CHRYSLER 300, 300C, 300 TOURING SEDANS AND DODGE MAGNUM BODY REPAIR MANUAL

SAFETY NOTICE

CAUTION

All SERVICE AND REBUILDING INSTRUCTIONS CONTAINED HEREIN ARE APPLICABLE TO, AND FOR THE CONVENIENCE OF, THE AUTOMOTIVE TRADE ONLY. All test and repair procedures on components or assemblies in non-automotive applications should be repaired in accordance with instructions supplied by the manufacturer of the total product.

Proper service and repair is important to the safe, reliable operation of all motor vehicles. The service produces recommended and described in this publication were developed for professional service personnel, and are effective methods for performing vehicle repair. Following these procedures will help ensure efficient economical vehicle performance and service reliability. Some service procedures require the use of special tools designed for specific procedures. These special tools should be used as recommended throughout this publication.

Special attention should be exercised when working with spring-or tension-loaded fasteners and devices such as E-Clips, Circlips, Snap rings, etc., since careless removal may cause personal injury. Always wear safety goggles when working on vehicles or vehicle components.

It is important to note that this publication contains various Cautions and Warnings. These should be read carefully in order to minimize risk of personal injury or the possibility that improper service methods may damage the vehicle or render it unsafe. It is important to note that these Cautions and Warnings cover only the situations and procedures DaimlerChrysler Corporation has encountered and recommended. DaimlerChrysler Corporation cannot possibly know, evaluate, and advise the service trade of all conceivable ways in which service may be performed, or of the possible hazards of each. Consequently, DaimlerChrysler has not undertaken any such broad service review. Accordingly, anyone uses a service procedure or tool that is not recommended in this publication must be certain that neither personal safety, nor vehicle safety, will be jeopardized by the service methods they select.

Back To Index

MANUFACTURER ADVERTISEMENTS

(CLICK ON LINKS)

- **3M**
- **AKZO-NOBEL**
- **BASF**
- **DAIMLERCHRYSLER PAINT CONDITION DECK-SEALER/SOUND DEADNER REPAIR GUIDE**
- **LORD CORPORATION**
- **MOPAR PARTS**
- **PPG**
- **TEAM PSE-PENTASTAR SERVICE EQUIPMENT**
- **TECH AUTHORITY**
- **VALSPAR**
- **DAIMLERCHRYSLER PLASTIC REPAIR GUIDE – WELDING & WELD BONDING MANUAL**

Copies of the Pacifica (81-316-0530CD), Durango (81-31-0430CD) & PT Convertible (81-316-0531CD) Body Repair Manuals are available by calling 1-800-890-4038

Back To Index

Introduction

CHRYSLER 300, 300C, 300 Touring and DODGE MAGNUM

This manual has been prepared for use by all body technicians involved in the repair of the 300, 300C, 300 Touring & Dodge Magnum

This manual shows:

- Typical unibody panels contained in these vehicles
- The weld locations for these panels
- The types of welds for the panel
- Proper sealer types and correct locations

Body Construction Characteristics.....
History of Collision Repair.....
Body Code Plate Information.....
Vehicle Identification Number Information.....
Corrosion Protection.....
Welded Panel Replacement.....
Sealer Locations.....
Sound Deadner Locations.....
Structural Adhesive Locations.....
Frame/Body Dimensions.....
Additional Support/Information.....

DaimlerChrysler Motors Corporation reserves the right to make improvements in design or to change specifications to these vehicles without incurring any obligation upon itself.

BODY CONSTRUCTION CHARACTERISTICS

Definitions of Steels used in the 300,300C, & Magnum:
MS 66 - Represents an uncoated Hot Rolled Steel Sheet used mainly for interior braces and reinforcements.

MS 67 - Represents an uncoated Cold Rolled Sheet structural steel used in areas where structural integrity is critical.
EG., the type of steel used for the "A" pillar.

MS 264 - Represents an uncoated high strength low alloy (HSLA) steel used in applications where structural integrity is critical.

MS 6000-44A - Low carbon, hot dipped galvanneal (or EGA) with 45 g/m² minimun coating weight on both sides.
- Most common Sheet Steel product used by Chrysler

MS 6000-44VA - 50 ksi min. yield strength, HSLA, killed steel, with 44 g/m² minimun coating weight on both sides. -
- Most common high strength coated steel product used by Chrysler

BODY CONSTRUCTION CHARACTERISTICS

The following measures have been implemented in order to provide maximum corrosion prevention and protection.

1. The use of galvannealed coatings throughout the body structure.
2. Ecoat is used on the complete body in all instances.
3. Body sealing.
4. Stone-chipping resistant primer application.
5. Underbody corrosion prevention.

Back To Index

CHRYSLER 300, 300C, 300 TOURING, & DODGE MAGNUM
COMPONENT CHART PART SPECIFICATION LIST

CHART PART #	CAR LINE ALL	C48	D48	D49	PART DESCRIPTION	MIN GAGE METRIC	MATERIAL
4		C			TROUGH - DECK OPENING SIDE RT	1.24	MS-6000 44A
		C			TROUGH - DECK OPENING SIDE LT		
4			8		TROUGH - DECK OPENING SIDE RT	1.24	MS-6000 44A
			8		TROUGH - DECK OPENING SIDE LT		
4				D	TROUGH - QTR PANEL DRAIN UPR RT	1.52	MS-6000 44VA-040SK
				D	TROUGH - QTR PANEL DRAIN UPR LT		
7	A				BRACKET - FRT SUSP UPR CONTROL ARM R	1.98	MS-6000 44VA-050XK
	A				BRACKET - FRT SUSP UPR CONTROL ARM L		
9	A				PANEL - RR WHEELHOUSE INR RT	1.22	MS-6000 44A
	A				PANEL - RR WHEELHOUSE INR LT		
10	A				REINFORCEMENT - SILL FRT RT	0.99	MS-6000 44VA-050-XF
	A				REINFORCEMENT - SILL FRT LT		
12	A				PANEL - RR WHEELHOUSE OTR RT	0.61	MS-6000 44A
	A				PANEL - RR WHEELHOUSE OTR LT		
13		C			PANEL - BODY SIDE INR RT	1.42	MS-6000 44VA-050-XK
		C			PANEL - BODY SIDE INR LT		

Back To Index

CHRYSLER 300, 300C, 300 TOURING, & DODGE MAGNUM COMPONENT CHART PART SPECIFICATION LIST

13		8		PANEL - BODY SIDE INR RT	1.42	MS-6000 44VA-050-XK
		8		PANEL - BODY SIDE INR LT		
13			D	PANEL - BODY SIDE INR RT	1.42	MS-6000 44VA-050-XK
			D	PANEL - BODY SIDE INR LT		
15	C			PANEL - BODY SIDE OTR RT	0.79	MS-6000 44AE
	C			PANEL - BODY SIDE OTR LT		
15		8		PANEL - BODY SIDE OTR RT	0.79	MS-6000 44AE
		8		PANEL - BODY SIDE OTR LT		
15			D	PANEL - BODY SIDE OTR RT	0.79	MS-6000 44AE
			D	PANEL - BODY SIDE OTR LT		
17	A			PANEL - RR SHOCK MOUNTING RT	2.00	MS-6000 44VA-050-XK
	A			PANEL - RR SHOCK MOUNTING LT		
18	A			TAPPING PLATE - DOOR HINGE FRT RT	2.40	MS-66
	A			TAPPING PLATE - DOOR HINGE FRT LT		
18	A			TAPPING PLATE - DOOR HINGE FRT LT	2.40	MS-66
23	A			BRACKET - ENGINE CRADLE MOUNTING UPR	1.80	MS-6000 44VA-050-XK
	A			BRACKET - ENGINE CRADLE MOUNTING UPR		
25	A			REINFORCEMENT - TOEBOARD CROSSMEMBER	1.98	MS-6000 44VA-080-XK
	A			REINFORCEMENT - TOEBOARD CROSSMEMBER		
26	A			PANEL - UPR LOAD PATH OTR RT	0.89	MS-6000 44VA-050-XK
	A			PANEL - UPR LOAD PATH OTR LT		

Back To Index

CHRYSLER 300, 300C, 300 TOURING, & DODGE MAGNUM
COMPONENT CHART PART SPECIFICATION LIST

27	A				BRACKET - ENGINE CRADLE MOUNTING UPR	1.47	MS-6000 44VA-050-XK
28	A				SPACER - BRAKE BOOSTER	3.50	MS - 588 -B - 3
31	A				PANEL - SHOCK TOWER MOUNTING FRT RT	2.08	MS-6000 44A
	A				PANEL - SHOCK TOWER MOUNTING FRT LT		
32	A				PANEL - FRT WHEELHOUSE RR RT	0.76	MS-6000 44A
	A				PANEL - FRT WHEELHOUSE RR LT		
33				D	PANEL - HOOD INR	0.90	MS-8580 A96022-T43
		C			PANEL - HOOD INR		
			8		PANEL - HOOD INR		
34				D	PANEL - HOOD OTR	0.90	MS-8580 A96022-T4E29
		C			PANEL - HOOD OTR		
			8		PANEL - HOOD OTR		
35	A				TAPPING PLATE - HOOD INR PANEL HINGE	2.00	MS-8580 A96022-T4
	A				TAPPING PLATE - HOOD INR PANEL HINGE		
36		C			CROSSMEMBER - HEADLAMP MOUNTING		MS-DB-41/MS-6000 44VA
				D	CROSSMEMBER - HEADLAMP MOUNTING		
			8		CROSSMEMBER - HEADLAMP MOUNTING		
38	A				PAN - TORQUE BOX RT	2.50	MSDB543,CPN2194,TYPEA
39	A				PANEL - FRT WHEELHOUSE FRT RT	1.42	MS-6000 44VA-050
	A				PANEL - FRT WHEELHOUSE FRT LT		
41	A				TAP PLATE - FLOATING	1.98	MS-66
44	A				PANEL - LWR RADIATOR CROSSMEMBER	0.79	MS-67

Back To Index

CHRYSLER 300, 300C, 300 TOURING, & DODGE MAGNUM
COMPONENT CHART PART SPECIFICATION LIST

49		C			REINF - HOOD INR PANEL SLAM	1.25	MS-8580 A96022-T4
				D	REINFORCEMENT - HOOD INR PANEL SLAM		
			8		REINFORCEMENT - HOOD INR PANEL SLAM		
51	A				PANEL - RAIL FRT COVER RT	1.54	MS-6000 44VA-590DT
	A				PANEL - RAIL FRT COVER LT		
53	A				PANEL - FRT SIDE RAIL INR RT	1.54	MS-6000 44VA-590DT
	A				PANEL - FRT SIDE RAIL INR LT		
54	A				PANEL - COWL LWR	0.89	MS-6000 44A
55	A				BRACKET - ICU	1.47	MS-6000 44A
56	A				PANEL - COWL UPR	0.71	MS-6000 44A
58	A				PANEL - DASH	0.71	MS-6000 44A
62	A				PANEL - EXTENSION FRT RAIL OTR RT	1.98	MS-6000 44VA-050-XK
	A				PANEL - EXTENSION FRT RAIL OTR LT		
63	A				PANEL - EXTENSION FRT RAIL INR RT	1.88	MS-6000 44VA-050-XK
	A				PANEL - EXTENSION FRT RAIL INR LT		
64	A				SHIELD - SPLASH RR WHEELHOUSE RT	2.00	MSDB-543,TYPE A
	A				SHIELD - SPLASH RR WHEELHOUSE LT		
65	A				REINF - RAIL TO TUNNEL RT	1.04	MS-264 035-SK
	A				REINF - RAIL TO TUNNEL LT		
66	A				COVER PLATE - RAIL RR RT	1.24	MS-6000 44VA-050-XK
	A				COVER PLATE - RAIL RR LT		

Back To Index

CHRYSLER 300, 300C, 300 TOURING, & DODGE MAGNUM
COMPONENT CHART PART SPECIFICATION LIST

67	A				ROD ASSY - HOOD SUPPORT	8.00	MS-284
68	A				REINF - TUNNEL	1.19	MS-264 050-XF
69	A				EXTENSION - RAIL FRT RT	1.40	MS-264 050-XK
	A				EXTENSION - RAIL FRT LT		
70	A				PANEL - FRT FLOOR PAN TUNNEL CTR	0.89	MS-6000 44VA-050-XF
71	A				TAPPING PLATE - HINGE BODY	1.27	MS-6000
72	A				REINF - I/P BRACKET RT	2.00	MS-66
	A				REINF - I/P BRACKET LT		
73	A				PANEL - LOAD PATH BEAM UPR INR RT	0.89	MS-6000 44VA-050-XF
	A				PANEL - LOAD PATH BEAM UPR INR LT		
76	A				RETAINER - RR DOOR STRIKER RT	1.52	MS-66
	A				RETAINER - RR DOOR STRIKER LT		
77	A				CROSSMEMBER - ISOFIX	1.50	MS-264 050-XK
78	A				GLASS ASSY - WINDSHIELD	5.10	MS-10472-B
79		C			PANEL - ROOF OTR	0.74	MS-67
			8		PANEL - ROOF OTR		
				D	PANEL - ROOF OTR		
				D	PANEL - ROOF OTR		
80	A				REINF - HOOD INR PANEL STRIKER	2.00	MS-8580 A96022-T4

Back To Index

CHRYSLER 300, 300C, 300 TOURING, & DODGE MAGNUM
COMPONENT CHART PART SPECIFICATION LIST

81		C			GLASS ASSY - RR WDO ELEC HEATED E-MA	3.90	MS-10472-C
			8		GLASS ASSY - RR WINDOW ELECTRIC HEAT	"	
				D	GLASS ASSY - RR WINDOW ELECTRIC HEAT	"	MS-7588
82		C			HEADER - RR WINDOW OPENING	0.74	MS-67
82			8		HEADER - RR WINDOW OPENING	0.74	MS-67
82				D	HEADER - REAR UPR	1.30	MS-6000 44A
84				D	HEADER - REAR LWR	0.89	MS-67
85	A				HEADER - WINDSHIELD OPENING	0.74	MS-67
86	A				CROSSMEMBER - FRT SEAT FRT RT	1.24	MS-264 050-XF
	A				CROSSMEMBER - FRT SEAT FRT LT		
87	A				CROSSMEMBER - FRT SEAT RR RT	1.24	MS-264 050-XF
	A				CROSSMEMBER - FRT SEAT RR LT		
89	A				EXTENSION - TUNNEL	1.47	MS-6000 44A-050-XF
90		C		D	BUMPER - HOOD ADJUSTER	0.00	MS-Z-77
91	A				CROSSMEMBER - RR KICK-UP	0.99	MS-6000 44A
92	A				BRACE - FRONT SHOCK TOWER	1.00	MS-67
94	A				TAP PLATE - REAR DOOR UPR RT	2.00	MS-66
94	A				TAP PLATE - REAR DOOR UPR RT	2.00	MS-66
96	A				PAN - CTR FLOOR PAN	0.66	MS-6000 44A

Back To Index

CHRYSLER 300, 300C, 300 TOURING, & DODGE MAGNUM
COMPONENT CHART PART SPECIFICATION LIST

98	A				PAN - REAR FLOOR	0.71	MS-6000 44A
101		C			REINF - RR SHELF PANEL RR	0.70	MS-6000 44A
101			8		REINF - RR SHELF PANEL RR	0.70	MS-6000 44A
102		C			PANEL - DECK LID OTR	0.90	MS-8580 A96022-T43
102			8		PANEL - DECK LID OTR	0.76	MS-6000 44WAE-025-SK
102				D	PANEL - LIFTGATE OTR LWR	0.81	MS-6000 44AE
103		C			PANEL - DECK LID INR	1.00	MS-8580 A96022-T43
103			8		PANEL - DECK LID INR	0.71	MS-6000 44A
103				D	PANEL - LIFTGATE INR	1.22	MS-6000 44AE
105		C			PANEL - DECK OPENING LWR INR	0.72	MS-6000 44A
105			8		PANEL - DECK OPENING LWR INR	0.71	MS-6000 44A
105				D	REINF - DECK OPENING LWR INR	0.81	MS-67
106		C			PANEL - DECK OPENING LWR OTR	0.72	MS-6000 44A
106			8		PANEL - DECK OPENING LWR OTR	0.71	MS-6000 44A
106				D	PANEL - DECK OPENING LWR OTR	1.12	MS-6000 44A
107	A				TAP PLATE - FRONT DOOR UPR RT	2.00	MS-67

Back To Index

CHRYSLER 300, 300C, 300 TOURING, & DODGE MAGNUM
COMPONENT CHART PART SPECIFICATION LIST

110	A			TAPPING PLATE - DOOR HINGE RR LWR RT	2.40	MS-66
	A			TAPPING PLATE - DOOR HINGE RR LWR LT		
112	A			CROSSMEMBER - RR SUSPENSION RR	1.75	MS-6000 44VA-050-XK
113	A			BRACKET - ENGINE CRADLE MOUNTING LWR	1.80	MS-6000 44VA-050-XK
	A			BRACKET - ENGINE CRADLE MOUNTING LWR		
114	A			RAIL - RR INR RT	1.14	MS-6000 44VA-050-XK
	A			RAIL - RR INR LT		
115	A			BRACKET - HEADLAMP MOUNTING RT	1.24	MS-6000 44A
	A			BRACKET - HEADLAMP MOUNTING LT		
117			D	PANEL - FRONT FENDER RT	0.71	MS-6000 44WAE-025
			D	PANEL - FRONT FENDER LT		
		C		PANEL - FRONT FENDER RT		
		C		PANEL - FRONT FENDER LT		
117		8		PANEL - FRONT FENDER RT	0.71	MS-6000 44WAE-025
		8		PANEL - FRONT FENDER LT		
118		C	D	PANEL - FRT DOOR INR RT	0.75	MS-6000 44A
		C	D	PANEL - FRT DOOR INR LT		
118		8		PANEL - FRT DOOR INR RT	0.75	MS-6000 44A
		8		PANEL - FRT DOOR INR LT		
119		C	D	REINF - FRT DOOR BELT INR RT	0.90	MS-264 050-XK
		C	D	REINF - FRT DOOR BELT INR LT		
119		8		REINF - FRT DOOR BELT INR RT	1.20	MS-264 050-XK
		8		REINF - FRT DOOR BELT INR LT		

Back To Index

CHRYSLER 300, 300C, 300 TOURING, & DODGE MAGNUM
COMPONENT CHART PART SPECIFICATION LIST

121	A			SHIELD - HEAT FRT FLOOR TUNNEL LT	0.50	MS-8580
123	A			SHIELD - HEAT FRT FLOOR FRT RT	3.00	MS-8580
	A			SHIELD - HEAT FRT FLOOR FRT LT		
124	A			BAR - IMPACT FRT DOOR RT	2.40	MS-8010 D
	A			BAR - IMPACT FRT DOOR LT		
125			D	ROD - LIFTGATE GAS PROP	0.00	N/A
125		C		PROP ASSY - DECK LID	0.00	N/A
125			8	PROP ASSY - DECK LID	0.00	N/A
126	A			EXTENSION - CROSSMEMBER END SUPPORT	2.24	MS-6000 44VA-050-XK
	A			EXTENSION - CROSSMEMBER END SUPPORT		
128		C	D	REINF - FRT DOOR BELT OTR RT	0.75	MS-6000 44A
		C	D	REINF - FRT DOOR BELT OTR LT		
128			8	REINF - FRT DOOR BELT OTR RT	0.75	MS-6000 44A
			8	REINF - FRT DOOR BELT OTR LT		
129		C	D	PANEL - RR DOOR INR RT	0.74	MS-6000 44A
		C	D	PANEL - RR DOOR INR LT		
129			8	PANEL - RR DOOR INR RT	0.74	MS-6000 44A
			8	PANEL - RR DOOR INR LT		
132		C	D	PANEL - REAR DOOR OUTER RT	0.76	MS-6000 44VAE-030-HK
		C	D	PANEL - REAR DOOR OUTER LT		

Back To Index

CHRYSLER 300, 300C, 300 TOURING, & DODGE MAGNUM
COMPONENT CHART PART SPECIFICATION LIST

132			8		PANEL - REAR DOOR OUTER RT	0.76	MS-6000 44VAE-030-HK
			8		PANEL - REAR DOOR OUTER LT		
133	A	C		D	REINFORCEMENT - NONE	2.00	MS-6000 44A
133	A	C		D	REINFORCEMENT - NONE	2.00	MS-6000 44A
134	A				BAR - IMPACT RR DOOR RT	2.20	MS-8010
	A				BAR - IMPACT RR DOOR LT		
137		C			PANEL - REAR SHELF	0.89	MS-67
137			8		PANEL - REAR SHELF	0.89	MS-67
139		C		D	PANEL - FRT DOOR OTR RT	0.76	MS-6000
		C		D	PANEL - FRT DOOR OTR LT		
139			8		PANEL - FRT DOOR OTR RT	0.76	MS-6000
			8		PANEL - FRT DOOR OTR LT		
140	A				SPACER - CRADLE RR	3.00	MS-1560
141		C		D	REINFORCEMENT - REAR DOOR BELT OTR R	0.76	MS-6000
		C		D	REINFORCEMENT - REAR DOOR BELT OTR L		
141			8		REINFORCEMENT - REAR DOOR BELT OTR R	0.76	MS-6000
			8		REINFORCEMENT - REAR DOOR BELT OTR L		
142	A				EXTENSION - IMPACT BEAM FRT DOOR FRT	1.50	MS-264 050 XK
	A				EXTENSION - IMPACT BEAM FRT DOOR FRT		
143	A				EXTENSION - IMPACT BEAM FRT DOOR RR	1.50	MS-264 050 XK
	A				EXTENSION - IMPACT BEAM FRT DOOR RR		

Back To Index

CHRYSLER 300, 300C, 300 TOURING, & DODGE MAGNUM
COMPONENT CHART PART SPECIFICATION LIST

144	A				EXTENSION - RR DOOR IMPACT BAR FRT R	1.50	MS-264 050 XK
	A				EXTENSION - REAR DOOR IMPACT BAR FRT		
145	A				EXTENSION - RR DOOR IMPACT BAR RR RT	1.50	MS-264
	A				EXTENSION - REAR DOOR IMPACT BAR RR		
146	A				SPACER - ENGINE CRADLE MOUNTING FRT	3.00	MS-345 TYPE 5
148	A				REINFORCEMENT - REAR RAIL OTR RT	1.98	MS-6000 44VA-050-XK
	A				REINFORCEMENT - REAR RAIL OTR LT		
149		C		D	BRACKET - BUMPER RR	2.00	MS-6000 44VA-050-XK
149		C		D	BRACKET - BUMPER RR	2.00	MS-6000 44VA-050-XK
152	A				REINF - SEAT BELT ANCHOR RR INBOARD	1.98	MS-6000 44VA-050-XK
154		C			REINF - C-PILLAR RT	1.19	MS-6000 44VA-050-XK
		C			REINF - C-PILLAR LT		
				D	REINF - C-PILLAR RT		
				D	REINF - C-PILLAR LT		
154			8		REINF - C-PILLAR RT	1.19	MS-6000 44VA-050-XK
			8		REINF - C-PILLAR LT		
155		C			REINF - DECK LID LATCH MOUNTING	2.00	MS-8580 A96022-T4
155			8		REINF - DECK LID LATCH MOUNTING	1.80	MS-66
156				D	REINF - LIFTGATE HINGE MOUNTING RT	2.03	MS-66
				D	REINF - LIFTGATE HINGE MOUNTING LT		

Back To Index

Back To Index

CHRYSLER 300, 300C, 300 TOURING, & DODGE MAGNUM
COMPONENT CHART PART SPECIFICATION LIST

156		C			REINF - DECK LID HINGE TO DECK LID M	2.00	MS-8580 A96022-T4
		C			REINF - DECK LID HINGE TO DECK LID M		
156			8		REINF - DECK LID HINGE TO DECK LID M	2.00	MS-66
			8		REINF - DECK LID HINGE TO DECK LID M		
157	A				BRACKET - LWR RADIATOR CROSSMEMBER S	1.98	MS-264 050-XK
	A				BRACKET - LWR RADIATOR CROSSMEMBER S		
159	A				STRIKER - HOOD	7.00	MS-5378 B
160				D	EXTENSION - QTR OTR PANEL LWR RR RT	0.89	MS-6000 44A
				D	EXTENSION - QTR OTR PANEL LWR RR LT		
160		C			EXTENSION - QTR OTR PANEL LWR RR RT	0.66	MS-6000 44A
		C			EXTENSION - QTR OTR PANEL LWR RR LT		
160			8		EXTENSION - QTR OTR PANEL LWR RR RT	0.66	MS-6000 44A
			8		EXTENSION - QTR OTR PANEL LWR RR LT		
161	A				BRACKET - VAPOR CANISTER	1.60	MS-6000 44A
	A				BRACKET - VAPOR CANISTER		
162				D	PANEL - LIFTGATE OTR UPR	0.81	MS-6000 44AE
164		C		D	DOOR - FUEL FILLER	0.79	MS-6000 44AE
164			8		DOOR - FUEL FILLER	0.79	MS-6000 44AE
165		C		D	REINFORCEMENT - REAR DOOR BELT INR R	0.90	MS-264 050-XK
		C		D	REINFORCEMENT - REAR DOOR BELT INR L		
165			8		REINFORCEMENT - REAR DOOR BELT INR R	0.90	MS-264 050-XK

CHRYSLER 300, 300C, 300 TOURING, & DODGE MAGNUM
COMPONENT CHART PART SPECIFICATION LIST

166		C	D	REINF - BODY SIDE RT	1.42	MS-6000 44VA-050-XK
		C	D	REINF - BODY SIDE LT		
166			8	REINF - BODY SIDE RT	1.42	MS-6000 44VA-050-XK
			8	REINF - BODY SIDE LT		
167		C		BRACKET - LOCK CYLINDER ATTACH	0.90	MS-67
167			8	BRACKET - LOCK CYLINDER ATTACH	1.20	MS-66
168		C	8	PANEL - RR SHELF SUPPORT RT	1.24	MS-67
		C	8	PANEL - RR SHELF SUPPORT LT		
172	A			SPACER - TOWER BRACE	1.98	MS-66
173	A			BRACKET - BATTERY RETAINER		MS-DB21
176		C	D	REINF - B-PILLAR	1.52	MS-264 050-XK
		C	D	REINF - B-PILLAR		
176			8	REINF - B-PILLAR	1.52	MS-264 050-XK
			8	REINF - B-PILLAR		
178	A			REINF - BRAKE BOOSTER	1.88	MS-66
179	A			TAPPING PLATE - NONE	2.54	MS-66
180	A			RAIL - RR OTR RT	1.42	MS-6000 44VA-050-XK
	A			RAIL - RR OTR LT		
181	A			COVER PLATE - RR RAIL EXTENSION RT	0.79	MS-6000 44A
	A			COVER PLATE - RR RAIL EXTENSION LT		

Back To Index

CHRYSLER 300, 300C, 300 TOURING, & DODGE MAGNUM
COMPONENT CHART PART SPECIFICATION LIST

183	A			HINGE ASSY - FRT DOOR LWR RT	6.00	MS-264 050-X
	A			HINGE ASSY - FRT DOOR LWR LT		
184	A			HINGE ASSY - RR DOOR LWR RT	6.00	MS-264 050-X
	A			HINGE ASSY - RR DOOR LWR LT		
186		C	D	HOUSING - RR QTR OTR PANEL FUEL FILL	1.00	MS-6000 44A
		8				
188	A			BRACKET - CRADLE ATTACHING RT	1.98	MS-6000 44VA-050-XK
	A			BRACKET - CRADLE ATTACHING LT		
189	A			BRACKET - WIPER MODULE MTG	1.88	MS-6000 44A
190	A			BRACKET - FENDER ATTACH	1.02	MS-2501
191		C		HINGE ASSY - DECK LID COMP RT	3.00	MS-264 030-S
		C		HINGE ASSY - DECK LID COMP LT		
191			8	HINGE ASSY - DECK LID COMP RT	3.00	MS-264 030-S
			8	HINGE ASSY - DECK LID COMP LT		
193	A			BRACKET - HEADLAMP MOUNTING RT	1.98	MS-66
	A			BRACKET - HEADLAMP MOUNTING LT		
198	A			HINGE ASSY - HOOD RT	3.00	MS-264 050-X
	A			HINGE ASSY - HOOD LT		
199	A			HINGE ASSY - FRT DOOR UPR RT	6.00	MS-264 050-X
	A			HINGE ASSY - FRT DOOR UPR LT		

Back To Index

CHRYSLER 300, 300C, 300 TOURING, & DODGE MAGNUM
COMPONENT CHART PART SPECIFICATION LIST

200	A				HINGE ASSY - RR DOOR UPR RT	6.00	MS-264 050-X
	A				HINGE ASSY - RR DOOR UPR LT		
206	A				BRKT - RETAINER ENGINE CRADLE T/PLT	1.44	MS-6000 55P
207	A				REINF - SPARE TIRE HOLD DOWN	0.99	MS-67
211	A				REINF - DASH PANEL	1.22	MS-6000 VA-050
212	A				PANEL - TOEBOARD CROSSMEMBER	1.80	MS-6000 44VA-600DT
214	A				REINF - JOUNCE	1.47	MS-6000 44VA-040-XK
215		C			BRACKET - DISABLED VEHICLE TIE DOWN	1.98	MS-264 050-XK
218		C	8		TAPPING PLATE - DECK LID STRIKER	2.00	MS-66
218				D	REINF - STRIKER PLATE	1.52	MS-66
219		C	8		STRIKER - D/LID LATCH	1.80	MS-67
220	A				REINF - SHOCK TOWER TO LOAD BEAM RT	1.47	MS-6000 44A
	A				REINF - SHOCK TOWER TO LOAD BEAM LT		
222	A				BRACKET - TRANS MOUNTING RT	1.83	MS-6000 44A
	A				BRACKET - TRANS MOUNTING LT		
223	A				REINF - FRT SIDE RAIL BUMPER MOUNTIN	1.98	MS-6000 44VA-050-XK
	A				REINF - FRT SIDE RAIL BUMPER MOUNTIN		
224	A				BRACKET - TOWER BRACE WIPER ATTACHME	1.47	MS-264 050-XK
226	A				REINF - FRT SHOCK TOWER RT	1.40	MS-6000 44A

Back To Index

CHRYSLER 300, 300C, 300 TOURING, & DODGE MAGNUM
COMPONENT CHART PART SPECIFICATION LIST

228	A				DOUBLER - FRT SIDE RAIL RT	1.80	MS-6000 44A
	A				DOUBLER - FRT SIDE RAIL LT		
233	A				SHIELD - FENDER WHEELHOUSE SPLASH RT	2.50	MSDB-543,CPN2194,TYPEA
	A				SHIELD - FENDER WHEELHOUSE SPLASH LT		
235	A				TRAY ASSY - BATTERY		MS-DB21
236		C		D	TAPPING PLATE - DOOR HINGE RR UPR RT	2.40	MS-66
		C		D	TAPPING PLATE - DOOR HINGE RR UPR LT		
238		C		D	BOW - ROOF	1.98	MS-264 050-XK
238			8		BOW - ROOF	1.98	MS-264 050-XK
239	A				PAN - TORQUE BOX LT	2.50	MSDB-543,CPN2194,TYPEA
242	A				CROSSMEMBER - REAR SUSPENSION FRT	1.04	MS-6000 44VA-050-XK
243	A				REINF - KICKUP CROSSMEMBER	1.35	MS-6000 44VA-050-XK
244	A				BRACKET - CTR BEARING MOUNTING RT	1.52	MS-6000 44A
	A				BRACKET - CTR BEARING MOUNTING LT		
245		C			PANEL - TAIL LAMP MOUNTING RT	0.76	MS-6000 44A
		C			PANEL - TAIL LAMP MOUNTING LT		
245			8		PANEL - TAIL LAMP MOUNTING RT	0.76	MS-6000 44A
			8		PANEL - TAIL LAMP MOUNTING LT		
245				D	PANEL - TAIL LAMP MOUNTING RT	0.89	MS-6000 44A
				D	PANEL - TAIL LAMP MOUNTING LT		

Back To Index

CHRYSLER 300, 300C, 300 TOURING, & DODGE MAGNUM
COMPONENT CHART PART SPECIFICATION LIST

247				D	TAP PLATE - CROSS CAR BEAM UPR	2.00	MS-66
247		C		D	TAPPING PLATE - SEAT BELT TURNING LO	2.50	MS-66
250		C			REINF - RR BELT RETRACTOR RT	1.00	MS-67
		C			REINF - RR BELT RETRACTOR LT		
250			8		REINF - RR BELT RETRACTOR RT	1.00	MS-67
			8		REINF - RR BELT RETRACTOR LT		
251				D	REINF - LIFTGATE HINGE BODY HALF RT	1.50	MS-66
252	A				BRACE - REINFORCEMENT TUNNEL CTR	1.98	MS-6000 66V-050XK
253				D	REINF - LIFTGATE PROP ROD RT	1.22	MS-67
				D	REINF - LIFTGATE PROP ROD LT		
254	A				BEAM ASSY - BUMPER FRT	1.20	MS-264 120-XF
255	A				BEAM - REAR BUMPER	1.60	MS-264 120-XF
256		C		D	TAP PLATE - NONE	1.80	MS-66
258				D	REINF - LIFTGATE LATCH	1.00	MS-67
261		C			TAPPING PLATE - DECK LID HINGE	1.80	MS-66
261			8		TAPPING PLATE - DECK LID HINGE	2.00	MS-66
			8				
261				D	TAPPING PLATE - PROP ROD RT	1.50	MS-67

Back To Index

CHRYSLER 300, 300C, 300 TOURING, & DODGE MAGNUM
COMPONENT CHART PART SPECIFICATION LIST

265				D	REINF - WIPER MOUNTING	1.00	MS-67
268				D	REINF - BODY SIDE INR PANEL D-PILLAR	1.19	MS-264
				D	REINF - BODY SIDE INR PANEL D-PILLAR		
269		C	8		CROSSMEMBER - RR SHELF	0.89	MS 67
271	A	C		D	TAPPING PLATE - NONE	1.40	MS-66
271	A	C		D	TAPPING PLATE - NONE	1.40	MS-66
272	A				TAPPING PLATE - CROSSMEMBER	3.50	MS-66
274	A				TAPPING PLATE - BODY SIDE FRT DOOR L	2.40	MS-66
	A				TAPPING PLATE - BODY SIDE FRT DOOR L		
277	A				TAPPING PLATE - SIDE AIR BAG SENSOR	2.00	MS-66
278	A				PANEL - FRT FLOOR PAN RT	0.61	MS-6000 44A
	A				PANEL - FRT FLOOR PAN LT		
280	A				TAPPING PLATE - SEAT BELT RETRACTOR	3.00	MS-66
280	A				TAPPING PLATE - SEAT BELT RETRACTOR	3.00	MS-66
281		C			BRACKET - CHILD TETHER ATTACH	2.67	MS-264 050-XK
282		C	8		REINF - CTR SEAT BELT RETRACTOR	1.65	MS-264 050-XK
283	A				REINFORCEMENT - CROSSMEMBER REAR SUS	3.48	MS-264 050-XK
	A				REINFORCEMENT - CROSSMEMBER REAR SUS		

Back To Index

CHRYSLER 300, 300C, 300 TOURING, & DODGE MAGNUM
COMPONENT CHART PART SPECIFICATION LIST

284	A			REINF - RR RAIL INR RR RT	1.52	MS-6000 44VA-080-XK
	A			REINF - RR RAIL INR RR LT		
285	A			GUSSET - ISOFIX	1.80	MS-264 050-XK
	A			GUSSET - ISOFIX		
288			D	BRACKET - SEAT BACK LATCH RR UPR RT	1.09	MS-67
			D	BRACKET - SEAT BACK LATCH RR UPR LT		
289			D	PANEL - SEAT STRIKER RT	1.09	MS-67
			D	PANEL - SEAT STRIKER LT		
290		C	D	CHANNEL - FRONT DOOR GLASS RUN RT	0.90	MS-6000 44A
		C	D	CHANNEL - FRONT DOOR GLASS RUN LT		
290		8		CHANNEL - FRONT DOOR GLASS RUN RT	0.90	MS-6000 44A
		8		CHANNEL - FRONT DOOR GLASS RUN LT		
291		C	D	REINF - FUEL FILLER DOOR HINGE	1.20	MS-6000 44A
		8				
293			D	REINF - ROOF RACK FRT	1.00	MS-67
			D	REINF - ROOF RACK RR		
296		C	D	CHANNEL - RR DOOR GLASS RUN RT	0.90	MS-6000 44A
		C	D	CHANNEL - RR DOOR GLASS RUN LT		
296		8		CHANNEL - RR DOOR GLASS RUN RT	0.90	MS-6000 44A
		8		CHANNEL - RR DOOR GLASS RUN LT		
298		C		PANEL - ROOF SUNROOF	0.74	MS-67
		8		PANEL - ROOF SUNROOF		
			D	PANEL - ROOF SUNROOF		

Back To Index

CHRYSLER 300, 300C, 300 TOURING, & DODGE MAGNUM COMPONENT CHART PART SPECIFICATION LIST

299		C		D	REINF - SUNROOF	1.20	MS-6000 44A
			8		REINF - SUNROOF		
329	A				REINF - SUN VISOR MOUNTING TRIM	1.80	MS-66
	A				REINF - SUN VISOR MOUNTING TRIM		

Back To Index

Tech Authority website includes the most complete listings, descriptions, and ordering information for DaimlerChrysler Corporation service information materials. The materials included in Tech Authority cover every aspect of repairing and maintaining Chrysler, Plymouth, Dodge, Dodge Truck and Jeep® vehicles.

Tech Authority is an extensive online catalog of diagnostic procedure manuals, student reference books, tech training programs, owner's manuals, service manuals, and technical service bulletin manuals. The materials range from written and illustrated books to the highly acclaimed Master Tech Video series.

By Telephone: Monday - Friday, 8:00-4:30 E.S.T.

Telephone orders may be placed at the number below. Credit cards are accepted (no CODs). Please have your order information available at time of call.

By Phone: (800) 890-4038

By Fax: (440) 572-0815

Vist our Website at:
www.techauthority.daimlerchrysler.com

Back To Index

HISTORY OF COLLISION REPAIR

Time was, if you had an accident, the call went out to the insurance company - to the collision shop - or several shops - get the lowest bid and in no time at all, the vehicle was repaired.

The facilities, training, and equipment were simple. Use a torch to cut, shape, and bend. Use something substantial as an anchoring point - maybe a tree and then just pull.

Use plenty of solder or body putty to make it look good. With the frame and body vehicle, the job was easy; first straighten the frame - then fix the mechanical components and the body work was cosmetic. This was all well and good until the mid - '70s.

Then, the designers, engineers, and manufacturers had to find ways to make the vehicles energy efficient - and that meant unibody cars. The unibody concept wasn't new - back in the '30s the Chrysler Air Flow had it - race cars have it - and now the driving public worldwide has it.

The change came quickly. Manufacturers devoted time, money, and talent to delvelop the unibody car.

The public was ready to buy and did!

But then came the problem! The collision repair industry wasn't given the luxury of taking their time to train people in the new technology - or take time to plan for new equipment.

The collision happened and the vehicle had to be fixed. Cars that were repairable were being totalled.

Cars that were repaired were not repaired correctly. Everybody was in a **quandary** - auto manufacturer - insurance company - repair equipment people - body shops - and repair technicians.

The problem started in the early '70s and body shops are still catching up today. Yesterday's "ding" is today's "crash". It takes trained technicians and sophisticated equipment to do the repair today.

That's why DaimlerChrysler is taking the time and effort to get the right information into the hands of the people that handle the repair job.

Back To Index

BODY CODE PLATE DESCRIPTION

The Body Code Plate is located in the engine compartment on the right headlamp mounting bracket/ radiator support. There are seven lines of information on the body code plate. Lines 4, 5, 6, and 7 are not used to define service information. Information reads from left to right, starting with line 3 in the center of the plate to line 1 at the bottom of the plate.

BODY CODE PLATE

1 - PRIMARY PAINT
2 - SECONDARY PAINT
3 - VINYL ROOF
4 - VEHICLE ORDER NUMBER
5 - CAR LINE SHELL
6 - PAINT PROCEDURE
7 - ENGINE
8 - TRIM
9 - TRANSMISSION
10 - MARKET
11 - VIN

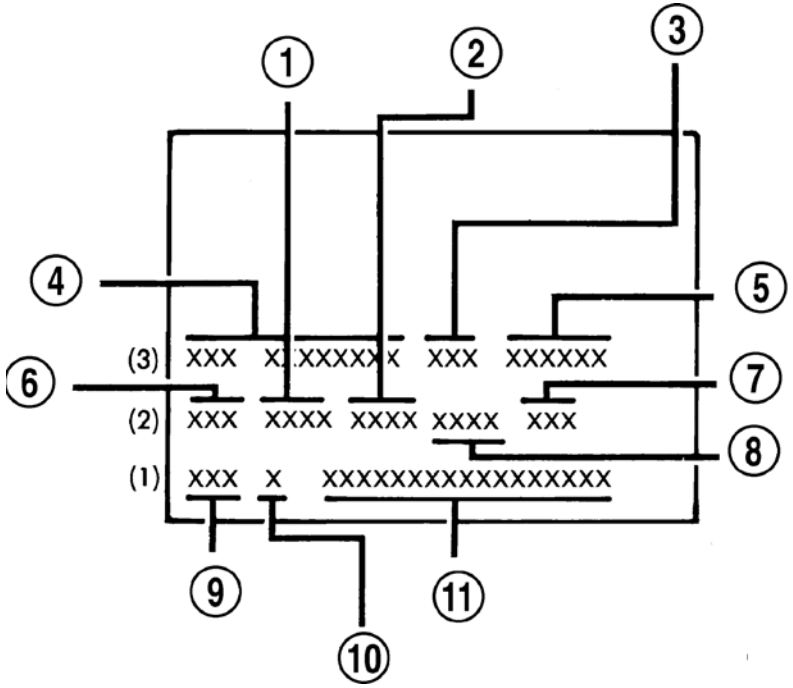

NOTE: Paint Code may also be found on safety certification label on inside of driver side door jamb.

Return To Index

VIN DECODING INFORMATION

POSITION	INTERPRETATION	CODE = DESCRIPTION
1	Country of Origin	1 = Manufactured by DaimlerChrysler Canada Inc.
2	Make	C = Chrysler
		D = Dodge
3	Vehicle Type	3 = Passenger Car
		4 = Multipurpose Passenger Vehicle With Side Airbags
		8 = Multipurpose Passenger Vehicle with Side Airbags
4	Restraint System	J = Restraint System Air bags Front Next Generation Multi-Stage Sales Code (CG1) Without Side Air Bags Sales Code (CGS)
	Gross Vehicle Weight Rating	H = 6001-7000 lbs.
5	Vehicle Line	A = 300 / 300C / SRT-8 (RWD)
		K = 300 (AWD)
		V = TBD (RWD)
		Z = TBD (AWD)
6	Series	2 = L Low Line
		3 = M Medium
		4 - H High Line
		5 = P Premium
		6 = S Sport
		7 = S Special
7	Body Style	3 = LX - 48
		8 = LX - 49
8	Engine	R = 2.7L V-6 cyl. DOHC 24 Valve MPI Gasoline
		G = 3.5L V-6 cyl. High Output 24 Valve MPI Gasoline
		H = 5.7L V-8 cyl. Gasoline
		T = 2.7L V-6 cyl. DOHC 24 Valve MPI Gasoline
		V = 3.5L V-6 cyl. High Output 24 Valve MPI Gasoline
		2 = 5.7L V-8 cyl. HEMI Multiple Displacement Gasoline
9	Check Digit	0 through 9 or X
10	Model Year	5 = 2005
11	Assembly Plant	H = Brampton Assembly
12 Through 17	Vehicle Build Sequence	Six Digit Number Assigned By Assembly Plant

Back To Index

VEHICLE IDENTIFICATION NUMBER

VEHICLE IDENTIFICATION NUMBER

DESCRIPTION - VEHICLE IDENTIFICATION NUMBER

The Vehicle Identification Number (VIN) is located on the upper left corner of the instrument panel, near the left A-Pillar. The VIN consists of 17 characters in a combination of letters and numbers that provide specific information about the vehicle (Fig. 1). Refer to VIN Code Decoding Chart.

To protect the consumer from theft and possible fraud the manufacturer is required to include a Check Digit at the ninth position of the Vehicle Identification Number. The check digit is used by the manufacturer and government agencies to verify the authenticity of the vehicle and official documentation. The formula to use the check digit is not released to the general public.

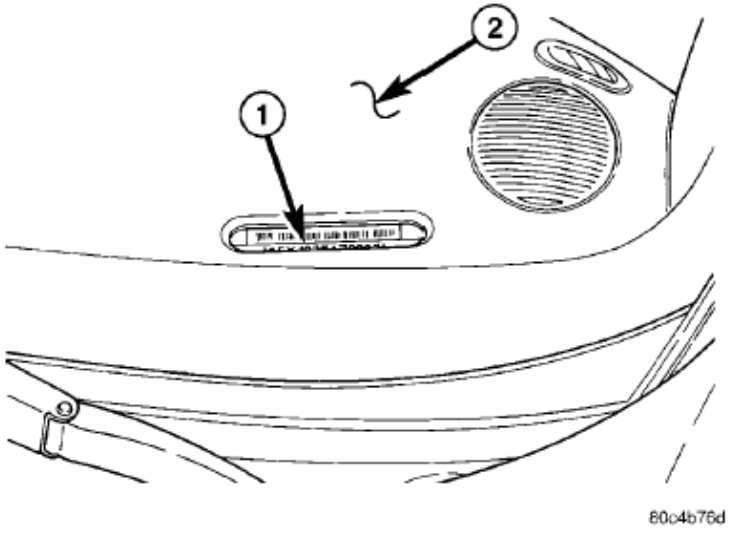

Fig. 1 VEHICLE IDENTIFICATION NUMBER LOCATION

1 - Vehicle Identification Number (VIN)

2 - Instrument Panel

Back To Index

Corrosion Protection

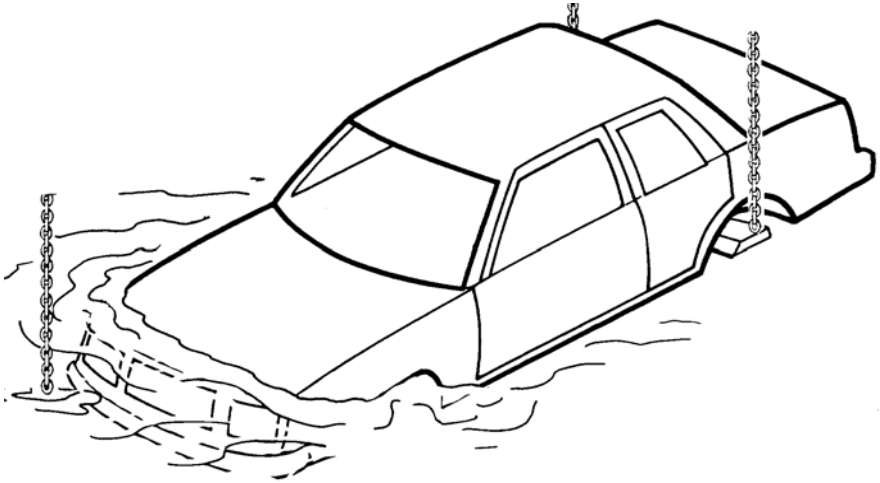

Factory Applied Corrosion Protection

During the manufacturing of the unibody car, the manufacturer applies "corrosion protection" using specialized manufacturing processes. This system is not duplicated in the collision repair body shop. However, the body shop still has a responsibility to apply corrosion protection to the unibody vehicle. So, the collision repair shop must use alternative materials to do the corrosion protection job after the repair.

This corrosion protection is required regardless of the environment and weather conditions the vehicle will be operated in. Corrosion protection is as important in the desert as it is at the seaside. Corrosion damage can literally destroy the structural integrity of a unibody vehicle from within. Many corrosion protection systems are destroyed during collision repair operations. Metal finishing, metal working and fatigue can cause the breakdown of many of the corrosion barriers installed at the factory. The use of heat for stress relief and welding also destroys factory installed corrosion barriers. These corrosion barriers and corrosion protection systems must be replaced after collision repair to ensure that the structural integrity of the unibody will remain intact throughout its life. In the past, only vehicles with aftermarket or after-delivery corrosion protection systems installed were serviced after collision repair to restore the corrosion protection system.

An understanding of the types of corrosion which affect the unibody vehicles will assist in understanding why the factory protection systems are important, how the factory protection systems consist of and how the systems' protection is replaced after collision and electrolytic corrosion. Some of the more common types of corrosion are **crevice corrosion, pitting, galvanic corrosion, stress corrosion, cracking, fretting,** and **erosion corrosion.**

Back To Index

Corrosion Protection

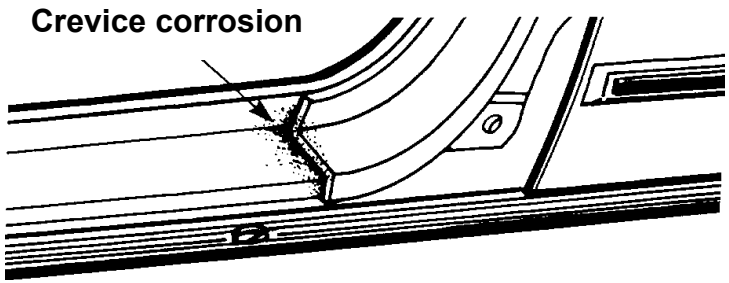

Crevice corrosion is a form of localized attack that occurs in areas on metal surfaces exposed to the elements. Examples include spot weld lap joints, threaded or riveted connections, gasket fittings, porous welds, valve seats.

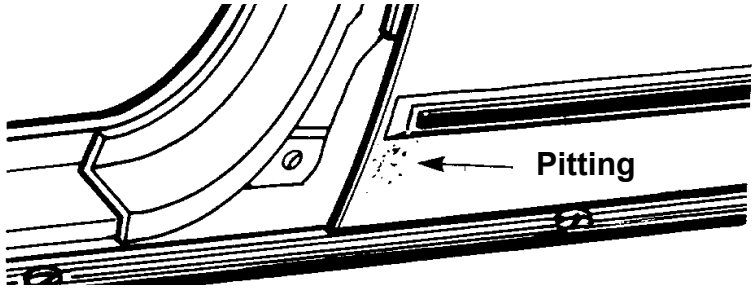

Pitting is the corrosion of a metal surface at points or small areas which look like a small hole in the metal.

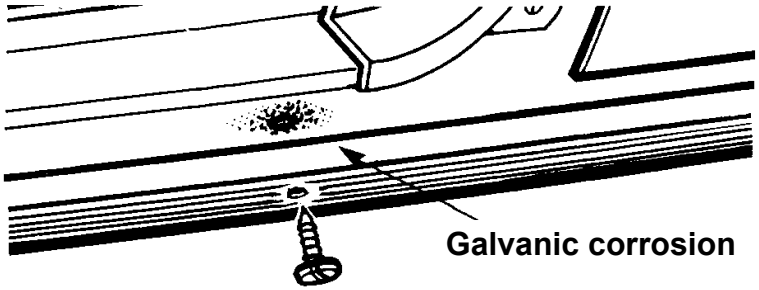

Galvanic corrosion is the type that occurs when dissimilar metals are in electrical contact while immersed in an electrolyte.

Back To Index

Corrosion Protection

The penetration of corrosive solutions into these small areas, with widths that are typically a few thousandths of an inch, can result in various types of failures: the metal surface may become rusty in appearance, operating components may seize when protective coatings may have been removed from the metal surface. The coating of zinc on steel, known as galvanized, is an example of sacrificial cathodic protection.

An example of galvanic corrosion on the automobile is a stainless steel trim molding on a painted mild steel. When the paint becomes damaged, a galvanic corrosion cell is formed between the passive stainless steel (cathode) and the steel (anode). The corrosion leads to what would look like a rust stain. Methods of reducing galvanic corrosion include the use of compatible materials, minimizing of cathode-to-anode areas, the insulation of dissimilar metal contacts and the use of thick, replaceable sections.

Stress corrosion, cracking, fretting, and erosion corrosion.

Corrosion cracking is the early cracking of metals produced by the combined action of tensile stress and a corrosive atmosphere.

Corrosion fatigue is cracking due to the action of stresses and corrosion. Methods of reducing corrosion fatigue include the reduction in stress and the use of coatings.

Fretting is the deterioration of a metal at contact surfaces due to the presence of a corrosive and relative motion between the surfaces. The two metal surfaces initially are covered with an oxide film that becomes abraded during vibration. The results are oxide particles that become corroded. During the collision repair process, the factory protection materials become damaged from working the metals, or from the use of heat in the repair operations. If these factory protection materials are not replaced with some similar protection material after repair, a corrosion hot spot is formed. A corrosion hot spot is a small unprotected area surrounded by a protected area throughout the rest of the vehicle. the hot spot effect causes rapid deterioration of the unprotected area. This deterioration takes place at a much faster rate, sometimes 10-12 times faster than if the entire car were unprotected. The hot spot effect is created because all the corrosive factors are channeled to the unprotected area much the same way all material flowing through a funnel is concentrated in a small area. This hot spot effect means that corrosion failures to the unibody structure could occur in a short period of time even in an atmosphere normally not subject to corrosion. The hot spot effect can cause rapid deterioration of unibody structures from corrosion damage in a desert as well as seaside.

Back To Index

Corrosion Protection

The types of materials used in rustproofing application include oil based materials, wax base materials, primers and color coats. The most important properties of rustproofing materials are adhesion, toughness, and the resistance to the environment. The best coating in the world is not effective unless it is present in the right place at the right time.

Corrosion Protection Information

When making the collision repair, refer to the manufacturer's information on where corrosion protection and sealants are applied. Be sure to follow the recommendations. The application process is usually included with the material manufacturer's information so be sure to read and understand it before proceeding with the repair.

Collision Repair Corrosion Protection Materials

The materials must provide good **electrolyte barriers**. The material must also be able to penetrate **tiny crevices** and prevent **abrasive corrosion**. The material must be **compatible** with **paint systems** as many areas of the car must be treated before paint is applied.

Materials containing silicones will cause paint conditions such as fish eyes if they are applied before the repaired vehicle is painted. So no silicone containing material is to be used. As many of the repair areas are more accessible before final assembly and painting, the non-silicone type materials are a must for this type of application.

When protecting an enclosed area, fog type properties for the corrosion protection material are a plus. The fog properties make the material much less susceptible to operator error or misapplication. With a fog type material, once the material is introduced inside of an enclosure, the fog spreads rapidly and evenly into all areas including tiny crevices. The fog type materials do not require direct spray application to be effective. Fog type materials are also very effective in coating over any existing rusted or corrosion damaged areas and preventing further corrosion of these areas. This is especially important on repairs of older vehicles.

Back To Index

Corrosion Protection

Spray Accessibility to the Repair

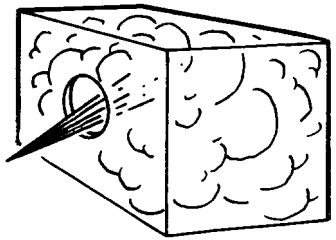

Being able to achieve fog spray penetration into enclosed cavities as well as open areas requires application equipment, which includes an assortment of wands of various lengths and design.

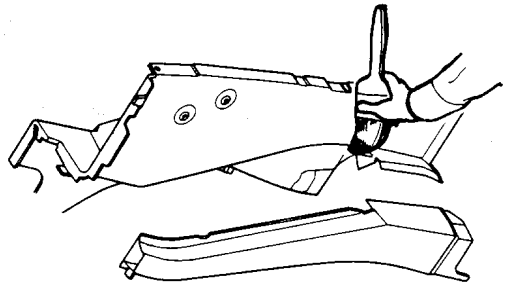

Some areas are more effectively treated by brush application of corrosion protection material before they are assembled. A good example of this is an inner and outer engine compartment side rail area. Brush application to the inside of these areas as individual pieces is easy before assembly and can be followed by a light fog application to the weld areas and the crevices formed during assembly after the rails are assembled. Brush application keeps the foreign material from getting between welded joints during assembly yet gives good coverage to general areas with easy application. The material selected in addition to paint compatibility features and fog application features is also an excellent brush application material. Repaired areas, boxed in or closed in are more easily treated during assembly using fog and brush on techniques. Care must be taken to keep the corrosion materials away from the welding areas as welding contamination might take place. Brush-on applications are used before welding and fog in applications are used after welding assemblies together.

Back To Index

Corrosion Protection

Desired Characteristics of Corrosion Protection Material

1. Corrosion prevention material- The material must displace water to prevent corrosion. This can be tested by spraying water on an open panel on the floor, then spraying the corrosion preventative material over the watered panel and observing if the material displaces the water.

2. Creepage of material- To insure thorough and complete protection coverage, the material should have a "creep" capability, approximately 1/4 inch per minute while drying. This assures protective penetration of pinch welds, cracks, etc.

3. Safe material- Material should be non-combustible when dried and when wet unable to support a fire after ignition.

4. Clean-up- The material should be of a viscosity which inhibits runs or drips. Overspray on a vehicle's painted surface should wipe off easily without solvent when wet, with solvent when dry. The material should also dry clean off clothing.

5. Guarantee/Warranty- The corrosion protection has to be done to maintain factory corrosion warranty. Manufacturer's recommendations must be followed.

Glossary:

Abrasion Corrosion - Rubbing or hitting of one material by another
Corrosion Protection - Material applied to deter corrosion (oxidation)
Crevice Corrosion - Oxidation when two metals are joined
Electrolytic Corrosion - Electrical action taking place between two materials in the presence of an electrolyte (liquid)
Fogging - Applying material in a mist form
Fretting - Deterioration of metal at contact surfaces due to motion and corrosive elements
Galvanic Corrosion - Electrical action (electrolysis) between two dissimilar metals in the presence of electrolyte (liquid)
Hot Spot - An unprotected area subject to corrosion
Pitting Corrosion - Corrosion on a surface the results in a small "specks" or "pinholes"
Stress of Fatigue, Cracking Corrosion - Cracking due to stress and atmospheric elements

Back To Index

3M

Paint Preparation System

PPS
PAINT PREPARATION SYSTEM

A completely new paint system from 3M™ which produces cleaner jobs, saves on solvent and gun cleaning time and can improve operator efficiency by as much as 15%.

Key Benefits of using 3M™ Paint Preparation System

- Only one PPS cup for mixing and spraying
- Closed system - no outside contamination
- Faster system - from mixing to disposal
- Less operator exposure to solvents and reduction in VOCs
- Spray gun functions at any angle

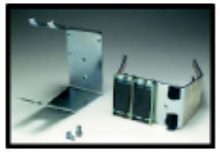

Contact your local 3M Representative for more information.

DODGE CHRYSLER Jeep MOPAR

For future advertising opportunities in DaimlerChrysler Technical Publications contact Scott Overly at sco@daimlerchrysler.com

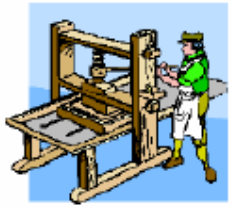

Back To Index

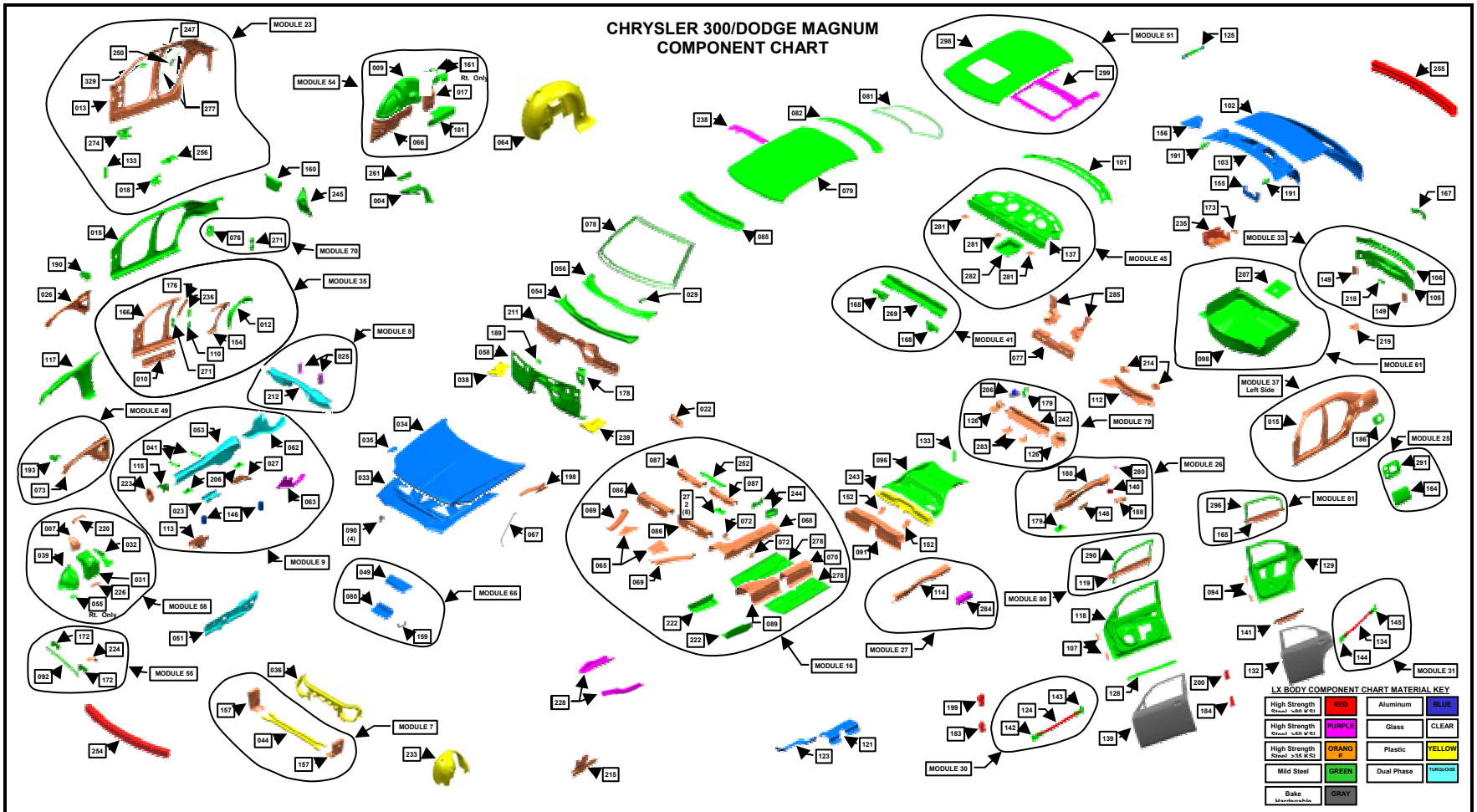

Note: To read numbers enlarge art to 200%.

Back To Index

Welded Panel Replacement

CHRYSLER 300, 300C, 300 Touring and DODGE MAGNUM

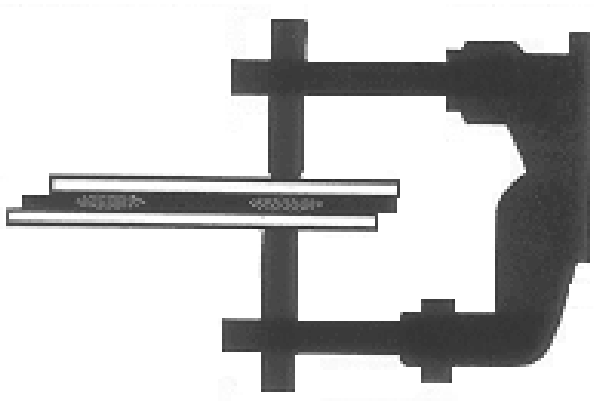

The basic parts of the body structure are the welded panels. This section contains a brief description of the placement of some of the panels and their weld locations.

Note: To ensure the strongest, most durable and cleanest welds possible, perform testing before and during all weld procedures. Always follow American Weld Society specifications and procedures.

Note: Diagrams do not show all of the parts.

Explanation of Manual Contents.....
Front Floor.....
Front Ladder.....
Engine Box.....
RR Floor & Ladder.....
Misc. Body.....
Underbody-48.....
BSA-48.....
BSA-49.....
Front Door.....
RR Door.....
Liftgate.....
Dash/Cowl.....
Frt Ladder,Rails, & Wheelhouse.....
Engine Box Ass'y.....
RR Ladder Ass'y.....
RR Ladder & Floor Ass'y.....
Underbody Framing Ass'y.....
Underbody Complete.....
BSA Outer-48 Ass'y.....
Framed BIW-48 Ass'y.....
Framed Full BIW-48 Ass'y.....
BSA Outer-49 Ass'y.....
Framed BIW-49 Ass'y.....
Framed Full BIW-49 Ass'y.....

Back To Index

Explanation of Welding/Sealer Information

The major construction of a unibody vehicle consists of welded panels that create the supporting structure for all componets and assemblies of the vehicle. Here are some examples for replacement of these parts.

Certain body components must use sealers to ensure proper assembly. Be sure to check the **Body Sealing Locations** and **Structural Adhesive Sections** for location and sealer type.

SEALER LEGEND

- Thumbgrade Sealer
- Pumpable Sealer
- Hidden Sealer
- Non Structural Expand Foam

1. AB TO AA 5/SD S/WELD
2. AC TO AA 3/SD S/WELD

Part I.D.

Weld Attachment Location (AB TO AA)
5 Standard Spot Welds (5/SD S/WELD)

Part I.D.
(AC TO AA)
AC= Fender Bracket
AA= Fender

Part Assembly I.D.
(Part Number 9803)

Part I.D.
(AB TO AA)
AB= Fender Bracket
AA= Fender

The welded componets are indicated by using the designations given in the illustration below: For example, "AB to AA" indicates that component "AB" and component "AA" shown in this illustration are welded together.

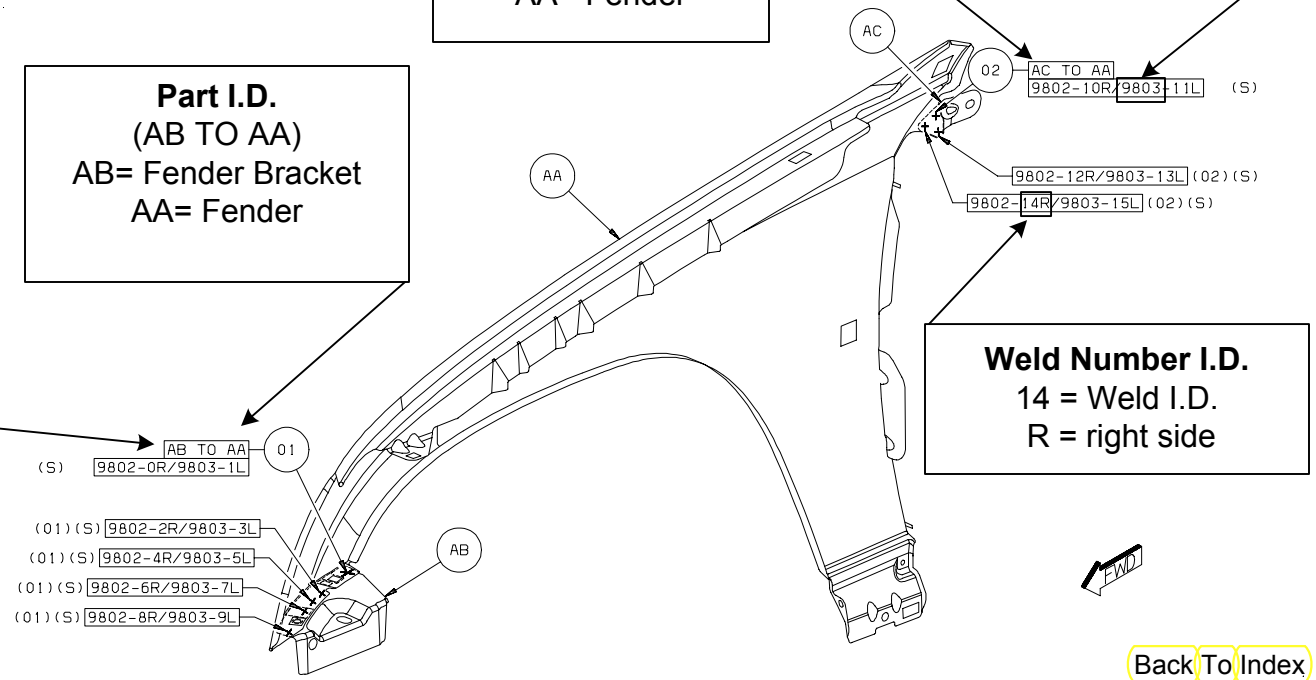

Weld Number I.D.
14 = Weld I.D.
R = right side

Back To Index

PARTS IDENTIFICATION LEGEND, OVERVIEW 2

AA	EXTENSION - TUNNEL -
AB	REINF - TUNNEL -
AC	PANEL - FRT FLOOR PAN TUNNEL CTR -
AD	PANEL - FRT FLOOR PAN RT -
AD	PANEL - FRT FLOOR PAN LT -
AE	CROSSMEMBER - FRT SEAT RR RT -
AE	CROSSMEMBER - FRT SEAT RR LT -
AF	STUD PLATE - CTR TUNNEL BRACE RT -
AF	STUD PLATE - CTR TUNNEL BRACE LT -
AG	BRACKET - CTR BEARING MOUNTING RT -
AG	BRACKET - CTR BEARING MOUNTING LT -
AH	CROSSMEMBER - FRT SEAT FRT RT -
AH	CROSSMEMBER - FRT SEAT FRT LT -
AJ	EXTENSION - RAIL FRT RT -
AK	REINF - RAIL TO TUNNEL RT -
AK	REINF - RAIL TO TUNNEL LT -
AL	BRACKET - TRANS MOUNTING RT -
AL	BRACKET - TRANS MOUNTING LT -
AM	STUD.WELD/EXTERNAL - HEADER.PT.SPECIAL - HEAT SHIELD ATTACH
AN	STUD.WELD/INTERNAL - HEADER.PT.NO.FIN.ROUND - STUD PLATE ATTACH
AP	REINF - I/P BRACKET RT -
AP	REINF - I/P BRACKET LT -
AR	NUT/WELD.HEX - NO.FIN - I/P ATTACH

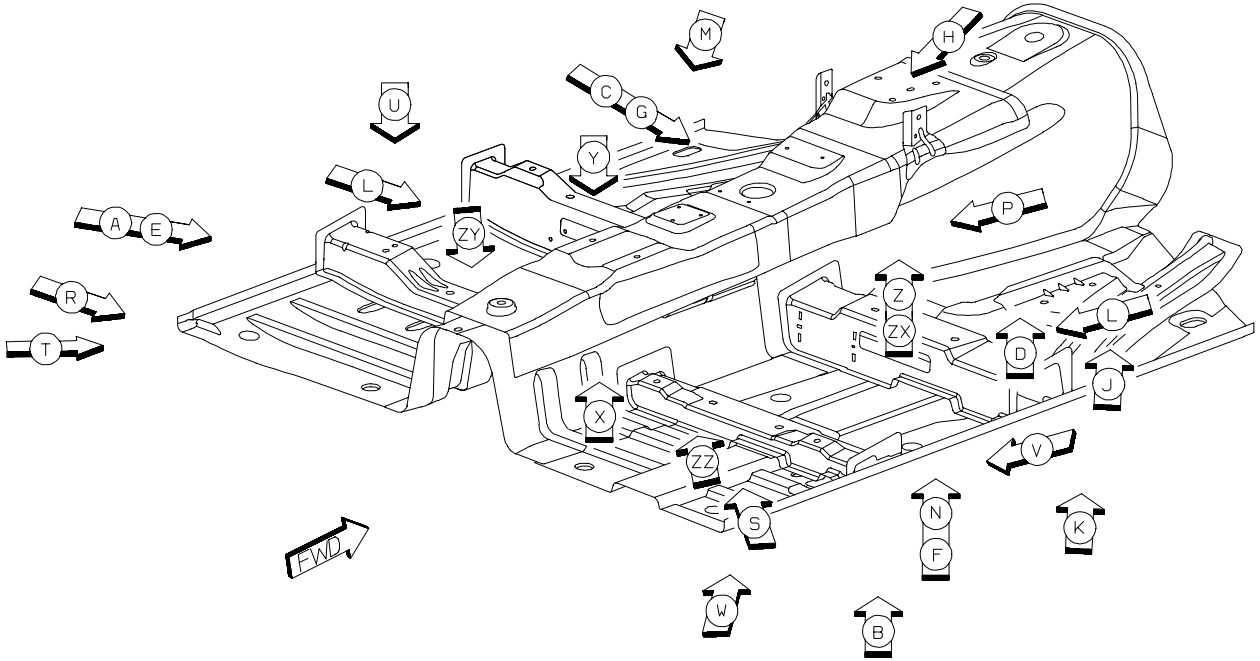

Back To Index

1. AB TO AA 33 S/WELD

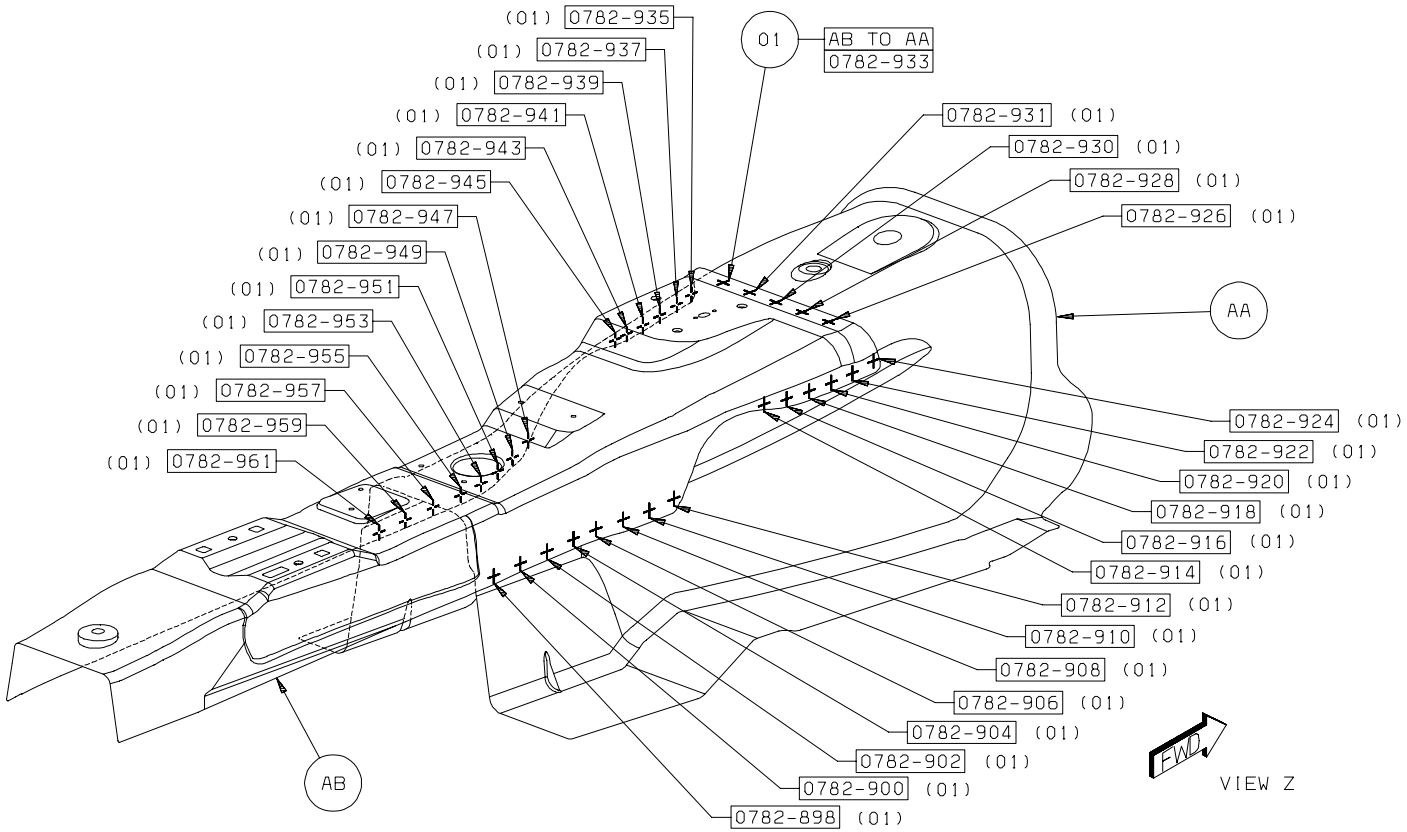

Back To Index

2. AB TO AA 2 S/WELD
3. AC TO AB 27 S/WELD

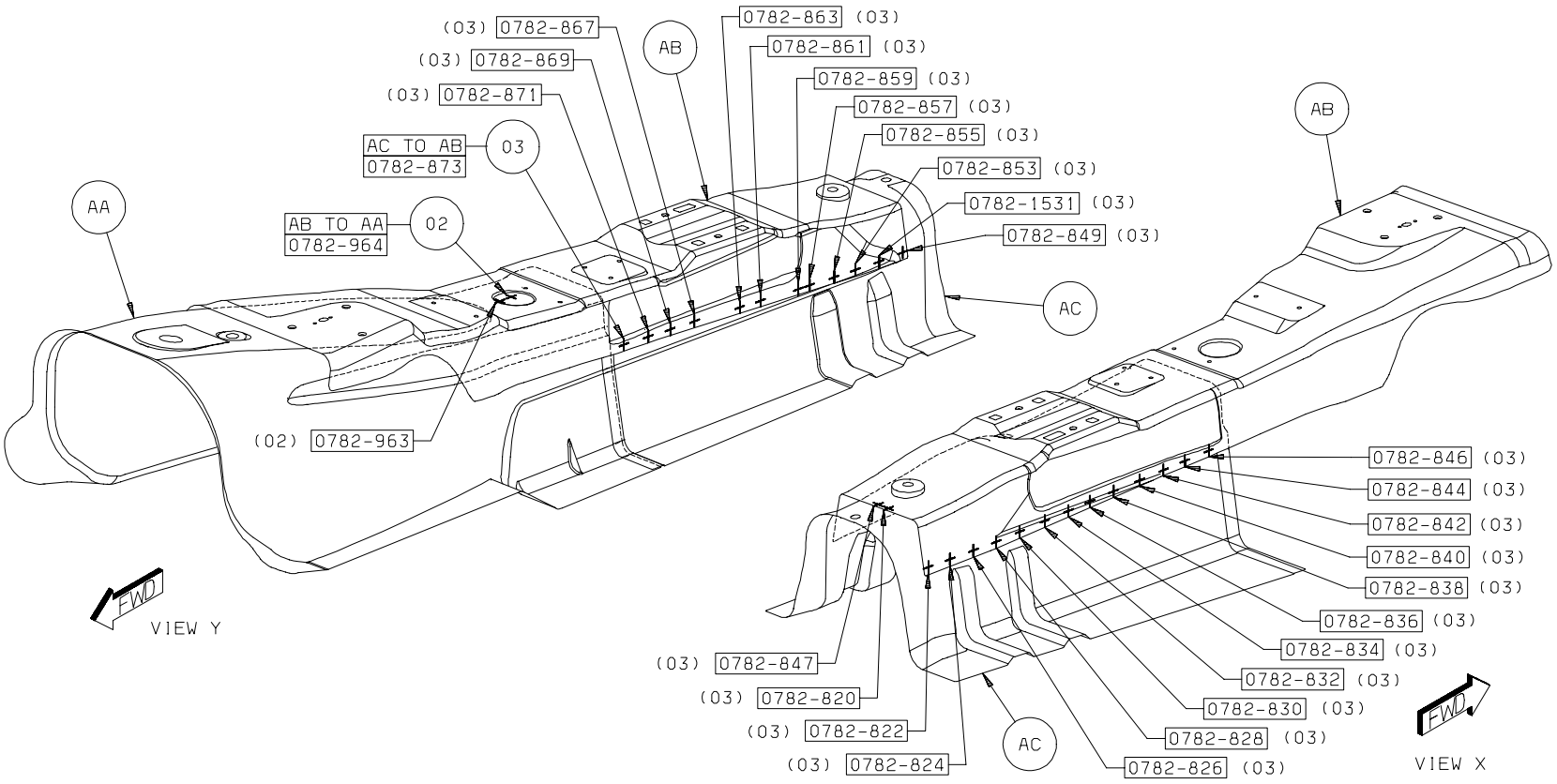

Back To Index

4. AE TO AD TO AC 2 S/WELD
5. AE TO AC 6 S/WELD
6. AE TO AD 17 S/WELD

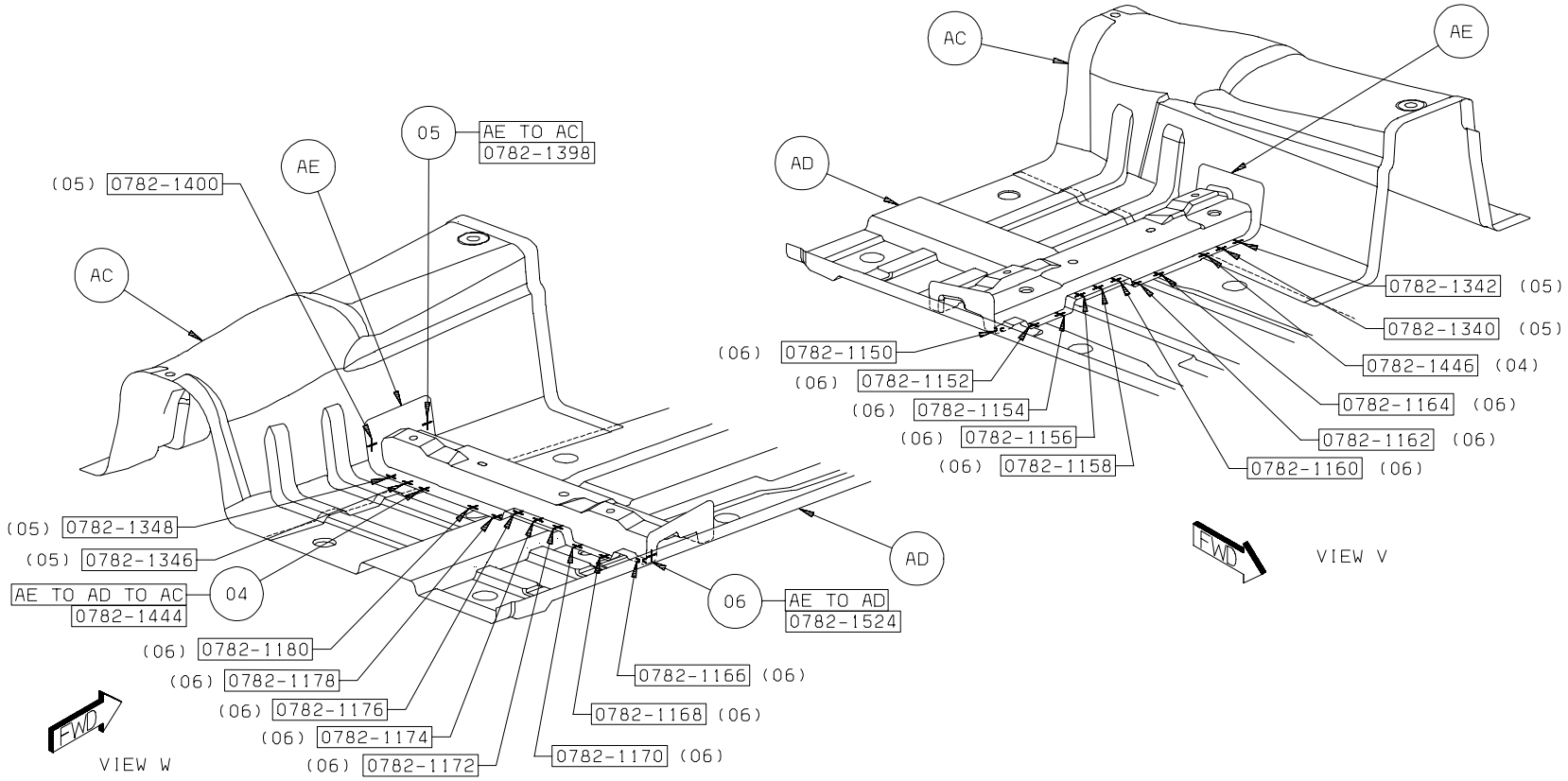

Back To Index

7. AG TO AF 22 S/WELD
8. AE TO AD TO AC 2 S/WELD
9. AE TO AC 6 S/WELD

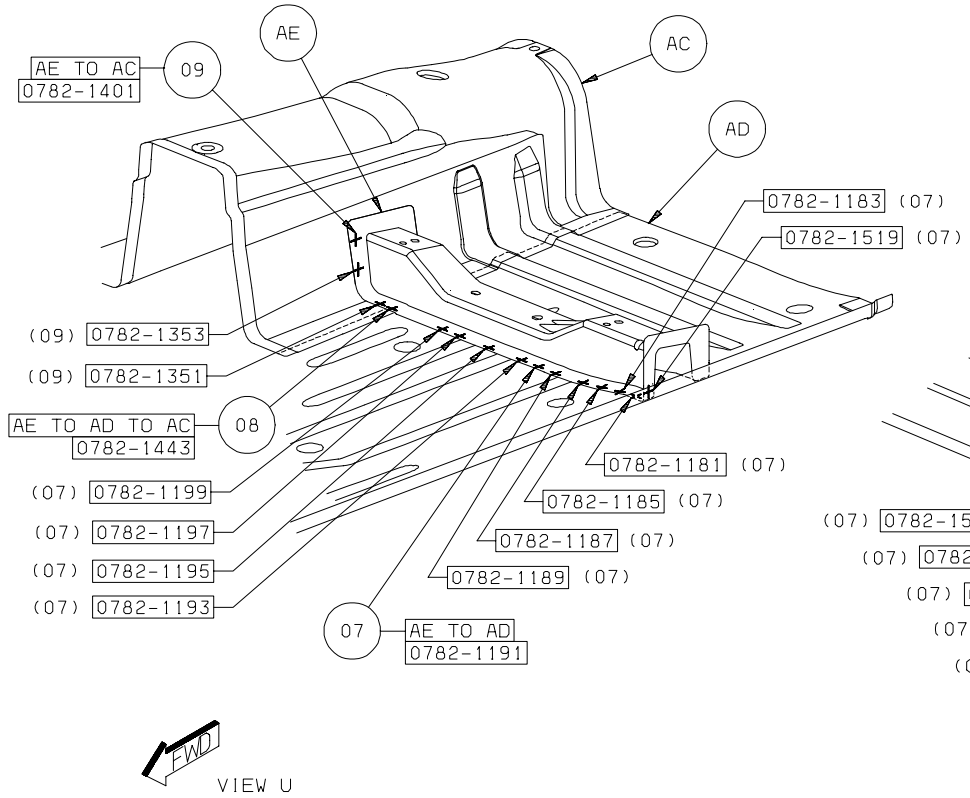

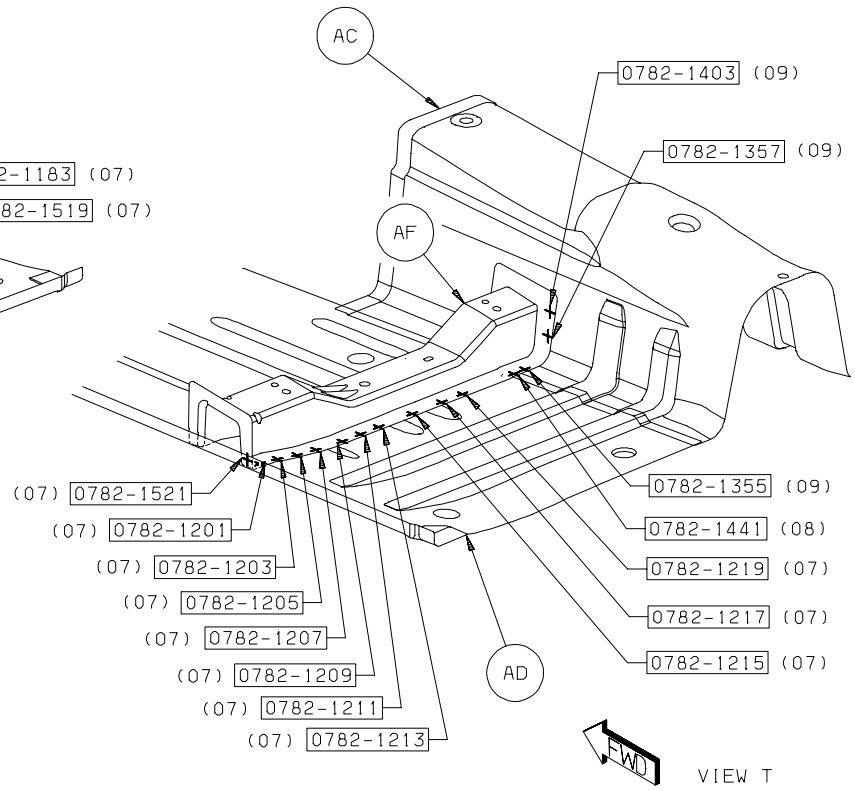

Back To Index

10. AG TO AE TO AC 3 S/WELD
11. AG TO AC 3 S/WELD
12. AF TO AD 2 S/WELD
13. AF TO AE TO AD 4 S/WELD

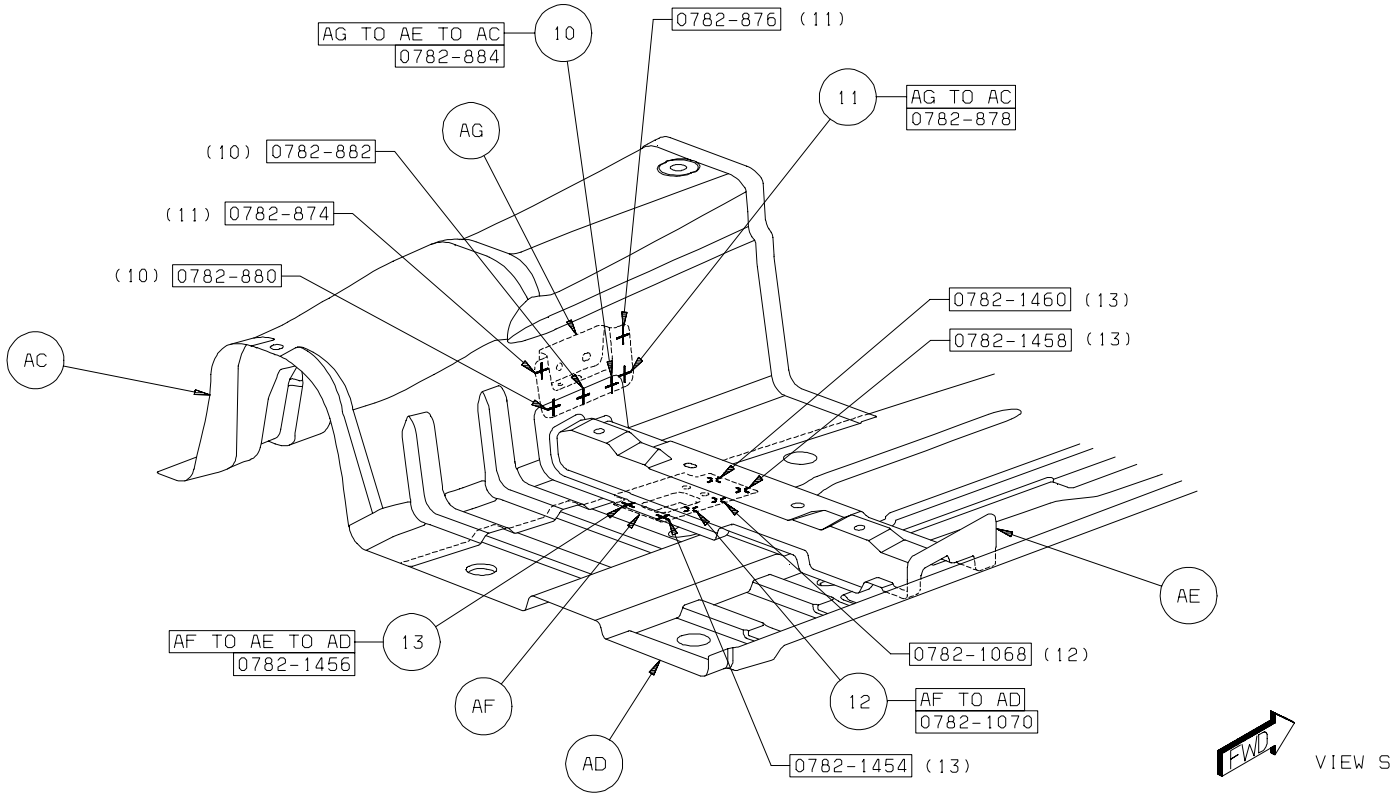

Back To Index

14. AF TO AE TO AD 4 S/WELD
15. AG TO AE TO AC 3 S/WELD
16. AG TO AC TO AB 2 S/WELD
17. AG TO AC 1 S/WELD
18. AF TO AD 2 S/WELD

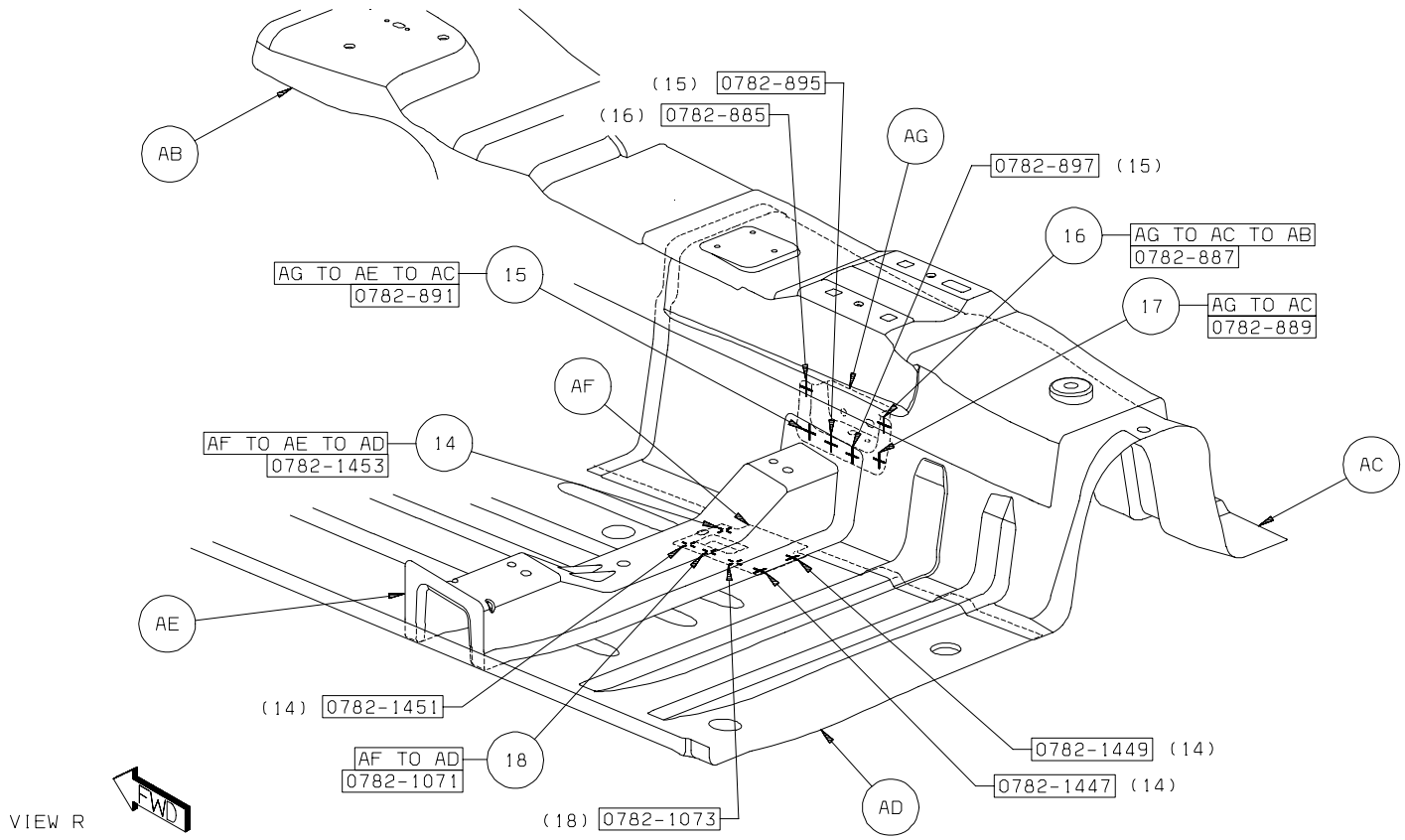

Back To Index

19. AC TO AA 19 S/WELD
20. AD TO AC TO AA 1 S/WELD

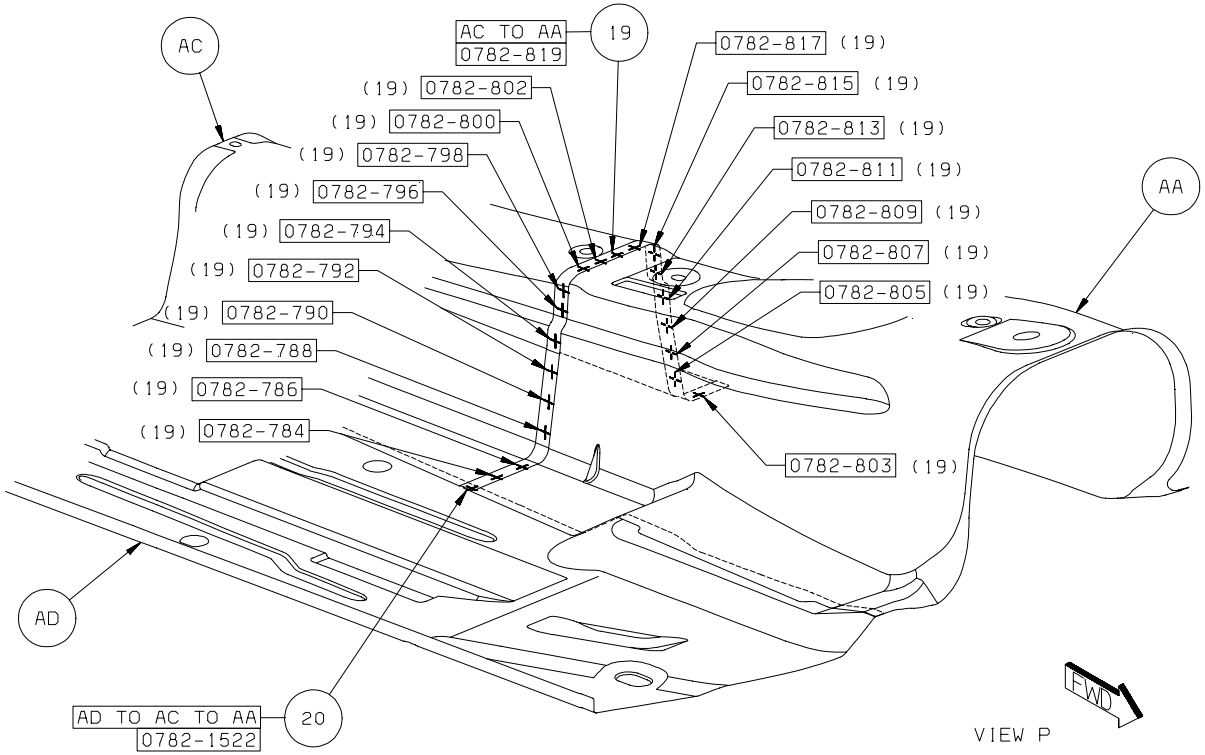

Back To Index

21. AH TO AA 8 S/WELD
22. AH TO AD 10 S/WELD
23. AH TO AD TO AA 1 S/WELD

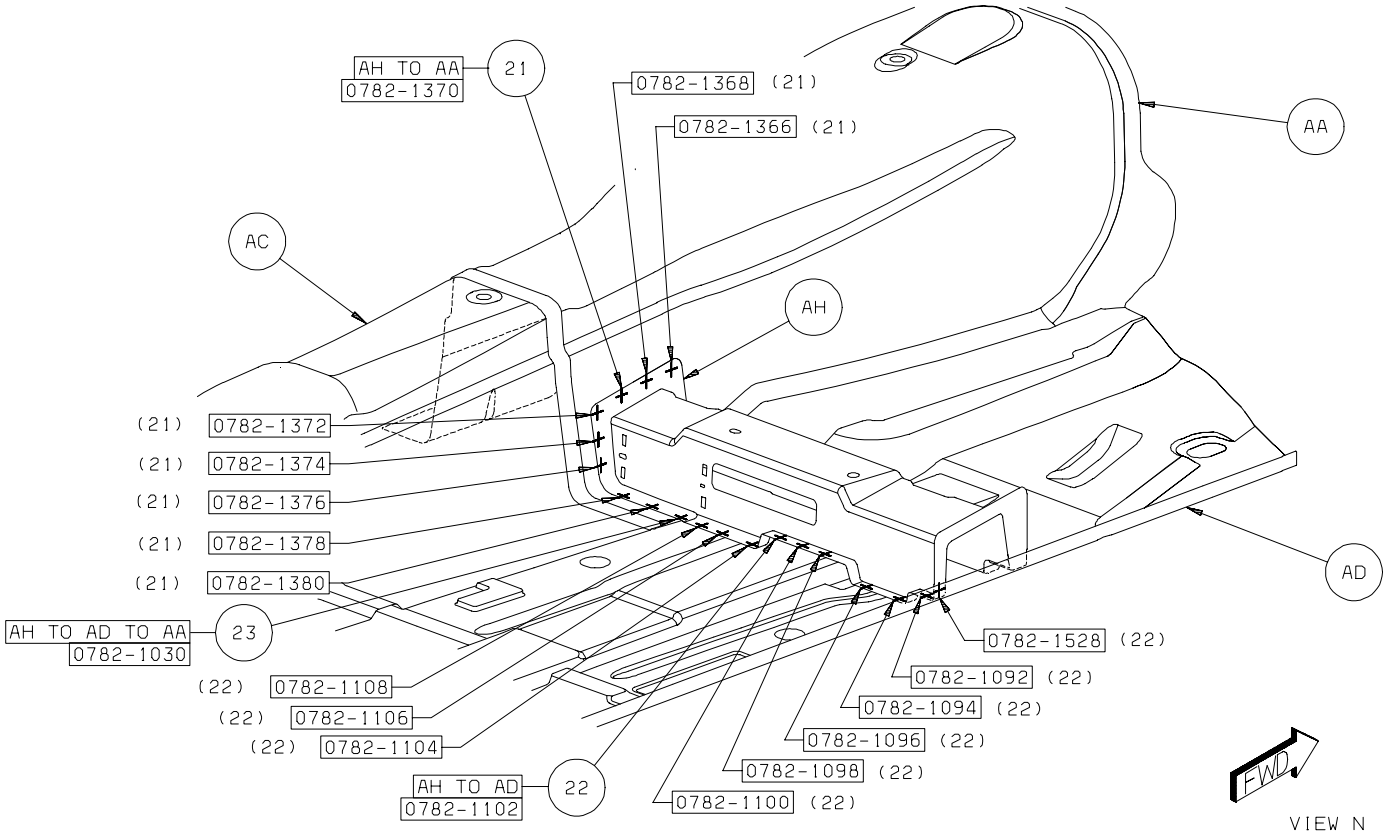

Back To Index

24. AH TO AA 4 S/WELD
25. AH TO AD TO AA 1 S/WELD
26. AH TO AD 11 S/WELD

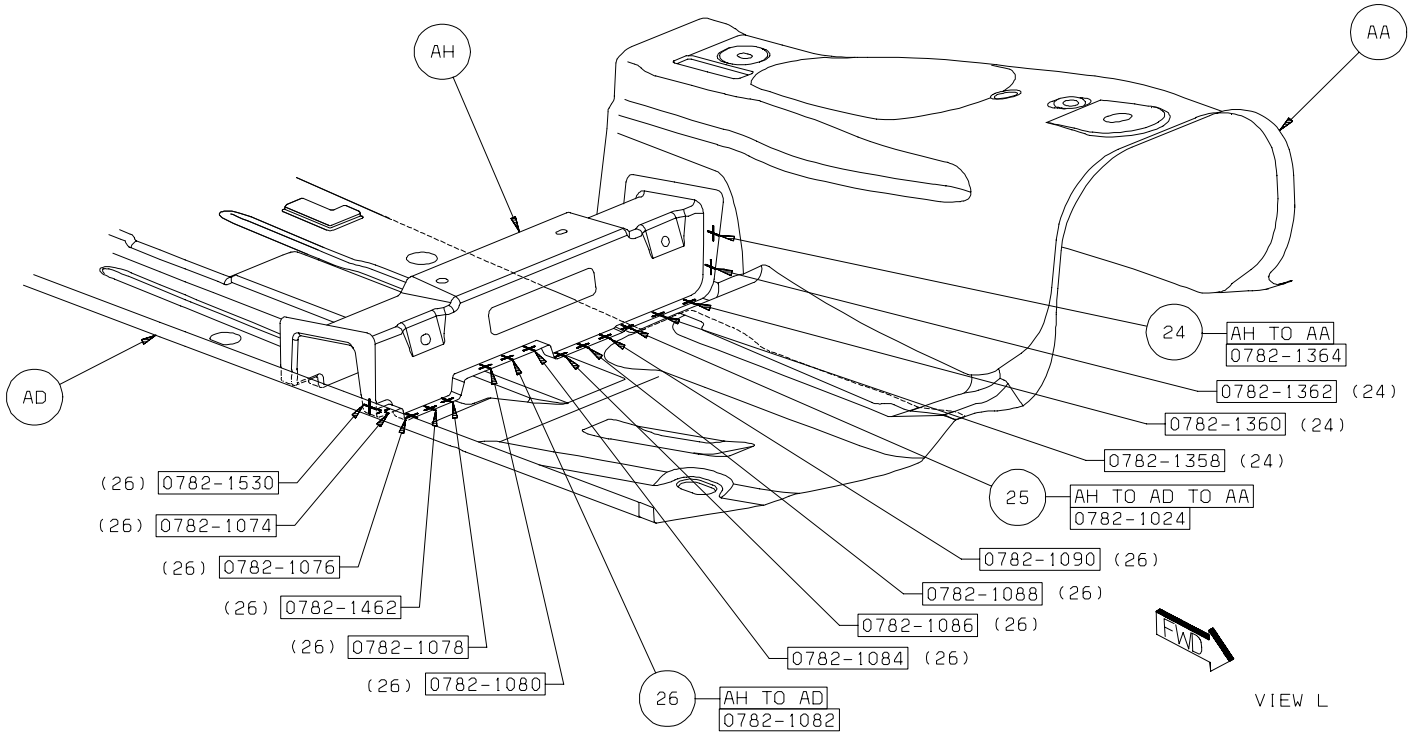

Back To Index

27. AH TO AD TO AA 1 S/WELD
28. AH TO AA 5 S/WELD
29. AH TO AD 10 S/WELD

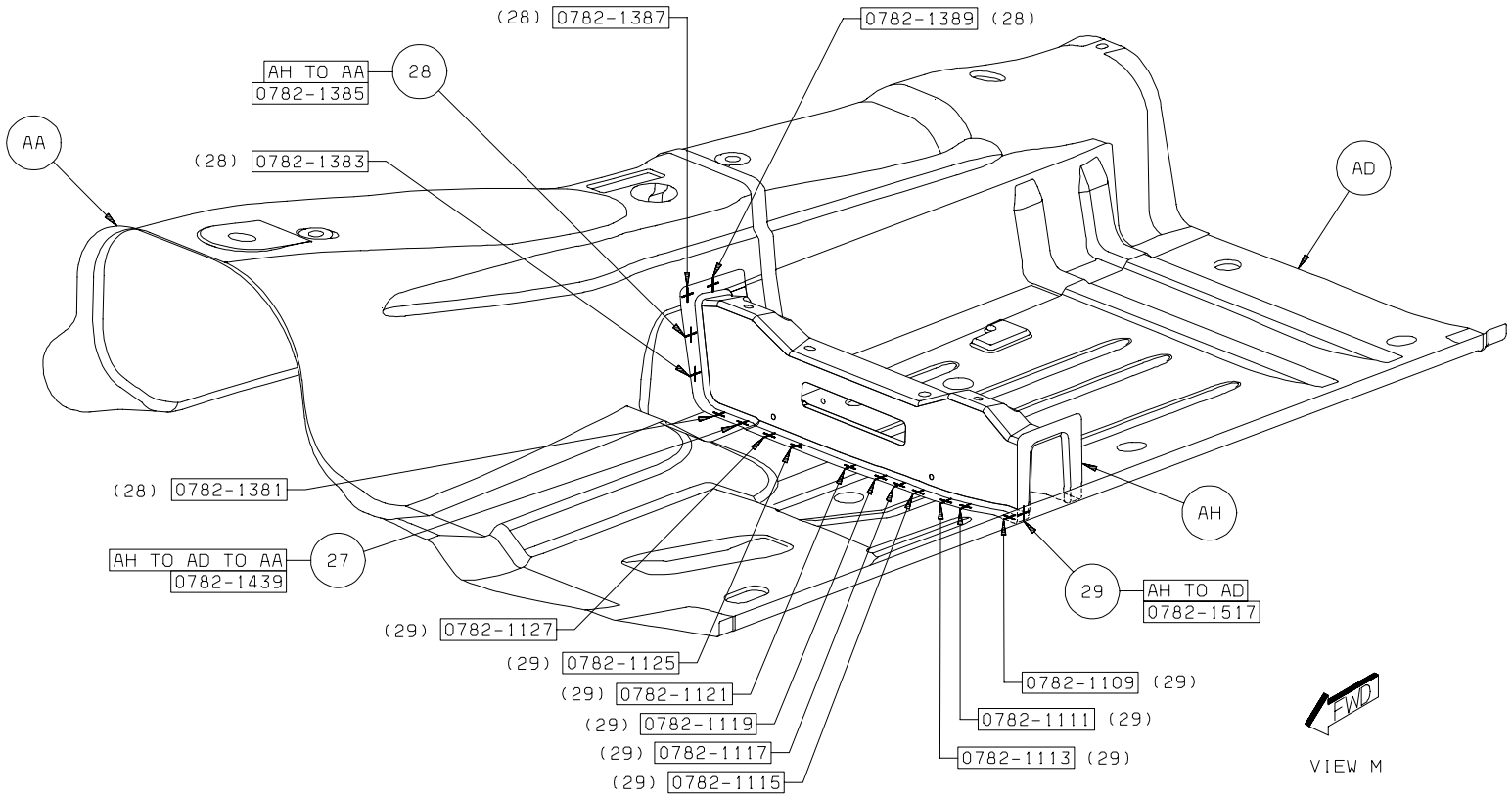

Back To Index

30. AH TO AD 12 S/WELD
31. AH TO AA 4 S/WELD
32. AH TO AD TO AA 1 S/WELD

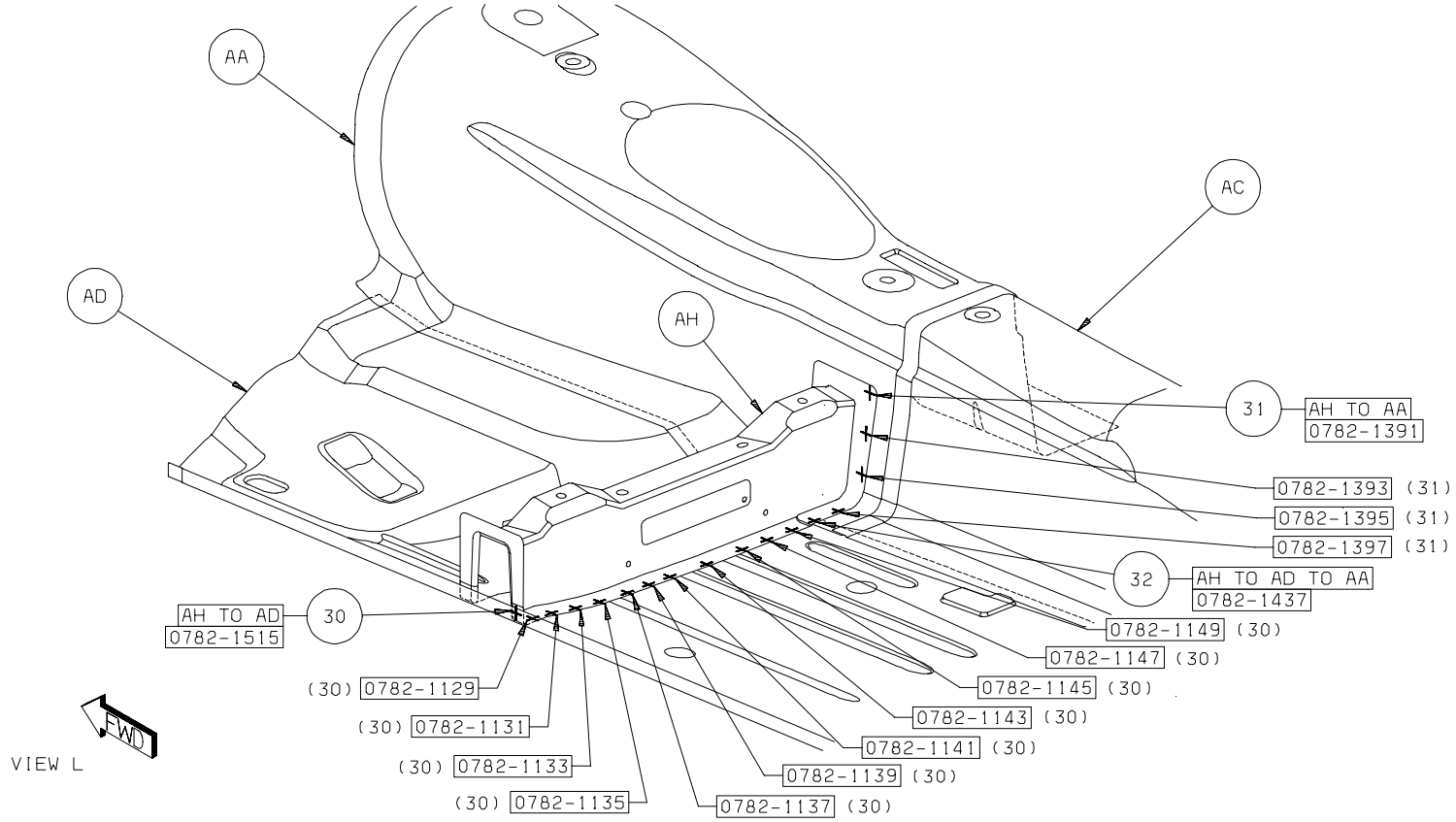

Back To Index

33. AJ TO AH TO AD 1 S/WELD
34. AJ TO AD 14 S/WELD
35. AJ TO AH 2 S/WELD

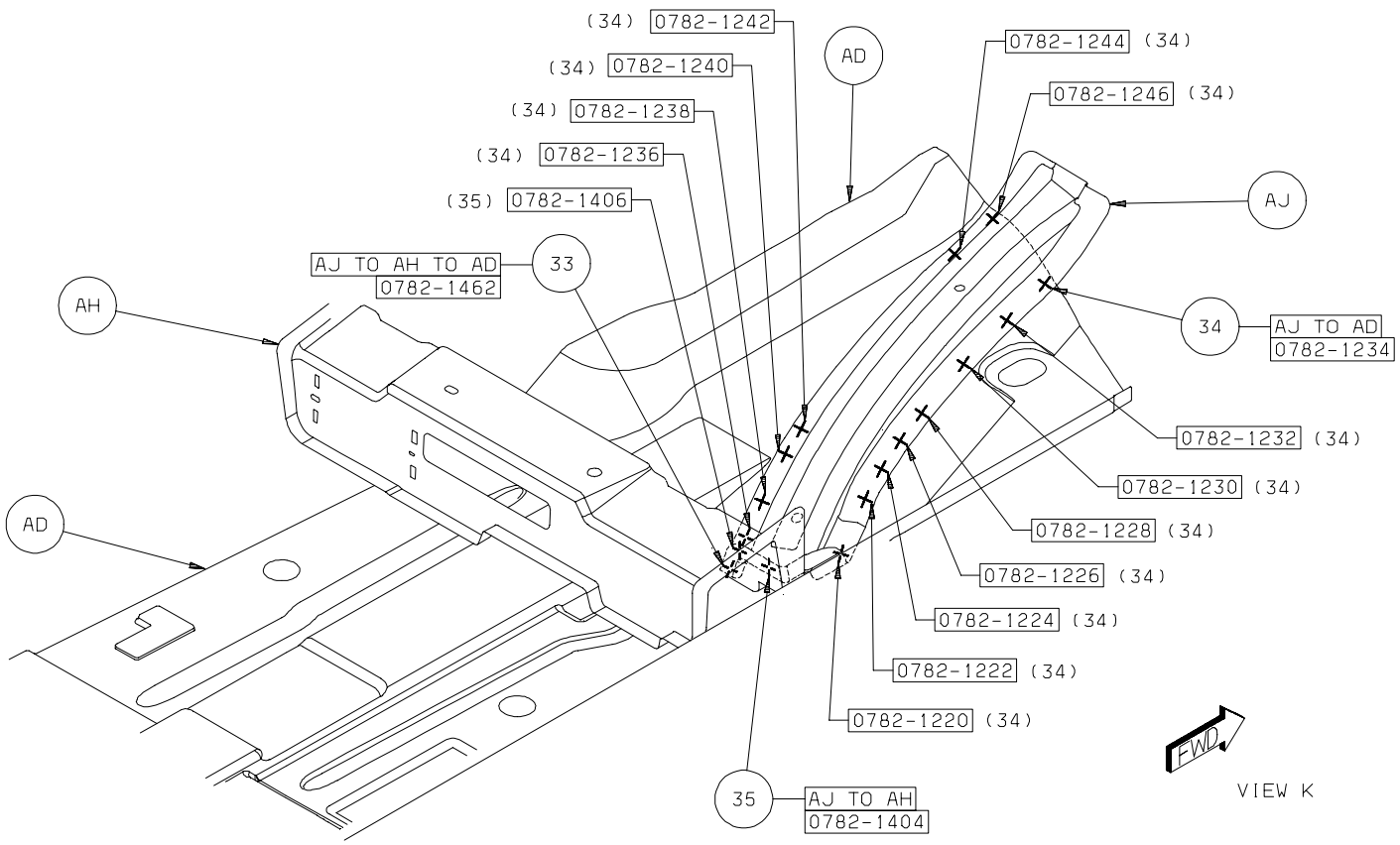

Back To Index

36. AK TO AD TO AA 5 S/WELD
37. AJ TO AD 6 S/WELD
38. AK TO AD 8 S/WELD

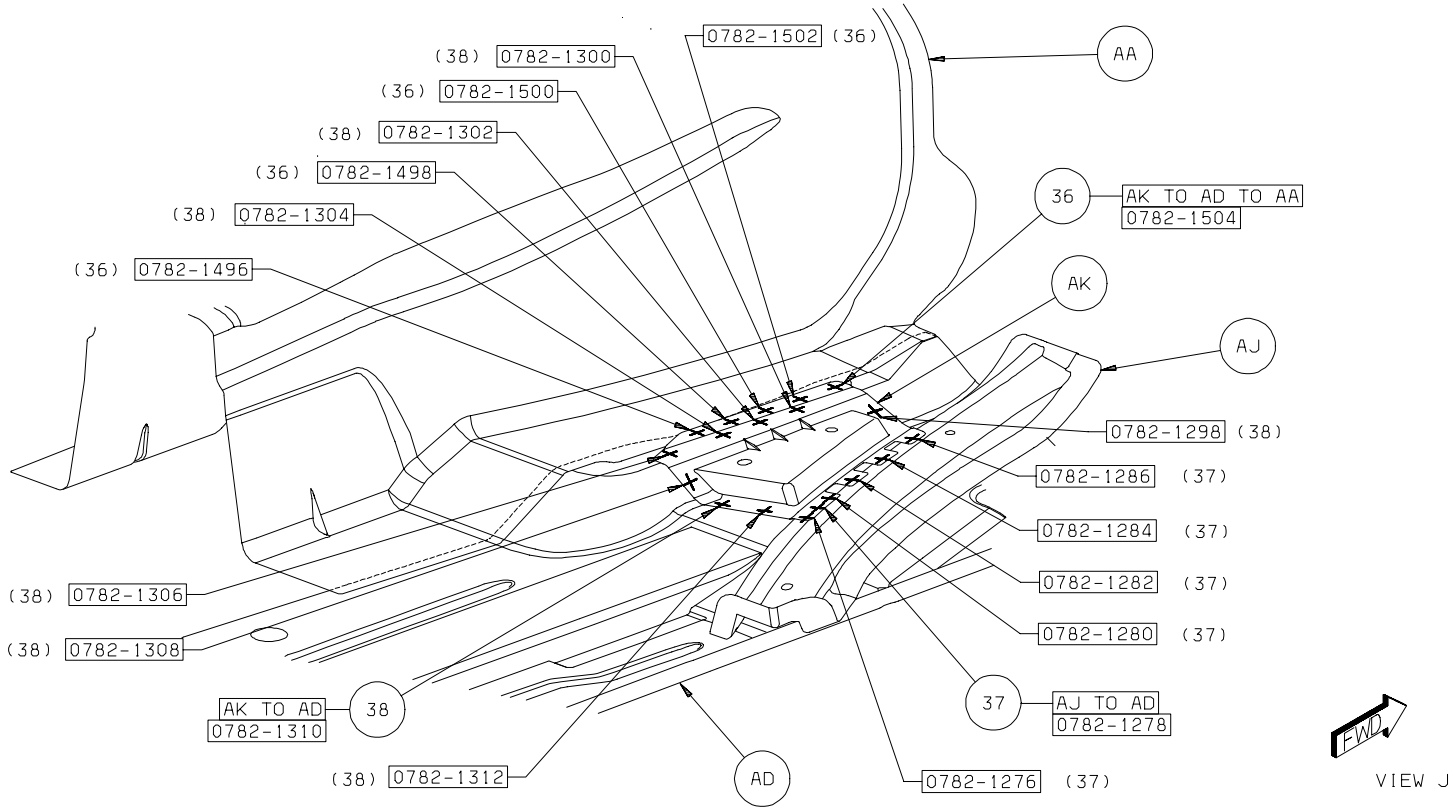

Back To Index

39. AJ TO AH 3 S/WELD
40. AJ TO AD 15 S/WELD
41. AK TO AJ TO AD 6 S/WELD

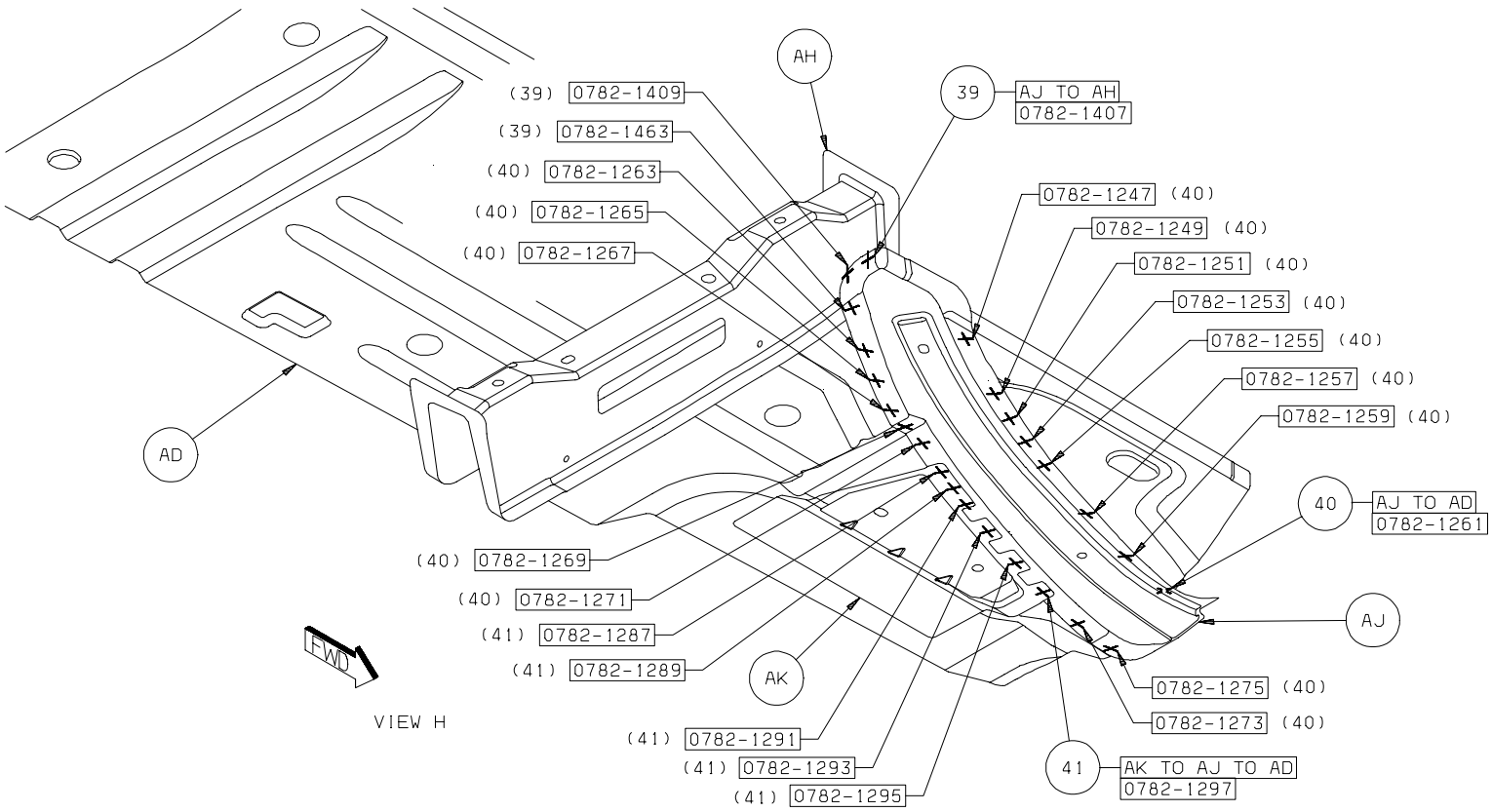

Back To Index

42. AK TO AD 14 S/WELD
43. AL TO AK TO AD 5 S/WELD

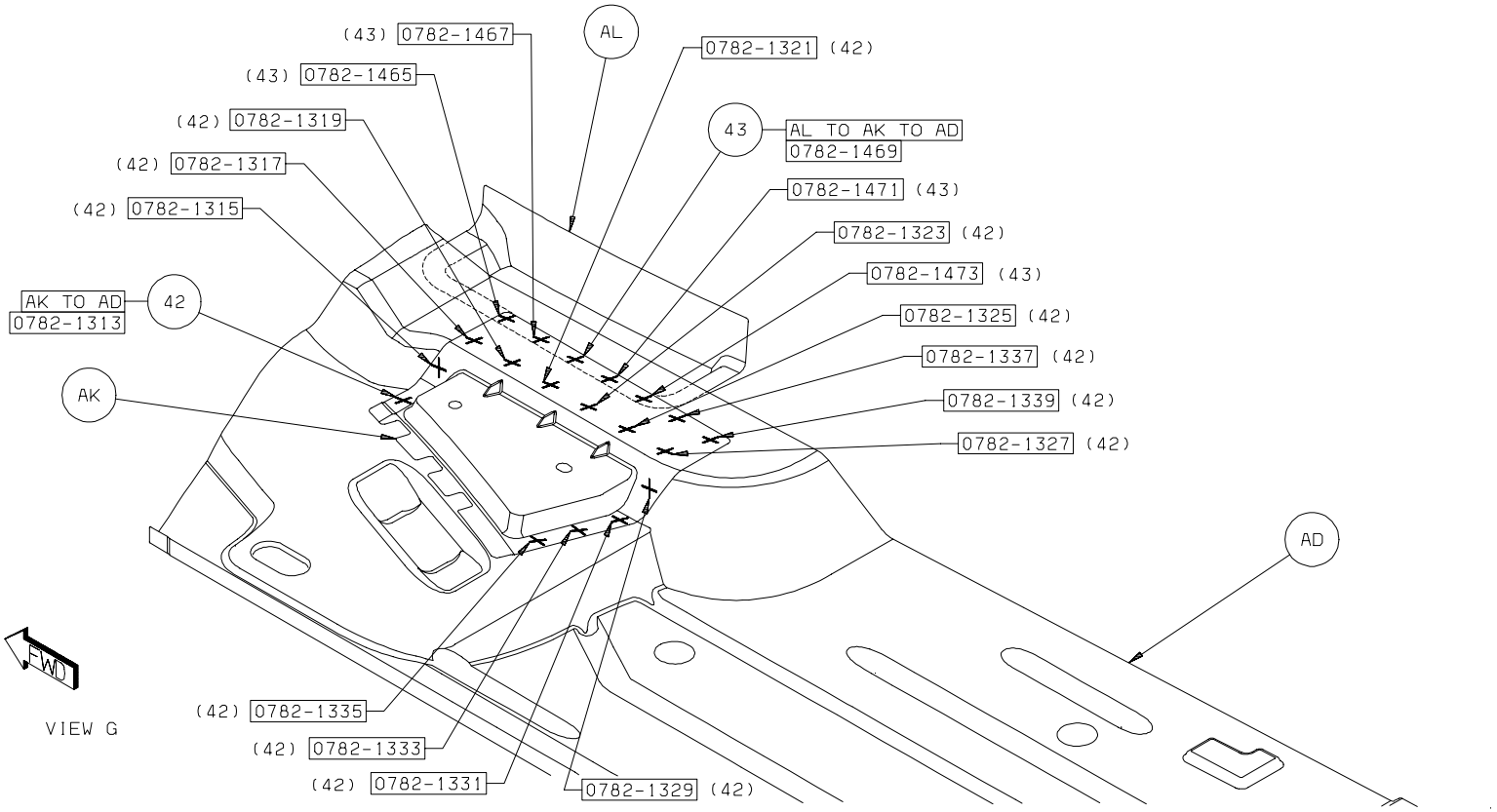

Back To Index

44. AF TO AD TO AC 3 S/WELD
45. AD TO AA 10 S/WELD
46. AD TO AC 10 S/WELD

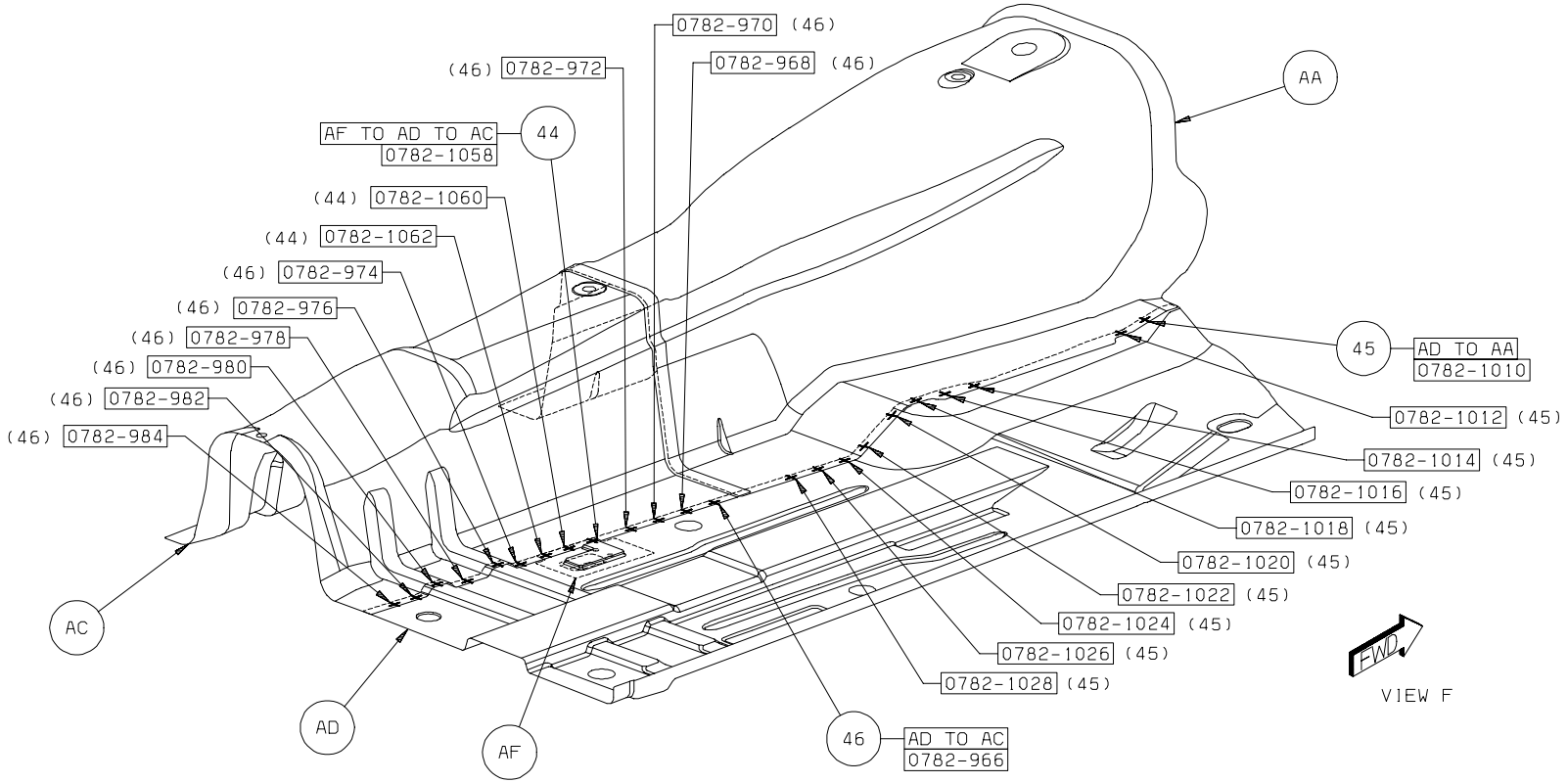

Back To Index

47. AD TO AA 14 S/WELD
48. AF TO AD TO AC 3 S/WELD
49. AD TO AC 11 S/WELD
50. AD TO AC TO AA 1 S/WELD

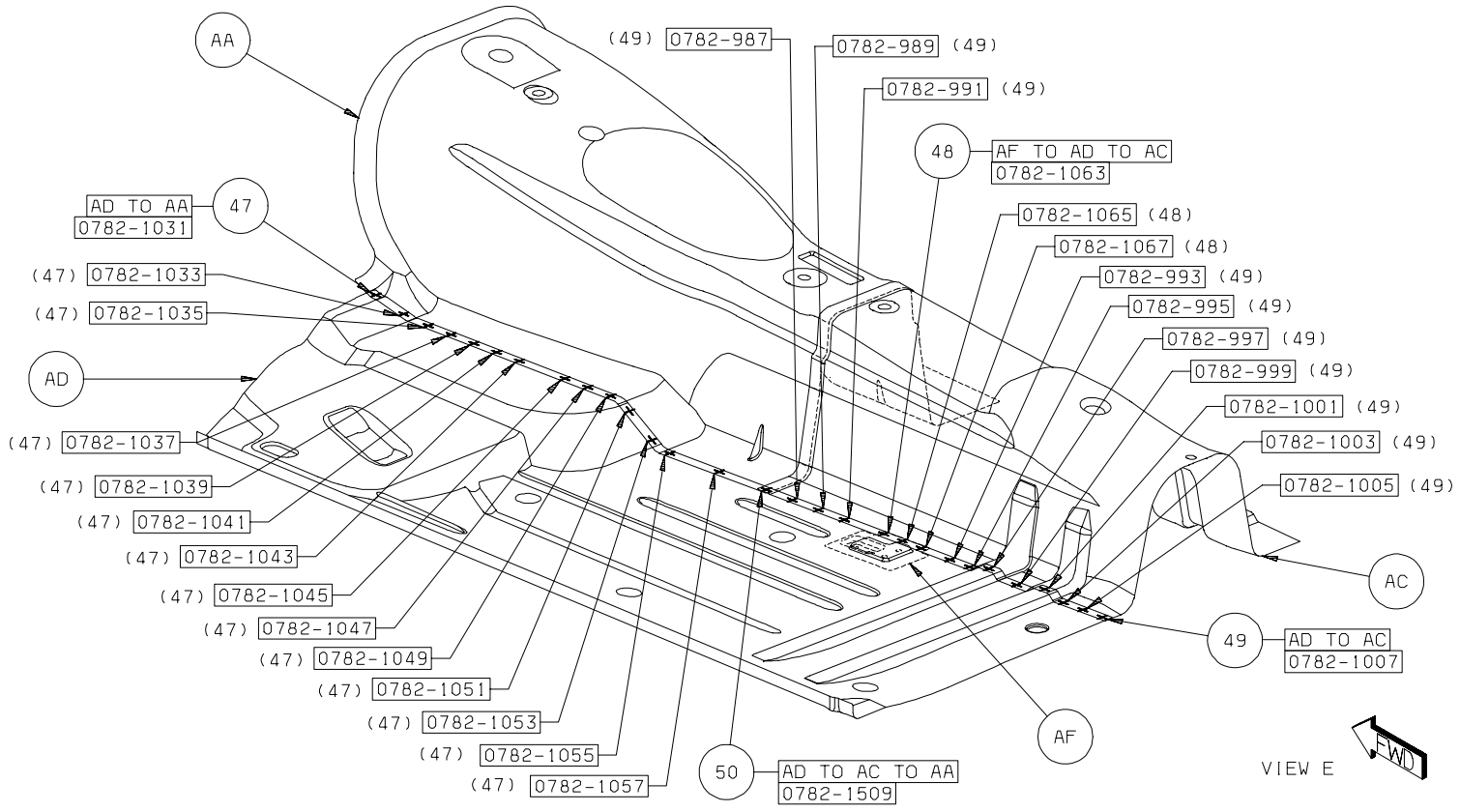

Back To Index

51. AL TO AA 17R 9L S/WELD
52. AL TO AD TO AA 2 S/WELD
53. AL TO AD 7 S/WELD

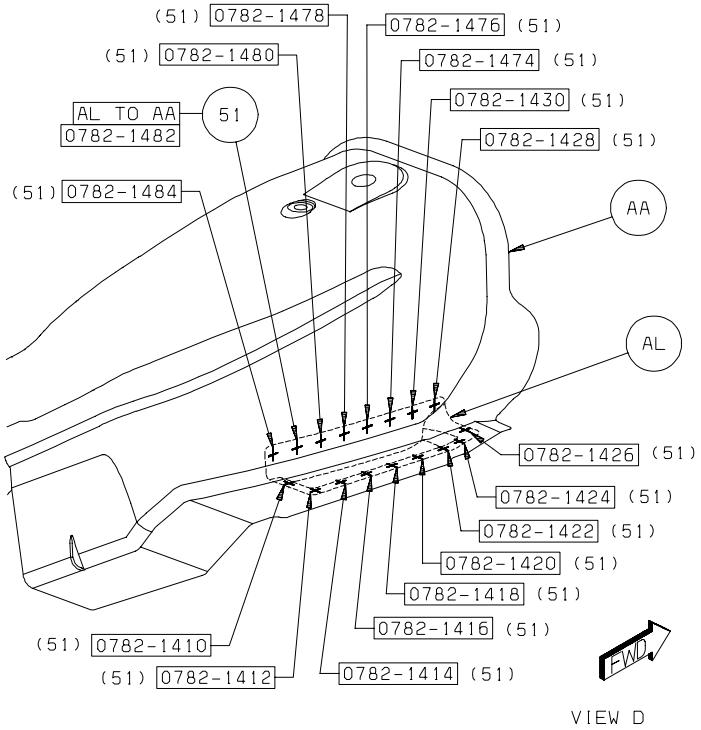

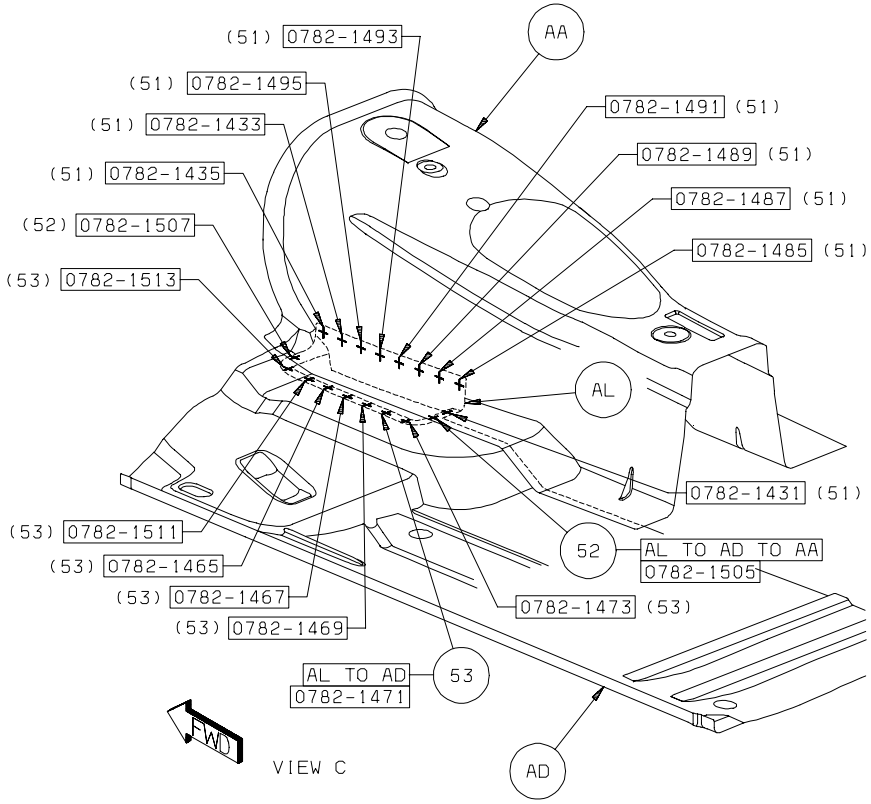

Back To Index

54. AM TO AA 2 PROJ WELD
55. AM TO AC 2 PROJ WELD
56. AM TO AD 7 PROJ WELD

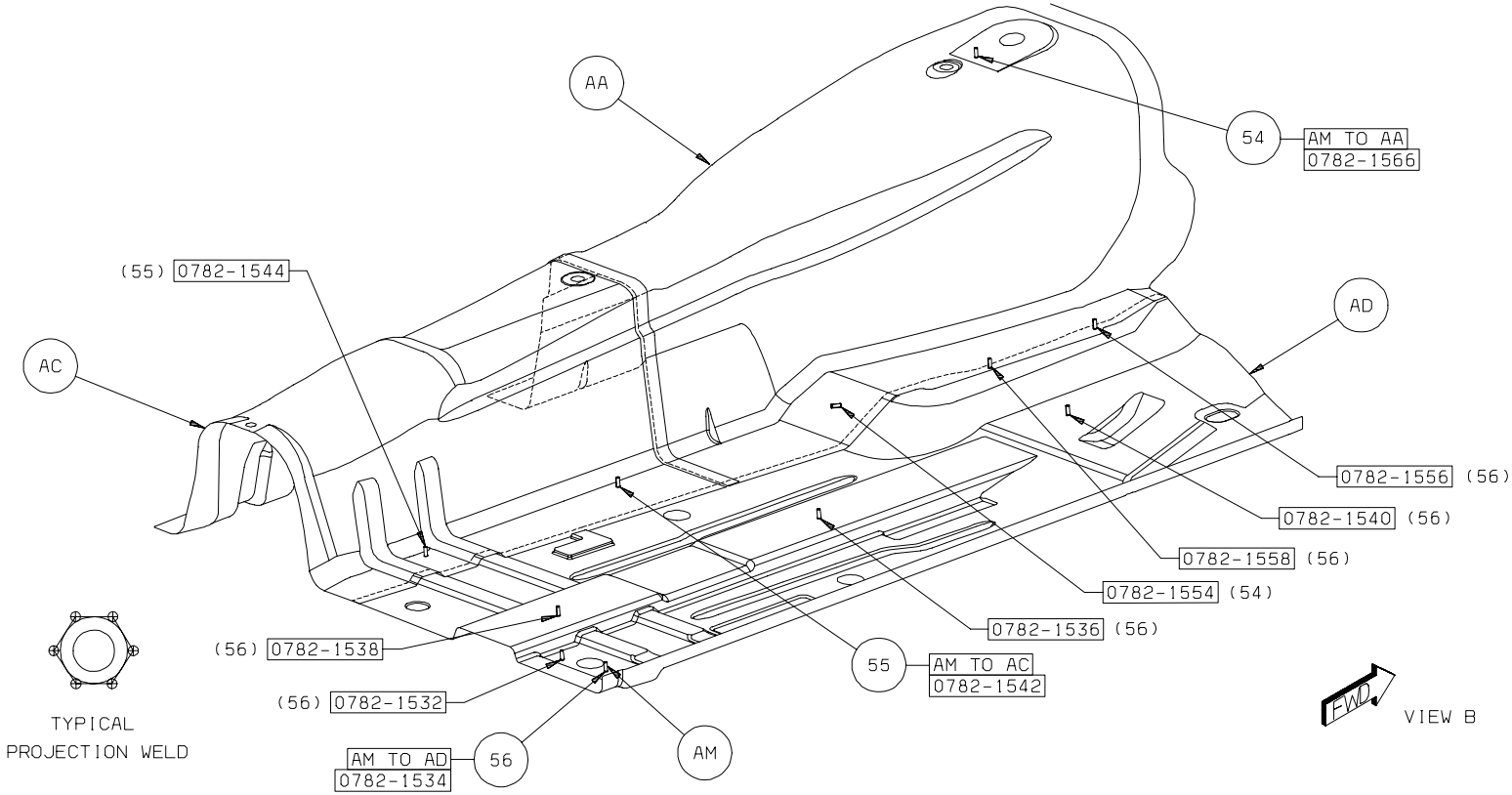

Back To Index

57. AM TO AD 9 PROJ WELD
58. AM TO AA 1 PROJ WELD
59. AM TO AC 2 PROJ WELD

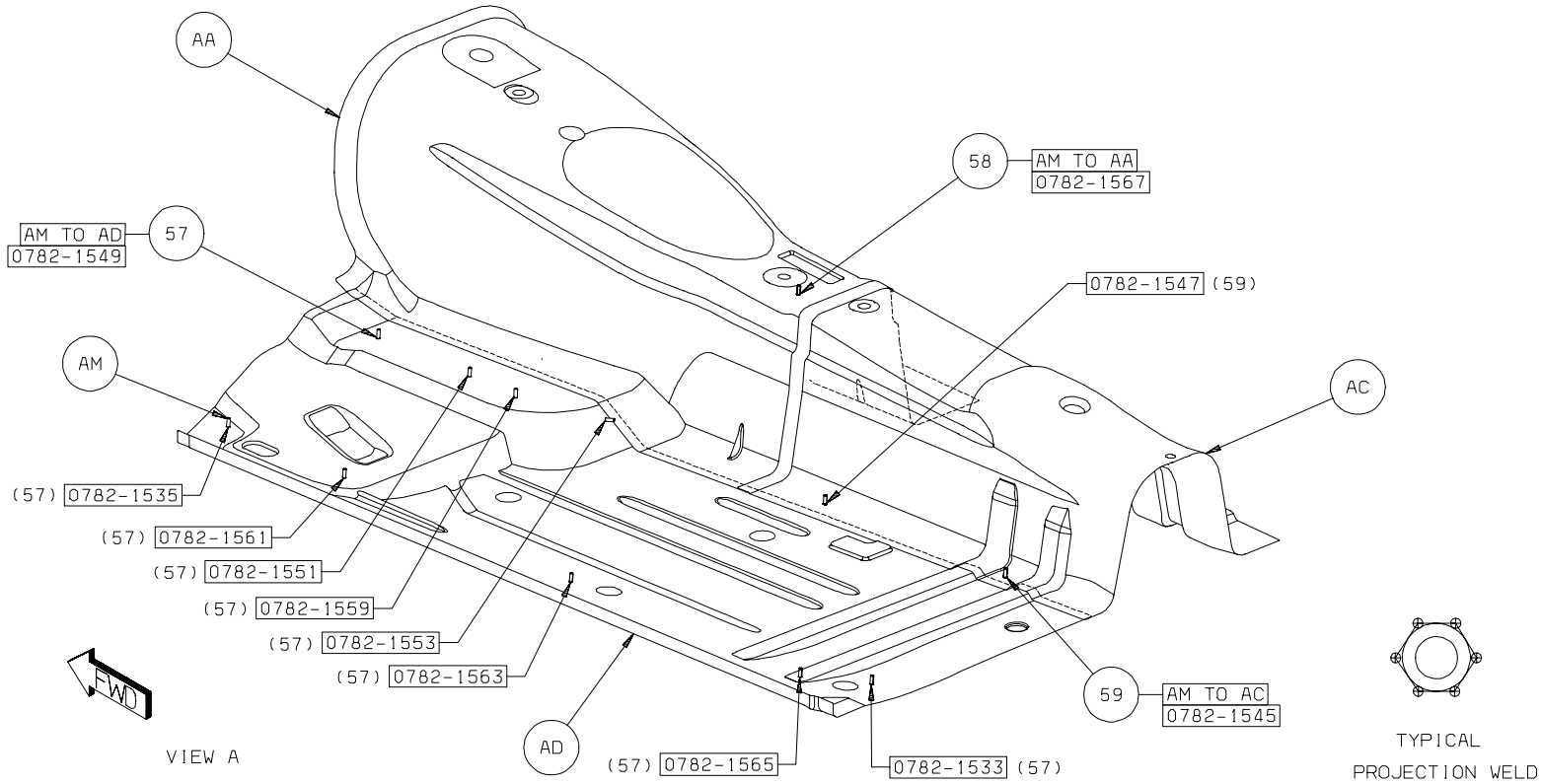

Back To Index

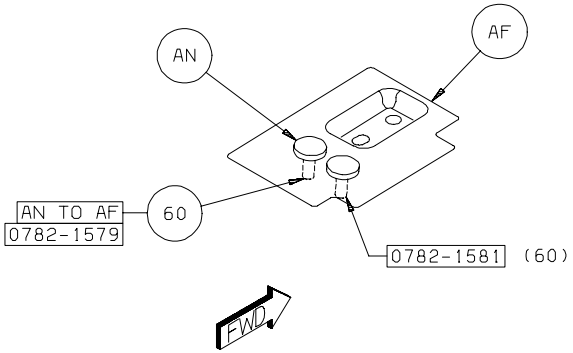

VIEW ZZ

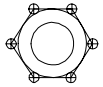

TYPICAL
PROJECTION WELD

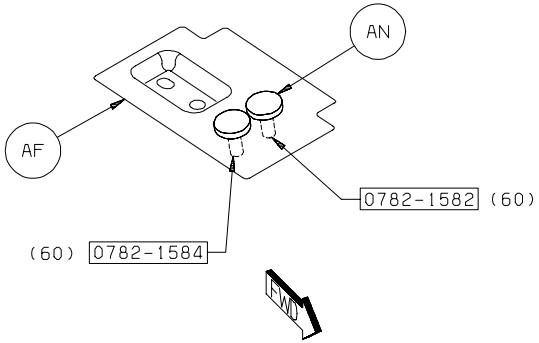

VIEW ZY

Back To Index

PARTS IDENTIFICATION LEGEND, OVERVIEW 3

AA	PANEL - TOEBOARD CROSSMEMBER -
AB	REINF - TOEBOARD CROSSMEMBER INR RT -
AB	REINF - TOEBOARD CROSSMEMBER INR LT -
AC	PANEL - EXTENSION FRT RAIL OTR RT -
AC	PANEL - EXTENSION FRT RAIL OTR LT
AD	PANEL - EXTENSION FRT RAIL INR RT
AD	PANEL - EXTENSION FRT RAIL INR LT -
AE	BRACKET - ENGINE CRADLE MOUNTING UPR RR RT -
AE	BRACKET - ENGINE CRADLE MOUNTING UPR RR LT -
AF	PANEL - FRT SIDE RAIL INR RT -
AG	REINF - FRT SIDE RAIL BUMPER MOUNTING RT -
AG	REINF - FRT SIDE RAIL BUMPER MOUNTING LT -
AH	BRACKET - HEADLAMP MOUNTING RT -
AH	BRACKET - HEADLAMP MOUNTING LT -
AJ	BRACKET - ENGINE CRADLE MOUNTING LWR FRT RT -
AJ	BRACKET - ENGINE CRADLE MOUNTING LWR FRT LT -
AK	BRACKET - ENGINE CRADLE MOUNTING UPR FRT RT -
AK	BRACKET - ENGINE CRADLE MOUNTING UPR FRT LT -
AL	TAPPING PLATE - FLOATING -
AM	NUT/WELD.SQ - SQUARE - FRT SIDE RAIL ASSY LT
AN	STUD.WELD/EXTERNAL - HEADER.PT.SPECIAL - DEAD PEDAL TRIM PNL ATTACH
AP	PANEL - SHOCK TOWER MOUNTING FRT RT -
AR	BRACKET - FRT SUSP UPR CONTROL ARM RT -
AT	REINF - FRT SHOCK TOWER RT -
AT	REINF - SHOCK TOWER TO LOAD BEAM RT - SHOCK TOWER RH
AU	PANEL - FRT WHEELHOUSE FRT RT -
AV	PANEL - FRT WHEELHOUSE RR RT -
AX	CHARTONLY-NONTORQUE HEADER.PT.LOCK.FEAT. SPECIAL - SHOCK TOWER GROUND
AY	NUT/WELD.HEX - NO.FIN - FRT STRUT TWR TO TWR BEAM ATTACH
AZ	BRACKET - RETAINER ENGINE CRADLE TAPPING PLATE FRT -
BA	REINF - RAIL FRT - FRT RAIL

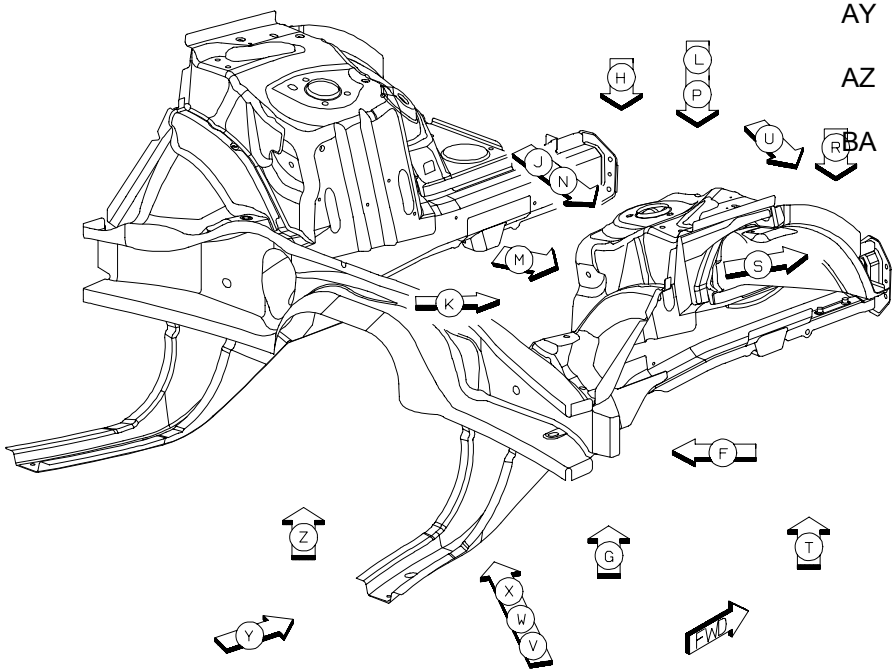

Back To Index

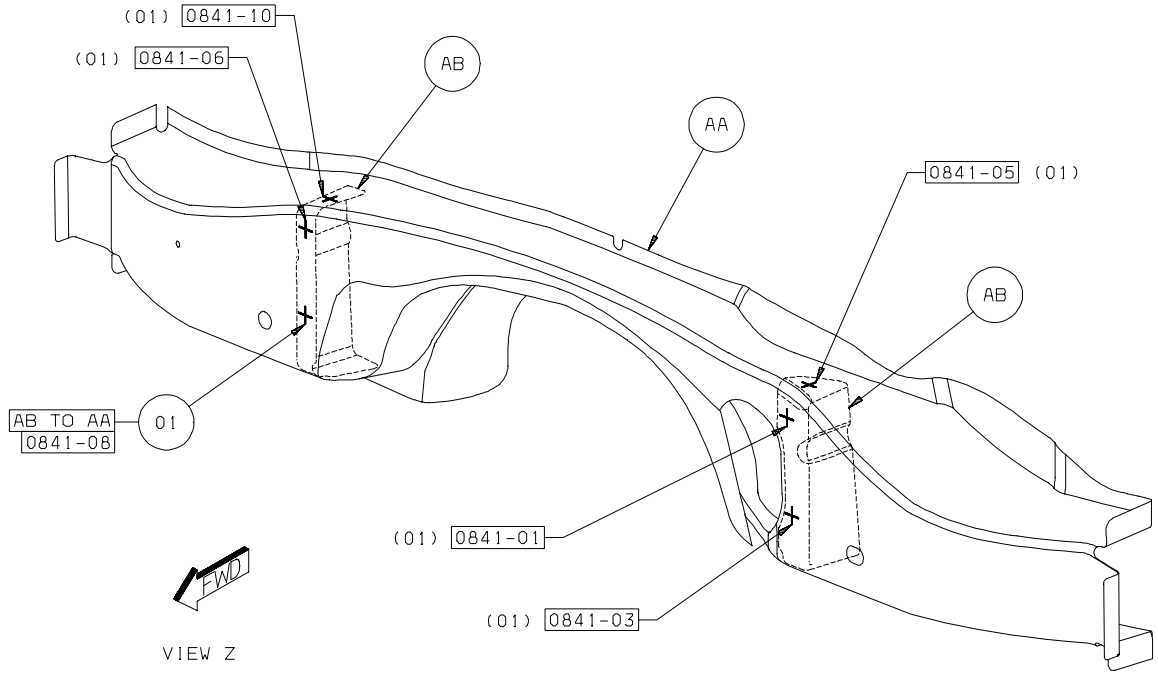

Back To Index

2. AE TO AC 1/SD S/WELD
3. AE TO AD TO AC 2/SD S/WELD
4. AD TO AC 11/SD S/WELD
5. AK TO AJ 4/SD S/WELD
6. AG TO AJ 1/SD S/WELD
7. AK TO AJ TO AG 1/SD S/WELD

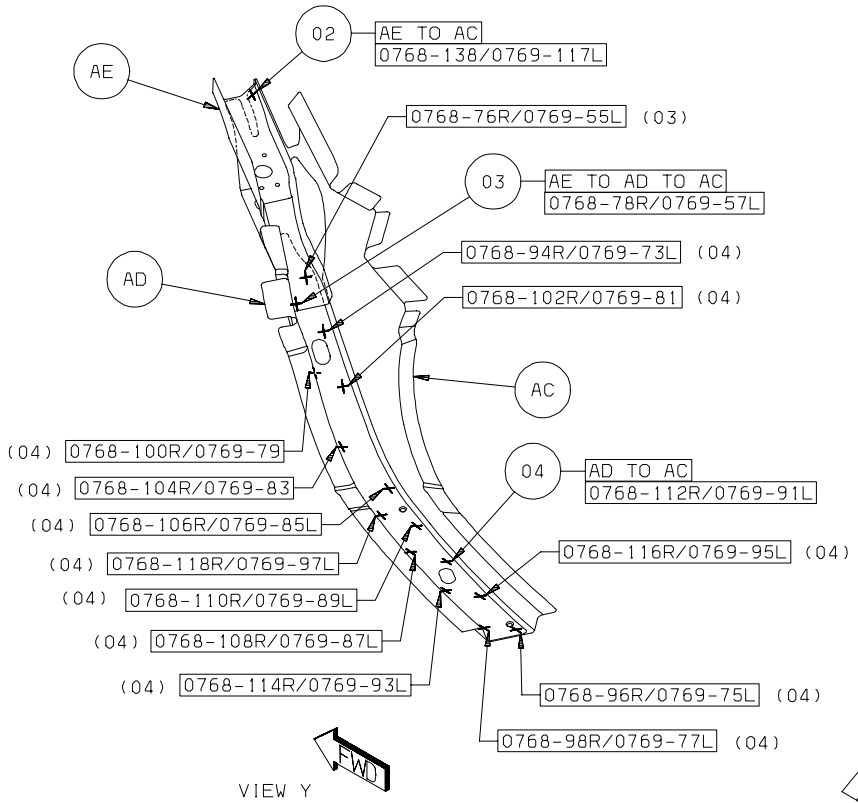

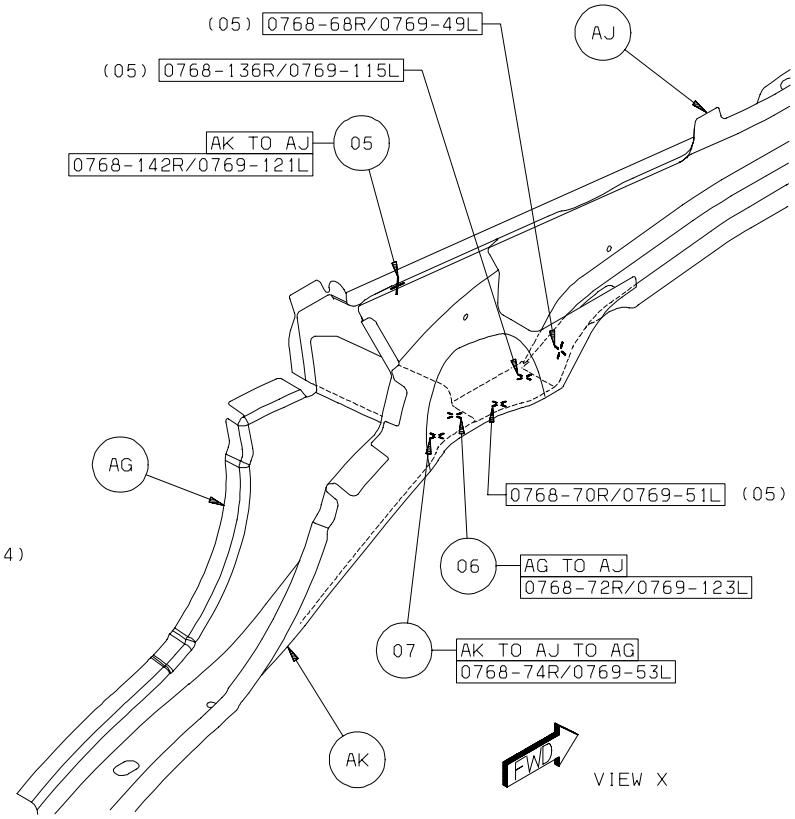

Back To Index

8. AE TO AC TO AF 1/SD S/WELD
9. AE TO AC 7/SD S/WELD

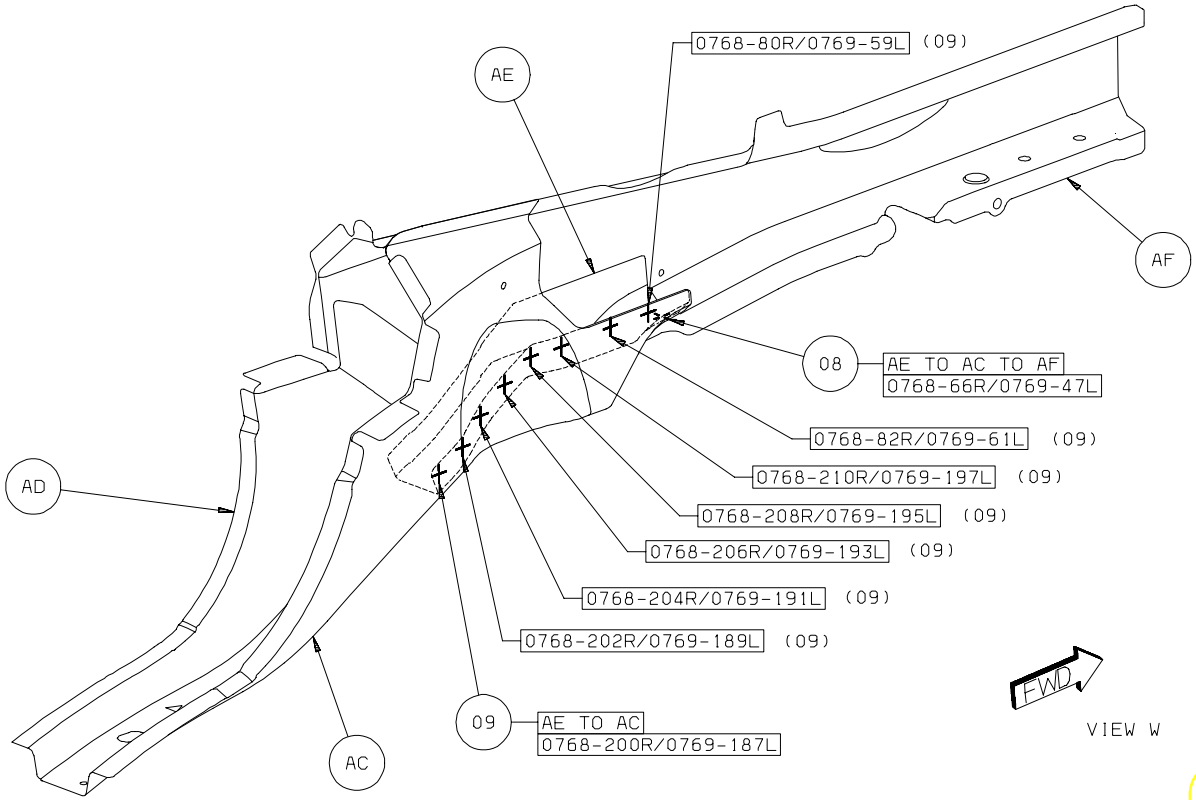

Back To Index

10. AF TO AD 5/SD S/WELD
11. AF TP AE 6/SD S/WELD
12. AF TO AE TO AD 1/SD S/WELD
13. AE TO AD 2/SD S/WELD

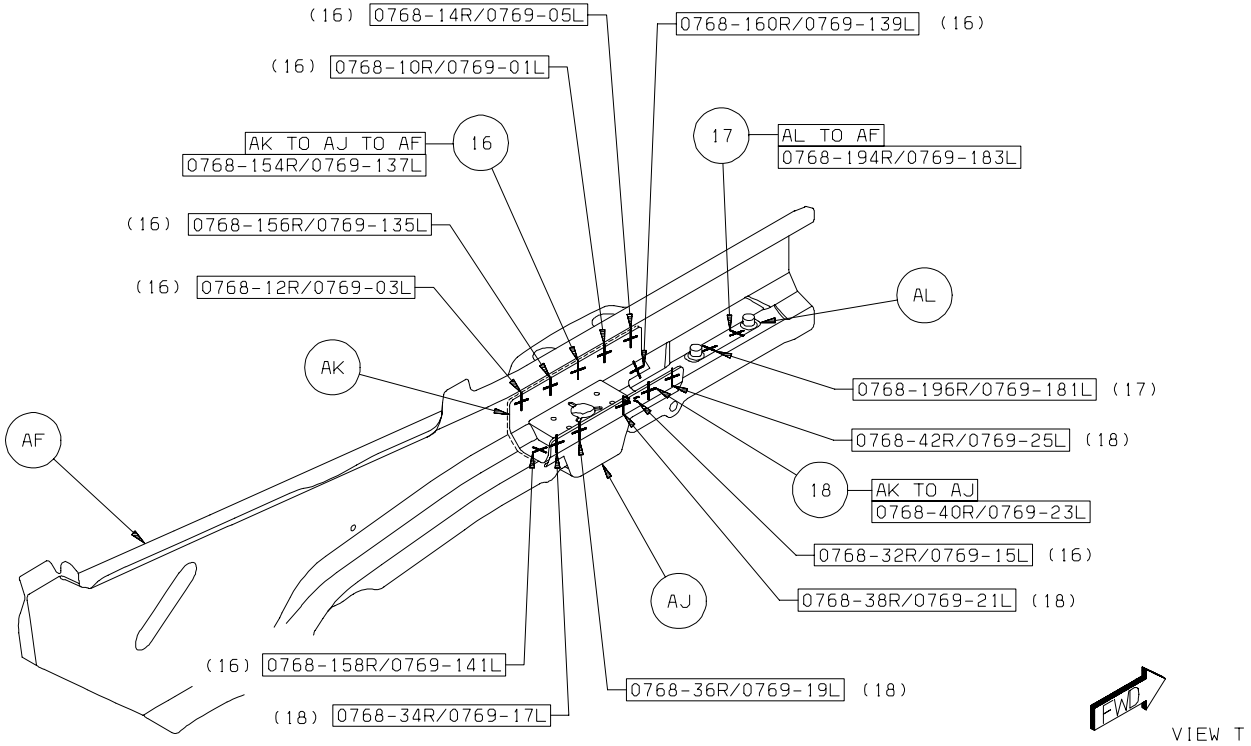

Back To Index

14. AH TO AF 5/SD S/WELD
15. AG TO AF 6/SD S/WELD

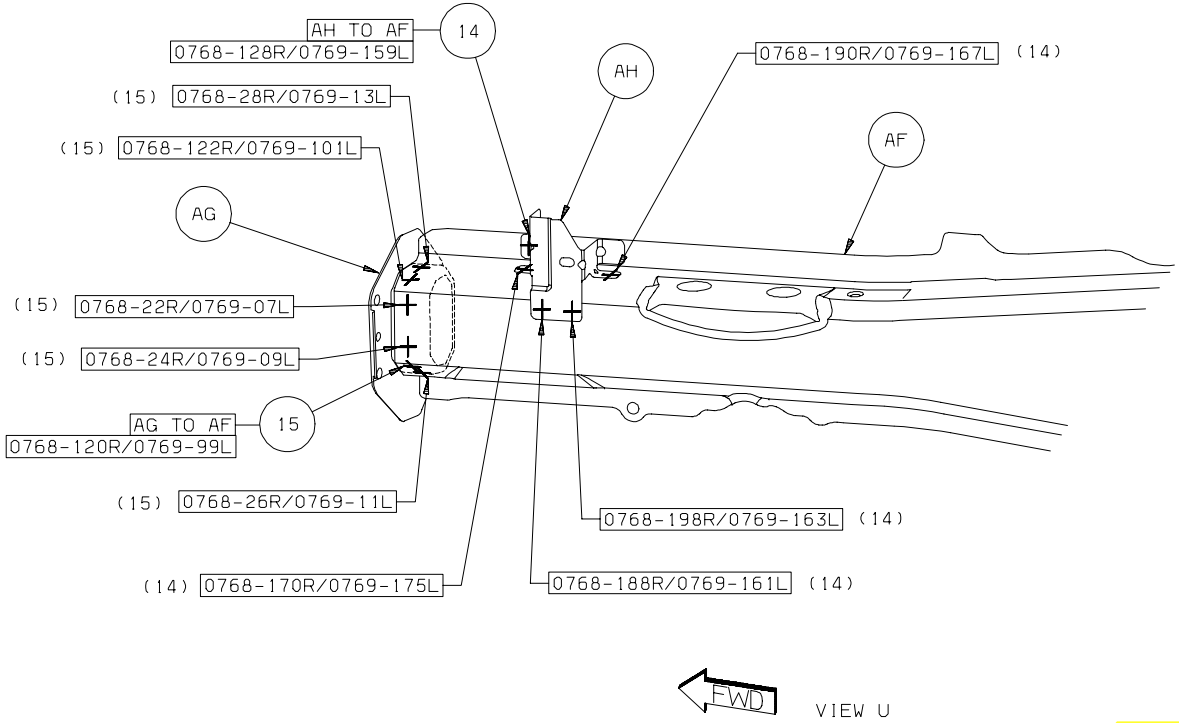

Back To Index

16. AK TO AJ TO AF 8/SD S/WELD
17. AL TO AF 2/SD S/WELD
18. AK TO AJ 5/SD S/WELD

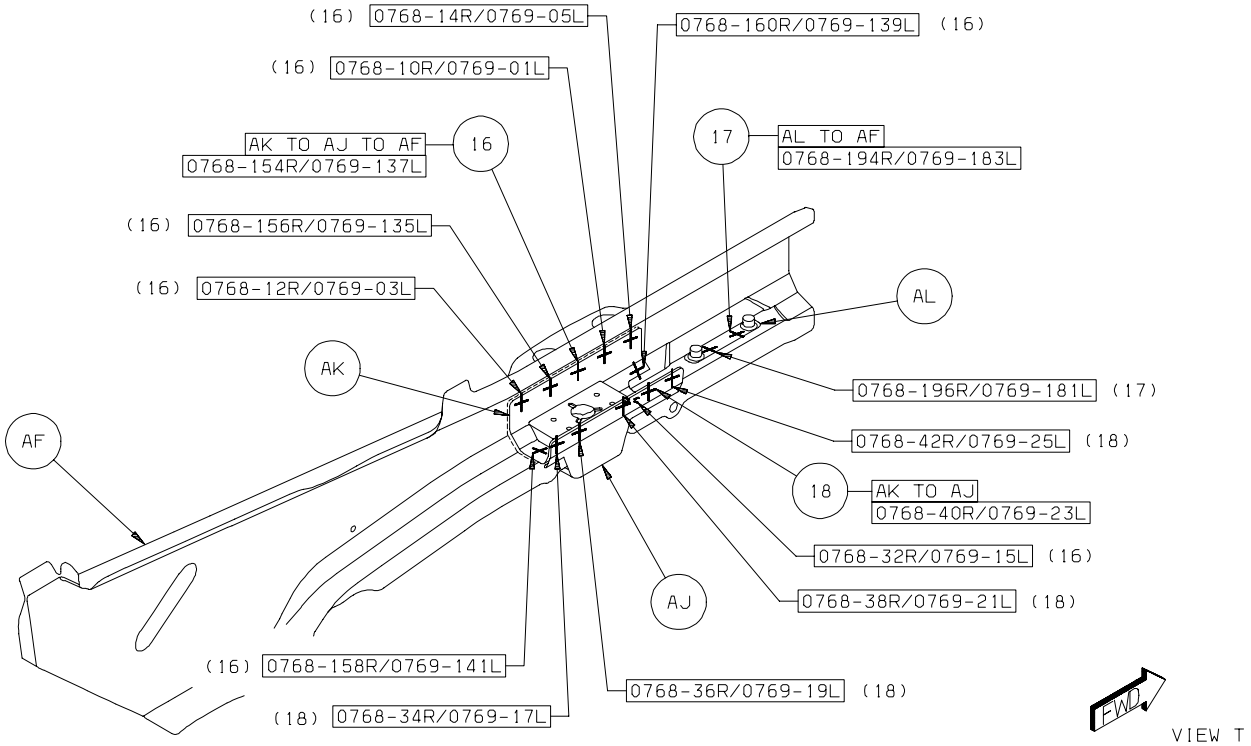

Back To Index

19. AM TO AG 4/SD PROJ WELD
20. AM TO AH 1/SD PROJ WELD
21. AN TO AF 1/SD PROJ WELD

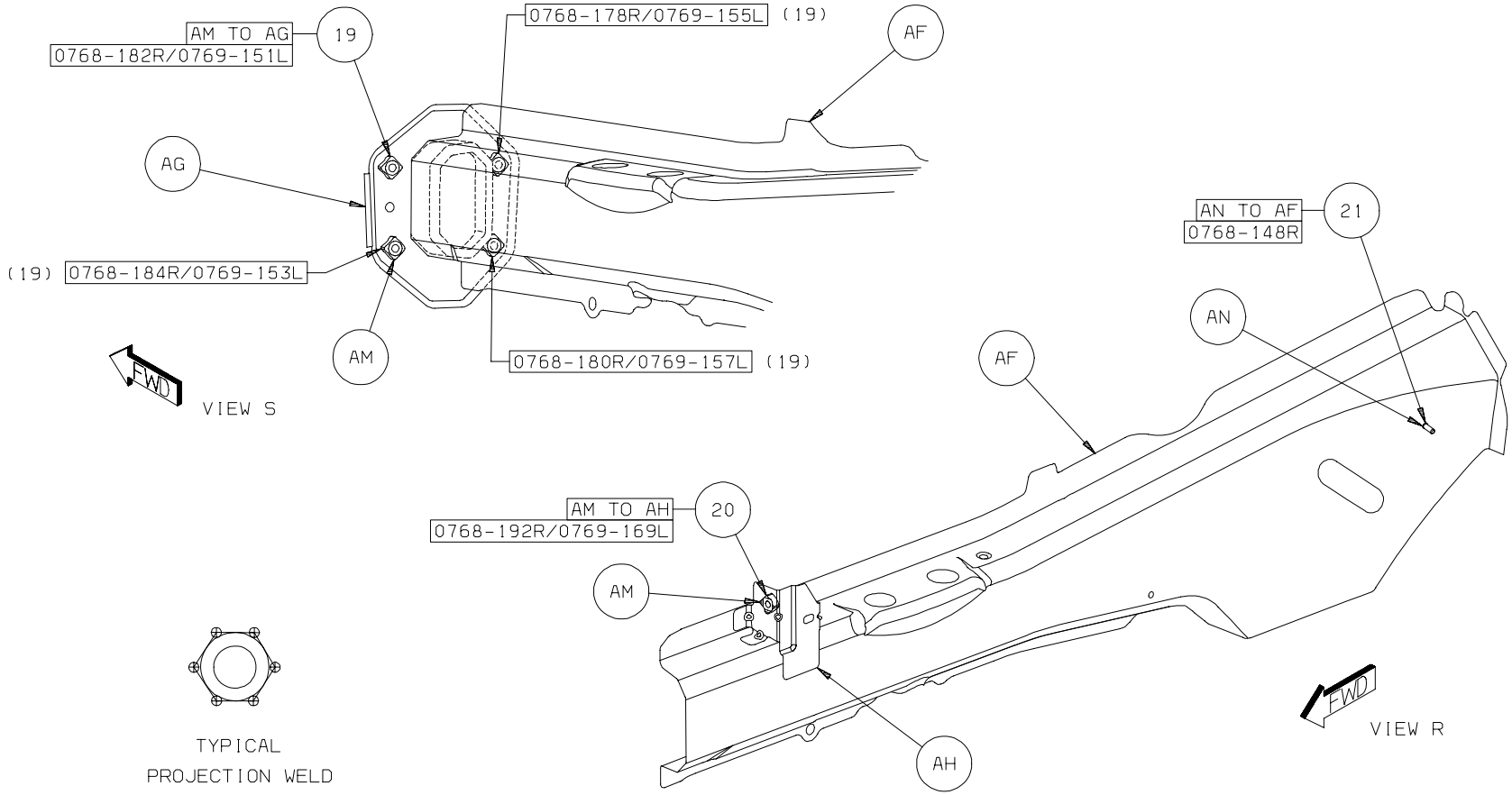

Back To Index

22. AR TO AP 22R/23L S/WELD

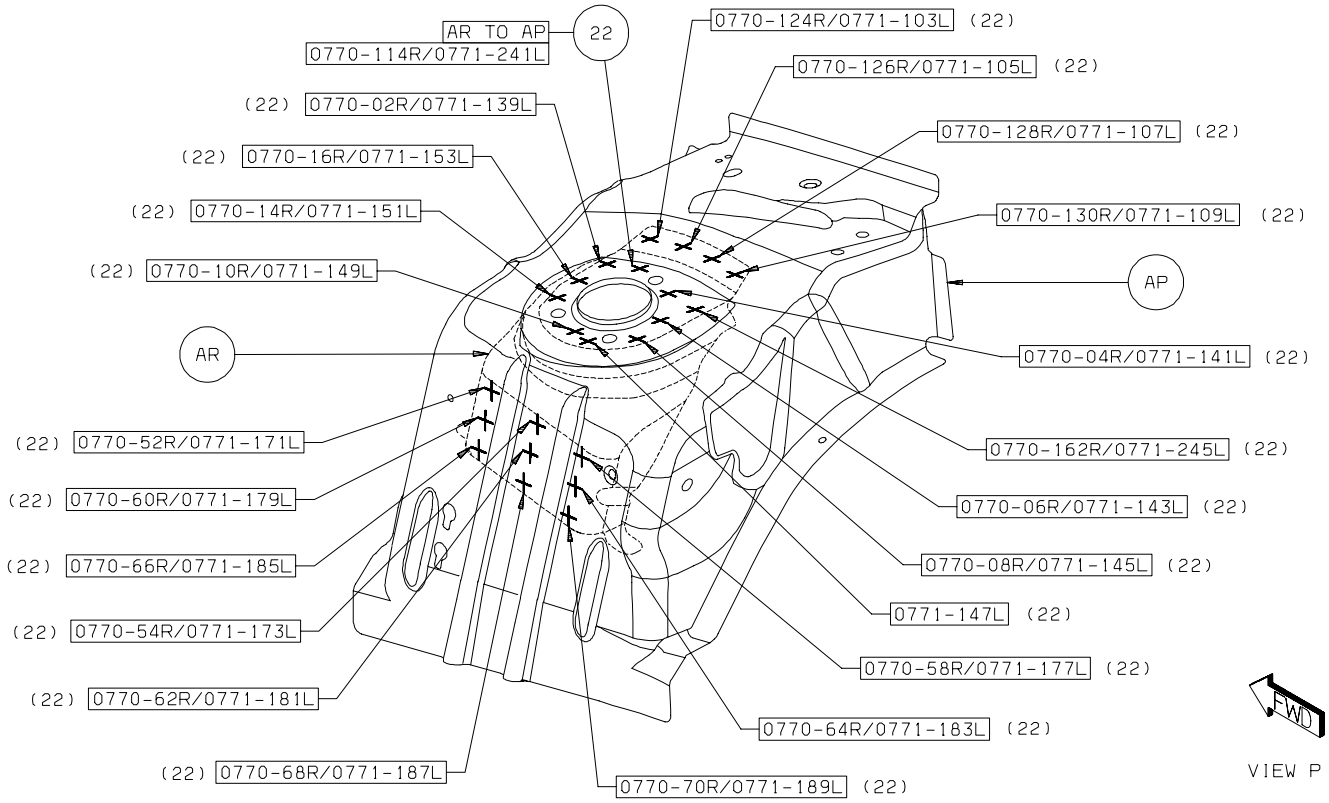

Back To Index

23. AT TO AP 13R/14L S/WELD
24. AS TO AR 4R/2L S/WELD
25. AS TO AP 7/SD S/WELD

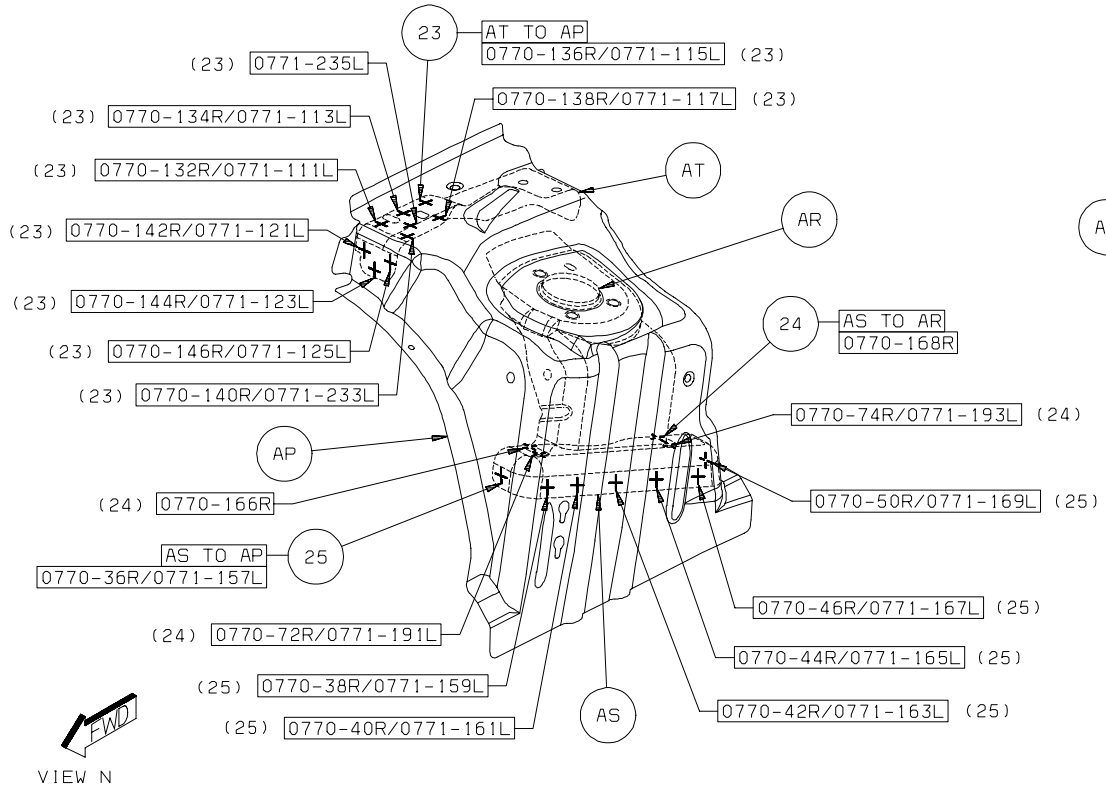

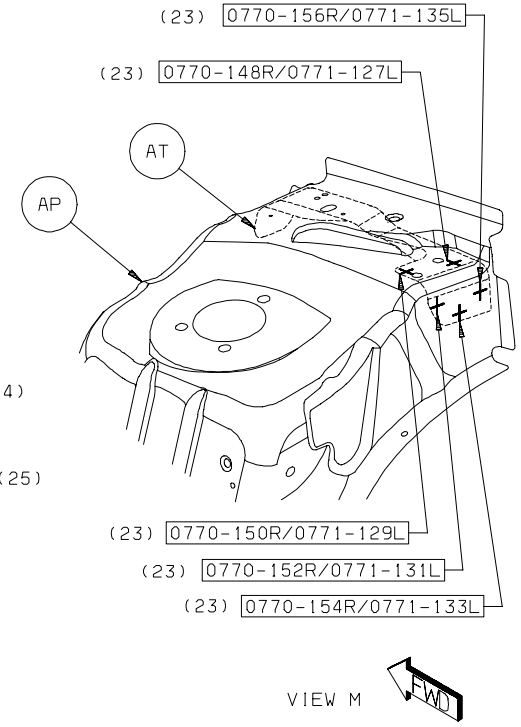

Back To Index

26. AU TO AP 9/SD S/WELD
27. AW TO AP 8/SD S/WELD

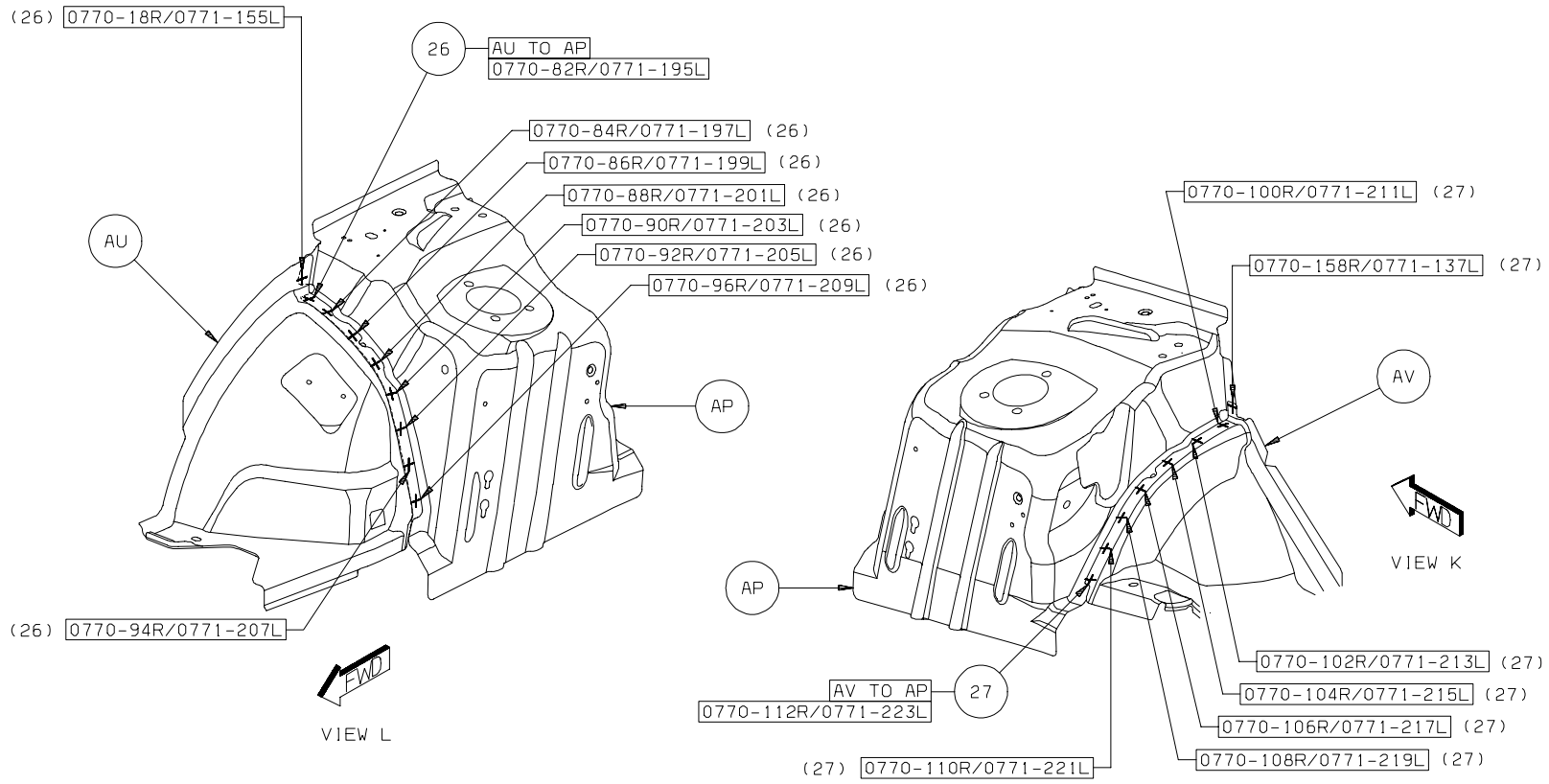

Back To Index

28. AW TO AU 2 PROJ WELD
29. AX TO AP 2/SD PROJ WELD
30. AX TO AU 1 PROJ WELD
31. AY TO AP 2/SD PROJ WELD

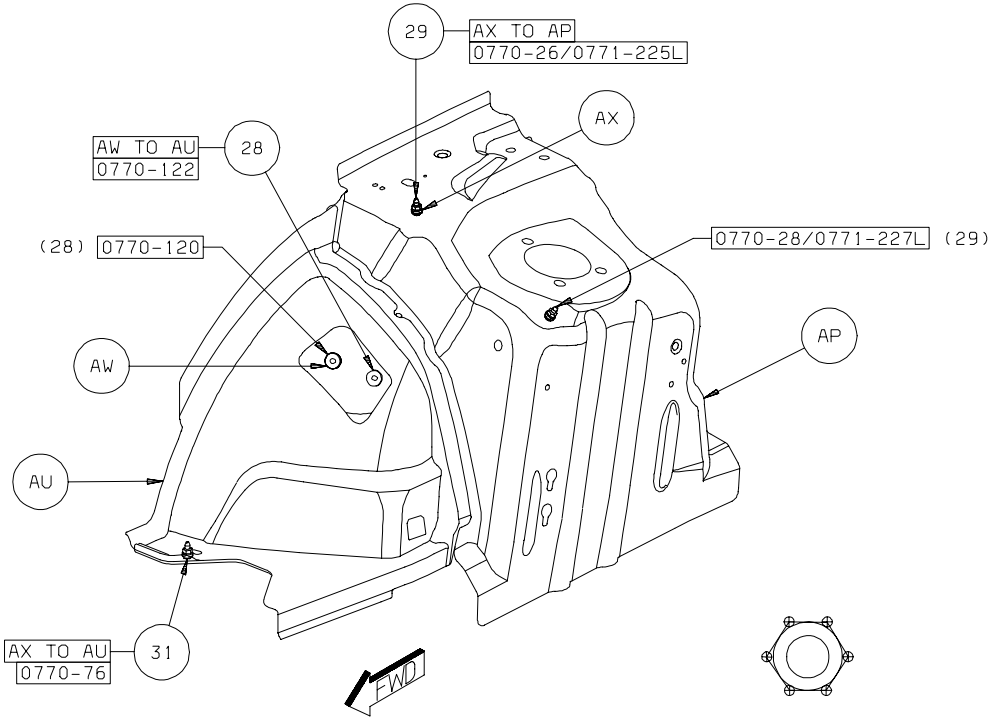

VIEW J

TYPICAL
PROJECTION WELD

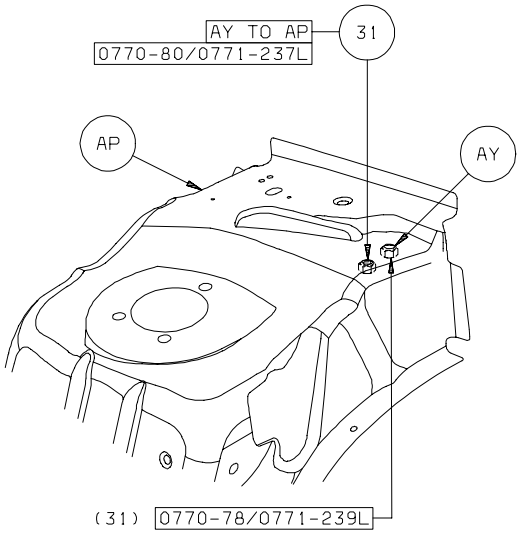

VIEW H

Back To Index

32. BA TO AE 2/SD S/WELD
33. AZ TO AE 7SD PROJ WELD
34. AZ TO AK 7/SD PROJ WELD

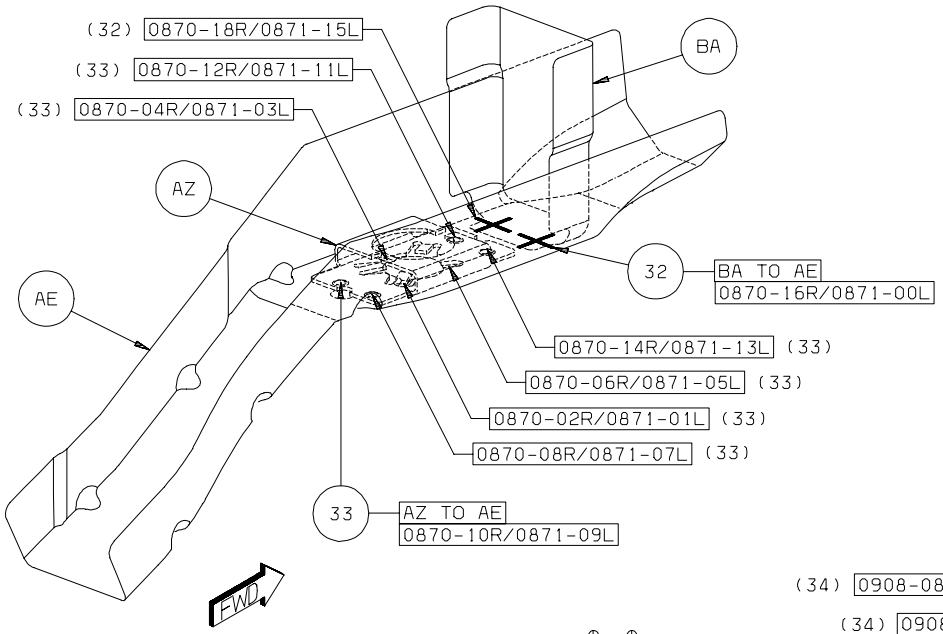

VIEW G

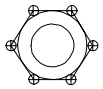

TYPICAL
PROJECTION WELD

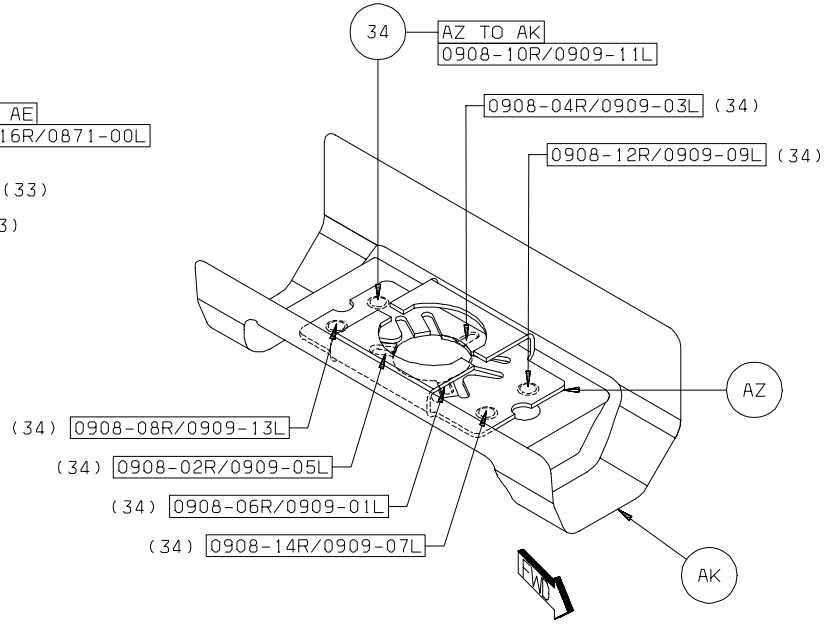

VIEW F

Back To Index

PARTS IDENTIFICATION LEGEND, OVERVIEW 4

AA	PANEL - LOAD PATH BEAM UPR INR RT -
AA	PANEL - LOAD PATH BEAM UPR INR LT -
AB	BRACKET - HEADLAMP MOUNTING RT -
AB	BRACKET - HEADLAMP MOUNTING LT -
AC	BRACKET - WIPER MODULE MTG -
AD	NUT/WELD.HEX - NO.FIN - BRKT TO MODULE
AE	STUD.WELD/INTERNAL - NO.FIN.PILOT.PT - UPR BRAKE PEDAL ATT
AF	REINF - BRAKE BOOSTER -

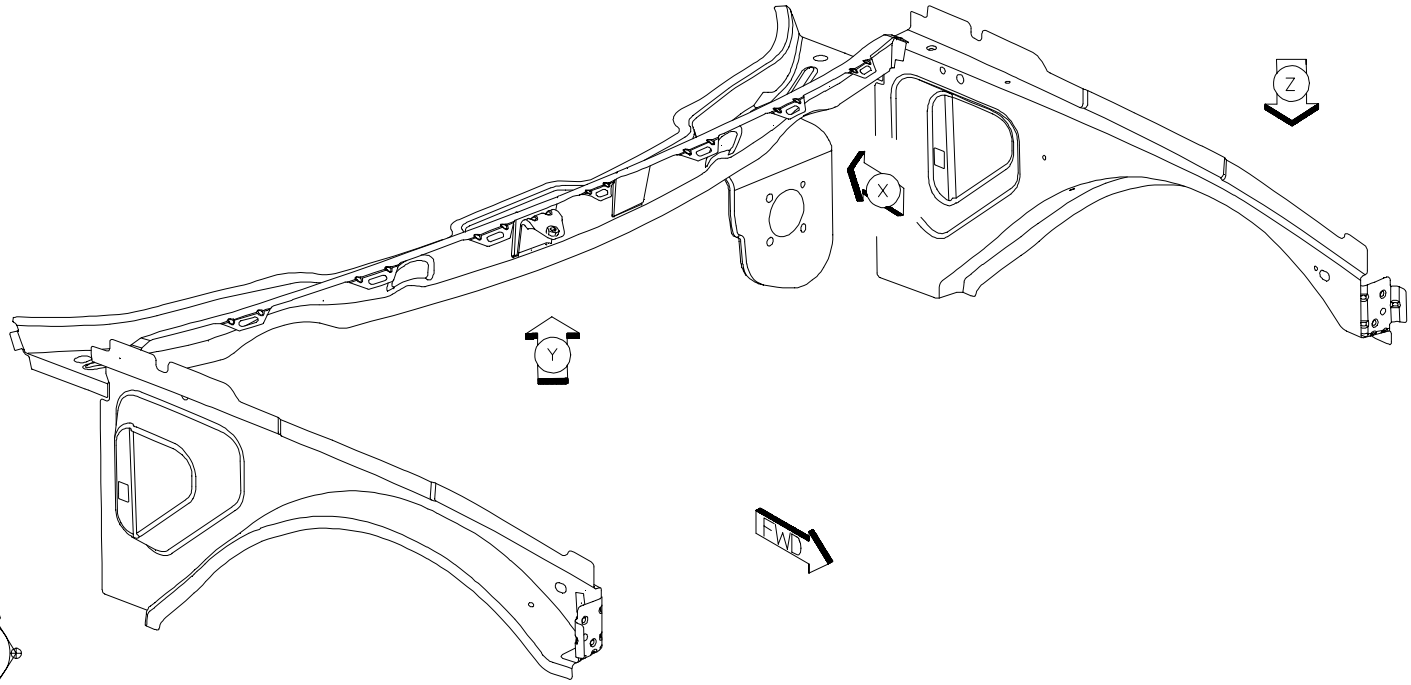

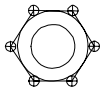

TYPICAL
PROJECTION WELD

Back To Index

1. AB TO AA 4/SD S/WELDS

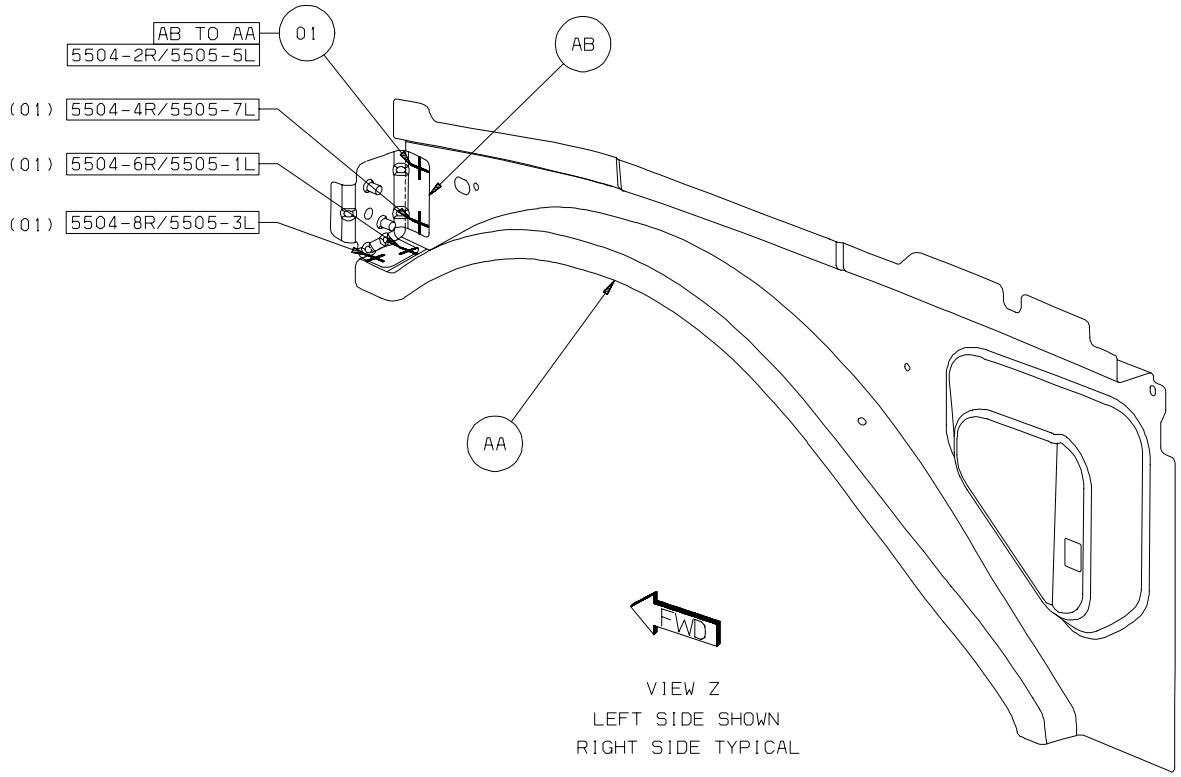

Back To Index

2. AC TO AD 1 PROJ WELD

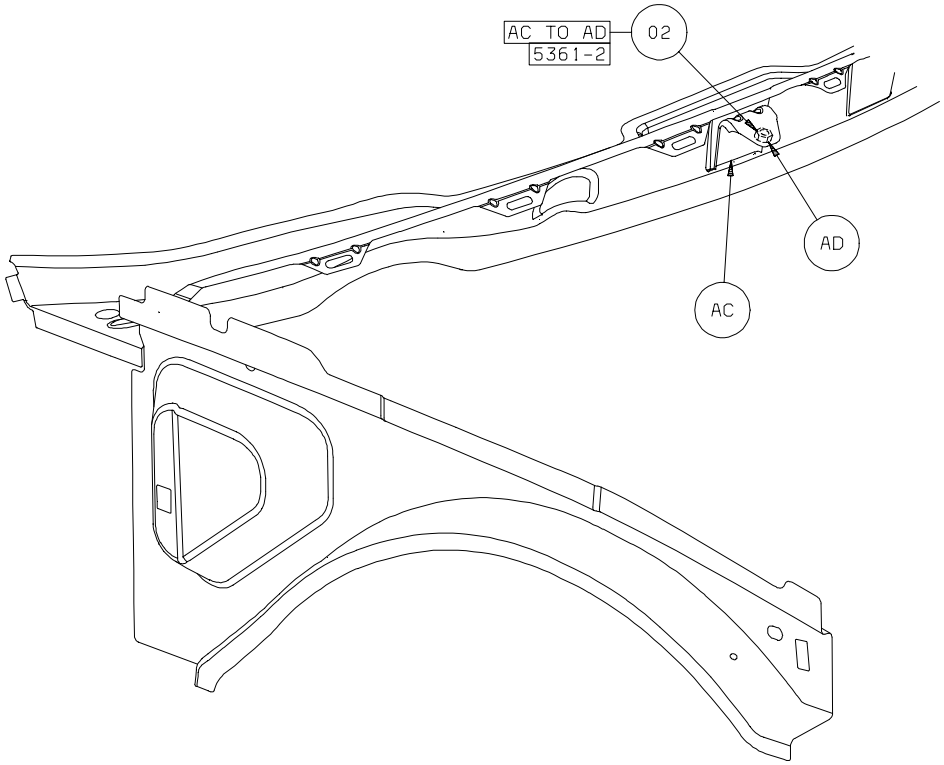

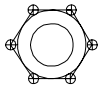

TYPICAL
PROJECTION WELD

VIEW Y

Back To Index

3. AE TO AF 1 PROJ WELD
4. AE TO AF 1 PROJ WELD

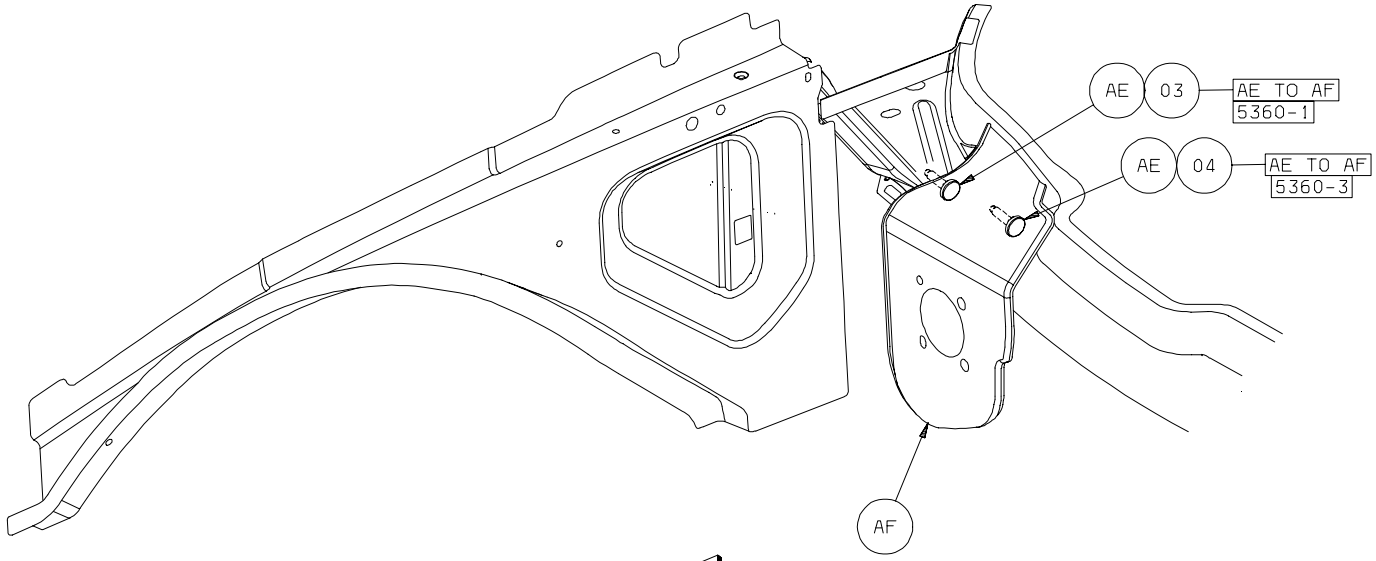

VIEW X

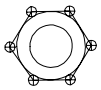

TYPICAL
PROJECTION WELD

Back To Index

Autobase® Plus • Colorbuild™ • Autocryl® LV • Autoclear® III

There's a lot to admire about Sikkens refinishing systems. Painters like the simplicity, speed, flexibility and exceptional colormatch. Customers love the glossy, distinctive and durable finish. And you'll appreciate the advanced technology and stellar support that helps you enhance profitability.

At Akzo Nobel, we believe every refinish is a work of art. And we'll help you create a masterpiece with each car that moves through your shop. Call us today at 1-800-2SIKKENS, or visit us at www.AkzoNobelCarRefinishes.net.

©2004 Akzo Nobel Coatings Inc.

TECHNOLOGY. ART. PROFIT.

sikkens

DODGE CHRYSLER Jeep MOPAR

DURANGO BODY REPAIR MANUAL

Addition copies of Publication Number 81-31-0430CD are availible by calling: 1-800-890-4038

Back To Index

PARTS IDENTIFICATION LEGEND, OVERVIEW 5

AA	RAIL - RR INR RT -
AA	RAIL - RR INR LT -
AB	REINF - RR RAIL INR RR RT -
AB	REINF - RR RAIL INR RR LT -
AC	NUT/WELD.SQ - SQUARE - RAIL ATTACH
AD	TAPPING PLATE - SEAT BELT RETRACTOR ANCHOR RR CTR -
AE	RAIL - RR OTR RT -
AE	RAIL - RR OTR LT -
AF	BRACKET ASSY - CRADLE RT -
AF	BRACKET ASSY - CRADLE LT -
AG	TAPPING PLATE - SEAT BELT RETRACTOR ANCHOR RR CTR -
AH	REINF - RR RAIL OTR RT -
AH	REINF - RR RAIL OTR LT -
AJ	BRACKET - CRADLE ATTACHING RT -
AJ	BRACKET - CRADLE ATTACHING LT -
AK	BRACKET - RETAINER ENGINE CRADLE TAPPING PLATE FRT -
AL	REINF - SEAT BELT ANCHOR RR INBOARD -
AM	STUD.WELD/INTERNAL - HEADER.PT.NO.FIN.PF- SAFETY CENTER SEAT BELT RETRACTOR ATT
AN	CROSSMEMBER - RR SUSPENSION FRT -
AP	TAPPING PLATE -
AR	EXTENSION - CROSSMEMBER END SUPPORT RT -
AR	EXTENSION - CROSSMEMBER END SUPPORT LT -
AS	REINF - CROSSMEMBER RR SUSPENSION MOUNTING RT -
AS	REINF - CROSSMEMBER RR SUSPENSION MOUNTING LT -
AT	BRACKET - RETAINER ENGINE CRADLE TAPPING PLATE FRT -
AU	NUT/WELD.SQ - SQUARE - BATTERY TRAY ATTACH
AV	PAN - RR FLOOR -
AW	REINF - SPARE TIRE HOLD-DOWN -
AX	GUSSET - ISO FIX -
AY	STUD.WELD/INTERNAL - HEADER.PT.NO.FIN.PF-SAFETY - CTR RR RETRACTOR ATTACH
AZ	CROSSMEMBER - ISO FIX -
BA	WIRE - ISO FIX - RIGHT
BA	WIRE - ISO FIX - LEFT
BB	WIRE - ISO FIX - CENTER

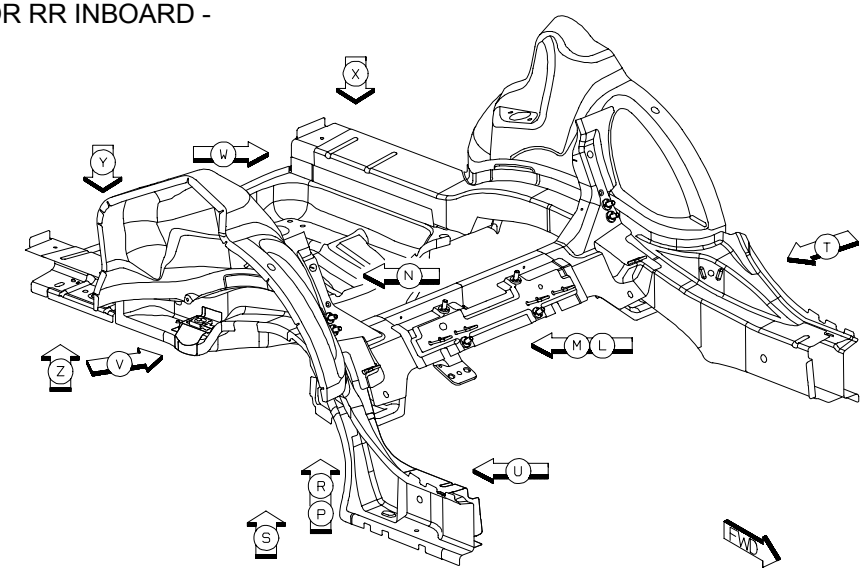

TYPICAL
PROJECTION WELD

Back To Index

1. AB TO AA 16R & 12L S/WELDS

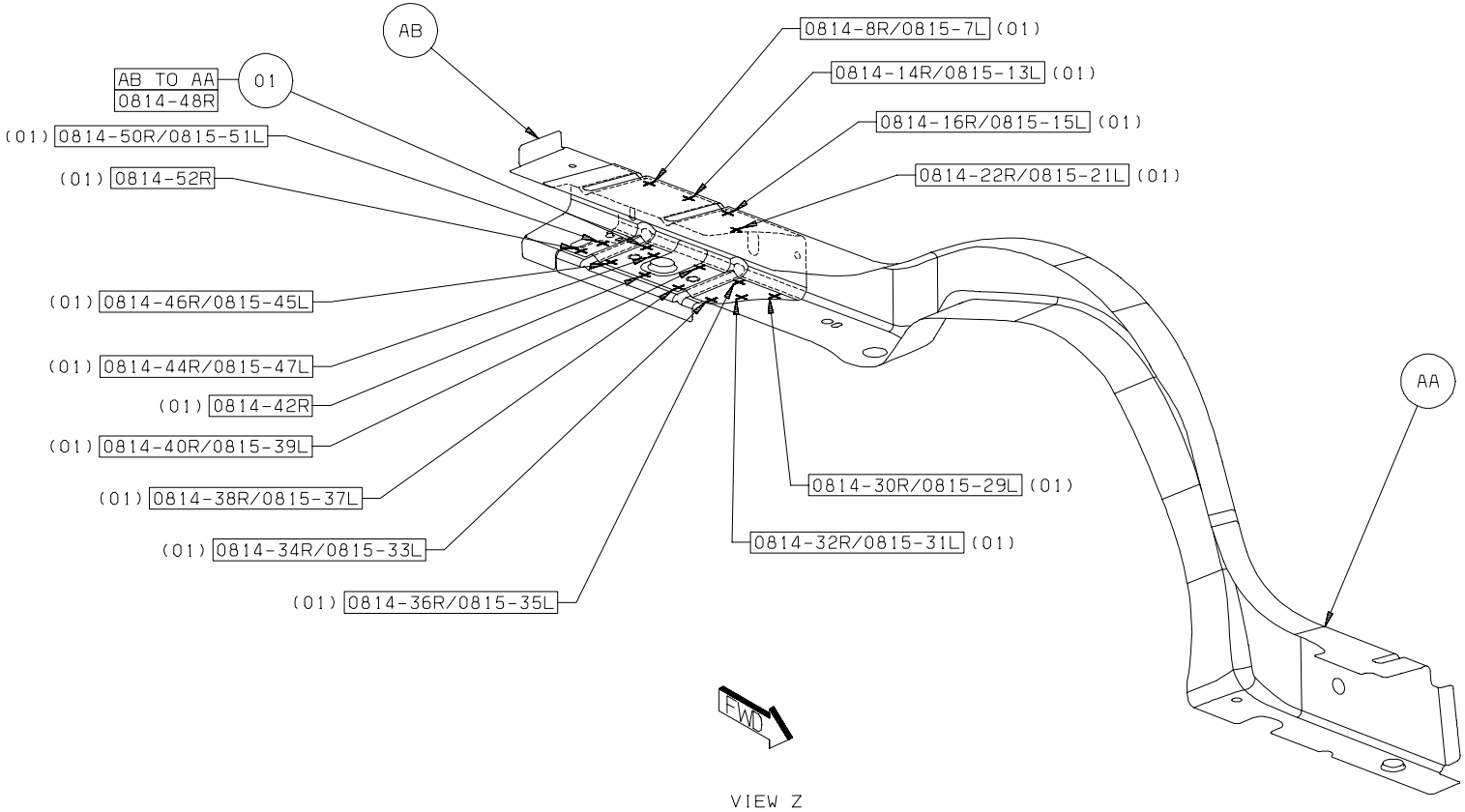

Back To Index

2. AB TO AA 16R & 9L S/WELDS
3. AC TO AA 2 PROJ WELDS

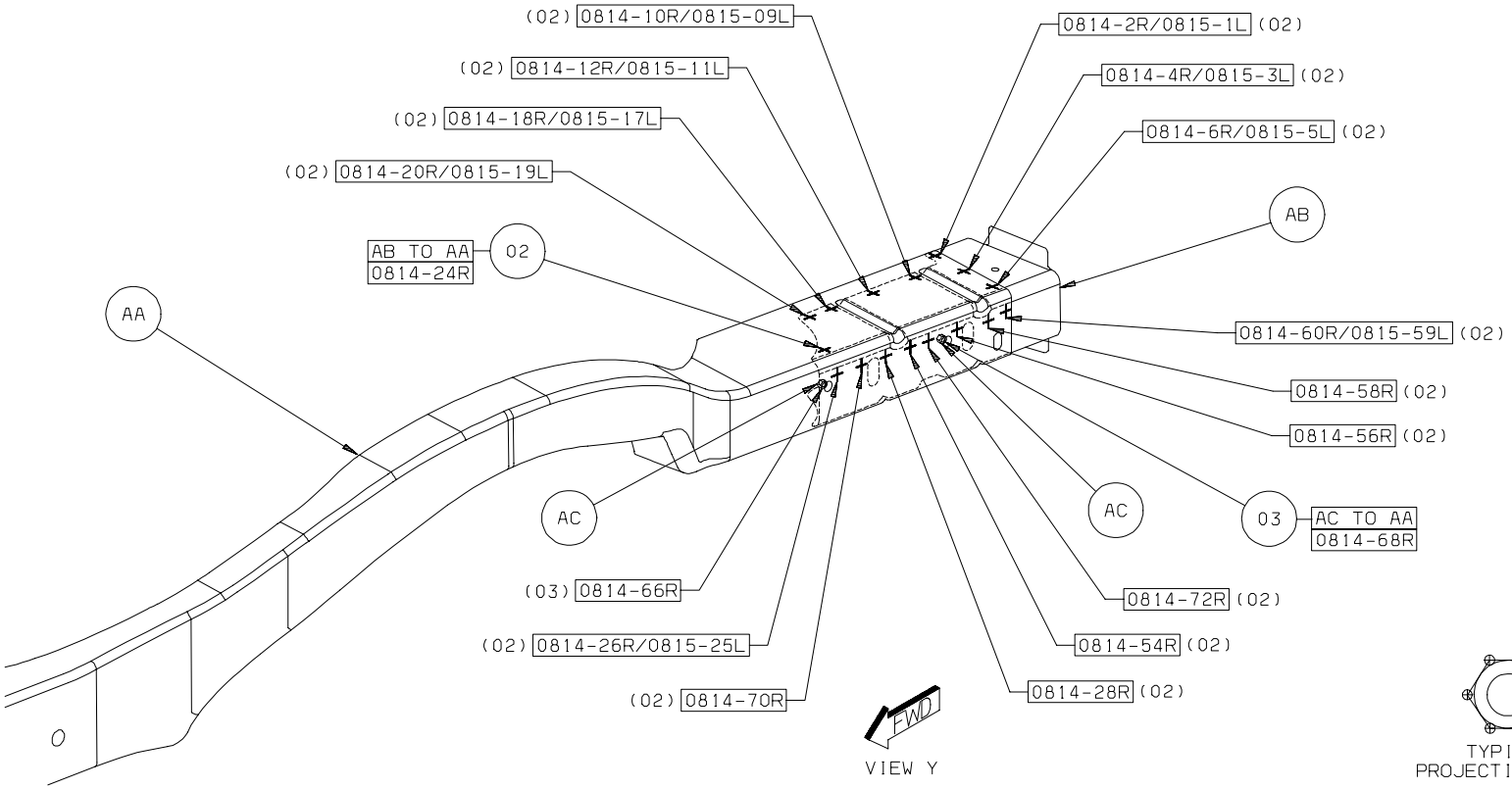

Back To Index

4. AB TO AA 8L S/WELDS
5. AD TO AB 4L S/WELDS

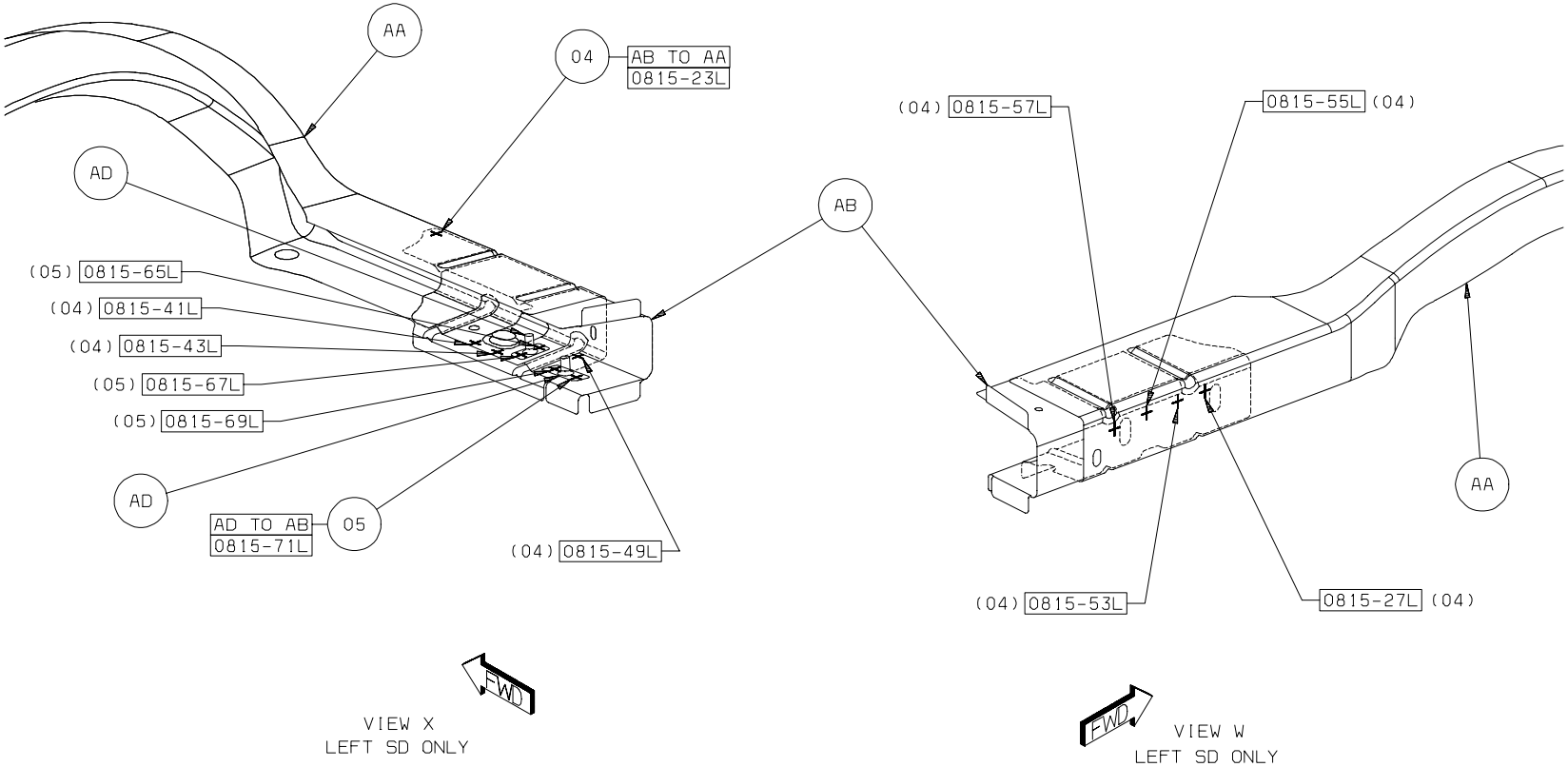

Back To Index

6. AF TO AE 7/SD S/WELDS
7. AG TO AE 2/SD S/WELDS

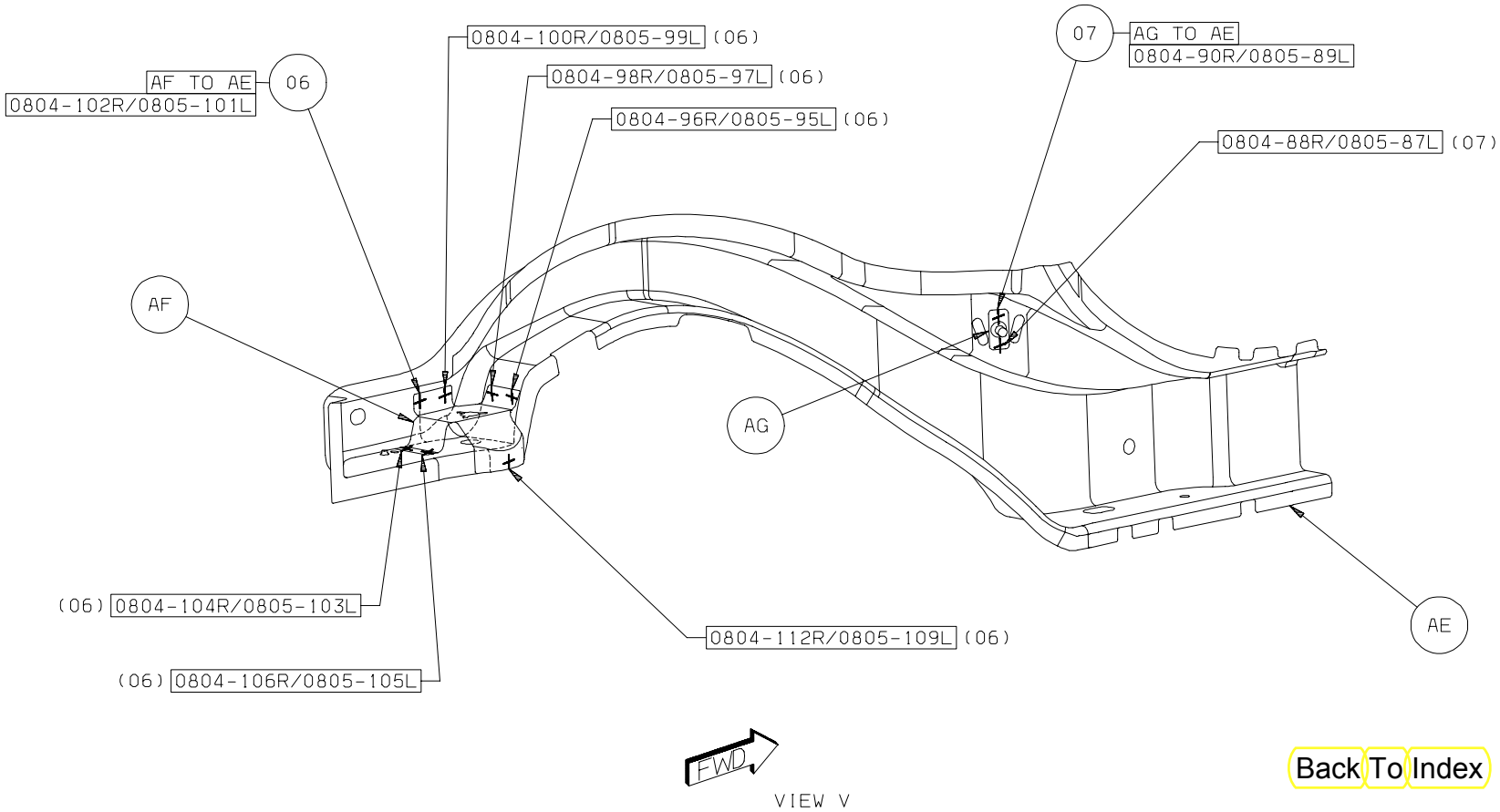

Back To Index

8. AH TO AE 24/SD S/WELDS

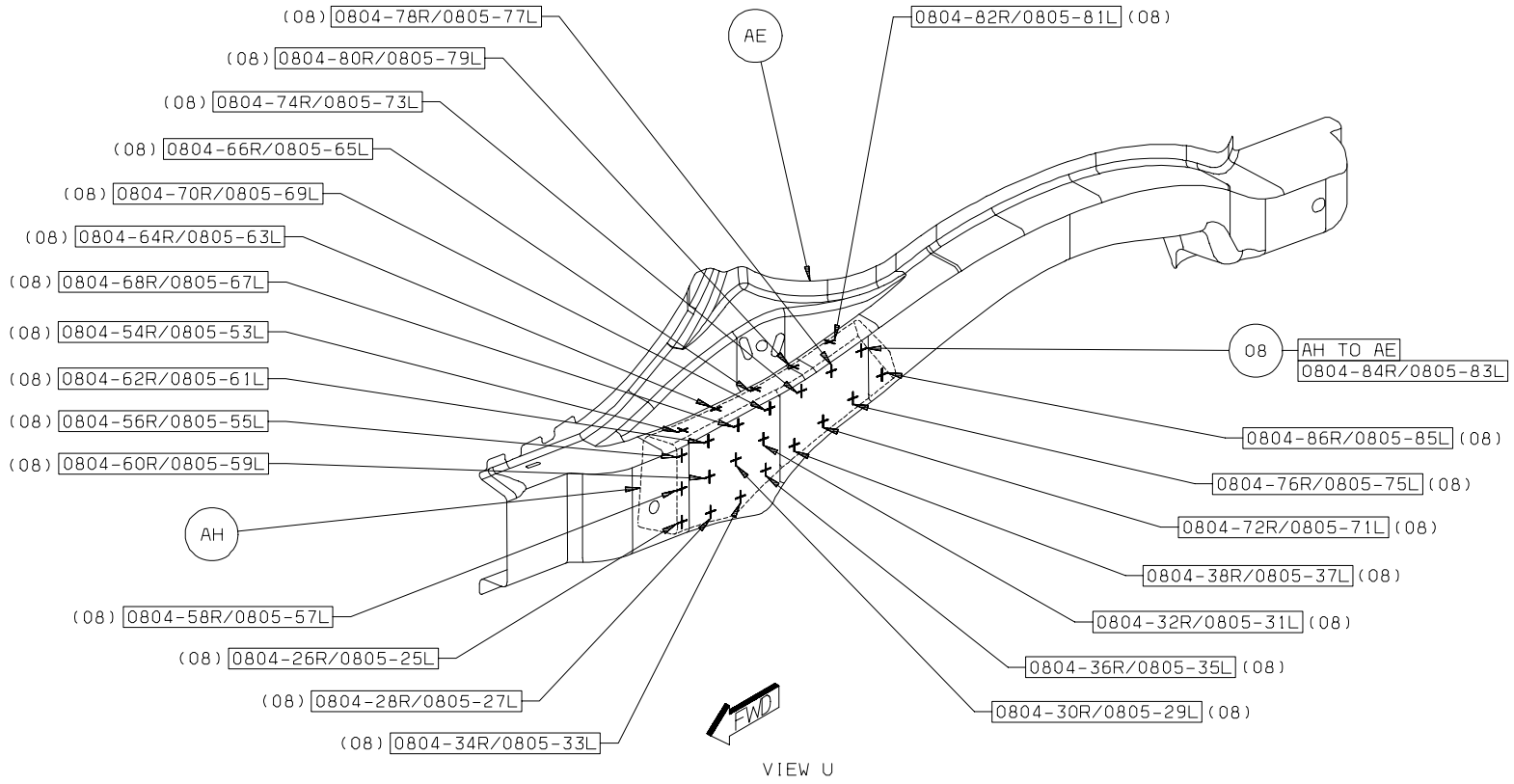

Back To Index

9. AH TO AE 5/SD S/WELDS

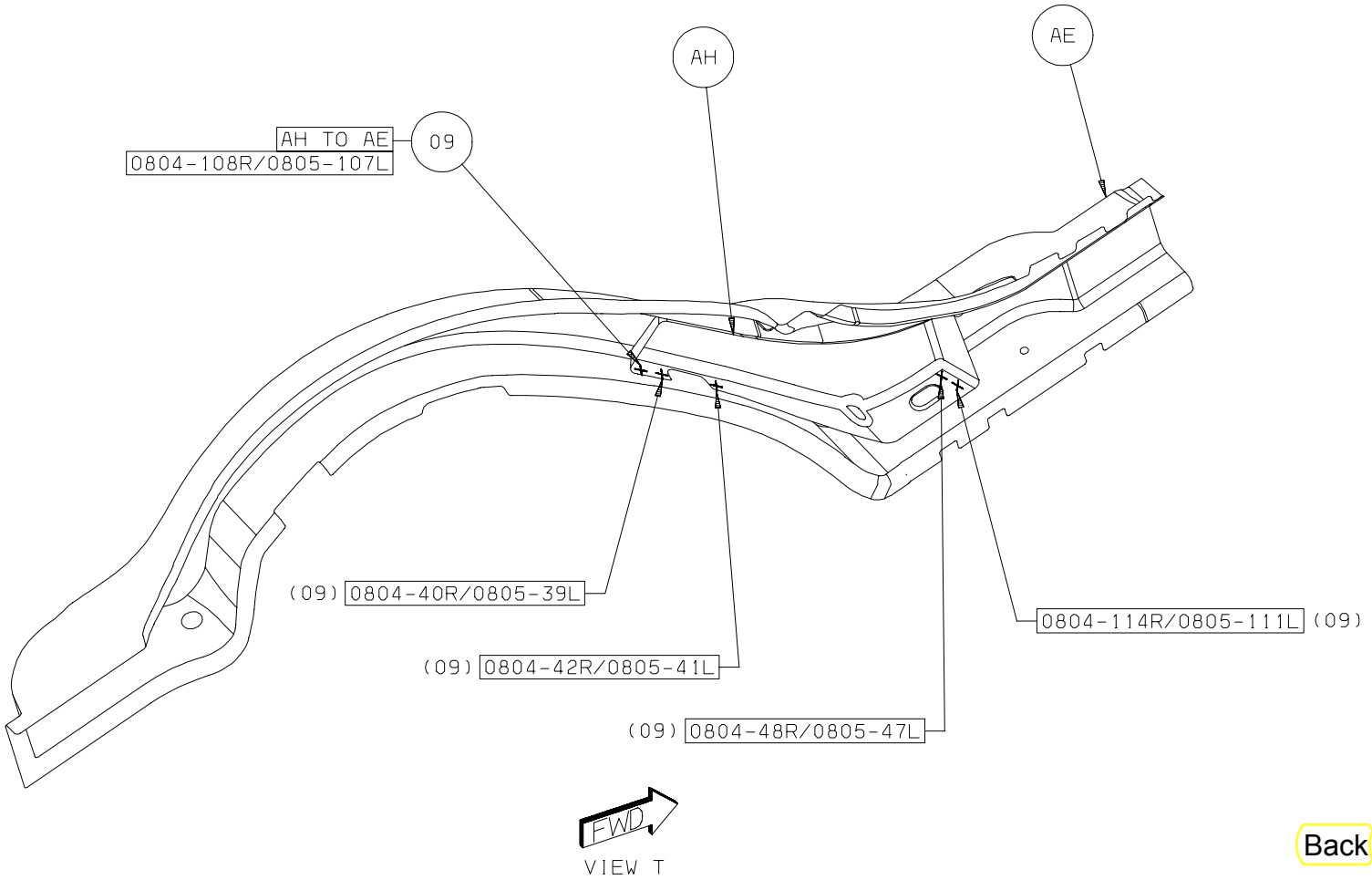

Back To Index

10. AK TO AJ 4/SD S/WELDS
11. AM TO AL 1 PROJ WELD

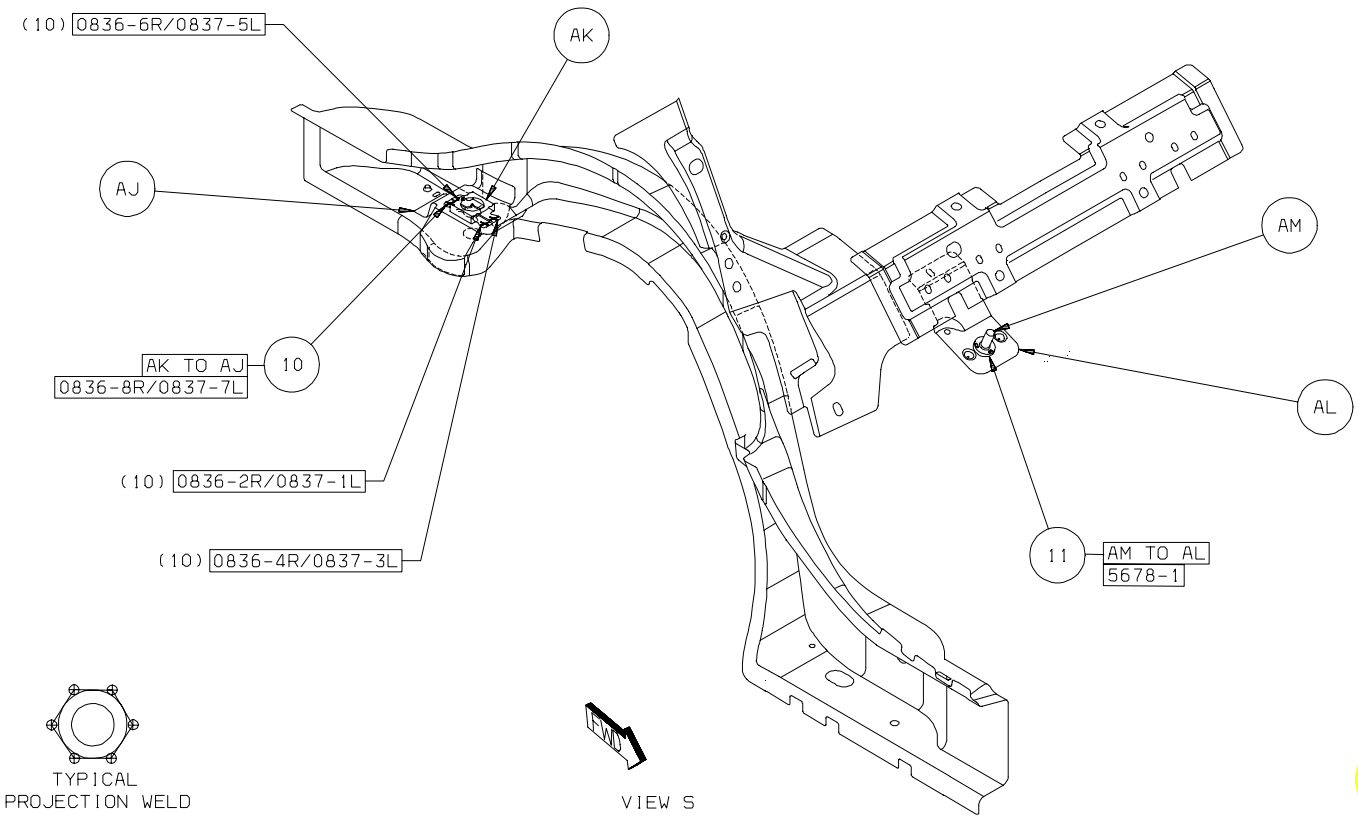

Back To Index

12. AP TO AN 2/SD S/WELDS
13. AS TO AR 6/SD S/WELDS

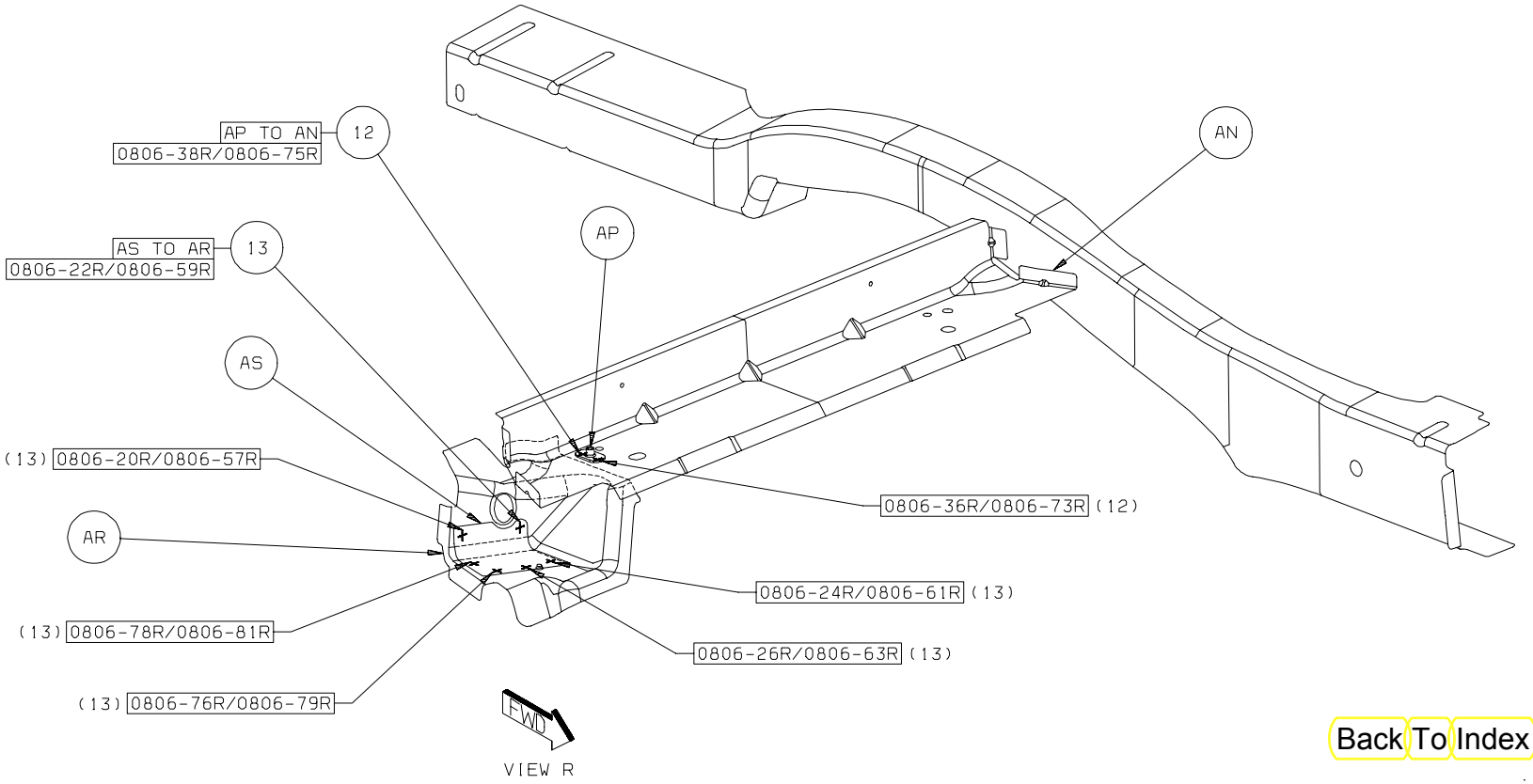

Back To Index

14. AR TO AN 9/SD S/WELDS
15. AT TO AS 4/SD S/WELDS

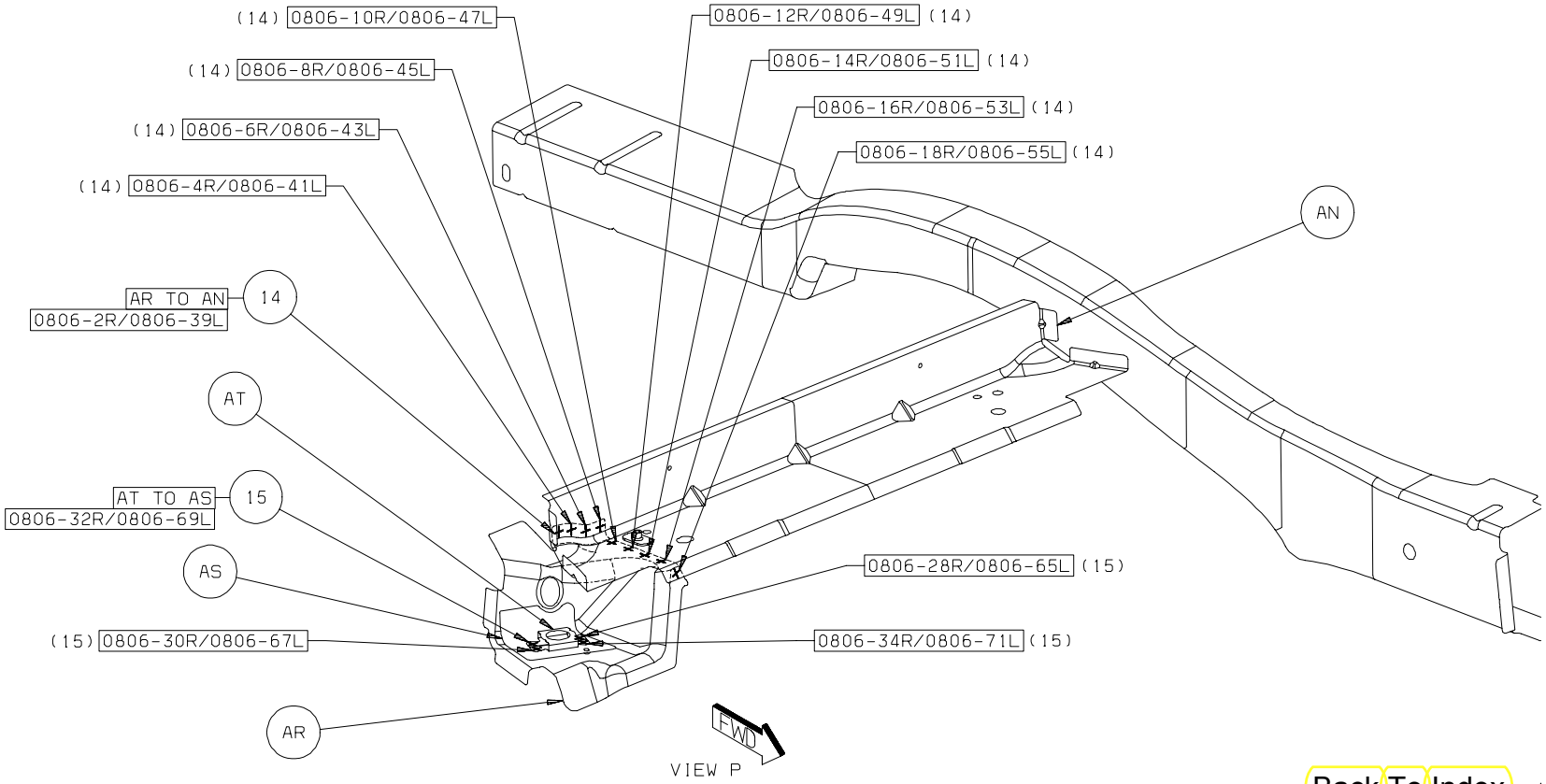

Back To Index

16. AU TO AV 2 PROJ WELDS
17. AW TO AV 10 S/WELDS

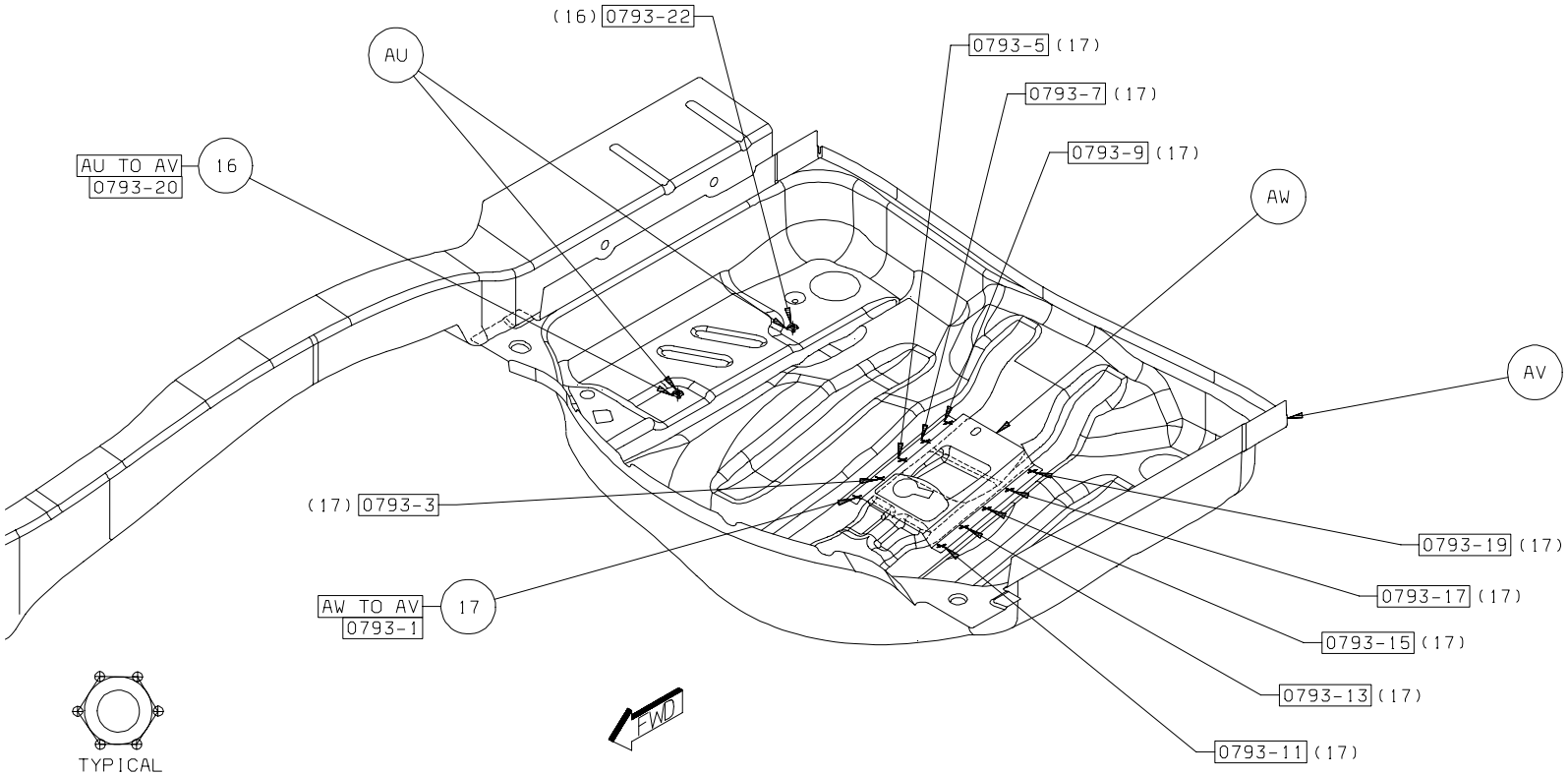

Back To Index

18. AY TO AX 4/SD PROJ WELDS
19. AZ TO AX 4/SD S/WELDS
20. BA TO AZ 4 FCAW WELDS

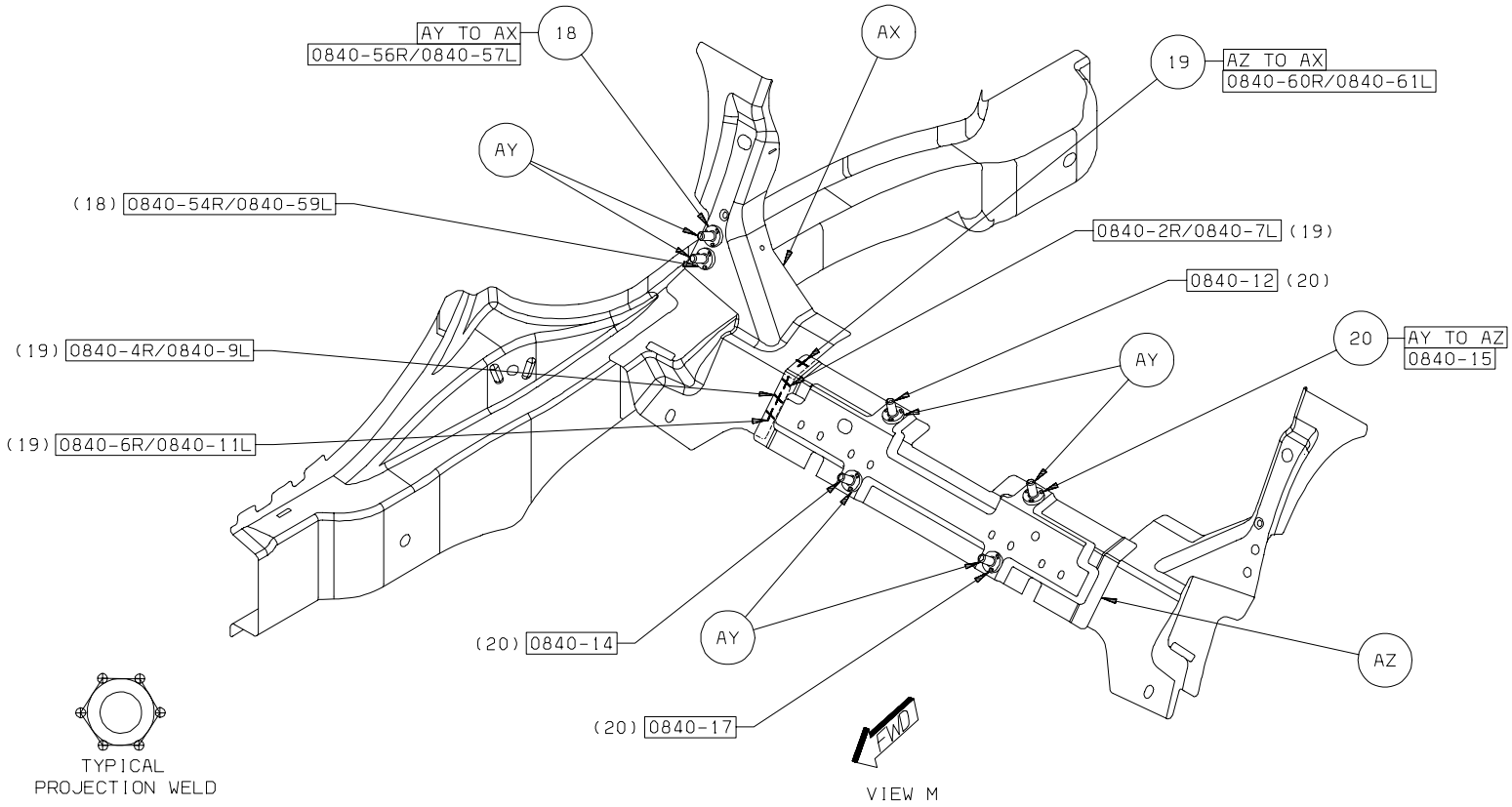

Back To Index

21. BB TO AX 2/SD FCAW WELDS
22. BC TO AZ 16 FCAW WELDS

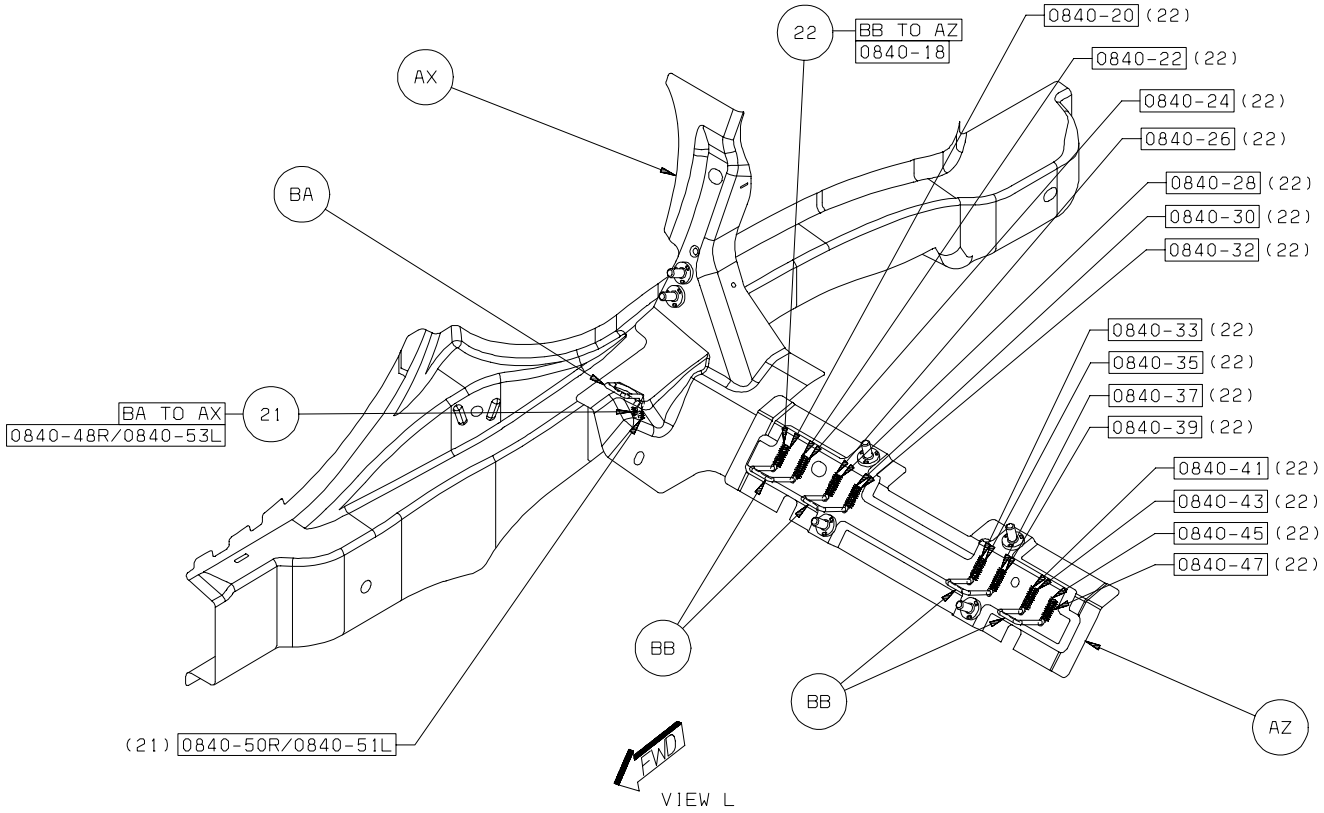

Back To Index

PARTS INDENTIFICATION LEGEND, OVERVIEW 6

AA	PANEL - ROOF SUNROOF -
AB	PANEL - ROOF OTR -
AC	PANEL - ROOF SUNROOF -
AD	REINF - SUNROOF -
AE	BAR - IMPACT FRT DOOR RT -
AE	BAR - IMPACT FRT DOOR LT -
AF	BAR - IMPACT RR DOOR RT -
AF	BAR - IMPACT RR DOOR LT -
AG	EXTENSION - IMPACT BEAM FRT DOOR FRT RT -
AG	EXTENSION - IMPACT BEAM FRT DOOR FRT LT -
AH	EXTENSION - IMPACT BEAM FRT DOOR RR RT -
AH	EXTENSION - IMPACT BEAM FRT DOOR RR LT -
AJ	EXTENSION - RR DOOR IMPACT BAR RR RT -
AJ	EXTENSION - RR DOOR IMPACT BAR RR LT -
AK	EXTENSION - RR DOOR IMPACT BAR FRT RT -
AK	EXTENSION - RR DOOR IMPACT BAR FRT LT -
AL	REINF - PLATE -
AL	REINF - PLATE - ROOF RACK REAR
AM	NUT/WELD.HEX - HEX.DRIVE.SPECIAL - SUNROOF MODULE

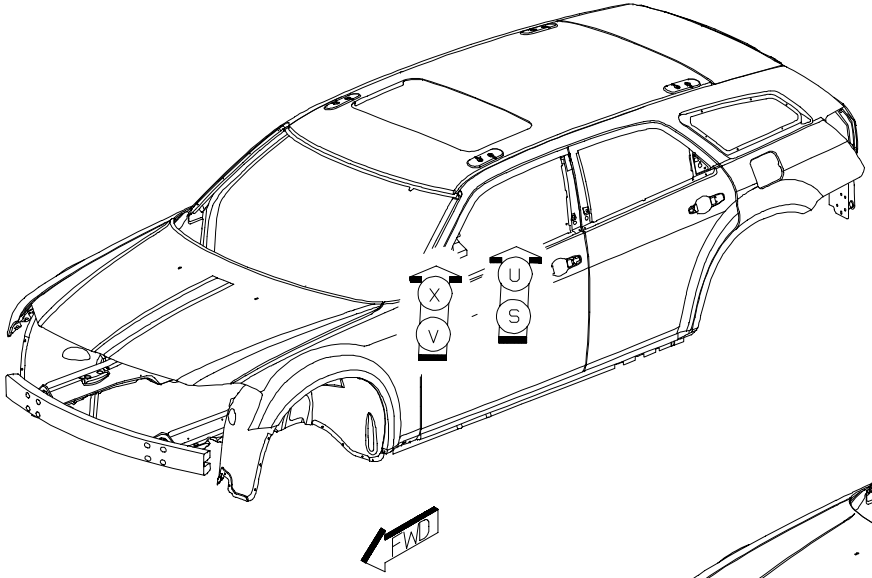

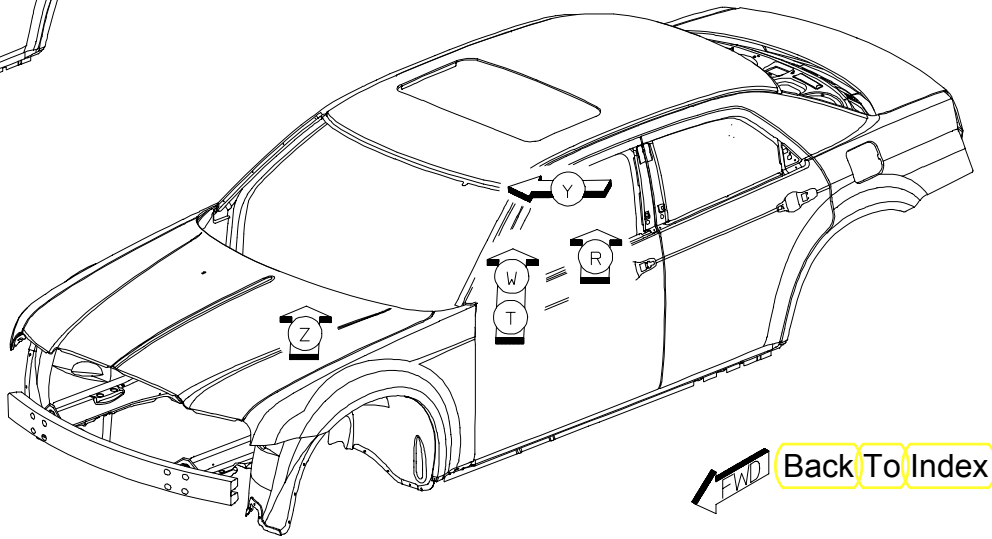

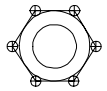

PROJECTION WELD

Back To Index

1. AH TO AE 2 GMAW WELD
2. AG TO AE 2 GMAW WELD
3. AJ TO AE 2 GMAW WELD
4. AK TO AF 2 GMAW WELD

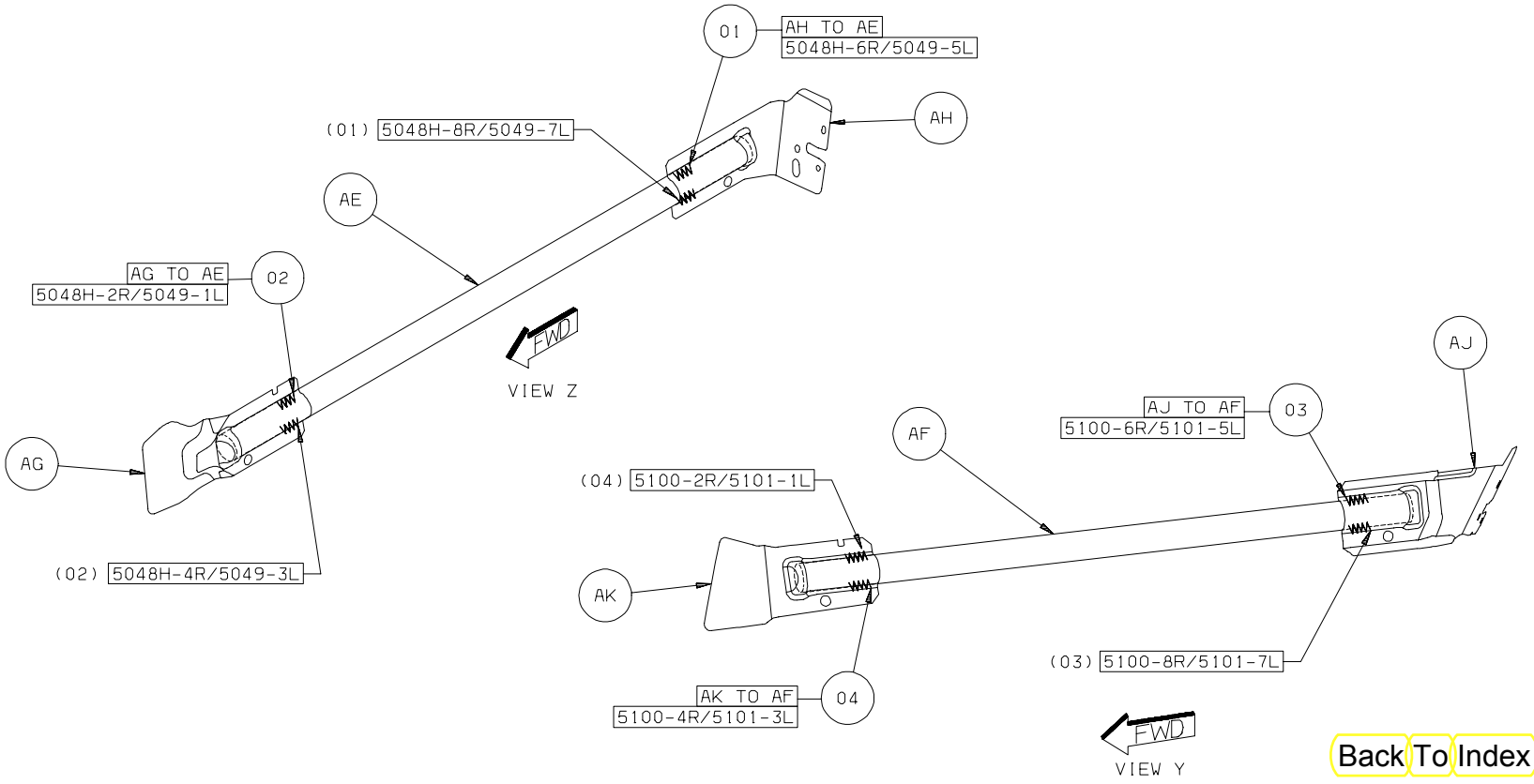

Back To Index

5. AD TO AA 30 S/WELD

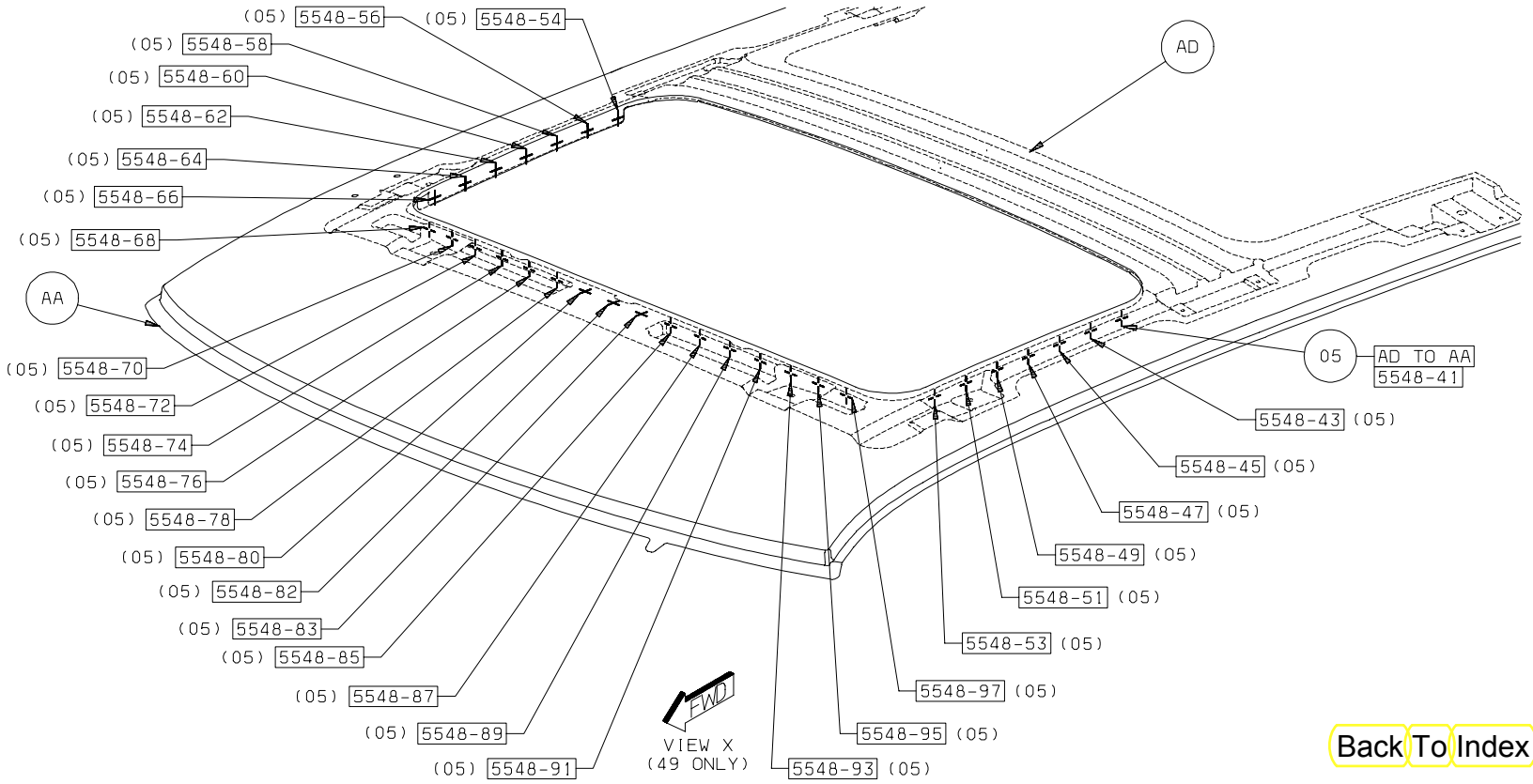

Back To Index

6. AD TO AC 28 S/WELD

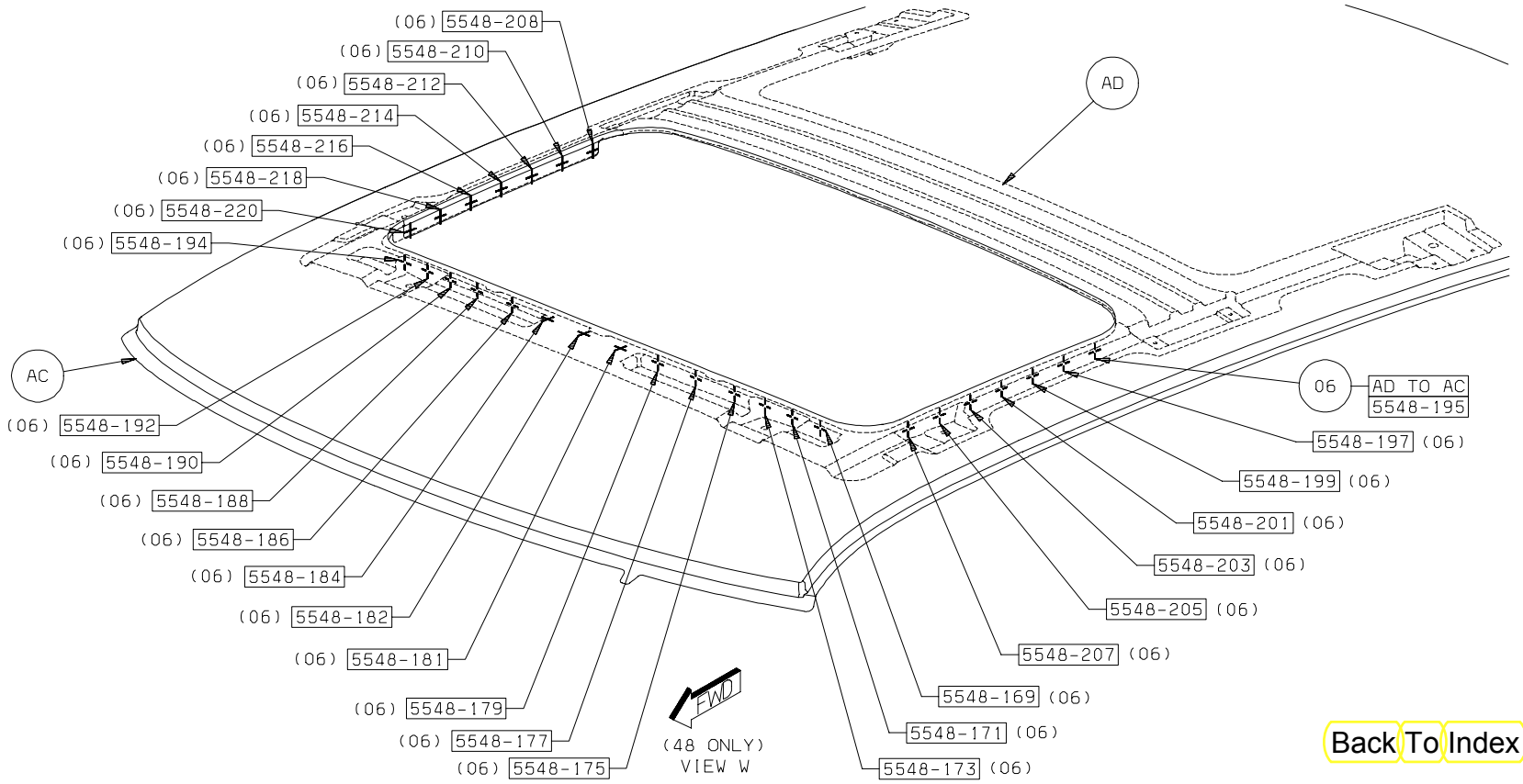

Back To Index

7. AL TO AA 8 S/WELD

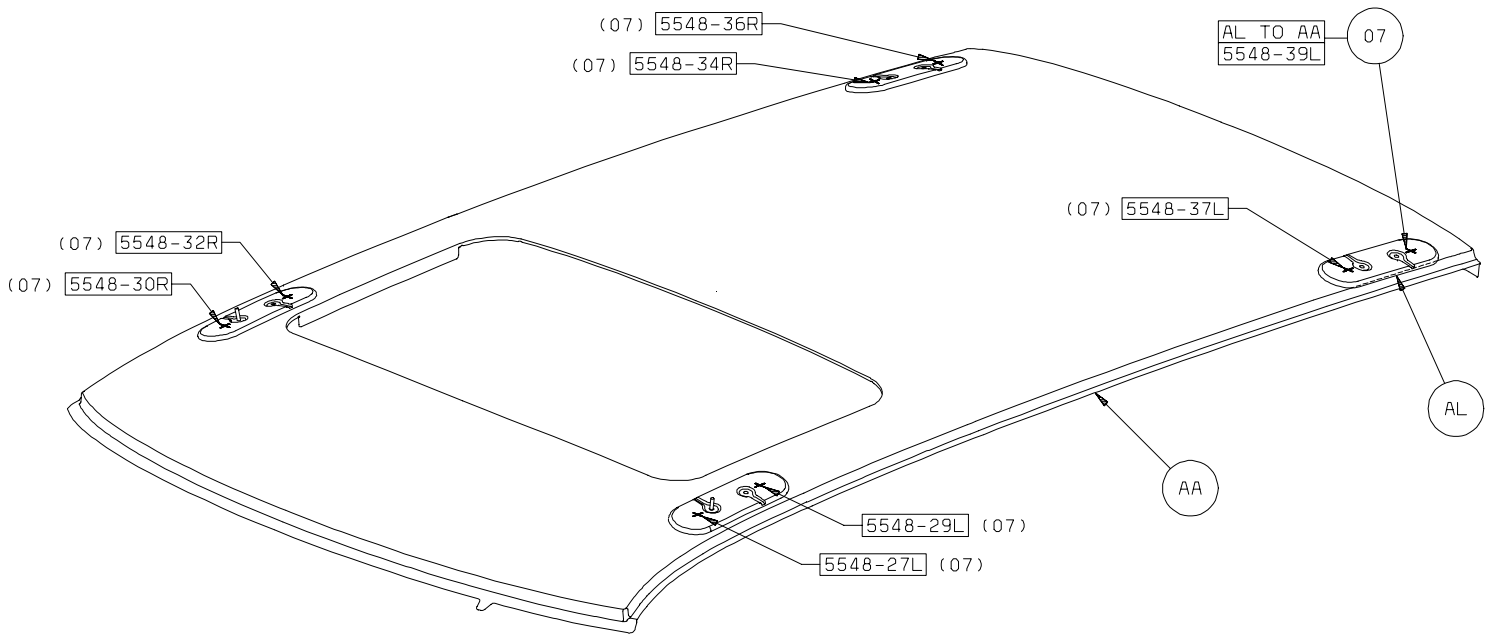

VIEW V
(49 ONLY)

Back To Index

8. AL TO AB 8 S/WELD

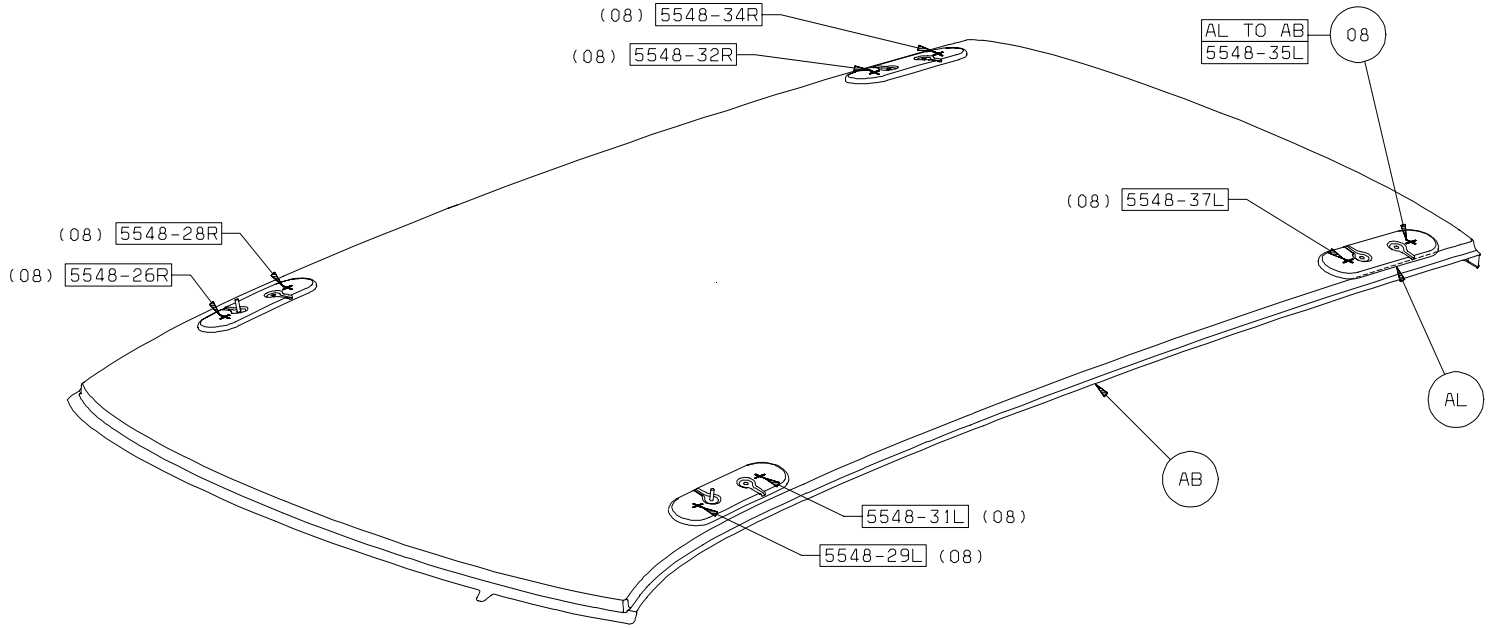

VIEW U
(49 ONLY)

Back To Index

9. AM TO AD 6 PROJ WELD

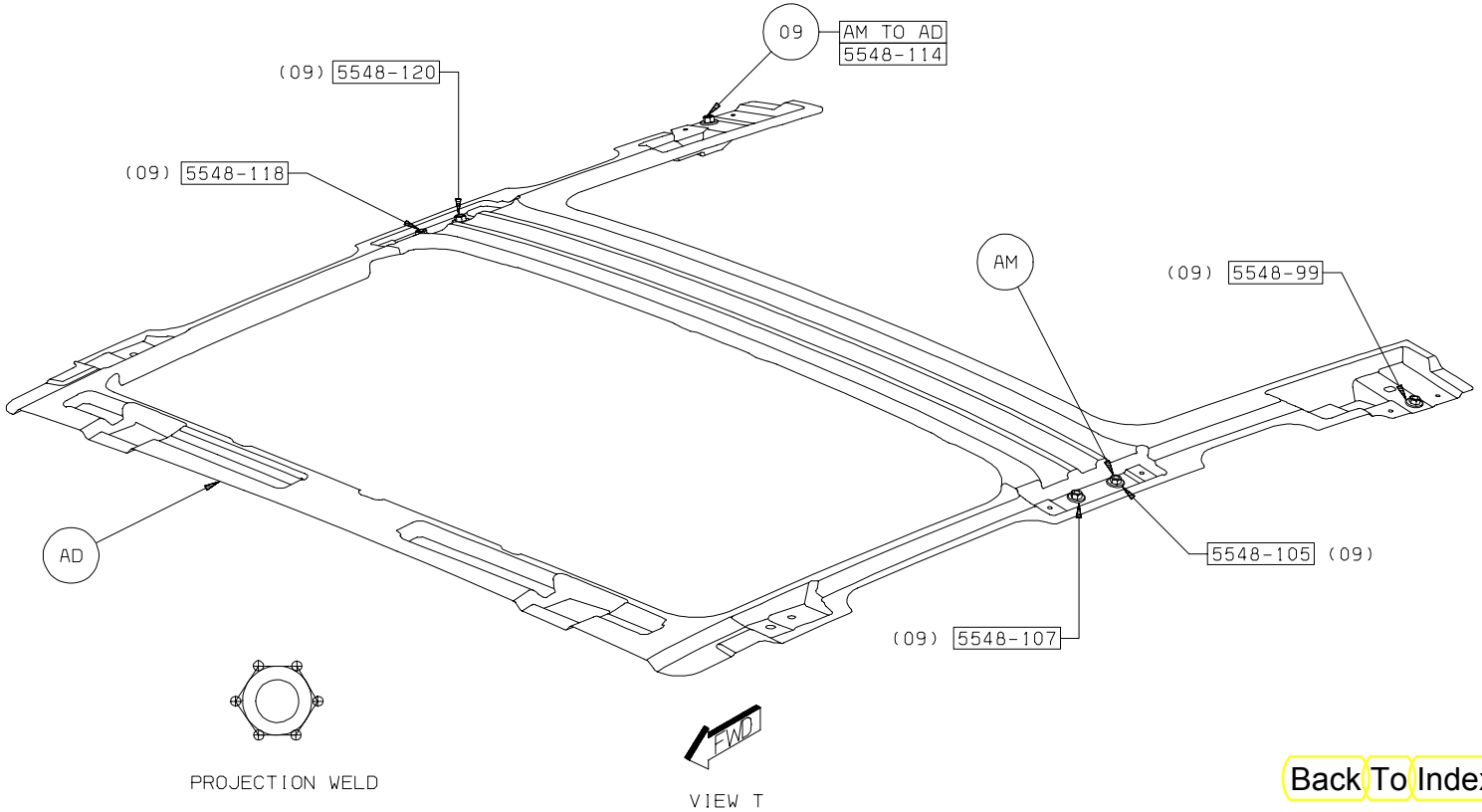

Back To Index

10. AD TO AA 1 ADH BEAD
11. AD TO AA 2 ADH BEAD
12. AD TO AA 1 ADH BEAD
13. AD TO AA 1 ADH BEAD

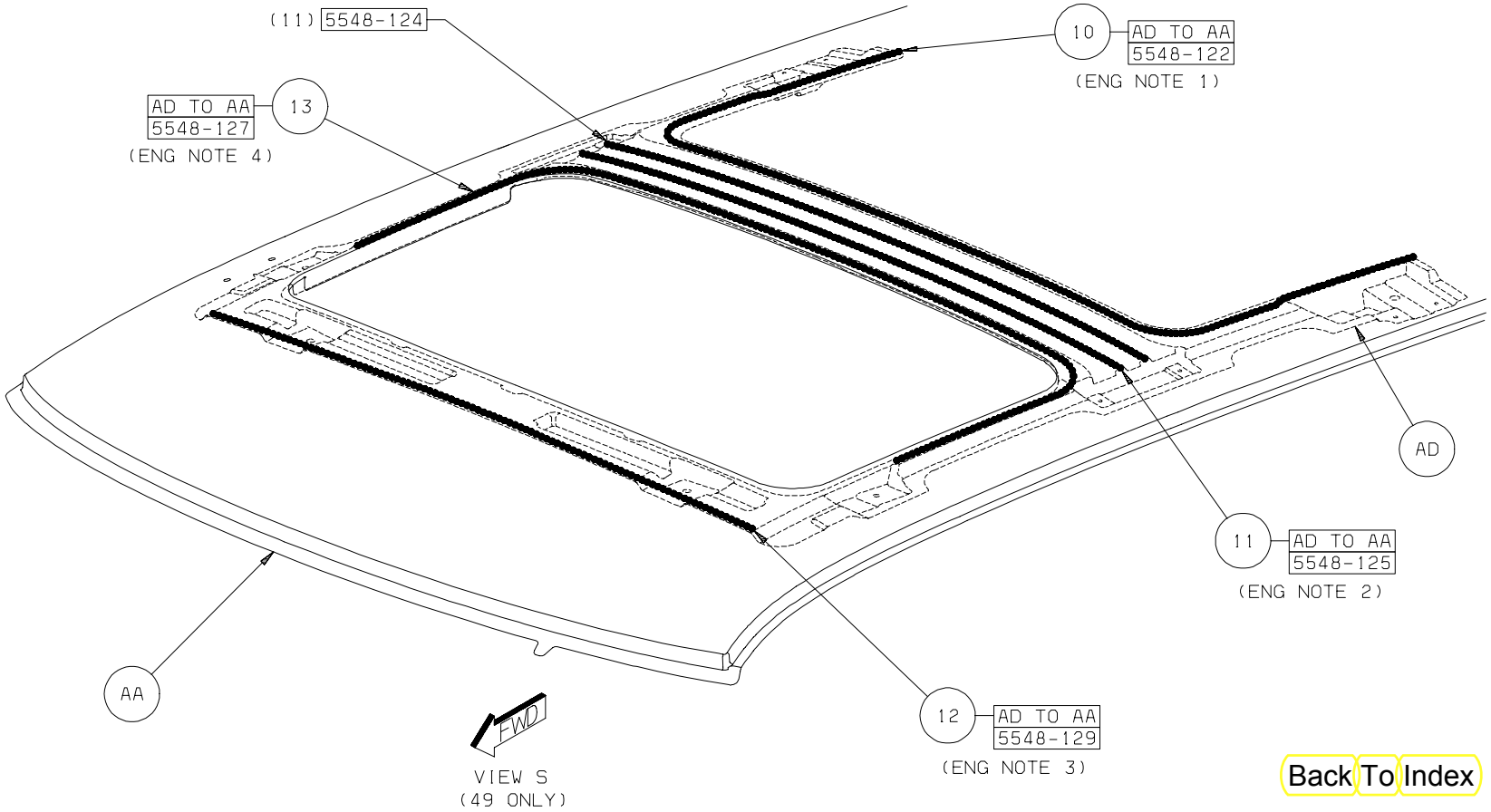

Back To Index

14. AD TO AC 1 ADH BEAD
15. AD TO AC 2 ADH BEAD
16. AD TO AC 2 ADH BEAD
17. AD TO AC 1 ADH BEAD
18. AD TO AC 1 ADH BEAD

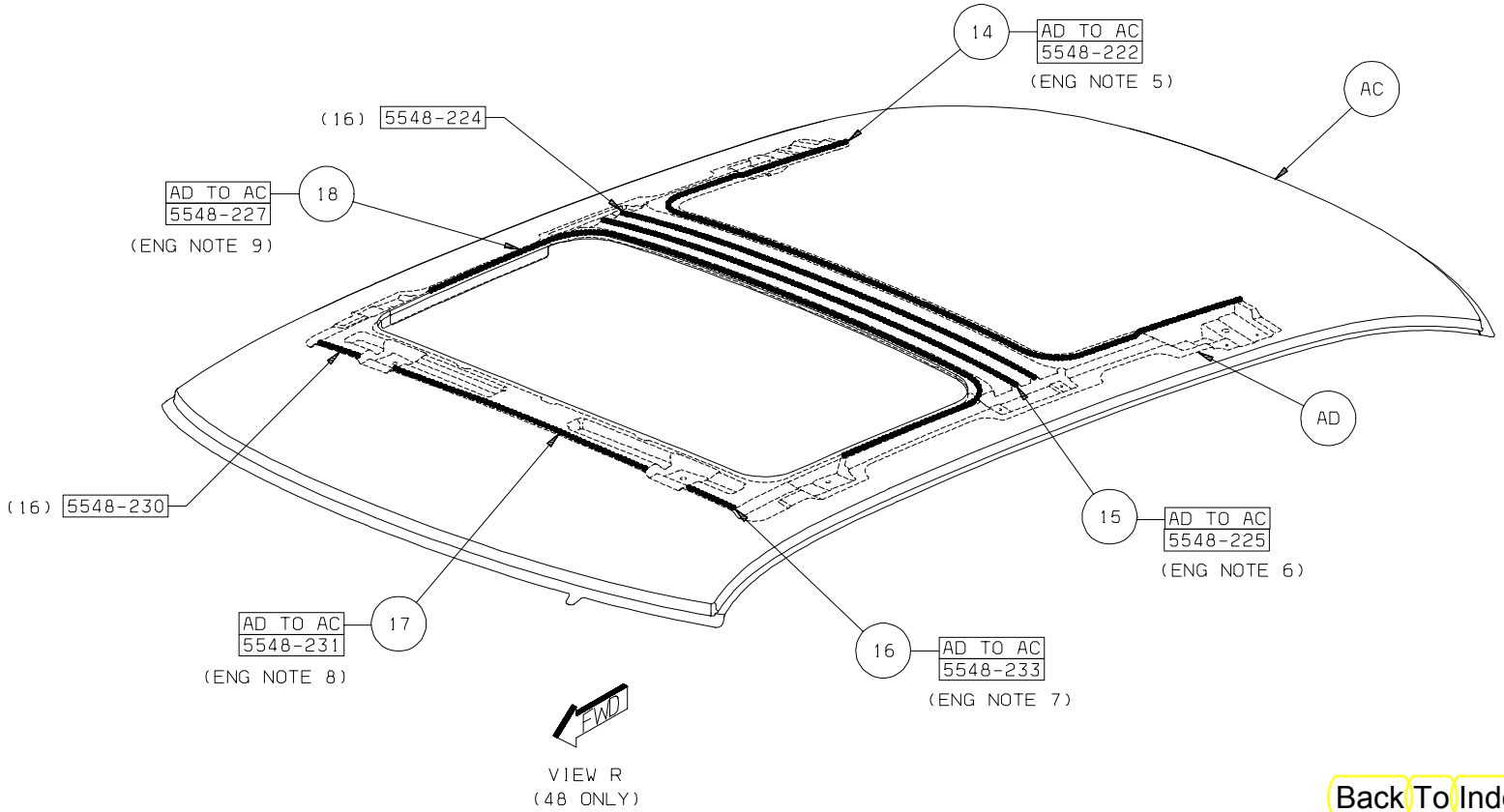

Back To Index

PARTS IDENTIFICATION LEGEND, OVERVIEW 7

AA	PANEL - RR SHELF -
AB	PANEL - DECK OPENING LWR OTR -
AC	PANEL - DECK OPENING LWR INR -
AD	CROSSMEMBER - RR SHELF -
AE	BRACKET - BUMPER RR -
AE	BRACKET - BUMPER RR -
AF	REINF - CTR SEAT BELT RETRAC-TOR
AG	BRACKET - CHILD TETHER ATTACH -
AH	TAPPING PLATE - DECK LID STRIKER-
AJ	STUD.WELD/INTERNAL - HEADER.PT.NO.FIN.PF-SAFETY - CENTER SEAT BELT RETRACTOR ATT
AK	PANEL - RR SHELF SUPPORT RT -
AK	PANEL - RR SHELF SUPPORT LT -
AL	STUD.WELD/INTERNAL - NO.FIN.PILOT.PT - RR BUMPER BRACKET RT
AL	STUD.WELD/INTERNAL - NO.FIN.PILOT.PT - RR BUMPER BRACKET LT
AM	STUD.WELD/EXTERNAL - HEADER.PT.SPECIAL - LWR DECK OPENING PANEL

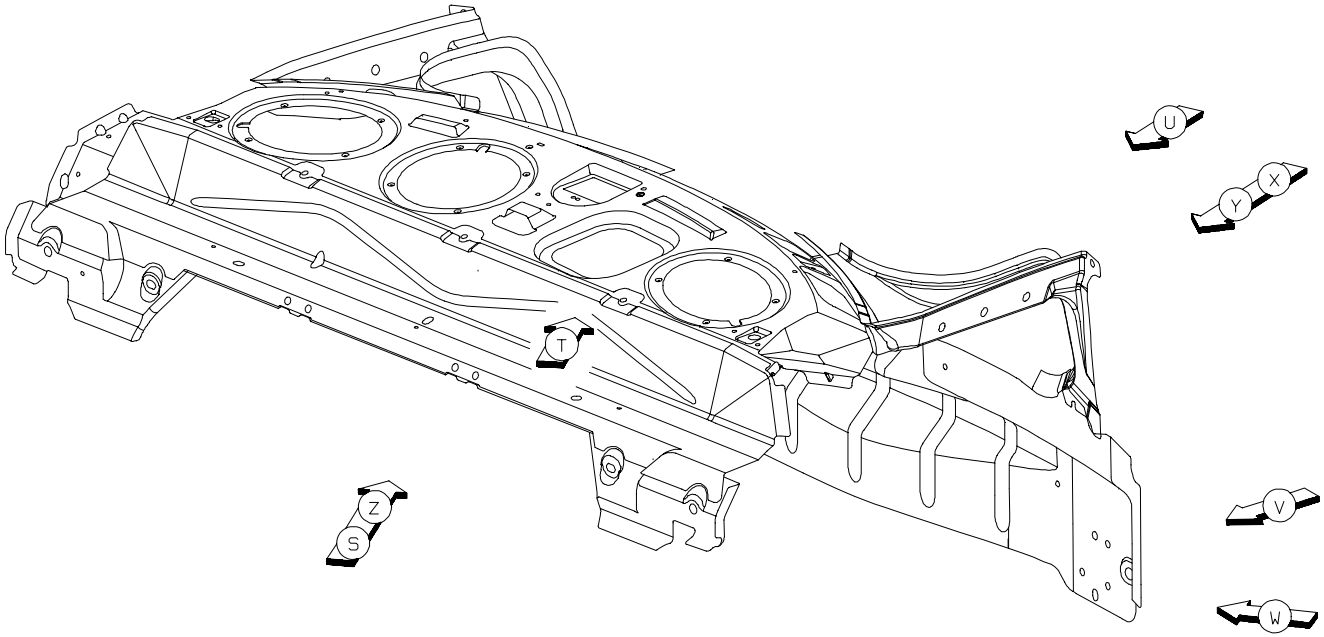

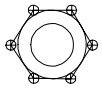

PROJECTION WELD

Back To Index

1. AG TO AA 6 S/WELD
2. AF TO AA 12 S/WELD

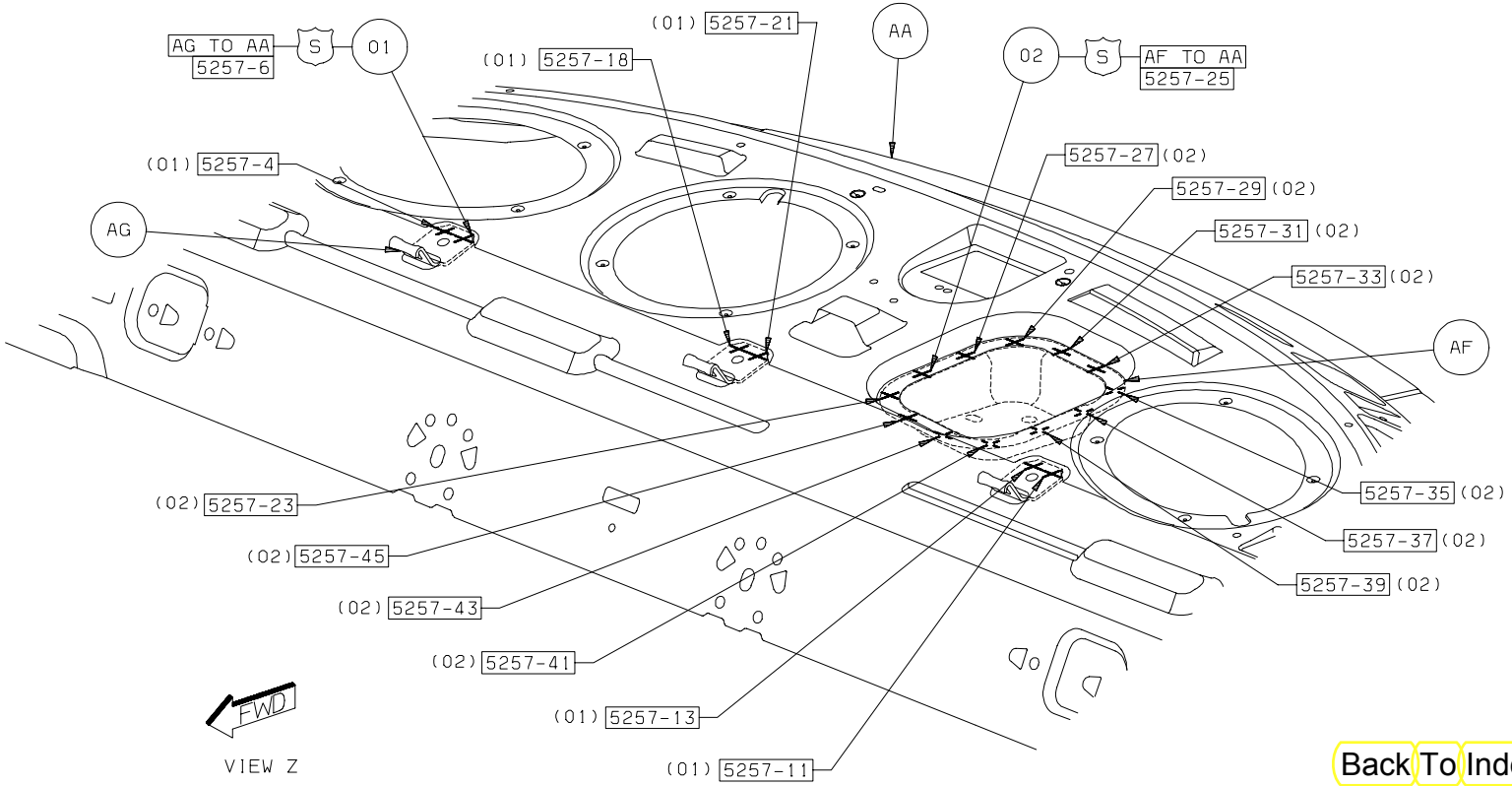

Back To Index

3. AC TO AB 41 S/WELD

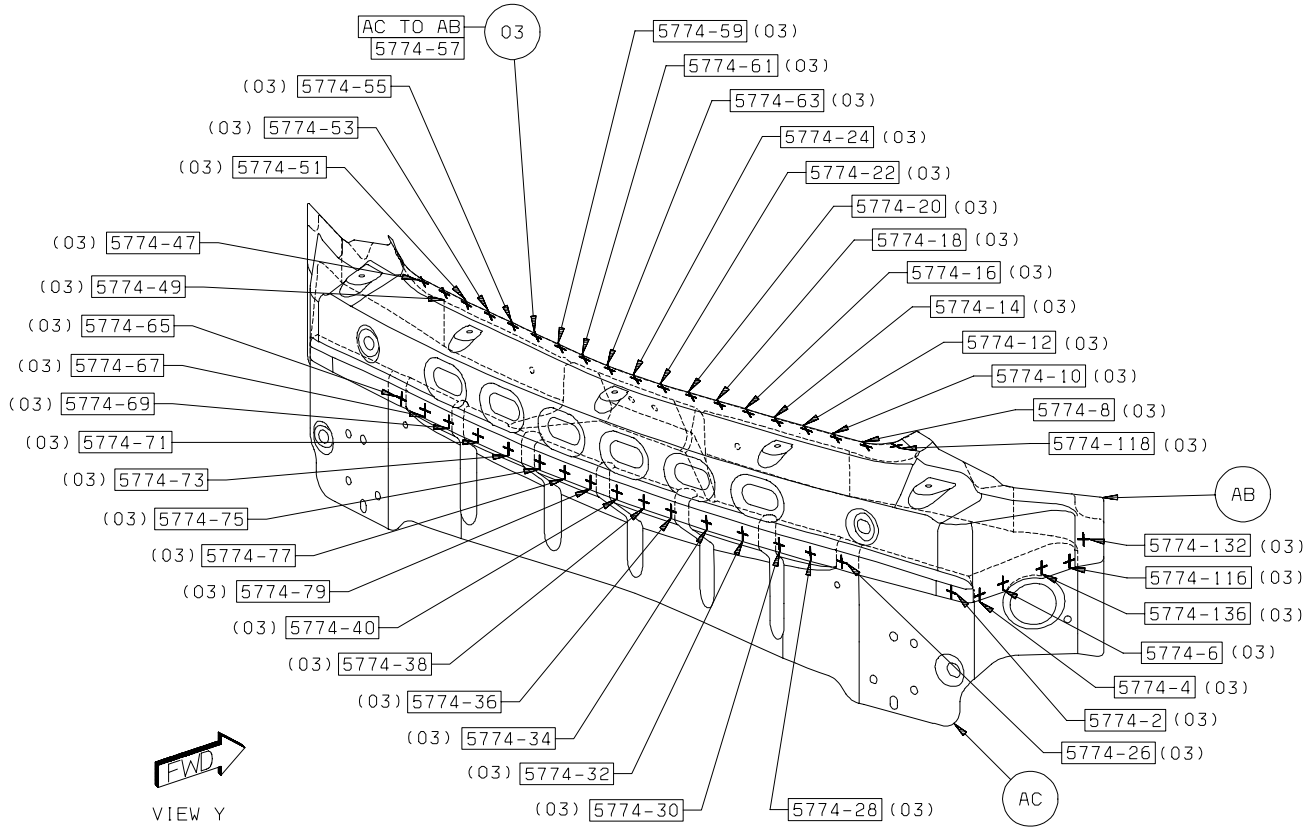

Back To Index

4. AE TO AC TO AB 6 S/WELD
5. AE TO AC 12 S/WELD

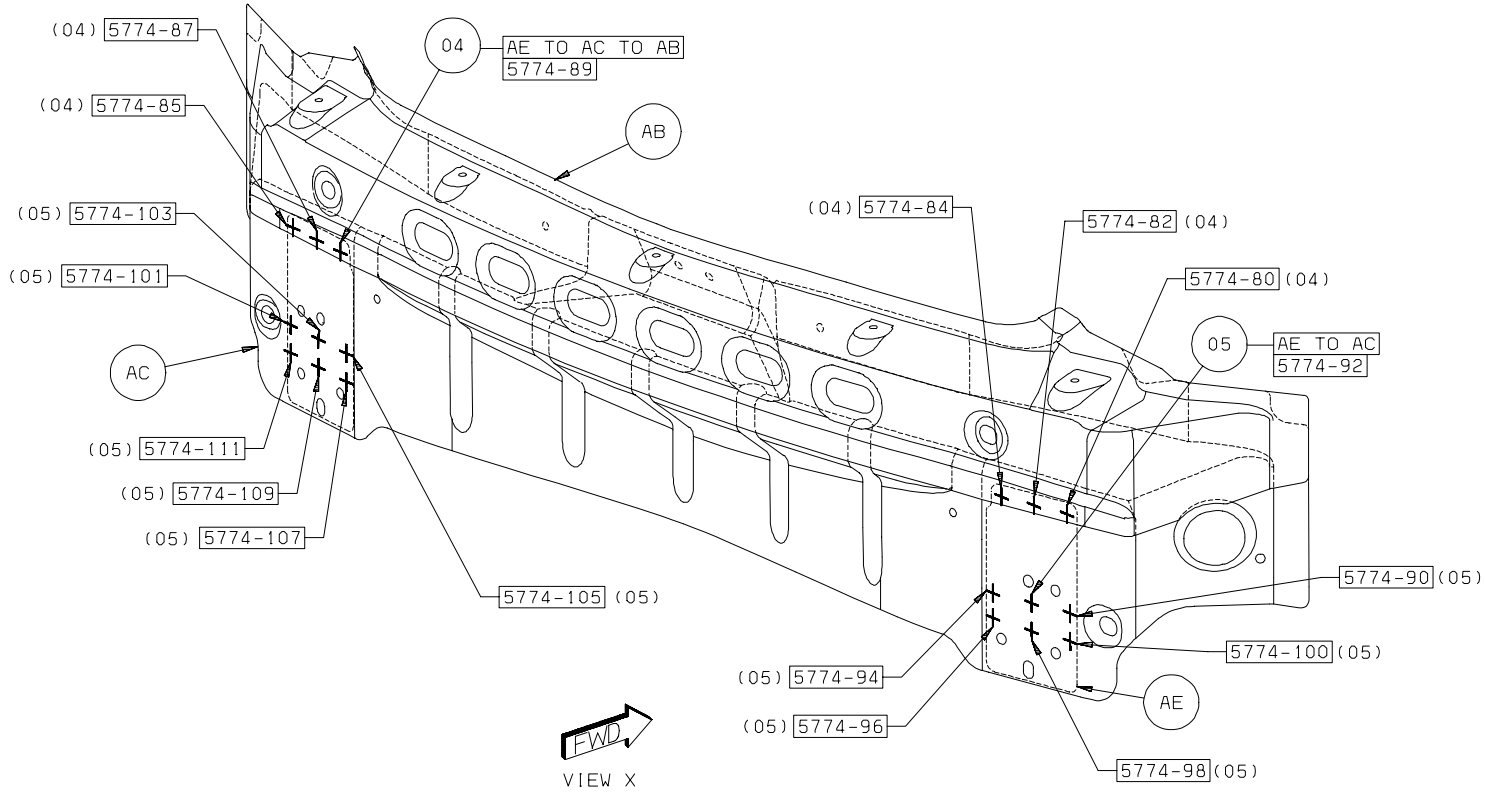

Back To Index

6. AC TO AB 6 S/WELD
7. AL TO AE 3/SD PROJ WELD

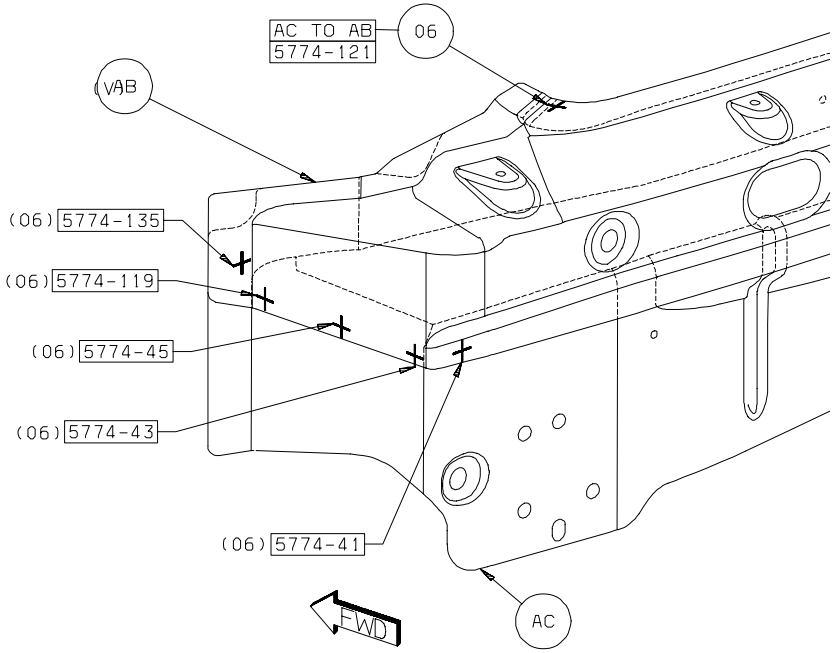

VIEW W

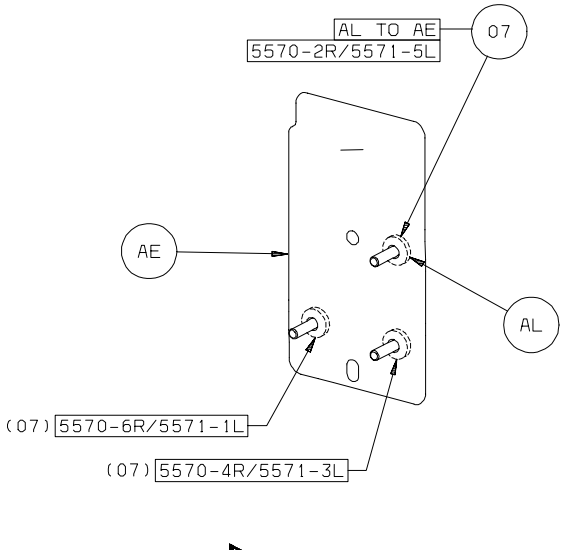

VIEW V

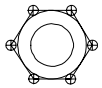

PROJECTION WELD

Back To Index

8. AM TO AC 5 PROJ WELD
9. AH TO AC 3 S/WELD
10. AJ TO AF 1 PROJ WELD

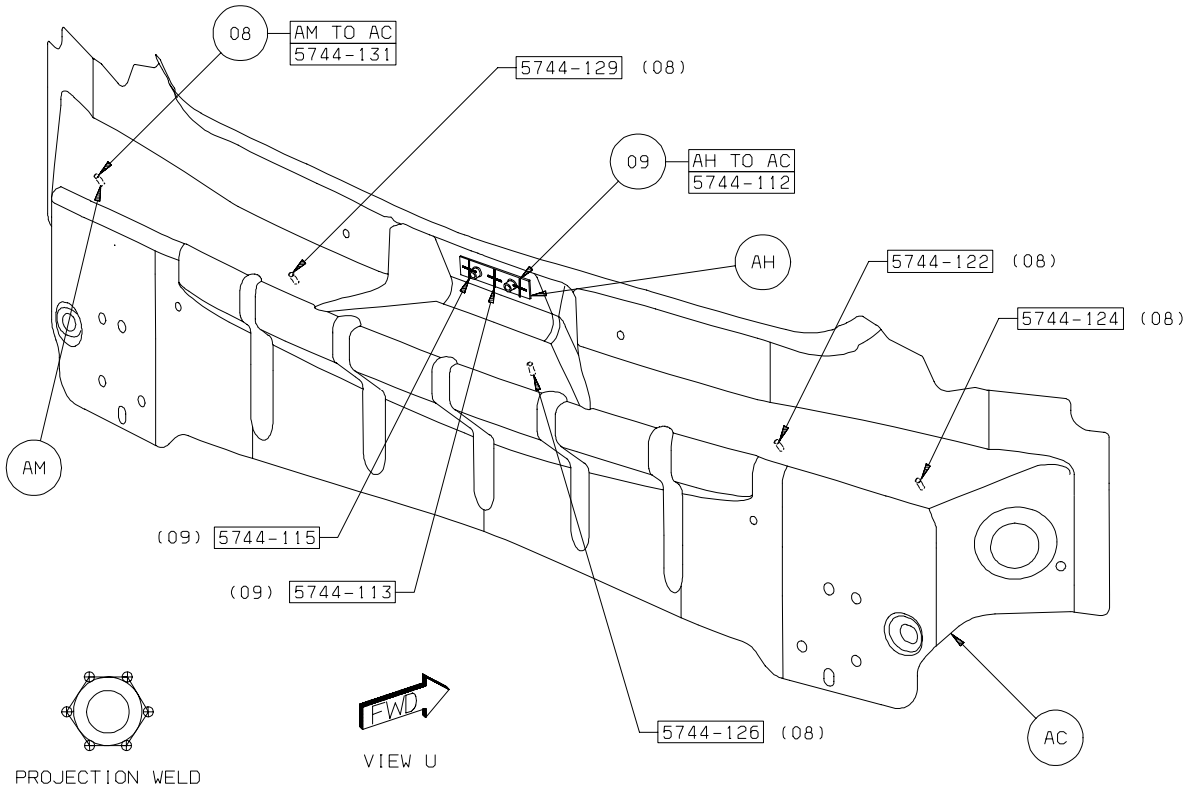

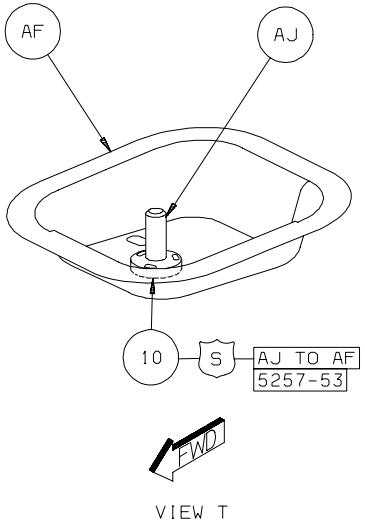

Back To Index

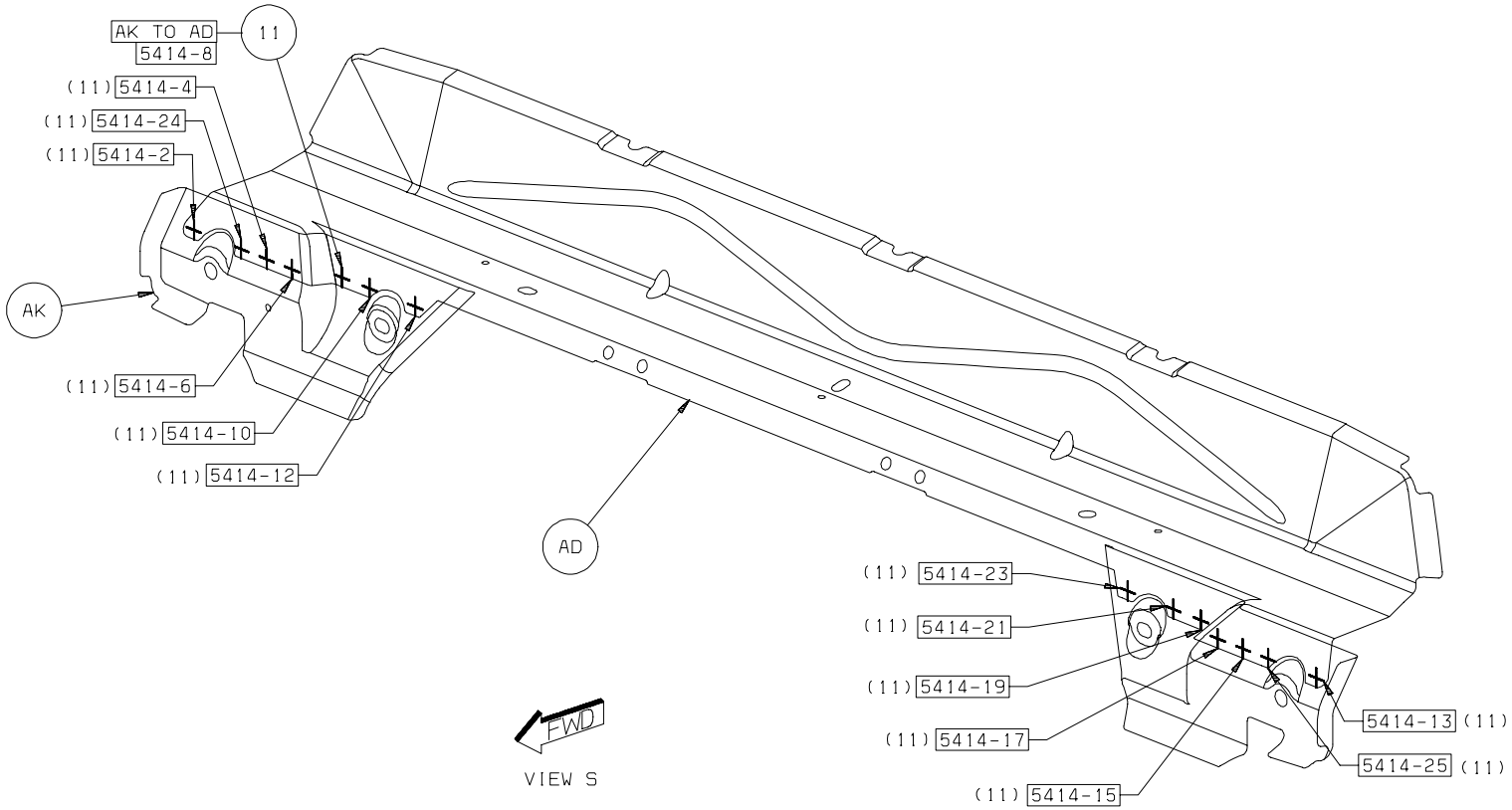

Back To Index

PARTS IDENTIFICATION LEGEND, OVERVIEW 8

AA PANEL - BODY SIDE INR RT -
AA PANEL - BODY SIDE INR LT -
AB TAPPING PLATE -
AB TAPPING PLATE -
AC TAPPING PLATE - BODY SIDE FRT DOOR LWR HINGE RT -
AC TAPPING PLATE - BODY SIDE FRT DOOR LWR HINGE LT -
AD TAPPING PLATE - DOOR HINGE FRT RT -
AD TAPPING PLATE - DOOR HINGE FRT LT -
AE TAPPING PLATE - SEAT BELT TURNING LOOP -
AE TAPPING PLATE - SEAT BELT TURNING LOOP -
AF REINF ASSY - BODY SIDE RT -
AF REINF ASSY - BODY SIDE LT -
AG REINF - RR BELT RETRACTOR RT -
AG REINF - RR BELT RETRACTOR LT -
AH NUT/PLATE.EXTRUDED - SPECIAL.PF-SAFETY - SEAT BELT OTR
AH NUT/PLATE.EXTRUDED - SPECIAL.PF-SAFETY - SEAT BELT OTR
AJ TAPPING PLATE - SIDE AIR BAG SENSOR MOUNTING -
AJ TAPPING PLATE - SIDE AIR BAG SENSOR MOUNTING -
AK REINF - C-PILLAR RT -
AK REINF - C-PILLAR LT -
AL PANEL - BODY SIDE OTR RT -
AL PANEL - BODY SIDE OTR LT -
AL PANEL - RR WHEELHOUSE OTR RT -
AL PANEL - RR WHEELHOUSE OTR LT -
AM REINF - BODY SIDE RT -
AM REINF - BODY SIDE LT -
AP TAPPING PLATE - DOOR HINGE RR UPR RT -
AP TAPPING PLATE - DOOR HINGE RR UPR LT -
AR TAPPING PLATE - DOOR HINGE RR LWR RT -
AR TAPPING PLATE - DOOR HINGE RR LWR LT -

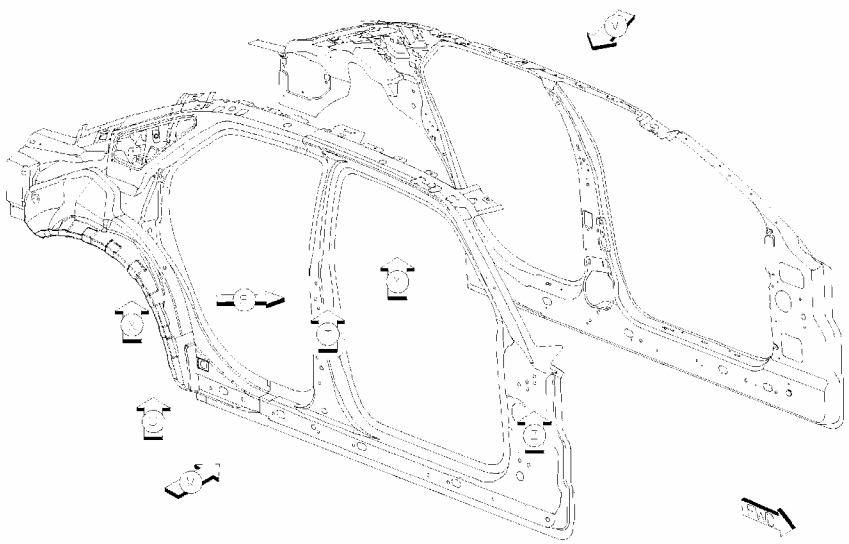

Back To Index

1. AB TO AA 6/SD S/WELDS
2. AC TO AA 9/SD S/WELDS
3. AD TO AA 7/SD S/WELDS

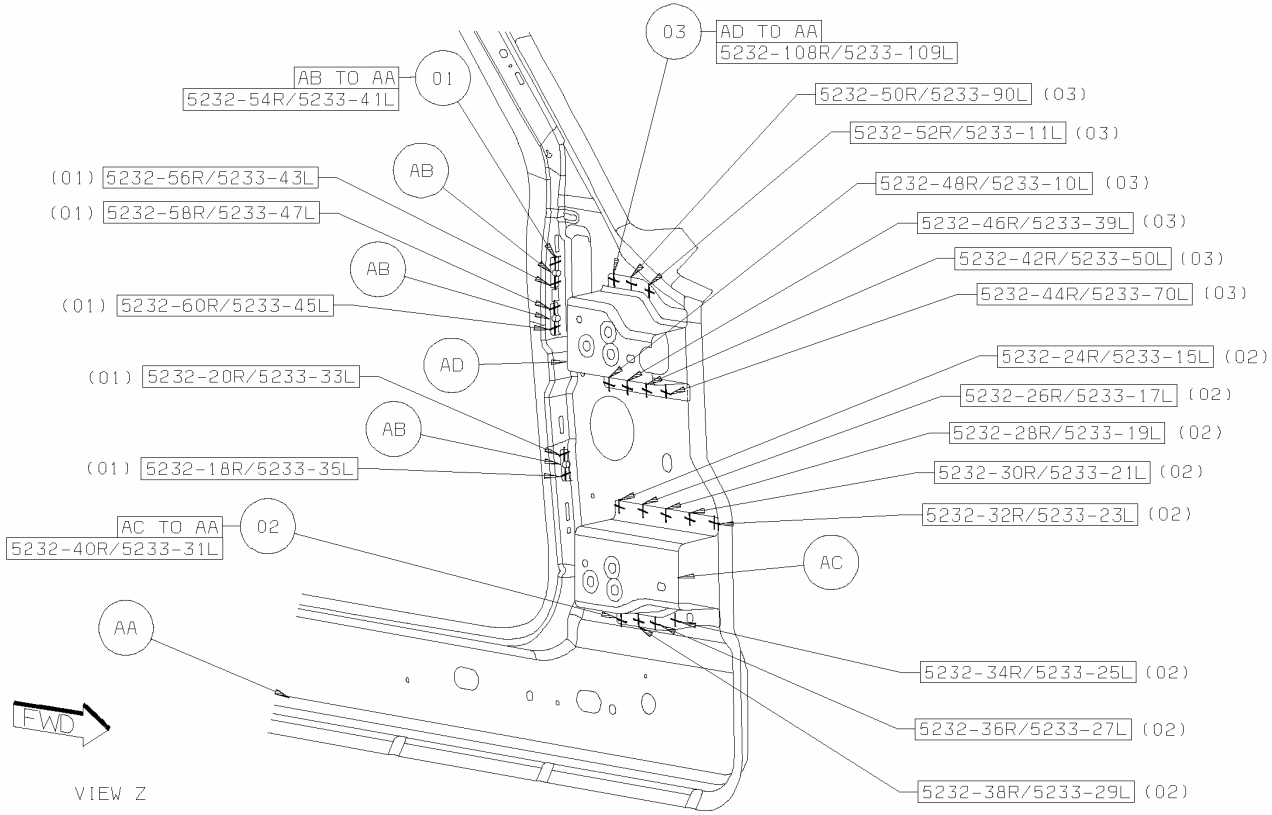

Back To Index

4. AE TO AA 5/SD S/WELDS
5. AF TO AA 7/SD S/WELDS

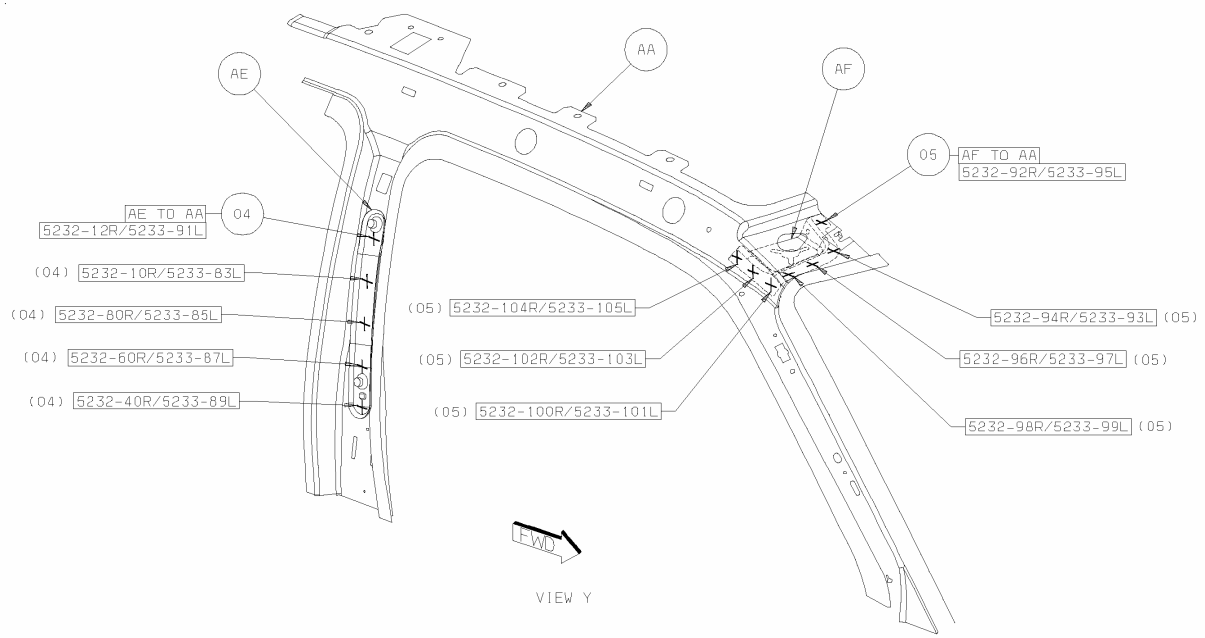

Back To Index

6. AG TO AA 9/SD S/WELDS

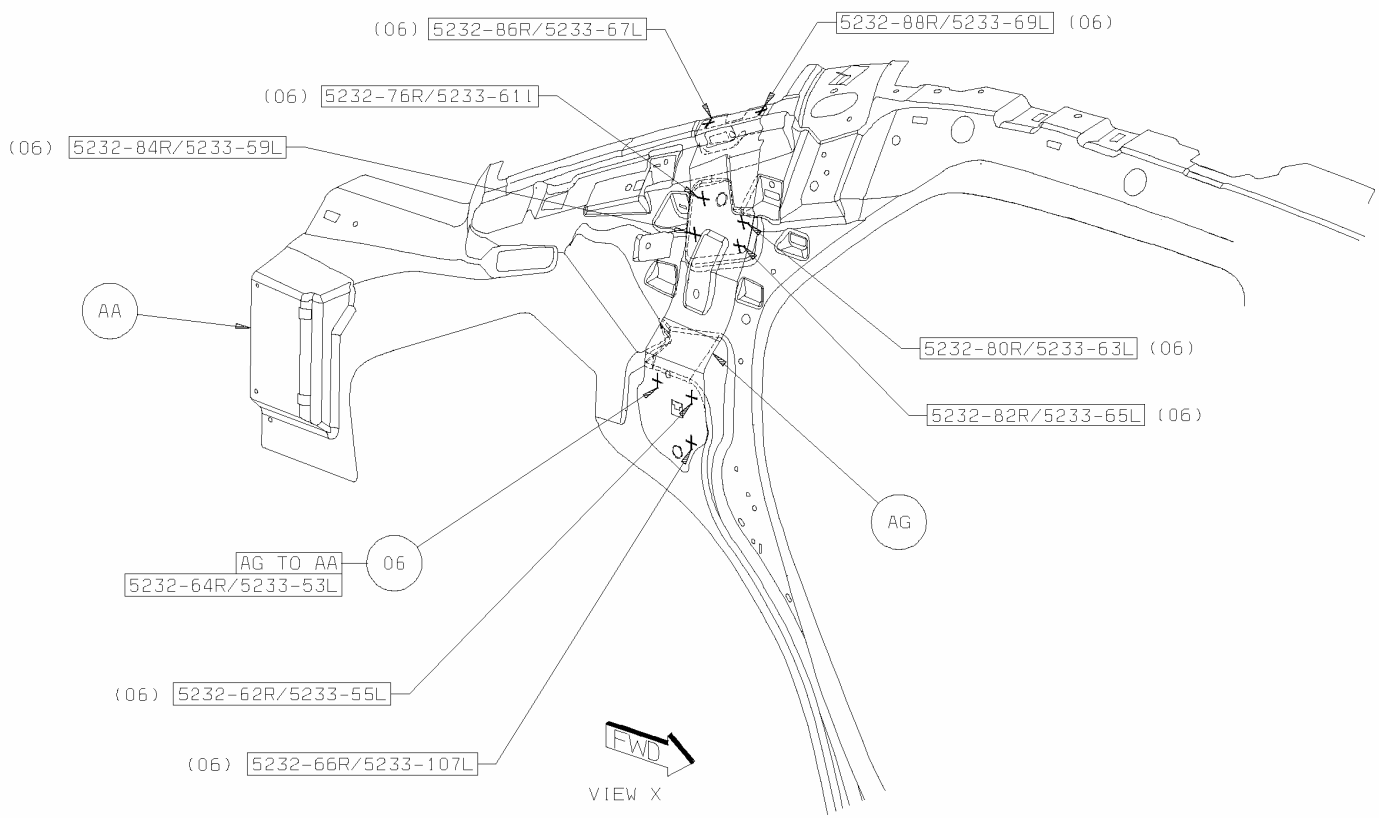

Back To Index

7. AH TO AA 6R S/WELDS
8. AJ TO AA 3/SD S/WELDS

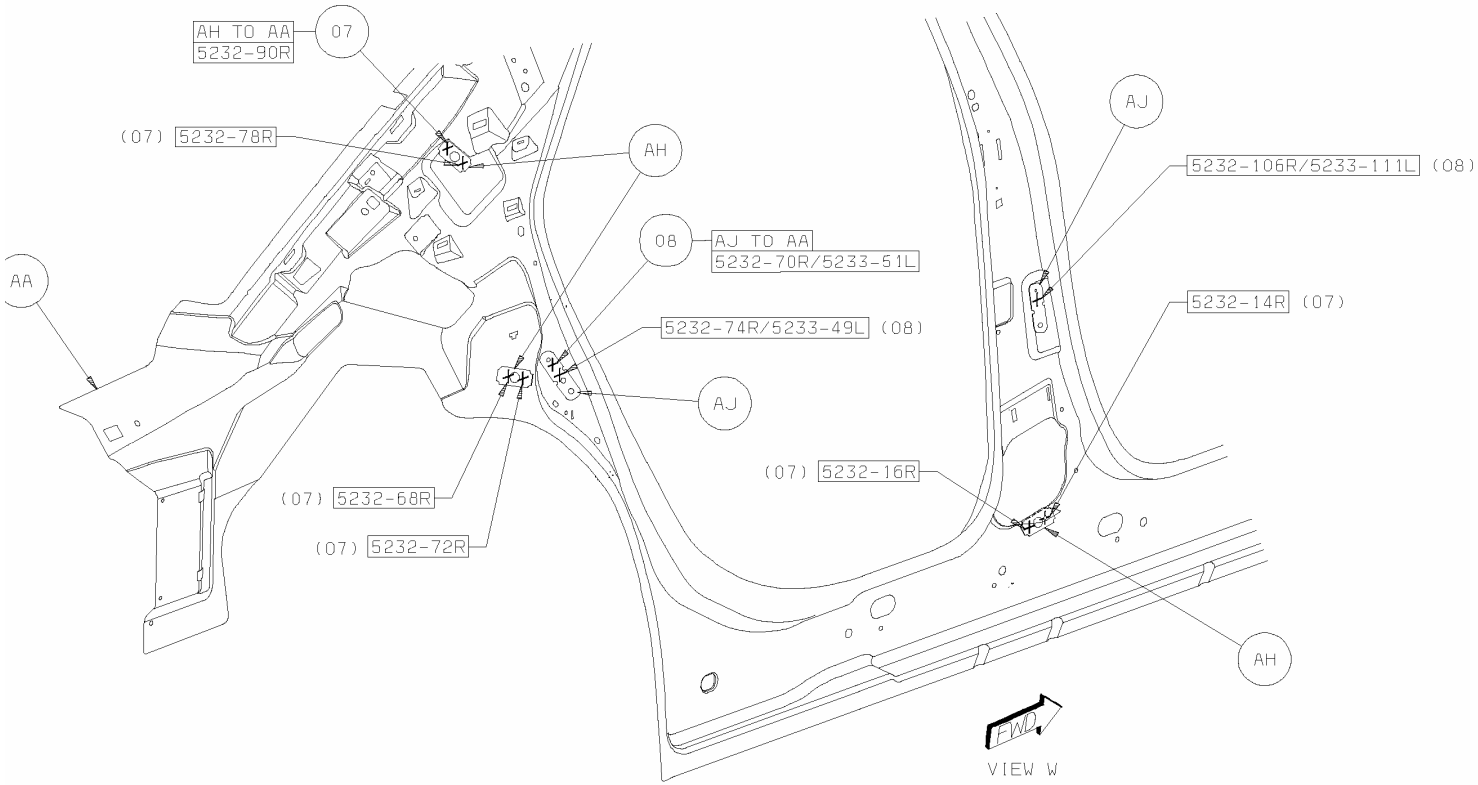

Back To Index

9. AH TO AA 6L S/WELDS

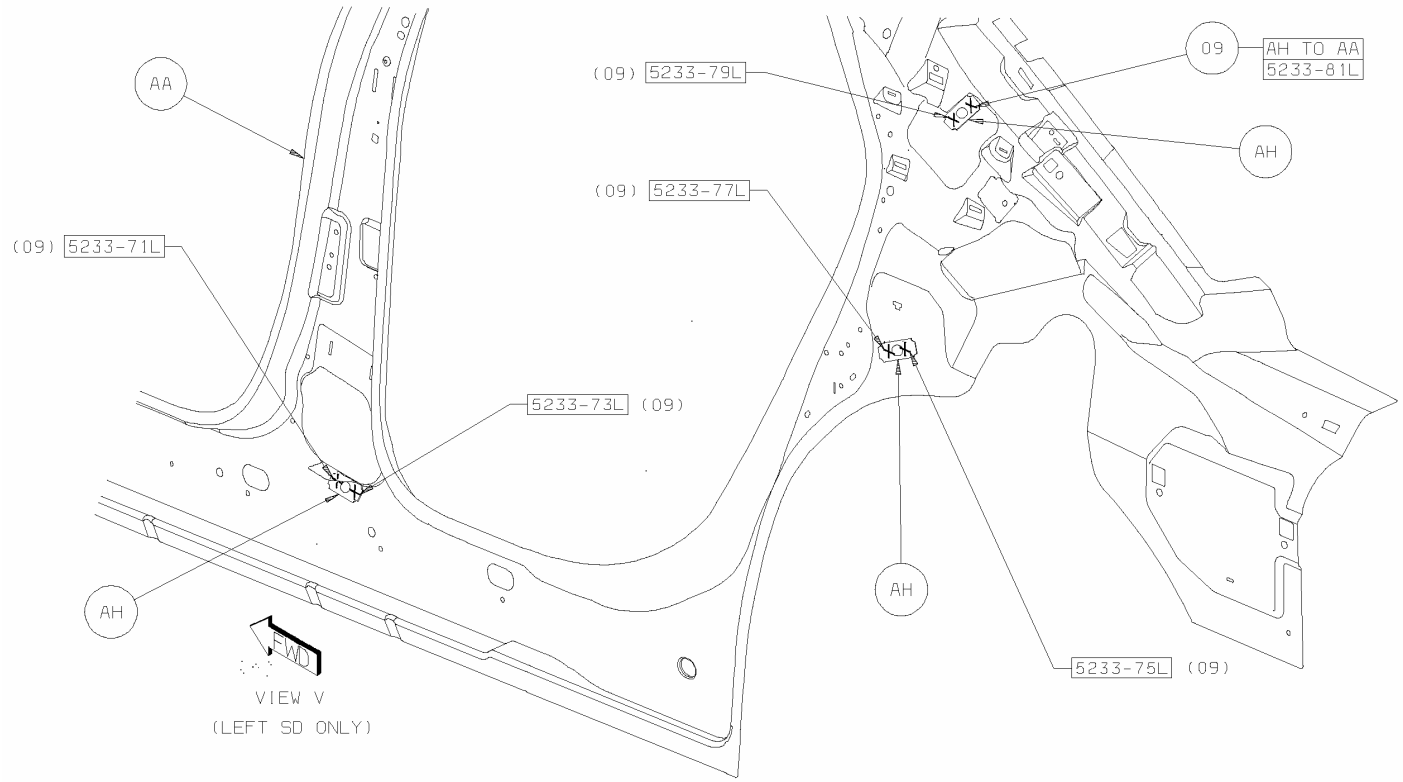

Back To Index

10. AL TO AK 21/SD S/WELDS

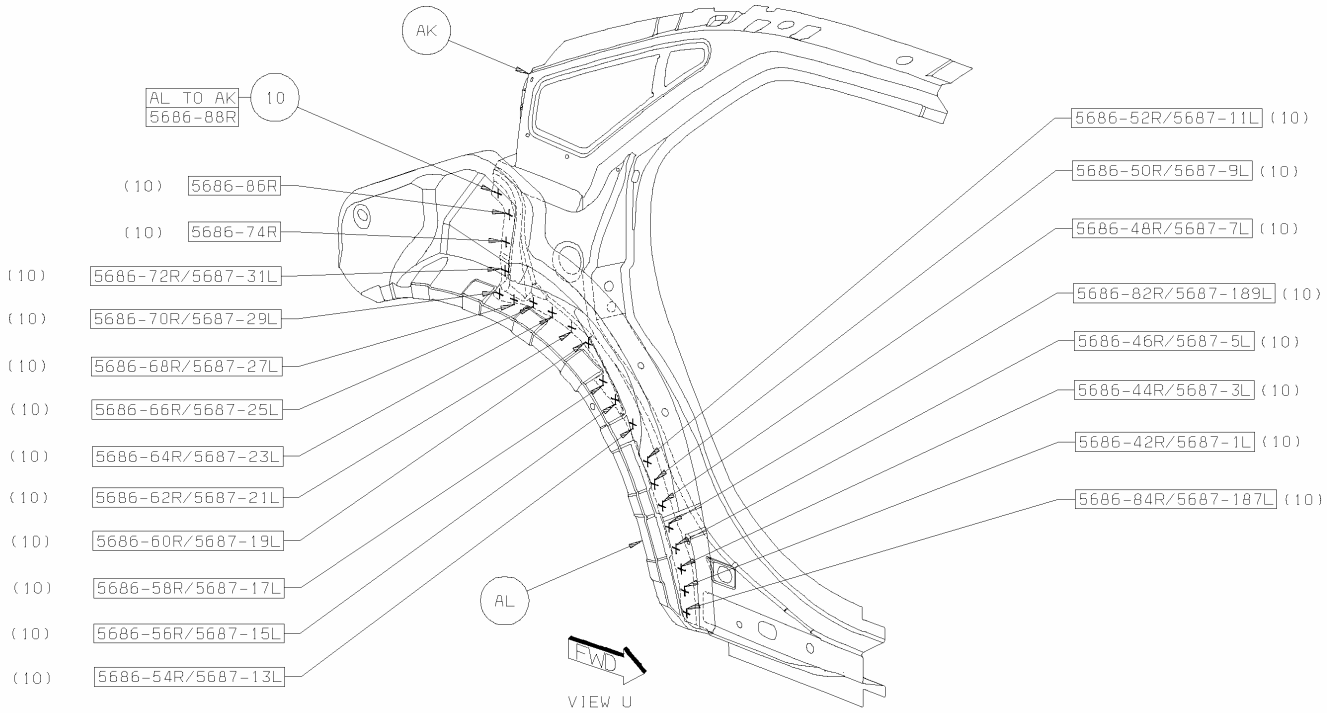

Back To Index

11. AM TO AK 6/SD S/WELDS
12. AN TO AM 8/SD S/WELDS

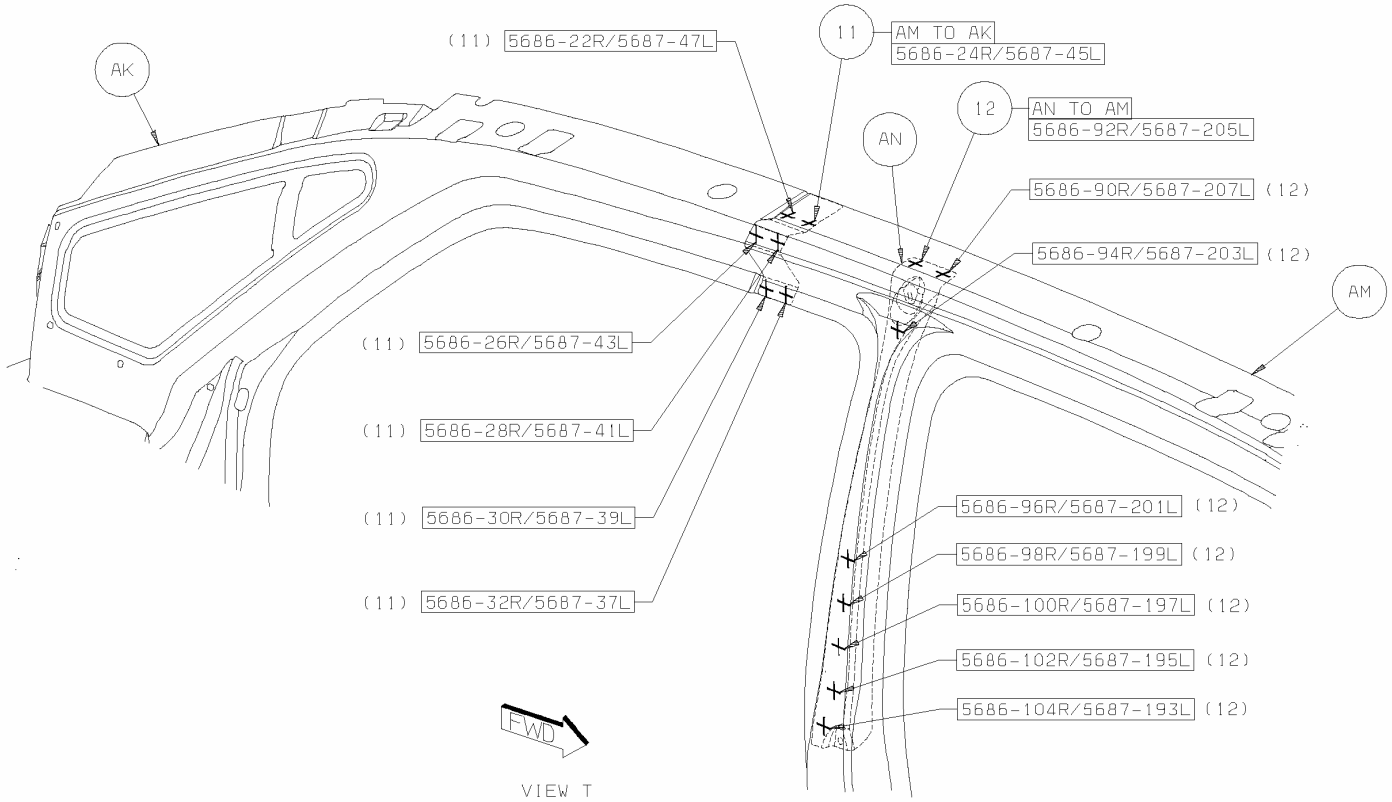

Back To Index

13. AM TO AK 6/SD S WELDS
14. AP TO AM 5/SD S/WELDS
15. AR TO AM 5/SD S/WELDS

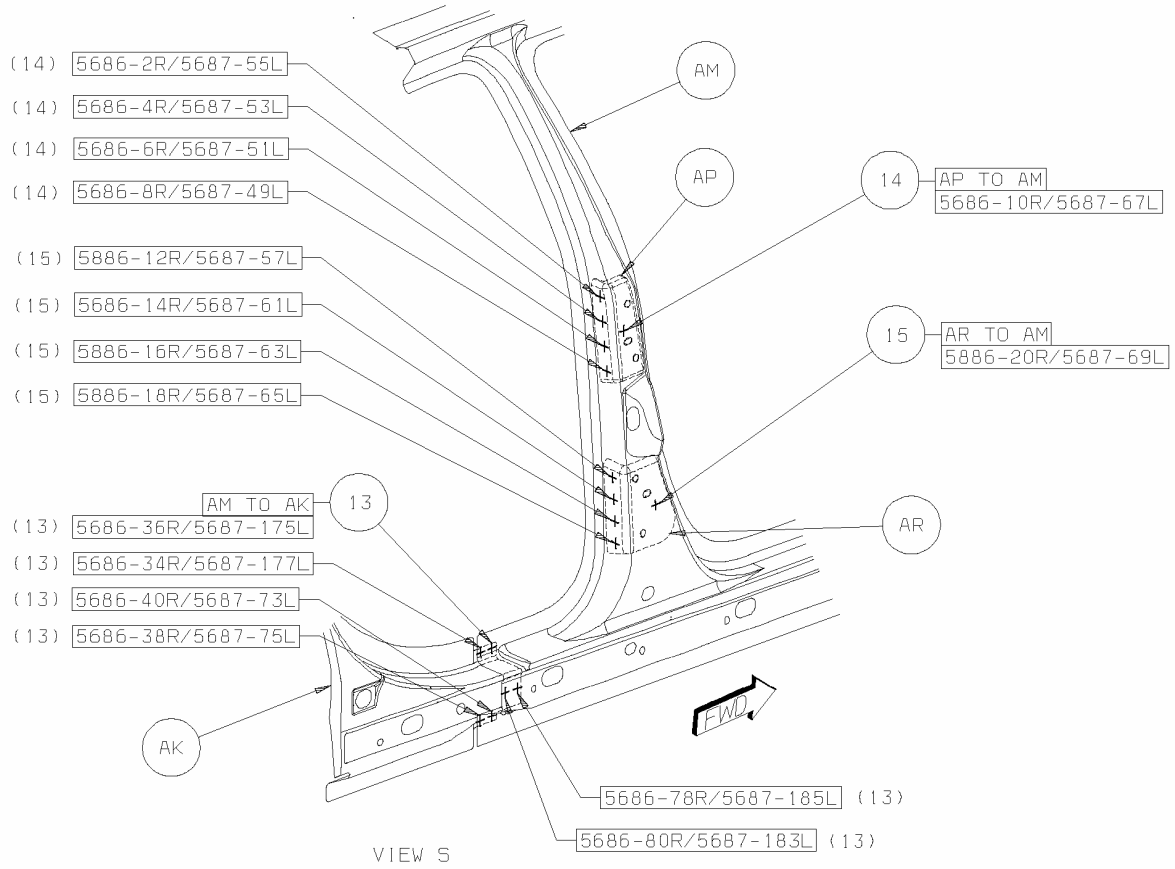

Back To Index

PARTS IDENTIFICATION LEGEND, OVERVIEW 9

AA	PANEL - BODY SIDE INR RT -
AA	PANEL - BODY SIDE INR LT -
AB	TAPPING PLATE - SIDE AIR BAG SENSOR MOUNTING -
AB	TAPPING PLATE - SIDE AIR BAG SENSOR MOUNTING -
AC	TAPPING PLATE - SEAT BELT TURNING LOOP
AC	TAPPING PLATE - SEAT BELT TURNING LOOP
AD	REINF - SUN VISOR MOUNTING TRIM -
AD	REINF - SUN VISOR MOUNTING TRIM -
AE	TAPPING PLATE -
AE	TAPPING PLATE -
AF	TAPPING PLATE - DOOR HINGE FRT RT -
AF	TAPPING PLATE - DOOR HINGE FRT LT -
AG	TAPPING PLATE - BODY SIDE FRT DOOR LWR HINGE RT -
AG	TAPPING PLATE - BODY SIDE FRT DOOR LWR HINGE LT -
AH	NUT/PLATE.EXTRUDED - SPECIAL.PF-SAFETY - BODY SIDE INR PANEL RT
AH	NUT/PLATE.EXTRUDED - SPECIAL.PF-SAFETY - BODY SIDE INR PANEL LT

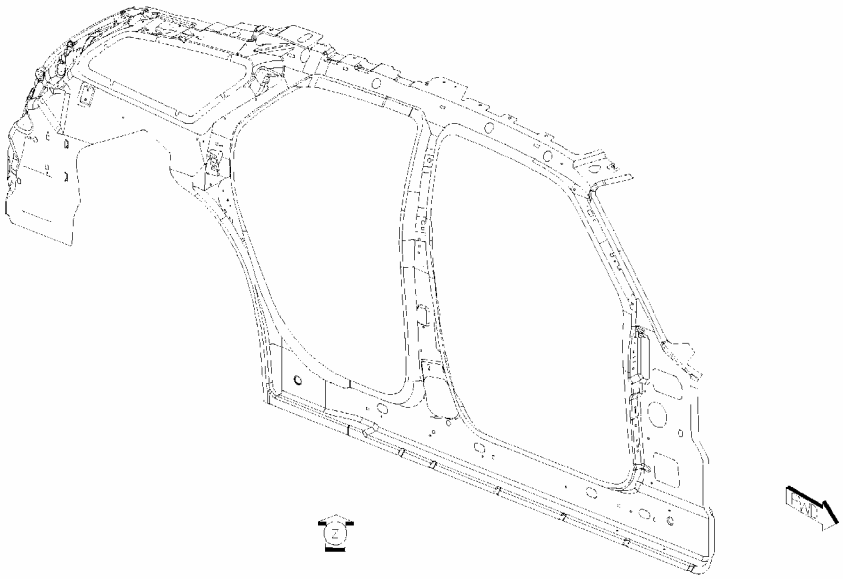

Back To Index

1 AB TO AA 2/SD S/WELDS
2 AC TO AA 5/SD S/WELDS
3 AA TO AD 7/SD S/WELDS
4 AF TO AA 6/SD S/WELDS
5 AG TO AA 9/SD S/WELDS
6 AE TO AA 6/SD S/WELDS
7 AH TO AA 2/SD S/WELDS

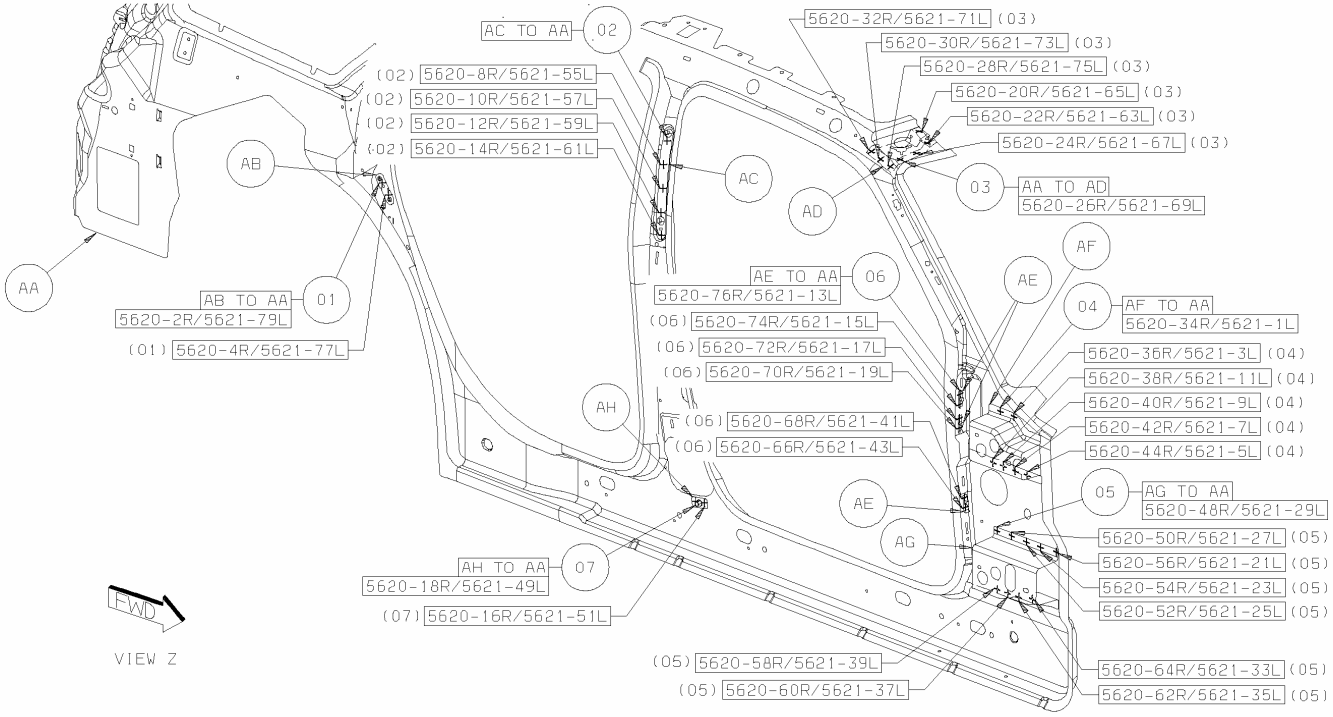

Back To Index

For fast, accurate color matching

You Can't Beat The System!

BASF offers the most comprehensive color management systems available to the collision repair industry. By using the BASF system— Smart*SCAN*®2, Smart*TRAK*®2, and COLOR-MAX®2—Chrysler Technicians can maximize speed and accuracy in color matching, which will help improve productivity.

For additional information please call 1-800-825-3000 or visit our website at www.basfrefinish.com.

WE'RE MAKING WINNERS

BASF
The Chemical Company

Back To Index

PARTS IDENTIFICATION LEGEND, OVERVIEW 11

AA	PANEL - FRT DOOR INR RT -
AA	PANEL - FRT DOOR INR LT -
AB	CHANNEL - FRT DOOR GLASS RUN RT -
AB	CHANNEL - FRT DOOR GLASS RUN LT -
AC	REINF - FRT DOOR BELT INR RT -
AC	REINF - FRT DOOR BELT INR LT -
AD	EXTENSION - IMPACT BEAM FRT DOOR RR RT -
AD	EXTENSION - IMPACT BEAM FRT DOOR RR LT -
AE	EXTENSION - IMPACT BEAM FRT DOOR FRT RT -
AE	EXTENSION - IMPACT BEAM FRT DOOR FRT LT -
AF	REINF - FRT DOOR BELT OTR RT -
AF	REINF - FRT DOOR BELT OTR LT -
AG	TAPPING PLATE - FRT DOOR UPR RT -
AH	TAPPING PLATE - RR DOOR UPR RT -
AJ	PANEL - FRT DOOR OTR RT -
AJ	PANEL - FRT DOOR OTR LT -
AK	BAR - IMPACT FRT DOOR RT -
AK	BAR - IMPACT FRT DOOR LT -

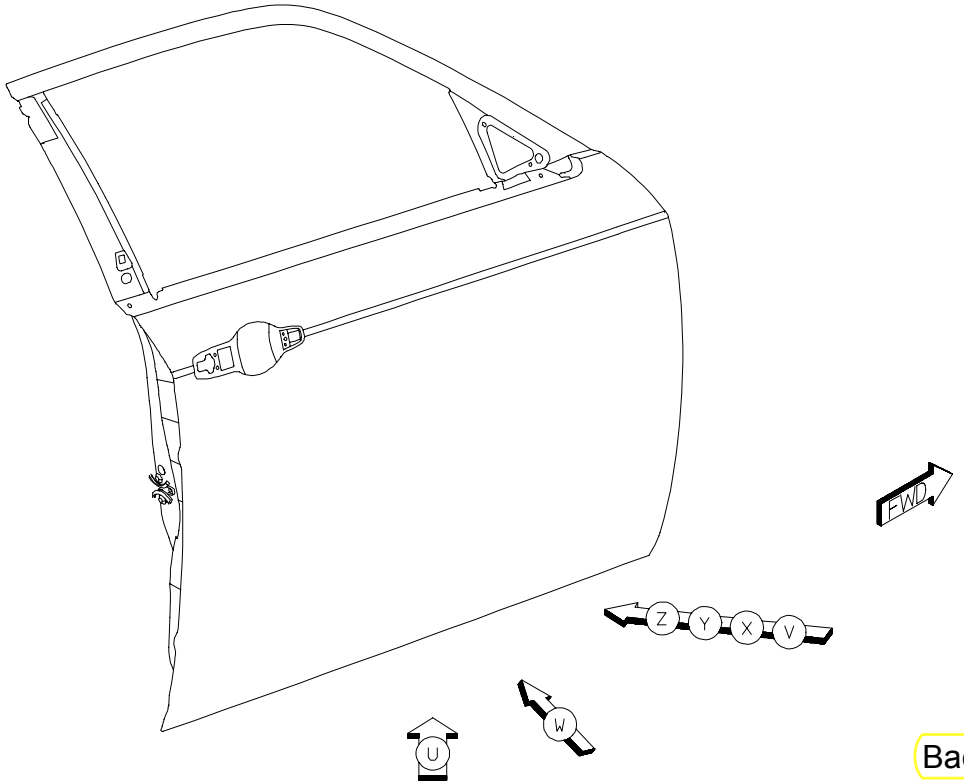

Back To Index

1. AB TO AA 19/SD S/WELDS

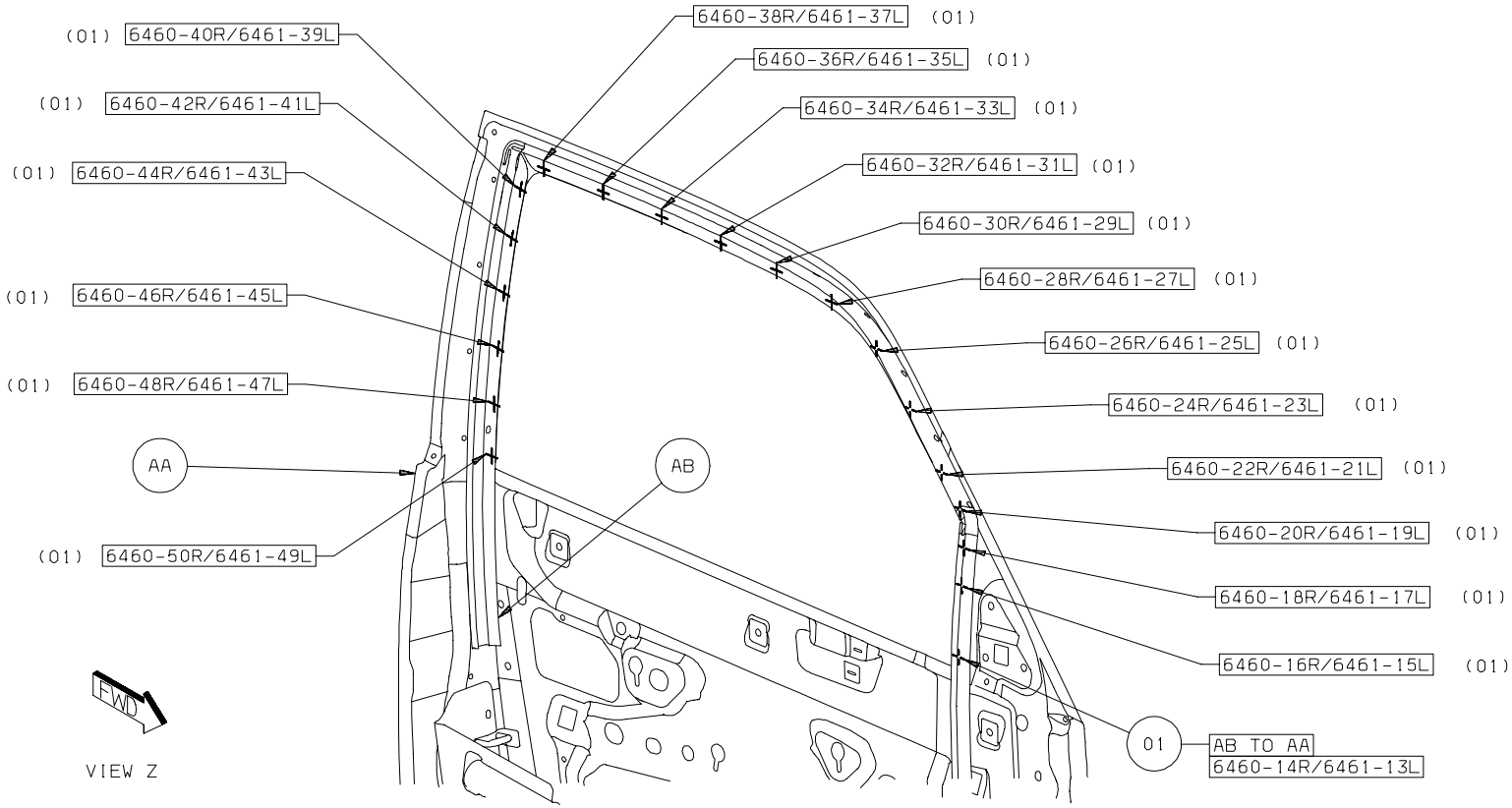

Back To Index

2. AD TO AA 7/SD S/WELDS
3. AE TO AA 7/SD S/WELDS

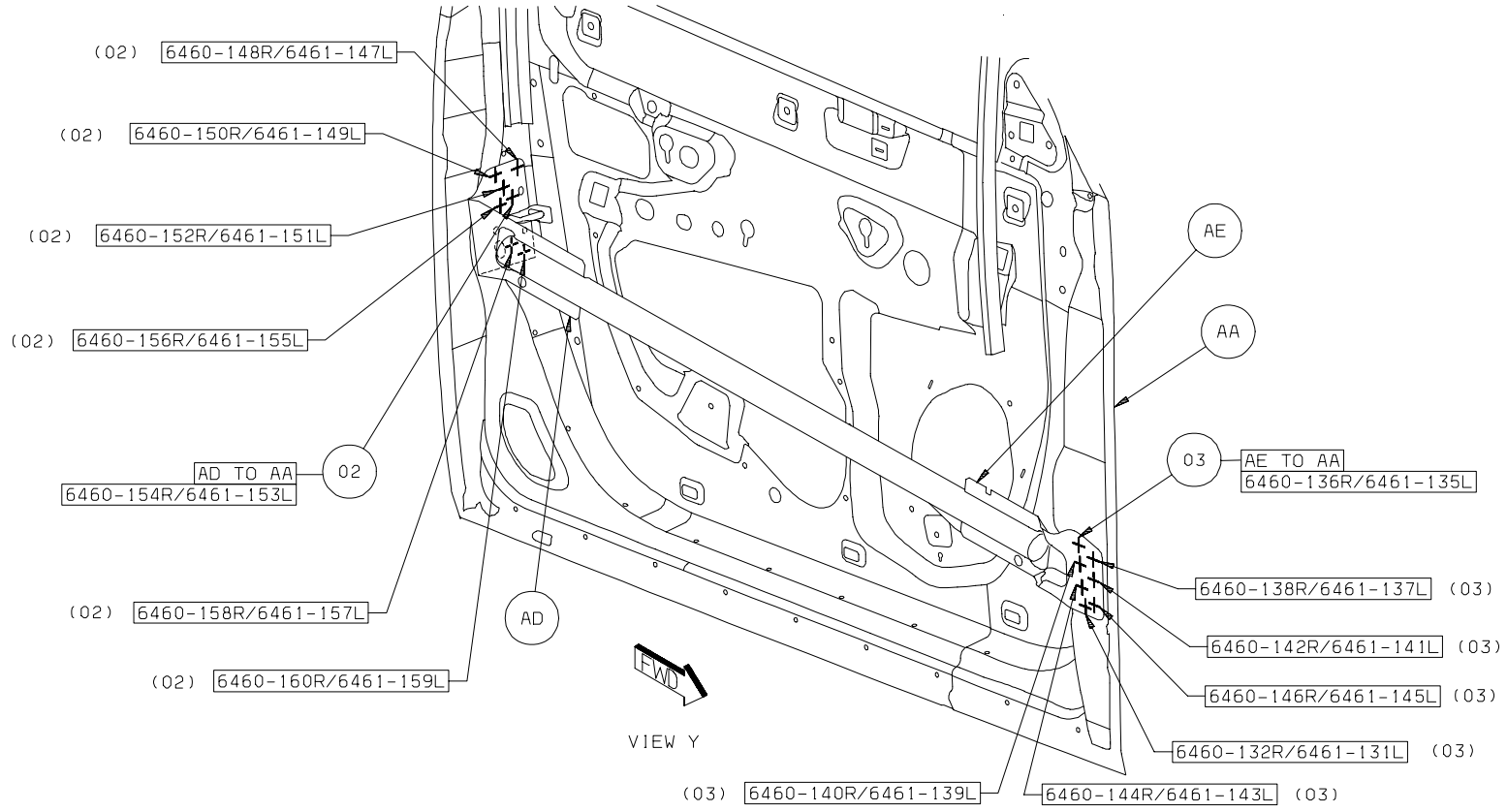

Back To Index

4. AC TO AA 28/SD S/WELDS

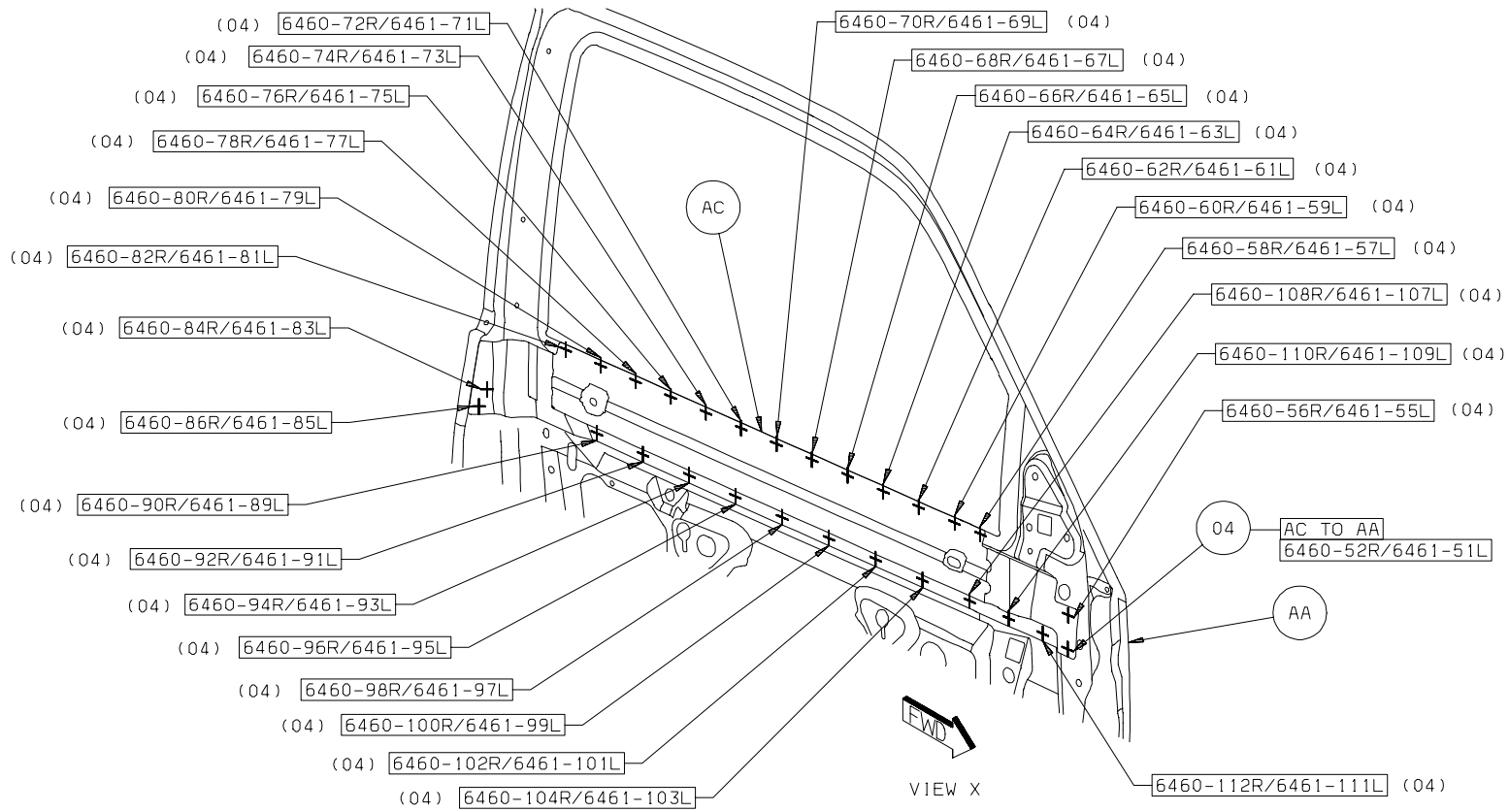

Back To Index

5. AF TO AC TO AA 2/SD S/WELDS
6. AG TO AA 4/SD S/WELDS
7. AH TO AA 3/SD S/WELDS

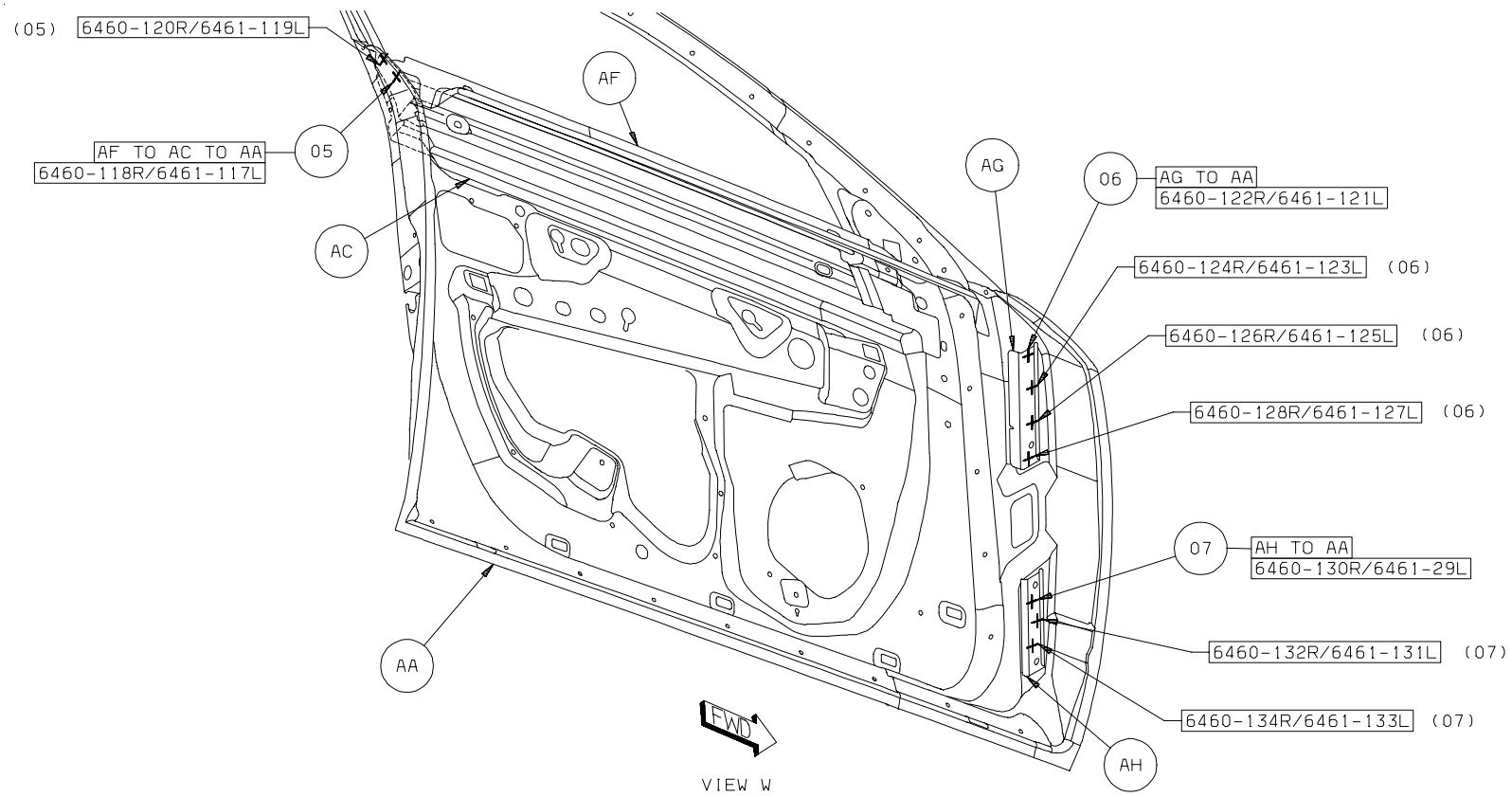

Back To Index

8. AJ TO AA 1/SD STRUC ADH
9. AB TO AJ 1/SD STRUC ADH
10. AF TO AJ 1/SD STRUC ADH
11. AF TO AJ 1/SD STRUC ADH
12. AK TO AJ 2/SD STRUC ADH

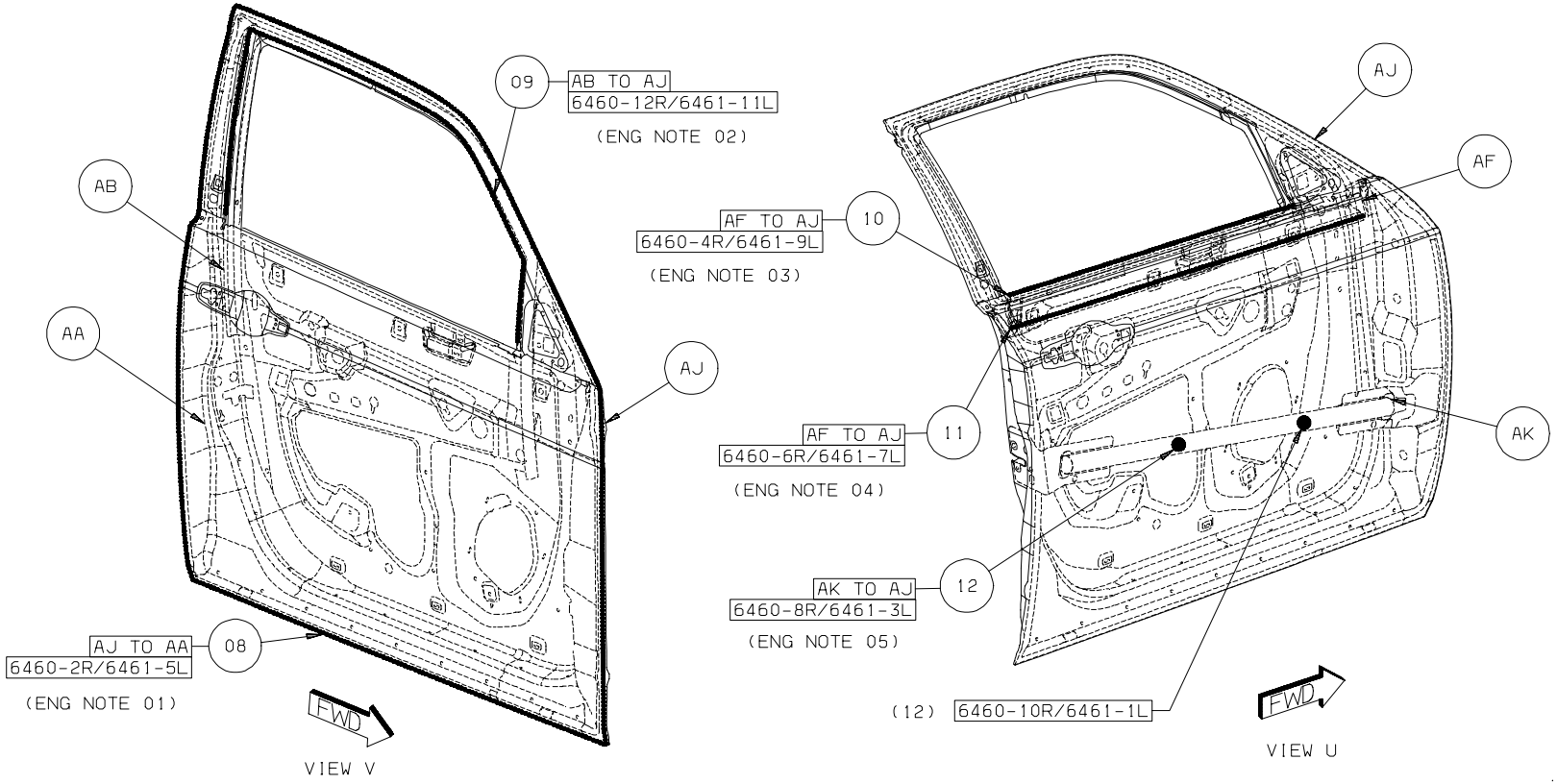

Back To Index

PARTS IDENTIFICATION LEGEND, OVERVIEW 12

AA	PANEL - RR DOOR INR RT -
AB	PANEL - RR DOOR INR LT -
AB	CHANNEL - RR DOOR GLASS RUN RT -
AB	CHANNEL - RR DOOR GLASS RUN LT -
AC	EXTENSION - RR DOOR IMPACT BAR RR RT -
AC	EXTENSION - RR DOOR IMPACT BAR RR LT -
AD	REINF - RR DOOR BELT INR RT -
AD	REINF - RR DOOR BELT INR LT -
AE	TAPPING PLATE - RR DOOR UPR RT -
AF	REINF - RR DOOR BELT OTR RT -
AF	REINF - RR DOOR BELT OTR LT -
AG	EXTENSION - RR DOOR IMPACT BAR FRT RT -
AG	EXTENSION - RR DOOR IMPACT BAR FRT LT -
AH	PANEL - RR DOOR OTR RT -
AH	PANEL - RR DOOR OTR LT -
AJ	BAR - IMPACT RR DOOR RT -
AJ	BAR - IMPACT RR DOOR LT -

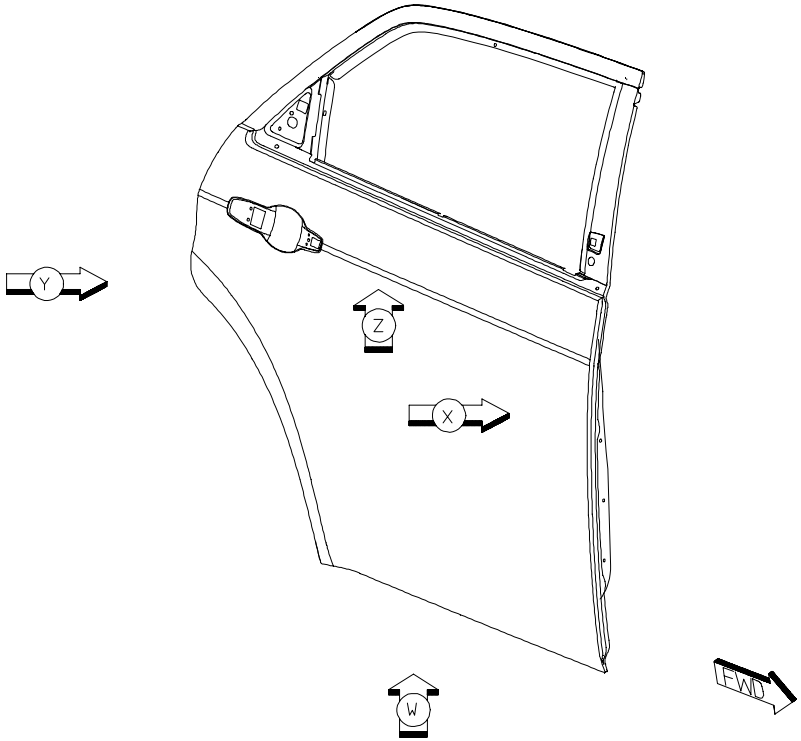

Back To Index

1. AB TO AA 19/SD S/WELDS
2. AC TO AA 6/SD S/WELDS

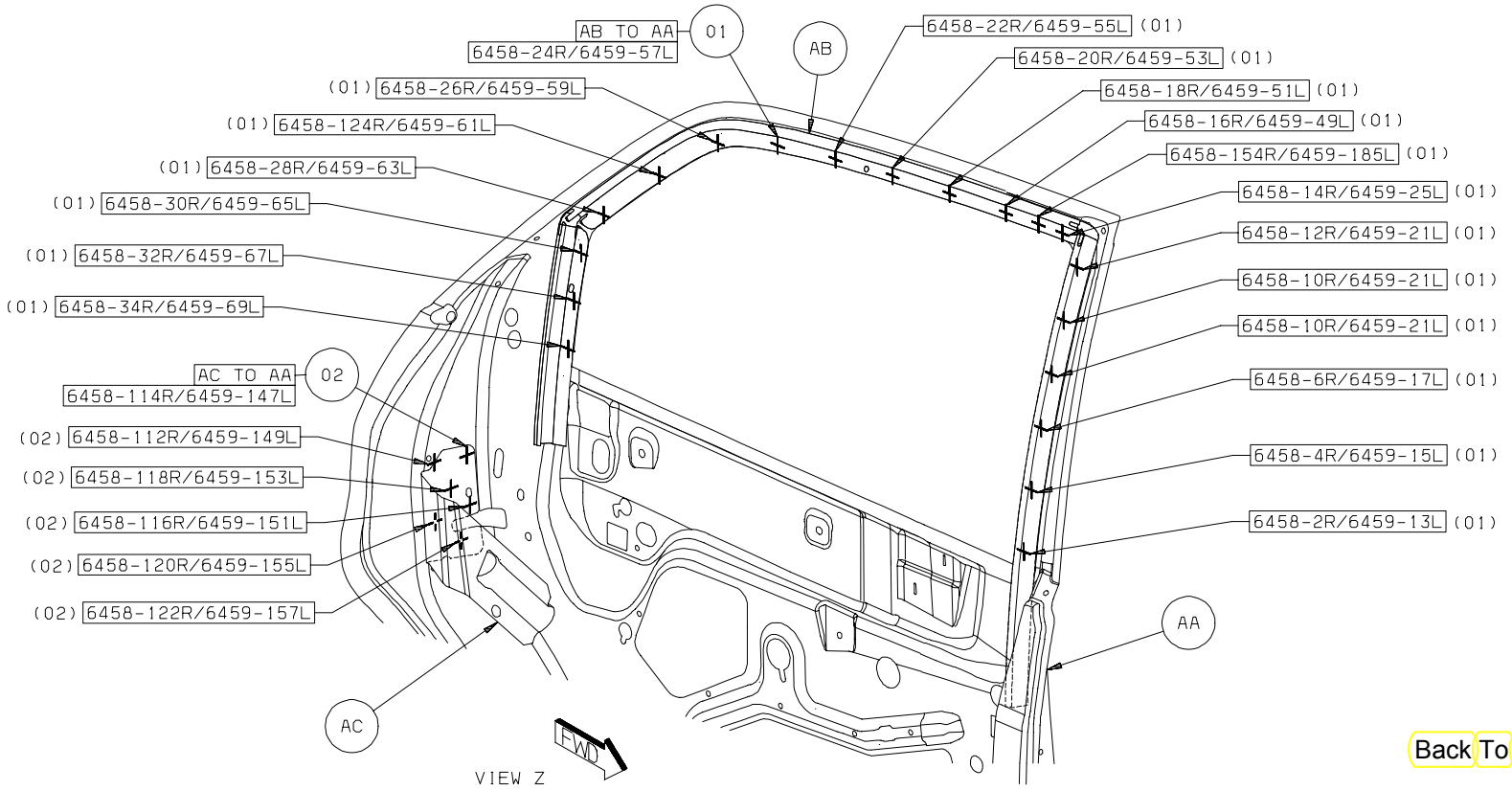

Back To Index

3. AD TO AA 25/SD S/WELDS
4. AE TO AA 3/SD S/WELDS

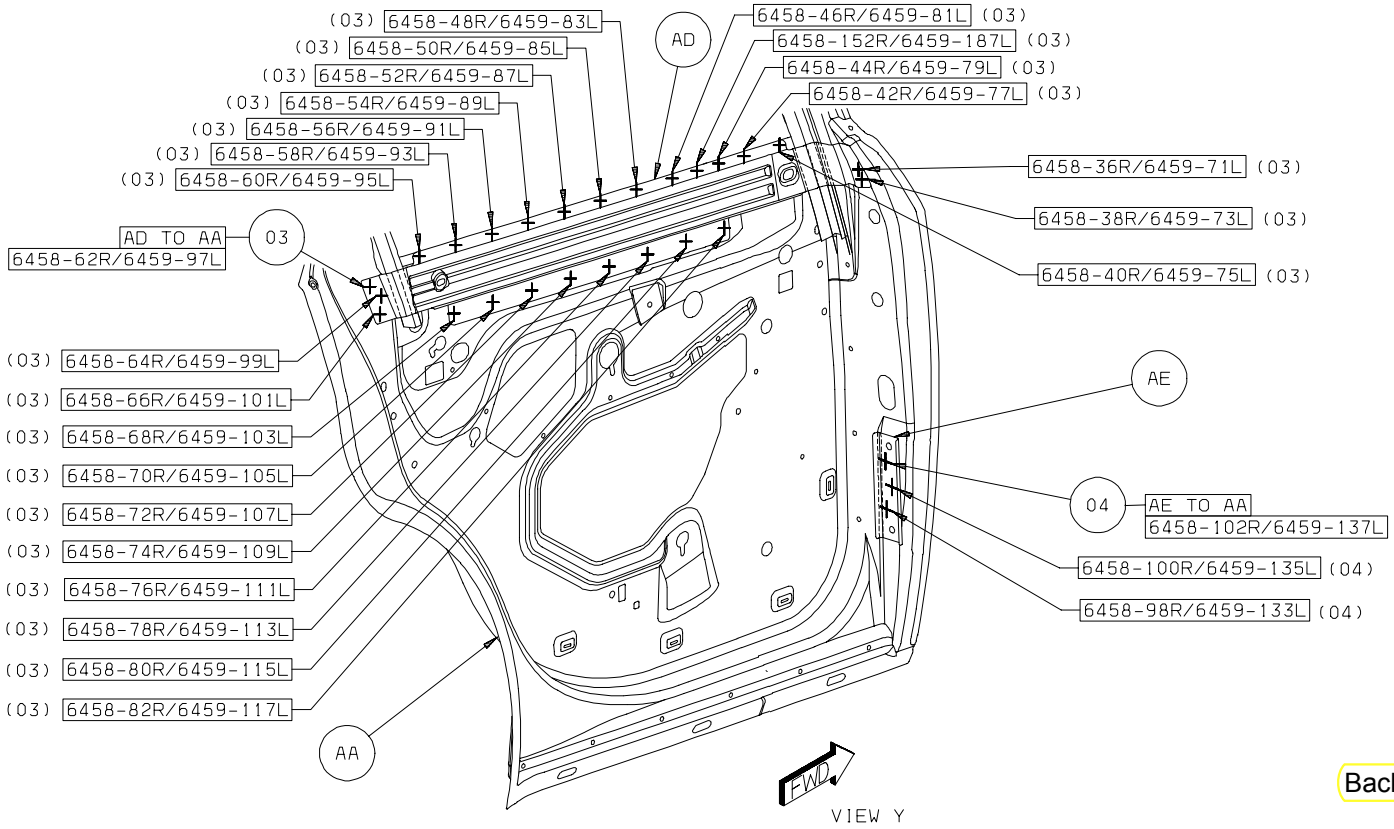

Back To Index

5. AF TO AA 4/SD S/WELDS
6. AE TO AA 3/SD S/WELDS
7. AG TO AA 4/SD S/WELDS

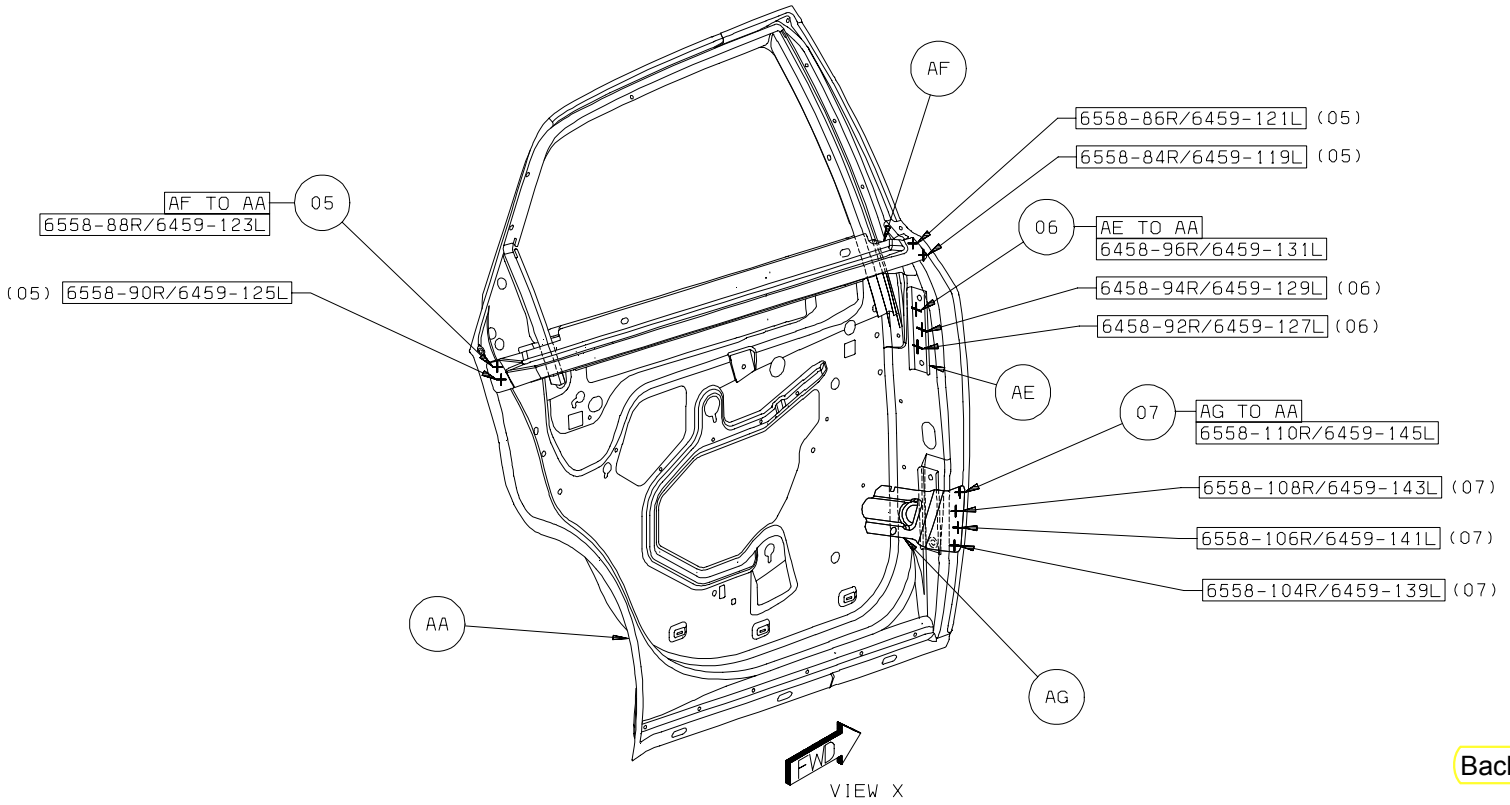

Back To Index

8. AH TO AA 1/SD STRUC ADH
9. AB TO AH 1/SD STRUC ADH
10. AF TO AH 2/SD STRUC ADH
11. AJ TO AH 2/SD STRUC ADH

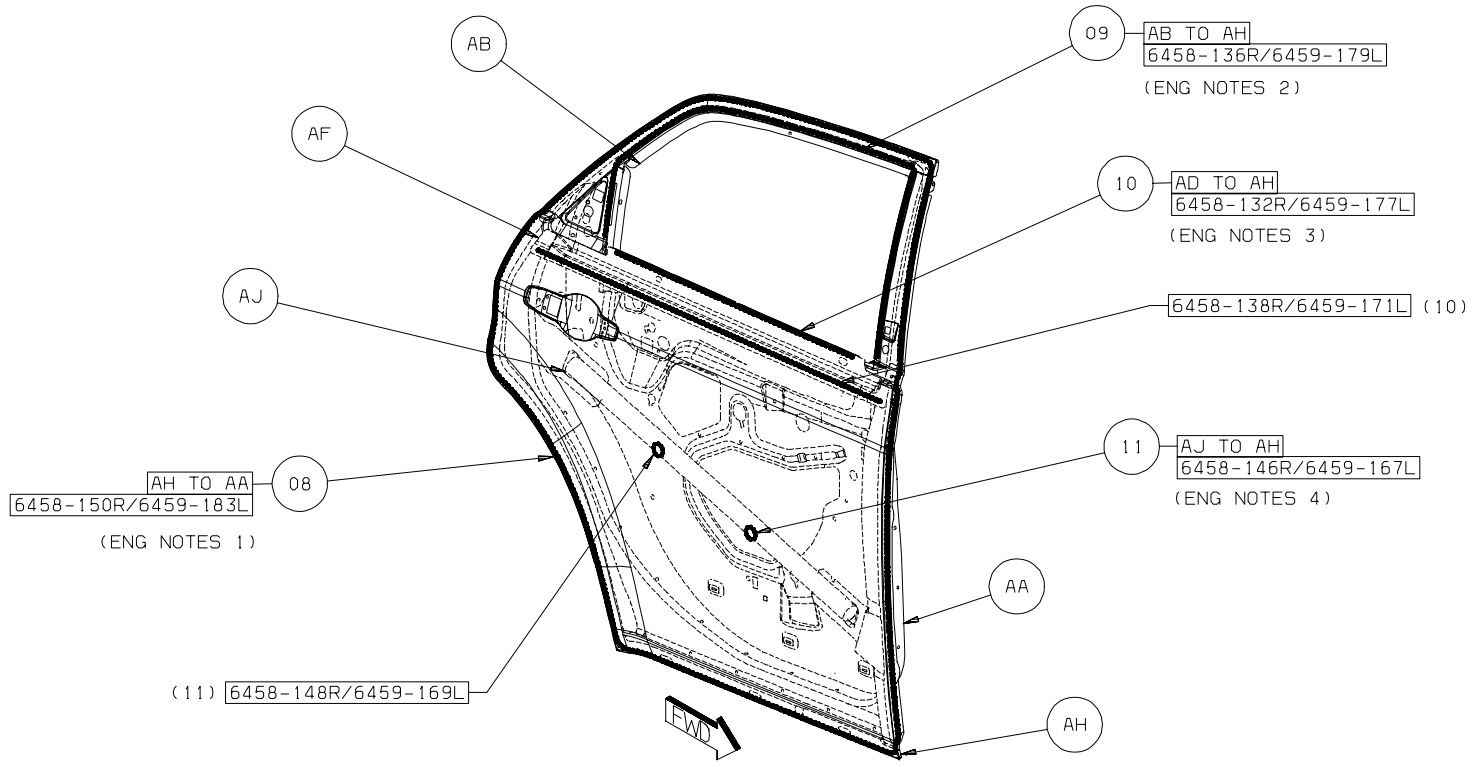

VIEW W

Back To Index

PARTS IDENTIFICATION LEGEND, OVERVIEW 13

AA	PANEL - LIFTGATE INR -
AB	REINF - LIFTGATE PROP ROD RT -
AB	REINF - LIFTGATE PROP ROD LT -
AC	REINF - LIFTGATE HINGE MOUNTING RT -
AC	REINF - LIFTGATE HINGE MOUNTING LT -
AD	PANEL - LIFTGATE OTR UPR -
AE	PANEL - LIFTGATE OTR LWR -
AF	REINF - WIPER MOUNTING -
AG	REINF - LIFTGATE LATCH -

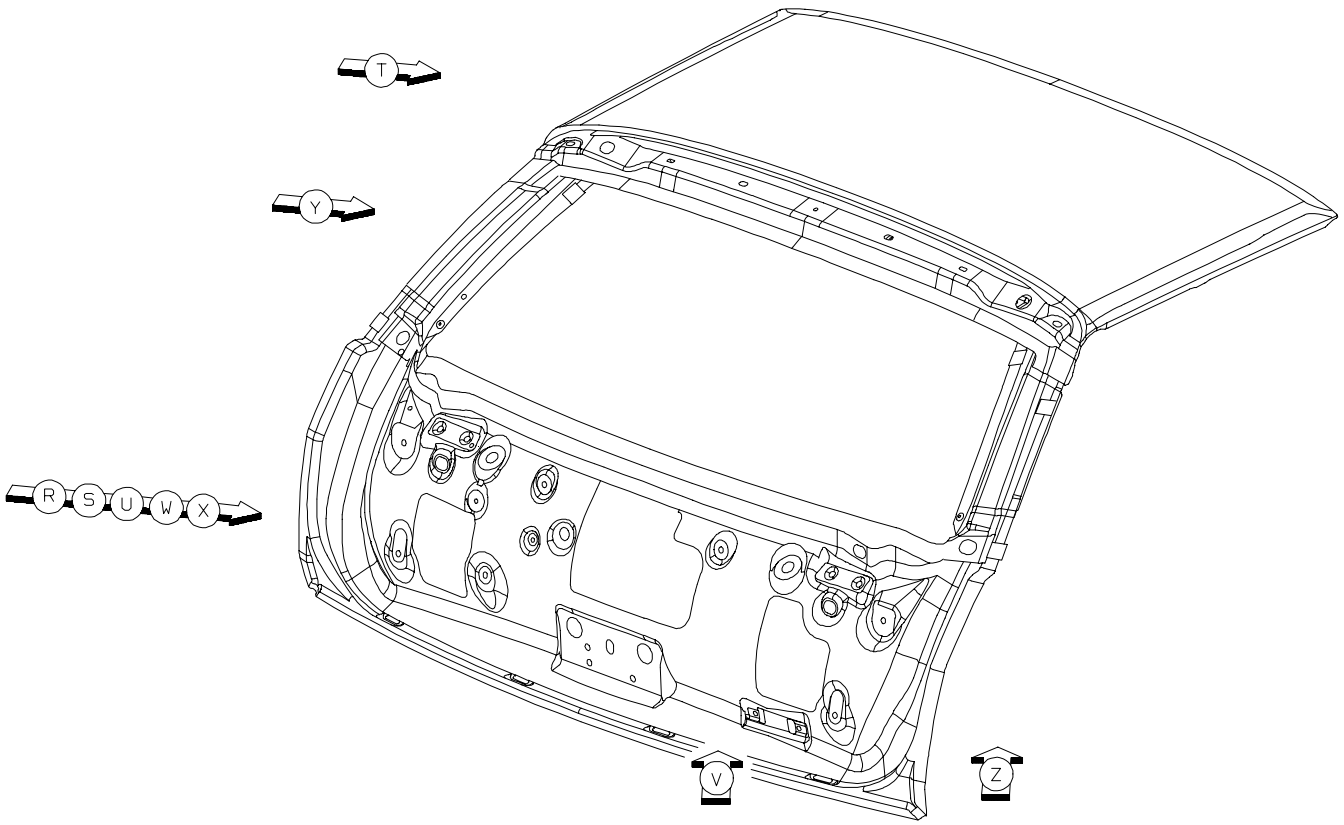

Back To Index

1. AB TO AA 24 S/WELDS
2. AA TO AC 6 S/WELDS

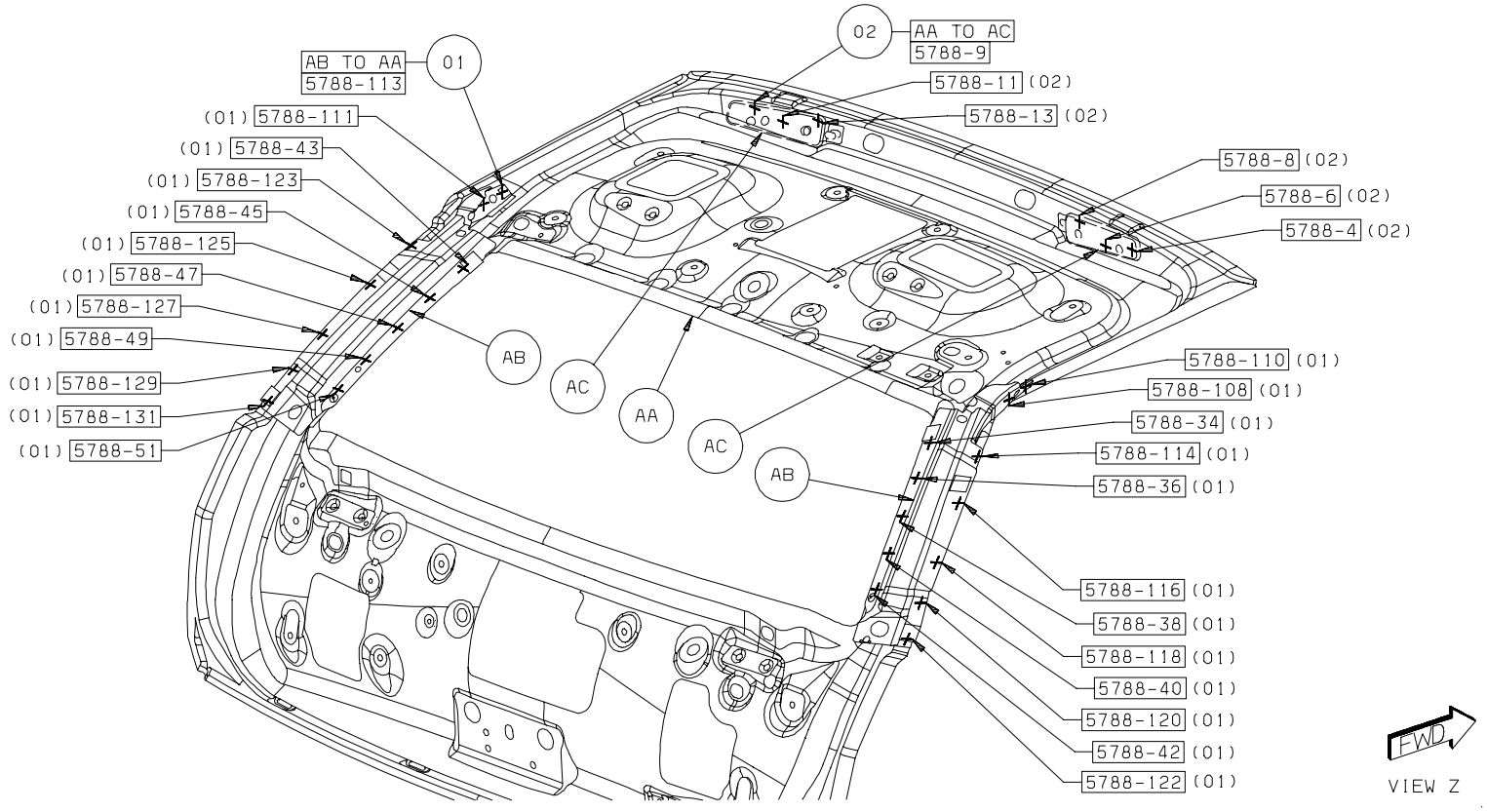

Back To Index

3. AD TO AA 10 S/WELDS

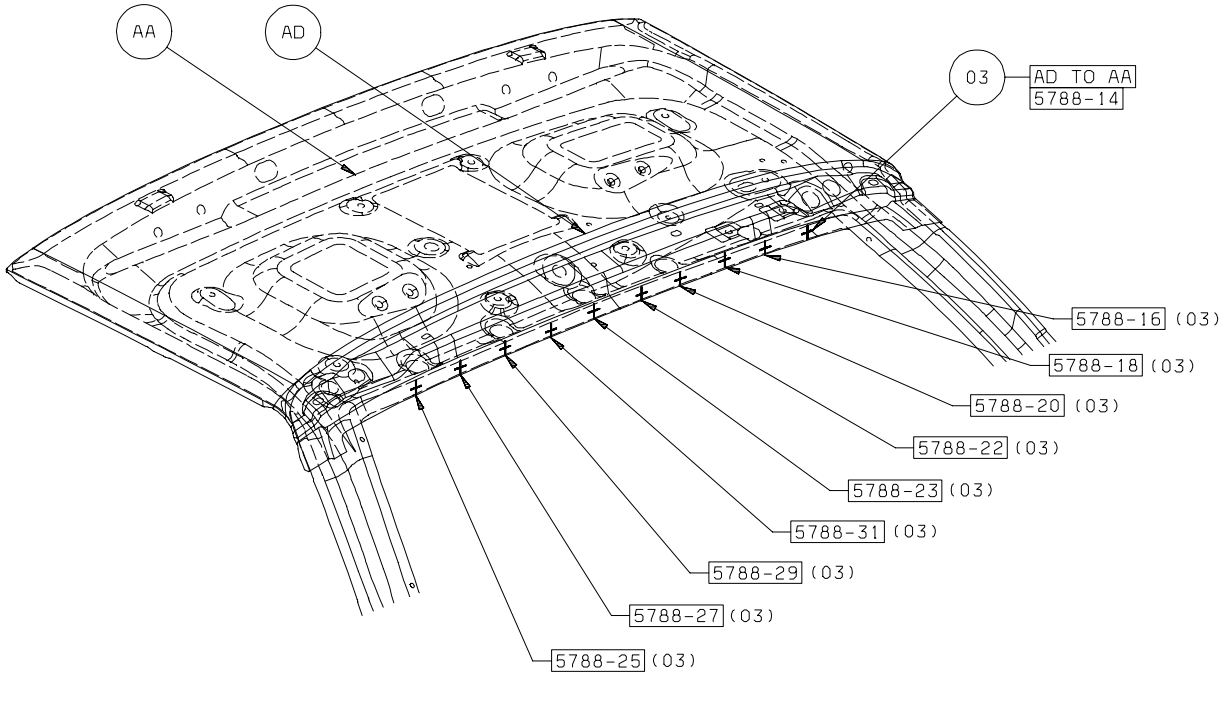

Back To Index

4. AE TO AA 11 S/WELDS

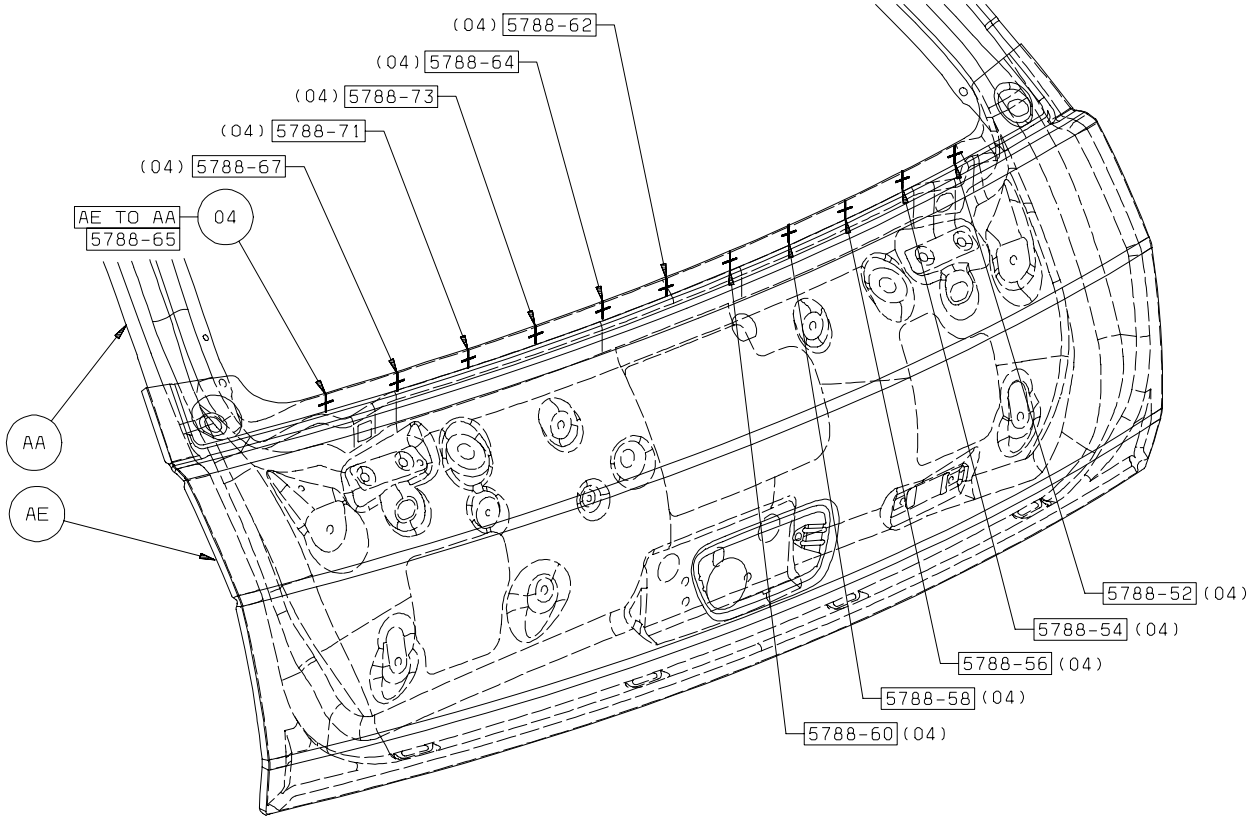

Back To Index

5. AF TO AA 5 S/WELDS

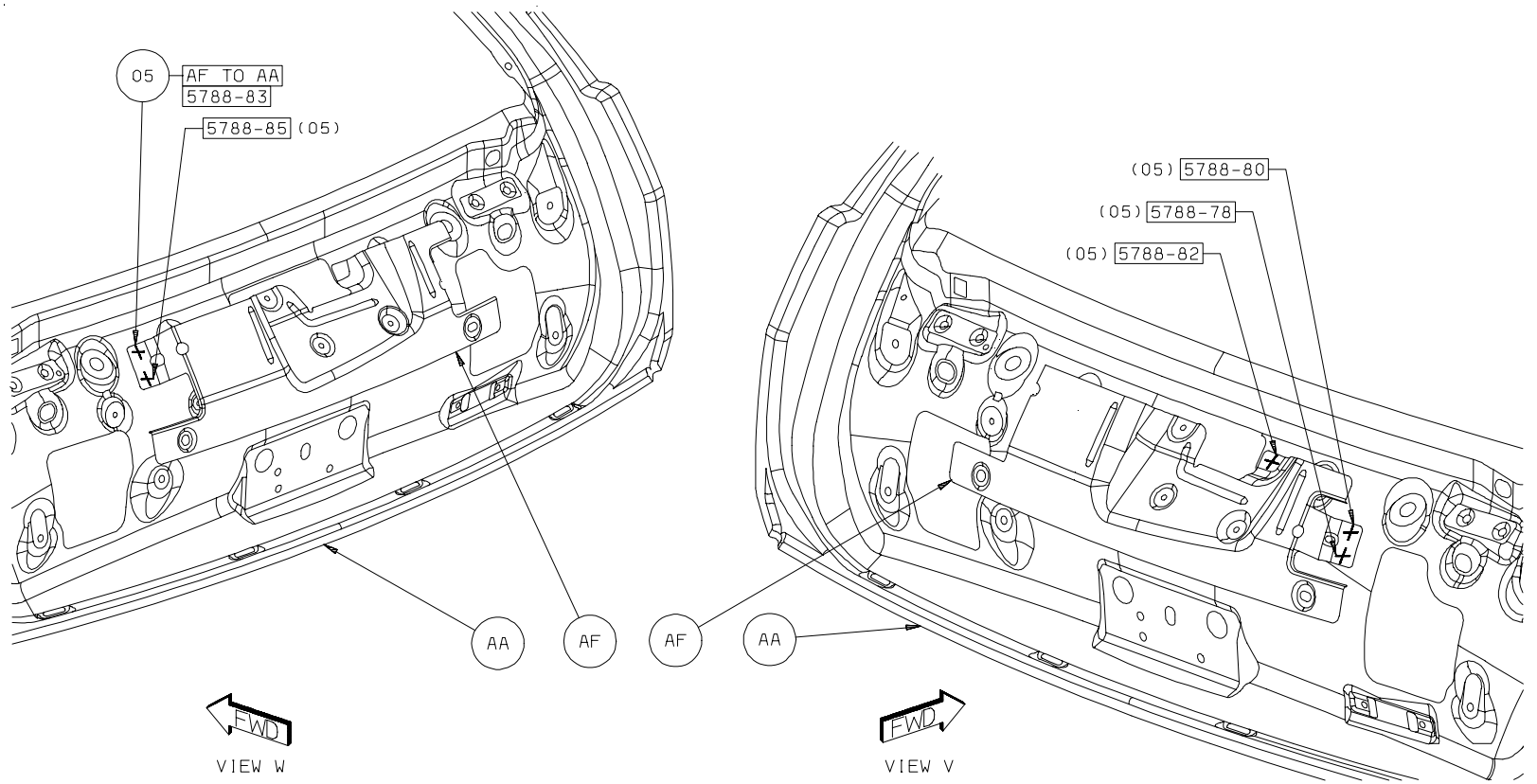

Back To Index

6. AG TO AA 8 S/WELDS

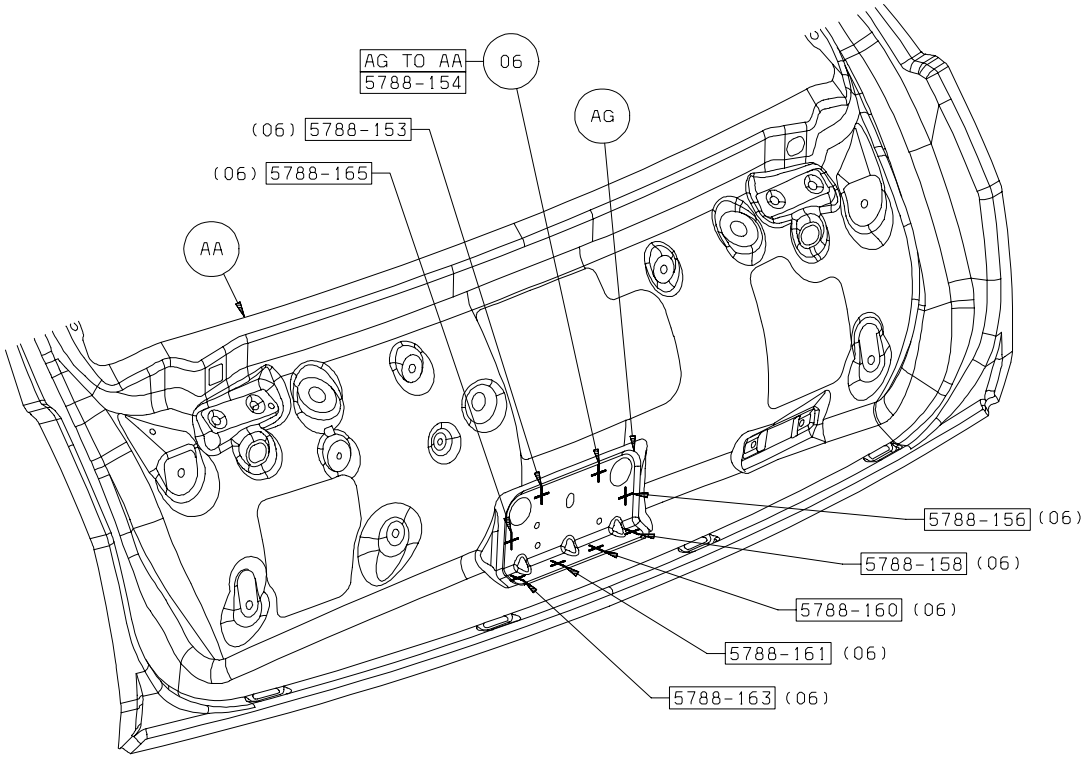

VIEW U

Back To Index

7. AA TO AD 1 STRUC ADH
8. AA TO AD 1 STRUC ADH
9. AA TO AD 1 STRUC ADH
10. AA TO AD 1 STRUC ADH
11. AD TO AB TO AA 1 STRUC ADH

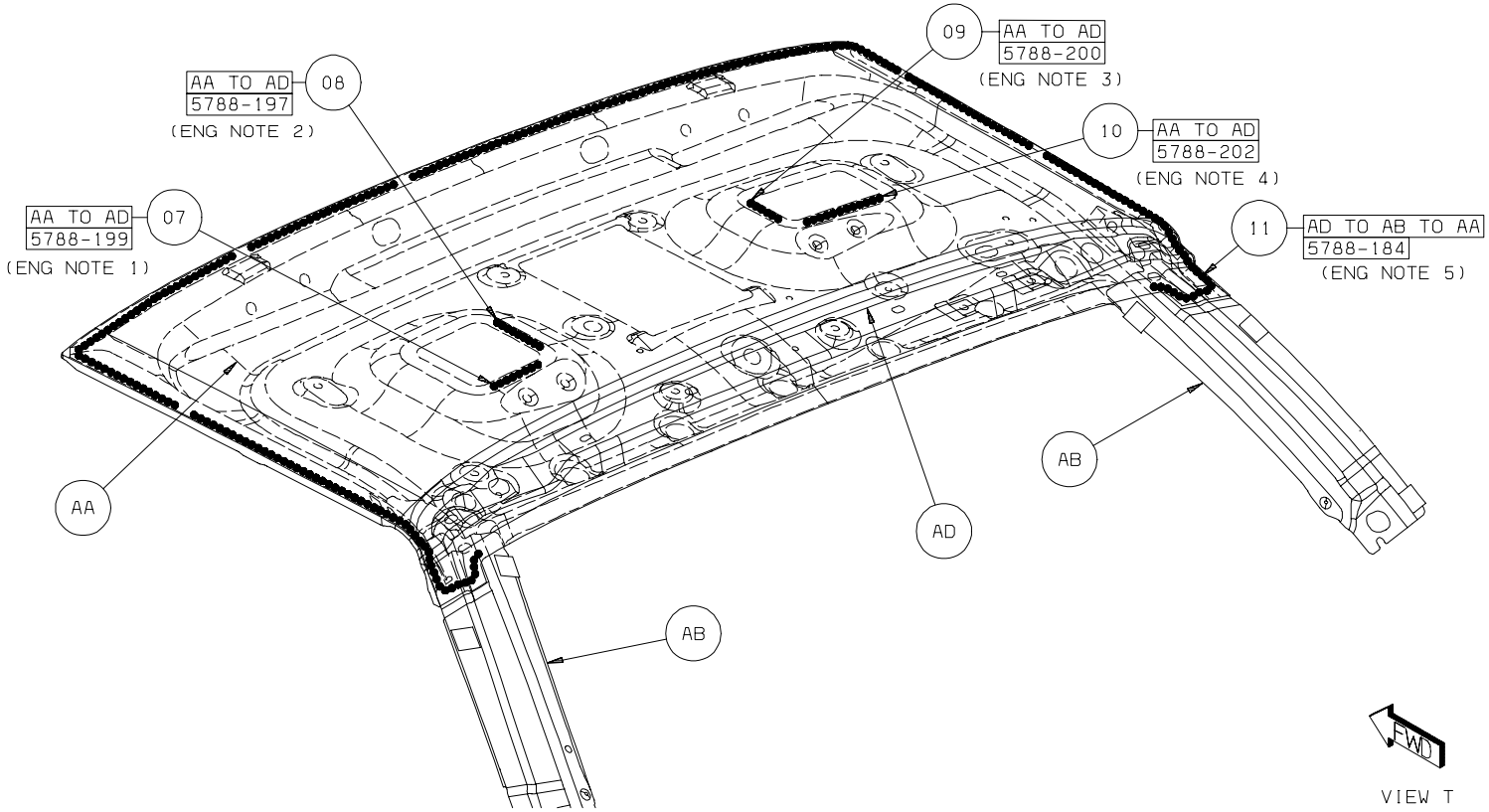

Back To Index

12. AE TO AB TO AA 1 STRUC ADH
13. AE TO AF 1 STRUC ADH
14. AE TO AF 1 STRUC ADH
15. AE TO AF 1 STRUC ADH
16. AE TO AF 1 STRUC ADH
17. AE TO AF 1 STRUC ADH
18. AE TO AF 1 STRUC ADH

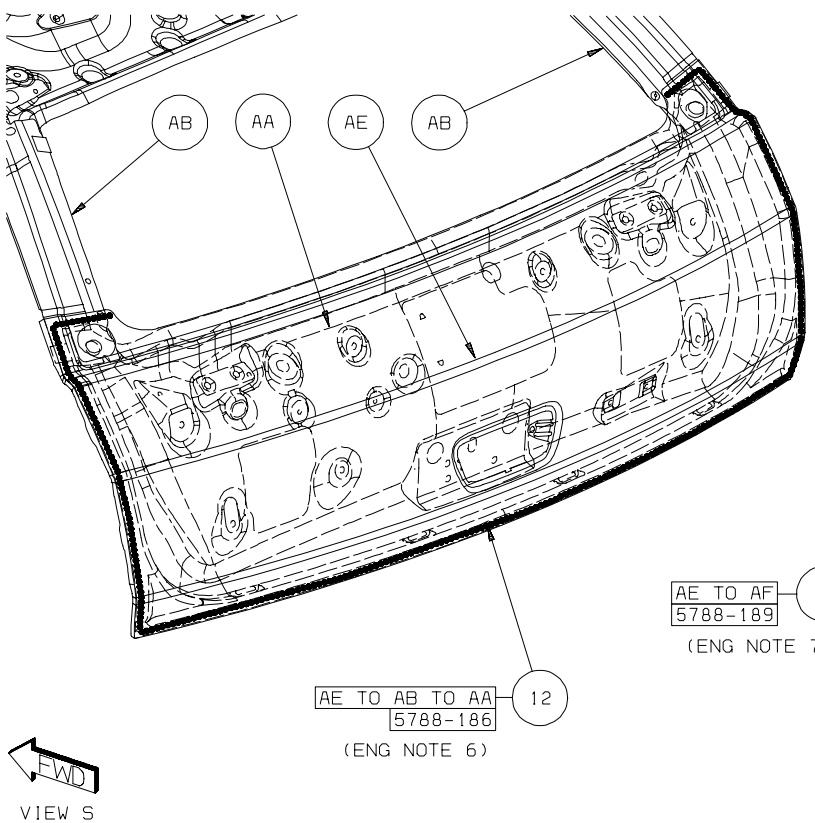

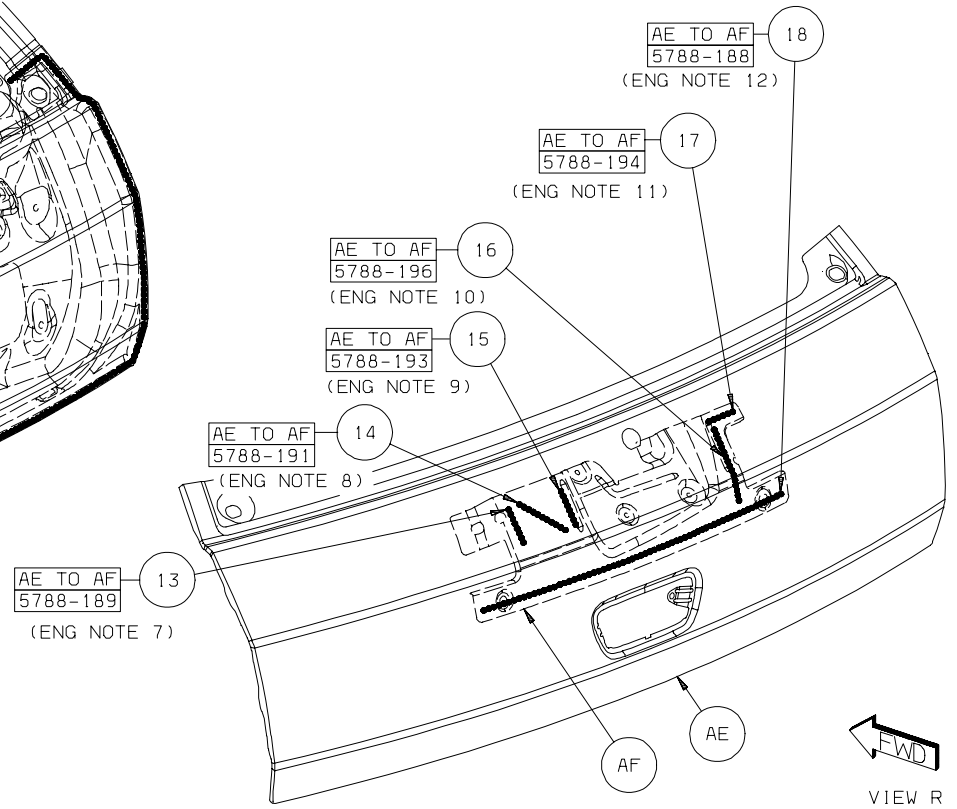

Back To Index

PARTS IDENTIFICATION LEGEND, OVERVIEW 15

AA	PANEL - DASH -
AB	REINF - DASH PANEL -
AC	REINF - BRAKE BOOSTER -
AD	PANEL - COWL UPR -
AE	STUD.WELD/EXTERNAL - NO.FIN.PILOT.PT.SPECIAL - HVAC ATTACH
AE	STUD.WELD/EXTERNAL - NO.FIN.PILOT.PT.SPECIAL - COLD BOX MTG
AE	STUD.WELD/EXTERNAL - NO.FIN.PILOT.PT.SPECIAL - STEERING COL ATTACH
AE	STUD.WELD/EXTERNAL - NO.FIN.PILOT.PT.SPECIAL - BATTERY STUD ATTACH
AF	PANEL - COWL LWR -
AG	BRACKET - WIPER MODULE MTG -
AH	STUD.WELD/EXTERNAL - HEADER.PT - SILENCER TO DASH PNL
AJ	STUD.WELD/INTERNAL – HEADER.PT.NO.FIN.ROUND - ACCEL PEDAL MTG

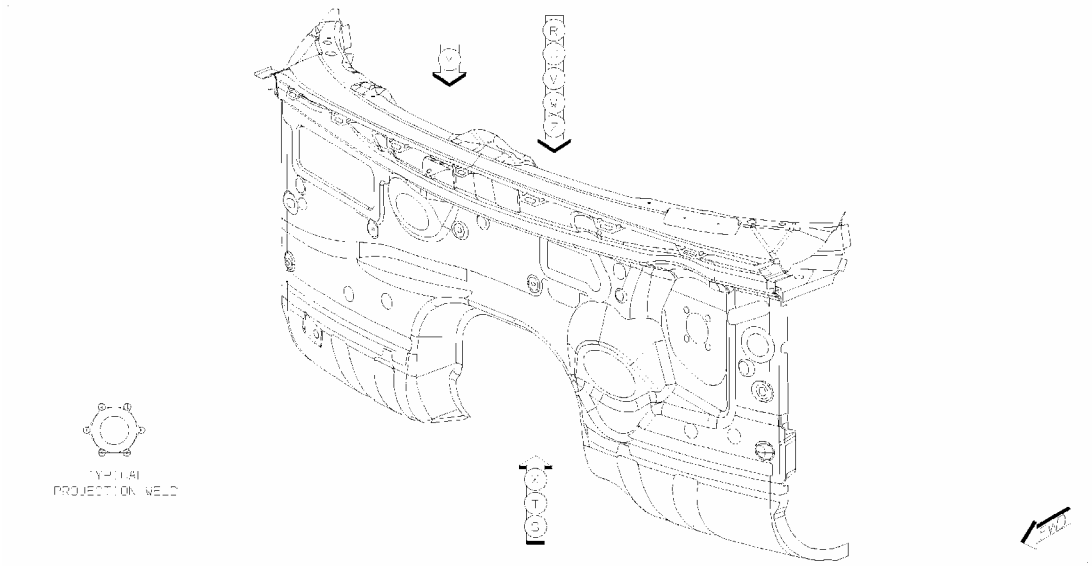

Back To Index

1. AA TO AB 17 S/WELDS
2. AA TO AB 3 S/WELDS

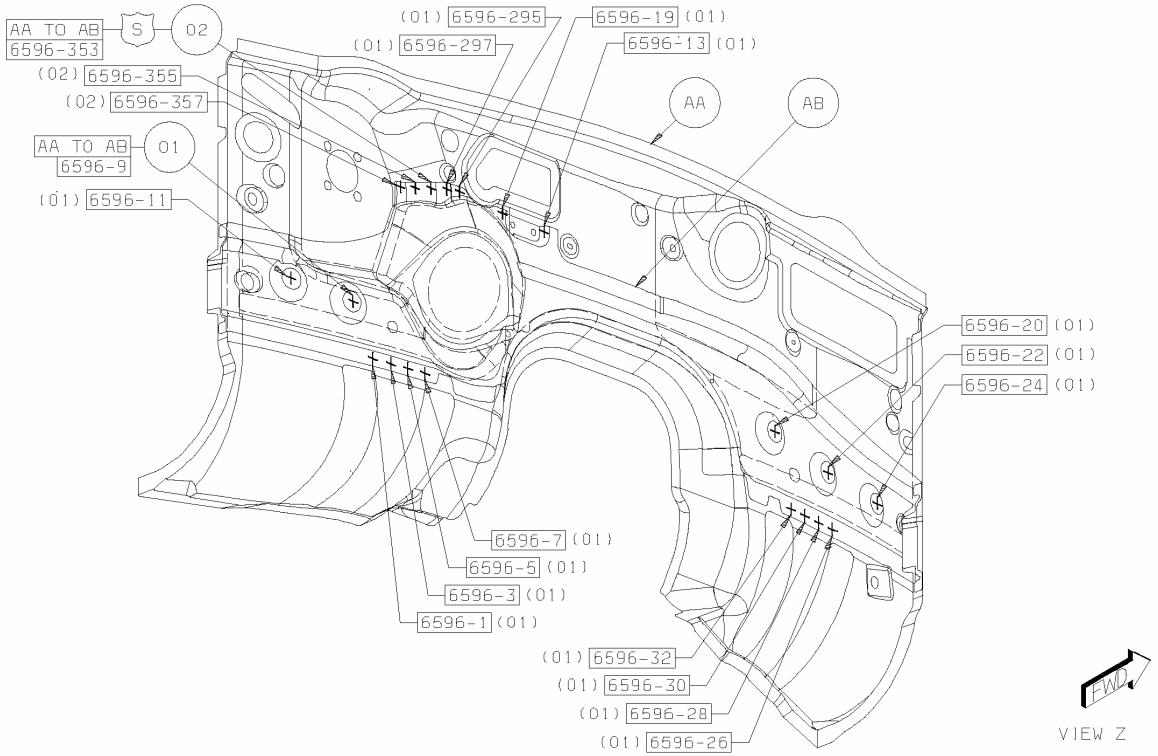

Back To Index

3. AA TO AC 14 S/WELDS
4. AD TO AE 2 PROJ WELDS

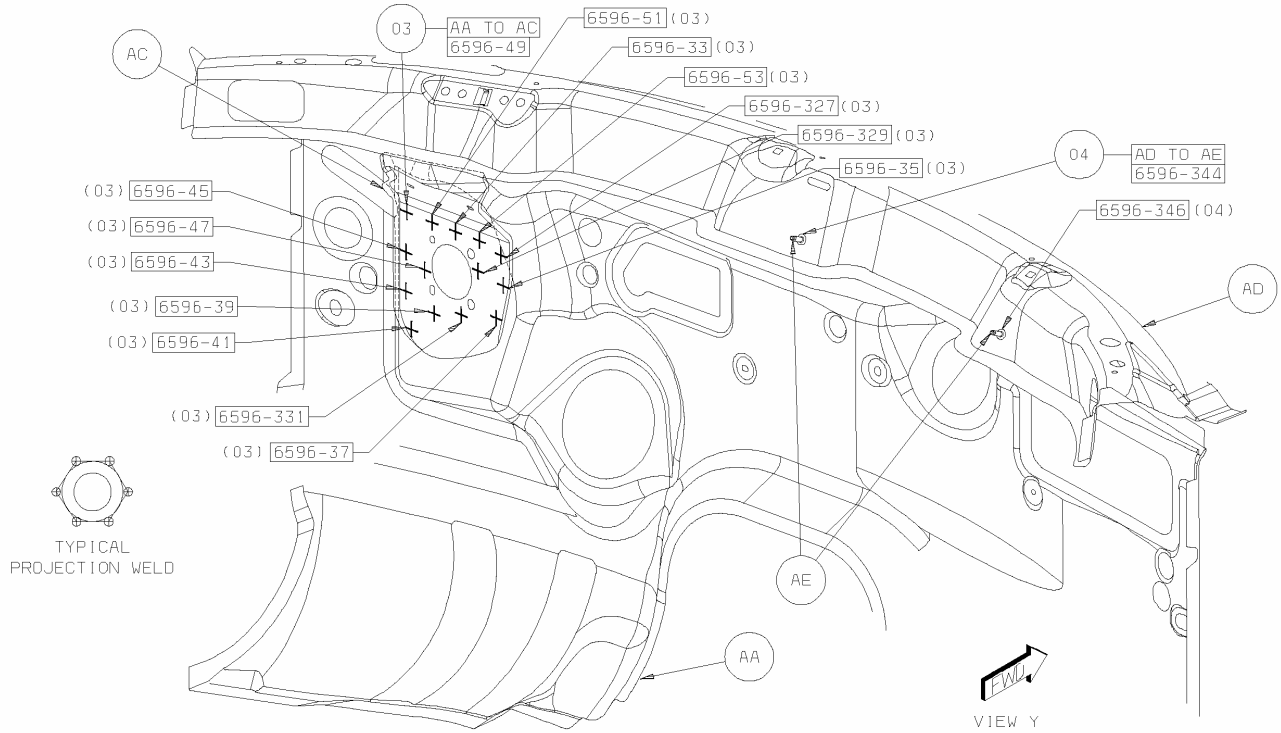

Back To Index

5. AA TO AF 38 S/WELDS

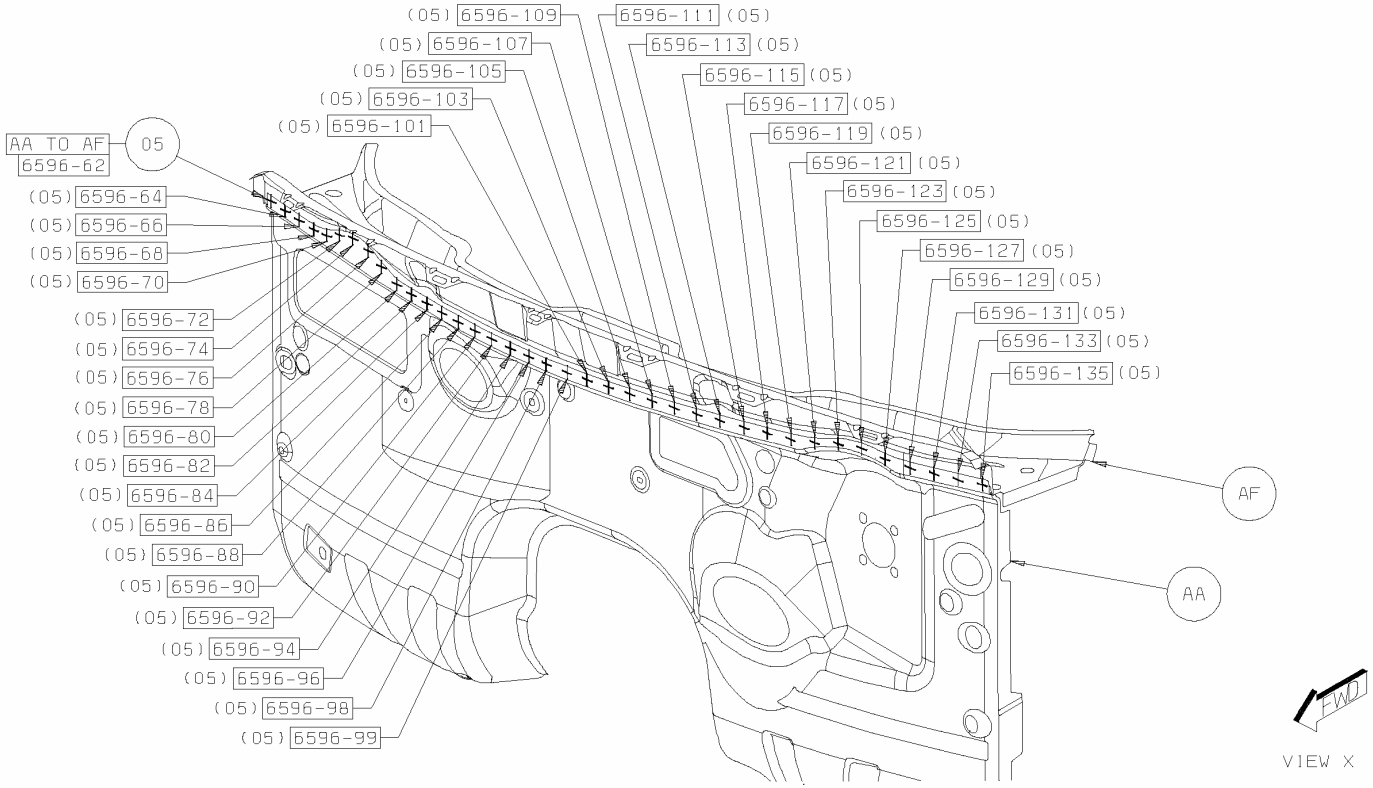

Back To Index

6 AF TO AD 30 S/WELDS

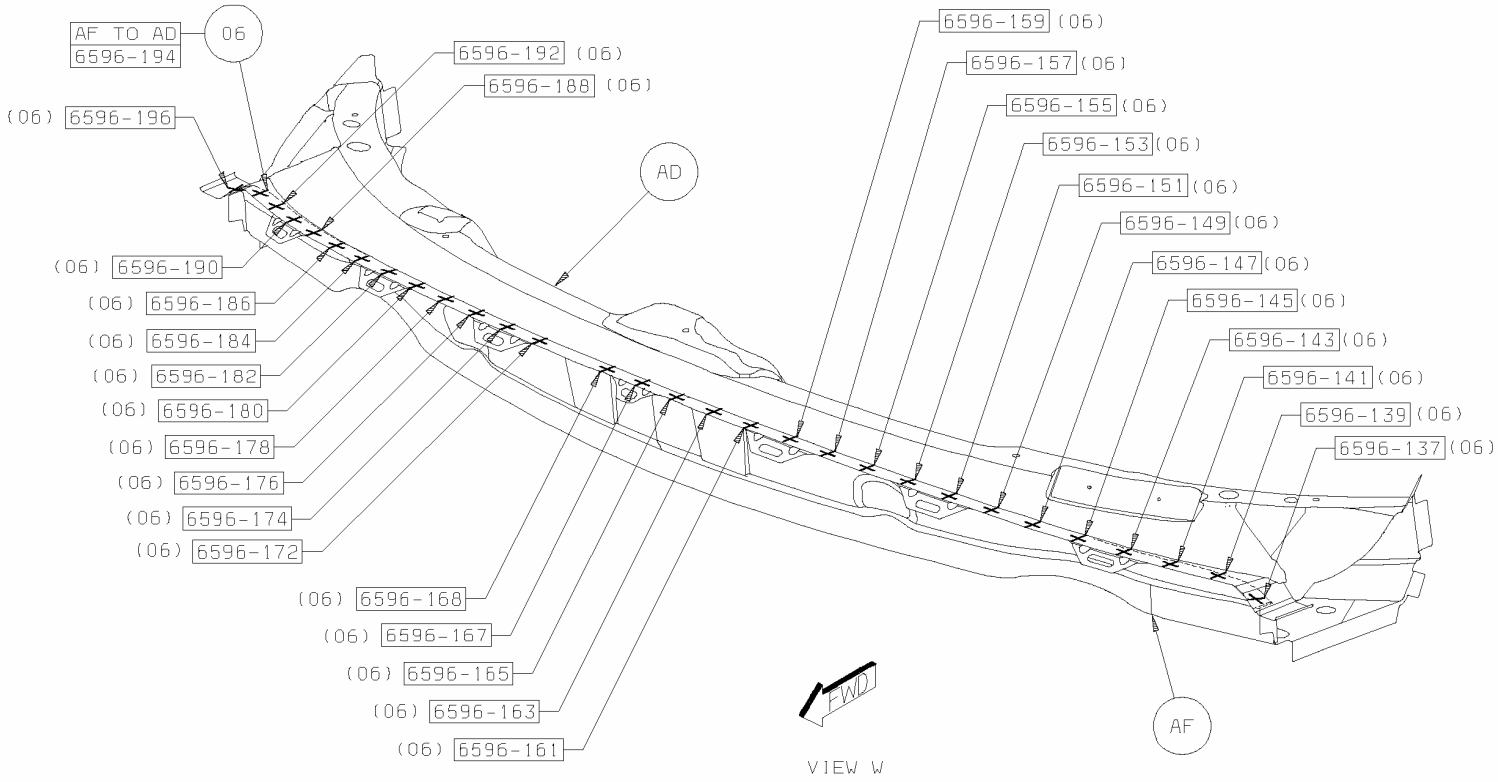

Back To Index

7. AD TO AF 35 S/WELDS

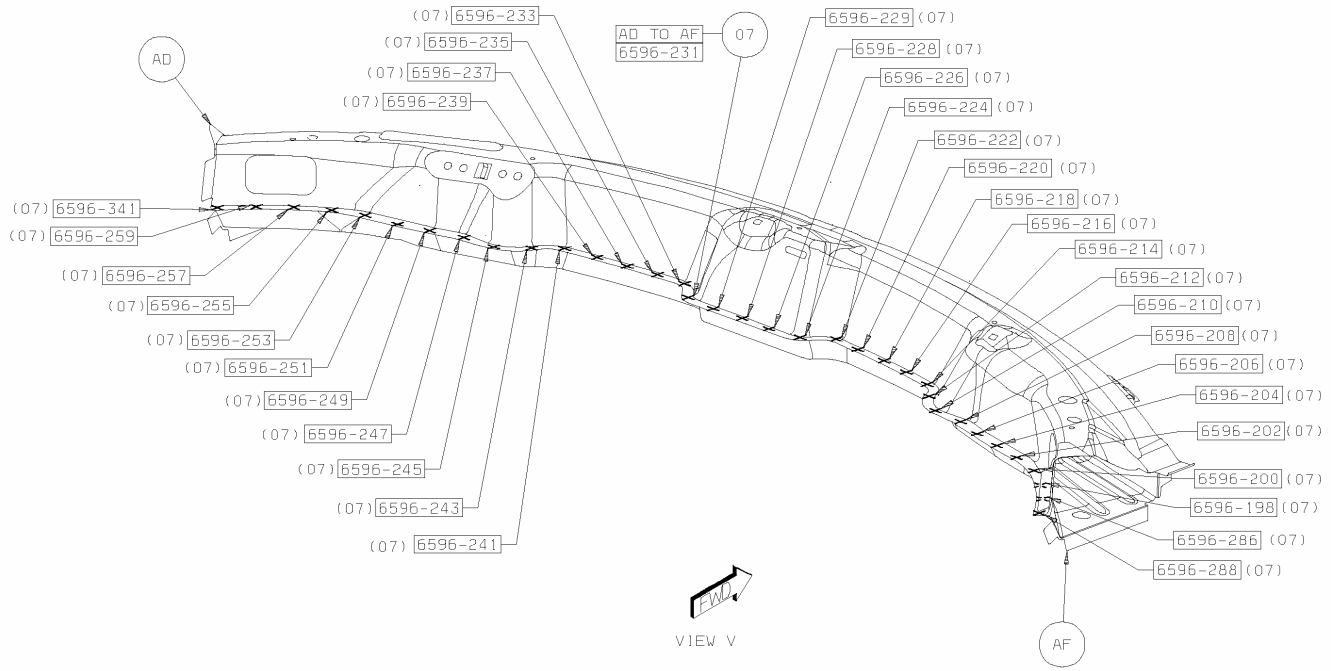

Back To Index

8. AC TO AF 4 S/WELDS
9. AF TO AG 4 S/WELDS

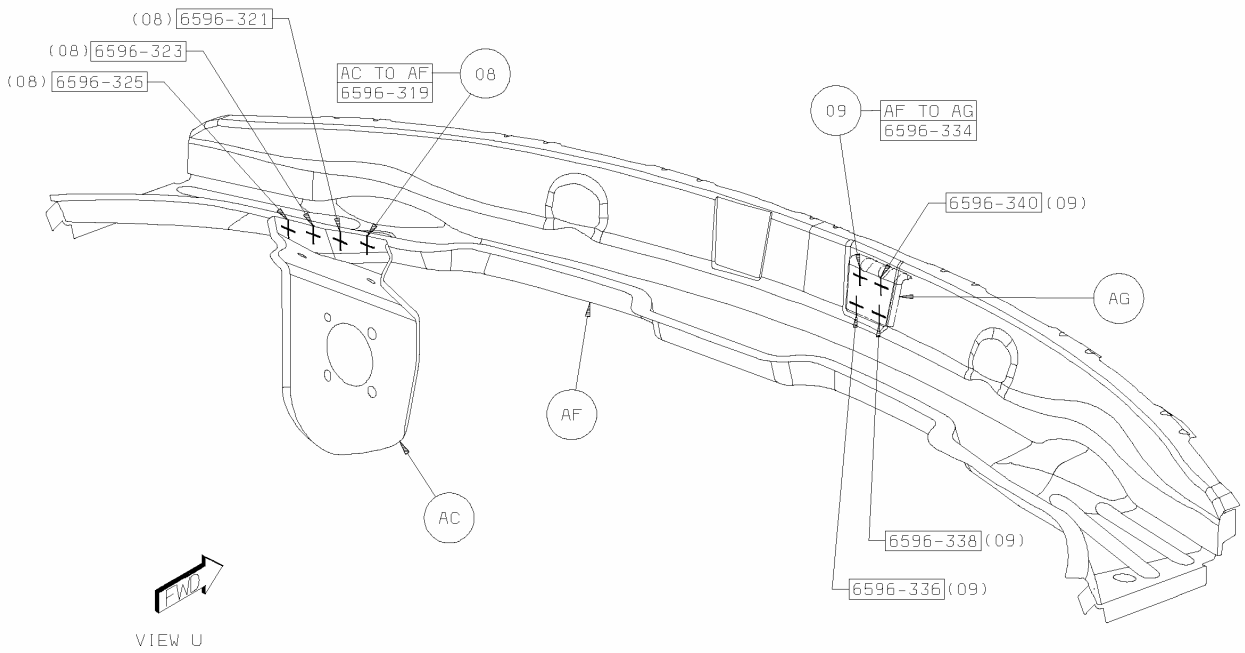

Back To Index

10. AA TO AE 5 PROJ WELDS
11. AB TO AJ 3 PROJ WELDS
12. AA TO AH 5 PROJ WELDS

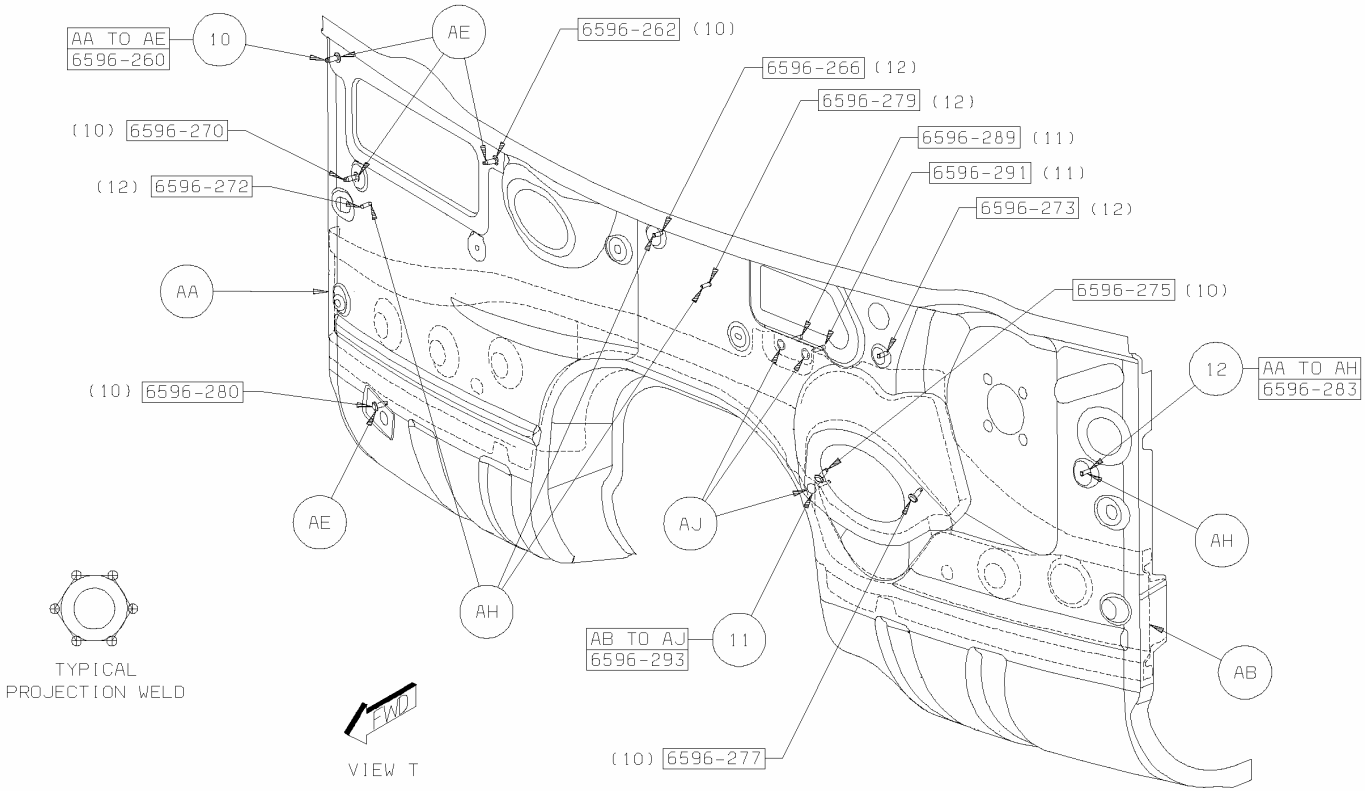

Back To Index

11. AB TO AJ 3 PROJ WELDS
12. AE TO AG 2 PROJWELDS

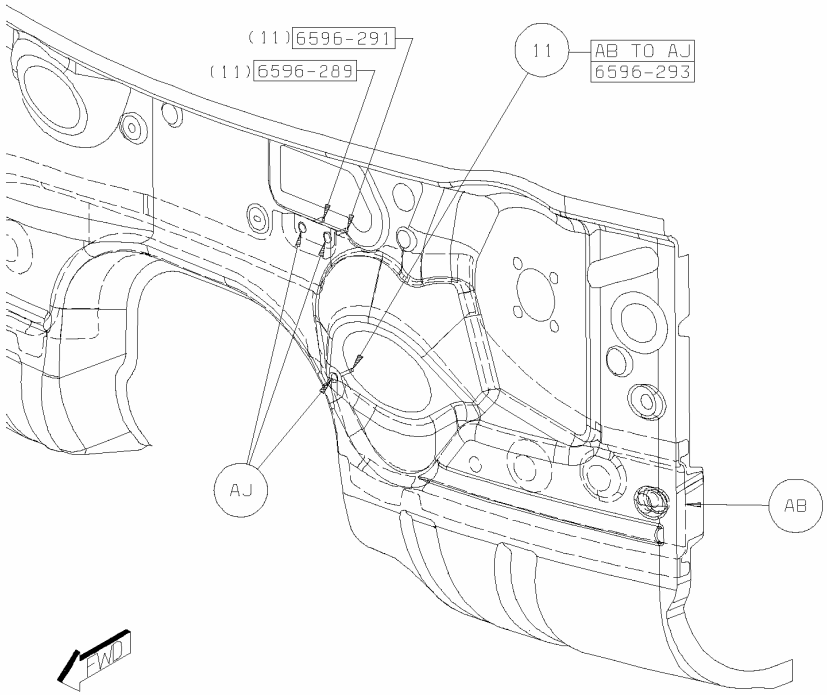

VIEW S

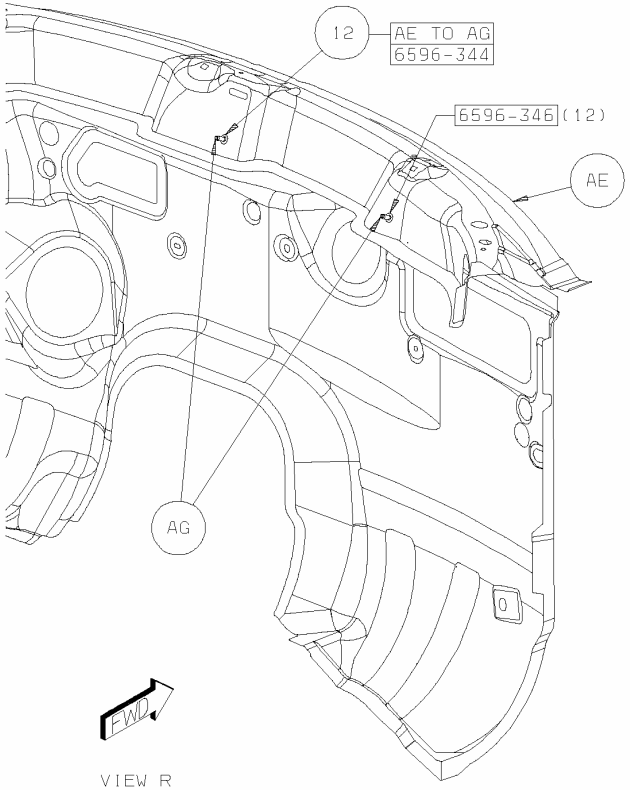

VIEW R

Back To Index

PARTS IDENTIFICATION LEGEND, OVERVIEW 16

AA	PANEL - TOEBOARD CROSSMEMBER -
AB	REINF - TOEBOARD CROSSMEMBER INR RT -
AB	REINF - TOEBOARD CROSSMEMBER INR LT -
AC	PANEL - FRT SIDE RAIL INR RT -
AC	PANEL - FRT SIDE RAIL INR LT -
AD	PANEL - SHOCK TOWER MOUNTING FRT RT -
AD	PANEL - SHOCK TOWER MOUNTING FRT LT -
AE	REINF - FRT SIDE RAIL BUMPER MOUNTING RT -
AE	REINF - FRT SIDE RAIL BUMPER MOUNTING LT -
AF	BRACKET - FRT BUMPER MOUNTING
AG	PANEL - RAIL FRT COVER RT -
AG	PANEL - RAIL FRT COVER LT -
AH	PANEL - EXTENSION FRT RAIL INR RT -
AH	PANEL - EXTENSION FRT RAIL INR LT -
AJ	PANEL - EXTENSION FRT RAIL OTR RT -
AJ	PANEL - EXTENSION FRT RAIL OTR LT -
AK	PANEL - FRT WHEELHOUSE RR RT -
AK	PANEL - FRT WHEELHOUSE RR LT -
AL	BRACKET - ENGINE CRADLE MOUNTING LWR FRT RT
AL	BRACKET - ENGINE CRADLE MOUNTING LWR FRT LT
AM	EXTENSION - RAIL TO SILL RT - FRONT
AM	EXTENSION - RAIL TO SILL LT - FRONT
AN	PANEL - FRT WHEELHOUSE FRT RT -
AN	PANEL - FRT WHEELHOUSE FRT LT -
AP	BRACKET - HEADLAMP MOUNTING RT -
AP	BRACKET - HEADLAMP MOUNTING LT -

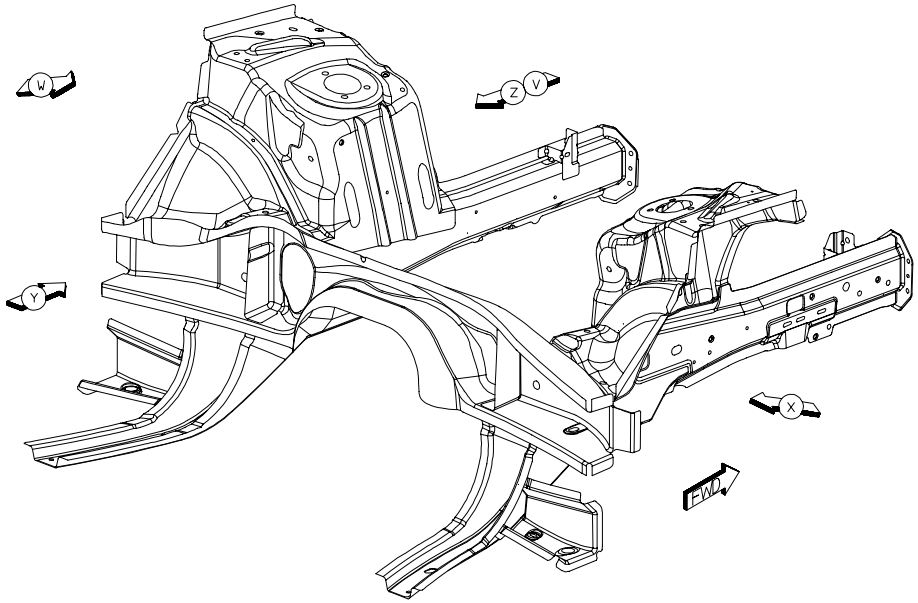

Back To Index

1. AA TO AC 2 S/WELDS
2. AA TO AB TO AC 2 S/WELDS
3. AA TO AB TO AC 2 S/WELDS
4. AA TO AC 2 S/WELDS
5. AC TO AD TO AG 2 S/WELD
6. AE TO AF 4 S/WELDS
7. AC TO AD 20 S/WELDS

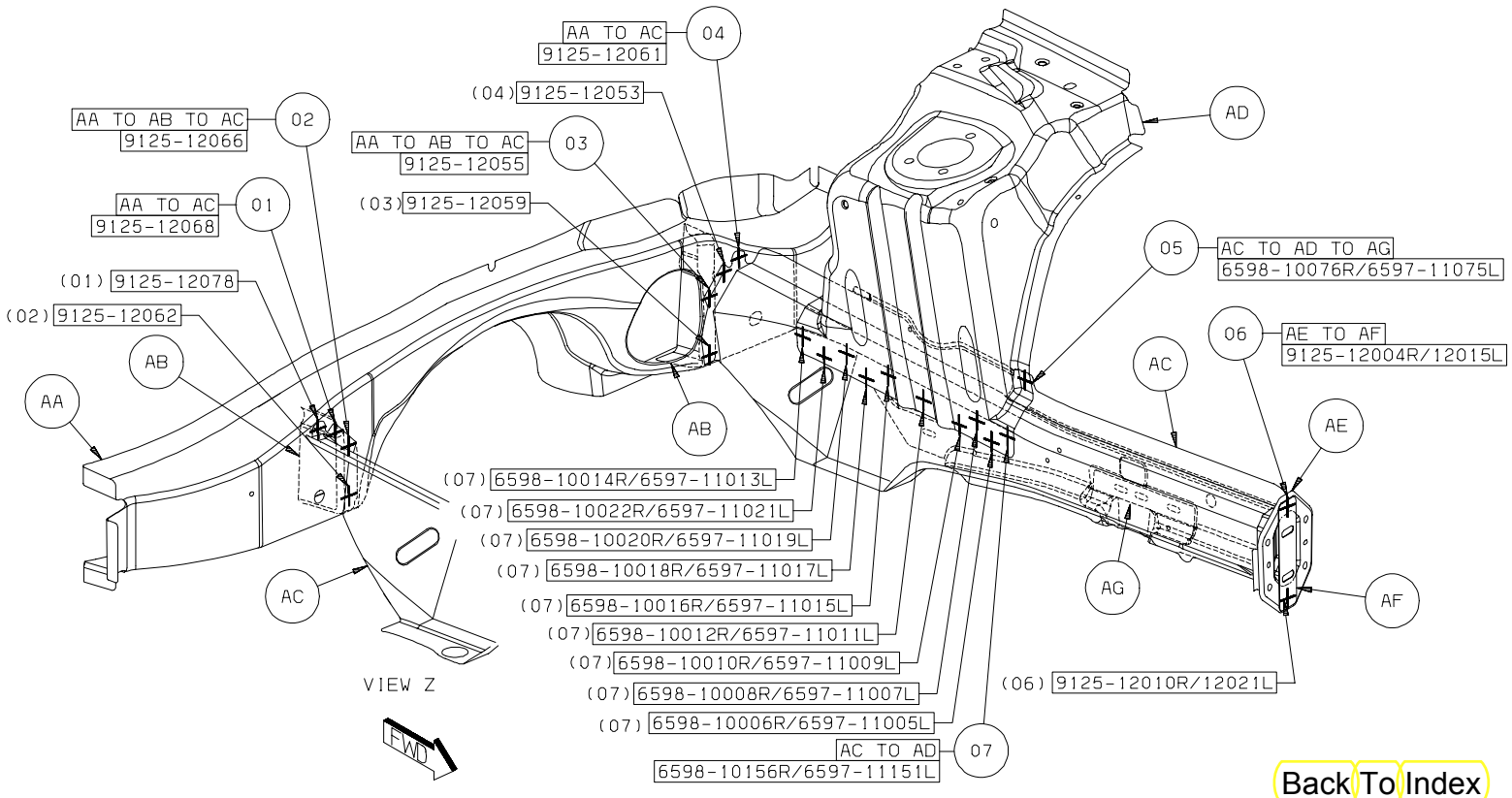

Back To Index

8. AA TO AJ 14 S/WELDS
9. AA TO AB TO AH 4 S/WELDS

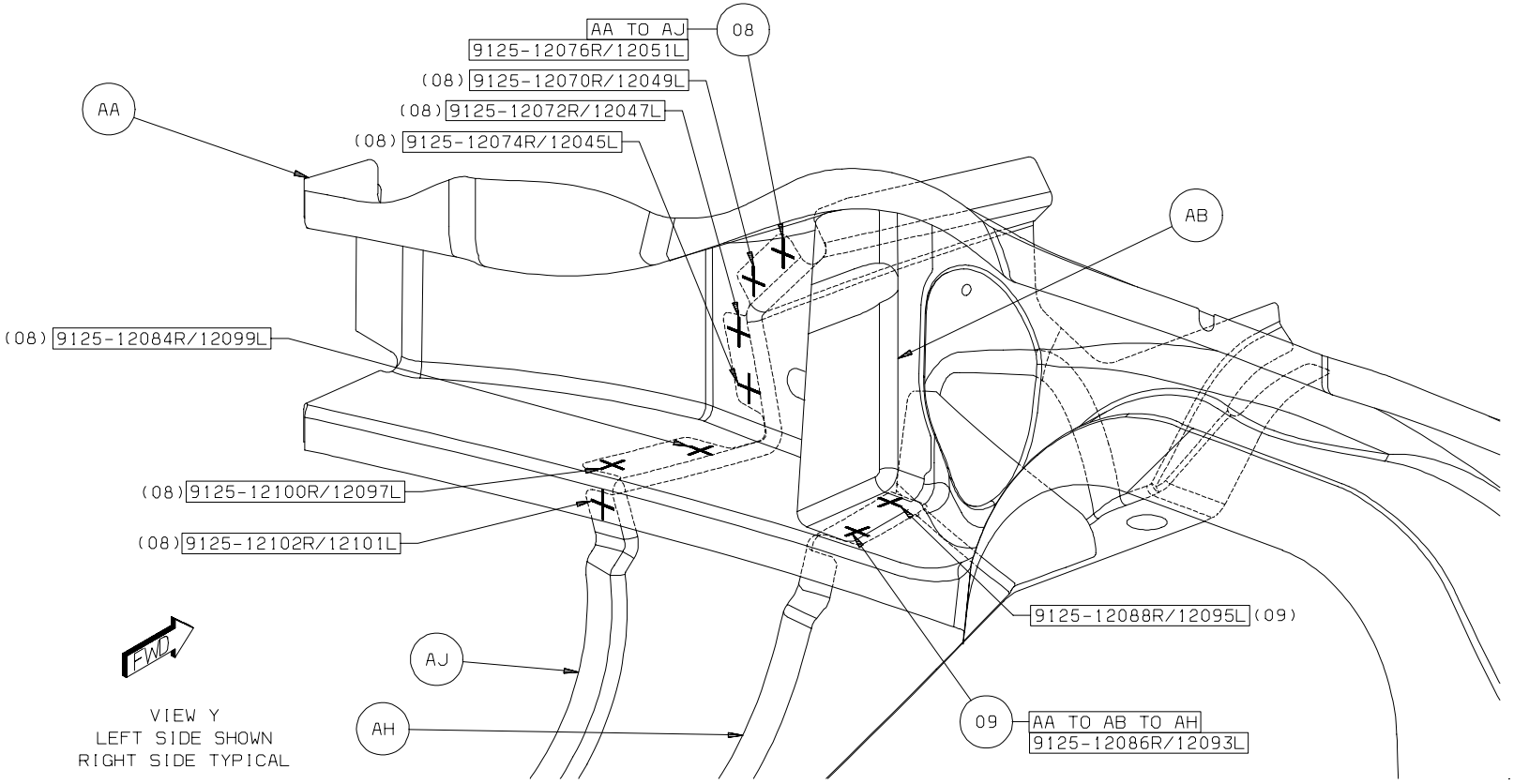

Back To Index

10. AA TO AK 12 S/WELDS
11. AC TO AJ TO AK 4 S/WELDS
12. AC TO AD TO AJ 2 S/WELDS

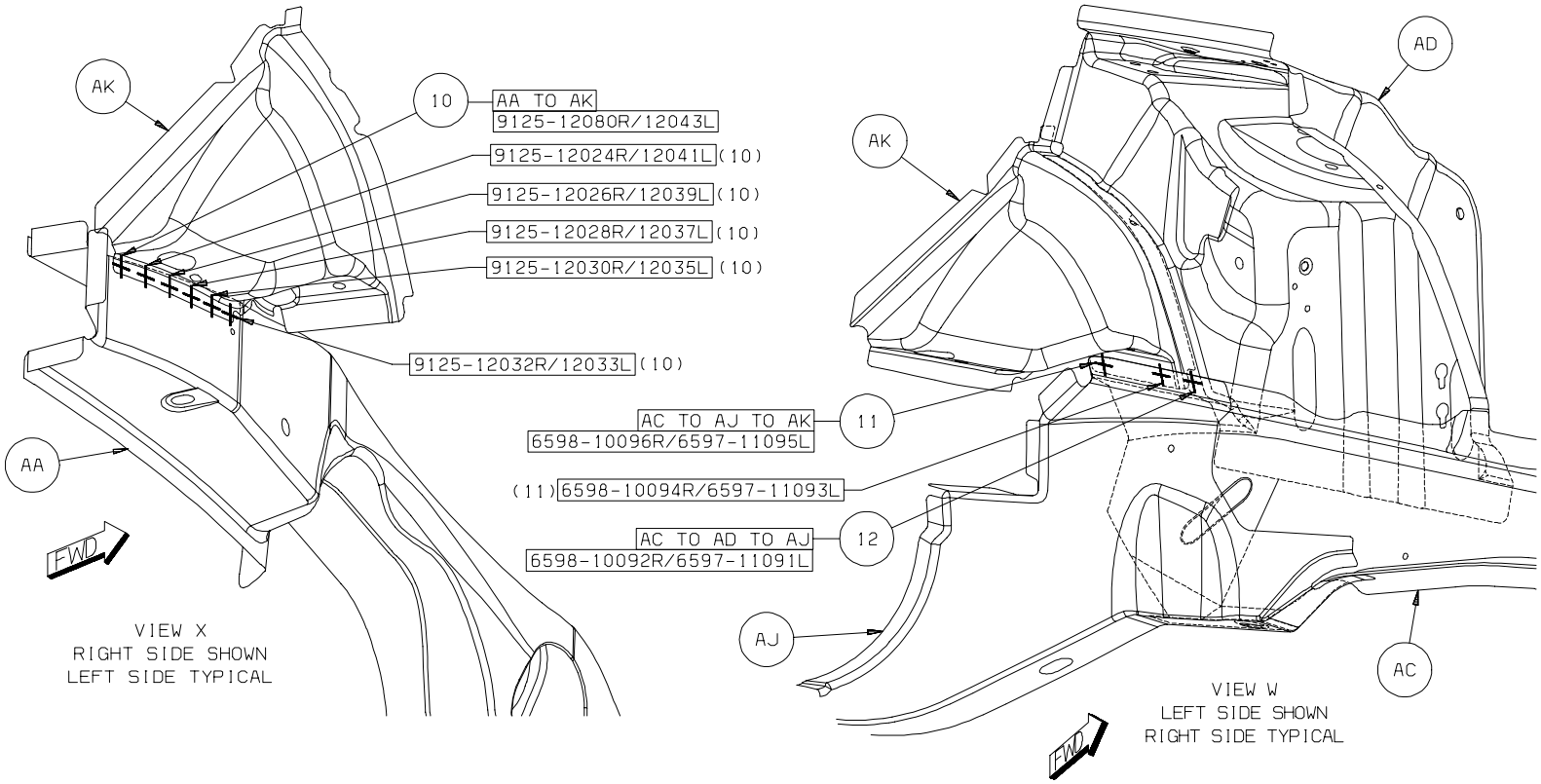

Back To Index

13. AE TO AG 8 S/WELDS
14. AG TO AL 6 FCWA WELDS
15. AG T0 AJ 8 FCWA WELDS
16. AC TO AG TO AJ 2 S/WELDS
17. AJ TO AM 16 S/WELDS
18. AH TO AJ TO AM 6 S/WELDS

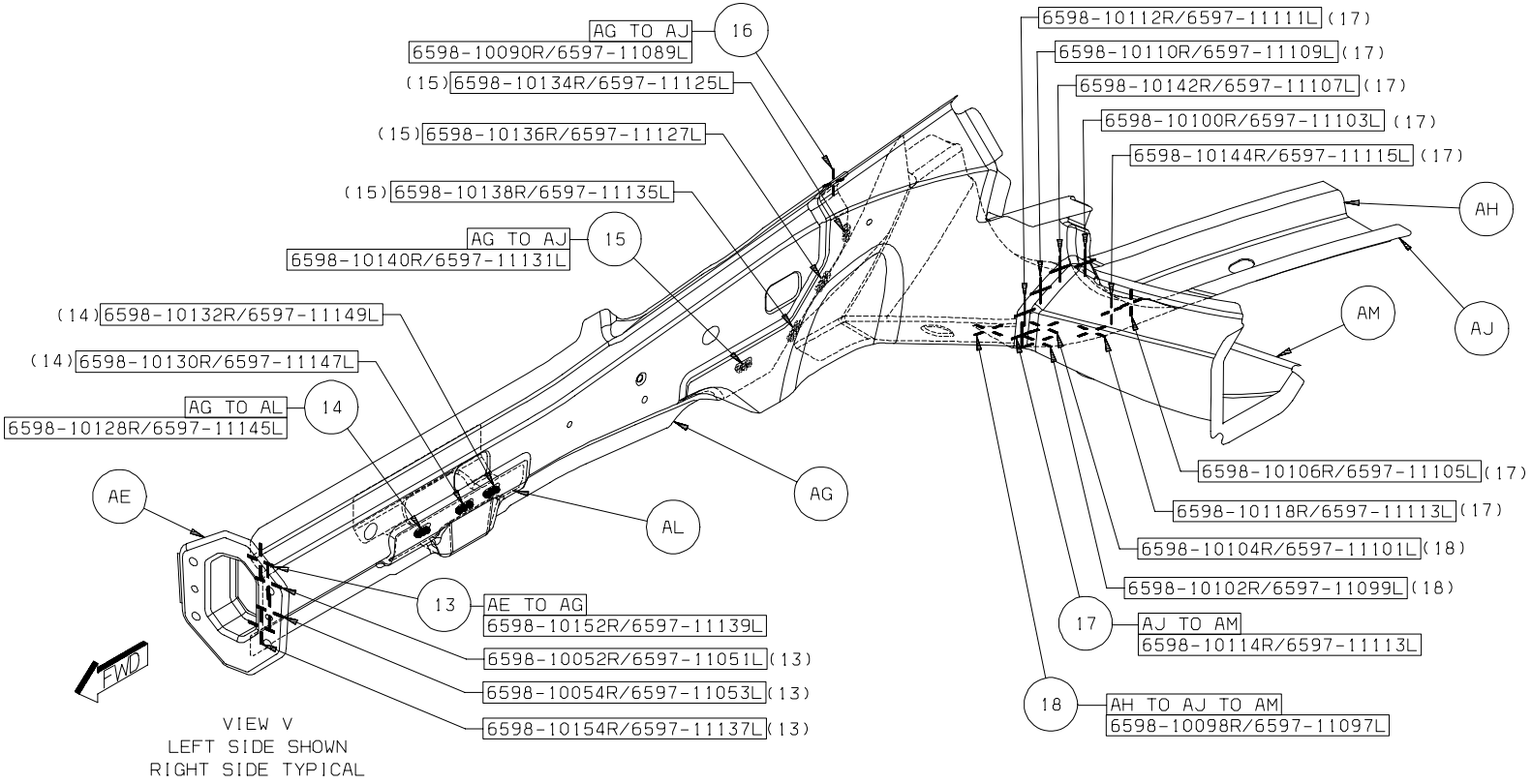

Back To Index

19. AC TO AG 52 S/WELDS
20. AC TO AG TO AP 2 S/WELDS
21. AC TO AG TO AN 10 S/WELDS
22. AC TO AN 4 S/WELDS

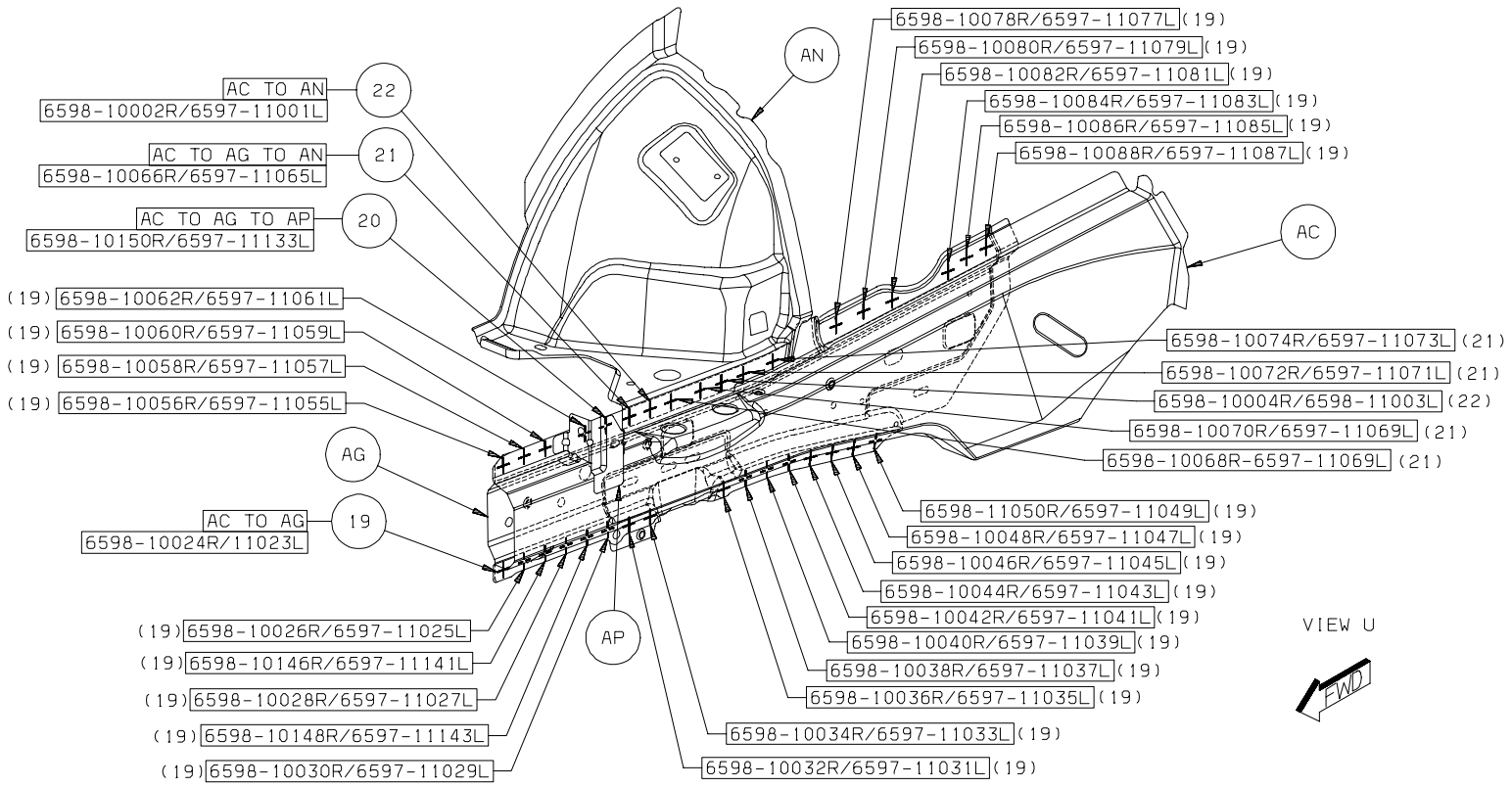

Back To Index

PARTS IDENTIFICATION LEGEND, OVERVIEW 17

AA	04780776 PANEL-LOAD PATH BEAM UPR INR RT
AB	PANEL - COWL UPR -
AC	PANEL - COWL LWR -
AD	PANEL - DASH -
AE	EXTENSION - RAIL TO SILL RT - FRONT
AE	EXTENSION - RAIL TO SILL LT - FRONT
AF	REINF - SHOCK TOWER TO LOAD BEAM RT - SHOCK TOWER RH
AF	REINF - SHOCK TOWER TO LOAD BEAM LT - SHOCK TOWER LT
AG	PANEL - EXTENSION FRT RAIL INR RT -
AG	PANEL - EXTENSION FRT RAIL INR LT -
AH	PANEL - TOEBOARD CROSSMEMBER -
AJ	PANEL - EXTENSION FRT RAIL OTR RT -
AJ	PANEL - EXTENSION FRT RAIL OTR LT -
AK	REINF - DASH PANEL -
AL	PANEL - FRT WHEELHOUSE FRT RT -
AL	PANEL - FRT WHEELHOUSE FRT LT -
AM	PANEL - SHOCK TOWER MOUNTING FRT RT -
AM	PANEL - SHOCK TOWER MOUNTING FRT LT -
AN	PANEL - FRT WHEELHOUSE RR RT -
AN	PANEL - FRT WHEELHOUSE RR LT -
AP	REINF - BRAKE BOOSTER -

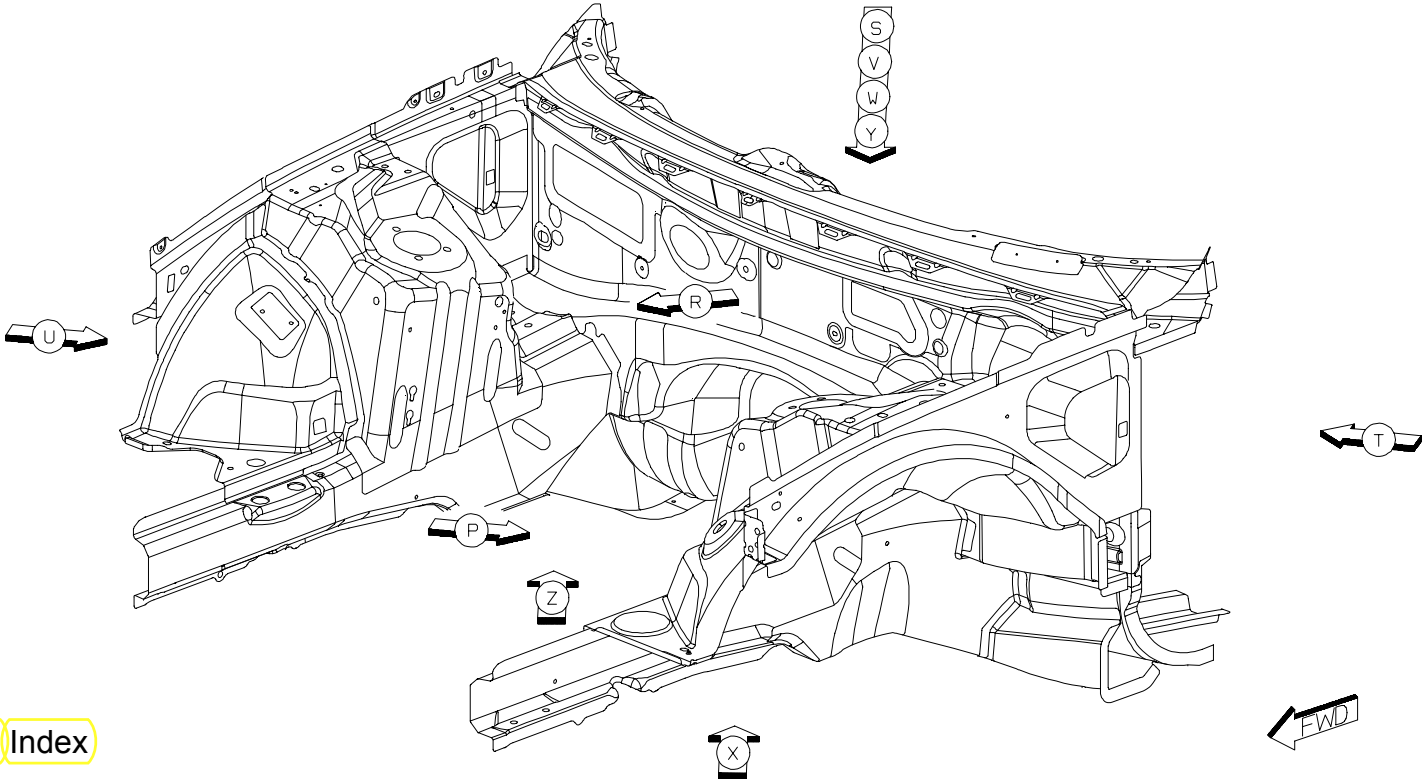

Back To Index

1. AB TO AA 4 S/WELDS
2. AA TO AC 2 S/WELDS
14. AL TO AA 2 S/WELDS
15. AM TO AA 4 S/WELDS
16. AD TO AK TO AA 2 S/WELDS

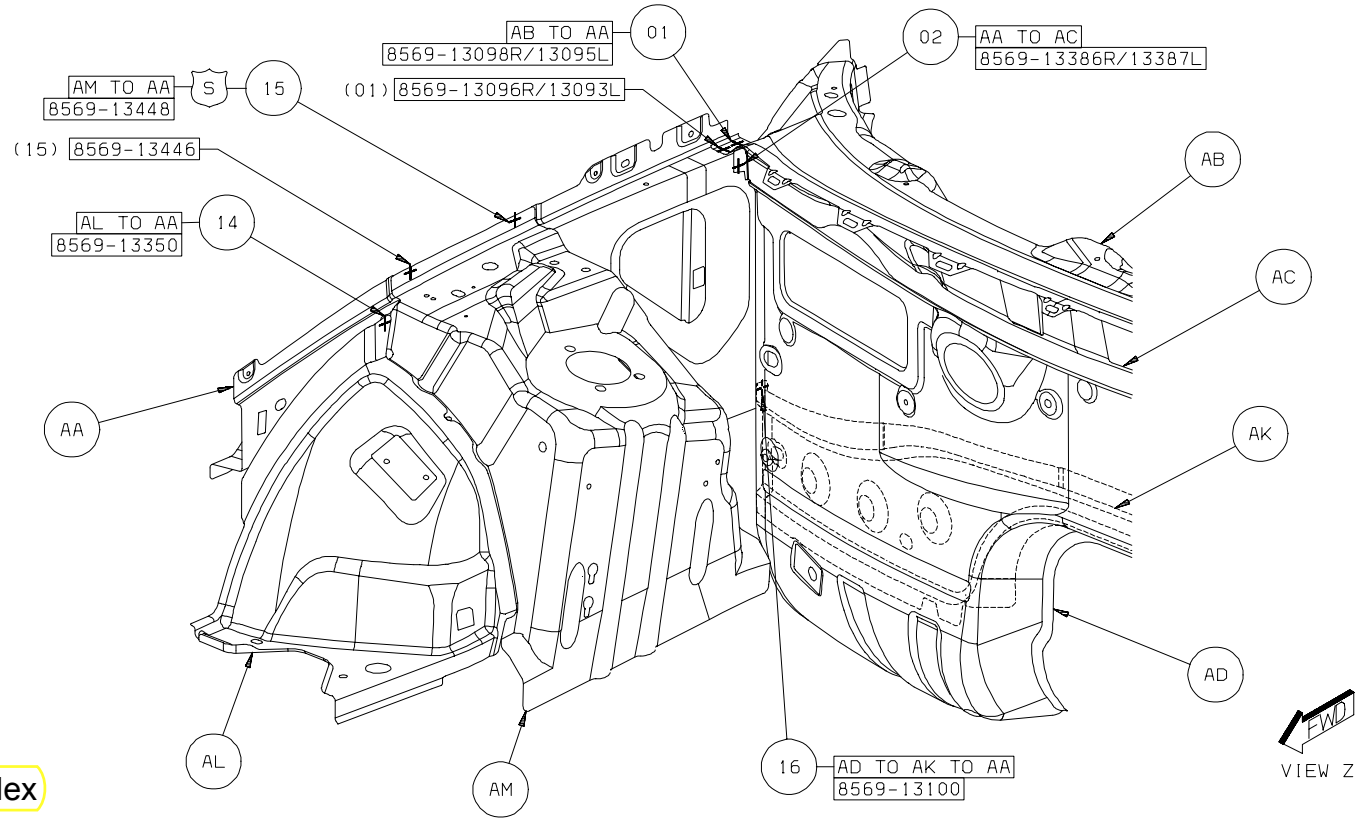

Back To Index

3. AA TO AD 4 S/WELDS
4. AD TO AE 24 S/WELDS

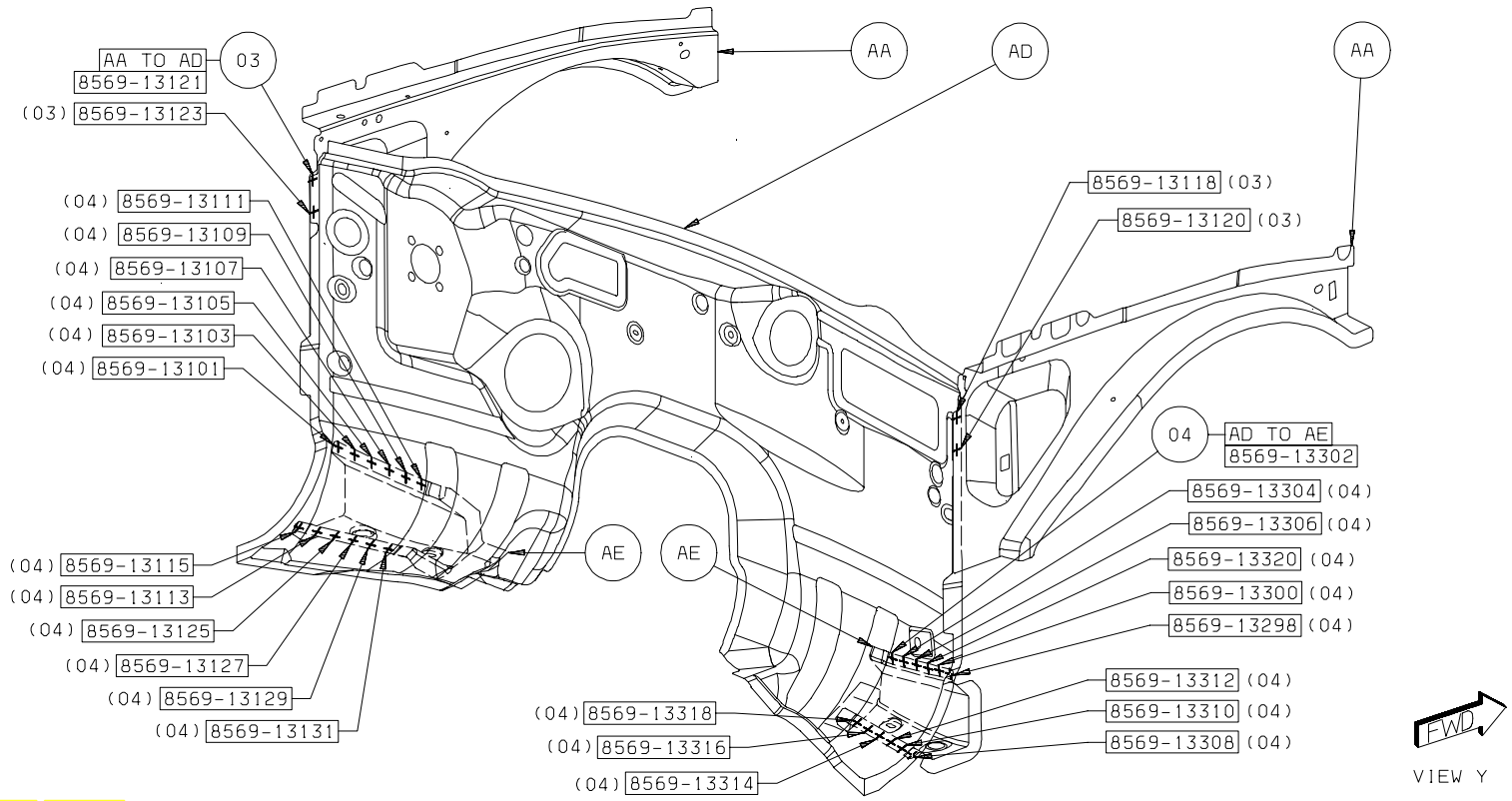

Back To Index

5. AA TO AF 8/SD S/WELDS

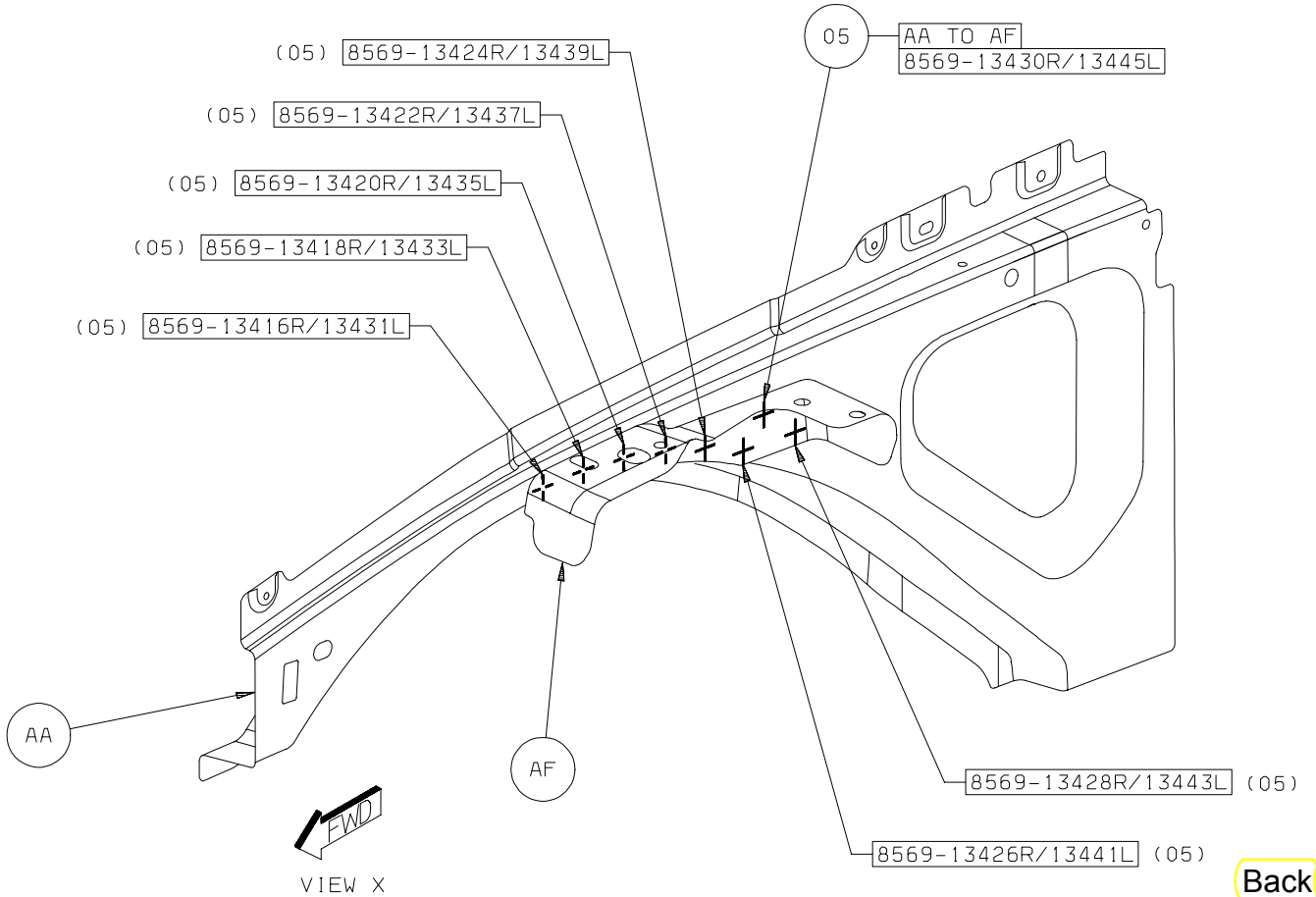

Back To Index

6. AD TO AH TO AG 2 S/WELDS
7. AD TO AG 8 S/WELDS

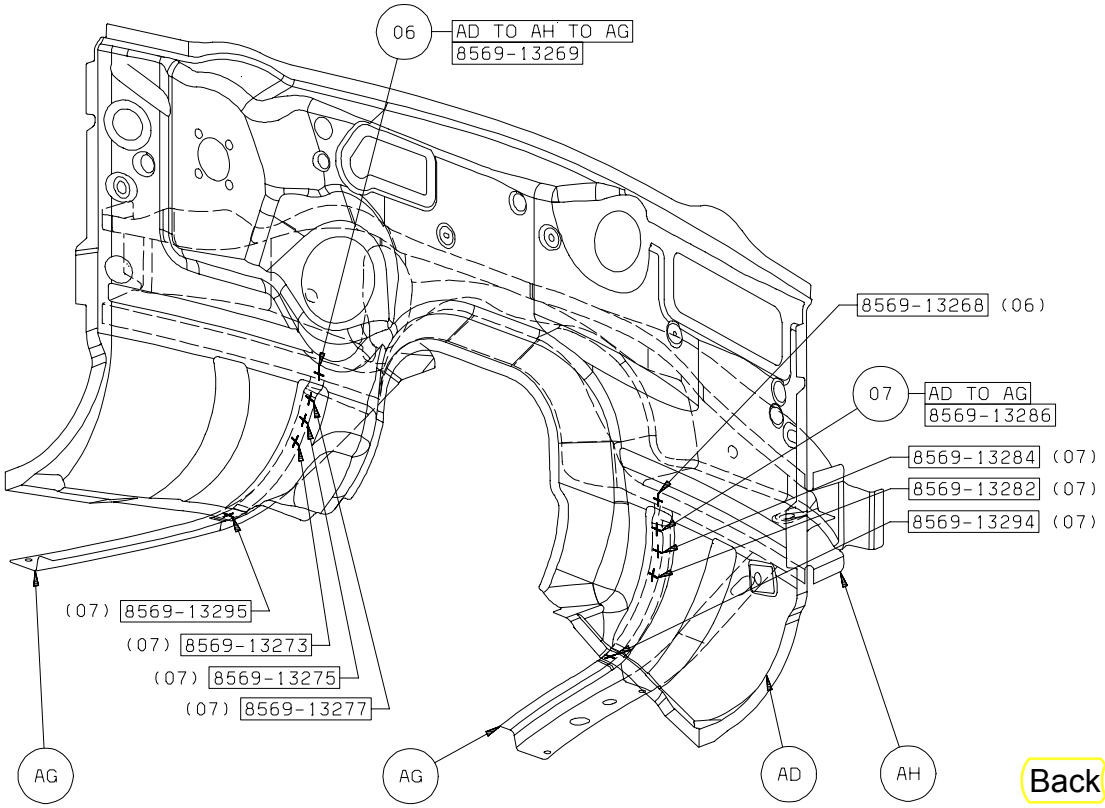

VIEW W

Back To Index

8. AD TO AJ 6 S/WELDS

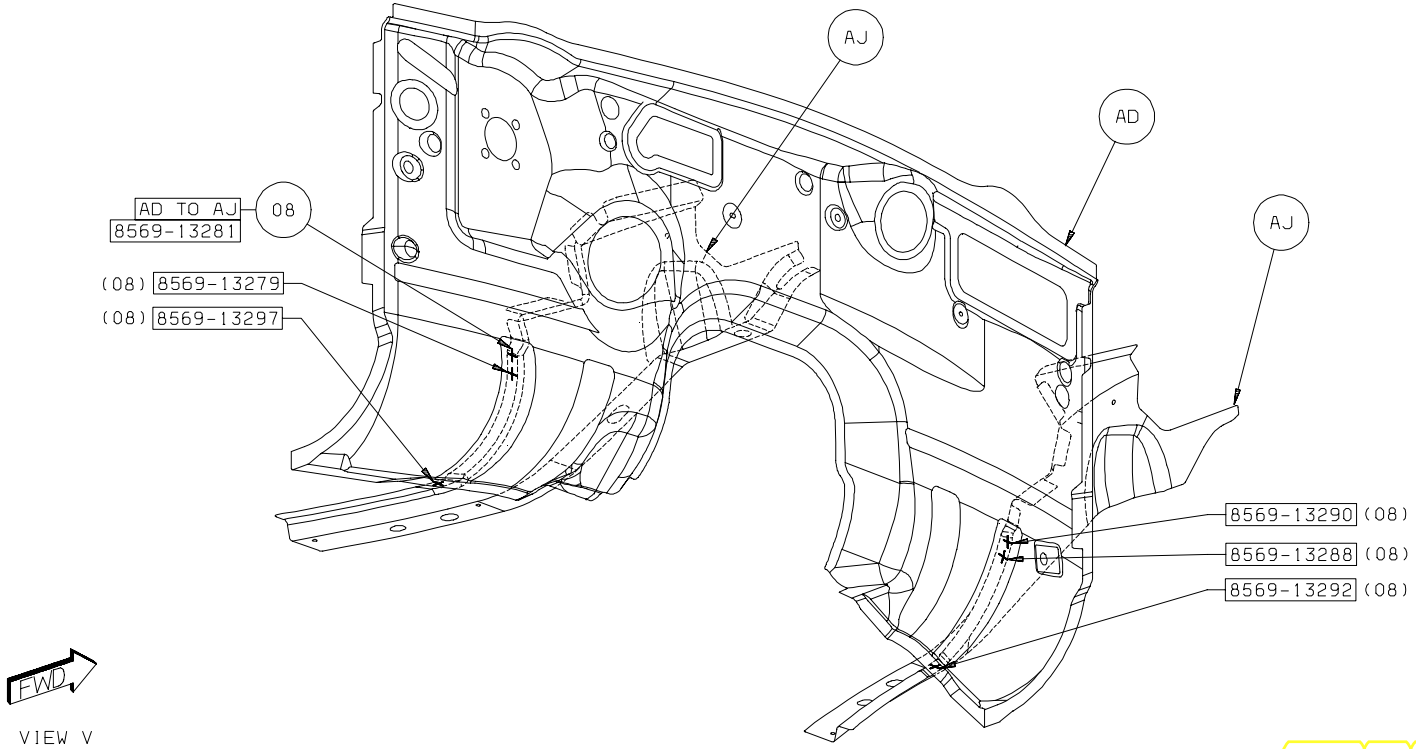

Back To Index

9. AD TO AH 36 S/WELDS

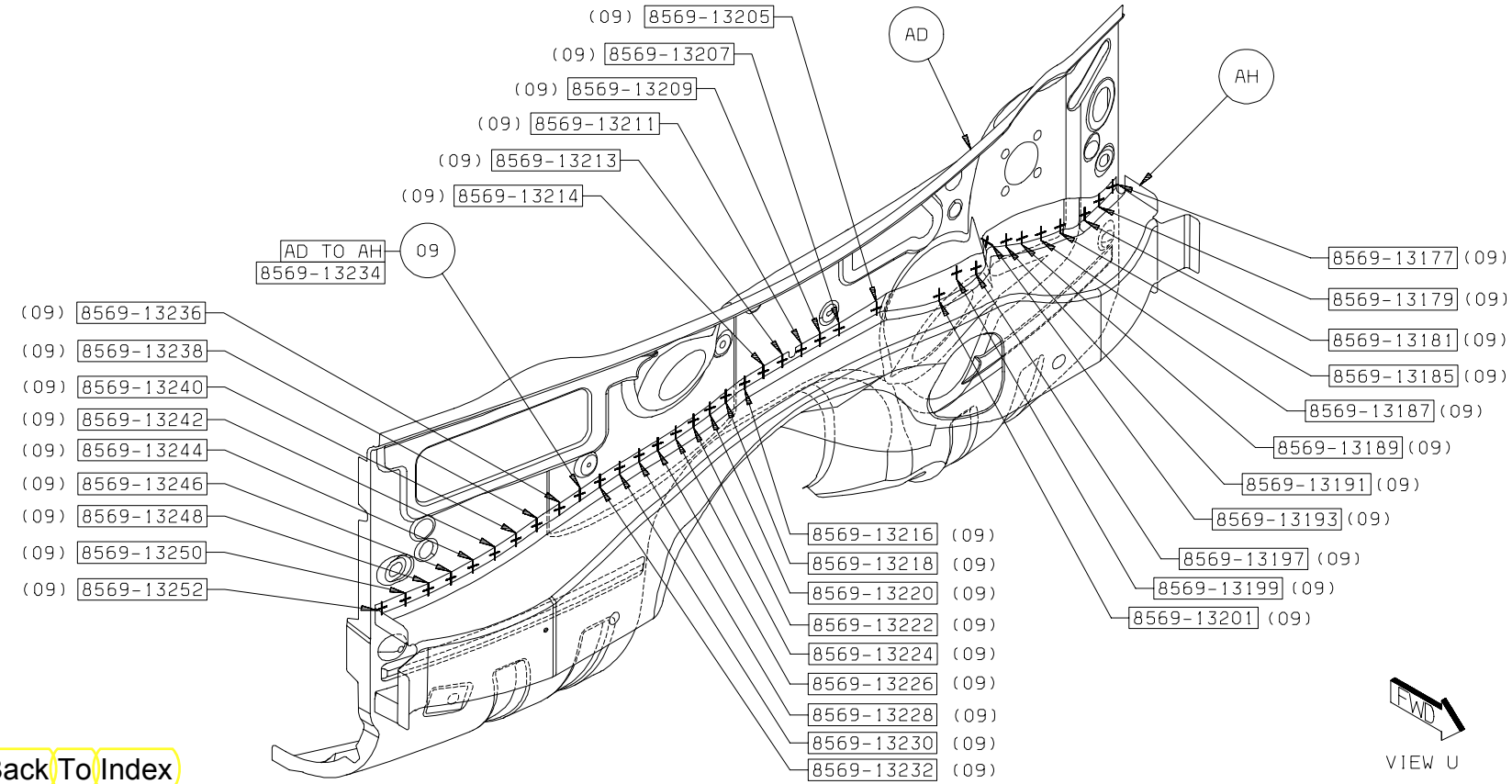

Back To Index

Back To Index

10. AD TO AK TO AH 28 S/WELDS

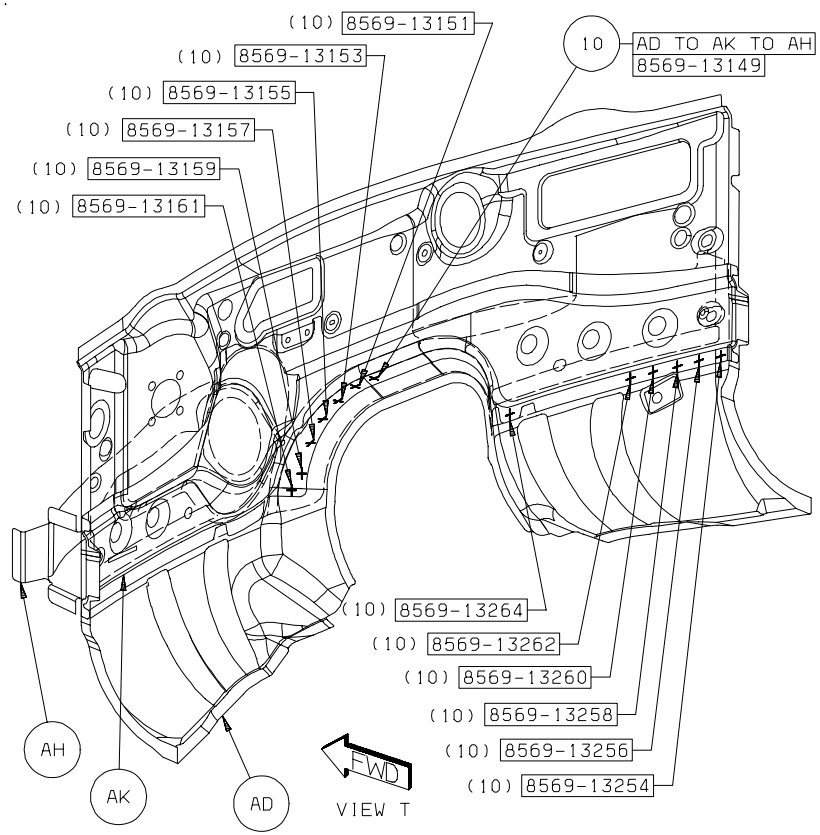

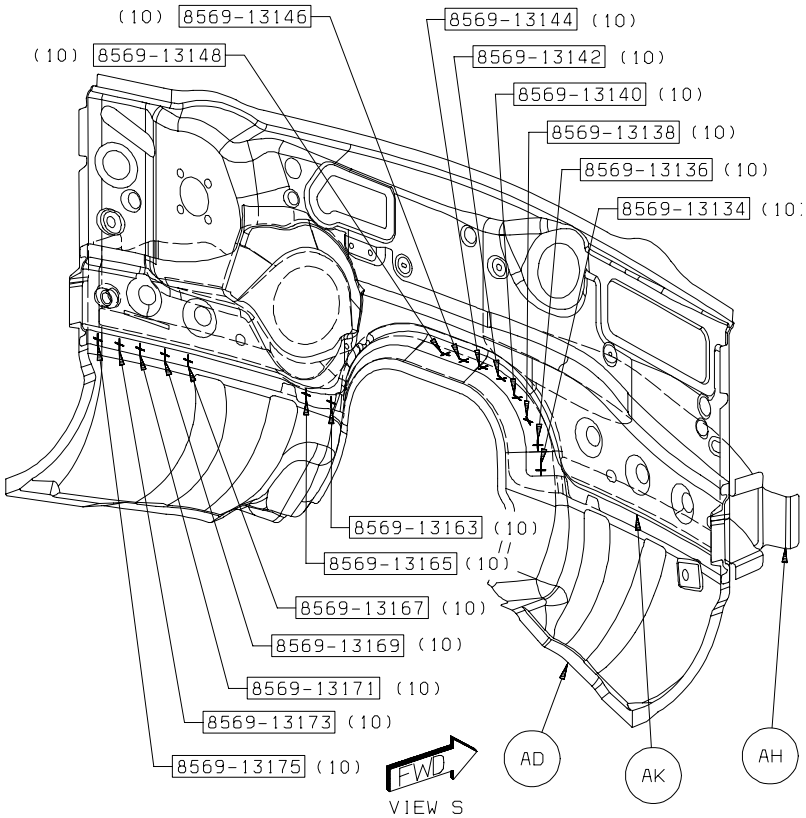

11. AA TO AL 7/SD S/WELDS
12. AM TO AA 2/SD S/WELDS
13. AA TO AN 8/SD S/WELDS

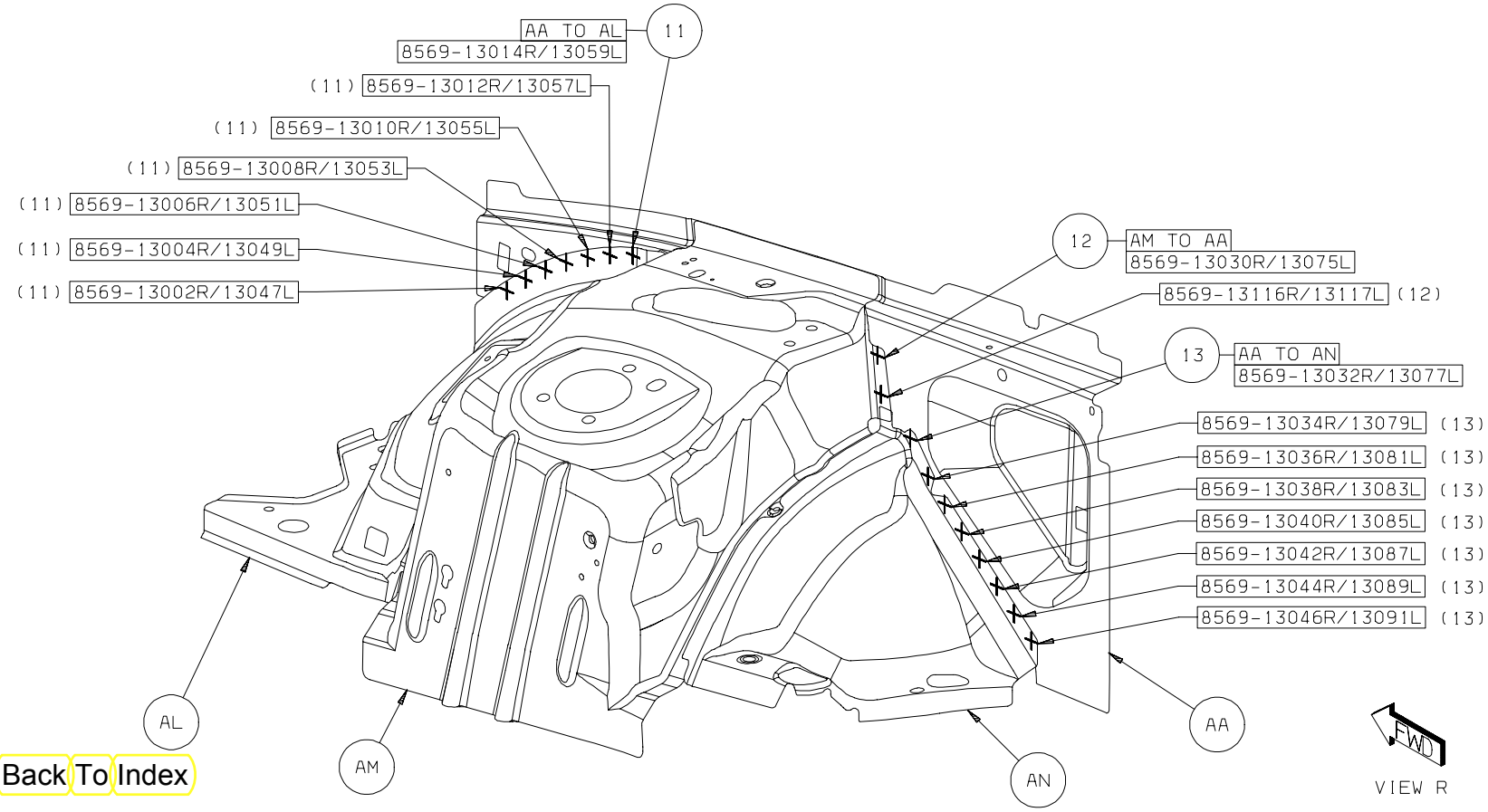

Back To Index

17. AH TO AD TO AK 3 S/WELDS
18. AH TO AD TO AP 2 S/WELDS
19. AH TO AD 1 S/WELD
20. AD TO AK TO AA 1 S/WELDS

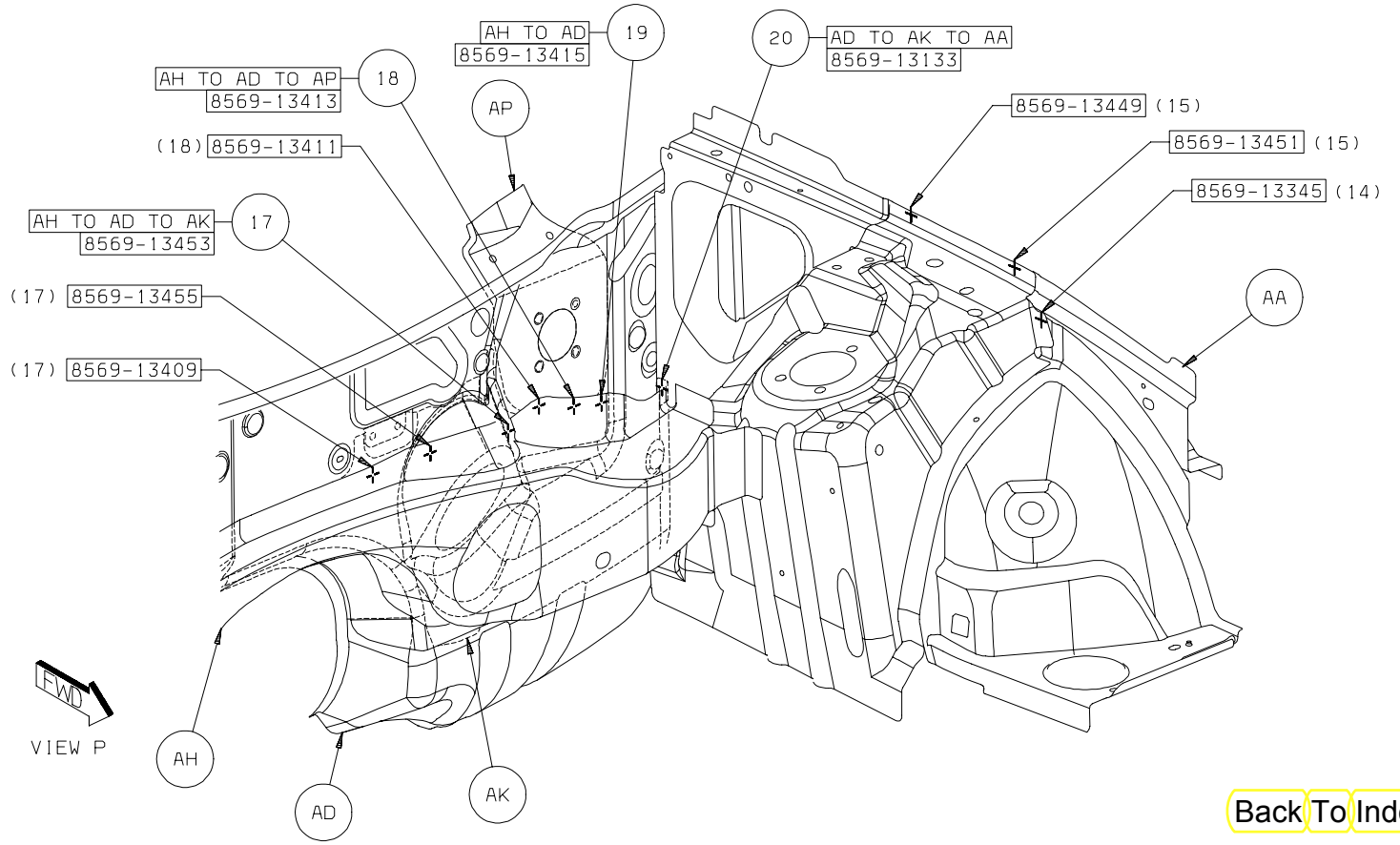

Back To Index

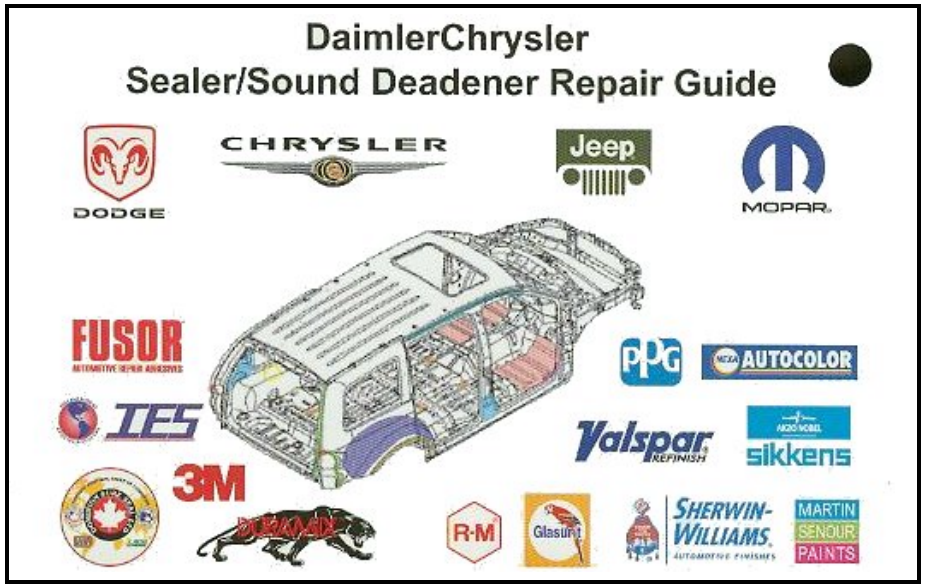

Publication # 81-316-0431

Publication # 81-170-00007

Addition copies of these publications are available by calling:
1-800-890-4038

Back To Index

PARTS IDENTIFICATION LEGEND, OVERVIEW 18

AA	RAIL - RR INR RT -
AA	RAIL - RR INR LT -
AB	PAN - RR FLOOR -
AC	REINF - RR RAIL INR RR RT -
AC	REINF - RR RAIL INR RR LT -
AD	CROSSMEMBER - RR SUSPENSION FRT -
AE	EXTENSION - CROSSMEMBER END SUPPORT RT -
AE	EXTENSION - CROSSMEMBER END SUPPORT LT -
AF	CROSSMEMBER - RR KICK-UP -
AG	REINF - KICKUP CROSSMEMBER -
AH	CROSSMEMBER - RR SUSPENSION RR -
AJ	REINF - JOUNCE -

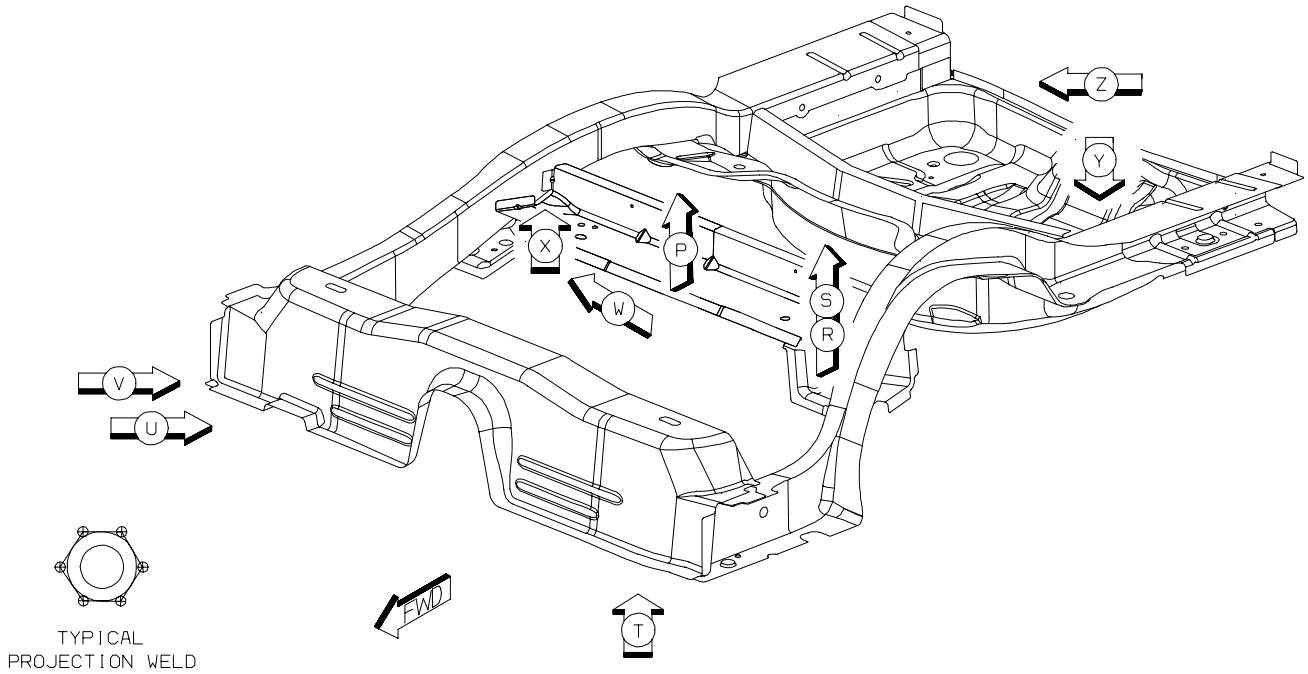

Back To Index

1. AB TO AA 8R & 2L S/WELDS
2. AB TO AA TO AC 11/SD S/WELDS
3. AB TO AC 5/SD S/WELDS

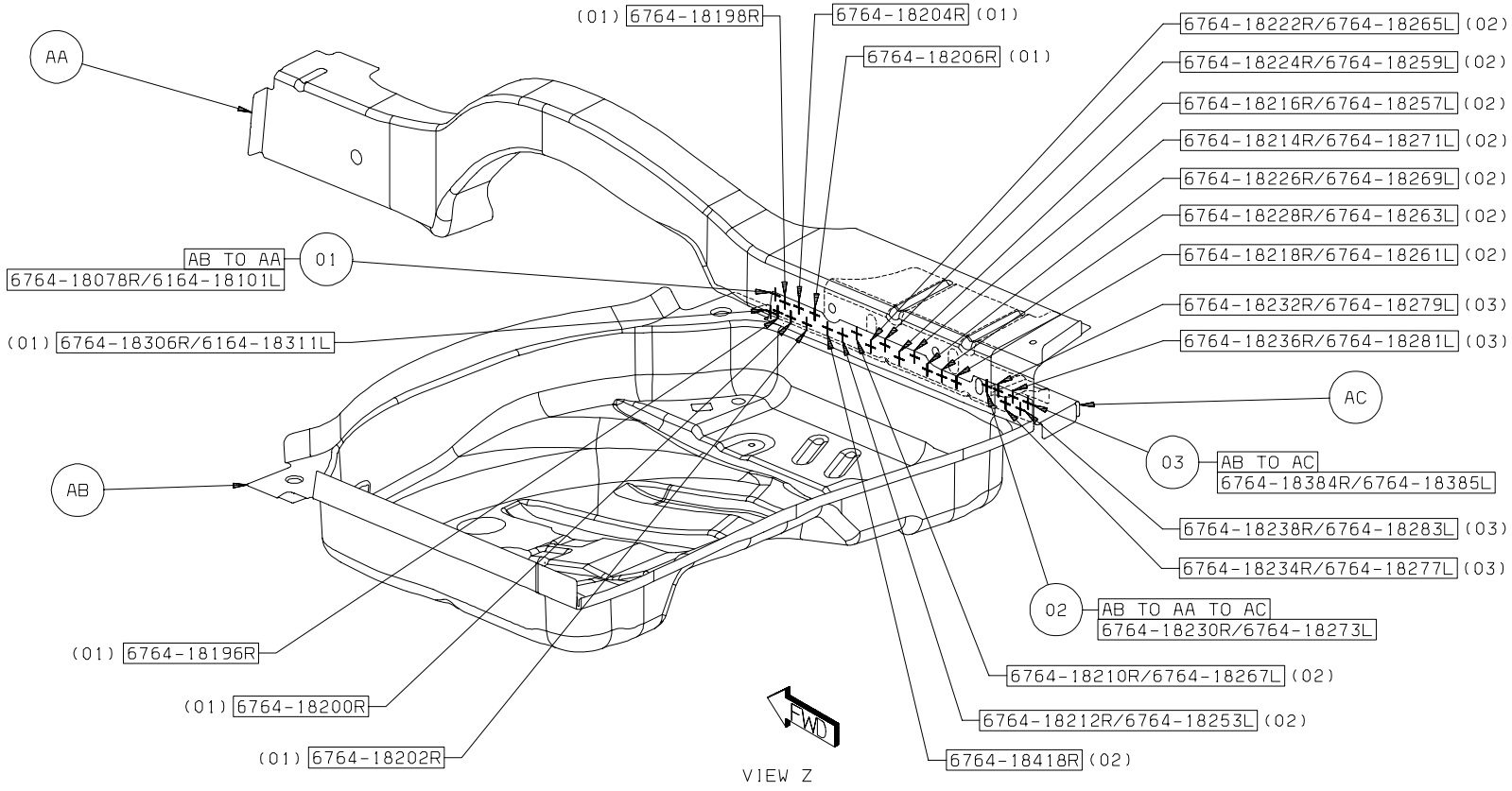

Back To Index

4. AB TO AA 7L S/WELDS

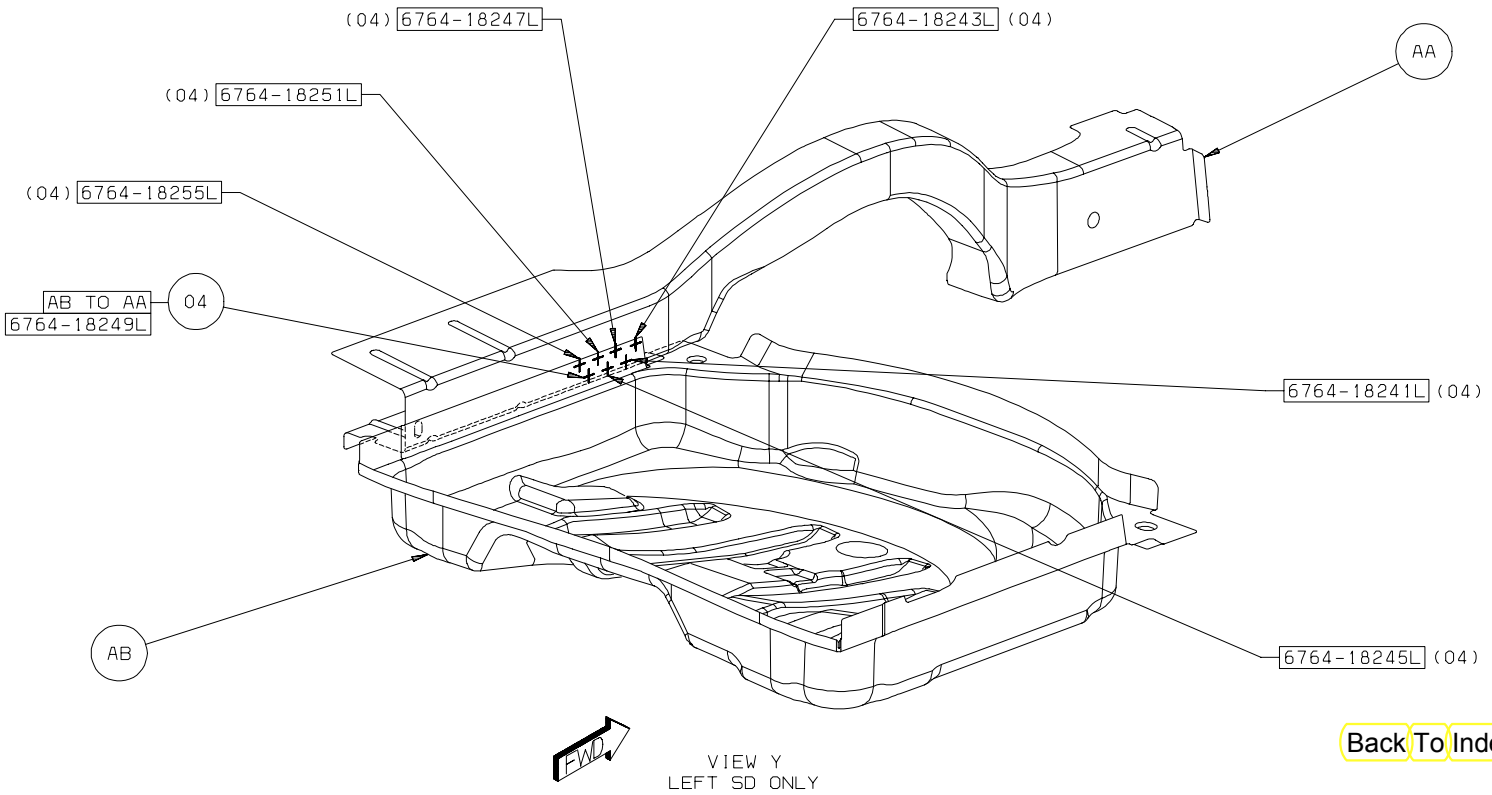

Back To Index

5. AD TO AA 5/SD S/WELDS

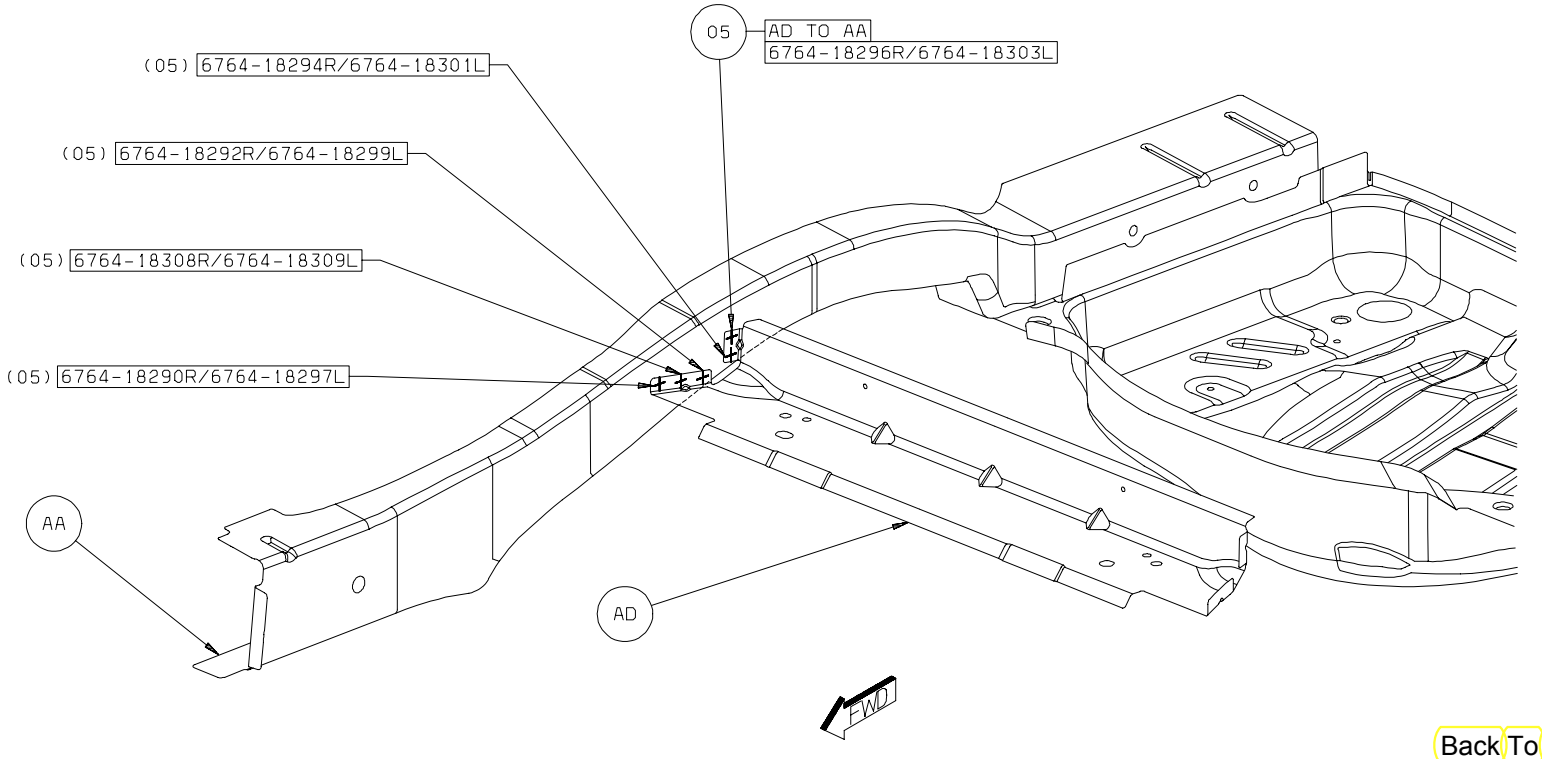

VIEW X

Back To Index

6. AE TO AA 4/SD S/WELDS

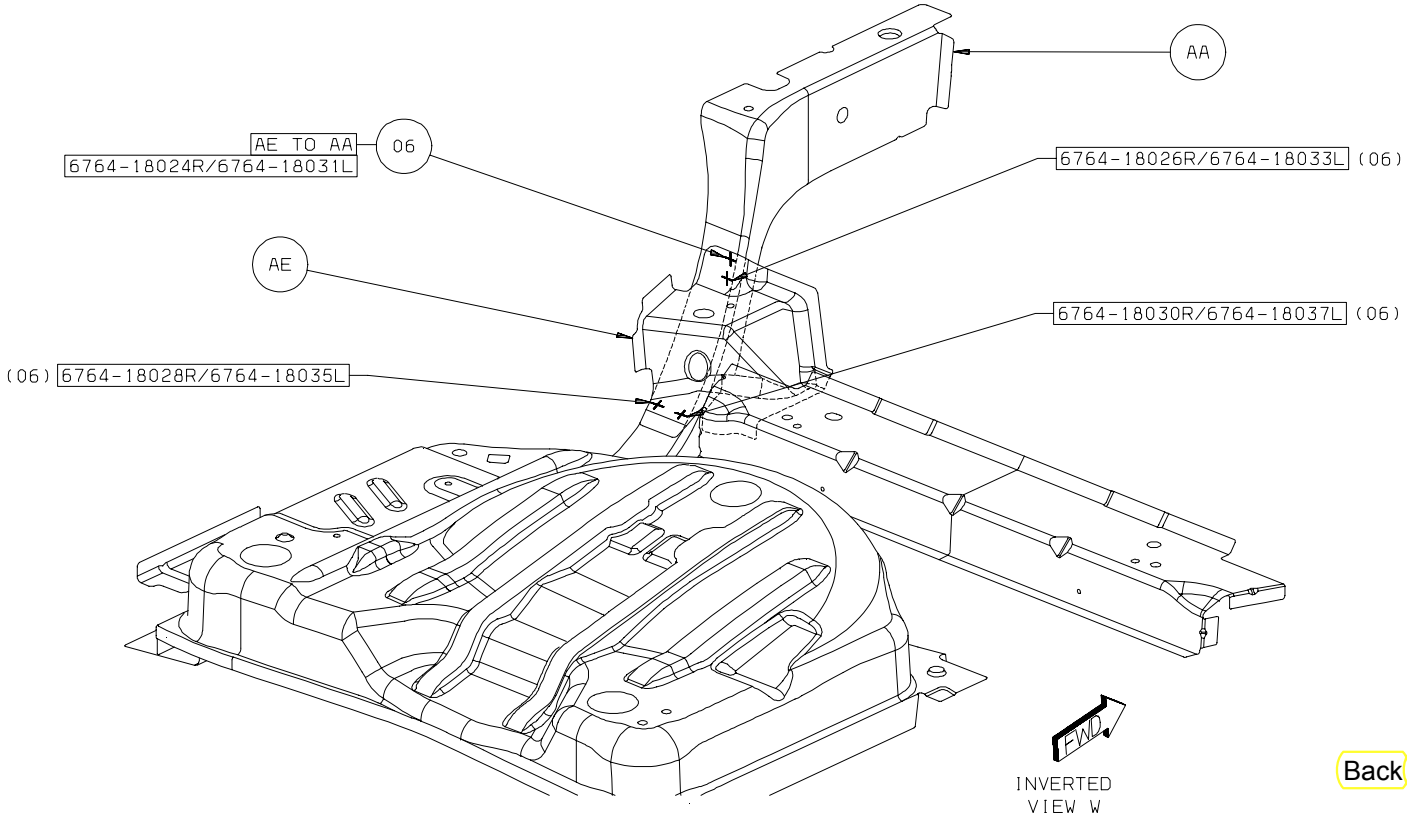

Back To Index

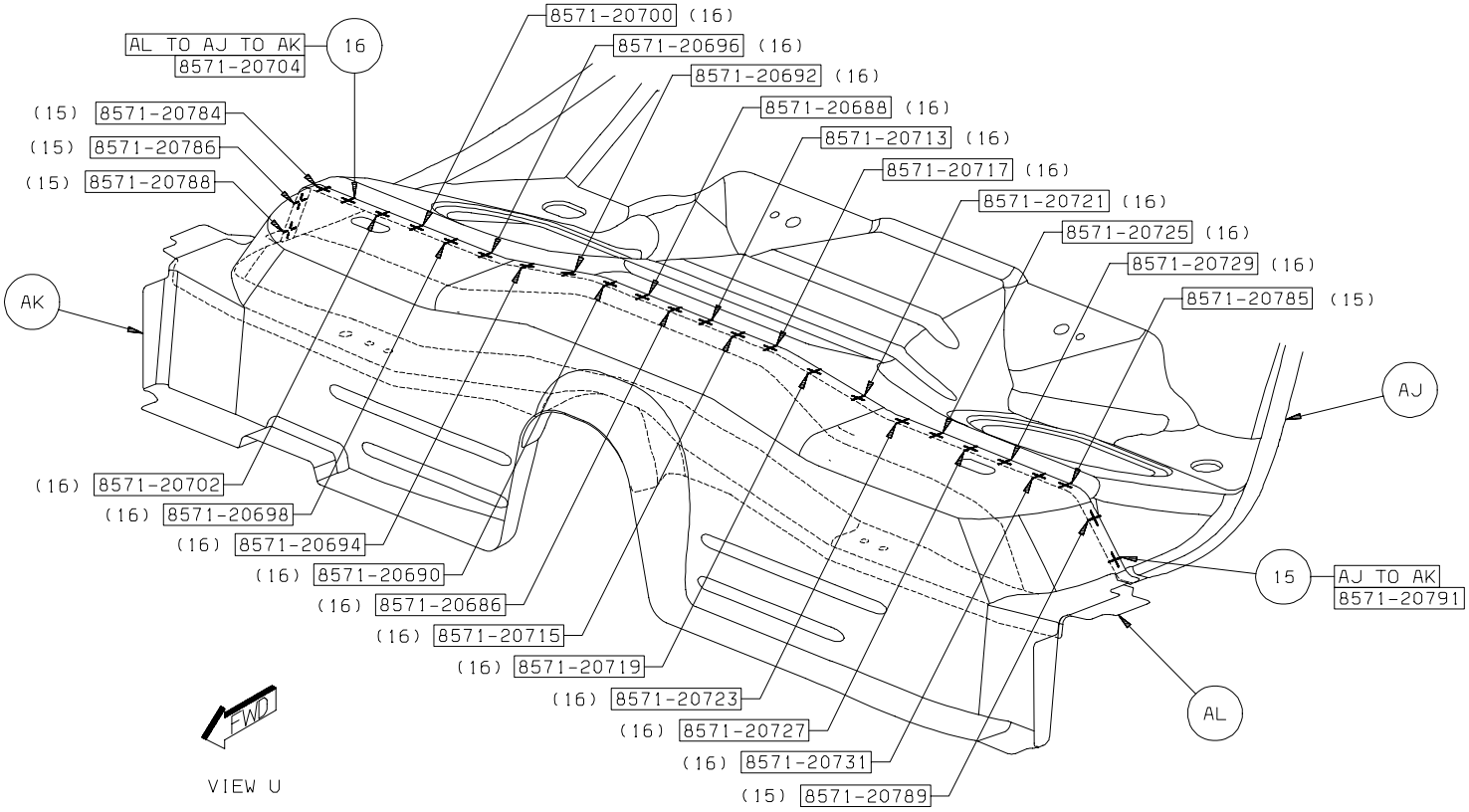

Back To Index

9. AF TO AG 2 PROJ WELDS
10. AF TO AG TO AA 3/SD S/WELDS
11. AG TO AF 20 S/WELDS

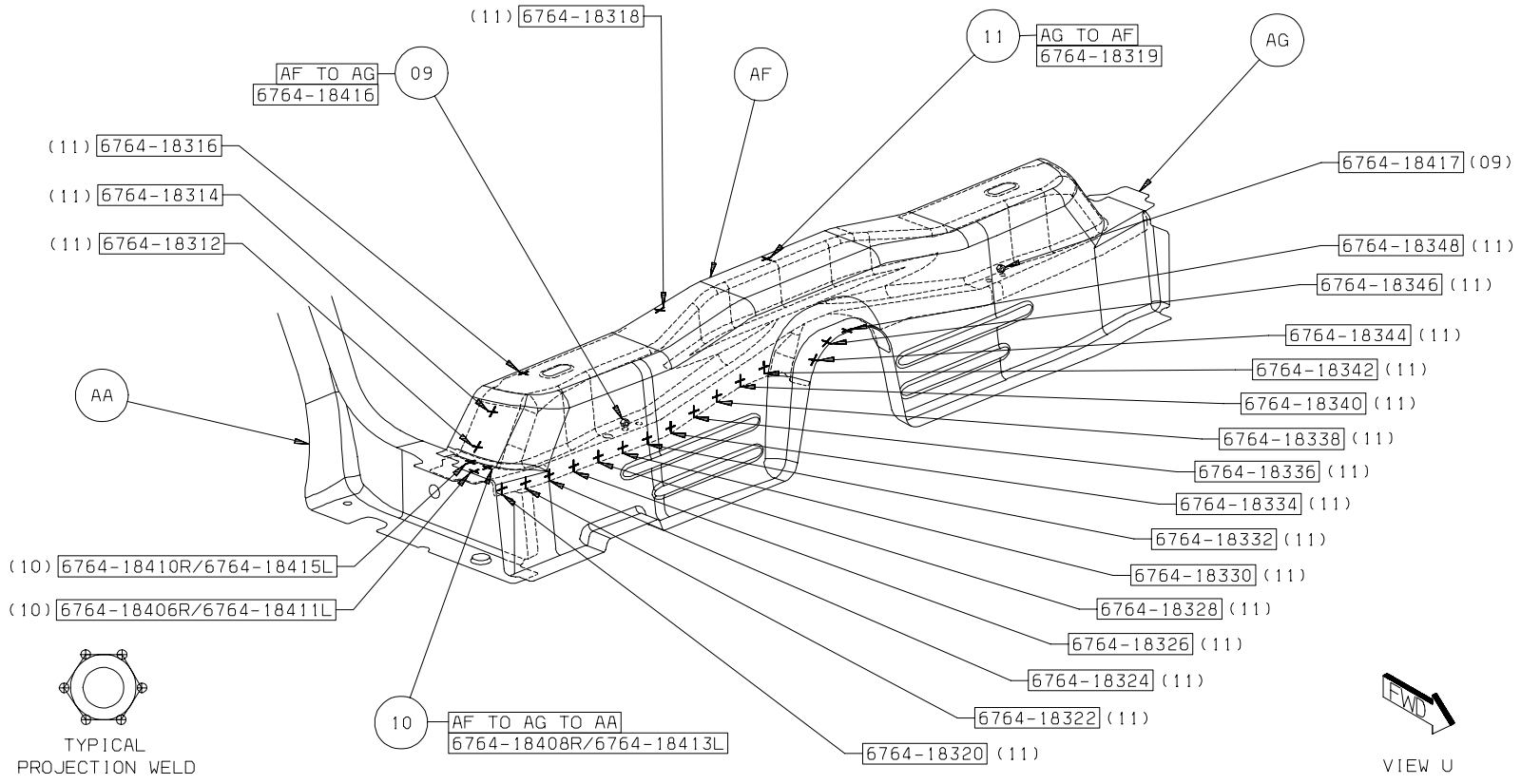

Back To Index

12. AG TO AF 23 S/WELDS

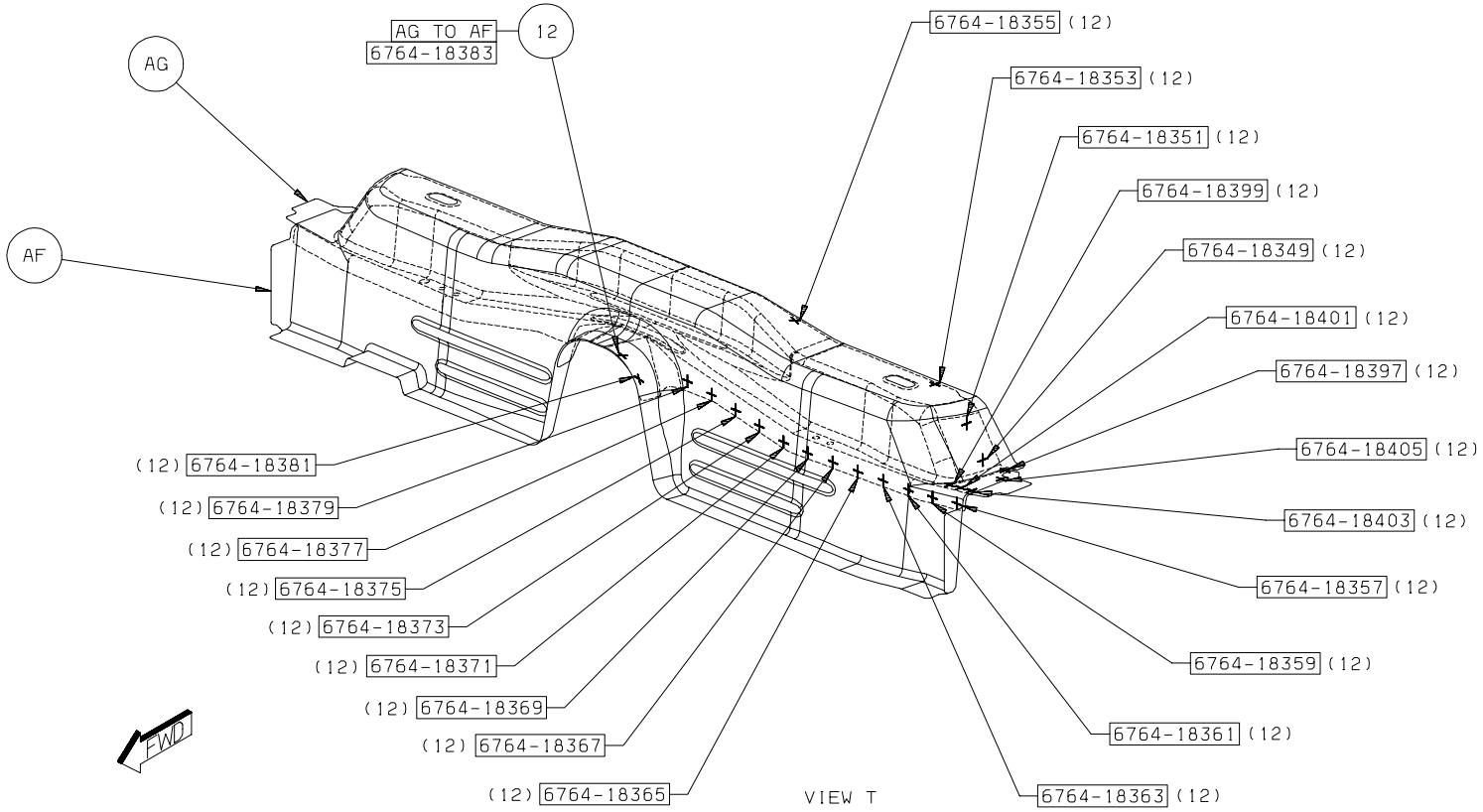

Back To Index

12. AP TO AN 2/SD S/WELDS
13. AS TO AR 6/SD S/WELDS

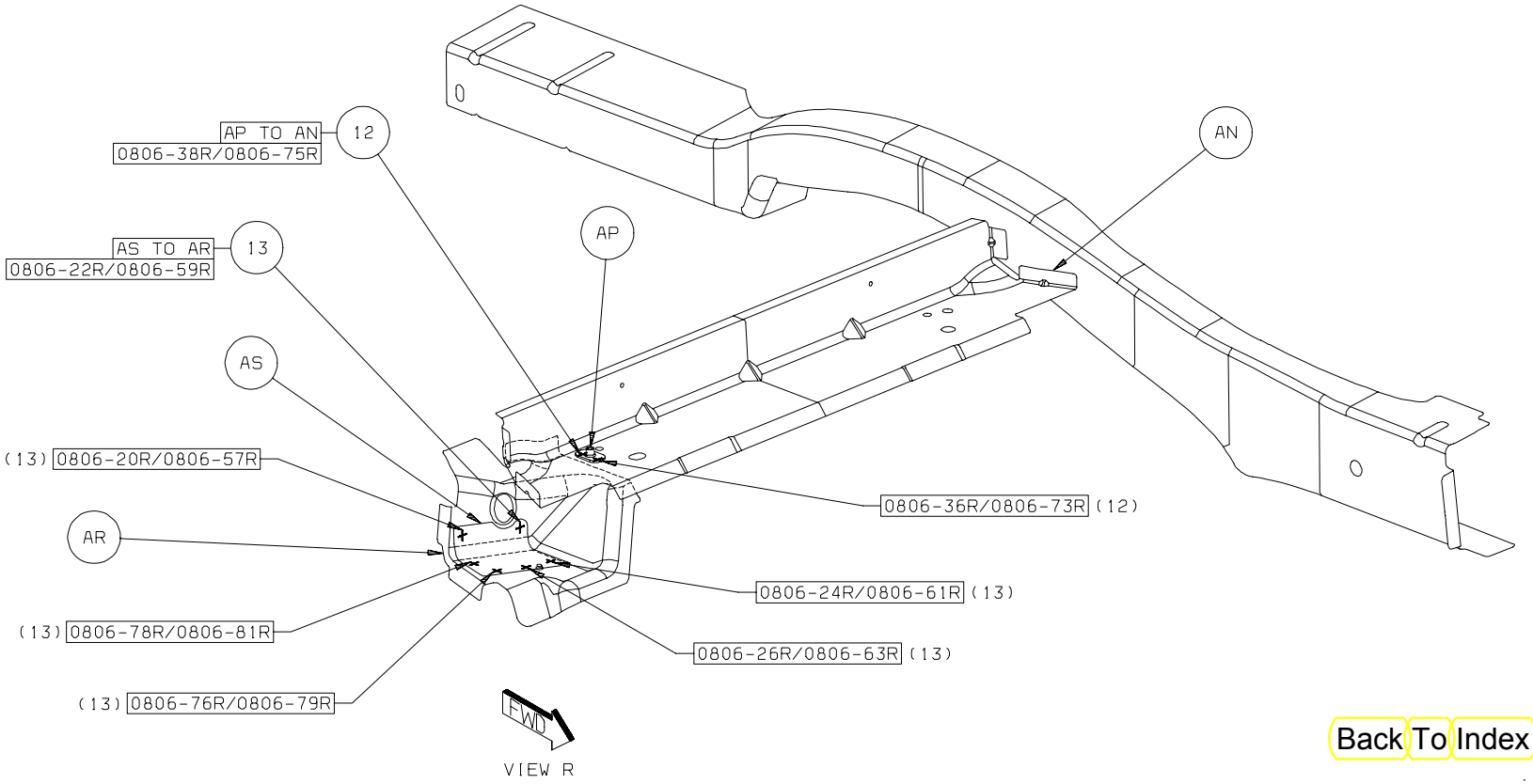

Back To Index

16. AB TO AA 1/SD S/WELD
17. AB TO AH TO AA 2/SD S/WELDS
18. AB TO AH 10 S/WELDS

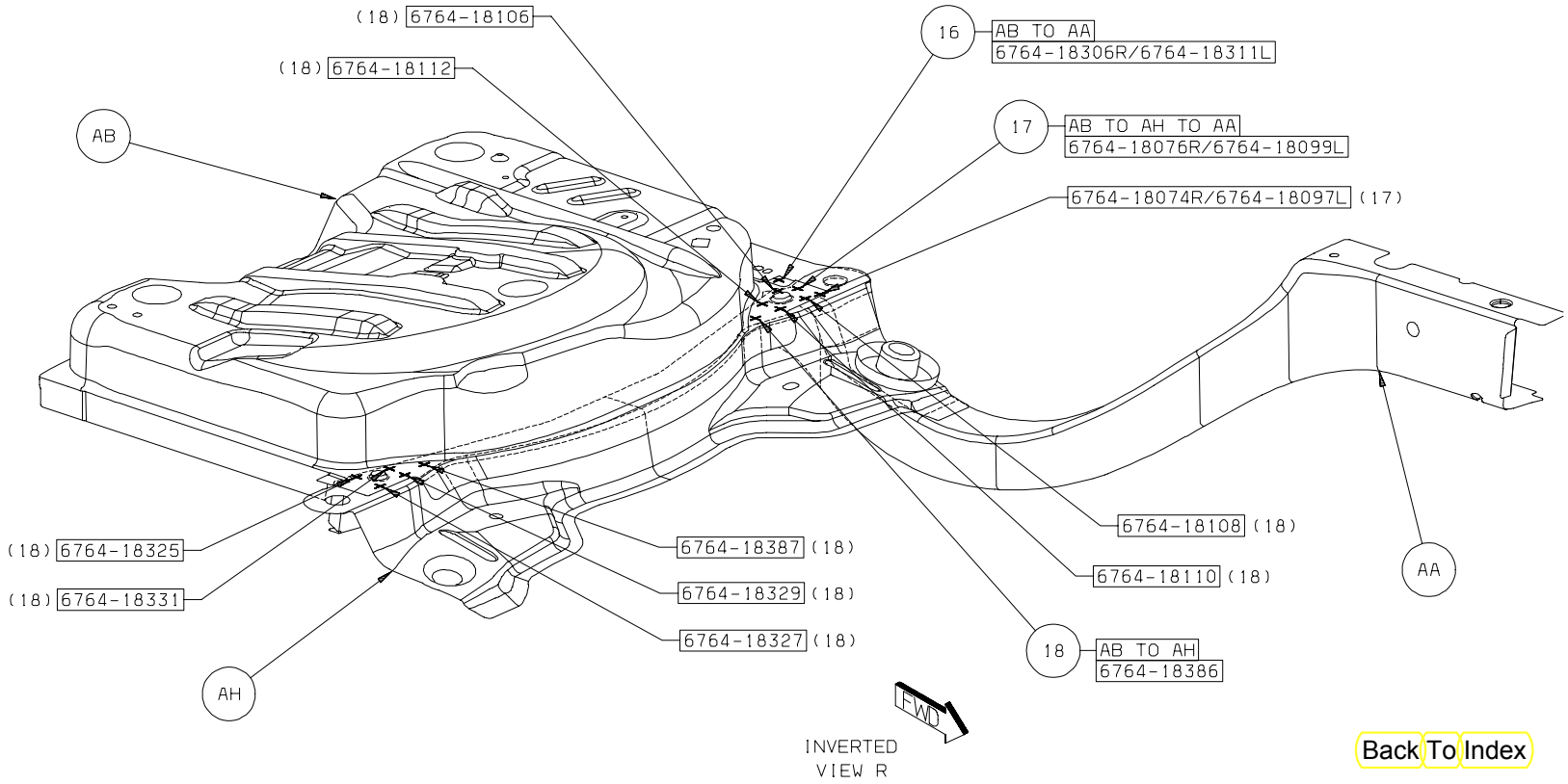

Back To Index

19. AH TO AA 10/SD S/WELDS

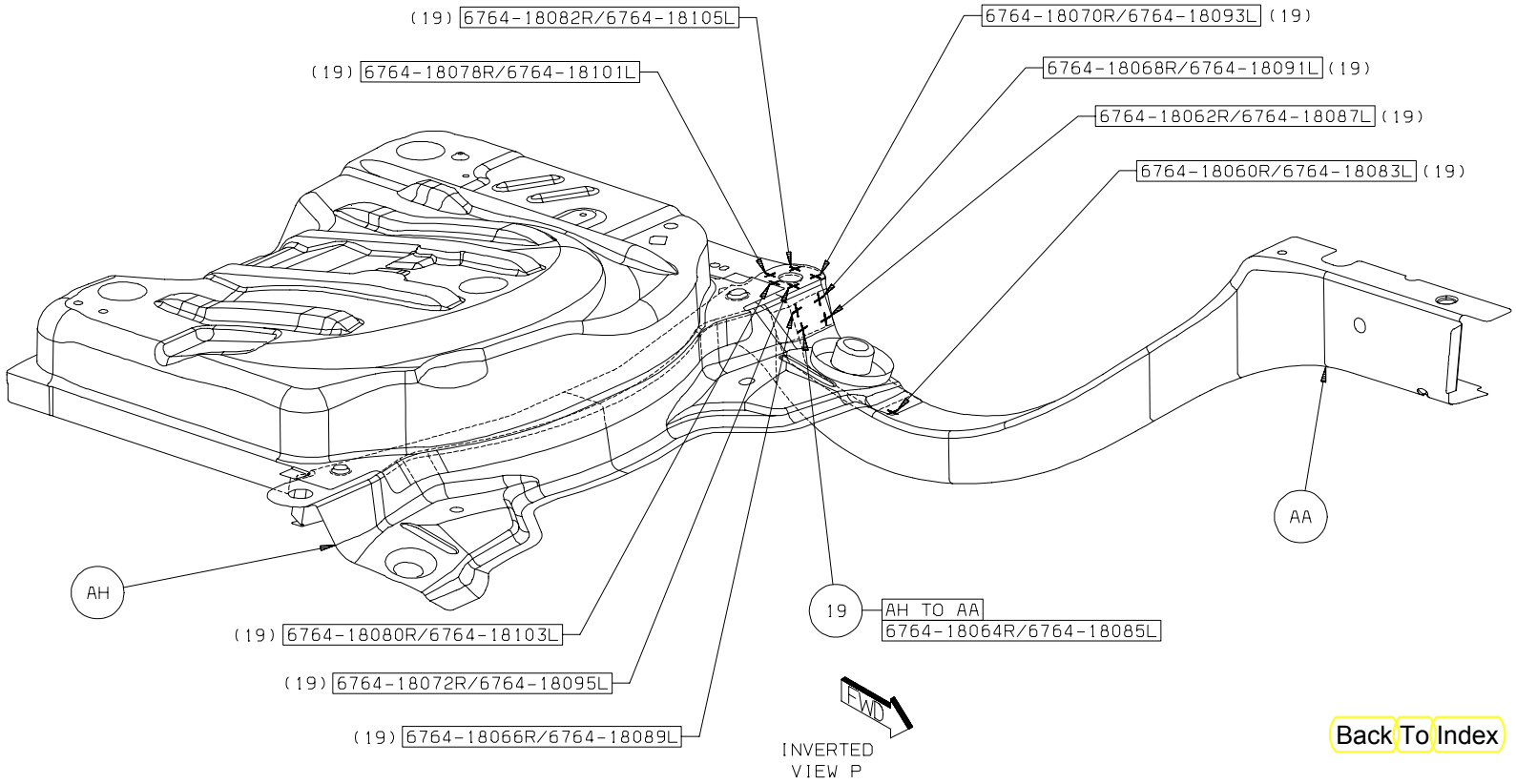

Back To Index

PARTS IDENTIFICATION LEGEND, OVERVIEW 19

AA	COVER PLATE - RR RAIL EXTENSION RT -
AA	COVER PLATE - RR RAIL EXTENSION LT -
AB	REINF - RR RAIL INR RR RT -
AB	REINF - RR RAIL INR RR LT -
AC	RAIL - RR INR RT -
AC	RAIL - RR INR LT -
AD	RAIL - RR OTR RT -
AD	RAIL - RR OTR LT -
AE	BRACKET - CRADLE ATTACHING RT -
AE	BRACKET - CRADLE ATTACHING LT -
AF	PANEL - RR WHEELHOUSE INR RT -
AF	PANEL - RR WHEELHOUSE INR LT -
AG	PANEL - RR SHOCK MOUNTING RT -
AG	PANEL - RR SHOCK MOUNTING LT -
AH	COVER PLATE - RAIL RR RT - FRONT
AH	COVER PLATE - RAIL RR LT - FRONT
AJ	PAN - CTR FLOOR PAN -
AK	CROSSMEMBER - RR KICK-UP
AL	REINF - KICKUP CROSSMEMBER -
AM	REINF - RR RAIL OTR RT -
AM	REINF - RR RAIL OTR LT -
AN	CROSSMEMBER - RR SUSPENSION RR -
AP	GUSSET - ISO FIX -
AR	PANEL - RR SHELF SUPPORT RT -
AR	PANEL - RR SHELF SUPPORT LT -
AS	BRACKET - SEAT BACK LATCH RR UPR RT -
AS	BRACKET - SEAT BACK LATCH RR UPR LT -
AT	CROSSMEMBER - RR SHELF -
AU	EXTENSION - CROSSMEMBER END SUPPORT RT -
AU	EXTENSION - CROSSMEMBER END SUPPORT LT -
AV	CROSSMEMBER - RR SUSPENSION FRT -
AW	REINF - SEAT BELT ANCHOR RR INBOARD -
AX	CROSSMEMBER - ISO FIX -
AY	06503273 - STUD.WELD/EXTERNAL - HEADER.PT.SPECIAL - CTR FLR STUD (QTY. 8)

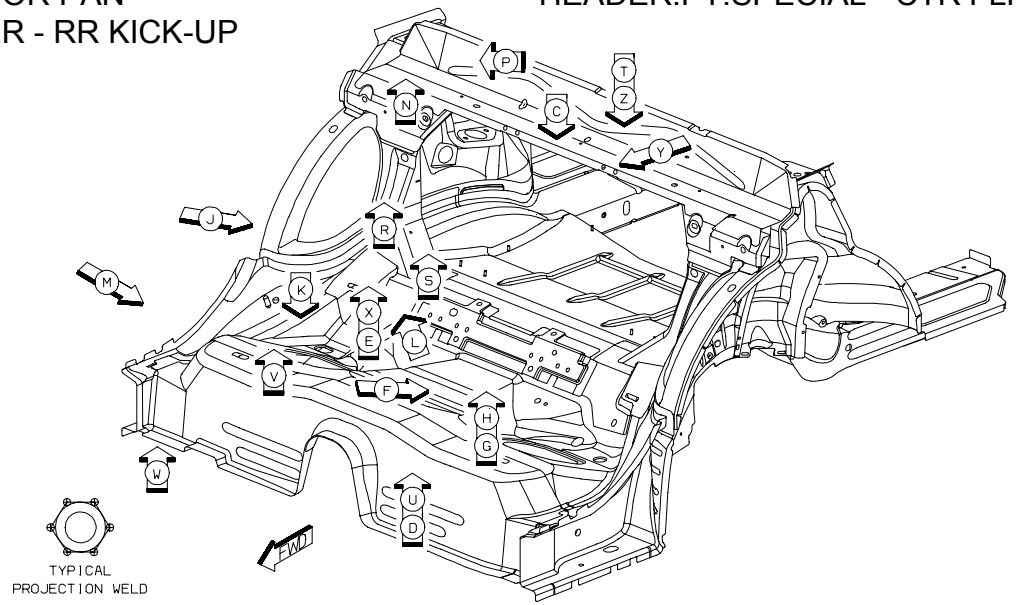

Back To Index

1. AD TO AC TO AA 4/SD S/WELD
2. AE TO AD TO AA 2/SD S/WELD
3. AD TO AA 5/SD S/WELD
4. AC TO AA 11/SD S/WELD
5. AB TO AA 5/SD S/WELD

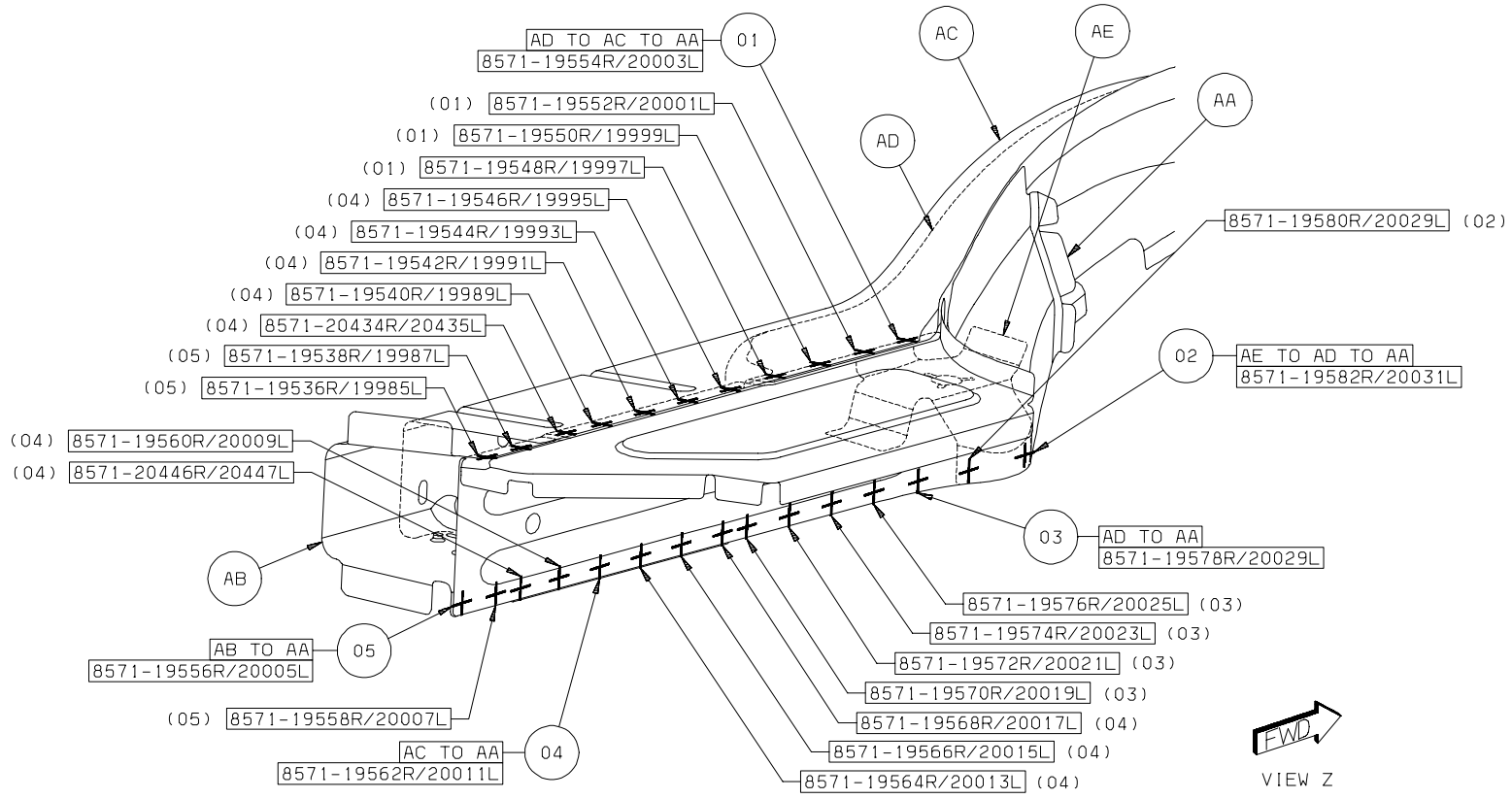

Back To Index

6. AD TO AC 27/SD S/WELD

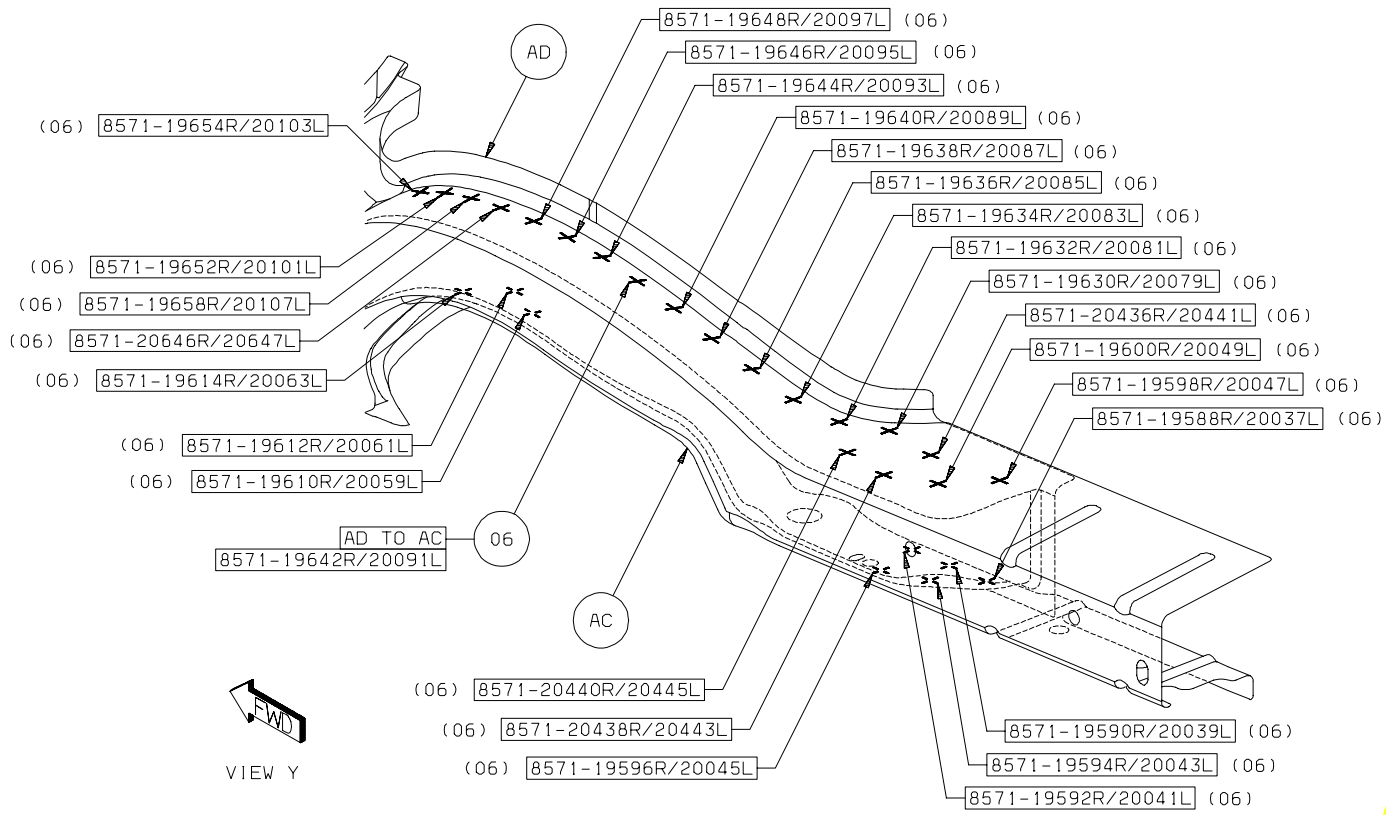

Back To Index

7. AG TO AF TO AD 4/SD S/WELD
8. AA TO AF TO AD 4/SD S/WELD
9. AA TO AD 2/SD S/WELD
10. AH TO AF TO AD 13/SD S/WELD

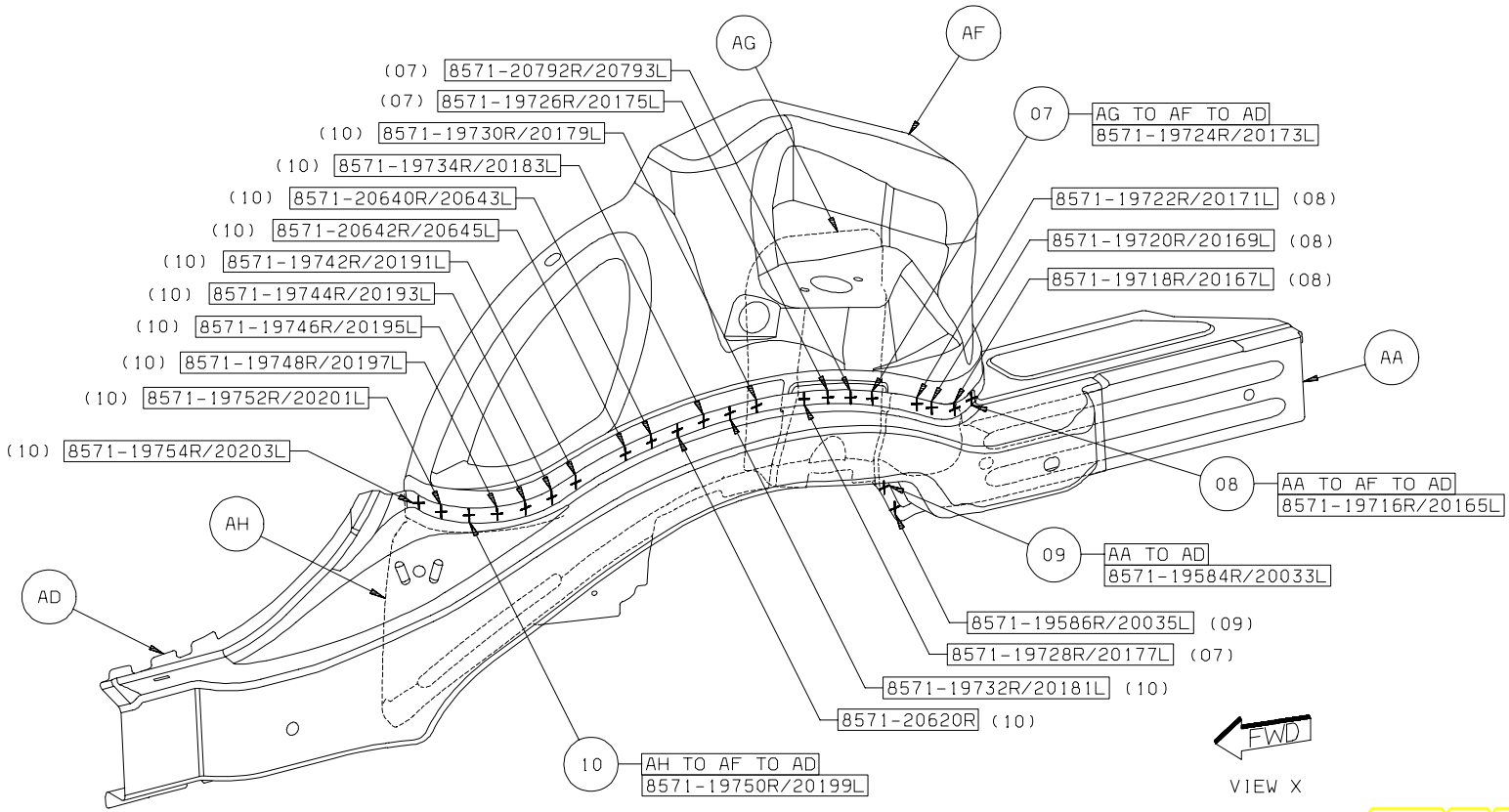

Back To Index

11. AC TO AL TO AD 3/SD S/WELD
12. AC TO AD 7/SD S/WELD
13. AK TO AD 3/SD S/WELD
14. AM TO AD TO AC 6/SD S/WELD

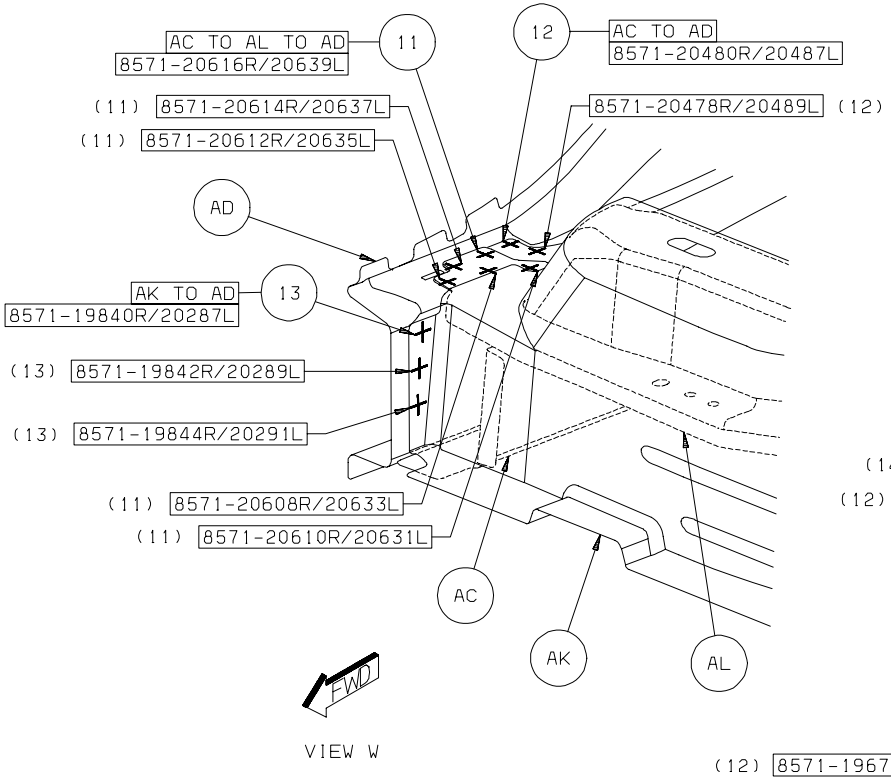

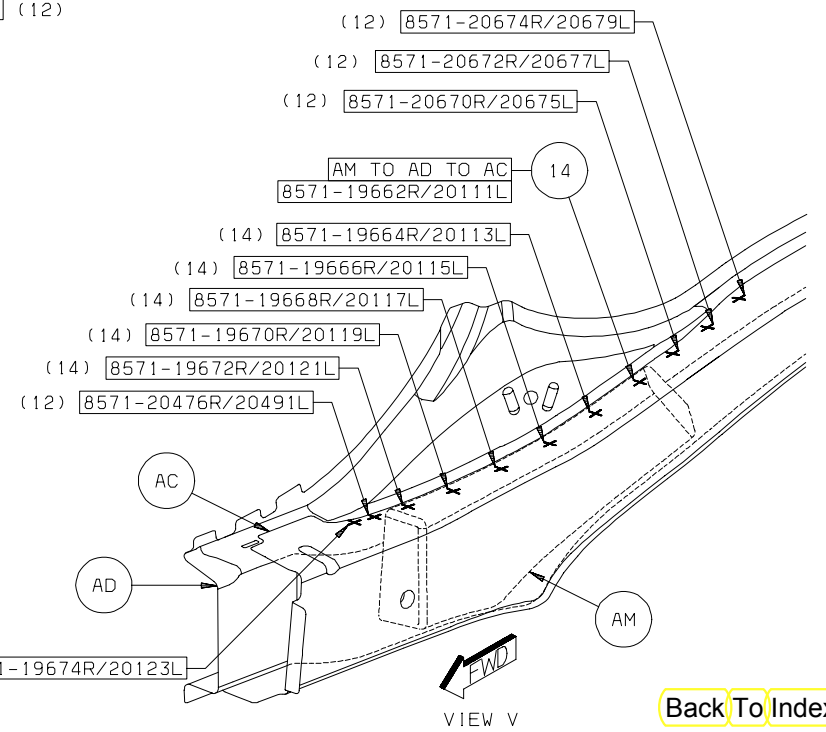

Back To Index

15. AJ TO AK 6 S/WELD
16. AL TO AJ TO AK 20 S/WELD

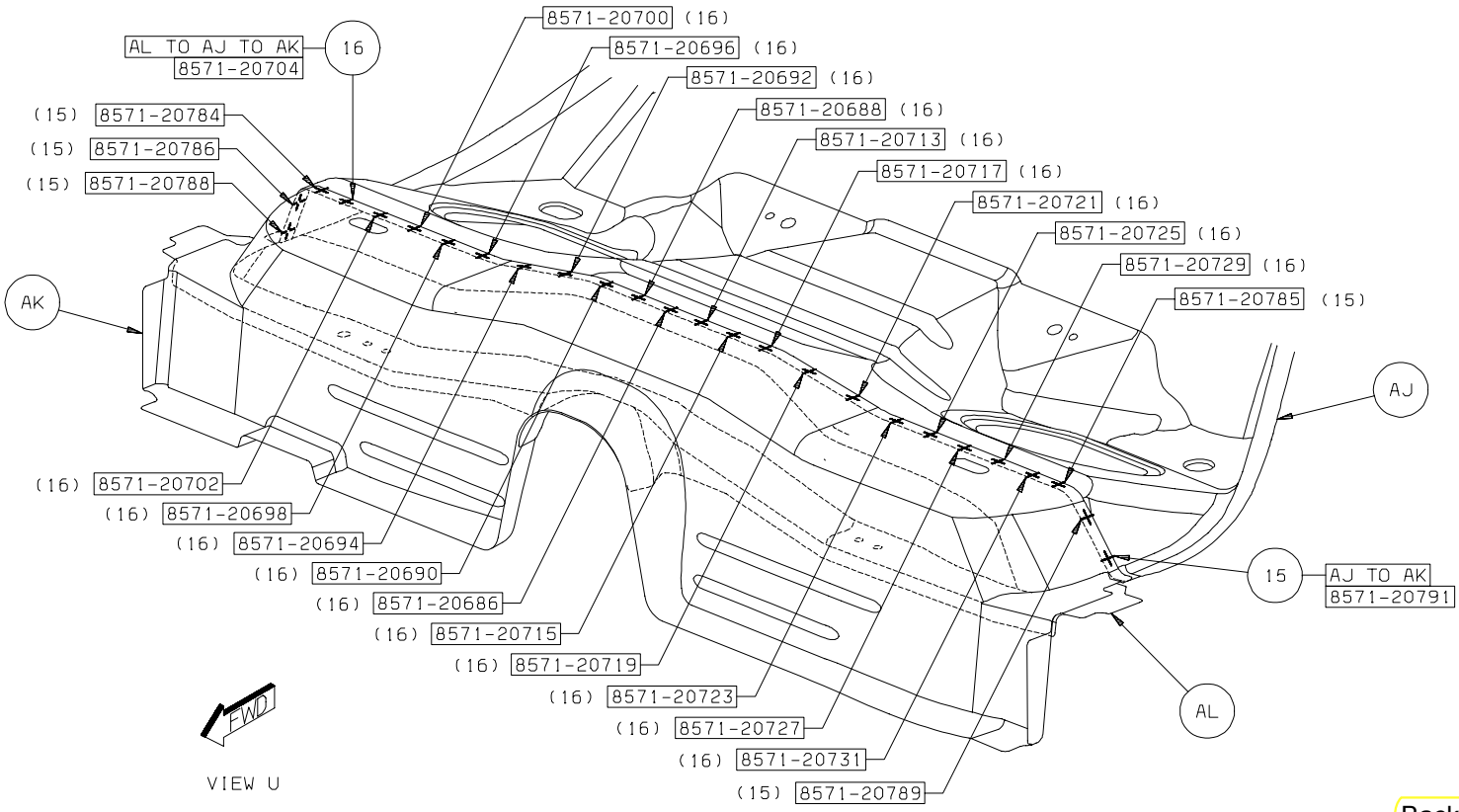

Back To Index

17. AN TO AJ 31 S/WELD
18. AC TO AJ 12 S/WELD

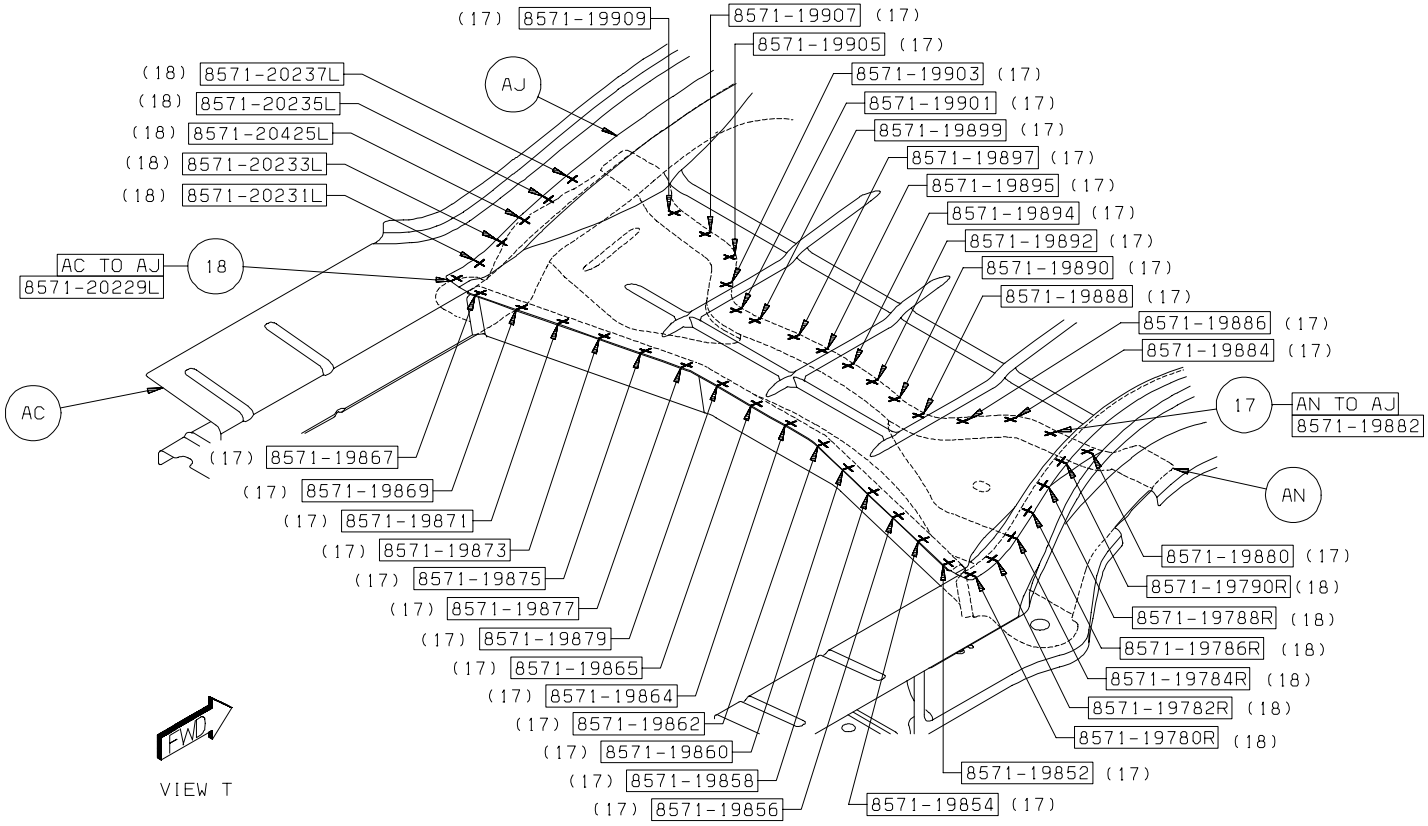

Back To Index

19. AC TO AJ 18/SD S/WELD
20. AP TO AC TO AJ 5/SD S/WELD
21. AK TO AC TO AJ 1/SD S/WELD
22. AC TO AD TO AJ 2/SD S/WELD

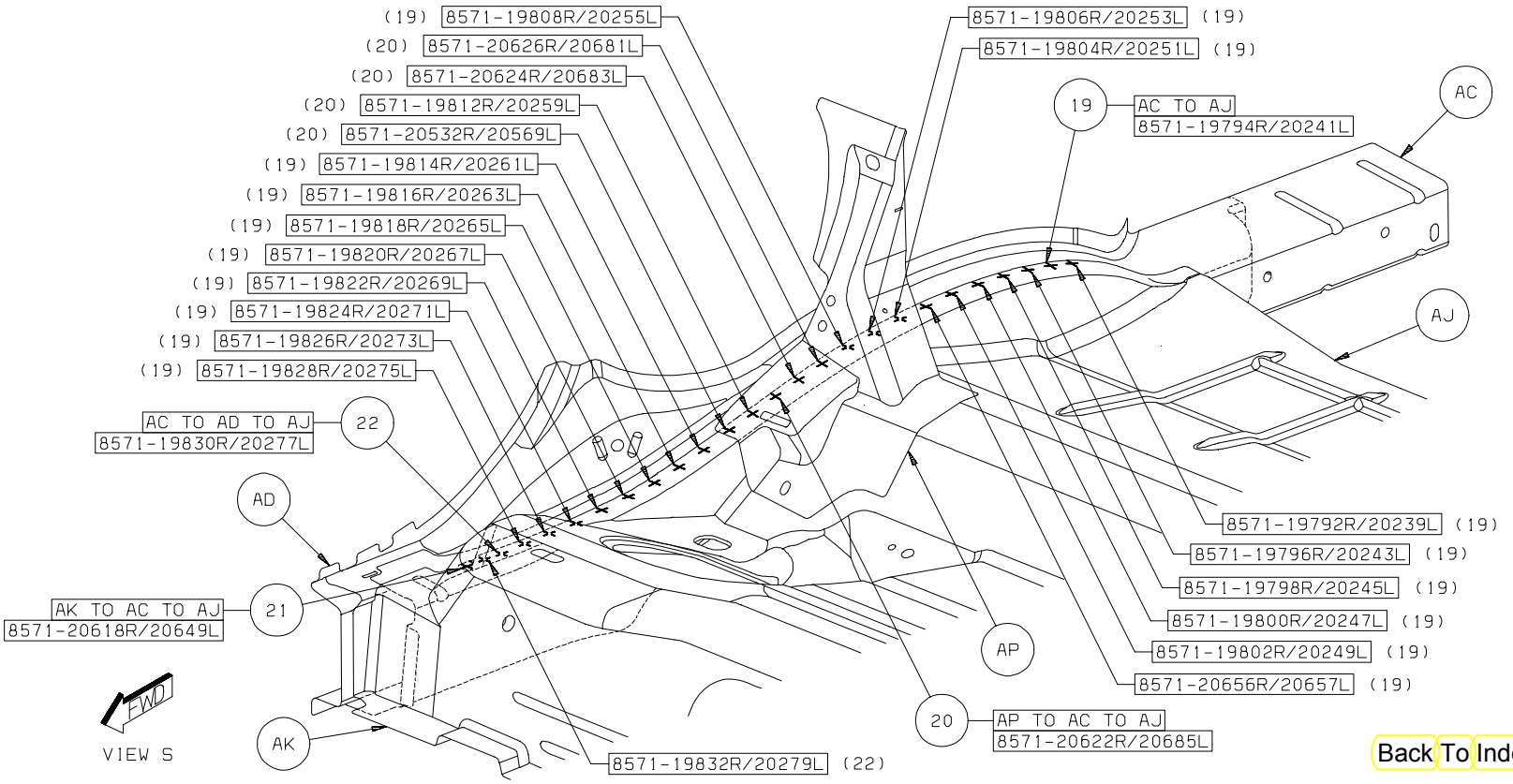

Back To Index

23. AR TO AP 3/SD S/WELD
24. AS TO AP 4/SD S/WELD
25. AP TO AF 5/SD S/WELD
26. AR TO AP TO AF 1/SD S/WELD
27. AR TO AF 2/SD S/WELD

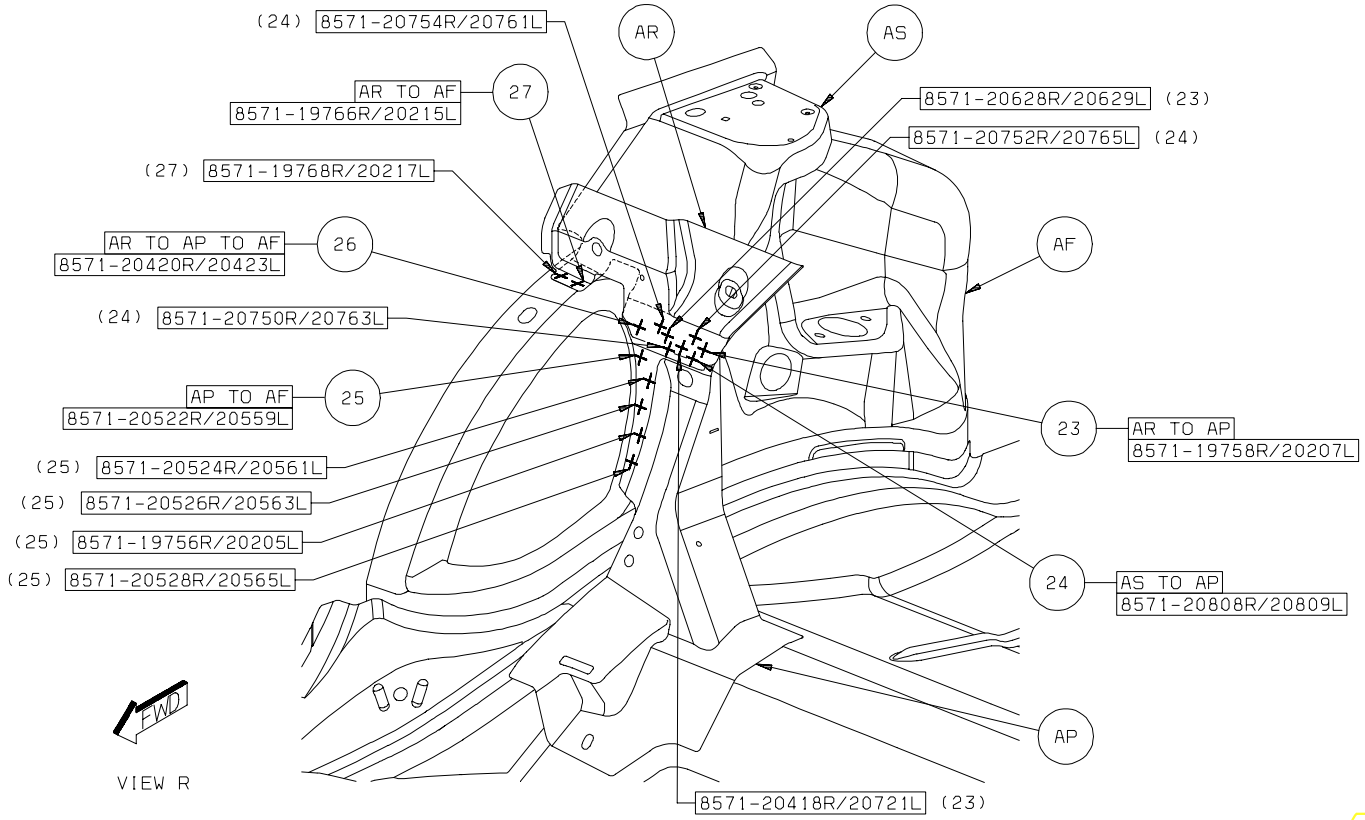

Back To Index

28. AS TO AF 6/SD S/WELD
29. AS TO AP TO AF 1/SD S/WELDS
30. AT TO AF 5/SD S/WELD S

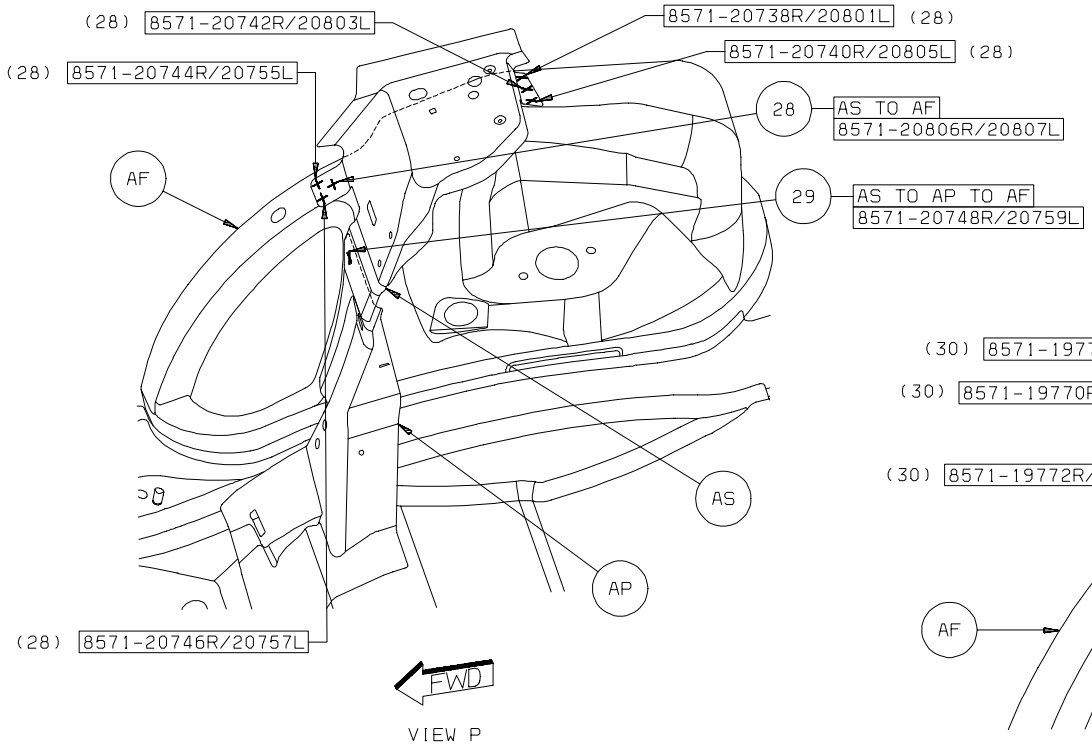

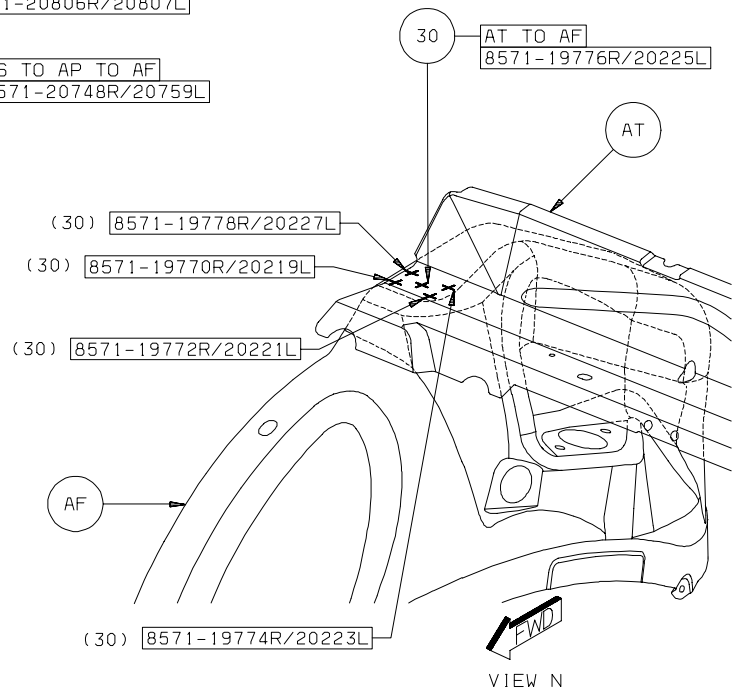

Back To Index

31. AM TO AC TO AD 3/SD S/WELDS
32. AC TO AD 7/SD S/WELDS
33. AN TO AD TO AC 2/SD S/WELDS
34. AU TO AD TO AC 4/SD S/WELDS
35. AH TO AU 5/SD S/WELDS

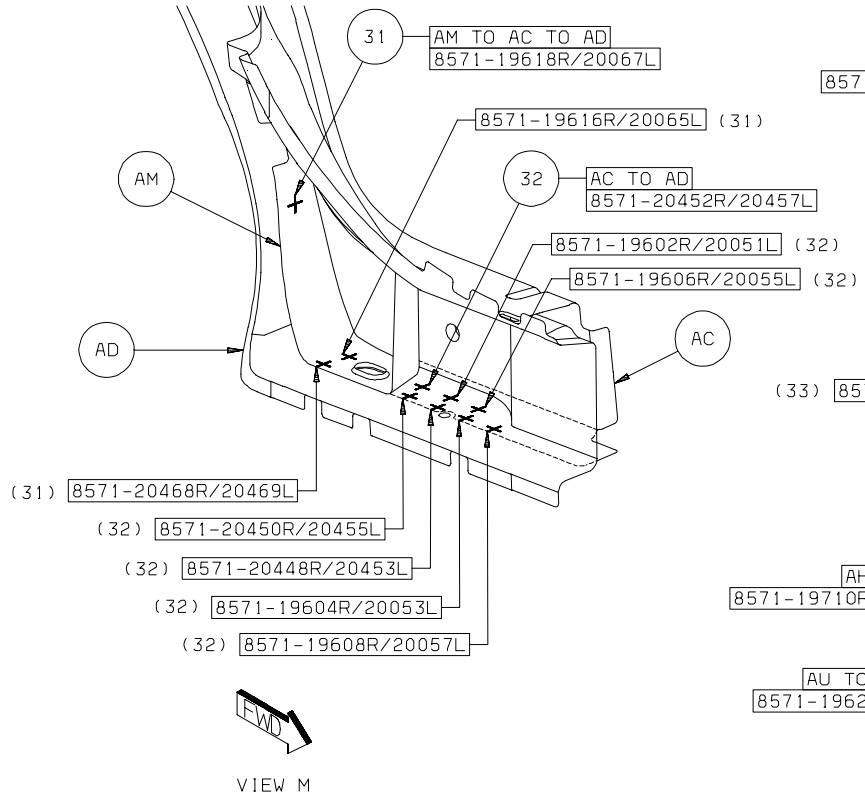

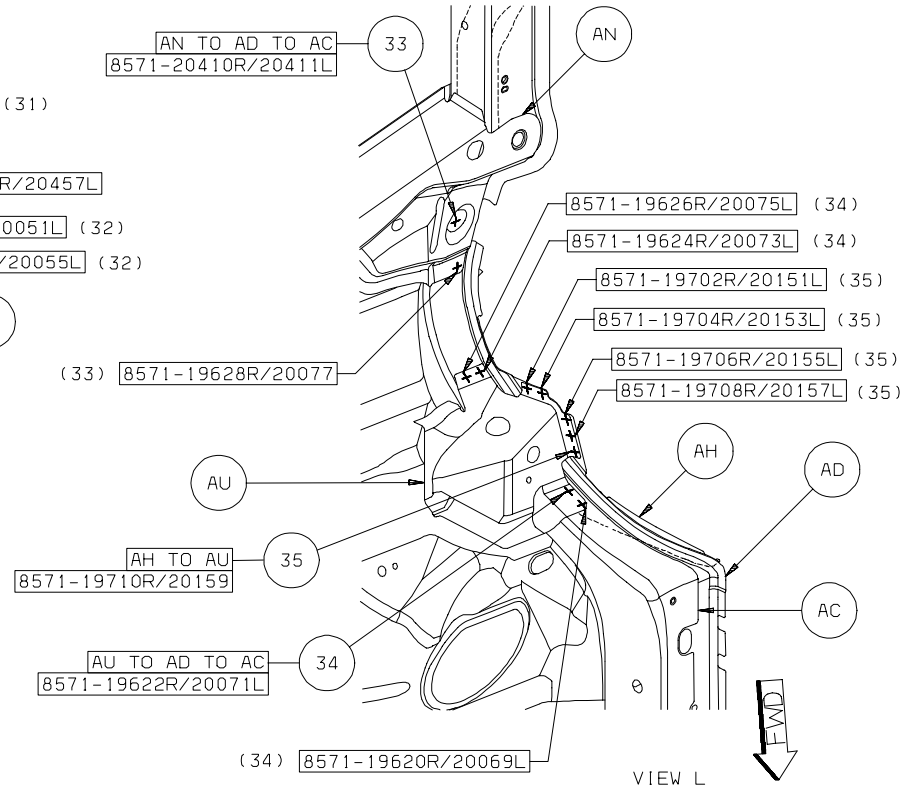

Back To Index

36. AC TO AH TO AD 11/SD S/WELDS

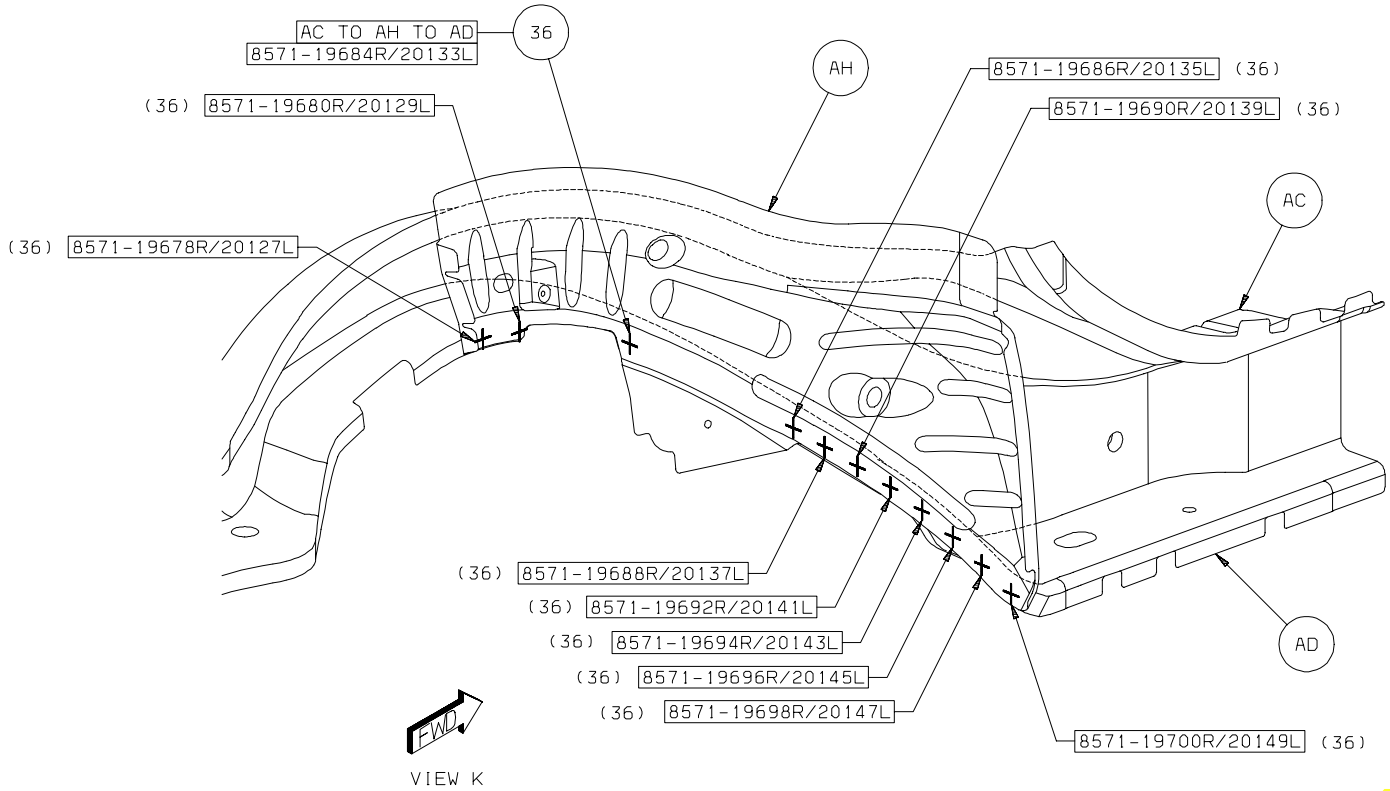

Back To Index

37. AP TO AJ 11/SD S/WELDS
38. AU TO AP TO AJ 2/SD S/WELDS
39. AU TO AJ 3/SD S/WELDS

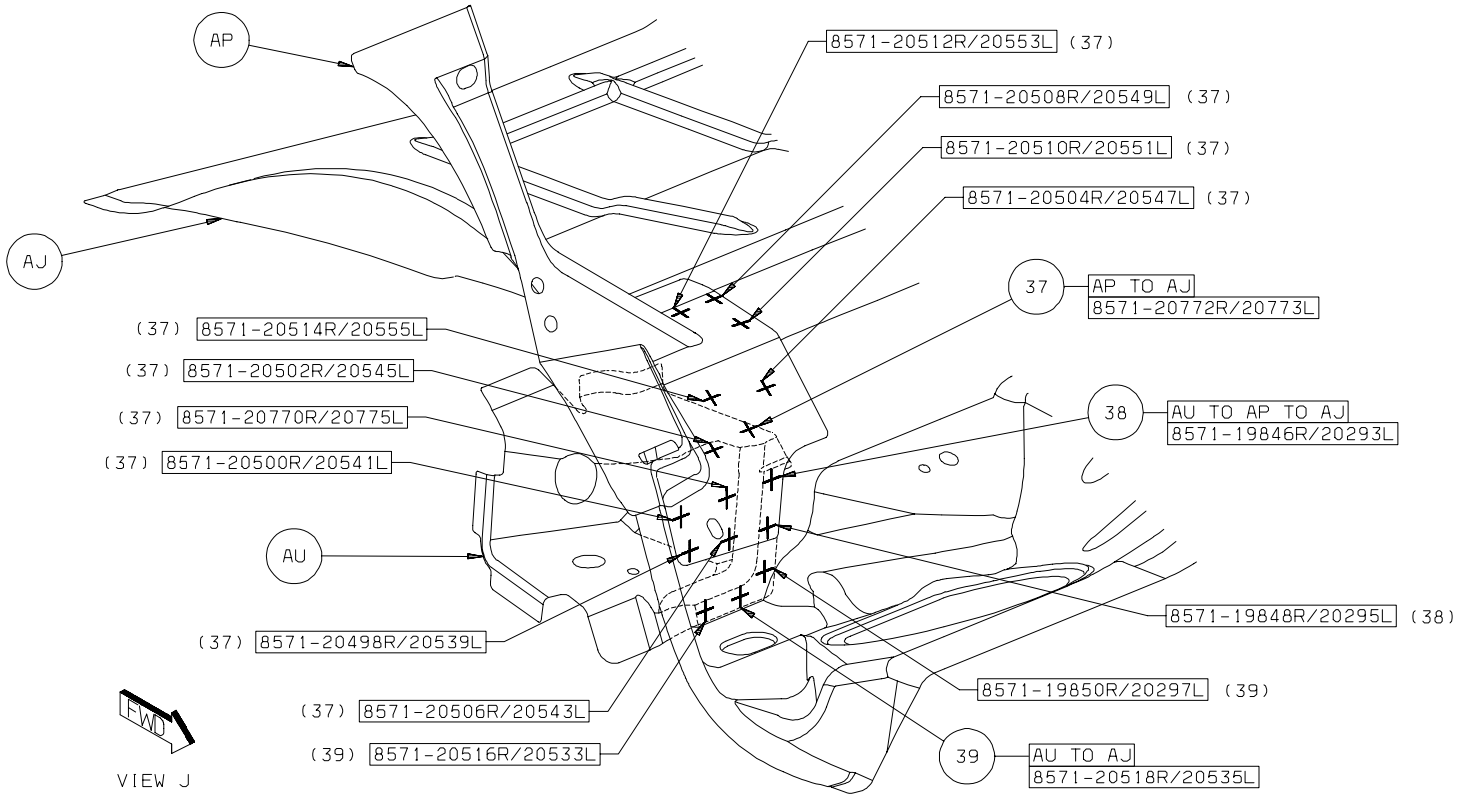

Back To Index

40. AV TO AJ 19 S/WELDS
41. AV TO AP TO AJ 6 S/WELDS
42. AW TO AV TO AJ 2 S/WELDS

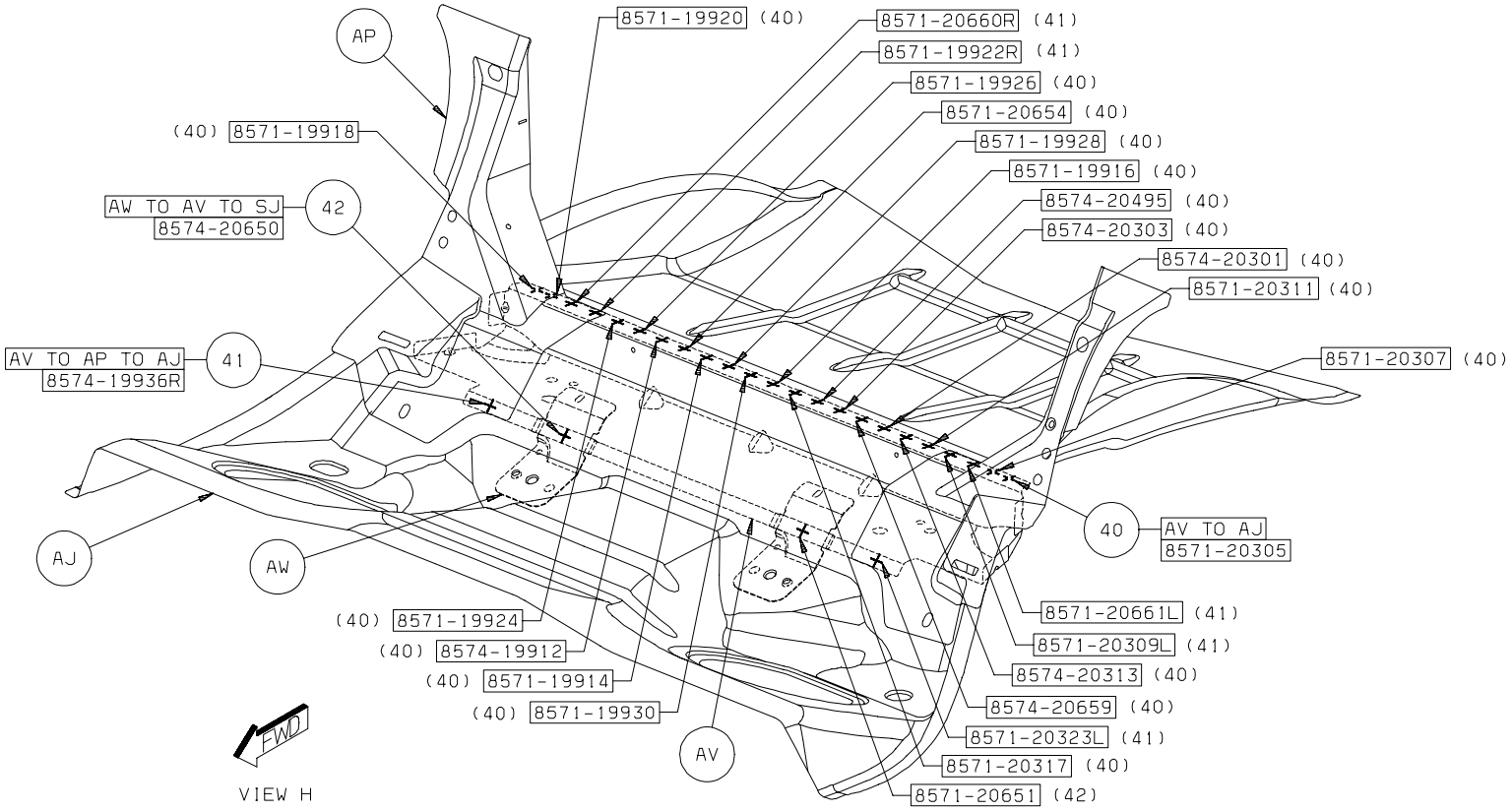

Back To Index

43. AV TO AX TO AJ 8 S/WELDS
44. AV TO AP TO AJ 2 S/WLDS
45. AX TO AJ 14 S/WELDS

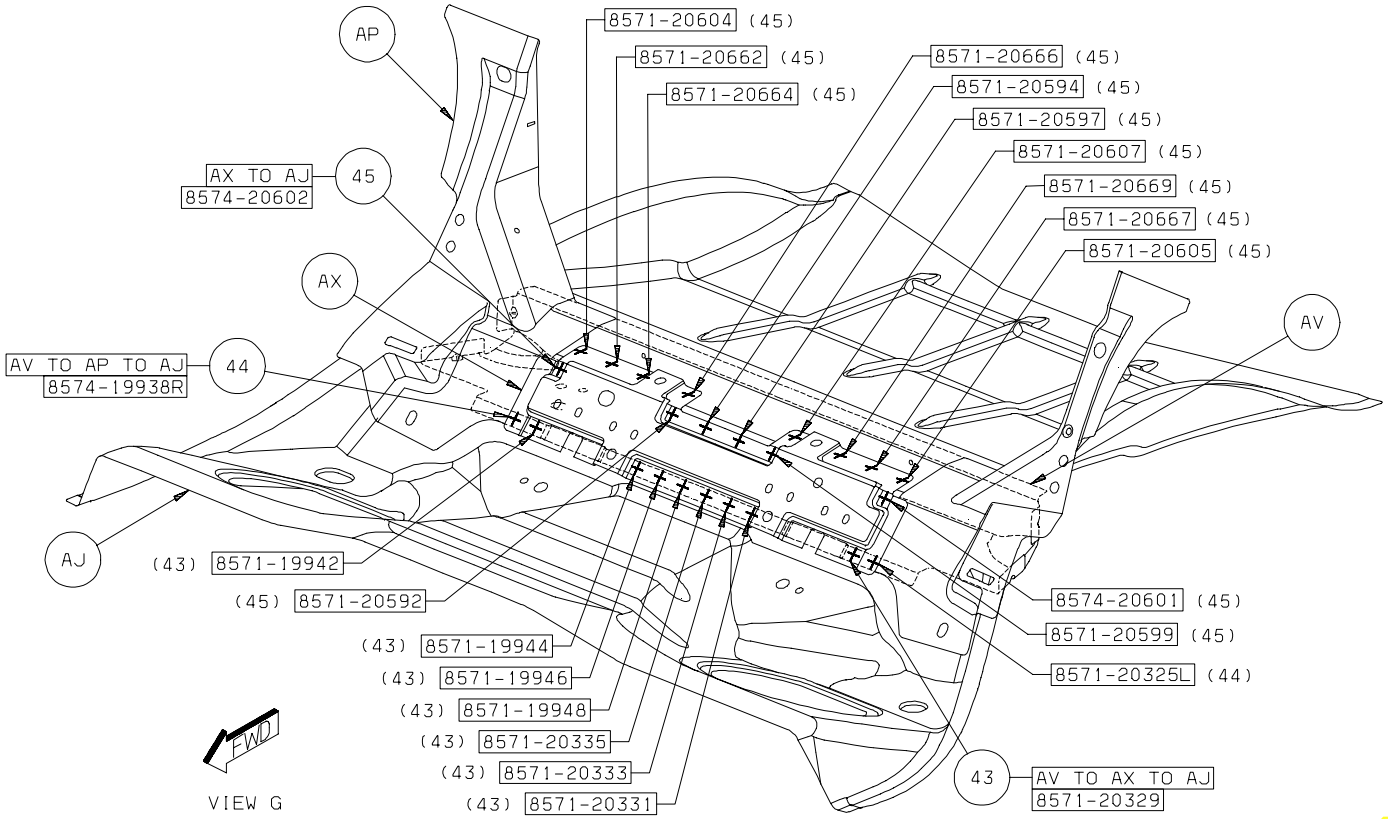

Back To Index

46. AW TO AJ 12 S/WELDS
47. AW TO AX TO AJ 4 S/WELDS
48. AY TO AJ 8 PROJ WELDS

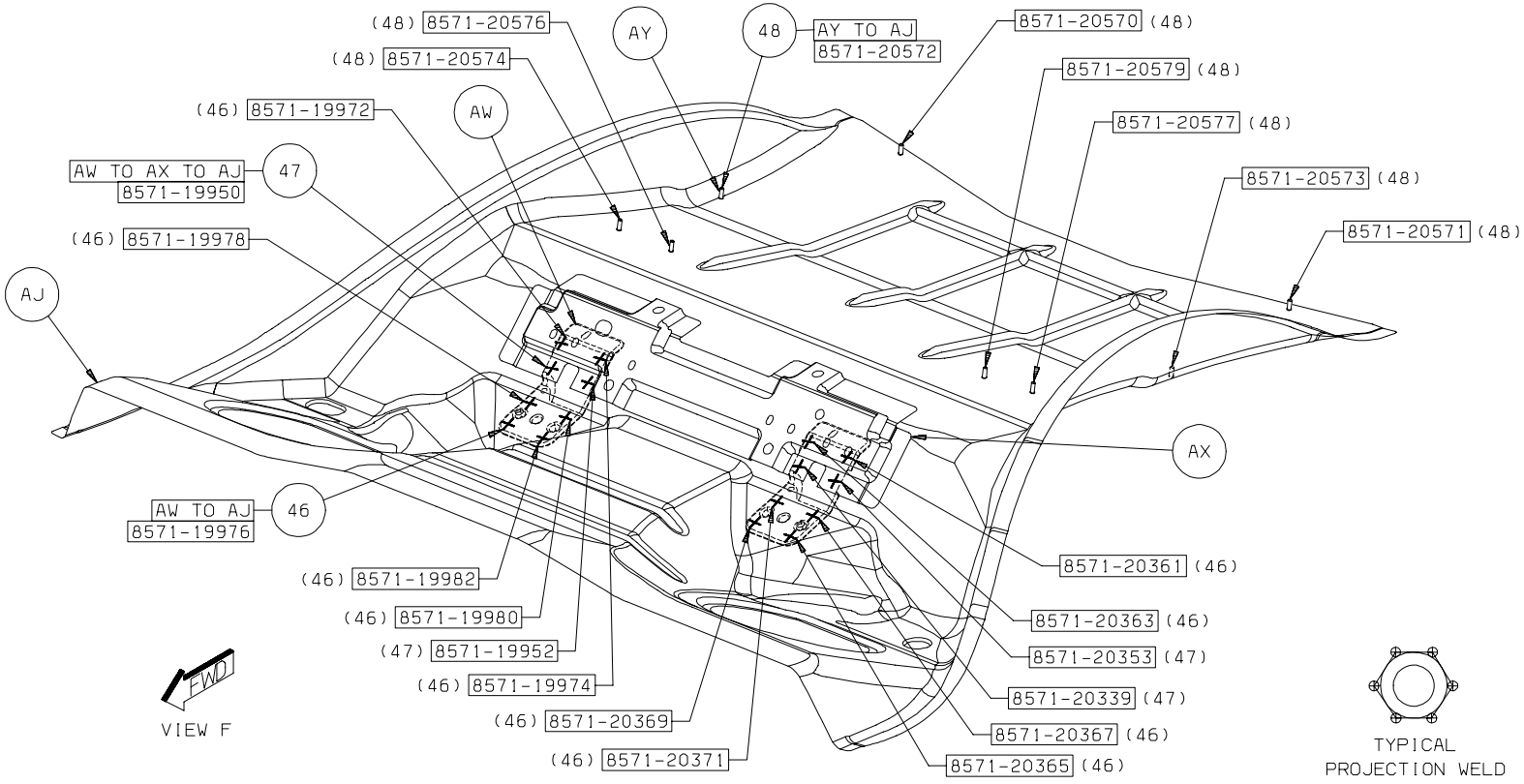

Back To Index

49. AG TO AD 2/SD FCAW WELDS
50. AH TO AA TO AF TO AD 1/SD STRUC ADH

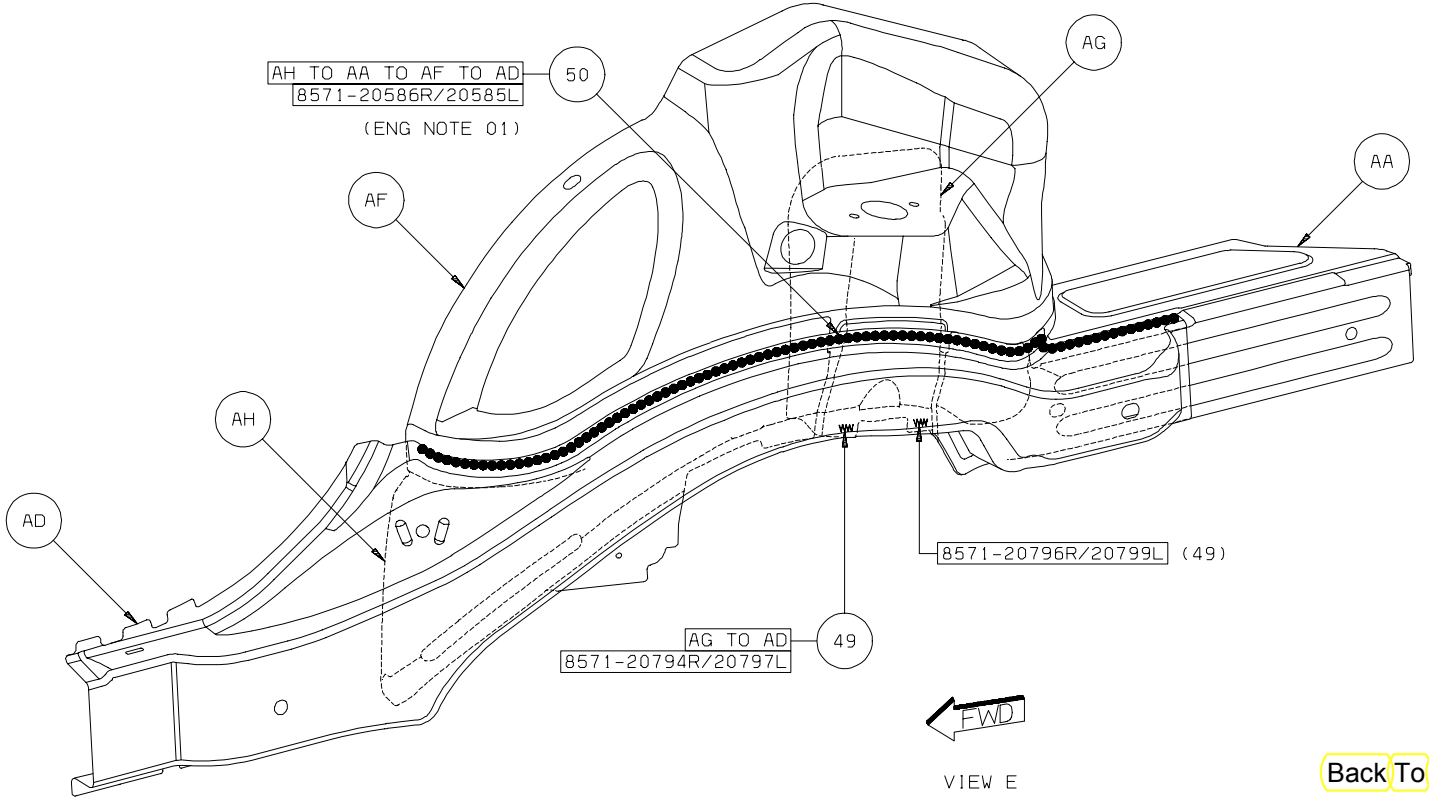

Back To Index

51. AV TO AJ 1 STRUC ADH
52. AU TO AV TO AJ 1 STRUC ADH
53. AK TO AJ 1 STRUC ADH
54. AU TO AV TO AJ 1 STRUC ADH
55. AV TO AJ 1 STRUC ADH

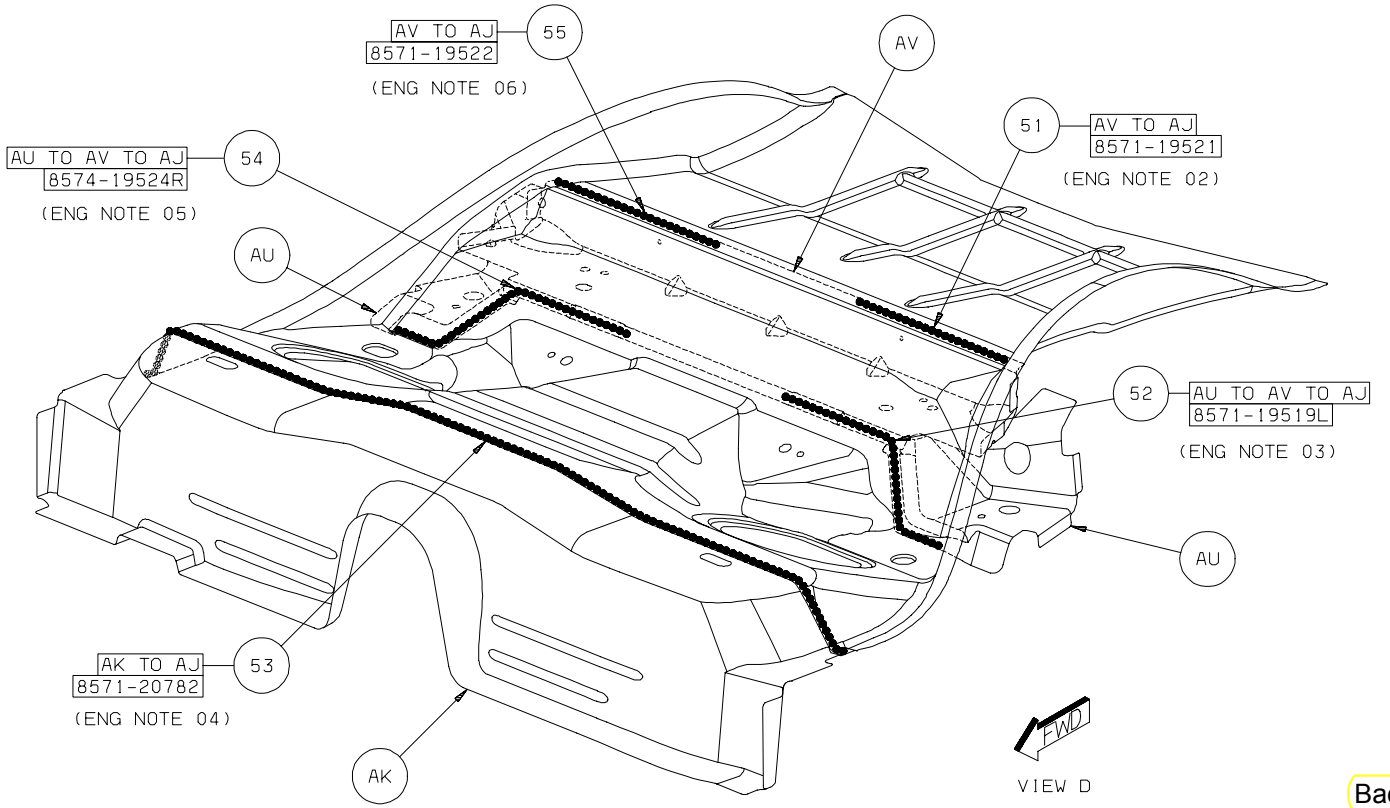

Back To Index

56. AC TO AJ 2 STRUC ADH
57. AN TO AJ 1 STRUC ADH

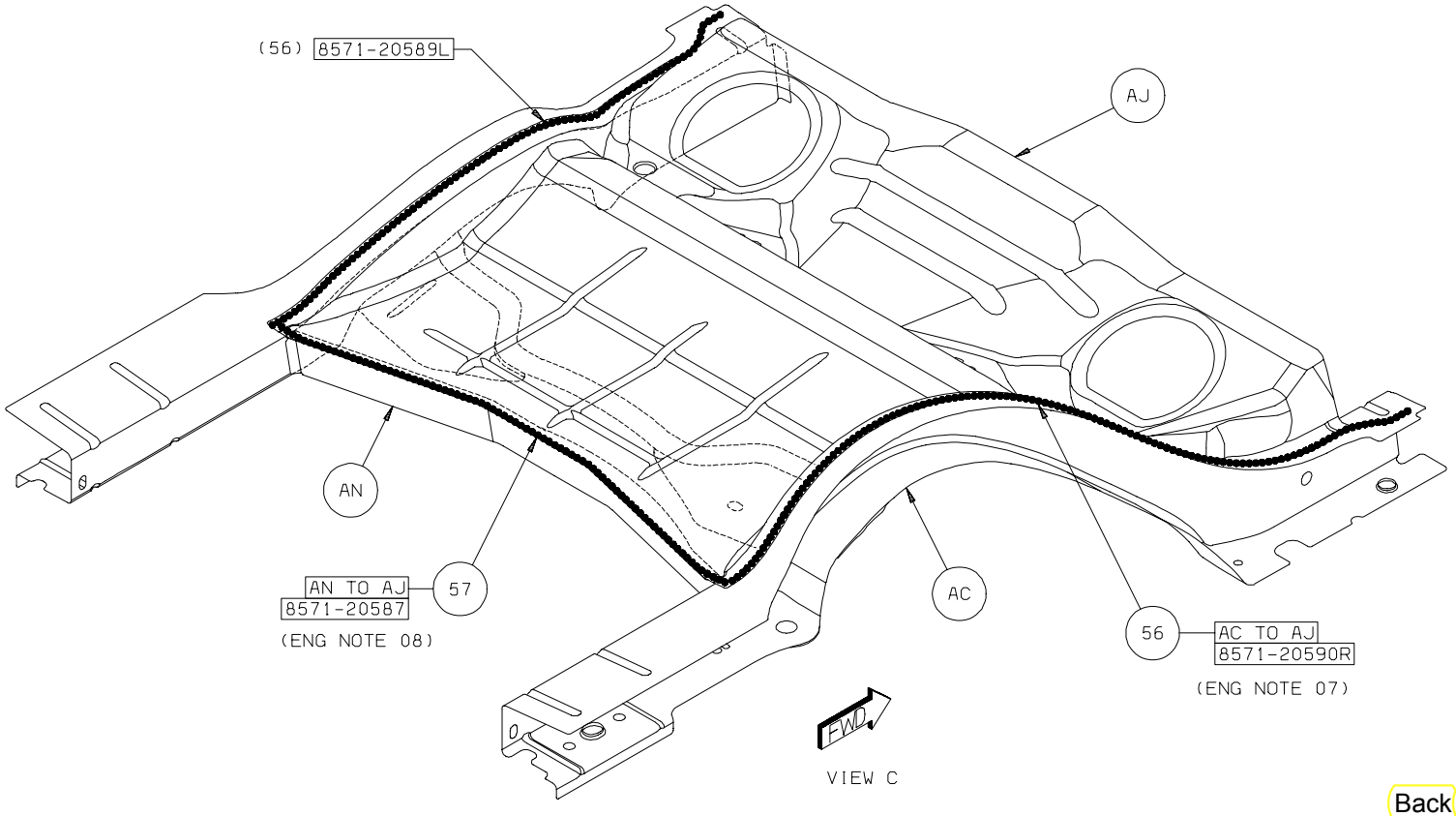

Back To Index

58. AH TO AD 1/SD STRUC ADH
59. AH TO AD 1/SD STRUC ADH
60. AA TO AD 1/SD STRUC ADH

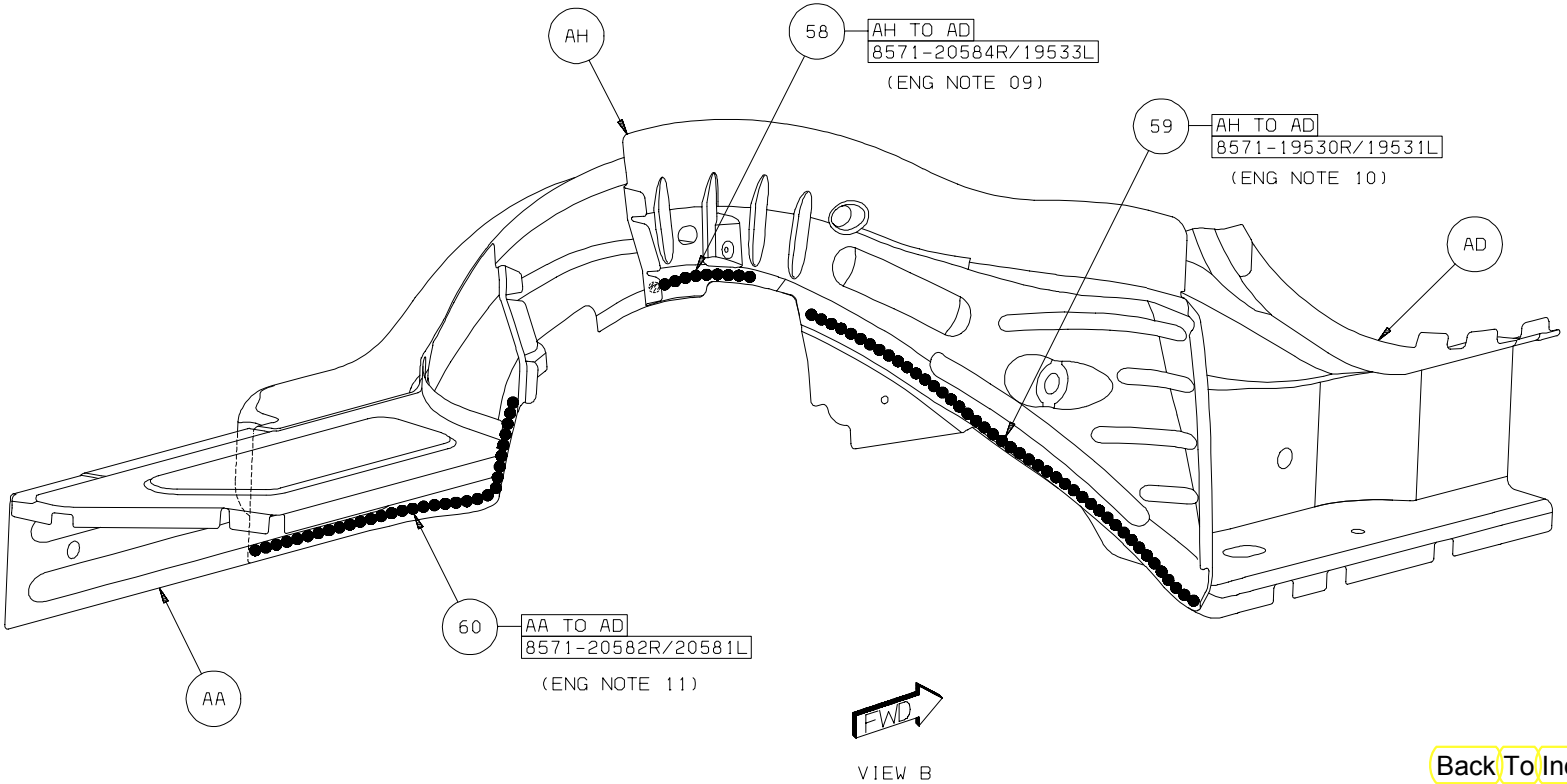

Back To Index

PARTS IDENTIFICATION LEGEND, OVERVIEW 20

AA	PANEL - DASH -
AB	EXTENSION - RAIL FRT RT -
AB	EXTENSION - RAIL FRT LT -
AC	PANEL - EXTENSION FRT RAIL INR RT -
AC	PANEL - EXTENSION FRT RAIL INR LT -
AD	PANEL - FRT FLOOR PAN RT -
AD	PANEL - FRT FLOOR PAN LT -
AE	CROSSMEMBER - RR KICK-UP -
AF	REINF - KICKUP CROSSMEMBER -
AG	PANEL - FRT FLOOR PAN TUNNEL CTR -
AH	RAIL - RR OTR RT -
AH	RAIL - RR OTR LT -
AJ	PANEL - EXTENSION FRT RAIL OTR RT -
AJ	PANEL - EXTENSION FRT RAIL OTR LT -
AK	EXTENSION - TUNNEL -
AL	PANEL - TOEBOARD CROSSMEMBER -

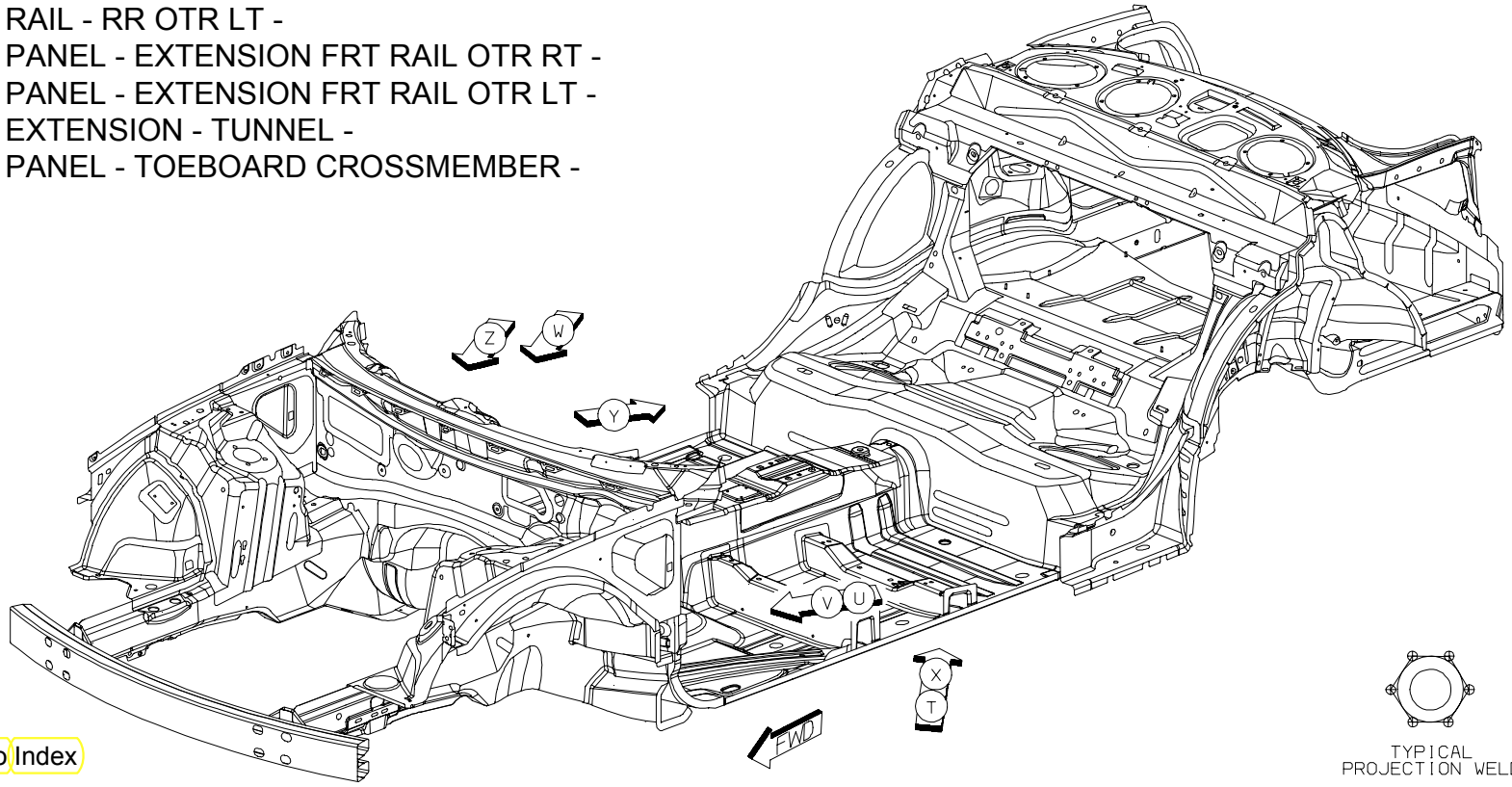

TYPICAL
PROJECTION WELD

Back To Index

1. AC TO AB TO AA 2R/2L S/WELD
2. AJ TO AB TO AA 1R/1L S/WELD
3. AJ TO AB TO AD 3R/3L S/WELD
4. AC TO AB TO AD 5R/5L S/WELD

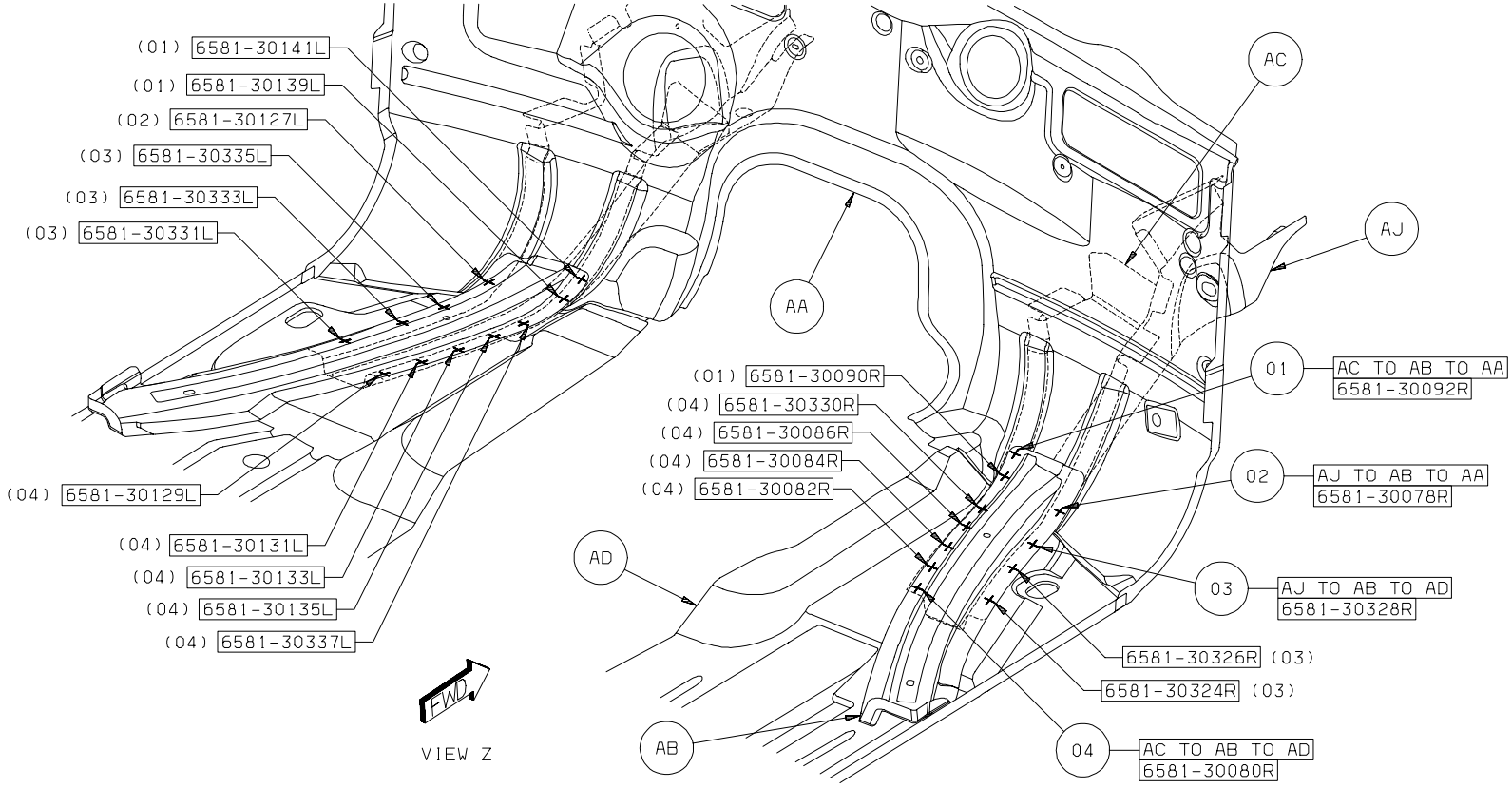

Back To Index

5. AF TO AG TO AE 3 S/WELD
6. AG TO AE 4 S/WELD
7. AD TO AG TO AE 1R S/WELD
8. AD TO AE 13R S/WELD
9. AH TO AD TO AE 1R S/WELD

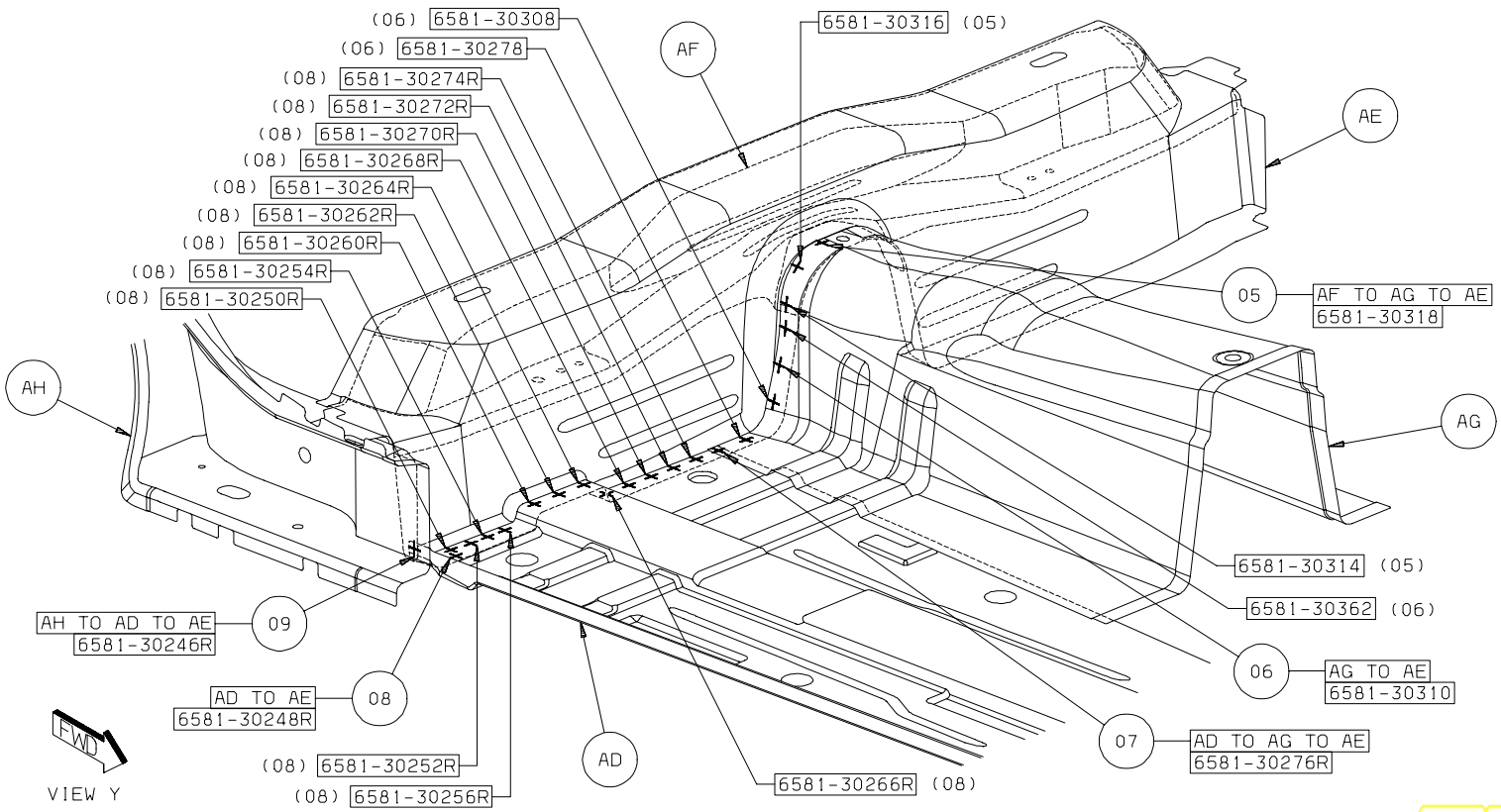

Back To Index

10. AH TO AD TO AE 1L S/WELD
11. AD TO AE 14L S/WELD
12. AG TO AE 4 S/WELD
13. AF TO AG TO AE 3 S/WELD

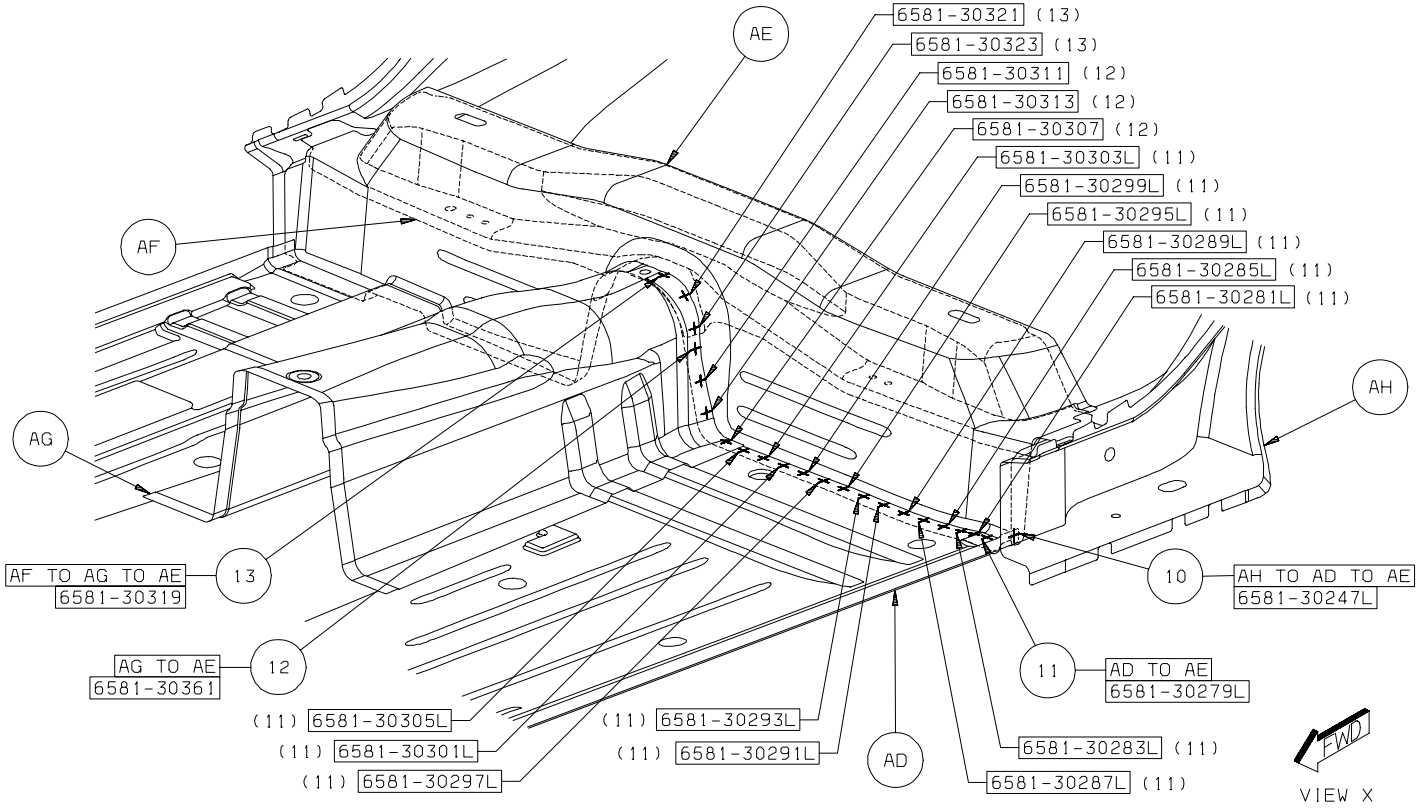

Back To Index

14. AD TO AA 9R S/WELD
15. AD TO AK TO AA 1R S/WELD
16. AK TO AA 8 S/WELD
17. AL TO AK TO AA 8 S/WELD

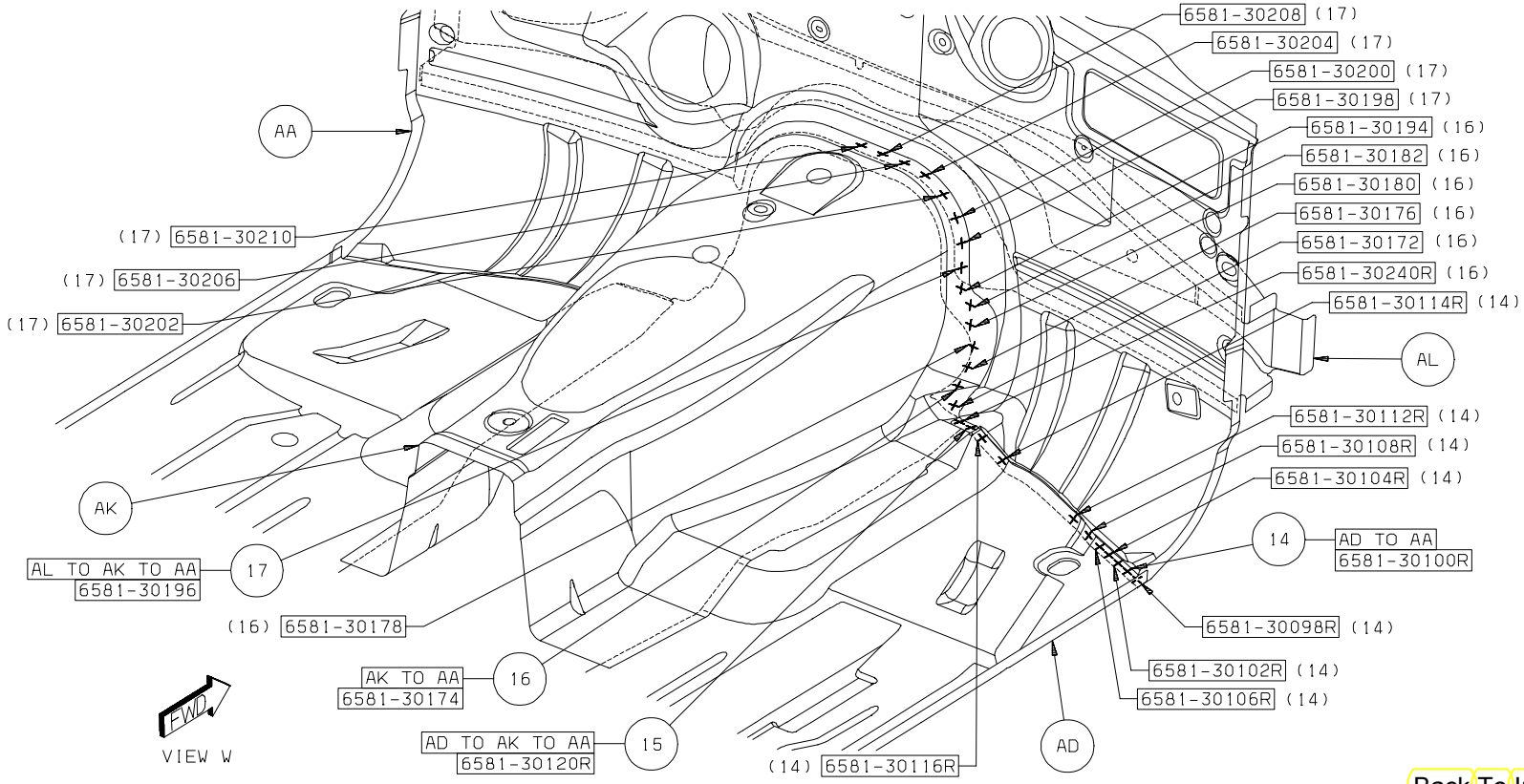

Back To Index

18. AL TO AK TO AA 7 S/WELD
19. AK TO AA 8 S/WELD
20. AD TO AA 12L S/WELD

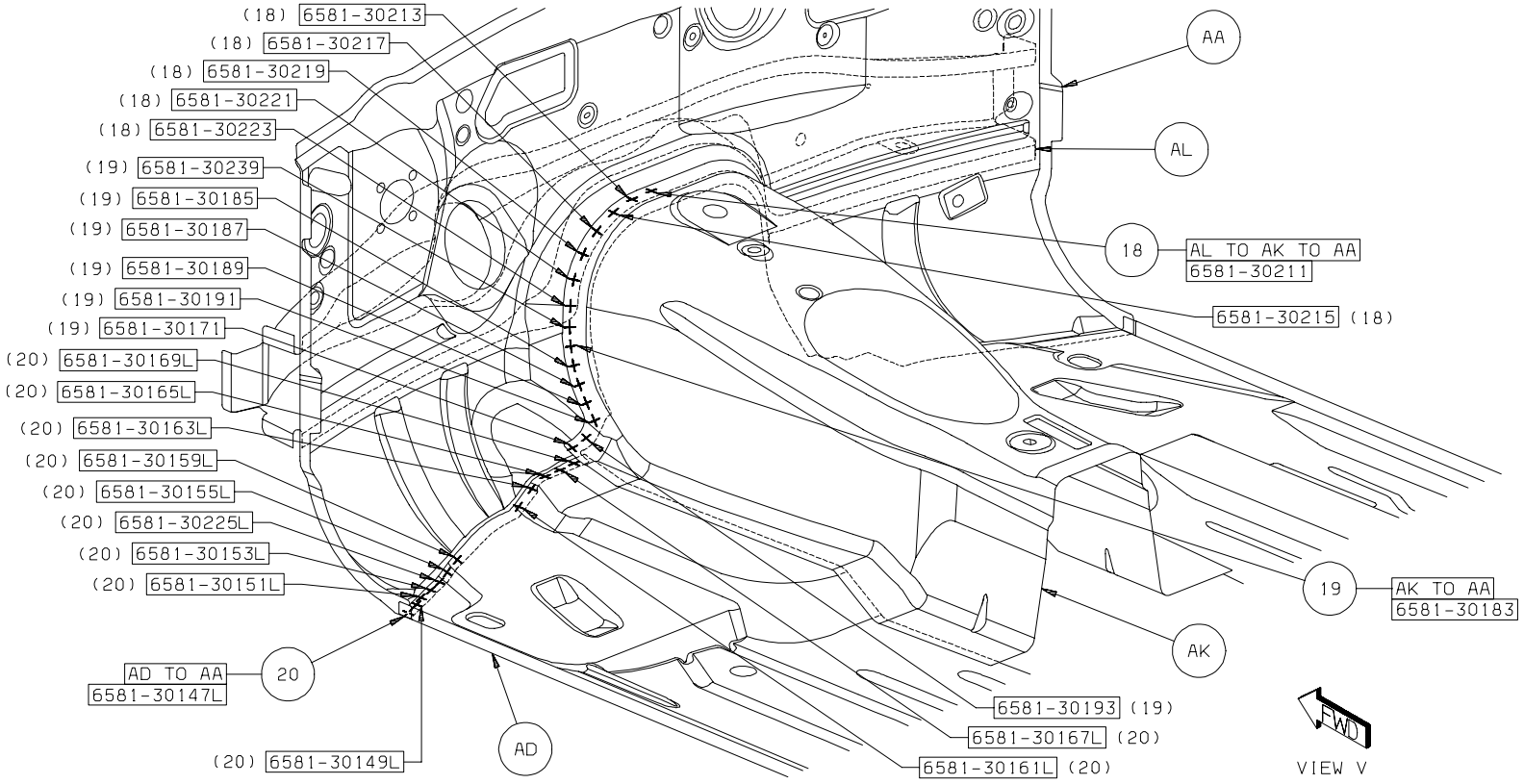

Back To Index

21. AD TO AA 1R STRUC ADH
22. AD TO AA 1R STRUC ADH
23. AD TO AA 1R STRUC ADH
24. AD TO AA 1R STRUC ADH
25. AD TO AA 1R STRUC ADH
26. AD TO AA 1L STRUC ADH
27. AD TO AA 1L STRUC ADH
28. AD TO AA 1L STRUC ADH
29. AD TO AA 1L STRUC ADH
30. AK TO AA 1 STRUC ADH
31. AK TO AA 1 STRUC ADH

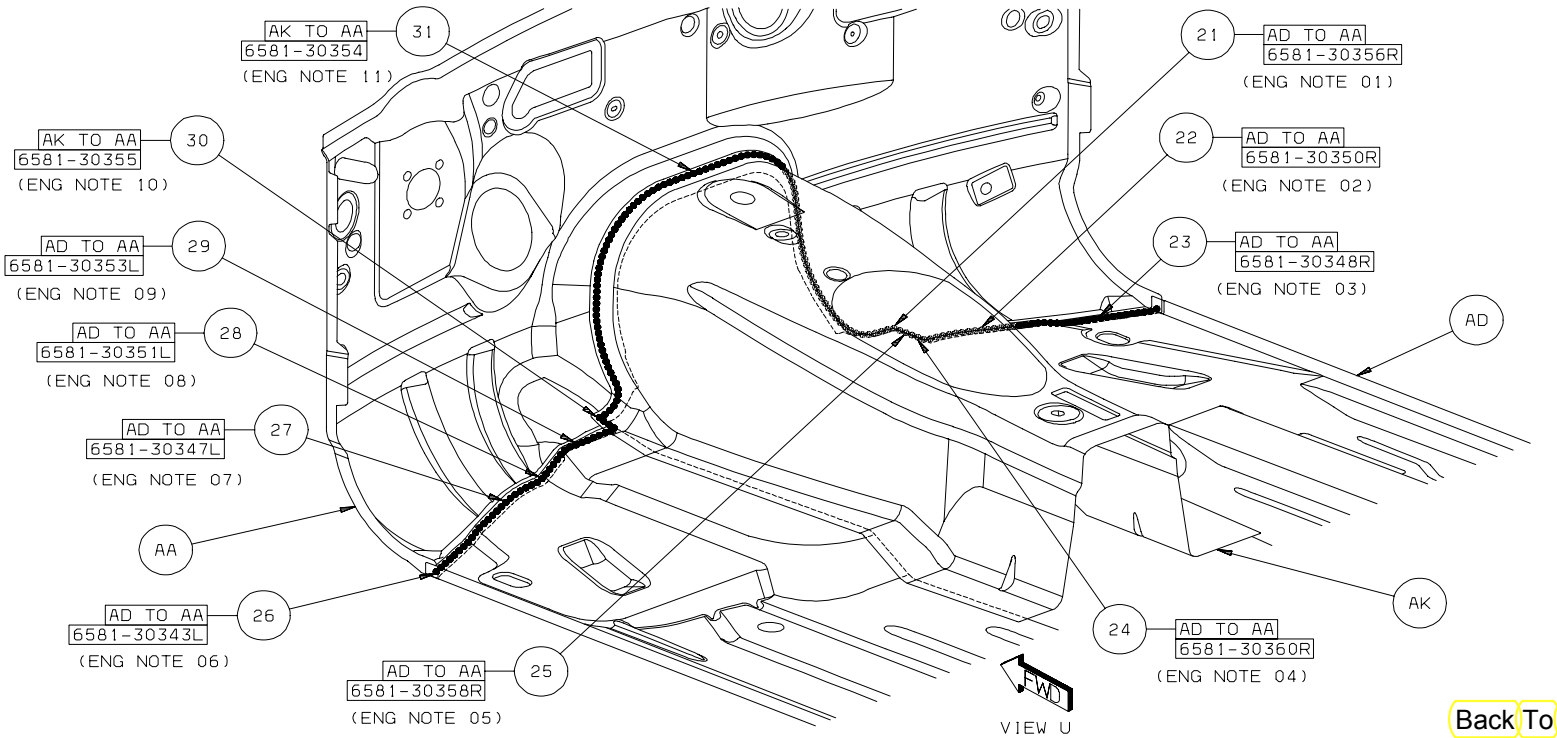

Back To Index

32. AF TO AD TO AG TO AE 1 STRUC ADH

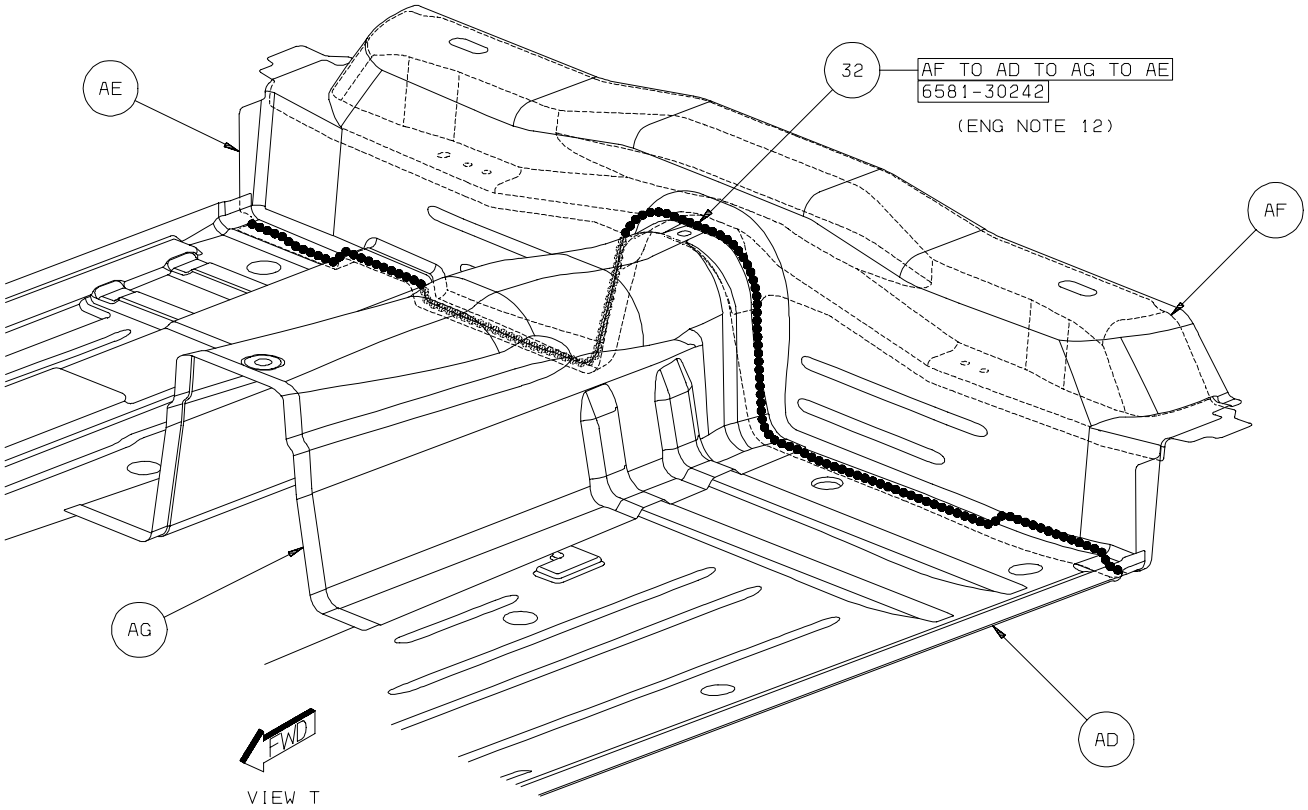

Back To Index

DURANGO BODY REPAIR MANUAL

PACIFICA BODY REPAIR MANUAL

OEM APPROVED FUSOR AUTOMOTIVE REPAIR ADHESIVES AFTERMARKET GUARANTEED

FUSOR®

OEM APPROVED FUSOR AUTOMOTIVE REPAIR ADHESIVES AFTERMARKET GUARANTEED

		SIZES	APPLICATIONS	WORK TIME	DCX APPROVALS
SECONDARY METAL BODY PANEL INSTALLATION	108B/109B/T30 MEDIUM-SET FORMULA	108B: 7.6 oz (225 ml) 109B: 1.7 oz (50 ml) T30: 7.6 oz (225 ml)	Secondary panel bonding of bare metals including aluminum. Quarter panels, rear body panels, roof panels and door skins. Hrs:Min	40 to 50 min. @ 70∞F 0:15 0:30 0:45 1:00 1:15+	Weld bonding per #81-170-03005
	112B/113B SLOW-SET FORMULA Mopar #05083855AA	112B: 7.6 oz (225 ml) 113B: 1.7 oz (50 ml) 7.6 oz (225ml)	Secondary panel bonding of bare metals including aluminum. Quarter panels, rear body panels, roof panels and door skins. Hrs:Min	35 to 40 min. @ 90∞F 70 min. @ 70∞F 0:15 0:30 0:45 1:00 1:15+	Weld bonding per #81-170-03005, meets MS-CD507, TSB#23-026-02, TSB#23-044-02
SMC AND FIBERGLASS INSTALLATION AND REPAIR	114/TR9 FAST-SET FORMULA	114: 5.1 oz (150 ml) TR9: 5.1 oz (150 ml)	Finishing adhesive for minor scratches and gouges for all plastic including TPO, TEO, PP and urethane. Hrs:Min	3 to 5 min. @ 70∞F 0:15 0:30 0:45 1:00 1:15+	
	100EZ/101EZ/T10 HEAT-SET FORMULA	100EZ: 10.1 oz (300 ml) 101EZ: 1.7 oz (50 ml) T10: 10.1 oz (300 ml)	Structural and cosmetic repair of all types of rigid body plastics such as body panels, hoods, decks and doors. Hrs:Min	40 min. @ 70∞F 0:15 0:30 0:45 1:00 1:15+	
SEAM SEALING	129 CONTROLLED FLOW FORMULA	129: 10.1 oz (300 ml)	Two-component, controlled flow cosmetic sealer is excellent for standing and sloping seams. No tooling needed. Hrs:Min	5 to 8 min. @ 70∞F 0:15 0:30 0:45 1:00 1:15+	
	800/801/803 NON-SAG FORMULA	800: 10.3 oz (305 ml) 801: 10.3 oz (305 ml) 803: 10.3 oz (305 ml)	Single-component sealer/adhesive duplicates factory look on seams and bonds to all primed or painted metals and most plastics. Hrs:Min	30 min. @ 70∞F 0:15 0:30 0:45 1:00 1:15+	
FOAM APPLICATION	121/124 FLEXIBLE FORMULA	121: 10.1 oz (300 ml) 124: 1.7 oz (50 ml)	Sound deadening, sealing and filling of door skins to crash bar; hood panel to supports; trunk panel to supports; gas tank filler area. Hrs:Min	5 to 10 sec. @ 70∞F 0:15 0:30 0:45 1:00 1:15+	

TECH HOTLINE: 800.234.FUSOR Fusor is a registered trademark of Lord Techmark, Inc., a subsidiary of Lord Corporation. ©2004, Lord Corporation Rev. 1 - 3/04 SA3243 WWW.FUSOR.COM

Back To Index

PARTS IDENTIFICATION LEGEND, OVERVIEW 21

AA	PAN - RR FLOOR -
AB	PANEL - RR SHELF -
AC	PANEL - DECK OPENING LWR INR -
AD	CROSSMEMBER - RR SHELF -
AE	PANEL - RR SHELF SUPPORT RT -
AE	PANEL - RR SHELF SUPPORT LT -
AF	REINF - RR RAIL INR RR RT -
AF	REINF - RR RAIL INR RR LT -
AG	COVER PLATE - RR RAIL EXTENSION RT -
AG	COVER PLATE - RR RAIL EXTENSION LT -
AH	BRACKET - BUMPER RR -
AH	BRACKET - BUMPER RR -
AH	BRACKET - BUMPER RR -
AH	BRACKET - BUMPER RR -
AJ	BRACKET - CHILD TETHER ATTACH -

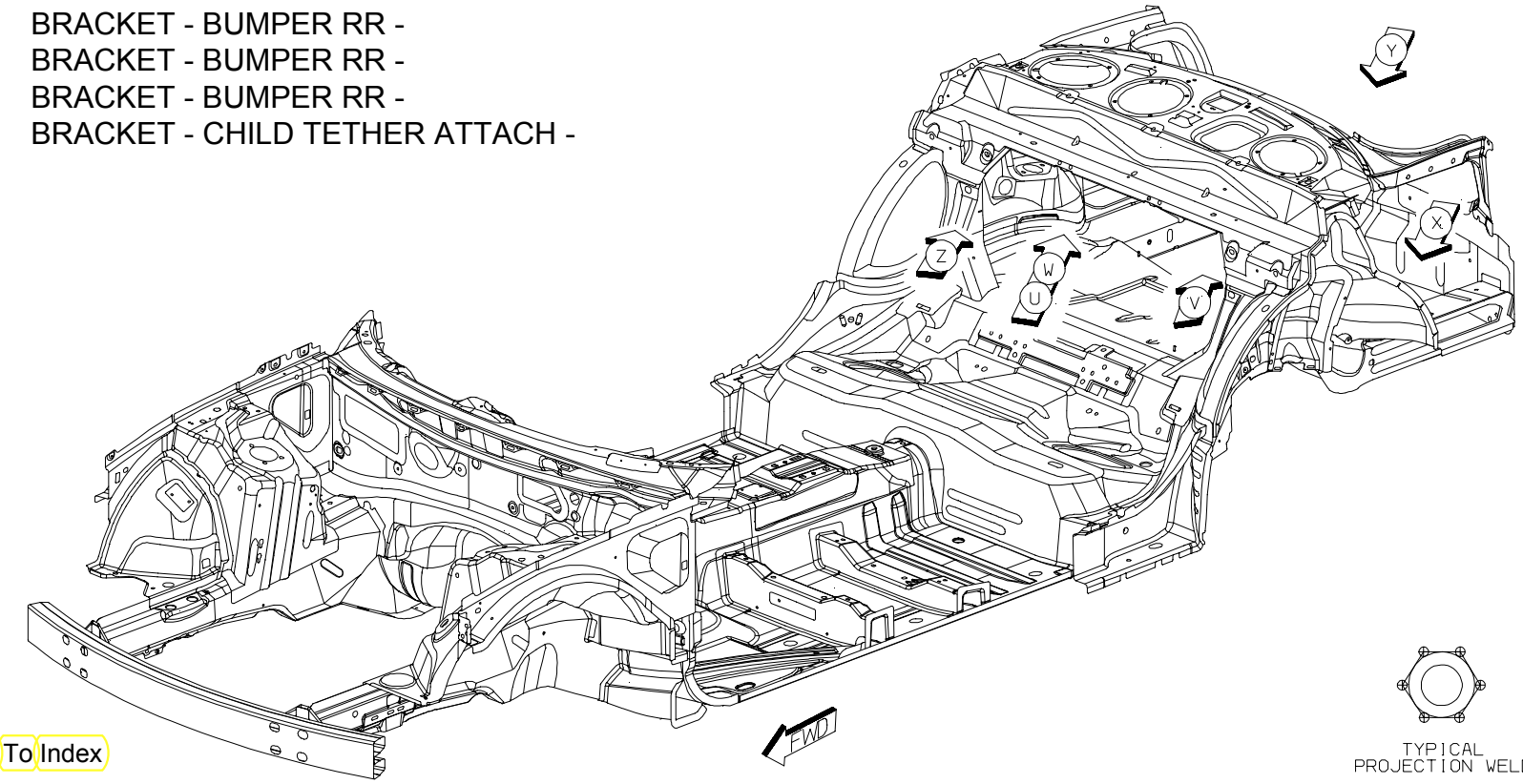

TYPICAL
PROJECTION WELD

Back To Index

1. AE TO AD TO AB 7/SD S/WELD
2. AH TO AF TO AC 5/SD S/WELD

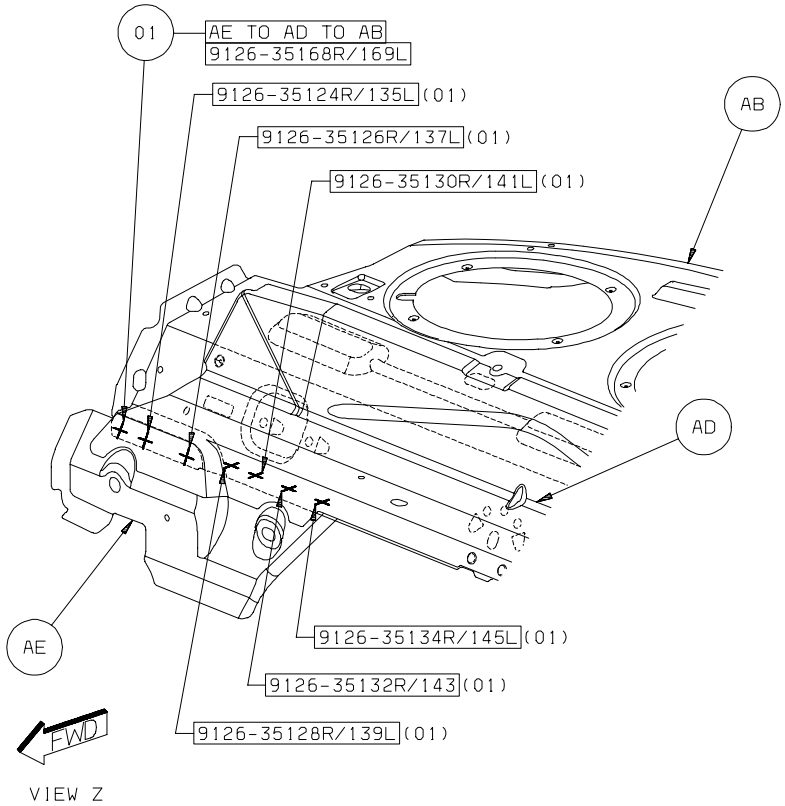

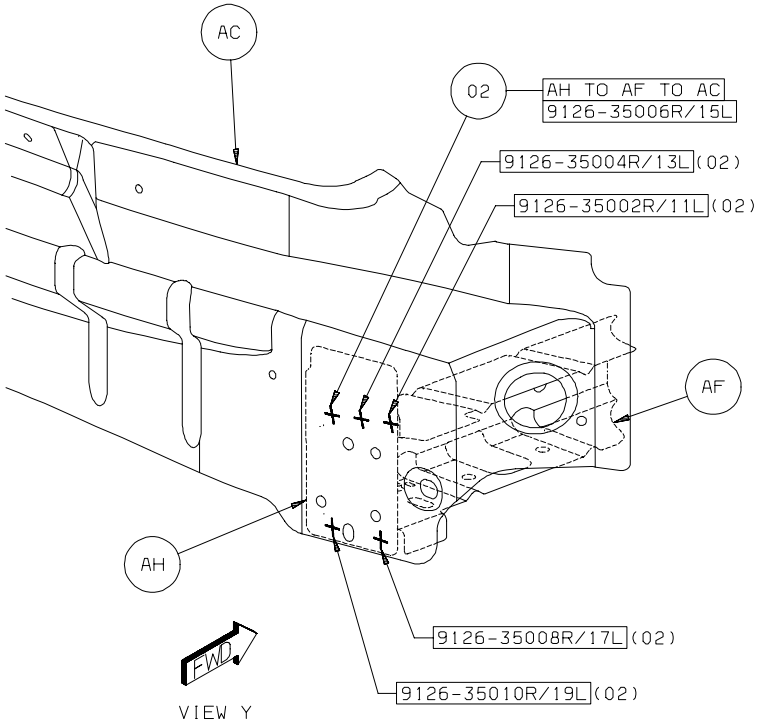

Back To Index

3.AC TO AA 17 S/WELD

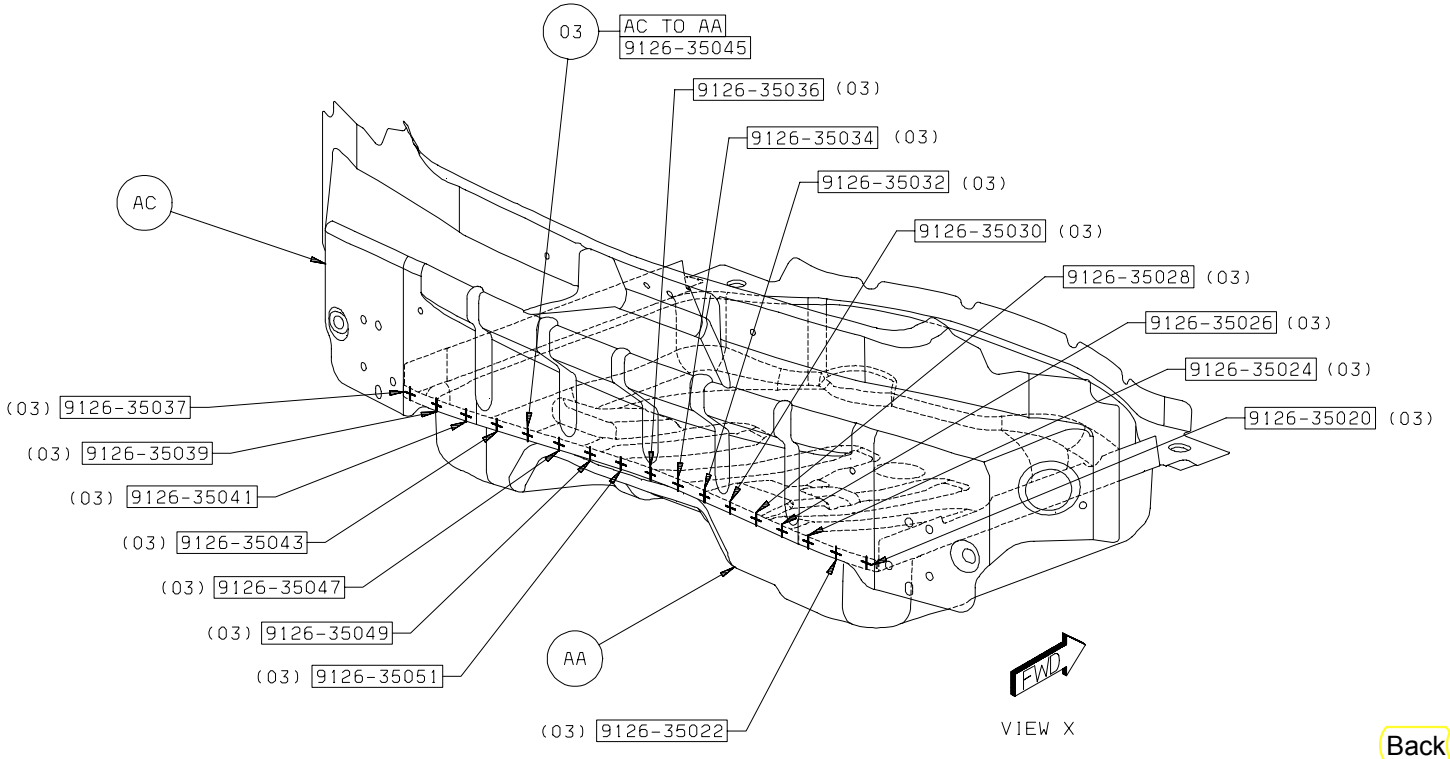

Back To Index

4. AD TO AA 47 S/WELD

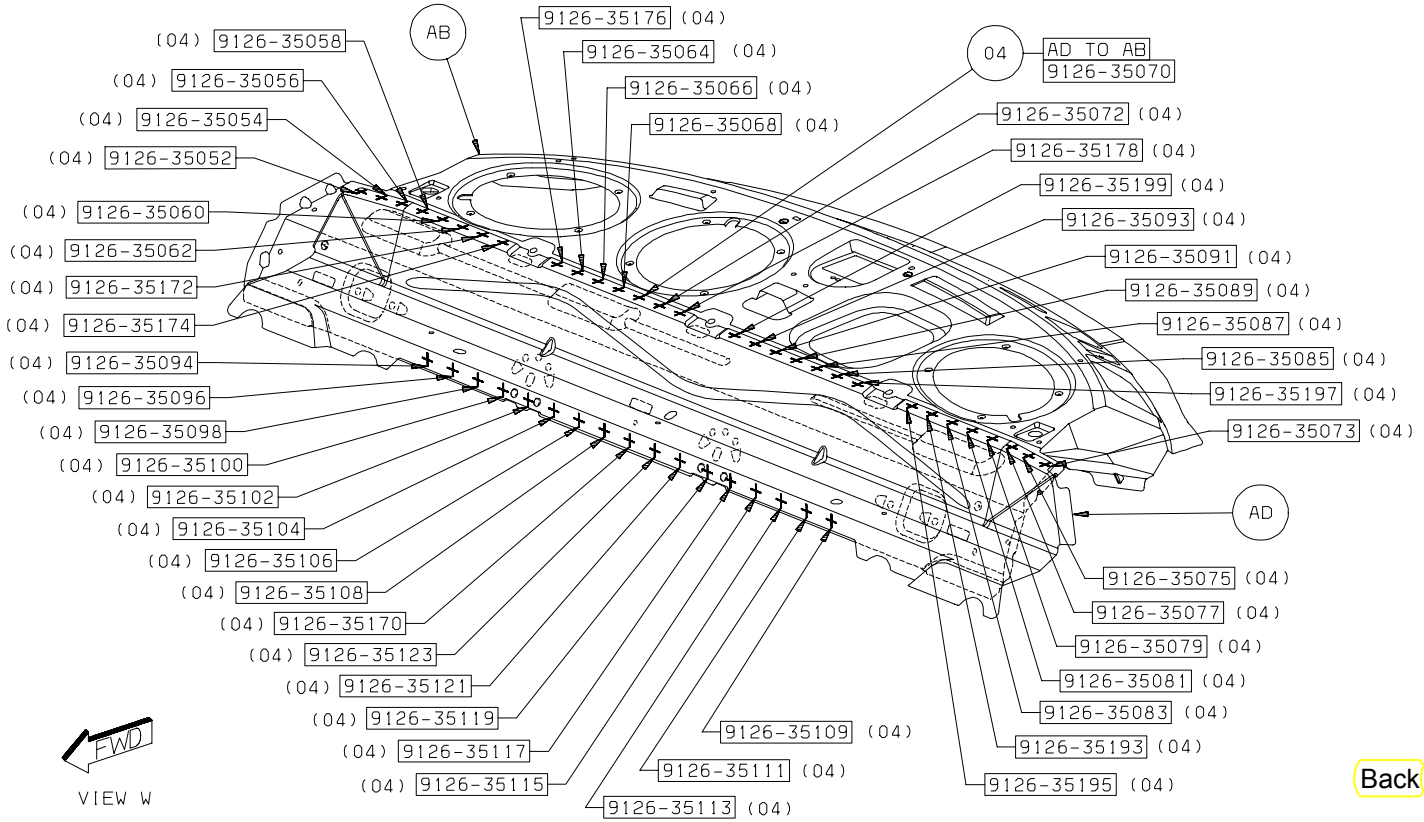

Back To Index

5. AG TO AC 6/SD S/WELD
6. AJ TO AD TO AB 6 S/WELD

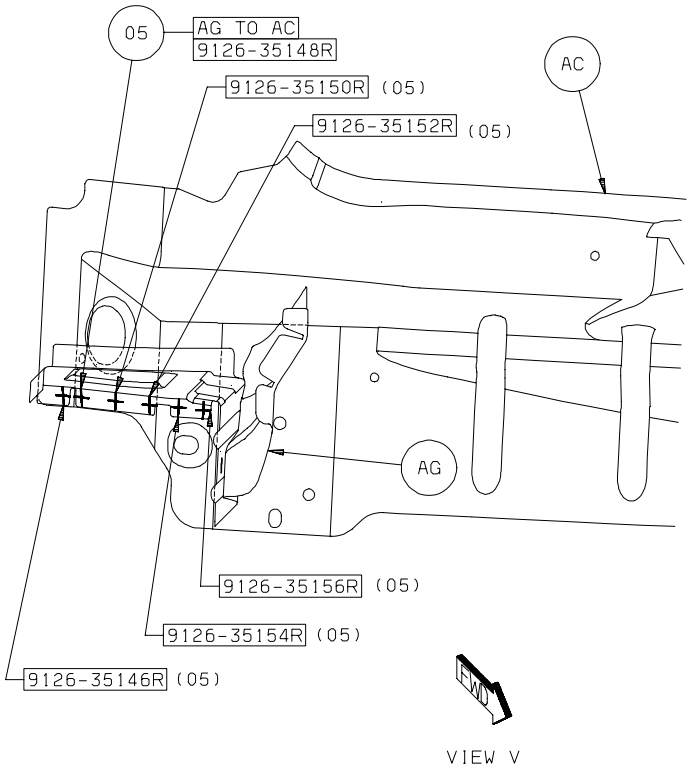

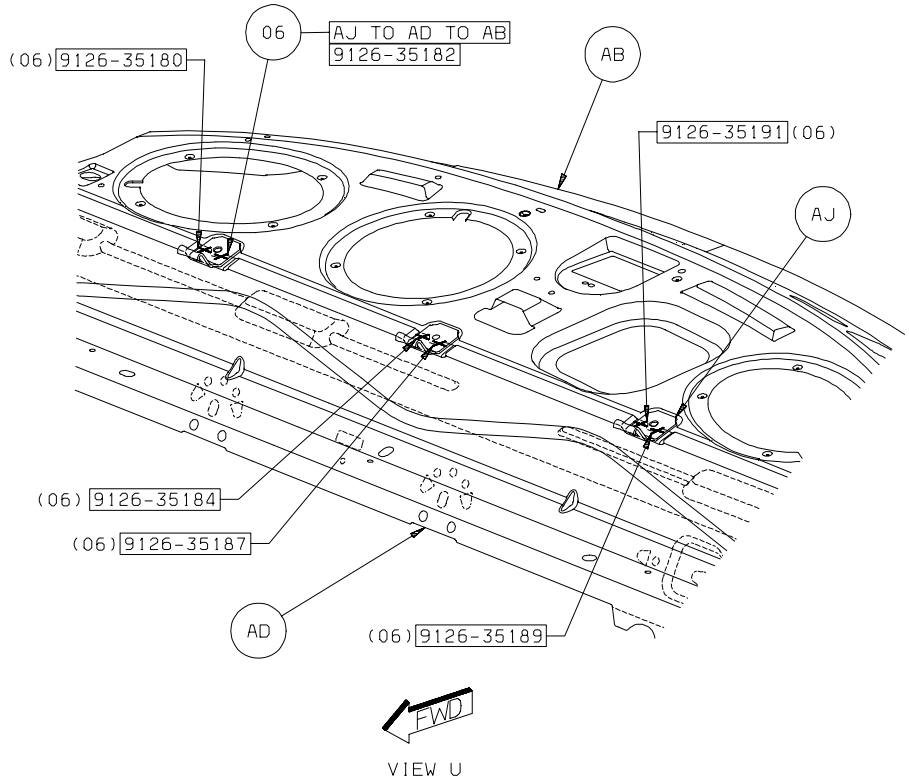

Back To Index

PARTS IDENTIFICATION LEGEND, OVERVIEW 22

AA	PANEL - BODY SIDE OTR RT -
AA	PANEL - BODY SIDE OTR LT -
AB	REINF - C-PILLAR RT -
AB	REINF - C-PILLAR LT -
AC	REINF - BODY SIDE RT -
AC	REINF - BODY SIDE LT -
AD	TAPPING PLATE - DOOR HINGE RR UPR RT -
AD	TAPPING PLATE - DOOR HINGE RR UPR LT -
AE	TAPPING PLATE - DOOR HINGE RR LWR RT -
AE	TAPPING PLATE - DOOR HINGE RR LWR LT -
AF	RETAINER - RR DOOR STRIKER RT -
AF	RETAINER - RR DOOR STRIKER LT -
AG	PANEL - RR WHEELHOUSE OTR RT -
AG	PANEL - RR WHEELHOUSE OTR LT -
AH	PANEL - TAIL LAMP MOUNTING RT -
AH	PANEL - TAIL LAMP MOUNTING LT -
AJ	TROUGH - DECK OPENING SIDE RT -
AJ	TROUGH - DECK OPENING SIDE LT -
AK	EXTENSION - QTR OTR PANEL LWR RR RT -
AK	EXTENSION - QTR OTR PANEL LWR RR LT -
AL	TAPPING PLATE - DECK LID HINGE -

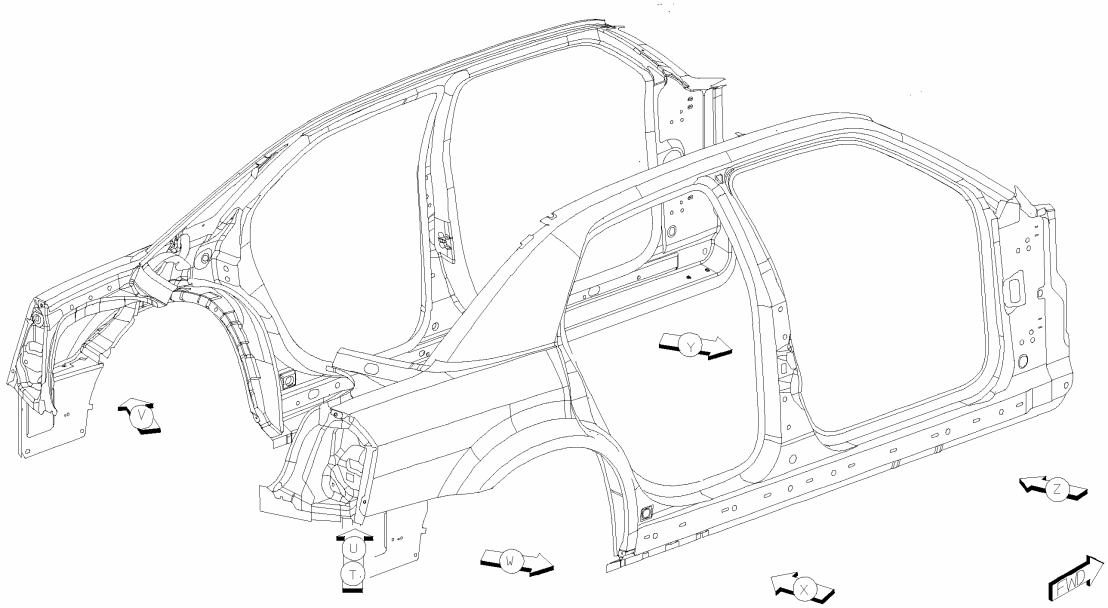

Back to Index

1. AA TO AC 33/SD S/WELDS
2. AA TO AB 11/SD S/WELDS

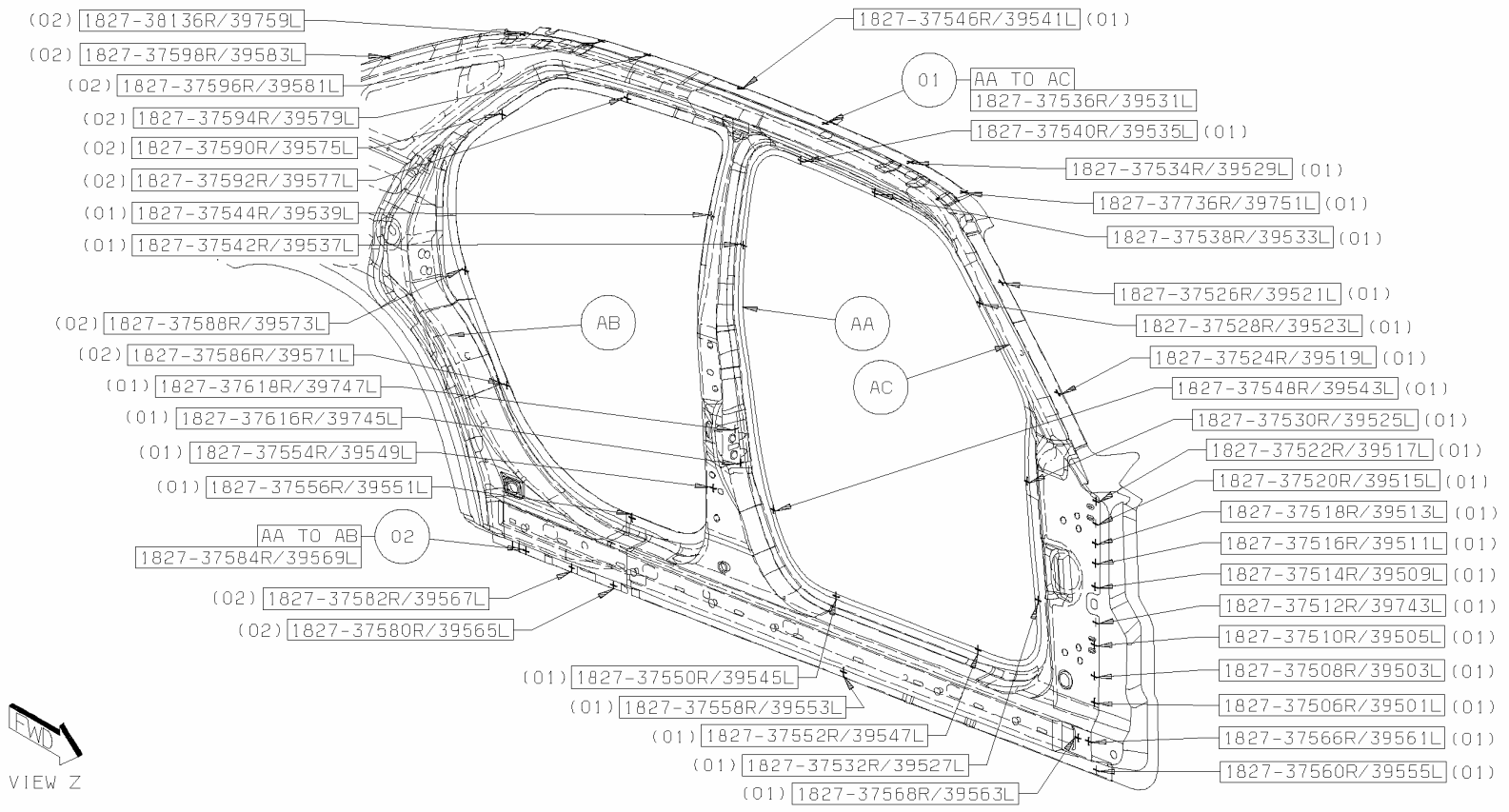

Back To Index

3. AC TO AB TO AA 1 S/WELD
4. AA TO AD TO AC 4/SD S/WELDS
5. AA TO AE TO AC 4/SD S/WELDS

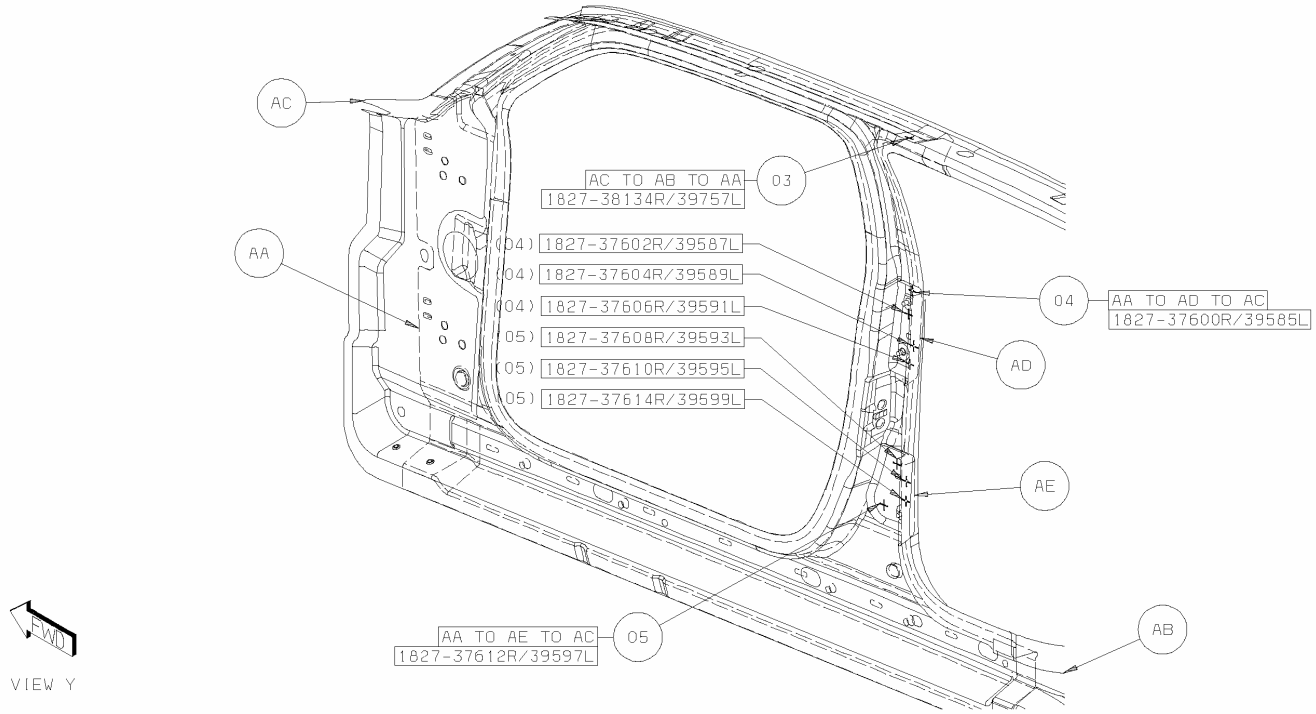

Back to Index

6. AA TO AG 14R/10L S/WELDS
7. AF TO AA 7/SD S/WELDS

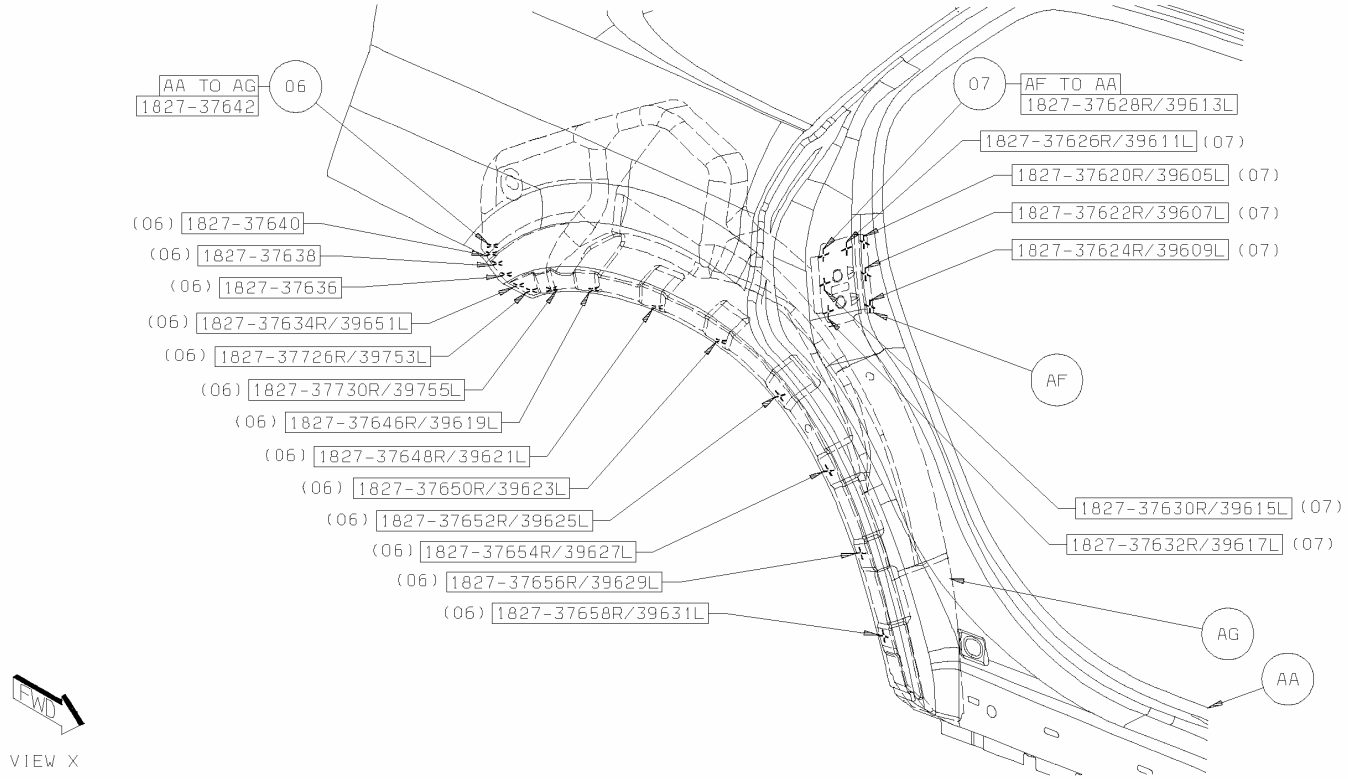

Back To index

8. AG TO AA 4R/5L S/WELDS
9. AH TO AA 1L S/WELD
10. AG TO AH 2L S/WELDS

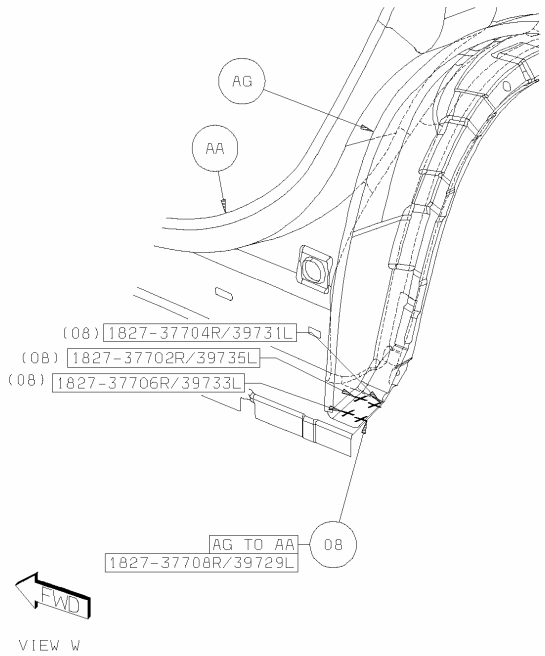

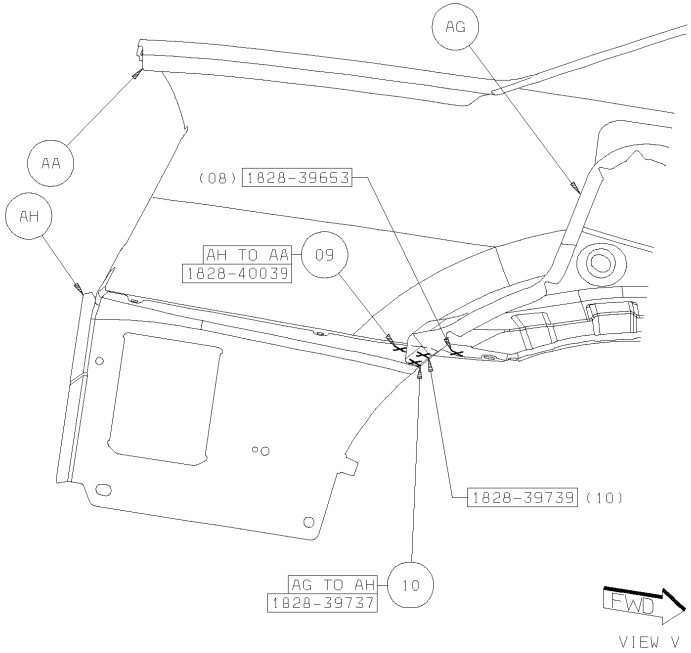

Back To Index

11. AK TO AJ 6/S S/WELDS
12. AK TO AA TO AJ 1 S/WELD
13. AA TO AJ 10/SD S/WELDS
14. AJ TO AL 4/S S/WELDS
15. AK TO AA 8/SD S/WELDS

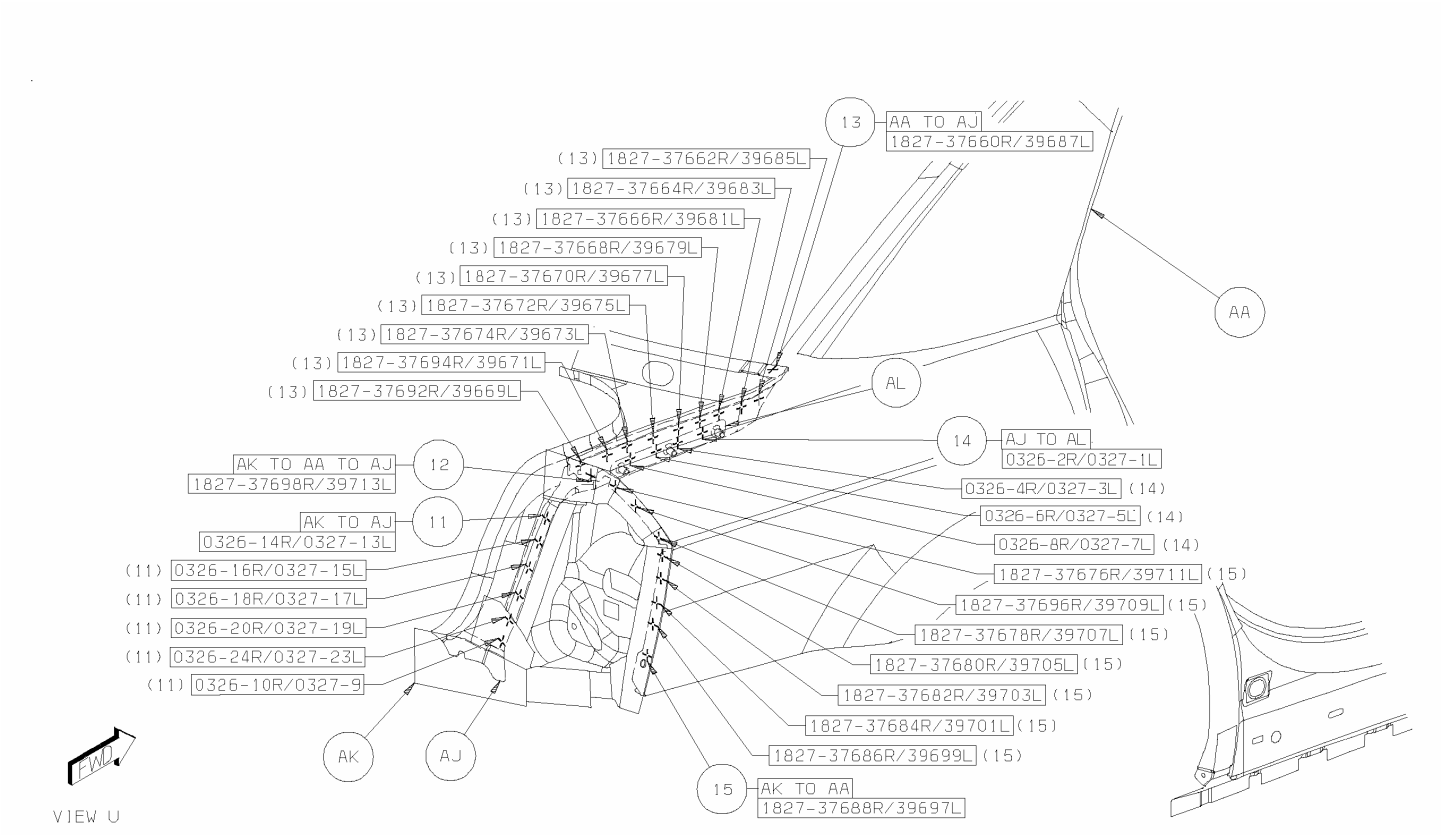

Back To Index

16. AK TO AA TO AH 1/SD S/WELDS
17. AA TO AH 7R/6L S/WELDS

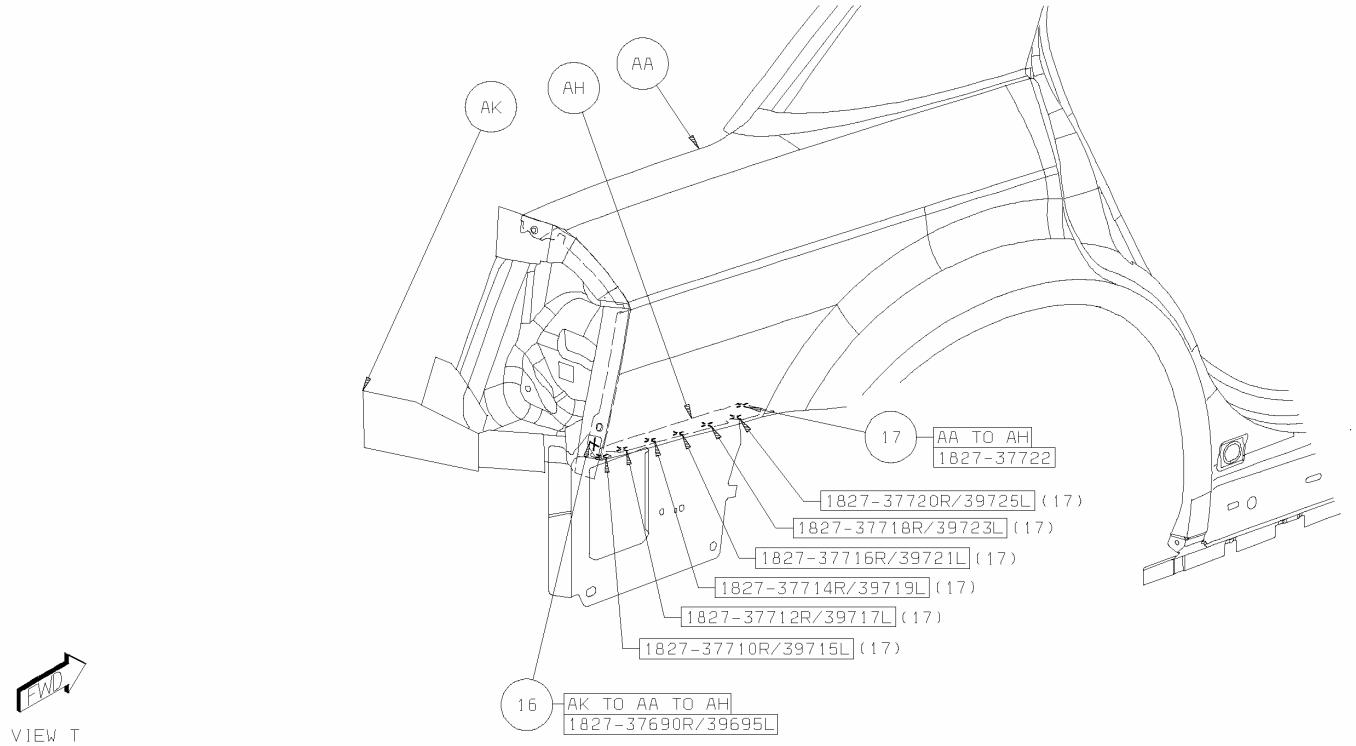

Back To index

PARTS IDENTIFICATION LEGEND, OVERVIEW 23

AA	PANEL - RR SHELF -
AB	REINF - RR SHELF PANEL RR -
AC	TROUGH - DECK OPENING SIDE RT -
AC	TROUGH - DECK OPENING SIDE LT -
AD	PANEL - BODY SIDE INR RT -
AD	PANEL - BODY SIDE INR LT -
AE	PANEL - DECK OPENING LWR OTR -
AF	PANEL - DECK OPENING LWR INR -
AG	COVER PLATE - RR RAIL EXTENSION RT -
AG	COVER PLATE - RR RAIL EXTENSION LT -
AH	EXTENSION - QTR OTR PANEL LWR RR RT -
AH	EXTENSION - QTR OTR PANEL LWR RR LT -
AJ	PANEL - TAIL LAMP MOUNTING RT -
AJ	PANEL - TAIL LAMP MOUNTING LT -
AK	PANEL - RR WHEELHOUSE OTR RT -
AK	PANEL - RR WHEELHOUSE OTR LT -
AL	COVER PLATE - RAIL RR RT - FRONT
AL	COVER PLATE - RAIL RR LT - FRONT
AM	PANEL - RR WHEELHOUSE INR RT -
AM	PANEL - RR WHEELHOUSE INR LT -
AN	PANEL - BODY SIDE OTR RT -
AN	PANEL - BODY SIDE OTR LT -
AP	HEADER - RR WINDOW OPENING -
AR	REINF - C-PILLAR RT -
AR	REINF - C-PILLAR LT -
AS	REINF - RR BELT RETRACTOR RT -
AS	REINF - RR BELT RETRACTOR LT -
AT	RAIL - RR OTR RT -
AT	RAIL - RR OTR LT -
AU	REINF - BODY SIDE RT -
AU	REINF - BODY SIDE LT -
AV	TAPPING PLATE - DOOR HINGE FRT RT -
AV	TAPPING PLATE - DOOR HINGE FRT LT -
AW	TAPPING PLATE - BODY SIDE FRT DOOR LWR HINGE RT -
AW	TAPPING PLATE - BODY SIDE FRT DOOR LWR HINGE LT -
AX	PANEL - COWL UPR -
AY	PANEL - LOAD PATH BEAM UPR INR RT -
AY	PANEL - LOAD PATH BEAM UPR INR LT -
AZ	PANEL - TOEBOARD CROSSMEMBER -
BA	HEADER - WINDSHIELD OPENING

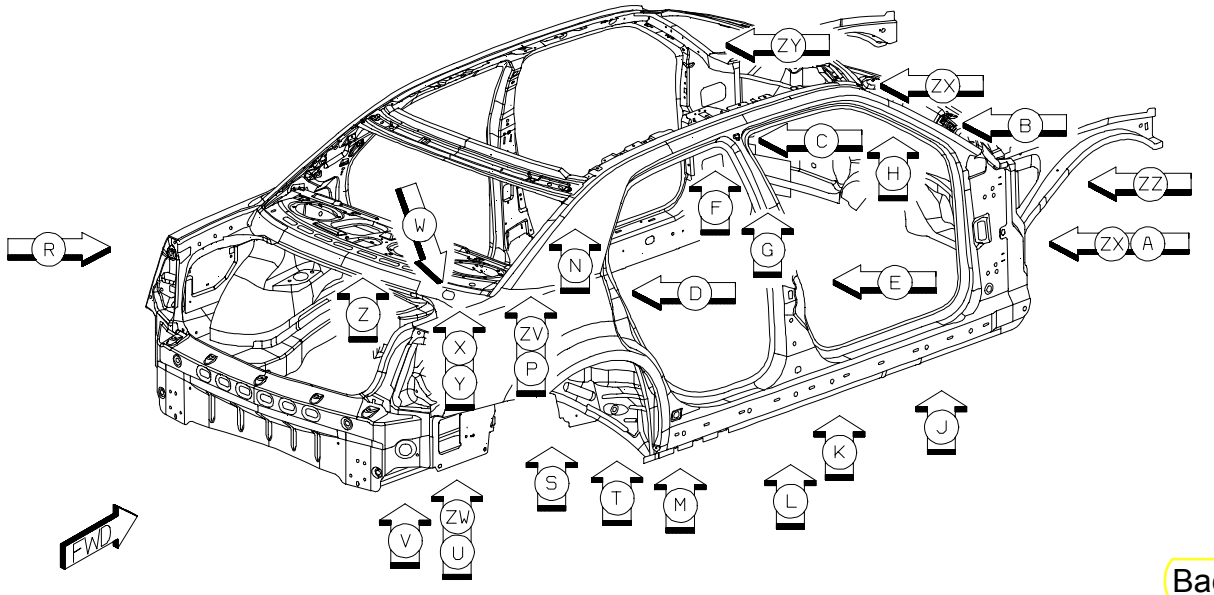

Back To Index

1. AB TO AA 38 S/WELDS

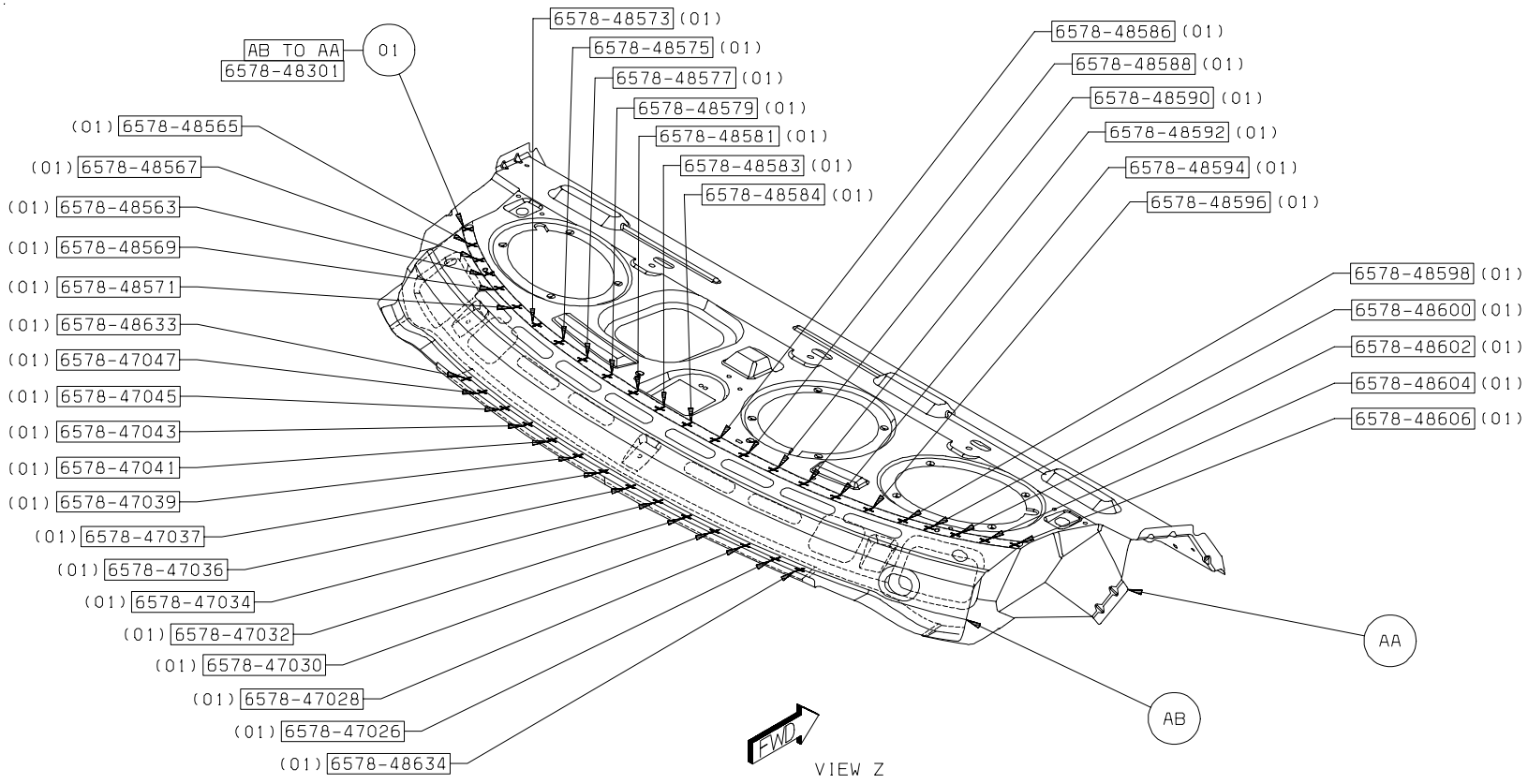

Back To Index

2. AC TO AB 12/SD S/WELDS

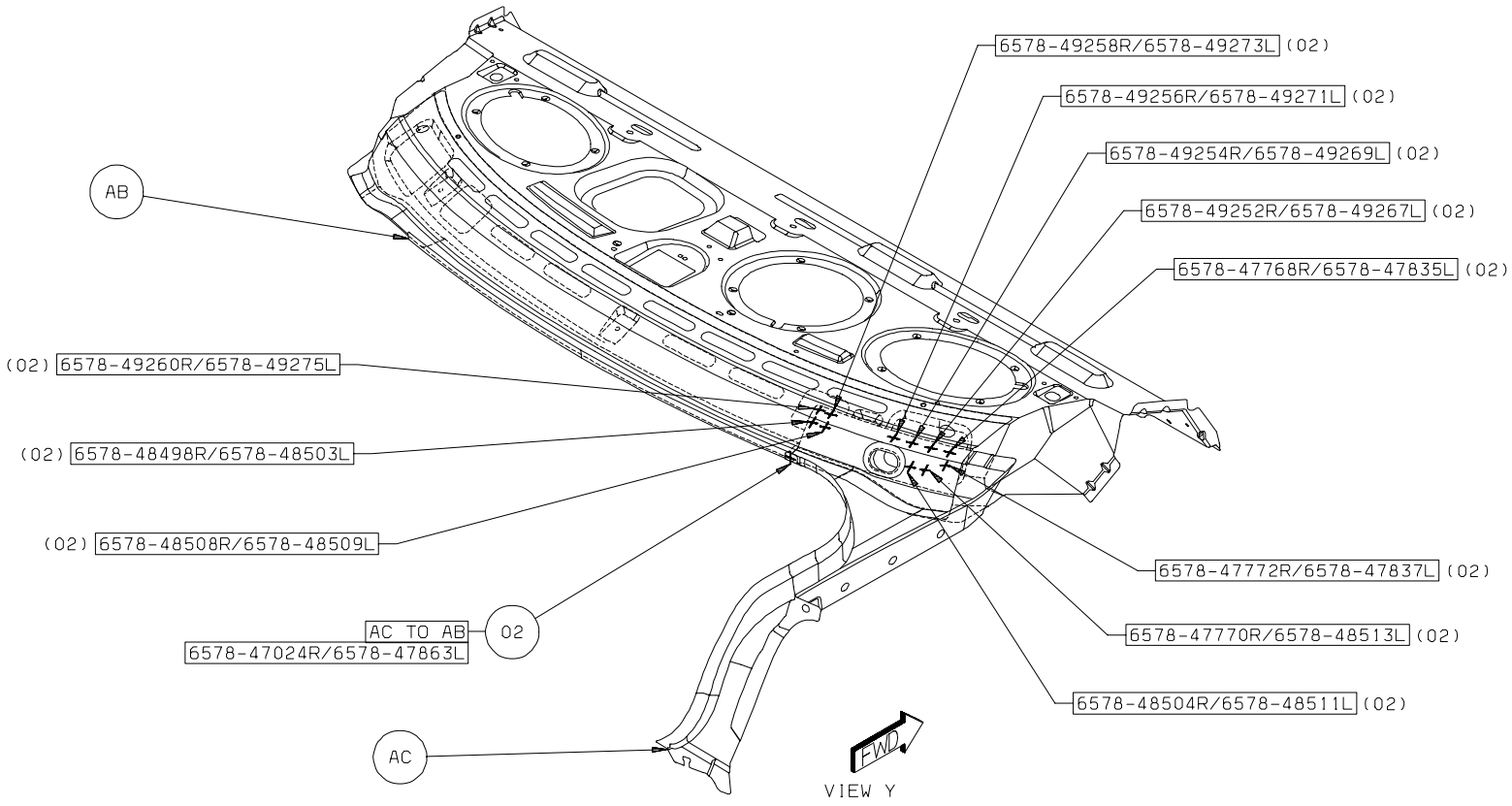

Back To Index

3. AC TO AB TO AA 6/SD S/WELDS

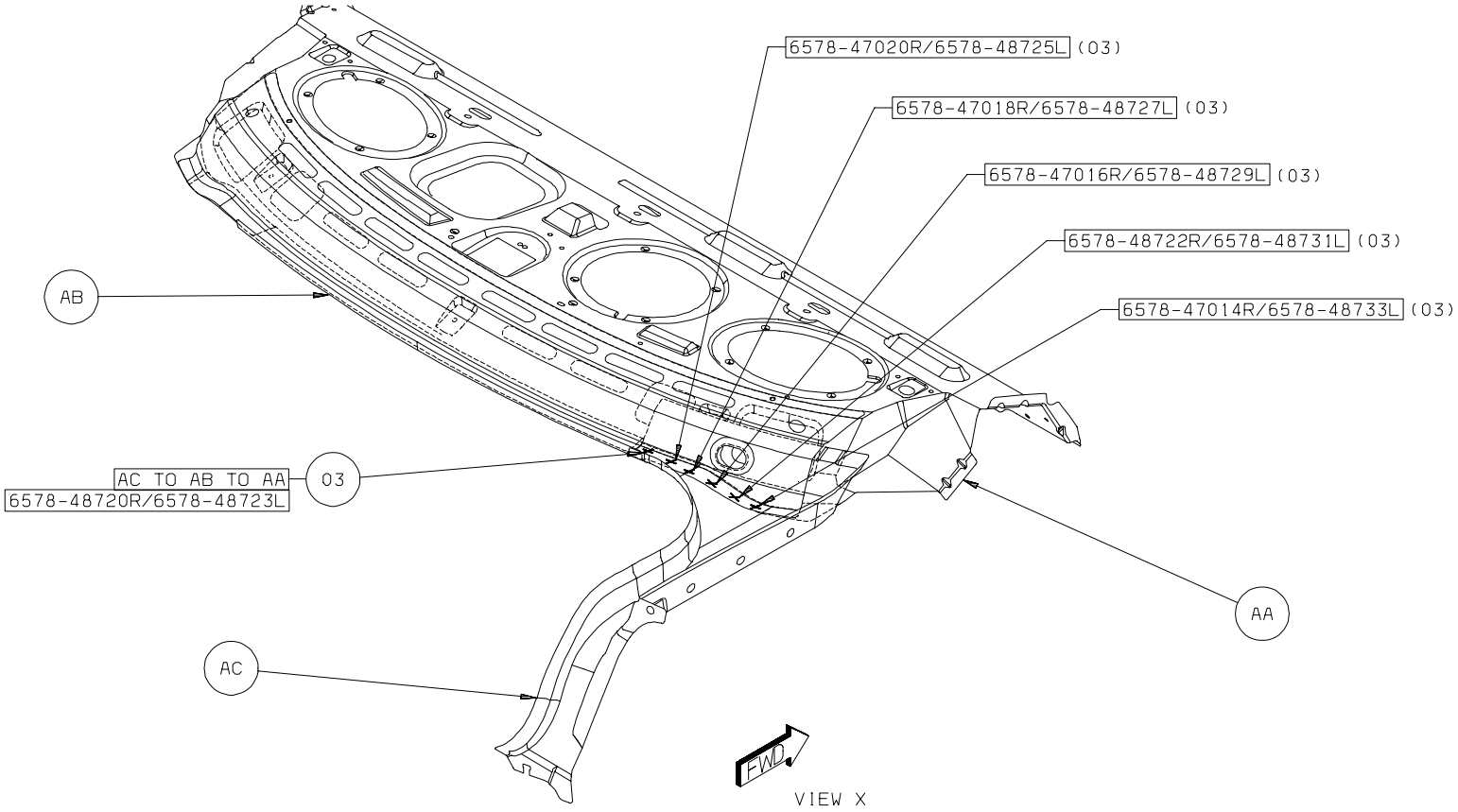

Back To Index

4. AC TO AD 6/SD S/WELDS

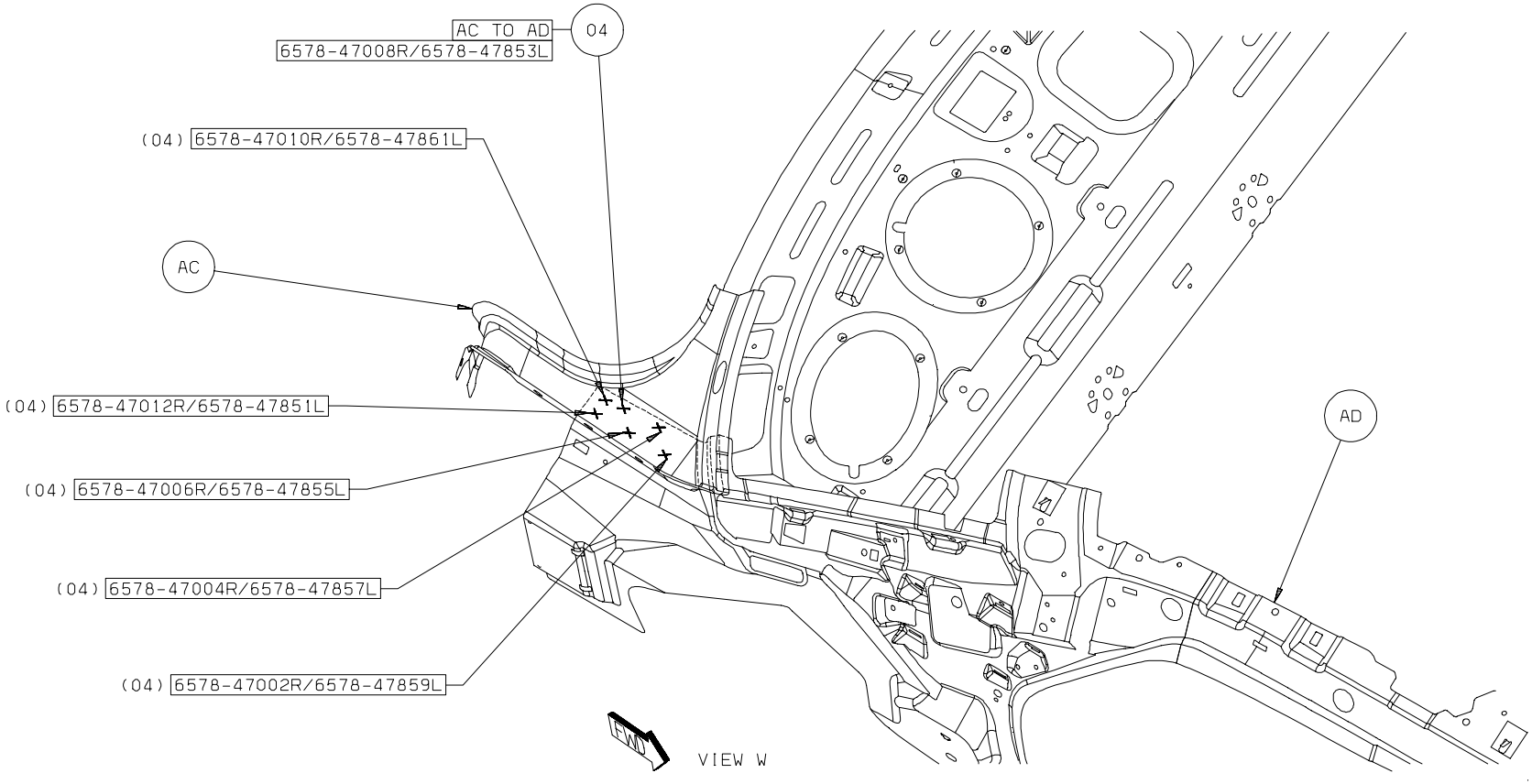

Back To Index

5. AC TO AE TO AF 3/SD S/WELDS
6. AF TO AH 3/SD S/WELDS
7. AF TO AH TO AG 1/SD S/WELD
8. AE TO AF TO AH 2/SD S/WELDS

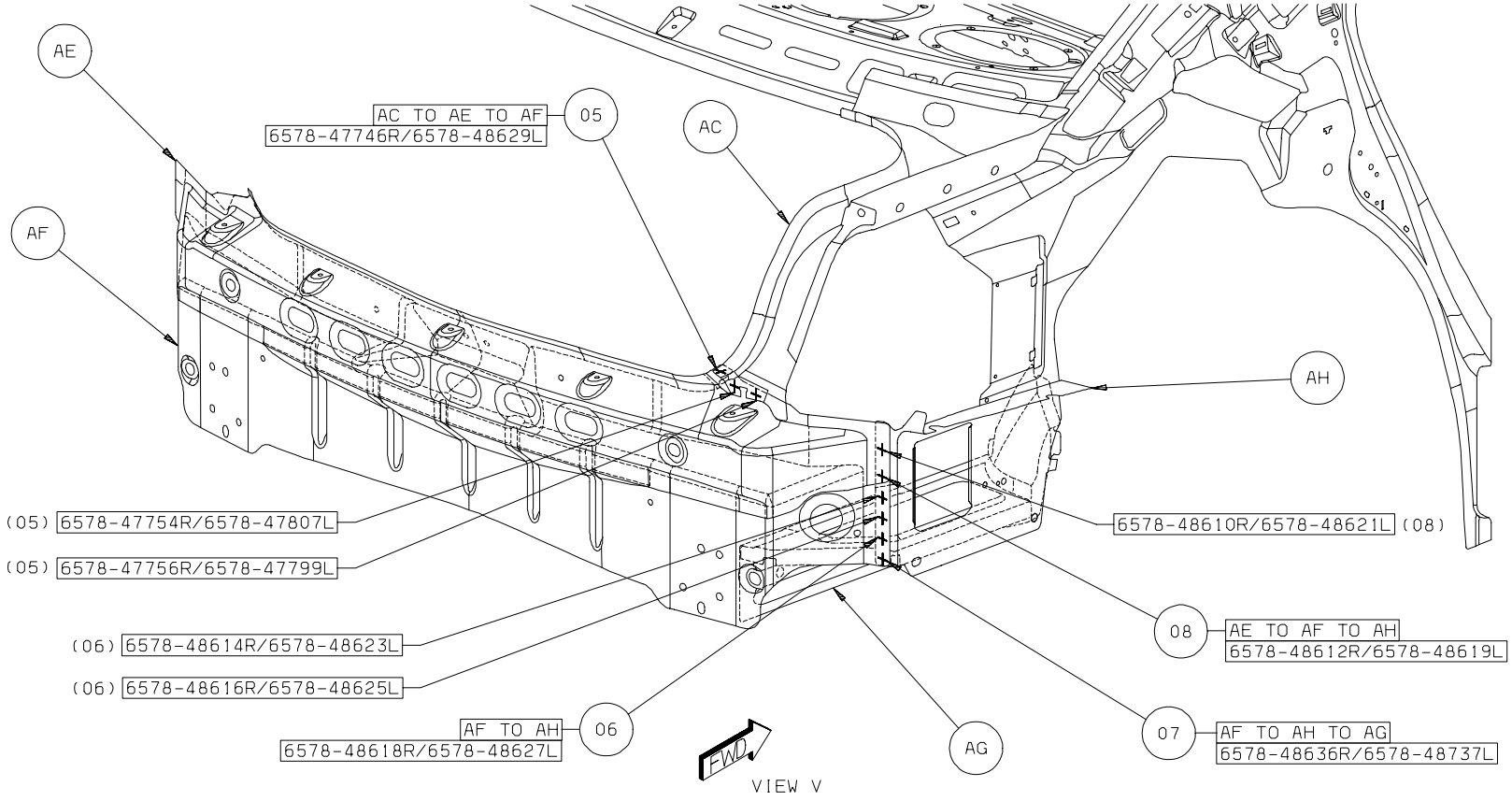

Back To Index

9. AC TO AJ TO AE 1/SD S/WELD
10. AJ TO AE TO AF 4/SD S/WELDS
11. AJ TO AH TO AE 1/SD S/WELD
12. AH TO AG 6/SD S/WELDS
13. AH TO AD 3/SD S/WELDS

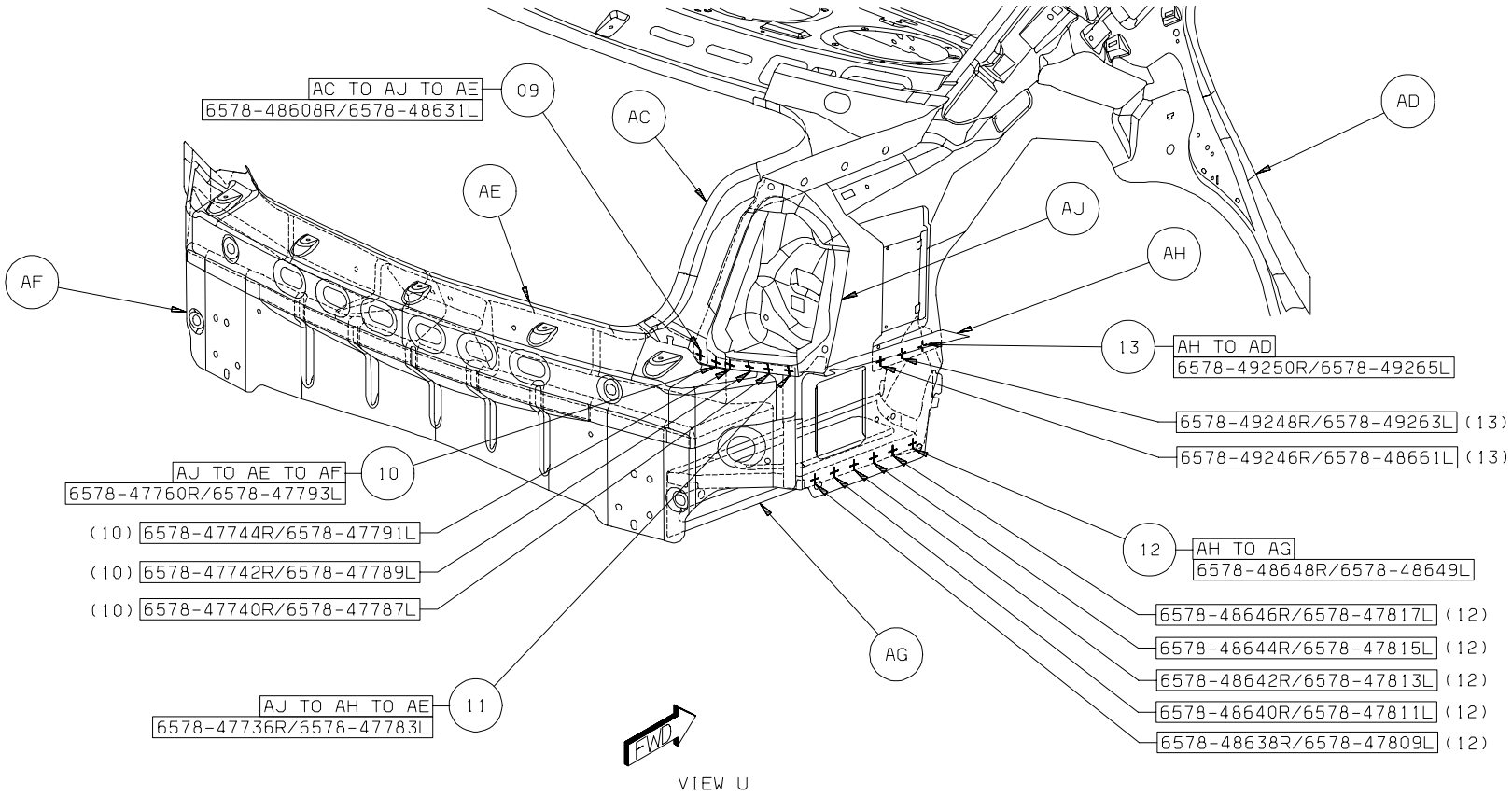

Back To Index

14. AG TO AD TO AM 1R S/WELD
15. AG TO AM 4R & 3L S/WELDS
16. AK TO AD TO AM 9R & 8L S/WELDS
17. AK TO AD 2/SD S/WELDS
18. AK TO AD TO AL 5/SD S/WELDS

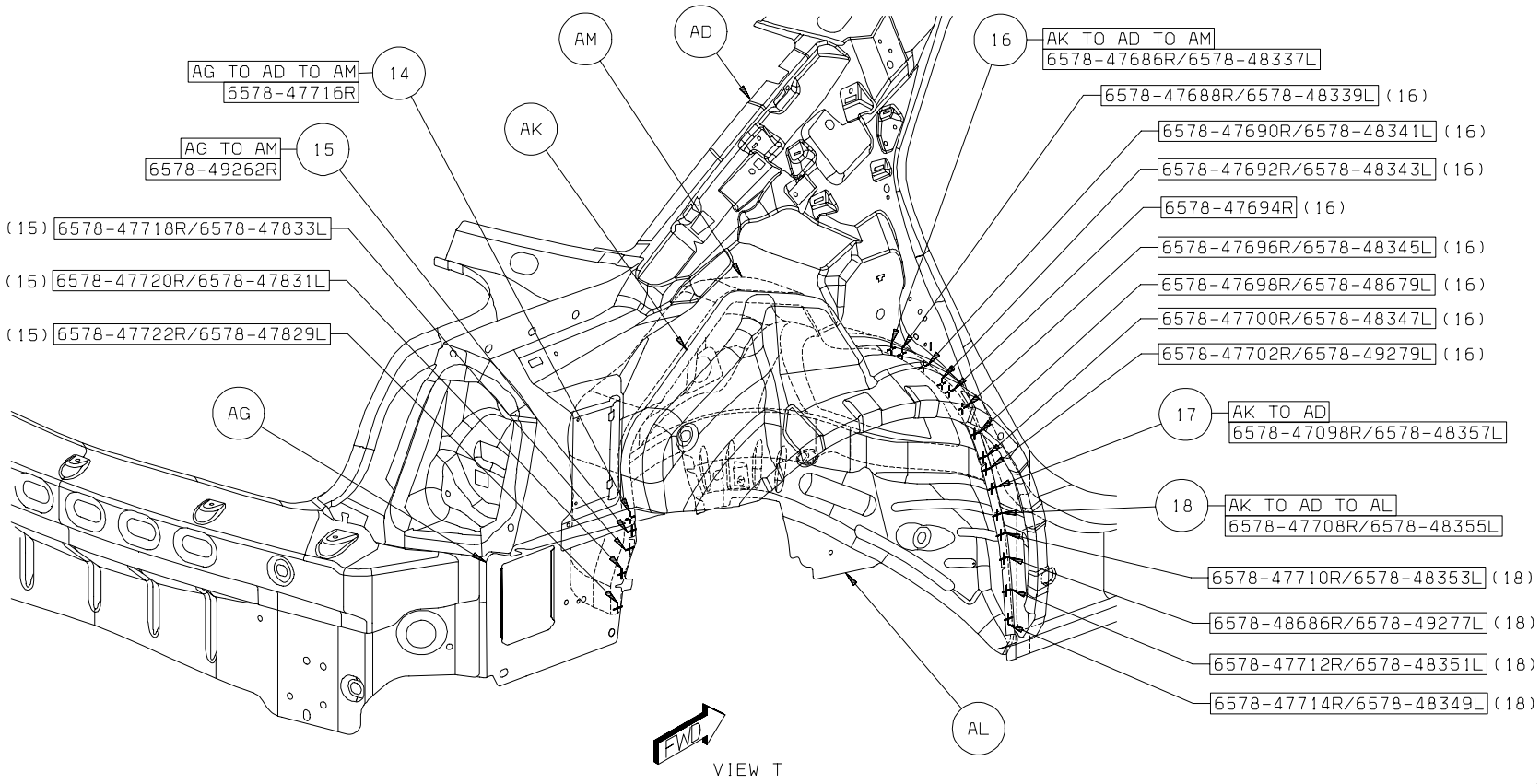

Back To Index

19. AK TO AD TO AM 17R & 7L S/WELDS

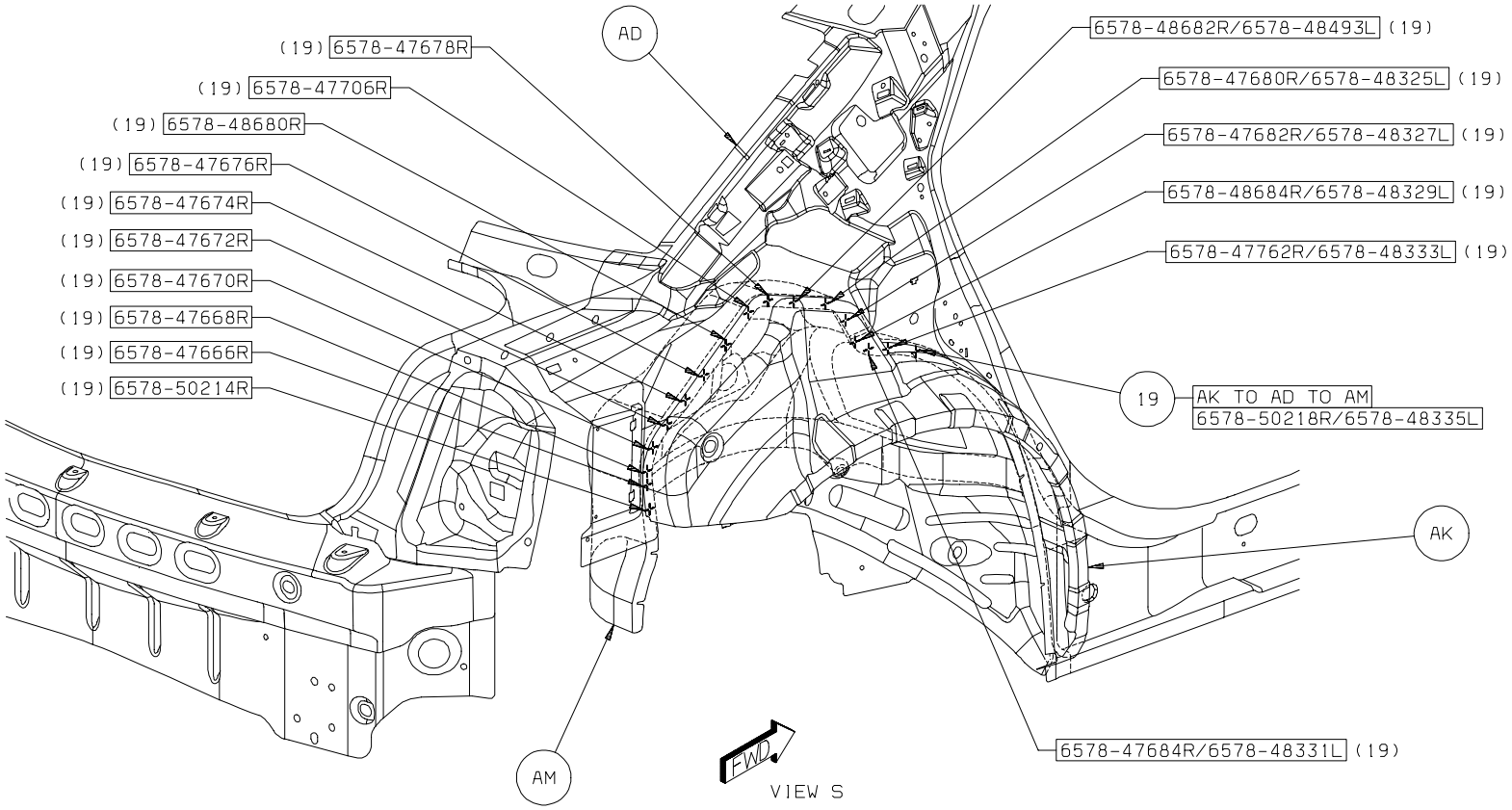

Back To Index

20. AK TO AD TO AM 9L S/WELDS
21. AH TO AD TO AM 2L S/WELDS

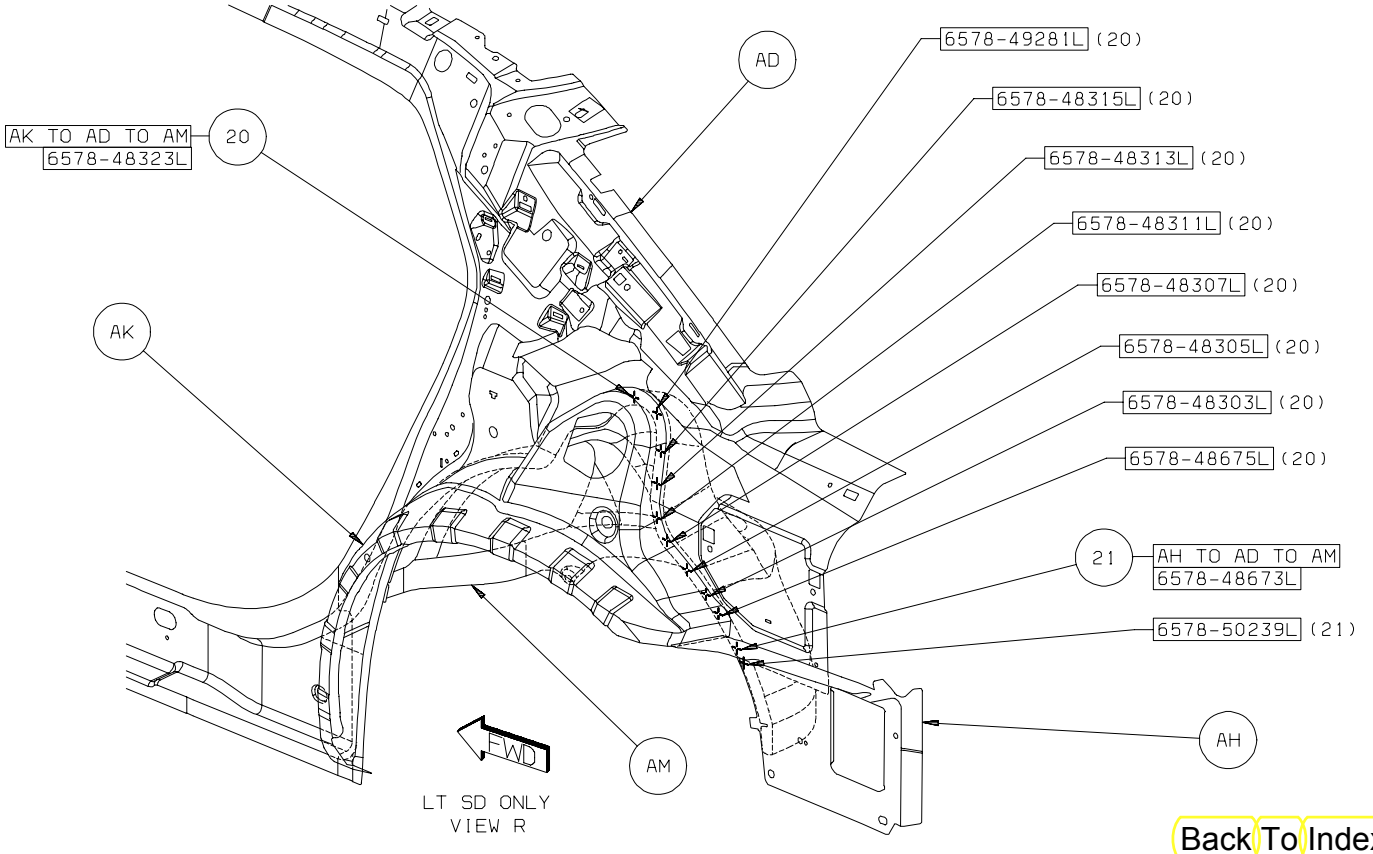

Back To Index

22. AD TO AN 5/SD S/WELDS

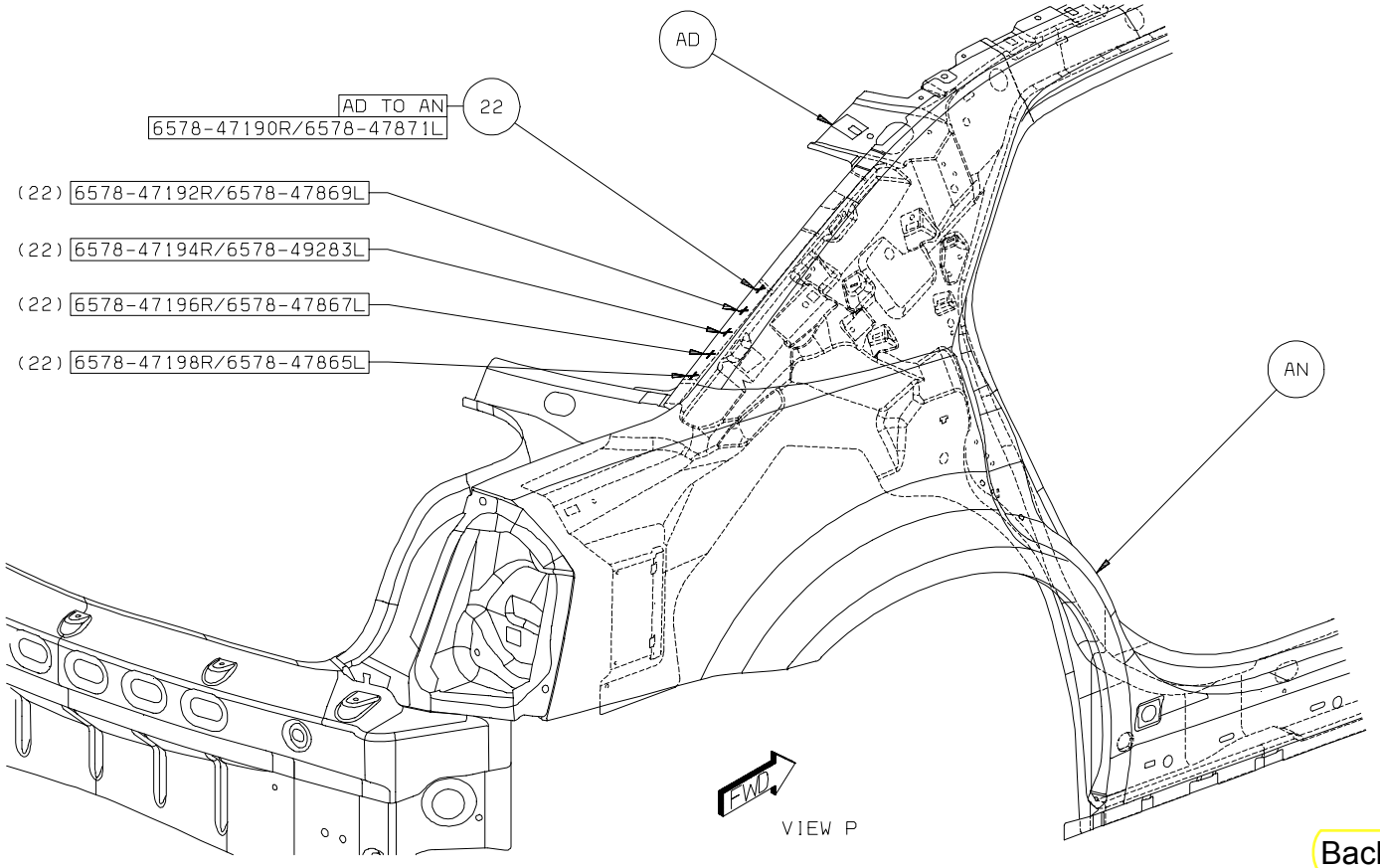

Back To Index

23. AR TO AS TO AN 1/SD S/WELD
24. AN TO AR TO AD 7/SD S/WELDS
25. AP TO AR 2/SD S/WELDS

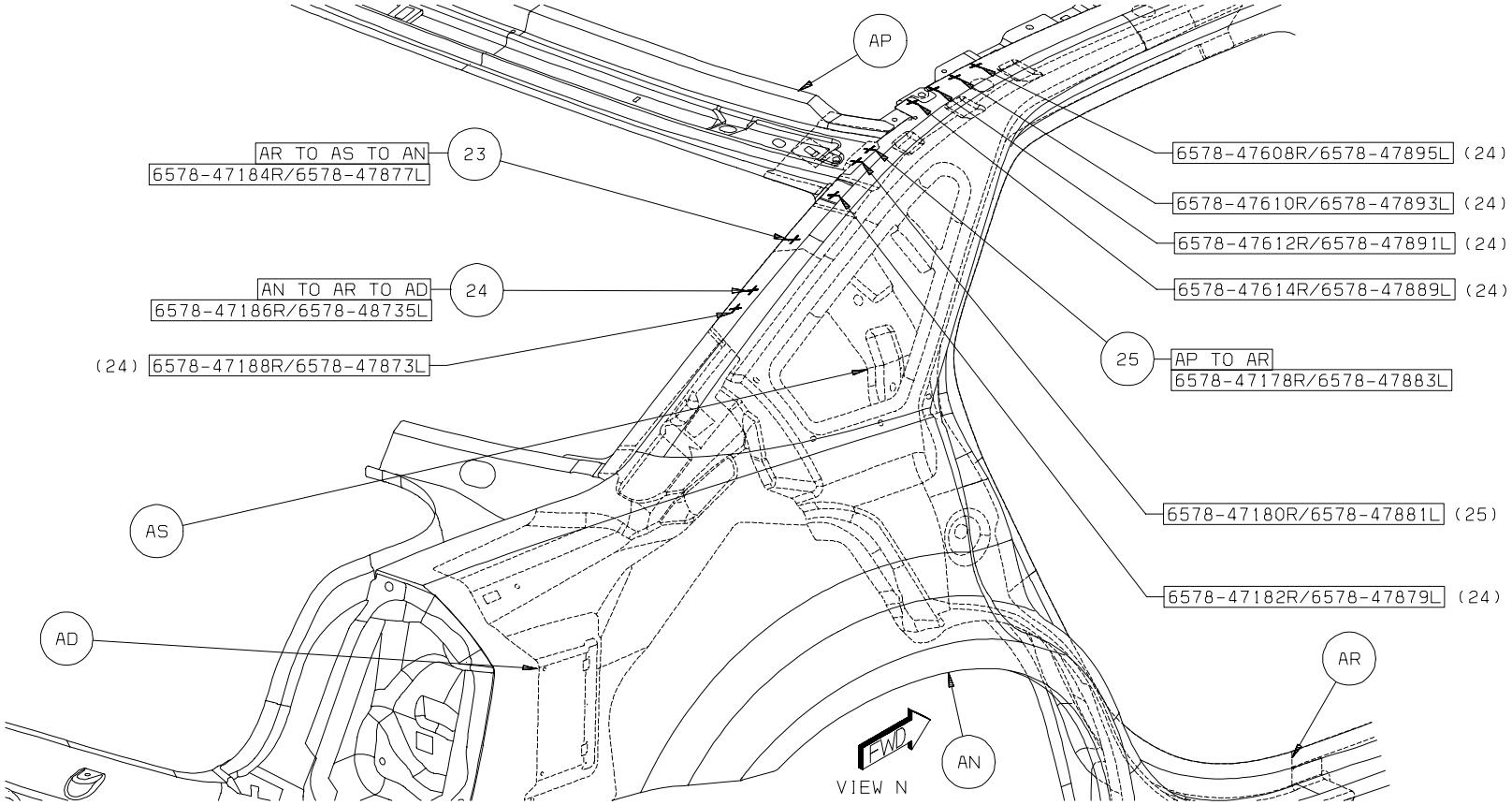

Back To Index

26. AR TO AD TO AT 4/SD S/WELDS
27. AU TO AD TO AT 1/SD S/WELD

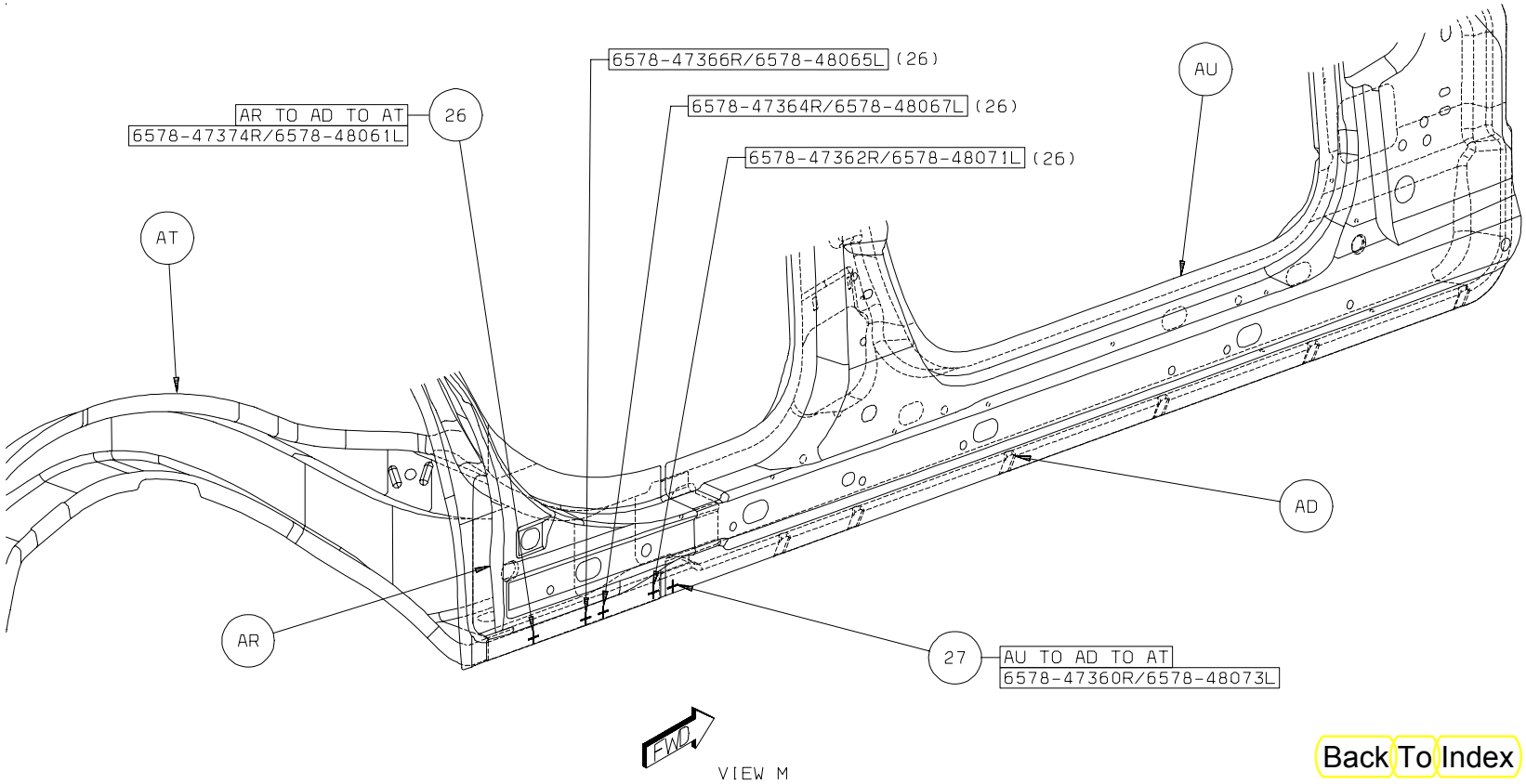

Back To Index

28. AN TO AU TO AD 21/SD S/WELDS
29. AN TO AR TO AD 3/SD S/WELDS
30. AN TO AD TO AT 1/SD S/WELD

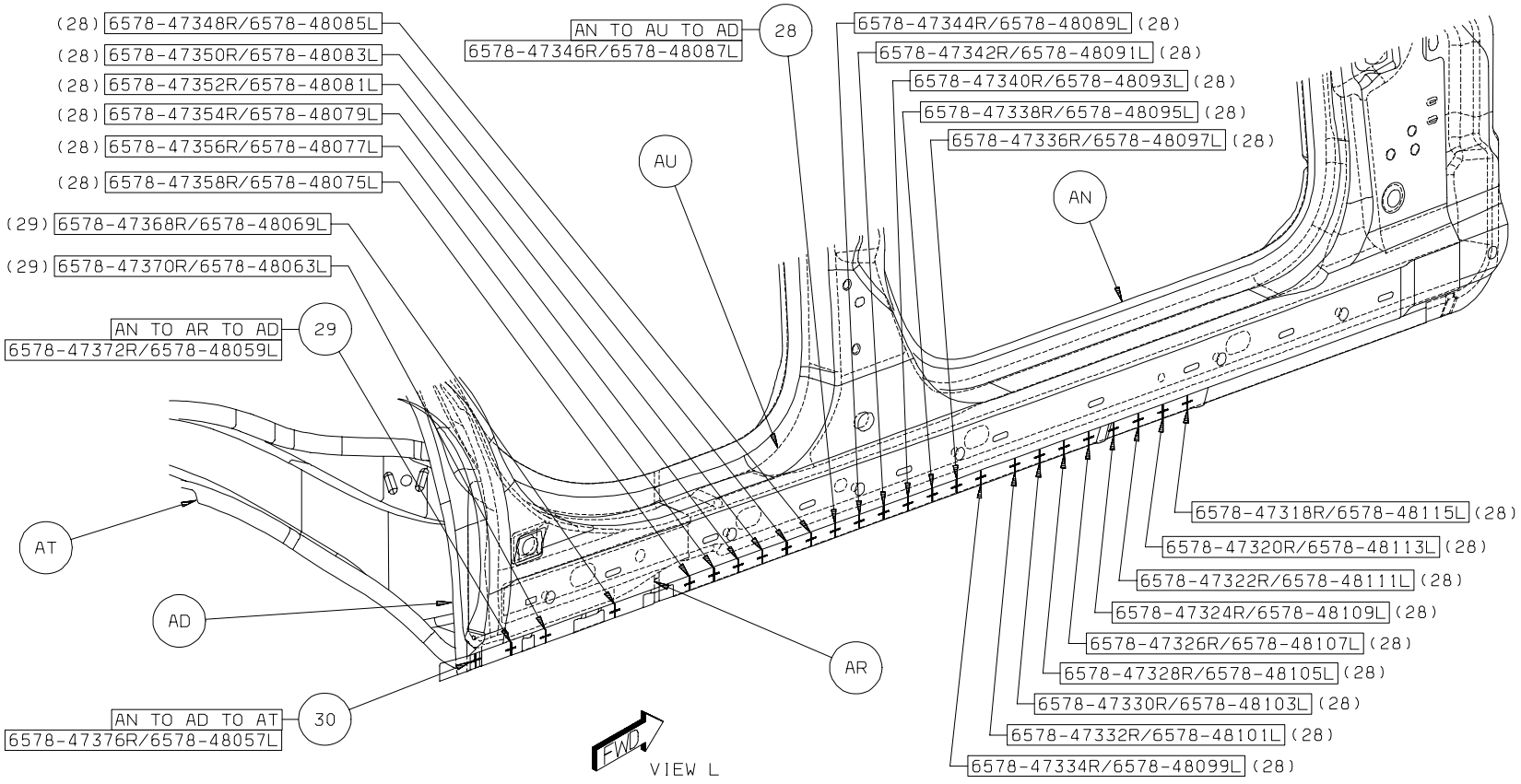

Back To Index

31. AN TO AR TO AD 6/SD S/WELDS
32. AN TO AU TO AD 17/SD S/WELDS

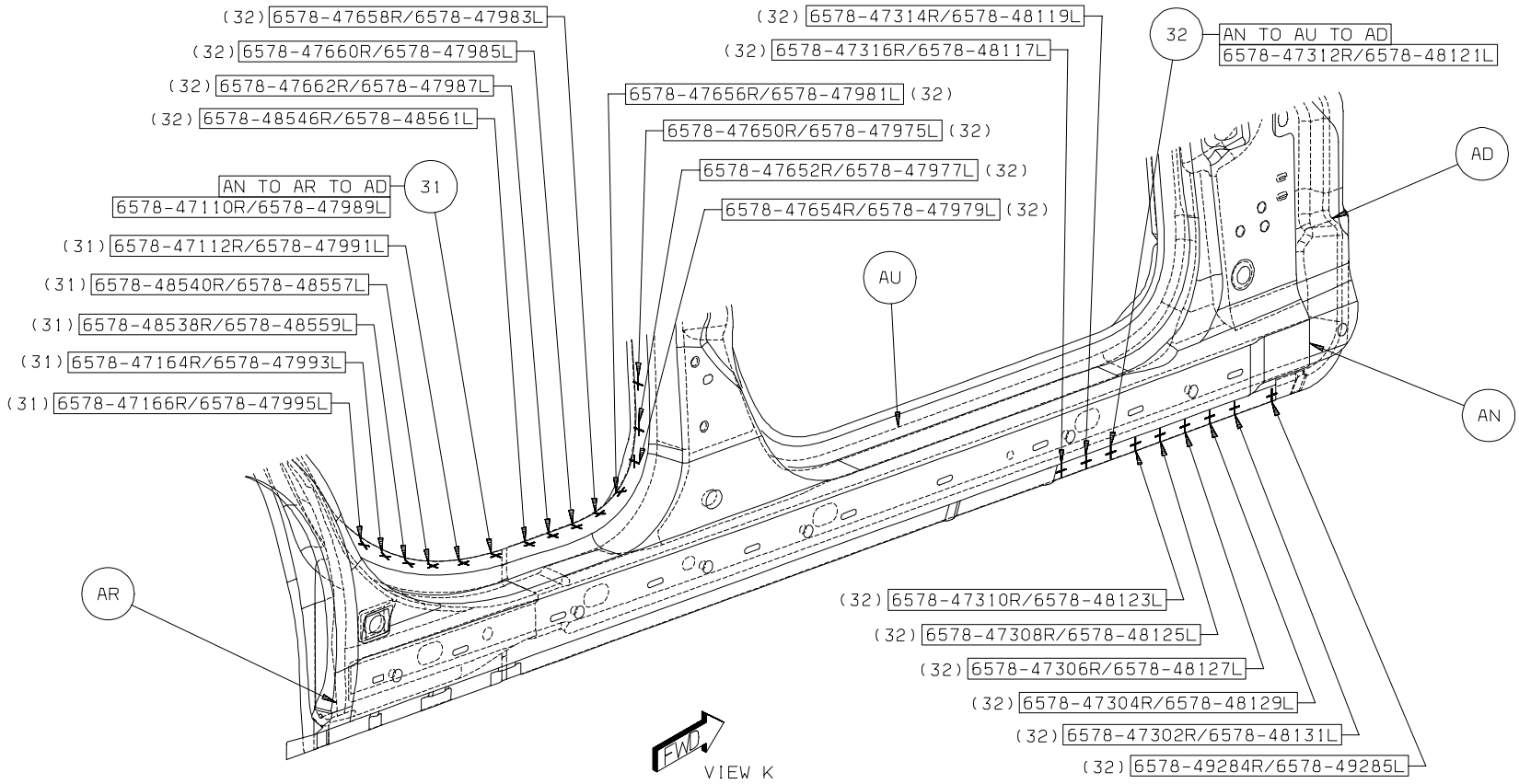

Back To Index

33. AN TO AU TO AD 20/SD S/WELDS
34. AU TO AD 9/SD S/WELDS

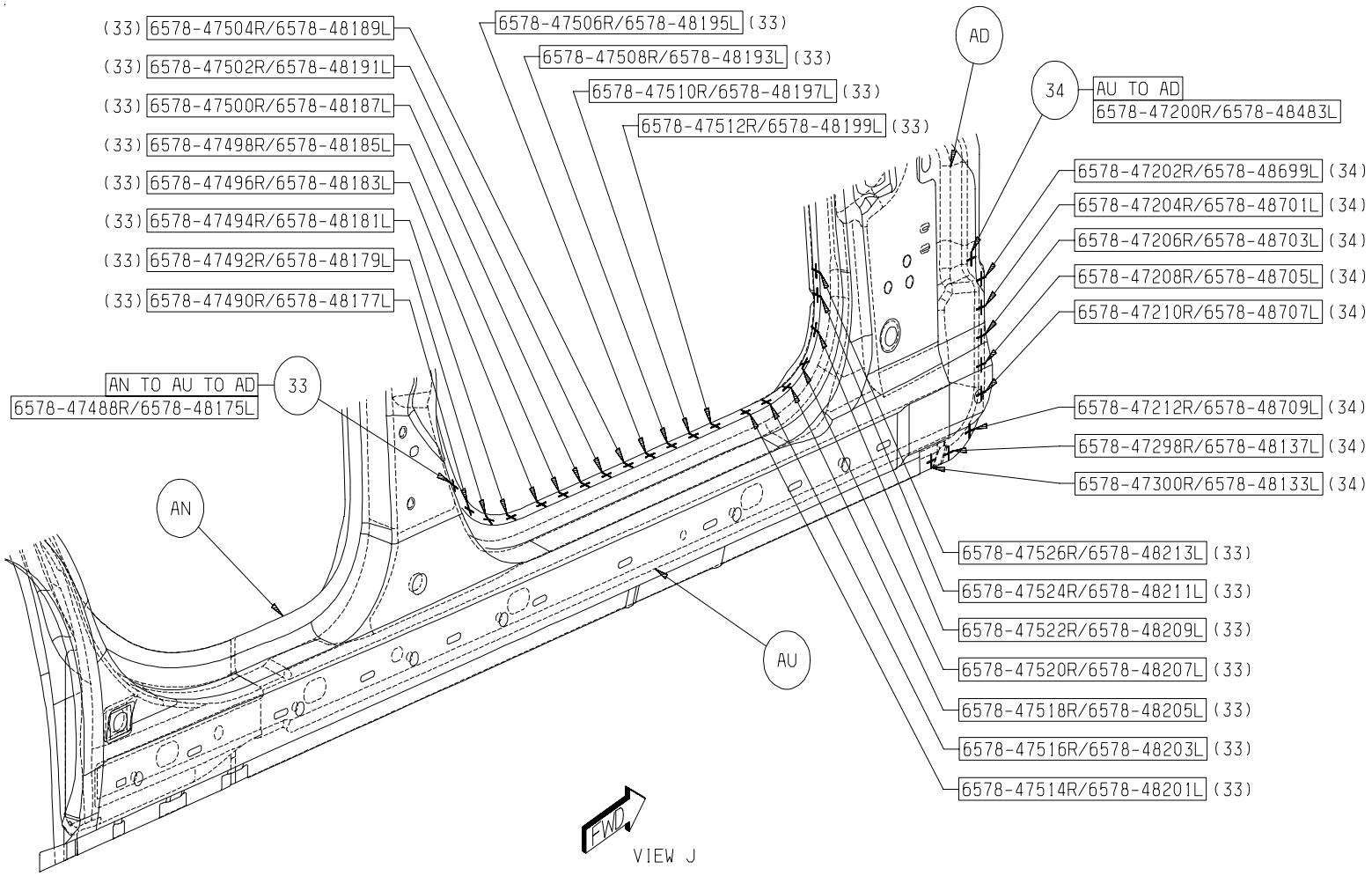

Back To Index

35. AN TO AU TO AD 29/SD S/WELDS

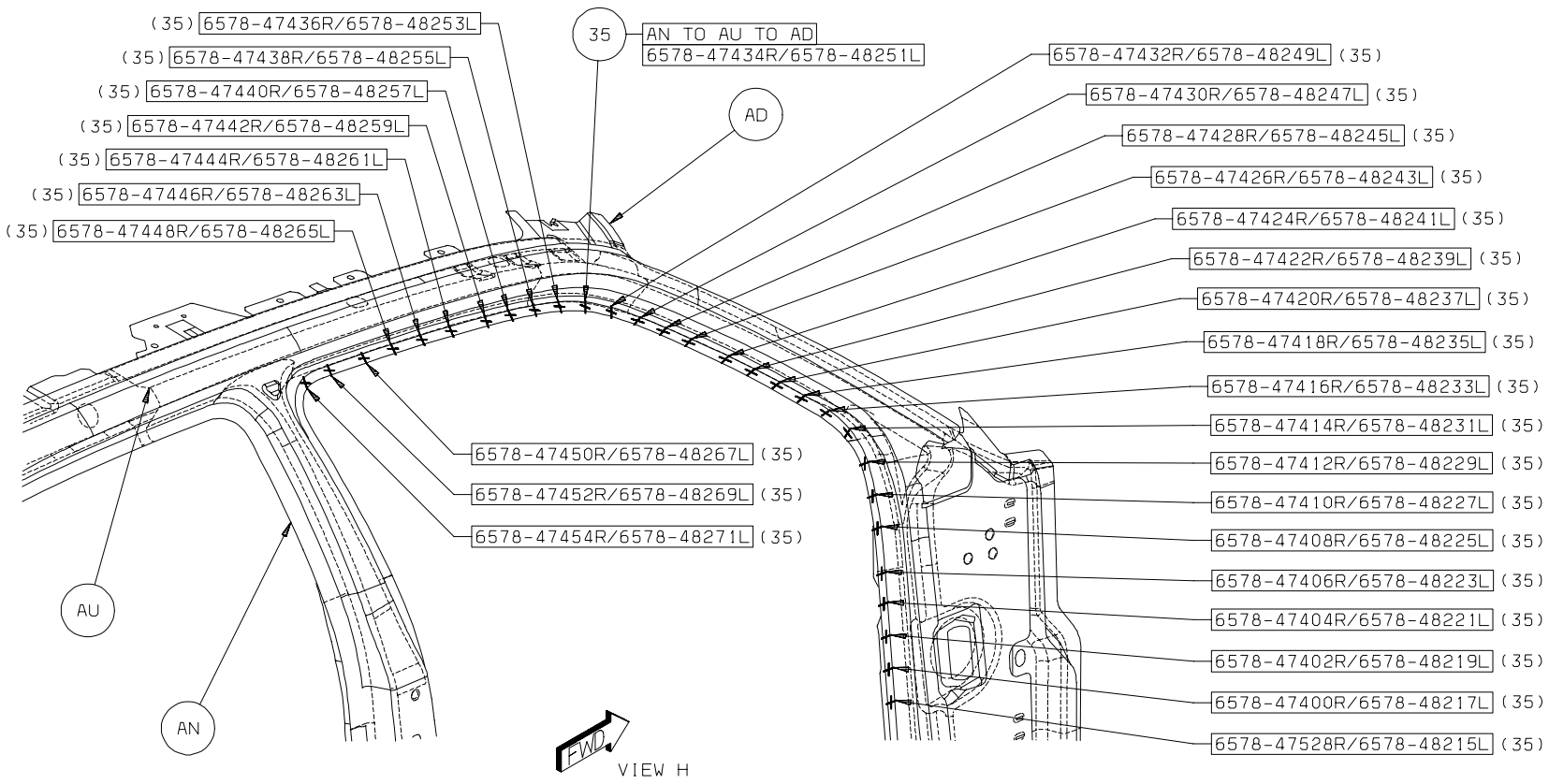

Back To Index

36. AN TO AU TO AD 10/SD S/WELDS

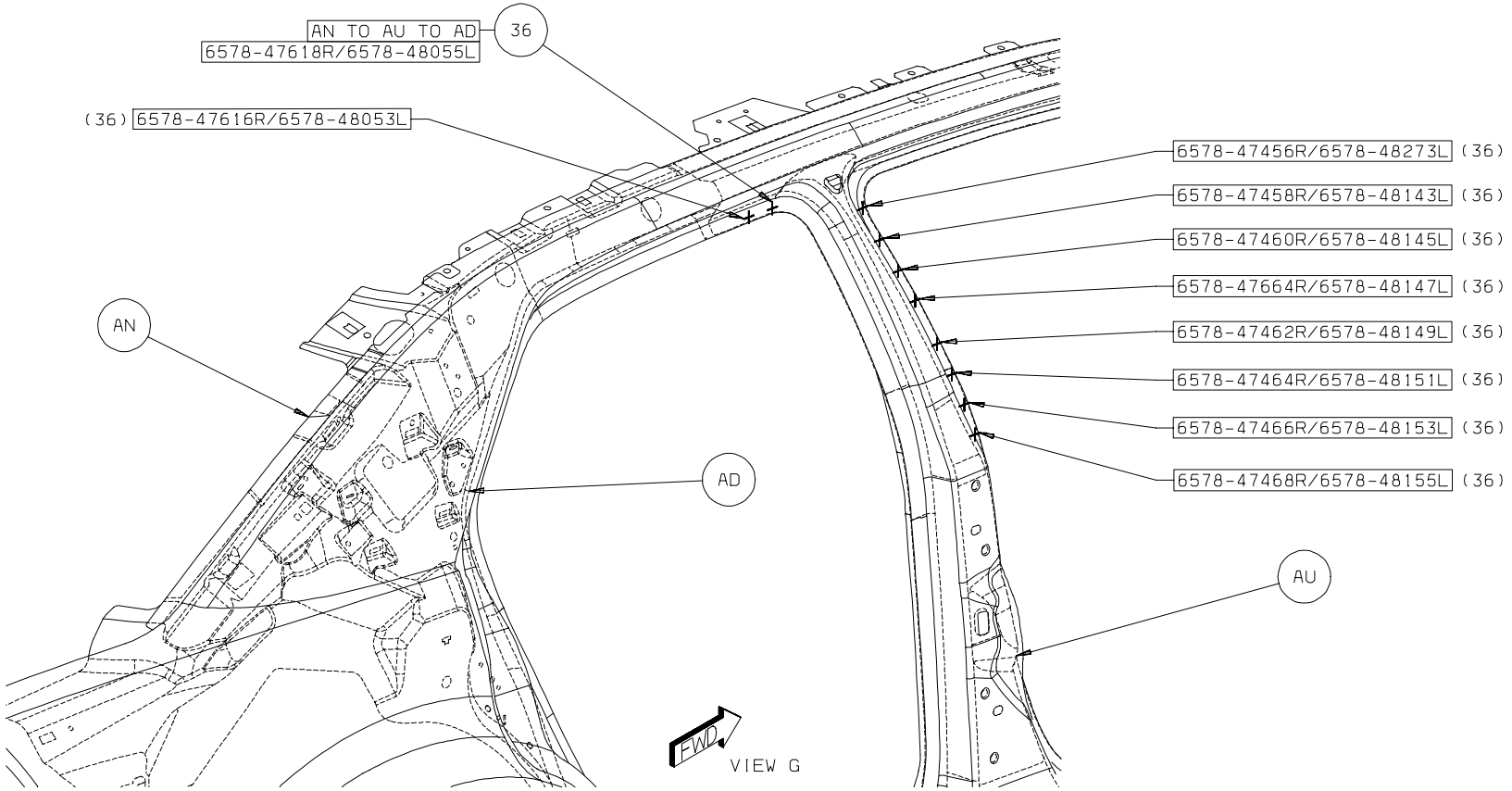

Back To Index

37. AN TO AR TO AD 8/SD S/WELDS
38. AN TO AU TO AD 16/SD S.WELDS

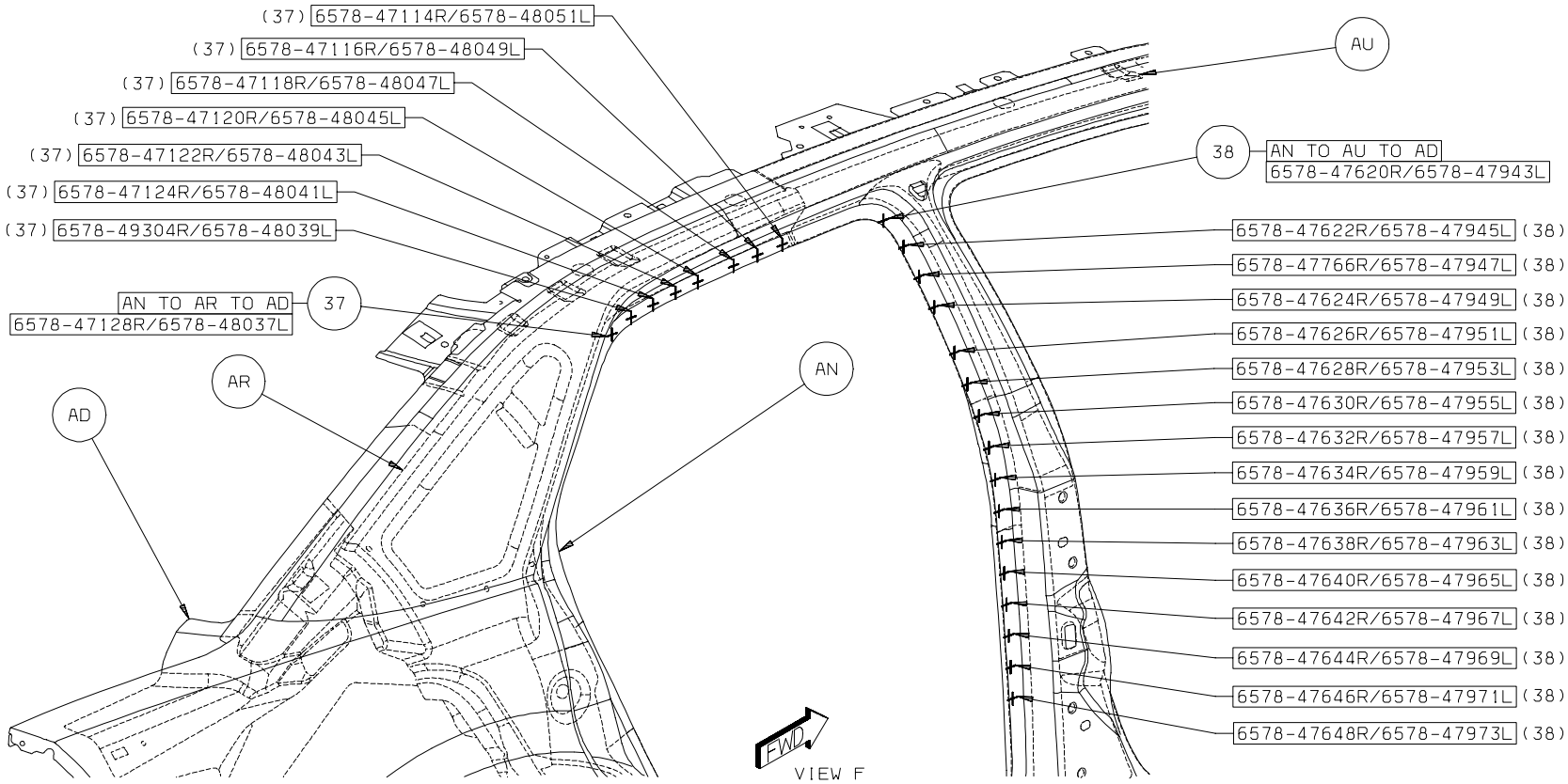

Back To Index

39. AN TO AU TO AD 9/SD S/WELDS

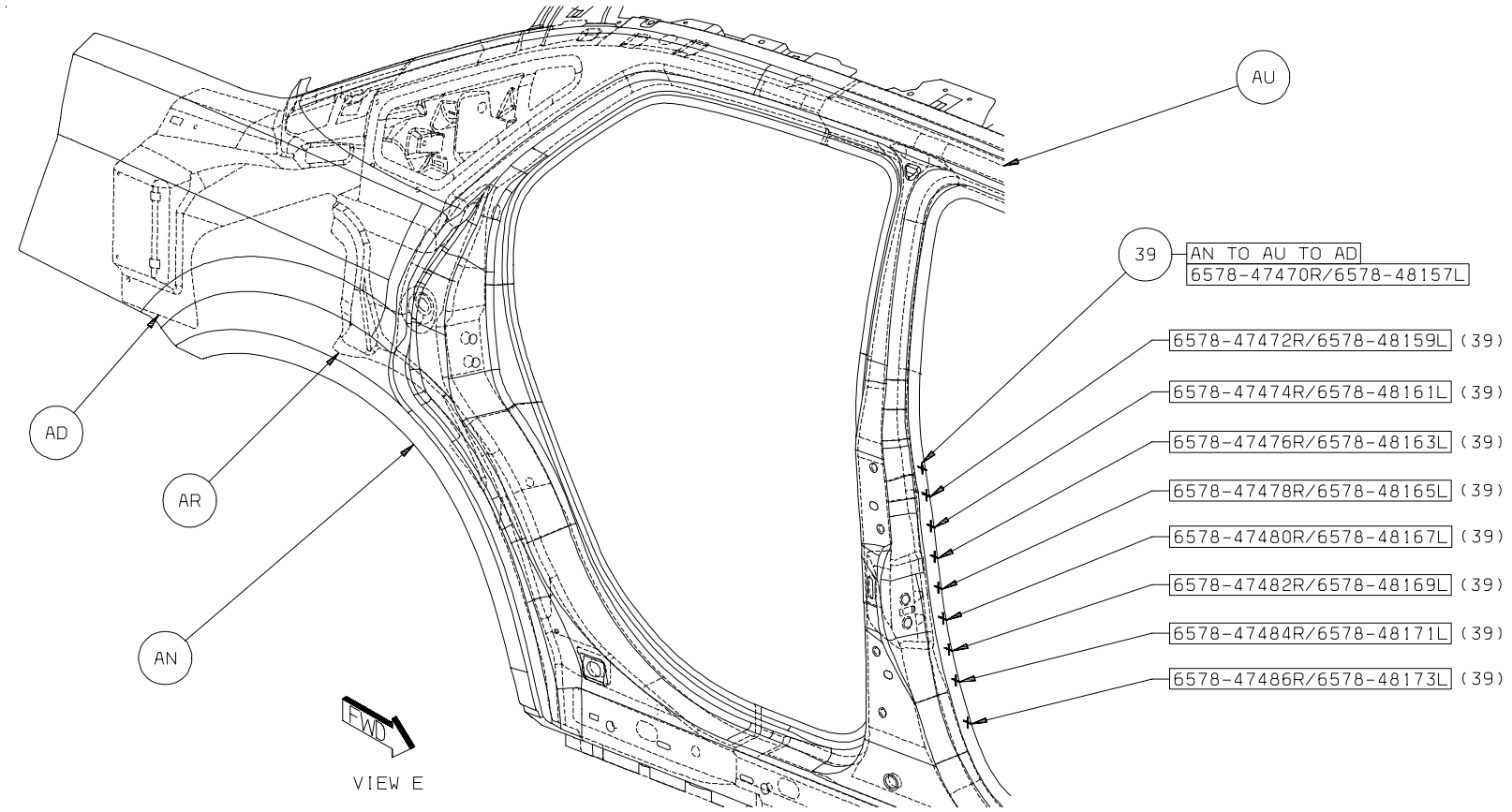

Back To Index

40. AN TO AR TO AD 21/SD S/WELDS

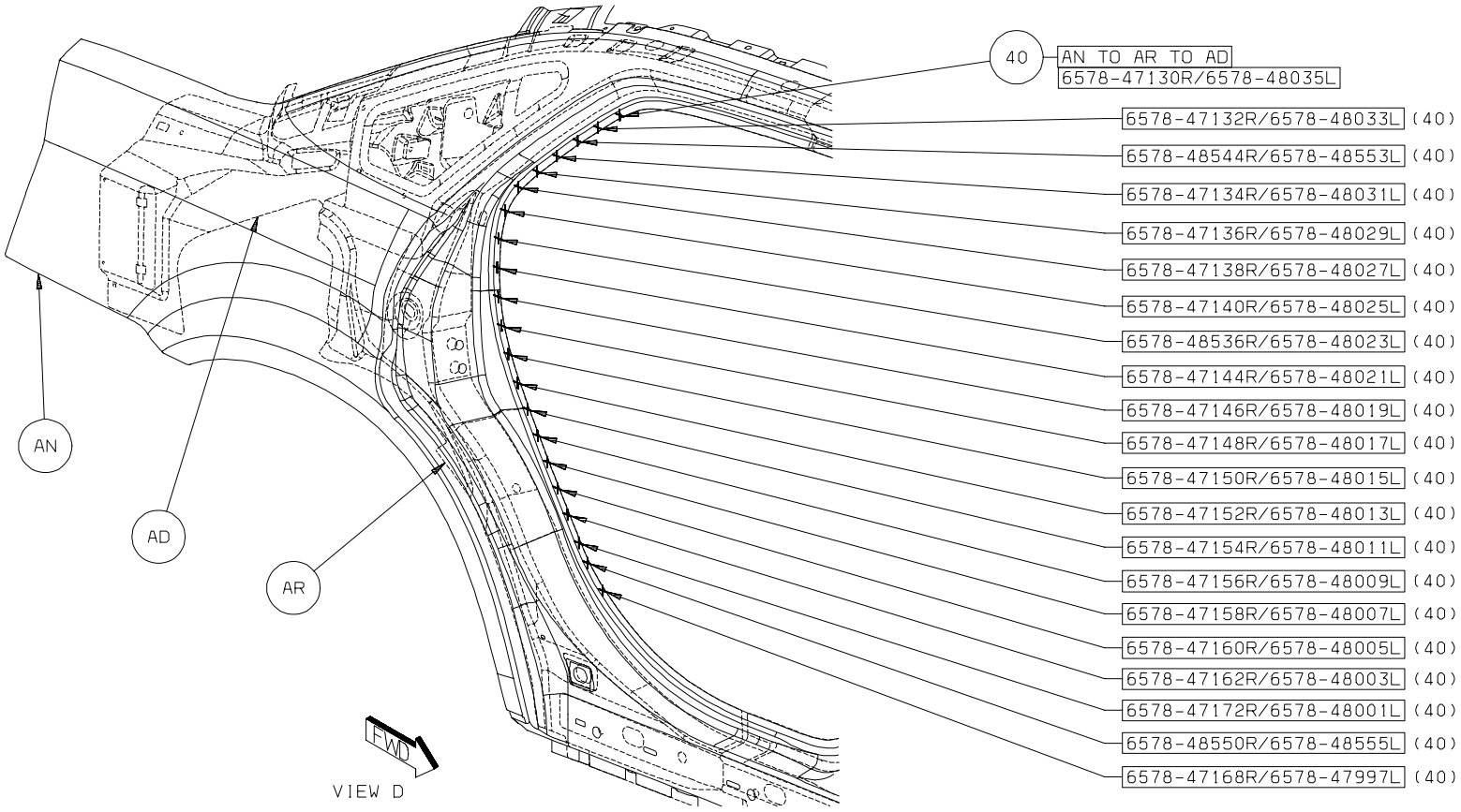

Back To Index

41. AN TO AR TO AD 5/SD S/WELDS
42. AN TO AU TO AD 15/SD S/WELDS

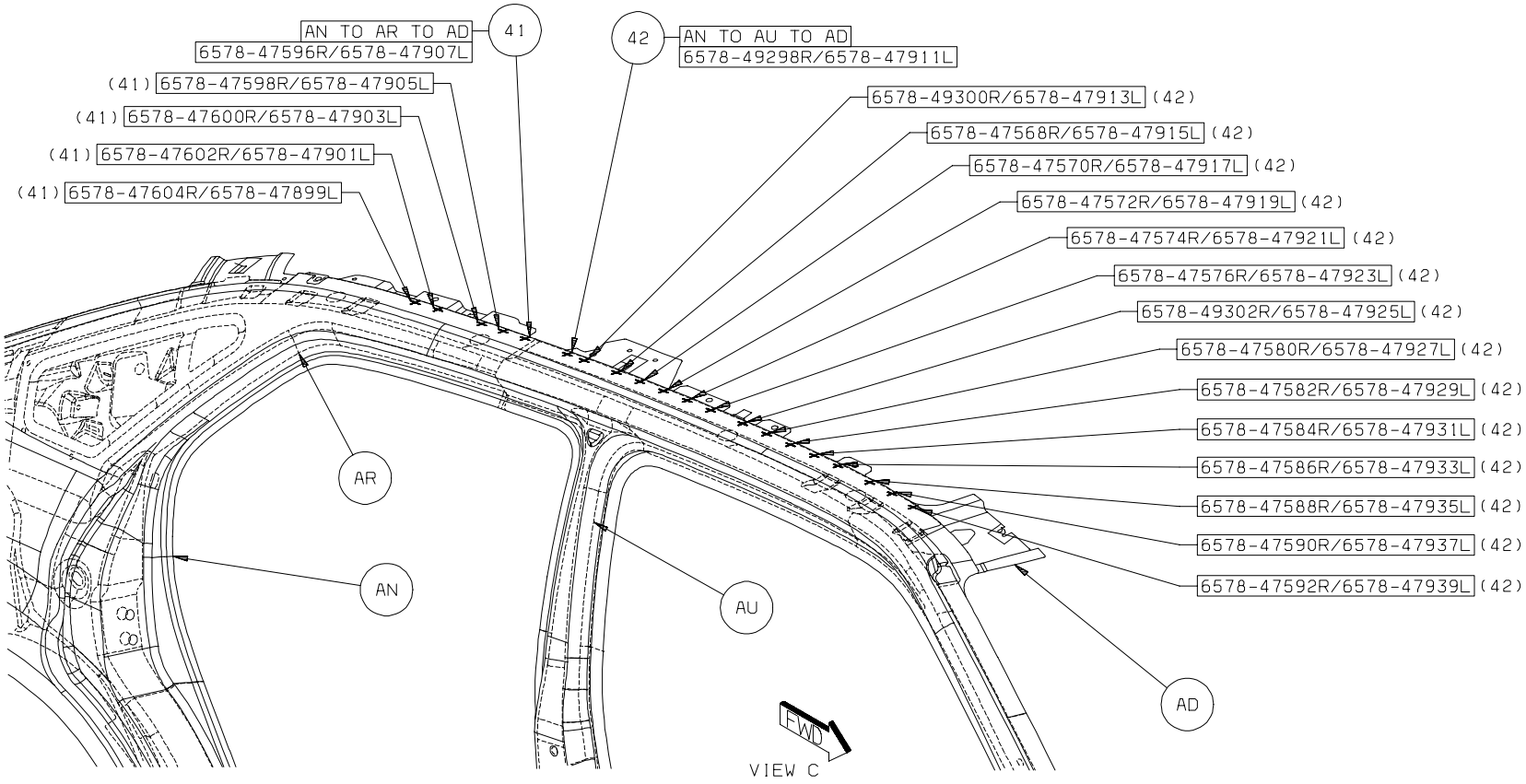

Back To Index

43. AN TO AU TO AD 11/SD S/WELDS

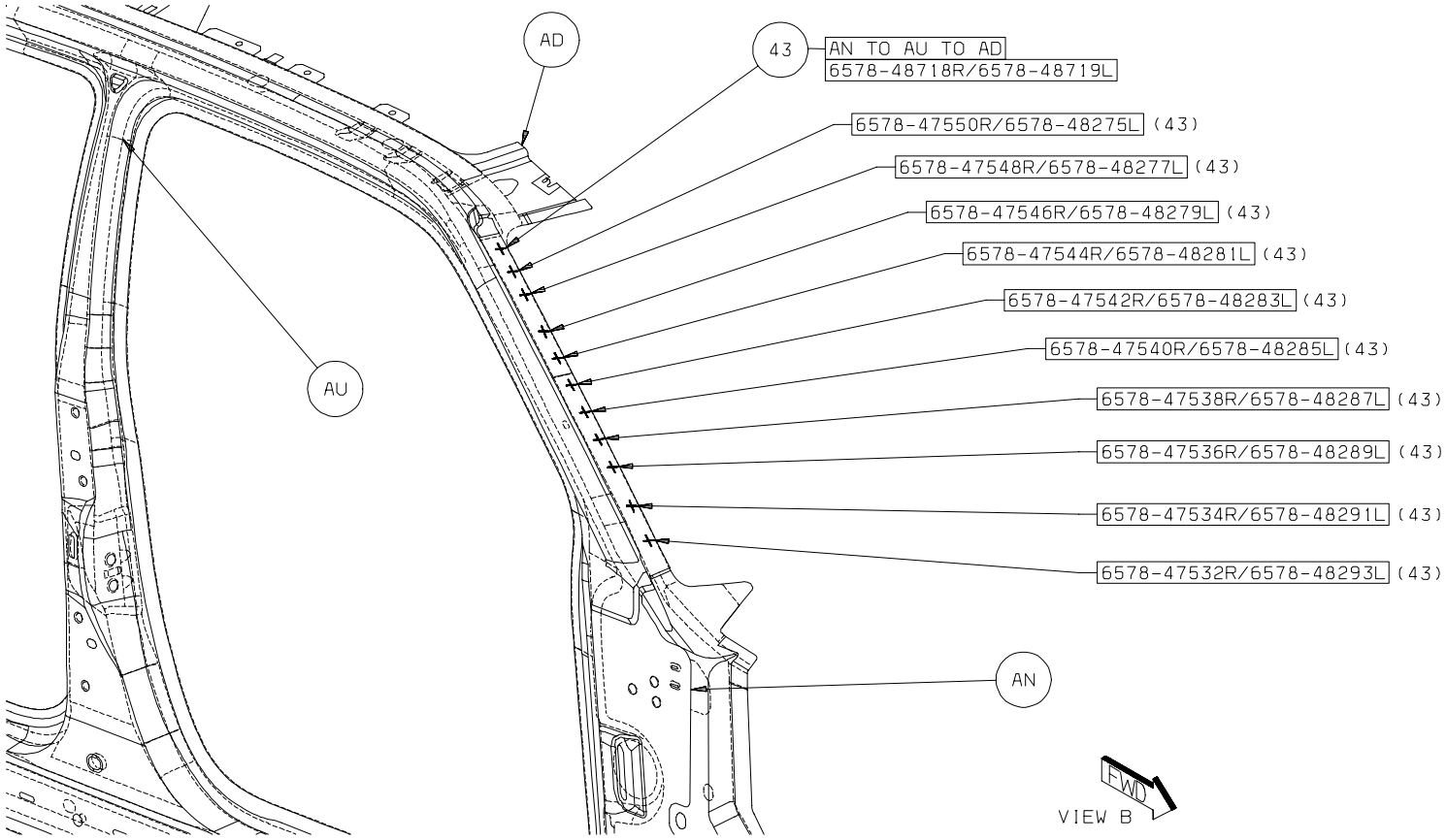

Back To Index

44. AN TO AU TO AV 6/SD S/WELDS
45. AN TO AU TO AW 6/SD S/WELDS

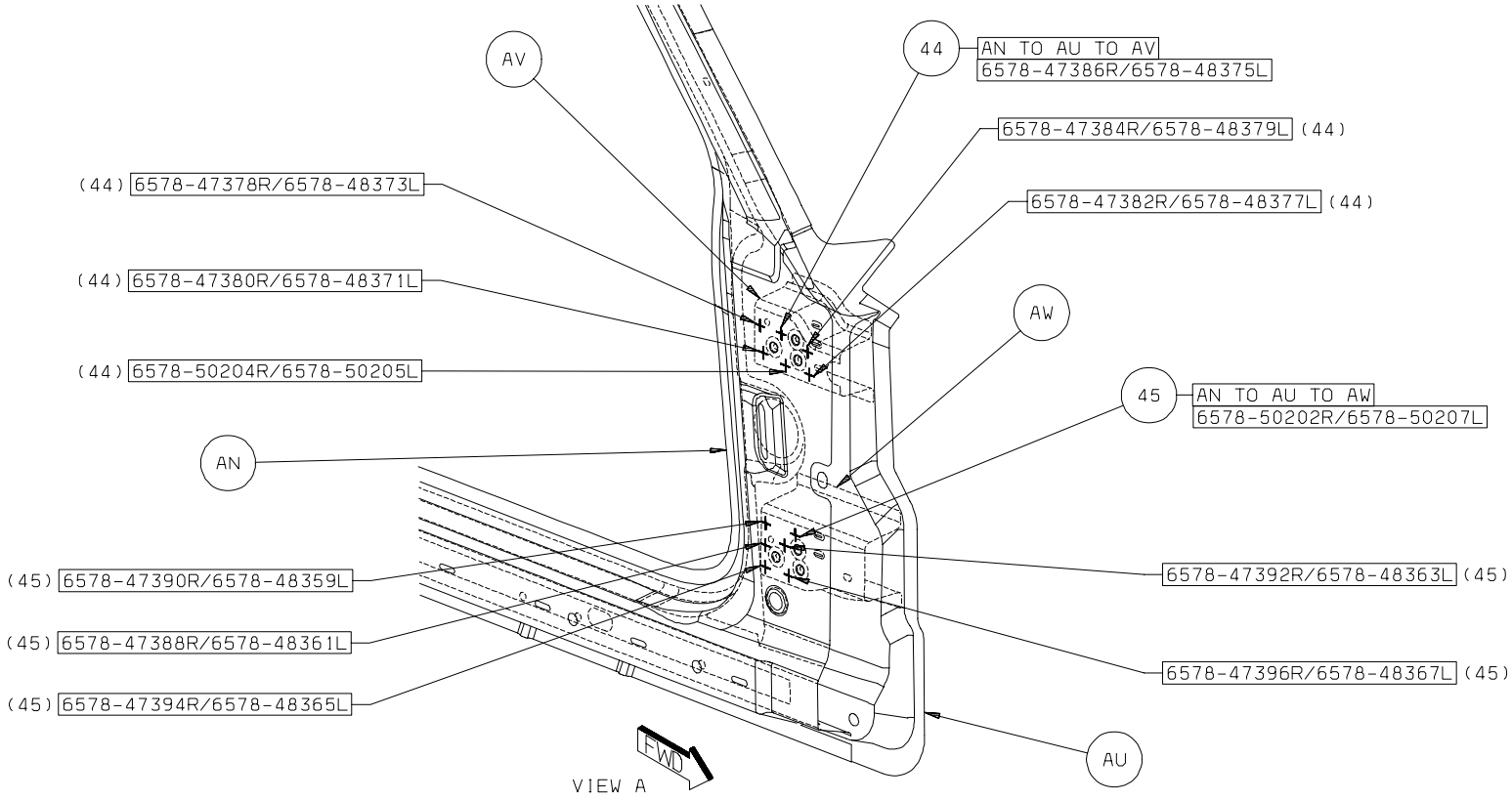

Back To Index

46. AU TO AD TO AY 2/SD S/WELDS
47. AU TO AD TO AX 2/SD S/WELDS
48. AU TO AD TO AZ 3/SD S/WELDS

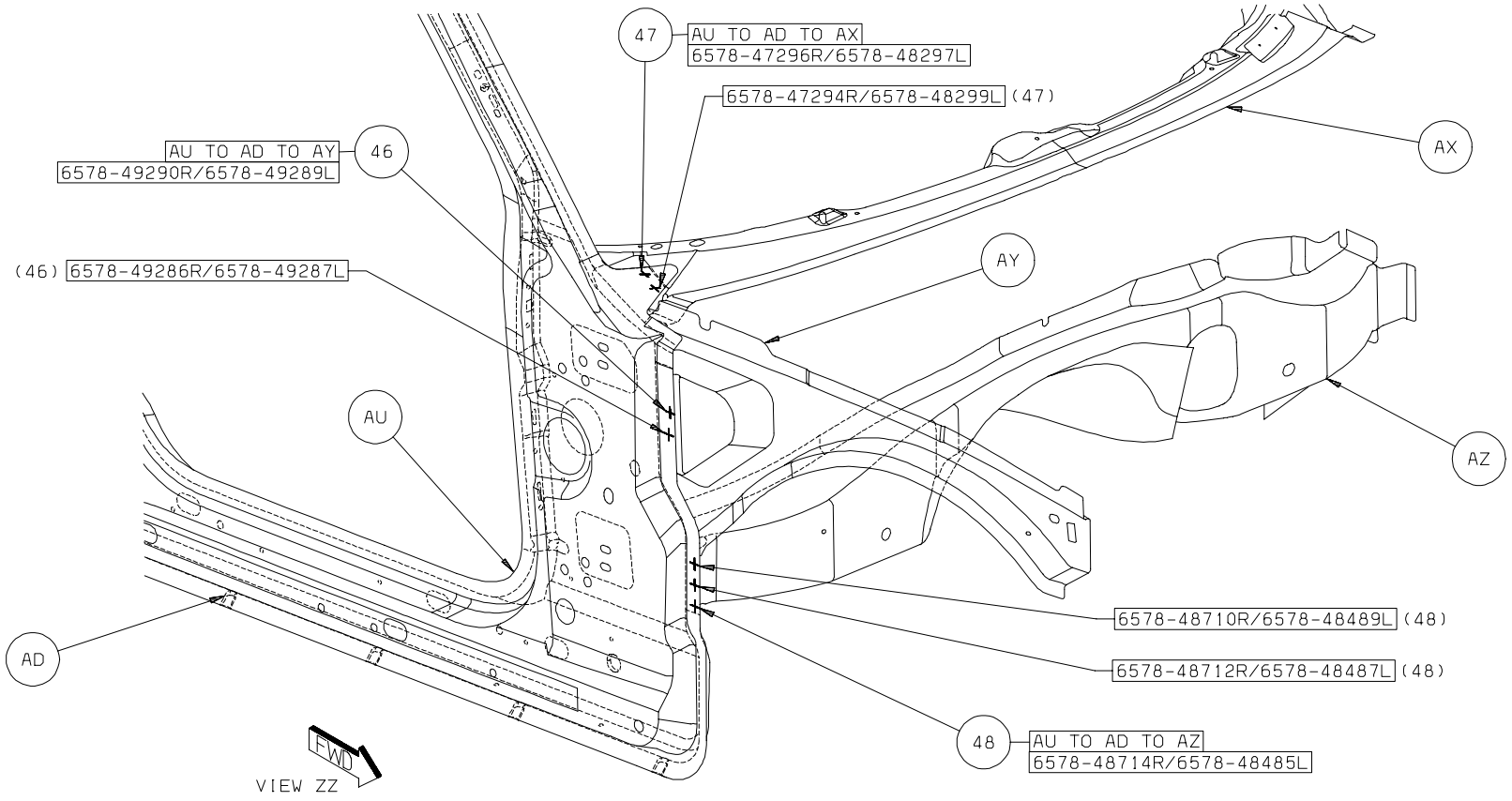

Back To Index

49. AN TO AU TO AD 1L S/WELD
50. AV TO AU 1/SD STRUC ADH
51. AV TO AU 1/SD STRUC ADH
52. AW TO AU 1/SD STRUC ADH
53. AW TO AU 1/SD STRUC ADH

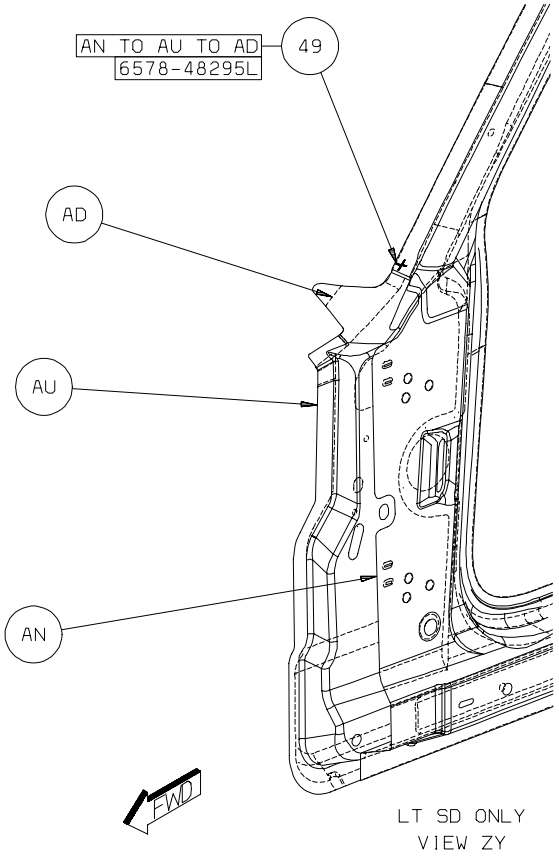

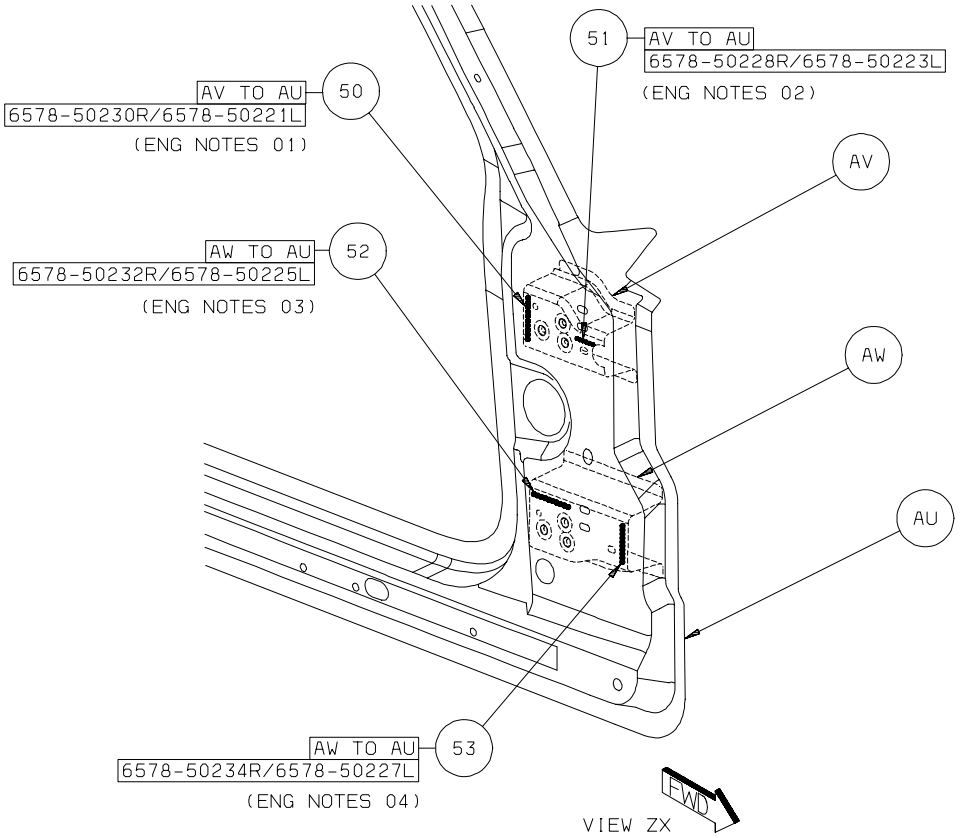

Back To Index

54. BA TO AU 1/SD STRUC ADH
55. AG TO AH 1/SD STRUC ADH

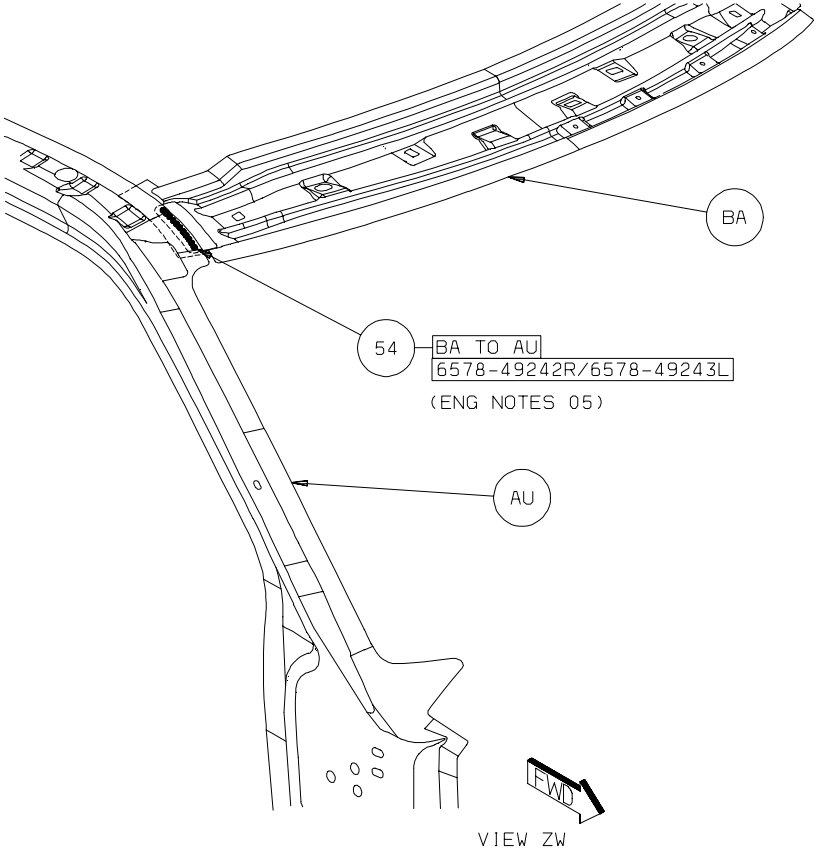

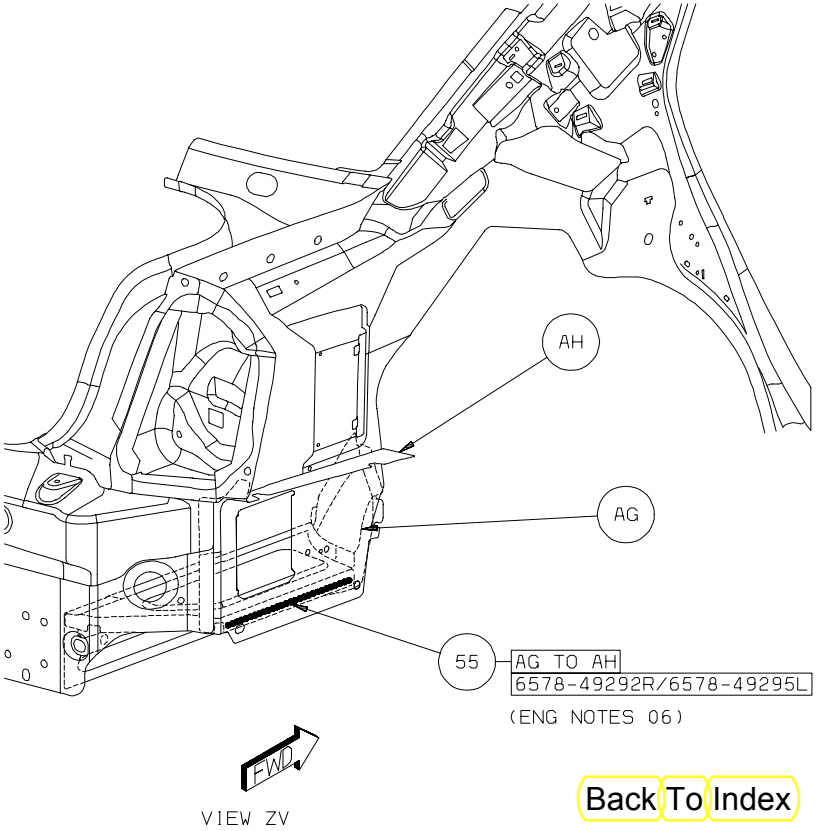

Back To Index

56. AR TO AD 1 STRUC ADH

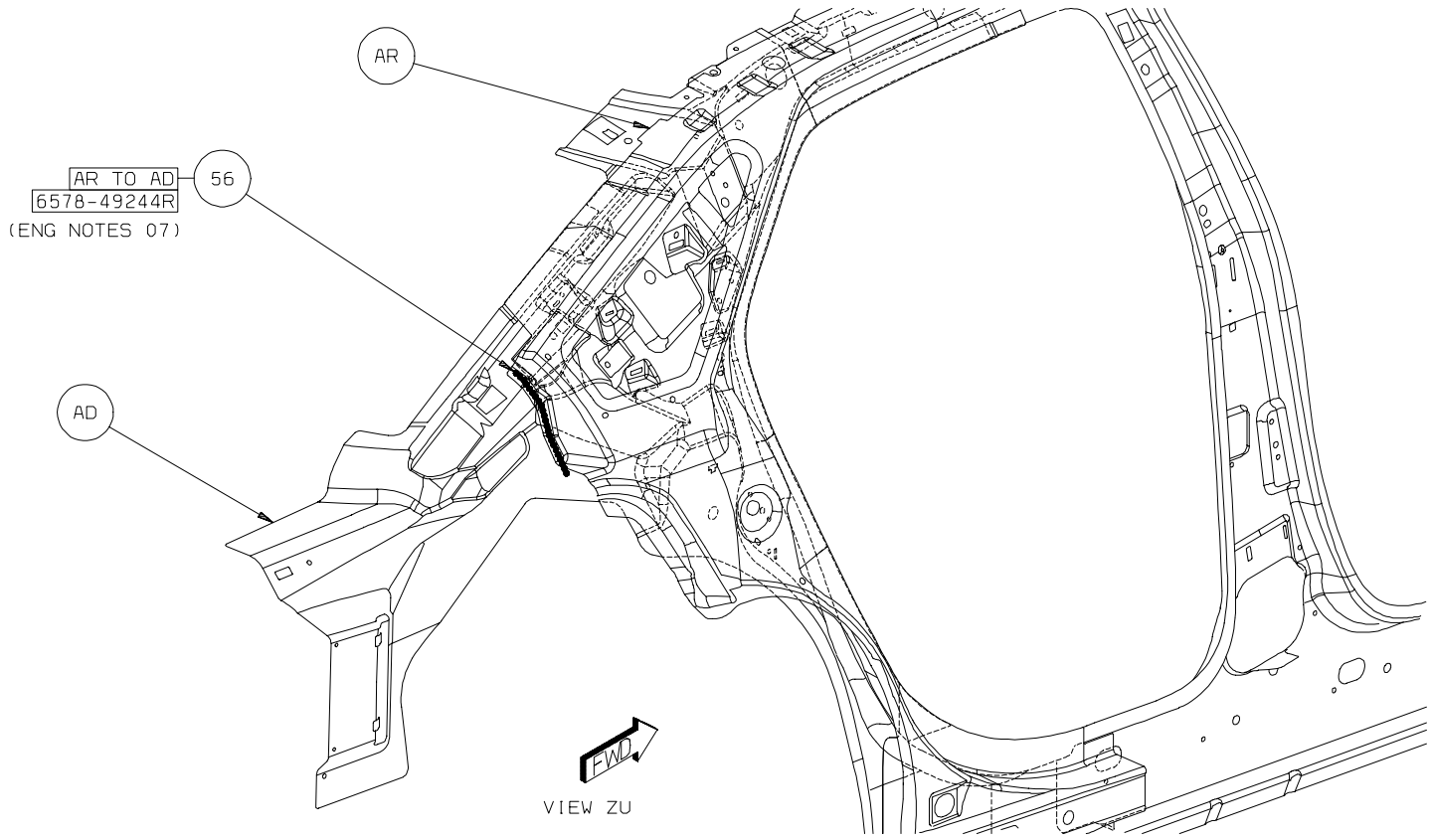

Back To Index

MOPAR.

Use the Best

Make your job easier and your customers happier. When you're repairing Dodge, Chrysler and Jeep® vehicles, nothing compares to Mopar original equipment collision repair parts. You get top quality parts that are easy to install and result in the best fit and finish — something your customers are sure to appreciate. Plus, Mopar collision repair parts come with a limited warranty backed by more than 4,000 DaimlerChrysler dealers nationwide.

Call your local dealer today for all your Mopar parts needs.

DODGE CHRYSLER Jeep

© 2004, DaimlerChrysler Corporation. All rights reserved. Mopar, Dodge, Chrysler and Jeep are registered trademarks of DaimlerChrysler.

Back To Index

PARTS IDENTIFICATION LEGEND, OVERVIEW 24

AA	PANEL - BODY SIDE INR RT -
AA	PANEL - BODY SIDE INR LT -
AB	PANEL - DASH -
AC	PANEL - FRT FLOOR PAN RT -
AC	PANEL - FRT FLOOR PAN LT -
AD	PANEL - RR WHEELHOUSE INR RT -
AD	PANEL - RR WHEELHOUSE INR LT -
AE	PANEL - RR SHELF -
AF	PANEL - COWL UPR -
AG	PANEL - COWL LWR -
AH	PANEL - RR SHELF SUPPORT RT -
AH	PANEL - RR SHELF SUPPORT LT -
AJ	REINF - DASH PANEL -
AK	CROSSMEMBER - RR SHELF -
AL	PANEL - LOAD PATH BEAM UPR INR RT -
AL	PANEL - LOAD PATH BEAM UPR INR LT -
AM	EXTENSION - RAIL TO SILL RT - FRONT
AM	EXTENSION - RAIL TO SILL LT - FRONT
AN	PANEL - TOEBOARD CROSSMEMBER -
AP	RAIL - RR OTR RT -
AP	RAIL - RR OTR LT -
AR	REINF - RR BELT RETRACTOR RT -
AR	REINF - RR BELT RETRACTOR LT -
AS	BOW - ROOF -
AT	HEADER - RR WINDOW OPENING -
AU	HEADER - WINDSHIELD OPENING -
AV	EXTENSION - RAIL FRT RT -
AV	EXTENSION - RAIL FRT LT -
AW	COVER PLATE - RAIL RR RT - FRONT
AW	COVER PLATE - RAIL RR LT - FRONT
AX	CROSSMEMBER - FRT SEAT FRT RT -
AX	CROSSMEMBER - FRT SEAT FRT LT -
AY	TAPPING PLATE - DOOR HINGE FRT RT -
AY	TAPPING PLATE - DOOR HINGE FRT LT -
AZ	TAPPING PLATE - BODY SIDE FRT DOOR LWR HINGE RT -
AZ	TAPPING PLATE - BODY SIDE FRT DOOR LWR HINGE LT -
BA	CROSSMEMBER - FRT SEAT RR RT -
BA	CROSSMEMBER - FRT SEAT RR LT -

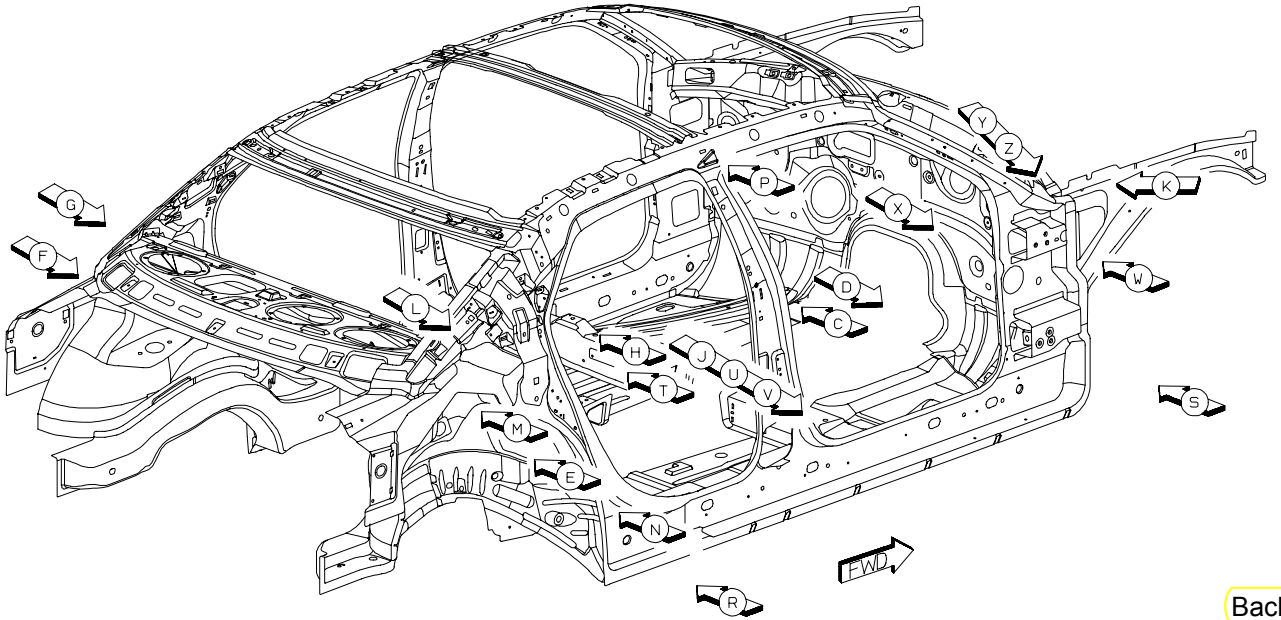

Back To Index

1. AF TO AA 4/SD S/WELD
2. AY TO AA TO AL 1/SD S/WELD

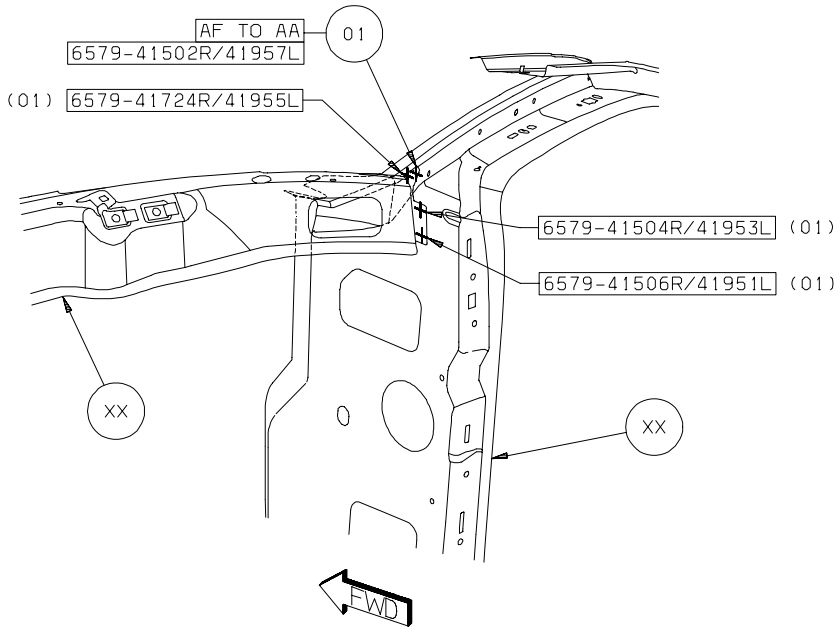

VIEW Z

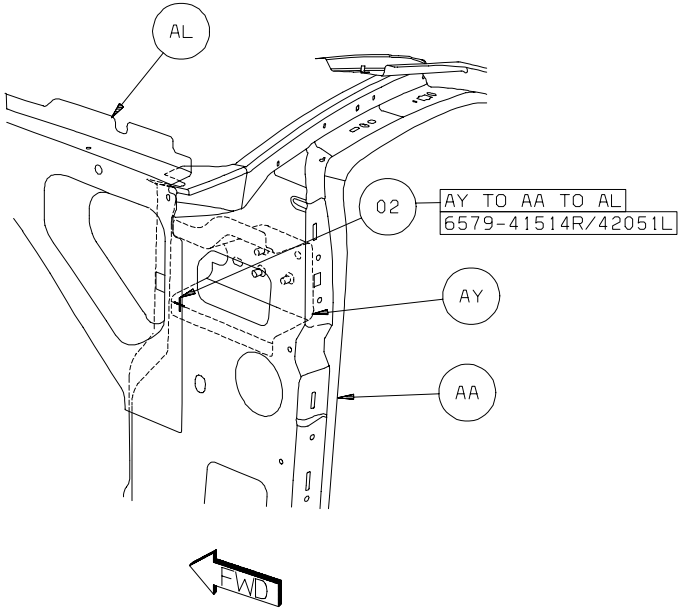

VIEW Y

Back To Index

3. AB TO AL TO AA 5/SD S/WELD
4. AB TO AA 6/SD S/WELD
5. AC TO AB TO AA 1/SD S/WELD
6. AJ TO AB TO AA 3/SD S/WELD

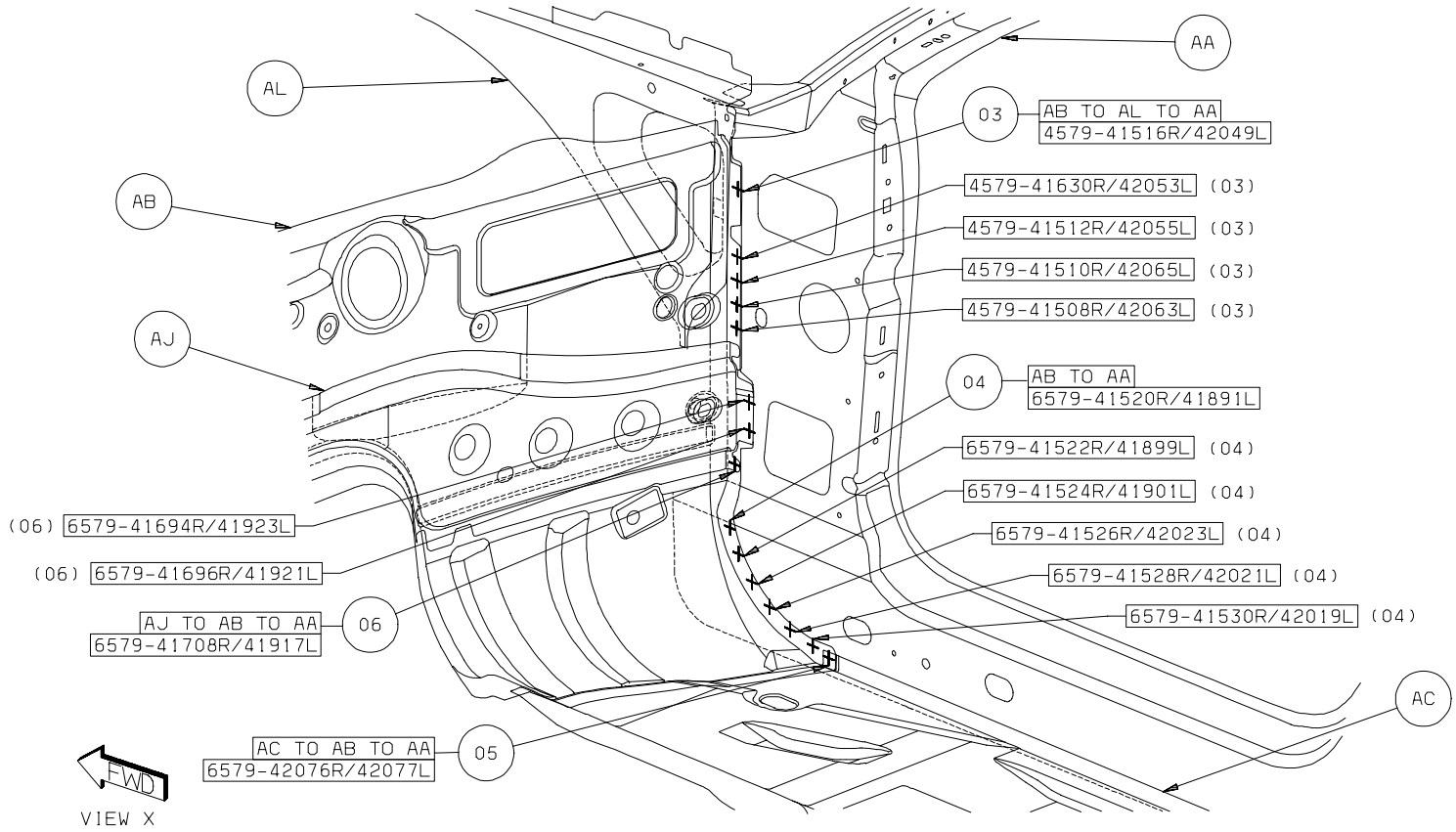

Back To Index

7. AY TO AA TO AG 2/SD S/WELD
8. AX TO AA 6 S/WELD

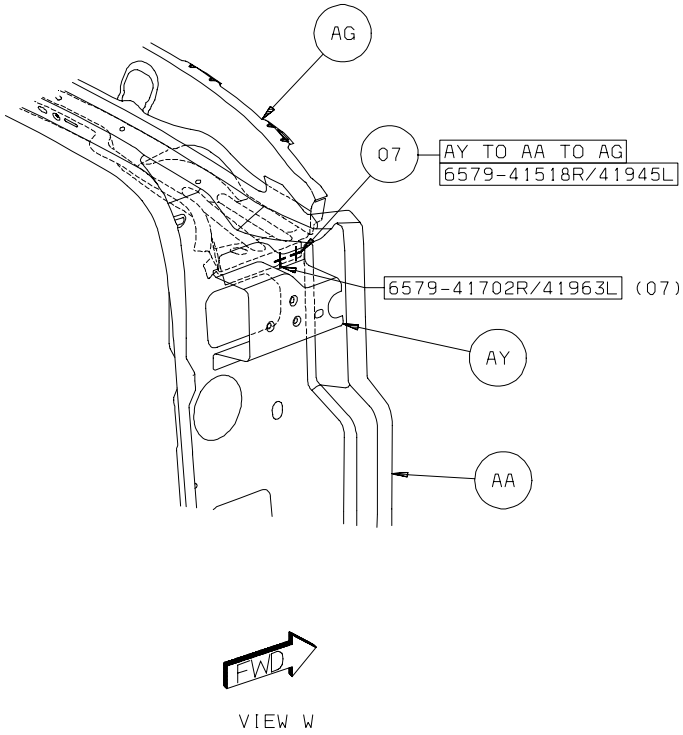

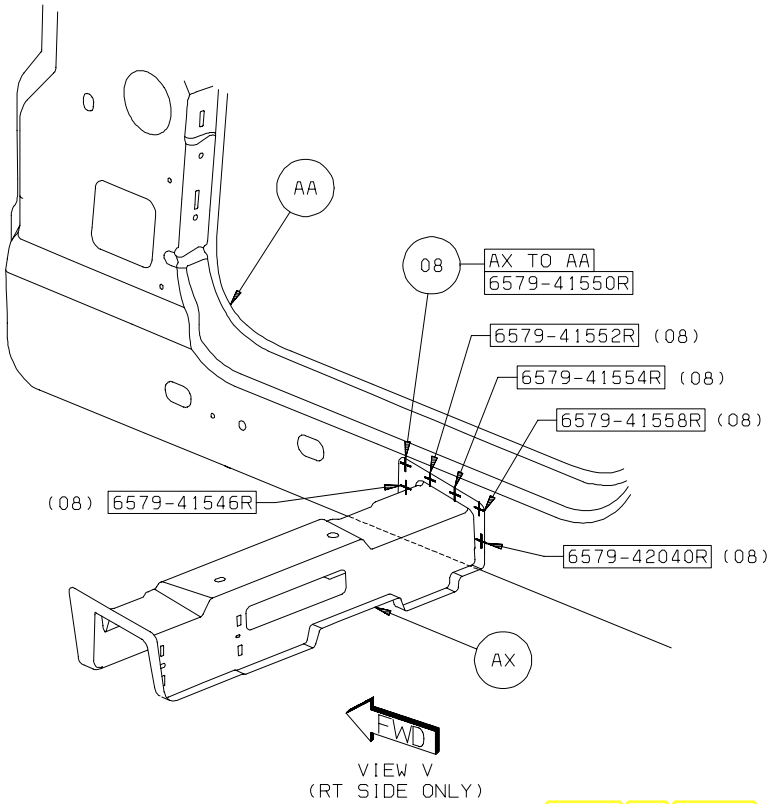

Back To Index

9. AC TO AA 21 S/WELD

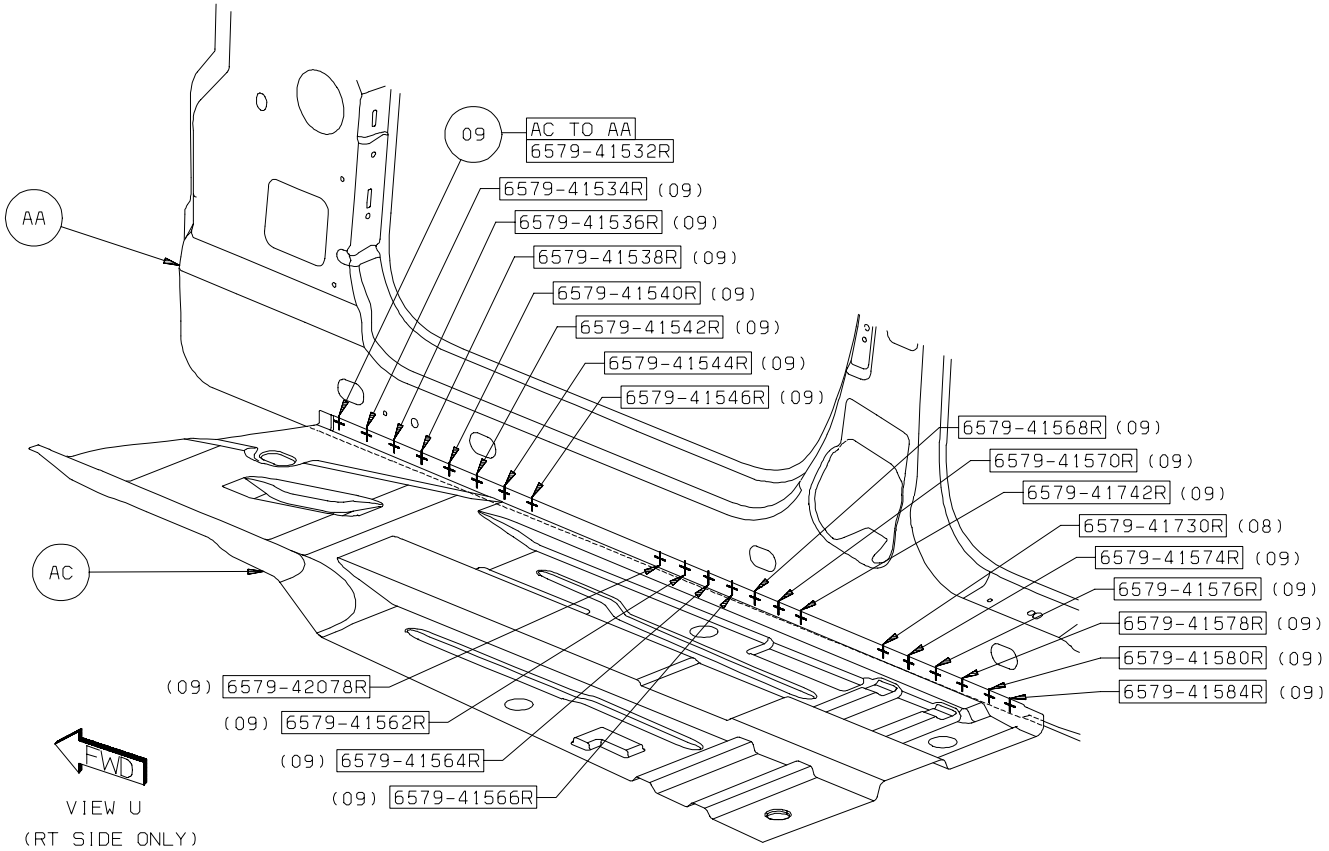

Back To Index

10. AC TO AA 21 S/WELD

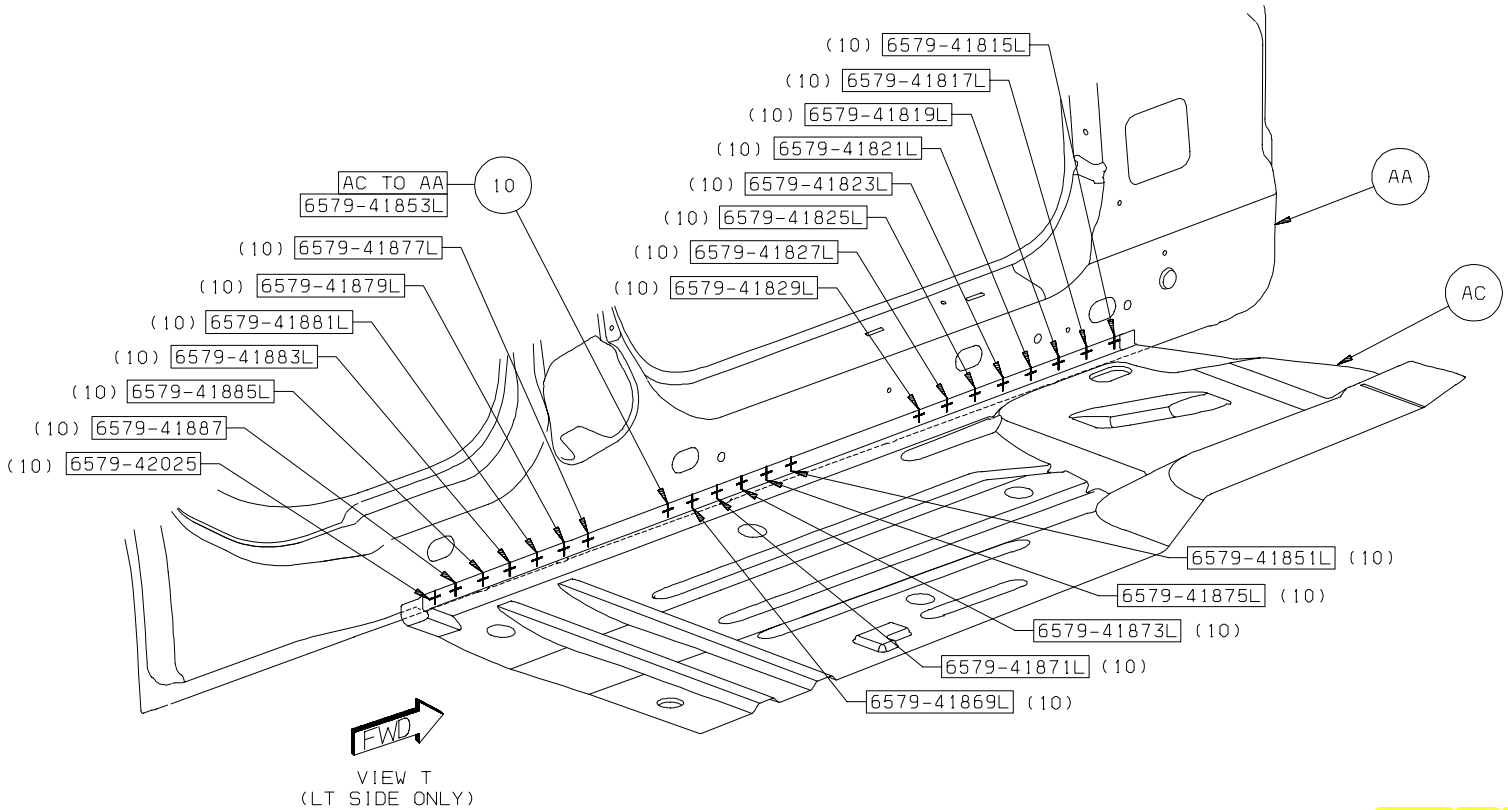

Back To Index

11. AL TO AA 3/SD S/WELD
12. AN TO AL TO AA 2/SD S/WELD
13. AN TO AA 1/SD S/WELD
14. AM TO AA 7/SD S/WELD
15. AZ TO AA TO AN 1/SD S/WELD

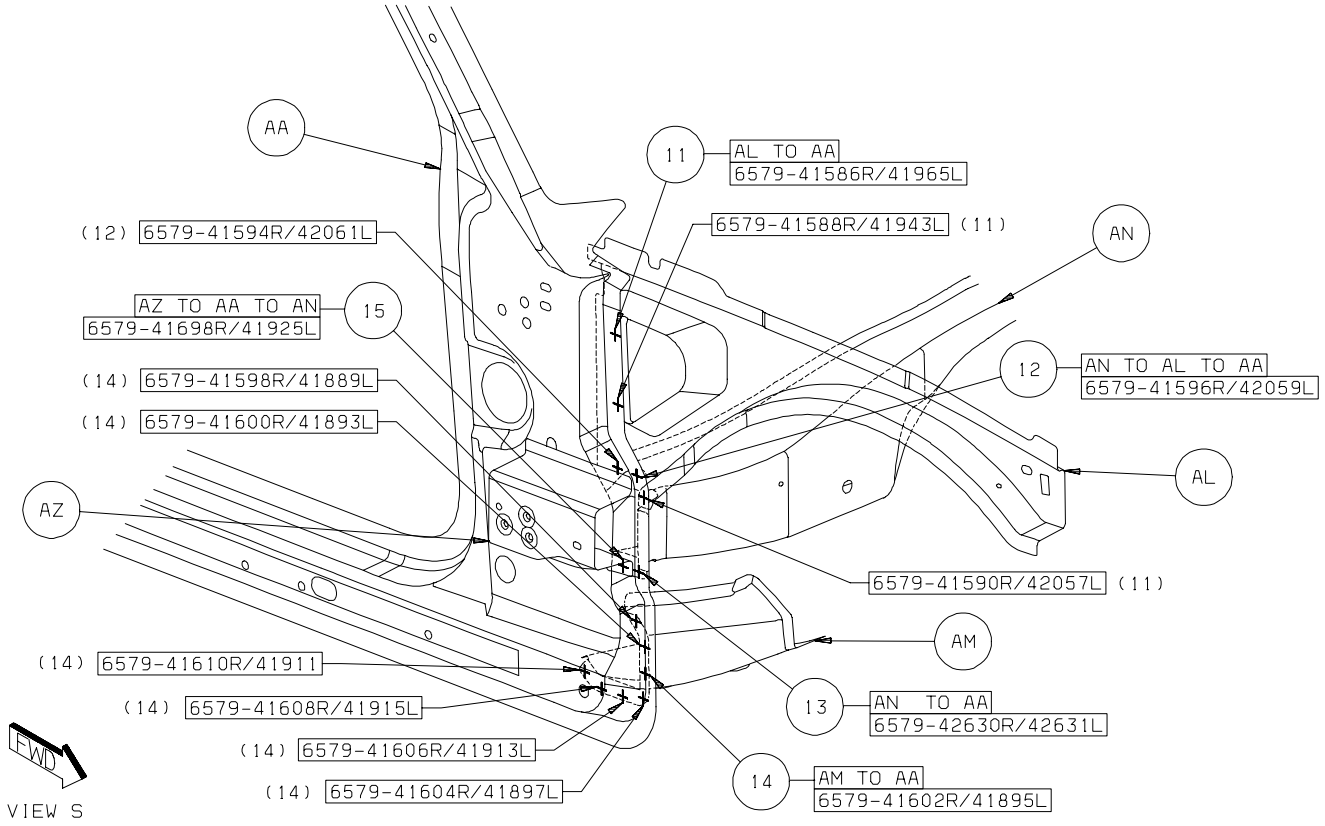

Back To Index

16. AP TO AA 16/SD S/WELD

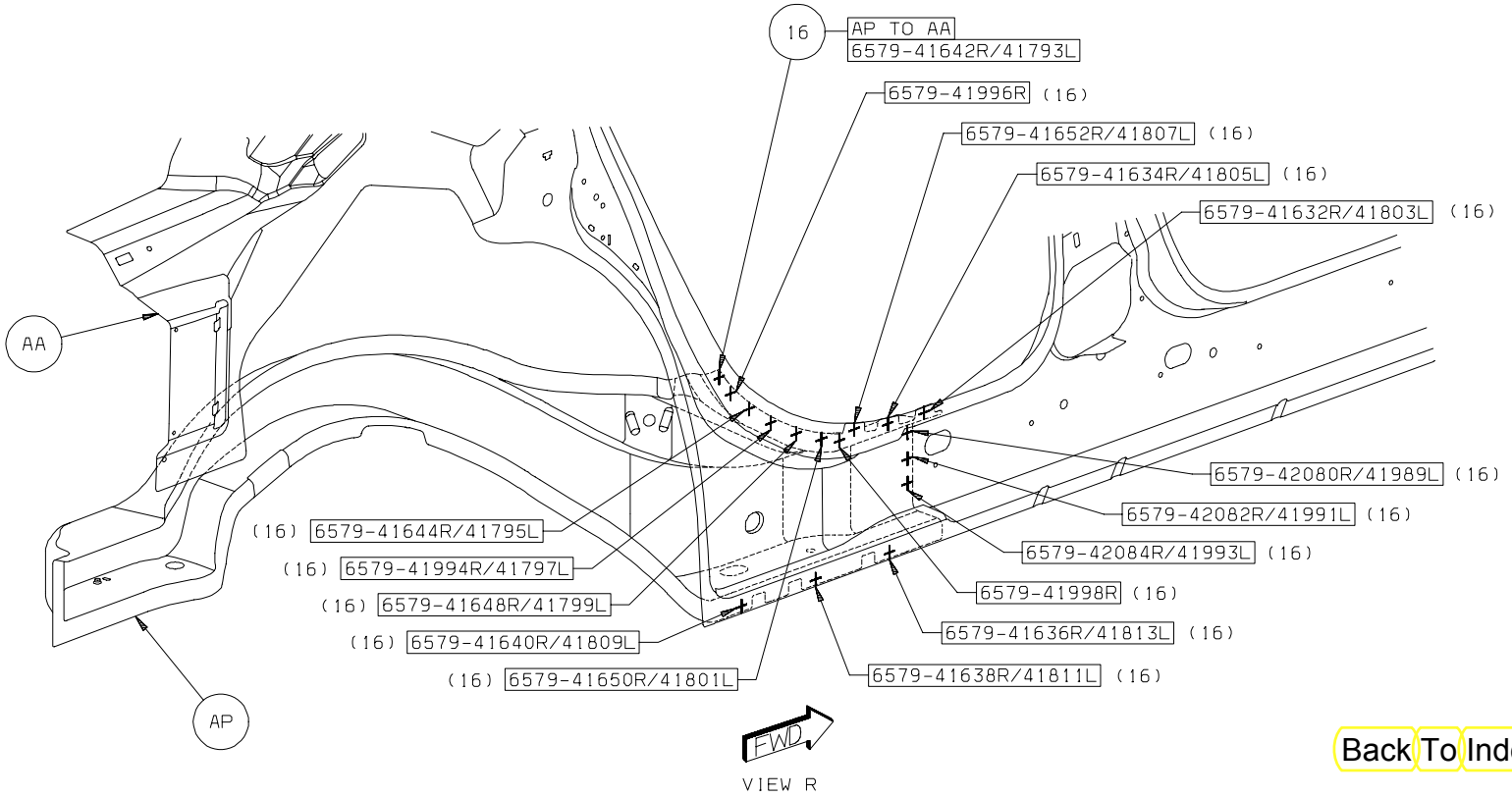

Back To Index

17. AS TO AA 4/SD S/WELD
18. AT TO AA 4/SD S/WELD

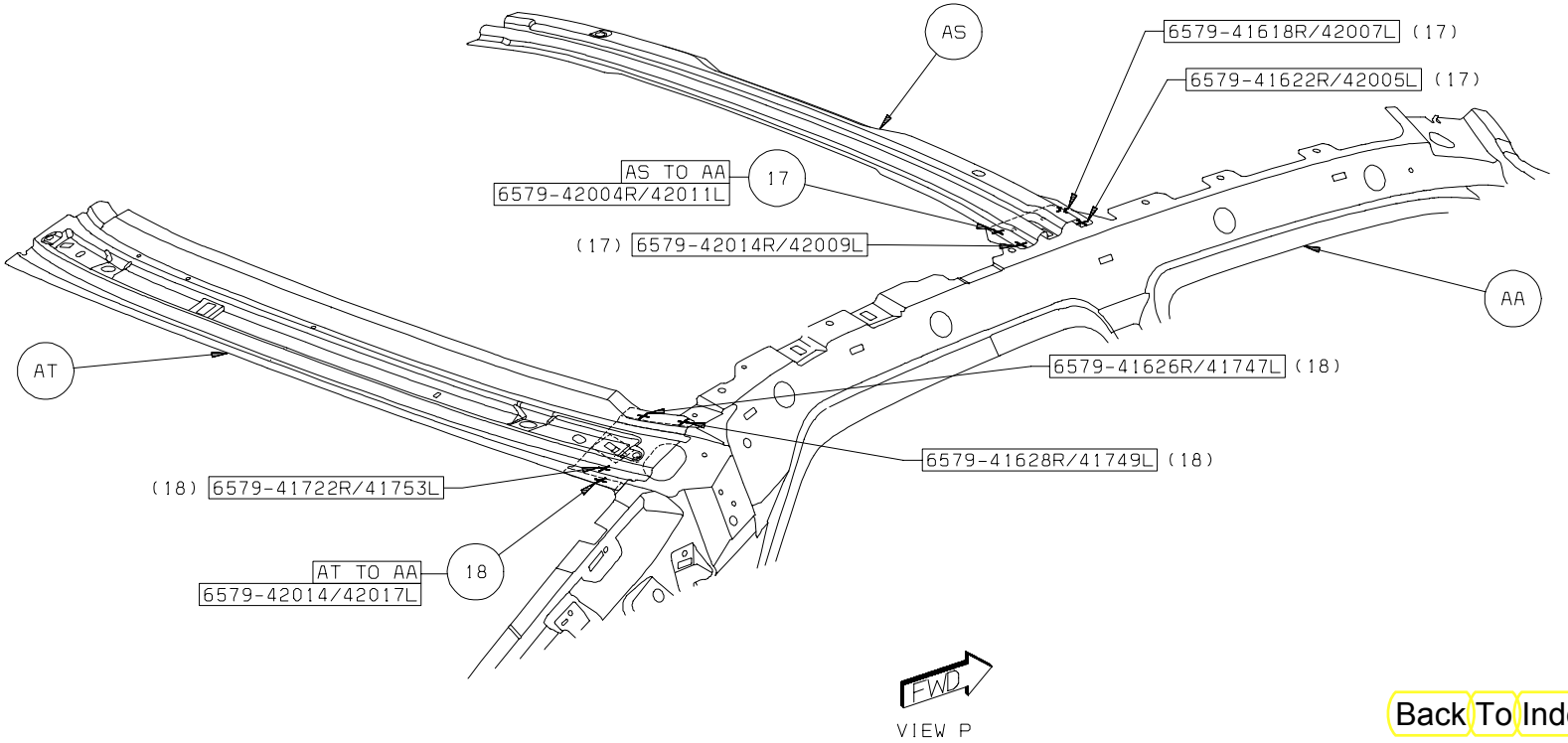

Back To Index

19. AK TO AA 3/SD S/WELD
20. AD TO AA 5/SD S/WELD
21. AW TO AA 1/SD S/WELD

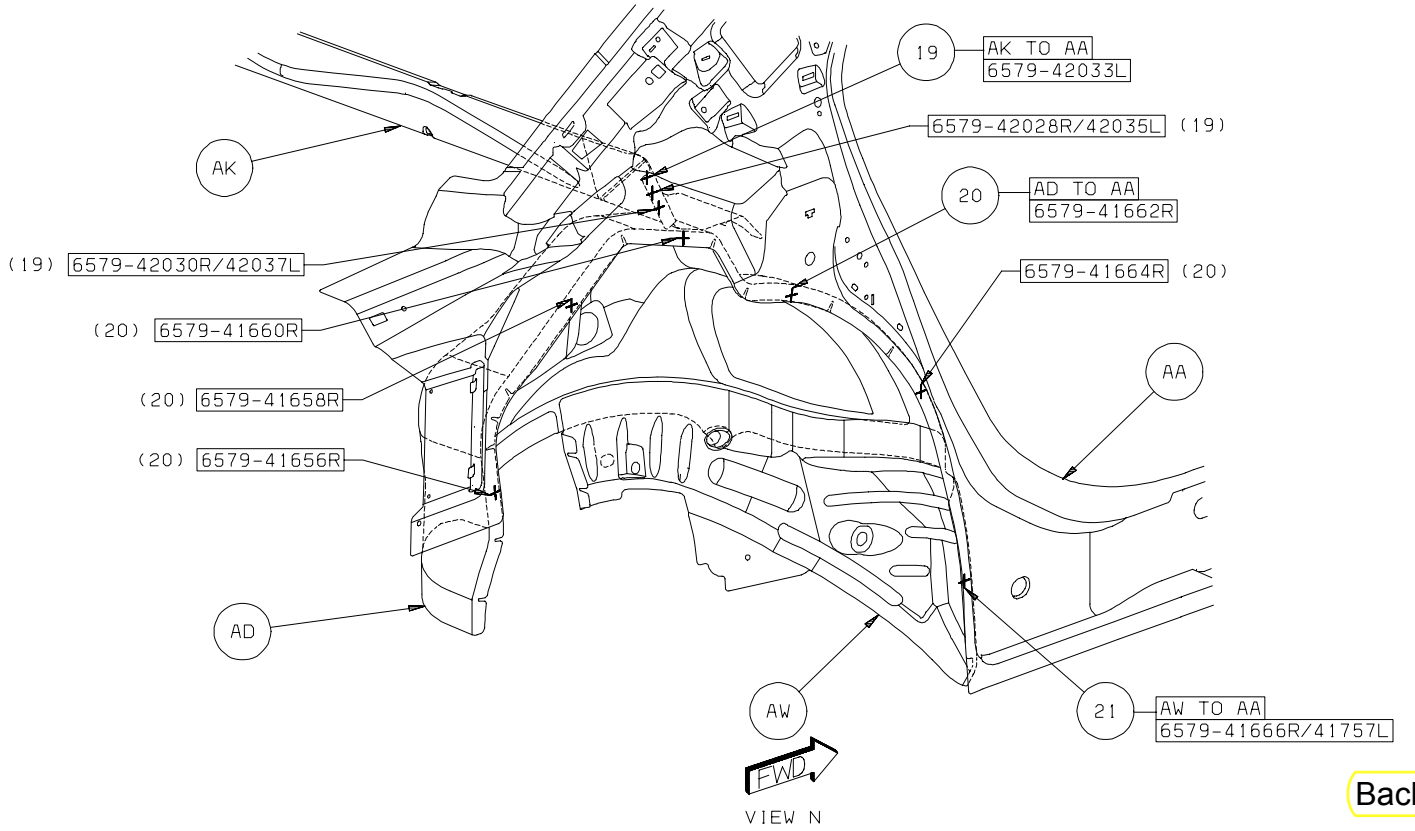

Back To Index

22. AE TO AA 11 S/WELD
23. AH TO AR TO AA 3/SD S/WELD

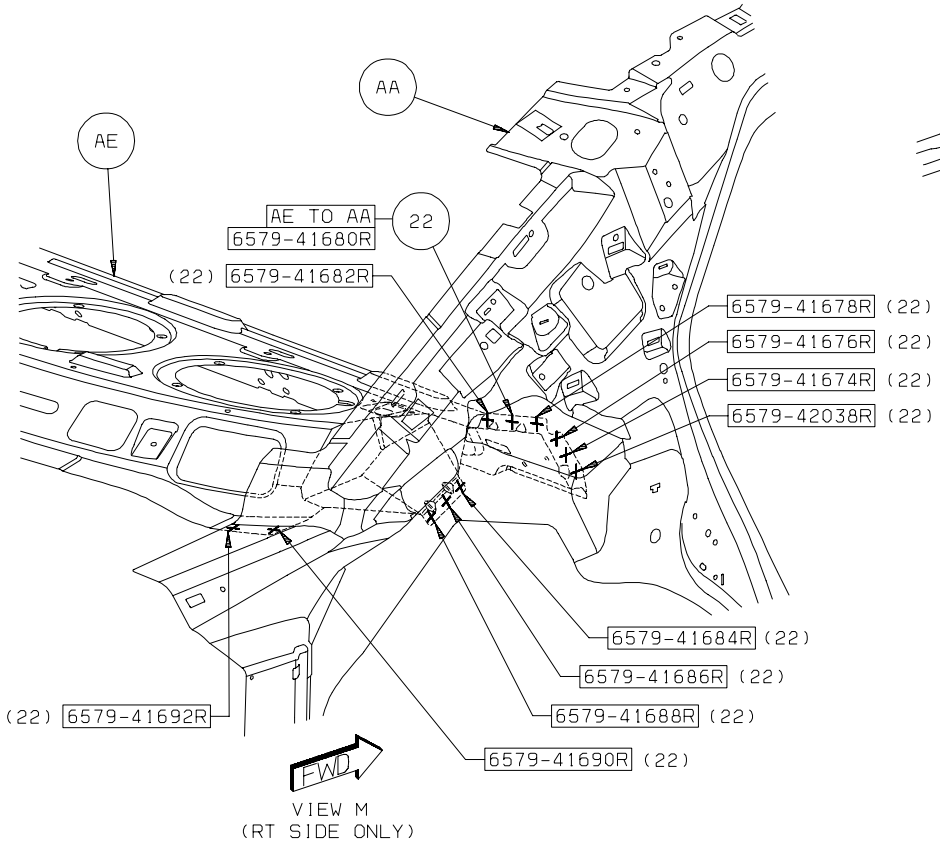

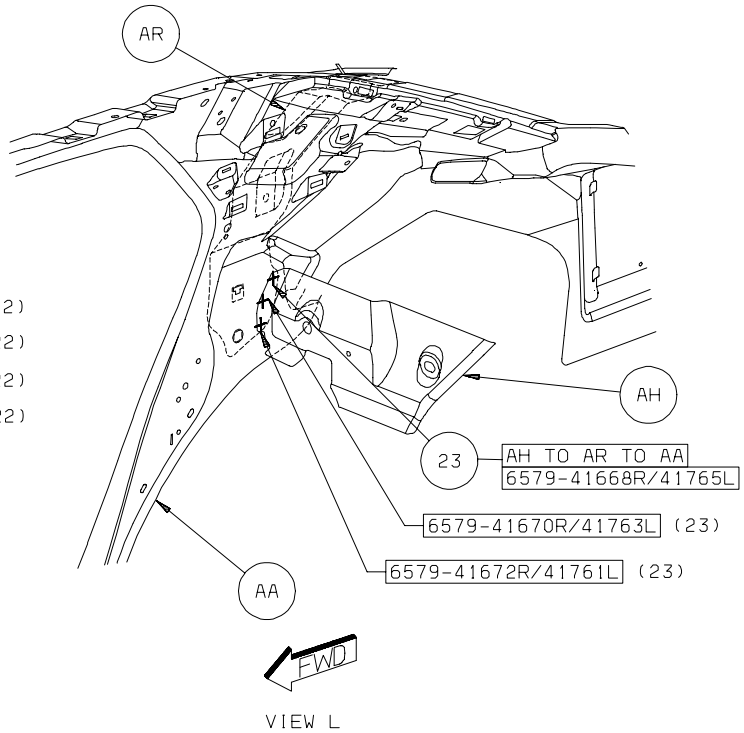

Back To Index

24. AU TO AA 4/SD S/WELD
25. AG TO AA 3/SD S/WELD

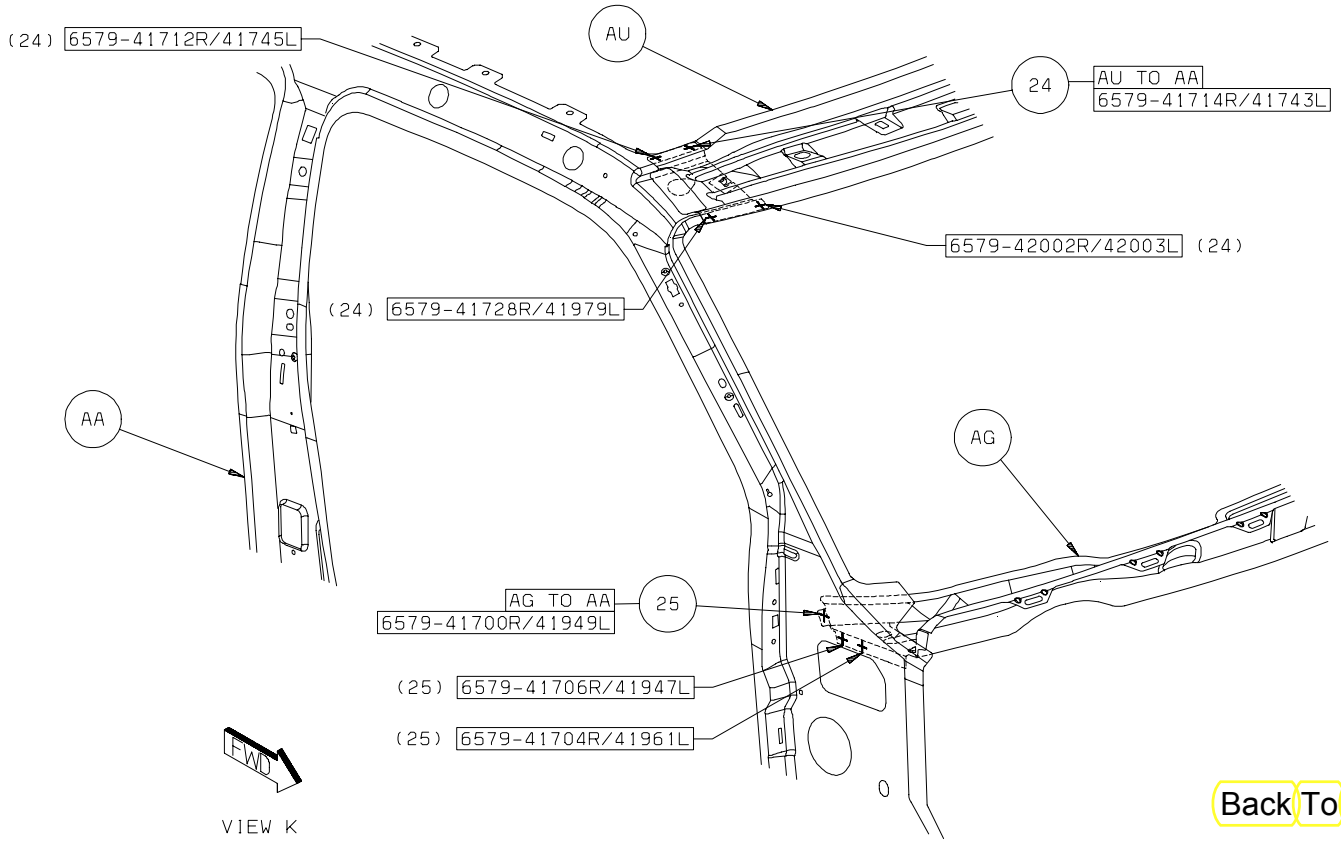

Back To Index

26. AV TO AA 2 S/WELD
27. AV TO AX TO AA 1 S/WELD
28. BA TO AA 5 S/WELD

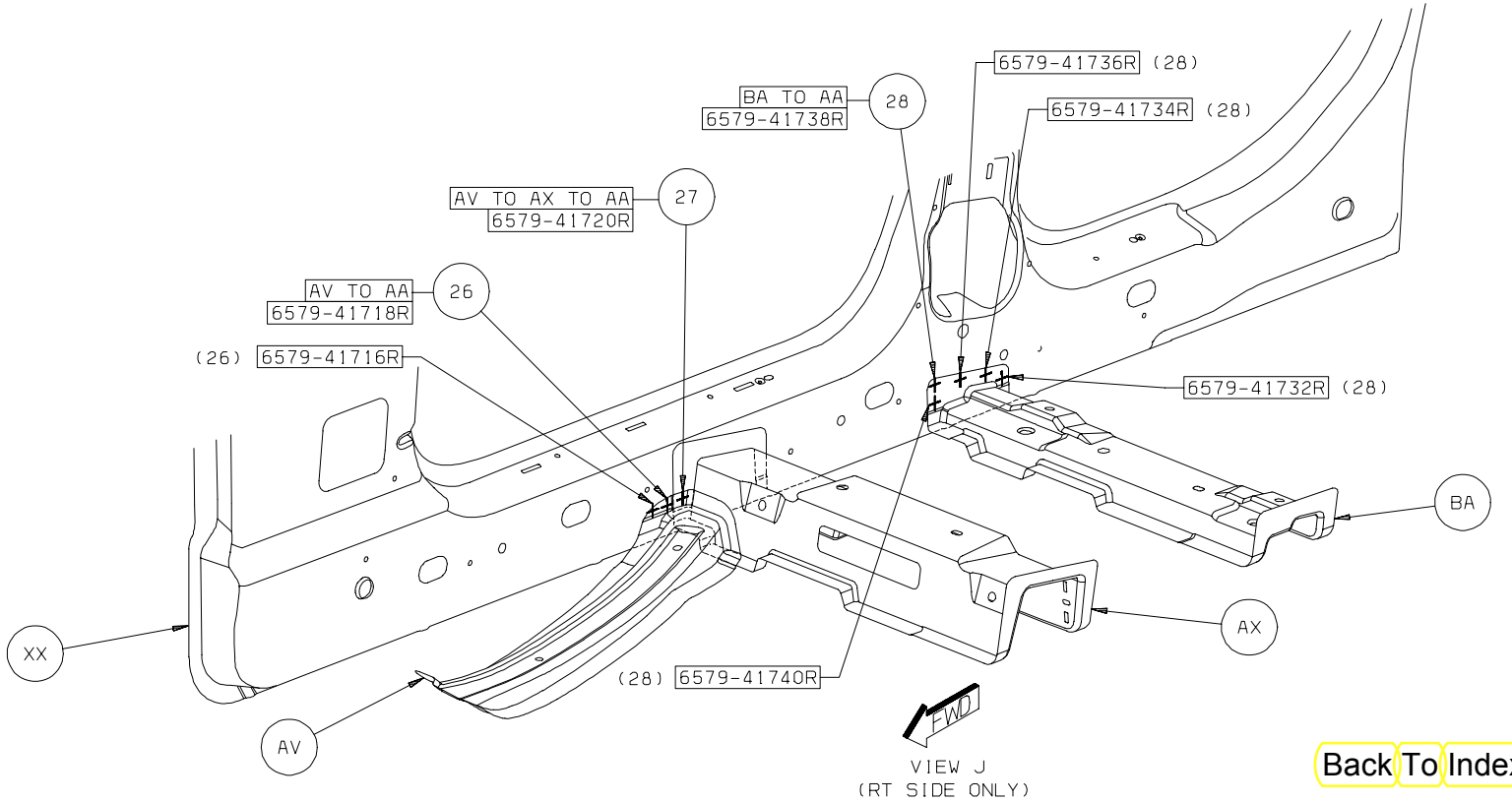

Back To Index

29. BA TO AA 7 S/WELD
30. AV TO AA 3 S/WELD
31. AV TO AX TO AA 1 S/WELD
32. AX TO AA 5 S/WELD

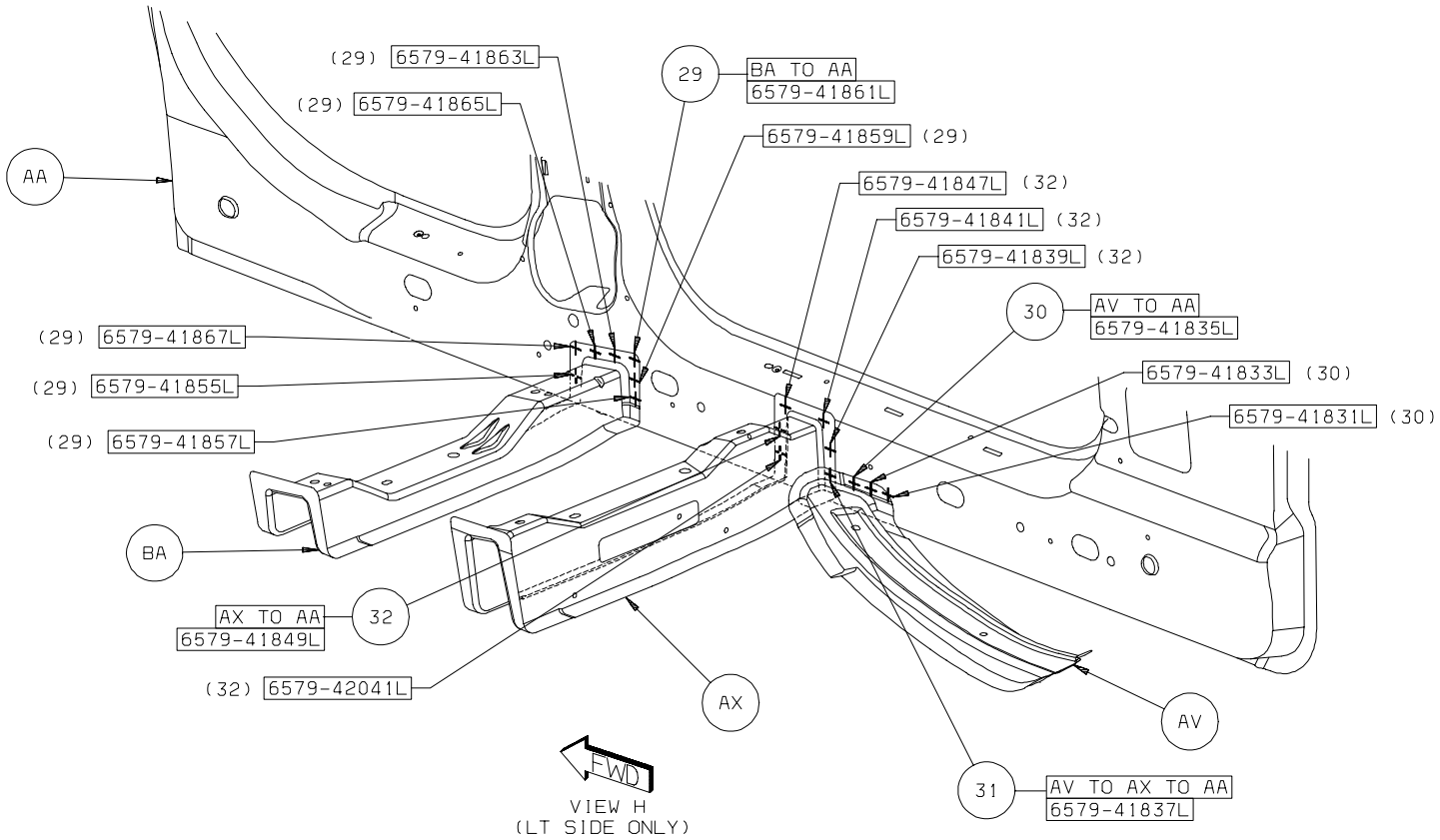

Back To Index

33. AE TO AA 12 S/WELD

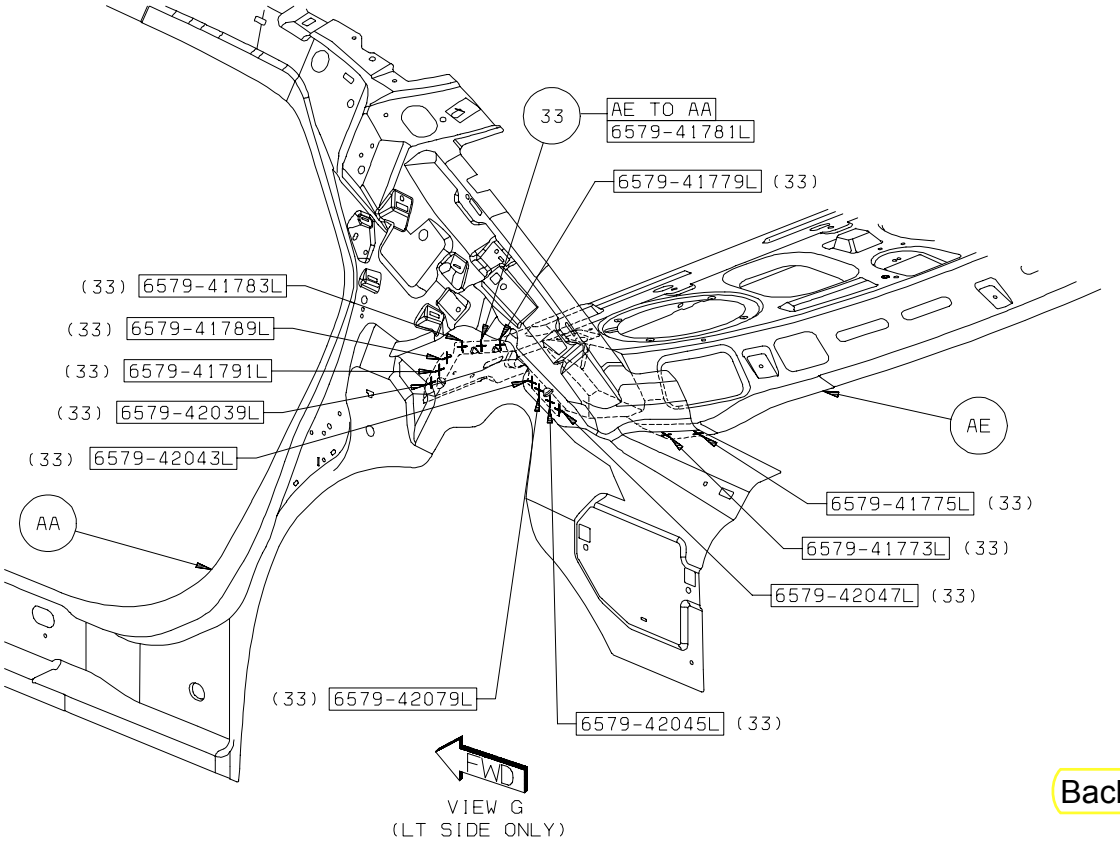

Back To Index

34. AD TO AA 5 S/WELD
35. AD TO AA 1 ADH BEAD

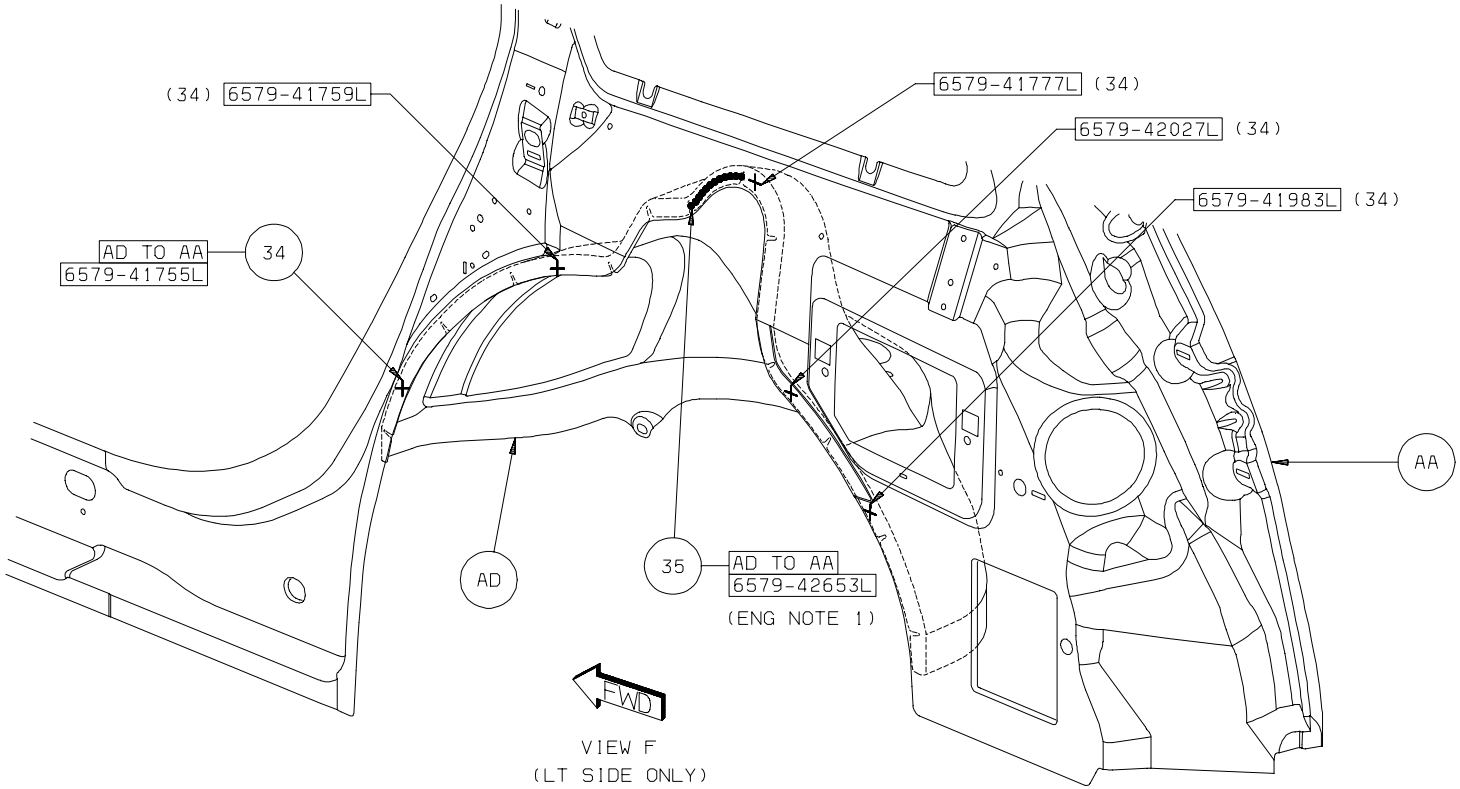

Back To Index

43. AL TO AG TO AC TO AB TO AA 1 ADH BEAD

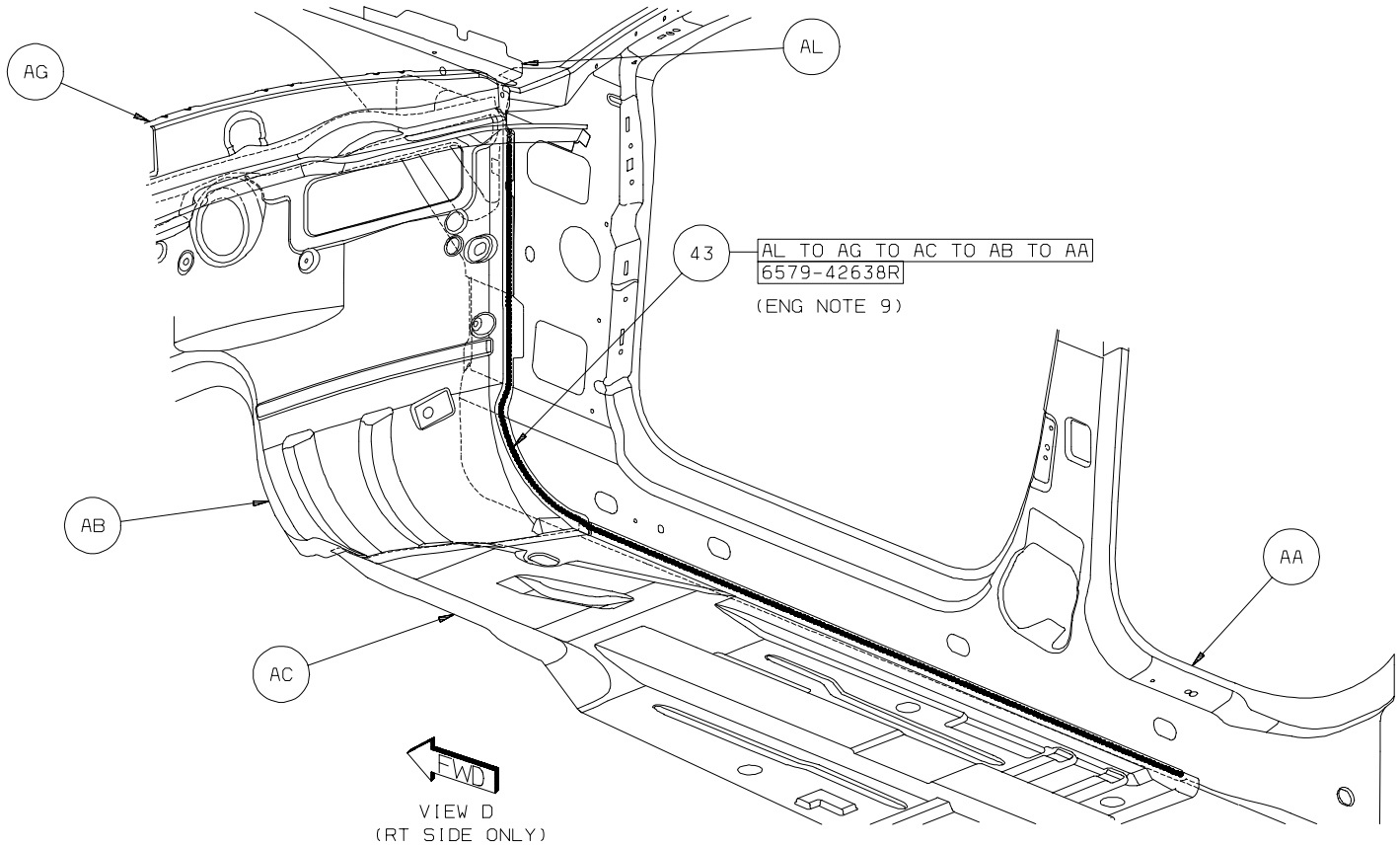

Back To Index

44. AL TO AB TO AG TO AB TO AA 1 ADH BEAD
45. AC TO AA 1 ADH BEAD

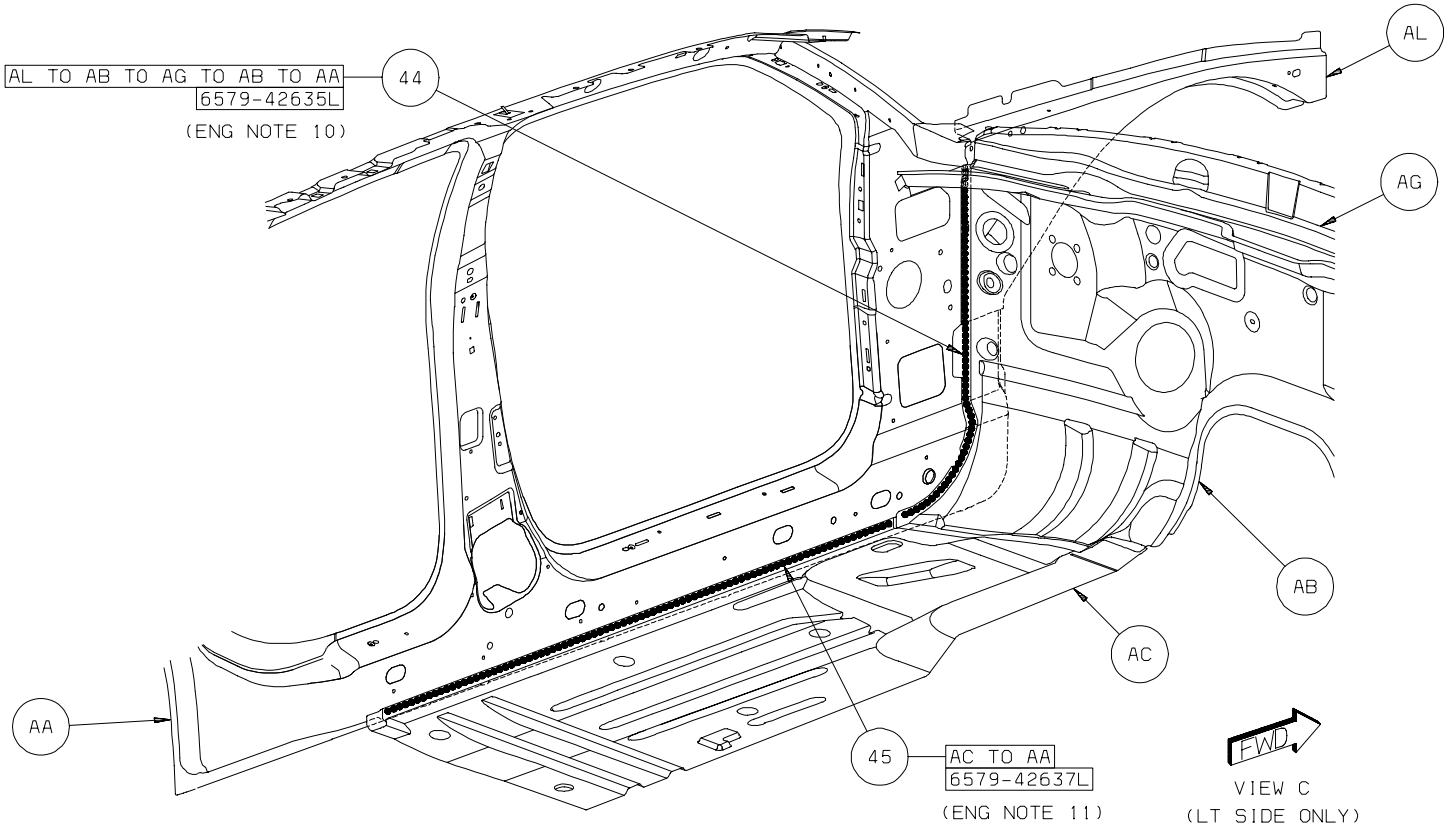

Back To Index

PARTS IDENTIFICATION LEGEND, OVERVIEW 25

AA	REINF - BODY SIDE RT -
AA	REINF - BODY SIDE LT -
AB	PANEL - BODY SIDE OTR RT -
AB	PANEL - BODY SIDE OTR LT -
AC	REINF - SILL FRT RT -
AC	REINF - SILL FRT LT -
AD	TAPPING PLATE - DOOR HINGE RR UPR RT -
AD	TAPPING PLATE - DOOR HINGE RR UPR LT -
AE	TAPPING PLATE - DOOR HINGE RR LWR RT -
AE	TAPPING PLATE - DOOR HINGE RR LWR LT -
AF	REINF - BODY SIDE INR PANEL D-PILLAR UPR RT -
AF	REINF - BODY SIDE INR PANEL D-PILLAR UPR LT -
AG	REINF - C-PILLAR RT -
AG	REINF - C-PILLAR LT -
AH	RETAINER - RR DOOR STRIKER RT -
AH	RETAINER - RR DOOR STRIKER LT -
AJ	TROUGH - QTR PANEL DRAIN UPR RT -
AJ	TROUGH - QTR PANEL DRAIN UPR LT -
AK	EXTENSION - QTR OTR PANEL LWR RR RT -
AK	EXTENSION - QTR OTR PANEL LWR RR LT -
AL	PANEL - TAIL LAMP MOUNTING RT -
AL	PANEL - TAIL LAMP MOUNTING LT -
AM	PANEL - RR WHEELHOUSE OTR RT -
AM	PANEL - RR WHEELHOUSE OTR LT -

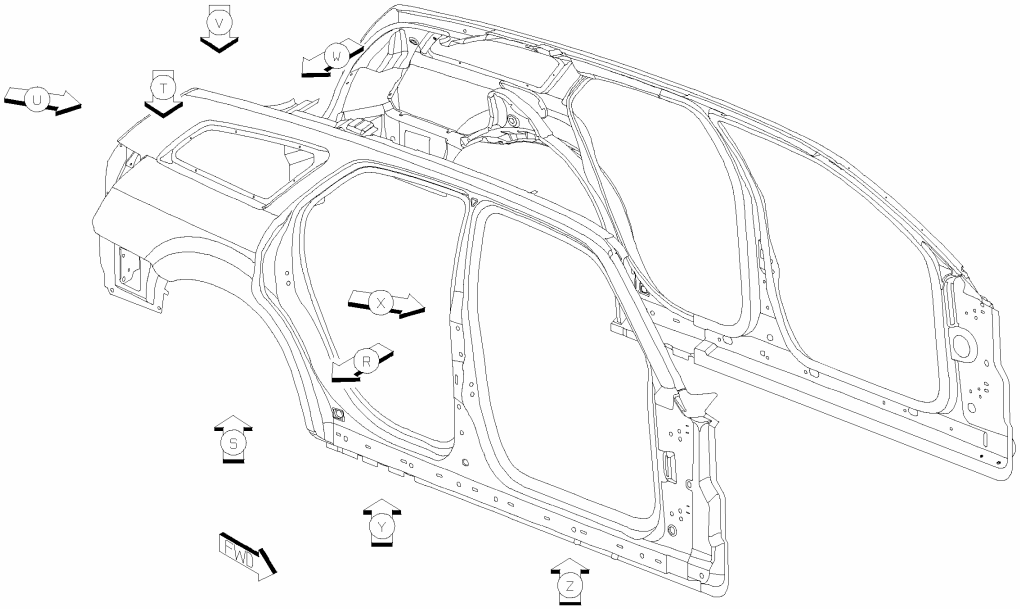

Back To Index

1. AC TO AA TO AB 1/SD S/WELD
2. AA TO AB 30/SD S/WELD

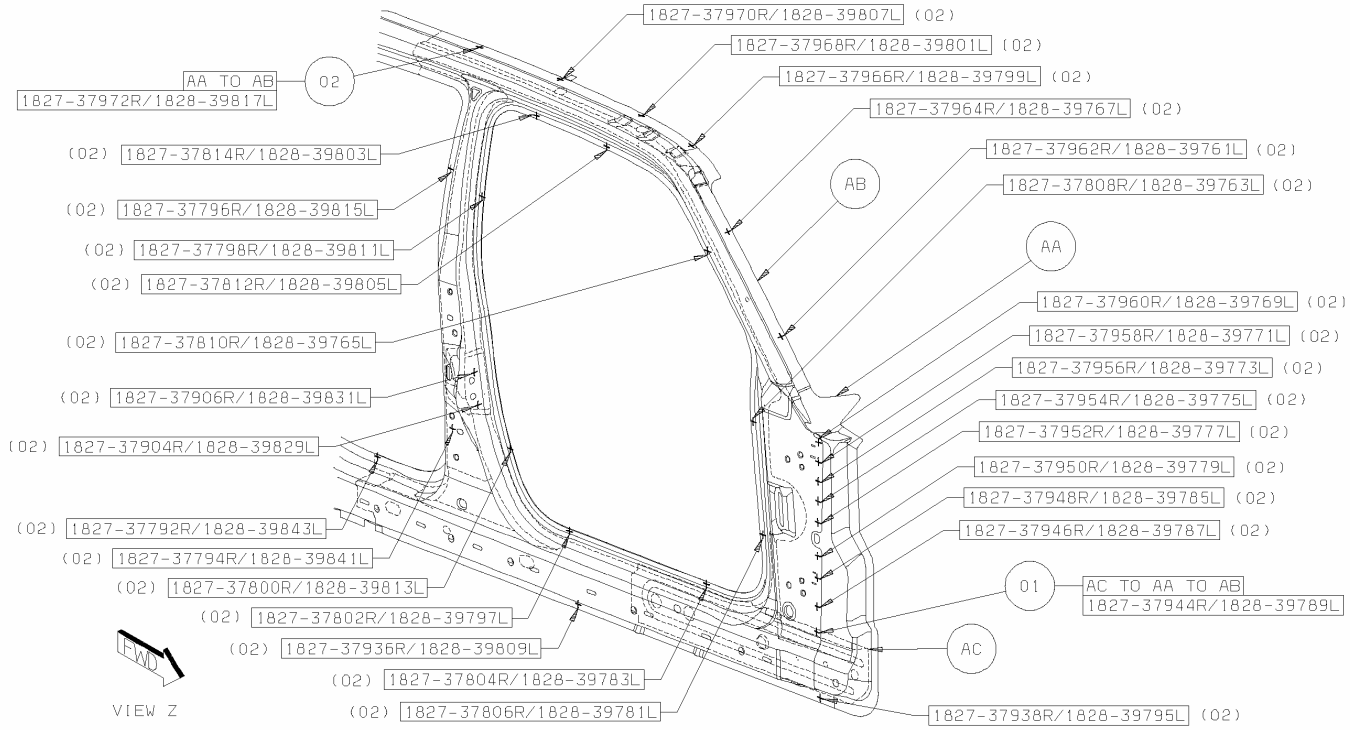

Back To Index

3. AF TO AA TO AB 1/SD S/WELD
4. AF TO AB 4/SD S/WELD
5. AF TO AG TO AB 1/SD S/WELD
6. AG TO AB 6/SD S/WELD
7. AH TO AB 7/SD S/WELD

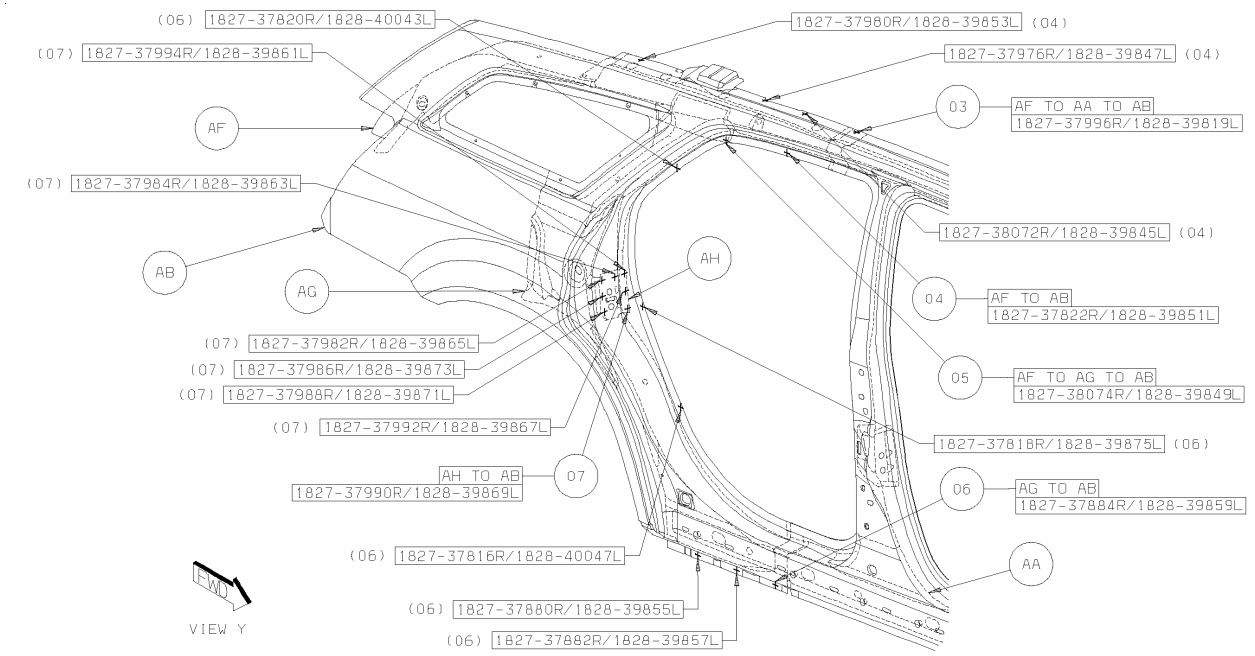

Back To Index

8. AD TO AA TO AB 4/SD S/WELD
9. AE TO AA TO AB 4/SD S/WELD
10. AF TO AJ 5/SD S/WELD

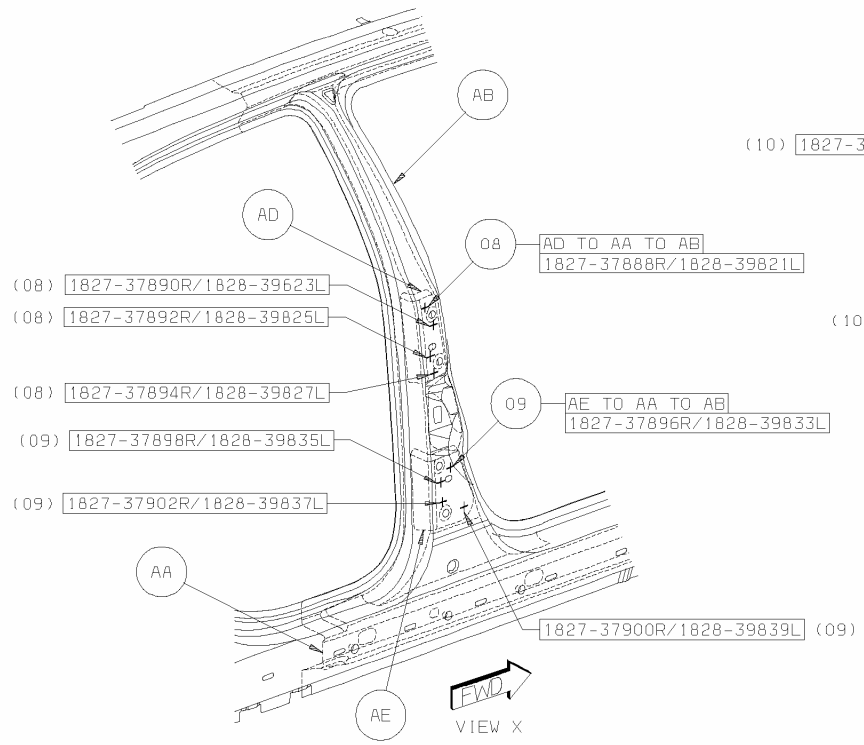

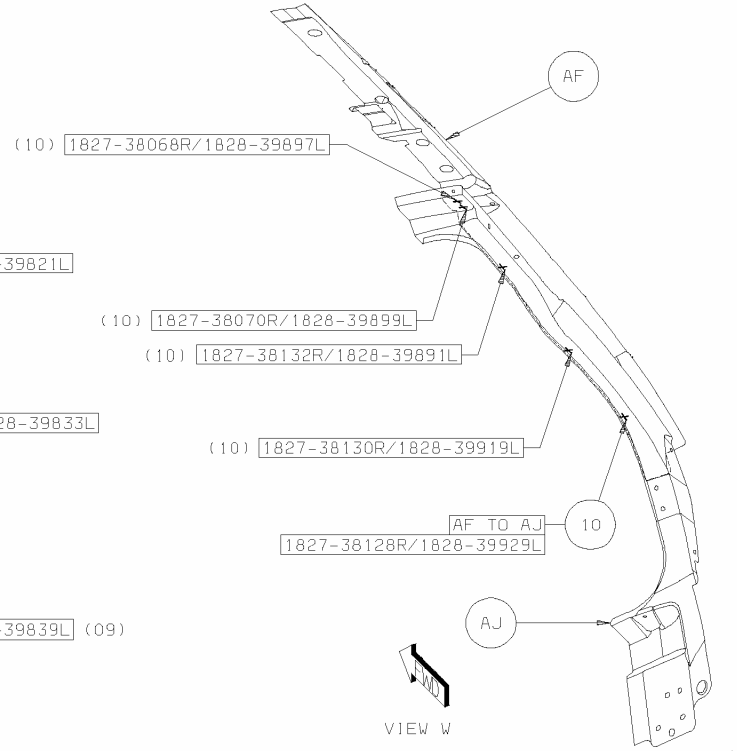

Back to Index

11. AK TO AJ 5/SD S/WELD
12. AK TO AB 6/SD S/WELD
13. AJ TO AB 19/SD S/WELD

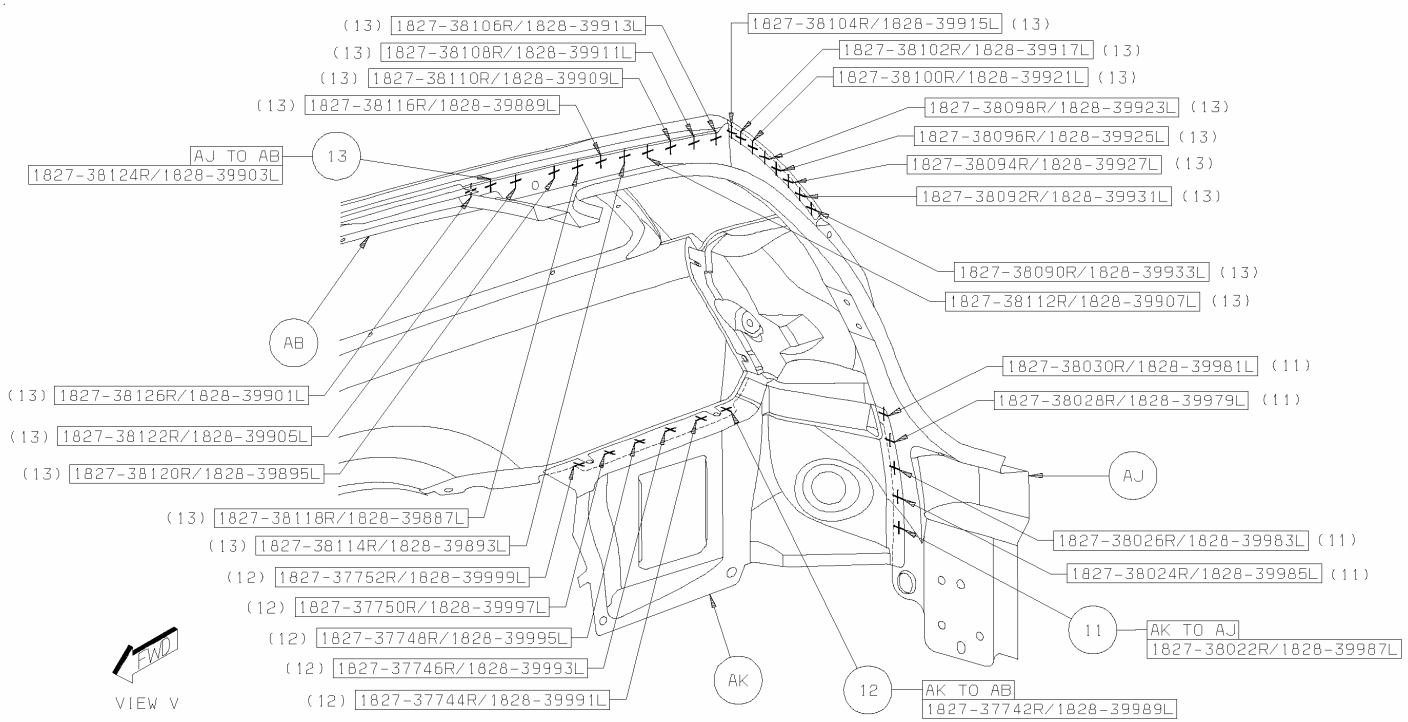

Back To index

14. AG TO AB 2/SD S/WELD
15. AL TO AB 7/SD S/WELD
16. AL TO AF 4/SD S/WELD
17. AF TO AB 2/SD S/WELD

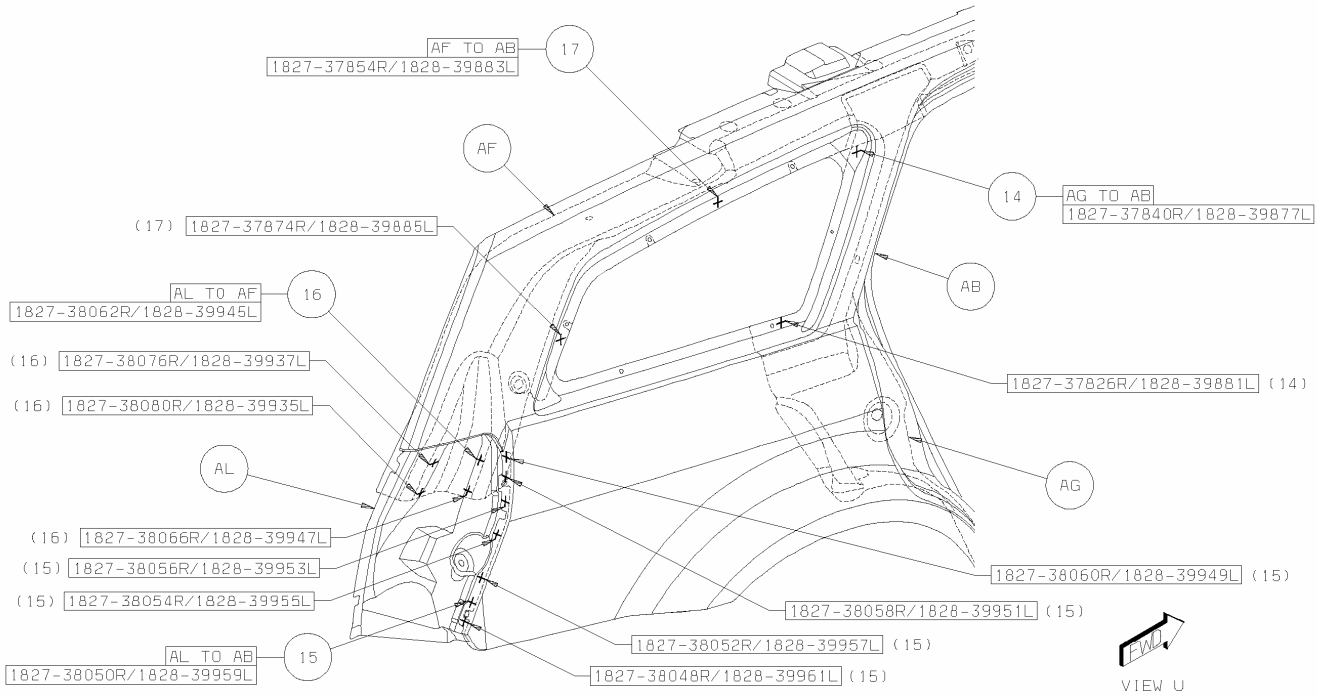

Back To Index

18. AL TO AB 3/SD S/WLED
19. AL TO AK 5/SD S/WELD
20. AM TO AK 2/SD S/WELD
21. AM TO AB 5R/3L S/WELD

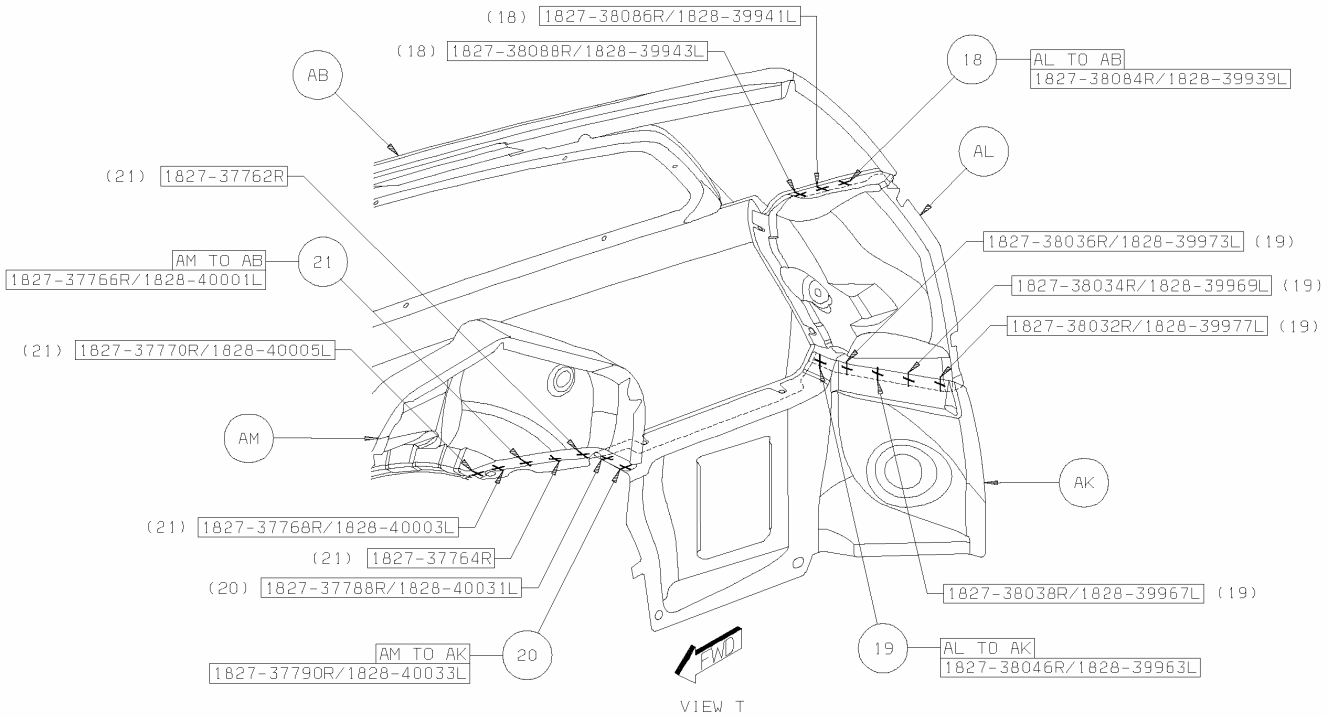

Back To Index

22. AM TO AB 12/SD S/WELD

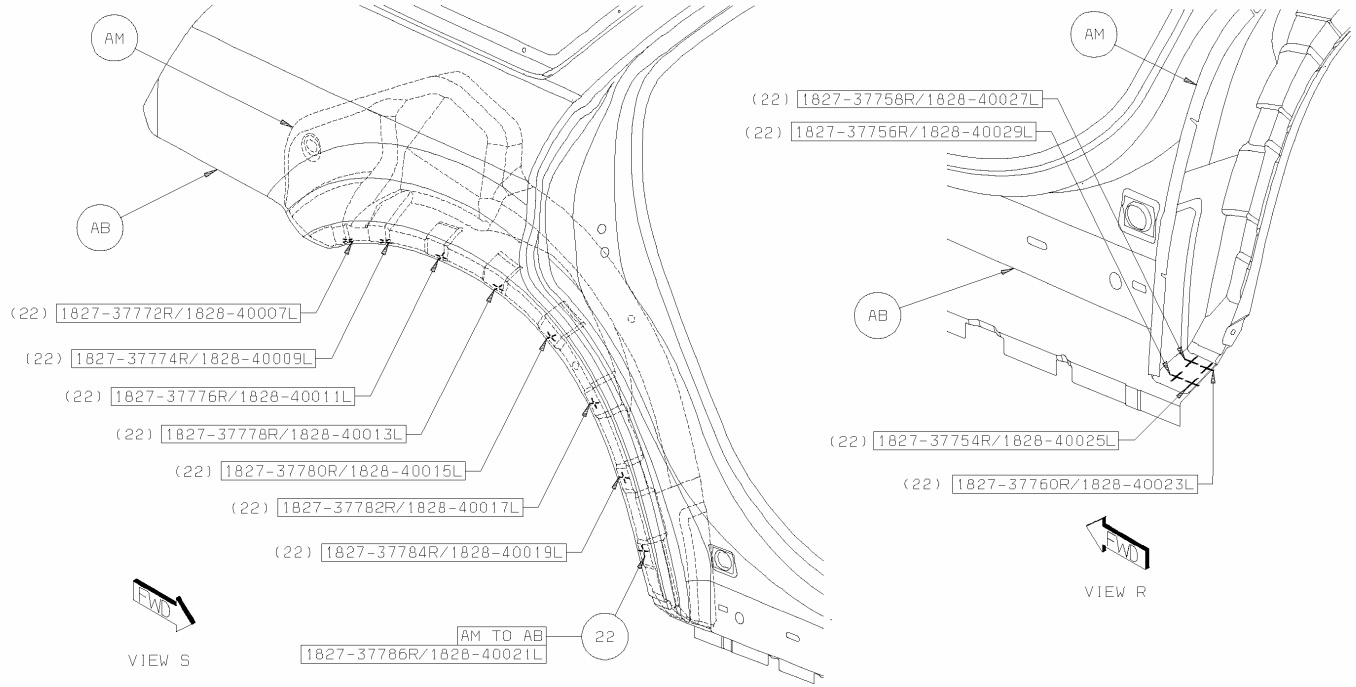

Back To Index

Global

REFINISH SYSTEM

When the world demands the best from PPG.

If you demand the best from a warranty-approved refinish system, then choose the *Global* Refinish System from PPG. As the world's latest in high solids coating technology, the *Global* line offers exceptional speed and premium appearance in a simple, easy-to-use system.

- Superb cycle times
- High solids, premium quality
- High hiding, superior gloss
- Simple, integrated line available in Basecoat & Direct Gloss systems
- Approved system for warranty work on DaimlerChrysler vehicles

PPG Industries

World Leaders in Automotive Finishes

©2004 PPG Industries www.ppgrefinish.com

Back To Index

PARTS IDENTIFICATION LEGEND, OVERVIEW 26

AA	REINF - BODY SIDE RT -
AA	REINF - BODY SIDE LT -
AB	PANEL - BODY SIDE OTR RT -
AB	PANEL - BODY SIDE OTR LT -
AC	TAPPING PLATE - BODY SIDE FRT DOOR LWR HINGE RT -
AC	TAPPING PLATE - BODY SIDE FRT DOOR LWR HINGE LT -
AD	PANEL - BODY SIDE INR RT -
AD	PANEL - BODY SIDE INR LT -
AE	PANEL - COWL UPR -
AF	PANEL - UPR LOAD PATH OTR RT -
AF	PANEL - UPR LOAD PATH OTR LT -
AG	PANEL - LOAD PATH BEAM UPR INR RT -
AG	PANEL - LOAD PATH BEAM UPR INR LT -
AH	PANEL - TOEBOARD CROSSMEMBER -
AJ	TROUGH - QTR PANEL DRAIN UPR RT -
AJ	TROUGH - QTR PANEL DRAIN UPR LT -
AK	BRACKET - BUMPER RR -
AL	REINF - RR RAIL INR RR RT -
AL	REINF - RR RAIL INR RR LT -
AM	PANEL - DECK OPENING LWR OTR -
AN	REINF - DECK OPENING LWR INR -
AP	PAN - RR FLOOR -
AR	REINF - BODY SIDE INR PANEL D-PILLAR UPR RT -
AR	REINF - BODY SIDE INR PANEL D-PILLAR UPR LT -
AS	REINF - C-PILLAR RT -
AS	REINF - C-PILLAR LT -
AT	RAIL - RR OTR RT -
AT	RAIL - RR OTR LT -
AU	PANEL - RR WHEELHOUSE OTR RT -
AU	PANEL - RR WHEELHOUSE OTR LT -
AV	COVER PLATE - RAIL RR RT - FRONT
AV	COVER PLATE - RAIL RR LT - FRONT
AW	EXTENSION - QTR OTR PANEL LWR RR RT -
AW	EXTENSION - QTR OTR PANEL LWR RR LT -
AX	PANEL - RR WHEELHOUSE INR RT -
AX	PANEL - RR WHEELHOUSE INR LT -
AY	COVER PLATE - RR RAIL EXTENSION RT -
AY	COVER PLATE - RR RAIL EXTENSION LT -
AZ	TAPPING PLATE - DOOR HINGE FRT RT -
AZ	TAPPING PLATE - DOOR HINGE FRT LT -

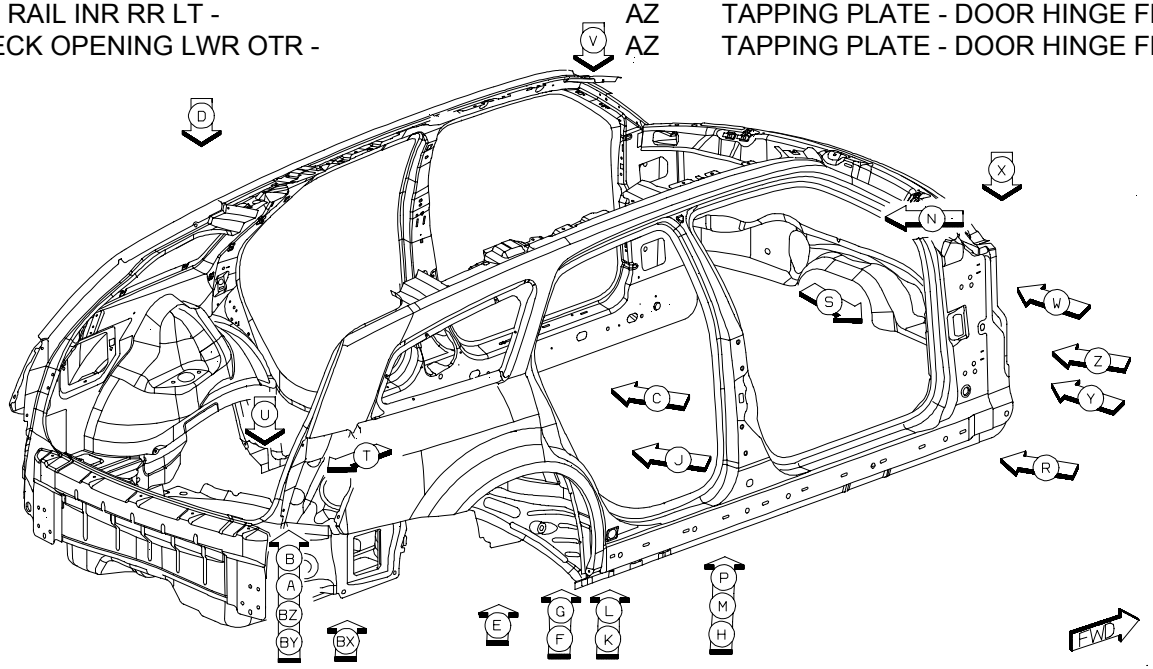

Back To Index

1. AC TO AB TO AA 6/SD S/WELDS
2. AZ TO AB TO AA 6/SD S/WELDS

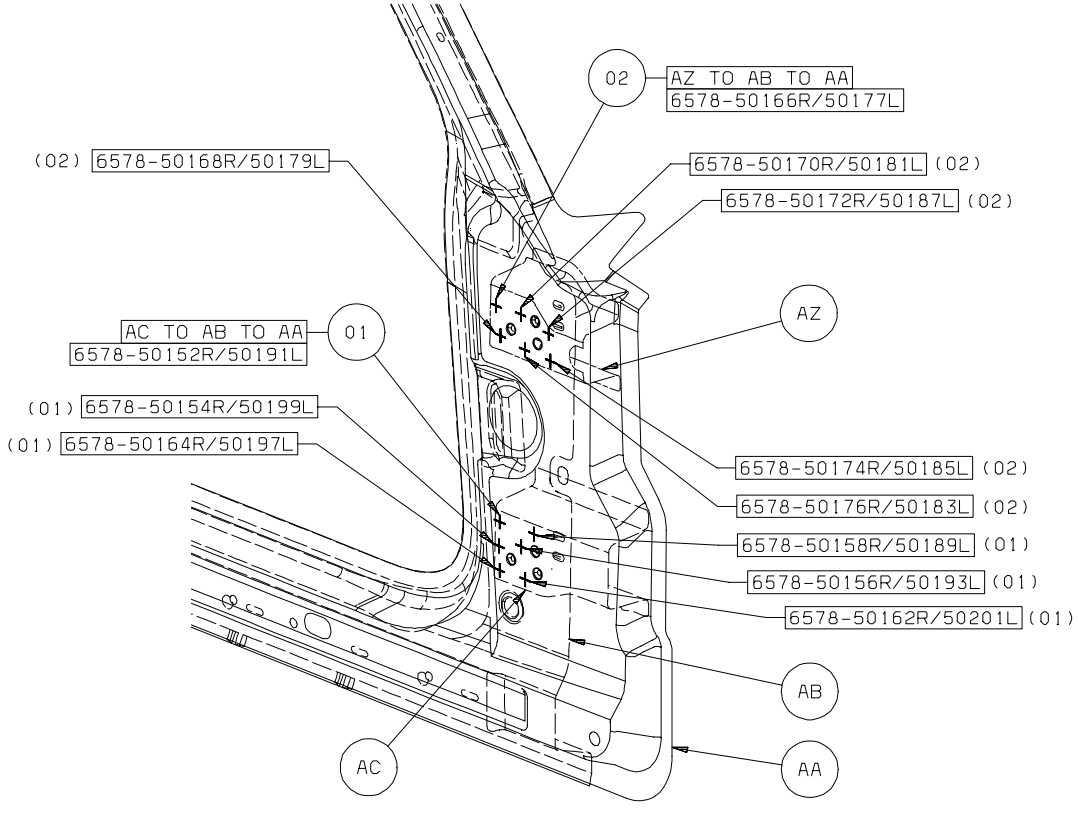

VIEW Z

Back To Index

3. AA TO AE TO AD 2/SD S/WELDS
4. AG TO AA TO AD 1/SD S/WELD
5. AF TO AA TO AD 1/SD S/WELD
6. AH TO AD TO AA 3/SD S/WELDS
7. AD TO AA 9/SD S/WELDS

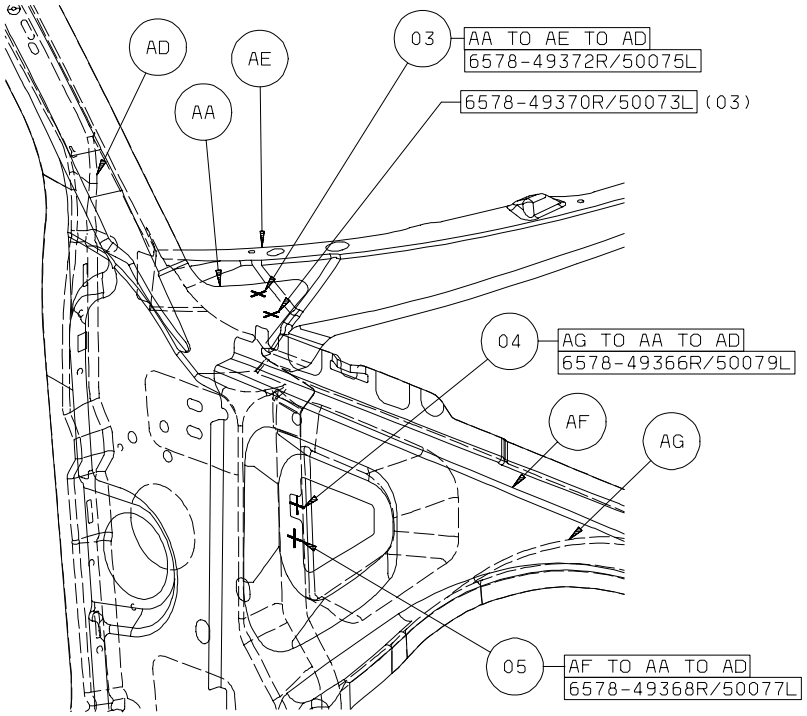

VIEW Y

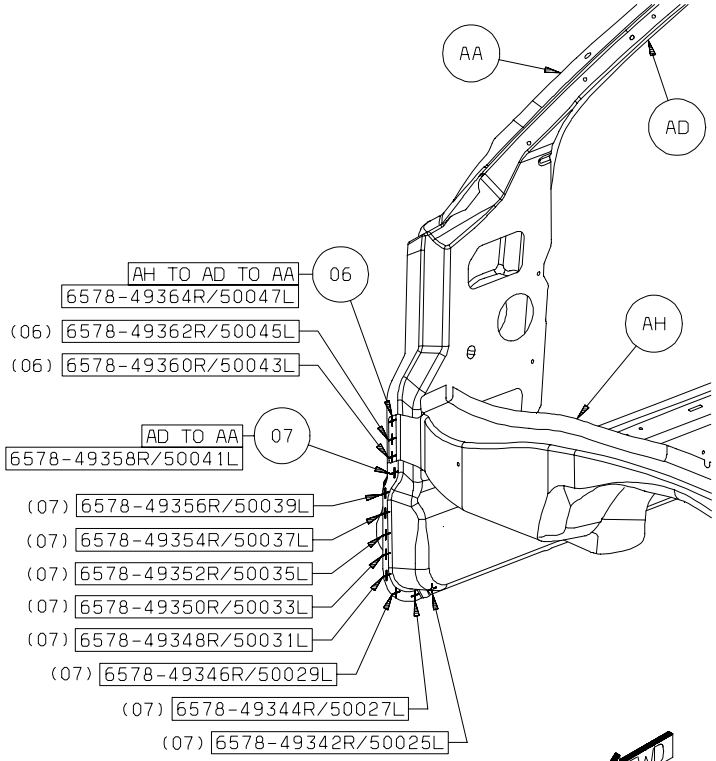

VIEW X

Back To Index

8. AB TO AA TO AD 11R/12L S/WELDS

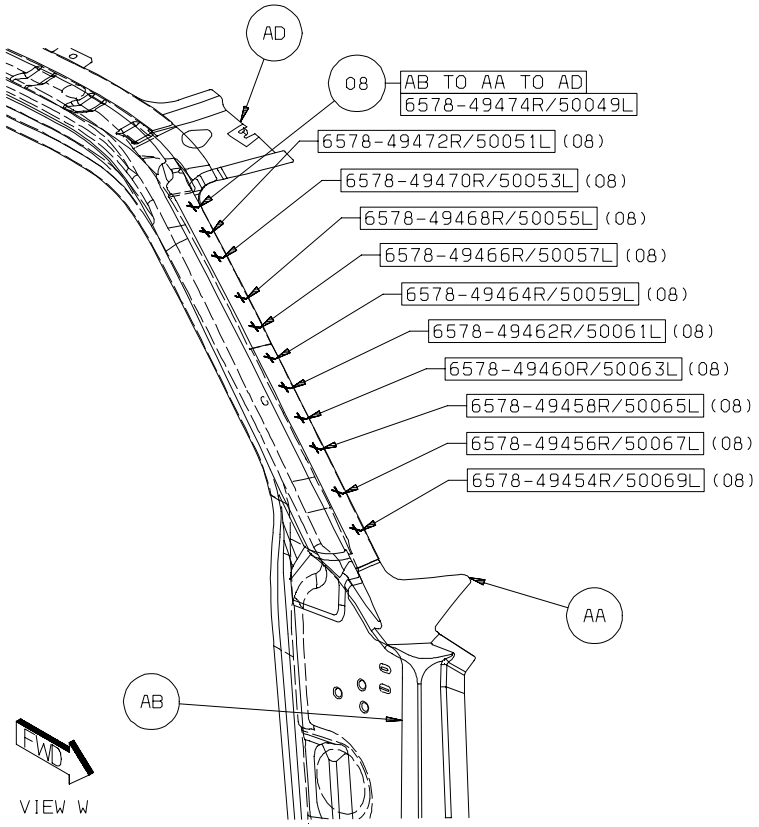

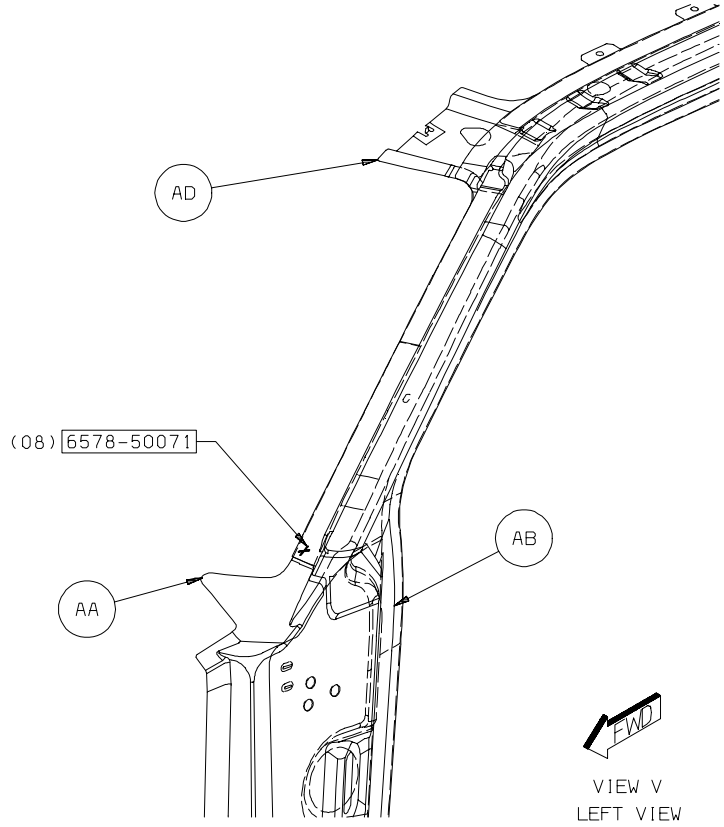

Back To Index

9. AM TO AJ 5/SD S/WELDS
10. AL TO AK TO AJ 5/SD S/WELDS
11. AK TO AN TO AJ 3/SD S/WELDS
12. AN TO AJ 3/SD S/WELDS
13. AN TO AJ TO AM 3/SD S/WELDS
14. AP TO AM TO AJ 1/SD S/WELD

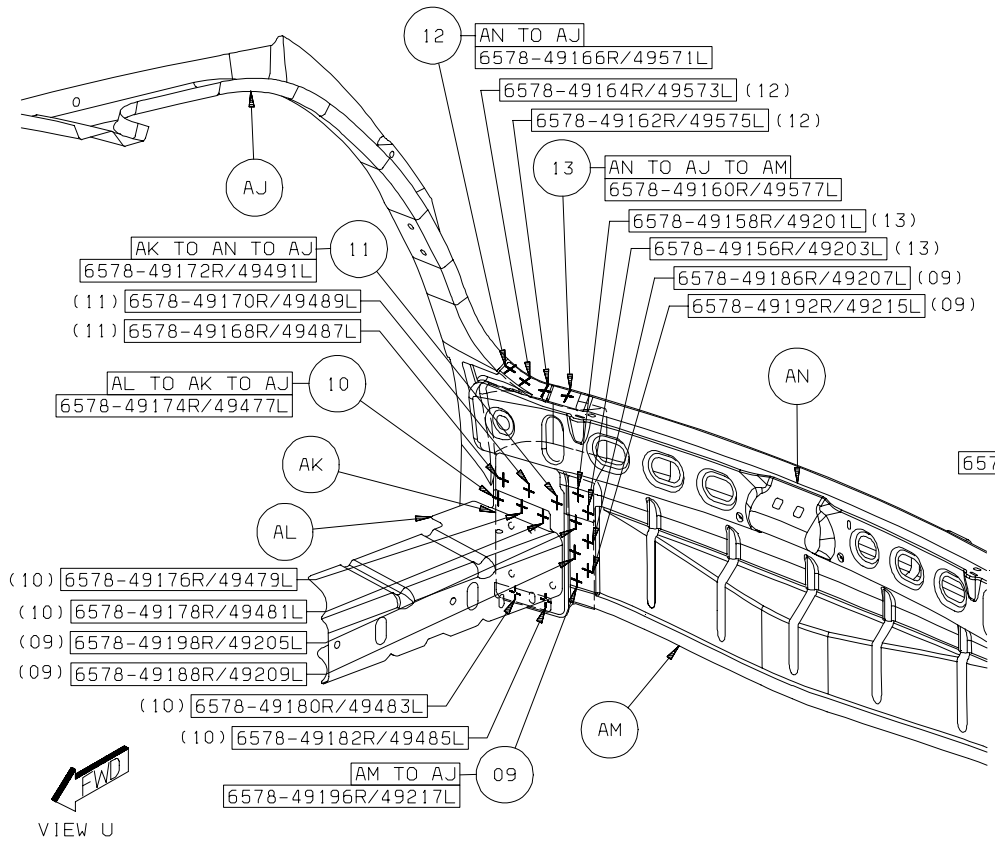

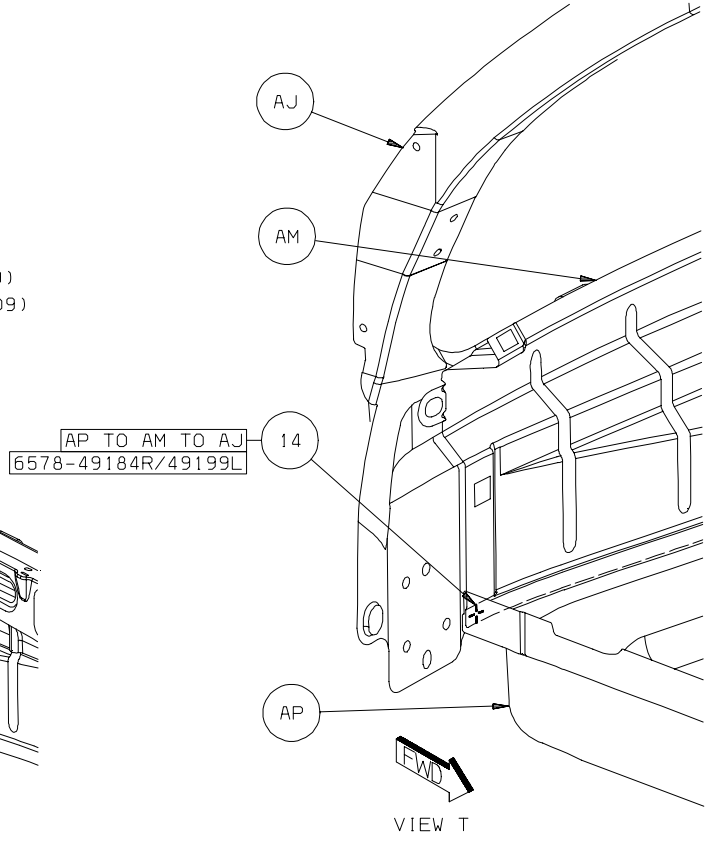

Back To Index

15. AB TO AA TO AD 35/SD S/WELDS

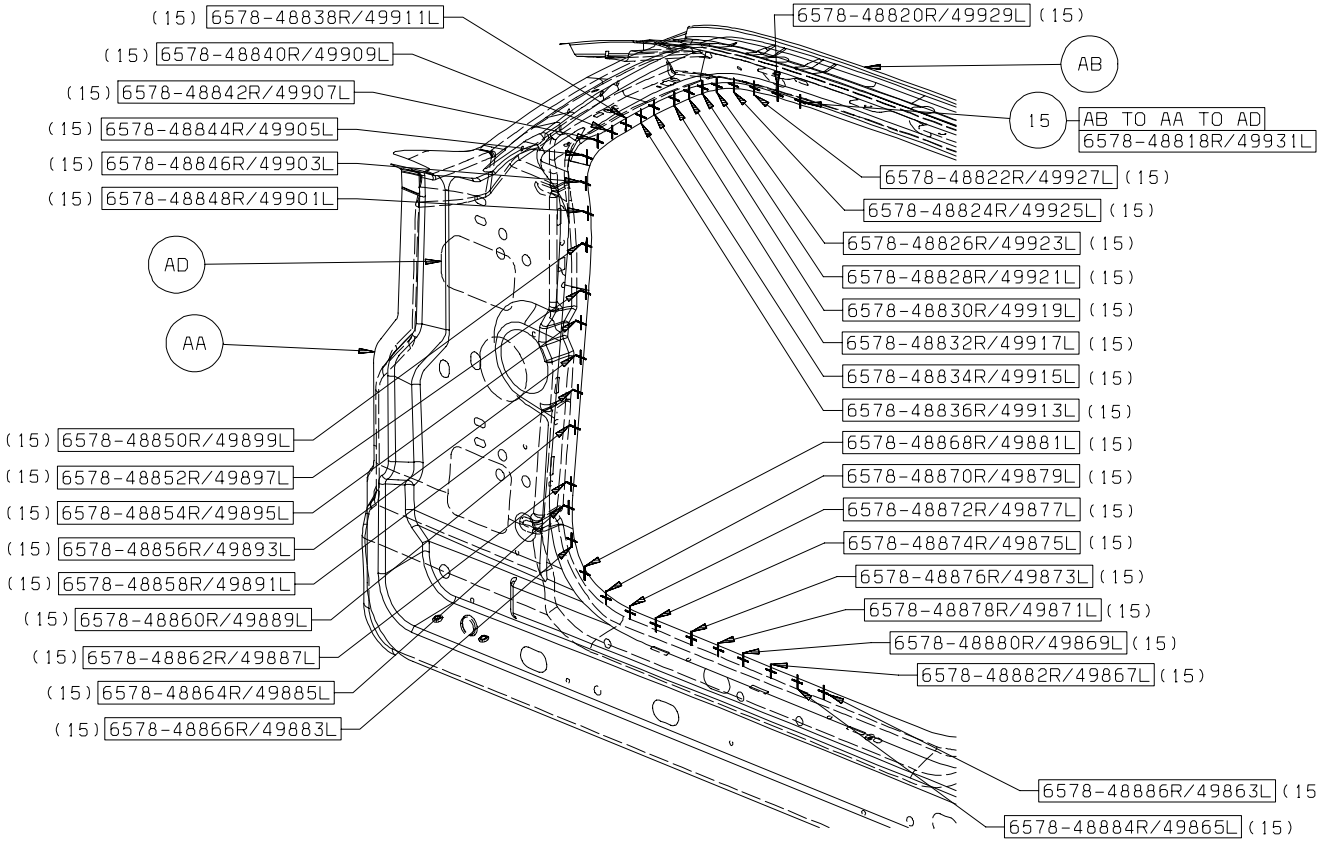

Back To Index

16. AB TO AD TO AA 31/SD S/WELDS

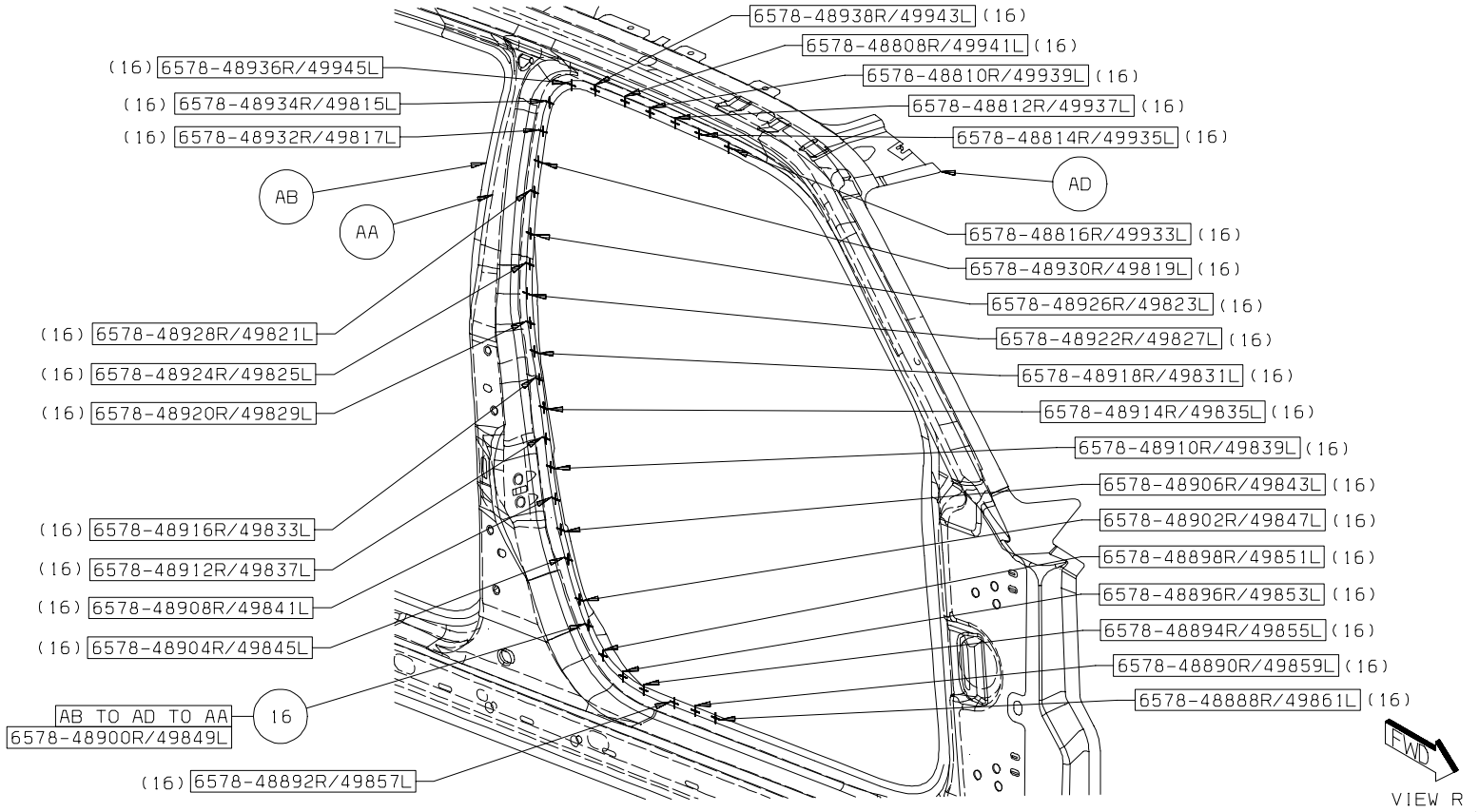

Back To Index

17. AB TO AA TO AD 26/SD S/WELDS

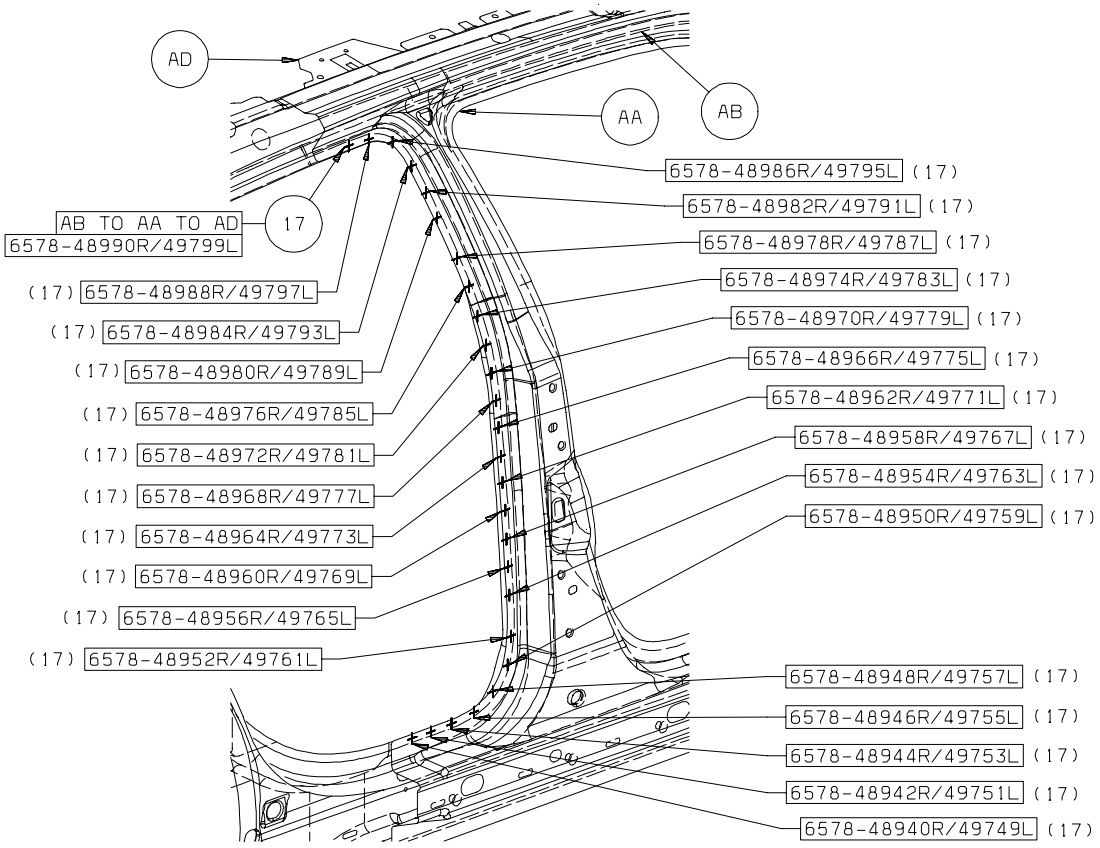

VIEW P

Back To Index

18. AB TO AA TO AD 15/SD S/WELDS
19. AB TO AR TO AD 9/SD S/WELDS

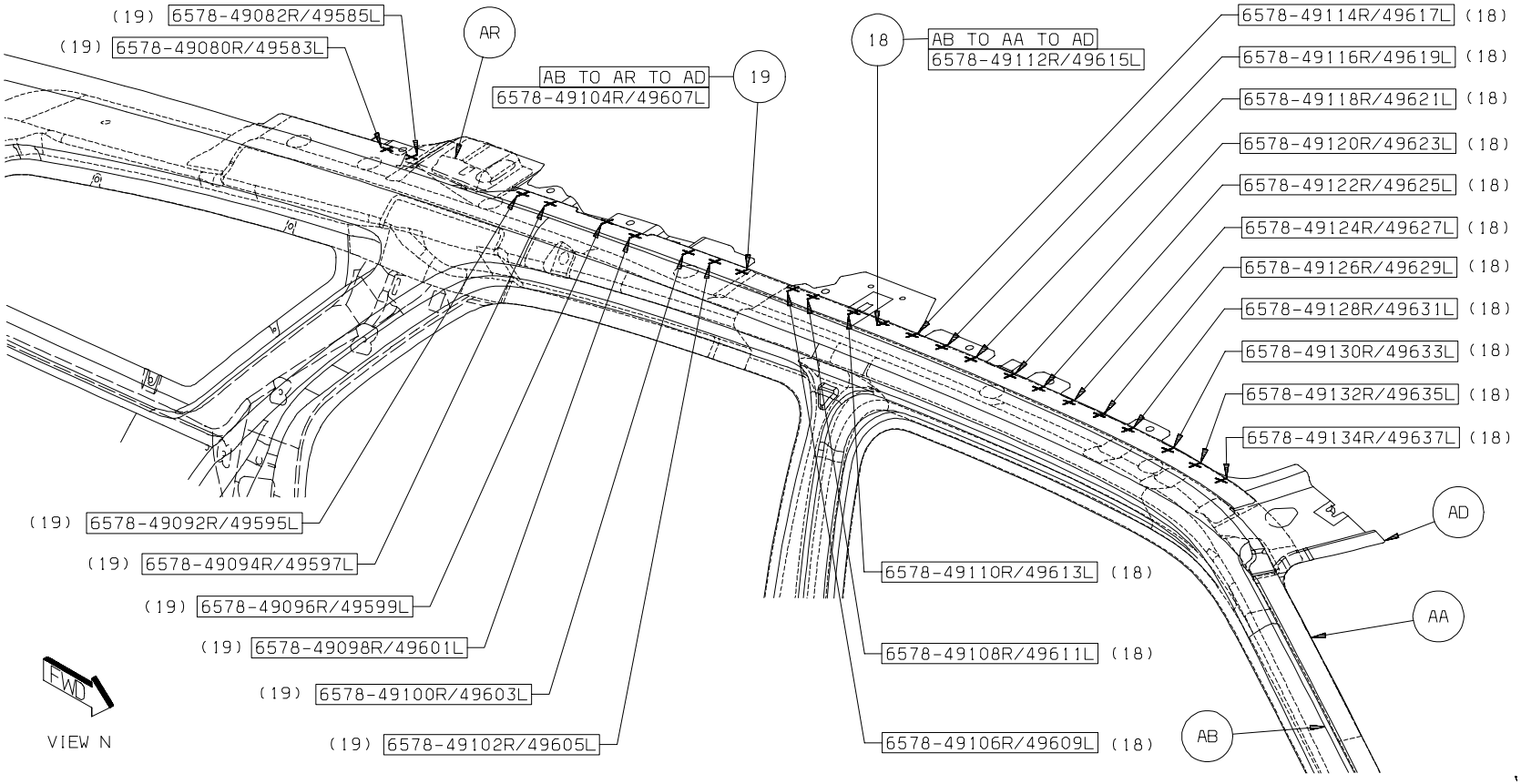

Back To Index

20. AB TO AA TO AD 30/SD S/WELDS

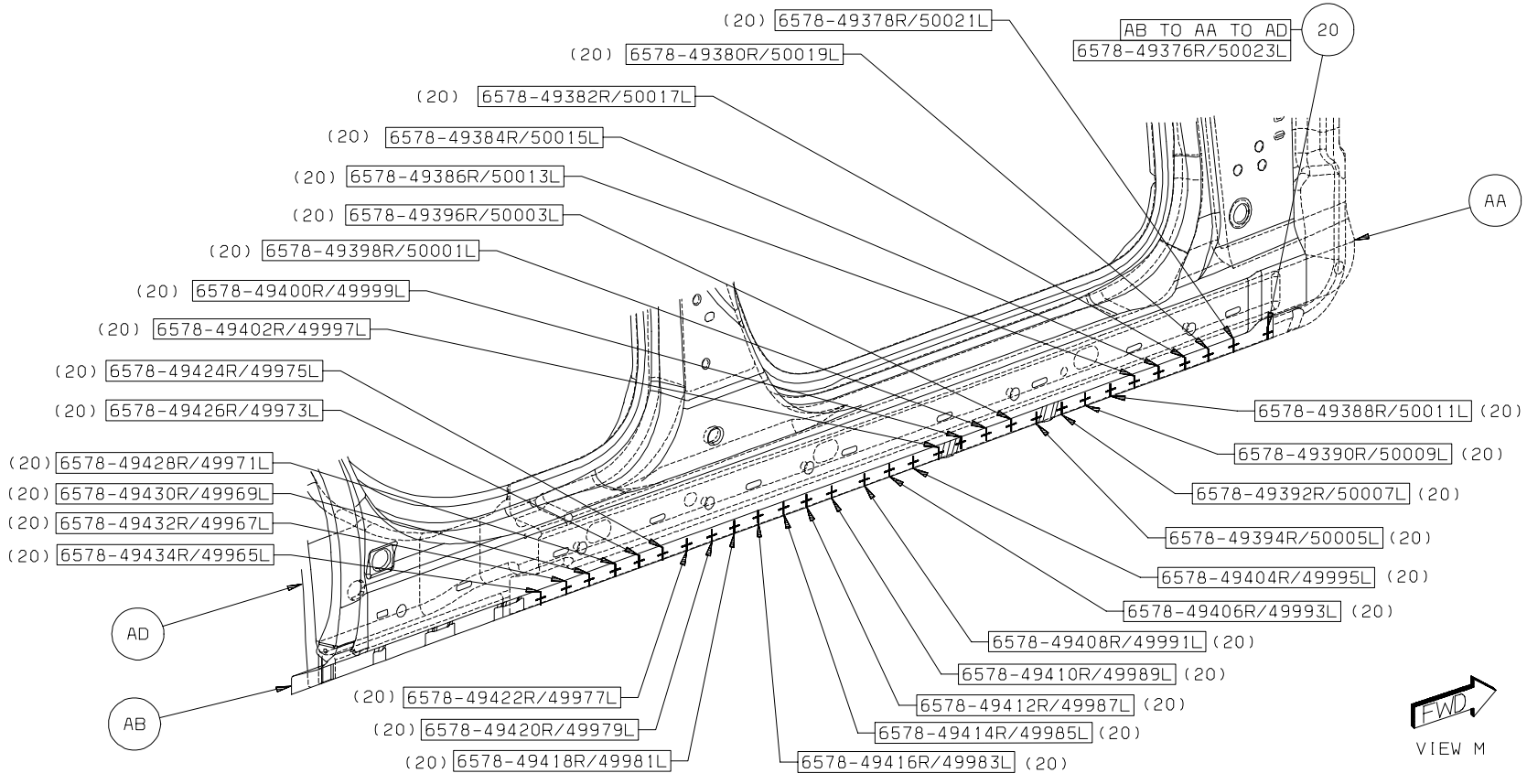

Back To Index

21. AB TO AS TO AD 3/SD S/WELDS
22. AD TO AS TO AT 4/SD S/WELDS

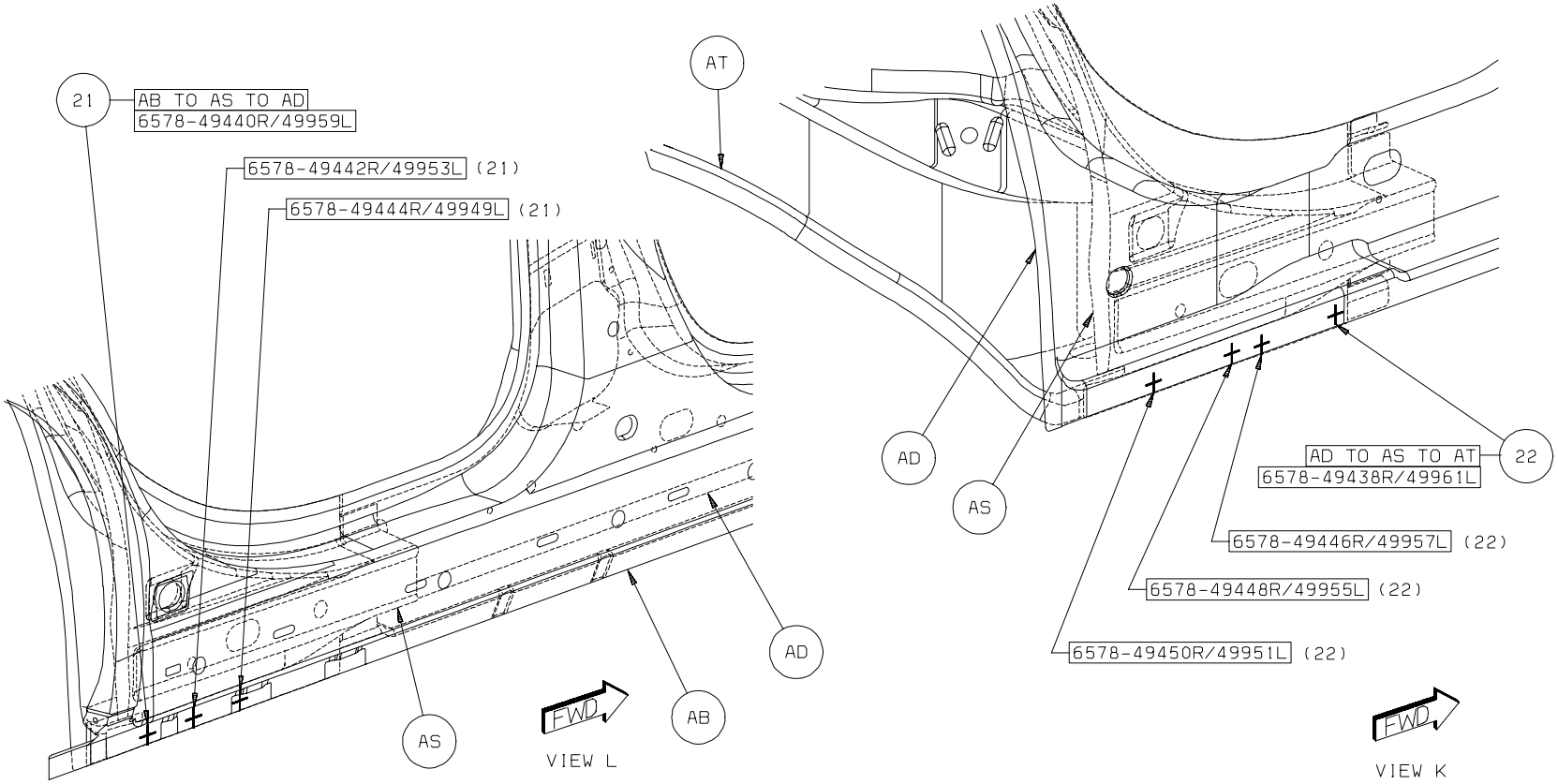

Back To Index

23. AD TO AS TO AB 27/SD S/WELDS
24. AA TO AD TO AT 1/SD S/WELD

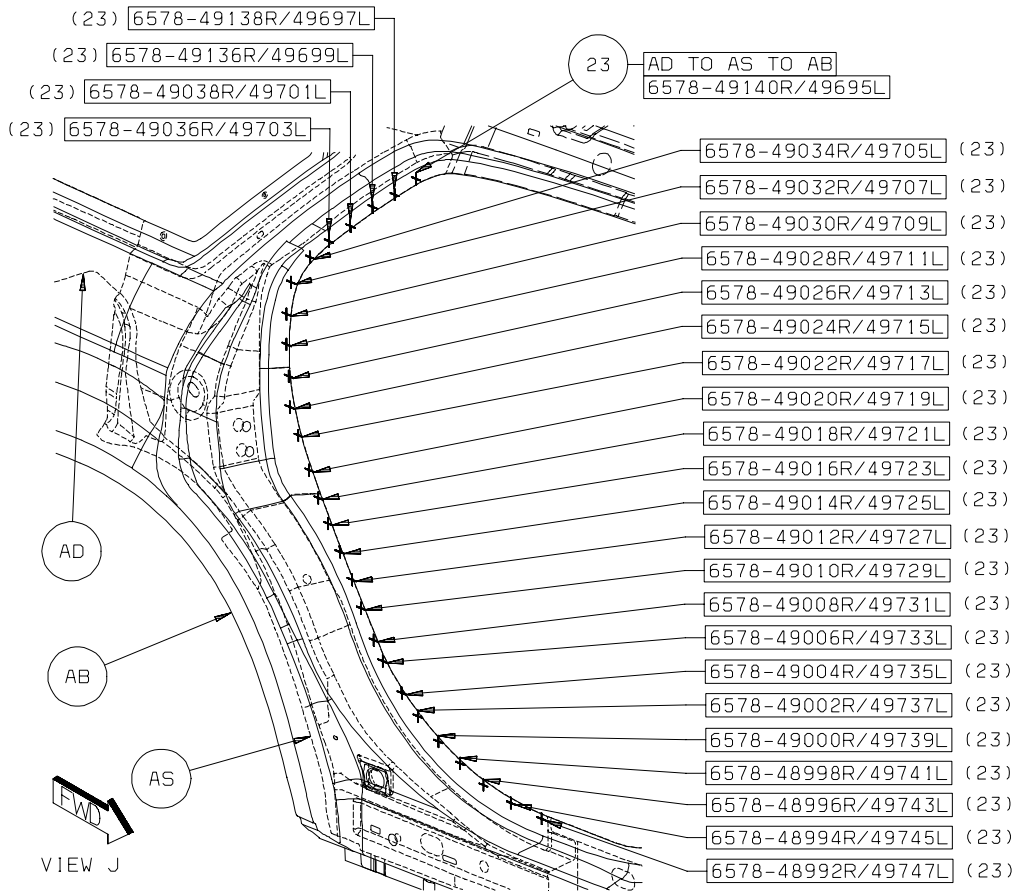

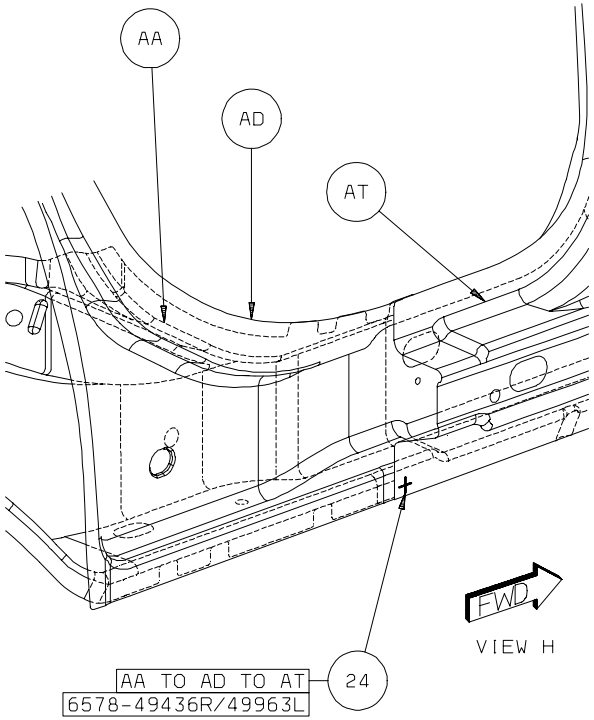

Back To Index

25. AU TO AV TO AD 5/SD S/WELDS
26. AB TO AD TO AT 1/SD S/WELD

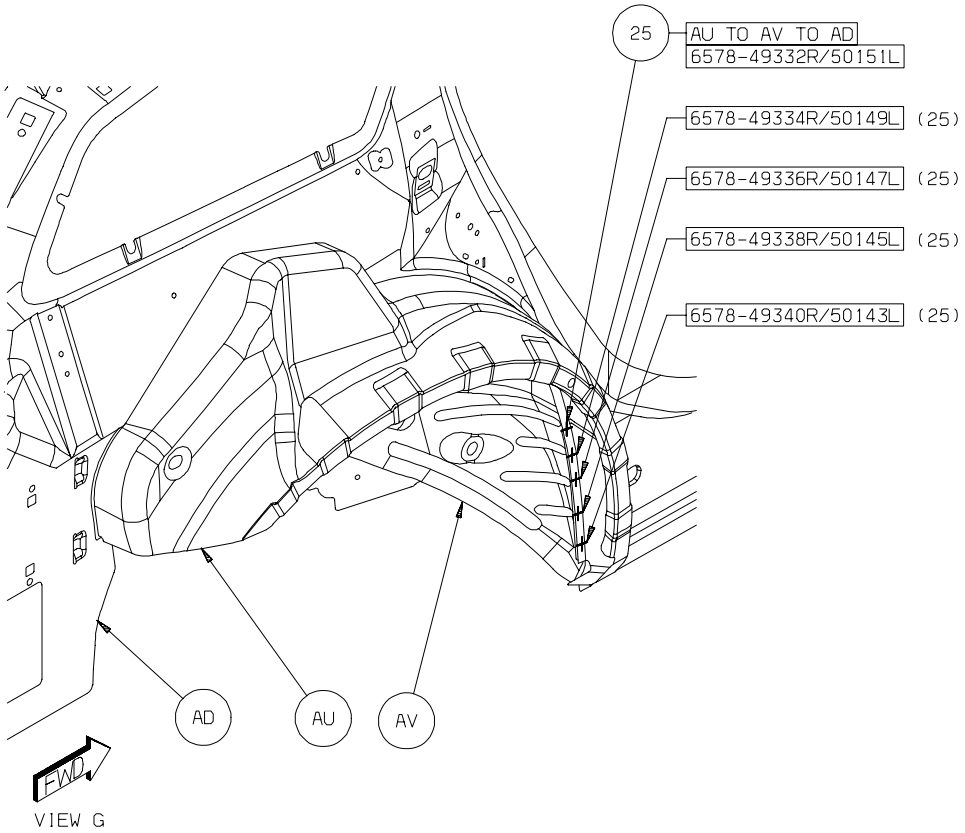

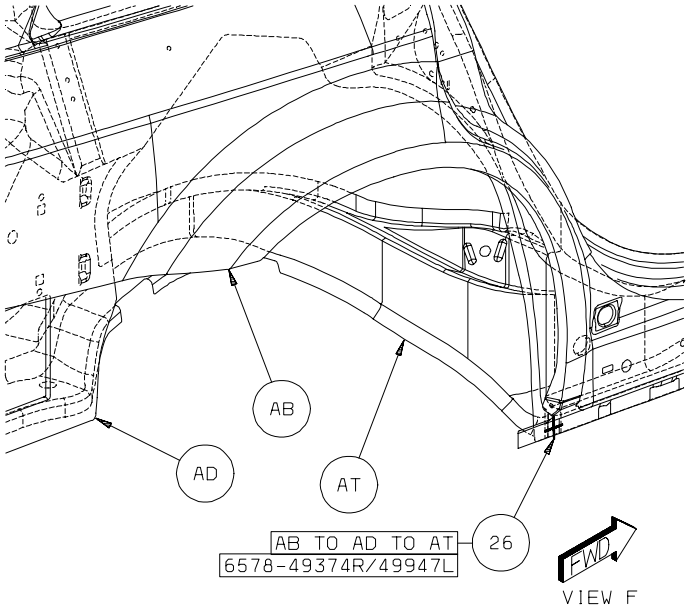

Back To Index

27. AW TO AX TO AD 4/SD S/WELDS
28. AU TO AD TO AX 25R S/WELDS

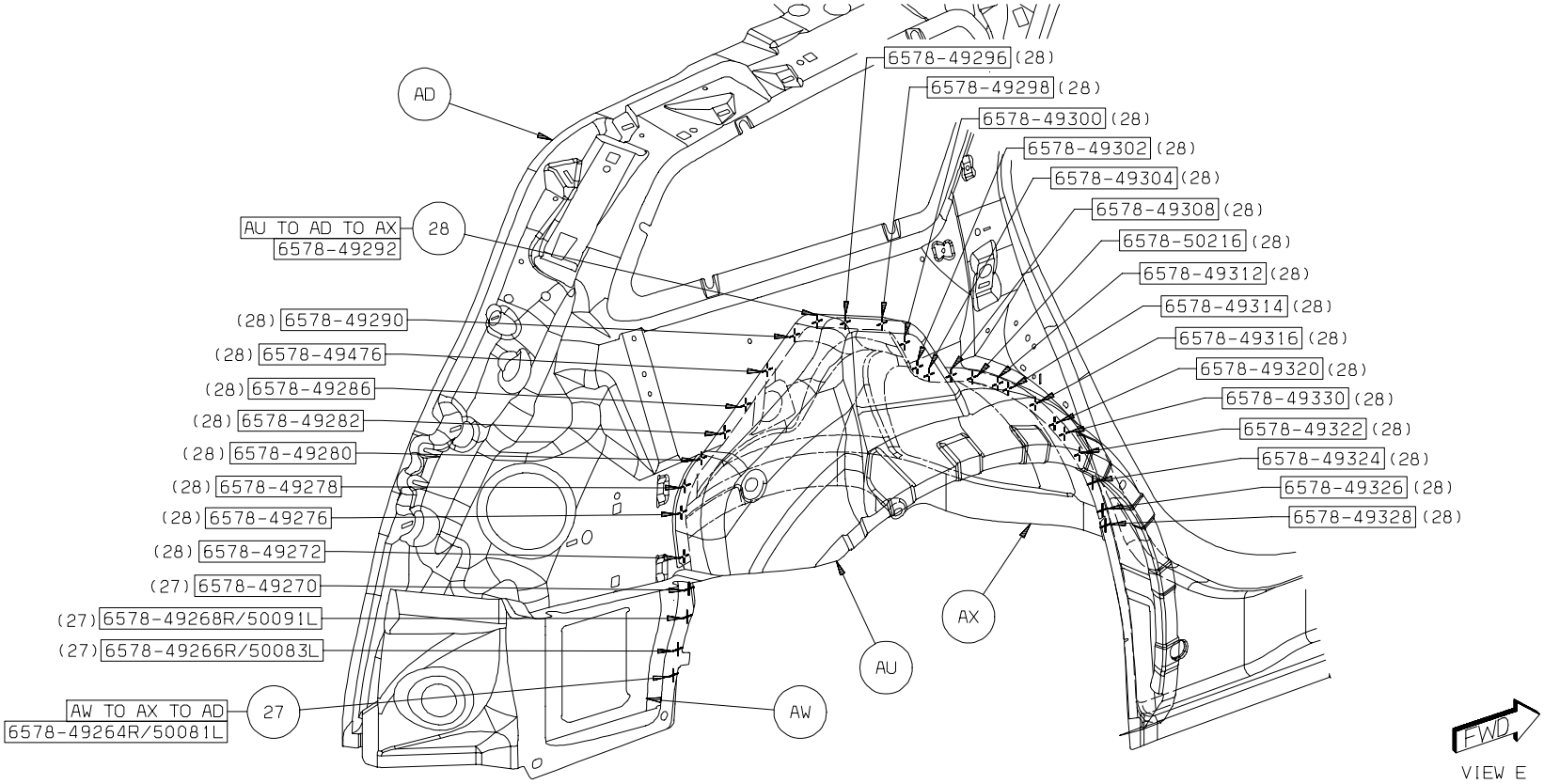

Back To Index

29. AU TO AD TO AX 24L S/WELDS
30. AW TO AD TO AX 1L S/WELD

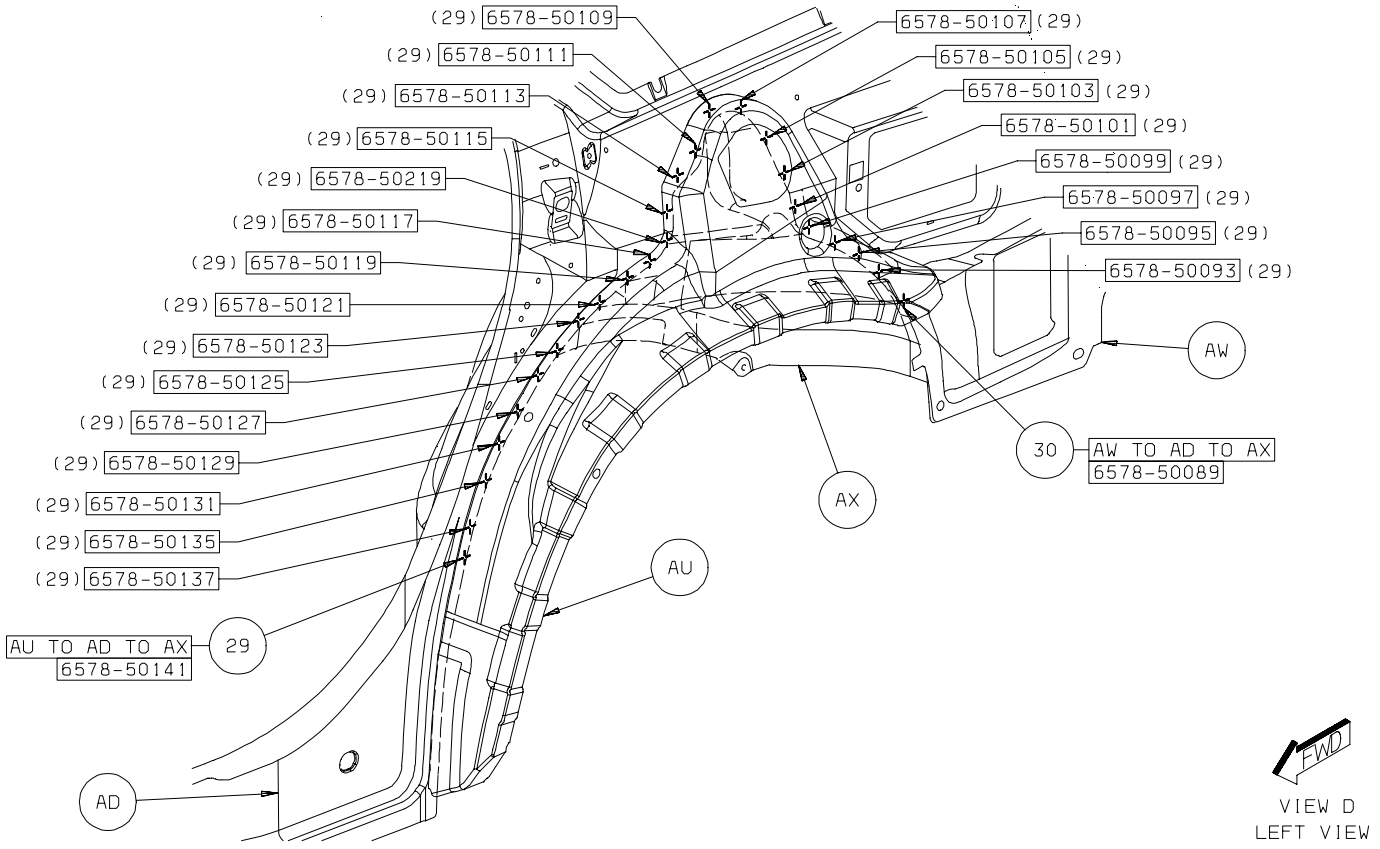

Back To Index

31. AB TO AD 8/SD S/WELDS
32. AB TO AR TO AD 21/SD S/WELDS
33. AB TO AS TO AD 6/SD S/WELDS

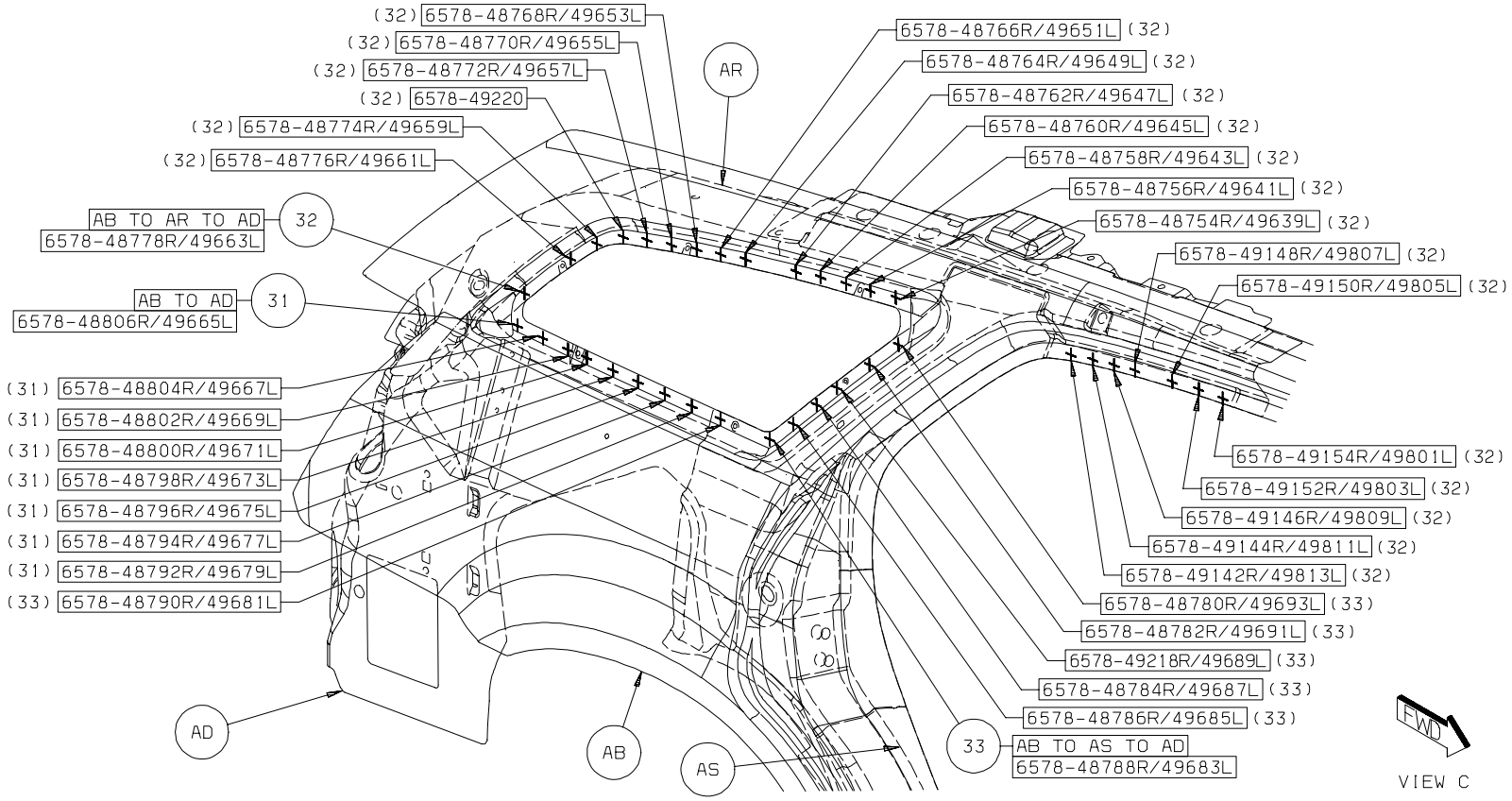

Back To Index

34. AJ TO AR TO AD 14/SD S/WELDS
35. AJ TO AW TO AY 1/SD S/WELD

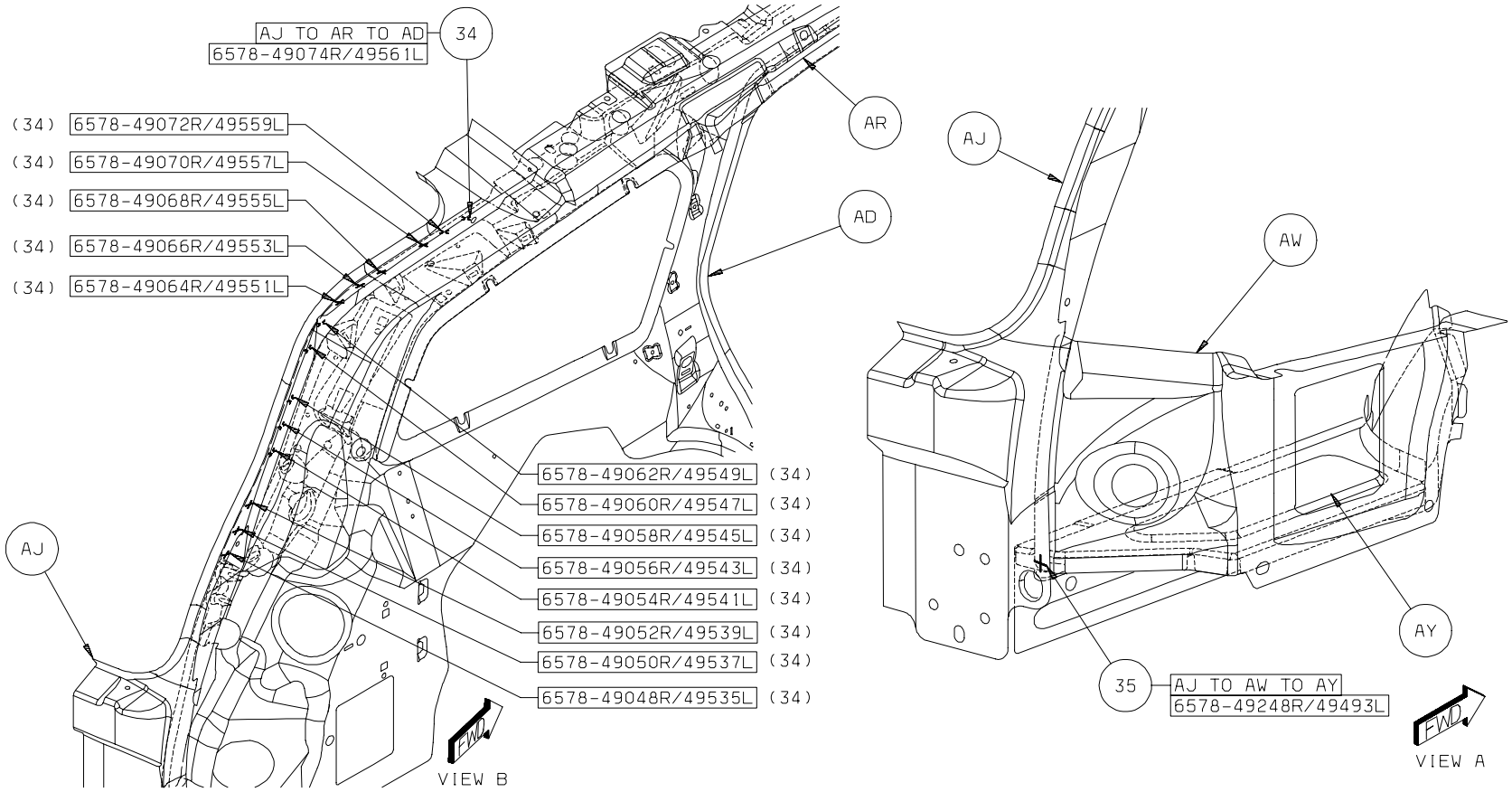

Back To Index

36. AD TO AJ TO AN 8/SD S/WELDS
37. AW TO AY TO AD 5/SD S/WELDS
38. AW TO AD 6/SD S/WELDS

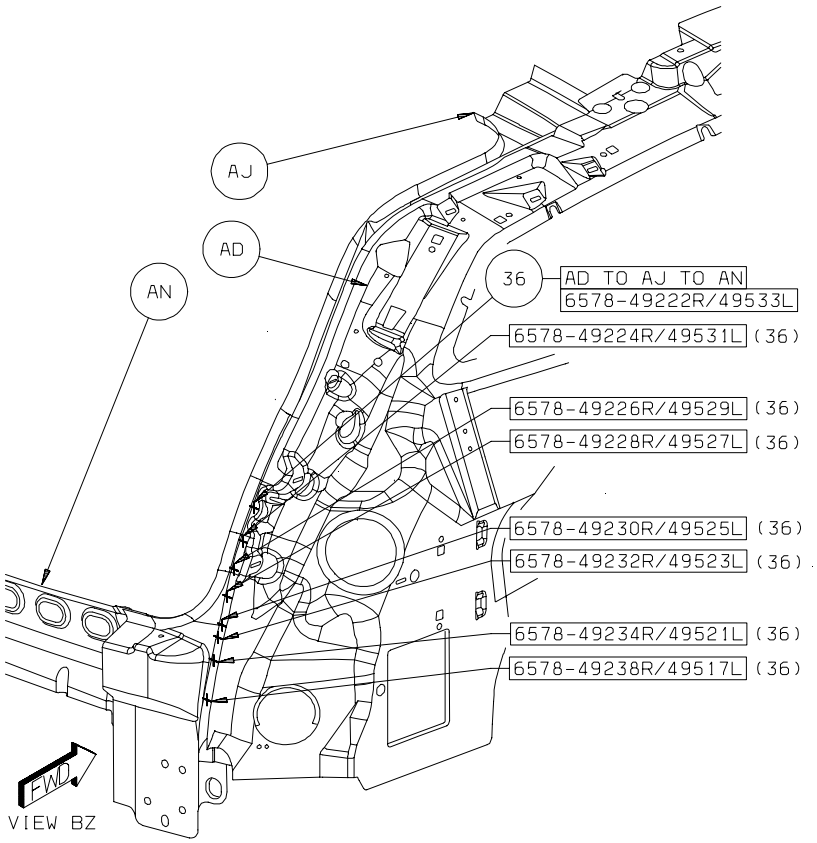

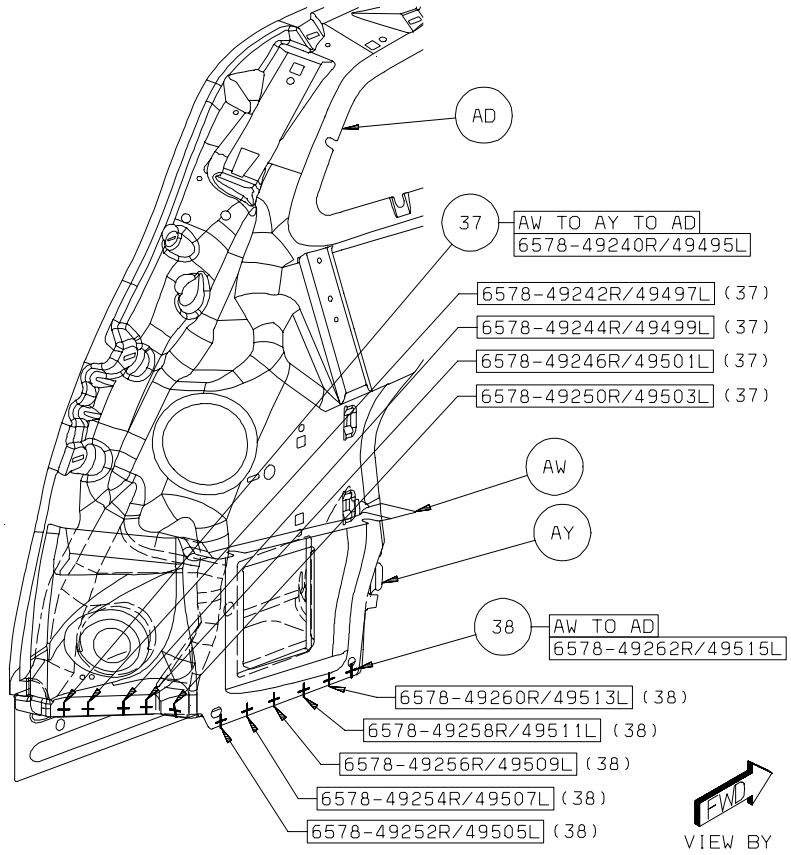

Back To Index

39. AW TO AY 1/SD STRUC ADH
40. AW TO AY 1/SD STRUC ADH

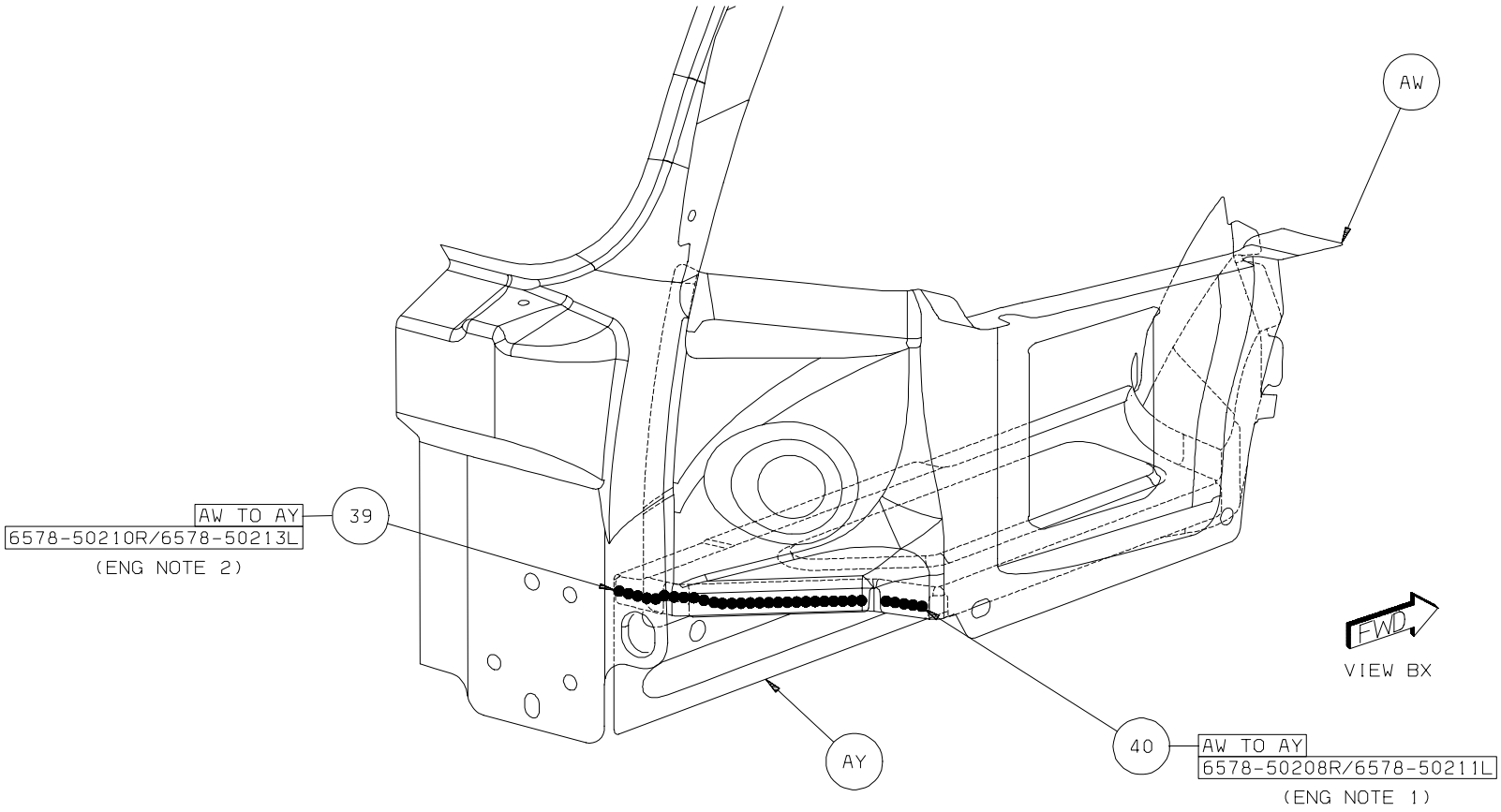

Back To Index

PARTS IDENTIFICATION LEGEND, OVERVIEW 27

AA	PANEL - BODY SIDE INR RT -
AA	PANEL - BODY SIDE INR LT -
AB	PANEL - RR WHEELHOUSE INR RT -
AB	PANEL - RR WHEELHOUSE INR LT -
AC	COVER PLATE - RAIL RR RT - FRONT
AC	COVER PLATE - RAIL RR LT - FRONT
AD	RAIL - RR OTR RT -
AD	RAIL - RR OTR LT -
AE	COVER PLATE - RR RAIL EXTENSION RT -
AE	COVER PLATE - RR RAIL EXTENSION LT -
AF	BRACKET - SEAT BACK LATCH RR UPR RT -
AF	BRACKET - SEAT BACK LATCH RR UPR LT -
AG	PANEL - FRT FLOOR PAN RT -
AG	PANEL - FRT FLOOR PAN LT -
AH	EXTENSION - RAIL FRT RT -
AH	EXTENSION - RAIL FRT LT -
AJ	CROSSMEMBER - FRT SEAT FRT RT -
AJ	CROSSMEMBER - FRT SEAT FRT LT -
AK	CROSSMEMBER - FRT SEAT RR RT -
AK	CROSSMEMBER - FRT SEAT RR LT -
AL	PANEL - LOAD PATH BEAM UPR INR RT -
AL	PANEL - LOAD PATH BEAM UPR INR LT -
AM	PANEL - TOEBOARD CROSSMEMBER -
AN	EXTENSION - RAIL TO SILL RT - FRONT
AN	EXTENSION - RAIL TO SILL LT - FRONT
AP	PANEL - DASH -
AR	REINF - DASH PANEL -
AS	PANEL - COWL UPR -
AT	PANEL - COWL LWR -
AU	TAPPING PLATE - DOOR HINGE FRT RT -
AU	TAPPING PLATE - DOOR HINGE FRT LT -
AV	TAPPING PLATE - BODY SIDE FRT DOOR LWR HINGE RT -
AV	TAPPING PLATE - BODY SIDE FRT DOOR LWR HINGE LT -
AW	HEADER - WINDSHIELD OPENING -
AX	BOW - ROOF -
AY	HEADER - RR UPR -
AZ	HEADER - RR LWR -

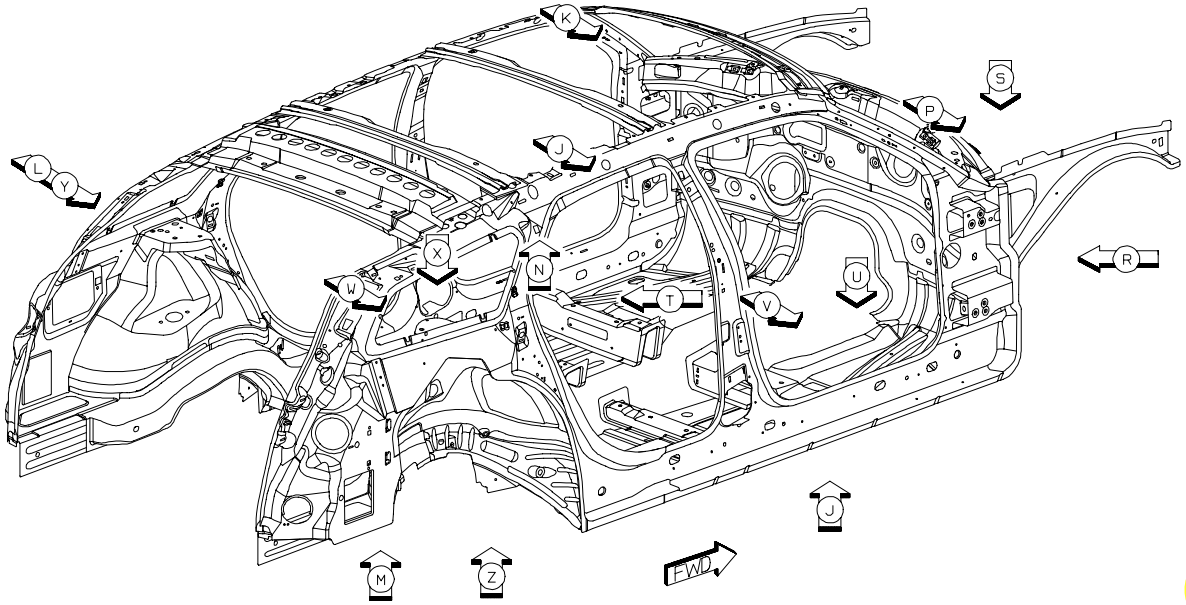

Back To Index

1. AD TO AA 16R/15L S/WELD
2. AC TO AA 1/SD S/WELD
3. AE TO AA 7R/6L S/WELD
4. AB TO AA 5R S/WELD

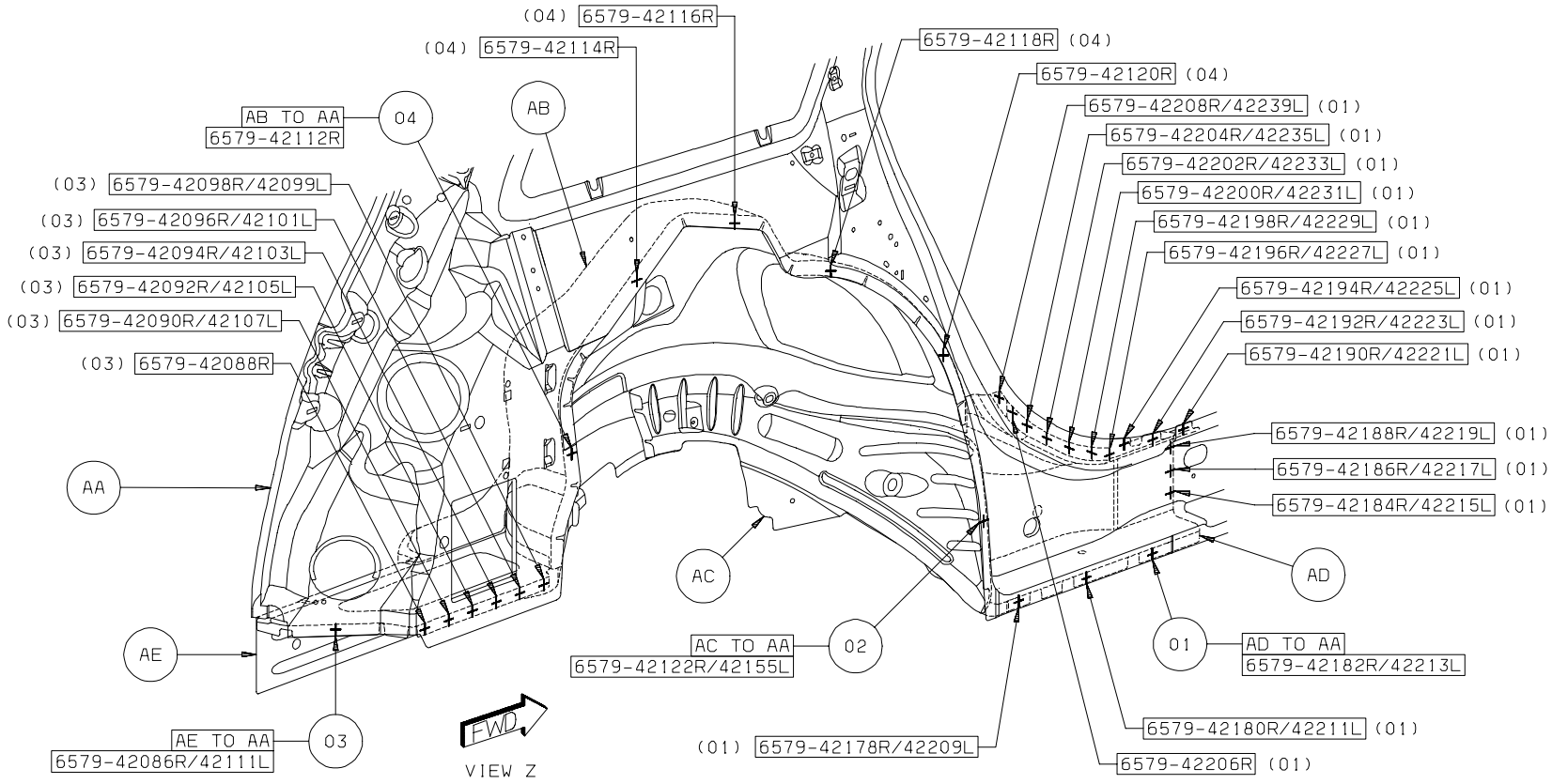

Back To Index

5. AB TO AA 5L S/WELD

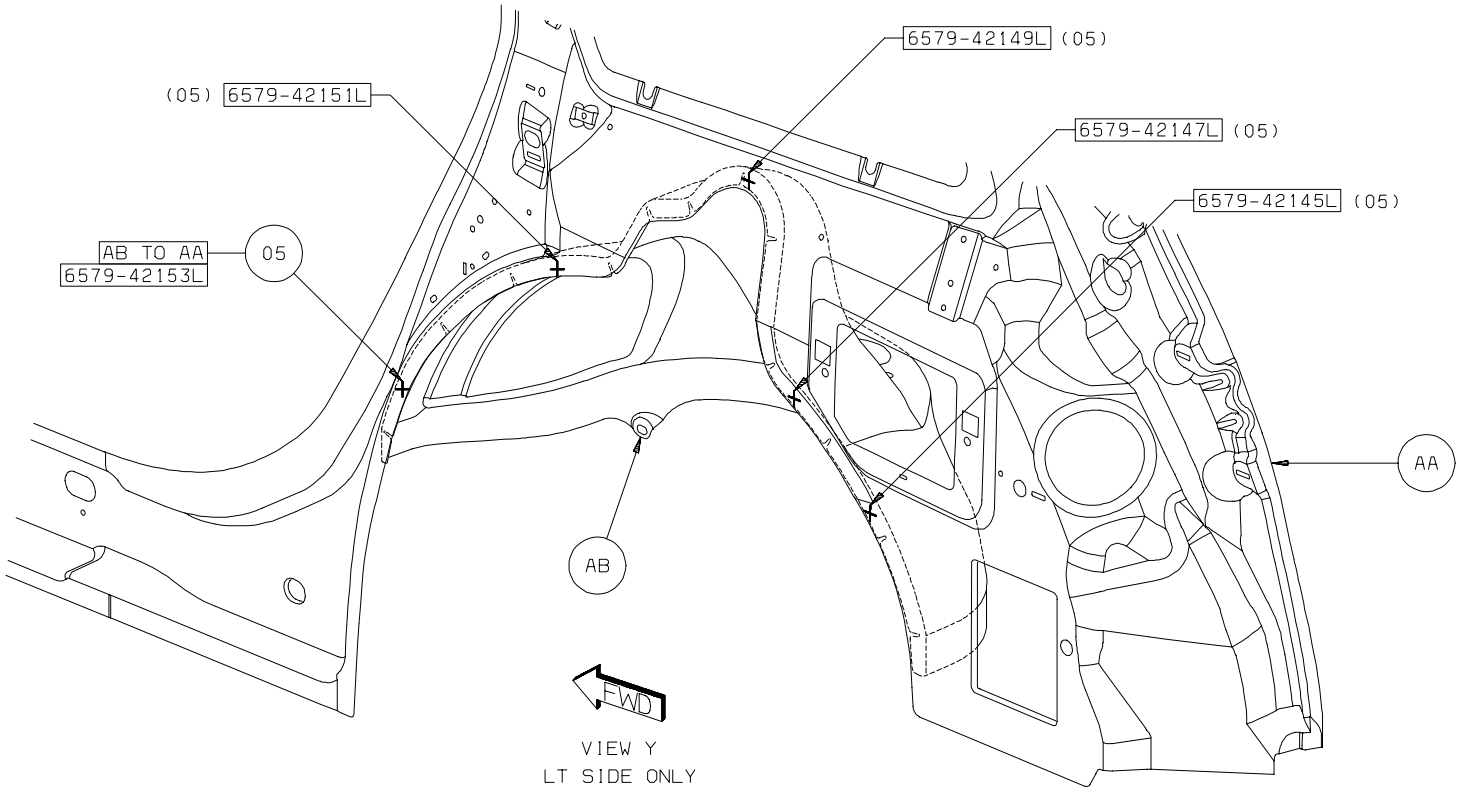

Back To Index

6. AF TO AA 11/SD S/WELD

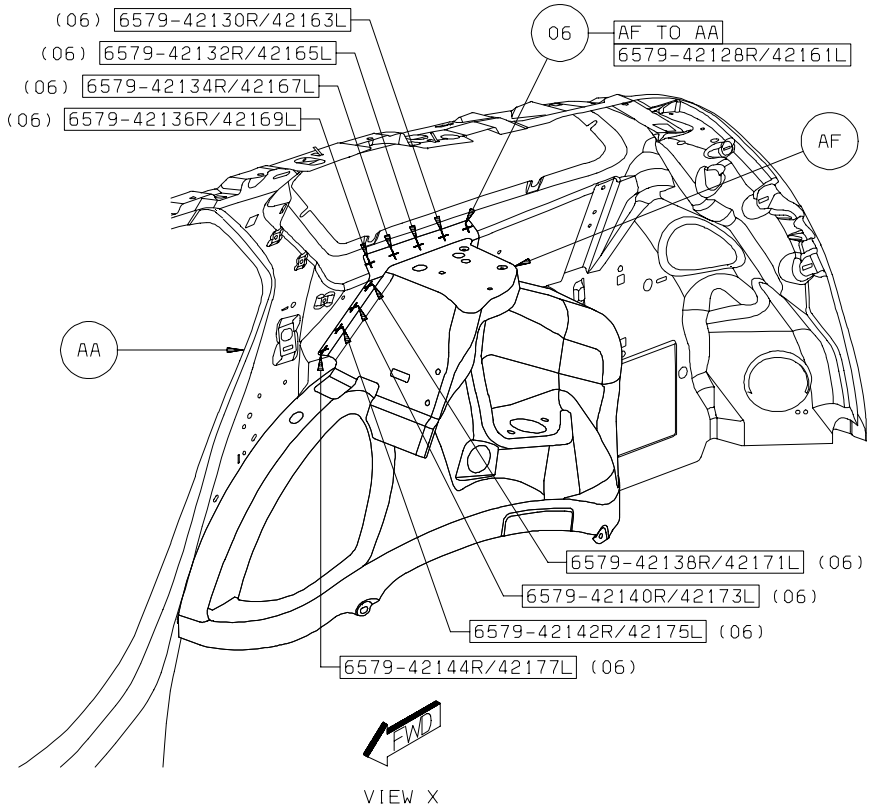

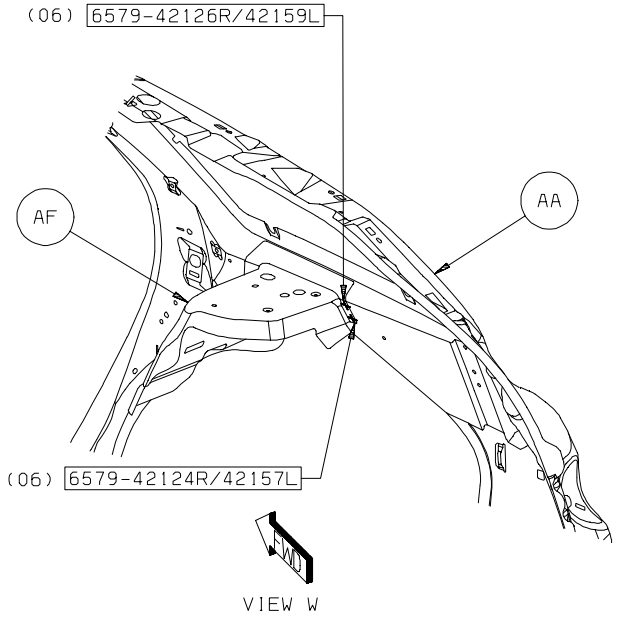

Back To Index

7. AG TO AA 21/SD S/WELD

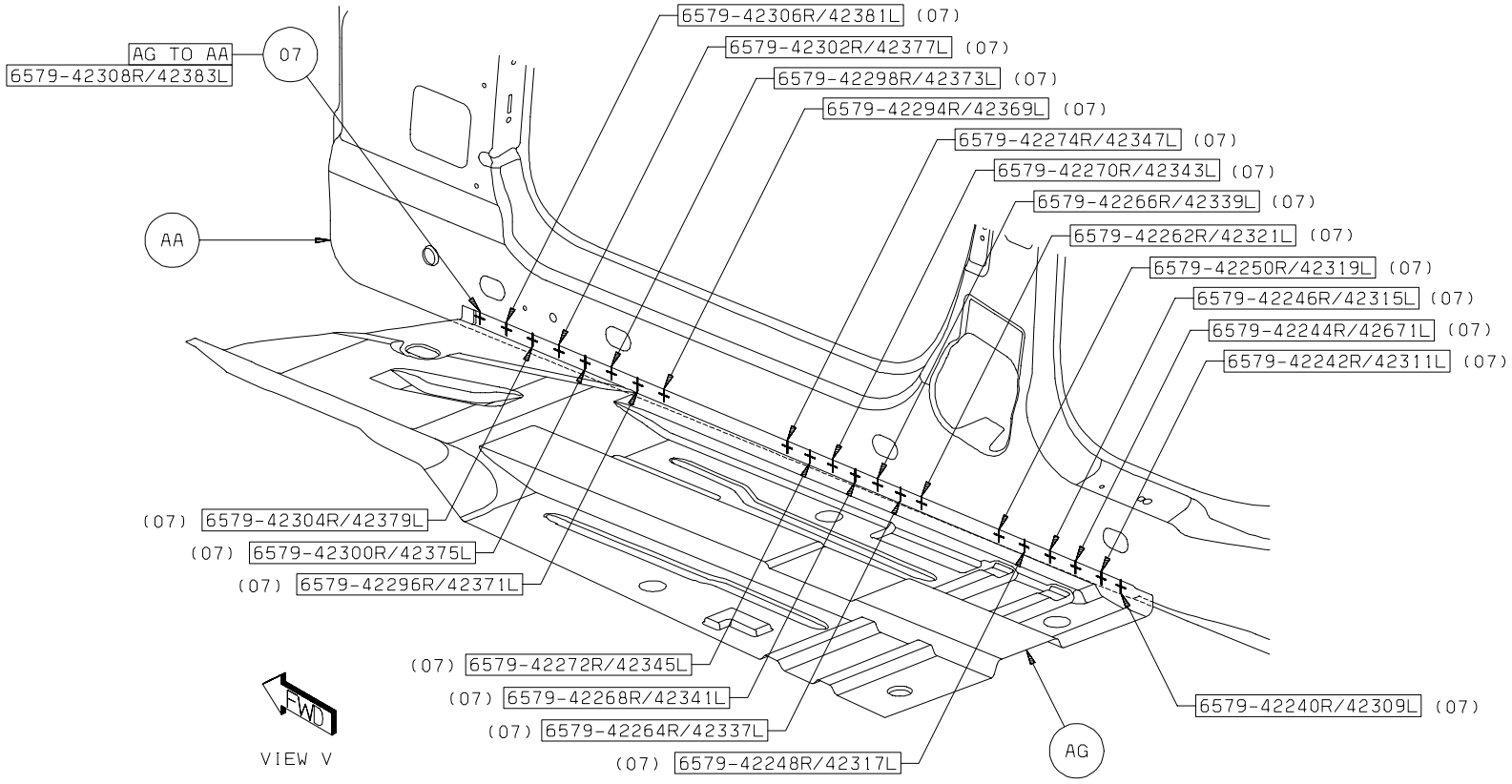

Back To Index

8. AK TO AA 5R S/WELD
9. AH TO AJ TO AA 1R S/WELD
10. AH TO AA 2R S/WELD
11. AJ TO AA 6R S/WELD

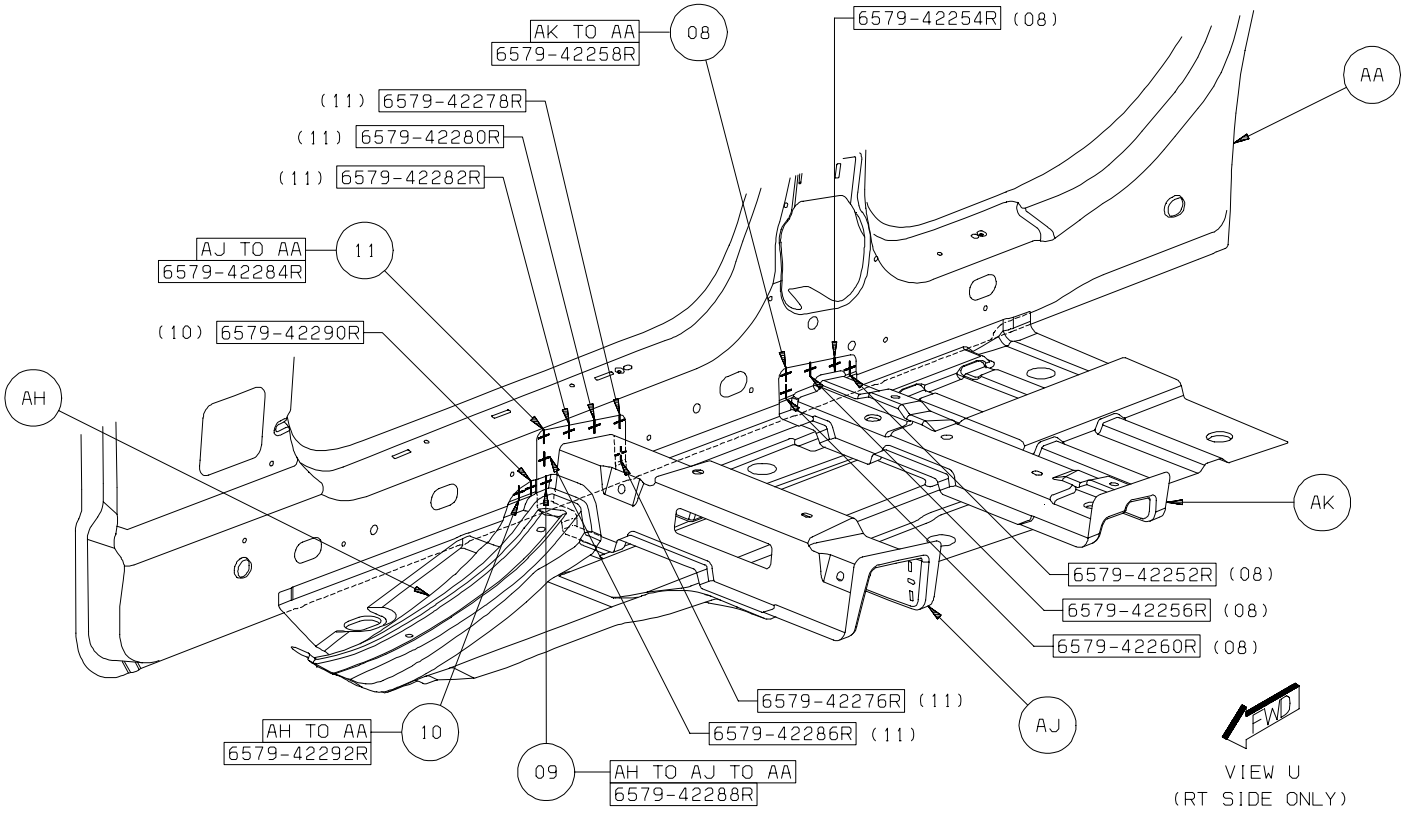

Back To Index

12. AJ TO AA 5L S/WELD
13. AH TO AA 3L S/WELD
14. AH TO AJ TO AA 1L S/WELD
15. AK TO AA 7L S/WELD

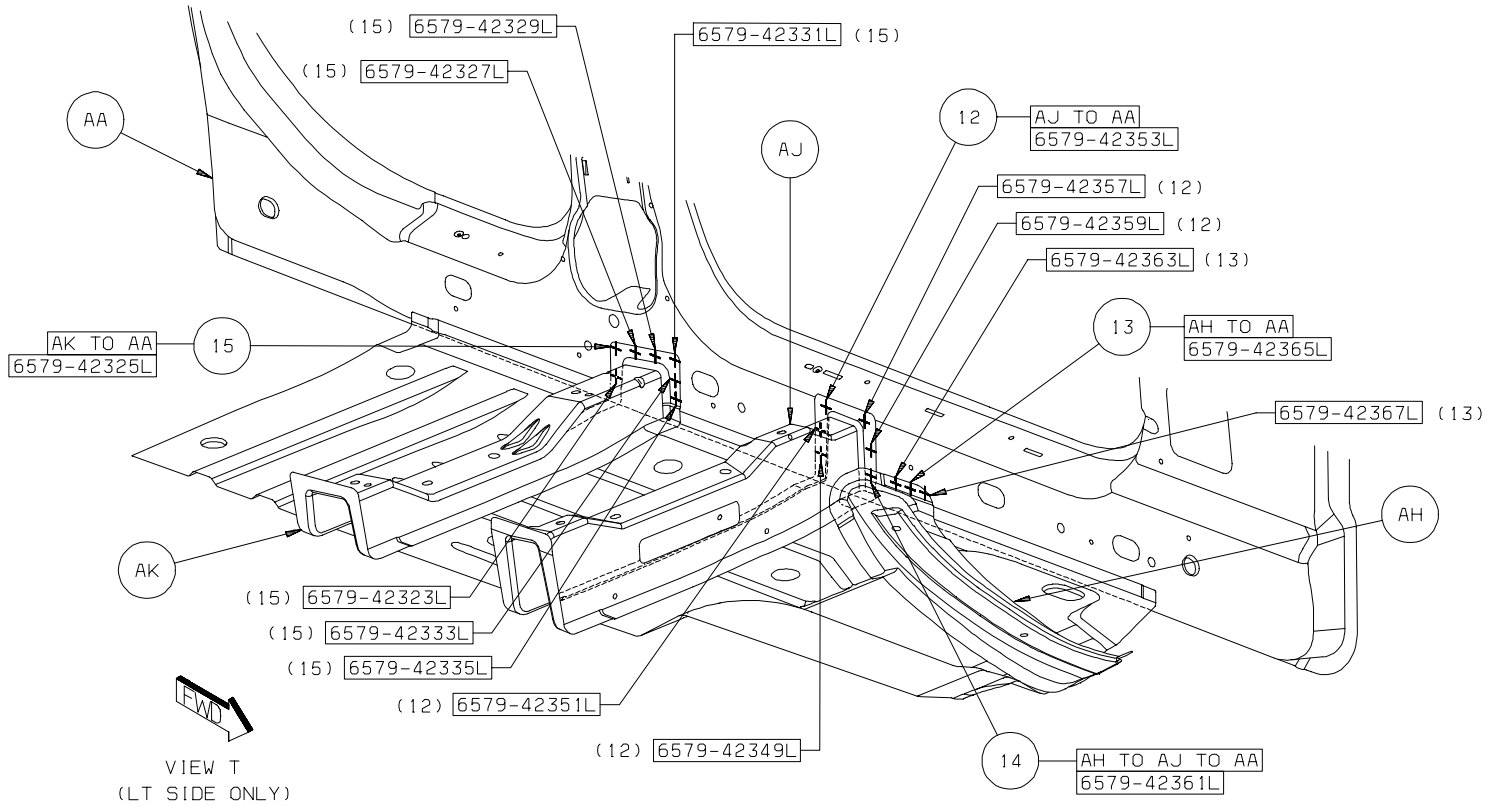

Back To Index

16. AS TO AA 4/SD S/WELD
17. AM TO AL TO AA 2/SD S/WELD
18. AM TO AA 1/SD S/WELD
19. AN TO AA 7/SD S/WELD
20. AL TO AA 3/SD S/WELD

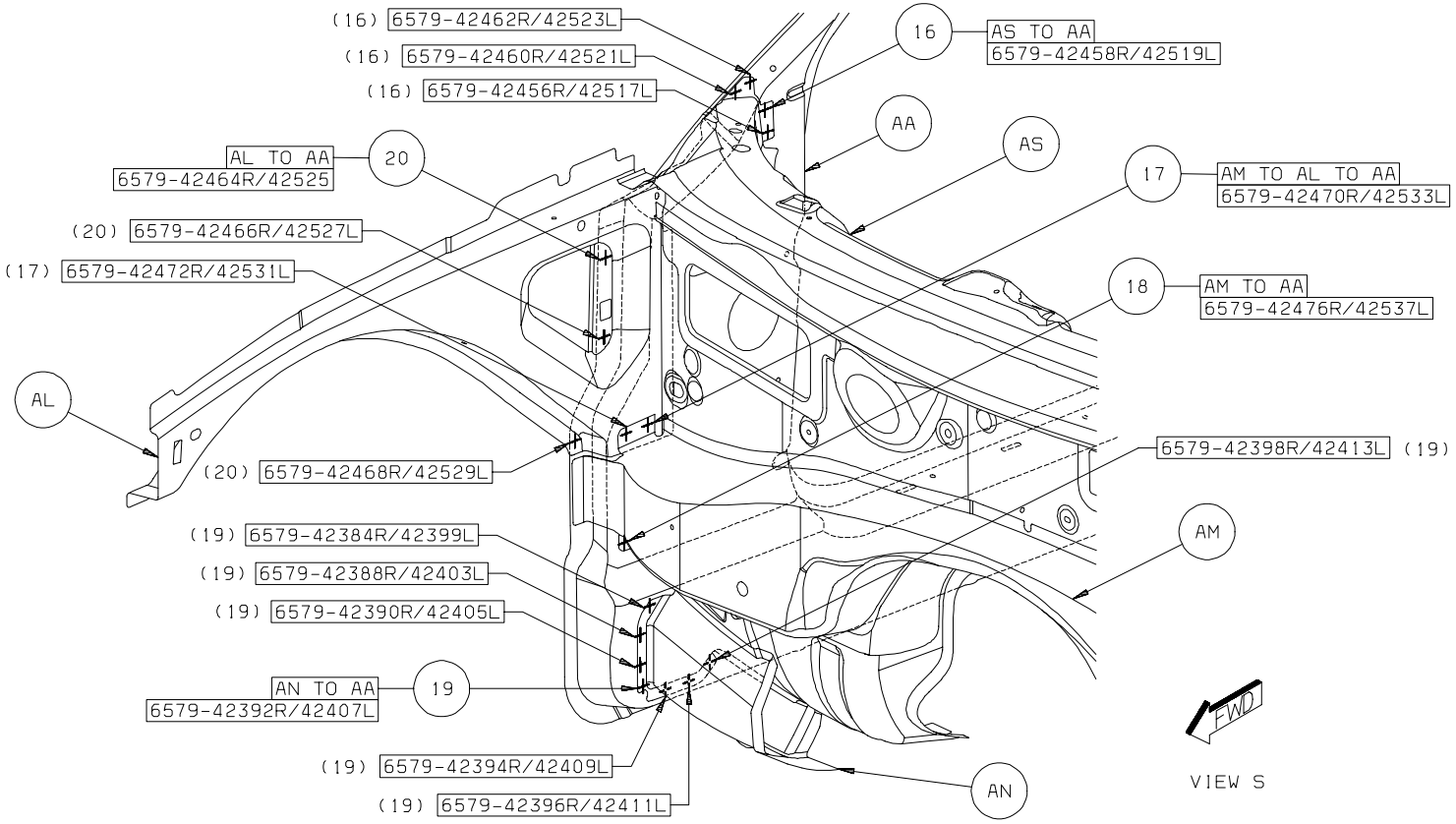

Back To Index

21. AU TO AT TO AA 2/SD S/WELD
22. AU TO AL TO AA 1/SD S/WELD
23. AV TO AM TO AA 1/SD S/WELD
24. AT TO AA 3/SD S/WELD

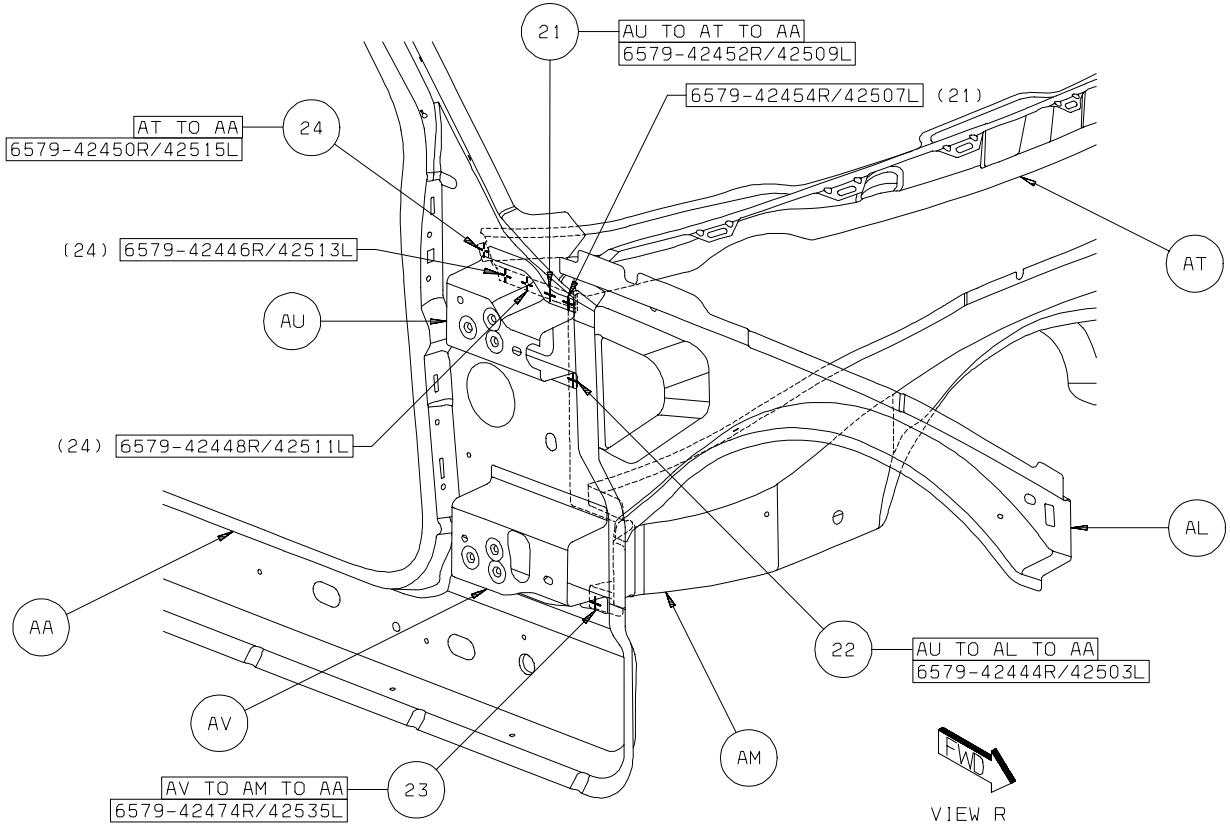

Back To Index

25. AR TO AP TO AA 3/SD S/WELD
26. AG TO AP TO AA 1/SD S/WELD
27. AP TO AA 6/SD S/WELD
28. AL TO AP TO AA 5/SD S/WELD

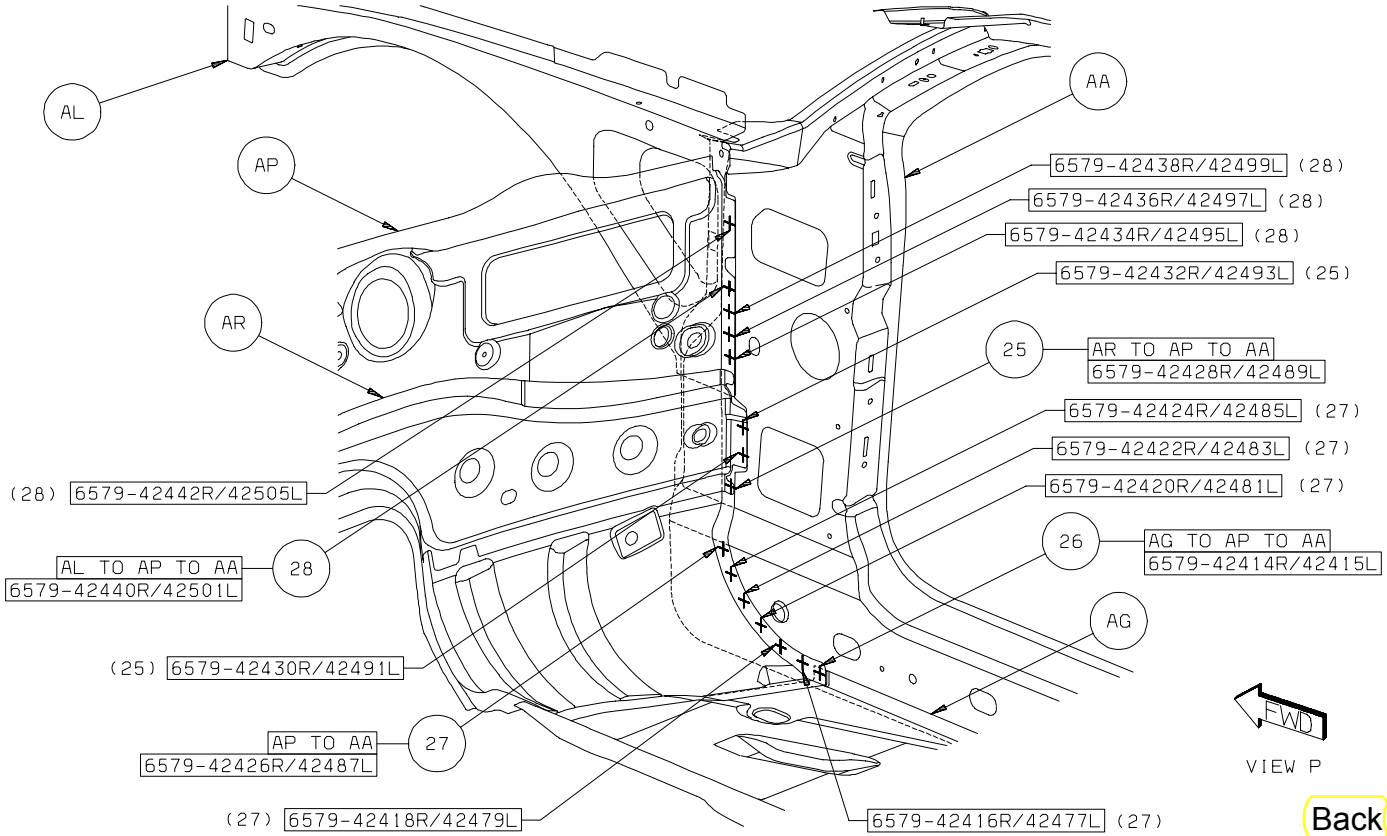

Back To Index

29. AW TO AA 4/SD S/WELD
30. AX TO AA 8/SD S/WELD
31. AZ TO AY TO AA 1/SD S/WELD
32. AZ TO AA 5/SD S/WELD

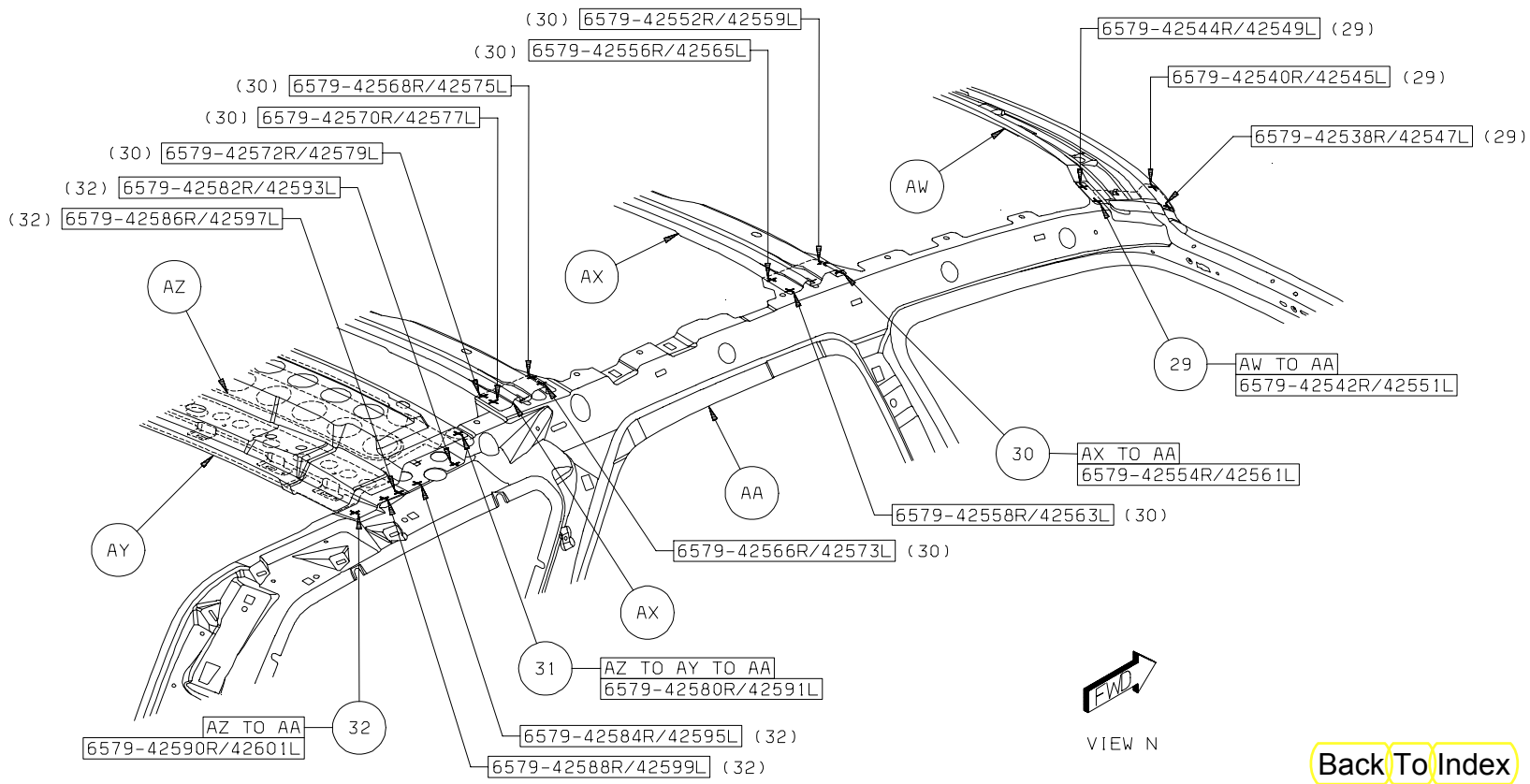

Back To Index

33. AE TO AB TO AC TO AB TO AA 1R STRUC ADH
34. AE TO AA 1R STRUC ADH
35. AE TO AE TO AA 1R STRUC ADH
36. AE TO AD TO AA 1R STRUC ADH

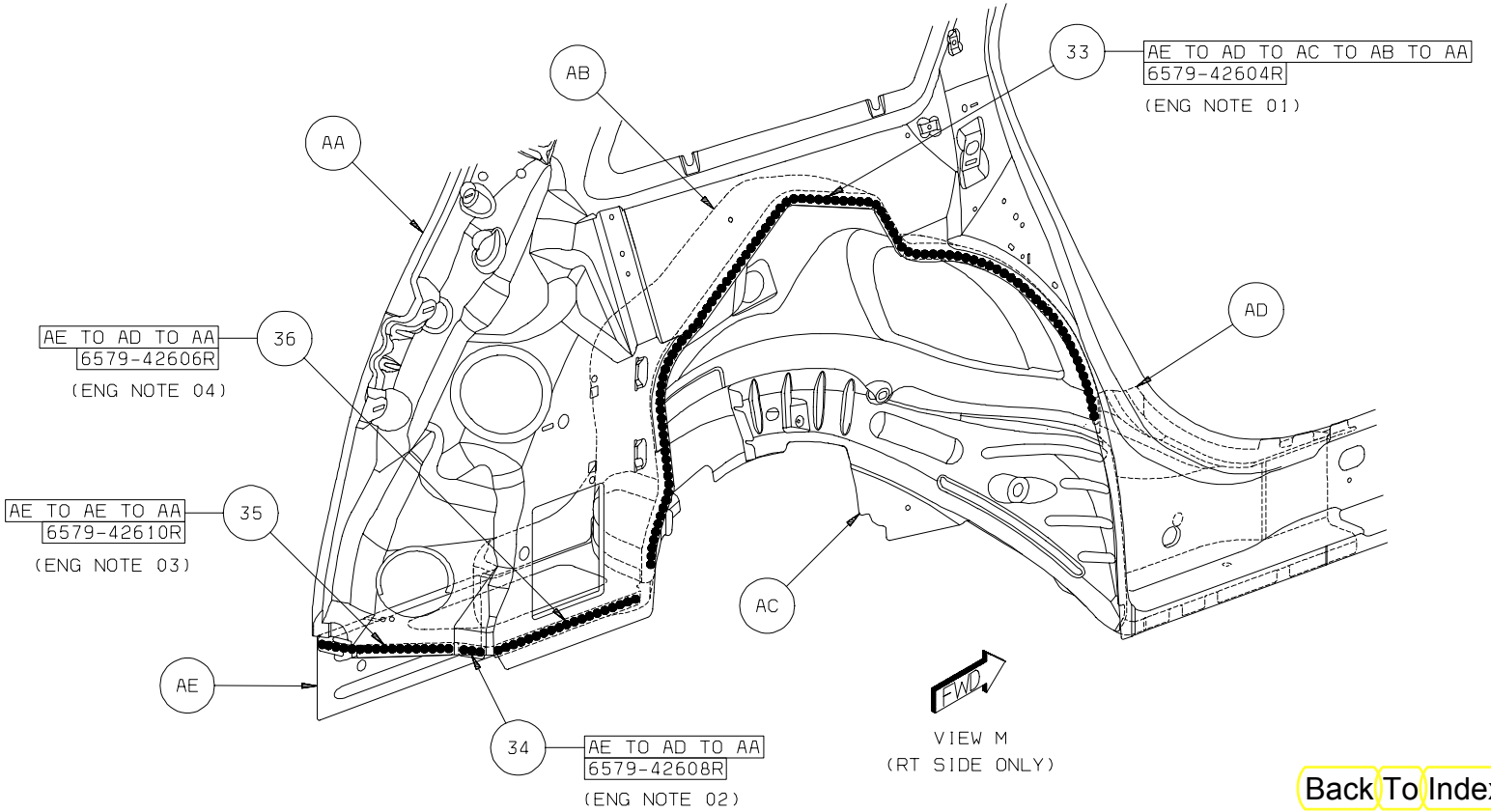

Back To Index

37. AE TO AD TO AA 1L STRUC ADH
38. AE TO AE TO AA 1L STRUC ADH
39. AE TO AD TO AA 1L STRUC ADH
40. AE TO AD TO AC TO AB TO AA 1L STRUC ADH

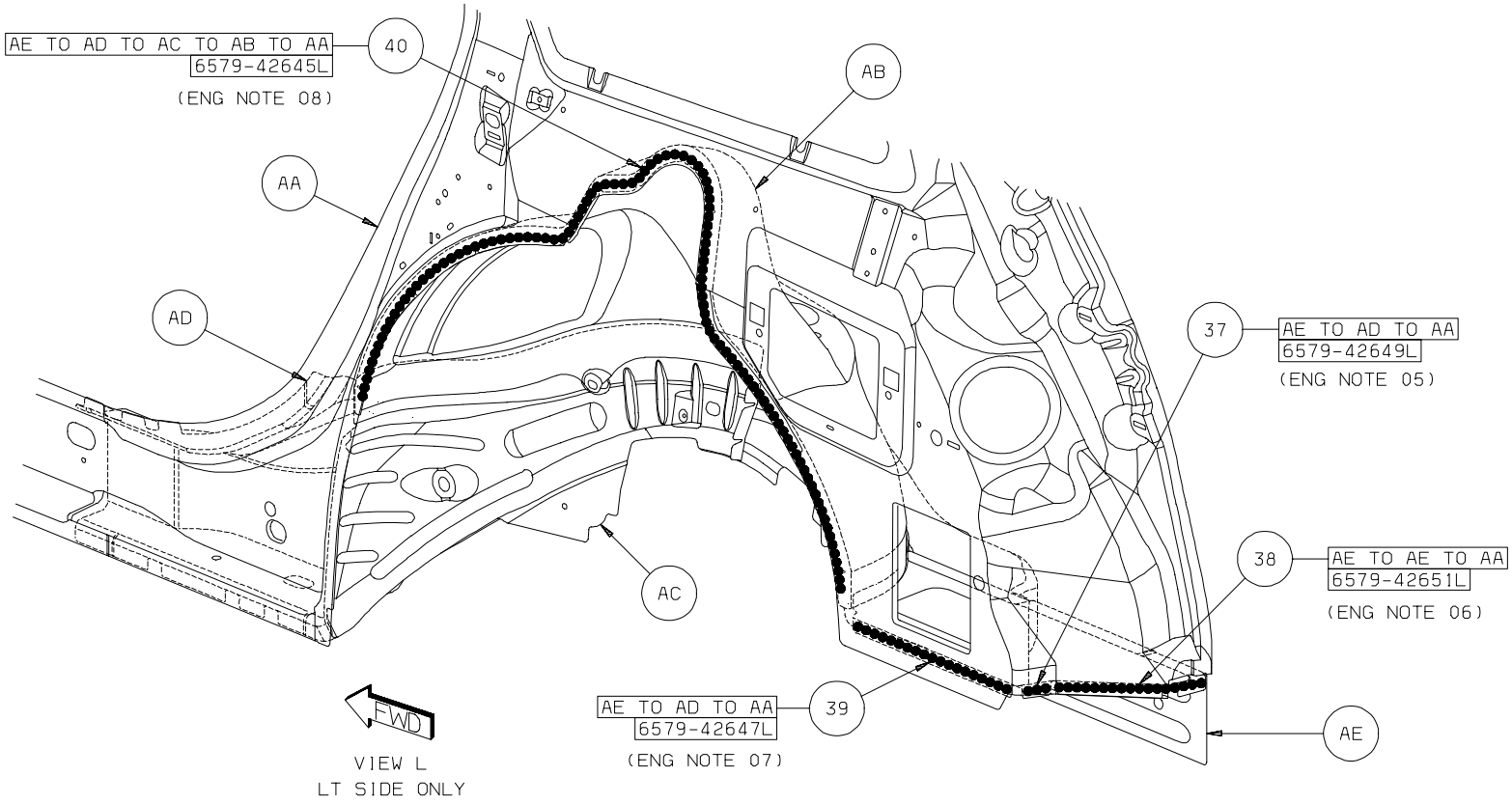

Back To Index

41. AL TO AT TO AP TO AG TO AA 1R STRUC ADH

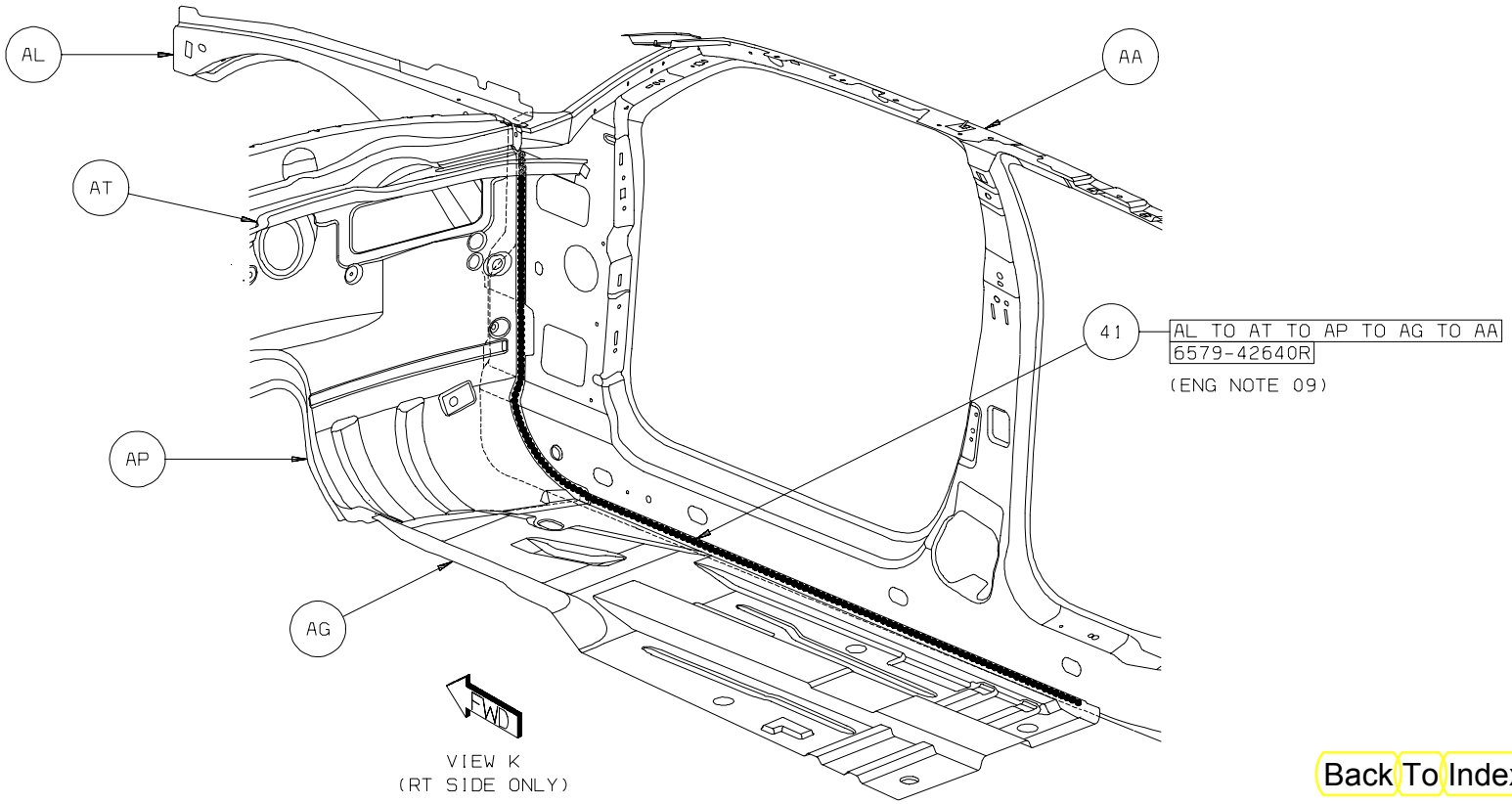

Back To Index

42. AG TO AA 1L STRUC ADH
43. AL TO AT TO AP TO AG TO AA 1L STRUC ADH

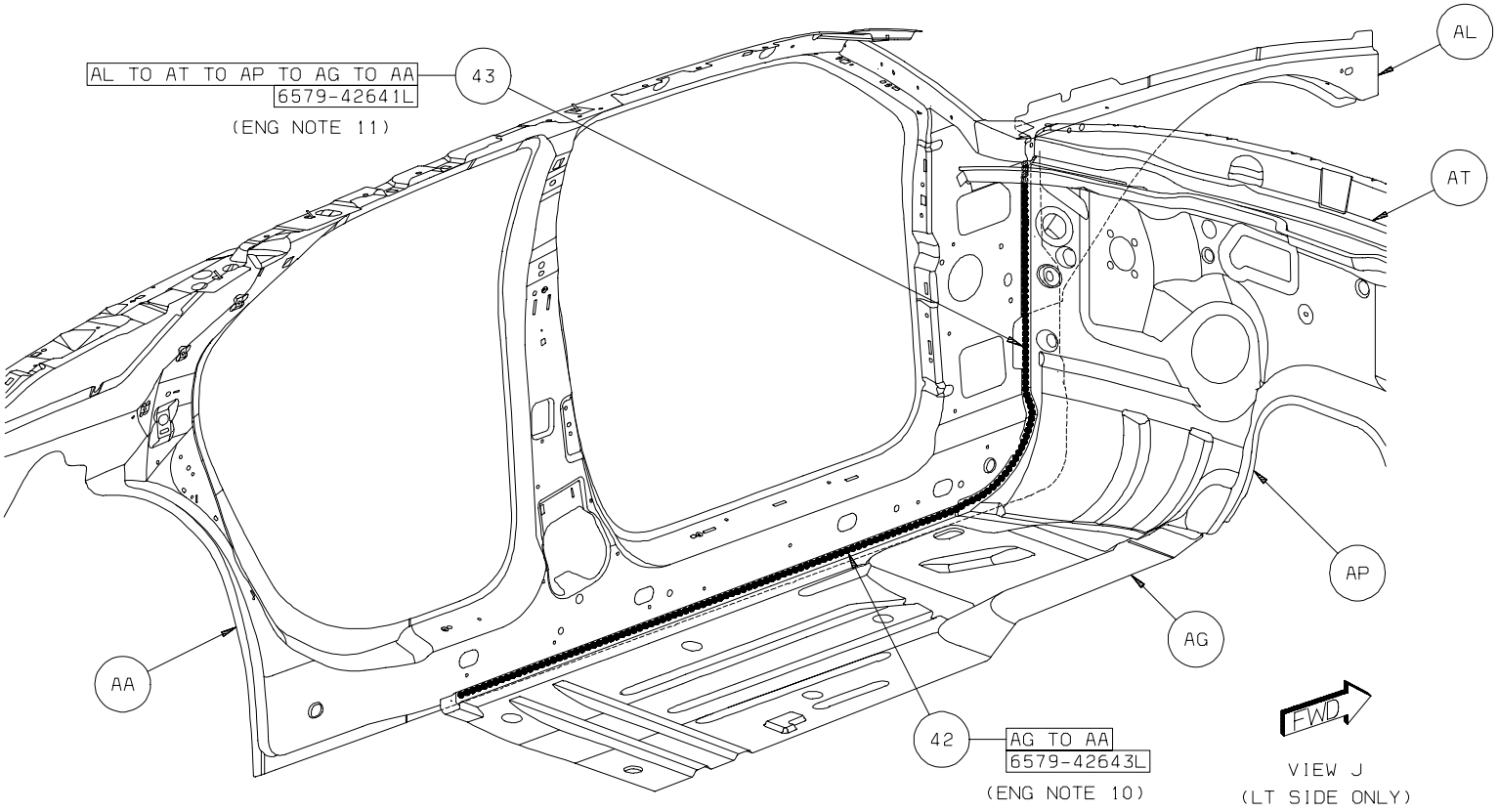

Back To Index

Back To Index

Sealer/Sound Deadner/ Structural Adhesive/ Foam Locations

300,300C,MAGNUM

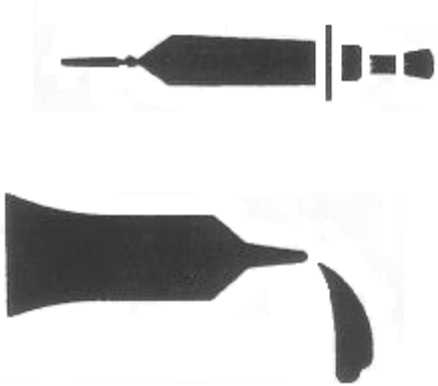

This section shows the different locations for Sealers, Sound Deadners and Strutural Adhesives and has been prepared for use by all body technicians involved in the repair of the Chrysler Pacifica.

Body/Paint Sealer Locations.....
NVH/Structural Foam Locations.....
Sound Deadner Locations.....
Structural Adhesive Locations.....

DaimlerChrysler Motors Corporation reserves the right to make improvements in design or to change specifications to these vehicles without incurring any obligation upon itself.

Back To Index

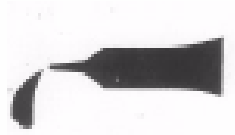

SEALER INFORMATION

SEALER AMOUNT / BEAD SIZE

4mm DIA* X 1000mm
PUMPABLE

* = DIAMETER

APPLICATION RECOMMENDATIONS

ALL REPAIRS WHERE PANELS WERE REPLACED HAVE VOIDS THAT MUST BE FILLED WITH SEALANT. SEALANT SHOULD BE APPLIED TO ALL SKIPS, PIN HOLES,IN SEALERS AND WELD BURN THROUGH HOLES ON THE INTERIOR AND EXTERIOR OF THE VEHICLE THAT WOULD PERMIT LEAKAGE OF WATER,AIR OR EXHAUST FUMES. TYPICAL AREAS OF THE EXTERIOR THAT MUST BE SEALED ARE LISTED IN THIS SECTION. AREAS OF THE INTERIOR THAT MUST BE SEALED ARE FLOOR PANS, WHEELHOUSES, DASH PANEL, AND COWL SIDES

SEALER LEGEND

THUMBGRADE SEALER

PUMPABLE SEALER

HIDDEN SEALER

Back To Index

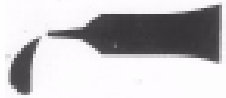

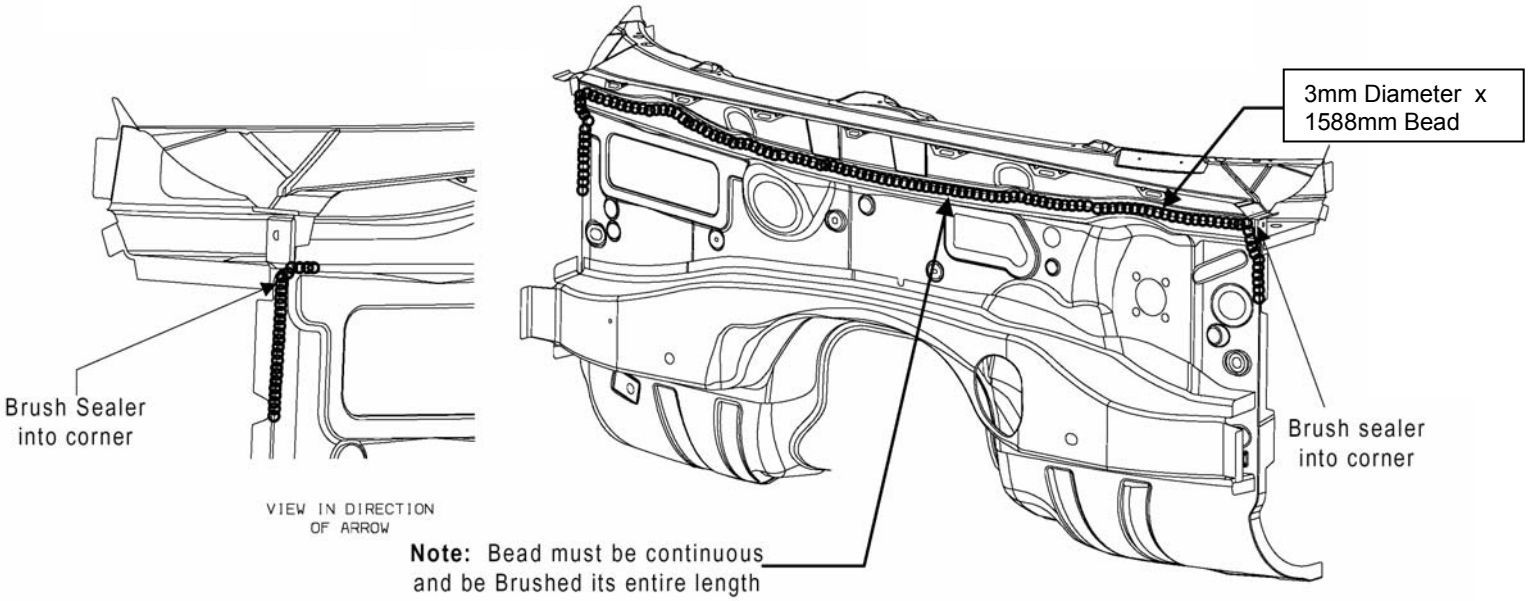

Back To Index

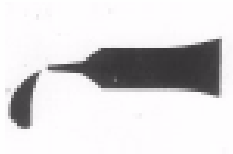

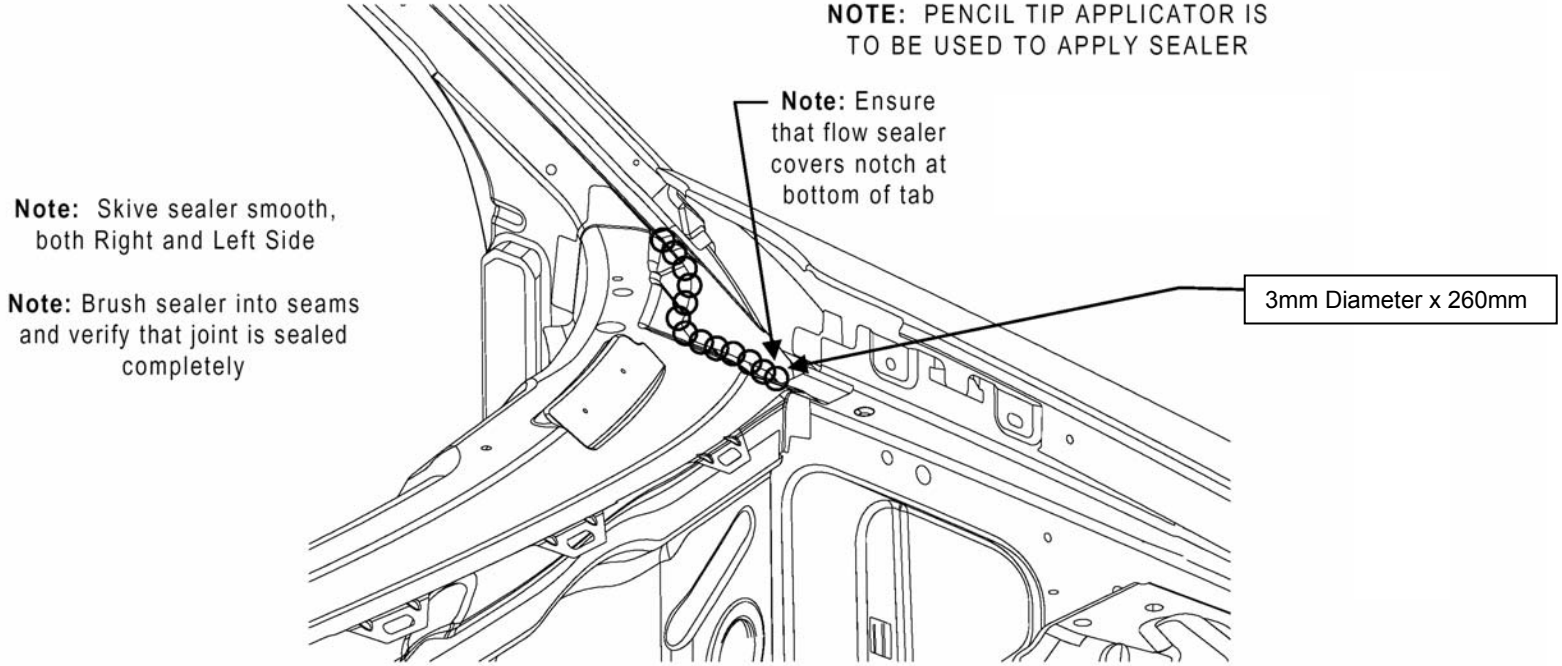

Back To Index

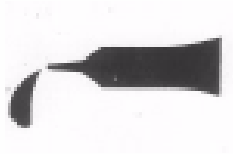

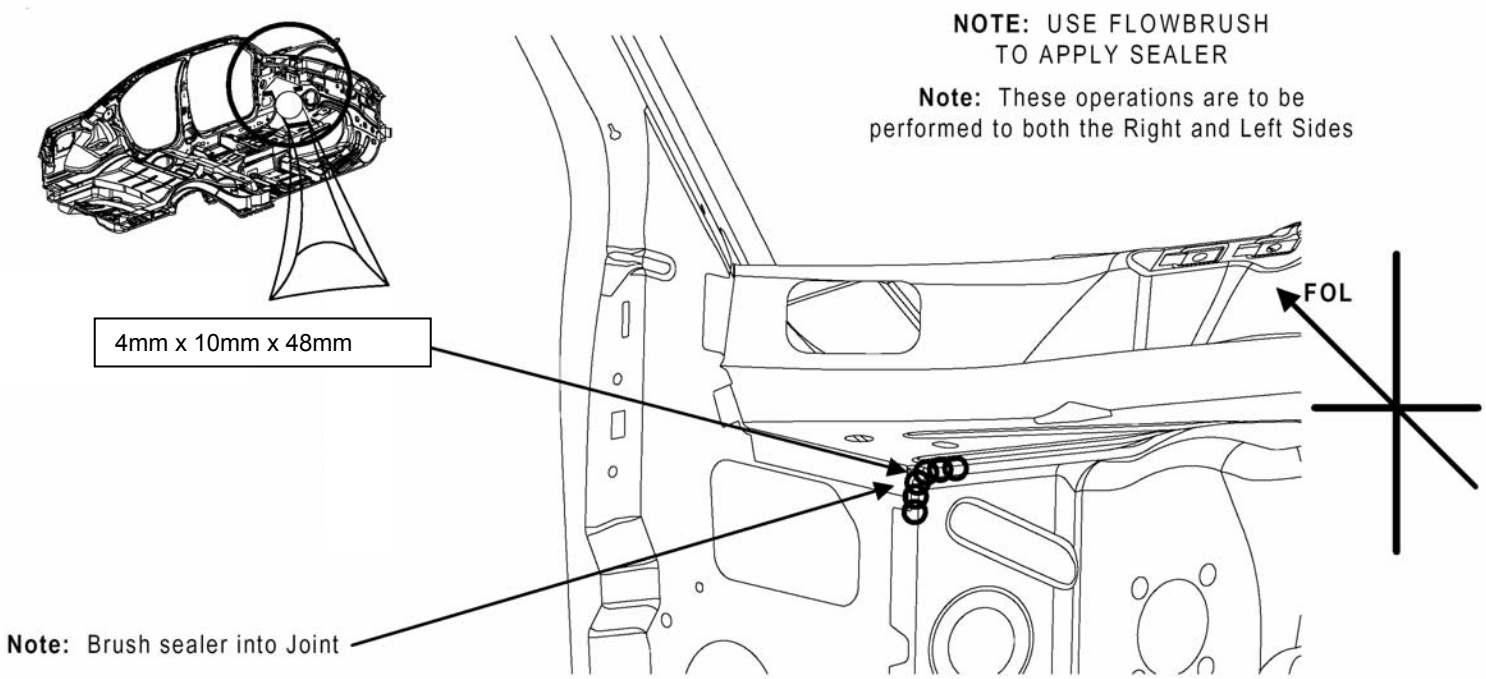

Back To Index

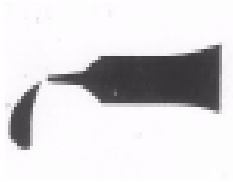

Note: Perform operations on both Right and Left Sides

3mm x 25mm x 835mm Bead

Note: Visually check sealer bead for skips. Rebrush if necessary

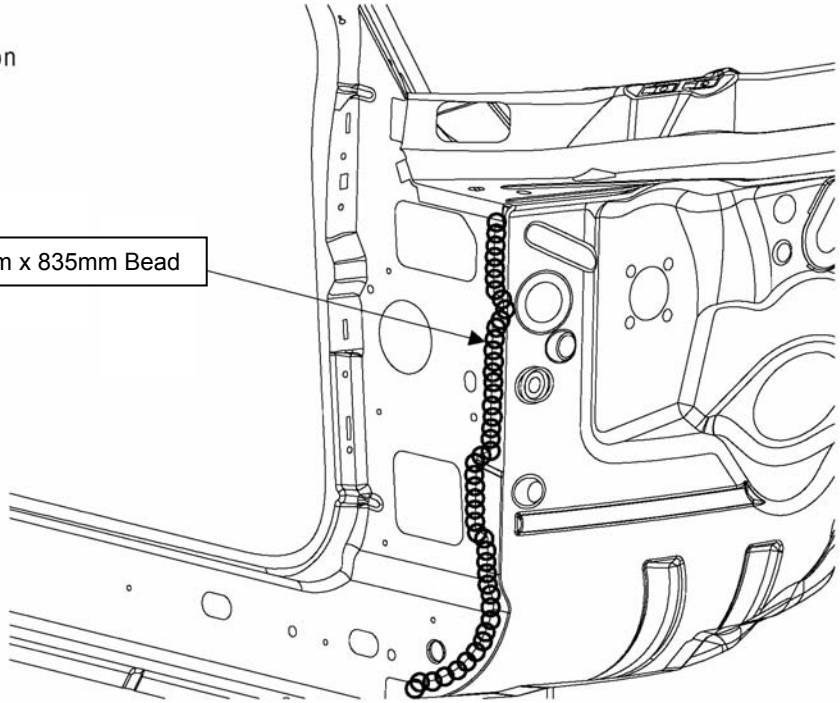

Back To Index

Back To Index

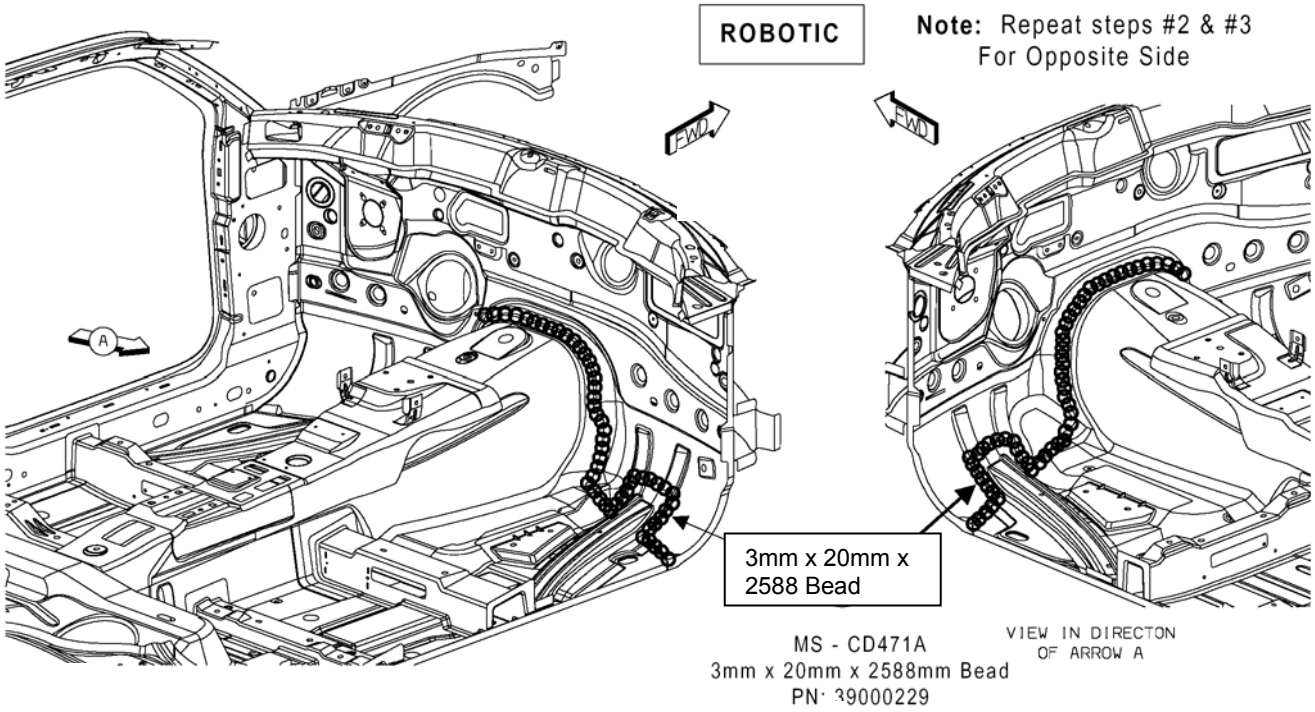

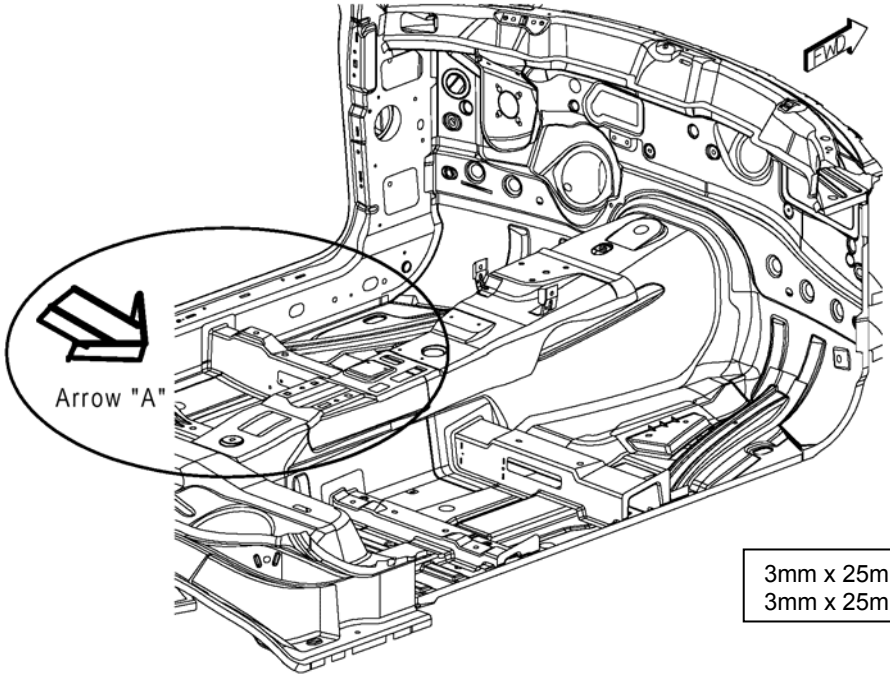

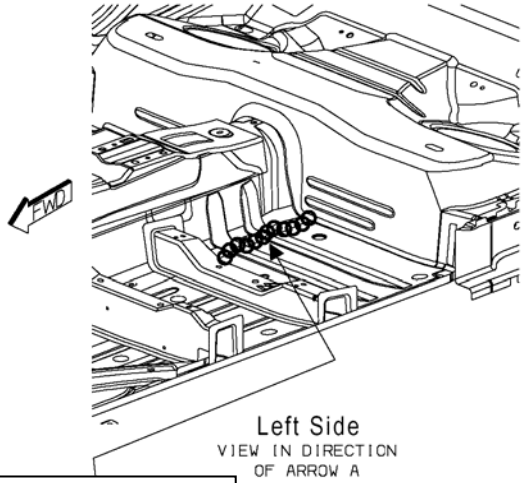

3mm x 25mm x 369 Bead (Left Side)
3mm x 25mm x 320 Bead (Right Side)

Note: Visually check sealer bead for skips and brush if necessary

Back To Index

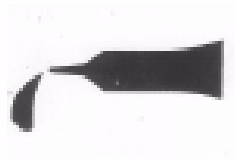

Back To Index

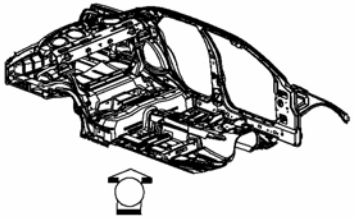

Note: Keep trim attachment holes free of sealer

Note: Visually check sealer bead for skips and brush if necessary

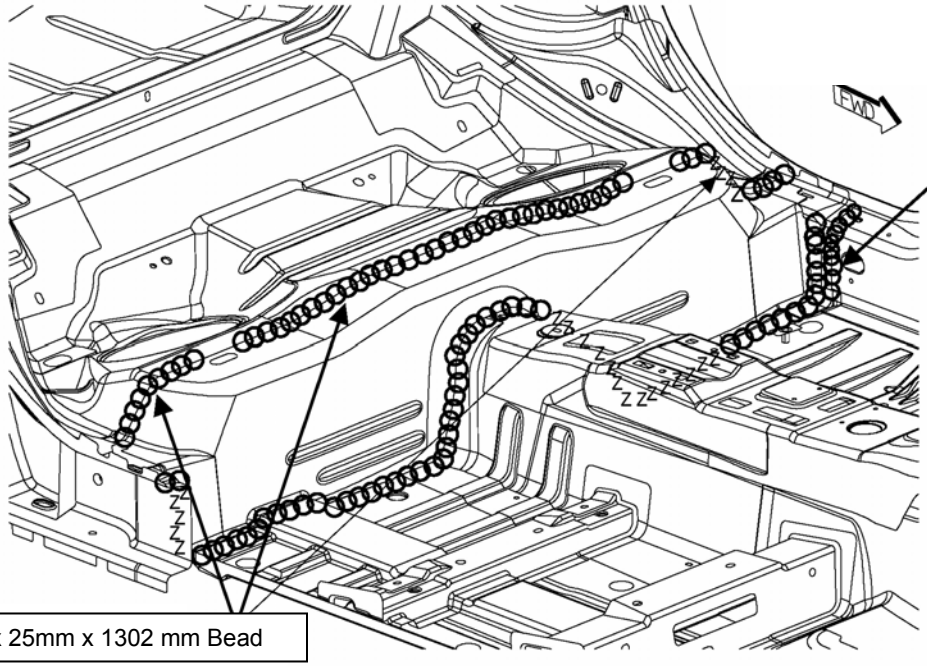

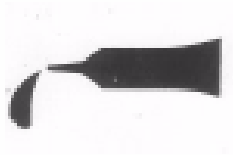

Back To Index

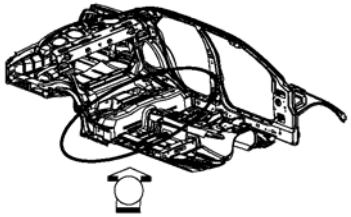

3mm Dia. X 100mm

Apply sealer using
a Pencil Tip

Note: Manual rebrushing
is required. Both Right and
Left Sides

Note: No sealer allowed on
door weather seal flange.
Skive if necessary,
Both Right and Left Sides

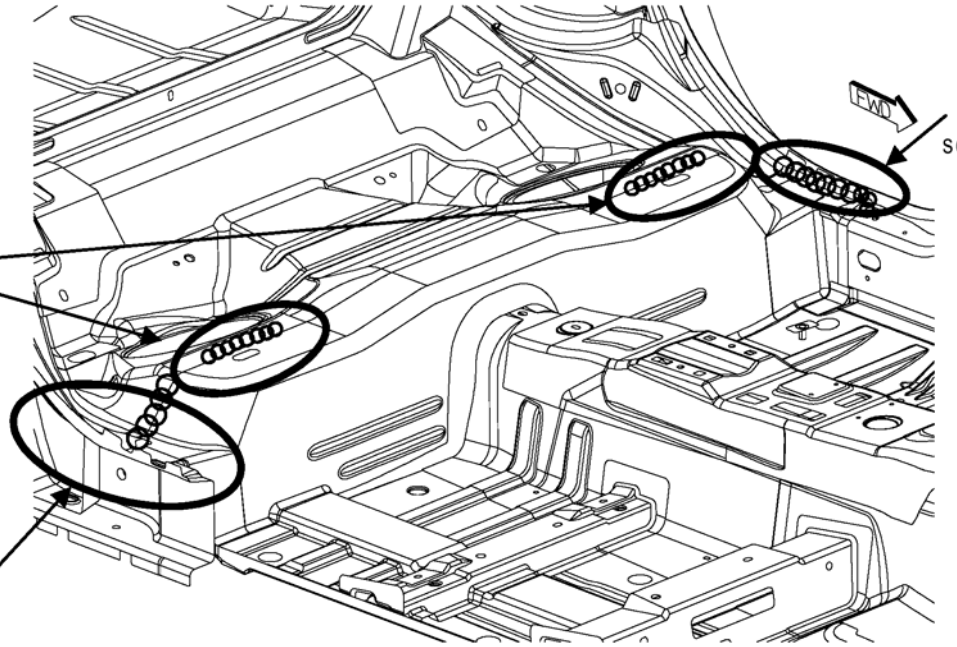

Note: Skive
sealer and keep
clear of hole

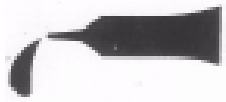

Back To Index

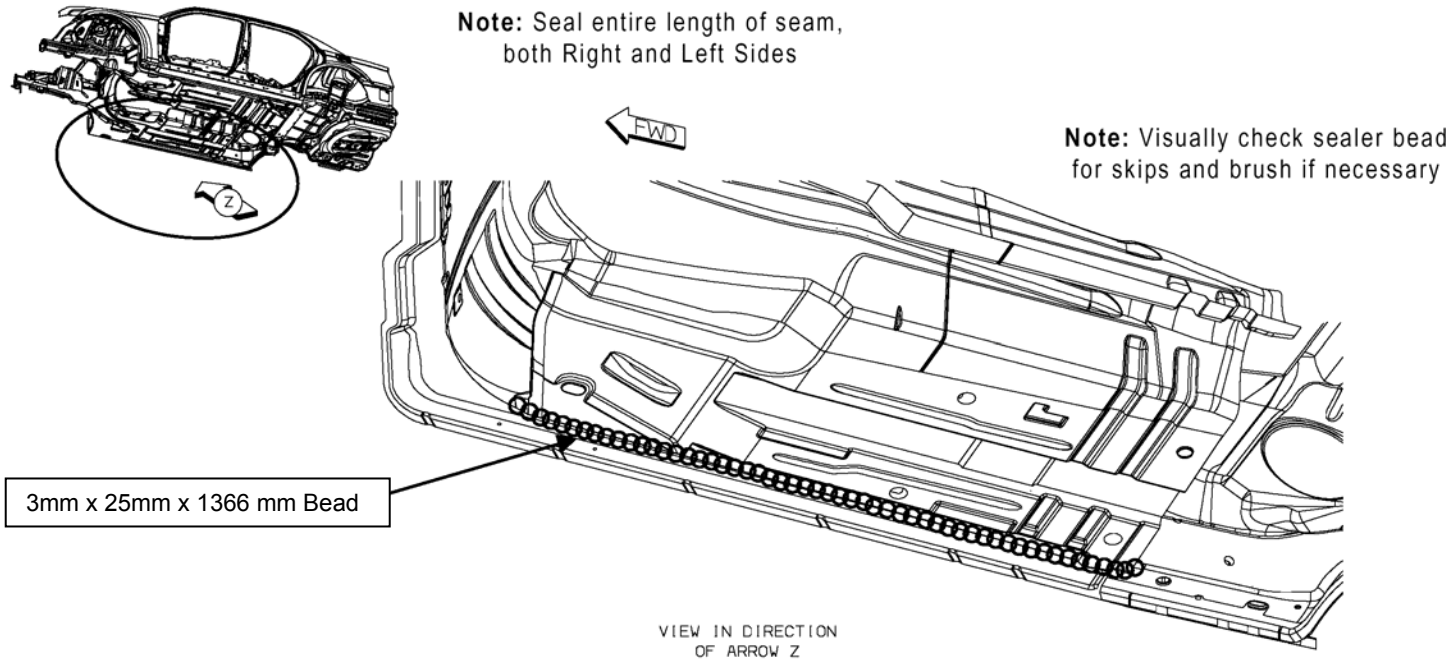

Back To Index

Note: Left Side Shown

Note: Seam to be sealed from the outside, Both Right and Left Sides

Note: visually check sealer bead for skips and brush if necessary

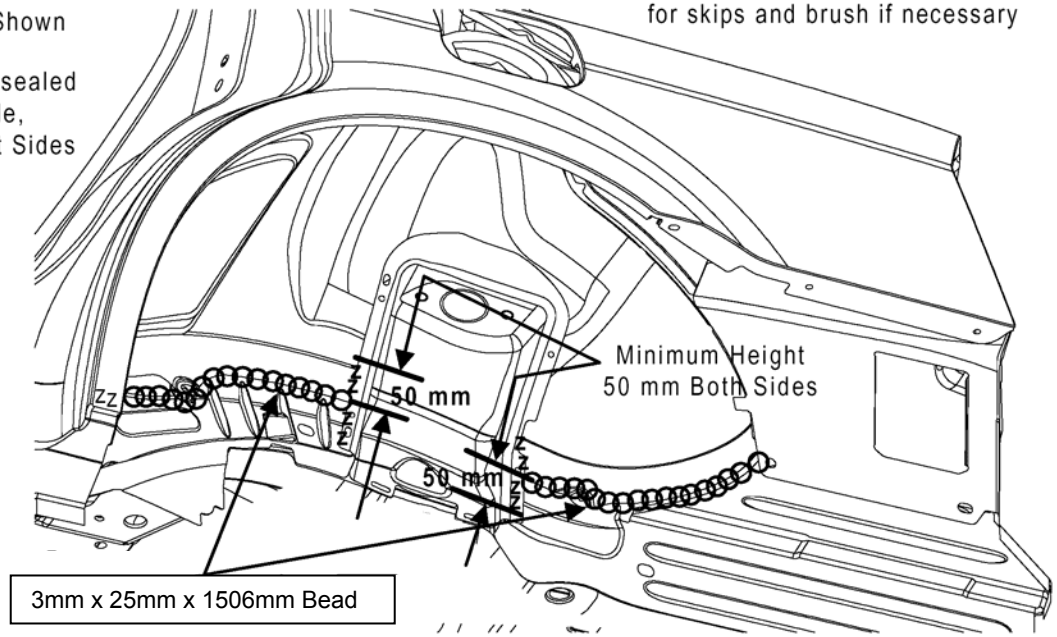

Back To Index

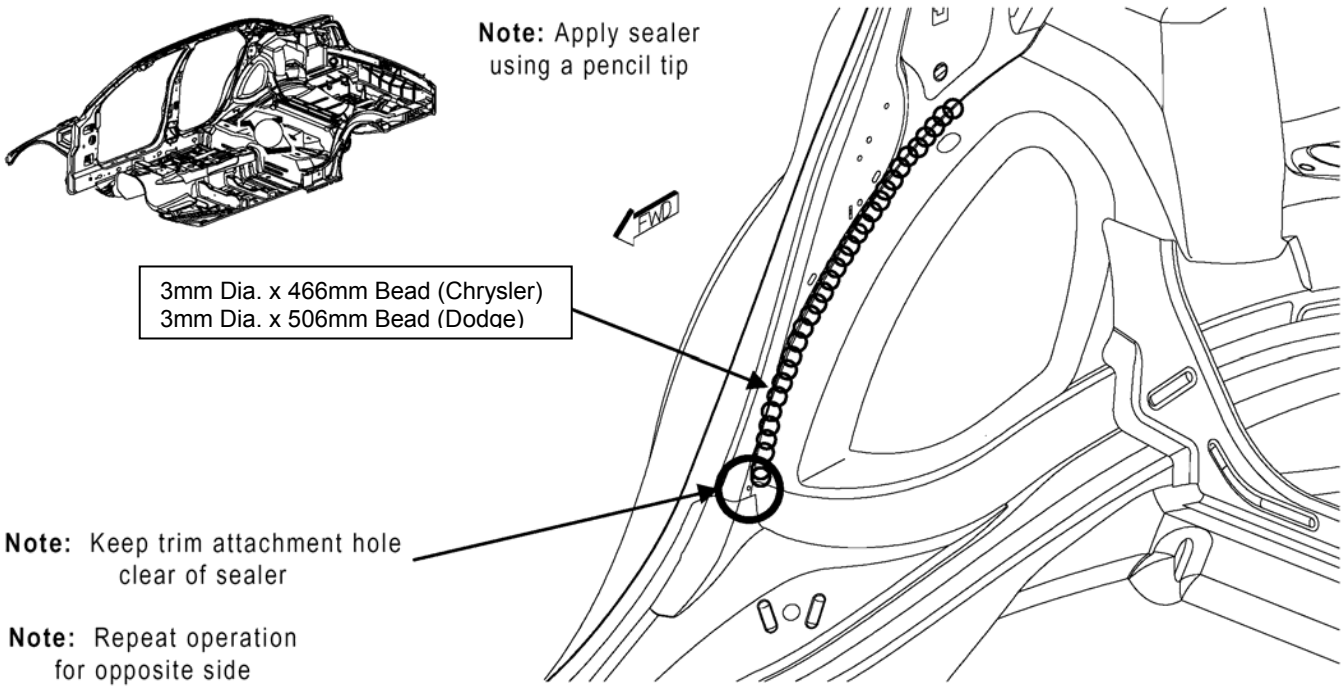

Back To Index

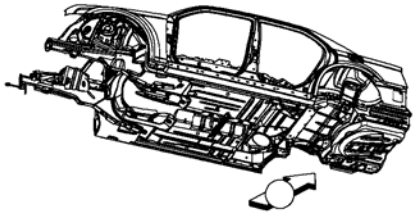

3mm x 25mm x 1408mm

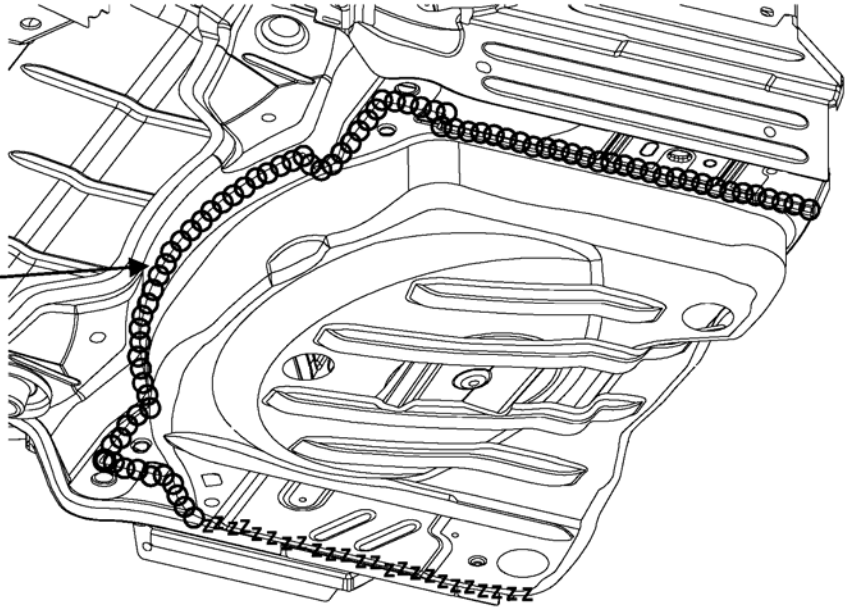

Note: Panel seams must be sealed from underneath

Note: Visually check sealer bead for skips and brush if necessary

Back To Index

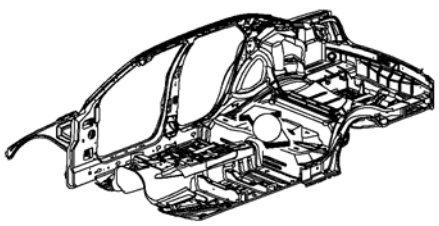

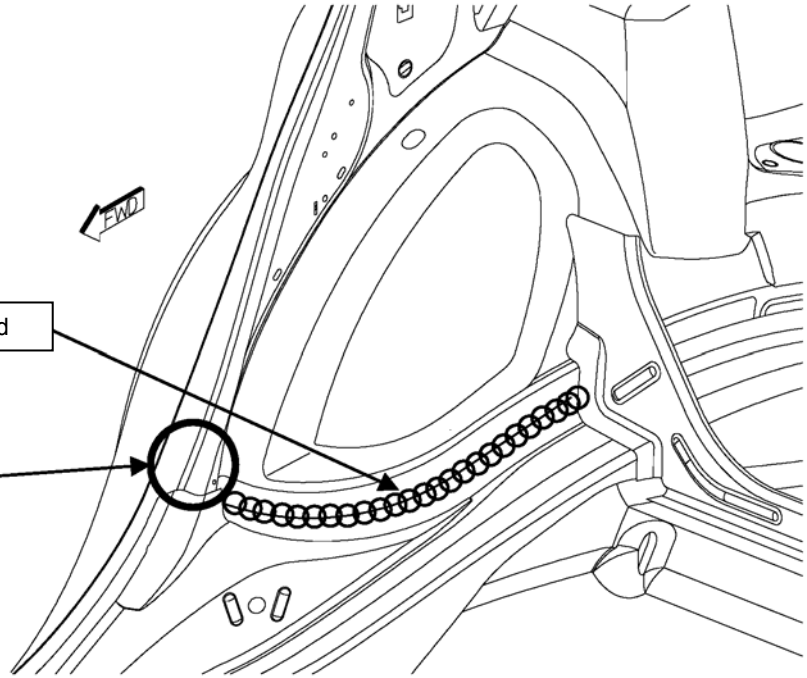

Note: Keep sealer away from trim attachment feature

Note: Repeat operation for opposite side

Note: Visually check sealer bead for skips and brush if necessary

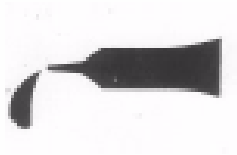

Back To Index

Note: Sealer to be applied using a ribbon tip

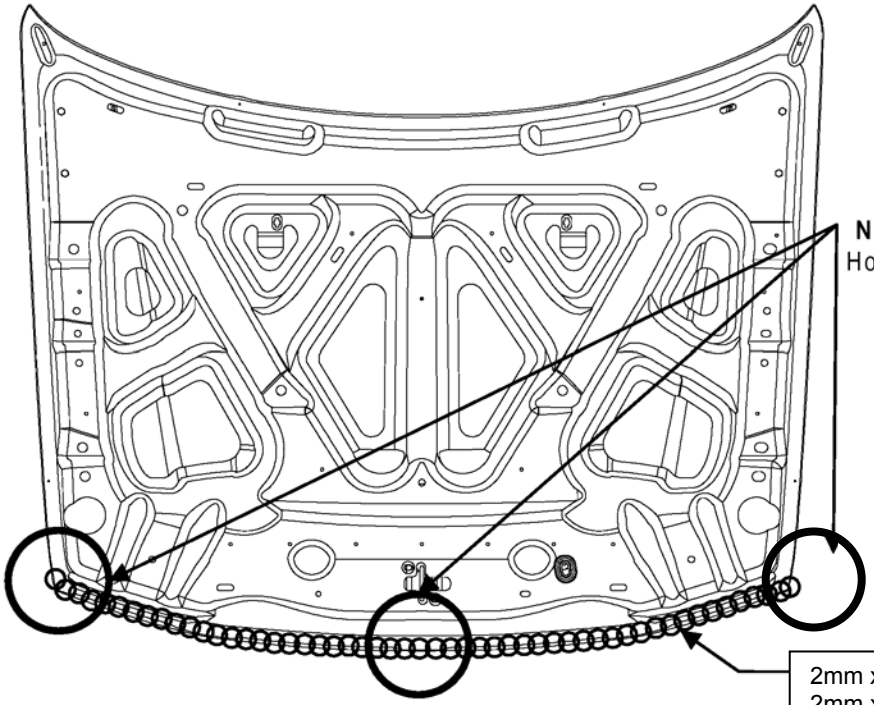

Note: Skive ends and Center of Hood forming a smooth transition

2mm x 10mm x 1749mm (C48)
2mm x 10mm x 1754mm (C49)

Back To Index

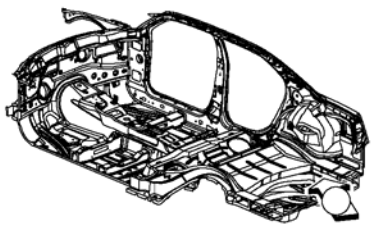

Note: Visually check sealer bead for skips and brush if necessary

Note: Right Side shown, Repeat operation on Left Side

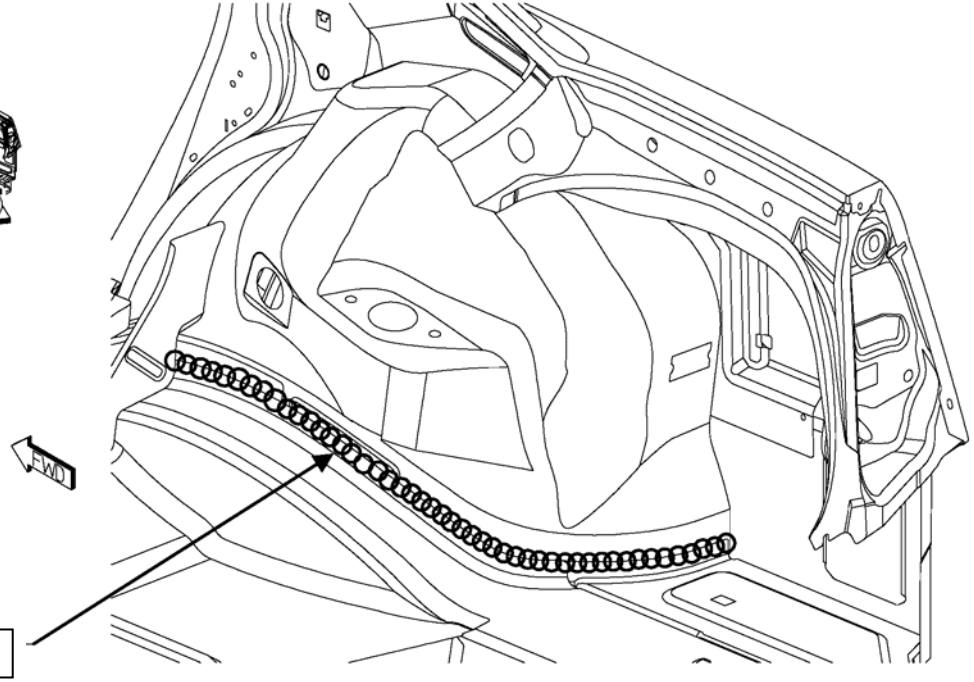

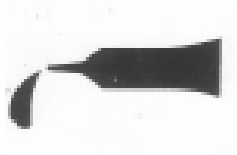

Back To Index

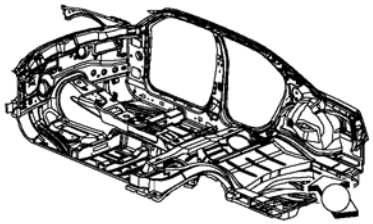

Note: Visually check sealer bead for skips and brush if necessary

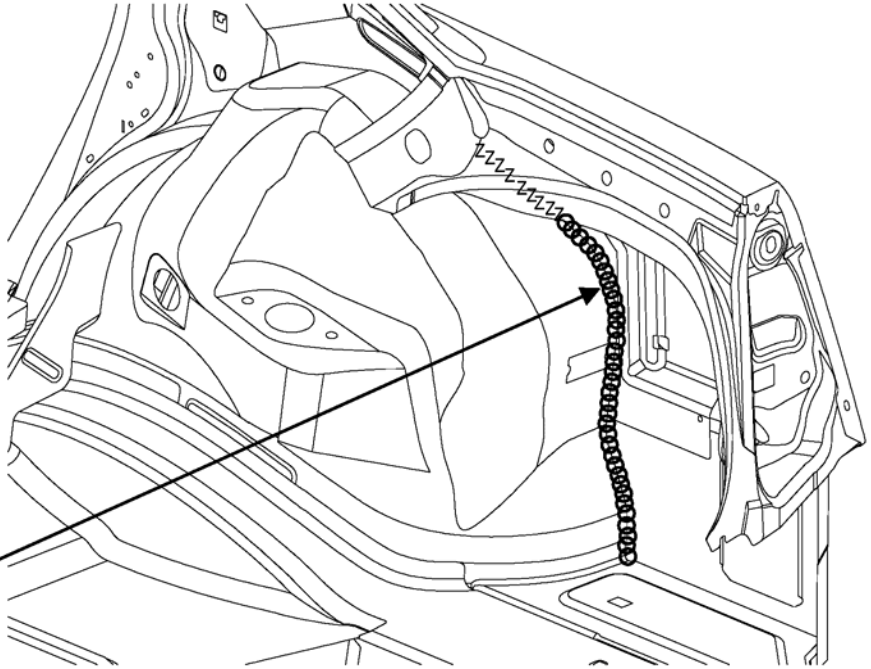

3mm x 25mm x 637mm Right Side
3mm x 25mm x 589mm Left Side

Back To Index

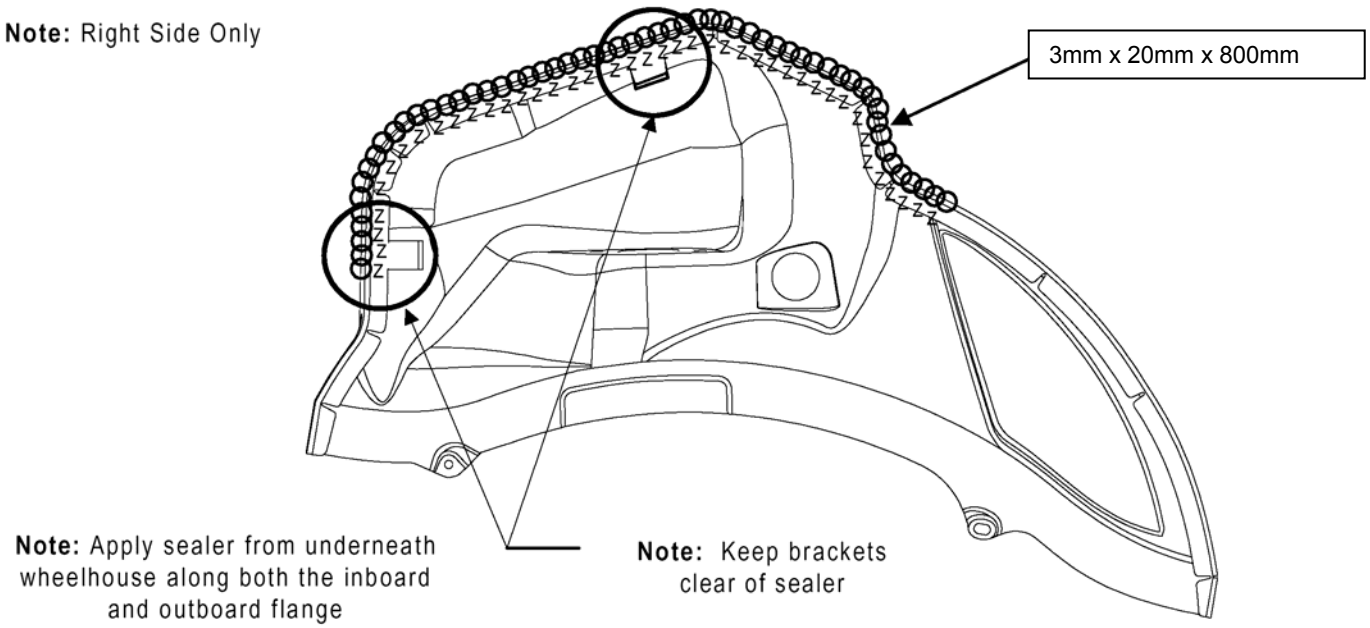

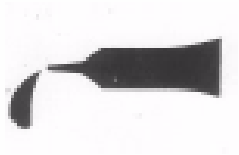

Back To Index

Note: Left Side Only

Note: Apply sealer from underneath wheelhouse along both the inboard and outboard flange

Note: Visually check sealer bead for skips and brush if necessary

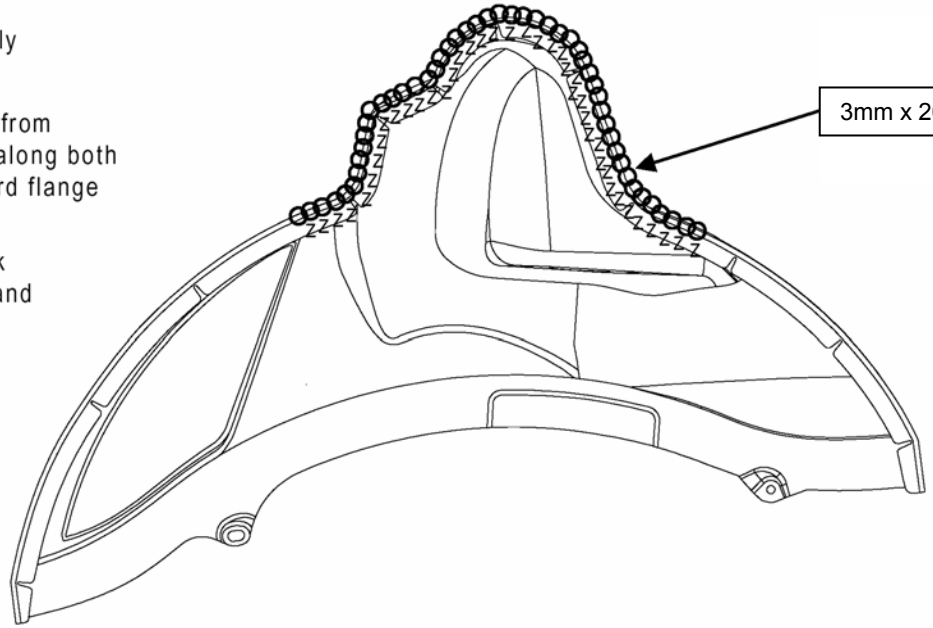

Back To Index

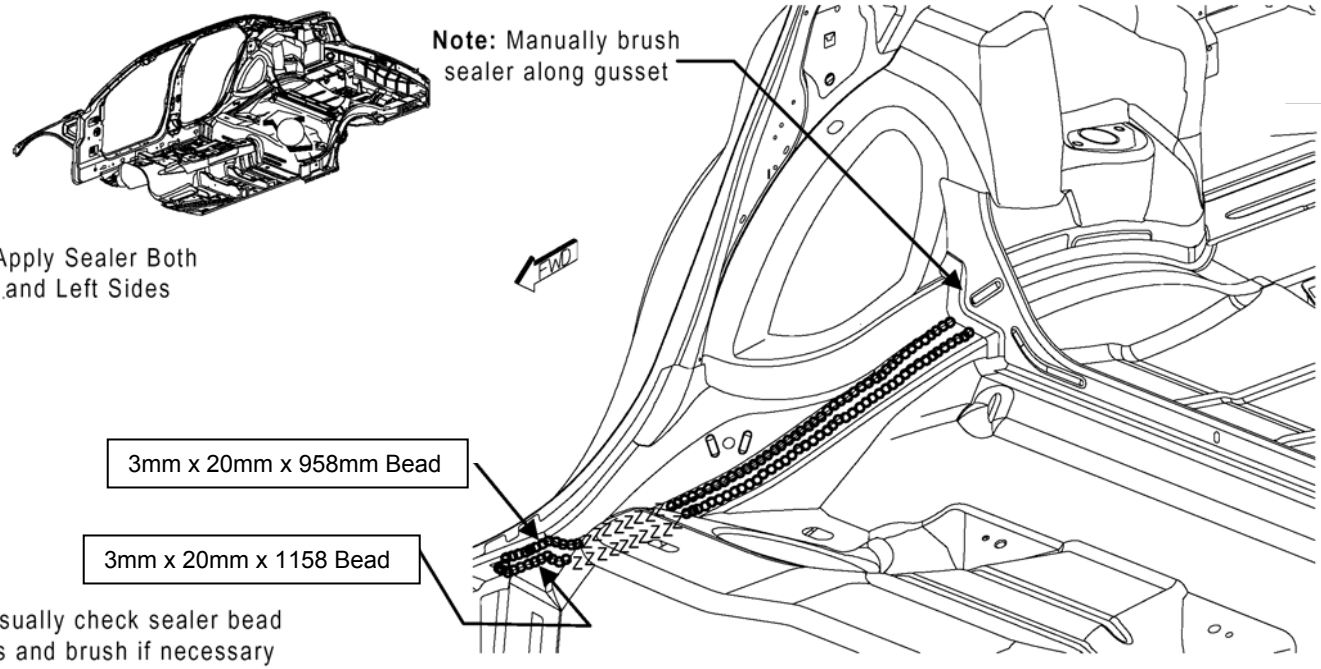

Back To Index

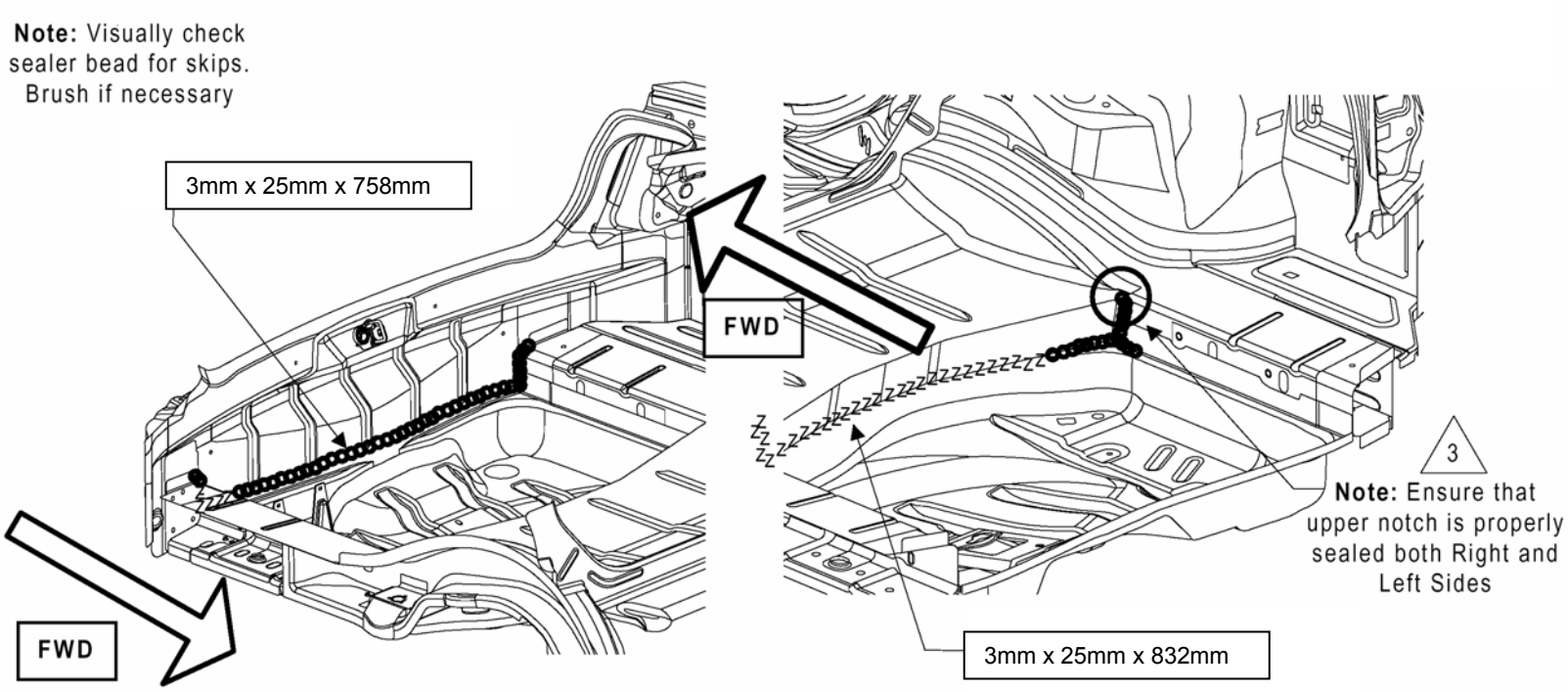

Back To Index

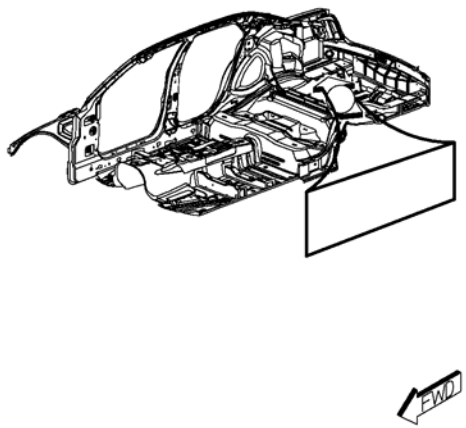

Note: Visually check sealer bead for skips and brush if necessary

Note: Both Right and Left Sides

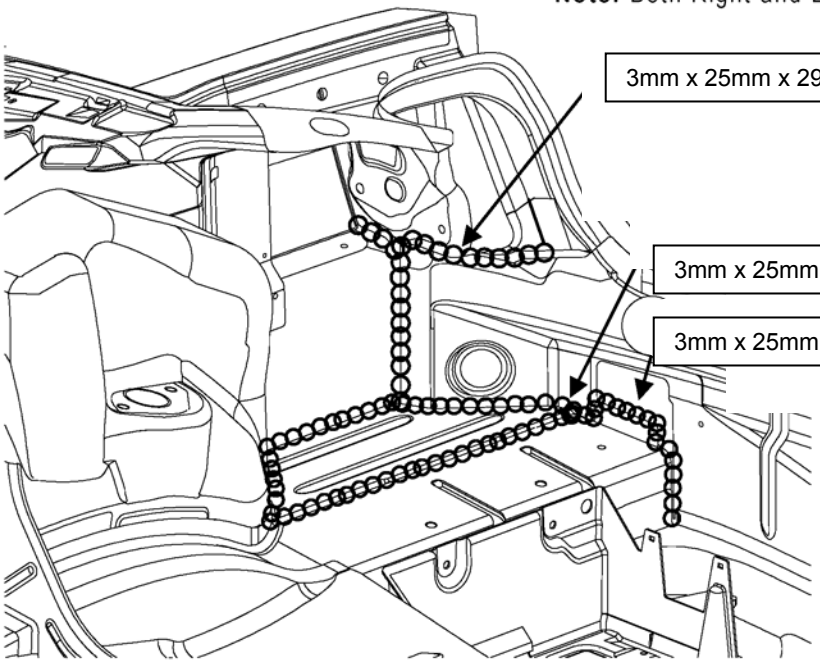

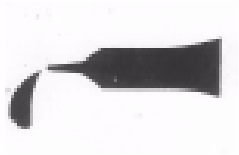

Back To Index

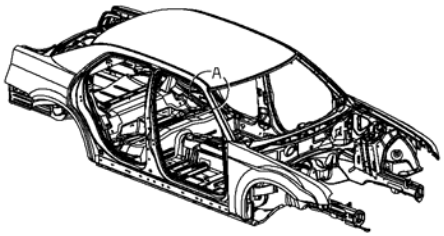

Note: Use a Ribbon tip to apply sealer

3mm x 8mm x 54mm Bead

Note: Skive Smooth, Both Right and Left Sides

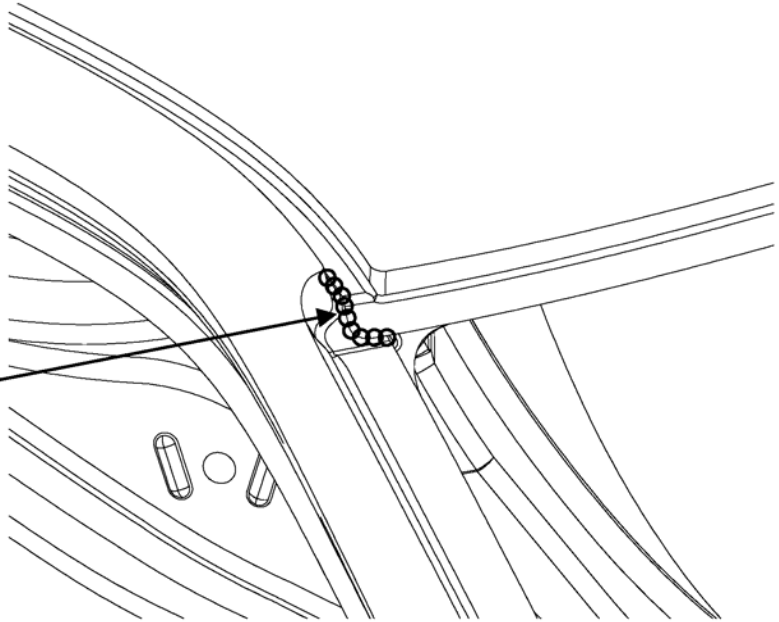

VIEW IN CIRCLE A

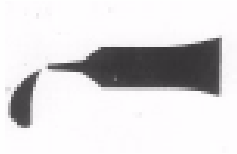

Back To Index

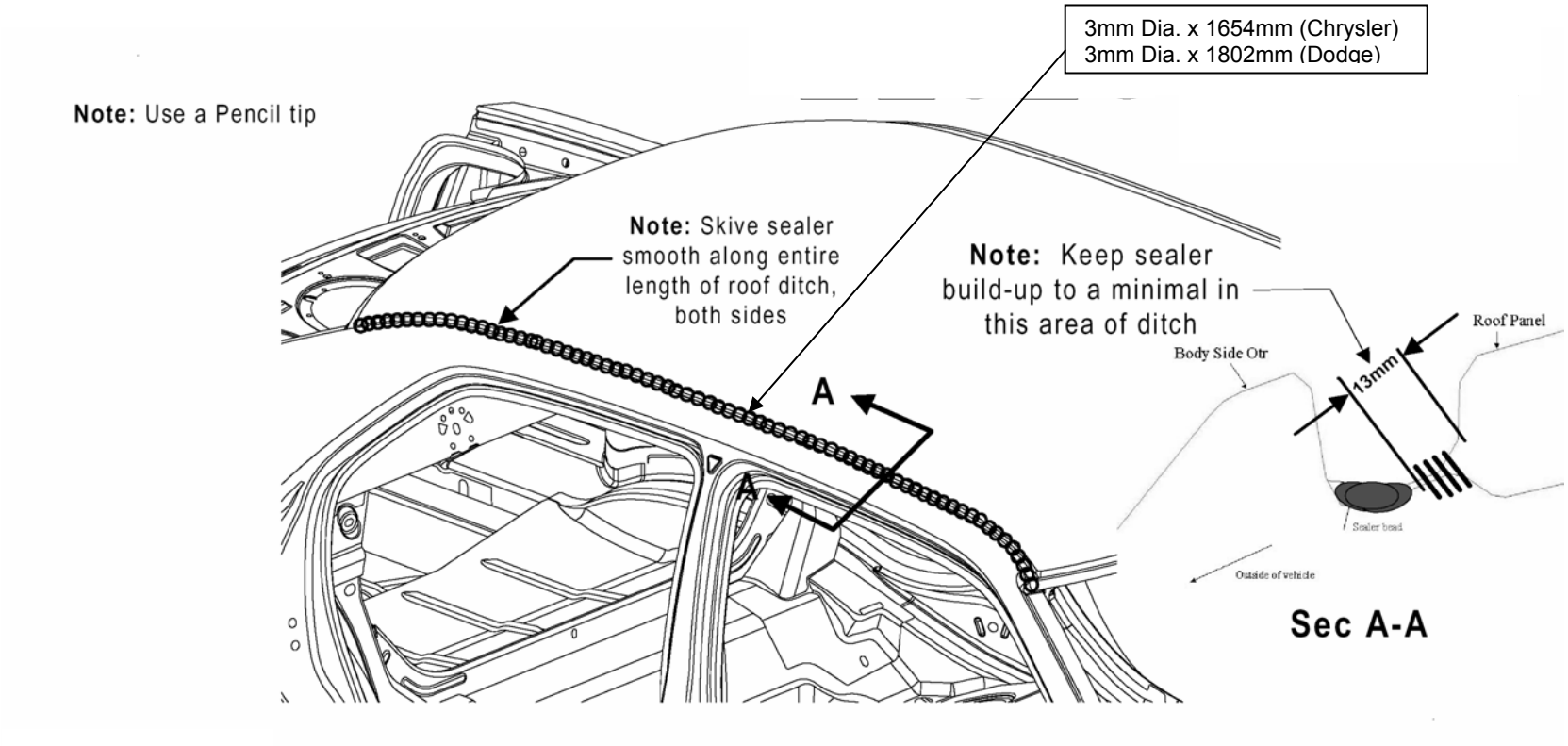

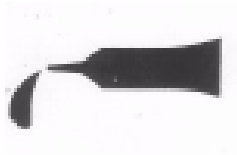

Back To Index

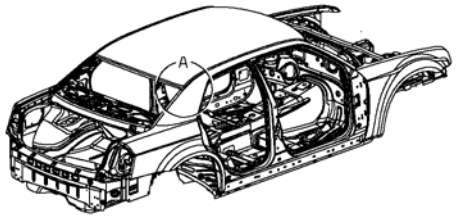

Note: Chrysler Only

Note: Use a Ribbon Tip

Note: Skive Sealer Smooth

3mm x 8mm x 50mm Bead

Note: Both Right and Left Sides

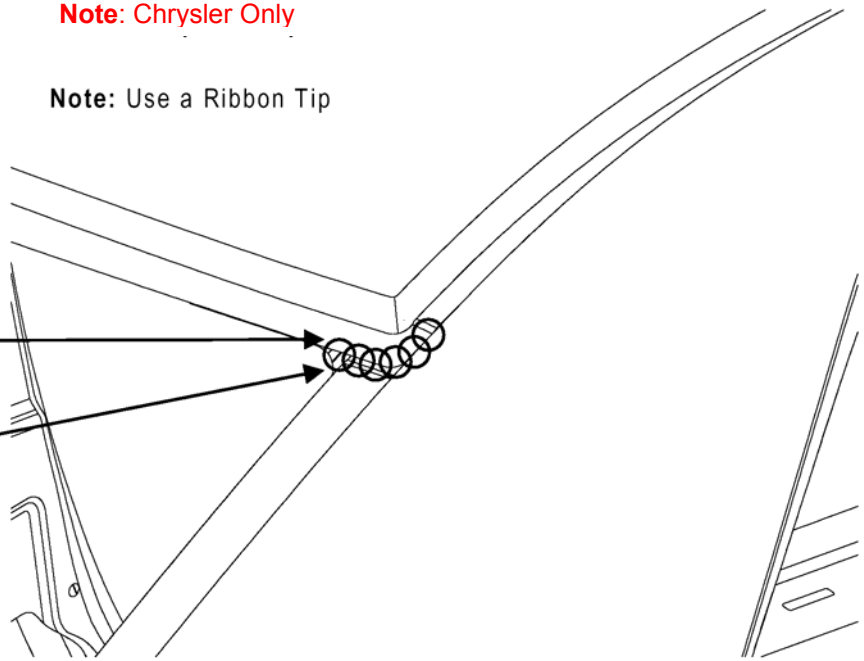

VIEW IN CIRCLE A

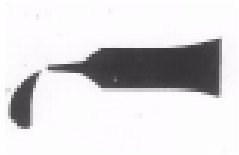

Back To Index

Note: Both Right and Left Sides

Chrysler Only

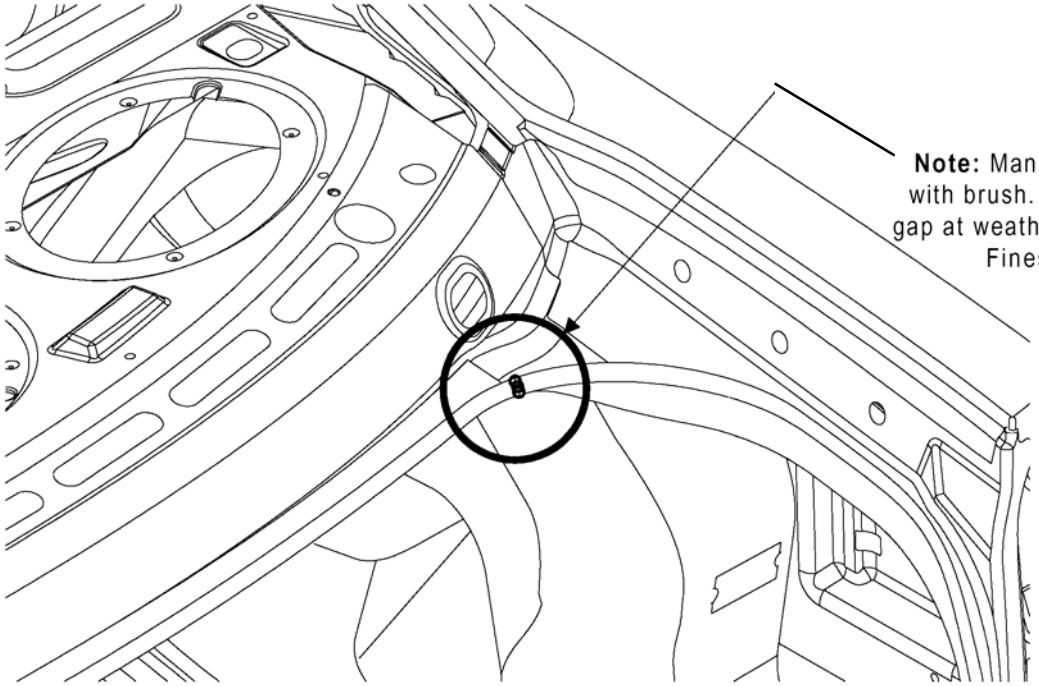

Note: Manually apply sealer with brush. Brush sealer into gap at weather seal flange joint. Finesse smooth

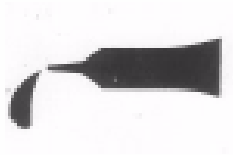

Back To Index

Note: These areas to be skived smooth

Note: Use a Pencil Tip

Note: Chrysler Only

Apply sealer to seam edges and skive smooth entire length.
Both Right and Left Sides

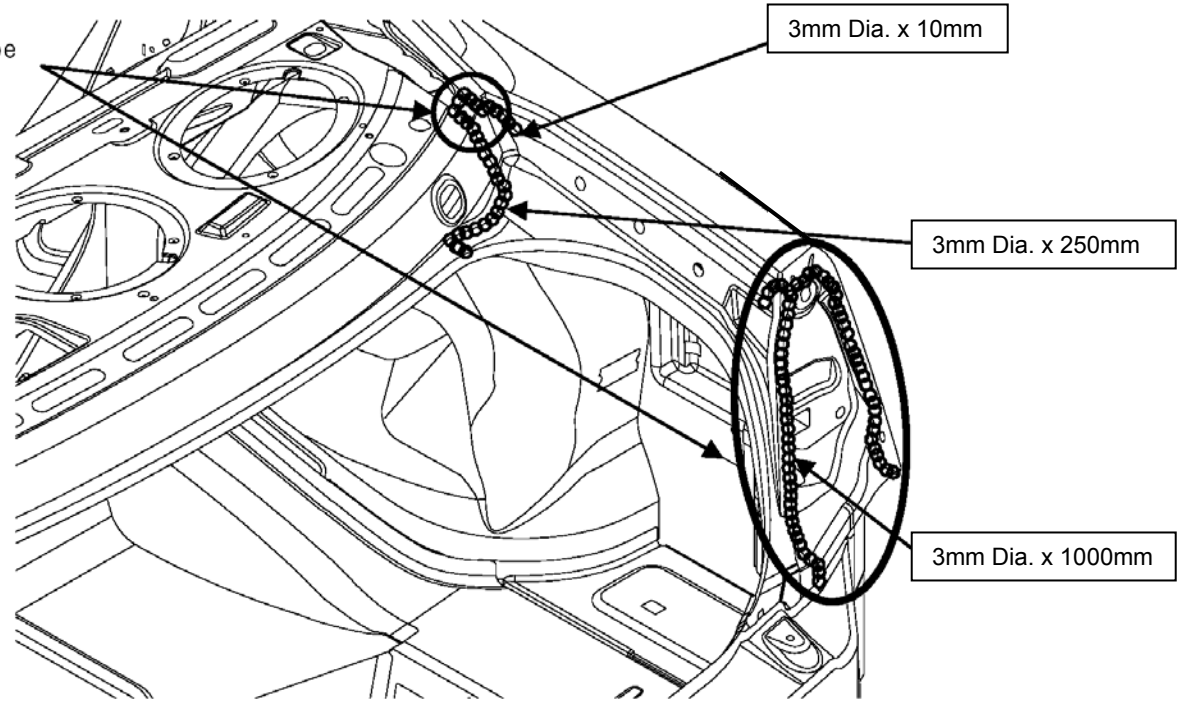

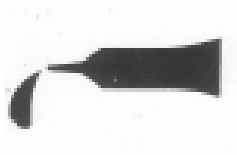

Back To Index

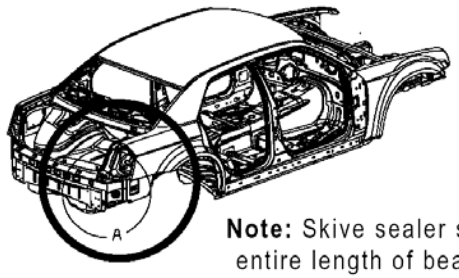

Note: Skive sealer smooth entire length of bead and Wipe sealer smooth at weatherseal flange

3mm Dia. x 645mm

Note: Both Right and Left Sides

Note: Chrysler Only

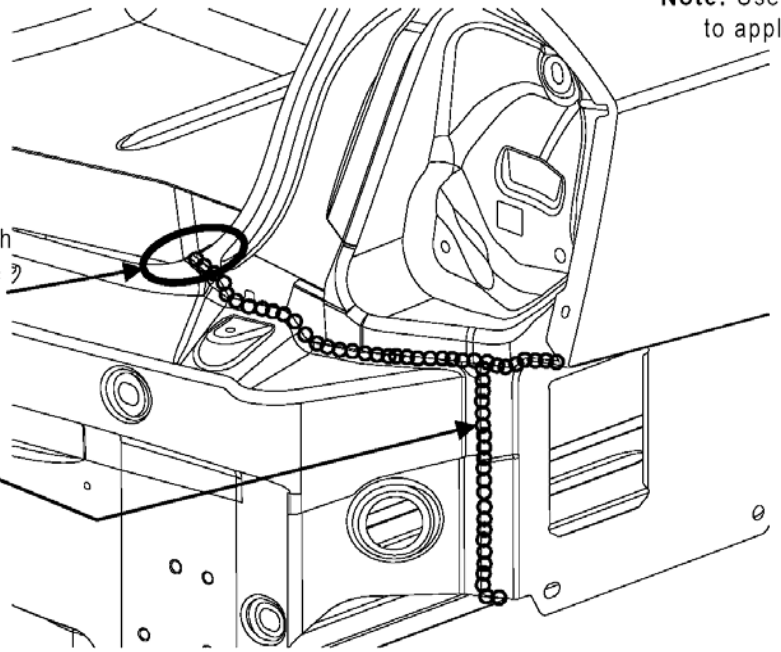

Note: Use a Pencil tip to apply sealer

VIEW IN CIRCLE A

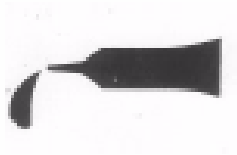

Back To Index

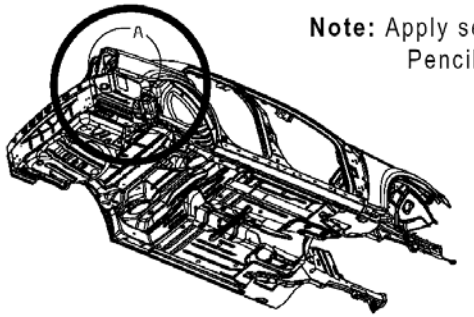

Note: Apply sealer using a Pencil Tip

Note: Both Right and Left Sides

Note: Keep holes for fascia attachment clear of sealer

3mm Dia. x 388mm

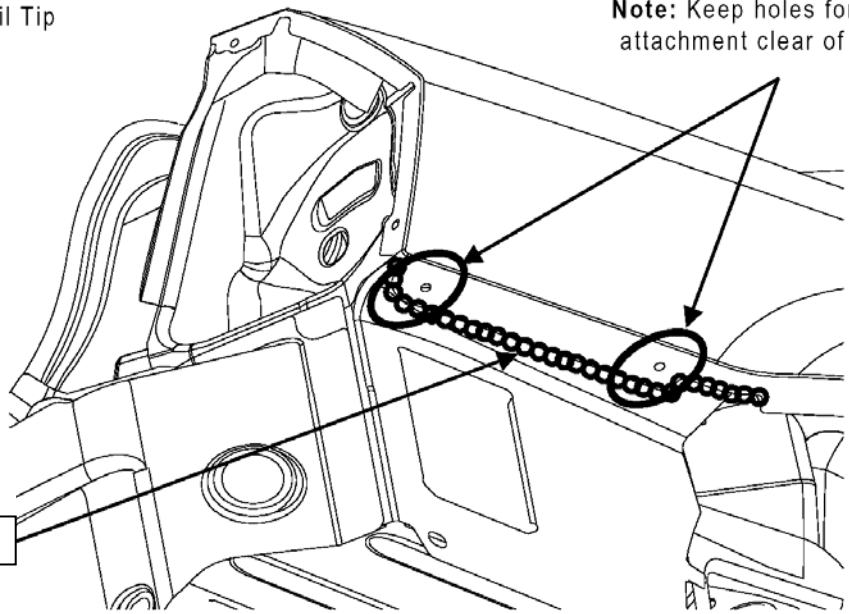

VIEW IN CIRCLE A

Note: Apply Sealer to seam edges and Brush smooth entire length

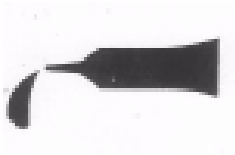

Back To Index

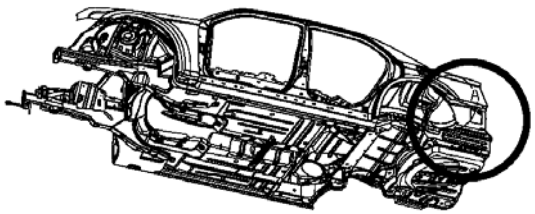

Note: Sealer is applied with a Flow Brush

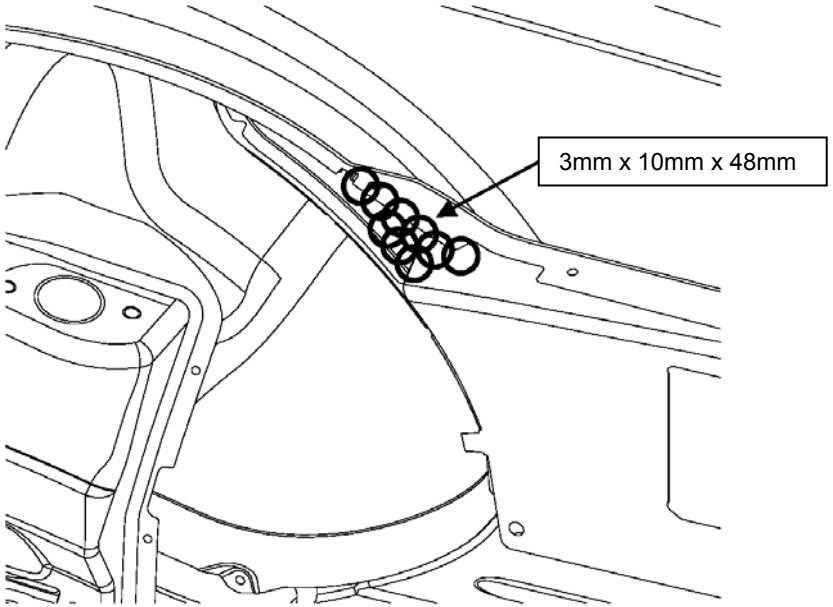

Note: This operation performed on Both Right and Left Sides

Note: On Left Side Apply Flowable Sealer over Thumbgrade Sealer

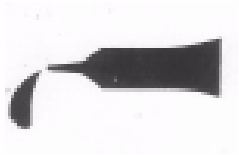

Back To Index

Note: Right side shown, Left side opposite

Note: Reference PS-10593 for Hem Flange Sealer Requirements

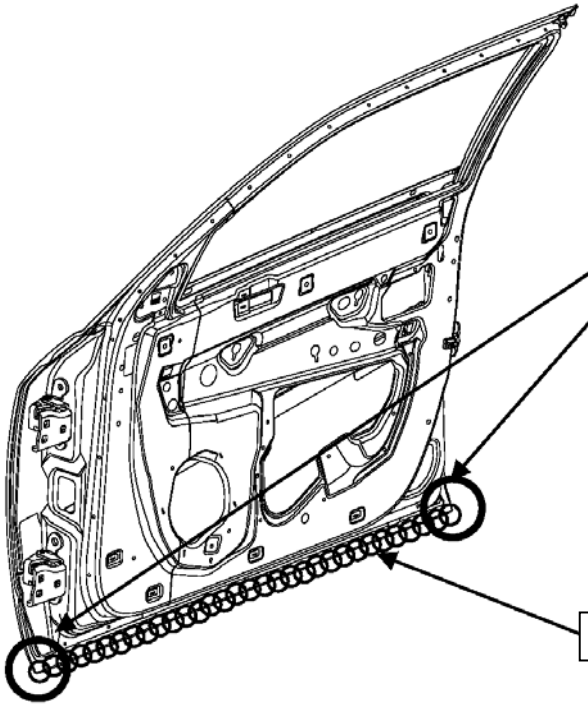

Note: A Ribbon bead is required

Note: Finesse Corners for a smooth transition

3mm x 10mm x 1237mm

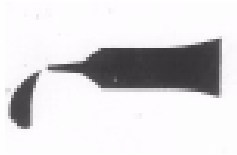

Back To Index

Note: Reference PS-10593 for Hem Flange Sealing Requirements

Note: Use a Ribbon Bead

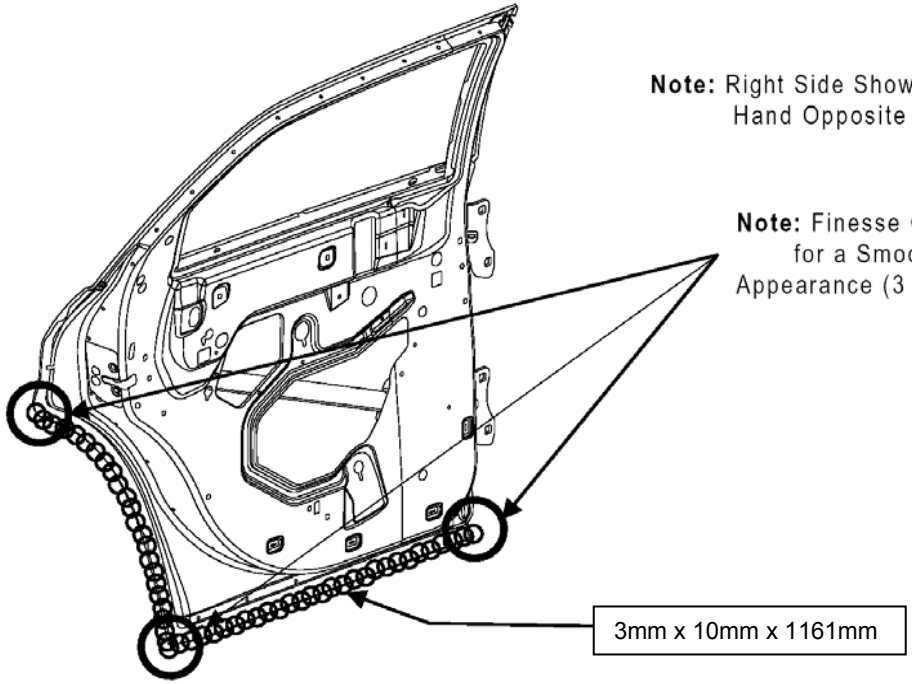

Note: Right Side Shown, Left Hand Opposite

Note: Finesse Corners for a Smooth Appearance (3 Places)

Back To Index

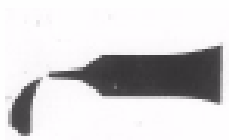

Note: Chrysler Only

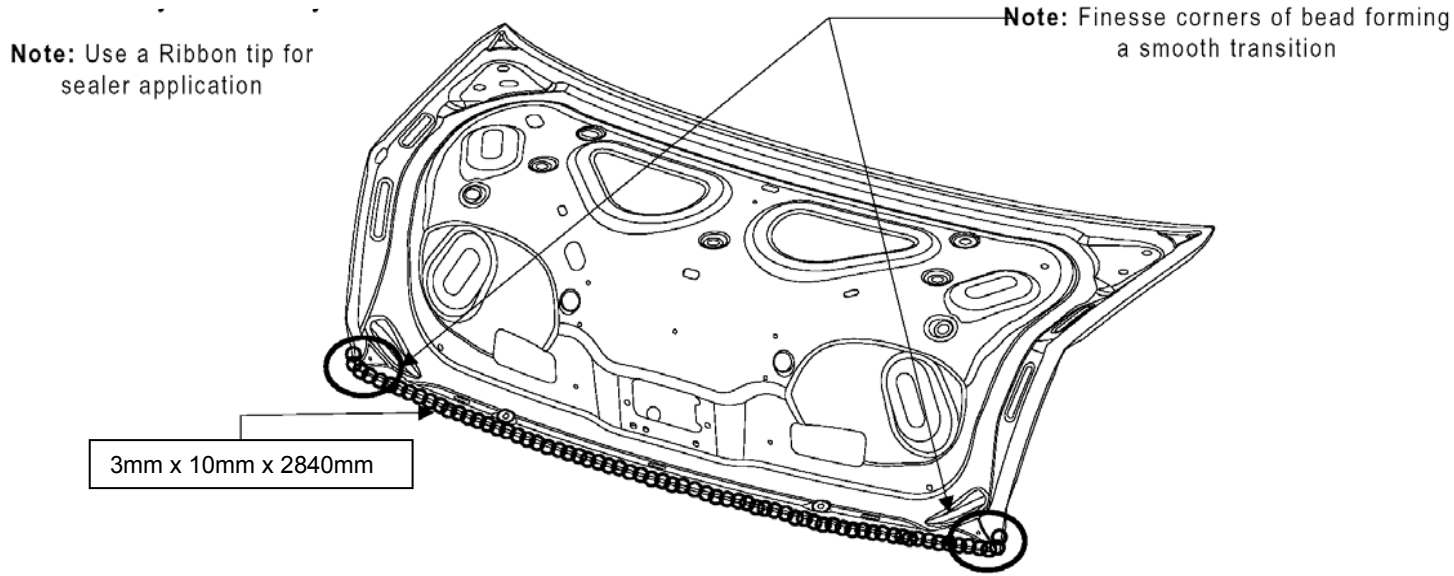

Back To Index

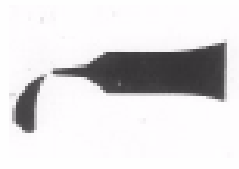

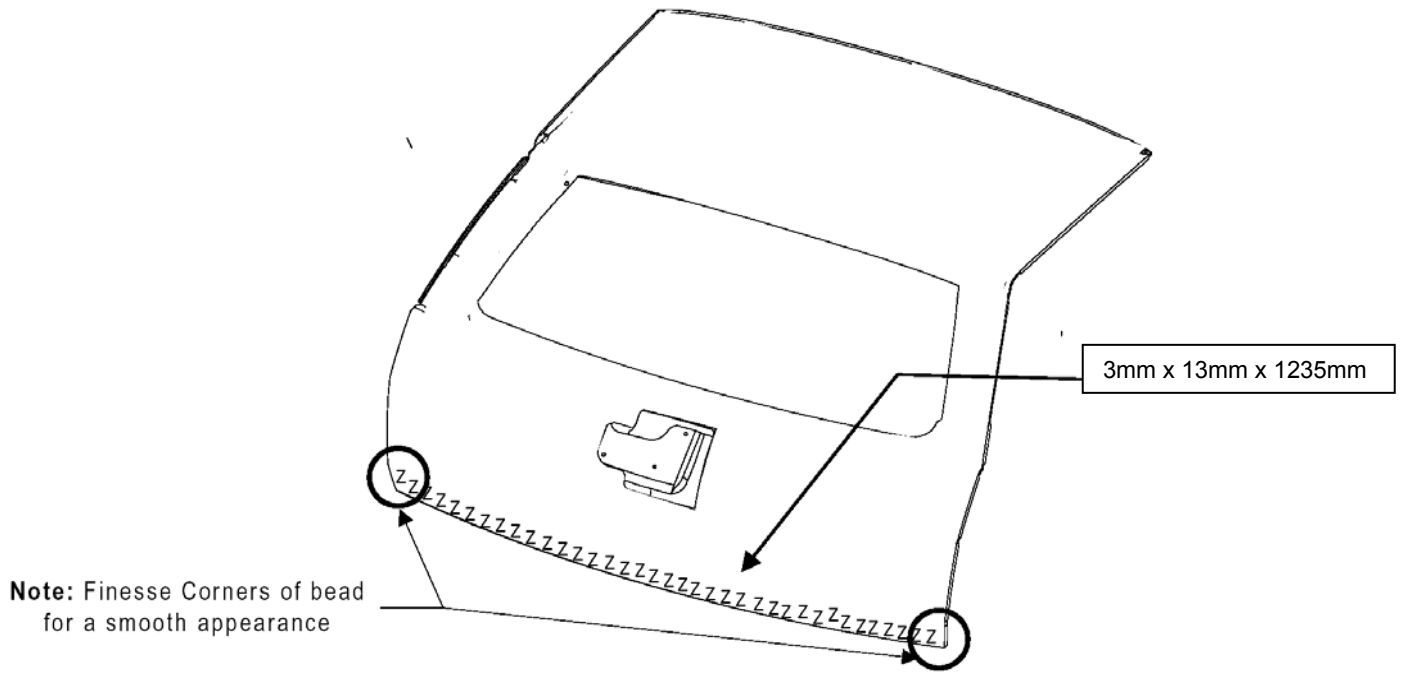

Back To Index

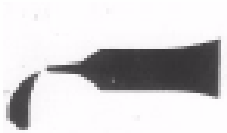

Note: Apply sealer using a Pencil Tip

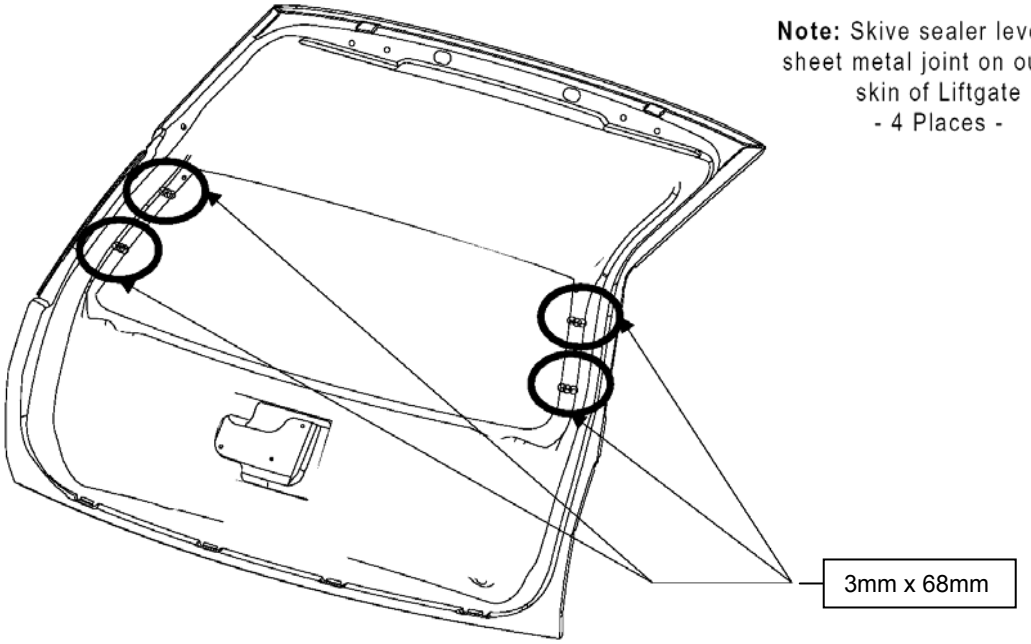

Note: Skive sealer level with sheet metal joint on outside skin of Liftgate
- 4 Places -

Back To Index

Note: Dodge Only

Note: Apply Sealer with a Pencil Tip

3mm x 947 mm

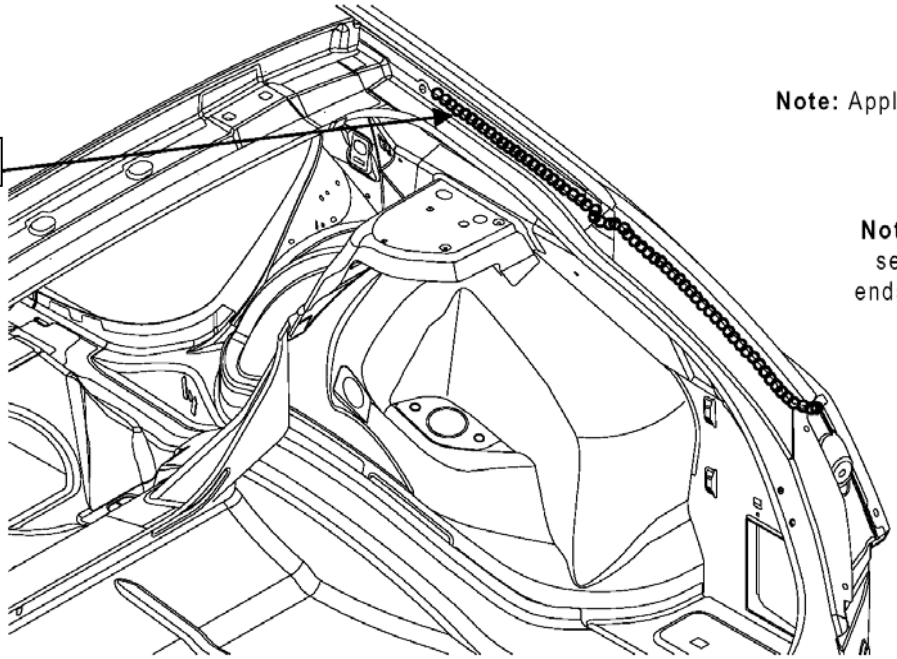

Note: Skive entire length of sealer bead and Finesse ends for a smooth transition

Back To Index

Note: Dodge Only

Both Right & Left Sides

Note: Use a Pencil Tip

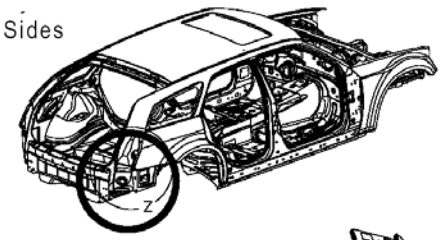

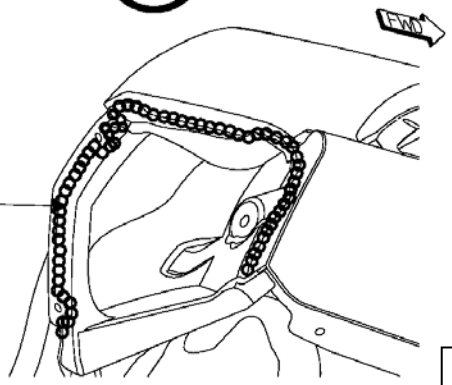

VIEW IN DIRECTION OF ARROW Y

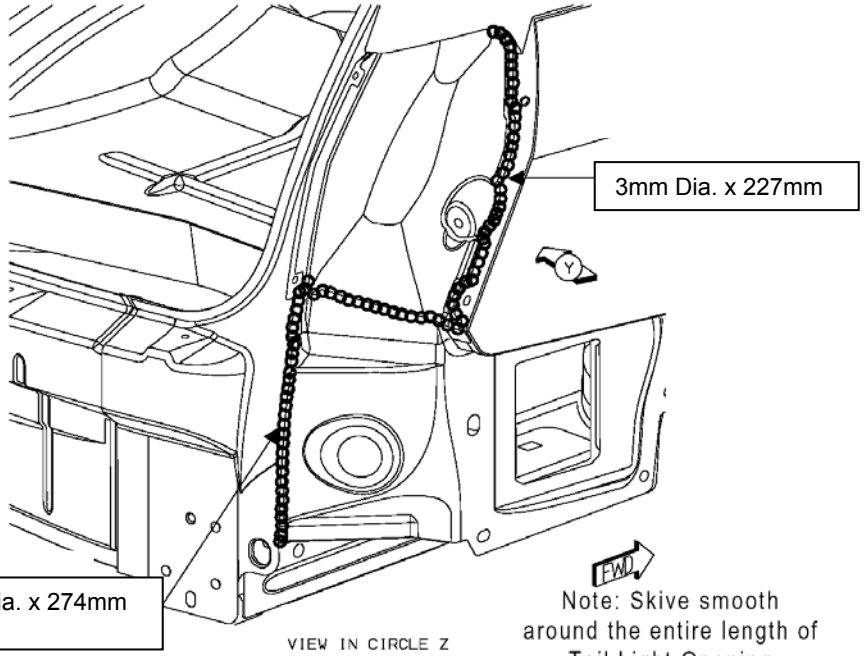

VIEW IN CIRCLE Z

Note: Skive smooth around the entire length of Tail Light Opening

Back To Index

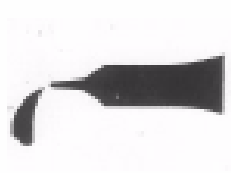

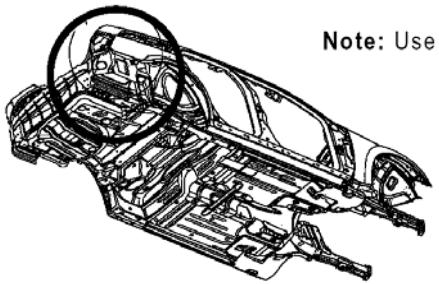

Note: Use a Pencil Tip

3mm x 402mm

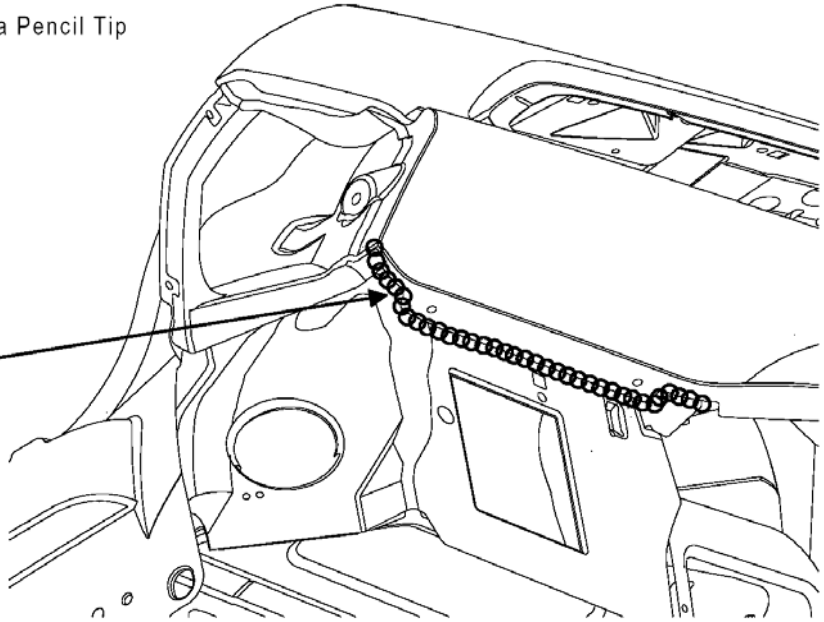

VIEW IN CIRCLE A

Note: Dodge Only

Note: Rebrush sealer flat entire length.
Wipe mounting holes if necessary

Back To Index

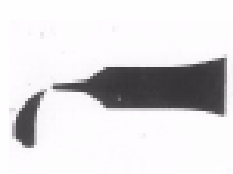

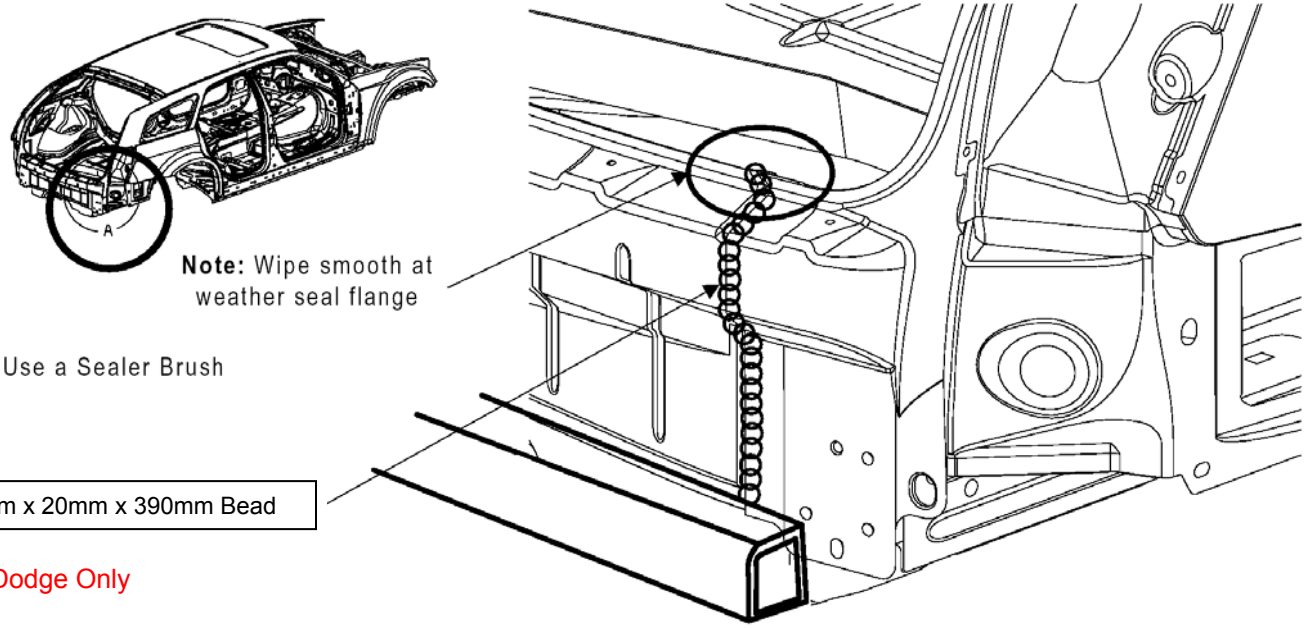

Note: Dodge Only

Back To Index

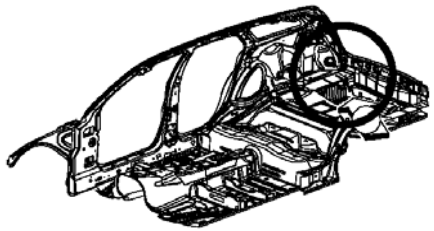

Note: Manual Rebrush of entire seam required

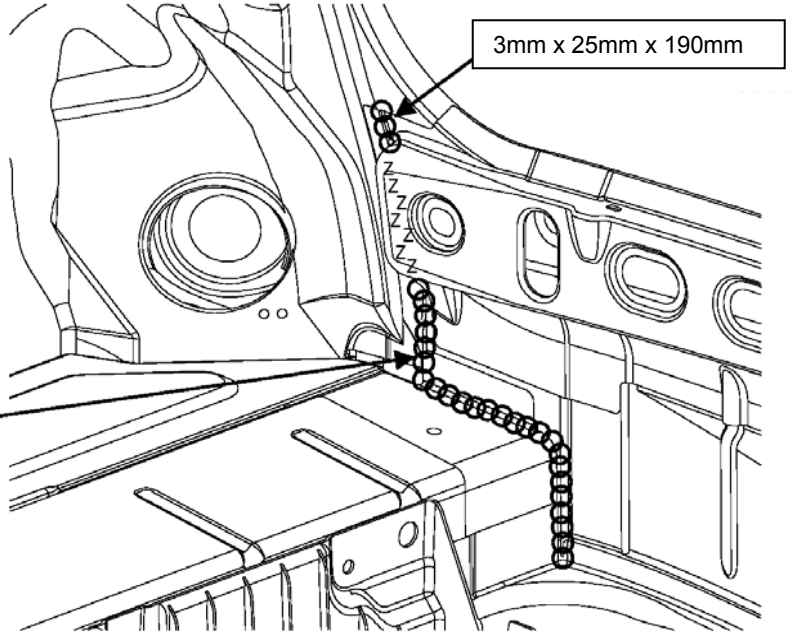

Note: Both Right And Left Sides

Note: Dodge Only

Back To Index

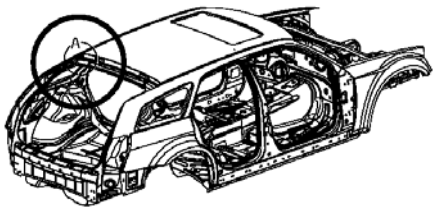

Note: Finesse Thumbgrade Sealer into corners for a Smooth transition, Both Right and Left Sides

Dodge Only

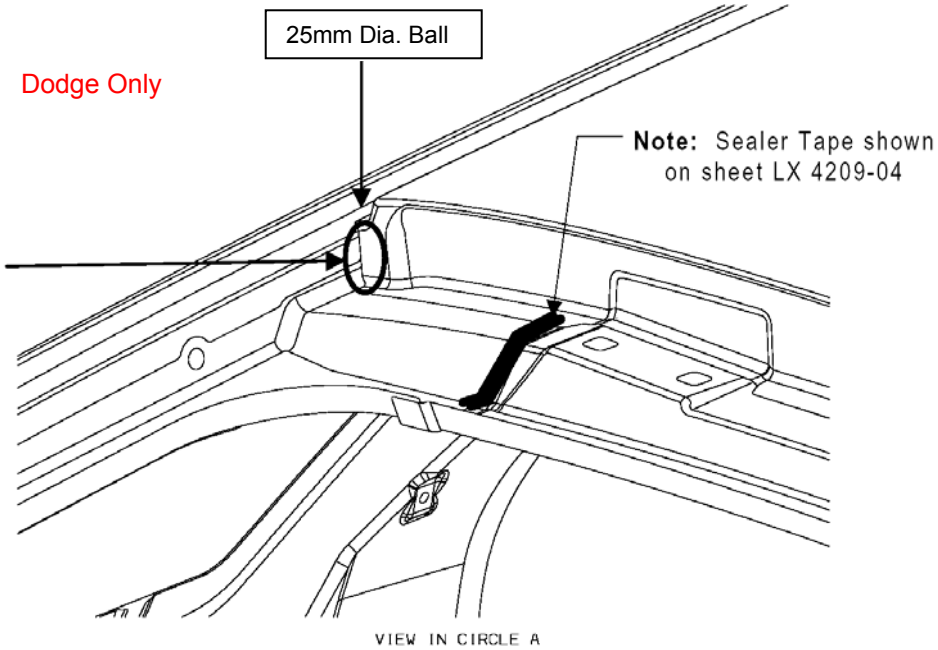

Back To Index

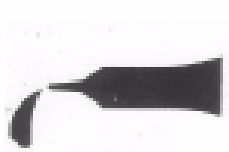

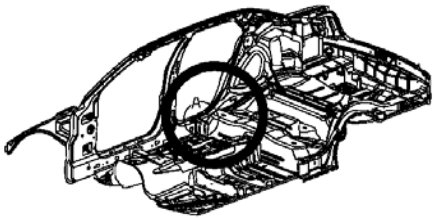

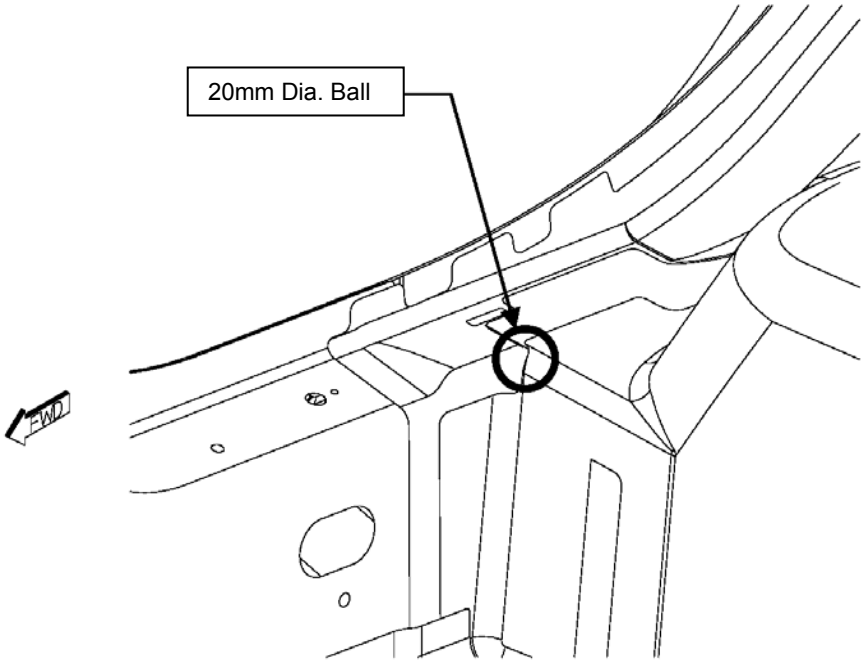

VIEW IN CIRCLE A

Note: Both Right and Left Sides

Note: Apply Thumbgrade sealer prior to Flowable Sealer

Back To Index

Note: Dodge Only
Both Right & Left Sides

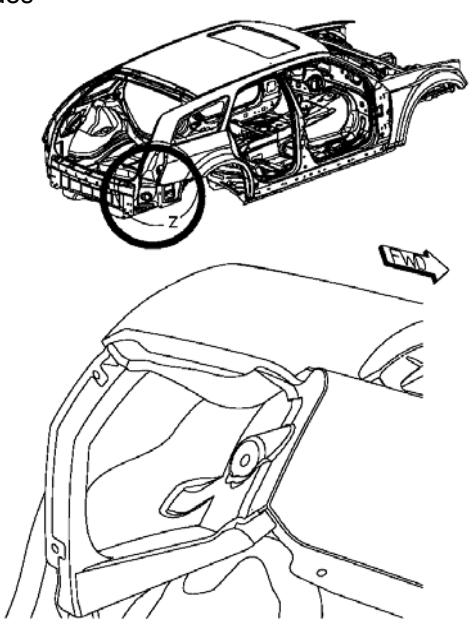

VIEW IN DIRECTION
OF ARROW Y

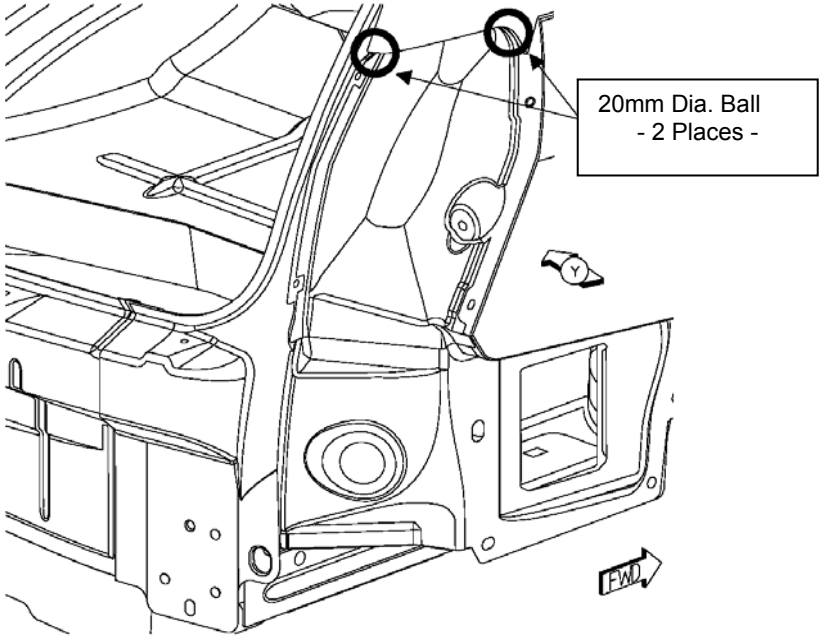

VIEW IN CIRCLE Z

Back To Index

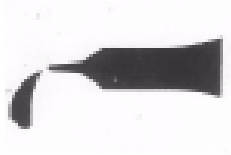

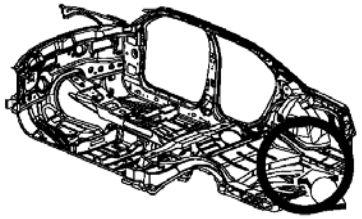

Note: Both Right and Left Sides

Note: Apply Thumbgrade Sealer prior to Flowable Sealer

15mm Dia. Ball

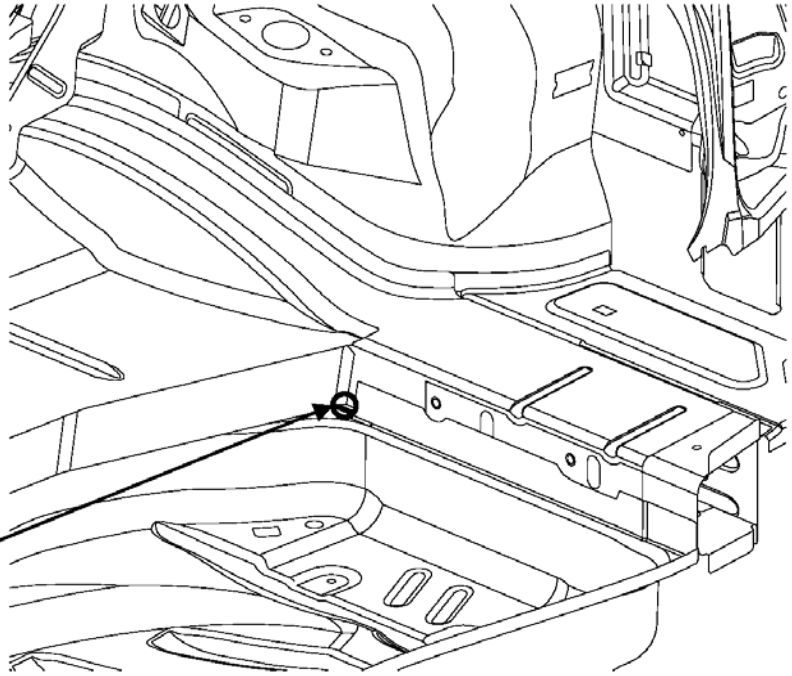

Back To Index

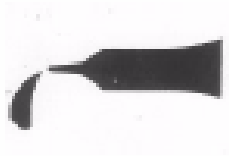

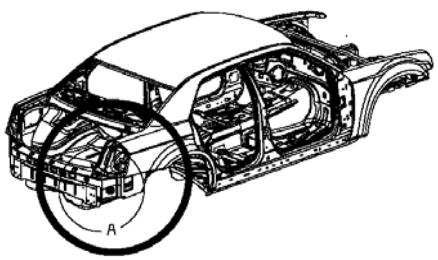

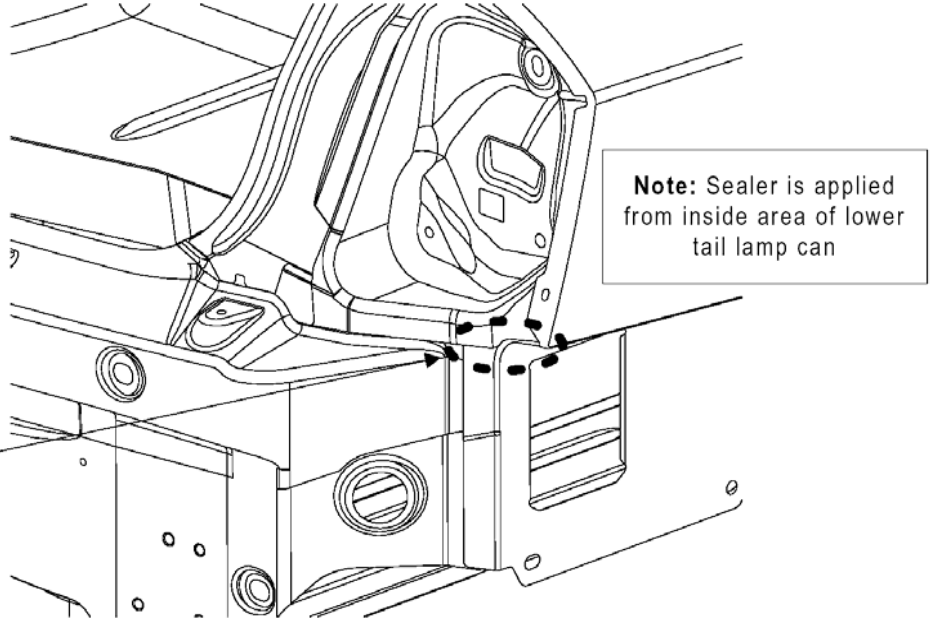

Note: Both Right and Left Sides

Note: Chrysler Only

Back To Index

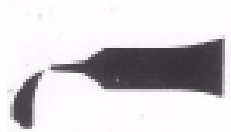

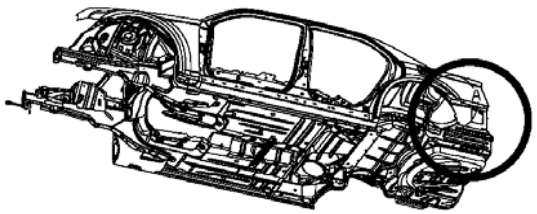

Note: This operation performed on Left Side Only

Note: Apply Thumbgrade Sealer prior to Flowable Sealer

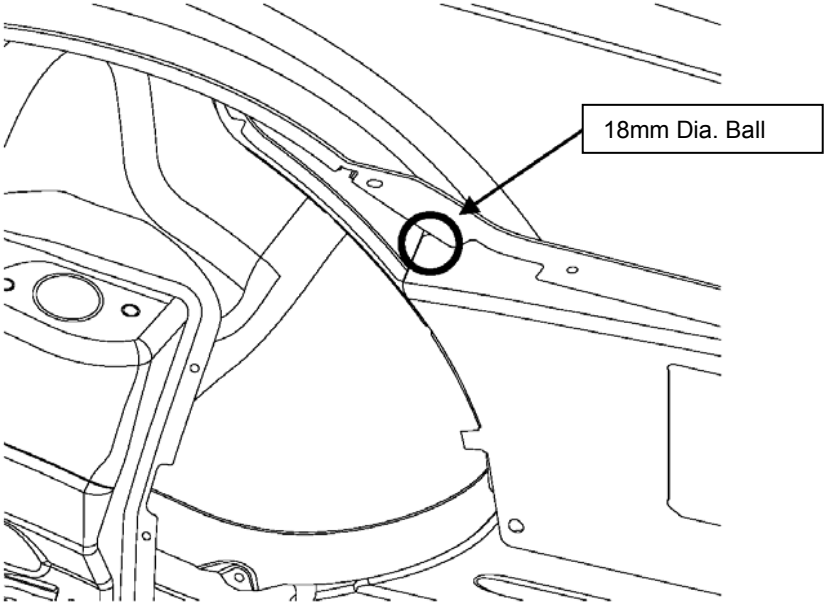

VIEW IN CIRCLE A

Tech Authority website includes the most complete listings, descriptions, and ordering information for DaimlerChrysler Corporation service information materials. The materials included in Tech Authority cover every aspect of repairing and maintaining Chrysler, Plymouth, Dodge, Dodge Truck and Jeep® vehicles.

Tech Authority is an extensive online catalog of diagnostic procedure manuals, student reference books, tech training programs, owner's manuals, service manuals, and technical service bulletin manuals. The materials range from written and illustrated books to the highly acclaimed Master Tech Video series.

By Telephone: Monday - Friday, 8:00-4:30 E.S.T.

Telephone orders may be placed at the number below. Credit cards are accepted (no CODs). Please have your order information available at time of call.

By Phone: (800) 890-4038

By Fax: (440) 572-0815

Vist our Website at:
www.techauthority.daimlerchrysler.com

Back To Index

CHRYSLER 300, 300C, 300 Touring
and
DODGE MAGNUM
STRUCTURAL ADHESIVE LOCATIONS

Back To Index

STRUCTURAL ADHESIVE LOCATIONS

TABLE OF CONTENTS

SPECIFICATIONS
STRUCTURAL ADHESIVE LOCATIONS
Index

DESCRIPTION	FIGURE
Sedan Only	
FRAMED BODY IN WHITE (1 OF 3)	1
FRAMED BODY IN WHITE (2 OF 3)	2
FRAMED BODY IN WHITE (3 OF 3)	3
FULL FRAMED BODY IN WHITE (1 OF 4)	4
FULL FRAMED BODY IN WHITE (2 OF 4)	5
FULL FRAMED BODY IN WHITE (3 OF 4)	6
FULL FRAMED BODY IN WHITE (4 OF 4)	7
ROOF	8
Wagon Only	
FRAMED BODY IN WHITE	9
FULL FRAMED BODY IN WHITE (1 OF 2)	10
FULL FRAMED BODY IN WHITE (2 OF 2)	11
ROOF	12
Sedan and Wagon	
REAR LADDER AND FLOOR (1 OF 4)	13
REAR LADDER AND FLOOR (2 OF 4)	14
REAR LADDER AND FLOOR (3 OF 4)	15
REAR LADDER AND FLOOR (4 OF 4)	16
UNDERBODY FRAMING (1 OF 2)	17
UNDERBODY FRAMING (2 OF 2)	18

Back To Index

Sedan Only

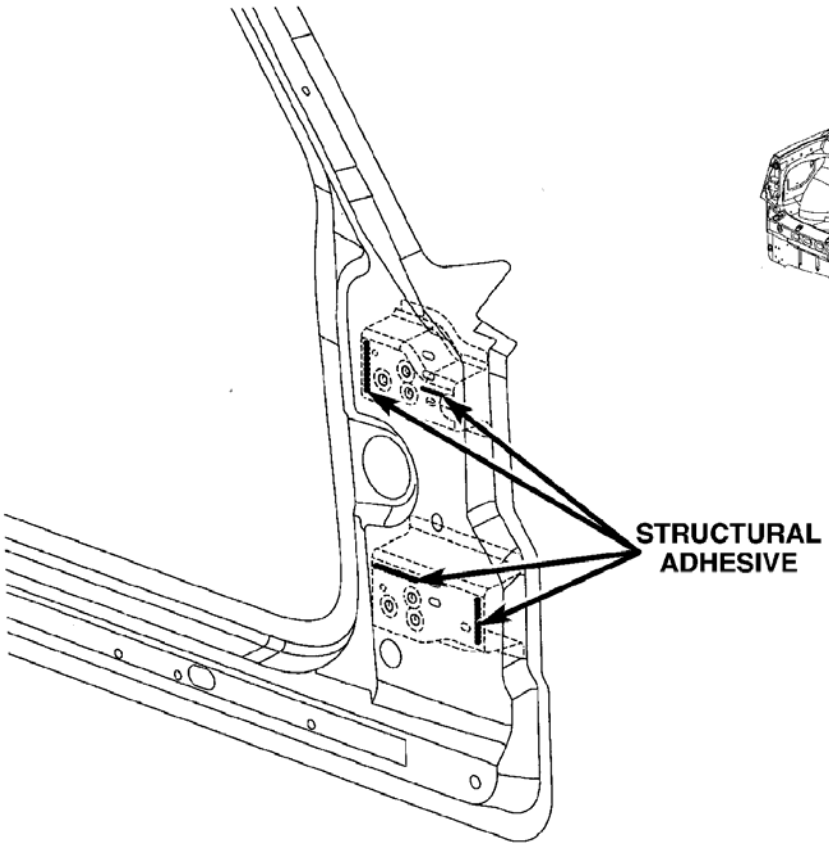

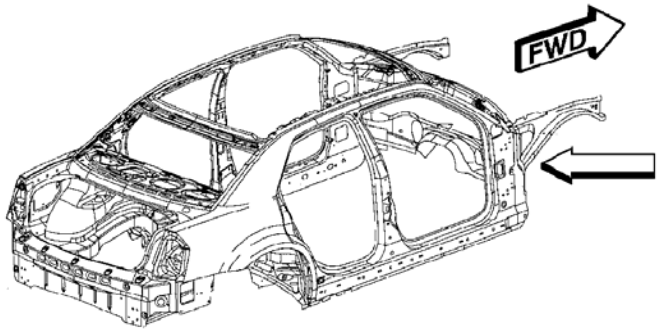

**RIGHT SIDE SHOWN,
LEFT SIDE TYPICAL**

8138587d

Fig. 1 FRAMED BODY IN WHITE (1 OF 3)

Back To Index

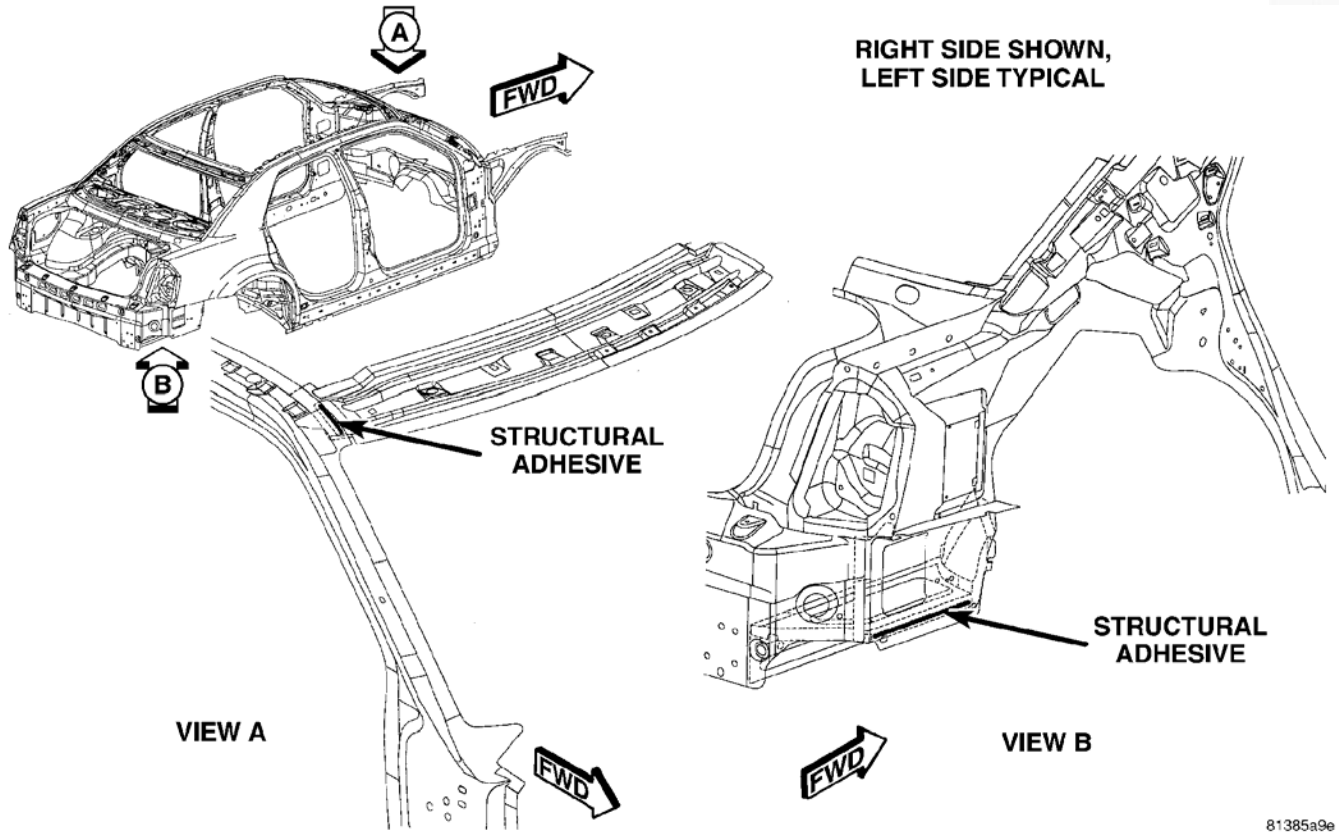

Fig. 2 FRAMED BODY IN WHITE (2 OF 3)

Back To Index

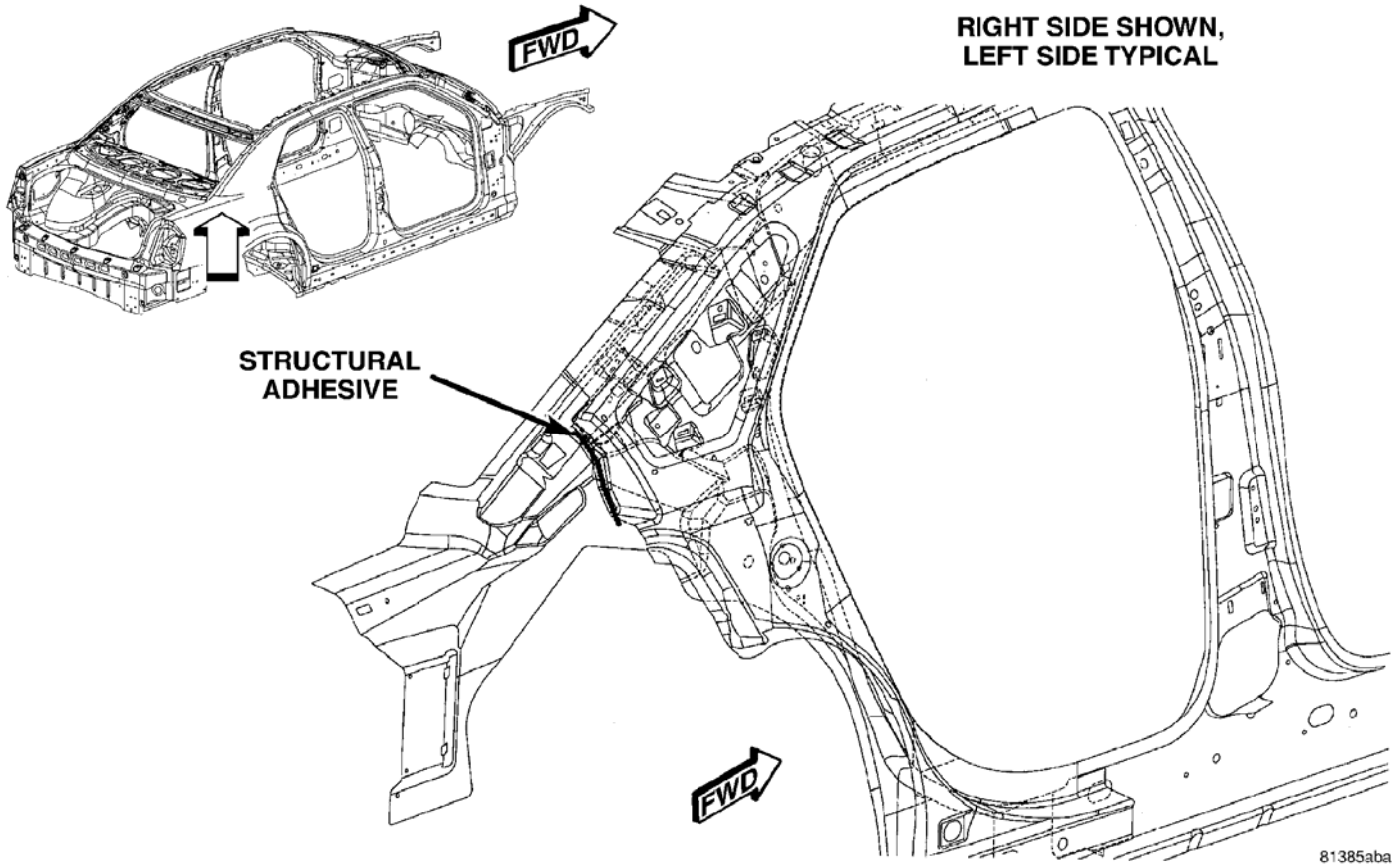

Fig. 3 FRAMED BODY IN WHITE (3 OF 3)

Back to Index

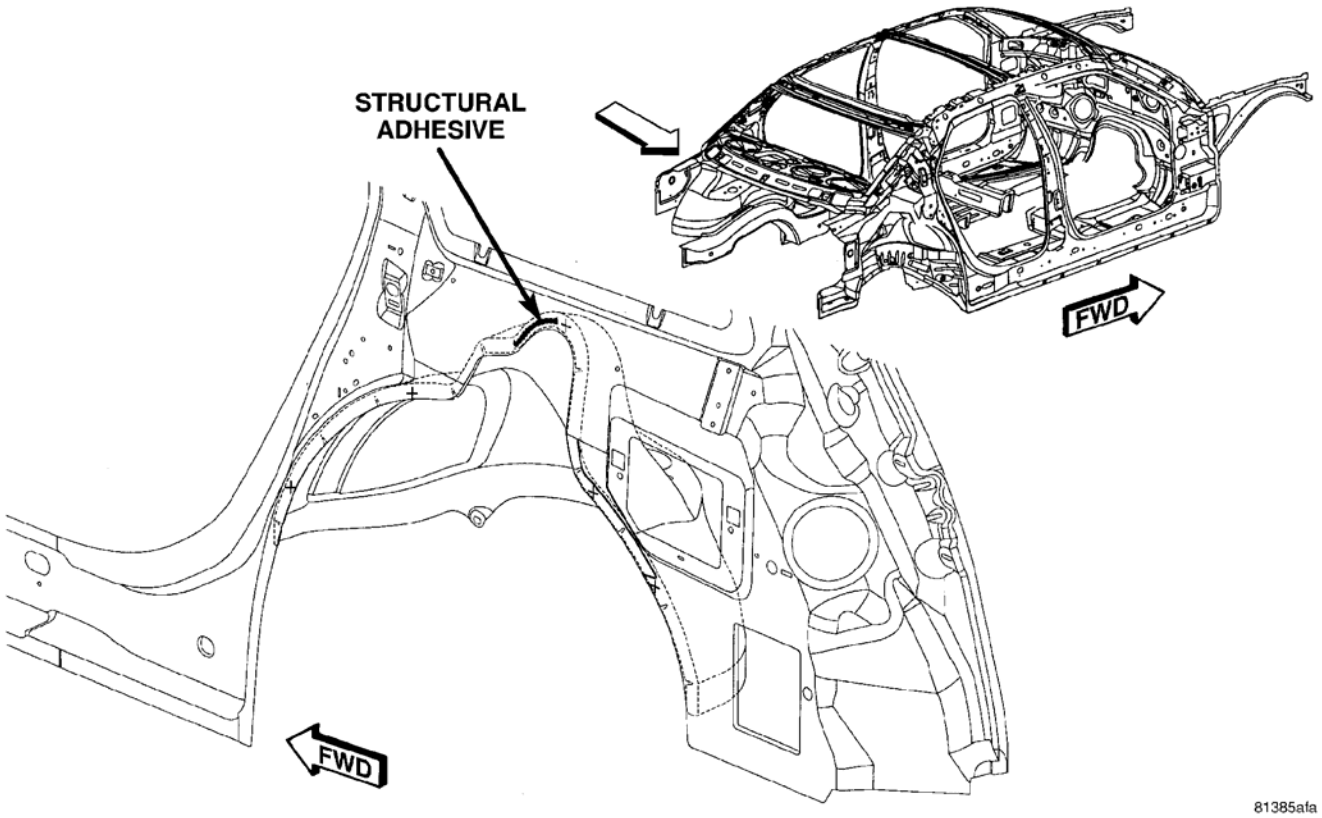

Fig. 4 FULL FRAMED BODY IN WHITE (1 OF 4)

Back To Index

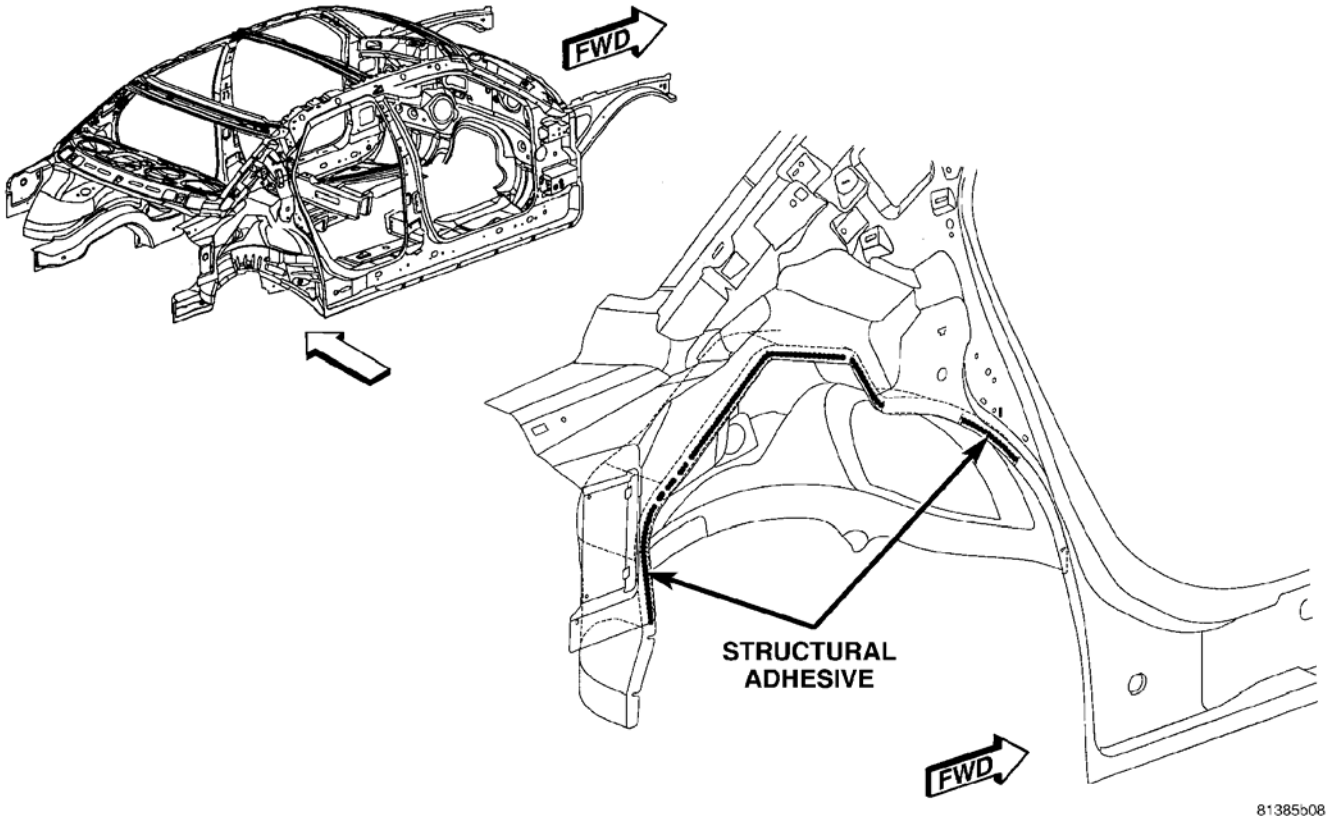

Fig. 5 FULL FRAMED BODY IN WHITE (2 OF 4)

Back To Index

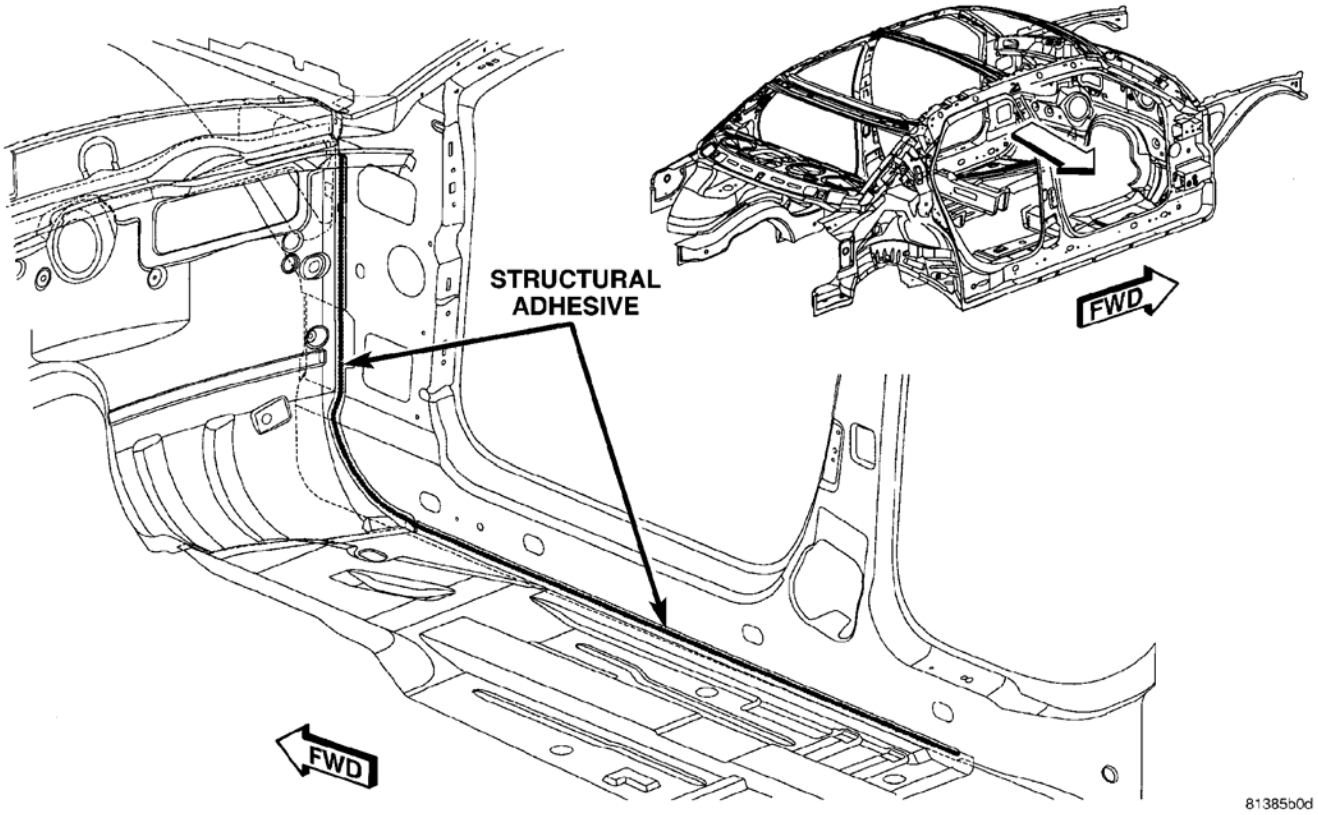

Fig. 6 FULL FRAMED BODY IN WHITE (3 OF 4)

Back To Index

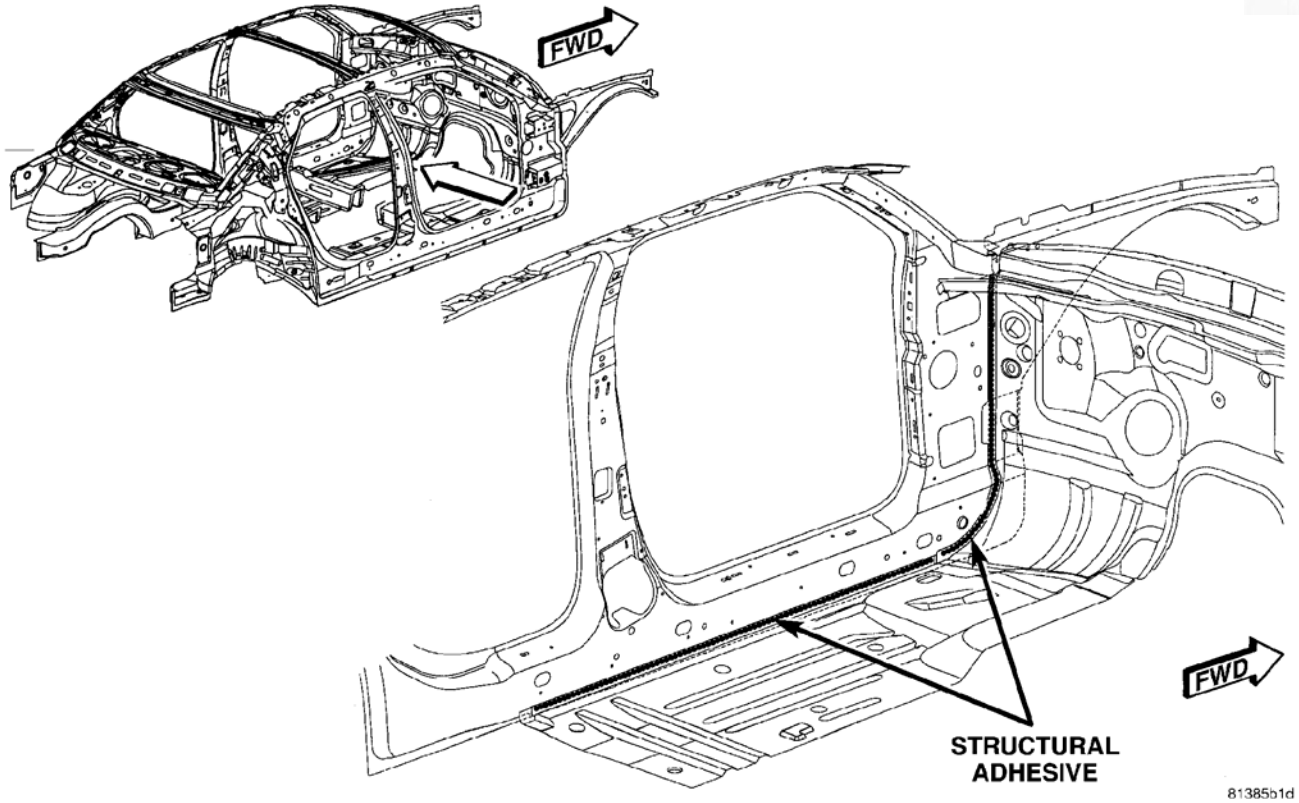

Fig. 7 FULL FRAMED BODY IN WHITE (4 OF 4)

Back To Index

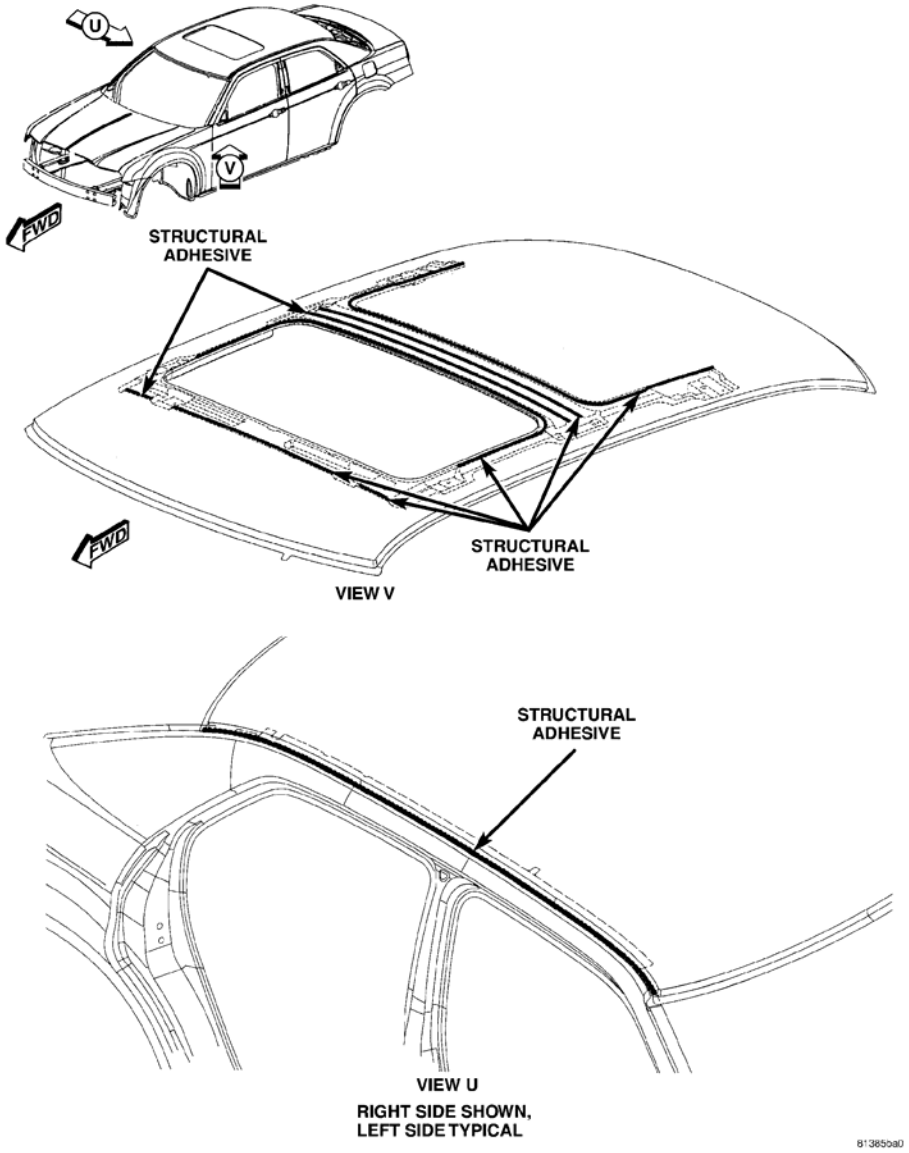

Fig. 8 ROOF

Back To Index

Wagon Only

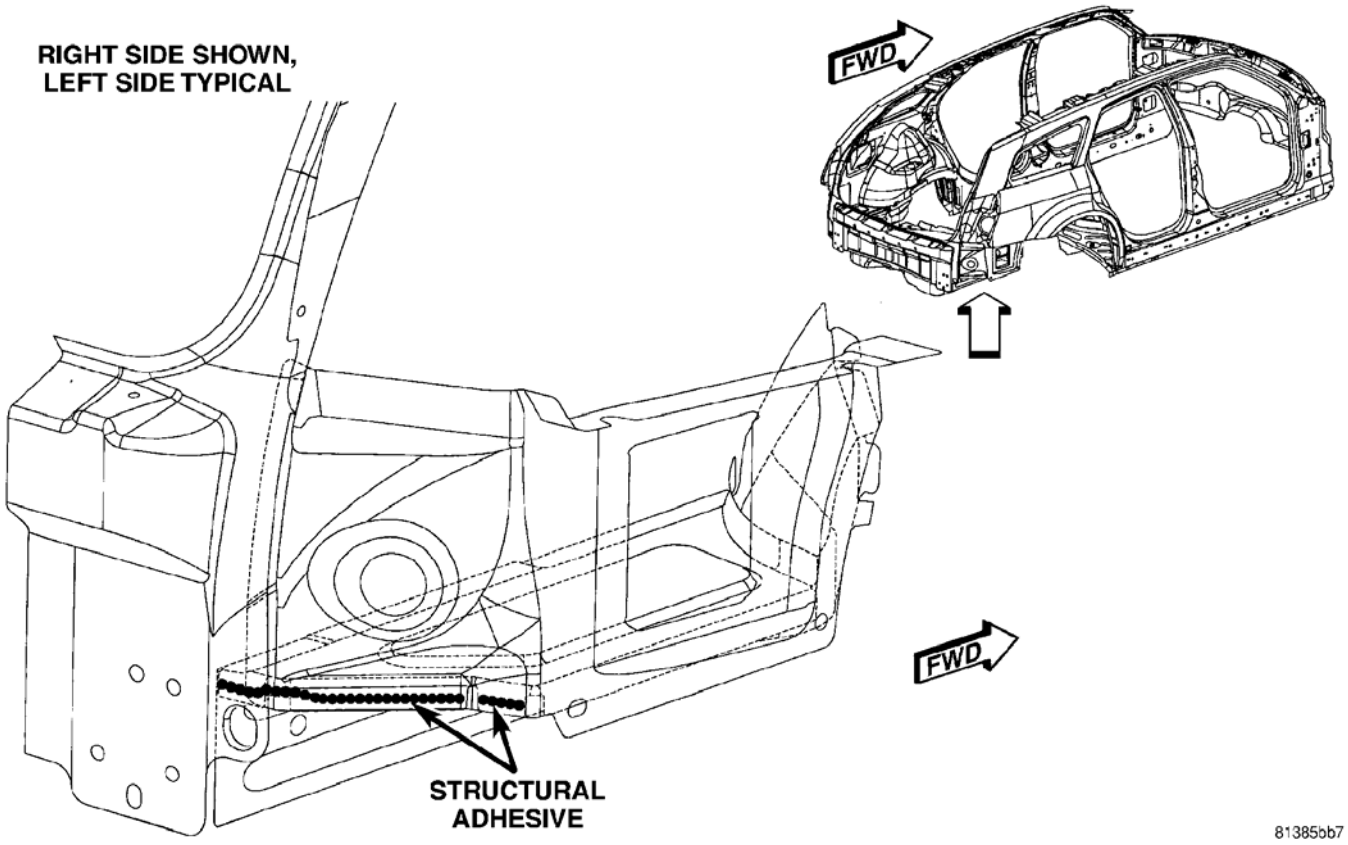

Fig. 9 FRAMED BODY IN WHITE

Back To Index

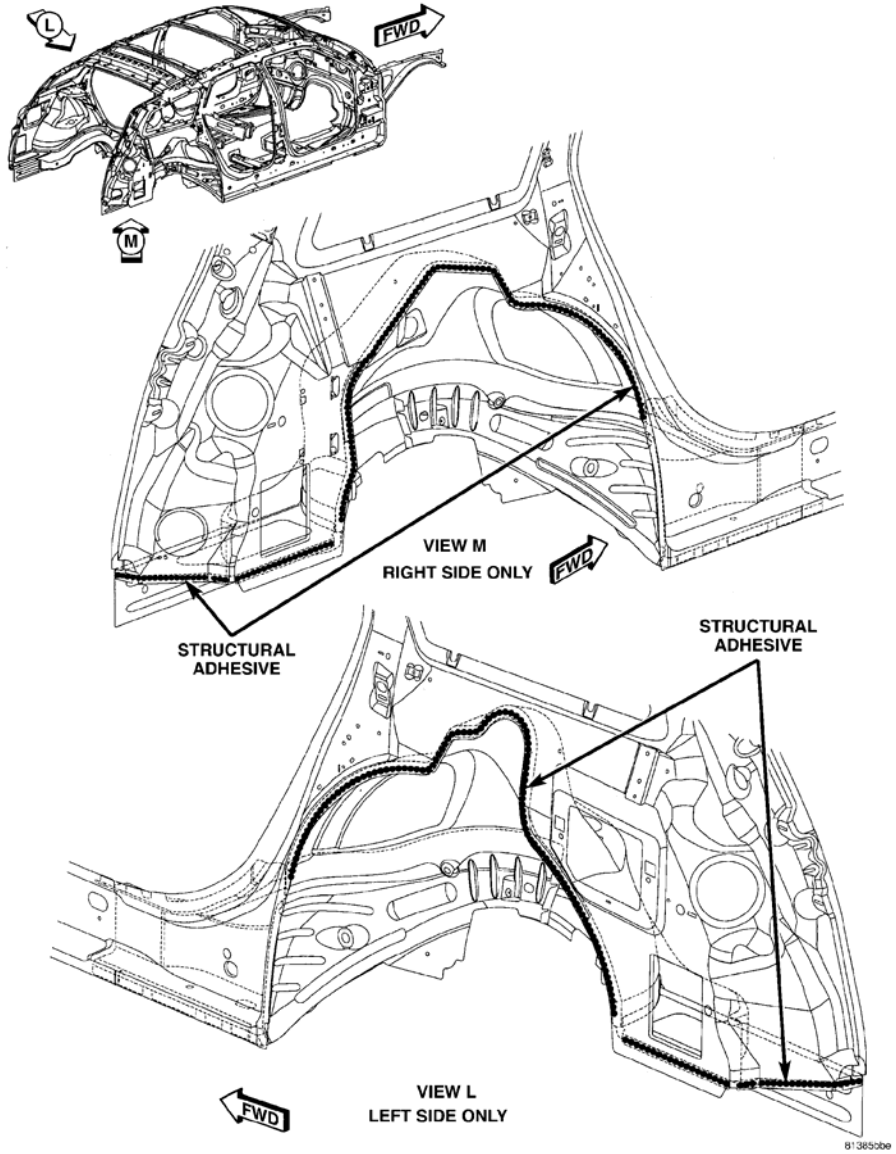

Fig. 10 FULL FRAMED BODY IN WHITE (1 OF 2)

Back To Index

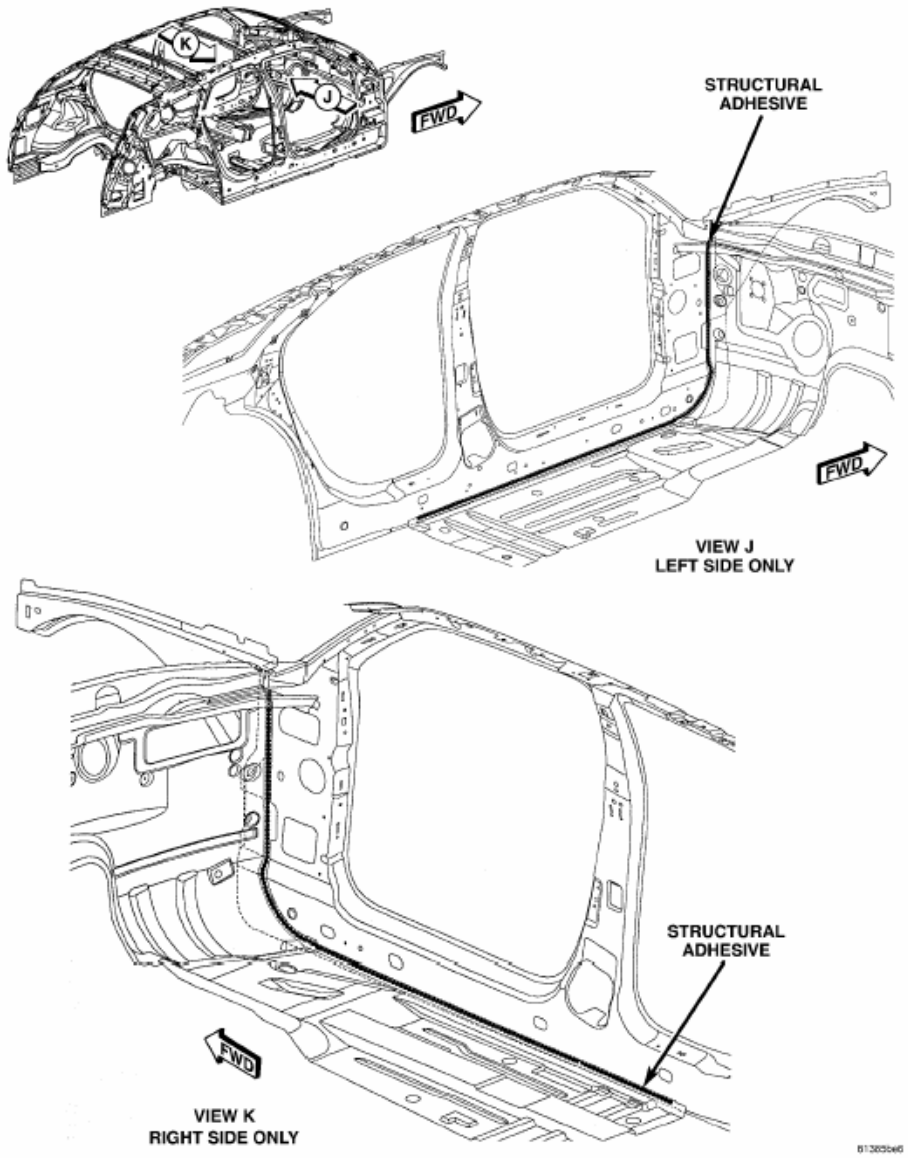

Fig. 11 FULL FRAMED BODY IN WHITE (2 OF 2)

Back to Index

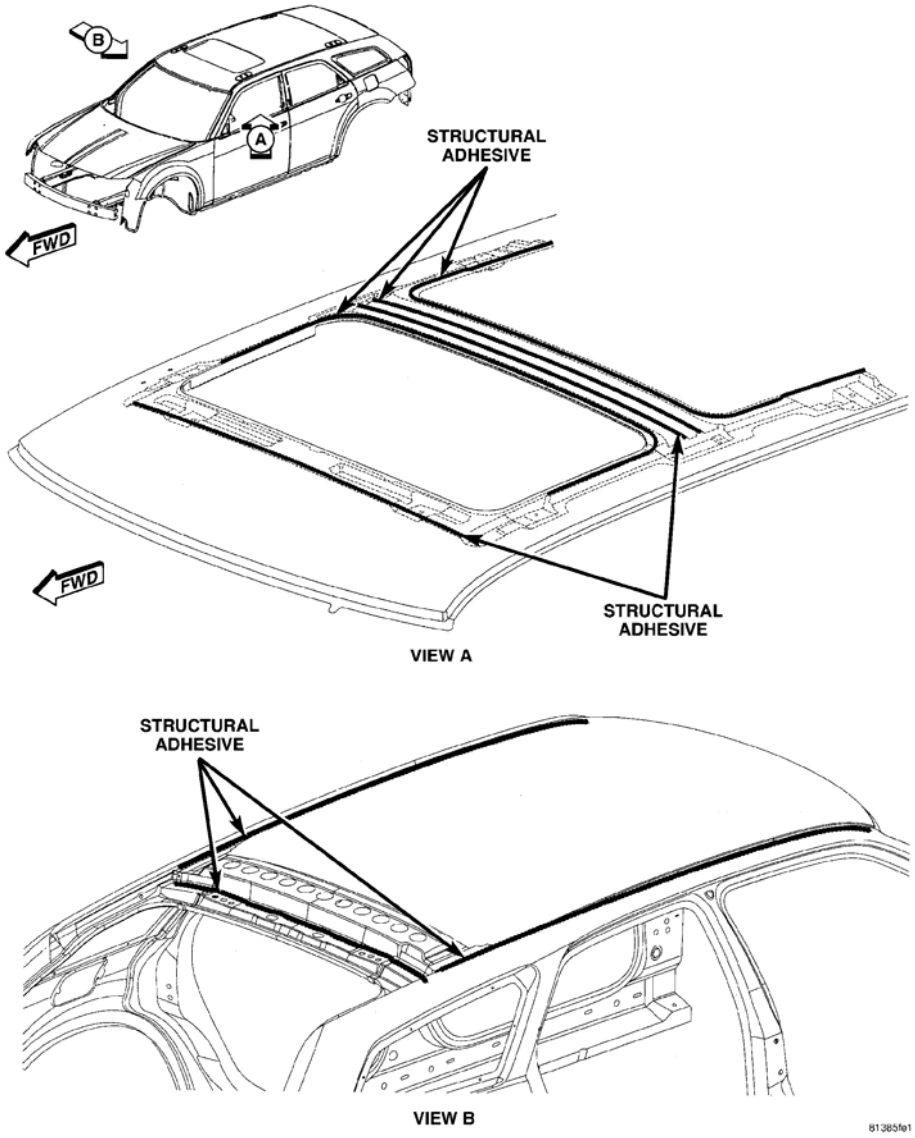

Fig. 12 ROOF

Back To Index

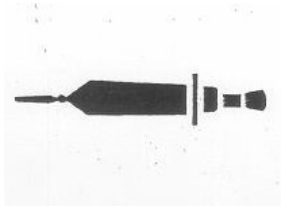

Sedan and Wagon

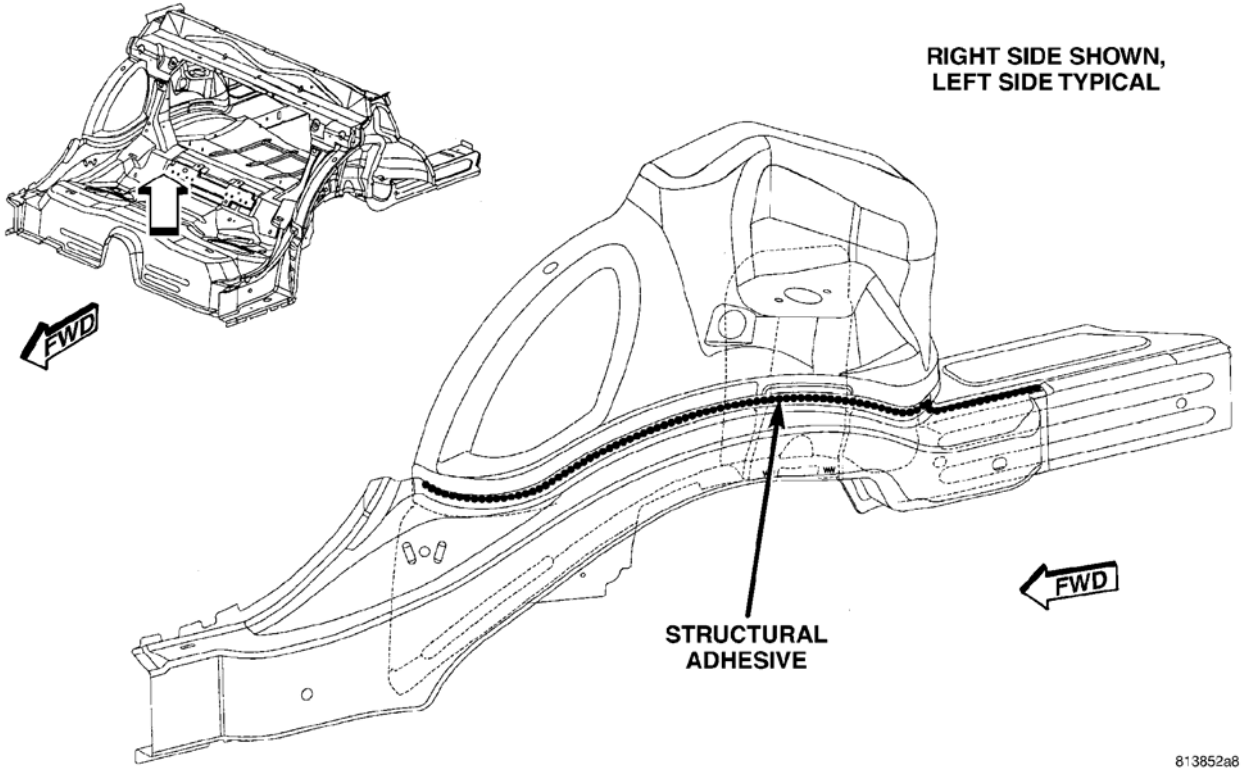

Fig. 13 REAR LADDER AND FLOOR (1 OF 4)

Back To Index

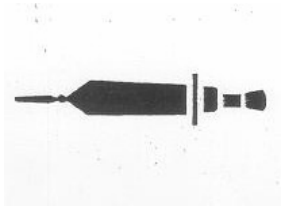

Sedan and Wagon

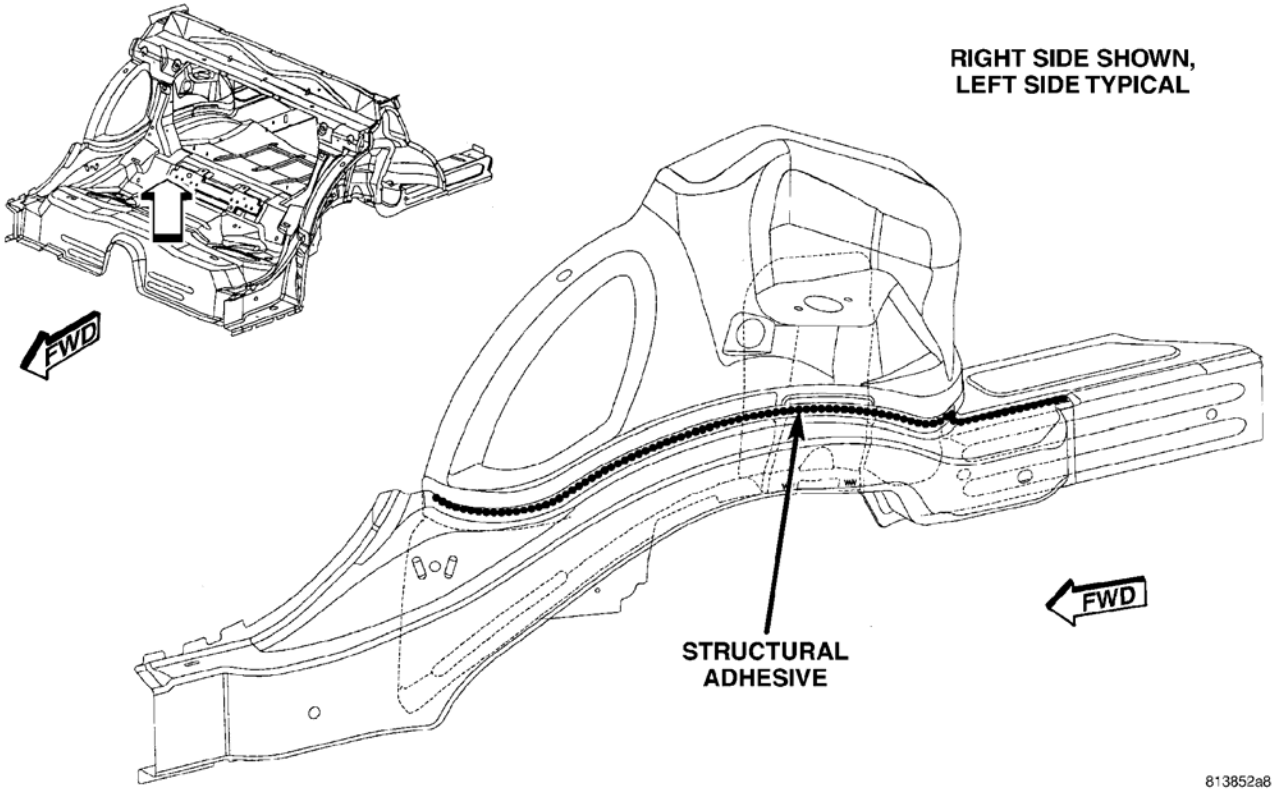

Fig. 13 REAR LADDER AND FLOOR (1 OF 4)

Back To Index

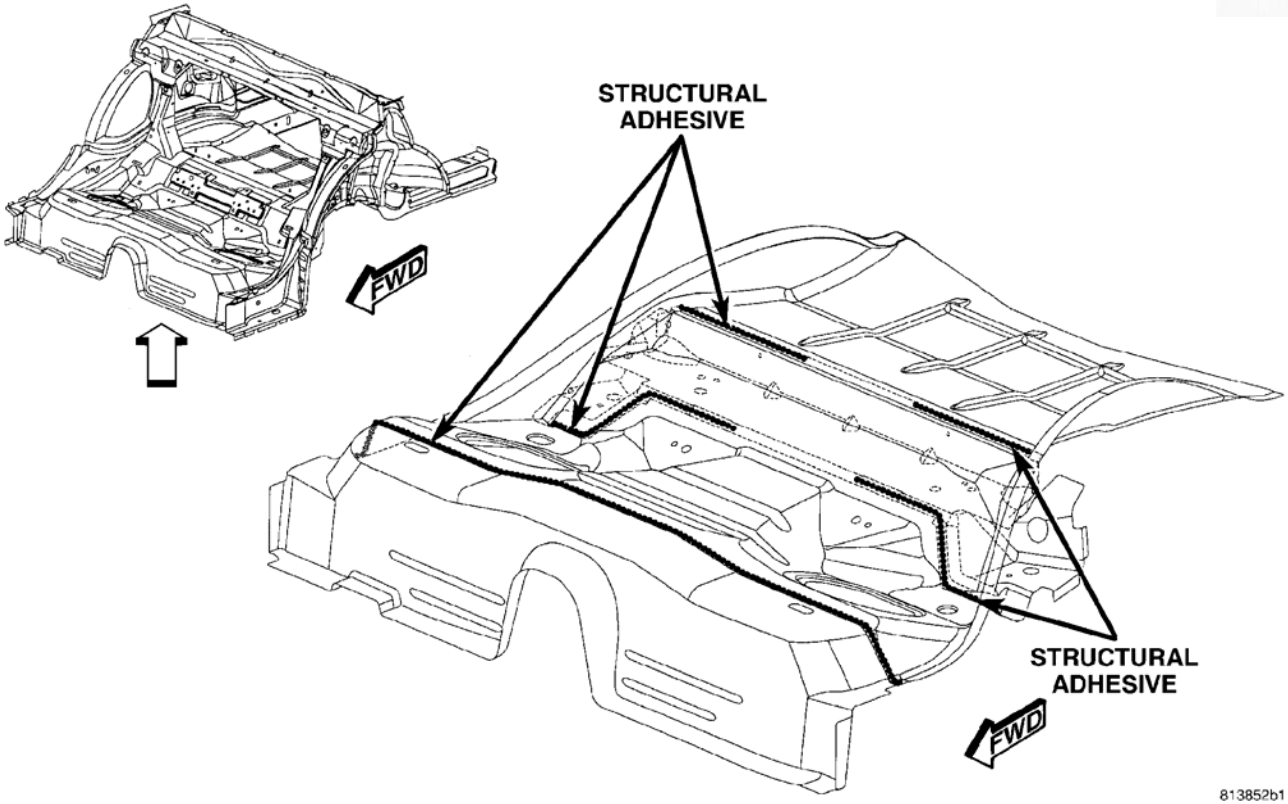

Fig. 14 REAR LADDER AND FLOOR (2 OF 4)

Back To Index

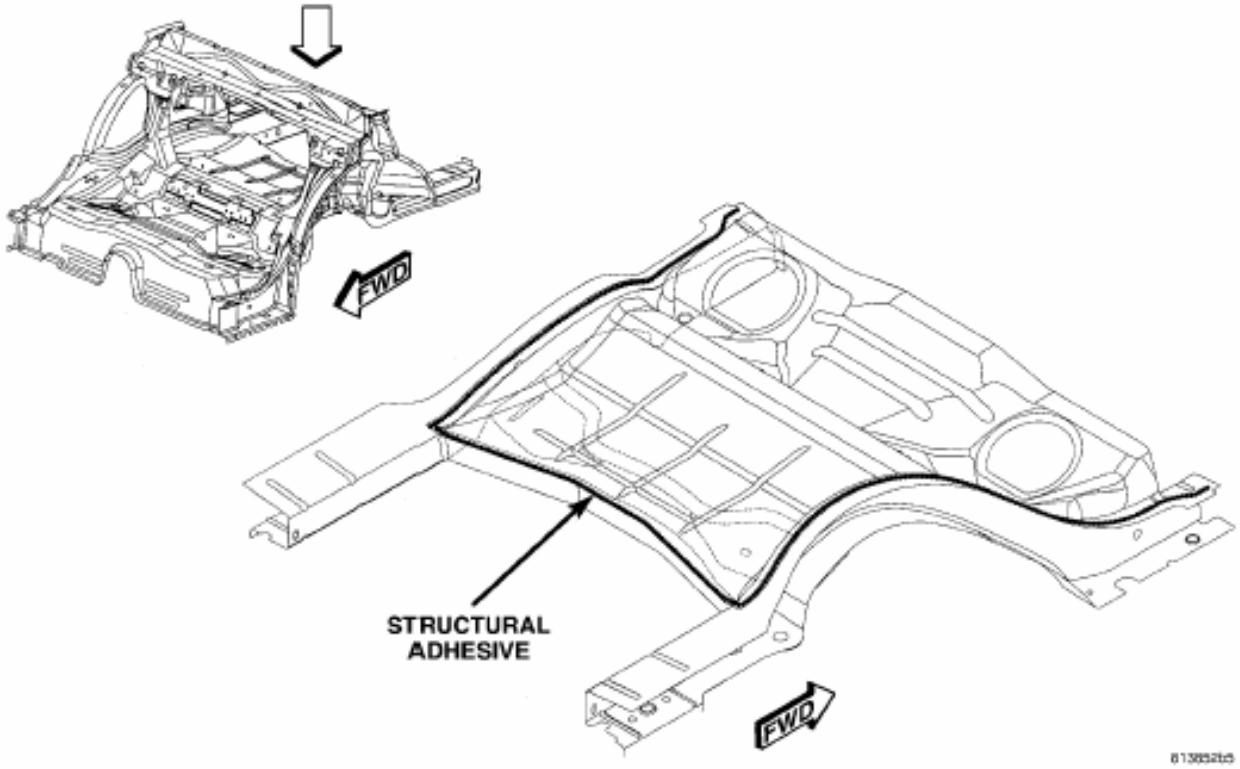

Fig. 15 REAR LADDER AND FLOOR (3 OF 4)

Back To Index

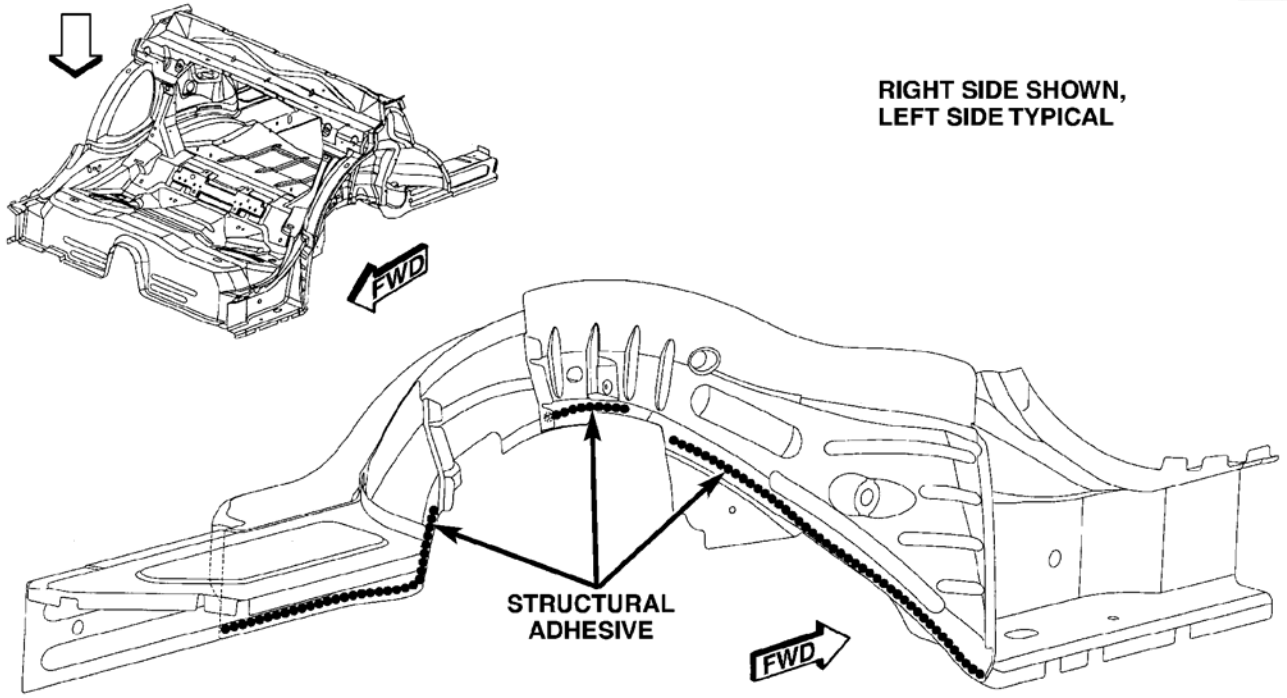

Fig. 16 REAR LADDER AND FLOOR (4 OF 4)

Back To Index

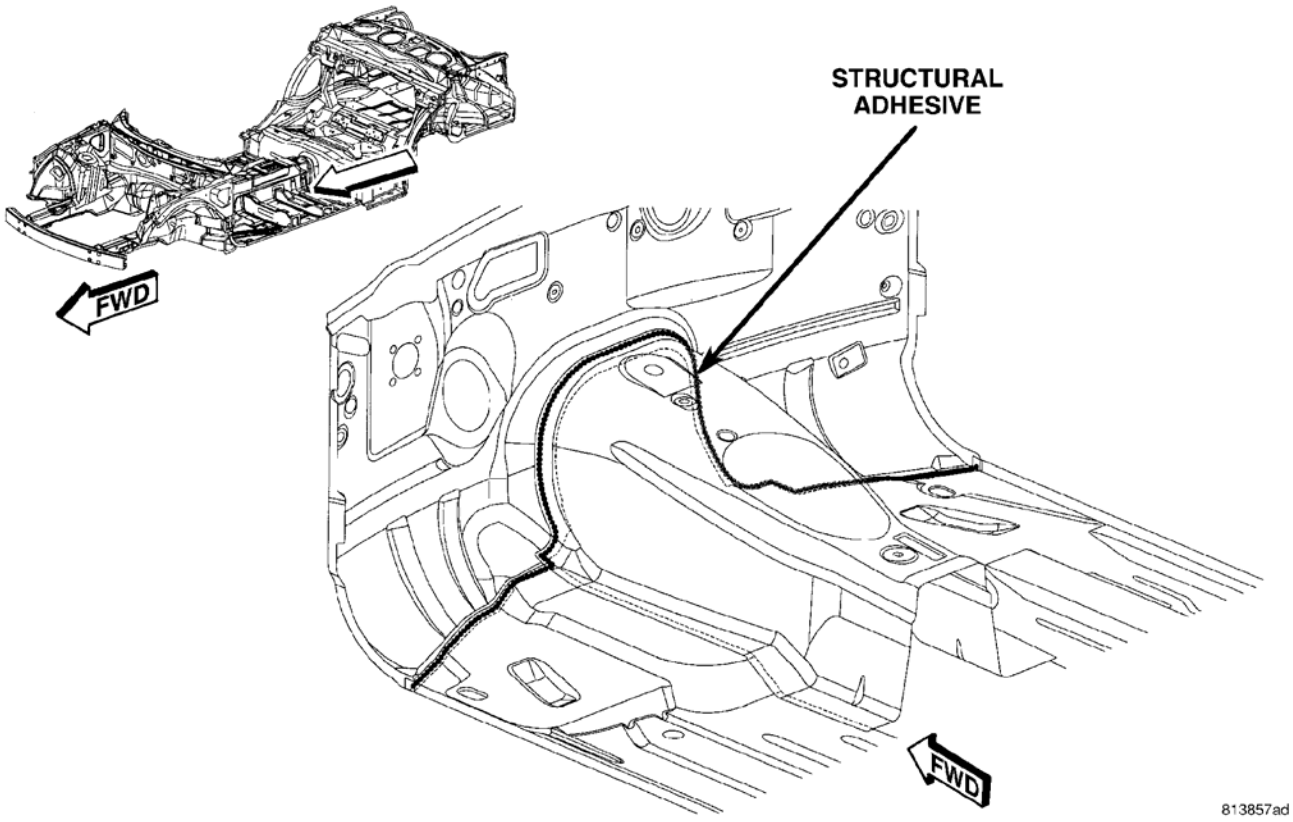

Fig. 17 UNDERBODY FRAMING (1 OF 2)

Back To Index

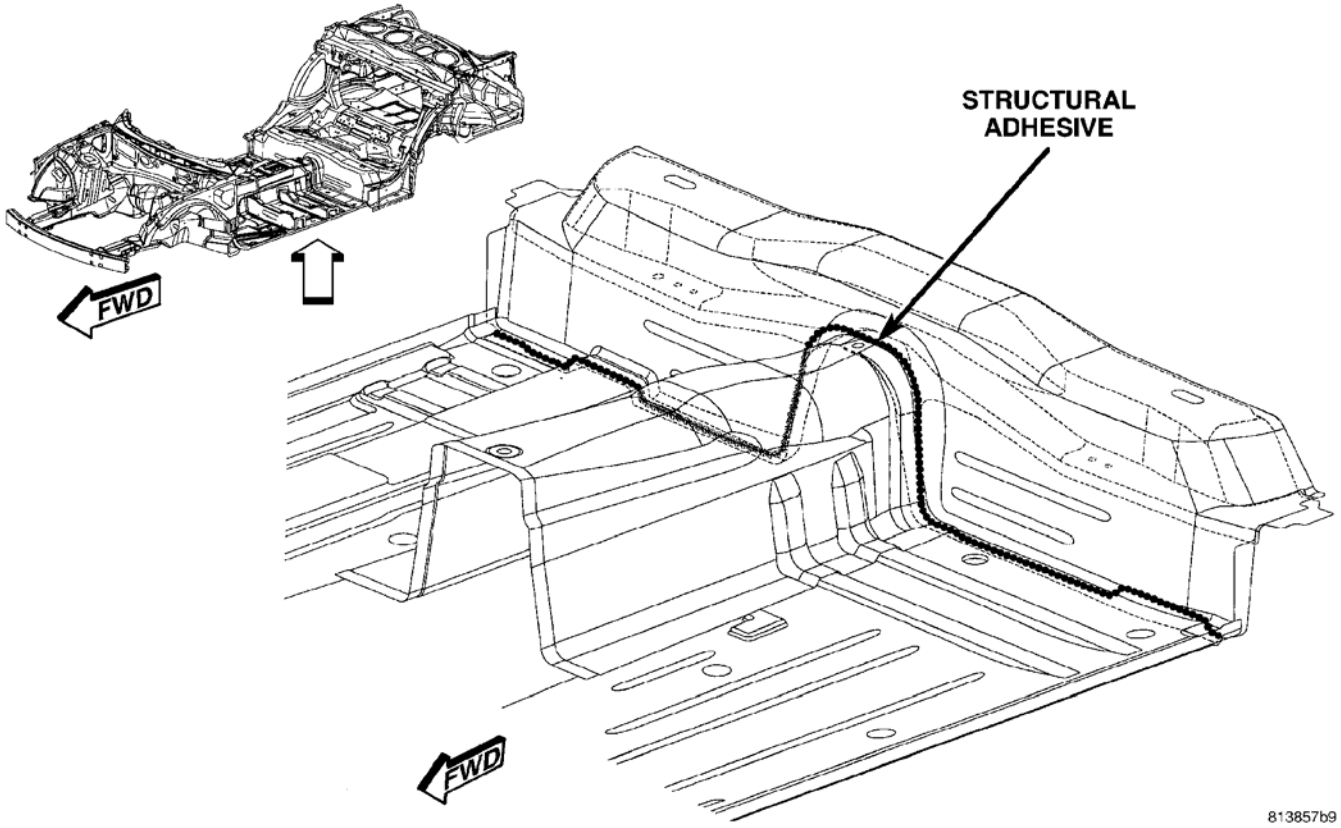

Fig. 18 UNDERBODY FRAMING (2 OF 2)

Back To Index

Back To Index

CHRYSLER 300, 300C, 300 Touring
and
DODGE MAGNUM
NVH/STRUCTURAL FOAM
INFORMATION

Back To Index

RIGHT SIDE SHOWN,
LEFT SIDE OPPOSITE.

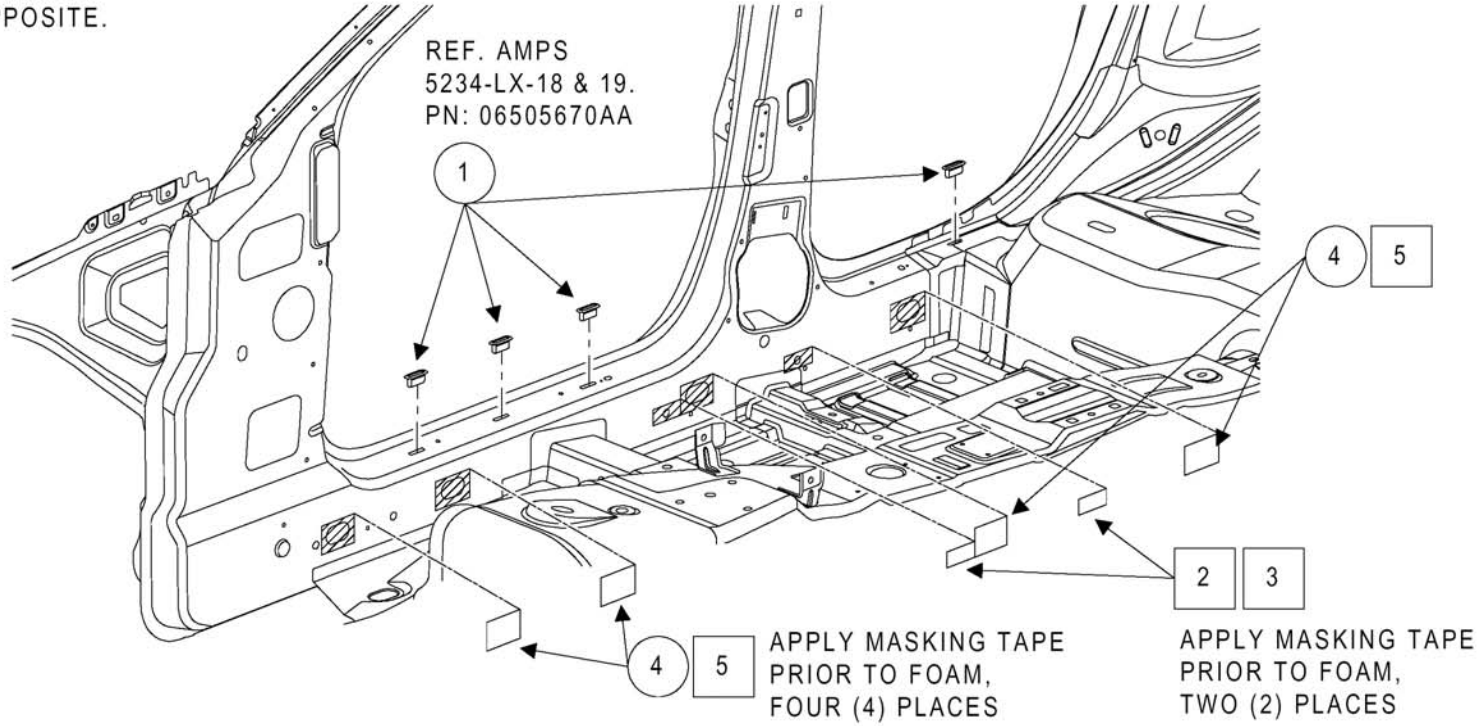

Back to Index

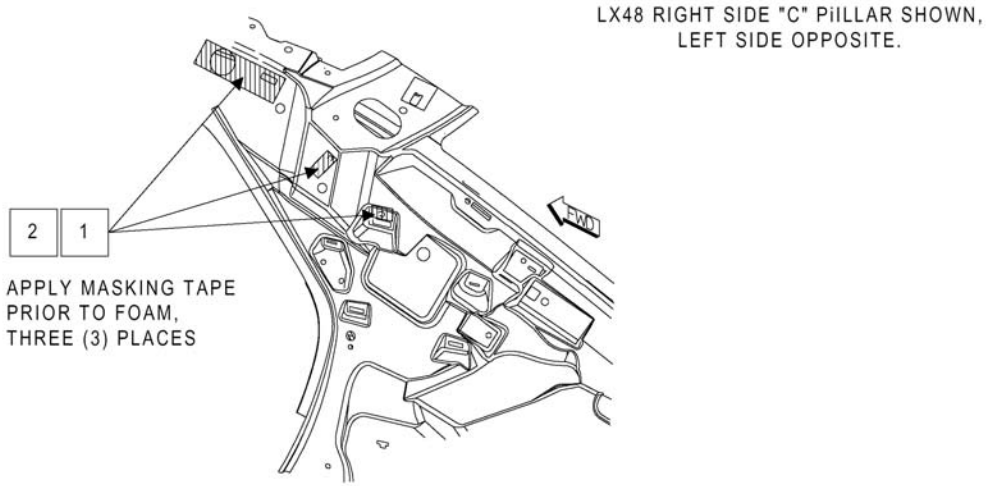

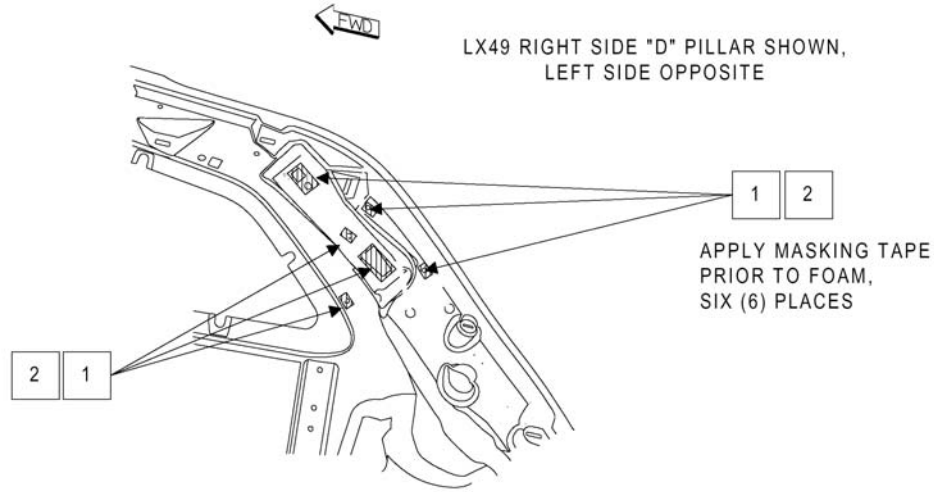

Back to Index

Back to Index

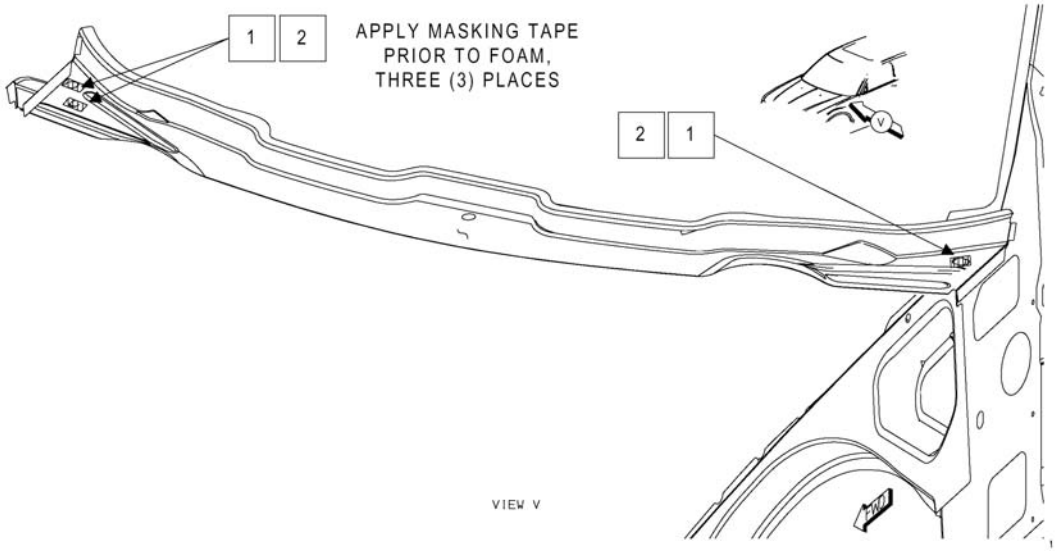

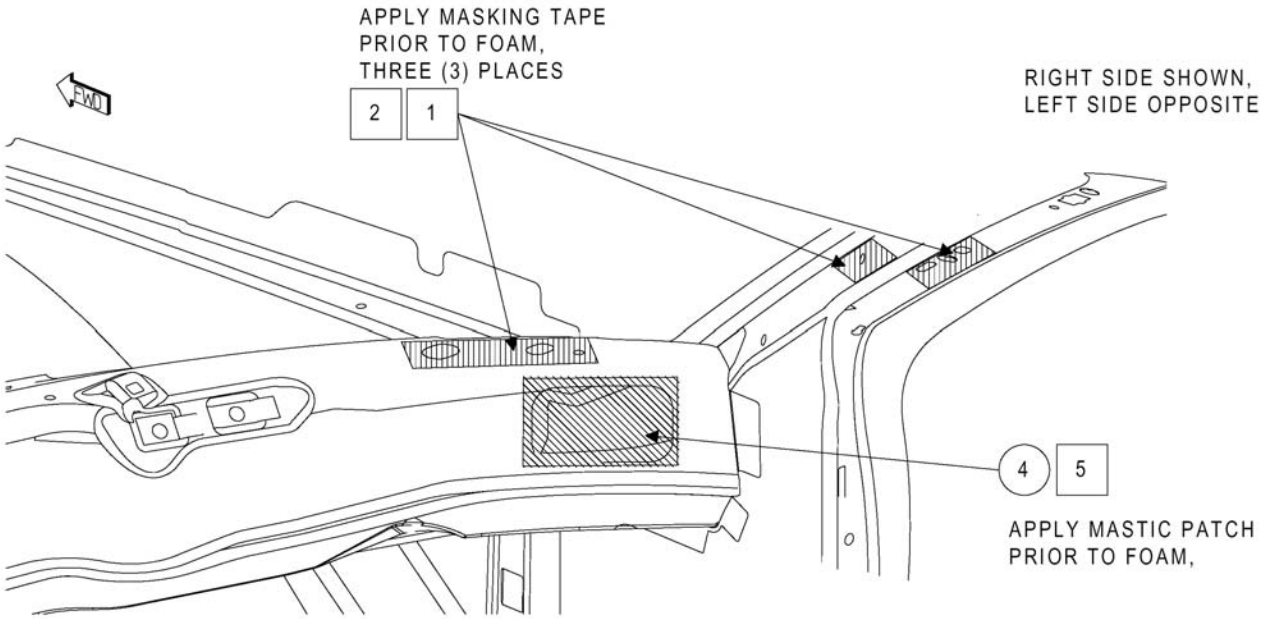

NOTE:
RIGHT SIDE SHOWN,
LEFT SIDE OPPOSITE.

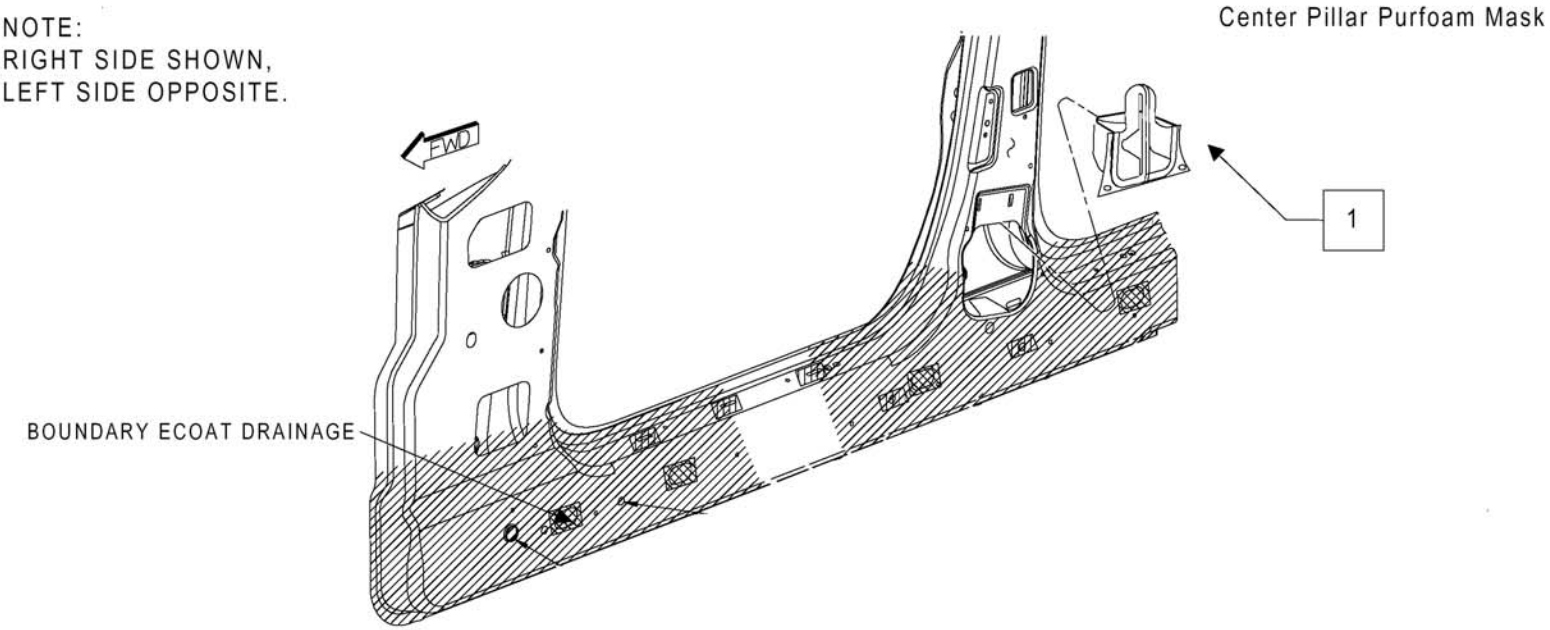

Back to Index

NOTE:
RIGHT SIDE SHOWN,
LEFT SIDE OPPOSITE.

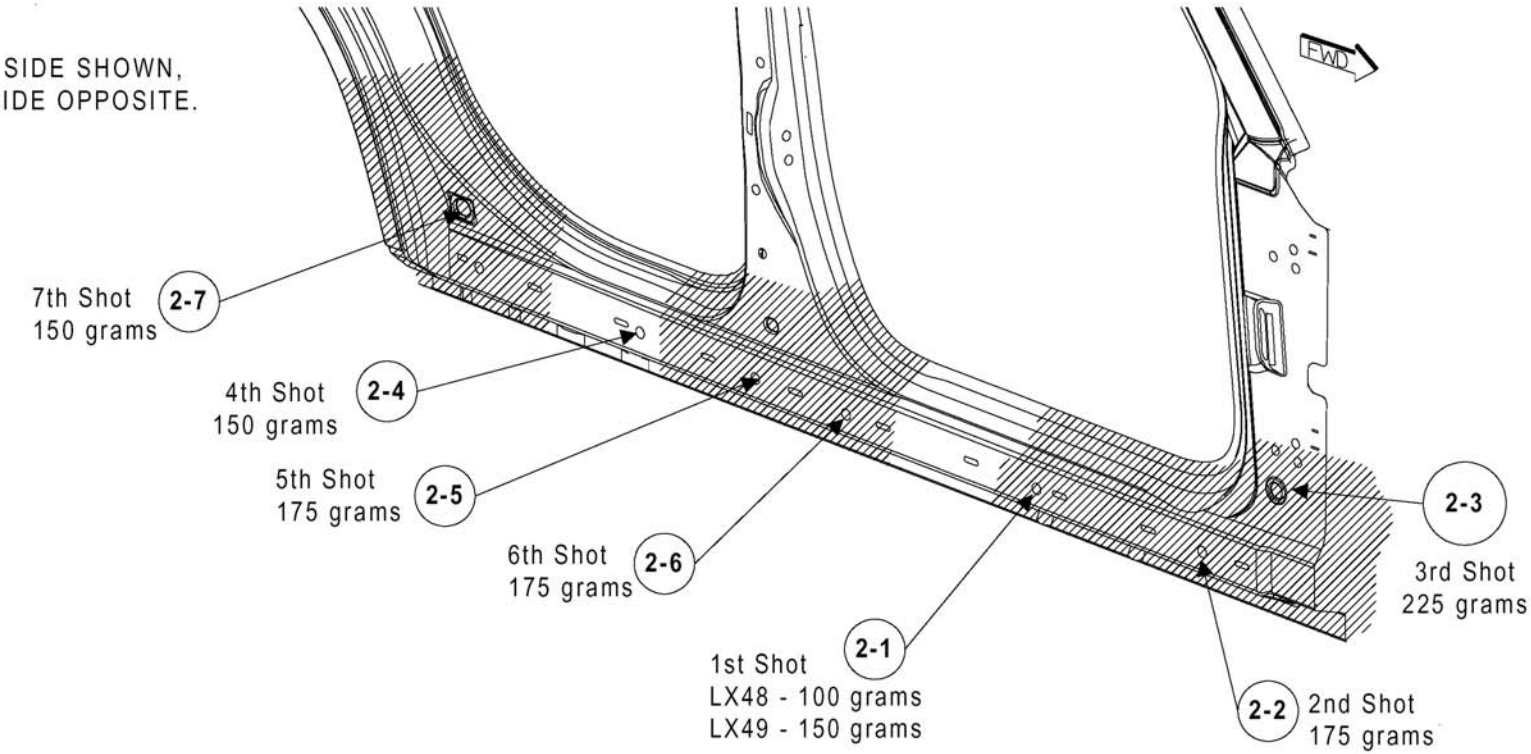

Back to Index

Back to Index

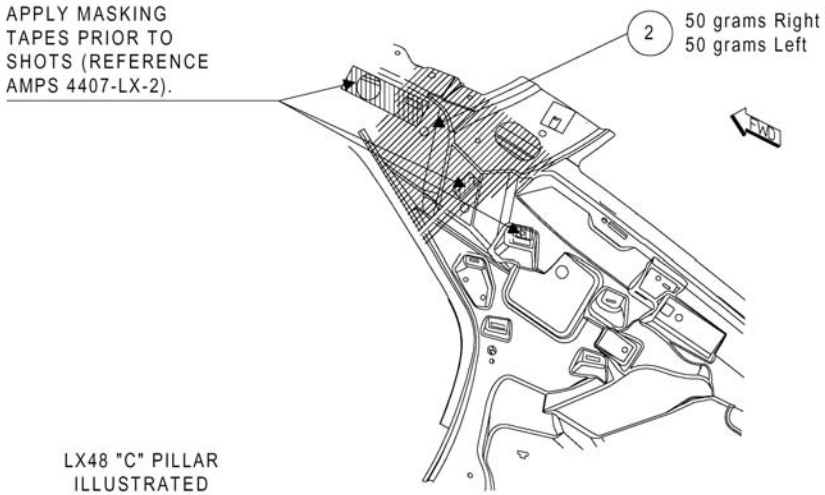

LX48 "C" PILLAR ILLUSTRATED

RIGHT SIDE SHOWN, LEFT SIDE OPPOSITE.

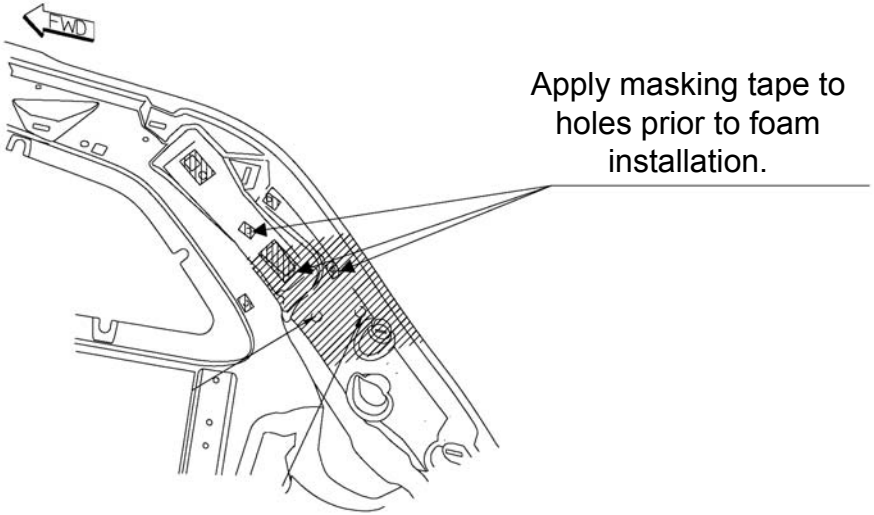

LX49 "D" PILLAR ILLUSTRATED

RIGHT SIDE SHOWN, LEFT SIDE OPPOSITE.

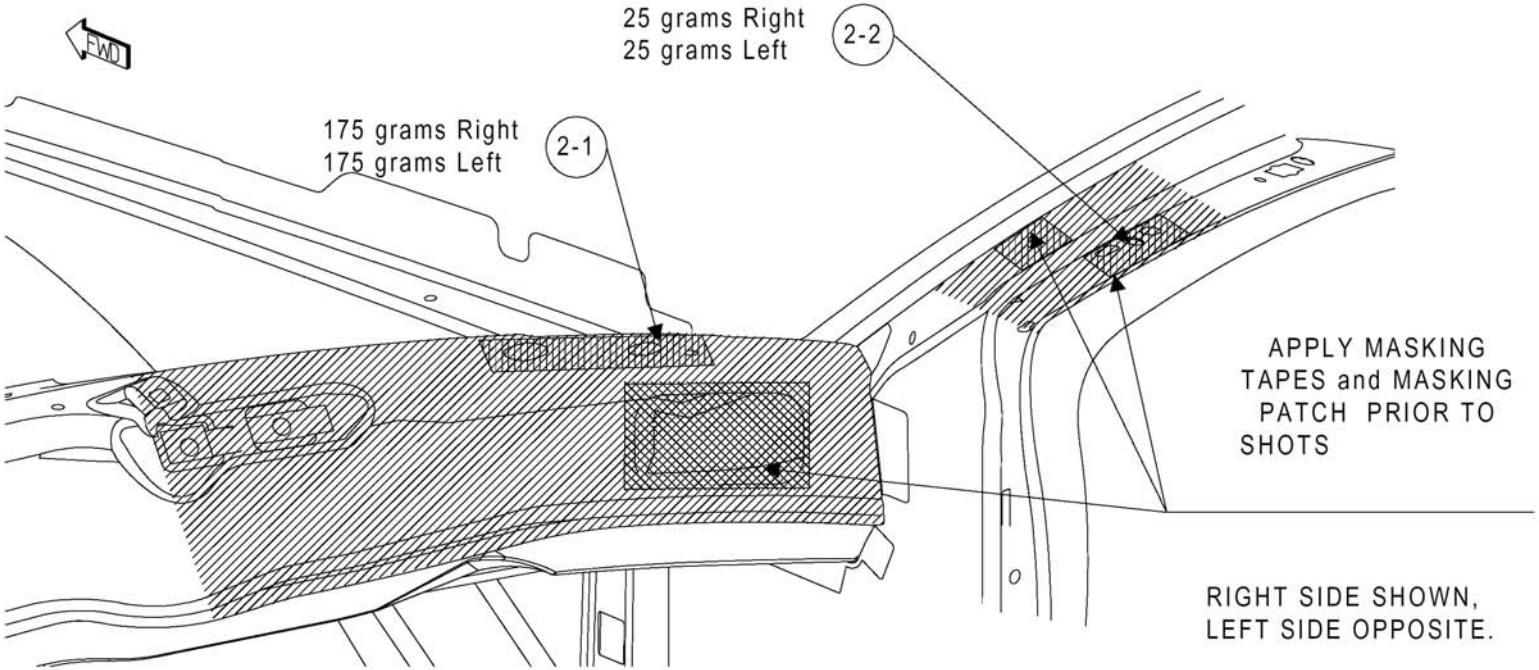

Back to Index

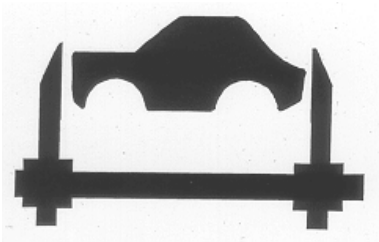

CHRYSLER 300, 300C, 300 Touring
and
DODGE MAGNUM
FRAME/BODY DIMENSIONS

Back To Index

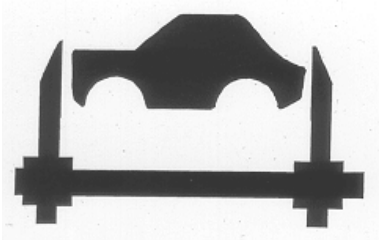

FRAME DIMENSIONS

Frame dimensions are listed in metric scale then converted to inch scale listed in parenthesis. All dimensions are from center to center of Principal Locating Point (PLP), or from center to center of PLP and fastener location. Vertical dimensions can be taken from the work surface to the locations indicated.

INDEX

DESCRIPTION	FIGURE
FRAME DIMENSIONS	1
ENGINE BOX DIMENSIONS	2

Back To Index

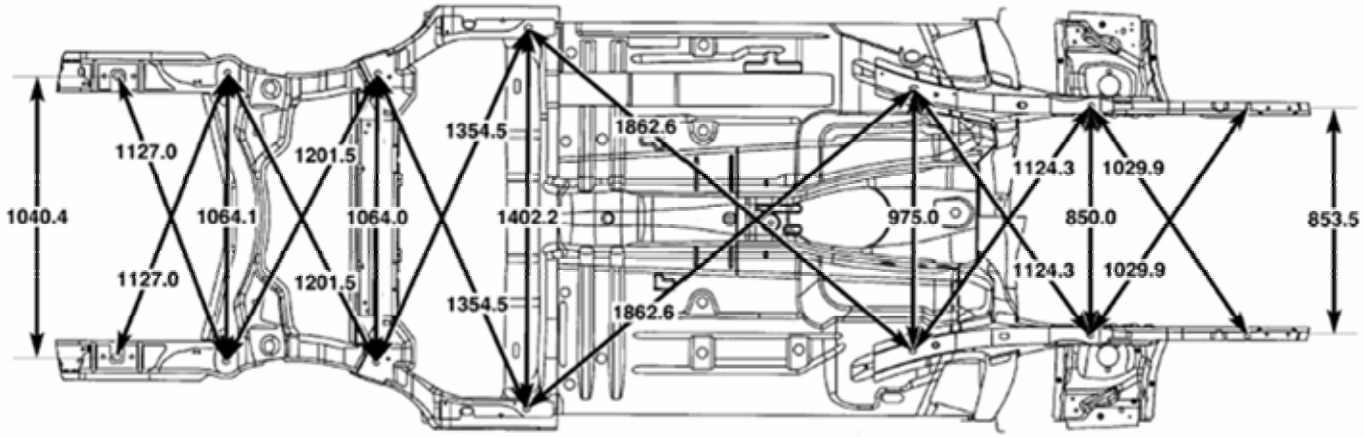

ALL DIMENSIONS ARE IN MILLIMETERS

MEASUREMENTS ARE FROM CENTER LINES OF HOLES (PLP's)

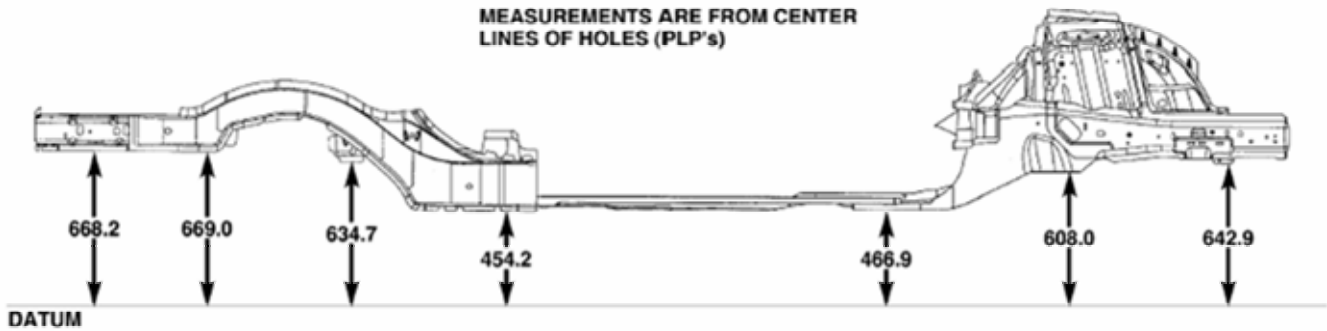

Fig. 1 FRAME DIMENSIONS

Back To Index

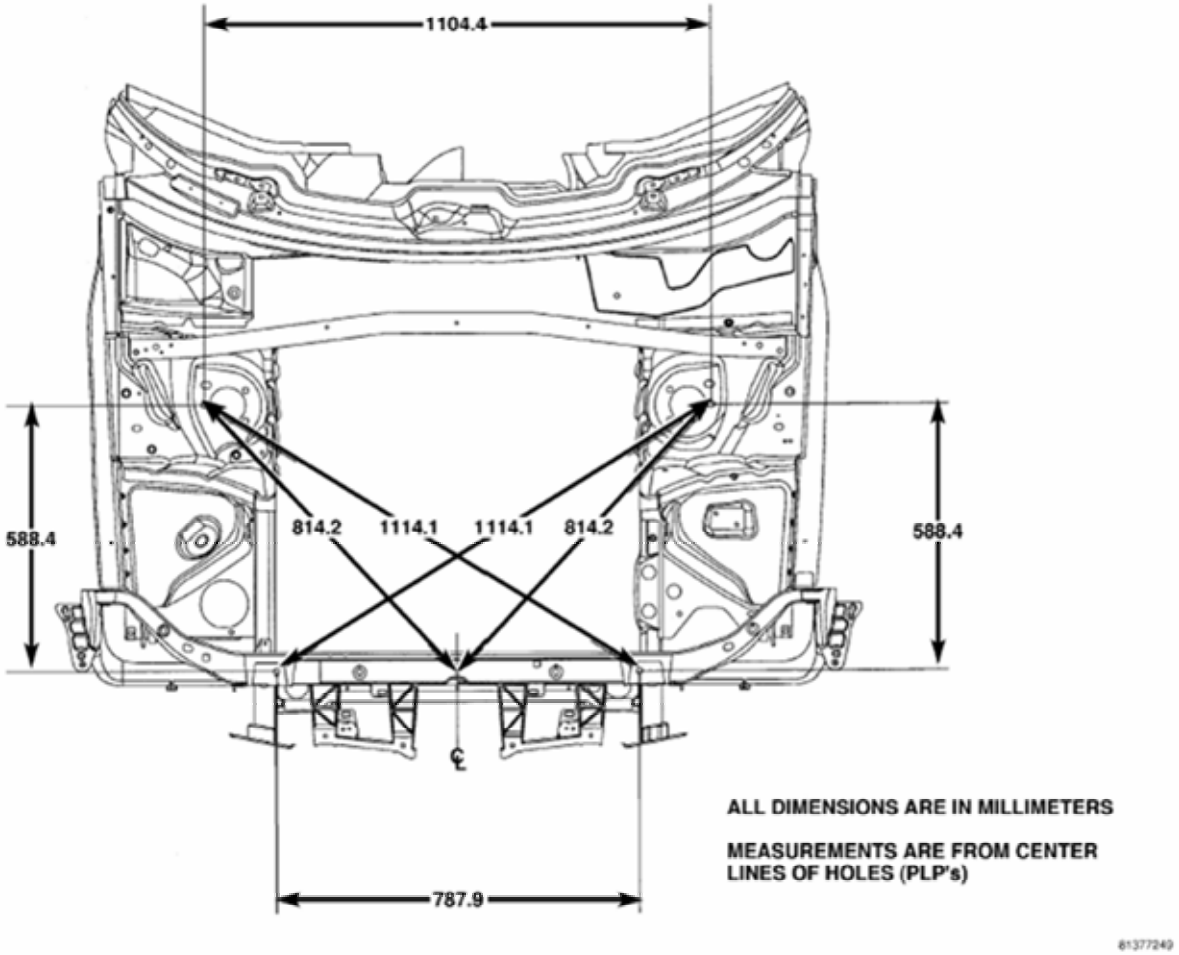

Fig. 2 ENGINE BOX DIMENSIONS

Back To Index

Back To Index

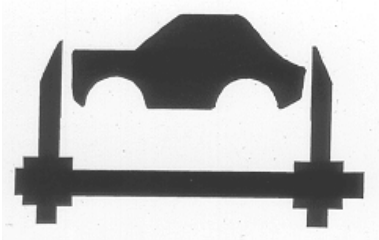

OPENING DIMENSIONS

TABLE OF CONTENTS

	page		page
OPENING DIMENSIONS SPECIFICATIONS		OPENING DIMENSIONS	1

OPENING DIMENSIONS

SPECIFICATIONS

OPENING DIMENSIONS

Index

DESCRIPTION	FIGURE
WINDSHIELD OPENING	(Fig. 1)
FRONT AND REAR DOOR OPENINGS	(Fig. 2)
REAR WINDOW OPENING	(Fig. 3)
DECKLID OPENING	(Fig. 4)
QUARTER WINDOW OPENING	(Fig. 5)
LIFTGATE OPENING	(Fig. 6)

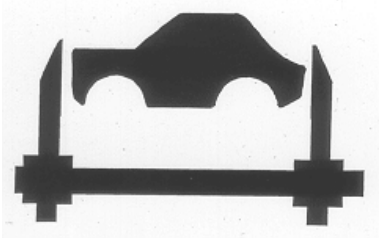

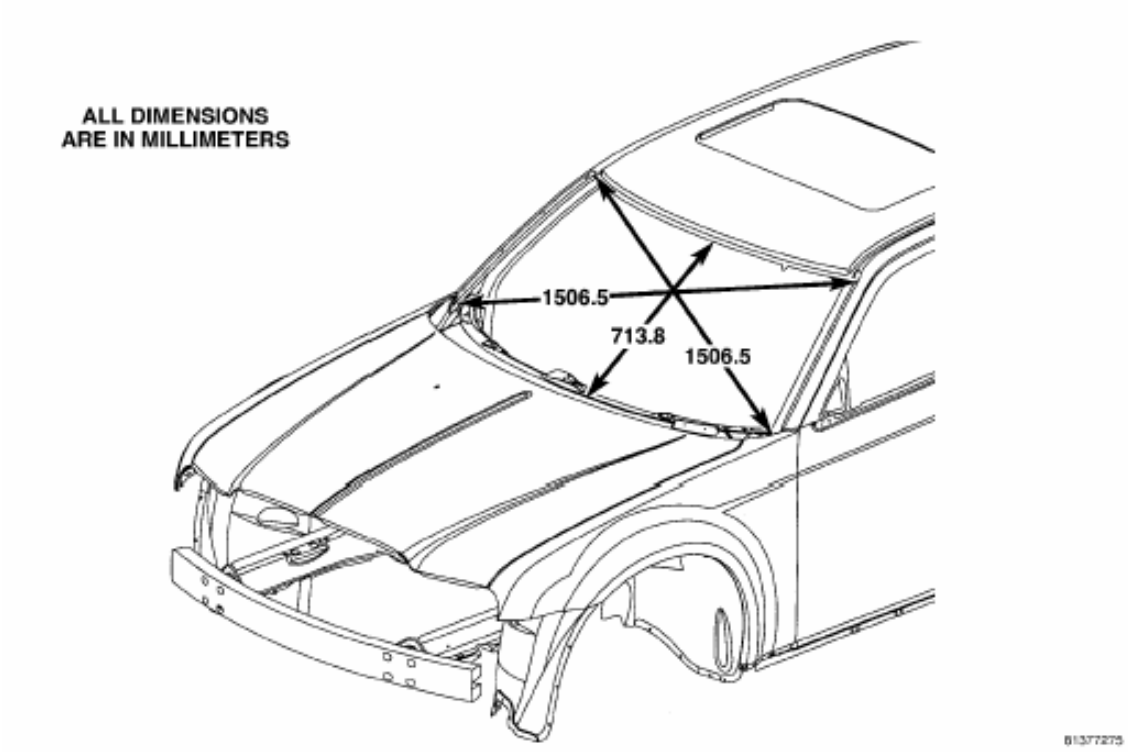

Fig. 1 WINDSHIELD OPENING

Back To Index

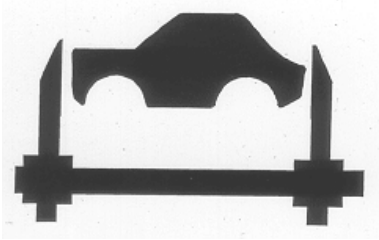

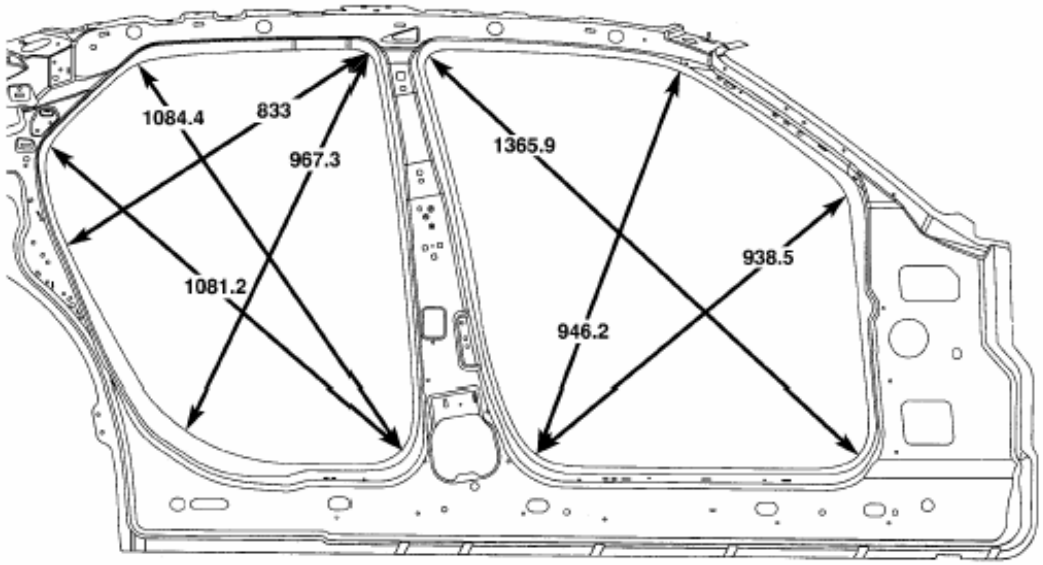

ALL DIMENSIONS ARE IN MILLIMETERS

81377260

Fig. 2 FRONT AND REAR DOOR OPENINGS

Back To Index

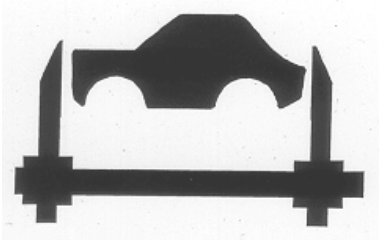

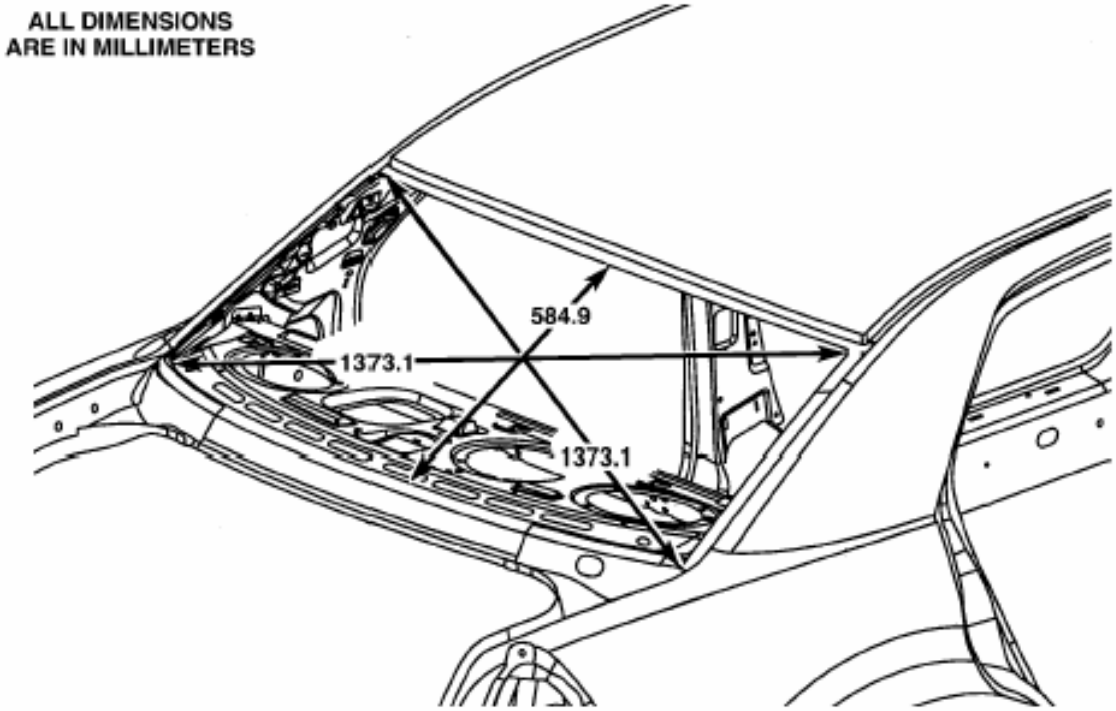

Back To Index

Fig. 3 REAR WINDOW OPENING

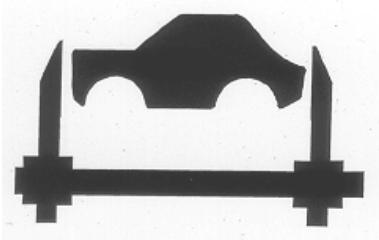

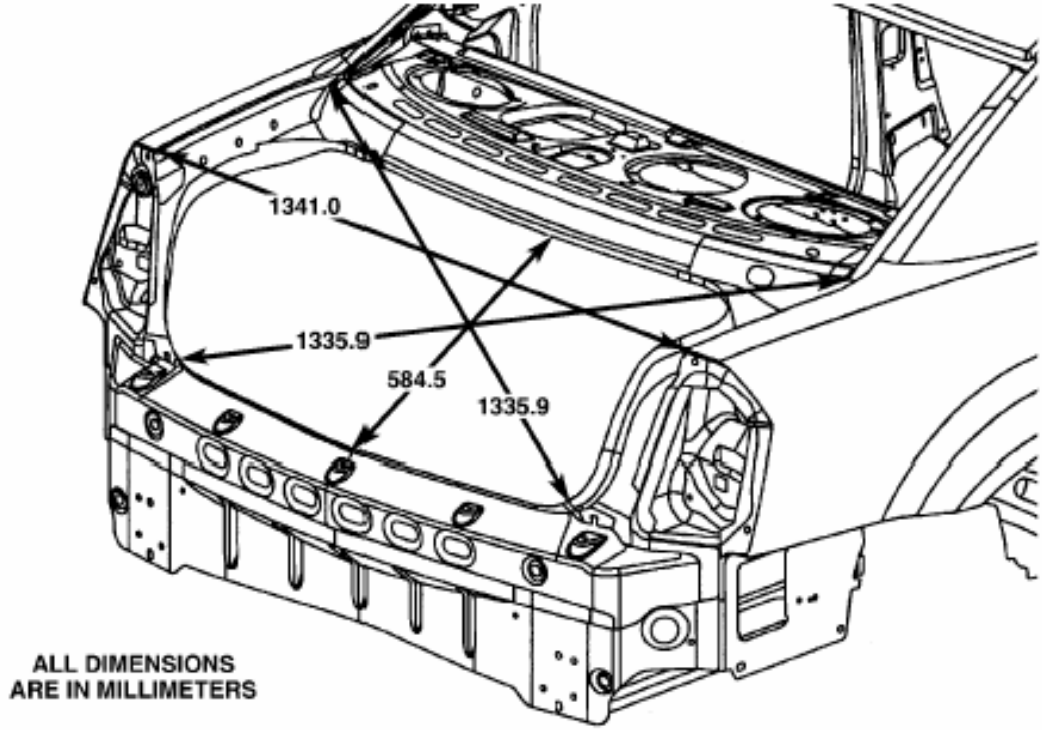

Fig. 4 DECKLID OPENING

Back To Index

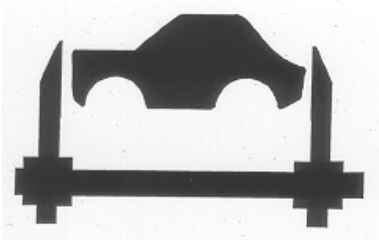

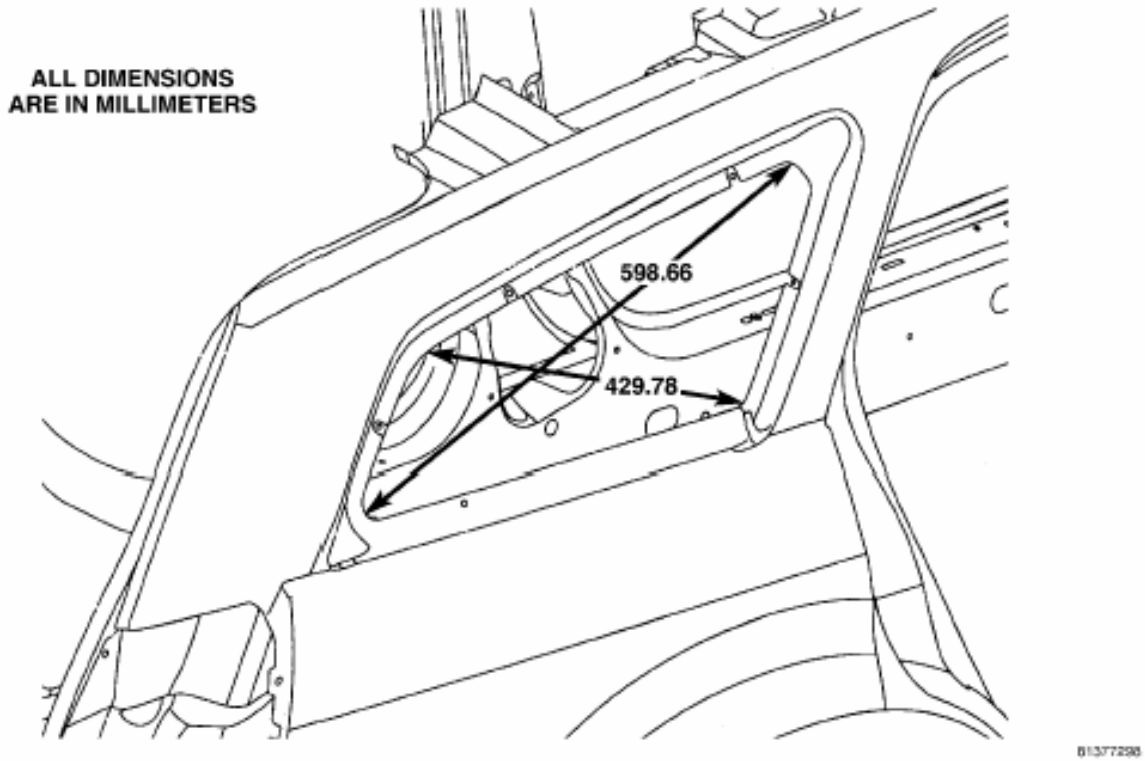

Fig. 5 QUARTER WINDOW OPENING

Back To Index

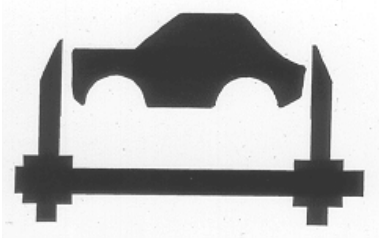

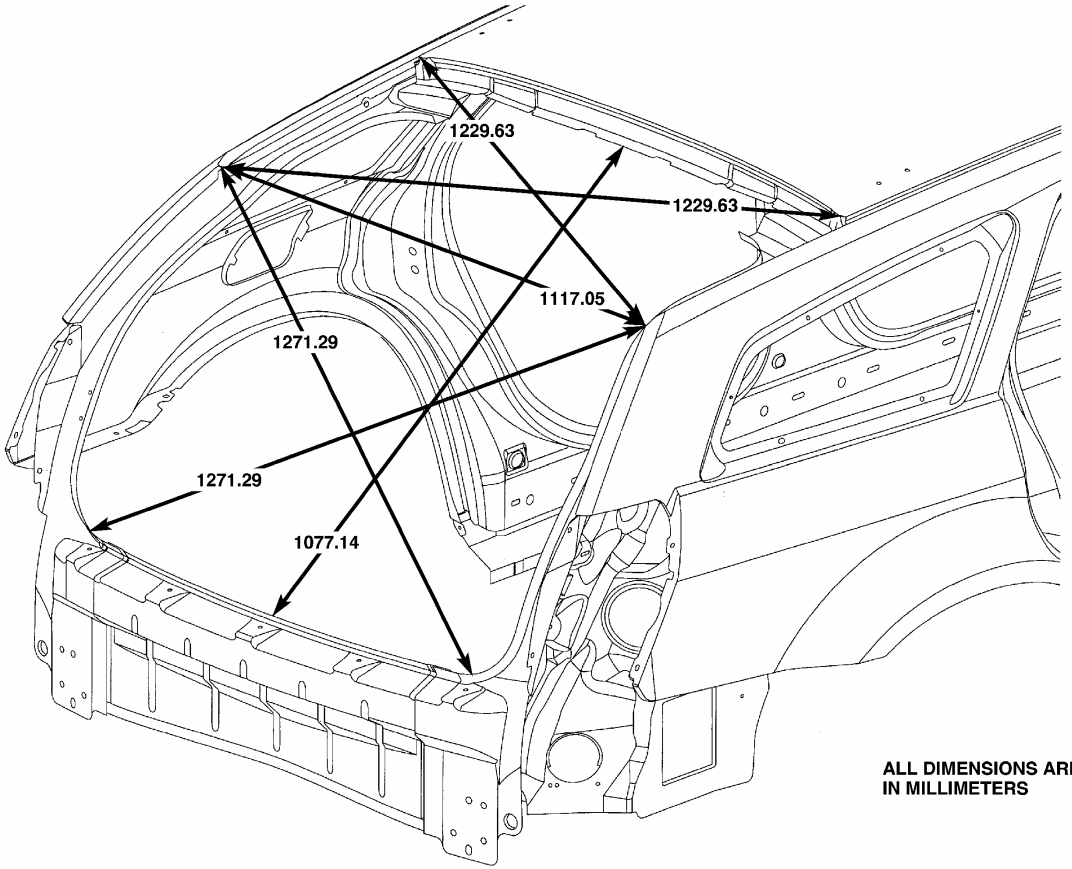

ALL DIMENSIONS ARE
IN MILLIMETERS

Back To Index

813772c0

GAP AND FLUSH

GAP AND FLUSH

SPECIFICATIONS

GAP AND FLUSH

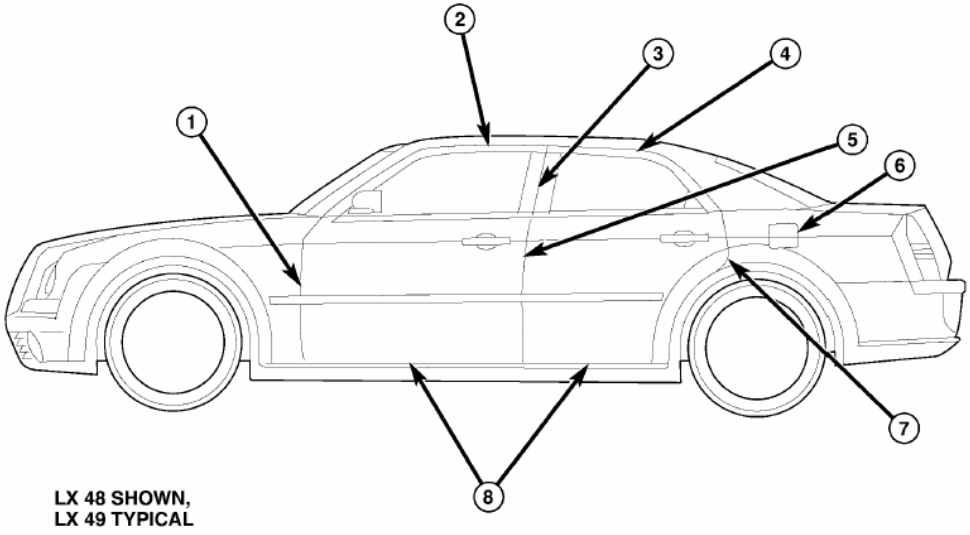

NOTE: ALL DIMENSIONS ARE IN MILLIMETERS.

WAGON & SEDAN MEASUREMENTS

DIMENSION	LOCATION	GAP	FLUSH
1	FRONT DOOR TO FENDER	4.0 ± 1.0 PARALLEL WITHIN 1.0	FENDER OVERFLUSH 0.8 ± 1.0
2	FRONT DOOR TO ROOF	4.7 +1.5/-1.0 PARALLEL WITHIN 1.5	DOOR UNDERFLUSH 1.5 ± 1.5
3	FRONT DOOR TO REAR DOOR	4.0 ± 1.5	—

Back To Index

DIMENSION	LOCATION	GAP	FLUSH
4	REAR DOOR TO ROOF	4.7 +1.5/-1.0 CONSISTANT WITHIN 2.O	DOOR UNDERFLUSH 1.5 ± 1.5
5	FRONT DOOR TO REAR DOOR	4.0 ± 1.0 PARALLLEL WITHIN 1.0	FRONT DOOR OVERFLUSH 0.0 - 2.0
6	FUEL FILLER DOOR TO QUARTER PANEL	3.0 ± 1.0 UNIFORM WITHIN 1.0	FUEL DOOR UNDERFLUSH 0.5 ± 1.0
7	REAR DOOR TO QUARTER PANEL	4.0 ± 1.0 PARALLEL WITHIN 1.0	0.0 ± 1.0
8	FRONT AND REAR DOOR TO SILL	6.0 ± 2.0 PARALLEL WITHIN 2.0	—

Back To Index

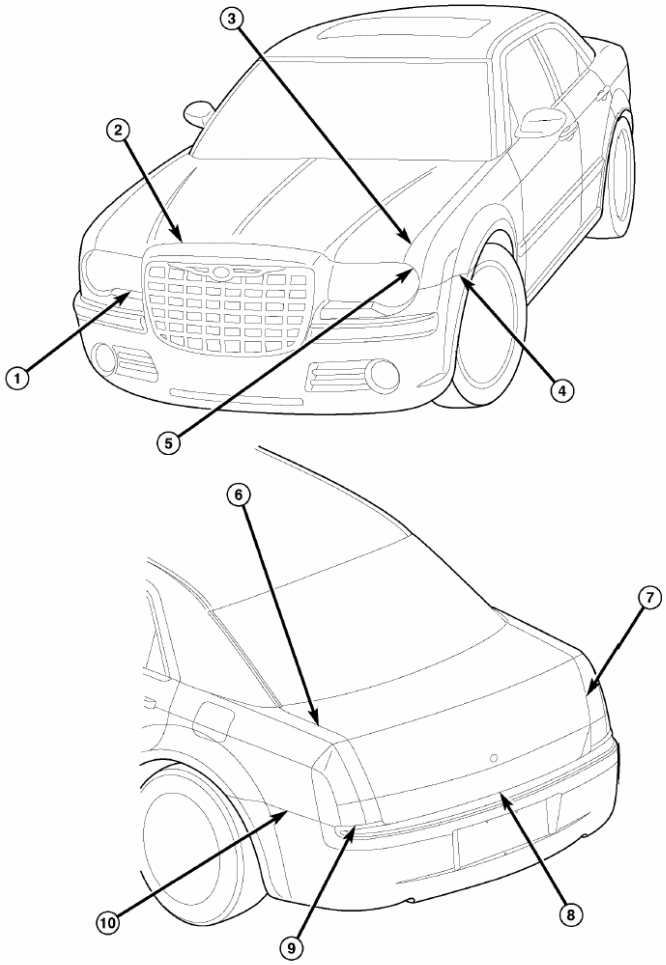

Back To Index

NOTE: ALL DIMENSIONS ARE IN MILLIMETERS.

SEDAN MEASUREMENTS

DIMENSION	LOCATION	GAP	FLUSH
1	FASCIA TO HEADLAMP	3.0 ± 2.0 PARALLEL WITHIN 1.5 LH/RH DIFFERENCE WITHIN 2.0	—
2	HOOD TO FASCIA	3.5 ± 1.5 PARALLEL WITHIN 2.0	FASCIA OVERFLUSH 1.0 ± 1.5
3	HOOD TO FENDER	3.5 ± 1.0 PARALLEL WITHIN 1.0 LH/RH DIFFERENCE WITHIN 1.0	0.0 ± 1.5
4	FASCIA TO FENDER	0.0 + 1.0	0.0 ± 1.0
5	HEADLAMP TO FENDER	3.0 ± 1.0 LH/RH DIFFERENCE WITHIN 1.5	—
6	DECKLID TO QUARTER PANEL	3.5 ± 1.0 PARALLEL WITHIN 1.0 LH/RH DIFFERENCE WITHIN 1.0	DECKLID UNDERFLUSH 0.8 ± 1.5
7	DECKLID TO TAILLAMP	4.0 ± 2.0 PARALLEL WITHIN 1.0 LH/RH DIFFERENCE WITHIN 1.0	TAILLAMP OVERFLUSH 1.0 ± 2.0
8	DECKLID TO FASCIA	6.5 ± 2.0 PARALLEL WITHIN 2.0	—
9	TAILLAMP TO FASCIA	2.0 ± 1.5 PARALLEL WITHIN 1.5	0.0 ± 1.5
10	FASCIA TO QUARETER PANEL	0.0 + 1.0	0.0 ± 1.0

Back To Index

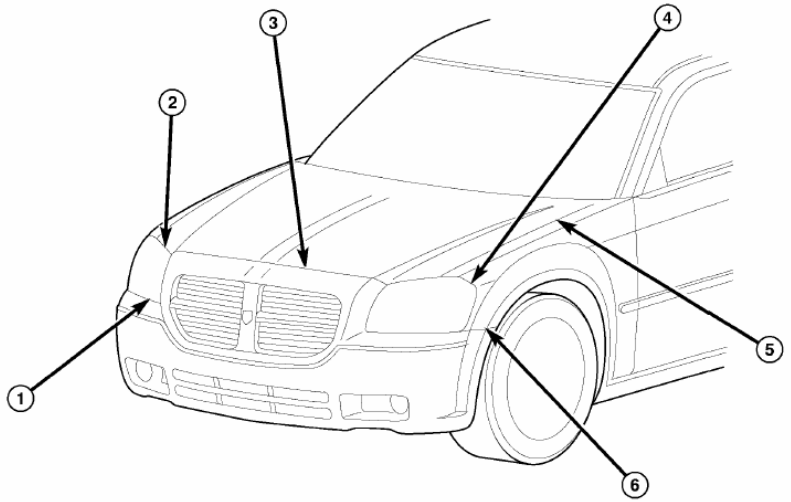

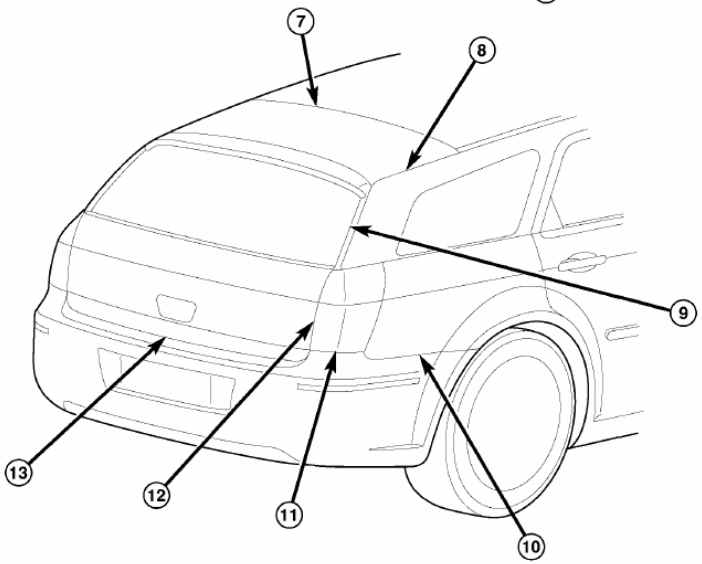

Back To Index

NOTE: ALL DIMENSIONS ARE IN MILLIMETERS.

WAGON MEASUREMENTS

DIMENSION	LOCATION	GAP	FLUSH
1	HEADLAMP TO FASCIA	4.5 ± 2.0 PARALLEL WITHIN 2.0 LH/RH DIFFERENCE WITHIN 2.0	—
2	HEADLAMP TO HOOD	4.5 ± 2.0 PARALLEL WITHIN 2.0 LH/RH DIFFERENCE WITHIN 2.0	HEADLAMP UNDERFLUSH 1.0 ± 1.5
3	HOOD TO FASCIA	3.5 ± 1.5 PARALLEL WITHIN 2.0	FASCIA OVERFLUSH 1.0 ± 1.5
4	HEADLAMP TO FENDER	3.5 ± 1.5 CONSISTANT WITHIN 2.0 LH/RH DIFFERENCE WITHIN 2.0	HEADLAMP UNDERFLUSH 1.0 ± 1.5
5	FENDER TO HOOD	3.5 ± 1.0 PARALLEL WITHIN 1.0 LH/RH DIFFERENCE WITHIN 1.0	0.0 ± 1.5
6	FASCIA TO FENDER	0.0 ± 1.0	0.0 ± 1.0
7	LIFTGATE TO ROOF	7.5 ± 1.5 PARALLEL WITHIN 1.5	LIFTGATE UNDERFLUSH 1.0 ± 1.5
8	LIFTGATE TO BODYSIDE	5.0 ± 1.5 PARALLEL WITHIN 1.5	—
9	LIFTGATE GLASS TO BODYSIDE	5.0 ± 1.5 PARALLEL WITHIN 2.0 LH/RH DIFFERENCE WITHIN 2.0	LIFTGATE GLASS UNDERFLUSH 1.5 ± 1.5
10	FASCIA TO QUARTER PANEL	0.0 ± 1.0	0.0 ± 1.0
11	FASCIA TO TAILLAMP	2.0 ± 1.5 PARALLEL WITHIN 1.5 LH/RH DIFFERENCE WITHIN 2.0	0.0 ± 1.5
12	LIFTGATE TO TAILLAMP	5.0 ± 2.0 PARALLEL WITHIN 1.5 LH/RH DIFFERENCE WITHIN 2.0	TAILLAMP OVERFLUSH 1.0 ± 2.0
13	LIFTGATE TO FASCIA	7.0 ± 2.0 PARALLEL WITHIN 2.0	—

Back To Index

Additional Support and Technical Information

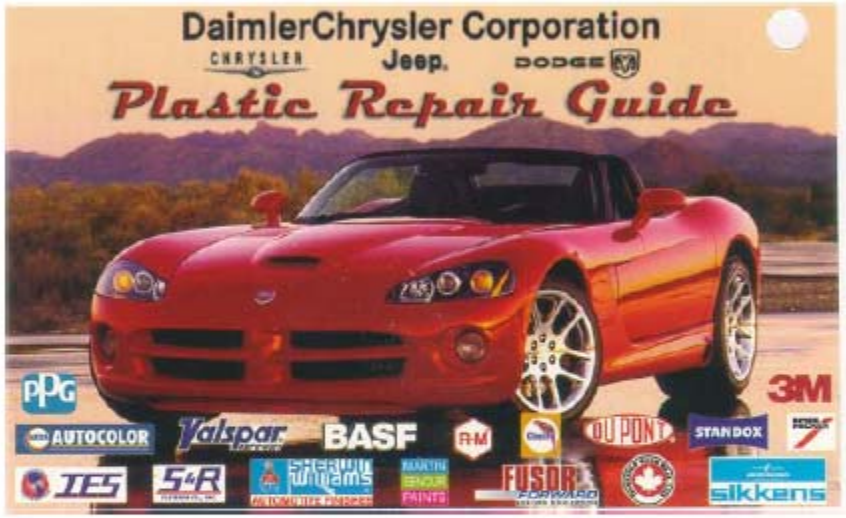

Publication Number
81-170-0012

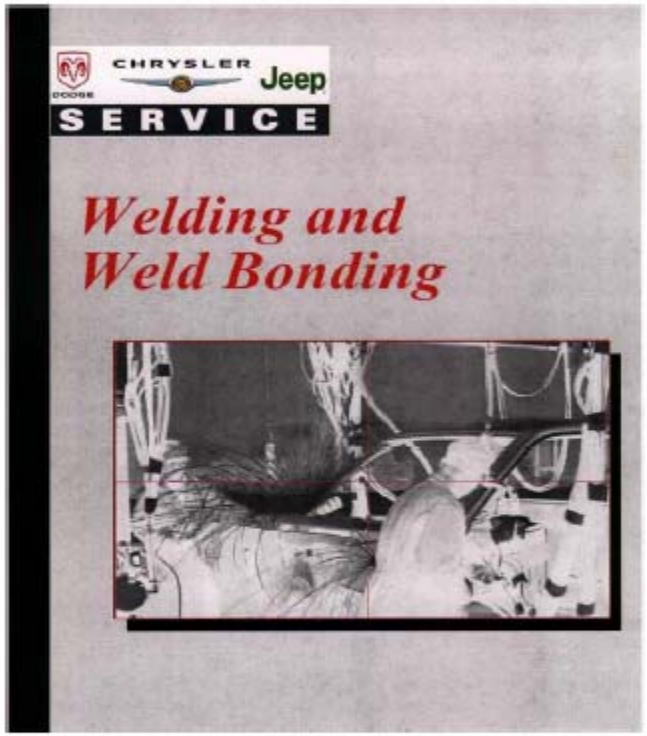

Publication Number
81-170-03005

Additional copies may be ordered by calling
1-800-890-4038

Back To Index