VIN PLATE DECODING INFORMATION

1	2	3	4	5	6	7	8	9	10	11	12 thru 17
Country	**Make**	**Vehicle Type**	**Other**	**Line**	**Series**	**Body Style**	**Engine**	**Check Digit**	**Model Year**	**Assy. Plant**	**Sequence No.**

The following table interprets the VIN Plate position shown above.

Position	Interpretation	Codes = Description
1	Country of Origin	2 = Manufactured By Chrysler Canada Inc.
2	Assembler	D = Dodge
3	Vehicle Type	3 = Passenger Car
4	GVWR & Pass. Safety	K = Restraint System Advanced Multistage Front Air Bags Sales Code (CG3)Without Side Air Bags Sales Code (CGS) L = Restraint System Advanced Multistage Front Air Bags Sales Code (CG3) With Side Air Bags Sales Code (CGS)
5	Vehicle Line	J = Challenger (RWD) (LHD) U.S., Canada, Mexico
6	Series	7 = Challenger SRT8 D-X-22 U.S.,Canada, Mexico
7	Body Style	4 = 2DR Pillared Hardtop Body Style - 22
8	Engine	V = 3.5L 6 CYL Gasoline Non Turbo (EGG) W = 6.1L 8 CYL Gasoline Non Turbo (ESF) T = 5.7L 8 CYL Gasoline Non Turbo (EZC,EZD)
9	Check Digit	0 = Check Digit
10	Model Year	9 = 2009 Model year
11	Assembly Plant	H = Brampton Assembly
12 thru 17	Vehicle Build Sequence	Model Year Assembly Sequence

Group - 1

Mopar Accessories - Component Parts

001-100 Audio and Electronics	001-300 Driver Convenience	001-400 Exterior Appearance	001-600 Fog Lights and Electrical
	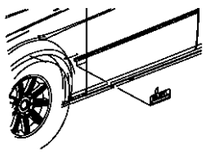		

Group - 1 Mopar Accessories - Component Parts

Illustration Title — Group-Fig. No.

Audio and Electronics
Install Kit - Satellite Receiver ..... Fig. 1 - 114

Driver Convenience
Hands Free Kit-Cellular Phone-Blue Tooth-Low Speed ..... Fig. 1 - 312
Sensor Kit - Park/Distance ..... Fig. 1 - 320

Exterior Appearance
Wheel Kit ..... Fig. 1 - 448

Fog Lights and Electrical
Heater Kit - Engine Block ..... Fig. 1 - 602

Install Kit - Satellite Receiver
Figure 1-114

ITEM	PART NUMBER	QTY	LINE	SERIES	BODY	ENGINE	TRANS	TRIM	DESCRIPTION
1	82210940AC	1			22				INSTALL KIT, Satelite Receiver
2	05064724AA	1			22				ANTENNA, Satellite
3	68023815AA	1			22				HARNESS, Wiring

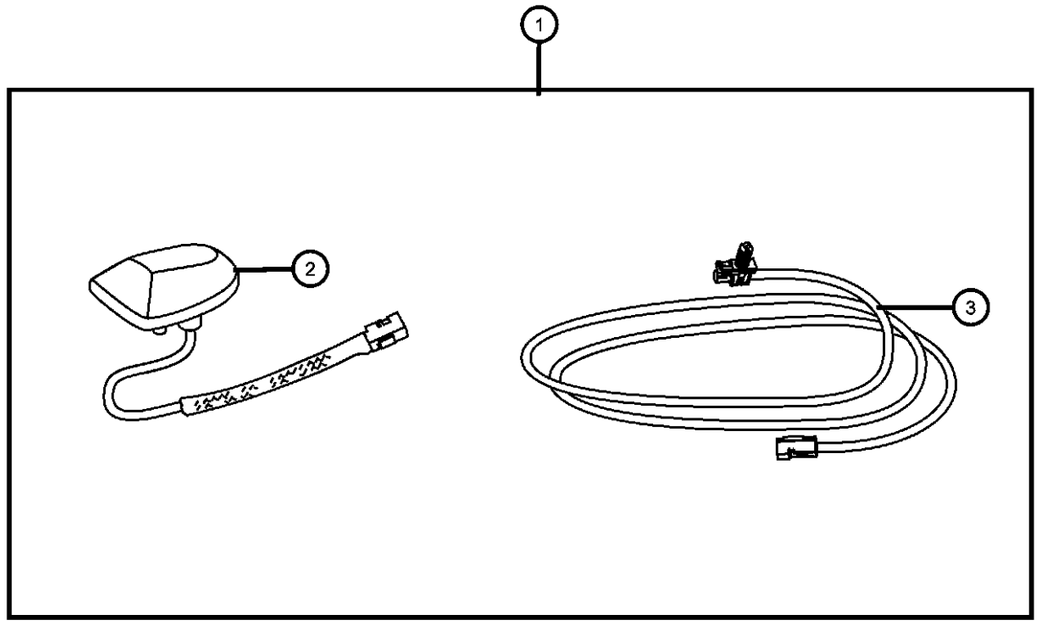

DODGE CHALLENGER (LC)

SERIES	LINE	BODY	ENGINE	TRANSMISSION
H = HIGHLINE P = PREMIUM X = SPECIAL	D = DODGE	22 = 2-DR SEDAN TYPE #2	EGG = 3.5L High Output V6 24V MPI Engine ESF = 6.1L SRT HEMI V8 Engine EZC = 5.7L HEMI VCT Engine EZD = 5.7L Hemi VCT MDS Engine	DEC = 6-Speed Manual TREMEC Transmission DGJ = 5-Speed Auto W5A580 Transmission DGV = 4-Spd. Automatic VLP 42RLE Trans

Hands Free Kit-Cellular Phone-Blue Tooth-Low Speed
Figure 1-312

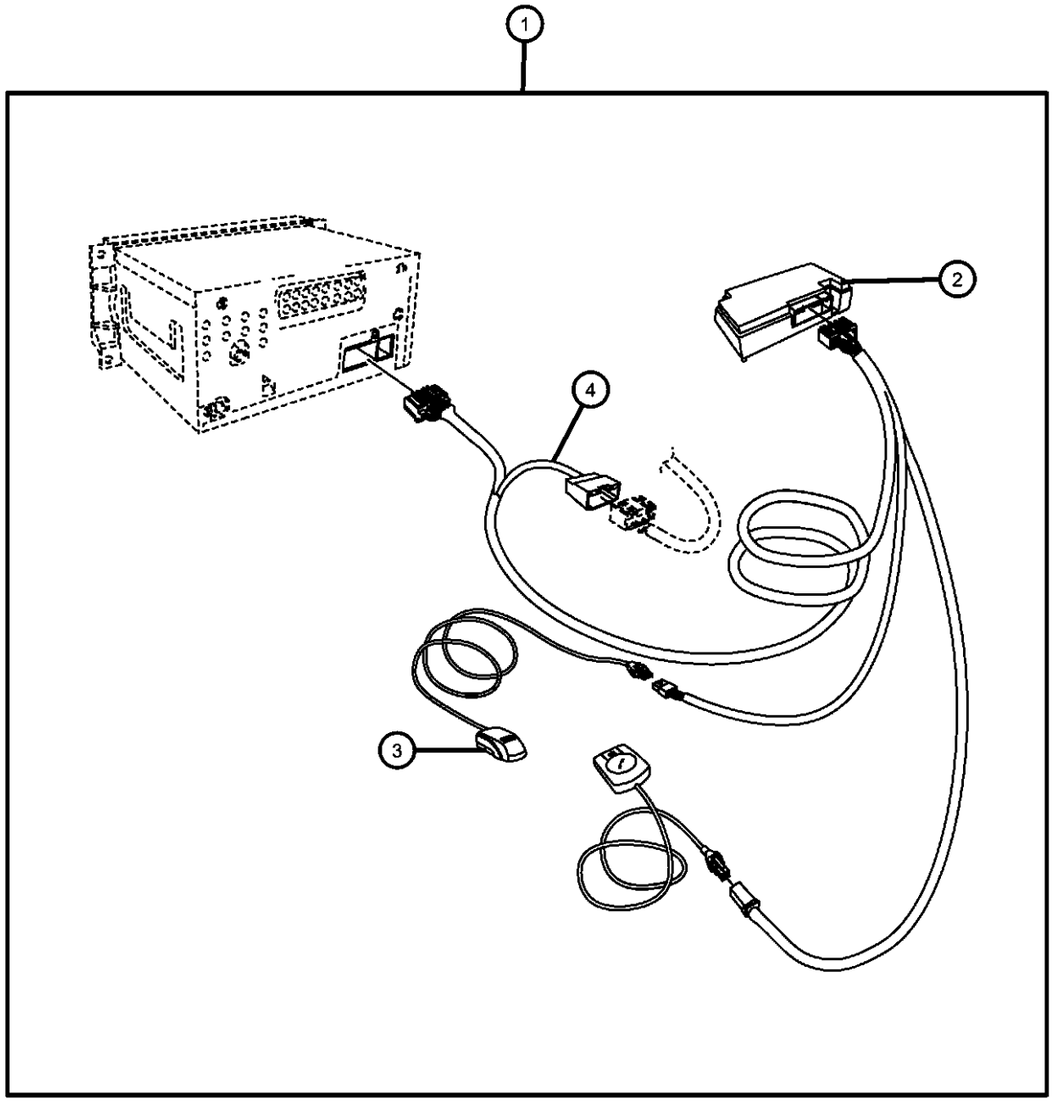

ITEM	PART NUMBER	QTY	LINE	SERIES	BODY	ENGINE	TRANS	TRIM	DESCRIPTION
1	82211005AB	1							HANDS FREE KIT, Cellular Phone
2	05064448AD	1							MODULE, Telematics
3	68002646AA	1							MICROPHONE, Audio
4	68002648AA	1							HARNESS

DODGE CHALLENGER (LC)

SERIES	LINE	BODY	ENGINE	TRANSMISSION
H = HIGHLINE P = PREMIUM X = SPECIAL	D = DODGE	22 = 2-DR SEDAN TYPE #2	EGG = 3.5L High Output V6 24V MPI Engine ESF = 6.1L SRT HEMI V8 Engine EZC = 5.7L HEMI VCT Engine EZD = 5.7L Hemi VCT MDS Engine	DEC = 6-Speed Manual TREMEC Transmission DGJ = 5-Speed Auto W5A580 Transmission DGV = 4-Spd. Automatic VLP 42RLE Trans

Sensor Kit - Park/Distance
Figure 1-320

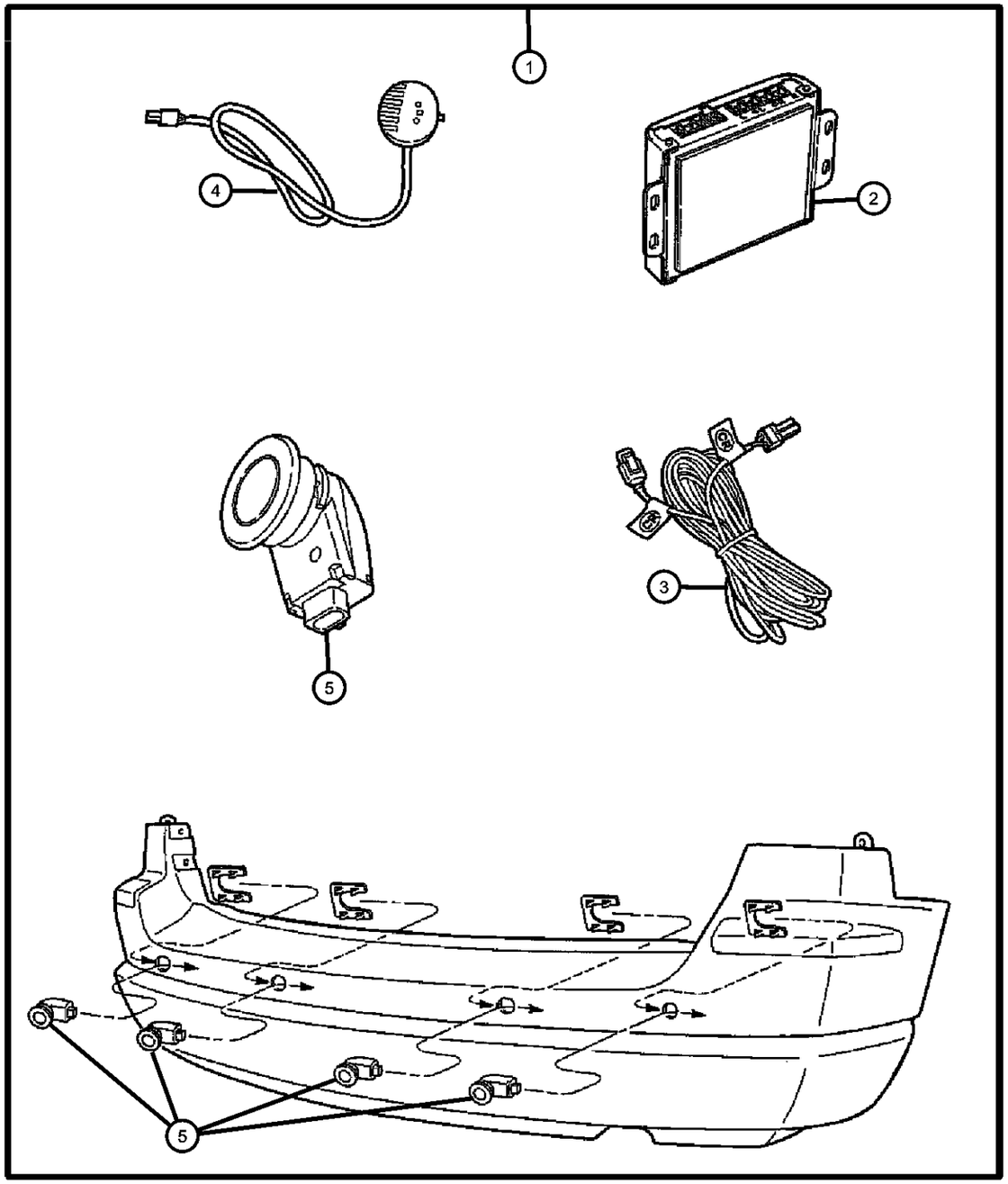

ITEM	PART NUMBER	QTY	LINE	SERIES	BODY	ENGINE	TRANS	TRIM	DESCRIPTION
1	82208246AE	1			22				SENSOR KIT, Park Distance
2	05137541AA	1			22				MODULE, Parking Assist
3	05137540AA	1			22				WIRING, Distance Sensor
4	05137539AA	1			22				DISPLAY, Parking Assist
5	05137536AA	1			22				SENSOR

DODGE CHALLENGER (LC)

SERIES	LINE	BODY	ENGINE	TRANSMISSION
H = HIGHLINE P = PREMIUM X = SPECIAL	D = DODGE	22 = 2-DR SEDAN TYPE #2	EGG = 3.5L High Output V6 24V MPI Engine ESF = 6.1L SRT HEMI V8 Engine EZC = 5.7L HEMI VCT Engine EZD = 5.7L Hemi VCT MDS Engine	DEC = 6-Speed Manual TREMEC Transmission DGJ = 5-Speed Auto W5A580 Transmission DGV = 4-Spd. Automatic VLP 42RLE Trans

AR = use ase required - = Non illustrrated part

Wheel Kit
Figure 1-448

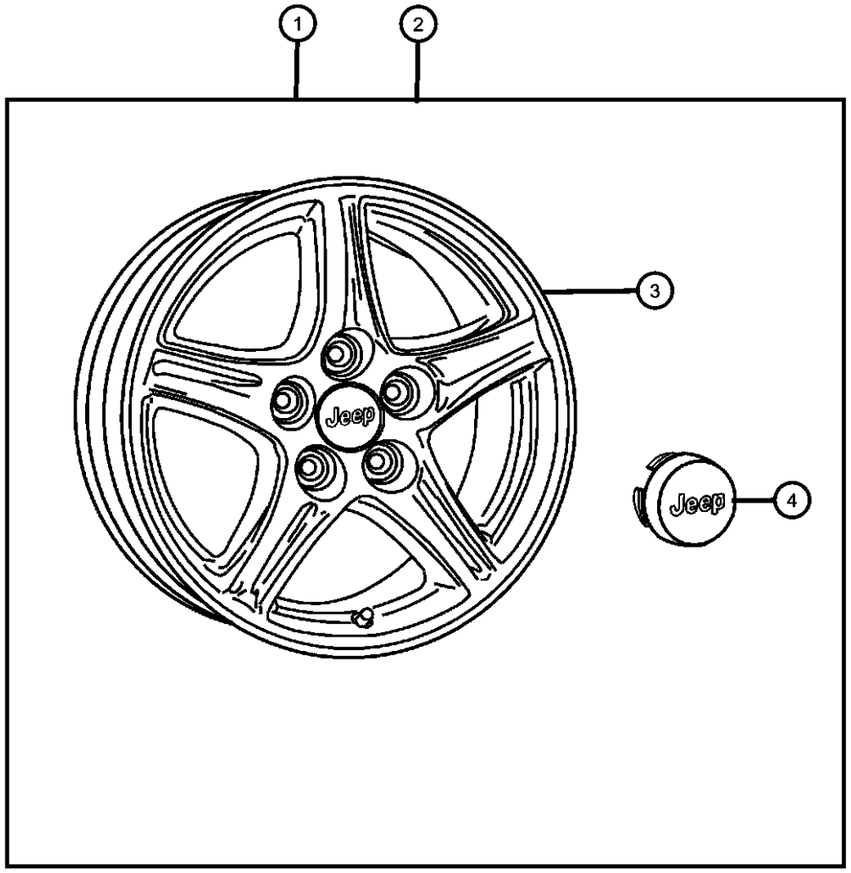

ITEM	PART NUMBER	QTY	LINE	SERIES	BODY	ENGINE	TRANS	TRIM	DESCRIPTION
Note;Item #1,Contains 1-Wheel and 1-Center Cap This is a generic illustration									
1	82209999AB	1	D		22				WHEEL KIT, Cast Aluminum, 18x7.5x24 Black & Bright
2	82211323	1	D		22				WHEEL KIT, Forged Aluminum, 20x8x24 Chrome-5 Spoke
3		1							WHEEL, (NOT SERVICED)
4									CAP, Wheel Center
	04895900AA	1	D		22				18x7.5x24 Black & Bright
	52110398AA	4	D		22				20x8x24 Chrome-5 Spoke

DODGE CHALLENGER (LC)

SERIES	LINE	BODY	ENGINE	TRANSMISSION
H = HIGHLINE	D = DODGE	22 = 2-DR SEDAN TYPE #2	EGG = 3.5L High Output V6 24V MPI Engine	DEC = 6-Speed Manual TREMEC Transmission
P = PREMIUM			ESF = 6.1L SRT HEMI V8 Engine	DGJ = 5-Speed Auto W5A580 Transmission
X = SPECIAL			EZC = 5.7L HEMI VCT Engine	DGV = 4-Spd. Automatic VLP 42RLE Trans
			EZD = 5.7L Hemi VCT MDS Engine	

Heater Kit - Engine Block
Figure 1-602

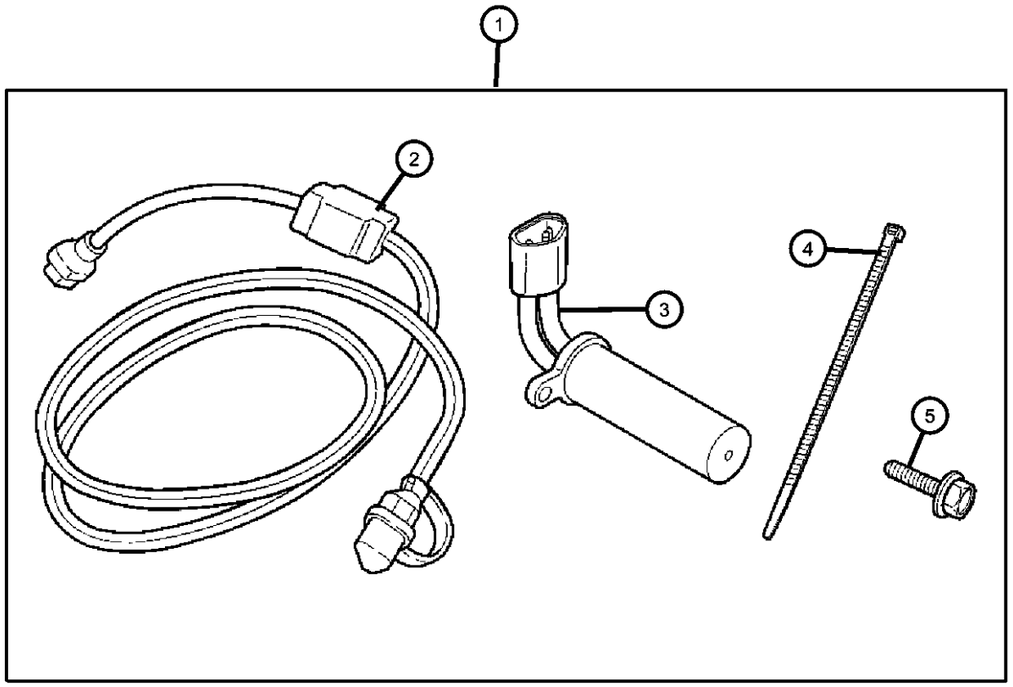

ITEM	PART NUMBER	QTY	LINE	SERIES	BODY	ENGINE	TRANS	TRIM	DESCRIPTION
1	82208937	1							HEATER PACKAGE, Engine Block
2	04608805AC	1							CORD, Engine Block Heater
3	56044359AA	1							HEATER, Engine Block
4	06015756	1							STRAP, Tie
5	06102001	1							BOLT AND WASHER, M6x12

DODGE CHALLENGER (LC)

SERIES	LINE	BODY	ENGINE	TRANSMISSION
H = HIGHLINE P = PREMIUM X = SPECIAL	D = DODGE	22 = 2-DR SEDAN TYPE #2	EGG = 3.5L High Output V6 24V MPI Engine ESF = 6.1L SRT HEMI V8 Engine EZC = 5.7L HEMI VCT Engine EZD = 5.7L Hemi VCT MDS Engine	DEC = 6-Speed Manual TREMEC Transmission DGJ = 5-Speed Auto W5A580 Transmission DGV = 4-Spd. Automatic VLP 42RLE Trans

Group - 2

Front Suspension

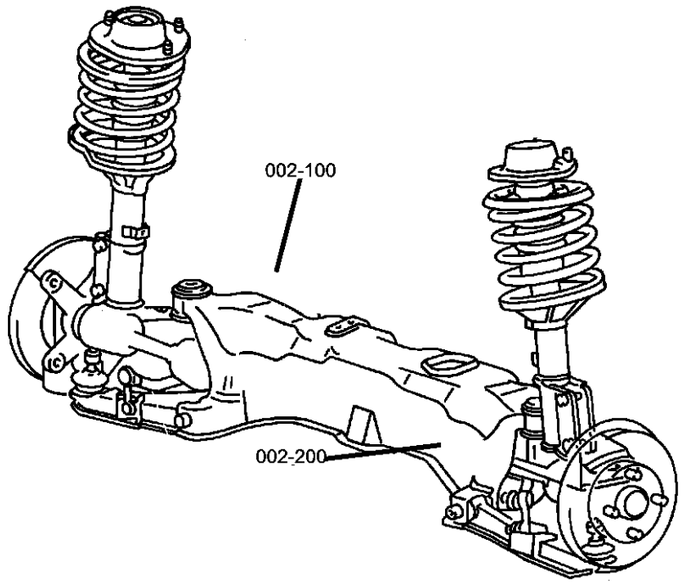

002-100 Front Suspension, Strut and Cradle 	**002-200** Front Stabilizer Bar 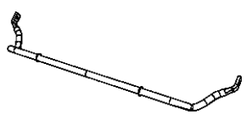		

Group - 2 Front Suspension

Illustration Title — Group-Fig. No.

Front Suspension, Strut and Cradle
Suspension, Front [RWD] ..... Fig. 2 - 110

Front Stabilizer Bar
Stabilizer Bar, Front ..... Fig. 2 - 205

Suspension, Front [RWD]
Figure 2-110

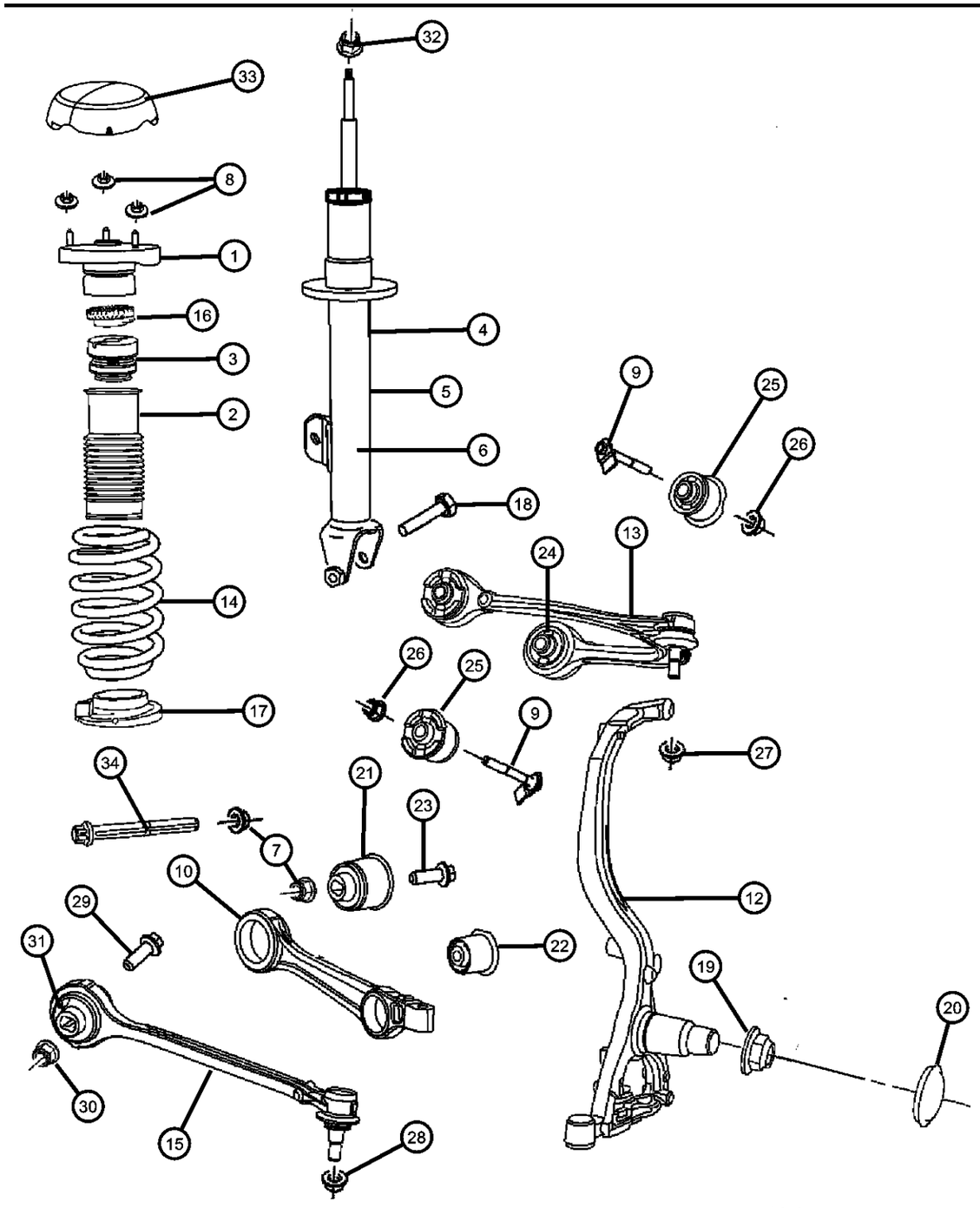

ITEM	PART NUMBER	QTY	LINE	SERIES	BODY	ENGINE	TRANS	TRIM	DESCRIPTION
NOTE:Sales codes: [BR3]=ANTI-LOCK 4-WHEEL DISC BRAKES [BR4]=ANTI-LOCK 4-WHEEL DISC PERF BRAKES [BR5]=ANTI-LOCK 4-WHEEL DISC PERF BRAKES [BR8]=4-WHEEL DISC HEAVY DUTY BRAKES [BRD]=4-WHEEL DISC BRAKES [SDC]=SUSPENSION - TOURING [SDG]=SUSPENSIO [BRD] = [BR3]									
1	04895412AC	1	D		22				MOUNT, Strut, Upper
2	04782629AA	1	D		22				SHIELD, Shock Absorber Dust
3									BUMPER, Jounce
	04895444AB	1	D		22				[SDC]
	04895443AB	1	D		22				[SDD]
4									SHOCK ABSORBER KIT, Suspension
	05181349AB	1	D		22				[ZVF], Right
	05181350AB	1	D		22				[ZGF], Left
5									SHOCK ABSORBER KIT, Suspension, [SDC]
	05180742AA	1	D		22				With [SDC], Right
	05180743AA	1	D		22				With [SDC], Left
6									SHOCK ABSORBER, Suspension, With [SDD]
	05180772AB	1	D		22				With [SDD] [ZNH]
	05180773AB	1	D		22				With [SDD] [ZAH]
7	06502502	2	D		22	ES0			NUT, Hex Flange Lock, M14x2
8	06506152AA	6	D		22				NUT AND WASHER, Hex Nut-Coned Washer, M8 x 1.25
9	06507711AA	4	D		22				BOLT
10									ARM, Control, Lower
	04782561AE	2	D		22	ES0			With [SDX]
	68002123AB	2	D		22	EG0			With [SDC]
-11									BOLT, Hex Head, M14x2.00x120.00, Lower Control Arm to Craddle
	06507089AA	2	D		22	ES0			
		2	D		22	EG0			
		2	D		22	EZ0			

DODGE CHALLENGER (LC)

SERIES	LINE	BODY	ENGINE	TRANSMISSION
H = HIGHLINE P = PREMIUM X = SPECIAL	D = DODGE	22 = 2-DR SEDAN TYPE #2	EGG = 3.5L High Output V6 24V MPI Engine ESF = 6.1L SRT HEMI V8 Engine EZC = 5.7L HEMI VCT Engine EZD = 5.7L Hemi VCT MDS Engine	DEC = 6-Speed Manual TREMEC Transmission DGJ = 5-Speed Auto W5A580 Transmission DGV = 4-Spd. Automatic VLP 42RLE Trans

Suspension, Front [RWD]
Figure 2-110

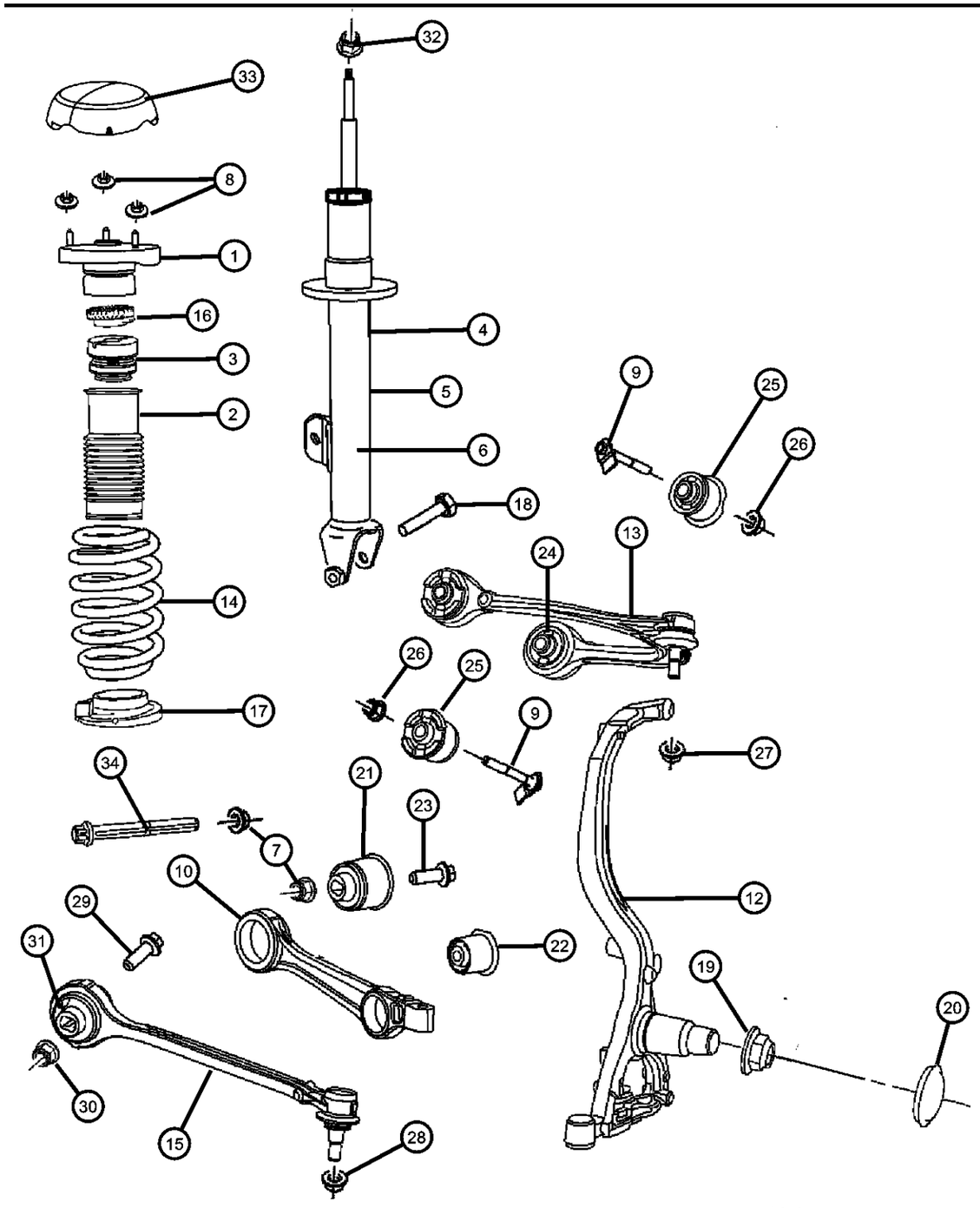

ITEM	PART NUMBER	QTY	LINE	SERIES	BODY	ENGINE	TRANS	TRIM	DESCRIPTION
		2	D		22	EZ0	DGJ		
		2	D		22	EZ0	DEC		
12									KNUCKLE, Front
	04782741AC	1	D		22				With [BR3] Sales Code, Left
		1	D		22				With [BR6] Sales Code, Left
	05039030AB	1	D		22				With [BR4] Sales Code, Right
	04782740AC	1	D		22				With [BR3] Sales Code, Right
		1	D		22				With [BR6] Sales Code, Right
		1	D		22				With [BR5] Sales Code, Right
		1	D		22				With [BRD] Sales Code, Right
		1	D		22				With [BRD] Sales Code, Left
		1	D		22				With [BR5] Sales Code, Left
	05039027AB	1	D		22				With [BR4] Sales Code, Left
13									ARM, Control, Upper
	04782665AC	1	D		22				Left
	04782666AC	1	D		22				Right
14									SPRING, Front Coil
	05181354AB	1	D		22				With [SDX] [ZGF]
		1	D		22				With [SDX] [ZVF]
	05180703AB	1	D		22				With [SDC] [ZAC]
		1	D		22				With [SDC] [ZNC]
	05180706AB	1	D		22				With [SDD] [ZAH]
		1	D		22				With [SDD] [ZNH]
15									STRUT, Tension
	05290829AA	1	D		22	EZ0	DGJ		[SDD], Left
		1	D		22	EZ0	DEC		[SDD], Left
	05180606AA	1	D		22	EG0			Right
	05180607AA	1	D		22	EZ0	DGJ, DGV		[SDD], Left
		1	D		22	EZ0			[SDC], Left
	05290828AA	1	D		22	ES0			[SDX], Right
		1	D		22	EZ0	DGJ		[SDD], Right
		1	D		22	EZ0	DEC		[SDD], Right
		1	D		22	ES0			[SDX], Left

DODGE CHALLENGER (LC)

SERIES	LINE	BODY	ENGINE	TRANSMISSION
H = HIGHLINE P = PREMIUM X = SPECIAL	D = DODGE	22 = 2-DR SEDAN TYPE #2	EGG = 3.5L High Output V6 24V MPI Engine ESF = 6.1L SRT HEMI V8 Engine EZC = 5.7L HEMI VCT Engine EZD = 5.7L Hemi VCT MDS Engine	DEC = 6-Speed Manual TREMEC Transmission DGJ = 5-Speed Auto W5A580 Transmission DGV = 4-Spd. Automatic VLP 42RLE Trans

Suspension, Front [RWD]
Figure 2-110

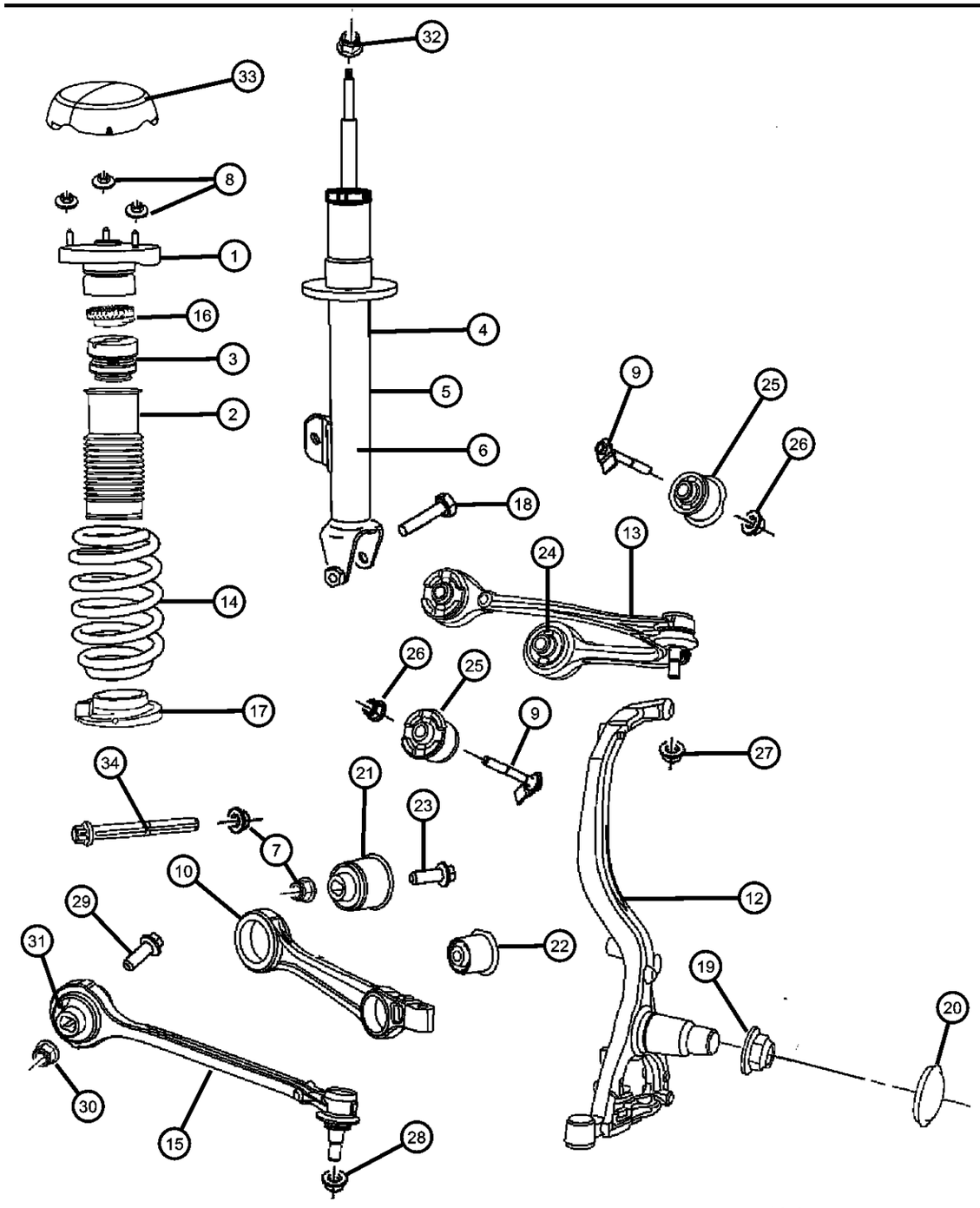

ITEM	PART NUMBER	QTY	LINE	SERIES	BODY	ENGINE	TRANS	TRIM	DESCRIPTION
		1	D		22	EG0			[SDC], Right
		1	D		22	EG0			[SDC], Left
		1	D		22	EZ0	DGJ, DGV		[SDD], Right
		1	D		22	EZ0			[SDC], Right
16	04895452AA	1	D		22				ISOLATOR, Front Suspension Spring
17	04895422AA	1	D		22				ISOLATOR, Front Suspension Spring
18	06507654AA	2	D		22				BOLT, Hex Flange Head, M14x2.00x90.00
19	06504007	1	D		22				NUT, Axle Hub
20	04779253AA	1	D		22				CAP, Wheel Bearing
21		1							BUSHING, Pivot, Serviced in item # 8, (NOT SERVICED)
22		1							BUSHING, Pivot, Serviced in item # 8, (NOT SERVICED)
23									SCREW, Cap
	06102382AA	1	D		22	EG0	DGV		
		1	D		22	EZ0	DGJ		
24									SPACER
	04895415AB	4	D		22	ES0			
		4	D		22	EG0			
		4	D		22	EZ0			
25		4							BUSHING, Pivot, Serviced in item # 10, (NOT SERVICED)
26	06502502	2	D		22	ES0			NUT, Hex Flange Lock, M14x2
27	06507207AA	2	D		22				NUT, Hex Flange Lock, M12x1.75
28	06507838AA	2	D		22				NUT
29	06508238AA	2	D		22	ES0			SCREW, Hex Flange Head
30	06502502	2	D		22	ES0			NUT, Hex Flange Lock, M14x2
31	04895415AB	4	D		22	ES0			SPACER
32	06507207AA	1	D		22				NUT, Hex Flange Lock, M12x1.75
33	04782982AB	2	D		22				CAP, Shock Tower
34	05134117AA	2	D		22	EG0			BOLT, Camber Adjust

DODGE CHALLENGER (LC)

SERIES	LINE	BODY	ENGINE	TRANSMISSION
H = HIGHLINE P = PREMIUM X = SPECIAL	D = DODGE	22 = 2-DR SEDAN TYPE #2	EGG = 3.5L High Output V6 24V MPI Engine ESF = 6.1L SRT HEMI V8 Engine EZC = 5.7L HEMI VCT Engine EZD = 5.7L Hemi VCT MDS Engine	DEC = 6-Speed Manual TREMEC Transmission DGJ = 5-Speed Auto W5A580 Transmission DGV = 4-Spd. Automatic VLP 42RLE Trans

AR = use ase required - = Non illustrrated part

Stabilizer Bar, Front
Figure 2-205

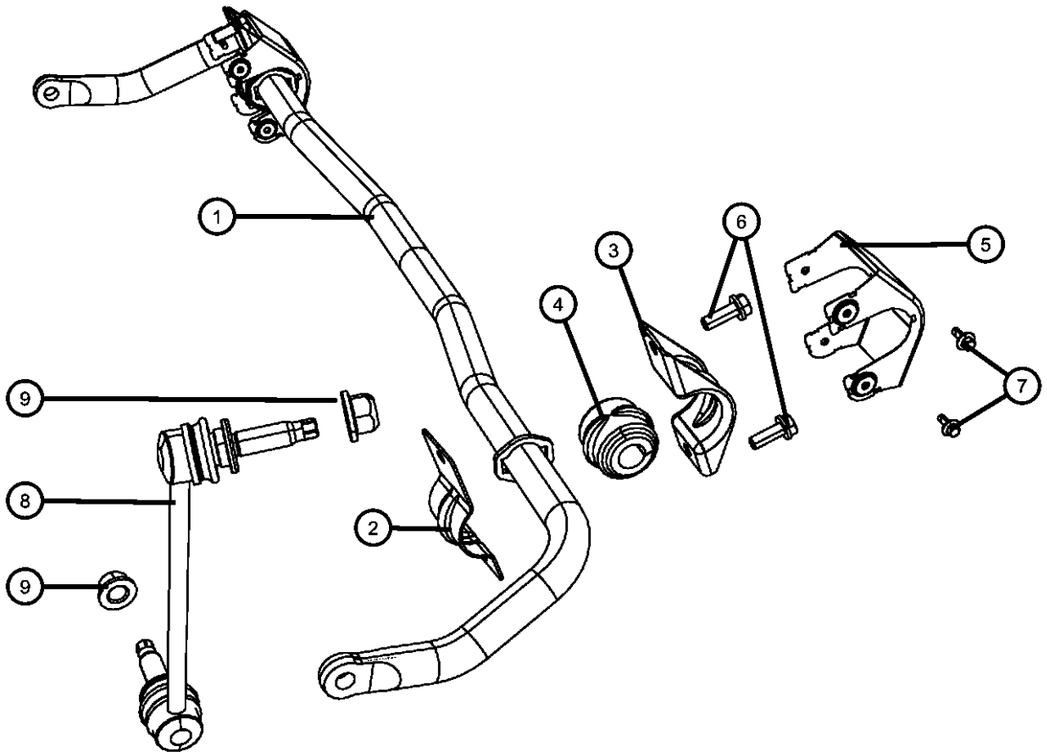

ITEM	PART NUMBER	QTY	LINE	SERIES	BODY	ENGINE	TRANS	TRIM	DESCRIPTION
Note: Sales Codes [EEO]=ALL 2.7L V6 GAS [EGO]=ALL 3.5L V6 GAS [EZO]=ALL 5.7L 8CYL GAS [ES0]=All 6.1L 8CYL GAS [SDC]=TOURING [SDD]= PERFORMANCE [SDG]=4-WHL INDEPENDENT SUSPENSION									
1									BAR, Front Sway
	04782543AB	1	D		22	EG0			[SDC]
	04782544AB	1	D		22	ES0			
2	04782722AA	2	D		22	EG0			CLAMP, Stabilizer Bar
3	04782718AA	2	D		22	ES0			CLAMP, Stabilizer Bar
4									CUSHION, Sway Eliminator
	04782683AB	2	D		22	EG0			[SDC]
	04782684AB	2	D		22	ES0			
5	04782817AA	2	D		22	ES0			SHIELD, Heat
6	06101848	4	D		22	EG0			BOLT AND WASHER, Hex Head, M10x1.50x30.00
7	06507593AA	4	D		22	ES0			BOLT
8									LINK, Sway Eliminator
	04895482AB	1	D		22				Right
	04895483AB	1	D		22				Left
9	06502502	2	D		22	ES0	DEC		NUT, Hex Flange Lock, M14x2

DODGE CHALLENGER (LC)

SERIES	LINE	BODY	ENGINE	TRANSMISSION
H = HIGHLINE P = PREMIUM X = SPECIAL	D = DODGE	22 = 2-DR SEDAN TYPE #2	EGG = 3.5L High Output V6 24V MPI Engine ESF = 6.1L SRT HEMI V8 Engine EZC = 5.7L HEMI VCT Engine EZD = 5.7L Hemi VCT MDS Engine	DEC = 6-Speed Manual TREMEC Transmission DGJ = 5-Speed Auto W5A580 Transmission DGV = 4-Spd. Automatic VLP 42RLE Trans

Group - 0035ZV

Rear Wheel Drive; Differential and Drive Line

0035ZV-600 Drive Shaft	0035ZV-700 Rear Axle Assembly	0035ZV-800 Rear Axle; Housing, Differential and Vent	0035ZV-900 Rear Axle Shafts

Group - 0035ZV Rear Wheel Drive; Differential and Drive Line

Illustration Title — Group-Fig. No.

Drive Shaft
Shaft, Drive, Rear ..... Fig. 0035ZV - 601

Rear Axle Assembly
Axle Assembly, Rear ..... Fig. 0035ZV - 710

Rear Axle; Housing, Differential and Vent
Housing and Differential with Internal -[RWD] ..... Fig. 0035ZV - 805

Rear Axle Shafts
Shafts,Rear Axle, RWD ..... Fig. 0035ZV - 910

Shaft, Drive, Rear
Figure 0035ZV-601

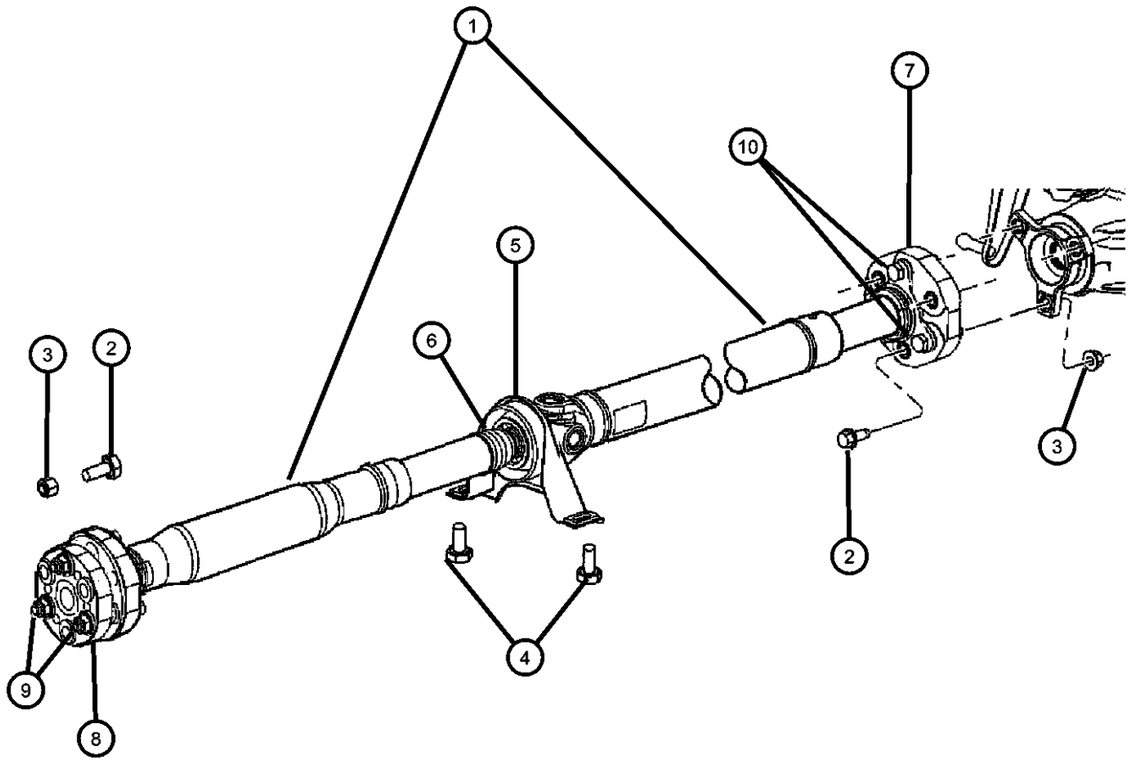

ITEM	PART NUMBER	QTY	LINE	SERIES	BODY	ENGINE	TRANS	TRIM	DESCRIPTION
Note: Sales Codes [EEO]= ALL 2.5L OR 2.7L V6 GAS [EGO]=ALL 3.3L,3.5L, & 3.8L 6CY [ESF]=6.1L SRT HEMI SMPI V8 [EXL]=3.0L V6 TURBO DIESEL ENGINE [EZO]=ALL 5.7L 8CYL GAS ENGINES									
1									SHAFT, Drive, Rear
	04593855AA	1	D		22				[EZD][DGJ]
	04593856AB	1	D		22				[DEC]
	05038277AB	1	D		22				[ESF][DGJ]
	04593857AB	1	D		22				[DGJ]
	04593869AA	1	D		22				[EGG][DGV]
	04593869AB	1	D		22				[DGV]
2	06509331AA	3	D		22				SCREW AND WASHER
3	06509330AA	3	D		22				NUT, Locking
4	06504179	2	D		22				BOLT AND CONED WASHER, Hex Head, M8X1.25X40.00
5	68043376AA	1	D		22				BEARING, Drive Shaft
6	05127288AA	1	D		22				BOOT, Driveshaft
7	05142478AA	1	D		22				COUPLING PKG, Driveshaft
8									COUPLING PKG, Driveshaft
	05166337AA	1	D		22				[EGG][DGV]
	05166338AA	1	D		22				[EZD][DGJ]
	68052353AA	1	D		22				[DEC]
	68052748AA	1	D		22				[ESF][DGJ]
9									BOLT KIT, Front Shaft
	05140314AA	1	D		22				FRONT SHAFT 70MM BOLT KIT
	05142479AA	1	D		22				
	05139904AA	1	D		22				65MM BOLT KIT
10	05142479AA	1	D		22				BOLT KIT, Rear ShaftFront

DODGE CHALLENGER (LC)

SERIES	LINE	BODY	ENGINE	TRANSMISSION
H = HIGHLINE P = PREMIUM X = SPECIAL	D = DODGE	22 = 2-DR SEDAN TYPE #2	EGG = 3.5L High Output V6 24V MPI Engine ESF = 6.1L SRT HEMI V8 Engine EZC = 5.7L HEMI VCT Engine EZD = 5.7L Hemi VCT MDS Engine	DEC = 6-Speed Manual TREMEC Transmission DGJ = 5-Speed Auto W5A580 Transmission DGV = 4-Spd. Automatic VLP 42RLE Trans

Axle Assembly, Rear
Figure 0035ZV-710

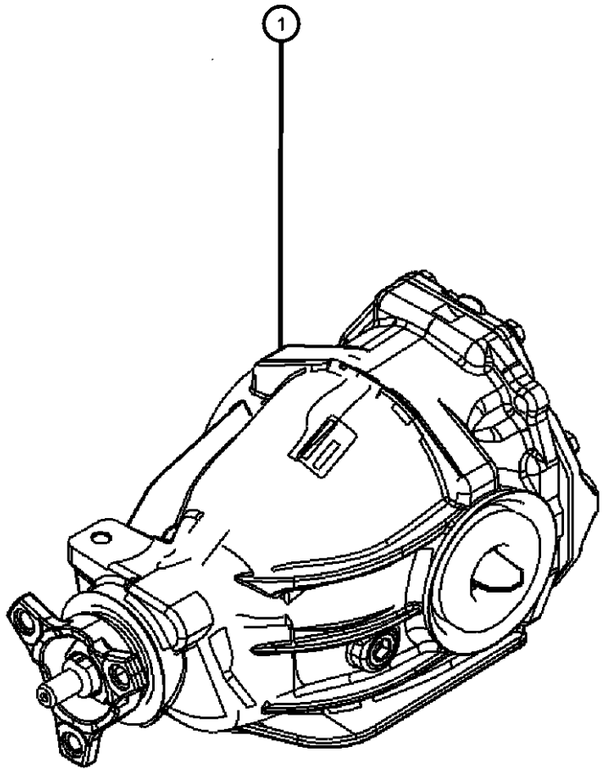

ITEM	PART NUMBER	QTY	LINE	SERIES	BODY	ENGINE	TRANS	TRIM	DESCRIPTION
Note: *No Serviceable Parts For SRT8 Axles* Sales Codes [BRD]= 4-WHEEL DISC [BR3]=ANTI-LOCK 4-WHEEL DISC [BR5]=ANTI-LOCK 4-WHEEL DISC, PERFORMANCE [BR8]=4-WHEEL DISC HEAVY DUTY BRAKES [EEO]= ALL 2.5L OR 2.7L V6 GAS [EGO]= ALL 3.3L,3.5L, & 3.8L									
1									DIFFERENTIAL, Rear Axle, See Note
	04593853AA	1	D		22				[EZ0][DGJ]
	04593854AC	1	D		22				[BR5]
	05038237AB	1	D		22				[ES0,EZ0][BR4,BR5]
	05038293AB	1	D		22				[ES0][DGJ]
	52111503AH	1	D		22				[EG0][DGV]
2	05010320AA	AR	D		22				LUBE, Axle, Requires Limited-Slip additive, [32oz] Minimum Ship Quantity 12
3	04318060AB	AR							ADDITIVE, Axle, [4oz] Minimum Ship Quantity 24
4	04874469	AR	D		22				LUBRICANT, Gear, [EGG] Only, [32oz] Minimum Ship Quantity 12
	04874469								Mopar SAE 75W-140 Synthetic Gear and Axle Lube Quart
	68003055AA								Mopar SAE 75W-140 Synthetic Gear and Axle Lube 16 Gallon Keg

DODGE CHALLENGER (LC)

SERIES	LINE	BODY	ENGINE	TRANSMISSION
H = HIGHLINE P = PREMIUM X = SPECIAL	D = DODGE	22 = 2-DR SEDAN TYPE #2	EGG = 3.5L High Output V6 24V MPI Engine ESF = 6.1L SRT HEMI V8 Engine EZC = 5.7L HEMI VCT Engine EZD = 5.7L Hemi VCT MDS Engine	DEC = 6-Speed Manual TREMEC Transmission DGJ = 5-Speed Auto W5A580 Transmission DGV = 4-Spd. Automatic VLP 42RLE Trans

AR = use ase required - = Non illustrrated part

Housing and Differential with Internal -[RWD]
Figure 0035ZV-805

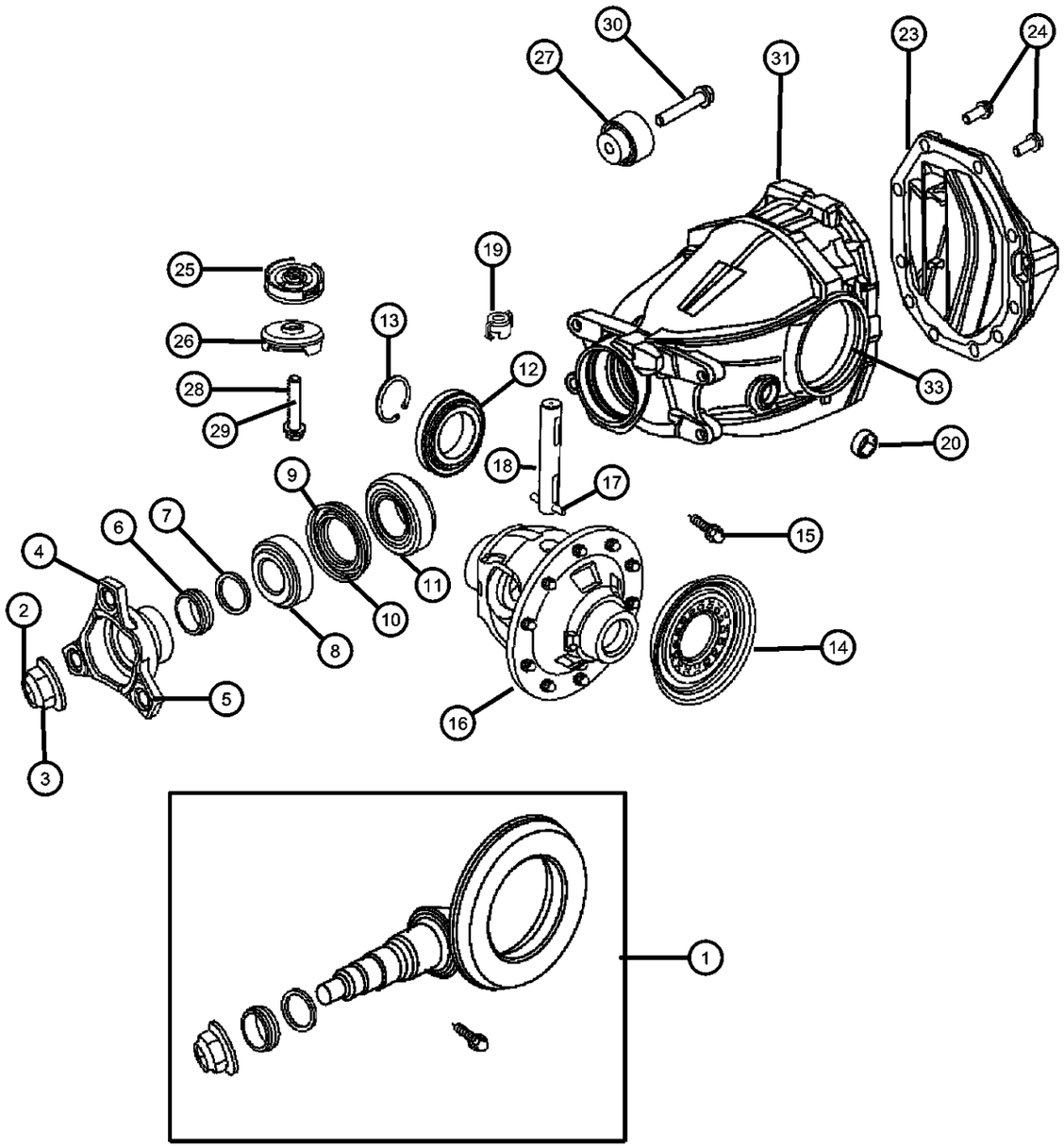

ITEM	PART NUMBER	QTY	LINE	SERIES	BODY	ENGINE	TRANS	TRIM	DESCRIPTION
1	05139144AC	1	D		22				GEAR KIT, Ring And Pinion
2	68049801AA	1	D		22				NUT, Pinion
3	05174162AA	1	D		22				NUT
4	52111451AC	1	D		22				FLANGE, Axle Output, [EGO], [SDC]
5	68049800AA	1	D		22				FLANGE, Output, [EZO], [SDD]
6	52111442AA	1	D		22				SPACER, Drive Pinion Bearing
7	52111443AB	2	D		22				WASHER, Thrust
8	52111439AA	1	D		22				BEARING, Drive Pinion
9	52114832AA	1	D		22				SEAL, [EG0]
10	68049798AA	1	D		22				SEAL, Drive Pinion
11	52111444AA	1	D		22				BEARING, Drive Pinion
12	52111478AB	2	D		22				BEARING, Differential
13									RETAINING RING/SHIM, Differential Bearing
	52111661AB	AR	D		22				3.60mm
	52111666AB	AR	D		22				3.70mm
	52111674AB	AR	D		22				3.85mm
	52111676AB	AR	D		22				3.90mm
14									SEAL, Axle Drive Shaft
	52111482AB	2	D		22				
	68014931AA	2	D		22				[EZO]
15	05114257AA	10	D		22				BOLT, Ring Gear to Differential, Mounting
16	52114060AC	1	D		22				CASE, Differential
17		1							PIN, M6x45.00, (NOT SERVICED)
18	52111469AA	1	D		22				SHAFT, Pinion Gear
19									VENT, Axle
	05175968AA	1	D		22				[EZO], [SDD]
	52111492AA	1	D		22				[EGO], [SDC]
20									PLUG, Oil Drain
	05097712AB	1	D		22				
	68049803AA	1	D		22				[SDD], [BR6]
-21	68049804AA	1	D		22				PLUG, Fill
-22									SHIM, Drive Pinion Bearing

DODGE CHALLENGER (LC)

SERIES	LINE	BODY	ENGINE	TRANSMISSION
H = HIGHLINE	D = DODGE	22 = 2-DR SEDAN TYPE #2	EGG = 3.5L High Output V6 24V MPI Engine	DEC = 6-Speed Manual TREMEC Transmission
P = PREMIUM			ESF = 6.1L SRT HEMI V8 Engine	DGJ = 5-Speed Auto W5A580 Transmission
X = SPECIAL			EZC = 5.7L HEMI VCT Engine	DGV = 4-Spd. Automatic VLP 42RLE Trans
			EZD = 5.7L Hemi VCT MDS Engine	

AR = use ase required - = Non illustrrated part

Housing and Differential with Internal -[RWD]
Figure 0035ZV-805

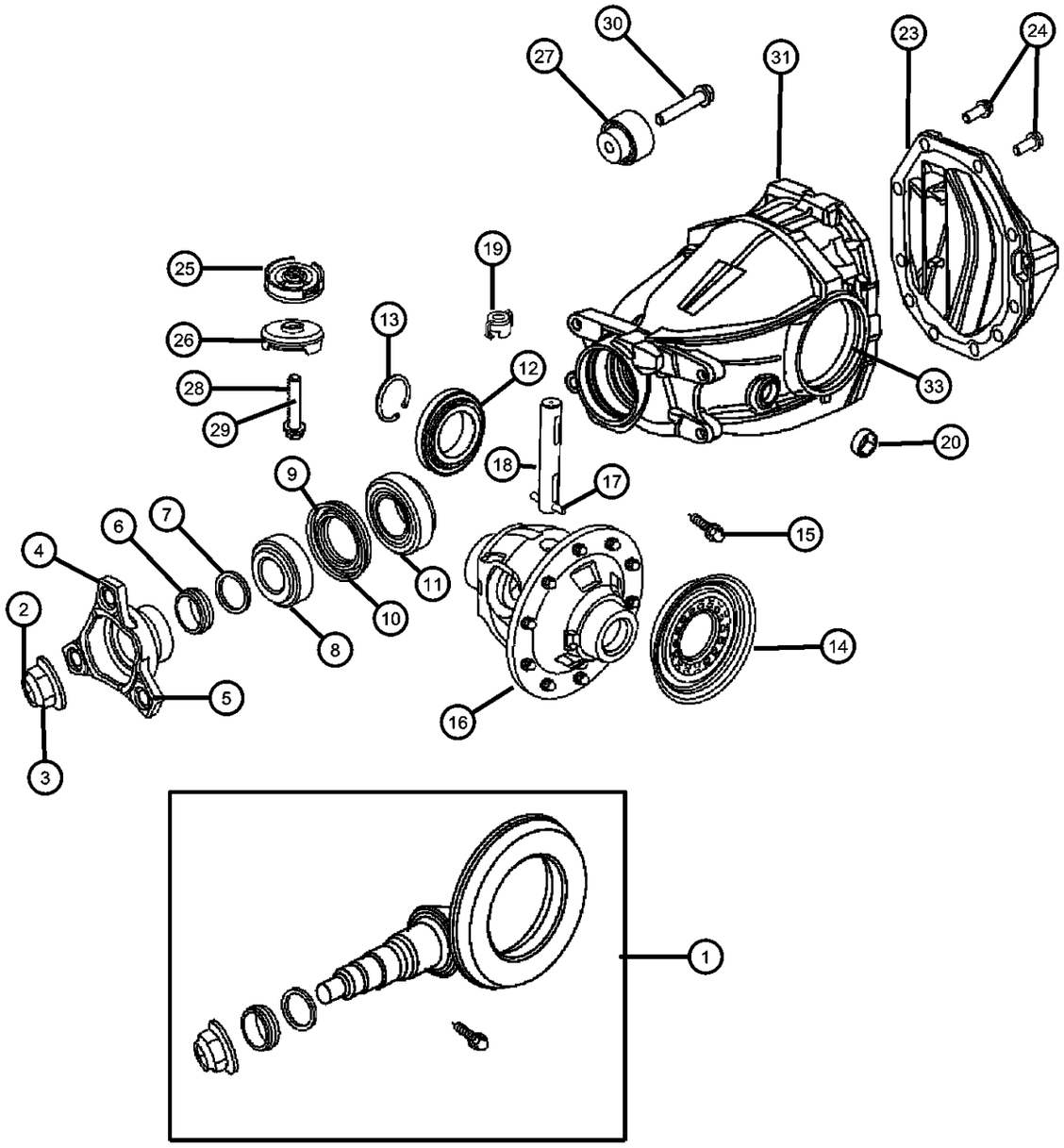

ITEM	PART NUMBER	QTY	LINE	SERIES	BODY	ENGINE	TRANS	TRIM	DESCRIPTION
	05139435AA	AR	D		22				1.85mm
	05139436AA	AR	D		22				1.90mm
	05139433AA	AR	D		22				1.75mm
	05139434AA	AR	D		22				1.80mm
	05139445AA	AR	D		22				2.15mm
	05139446AA	AR	D		22				2.20mm
	05139441AA	AR	D		22				2.05mm
	05139444AA	AR	D		22				2.10mm
	05139451AA	AR	D		22				2.40mm
	05139450AA	AR	D		22				2.35mm
	05139421AA	AR	D		22				1.65mm
	05139429AA	AR	D		22				1.70mm
	05139437AA	AR	D		22				1.95mm
	05139439AA	AR	D		22				2.00mm
	05139447AA	AR	D		22				2.25mm
	05139448AA	AR	D		22				2.30mm
	05139417AA	AR	D		22				1.50mm
	05139419AA	AR	D		22				1.55mm
	05139420AA	AR	D		22				1.60mm
23	52111484AD	1	D		22				COVER, Differential
24	06507605AA	10	D		22				BOLT, Hex Flange Head, M10x1.50x25, Cover Assembly to Differential Housing, Mounting
25	04578085AA	1	D		22				MOUNT, DifferentialFront Upper
26	04578191AA	1	D		22				MOUNT, DifferentialFront Lower
27	04578084AC	2	D		22				MOUNT, DifferentialRear
28									SCREW, Cap
	06102382AA	1	D		22				[SDD], [BR5] Differential and Carrier to Subframe Front, Mounting
		1	D		22				[SDC], [BR3] Differential and Carrier to Subframe Front, Mounting
		1	D		22				[SDC], [BRD] Differential and Carrier to Subframe Front, Mounting

DODGE CHALLENGER (LC)

SERIES	LINE	BODY	ENGINE	TRANSMISSION
H = HIGHLINE P = PREMIUM X = SPECIAL	D = DODGE	22 = 2-DR SEDAN TYPE #2	EGG = 3.5L High Output V6 24V MPI Engine ESF = 6.1L SRT HEMI V8 Engine EZC = 5.7L HEMI VCT Engine EZD = 5.7L Hemi VCT MDS Engine	DEC = 6-Speed Manual TREMEC Transmission DGJ = 5-Speed Auto W5A580 Transmission DGV = 4-Spd. Automatic VLP 42RLE Trans

AR = use ase required - = Non illustrrated part

Housing and Differential with Internal -[RWD]
Figure 0035ZV-805

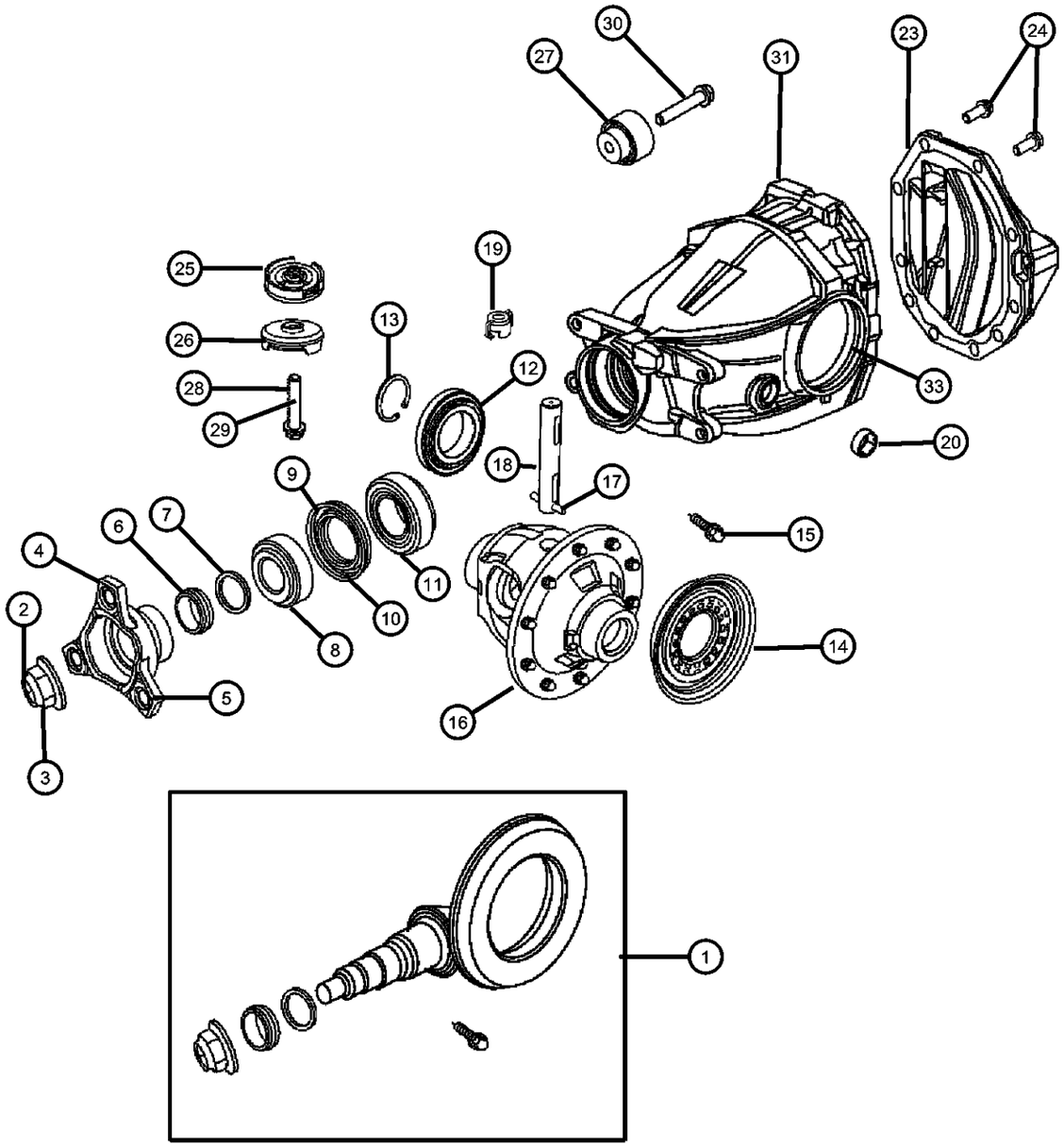

ITEM	PART NUMBER	QTY	LINE	SERIES	BODY	ENGINE	TRANS	TRIM	DESCRIPTION
29									BOLT, Hex Head
	06509315AA	1	D		22				[SDX], [BR4] Differential and Carrier to Subframe Front
		1	D		22				[SDD], [BR6] Differential and Carrier to Subframe Front, Mounting
		1	D		22				[SDD], [BR5] Differential and Carrier to Subframe Front
30	06507311AA	2	D		22				SCREW AND WASHER, Hex Head, Differential and Carrier to Subframe Rear, Mounting
31	52111436AB	1	D		22				HOUSING, Differential
-32	52111468AA	2	D		22				WASHER, Pinion Gear
33	68049799AA	2	D		22				SEAL, Output

DODGE CHALLENGER (LC)

SERIES	LINE	BODY	ENGINE	TRANSMISSION
H = HIGHLINE P = PREMIUM X = SPECIAL	D = DODGE	22 = 2-DR SEDAN TYPE #2	EGG = 3.5L High Output V6 24V MPI Engine ESF = 6.1L SRT HEMI V8 Engine EZC = 5.7L HEMI VCT Engine EZD = 5.7L Hemi VCT MDS Engine	DEC = 6-Speed Manual TREMEC Transmission DGJ = 5-Speed Auto W5A580 Transmission DGV = 4-Spd. Automatic VLP 42RLE Trans

AR = use ase required - = Non illustrrated part

Shafts,Rear Axle, RWD
Figure 0035ZV-910

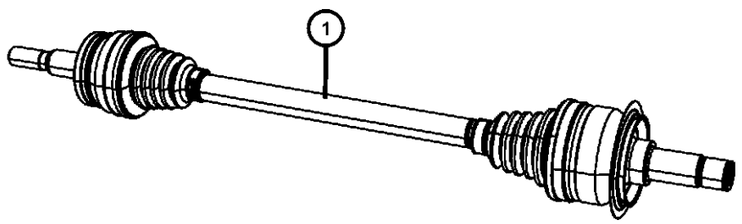

ITEM	PART NUMBER	QTY	LINE	SERIES	BODY	ENGINE	TRANS	TRIM	DESCRIPTION
1									SHAFT, Axle Half
	04578136AE	1	D		22				3.5L [EGG] With Automatic Transmission [DGV] 4 Wheel Disc ABS Brakes [BR3], Right
	04578732AB	1	D		22				6.1L [ESF] With Manual Transmission [DEC], Right
		1	D		22				6.1L [ESF] With Automatic Transmission [DGJ], Right
		1	D		22				5.7L [EZC] With Manual Transmission [DEC], Right
	04578733AB	1	D		22				6.1L [ESF] With Manual Transmission [DEC], Left
		1	D		22				6.1L [ESF] With Automatic Transmission [DGJ], Left
		1	D		22				5.7L [EZC] With Manual Transmission [DEC], Left
	04578775AA	1	D		22				3.5L [EGG] With Automatic Transmission [DGV] 4 Wheel Disc Brakes [BRD], Right
	04578776AA	1	D		22				3.5L [EGG] With Automatic Transmission [DGV] 4 Wheel Disc Brakes [BRD], Left
	04726137AE	1	D		22				3.5L [EGG] With Automatic Transmission [DGV] 4 Wheel Disc ABS Brakes [BR3], Left
	05180490AB	1	D		22				5.7L [EZD] or [EZH] With Automatic Transmission [DGJ], Right
	05180491AB	1	D		22				5.7L [EZD] or [EZH] With Automatic Transmission [DGJ], Left
-2	04809863AC	2	D		22				GASKET, Front halfshaft/hub

DODGE CHALLENGER (LC)

SERIES	LINE	BODY	ENGINE	TRANSMISSION
H = HIGHLINE	D = DODGE	22 = 2-DR SEDAN TYPE #2	EGG = 3.5L High Output V6 24V MPI Engine	DEC = 6-Speed Manual TREMEC Transmission
P = PREMIUM			ESF = 6.1L SRT HEMI V8 Engine	DGJ = 5-Speed Auto W5A580 Transmission
X = SPECIAL			EZC = 5.7L HEMI VCT Engine	DGV = 4-Spd. Automatic VLP 42RLE Trans
			EZD = 5.7L Hemi VCT MDS Engine	

Group - 5

Brakes

Group - 5 Brakes

Illustration Title — Group-Fig. No.

Front Brakes
Brakes,Front ..... Fig. 5 - 105

Rear Brakes
Brakes, Rear, Disc ..... Fig. 5 - 205

Power Brake Booster
Booster,Vacuum Power Brake ..... Fig. 5 - 305

Brake Master Cylinder
Master Cylinder ..... Fig. 5 - 405

Hydraulic Control Unit, Brake Tubes and Hoses
HCU and Tubes, Front ..... Fig. 5 - 505
Brake Tubes,Rear ..... Fig. 5 - 520

Brake Pedals
Pedal,Brake,Auto Trans ..... Fig. 5 - 605

Parking Brake Lever, Cables, and Rear Disc Park Brake Assembly
Park Brake Lever and Cables ..... Fig. 5 - 705
Park Brake Assembly, Rear Disc ..... Fig. 5 - 725

005-100 Front Brakes	**005-200** Rear Brakes	**005-300** Power Brake Booster	**005-400** Brake Master Cylinder
005-500 Hydraulic Control Unit, Brake Tubes and Hoses	**005-600** Brake Pedals	**005-700** Parking Brake Lever, Cables, and Rear Disc Park Brake Assembly	

Brakes,Front
Figure 5-105

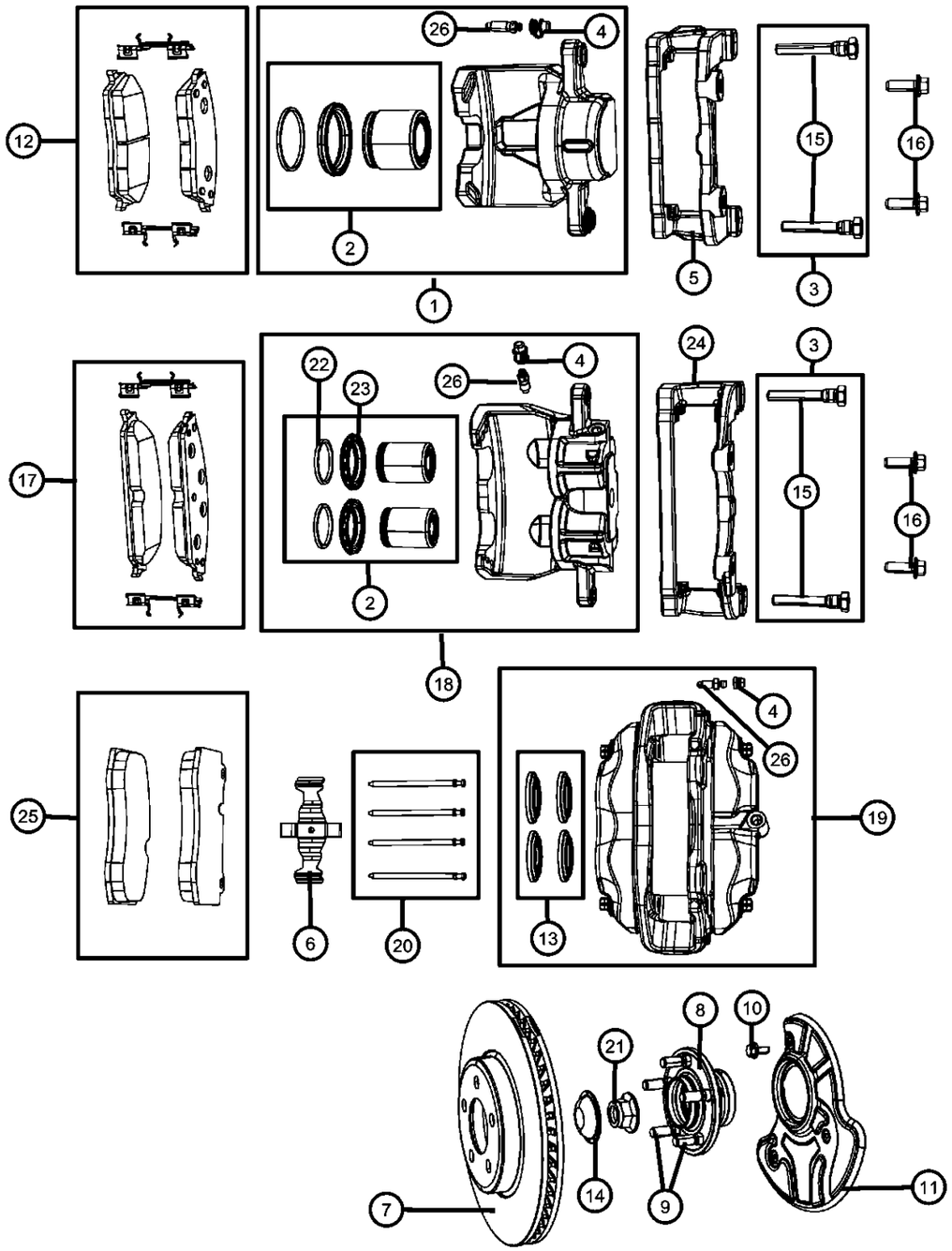

ITEM	PART NUMBER	QTY	LINE	SERIES	BODY	ENGINE	TRANS	TRIM	DESCRIPTION

Note: To service piston kit or adapter for sales code [BR4], need to service caliper assembly
Sales Codes:
[BRD]= 4-WHEEL DISC
[BR3]= ANTI-LOCK 4-WHEEL DISC
[BR4]= ANTI-LOCK 4-WHEEL DISC PERF BRAKES
[BR5]= ANTI-LOCK 4-WHEEL DISC, PERFORMANCE
[BR6]= ANTI-LOCK 4-WHEEL DISC, HEAVY DUTY

ITEM	PART NUMBER	QTY	LINE	SERIES	BODY	ENGINE	TRANS	TRIM	DESCRIPTION
1									CALIPER, Disc Brake
	05142556AA	1	D		22				[BRD][BR3], Right
	05142557AA	1	D		22				[BRD][BR3], Left
2									PISTON KIT, DISC BRAKE
	05137609AA	1	D		22				[BRD][BR3]
	05137665AA	1	D		22				[BR6][BR5]
3									PIN KIT, Disc Brake, Guide
	05137608AA	1	D		22				[BRD][BR3]
		1	D		22				[BR6][BR5]
4	05175059AA	1	D		22				CAP, Bleeder
5									ADAPTER, Disc Brake Caliper
	05137613AA	1	D		22				[BRD][BR3]
	05137668AA	1	D		22				[BR5][BR6], Right
	05137669AA	1	D		22				[BR5][BR6], Left
6	05174321AA	1	D		22				CLIP, Brake Anti-Rattle, [BR4]
7									ROTOR, Brake
	04779196AD	1	D		22				[BRD][BR3]
	V5019196AA								Mopar V-Line Alternative Brake Rotors
	VCLX2555AB								Make It Ceramic Brake Kit
	04779197AD	1	D		22				[BR5][BR6]
	V5019197AA								Mopar V-Line Alternative Brake Rotors
	VLX02558AB								Make It New Brake Kits
	VCLX2558AB								Make It Ceramic Brake Kit
	05154118AA	1	D		22				[BR6]
	05290537AB	1	D		22				[BR4]
8	04779199AA	1	D		22				HUB AND BEARING, Brake
9	06507915AA	5	D		22				STUD, Hub

DODGE CHALLENGER (LC)

SERIES	LINE	BODY	ENGINE	TRANSMISSION
H = HIGHLINE P = PREMIUM X = SPECIAL	D = DODGE	22 = 2-DR SEDAN TYPE #2	EGG = 3.5L High Output V6 24V MPI Engine ESF = 6.1L SRT HEMI V8 Engine EZC = 5.7L HEMI VCT Engine EZD = 5.7L Hemi VCT MDS Engine	DEC = 6-Speed Manual TREMEC Transmission DGJ = 5-Speed Auto W5A580 Transmission DGV = 4-Spd. Automatic VLP 42RLE Trans

Brakes,Front
Figure 5-105

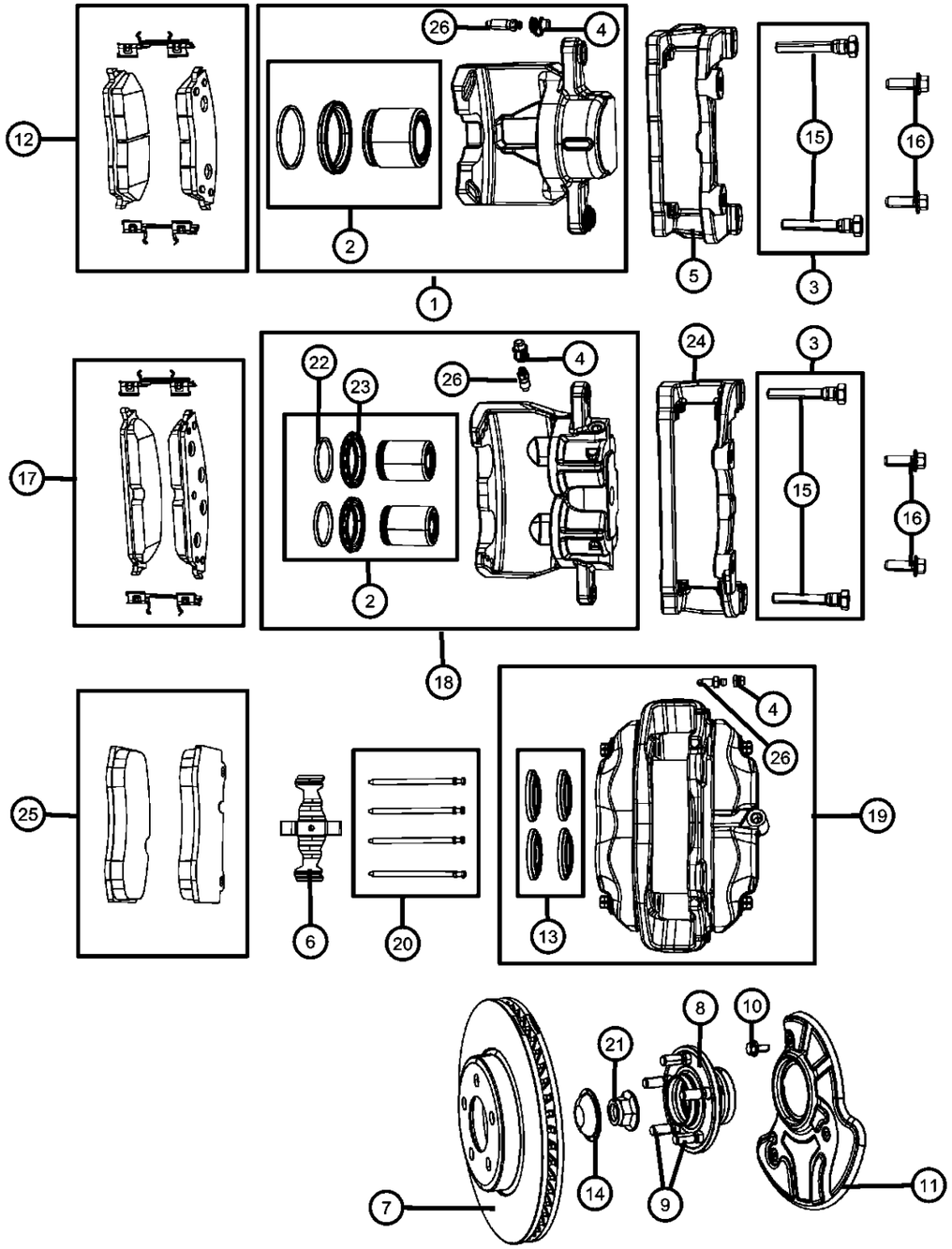

ITEM	PART NUMBER	QTY	LINE	SERIES	BODY	ENGINE	TRANS	TRIM	DESCRIPTION
10		5							SCREW, Shield Attaching, (NOT SERVICED)
11									SHIELD, Brake
	04779201AA	1	D		22				Left
	04779200AA	1	D		22				Right
12									PAD KIT, Front Disc Brake, Contains Pads and Slippers
	05174001AA	1	D		22				[BRD][BR3]
	BHKH5765								Mopar V-Line Alternative Part Disc Hardware
	BHKH5095								Mopar V-Line Alternative Part Caliper Bolts
	V1012555								Mopar V-Line Alternative Part
	V3012555								Mopar V-Line Alternative Part Ceramic
	VLX02555AB								Make It New Brake Kits
	VCLX2555AB								Make It Ceramic Brake Kit
	05142558AA	1	D		22				[BR5]
	BHKH5765								Mopar V-Line Alternative Part Disc Hardware
	BHKH5095								Mopar V-Line Alternative Part Caliper Bolts
	V1012558								Mopar V-Line Alternative Part
	VLX02558AB								Make It New Brake Kits
	VCLX2558AB								Make It Ceramic Brake Kit
13	05174318AA	1	D		22				BOOT KIT, Disc brake, Contains 4 Boots for 1 Caliper, [BR4]
14	04779253AA	1	D		22				CAP, Wheel Bearing
15	05137614AA	2	D		22				PIN, Caliper
16	06505832AA	2	D		22				BOLT, Hex Flange Head, M12X1.75X45.00
17	05142559AA	1	D		22				PAD KIT, Front Disc Brake, Contains Pads and Slippers, [BR6]
18									CALIPER, Disc Brake
	05137671AA	1	D		22				[BR5][BR6], Left
	05137670AA	1	D		22				[BR5][BR6], Right
19									CALIPER, Disc Brake
	05175106AB	1	D		22				[BR4], Painted red, Right

DODGE CHALLENGER (LC)

SERIES	LINE	BODY	ENGINE	TRANSMISSION
H = HIGHLINE P = PREMIUM X = SPECIAL	D = DODGE	22 = 2-DR SEDAN TYPE #2	EGG = 3.5L High Output V6 24V MPI Engine ESF = 6.1L SRT HEMI V8 Engine EZC = 5.7L HEMI VCT Engine EZD = 5.7L Hemi VCT MDS Engine	DEC = 6-Speed Manual TREMEC Transmission DGJ = 5-Speed Auto W5A580 Transmission DGV = 4-Spd. Automatic VLP 42RLE Trans

Brakes,Front
Figure 5-105

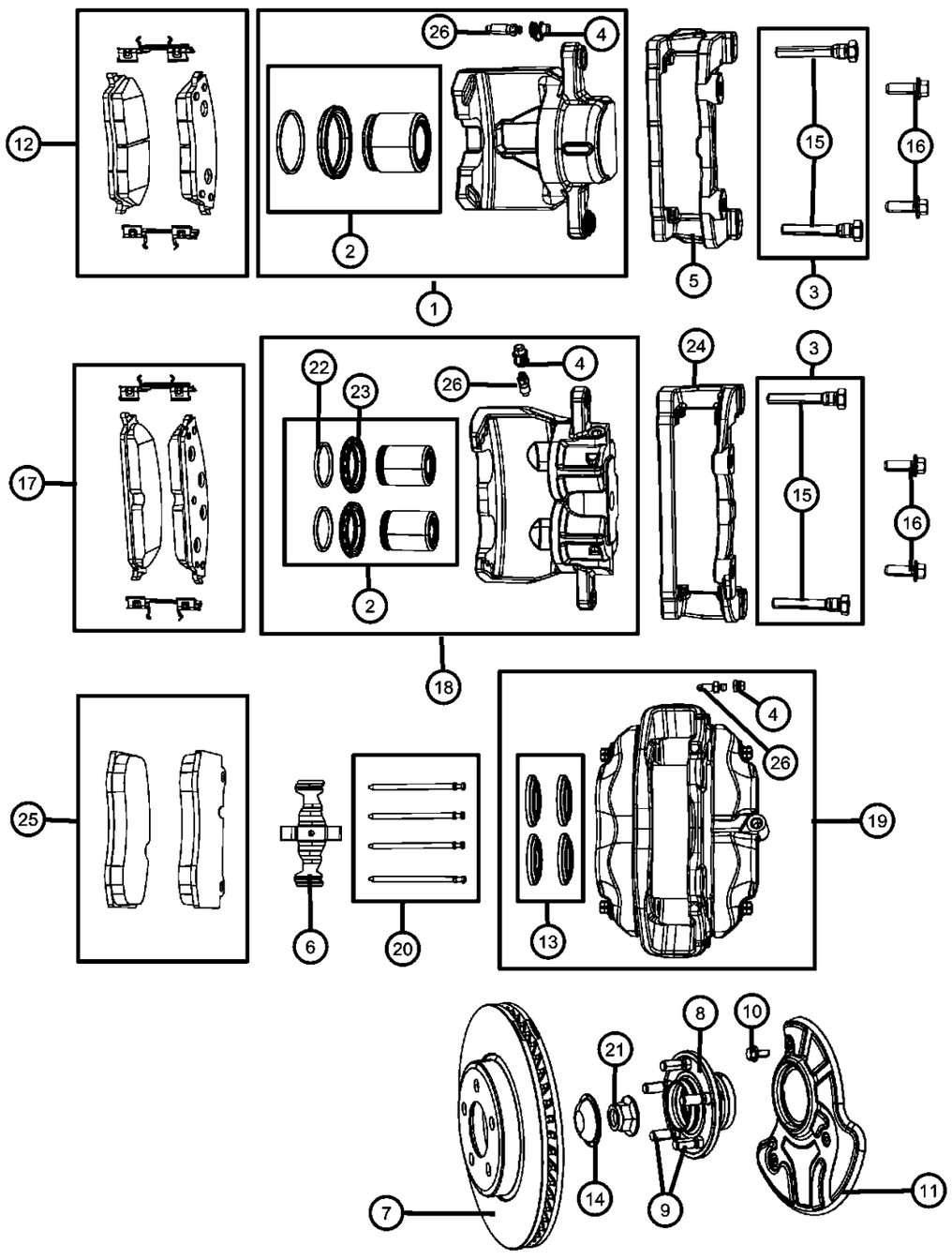

ITEM	PART NUMBER	QTY	LINE	SERIES	BODY	ENGINE	TRANS	TRIM	DESCRIPTION
	05175107AB	1	D		22				[BR4], Painted red, Left
20	05174320AA	1	D		22				PIN KIT, Disc Brake, Contains 4 Pins for Both Calipers
21	06504007	1	D		22				NUT, Axle Hub
22	05175677AA	2	D		22				SEAL, Caliper Piston, [BR5][BR6]
23	05183938AA	2	D		22				BOOT, Brake Piston, [BR5][BR6]
24									ADAPTER, Disc Brake Caliper
	05137669AA	1	D		22				[BR5][BR6], Left
	05137668AA	1	D		22				[BR5][BR6], Right
25	05174311AC	1	D		22				PAD KIT, Front Disc Brake, Contains 4 Pads, [BR4]
26	05137612AA	1	D		22				BLEEDER SCREW, Brake

DODGE CHALLENGER (LC)

SERIES	LINE	BODY	ENGINE	TRANSMISSION
H = HIGHLINE	D = DODGE	22 = 2-DR SEDAN TYPE #2	EGG = 3.5L High Output V6 24V MPI Engine	DEC = 6-Speed Manual TREMEC Transmission
P = PREMIUM			ESF = 6.1L SRT HEMI V8 Engine	DGJ = 5-Speed Auto W5A580 Transmission
X = SPECIAL			EZC = 5.7L HEMI VCT Engine	DGV = 4-Spd. Automatic VLP 42RLE Trans
			EZD = 5.7L Hemi VCT MDS Engine	

Brakes, Rear, Disc
Figure 5-205

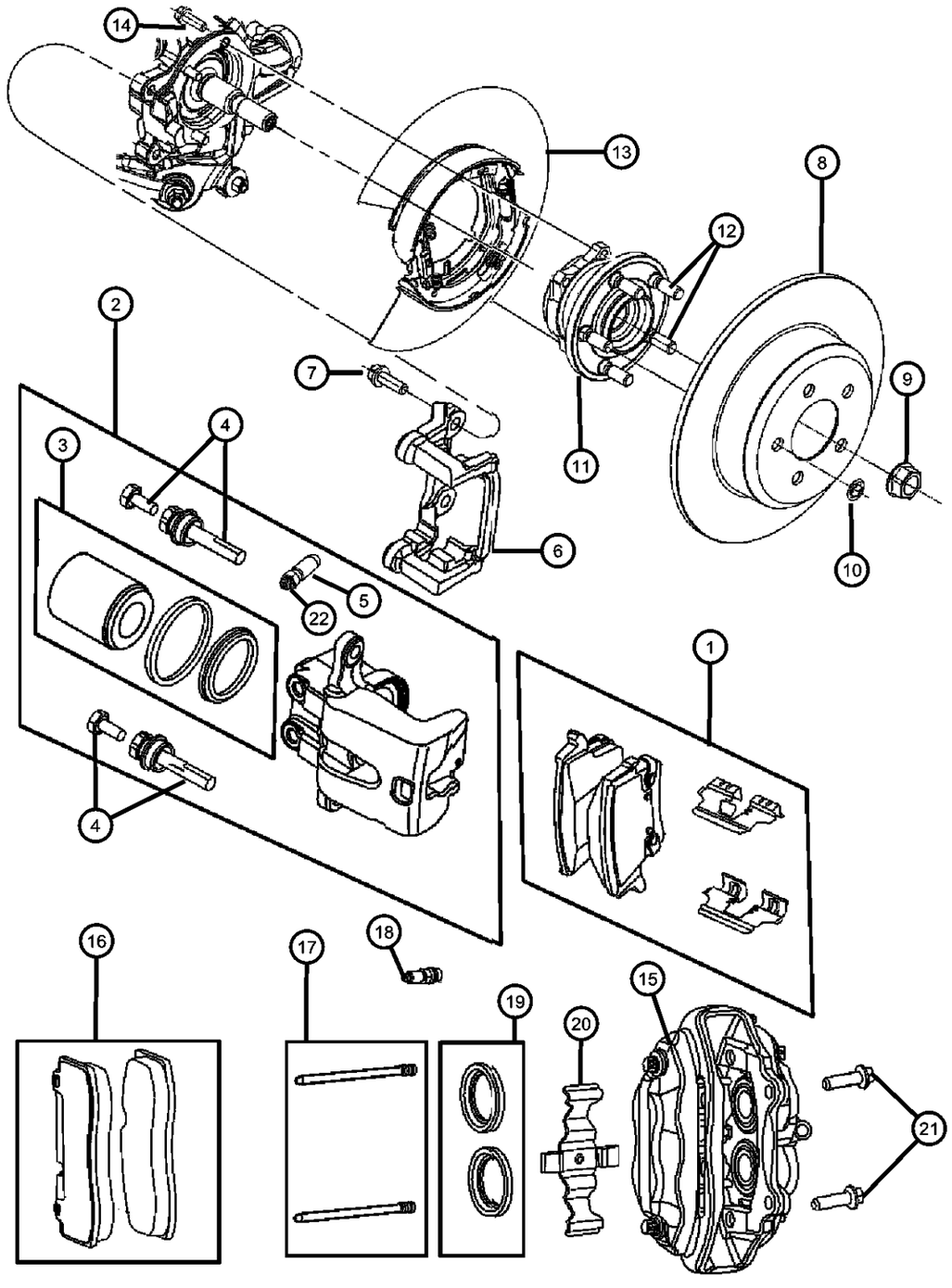

ITEM	PART NUMBER	QTY	LINE	SERIES	BODY	ENGINE	TRANS	TRIM	DESCRIPTION
Note: To service Piston Kit or Adapter for sales code [BR4] need to service Caliper Assembly Sales Codes: [BR3] = ANTI-LOCK 4-WHEEL DISC BRAKES [BR4] = ANTI-LOCK 4-WHEEL DISC PERF BRAKES [BR5] = ANTI-LOCK 4-WHEEL DISC PERF BRAKES [BR8] = 4-WHEEL DISC									
1									PAD KIT, Rear Disc Brake
	05142560AA	1	D		22				[BR3], [BRD]
	BHKH5767								Mopar V-Line Alternative Part Disc Hardware
	BHKH5095								Mopar V-Line Alternative Part Caliper Bolts
	V4012560								Mopar V-Line Alternative Part Ceramic
	VCLX2560AA								Make It Ceramic Rear Brake Kit
	V2012560AB								Mopar V-Line Alternative Part
	VRLX2560AA								Make It New Brake Kits
	05174327AC	1	D		22				[BR4]
	05142561AA	1	D		22				[BR5]
	BHKH5095								Mopar V-Line Alternative Part Caliper Bolts
	V4012560								Mopar V-Line Alternative Part Ceramic
	V2012560AB								Mopar V-Line Alternative Part
	05142566AA	1	D		22				[BR6]
	BHKH5095								Mopar V-Line Alternative Part Caliper Bolts
	V2012566								Mopar V-Line Alternative Part
	V4012566								Mopar V-Line Alternative Part Ceramic
	VCLX2566AA								Make It Ceramic Rear Brake Kit
	VRLX2566AA								Make It New Brake Kits
2									CALIPER, Disc Brake
	05142564AA	1	D		22				[BR5], Right
	05142565AA	1	D		22				[BR5], Left
	05142562AA	1	D		22				[BR3], Right
	05142563AA	1	D		22				[BR3], Left
3	05137665AA	1	D		22				PISTON KIT, DISC BRAKE
4									PIN KIT, Disc Brake

DODGE CHALLENGER (LC)

SERIES	LINE	BODY	ENGINE	TRANSMISSION
H = HIGHLINE P = PREMIUM X = SPECIAL	D = DODGE	22 = 2-DR SEDAN TYPE #2	EGG = 3.5L High Output V6 24V MPI Engine ESF = 6.1L SRT HEMI V8 Engine EZC = 5.7L HEMI VCT Engine EZD = 5.7L Hemi VCT MDS Engine	DEC = 6-Speed Manual TREMEC Transmission DGJ = 5-Speed Auto W5A580 Transmission DGV = 4-Spd. Automatic VLP 42RLE Trans

Brakes, Rear, Disc
Figure 5-205

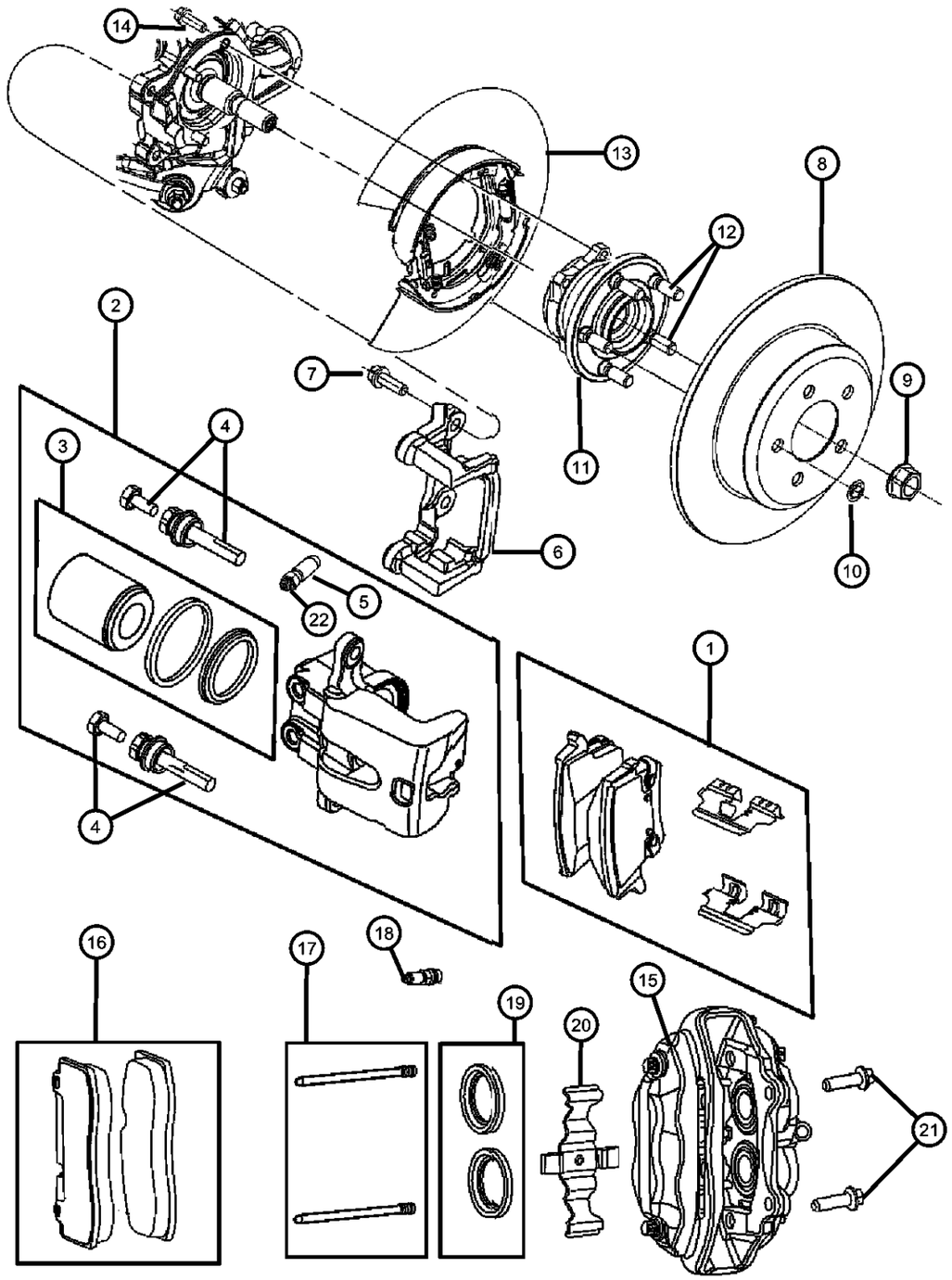

ITEM	PART NUMBER	QTY	LINE	SERIES	BODY	ENGINE	TRANS	TRIM	DESCRIPTION
	05137608AA	1	D		22				[BR6]
		1	D		22				[BR5]
		1	D		22				[BRD,BR3]
	05137686AA	1	D		22				[BR3]
5	05137612AA	1	D		22				BLEEDER SCREW, Brake
6	05137687AA	1	D		22				ADAPTER, Disc Brake Caliper
7	06505832AA	2	D		22				BOLT, Hex Flange Head, M12X1.75X45.00
8									ROTOR, Brake
	05290538AB	2	D		22				[BR4]
	04779208AB	2	D		22				[BR3]
	VCLX2560AA								Make It Ceramic Rear Brake Kit
	04779209AC	2	D		22				[BR5 or BR6]
	VCLX2566AA								Make It Ceramic Rear Brake Kit
	VRLX2566AA								Make It New Brake Kits
9	06506263AA	2	D		22				NUT, Hex Flange Lock
10		2							NUT, Spring, (NOT SERVICED)
11	04779572AA	2	D		22				HUB AND BEARING, Brake
12	06507915AA	5	D		22				STUD, Hub
13		5							PARKING BRAKE PACKAGE, See Group 4-120, (NOT SERVICED)
14	06507234AA	8	D		22				SCREW, 6 Lobed
15									CALIPER ASSEMBLY, Disc Brake, Rear
	05175109AA	1	D		22				[BR4], Left
	05175108AA	1	D		22				[BR4], Right
16									PAD KIT, Rear Disc Brake
	05174327AC	1	D		22				[BR4]
	05142566AA	1	D		22				[BR6]
	BHKH5095								Mopar V-Line Alternative Part Caliper Bolts
	V2012566								Mopar V-Line Alternative Part
	V4012566								Mopar V-Line Alternative Part Ceramic
	VCLX2566AA								Make It Ceramic Rear Brake Kit

DODGE CHALLENGER (LC)

SERIES	LINE	BODY	ENGINE	TRANSMISSION
H = HIGHLINE P = PREMIUM X = SPECIAL	D = DODGE	22 = 2-DR SEDAN TYPE #2	EGG = 3.5L High Output V6 24V MPI Engine ESF = 6.1L SRT HEMI V8 Engine EZC = 5.7L HEMI VCT Engine EZD = 5.7L Hemi VCT MDS Engine	DEC = 6-Speed Manual TREMEC Transmission DGJ = 5-Speed Auto W5A580 Transmission DGV = 4-Spd. Automatic VLP 42RLE Trans

Brakes, Rear, Disc
Figure 5-205

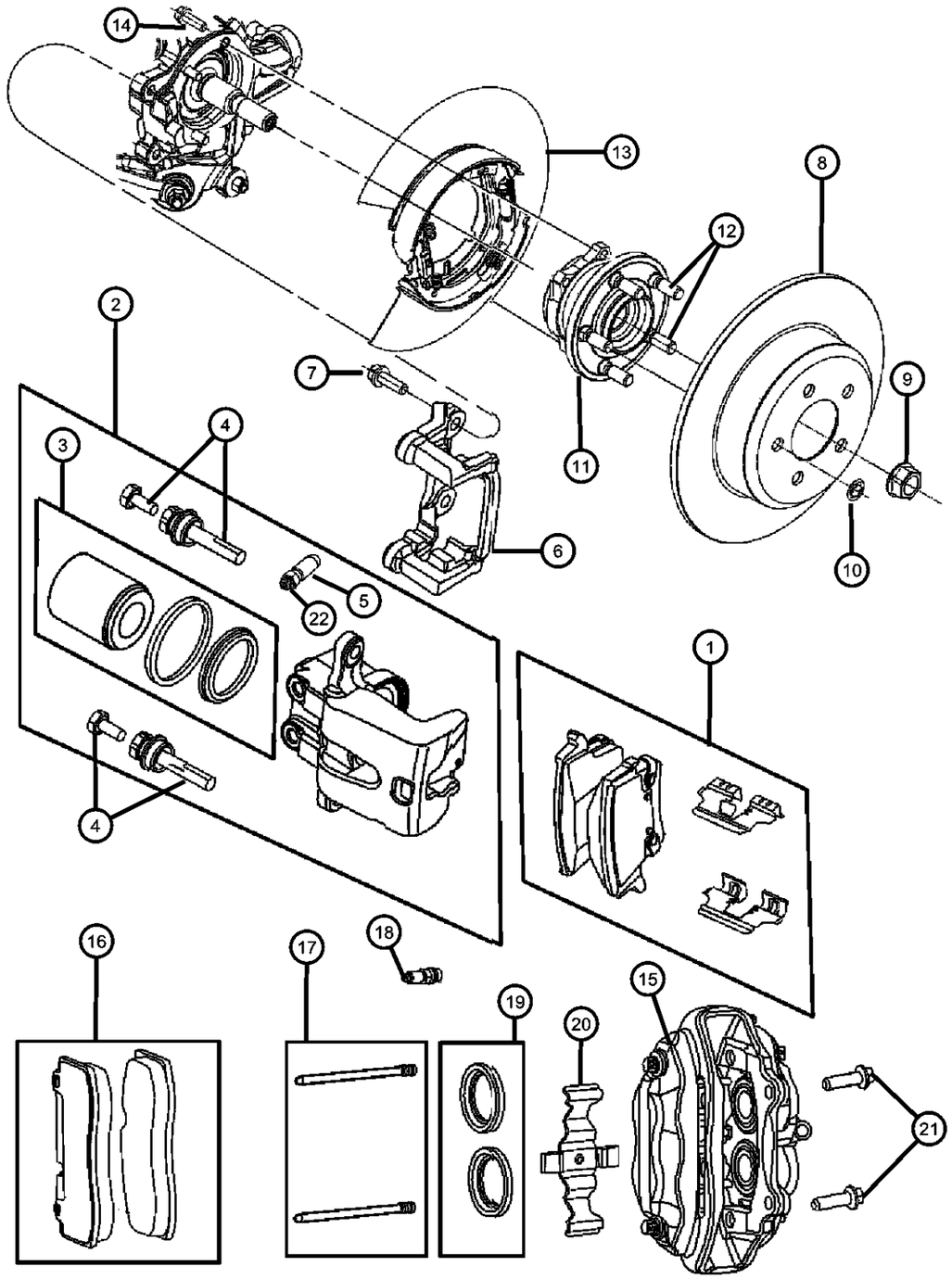

ITEM	PART NUMBER	QTY	LINE	SERIES	BODY	ENGINE	TRANS	TRIM	DESCRIPTION
	VRLX2566AA								Make It New Brake Kits
17	05174332AA	1	D		22				PIN KIT, Disc Brake
18	04720990	1	D		22				BLEEDER SCREW PKG, BRAKE
19	05174330AC	1	D		22				BOOT KIT, Disc brake, [BR4]
20	05174333AA	1	D		22				CLIP, Brake Anti-Rattle
21	06102016	4	D		22				BOLT, Hex Flange Head, M12x1.75x45
22	05175059AA	1	D		22				CAP, Bleeder

DODGE CHALLENGER (LC)

SERIES	LINE	BODY	ENGINE	TRANSMISSION
H = HIGHLINE	D = DODGE	22 = 2-DR SEDAN TYPE #2	EGG = 3.5L High Output V6 24V MPI Engine	DEC = 6-Speed Manual TREMEC Transmission
P = PREMIUM			ESF = 6.1L SRT HEMI V8 Engine	DGJ = 5-Speed Auto W5A580 Transmission
X = SPECIAL			EZC = 5.7L HEMI VCT Engine	DGV = 4-Spd. Automatic VLP 42RLE Trans
			EZD = 5.7L Hemi VCT MDS Engine	

Booster,Vacuum Power Brake
Figure 5-305

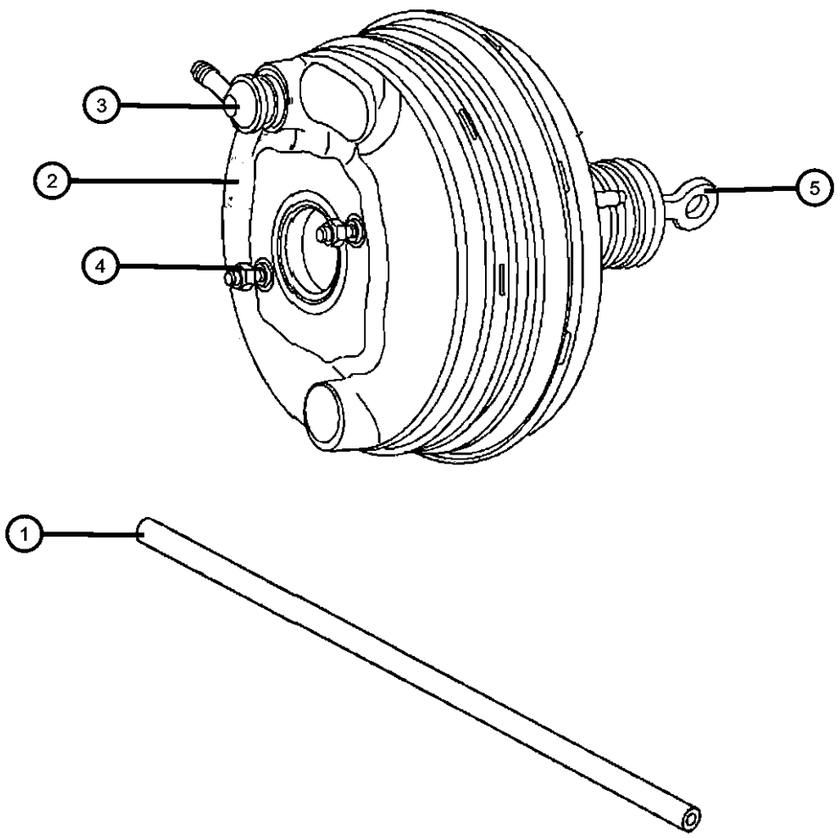

ITEM	PART NUMBER	QTY	LINE	SERIES	BODY	ENGINE	TRANS	TRIM	DESCRIPTION
Note: Sale Codes [EEO]=2.7L V6 GAS [EGO]=3.8L 6CY [EZO]= 5.7L 8CYL GAS									
1									HOSE, Brake Booster Vacuum
	04779605AA	1	D		22				
	04779608AA	1	D		22				[EG0]
2	68048544AA	1	D		22				BOOSTER, Power Brake
3	05139149AA	1	D		22				VALVE, Brake Booster Check
4	05183872AA	2	D		22				NUT, Hex Lock
5		2							ROD, Brake Booster, Serviced in Booster, (NOT SERVICED)

DODGE CHALLENGER (LC)

SERIES	LINE	BODY	ENGINE	TRANSMISSION
H = HIGHLINE P = PREMIUM X = SPECIAL	D = DODGE	22 = 2-DR SEDAN TYPE #2	EGG = 3.5L High Output V6 24V MPI Engine ESF = 6.1L SRT HEMI V8 Engine EZC = 5.7L HEMI VCT Engine EZD = 5.7L Hemi VCT MDS Engine	DEC = 6-Speed Manual TREMEC Transmission DGJ = 5-Speed Auto W5A580 Transmission DGV = 4-Spd. Automatic VLP 42RLE Trans

Master Cylinder
Figure 5-405

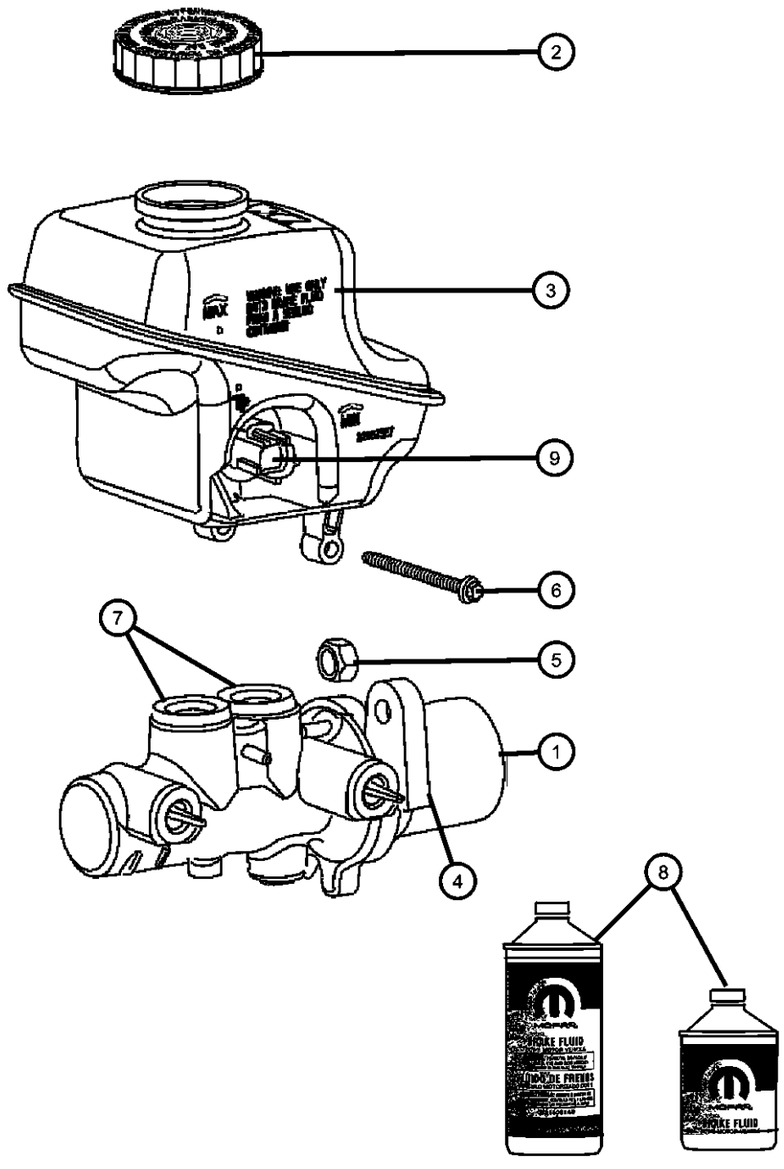

ITEM	PART NUMBER	QTY	LINE	SERIES	BODY	ENGINE	TRANS	TRIM	DESCRIPTION
1									MASTER CYLINDER, Brake
	68048548AA	1	D		22				
	68048551AA	1	D		22				[BR4]
2	05072525AA	1	D		22				CAP, Master Cylinder Reservoir
3	68048549AA	1	D		22				RESERVOIR, Brake Master Cylinder
4	68002156AA	1	D		22				SEAL, Master Cylinder To Booster
5	05183872AA	2	D		22				NUT, Hex Lock
6	05080890AA	1	D		22				SCREW, Master Cylinder to Reservoir
7	68003259AA	2	D		22				GROMMET KIT, Master Cylinder to Reservoir
8									FLUID, Brake, Standard MS-4574
	04318080AB	AR	D		22				[12 Fluid Ounces]
	04318081AB	AR	D		22				[32 Fluid Ounces]
9	68048550AA	1	D		22				SWITCH, Brake Fluid Level

DODGE CHALLENGER (LC)

SERIES	LINE	BODY	ENGINE	TRANSMISSION
H = HIGHLINE P = PREMIUM X = SPECIAL	D = DODGE	22 = 2-DR SEDAN TYPE #2	EGG = 3.5L High Output V6 24V MPI Engine ESF = 6.1L SRT HEMI V8 Engine EZC = 5.7L HEMI VCT Engine EZD = 5.7L Hemi VCT MDS Engine	DEC = 6-Speed Manual TREMEC Transmission DGJ = 5-Speed Auto W5A580 Transmission DGV = 4-Spd. Automatic VLP 42RLE Trans

AR = use ase required - = Non illustrrated part

HCU and Tubes, Front
Figure 5-505

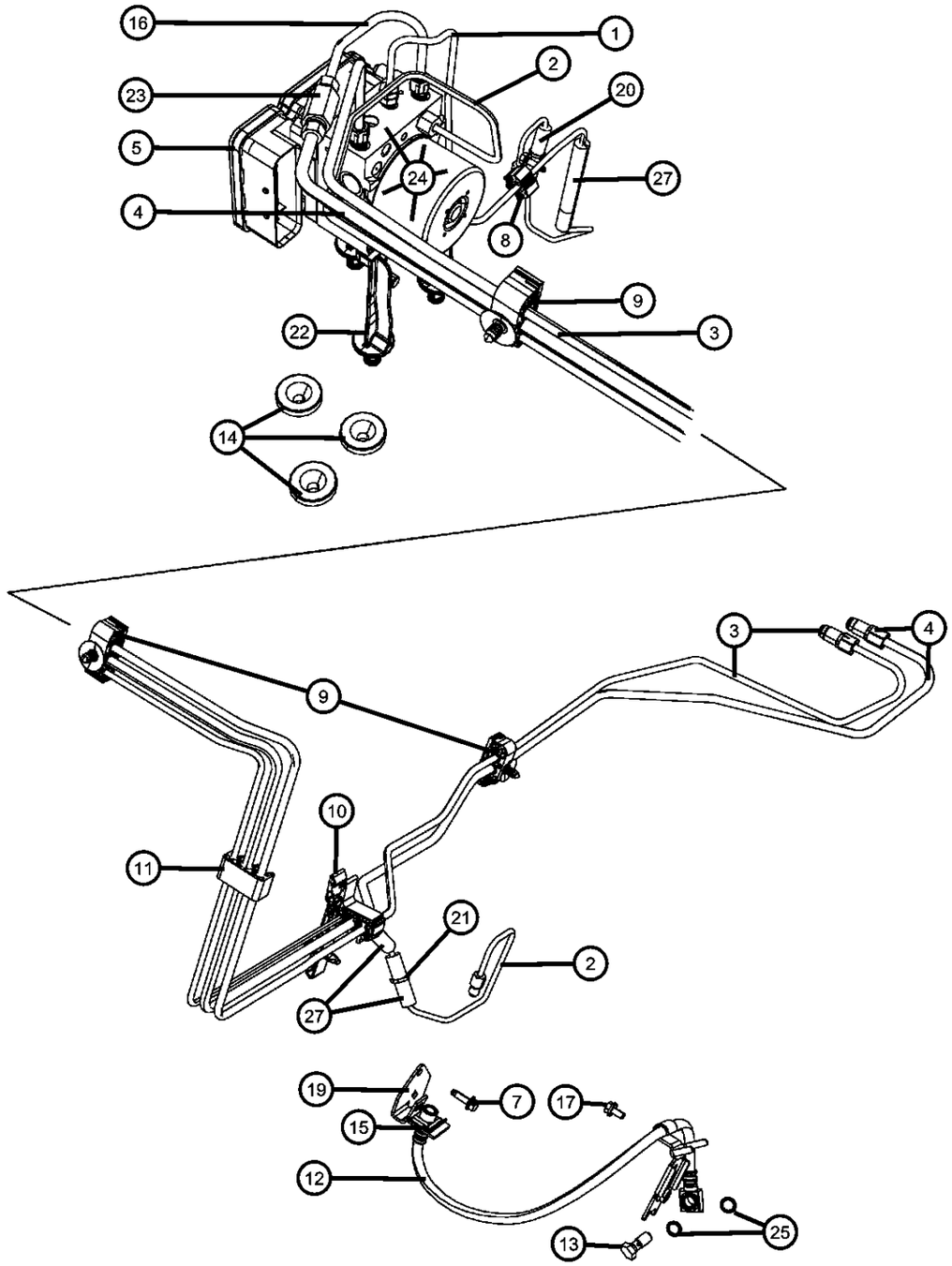

ITEM	PART NUMBER	QTY	LINE	SERIES	BODY	ENGINE	TRANS	TRIM	DESCRIPTION
1	05170763AA	1	D		22				TUBE, Brake, with Clips
2	05170762AA	1	D		22				TUBE, Brake, with Clips
3	68033790AA	1	D		22				TUBE, Brake
4	68033789AA	1	D		22				TUBE, Brake
5									MODULE, Anti-Lock Brake System
	68048305AC	1	D		22				
	68049869AA	1	D		22				[DEC]
-6	05159024AA	1	D		22				O RING
7	06105037AA	2	D		22				SCREW, Hex Flange Head, M6x1.00x20.00
8	32000404	2	D		22				CLIP, Brake Tube
9	68001853AA	3	D		22				CLIP, Brake Tube
10	68001853AA	3	D		22				CLIP, Brake Tube
11	68001854AA	1	D		22				CLIP, Brake Tube
12									HOSE, Brake
	05166552AA	1	D		22				[BR4], Right
	05140863AA	1	D		22				[BRD or BR3], Left
	05140864AA	1	D		22				[BR5 or BR6], Left
	05174067AA	1	D		22				[BR4], Left
	05140862AA	1	D		22				[BR5 or BR6], Right
	05140861AA	1	D		22				[BRD or BR3], Right
13									BOLT, Banjo
	06508379AA	2	D		22				[BR3 or BR6 or BRD or BR5]
	06508914AA	1	D		22				[BR4]
14	04779281AA	3	D		22				GROMMET
15	02208893	1	D		22				LOCK, Brake Hose
16	68001849AA	1	D		22				TUBE, Brake
17	05183964AA	2	D		22				BOLT, Hex Flange Head, M6x1.00x10.90
-18	68020717AA	12	D		22				SEAL, ECU Coil Seal
19	05140866AA	1	D		22				BRACKET, Brake Hose
20	68001858AA	1	D		22				SLEEVE, Rubber
21	68001857AA	1	D		22				TIE STRAP
22	05175604AA	1	D		22				BRACKET, Control Unit

DODGE CHALLENGER (LC)

SERIES	LINE	BODY	ENGINE	TRANSMISSION
H = HIGHLINE P = PREMIUM X = SPECIAL	D = DODGE	22 = 2-DR SEDAN TYPE #2	EGG = 3.5L High Output V6 24V MPI Engine ESF = 6.1L SRT HEMI V8 Engine EZC = 5.7L HEMI VCT Engine EZD = 5.7L Hemi VCT MDS Engine	DEC = 6-Speed Manual TREMEC Transmission DGJ = 5-Speed Auto W5A580 Transmission DGV = 4-Spd. Automatic VLP 42RLE Trans

HCU and Tubes, Front
Figure 5-505

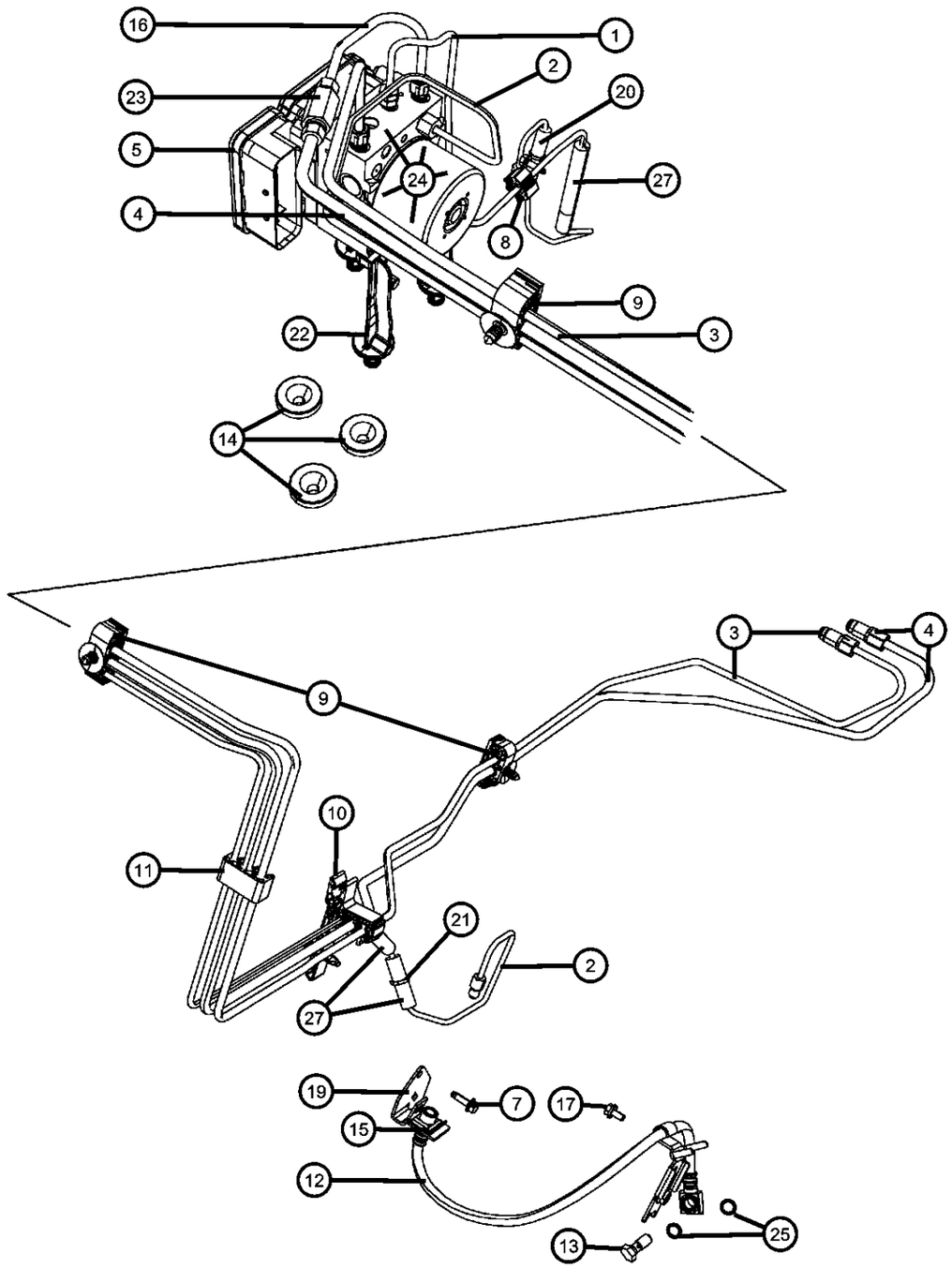

ITEM	PART NUMBER	QTY	LINE	SERIES	BODY	ENGINE	TRANS	TRIM	DESCRIPTION
23	68000901AA	1	D		22				UNION, Brake Tube
24									HYDRAULIC CONTROL UNIT, Anti-Lock Brake System
	68048306AA	1	D		22				
	68049871AA	1	D		22				[DEC]
25	06502114	4	D		22				GASKET, Brake Hose To Caliper
-26	05189423AA	3	D		22				SCREW, Torx Head
27	05179053AA	3	D		22				SLEEVE, Rubber

DODGE CHALLENGER (LC)

SERIES	LINE	BODY	ENGINE	TRANSMISSION
H = HIGHLINE	D = DODGE	22 = 2-DR SEDAN TYPE #2	EGG = 3.5L High Output V6 24V MPI Engine	DEC = 6-Speed Manual TREMEC Transmission
P = PREMIUM			ESF = 6.1L SRT HEMI V8 Engine	DGJ = 5-Speed Auto W5A580 Transmission
X = SPECIAL			EZC = 5.7L HEMI VCT Engine	DGV = 4-Spd. Automatic VLP 42RLE Trans
			EZD = 5.7L Hemi VCT MDS Engine	

AR = use ase required - = Non illustrrated part

Brake Tubes,Rear
Figure 5-520

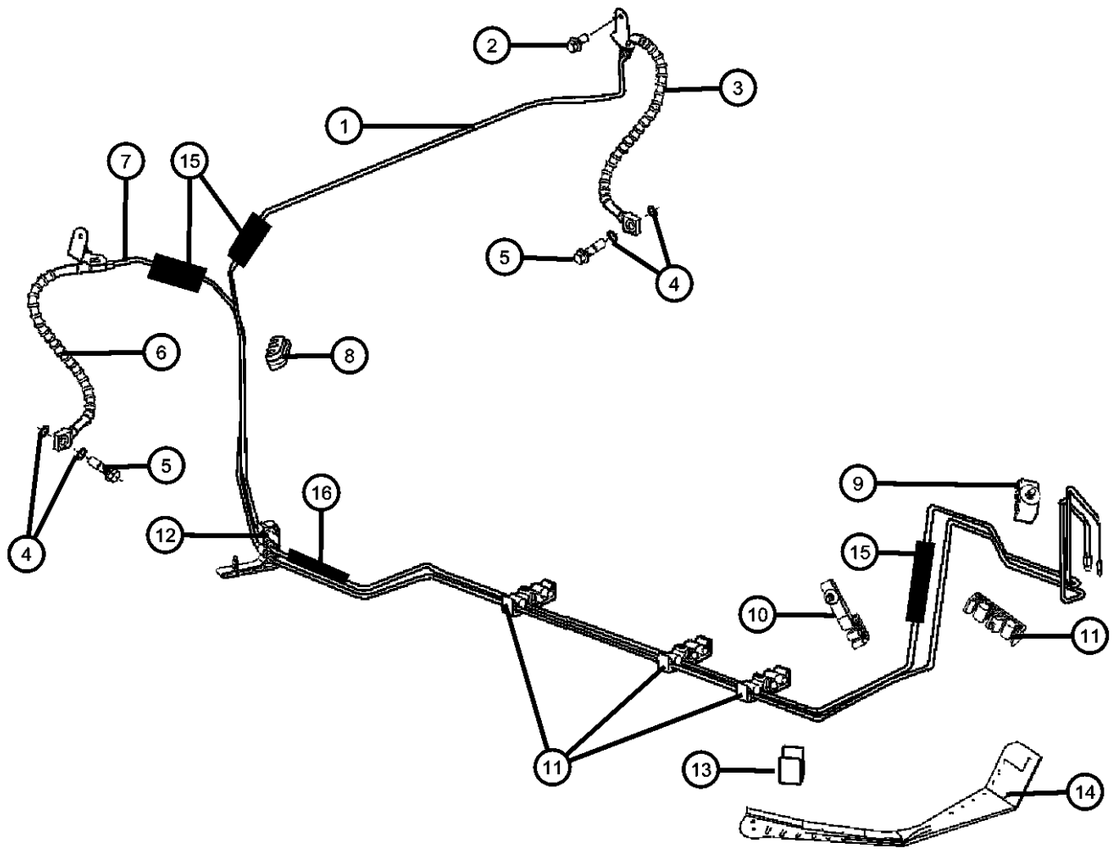

ITEM	PART NUMBER	QTY	LINE	SERIES	BODY	ENGINE	TRANS	TRIM	DESCRIPTION
1	68047021AA	1	D		22				TUBE, Brake, Left Rear
2	06102152AA	2	D		22				BOLT, Hex Flange Head, M6.3X1.81X20.00
3	04854455AD	1	D		22				HOSE, Brake
4	06502114	4	D		22				GASKET, Brake Hose To Caliper
5	06508914AA	1	D		22				BOLT, Banjo
6	04854454AD	1	D		22				HOSE, Brake
7	68046926AA	1	D		22				TUBE, Brake, Right Rear
8	04582074	2	D		22				CLIP, Fuel Bundle
9	05175876AA	1	D		22				CLIP, Fuel Tube
10	05137751AA	1	D		22				CLIP, Fuel Bundle
11	05137752AA	4	D		22				CLIP, Fuel Bundle
12	05137753AA	1	D		22				CLIP, Fuel Bundle
13	05137750AA	1	D		22				CLIP, Fuel Bundle
14	05137754AA	1	D		22				SHIELD, Fuel and Brake Bundle
15	05179053AA	3	D		22				SLEEVE, Rubber
16	05179054AA	1	D		22				SLEEVE, Rubber
-17	68001857AA	1	D		22				TIE STRAP

DODGE CHALLENGER (LC)

SERIES	LINE	BODY	ENGINE	TRANSMISSION
H = HIGHLINE P = PREMIUM X = SPECIAL	D = DODGE	22 = 2-DR SEDAN TYPE #2	EGG = 3.5L High Output V6 24V MPI Engine ESF = 6.1L SRT HEMI V8 Engine EZC = 5.7L HEMI VCT Engine EZD = 5.7L Hemi VCT MDS Engine	DEC = 6-Speed Manual TREMEC Transmission DGJ = 5-Speed Auto W5A580 Transmission DGV = 4-Spd. Automatic VLP 42RLE Trans

Pedal,Brake,Auto Trans
Figure 5-605

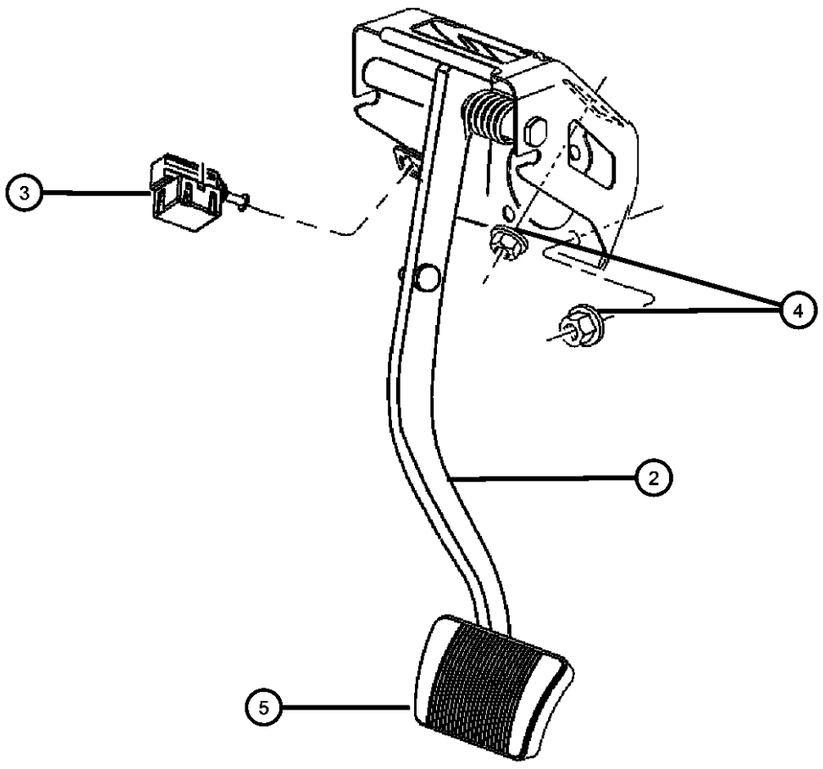

ITEM	PART NUMBER	QTY	LINE	SERIES	BODY	ENGINE	TRANS	TRIM	DESCRIPTION
Sales Codes:									
[AHV]= SPECIAL SERVICE GROUP									
-1	04294036	1	D		22				CLIP, Master Cylinder Push Rod Pin
2	04779558AE	1	D		22				PEDAL AND PAD, Brake
3	04671336AB	1	D		22				SWITCH, Stop Lamp
4	06504572	6	D		22				NUT AND WASHER, Hex Nut-Coned Washer, M8 x 1.25
5	68031956AA	1	D		22				PAD, Pedal

DODGE CHALLENGER (LC)

SERIES	LINE	BODY	ENGINE	TRANSMISSION
H = HIGHLINE	D = DODGE	22 = 2-DR SEDAN TYPE #2	EGG = 3.5L High Output V6 24V MPI Engine	DEC = 6-Speed Manual TREMEC Transmission
P = PREMIUM			ESF = 6.1L SRT HEMI V8 Engine	DGJ = 5-Speed Auto W5A580 Transmission
X = SPECIAL			EZC = 5.7L HEMI VCT Engine	DGV = 4-Spd. Automatic VLP 42RLE Trans
			EZD = 5.7L Hemi VCT MDS Engine	

Park Brake Lever and Cables
Figure 5-705

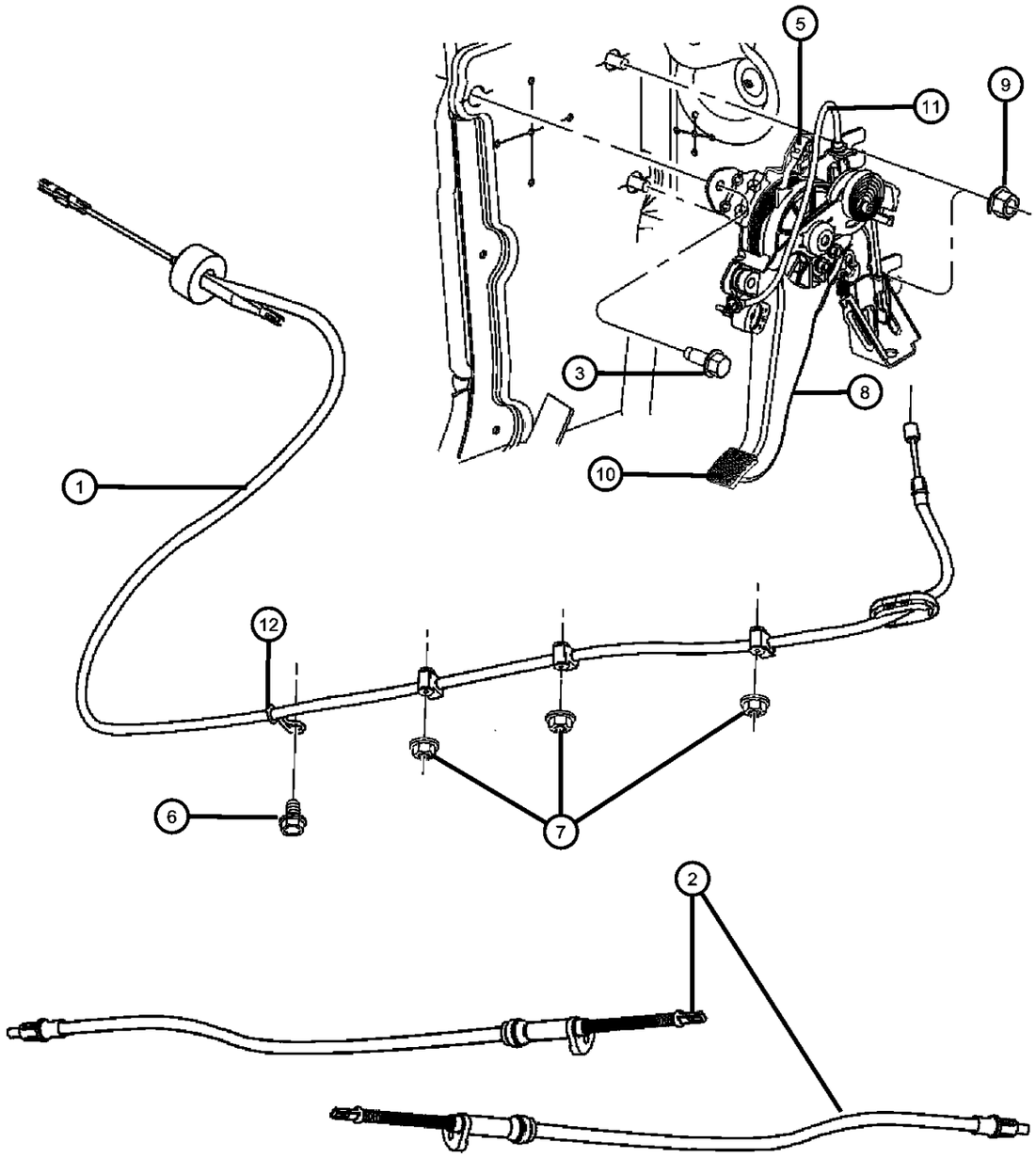

ITEM	PART NUMBER	QTY	LINE	SERIES	BODY	ENGINE	TRANS	TRIM	DESCRIPTION
Sale Codes:									
[EEO]=ALL 2.5L OR 2.7L V6 GAS ENGINES									
[EGO]=ALL 3.3L,3.5L,3.8L & 4.0L ENGINES									
[ESO]=ALL 6 L ENGINES									
[EXO]=ALL 3.0/3.1L TURBO DIESELS ENGINES									
[EZO]=ALL 5.7L 8CYL GAS ENGINES									
1	04779591AB	1	D		22				CABLE, Parking Brake
2	04779592AA	2	D		22				CABLE, Parking Brake
3	06505559AA	1	D		22				SCREW AND WASHER, Hex Head, M8x1.25x40
-4		1							HANDLE, Parking Brake, Serviced in Steering Column Cover [Group 08A], (NOT SERVICED)
5	05189366AB	1	D		22				SWITCH, Parking Brake
6	06504249	1	D		22				SCREW, Hex Head, M6x1x20
7	06505953AA	1	D		22				NUT AND WASHER, M6x1
8									LEVER, Parking Brake
	04779478AD	1	D		22				
	04779596AD	1	D		22				[DEC]
9	06101445	2	D		22				NUT AND WASHER, Hex, M8x1.25
10									PAD, Parking Brake Pedal
	68044148AA	1	D		22				
	68046409AB	1	D		22				[DEC]
11									CABLE, Parking Brake Release
	68048099AA	1	D		22				
	68048763AA	1	D		22				[DEC]
12									BRACKET, Brake Cable Guide
	04779587AA	1	D		22				Left
	04779586AA	1	D		22				Right

DODGE CHALLENGER (LC)

SERIES	LINE	BODY	ENGINE	TRANSMISSION
H = HIGHLINE P = PREMIUM X = SPECIAL	D = DODGE	22 = 2-DR SEDAN TYPE #2	EGG = 3.5L High Output V6 24V MPI Engine ESF = 6.1L SRT HEMI V8 Engine EZC = 5.7L HEMI VCT Engine EZD = 5.7L Hemi VCT MDS Engine	DEC = 6-Speed Manual TREMEC Transmission DGJ = 5-Speed Auto W5A580 Transmission DGV = 4-Spd. Automatic VLP 42RLE Trans

Park Brake Assembly, Rear Disc
Figure 5-725

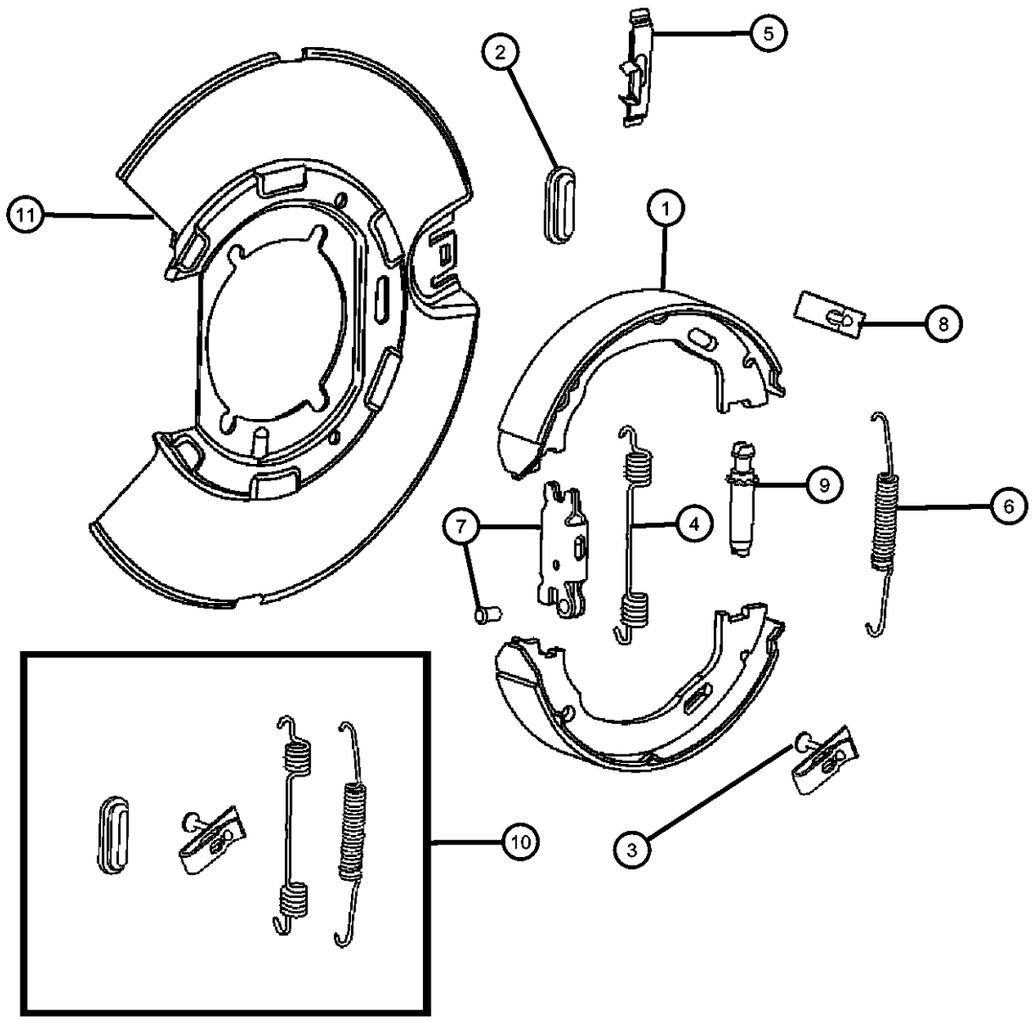

ITEM	PART NUMBER	QTY	LINE	SERIES	BODY	ENGINE	TRANS	TRIM	DESCRIPTION
1	68020626AA	1	D		22				SHOE AND LINING KIT, Drum
2	04762121	1	D		22				PLUG, Brake Adjusting Hole
3	05179890AA	2	D		22				PIN, Brake Shoe Hold Down
4	05137622AA	1	D		22				SPRING, Brake Shoe Return
5									SHIM
	04779275AB	2	D		22				[SDD], [BR6]
		2	D		22				[SDD], [BR5]
		2	D		22				[SDC], [BR3]
		2	D		22				[SDC], [BRD]
	05290853AB	2	D		22				[SDX], [BR4]
6	04762116	1	D		22				SPRING, Lower Shoe Return
7	05103208AA	1	D		22				LEVER, Parking Brake Adjusting
8	05179889AA	2	D		22				CLIP, Brake Shoe Hold Down, [SDC] Or [SDD]
9	68020627AA	1	D		22				ADJUSTER, Parking Brake
10	05179890AA	2	D		22				PIN, Brake Shoe Hold Down
11									ADAPTER ASSEMBLY, Parking Brake
	05137619AA	1	D		22				[SDC] Or [SDD], Left
	05137620AA	1	D		22				[SDC] Or [SDD], Right

DODGE CHALLENGER (LC)

SERIES	LINE	BODY	ENGINE	TRANSMISSION
H = HIGHLINE P = PREMIUM X = SPECIAL	D = DODGE	22 = 2-DR SEDAN TYPE #2	EGG = 3.5L High Output V6 24V MPI Engine ESF = 6.1L SRT HEMI V8 Engine EZC = 5.7L HEMI VCT Engine EZD = 5.7L Hemi VCT MDS Engine	DEC = 6-Speed Manual TREMEC Transmission DGJ = 5-Speed Auto W5A580 Transmission DGV = 4-Spd. Automatic VLP 42RLE Trans

Group - 6

Clutch

Group - 6 Clutch

Illustration Title — Group-Fig. No.

Clutch
Clutch Assembly ..... Fig. 6 - 110

Clutch Housing
Clutch Housing ..... Fig. 6 - 205

Clutch Controls
Controls, Hydraulic Clutch ..... Fig. 6 - 310

Clutch Pedals
Pedal,Clutch ..... Fig. 6 - 410

006-100 Clutch	**006-200** Clutch Housing	**006-300** Clutch Controls	**006-400** Clutch Pedals

Clutch Assembly
Figure 6-110

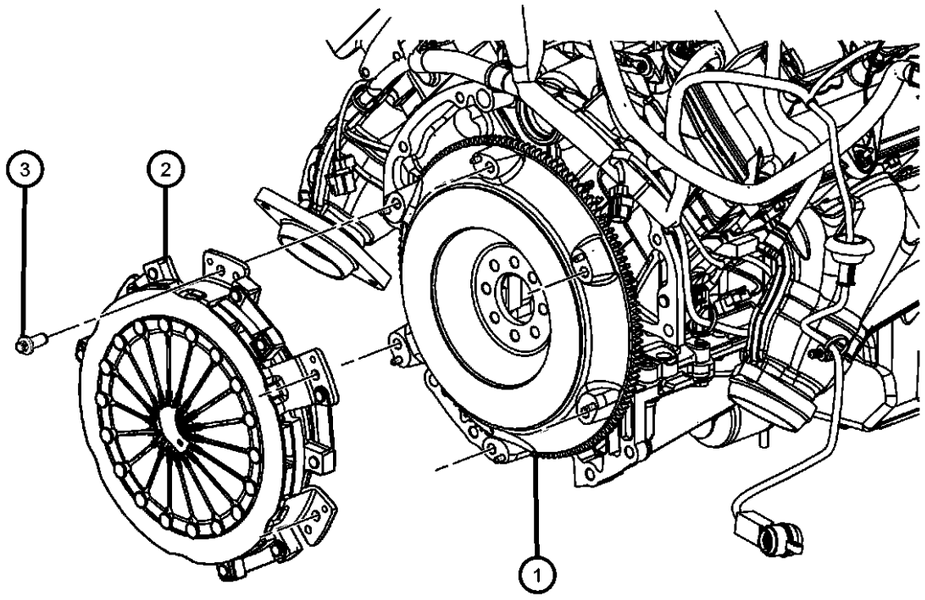

ITEM	PART NUMBER	QTY	LINE	SERIES	BODY	ENGINE	TRANS	TRIM	DESCRIPTION
1	05038113AC	1	D			ESF, EZC, EZD	DEC		FLYWHEEL
2	05038119AD	1	D			ESF, EZC, EZD	DEC		CLUTCH KIT, Pressure Plate and Disc
3	06508880AA	6	D			ESF, EZC, EZD	DEC		SCREW

DODGE CHALLENGER (LC)

SERIES	LINE	BODY	ENGINE	TRANSMISSION
H = HIGHLINE	D = DODGE	22 = 2-DR SEDAN TYPE #2	EGG = 3.5L High Output V6 24V MPI Engine	DEC = 6-Speed Manual TREMEC Transmission
P = PREMIUM			ESF = 6.1L SRT HEMI V8 Engine	DGJ = 5-Speed Auto W5A580 Transmission
X = SPECIAL			EZC = 5.7L HEMI VCT Engine	DGV = 4-Spd. Automatic VLP 42RLE Trans
			EZD = 5.7L Hemi VCT MDS Engine	

Clutch Housing
Figure 6-205

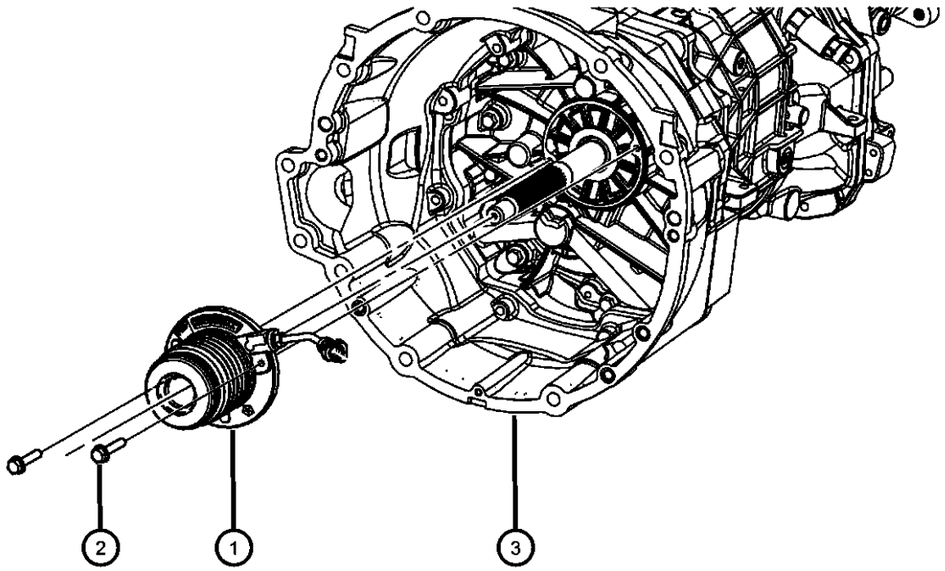

ITEM	PART NUMBER	QTY	LINE	SERIES	BODY	ENGINE	TRANS	TRIM	DESCRIPTION
1	05038118AB	1	D			ESF, EZC, EZD	DEC		ACTUATOR ASSEMBLY, Clutch Concentric Slave
2	06100296	2	D			ESF, EZC, EZD	DEC		BOLT AND CONED WASHER, Hex Head, M8X1.25X25.00
3	68061184AA	1	D			ESF, EZC, EZD	DEC		HOUSING, Clutch

DODGE CHALLENGER (LC)

SERIES	LINE	BODY	ENGINE	TRANSMISSION
H = HIGHLINE P = PREMIUM X = SPECIAL	D = DODGE	22 = 2-DR SEDAN TYPE #2	EGG = 3.5L High Output V6 24V MPI Engine ESF = 6.1L SRT HEMI V8 Engine EZC = 5.7L HEMI VCT Engine EZD = 5.7L Hemi VCT MDS Engine	DEC = 6-Speed Manual TREMEC Transmission DGJ = 5-Speed Auto W5A580 Transmission DGV = 4-Spd. Automatic VLP 42RLE Trans

Controls, Hydraulic Clutch
Figure 6-310

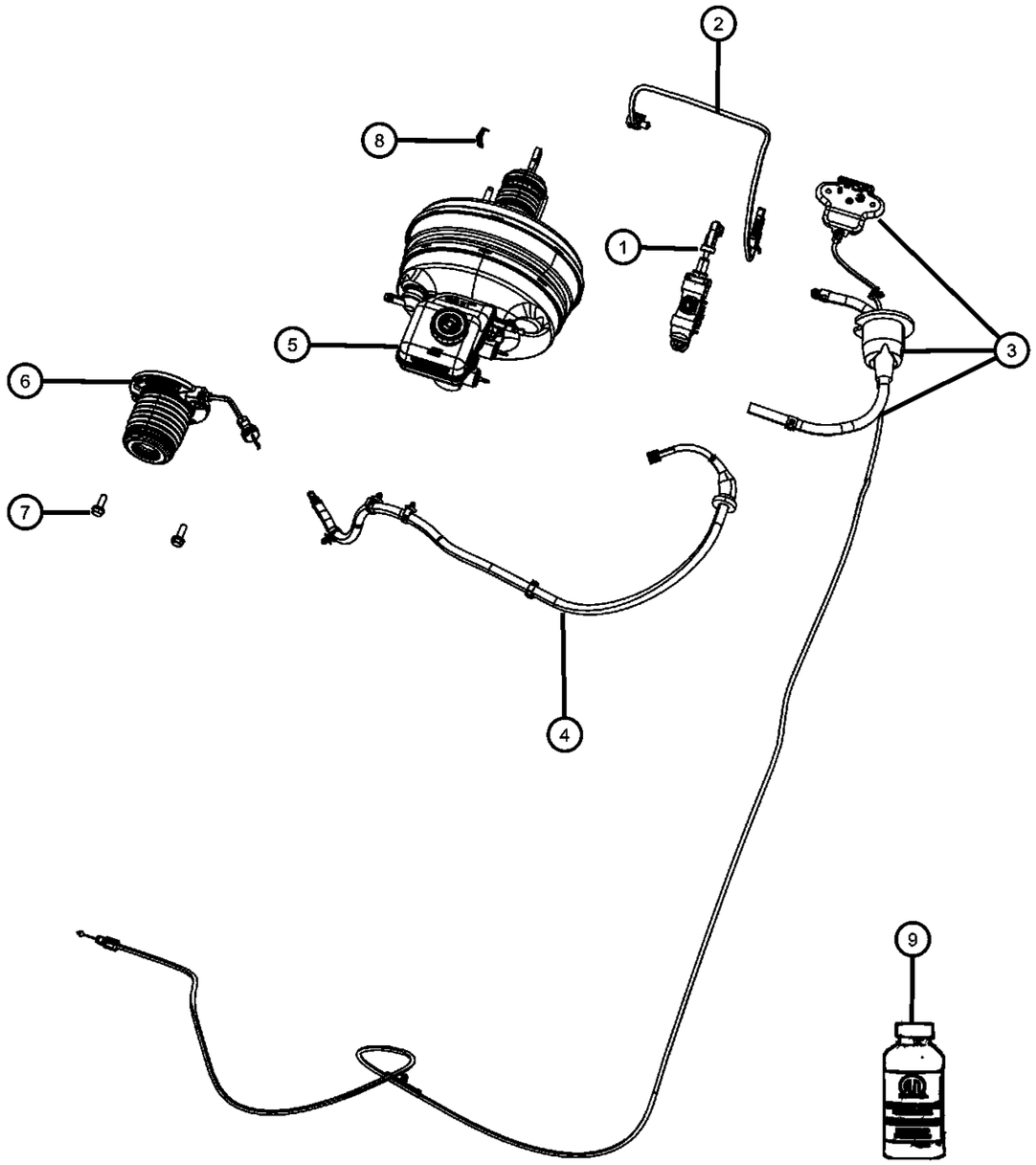

ITEM	PART NUMBER	QTY	LINE	SERIES	BODY	ENGINE	TRANS	TRIM	DESCRIPTION
1	68027905AB	1	D				DEC		MASTER CYLINDER, Brake, Includes Switch Item #2
2	68050183AA	1	D				DEC		SWITCH, Clutch Starter Interlock
3	05112931AA	1	D				DEC		RELEASE, Hood Latch, Includes Hose From Reservoir To Master Cylinder
4	04779564AA	1	D				DEC		TUBE, Hydraulic Clutch, From Master Cylinder To Actuator
5	68048549AA	1	D						RESERVOIR, Brake Master Cylinder
6	05038118AB	1	D			ESF, EZC, EZD	DEC		ACTUATOR ASSEMBLY, Clutch Concentric Slave
7	06100296	2	D			ESF, EZC, EZD	DEC		BOLT AND CONED WASHER, Hex Head, M8X1.25X25.00
8	04294036	1	D				DEC		CLIP, Master Cylinder Push Rod Pin
9									FLUID, Brake
	04318080AB	AR	D						12 Fluid Ounces
	04318081AB	AR	D						32 Fluid Ounces

DODGE CHALLENGER (LC)

SERIES	LINE	BODY	ENGINE	TRANSMISSION
H = HIGHLINE P = PREMIUM X = SPECIAL	D = DODGE	22 = 2-DR SEDAN TYPE #2	EGG = 3.5L High Output V6 24V MPI Engine ESF = 6.1L SRT HEMI V8 Engine EZC = 5.7L HEMI VCT Engine EZD = 5.7L Hemi VCT MDS Engine	DEC = 6-Speed Manual TREMEC Transmission DGJ = 5-Speed Auto W5A580 Transmission DGV = 4-Spd. Automatic VLP 42RLE Trans

AR = use ase required - = Non illustrrated part

Pedal,Clutch
Figure 6-410

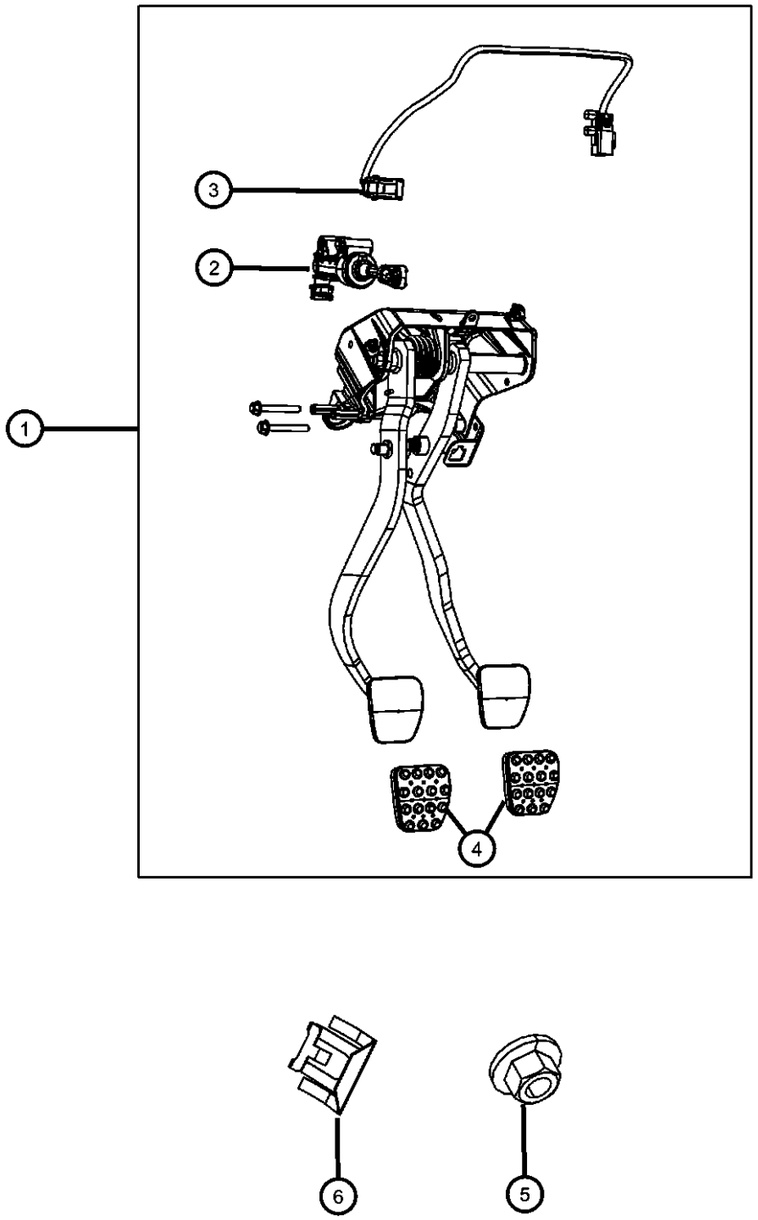

ITEM	PART NUMBER	QTY	LINE	SERIES	BODY	ENGINE	TRANS	TRIM	DESCRIPTION
1	04779600AF	1	D				DEC		PEDAL ASSEMBLY, Non Adjustable
2	68027905AB	1	D				DEC		MASTER CYLINDER, Brake, Will Include Switch Item # 3
3	68050183AA	1	D				DEC		SWITCH, Clutch Starter Interlock
4	68048939AA	2	D				DEC		PAD, Pedal
5	06506152AA	6	D						NUT AND WASHER, Hex Nut-Coned Washer, M8 x 1.25
6	04294036	1	D				DEC		CLIP, Master Cylinder Push Rod Pin

DODGE CHALLENGER (LC)

SERIES	LINE	BODY	ENGINE	TRANSMISSION
H = HIGHLINE P = PREMIUM X = SPECIAL	D = DODGE	22 = 2-DR SEDAN TYPE #2	EGG = 3.5L High Output V6 24V MPI Engine ESF = 6.1L SRT HEMI V8 Engine EZC = 5.7L HEMI VCT Engine EZD = 5.7L Hemi VCT MDS Engine	DEC = 6-Speed Manual TREMEC Transmission DGJ = 5-Speed Auto W5A580 Transmission DGV = 4-Spd. Automatic VLP 42RLE Trans

Group - 7

Cooling

007-100 Radiator and Related Parts; Charge Air Cooler	**007-200** Water Pump and Related Parts	**007-300** Engine Coolant Reservoir (Bottle)	**007-400** Pulleys and Related Parts
007-500 Drive Belts	**007-600** Transmission Oil Cooler, and Lines		

Group - 7 Cooling

Illustration Title — Group-Fig. No.

Radiator and Related Parts; Charge Air Cooler
Radiator and Related Items ..... Fig. 7 - 105
Radiator Support ..... Fig. 7 - 150

Water Pump and Related Parts
Water Pump and Related Parts ..... Fig. 7 - 205
Water Pump and Related Parts ..... Fig. 7 - 210
Thermostat and Related Parts ..... Fig. 7 - 250
Thermostat and Related Parts ..... Fig. 7 - 260

Engine Coolant Reservoir (Bottle)
Coolant Recovery Bottle ..... Fig. 7 - 305

Pulleys and Related Parts
Pulleys and Related Parts ..... Fig. 7 - 405
Pulleys and Related Parts ..... Fig. 7 - 410

Drive Belts
Belts, Serpentine and V-Belts ..... Fig. 7 - 505

Transmission Oil Cooler, and Lines
Transmission Oil Cooler and Lines ..... Fig. 7 - 605

Radiator and Related Items
Figure 7-105

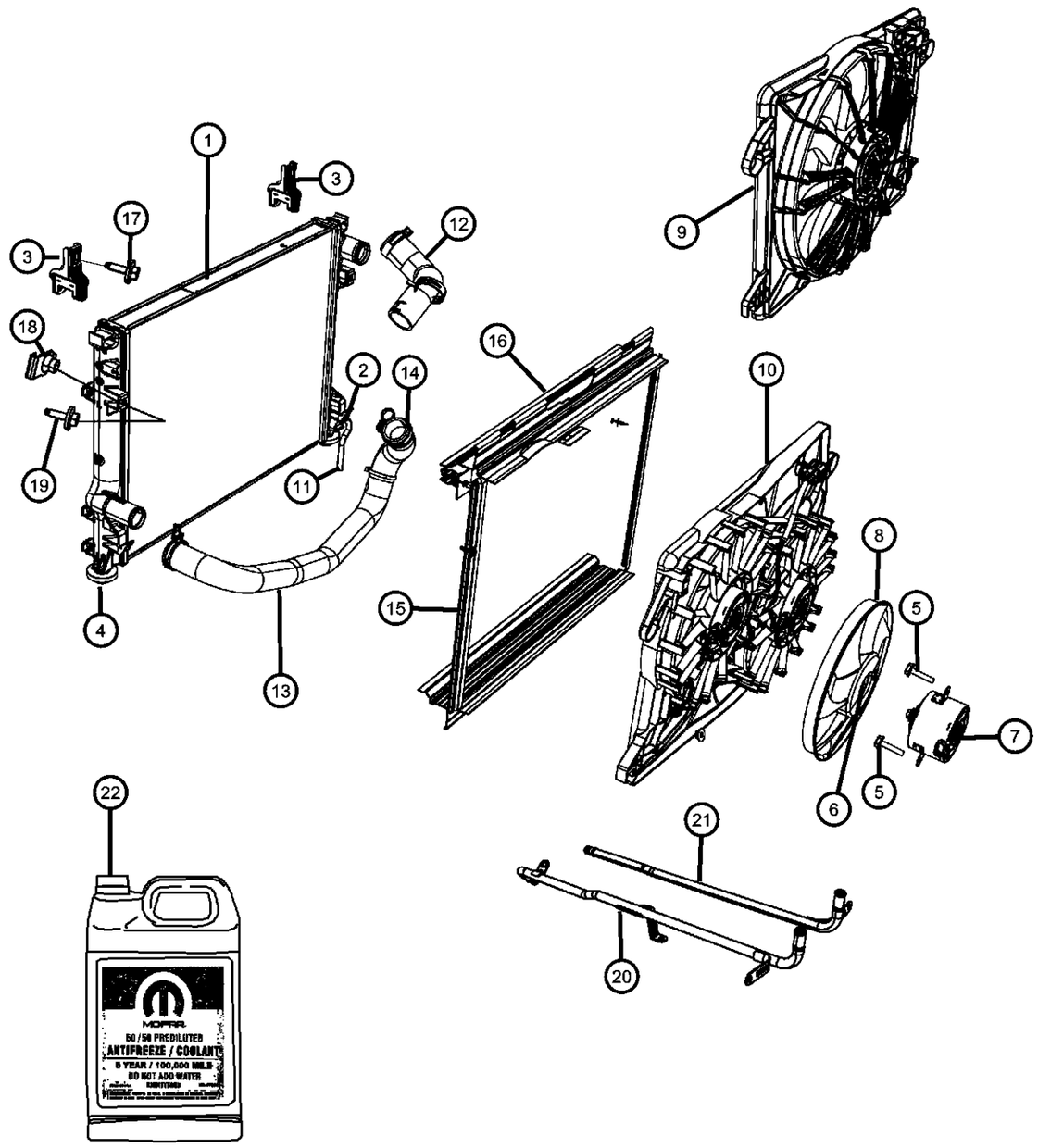

ITEM	PART NUMBER	QTY	LINE	SERIES	BODY	ENGINE	TRANS	TRIM	DESCRIPTION
1									RADIATOR, Engine Cooling
	68050126AA	1	D		22				[NMC]
	68050131AA	1	D		22				[XDL]
2	04644269	1	D		22				DRAINCOCK, Radiator, [NMC]
3	04596474AD	2	D		22				ISOLATOR, Cooling Module Mounting
4	68017994AA	2	D		22				ISOLATOR, Radiator, Lower
5	68029031AA	3	D		22				SCREW AND WASHER
6	05137718AA	1	D		22				NUT, Fan Module Retaining
7									MOTOR, Radiator Fan
	05072330AB	1	D		22				Right
	05137714AA	1	D		22				Left
8	05137713AA	2	D		22				FAN, Cooling
9	68050129AA	1	D		22				FAN, Cooling
10	68050294AA	1	D		22				SHROUD, Fan
11	05137723AA	1	D		22				HOSE, Drain
12									HOSE, Radiator Inlet
	05039678AA	1	D		22	ESF			
	55038118AA	1	D		22	EGG			
	55038144AA	1	D		22	EZC, EZD, EZH			
13									HOSE, Radiator Outlet
	04598096AC	1	D		22	EZC, EZD, EZH			
	05039789AA	1	D		22	ESF			
	55038119AA	1	D		22	EGG			
14	55056415AA	1	D		22	ESF, EZC, EZD, EZH			CLAMP, Hose, 55X15
15	68026556AA	4	D		22				SEAL, Radiator Side Air
16	05170747AA	2	D		22				SEAL, Radiator, Upper Or Lower
17	06104368AA	2	D		22				BOLT AND WASHER, Hex Head, M6X1.00X25.00, COOLING MODULE ISOLATOR ATTACH
18	68046824AA	6	D		22				U-NUT
19	68003499AA	1	D		22				SCREW
20									TUBE, Coolant inlet

DODGE CHALLENGER (LC)

SERIES	LINE	BODY	ENGINE	TRANSMISSION
H = HIGHLINE P = PREMIUM X = SPECIAL	D = DODGE	22 = 2-DR SEDAN TYPE #2	EGG = 3.5L High Output V6 24V MPI Engine ESF = 6.1L SRT HEMI V8 Engine EZC = 5.7L HEMI VCT Engine EZD = 5.7L Hemi VCT MDS Engine	DEC = 6-Speed Manual TREMEC Transmission DGJ = 5-Speed Auto W5A580 Transmission DGV = 4-Spd. Automatic VLP 42RLE Trans

AR = use ase required - = Non illustrrated part

Radiator and Related Items
Figure 7-105

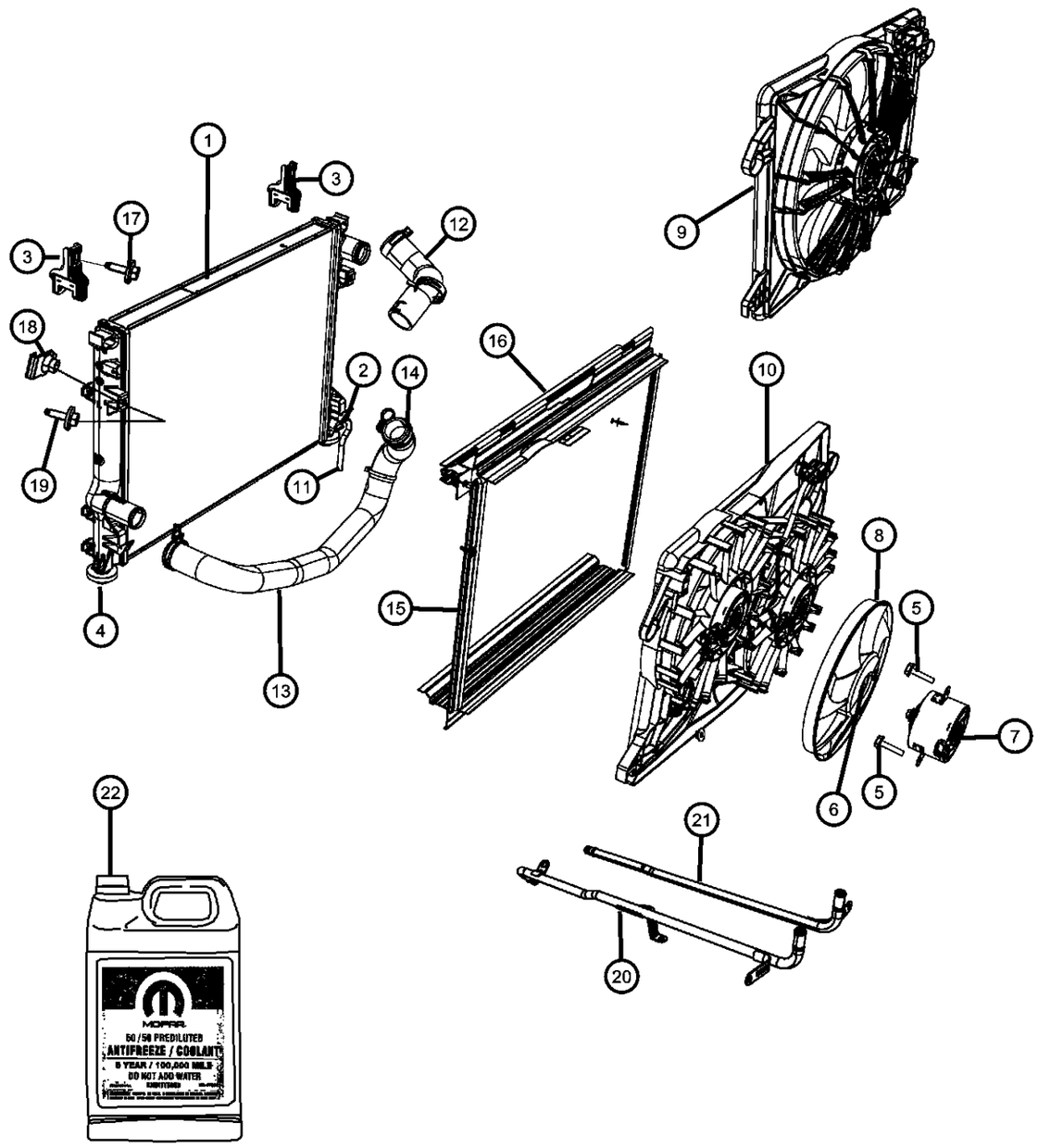

ITEM	PART NUMBER	QTY	LINE	SERIES	BODY	ENGINE	TRANS	TRIM	DESCRIPTION
	05037891AA	1	D		22	ESF			
	04892345AF	1	D		22	EZC, EZD, EZH			
21									TUBE, Coolant outlet
	04892346AD	1	D		22	EZH			
		1	D		22	ESF, EZC, EZD			
22									ANTIFREEZE, Coolant, Gallon, Standard MS-9769
	68048953AA	AR	D		22	EG0			[128 Fluid Ounces] Minimum Ship Quantity of 6 gallons.
	68051212AA	AR	D		22	EG0			[128 Fluid Ounces] 50/50 Mix, Minimum Ship Quantity of 6 gallons.

DODGE CHALLENGER (LC)

SERIES	LINE	BODY	ENGINE	TRANSMISSION
H = HIGHLINE P = PREMIUM X = SPECIAL	D = DODGE	22 = 2-DR SEDAN TYPE #2	EGG = 3.5L High Output V6 24V MPI Engine ESF = 6.1L SRT HEMI V8 Engine EZC = 5.7L HEMI VCT Engine EZD = 5.7L Hemi VCT MDS Engine	DEC = 6-Speed Manual TREMEC Transmission DGJ = 5-Speed Auto W5A580 Transmission DGV = 4-Spd. Automatic VLP 42RLE Trans

AR = use ase required - = Non illustrrated part

Radiator Support
Figure 7-150

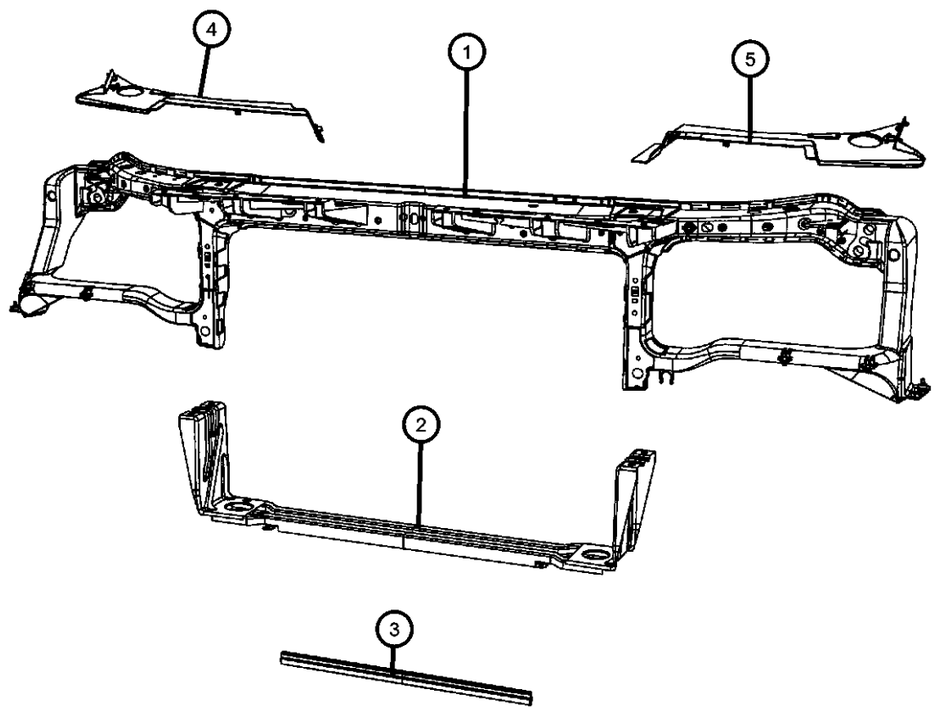

ITEM	PART NUMBER	QTY	LINE	SERIES	BODY	ENGINE	TRANS	TRIM	DESCRIPTION
1	05028743AB	1	D		22				CROSSMEMBER, Front Support
2	05065240AE	1	D		22				CROSSMEMBER, Radiator
3	05112199AB	1	D		22				WEATHERSTRIP, Lower Radiator Crossmember
4	05028748AB	1	D		22				PANEL, Under Hood AppearanceRight
5	05028749AB	1	D		22				PANEL, Under Hood AppearanceLeft

DODGE CHALLENGER (LC)

SERIES	LINE	BODY	ENGINE	TRANSMISSION
H = HIGHLINE P = PREMIUM X = SPECIAL	D = DODGE	22 = 2-DR SEDAN TYPE #2	EGG = 3.5L High Output V6 24V MPI Engine ESF = 6.1L SRT HEMI V8 Engine EZC = 5.7L HEMI VCT Engine EZD = 5.7L Hemi VCT MDS Engine	DEC = 6-Speed Manual TREMEC Transmission DGJ = 5-Speed Auto W5A580 Transmission DGV = 4-Spd. Automatic VLP 42RLE Trans

Water Pump and Related Parts
Figure 7-205

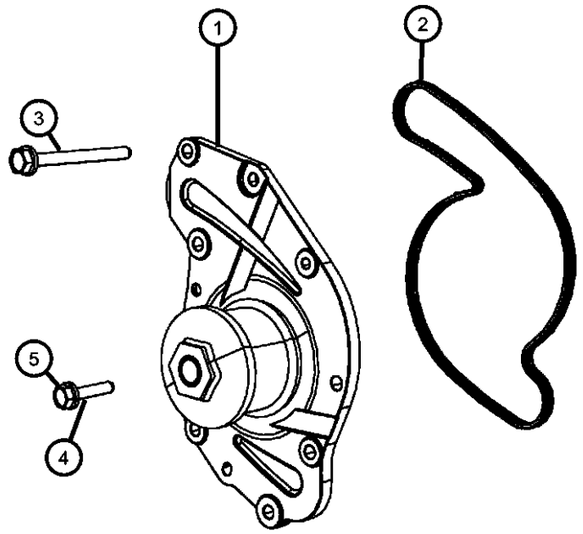

ITEM	PART NUMBER	QTY	LINE	SERIES	BODY	ENGINE	TRANS	TRIM	DESCRIPTION
Sales Codes:									
[EGG] = 3.5L HIGH OUTPUT V6 24V MPI									
1	04792968AD	1	D		22	EGG			PUMP, Water
2	04792982AA	1	D		22	EGG			GASKET, Water Pump
3	06101770	6	D		22	EGG			BOLT AND CONED WASHER, Hex head, M6X1.00X45.00
4	06100267	4	D		22	EGG			BOLT AND CONED WASHER, Hex Head, M6x25x12.5, WATER PUMP TO TIMING BELT COVER
5	06100266	1	D		22	EGG			BOLT AND WASHER, M6x1.0x20, WATER PUMP TO TIMING BELT COVER

DODGE CHALLENGER (LC)

SERIES	LINE	BODY	ENGINE	TRANSMISSION
H = HIGHLINE	D = DODGE	22 = 2-DR SEDAN TYPE #2	EGG = 3.5L High Output V6 24V MPI Engine	DEC = 6-Speed Manual TREMEC Transmission
P = PREMIUM			ESF = 6.1L SRT HEMI V8 Engine	DGJ = 5-Speed Auto W5A580 Transmission
X = SPECIAL			EZC = 5.7L HEMI VCT Engine	DGV = 4-Spd. Automatic VLP 42RLE Trans
			EZD = 5.7L Hemi VCT MDS Engine	

Water Pump and Related Parts
Figure 7-210

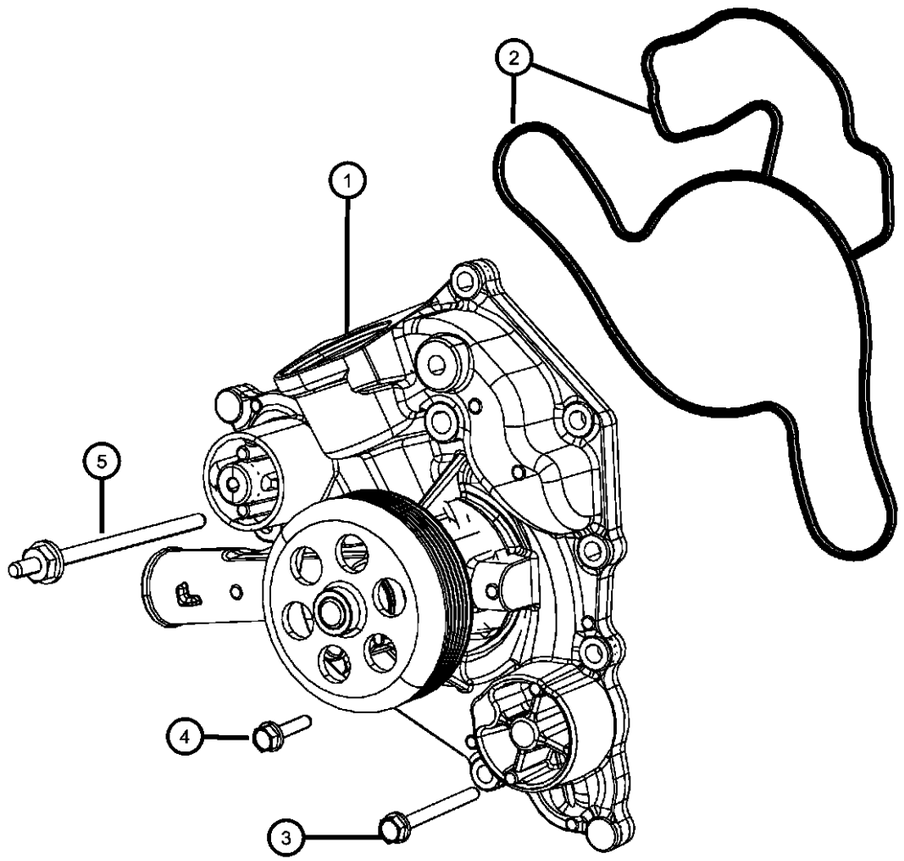

ITEM	PART NUMBER	QTY	LINE	SERIES	BODY	ENGINE	TRANS	TRIM	DESCRIPTION
Sales Codes:									
[EZ0] = ALL 5.7L 8CYL GAS ENGINES									
1									PUMP, Water
	04792838AB	1	D		22	ESF			
	53022095AF	1	D		22	EZC, EZD, EZH			
2									GASKET, Water Pump
	04792922AA	1	D		22	ESF			
	04792922AB	1	D		22	EZC, EZD			
3	06506270AA	5	D		22	ESF			BOLT AND CONED WASHER, Hex Head, M8X1.25X80.00, WATER PUMP TO CYLINDER BLOCK
4									BOLT AND CONED WASHER, Hex Head, M8X1.25X35.00
	06506269AA	5	D		22	EZC, EZD			WATER PUMP TO FRONT COVER
		5	D		22	ESF			WATER PUMP TO FRONT COVER
5									STUD
	06506684AA	1	D		22	EZC, EZD			WATER PUMP TO CYL BLOCK
		1	D		22	ESF			WATER PUMP TO CYL BLOCK

DODGE CHALLENGER (LC)

SERIES	LINE	BODY	ENGINE	TRANSMISSION
H = HIGHLINE P = PREMIUM X = SPECIAL	D = DODGE	22 = 2-DR SEDAN TYPE #2	EGG = 3.5L High Output V6 24V MPI Engine ESF = 6.1L SRT HEMI V8 Engine EZC = 5.7L HEMI VCT Engine EZD = 5.7L Hemi VCT MDS Engine	DEC = 6-Speed Manual TREMEC Transmission DGJ = 5-Speed Auto W5A580 Transmission DGV = 4-Spd. Automatic VLP 42RLE Trans

Thermostat and Related Parts
Figure 7-250

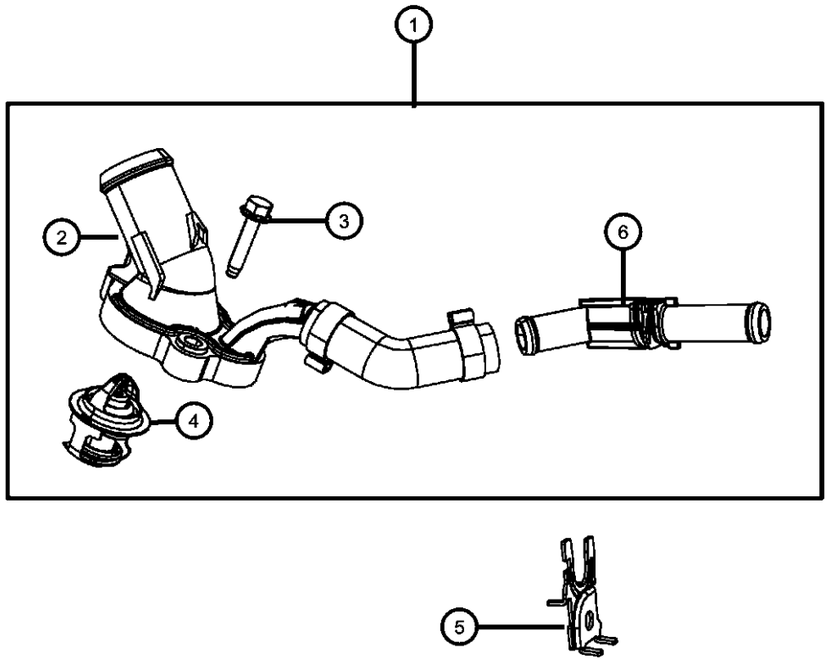

ITEM	PART NUMBER	QTY	LINE	SERIES	BODY	ENGINE	TRANS	TRIM	DESCRIPTION
1	04892312AC	1	D		22	EGG			CONNECTOR, Water Inlet
2		1							HOUSING, Thermostat, Serviced with Item 1, (NOT SERVICED)
3	06105039AA	2	D		22	EGG			BOLT, Hex Flange Head, M6X1.00X30.00
4		2							THERMOSTAT, Serviced with Item 1, (NOT SERVICED)
5	04892210AD	1	D		22	EGG			BRACKET, Tube
6		1							TUBE, Water Inlet, Serviced with Item 1, (NOT SERVICED)

DODGE CHALLENGER (LC)

SERIES	LINE	BODY	ENGINE	TRANSMISSION
H = HIGHLINE P = PREMIUM X = SPECIAL	D = DODGE	22 = 2-DR SEDAN TYPE #2	EGG = 3.5L High Output V6 24V MPI Engine ESF = 6.1L SRT HEMI V8 Engine EZC = 5.7L HEMI VCT Engine EZD = 5.7L Hemi VCT MDS Engine	DEC = 6-Speed Manual TREMEC Transmission DGJ = 5-Speed Auto W5A580 Transmission DGV = 4-Spd. Automatic VLP 42RLE Trans

Thermostat and Related Parts
Figure 7-260

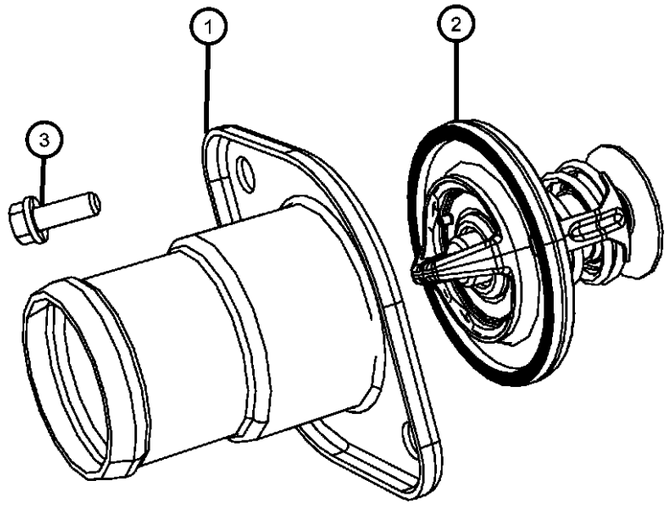

ITEM	PART NUMBER	QTY	LINE	SERIES	BODY	ENGINE	TRANS	TRIM	DESCRIPTION
1									HOUSING, Thermostat
	53021536AC	1	D		22	EZC, EZD			
		1	D		22	ESF			
2									THERMOSTAT
	52028898AE	1	D		22	ESF			
	68060340AA	1	D		22	EZC, EZD			
		1	D		22	EZC, EZD, EZH			
3	06507071AA	2	D		22	ESF			SCREW AND WASHER, Hex Head, M8X1.25X24.00

DODGE CHALLENGER (LC)

SERIES	LINE	BODY	ENGINE	TRANSMISSION
H = HIGHLINE P = PREMIUM X = SPECIAL	D = DODGE	22 = 2-DR SEDAN TYPE #2	EGG = 3.5L High Output V6 24V MPI Engine ESF = 6.1L SRT HEMI V8 Engine EZC = 5.7L HEMI VCT Engine EZD = 5.7L Hemi VCT MDS Engine	DEC = 6-Speed Manual TREMEC Transmission DGJ = 5-Speed Auto W5A580 Transmission DGV = 4-Spd. Automatic VLP 42RLE Trans

Coolant Recovery Bottle
Figure 7-305

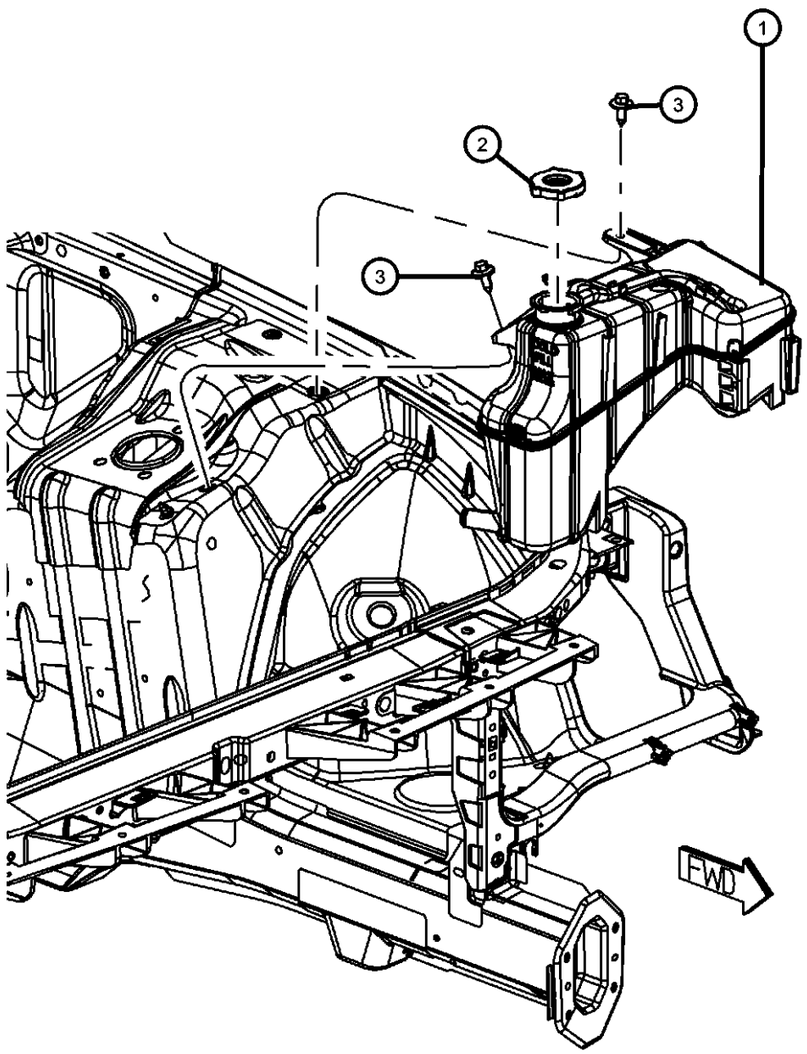

ITEM	PART NUMBER	QTY	LINE	SERIES	BODY	ENGINE	TRANS	TRIM	DESCRIPTION
1	04596466AF	1	D		22				BOTTLE, Coolant Recovery
2	55116897AA	1	D		22				CAP, Radiator
3	06034716	2	D		22				SCREW AND WASHER, Hex Flange Head, .25-14x.875, COOLANT BOTTLE MOUNTING

DODGE CHALLENGER (LC)

SERIES	LINE	BODY	ENGINE	TRANSMISSION
H = HIGHLINE P = PREMIUM X = SPECIAL	D = DODGE	22 = 2-DR SEDAN TYPE #2	EGG = 3.5L High Output V6 24V MPI Engine ESF = 6.1L SRT HEMI V8 Engine EZC = 5.7L HEMI VCT Engine EZD = 5.7L Hemi VCT MDS Engine	DEC = 6-Speed Manual TREMEC Transmission DGJ = 5-Speed Auto W5A580 Transmission DGV = 4-Spd. Automatic VLP 42RLE Trans

Pulleys and Related Parts
Figure 7-405

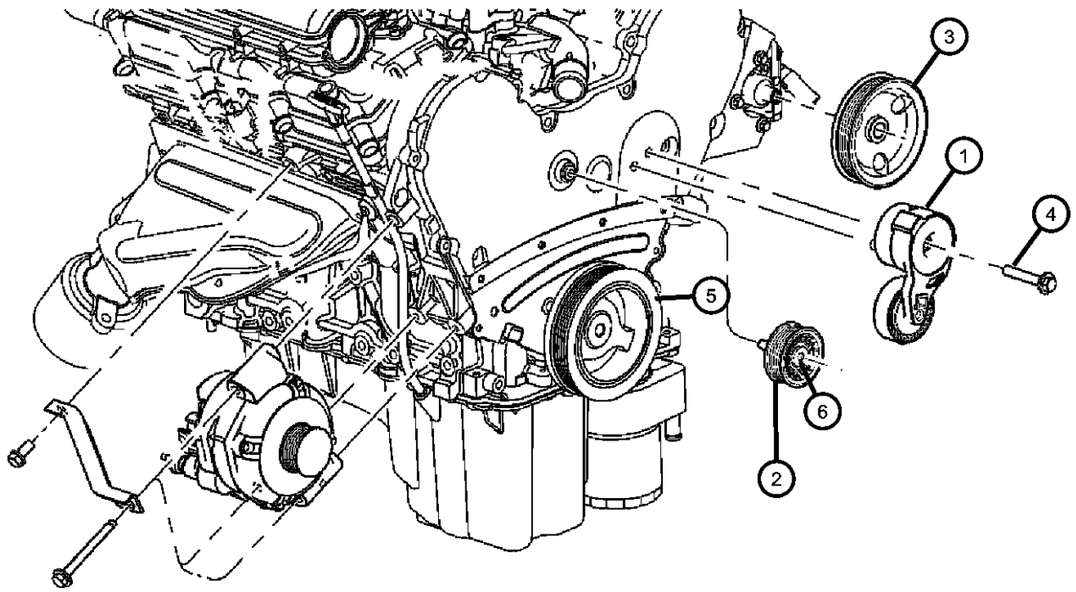

ITEM	PART NUMBER	QTY	LINE	SERIES	BODY	ENGINE	TRANS	TRIM	DESCRIPTION
Sales Codes:									
[EGG] = 3.5L HIGH OUTPUT V6 24V MPI									
1	04861660AA	1	D		22	EGG, EZC, EZD			TENSIONER, Belt
2	04593848AA	1	D		22	EGG			PULLEY, Idler
3	04892093AA	1	D		22	EGG			PULLEY, Power Steering Pump
4	06104221AA	1	D		22	EGG			BOLT, Hex Flange Head, M10X1.50X55.00
5		1							PULLEY, Crankshaft, Serviced with Crank Damper group 09, (NOT SERVICED)
6	06508247AA	1	D		22	EGG			SCREW, Hex Flange Head, M8x1.25x34

DODGE CHALLENGER (LC)

SERIES	LINE	BODY	ENGINE	TRANSMISSION
H = HIGHLINE P = PREMIUM X = SPECIAL	D = DODGE	22 = 2-DR SEDAN TYPE #2	EGG = 3.5L High Output V6 24V MPI Engine ESF = 6.1L SRT HEMI V8 Engine EZC = 5.7L HEMI VCT Engine EZD = 5.7L Hemi VCT MDS Engine	DEC = 6-Speed Manual TREMEC Transmission DGJ = 5-Speed Auto W5A580 Transmission DGV = 4-Spd. Automatic VLP 42RLE Trans

Pulleys and Related Parts
Figure 7-410

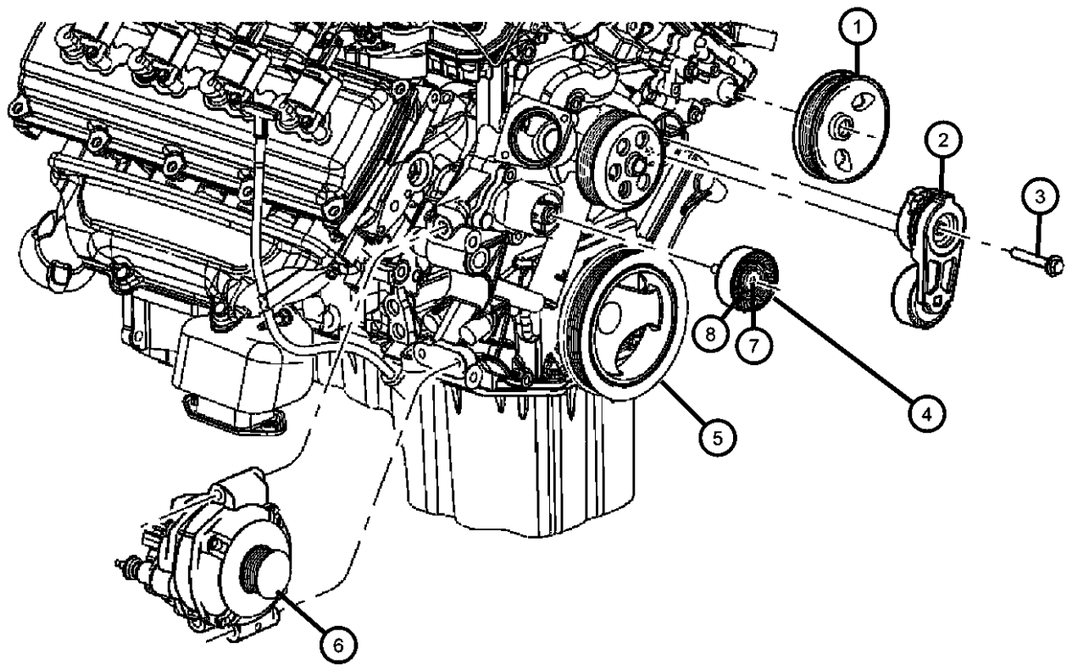

ITEM	PART NUMBER	QTY	LINE	SERIES	BODY	ENGINE	TRANS	TRIM	DESCRIPTION
1									PULLEY, Power Steering Pump
	04578769AA	1	D		22	EZC			
	04892093AA	1	D		22	ESF	DGJ		
		1	D		22	EZD			
2									TENSIONER, Belt
	04861660AA	1	D		22	ESF			
		1	D		22	EGG, EZC, EZD			
3	06104222AA	1	D		22	ESF			BOLT, Hex Flange Head, M10X1.5X60.0, Tensioner to Block
4									PULLEY, Idler
	68061368AA	1	D		22	EZC, EZD, EZH			
	04891720AA	1	D		22	ESF			
5		1							PULLEY, Crankshaft, Serviced with Damper, (NOT SERVICED)
6		1							PULLEY, Alternator, Serviced with Alternator, (NOT SERVICED)
7	06508247AA	1	D		22	EZC, EZD			SCREW, Hex Flange Head, M8x1.25x34
8	06507929AA	1	D		22	ESF			SCREW, Shoulder Hex Flange Head, M10x1.50x40.00

DODGE CHALLENGER (LC)

SERIES	LINE	BODY	ENGINE	TRANSMISSION
H = HIGHLINE	D = DODGE	22 = 2-DR SEDAN TYPE #2	EGG = 3.5L High Output V6 24V MPI Engine	DEC = 6-Speed Manual TREMEC Transmission
P = PREMIUM			ESF = 6.1L SRT HEMI V8 Engine	DGJ = 5-Speed Auto W5A580 Transmission
X = SPECIAL			EZC = 5.7L HEMI VCT Engine	DGV = 4-Spd. Automatic VLP 42RLE Trans
			EZD = 5.7L Hemi VCT MDS Engine	

Belts, Serpentine and V-Belts
Figure 7-505

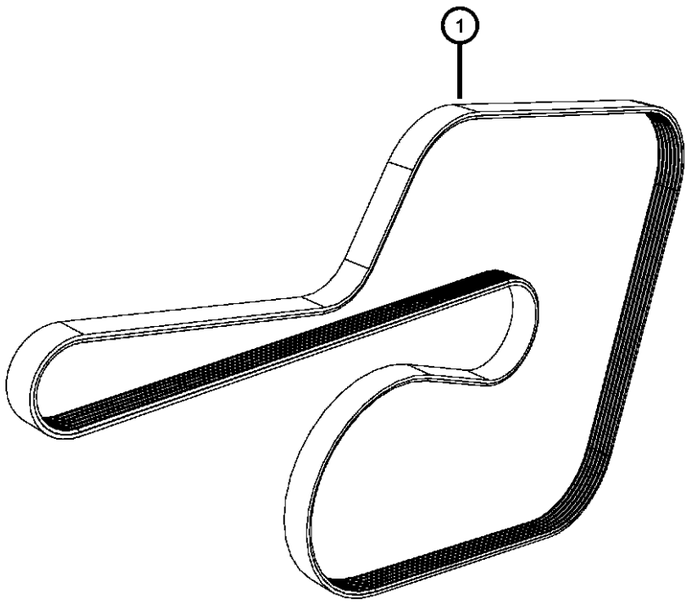

ITEM	PART NUMBER	QTY	LINE	SERIES	BODY	ENGINE	TRANS	TRIM	DESCRIPTION
Sales Codes:									
[EER] = 2.7L V6 DOHC 24 VALVE MPI									
[EGC] = MAGNUM 3.5L V6 SOHC 24V									
[EGG] = 3.5L HIGH OUTPUT V6 24V MPI									
[EGJ] = 3.5L V6 SOHC 24 VALVE									
[EGK] =3.5L HIGH OUTPUT V6 24V MPI									
1									BELT, Serpentine
	04593684AA	1	D		22	EGG			
	05037542AA	1	D		22	ESF			
	68060352AA	1	D		22	EZC, EZD			
		1	D		22	EZC, EZD, EZH			

DODGE CHALLENGER (LC)

SERIES	LINE	BODY	ENGINE	TRANSMISSION
H = HIGHLINE	D = DODGE	22 = 2-DR SEDAN TYPE #2	EGG = 3.5L High Output V6 24V MPI Engine	DEC = 6-Speed Manual TREMEC Transmission
P = PREMIUM			ESF = 6.1L SRT HEMI V8 Engine	DGJ = 5-Speed Auto W5A580 Transmission
X = SPECIAL			EZC = 5.7L HEMI VCT Engine	DGV = 4-Spd. Automatic VLP 42RLE Trans
			EZD = 5.7L Hemi VCT MDS Engine	

Transmission Oil Cooler and Lines
Figure 7-605

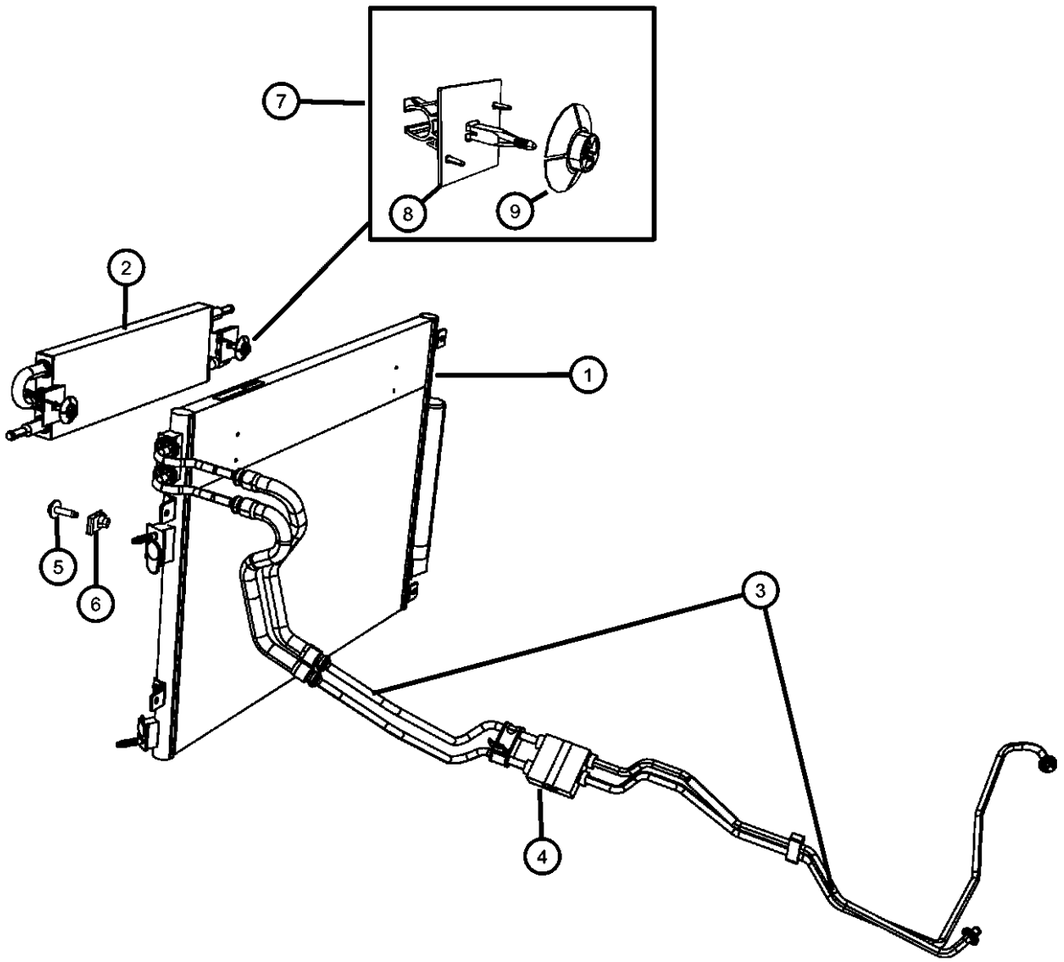

ITEM	PART NUMBER	QTY	LINE	SERIES	BODY	ENGINE	TRANS	TRIM	DESCRIPTION
Sales Codes:									
[EE0] = All 2.7L V6 DOHC 24 VALVE MPI									
[EG0] = All 3.5L HIGH OUTPUT V6 24 VALVE									
[EZ0] = All 5.7L HEMI									
1									COOLER, Condenser and Trans Cooler
	68050127AA	1	D		22				[NMC,XDK]
	68050132AA	1	D		22				[XDL]
2									COOLER, Power Steering
	05137721AA	1	D		22				[NMC]
	68017995AA	1	D		22				[XDL]
3									TUBE AND HOSE, Oil Cooler
	04598101AA	1	D		22	EZD	DGJ		
	55038150AA	1	D		22	EGG	DGV		
	55038151AA	1	D		22	ESF	DGJ		
4									VALVE, Cooler Bypass
	55111005AA	1	D		22	EZD	DGJ		
		1	D		22	ESF	DGJ		
5	68046823AA	6	D		22				SCREW
6									U-NUT
	68051433AA	2	D	X	22				
		2	D	H	22				
		2	D	P	22				
7	05137778AC	2	D		22				RETAINER PACKAGE, Power Steering Cooler
8	05183297AB	2	D		22				RETAINER, Power Steering Oil Cooler
9		2							CLIP, Locking, (NOT SERVICED)

DODGE CHALLENGER (LC)

SERIES	LINE	BODY	ENGINE	TRANSMISSION
H = HIGHLINE	D = DODGE	22 = 2-DR SEDAN TYPE #2	EGG = 3.5L High Output V6 24V MPI Engine	DEC = 6-Speed Manual TREMEC Transmission
P = PREMIUM			ESF = 6.1L SRT HEMI V8 Engine	DGJ = 5-Speed Auto W5A580 Transmission
X = SPECIAL			EZC = 5.7L HEMI VCT Engine	DGV = 4-Spd. Automatic VLP 42RLE Trans
			EZD = 5.7L Hemi VCT MDS Engine	

Group - 8

Electrical

008-100 Starters	**008-1000** Battery, Battery Tray and Cables	**008-1100** Lamps-Interior and Exterior	**008-1200** Wiring-Powertrain
008-1300 Wiring-Headlamp to Dash	**008-1400** Wiring-Instrument Panel	**008-1500** Wiring-Body and Accessories	**008-1600** Wiring and Repair

008-1900 Ignition - Spark Plugs, Cables, Coils, and Glow Plugs	**008-200** Generators / Alternators	**008-2100** Instrument Panel Cluster	**008-2200** Radio, Antenna, Speakers, DVD, and Video systems
008-2400 Navigation	**008-2500** Telecommunication	**008-2700** Speed Control	**008-300** Wiper and Washer System
008-400 Keys, Modules and Engine Controllers	**008-500** Power Distribution Center, Fuse Block, Junction Block, Relays and Fuses	**008-600** Sensors	**008-800** Switches
008-900 Horns			

Group - 8 Electrical

Illustration Title — Group-Fig. No.

Starters
Starter and Related Parts 3.5L [EGG] ..... Fig. 8 - 105
Starter and Related Parts 5.7L [EZC][EZD], 6.1L [ESF] ..... Fig. 8 - 106
Remote Start ..... Fig. 8 - 110

Generators / Alternators
Generator/Alternator and Related Parts ..... Fig. 8 - 205
Generator/Alternator and Related Parts ..... Fig. 8 - 206

Wiper and Washer System
Front Wiper System ..... Fig. 8 - 305
Front Washer System ..... Fig. 8 - 310

Keys, Modules and Engine Controllers
Modules Engine Compartment ..... Fig. 8 - 405
Modules Instrument Panel ..... Fig. 8 - 410
Modules Overhead ..... Fig. 8 - 415
Modules Body ..... Fig. 8 - 420
Modules Lighting ..... Fig. 8 - 425
Modules Brakes, Suspension and Steering ..... Fig. 8 - 430
Receiver Modules, Keys, and Key FOBS ..... Fig. 8 - 435

Power Distribution Center, Fuse Block, Junction Block, Relays and Fuses
Power Distribution Center Front Under Hood ..... Fig. 8 - 505
Power Distribution Center Rear Trunk Area ..... Fig. 8 - 506

Sensors
Sensors Engine ..... Fig. 8 - 605
Sensors, Gas Engine ..... Fig. 8 - 606
Sensors Oxygen Gas ..... Fig. 8 - 615
Sensors Brakes ..... Fig. 8 - 625
Sensors Suspension and Steering ..... Fig. 8 - 630
Sensors Body ..... Fig. 8 - 635
Sensors Drivetrain ..... Fig. 8 - 640

Switches
Switches Instrument Panel ..... Fig. 8 - 805
Switches Doors, Decklid, and Liftgate ..... Fig. 8 - 815
Switches Body ..... Fig. 8 - 820
Switches Seats ..... Fig. 8 - 825
Switches Steering Column and Wheel ..... Fig. 8 - 830
Switches Powertrain ..... Fig. 8 - 835
Switches Heating and Air Conditioning ..... Fig. 8 - 840
Switches Lighting ..... Fig. 8 - 845

Horns
Horns ..... Fig. 8 - 905

Battery, Battery Tray and Cables
Battery Tray and Support ..... Fig. 8 - 1005
Battery Wiring ..... Fig. 8 - 1010

Lamps-Interior and Exterior
Lamps Front ..... Fig. 8 - 1105
Lamps Rear ..... Fig. 8 - 1110
Lamps Interior ..... Fig. 8 - 1115

Wiring-Powertrain
Wiring Engine ..... Fig. 8 - 1205
Wiring Engine ..... Fig. 8 - 1206
Wiring Engine ..... Fig. 8 - 1207
Wiring Transmission ..... Fig. 8 - 1215
Ground Straps ..... Fig. 8 - 1220

Wiring-Headlamp to Dash
Wiring Headlamp to Dash ..... Fig. 8 - 1305

Wiring-Instrument Panel
Wiring Instrument Panel ..... Fig. 8 - 1405

Wiring-Body and Accessories
Wiring Body ..... Fig. 8 - 1505
Wiring Door, Deck Lid, and Liftgate ..... Fig. 8 - 1515
Wiring Seats, Front ..... Fig. 8 - 1520
Wiring Heater and Air Conditioning ..... Fig. 8 - 1530

Wiring and Repair
Wiring Repairs ..... Fig. 8 - 1605

Ignition - Spark Plugs, Cables, Coils, and Glow Plugs
Spark Plugs, Ignition Coil and Cables ..... Fig. 8 - 1905
Spark Plugs, Ignition Coil and Cables ..... Fig. 8 - 1906
Spark Plugs and Ignition Coil ..... Fig. 8 - 1910

Instrument Panel Cluster
Instrument Panel Cluster ..... Fig. 8 - 2105

Radio, Antenna, Speakers, DVD, and Video systems
Radio ..... Fig. 8 - 2205
Antenna ..... Fig. 8 - 2210
Satellite Radio System ..... Fig. 8 - 2215
Speakers and Amplifiers ..... Fig. 8 - 2220

Navigation
Navigation System ..... Fig. 8 - 2405

Telecommunication
Telecommunications ..... Fig. 8 - 2505

Speed Control
Speed Control ..... Fig. 8 - 2705

Starter and Related Parts 3.5L [EGG]
Figure 8-105

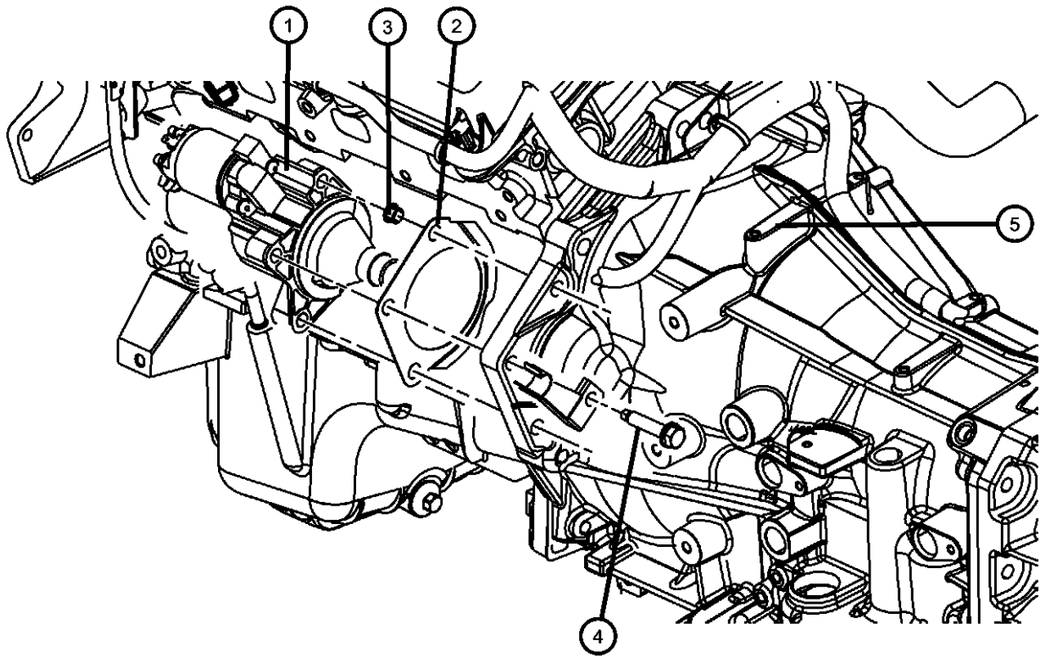

ITEM	PART NUMBER	QTY	LINE	SERIES	BODY	ENGINE	TRANS	TRIM	DESCRIPTION
1	04801651AA	1	D		22	EGG			STARTER, Engine
2	04861621AA	1	D		22	EGG	DGV		SHIELD, Starter
3	04593525	1	D		22	EGG			SLEEVE, Starter Shield
4	06502717	3	D		22	EGG			BOLT AND WASHER, Hex Head, M10x1.50x50.00
5	04608996AD	1	D		22	EGG			BRACKET, Wiring

DODGE CHALLENGER (LC)

SERIES	LINE	BODY	ENGINE	TRANSMISSION
H = HIGHLINE	D = DODGE	22 = 2-DR SEDAN TYPE #2	EGG = 3.5L High Output V6 24V MPI Engine	DEC = 6-Speed Manual TREMEC Transmission
P = PREMIUM			ESF = 6.1L SRT HEMI V8 Engine	DGJ = 5-Speed Auto W5A580 Transmission
X = SPECIAL			EZC = 5.7L HEMI VCT Engine	DGV = 4-Spd. Automatic VLP 42RLE Trans
			EZD = 5.7L Hemi VCT MDS Engine	

Starter and Related Parts 5.7L [EZC][EZD], 6.1L [ESF]
Figure 8-106

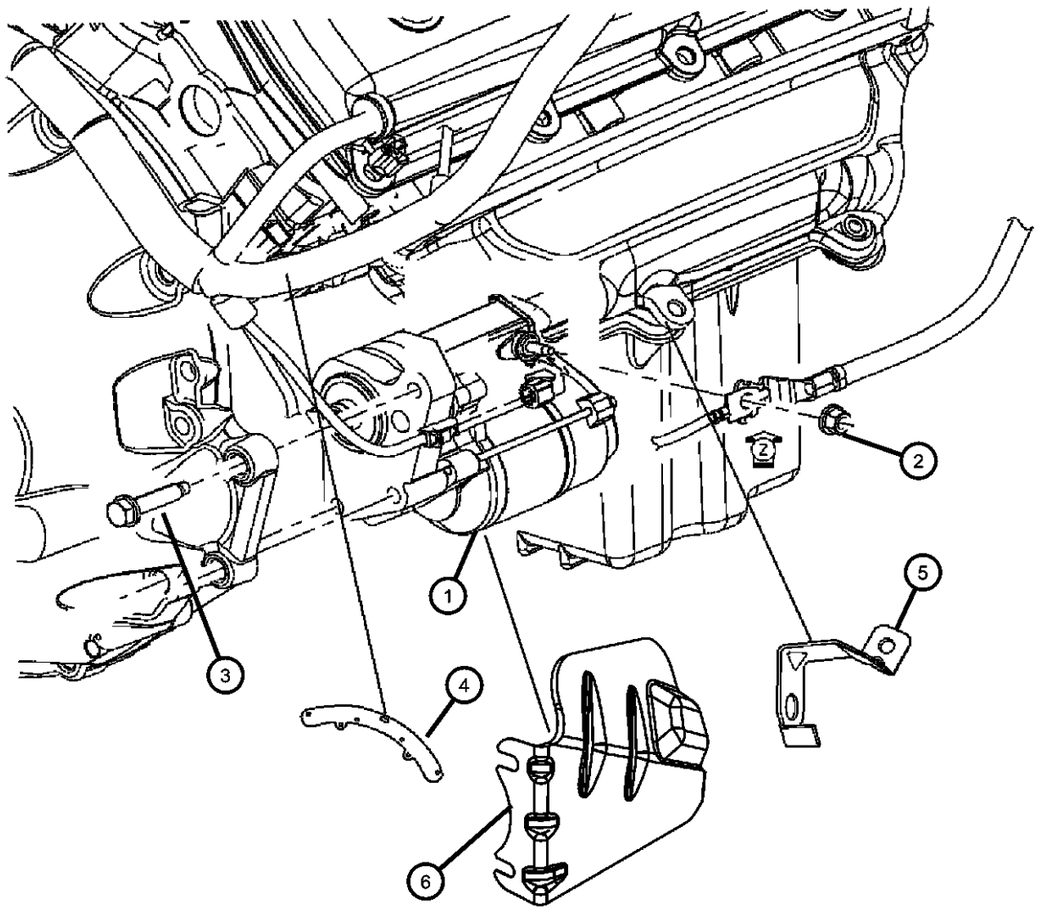

ITEM	PART NUMBER	QTY	LINE	SERIES	BODY	ENGINE	TRANS	TRIM	DESCRIPTION
1									STARTER, Engine
	04608801AB	1	D		22	EZC, EZD			
	05030076AC	1	D		22	ESF			
2	06101809	2	D		22	EGG, ESF, EZC, EZD			NUT AND WASHER, Hex, M8x1.25
3									BOLT AND WASHER, Hex Head, M10x1.50x50.00
	06502717	2	D		22	EZC	DEC		
		3	D		22	EZD	DGJ		
		1	D		22	ESF			
4	04608997AC	1	D		22	EZC, EZD, ESF			BRACKET, Wiring Harness
5	04607124AA	1	D		22	ESF, EZC, EZD			BRACKET, Wiring
6	05030085AB	1	D		22	ESF			SHIELD, Heat

DODGE CHALLENGER (LC)

SERIES	LINE	BODY	ENGINE	TRANSMISSION
H = HIGHLINE P = PREMIUM X = SPECIAL	D = DODGE	22 = 2-DR SEDAN TYPE #2	EGG = 3.5L High Output V6 24V MPI Engine ESF = 6.1L SRT HEMI V8 Engine EZC = 5.7L HEMI VCT Engine EZD = 5.7L Hemi VCT MDS Engine	DEC = 6-Speed Manual TREMEC Transmission DGJ = 5-Speed Auto W5A580 Transmission DGV = 4-Spd. Automatic VLP 42RLE Trans

Remote Start
Figure 8-110

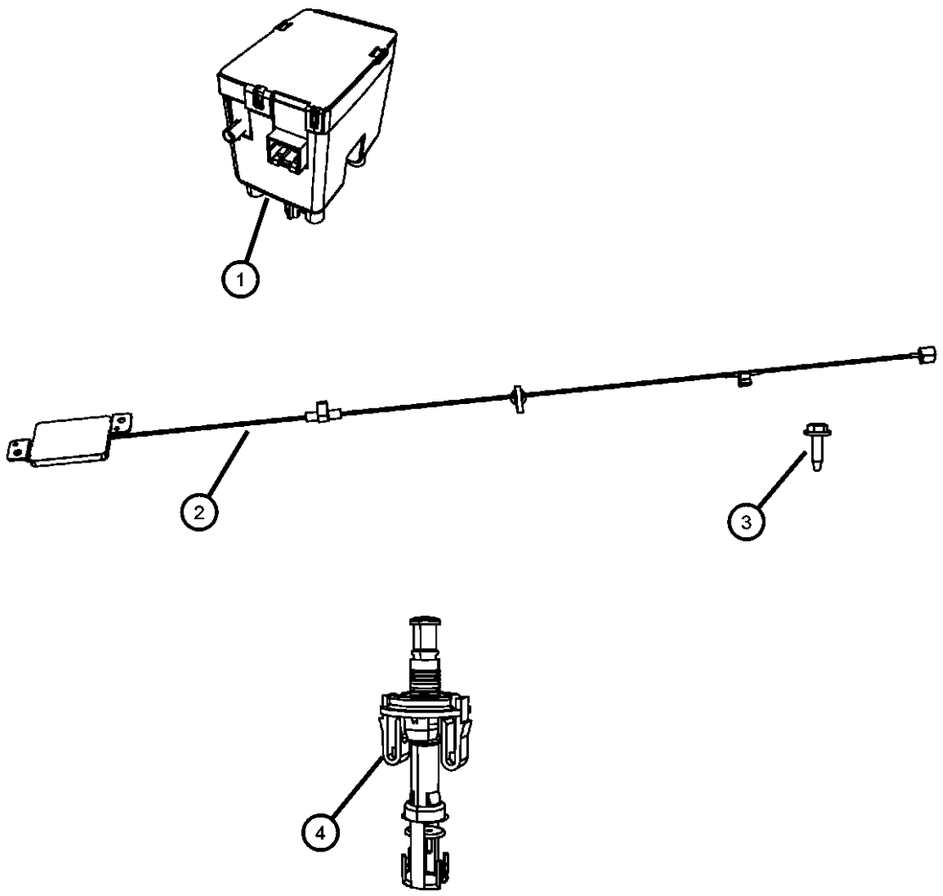

ITEM	PART NUMBER	QTY	LINE	SERIES	BODY	ENGINE	TRANS	TRIM	DESCRIPTION
1	05026366AE	1	D		22		DGJ, DGV		RECEIVER, Wireless Ignition Node
2	05026433AB	1	D		22				ANTENNA, Keyless Entry
3		1							SCREW, Tapping Hex Head, M4.2X1.7X15.80, (NOT SERVICED)
4	05026211AA	1	D		22				SWITCH, Underhood

DODGE CHALLENGER (LC)

SERIES	LINE	BODY	ENGINE	TRANSMISSION
H = HIGHLINE P = PREMIUM X = SPECIAL	D = DODGE	22 = 2-DR SEDAN TYPE #2	EGG = 3.5L High Output V6 24V MPI Engine ESF = 6.1L SRT HEMI V8 Engine EZC = 5.7L HEMI VCT Engine EZD = 5.7L Hemi VCT MDS Engine	DEC = 6-Speed Manual TREMEC Transmission DGJ = 5-Speed Auto W5A580 Transmission DGV = 4-Spd. Automatic VLP 42RLE Trans

Generator/Alternator and Related Parts
Figure 8-205

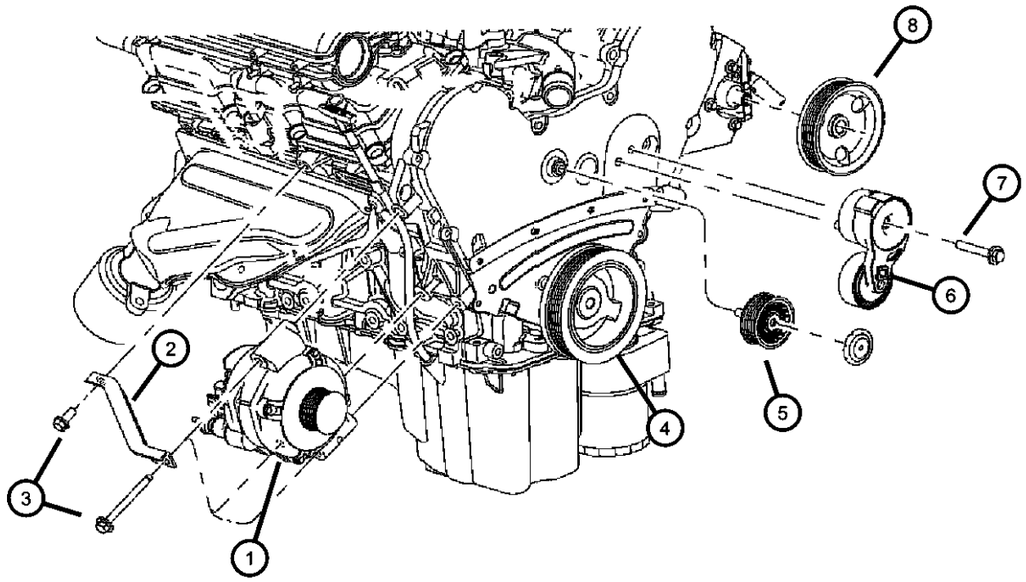

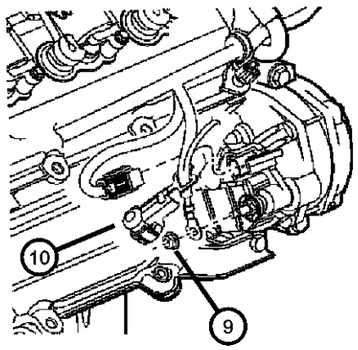

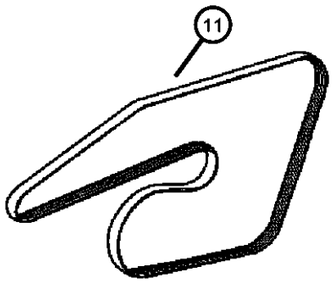

ITEM	PART NUMBER	QTY	LINE	SERIES	BODY	ENGINE	TRANS	TRIM	DESCRIPTION
1									GENERATOR, Engine
	04896805AD	1	D		22	EGG, ESF, EZC, EZD			Up to 11/17/08
	04896805AE	1	D		22				After 11/17/08
2	04892048AB	1	D		22	EGG			STRUT, Alternator Bracket
3	06507394AA	3	D		22				SCREW, Alternator
4	04792811AB	1	D		22	EGG			DAMPER, Crankshaft
5	04593848AA	1	D		22	EGG			PULLEY, Idler
6	04861660AA	1	D		22	EGG, EZC, EZD			TENSIONER, Belt
7	06104221AA	1	D		22	EGG			BOLT, Hex Flange Head, M10X1.50X55.00
8	04892093AA	1	D		22	EGG			PULLEY, Power Steering Pump
9	06502720	1	D		22				NUT, Hex Flange Lock, M8x1.25
10		1							CAP, Serviced in Engine Harness only, (NOT SERVICED)
11	04593684AA	1	D		22	EGG			BELT, Serpentine

DODGE CHALLENGER (LC)

SERIES	LINE	BODY	ENGINE	TRANSMISSION
H = HIGHLINE	D = DODGE	22 = 2-DR SEDAN TYPE #2	EGG = 3.5L High Output V6 24V MPI Engine	DEC = 6-Speed Manual TREMEC Transmission
P = PREMIUM			ESF = 6.1L SRT HEMI V8 Engine	DGJ = 5-Speed Auto W5A580 Transmission
X = SPECIAL			EZC = 5.7L HEMI VCT Engine	DGV = 4-Spd. Automatic VLP 42RLE Trans
			EZD = 5.7L Hemi VCT MDS Engine	

AR = use ase required - = Non illustrrated part

Generator/Alternator and Related Parts
Figure 8-206

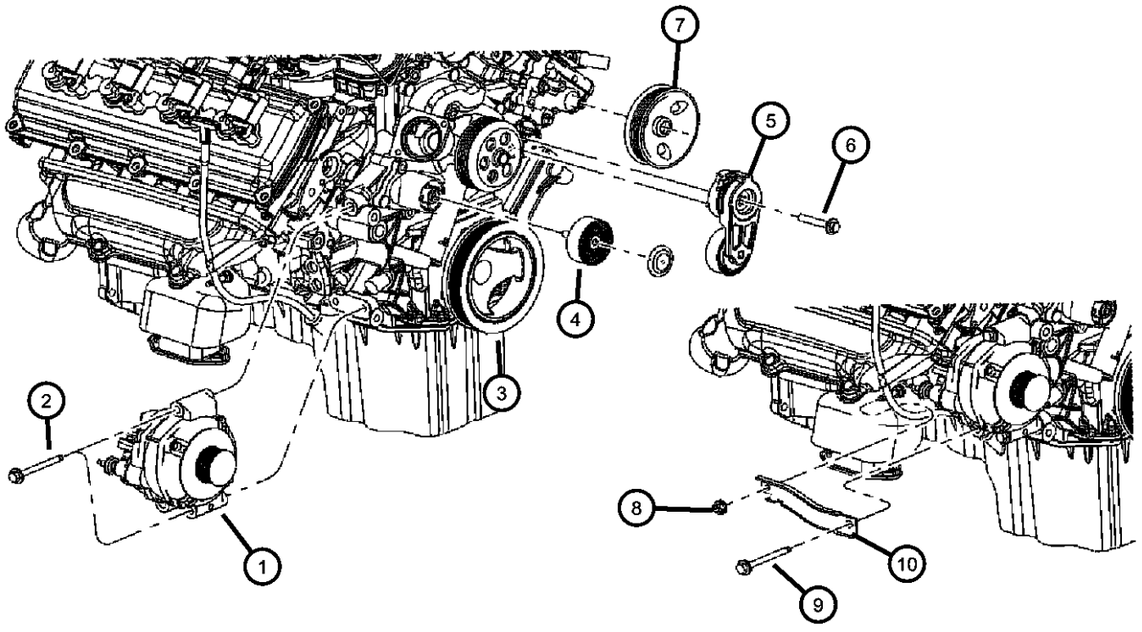

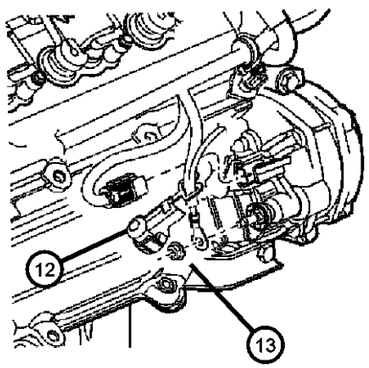

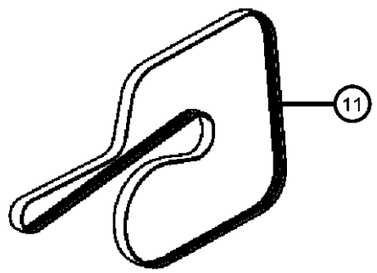

ITEM	PART NUMBER	QTY	LINE	SERIES	BODY	ENGINE	TRANS	TRIM	DESCRIPTION
1									GENERATOR, Engine
	04896805AD	1	D		22	EGG, ESF, EZC, EZD			Up to 11/17/08
	04896805AE	1	D		22				After 11/17/08
2	06507394AA	3	D		22				SCREW, Alternator
3	05037394AA	1	D		22	ESF			DAMPER, Crankshaft
4									PULLEY, Idler
	04891720AA	1	D		22	ESF			
	68061368AA	1	D		22	EZC, EZD, EZH			
5									TENSIONER, Belt
	04861660AA	1	D		22	ESF			
		1	D		22	EGG, EZC, EZD			
6	06507479AA	3	D		22	ESF			BOLT AND WASHER, Hex Head, M8x1.25x20.00
7									PULLEY, Power Steering Pump
	04892093AA	1	D		22	EZD			
	04578769AA	1	D		22	EZC			
		1	D		22	ESF	DGJ		
8									NUT, Hex Flange Lock, M8X1.25
	06101695	1	D		22	EZC, EZD			
		1	D		22	ESF			
9	06507394AA	3	D		22				SCREW, Alternator
10									STRUT, Alternator Bracket
	04892047AA	1	D		22	ESF			
		1	D		22	EZC, EZD			
11									BELT, Serpentine
	68060352AA	1	D		22	EZC, EZD			
	05037542AA	1	D		22	ESF			
12		1							CAP, Serviced in Engine Harness only, (NOT SERVICED)
13	06502720	1	D		22				NUT, Hex Flange Lock, M8x1.25

DODGE CHALLENGER (LC)

SERIES	LINE	BODY	ENGINE	TRANSMISSION
H = HIGHLINE P = PREMIUM X = SPECIAL	D = DODGE	22 = 2-DR SEDAN TYPE #2	EGG = 3.5L High Output V6 24V MPI Engine ESF = 6.1L SRT HEMI V8 Engine EZC = 5.7L HEMI VCT Engine EZD = 5.7L Hemi VCT MDS Engine	DEC = 6-Speed Manual TREMEC Transmission DGJ = 5-Speed Auto W5A580 Transmission DGV = 4-Spd. Automatic VLP 42RLE Trans

AR = use ase required - = Non illustrrated part

Front Wiper System
Figure 8-305

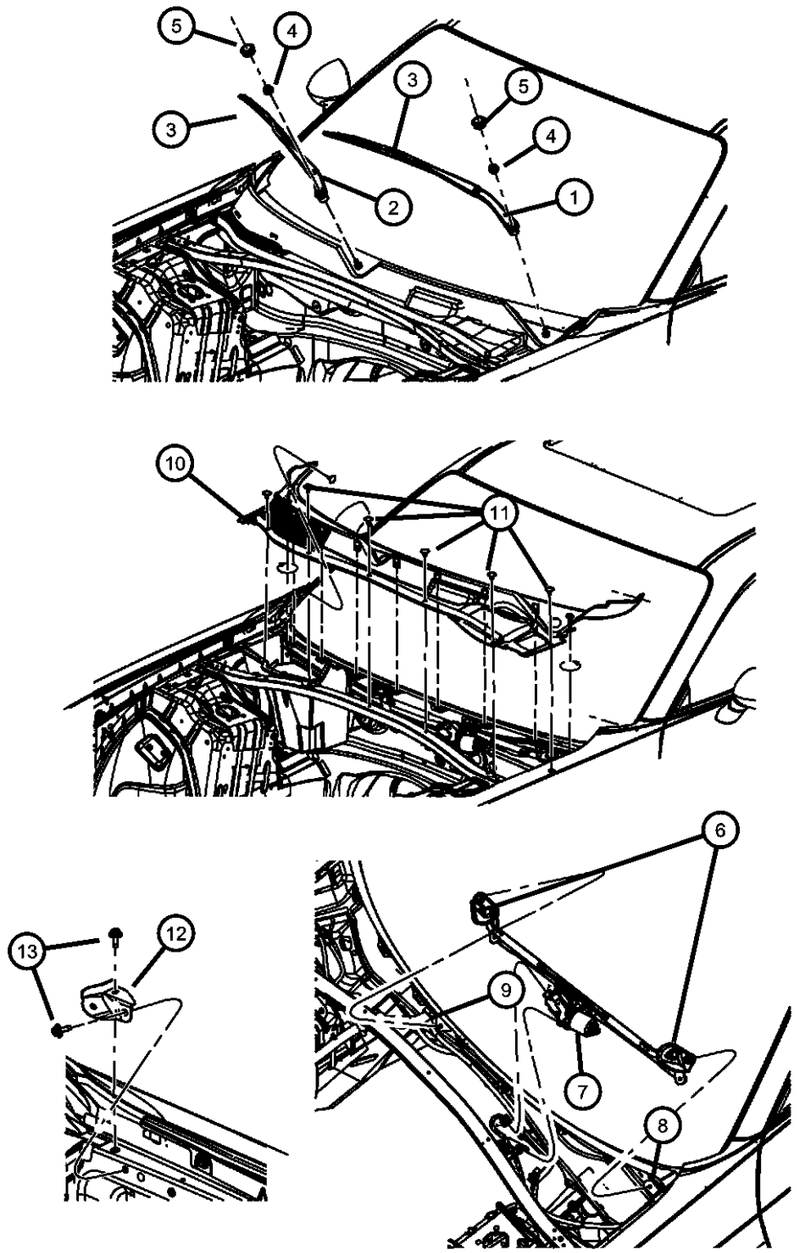

ITEM	PART NUMBER	QTY	LINE	SERIES	BODY	ENGINE	TRANS	TRIM	DESCRIPTION
1	68044161AA	1	D		22				ARM, Front WiperLeft
2	68044160AA	1	D		22				ARM, Front WiperRight
3	68015148AA	1	D		22				BLADE, Wiper
	WB000022AE								Mopar V-Line Alternative Part
	WBFLAT10AA								Mopar Alternative Flat Blade Set
	WBW00022AD								Mopar Alternative Winter Wiper Blades
4	06504954AA	2	D		22				NUT AND WASHER, Hex, M10X1.25
5	04630783	2	D		22				CAP, Wiper Arm
6	68044165AA	1	D		22				PIVOT AND LINKAGE, Wiper
7	68044164AA	1	D		22				MOTOR KIT, Windshield Wiper
8	06507942AA	1	D		22				SCREW, Hex Head, M6X1X31
9	06507943AA	1	D		22				SCREW, Hex Head, M6X1X31
10	05028757AC	1	D		22				PANEL, Cowl Top, Includes Seal to Hood
11	06506293AA	6	D		22				PIN, Push
12	05112056AA	1	D		22				BRACKET, Wiper Motor
13	06505903AA	2	D		22				SCREW AND WASHER, Self Tapping, M6x1x22

DODGE CHALLENGER (LC)

SERIES	LINE	BODY	ENGINE	TRANSMISSION
H = HIGHLINE	D = DODGE	22 = 2-DR SEDAN TYPE #2	EGG = 3.5L High Output V6 24V MPI Engine	DEC = 6-Speed Manual TREMEC Transmission
P = PREMIUM			ESF = 6.1L SRT HEMI V8 Engine	DGJ = 5-Speed Auto W5A580 Transmission
X = SPECIAL			EZC = 5.7L HEMI VCT Engine	DGV = 4-Spd. Automatic VLP 42RLE Trans
			EZD = 5.7L Hemi VCT MDS Engine	

AR = use ase required - = Non illustrrated part

Front Washer System
Figure 8-310

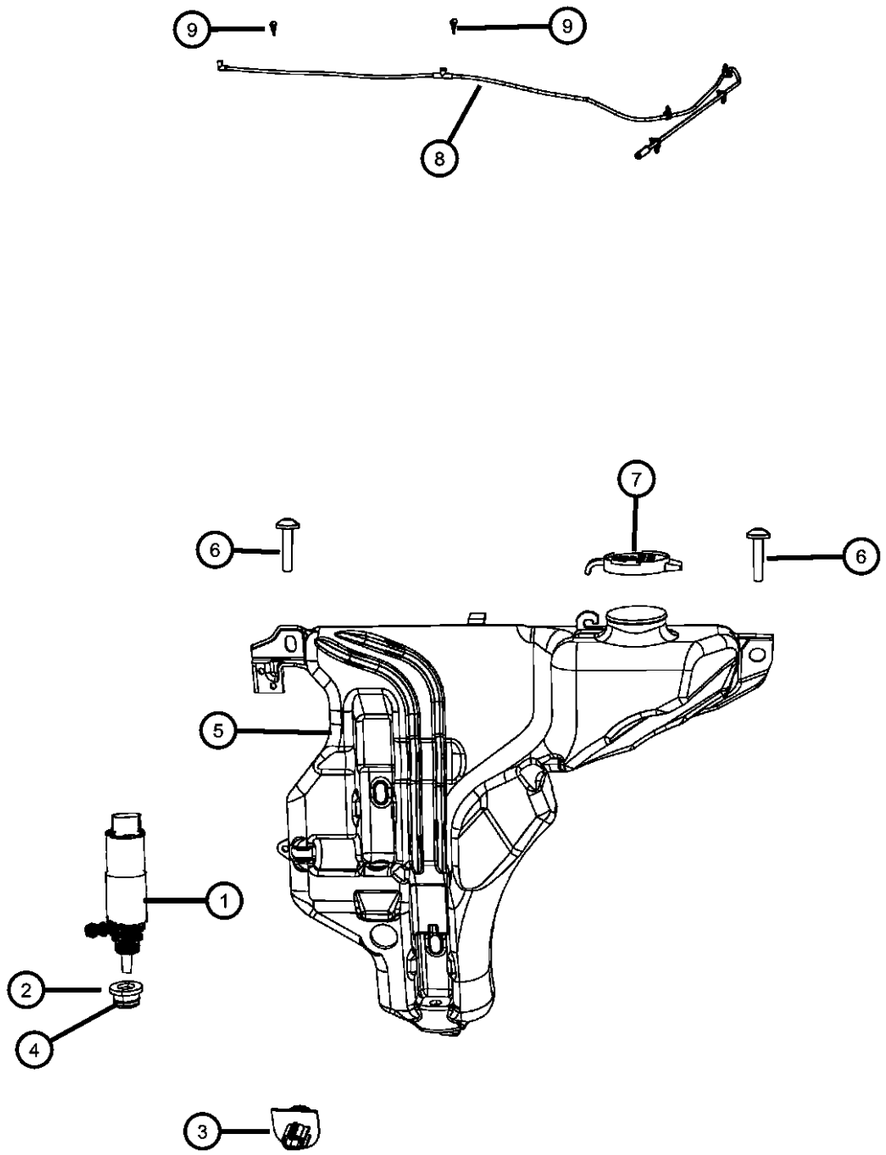

ITEM	PART NUMBER	QTY	LINE	SERIES	BODY	ENGINE	TRANS	TRIM	DESCRIPTION
1	05139113AA	1	D		22				PUMP, Windshield Washer, Single Outlet
2	05102254AA	1	D		22				GROMMET, Windshield Washer Pump
3	05139115AA	1	D		22				SENSOR, Washer Fluid Level
4	05139116AA	1	D		22				GROMMET, Washer Level Sensor
5	05170706AA	1	D		22				RESERVOIR, Windshield Washer
6	06034716	3	D		22				SCREW AND WASHER, Hex Flange Head, .25-14x.875
7	05096347AA	1	D		22				CAP, Washer Reservoir
8									HOSE AND CONNECTOR, Windshield Washer
	68061848AA	1	D		22				[MHZ]
	04805741AE	1	D		22				
9	68024312AB	2	D		22				NOZZLE, Windshield washer

DODGE CHALLENGER (LC)

SERIES	LINE	BODY	ENGINE	TRANSMISSION
H = HIGHLINE P = PREMIUM X = SPECIAL	D = DODGE	22 = 2-DR SEDAN TYPE #2	EGG = 3.5L High Output V6 24V MPI Engine ESF = 6.1L SRT HEMI V8 Engine EZC = 5.7L HEMI VCT Engine EZD = 5.7L Hemi VCT MDS Engine	DEC = 6-Speed Manual TREMEC Transmission DGJ = 5-Speed Auto W5A580 Transmission DGV = 4-Spd. Automatic VLP 42RLE Trans

Modules Engine Compartment
Figure 8-405

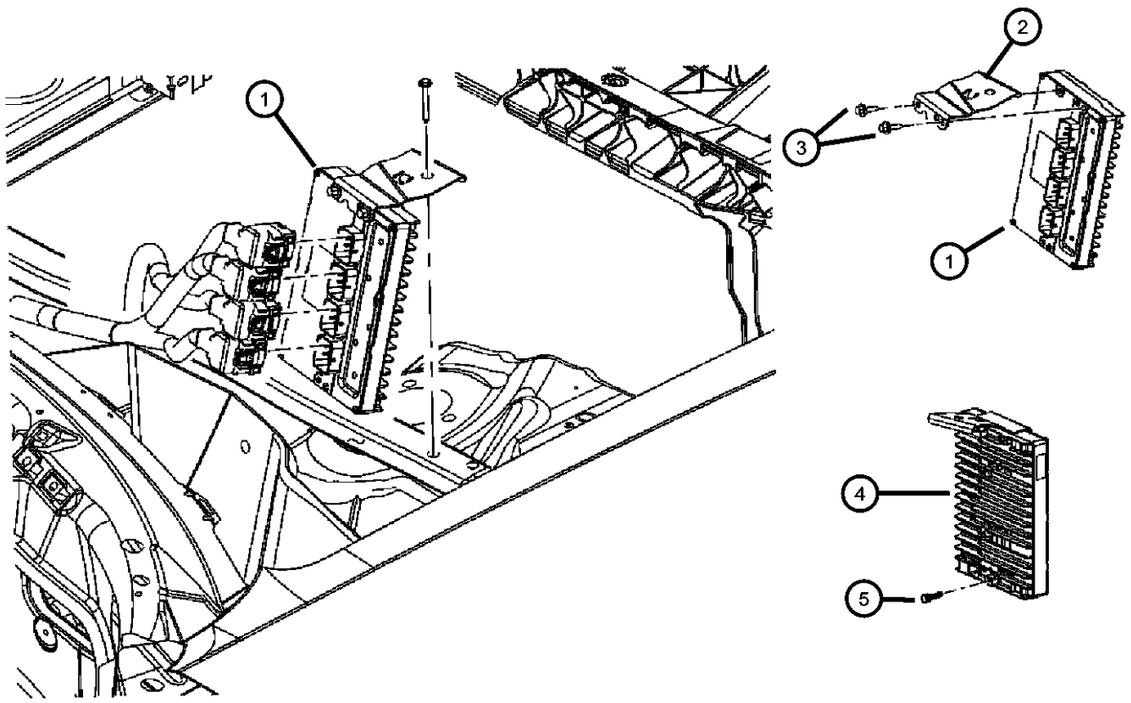

ITEM	PART NUMBER	QTY	LINE	SERIES	BODY	ENGINE	TRANS	TRIM	DESCRIPTION
1									MODULE, Powertrain Control, Generic
	05150246AD	1	D		22	EGG	DGV		
	05150301AD	1	D		22	EGG	DGJ		
	05150310AC	1	D		22	ESF	DGJ		
	05150397AE	1	D		22	ESF	DEC		
		1	D		22	EZC, EZD, EZH			
2	04606696AB	1	D		22	EGG, ESF, EZC, EZD			BRACKET, Powertrain Control Module
3	06102141AA	2	D		22				SCREW, Hex Head, M6X1.00X25.00
4									MODULE, Transmission Control
	05150549AA	1	D		22		DGJ		After 02/02/09
	05150241AD	1	D		22		DGJ		Up to 02/02/09
5									PLUG
	05187883AA	1	D		22	ESF	DGJ		
		1	D		22	EGG			
-6									COVER, Wiring Protector
	05037534AB	1	D		22	ESF			Right
	05037535AB	1	D		22	ESF			Left

DODGE CHALLENGER (LC)

SERIES	LINE	BODY	ENGINE	TRANSMISSION
H = HIGHLINE P = PREMIUM X = SPECIAL	D = DODGE	22 = 2-DR SEDAN TYPE #2	EGG = 3.5L High Output V6 24V MPI Engine ESF = 6.1L SRT HEMI V8 Engine EZC = 5.7L HEMI VCT Engine EZD = 5.7L Hemi VCT MDS Engine	DEC = 6-Speed Manual TREMEC Transmission DGJ = 5-Speed Auto W5A580 Transmission DGV = 4-Spd. Automatic VLP 42RLE Trans

Modules Instrument Panel
Figure 8-410

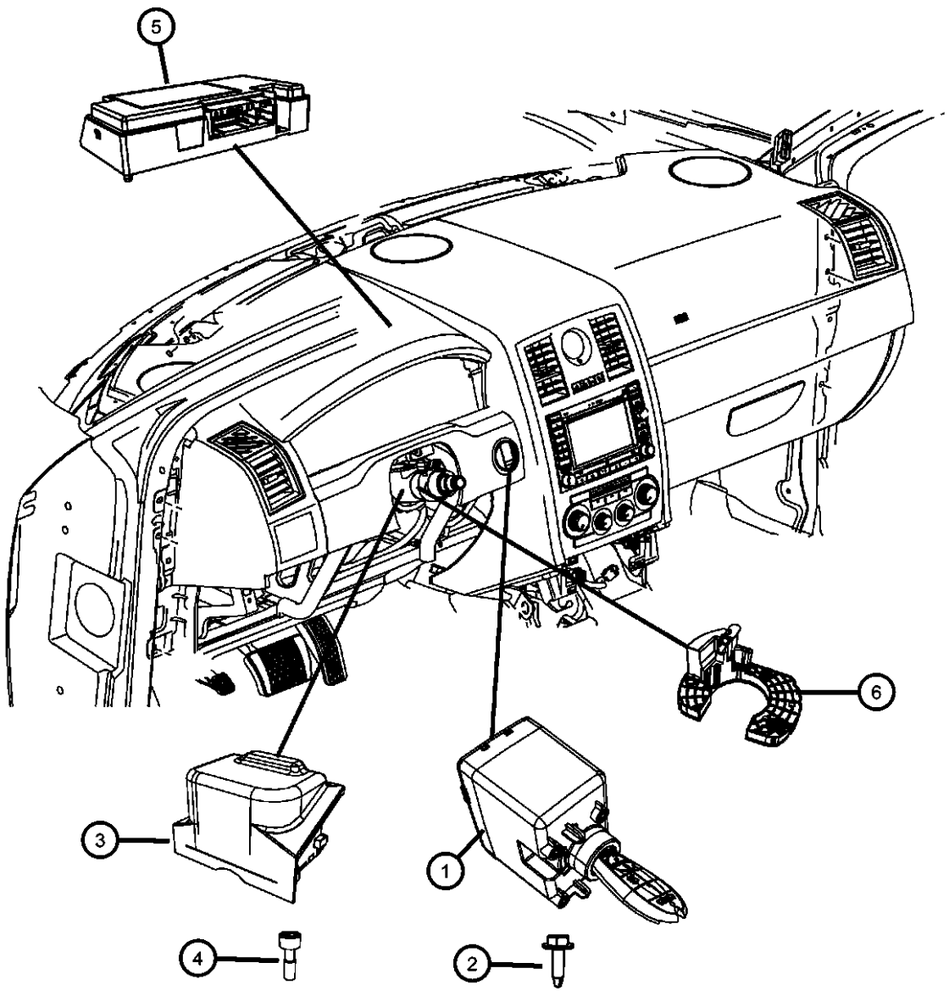

ITEM	PART NUMBER	QTY	LINE	SERIES	BODY	ENGINE	TRANS	TRIM	DESCRIPTION
1									RECEIVER, Wireless Ignition Node
	05026364AC	1	D		22		DGJ, DGV		
	05026366AE	1	D		22		DGJ, DGV		[XBM]
2	06101945	4	D		22				SCREW, Hex Flange Head, M4.2X1.70X15.00
3									MODULE, Passive Entry
	05026443AE	1	D		22		DGJ, DGV		
		1	D		22		DEC		
4		1							SCREW, Cap Head, M5X0.8X16.25, (NOT SERVICED)
5	05064448AG	1	D		22				MODULE, Telematics
6									MODULE, INTERFACE
	68034725AA	1	D		22				
	68034920AA	1	D		22				[BNB]

DODGE CHALLENGER (LC)

SERIES	LINE	BODY	ENGINE	TRANSMISSION
H = HIGHLINE P = PREMIUM X = SPECIAL	D = DODGE	22 = 2-DR SEDAN TYPE #2	EGG = 3.5L High Output V6 24V MPI Engine ESF = 6.1L SRT HEMI V8 Engine EZC = 5.7L HEMI VCT Engine EZD = 5.7L Hemi VCT MDS Engine	DEC = 6-Speed Manual TREMEC Transmission DGJ = 5-Speed Auto W5A580 Transmission DGV = 4-Spd. Automatic VLP 42RLE Trans

Modules Overhead
Figure 8-415

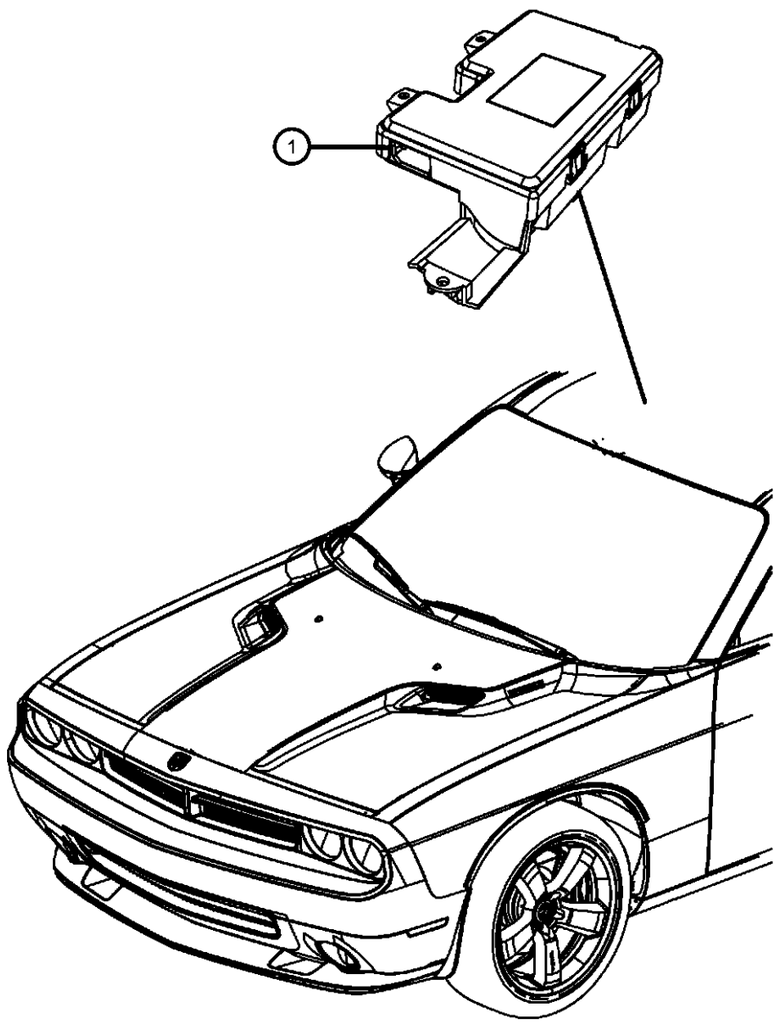

ITEM	PART NUMBER	QTY	LINE	SERIES	BODY	ENGINE	TRANS	TRIM	DESCRIPTION
1	1HT94XDVAA	1	D		22				MODULE, Compass Temperature, W/Garage Door Opener

DODGE CHALLENGER (LC)

SERIES	LINE	BODY	ENGINE	TRANSMISSION
H = HIGHLINE	D = DODGE	22 = 2-DR SEDAN TYPE #2	EGG = 3.5L High Output V6 24V MPI Engine	DEC = 6-Speed Manual TREMEC Transmission
P = PREMIUM			ESF = 6.1L SRT HEMI V8 Engine	DGJ = 5-Speed Auto W5A580 Transmission
X = SPECIAL			EZC = 5.7L HEMI VCT Engine	DGV = 4-Spd. Automatic VLP 42RLE Trans
			EZD = 5.7L Hemi VCT MDS Engine	

Modules Body
Figure 8-420

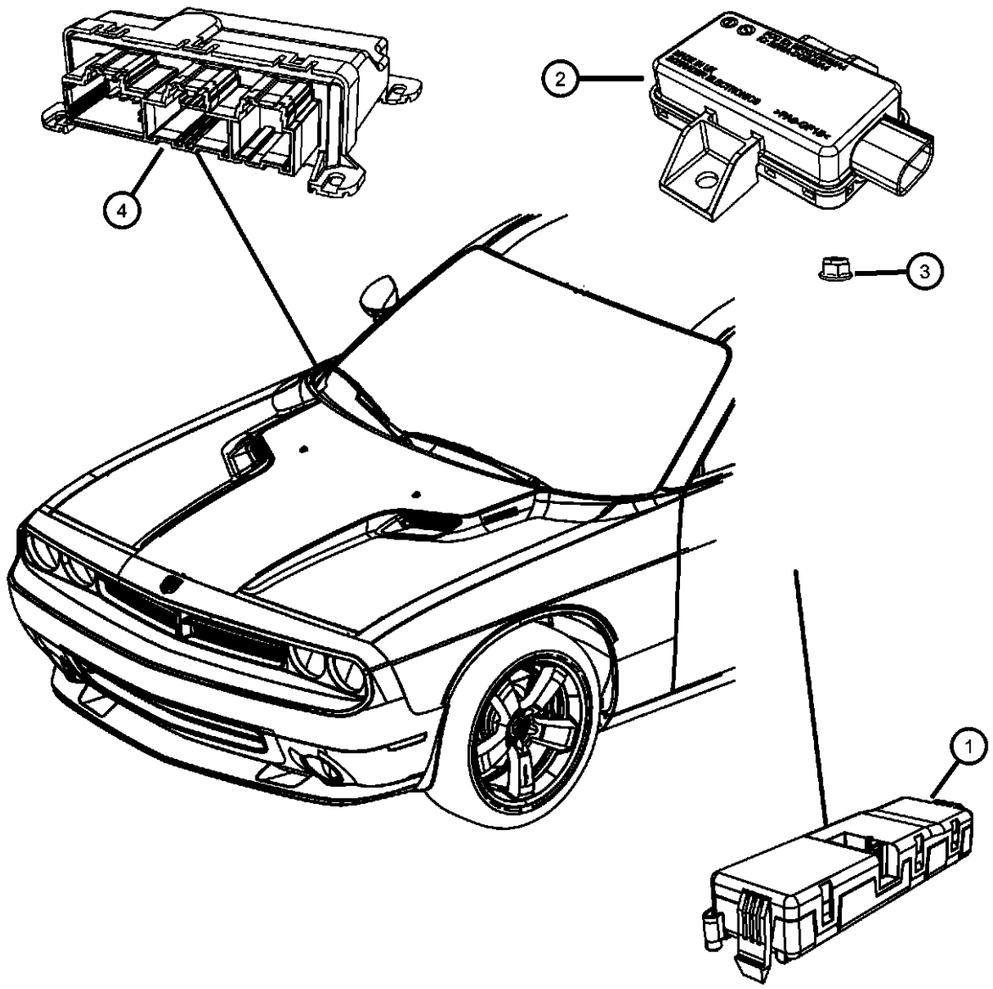

ITEM	PART NUMBER	QTY	LINE	SERIES	BODY	ENGINE	TRANS	TRIM	DESCRIPTION
1	04602670AD	1	D		22				MODULE, Heated Seat Control
2									MODULE, Low Tire Pressure Warning
	56029467AB	1	D		22				After 02/04/08
	56029401AB	1	D		22				Up to 02/04/08
3	06104715AA	2	D		22				NUT, Hex Flange Lock, M6X1.00
4	04602923AE	2	D		22				MODULE, Door

DODGE CHALLENGER (LC)

SERIES	LINE	BODY	ENGINE	TRANSMISSION
H = HIGHLINE	D = DODGE	22 = 2-DR SEDAN TYPE #2	EGG = 3.5L High Output V6 24V MPI Engine	DEC = 6-Speed Manual TREMEC Transmission
P = PREMIUM			ESF = 6.1L SRT HEMI V8 Engine	DGJ = 5-Speed Auto W5A580 Transmission
X = SPECIAL			EZC = 5.7L HEMI VCT Engine	DGV = 4-Spd. Automatic VLP 42RLE Trans
			EZD = 5.7L Hemi VCT MDS Engine	

Modules Lighting
Figure 8-425

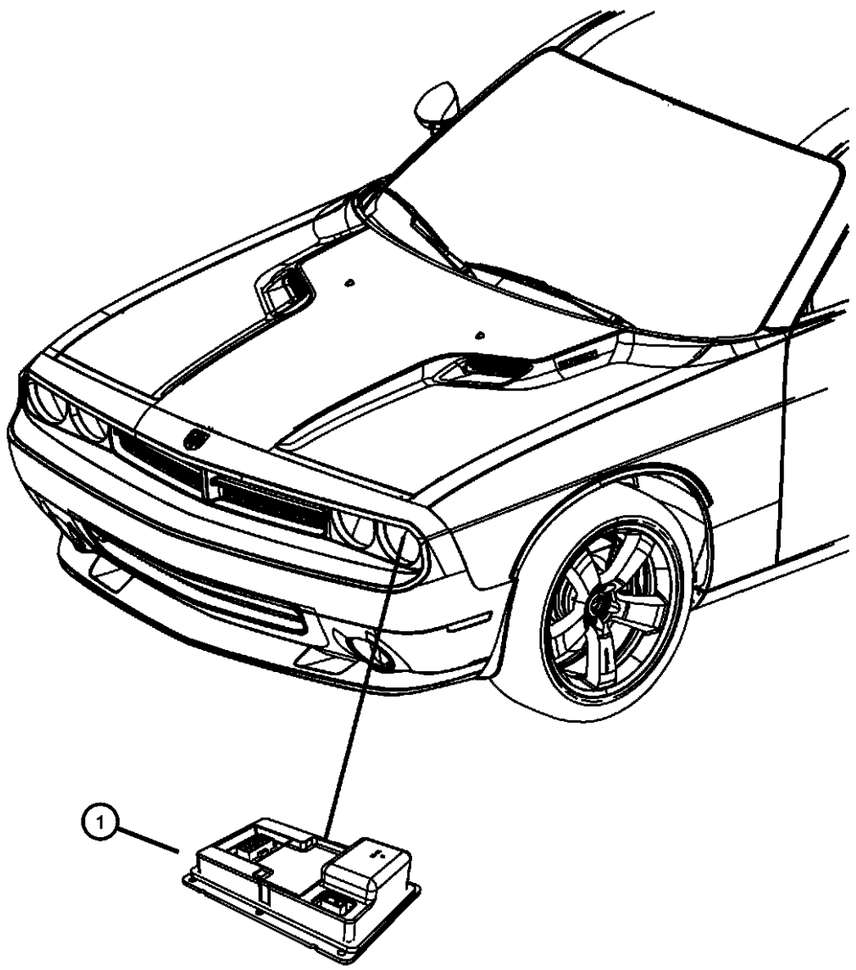

ITEM	PART NUMBER	QTY	LINE	SERIES	BODY	ENGINE	TRANS	TRIM	DESCRIPTION
1	68033739AA	1	D		22				MODULE, HID Ballast

DODGE CHALLENGER (LC)

SERIES	LINE	BODY	ENGINE	TRANSMISSION
H = HIGHLINE P = PREMIUM X = SPECIAL	D = DODGE	22 = 2-DR SEDAN TYPE #2	EGG = 3.5L High Output V6 24V MPI Engine ESF = 6.1L SRT HEMI V8 Engine EZC = 5.7L HEMI VCT Engine EZD = 5.7L Hemi VCT MDS Engine	DEC = 6-Speed Manual TREMEC Transmission DGJ = 5-Speed Auto W5A580 Transmission DGV = 4-Spd. Automatic VLP 42RLE Trans

Modules Brakes, Suspension and Steering
Figure 8-430

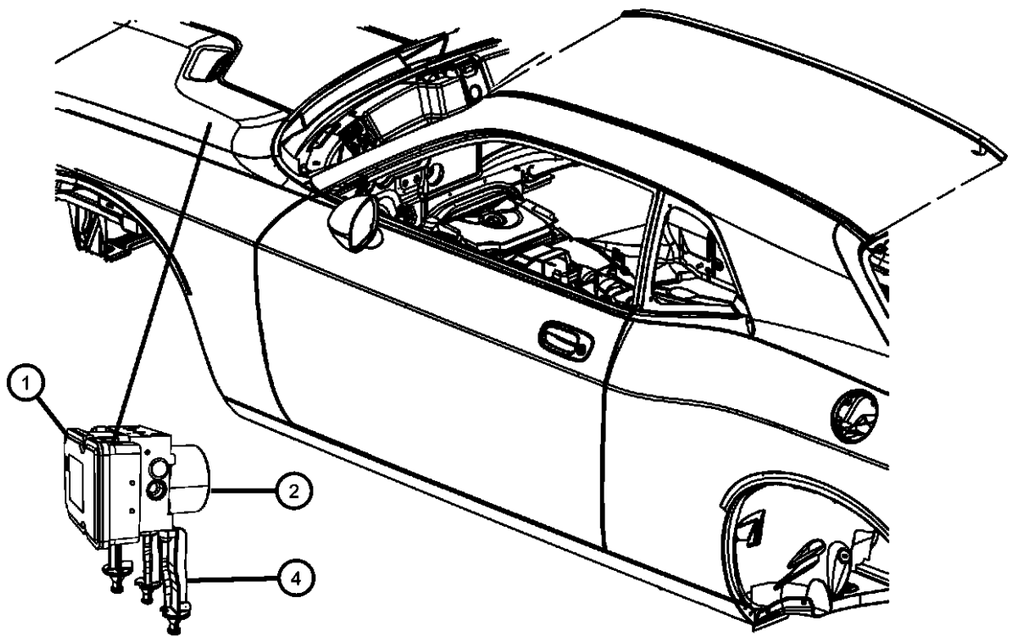

ITEM	PART NUMBER	QTY	LINE	SERIES	BODY	ENGINE	TRANS	TRIM	DESCRIPTION
1									MODULE, Anti-Lock Brake System
	68048305AC	1	D		22		DGJ, DGV		
	68049869AB	1	D		22		DEC		
2									HYDRAULIC CONTROL UNIT, Anti-Lock Brake System
	68048306AA	1	D		22	ES0	DGJ		
		1	D		22	EG0, EZ0	DGJ, DGV		
	68049871AA	1	D		22		DEC		
-3									SEAL, ECU Coil Seal
	68020717AA	12	D		22	EG0, EZ0	DGJ, DGV		
		12	D		22		DEC		
		12	D		22	ES0	DGJ		
4									BRACKET, Control Unit
	05175604AA	1	D		22	ES0	DGJ		
		1	D		22		DEC		
		1	D		22	EG0, EZ0	DGJ, DGV		

DODGE CHALLENGER (LC)

SERIES	LINE	BODY	ENGINE	TRANSMISSION
H = HIGHLINE	D = DODGE	22 = 2-DR SEDAN TYPE #2	EGG = 3.5L High Output V6 24V MPI Engine	DEC = 6-Speed Manual TREMEC Transmission
P = PREMIUM			ESF = 6.1L SRT HEMI V8 Engine	DGJ = 5-Speed Auto W5A580 Transmission
X = SPECIAL			EZC = 5.7L HEMI VCT Engine	DGV = 4-Spd. Automatic VLP 42RLE Trans
			EZD = 5.7L Hemi VCT MDS Engine	

Receiver Modules, Keys, and Key FOBS
Figure 8-435

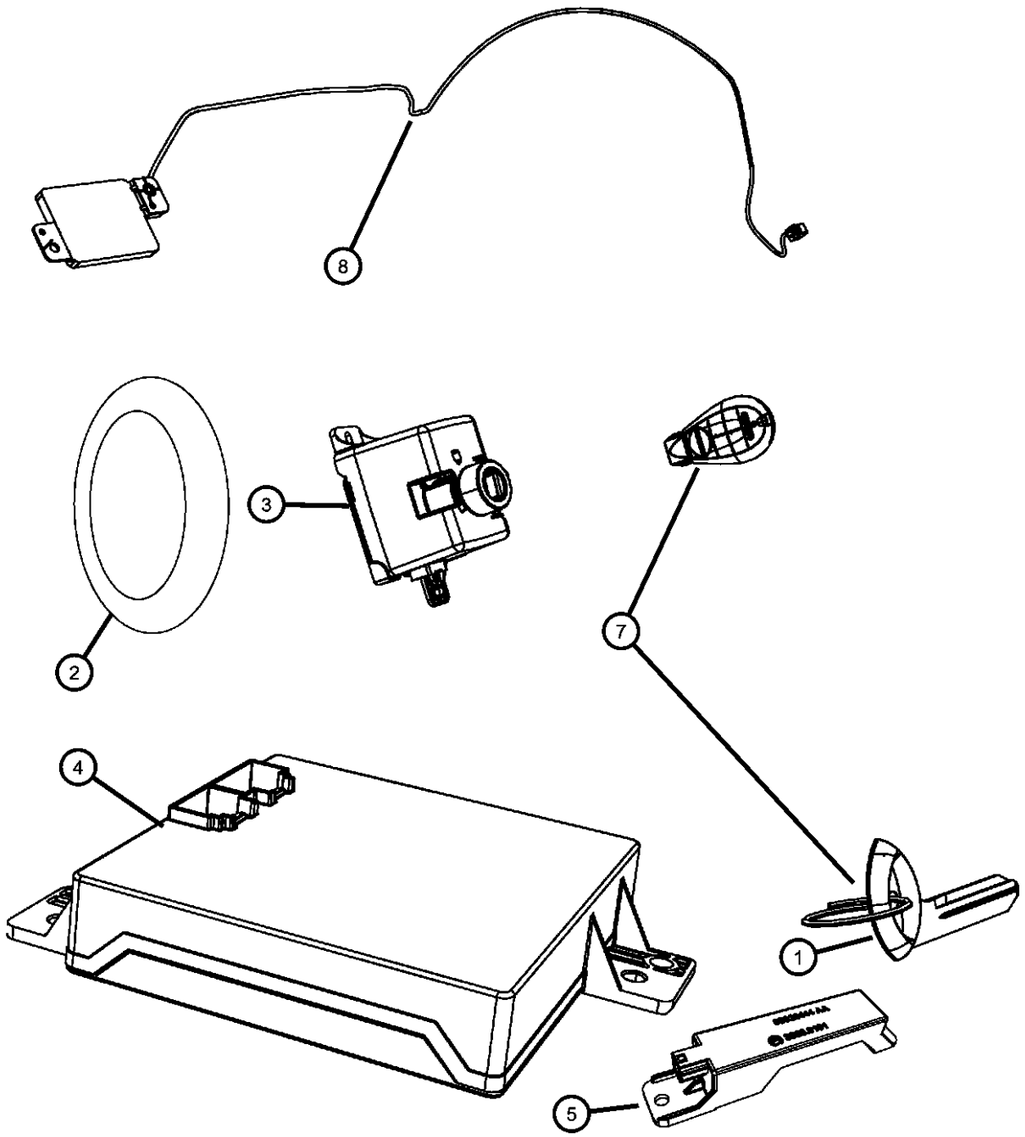

ITEM	PART NUMBER	QTY	LINE	SERIES	BODY	ENGINE	TRANS	TRIM	DESCRIPTION
1	68029829AB	1	D		22				KEY, Blank
2	05066241AB	1	D		22		DEC		BATTERY, Transmitter
3									RECEIVER, Wireless Ignition Node
	05026954AI	1	D		22		DEC		[GX4]
		1	D		22		DEC		
	05026364AG	1	D		22		DGJ, DGV		[GX4] Without remote start
	05026366AM	1	D		22		DGJ, DGV		[GX4,XBM] With remote start
	05026446AC	1	D		22				[GX4,XBM]
4	05026443AF	1	D		22		DGJ, DGV		MODULE, Passive Entry
5	05026444AA	3	D		22				ANTENNA, Passive Entry
-6	06505403AA	2	D		22				PIN, Push
7									TRANSMITTER KIT, Integrated Key FOB
	68052065AB	2	D		22		DGJ, DGV		
	68052144AB	2	D		22		DGJ, DGV		[GX4,XBM]
	68044059AA	2	D		22				
	68044078AB	2	D		22		DEC		[GX4]
	68052062AB	2	D		22		DGJ, DGV		[XBM]
8	05026433AB	1	D		22				ANTENNA, Keyless Entry, [XBM]

DODGE CHALLENGER (LC)

SERIES	LINE	BODY	ENGINE	TRANSMISSION
H = HIGHLINE	D = DODGE	22 = 2-DR SEDAN TYPE #2	EGG = 3.5L High Output V6 24V MPI Engine	DEC = 6-Speed Manual TREMEC Transmission
P = PREMIUM			ESF = 6.1L SRT HEMI V8 Engine	DGJ = 5-Speed Auto W5A580 Transmission
X = SPECIAL			EZC = 5.7L HEMI VCT Engine	DGV = 4-Spd. Automatic VLP 42RLE Trans
			EZD = 5.7L Hemi VCT MDS Engine	

AR = use ase required - = Non illustrrated part

Power Distribution Center Front Under Hood
Figure 8-505

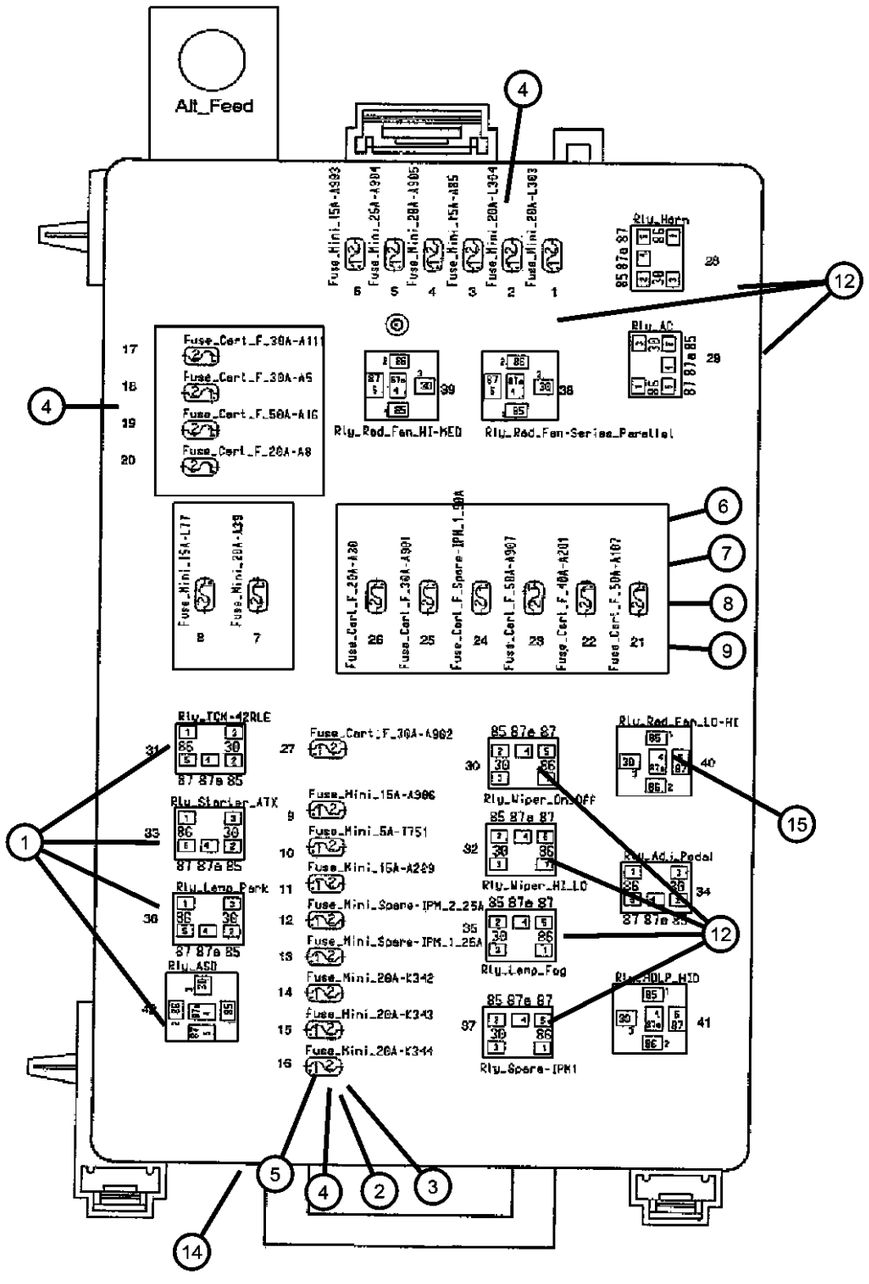

ITEM	PART NUMBER	QTY	LINE	SERIES	BODY	ENGINE	TRANS	TRIM	DESCRIPTION
1	04727370AA	4	D		22				RELAY, Mini
2	0000ATM5	3	D		22				FUSE, Mini, 5 Amp, Tan
3	000ATM10	7	D		22				FUSE, Mini, 10 AMP, Red
4	000ATM20	5	D		22				FUSE, Mini, 20 AMP, Yellow
5	000ATM25	6	D		22				FUSE, Mini, 25 Amp, Natural
6	04868007AA	3	D		22				FUSE CARTRIDGE, 30 Amp
7	04868008AA	2	D		22				FUSE CARTRIDGE, 40 Amp
8	06102078AA	2	D		22				FUSE CARTRIDGE, 50 Amp
9	06102075AA	2	D		22				FUSE CARTRIDGE, 20 Amp
-10	04607125AB	1	D		22				BRACKET, Power Distribution Center
-11	68044658AA	1	D		22				COVER, Power Distribution Center
12	05269988AA	5	D		22				RELAY, Mini
-13	68049183AA	1	D		22				COVER, Power Distribution Center
14	04692270AG	1	D		22				POWER DISTRIBUTION CENTER
15	56007078	1			22				RELAY

DODGE CHALLENGER (LC)

SERIES	LINE	BODY	ENGINE	TRANSMISSION
H = HIGHLINE P = PREMIUM X = SPECIAL	D = DODGE	22 = 2-DR SEDAN TYPE #2	EGG = 3.5L High Output V6 24V MPI Engine ESF = 6.1L SRT HEMI V8 Engine EZC = 5.7L HEMI VCT Engine EZD = 5.7L Hemi VCT MDS Engine	DEC = 6-Speed Manual TREMEC Transmission DGJ = 5-Speed Auto W5A580 Transmission DGV = 4-Spd. Automatic VLP 42RLE Trans

Power Distribution Center Rear Trunk Area
Figure 8-506

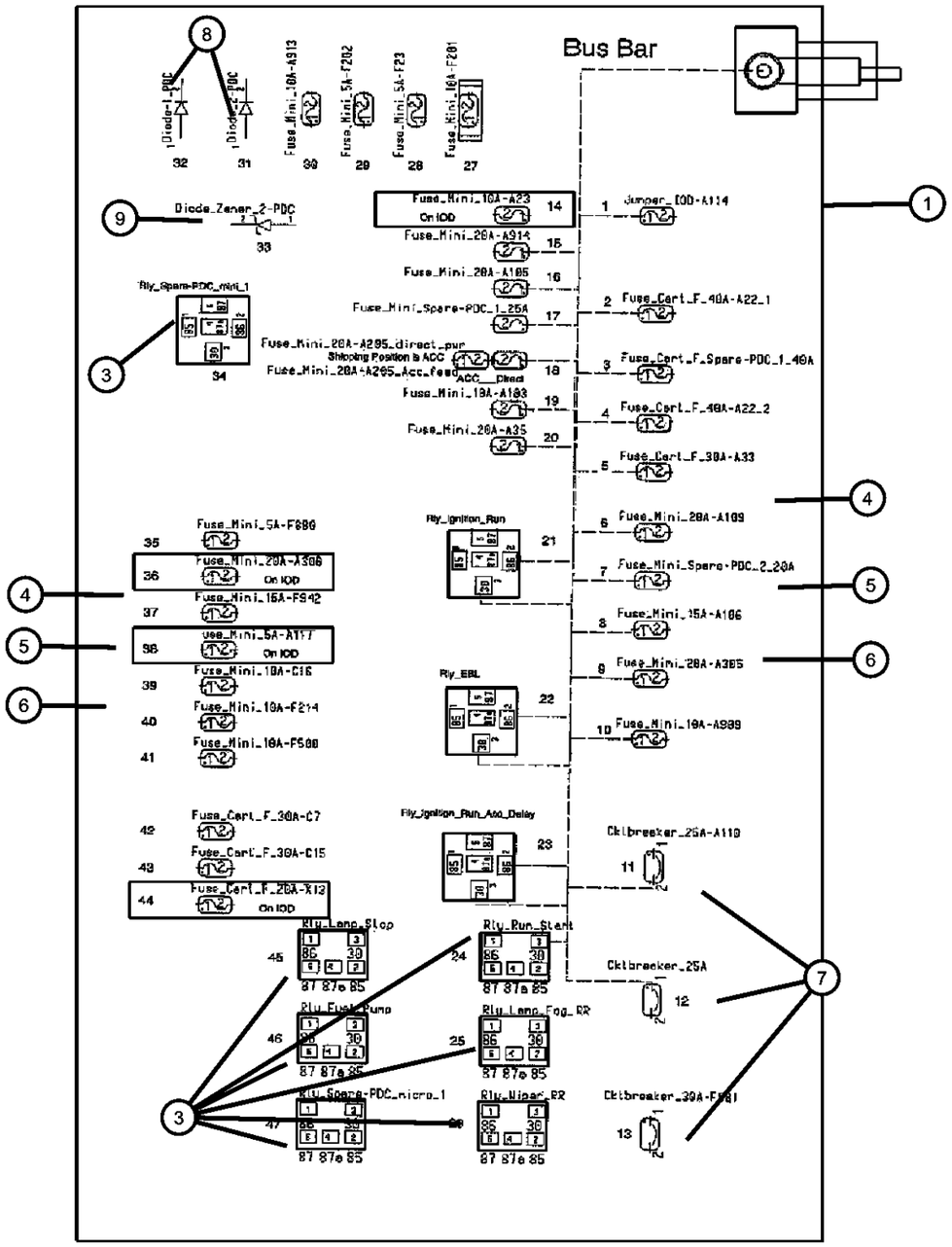

ITEM	PART NUMBER	QTY	LINE	SERIES	BODY	ENGINE	TRANS	TRIM	DESCRIPTION
1		1							POWER DISTRIBUTION CENTER, Serviced in Body Harness only, (NOT SERVICED)
-2	05166279AA	1	D		22				COVER, Power Distribution Center
3	04727370AA	3	D		22				RELAY, Mini
4	000ATM10	2	D		22				FUSE, Mini, 10 AMP, Red
5	000ATM15	3	D		22				FUSE, Mini, 15 AMP, Light Blue
6	000ATM20	5	D		22				FUSE, Mini, 20 AMP, Yellow
7	56021543	3	D		22				BREAKER, Circuit
8	05161420AA	1	D		22				DIODE, Mini
9	05179025AA	1	D		22				DIODE, Zenner

DODGE CHALLENGER (LC)

SERIES	LINE	BODY	ENGINE	TRANSMISSION
H = HIGHLINE P = PREMIUM X = SPECIAL	D = DODGE	22 = 2-DR SEDAN TYPE #2	EGG = 3.5L High Output V6 24V MPI Engine ESF = 6.1L SRT HEMI V8 Engine EZC = 5.7L HEMI VCT Engine EZD = 5.7L Hemi VCT MDS Engine	DEC = 6-Speed Manual TREMEC Transmission DGJ = 5-Speed Auto W5A580 Transmission DGV = 4-Spd. Automatic VLP 42RLE Trans

Sensors Engine
Figure 8-605

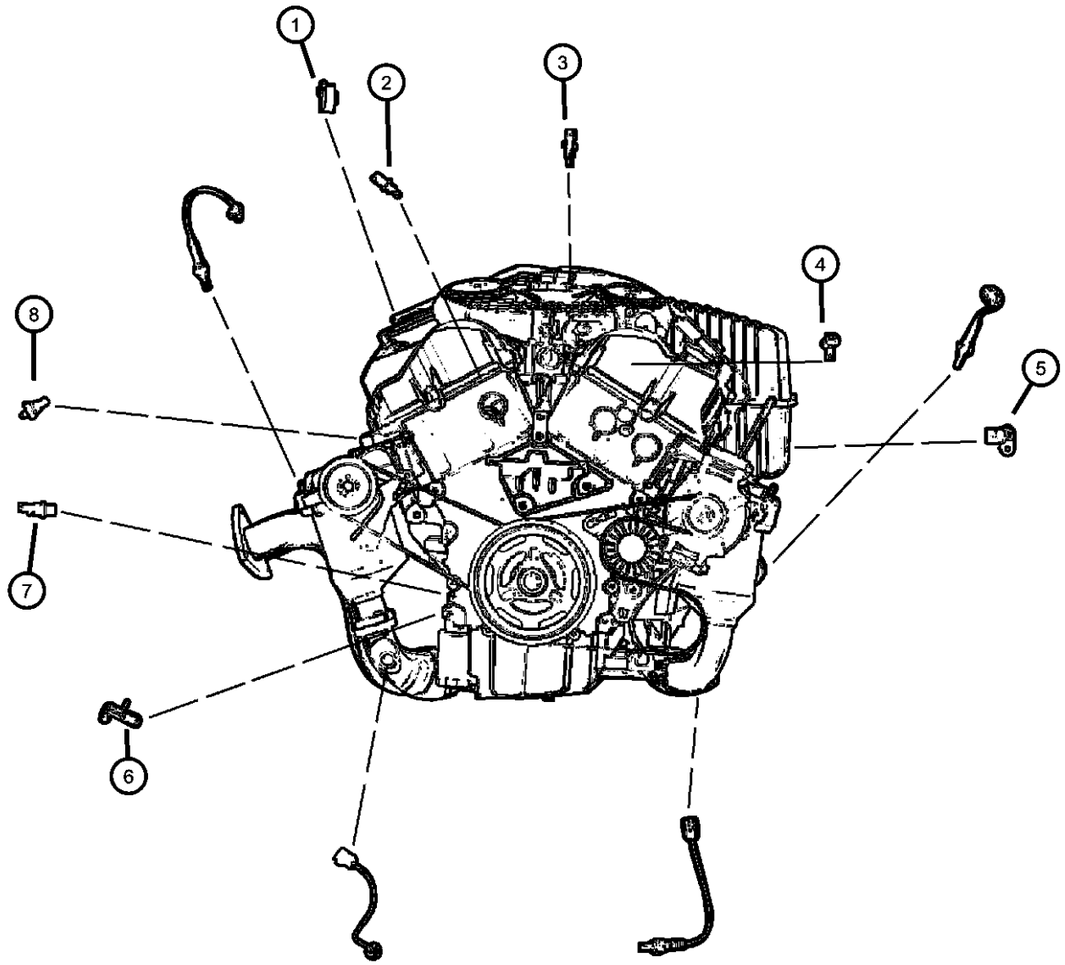

ITEM	PART NUMBER	QTY	LINE	SERIES	BODY	ENGINE	TRANS	TRIM	DESCRIPTION
1		1							SENSOR, Throttle Position, Serviced in Throttle Body assembly only, (NOT SERVICED)
2	04606487AB	1	D		22	EGG			SENSOR, Charge Air Temp
3	05149096AB	1	D		22	EG0			SENSOR, Coolant Temperature
4	05033310AC	1	D		22	EGG			SENSOR, MAP
5	05029808AD	1	D		22	EGG			SENSOR, Camshaft
6	05029811AC	1	D		22	EGG			SENSOR, Crankshaft Position
7	05149098AA	1	D		22	EGG			SENDING UNIT, Oil Pressure
8	04606093AD	1	D		22	EGG			SENSOR, Detonation

DODGE CHALLENGER (LC)

SERIES	LINE	BODY	ENGINE	TRANSMISSION
H = HIGHLINE P = PREMIUM X = SPECIAL	D = DODGE	22 = 2-DR SEDAN TYPE #2	EGG = 3.5L High Output V6 24V MPI Engine ESF = 6.1L SRT HEMI V8 Engine EZC = 5.7L HEMI VCT Engine EZD = 5.7L Hemi VCT MDS Engine	DEC = 6-Speed Manual TREMEC Transmission DGJ = 5-Speed Auto W5A580 Transmission DGV = 4-Spd. Automatic VLP 42RLE Trans

Sensors, Gas Engine
Figure 8-606

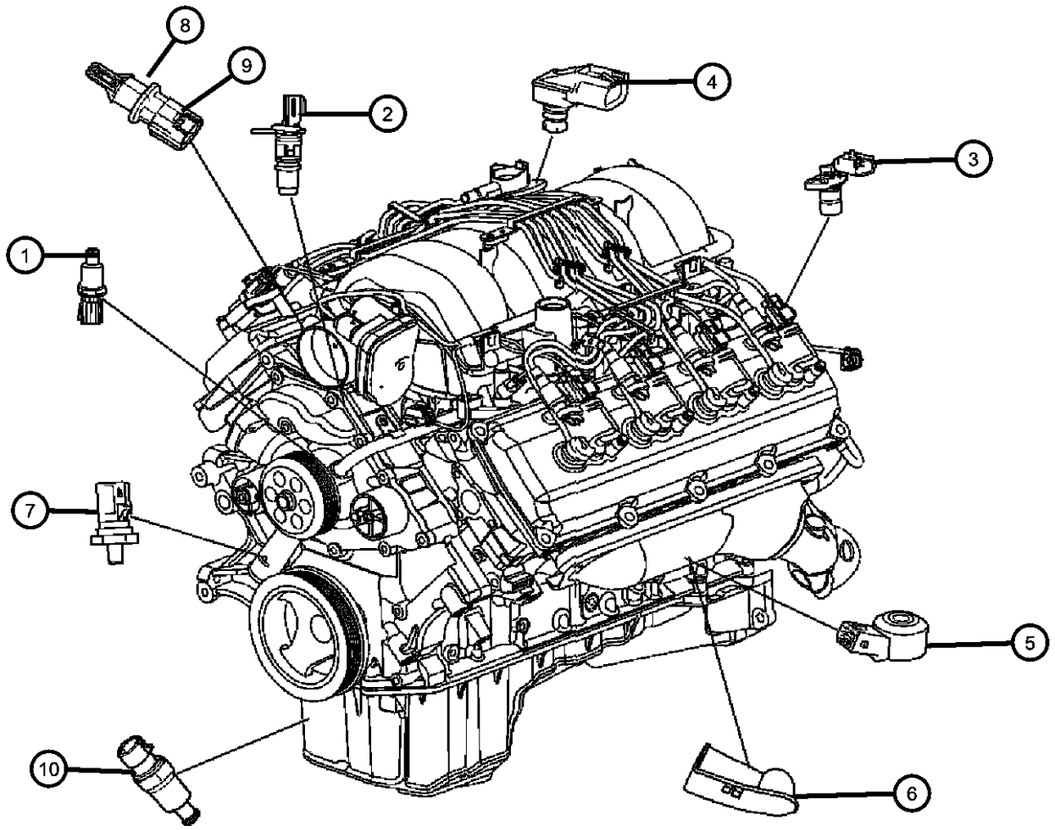

ITEM	PART NUMBER	QTY	LINE	SERIES	BODY	ENGINE	TRANS	TRIM	DESCRIPTION
1									SENSOR, Coolant Temperature
	05149077AB	1	D		22	ESF			Engine coolant temp
	05149096AB	1	D		22	EZC, EZD, EZH			Engine coolant temp
2									SENSOR, Camshaft
	05149054AC	1	D		22	ESF			
	68060336AA	1	D		22	EZD, EZC			
		1	D		22	EZC, EZD, EZH			
3									SENSOR, Crankshaft Position
	05149009AB	1	D		22	ESF			
	05149230AA	1	D		22	EZC, EZD, EZH			
4									SENSOR, MAP
	56041018AD	1	D		22	ESF			
	05033310AC	1	D		22	EZC, EZD, EZH			
5									SENSOR, Knock
	05033316AA	2	D		22	ESF			
		2	D		22	EZC, EZD, EZH			
6	05094164AB	2	D		22	ESF, EZC, EZD, EZH			SHIELD, Heat
7									SENDING UNIT, Oil Pressure
	05149062AA	1	D		22	ESF			
	68060337AA	1	D		22	EZC, EZD			
		1	D		22	EZH			
8	04606487AB	1	D		22	ESF			SENSOR, Charge Air Temp
9									SENSOR, Air Temperature
	56028364AA	1	D		22	EZC	DEC		
		1	D		22	EZD, EZH	DGJ		
10									SENSOR, Coolant Temperature
	05149077AB	1	D		22	ESF			Engine oil temp
	68060339AA	1	D		22	EZC, EZD, EZH			Engine oil temp

DODGE CHALLENGER (LC)

SERIES	LINE	BODY	ENGINE	TRANSMISSION
H = HIGHLINE	D = DODGE	22 = 2-DR SEDAN TYPE #2	EGG = 3.5L High Output V6 24V MPI Engine	DEC = 6-Speed Manual TREMEC Transmission
P = PREMIUM			ESF = 6.1L SRT HEMI V8 Engine	DGJ = 5-Speed Auto W5A580 Transmission
X = SPECIAL			EZC = 5.7L HEMI VCT Engine	DGV = 4-Spd. Automatic VLP 42RLE Trans
			EZD = 5.7L Hemi VCT MDS Engine	

Sensors Oxygen Gas
Figure 8-615

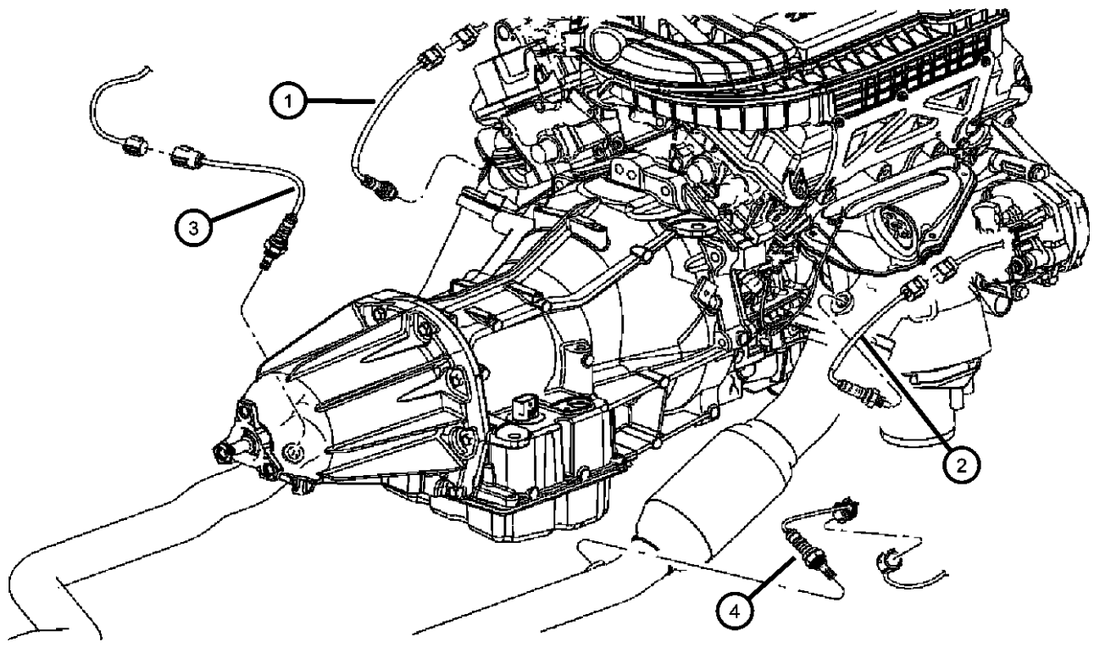

ITEM	PART NUMBER	QTY	LINE	SERIES	BODY	ENGINE	TRANS	TRIM	DESCRIPTION
1									SENSOR, Oxygen
	56029049AA	1	D		22	EGG			Before Catalyst, Left
		1	D		22	ESF, EZC, EZD			Before Catalyst, Left
2									SENSOR, Oxygen
	56029049AA	1	D		22	EGG			Before Catalyst, Right
		1	D		22	EZC, EZD, ESF			Before Catalyst, Right
3									SENSOR, Oxygen
	56029049AA	1	D		22	EGG			After Catalyst, Left
		1	D		22	ESF, EZC, EZD			After Catalyst, Left
4									SENSOR, Oxygen
	56029049AA	1	D		22	ESF, EZC, EZD			After Catalyst, Right
		1	D		22	EGG			[NAA], After Catalyst, Right
	56029050AA	1	D		22	EGG			[NAE], After Catalyst, Right

DODGE CHALLENGER (LC)

SERIES	LINE	BODY	ENGINE	TRANSMISSION
H = HIGHLINE	D = DODGE	22 = 2-DR SEDAN TYPE #2	EGG = 3.5L High Output V6 24V MPI Engine	DEC = 6-Speed Manual TREMEC Transmission
P = PREMIUM			ESF = 6.1L SRT HEMI V8 Engine	DGJ = 5-Speed Auto W5A580 Transmission
X = SPECIAL			EZC = 5.7L HEMI VCT Engine	DGV = 4-Spd. Automatic VLP 42RLE Trans
			EZD = 5.7L Hemi VCT MDS Engine	

Sensors Brakes
Figure 8-625

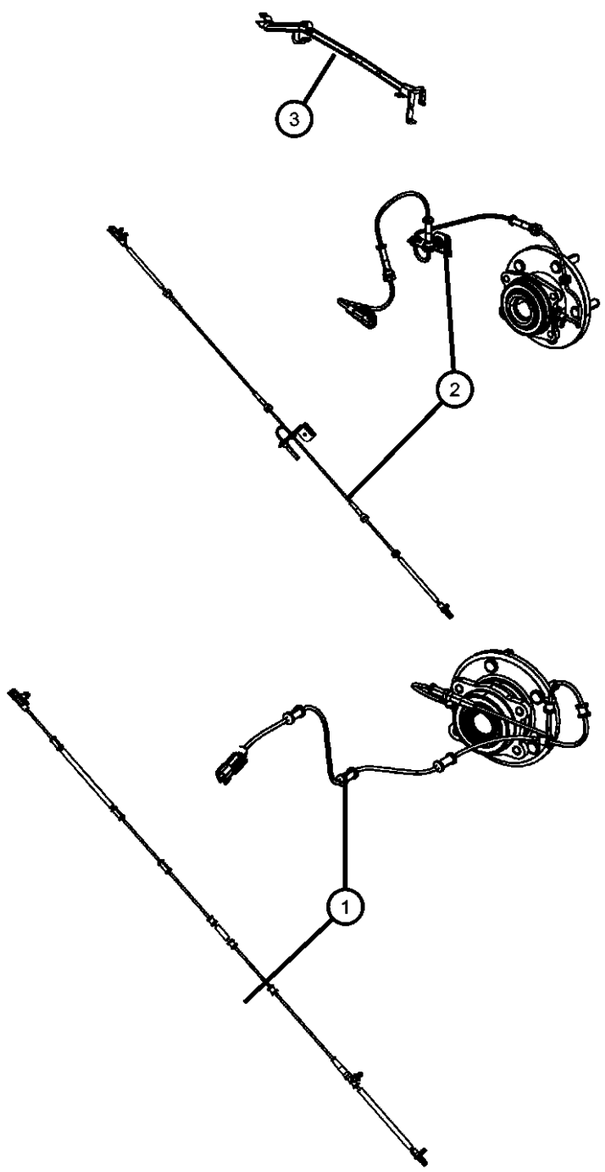

ITEM	PART NUMBER	QTY	LINE	SERIES	BODY	ENGINE	TRANS	TRIM	DESCRIPTION
1	04779244AD	1	D		22				SENSOR, Anti-Lock BrakesFront
2									SENSOR, Anti-Lock Brakes
	04779246AC	1	D		22	EZ0	DGJ		Right Rear
		1	D		22	EG0	DGV		Right Rear
	04779247AD	1	D		22	EG0	DGV		[BR3], Left Rear
		1	D		22	EZ0	DEC		[BR6], Left Rear
		1	D		22	EZ0	DEC		Right Rear
		1	D		22	EZ0	DGJ		[BR6], Left Rear
	04779457AB	1	D		22	EZ0	DEC		[BR5], Left Rear
		1	D		22	ES0	DGJ		[BR4], Left Rear
	04779456AB	1	D		22	ES0	DGJ		Right Rear
		1	D		22	ES0	DEC		Left Rear
3									CLIP, Wiring
	04895426AA	1	D		22	ES0	DEC		Right Rear
	04895427AA	1	D		22	ES0	DEC		Left Rear

DODGE CHALLENGER (LC)

SERIES	LINE	BODY	ENGINE	TRANSMISSION
H = HIGHLINE	D = DODGE	22 = 2-DR SEDAN TYPE #2	EGG = 3.5L High Output V6 24V MPI Engine	DEC = 6-Speed Manual TREMEC Transmission
P = PREMIUM			ESF = 6.1L SRT HEMI V8 Engine	DGJ = 5-Speed Auto W5A580 Transmission
X = SPECIAL			EZC = 5.7L HEMI VCT Engine	DGV = 4-Spd. Automatic VLP 42RLE Trans
			EZD = 5.7L Hemi VCT MDS Engine	

Sensors Suspension and Steering
Figure 8-630

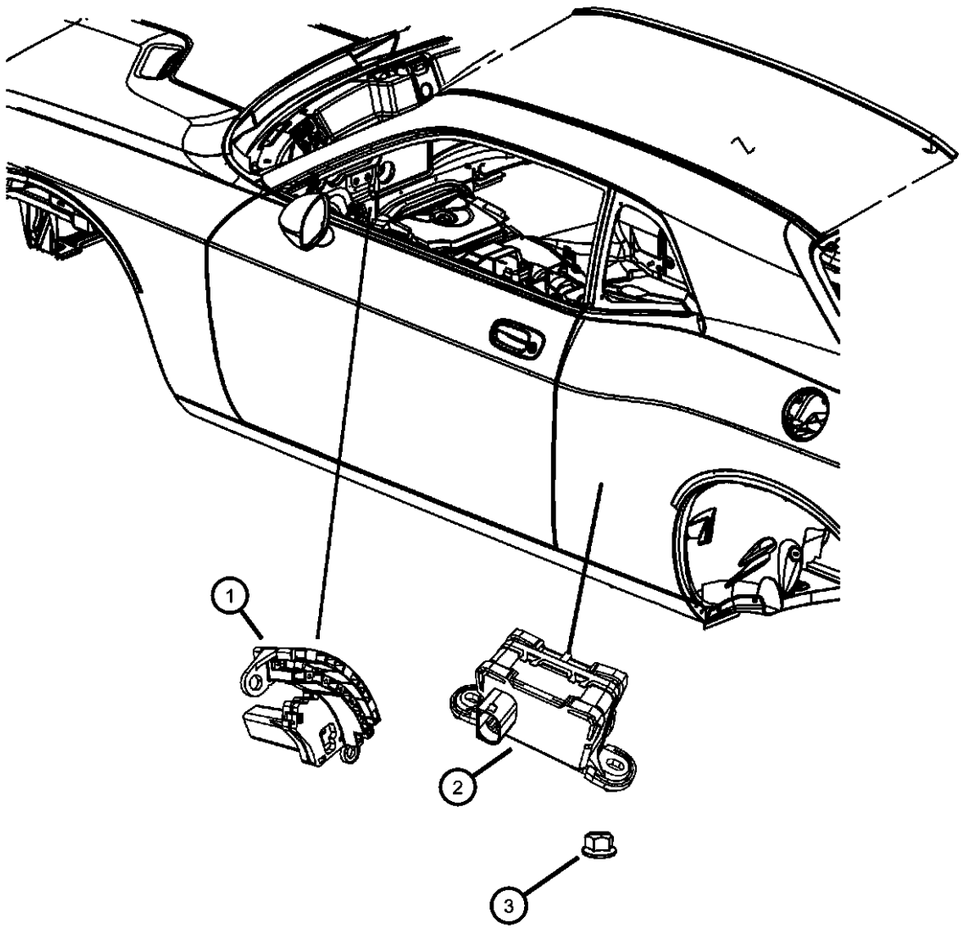

ITEM	PART NUMBER	QTY	LINE	SERIES	BODY	ENGINE	TRANS	TRIM	DESCRIPTION
1	05135969AA	1	D		22				SENSOR, Steering Wheel Angle
2									SENSOR, Dynamics, Lateral Acceleration and YAW Rate
	56029483AA	1	D		22				
	56029427AA	1	D		22				[BNG]
3	06101447	2	D		22				NUT AND WASHER, M6x1.00

DODGE CHALLENGER (LC)

SERIES	LINE	BODY	ENGINE	TRANSMISSION
H = HIGHLINE P = PREMIUM X = SPECIAL	D = DODGE	22 = 2-DR SEDAN TYPE #2	EGG = 3.5L High Output V6 24V MPI Engine ESF = 6.1L SRT HEMI V8 Engine EZC = 5.7L HEMI VCT Engine EZD = 5.7L Hemi VCT MDS Engine	DEC = 6-Speed Manual TREMEC Transmission DGJ = 5-Speed Auto W5A580 Transmission DGV = 4-Spd. Automatic VLP 42RLE Trans

Sensors Body
Figure 8-635

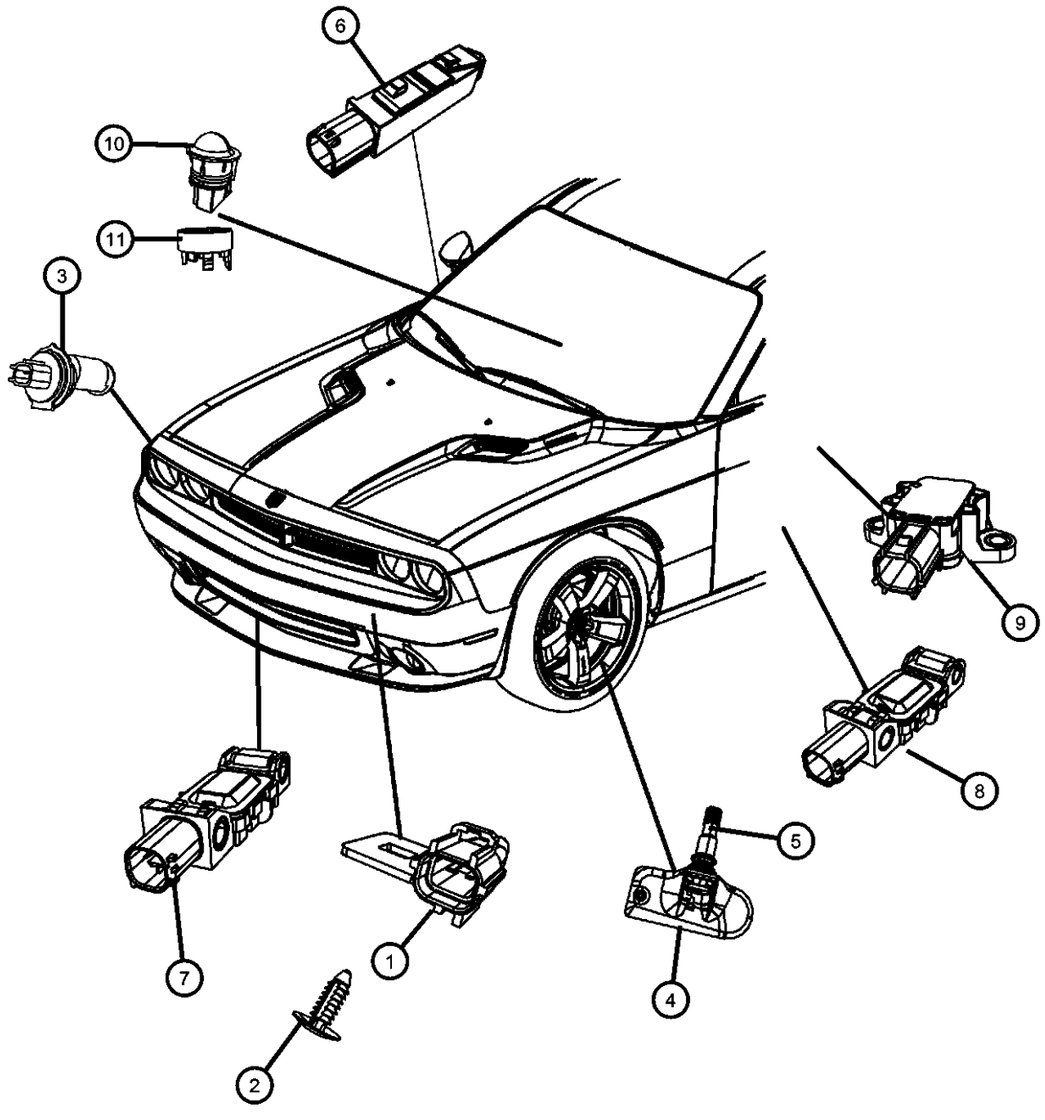

ITEM	PART NUMBER	QTY	LINE	SERIES	BODY	ENGINE	TRANS	TRIM	DESCRIPTION
1	56042395	1	D		22				SENSOR, Ambient Temperature
2	06501925	1	D		22				PIN, Push, AMBIENT TEMP SENSOR MTG
3	05139115AA	1	D		22				SENSOR, Washer Fluid Level
4	56029400AB	2	D		22				SENSOR, Tire Pressure
5									HARDWARE KIT, Mounting
	68020719AA	2	D		22				NUT, TPM RETAINING WASHER, SEAL SUPPORT CAP, VALVE STEM, BLACK CAP, VALVE STEM, GREY SEAL, TPM TO WHEEL RIM,VALVE CORE
	68020724AA	2	D		22				VALVE STEM SEAL, TPM TO WHEEL RIM, VALVE CORE, TPM INSTRUCTION SHEET
	68020722AA	2	D		22				Cap Valve Stem,Black Cap Valve Stem, Grey Valve Core, TPM Instruction Sheet, TPM Mounting
6	56054036AA	2	D		22				SENSOR, Seat Position
7	04896173AA	2	D		22				SENSOR, Impact
8	04671779AC	2	D		22				SENSOR, Impact
9	04896086AA	2	D		22				SENSOR, Air Bag, Side Impact
10	55111903AB	1	D		22				SENSOR, Sun
11	1EJ31XDVAD	1	D		22				BEZEL, Sensor

DODGE CHALLENGER (LC)

SERIES	LINE	BODY	ENGINE	TRANSMISSION
H = HIGHLINE	D = DODGE	22 = 2-DR SEDAN TYPE #2	EGG = 3.5L High Output V6 24V MPI Engine	DEC = 6-Speed Manual TREMEC Transmission
P = PREMIUM			ESF = 6.1L SRT HEMI V8 Engine	DGJ = 5-Speed Auto W5A580 Transmission
X = SPECIAL			EZC = 5.7L HEMI VCT Engine	DGV = 4-Spd. Automatic VLP 42RLE Trans
			EZD = 5.7L Hemi VCT MDS Engine	

AR = use ase required - = Non illustrrated part

Sensors Drivetrain
Figure 8-640

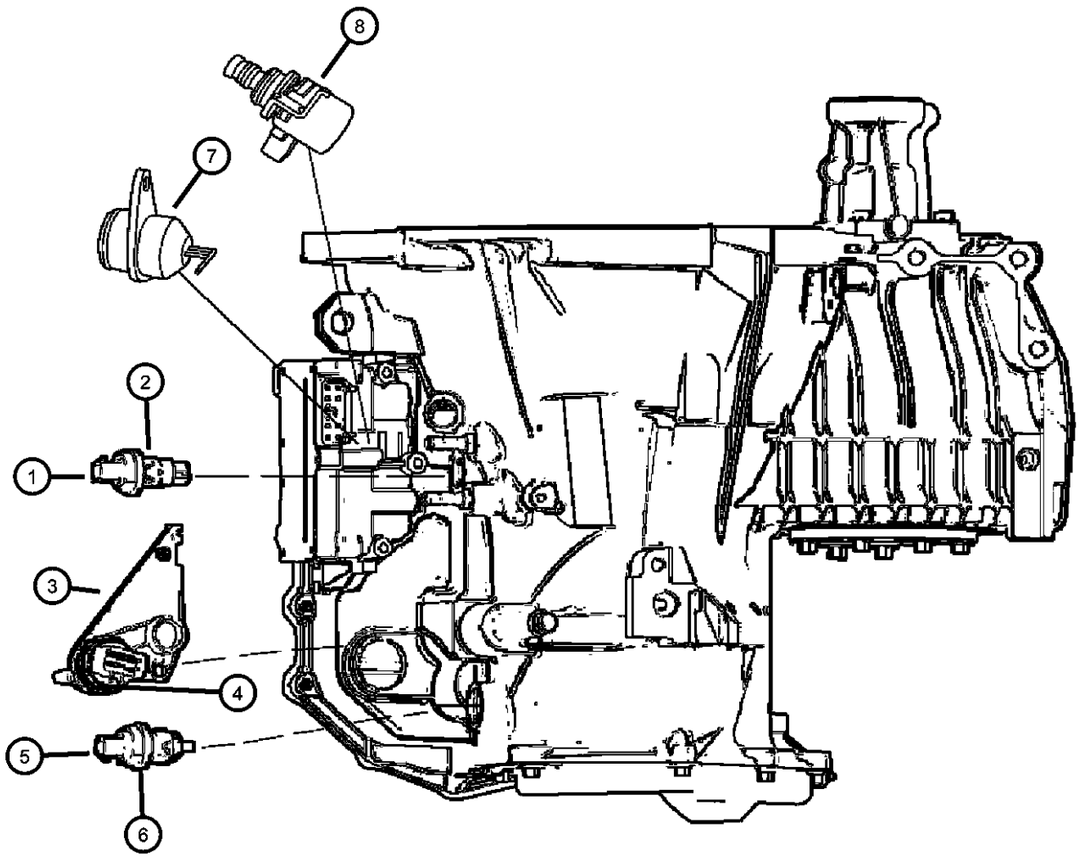

ITEM	PART NUMBER	QTY	LINE	SERIES	BODY	ENGINE	TRANS	TRIM	DESCRIPTION
1	04799061AB	1	D		22	EGG	DGV		SENSOR, Transmission Input Speed
2	04799062	1	D		22	EGG	DGV		O RING
3	04659677AC	1	D		22	EGG	DGV		SENSOR, Manual Valve Lever
4	04659678	1	D		22	EGG	DGV		SEAL, Manual Valve Position Sensor
5	52854001AA	1	D		22	EGG	DGV		SENSOR, Transmission Output Speed
6	04799062	1	D		22	EGG	DGV		O RING
7	05078336AA	1	D		22	EGG	DGV		SENSOR, TRANS PRESSURE TRANSDUCER
8	05078335AA	1	D		22	EGG	DGV		SOLENOID, Transmission Variable Force

DODGE CHALLENGER (LC)

SERIES	LINE	BODY	ENGINE	TRANSMISSION
H = HIGHLINE	D = DODGE	22 = 2-DR SEDAN TYPE #2	EGG = 3.5L High Output V6 24V MPI Engine	DEC = 6-Speed Manual TREMEC Transmission
P = PREMIUM			ESF = 6.1L SRT HEMI V8 Engine	DGJ = 5-Speed Auto W5A580 Transmission
X = SPECIAL			EZC = 5.7L HEMI VCT Engine	DGV = 4-Spd. Automatic VLP 42RLE Trans
			EZD = 5.7L Hemi VCT MDS Engine	

AR = use ase required - = Non illustrrated part

Switches Instrument Panel
Figure 8-805

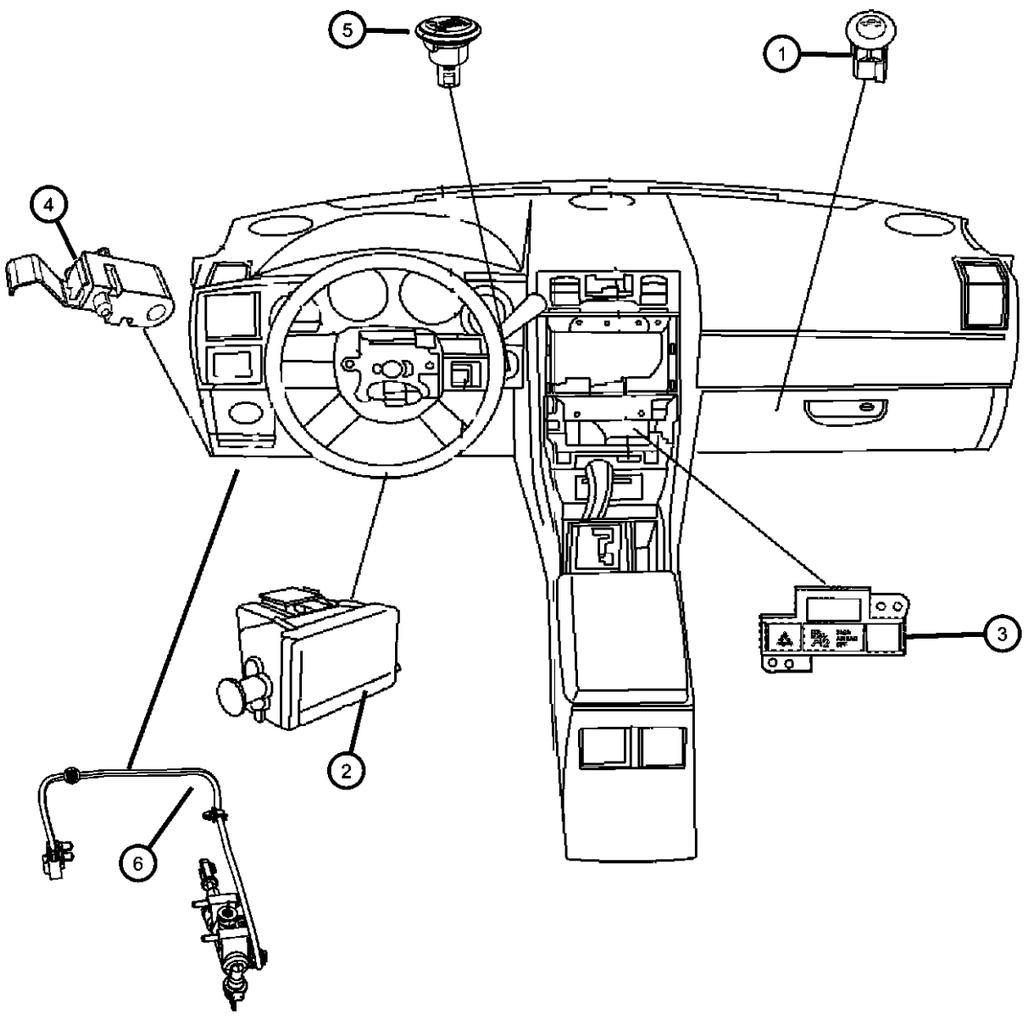

ITEM	PART NUMBER	QTY	LINE	SERIES	BODY	ENGINE	TRANS	TRIM	DESCRIPTION
1	04760847AC	1	D		22				SWITCH, Deck Lid Release
2	04671336AB	1	D		22				SWITCH, Stop Lamp
3									SWITCH, Instrument Panel
	68025931AA	1	D		22				[BNB]
	68025932AA	1	D		22				[BNP]
4	05189366AB	1	D		22				SWITCH, Parking Brake
5									SWITCH, Ignition
	1FU931X9AC	1	D		22		DGJ, DGV		
		1	D		22		DEC		
6	68050183AA	1	D		22		DEC		SWITCH, Clutch Starter Interlock

DODGE CHALLENGER (LC)

SERIES	LINE	BODY	ENGINE	TRANSMISSION
H = HIGHLINE P = PREMIUM X = SPECIAL	D = DODGE	22 = 2-DR SEDAN TYPE #2	EGG = 3.5L High Output V6 24V MPI Engine ESF = 6.1L SRT HEMI V8 Engine EZC = 5.7L HEMI VCT Engine EZD = 5.7L Hemi VCT MDS Engine	DEC = 6-Speed Manual TREMEC Transmission DGJ = 5-Speed Auto W5A580 Transmission DGV = 4-Spd. Automatic VLP 42RLE Trans

AR = use ase required - = Non illustrrated part

Switches Doors, Decklid, and Liftgate
Figure 8-815

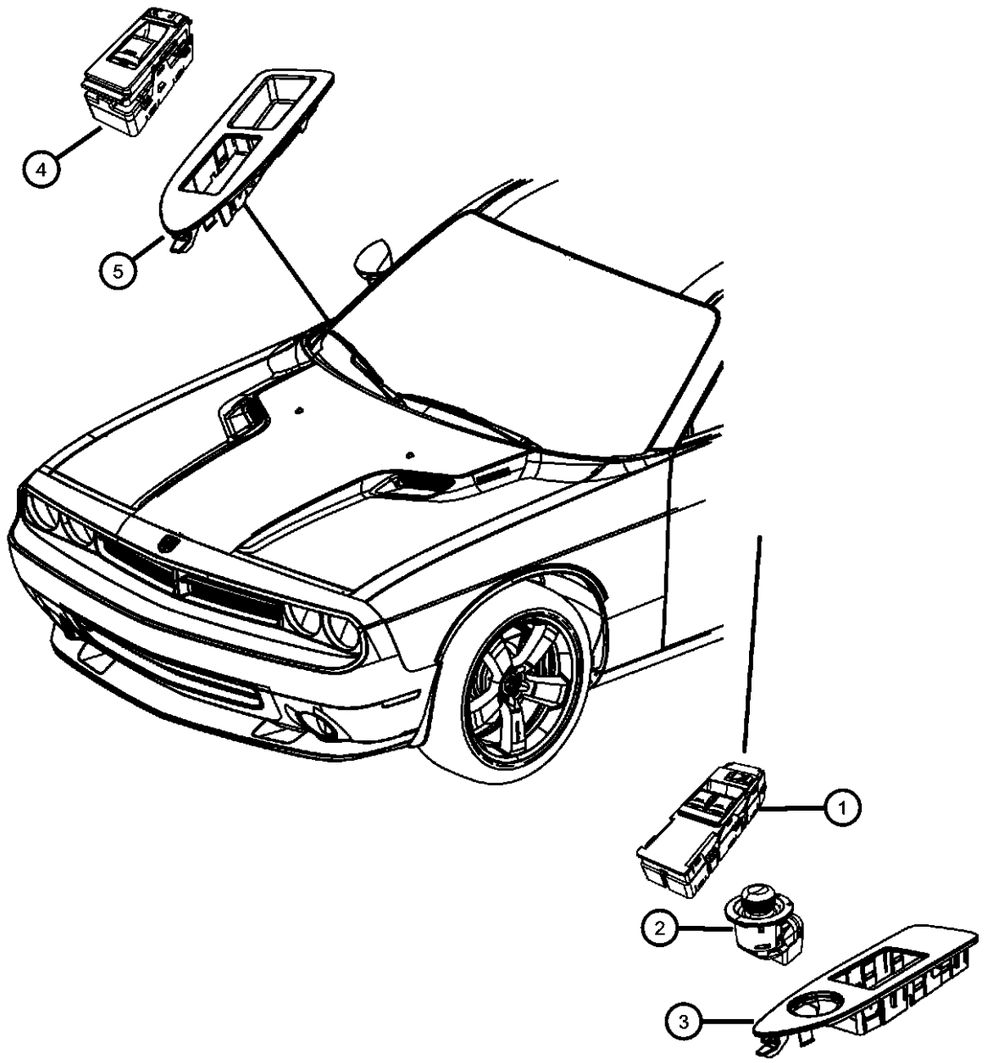

ITEM	PART NUMBER	QTY	LINE	SERIES	BODY	ENGINE	TRANS	TRIM	DESCRIPTION
1									SWITCH, Window and Door Lock
	04602784AA	1	D	P	22				
		1	D	X	22				
		1	D	H	22				
2									SWITCH, Mirror
	04602788AA	1	D	P	22				
	V7700007AA								Mopar Alternative Switch
		1	D	X	22				
	V7700007AA								Mopar Alternative Switch
		1	D	H	22				
	V7700007AA								Mopar Alternative Switch
3									BEZEL, Switch
	1MV651DVAA	1	D	H	22				Left
		1	D	P	22				Left
		1	D	X	22				Left
4									SWITCH, Power Window
	68025161AA	1	D	X	22				
		1	D	H	22				
		1	D	P	22				
5									BEZEL, Switch
	1MV641DVAA	1	D	P	22				Right
		1	D	X	22				Right
		1	D	H	22				Right

DODGE CHALLENGER (LC)

SERIES	LINE	BODY	ENGINE	TRANSMISSION
H = HIGHLINE P = PREMIUM X = SPECIAL	D = DODGE	22 = 2-DR SEDAN TYPE #2	EGG = 3.5L High Output V6 24V MPI Engine ESF = 6.1L SRT HEMI V8 Engine EZC = 5.7L HEMI VCT Engine EZD = 5.7L Hemi VCT MDS Engine	DEC = 6-Speed Manual TREMEC Transmission DGJ = 5-Speed Auto W5A580 Transmission DGV = 4-Spd. Automatic VLP 42RLE Trans

Switches Body
Figure 8-820

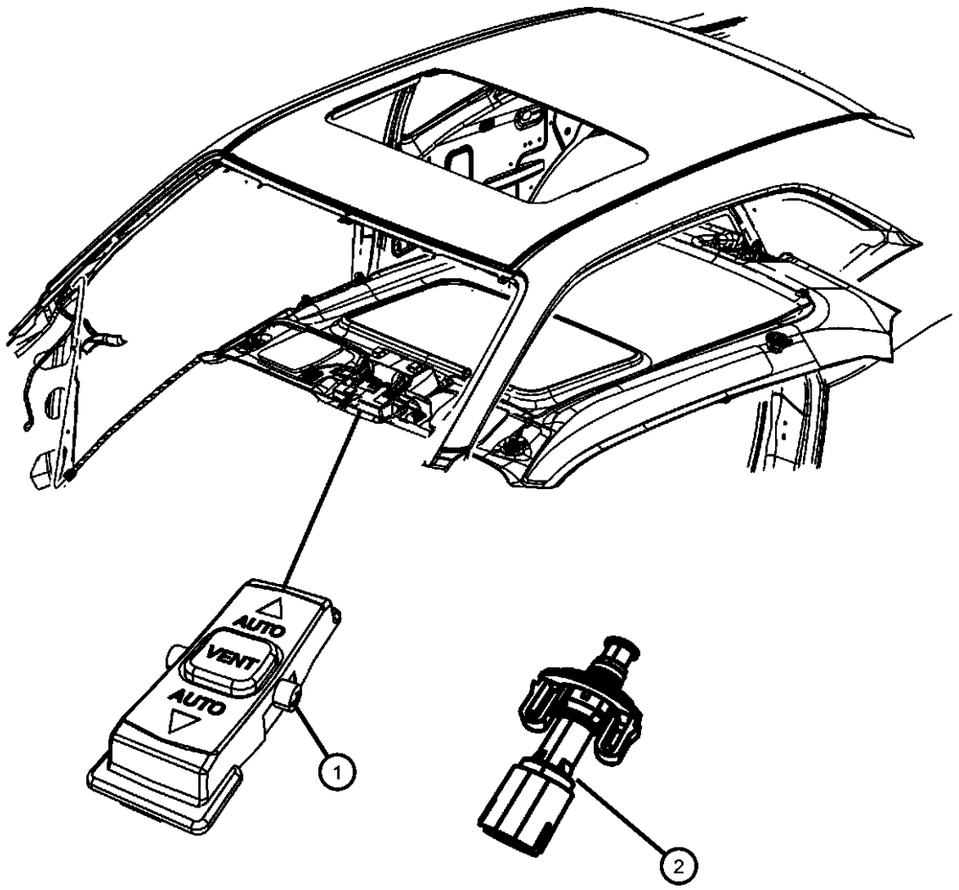

ITEM	PART NUMBER	QTY	LINE	SERIES	BODY	ENGINE	TRANS	TRIM	DESCRIPTION
1	68023666AA	1	D		22				SWITCH, Sunroof
2	04707875AB	1	D		22				SWITCH, Underhood

DODGE CHALLENGER (LC)

SERIES	LINE	BODY	ENGINE	TRANSMISSION
H = HIGHLINE	D = DODGE	22 = 2-DR SEDAN TYPE #2	EGG = 3.5L High Output V6 24V MPI Engine	DEC = 6-Speed Manual TREMEC Transmission
P = PREMIUM			ESF = 6.1L SRT HEMI V8 Engine	DGJ = 5-Speed Auto W5A580 Transmission
X = SPECIAL			EZC = 5.7L HEMI VCT Engine	DGV = 4-Spd. Automatic VLP 42RLE Trans
			EZD = 5.7L Hemi VCT MDS Engine	

Switches Seats
Figure 8-825

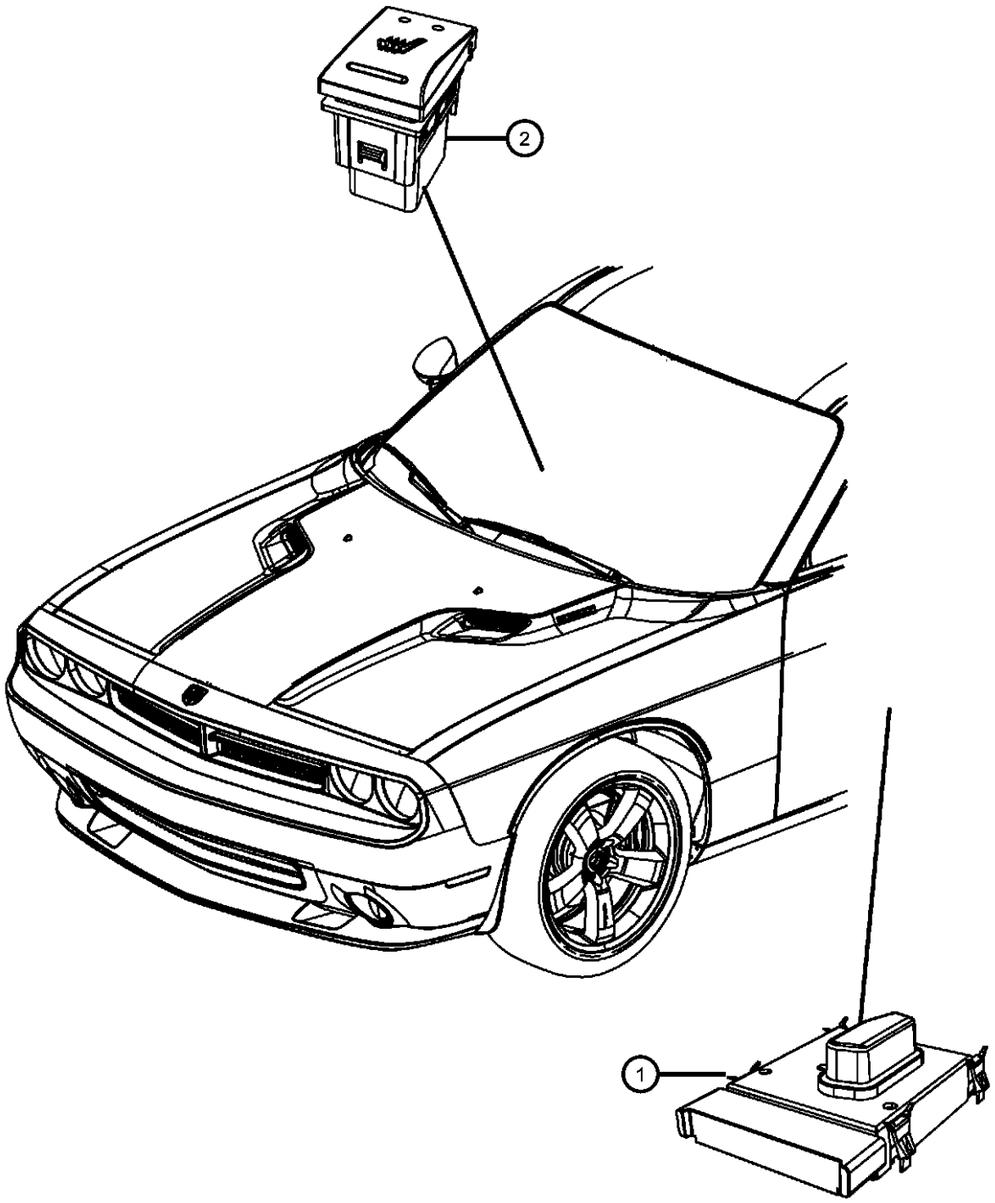

ITEM	PART NUMBER	QTY	LINE	SERIES	BODY	ENGINE	TRANS	TRIM	DESCRIPTION
1									SWITCH, Power Seat
	56049429AE	1	D		22				6 way, Driver
	56049431AE	1	D		22				8 way [JPS], Driver
	56049433AE	1	D		22				8 way [JPR], Driver
2	04602970AA	2	D		22				SWITCH, Heated Seat

DODGE CHALLENGER (LC)

SERIES	LINE	BODY	ENGINE	TRANSMISSION
H = HIGHLINE P = PREMIUM X = SPECIAL	D = DODGE	22 = 2-DR SEDAN TYPE #2	EGG = 3.5L High Output V6 24V MPI Engine ESF = 6.1L SRT HEMI V8 Engine EZC = 5.7L HEMI VCT Engine EZD = 5.7L Hemi VCT MDS Engine	DEC = 6-Speed Manual TREMEC Transmission DGJ = 5-Speed Auto W5A580 Transmission DGV = 4-Spd. Automatic VLP 42RLE Trans

Switches Steering Column and Wheel
Figure 8-830

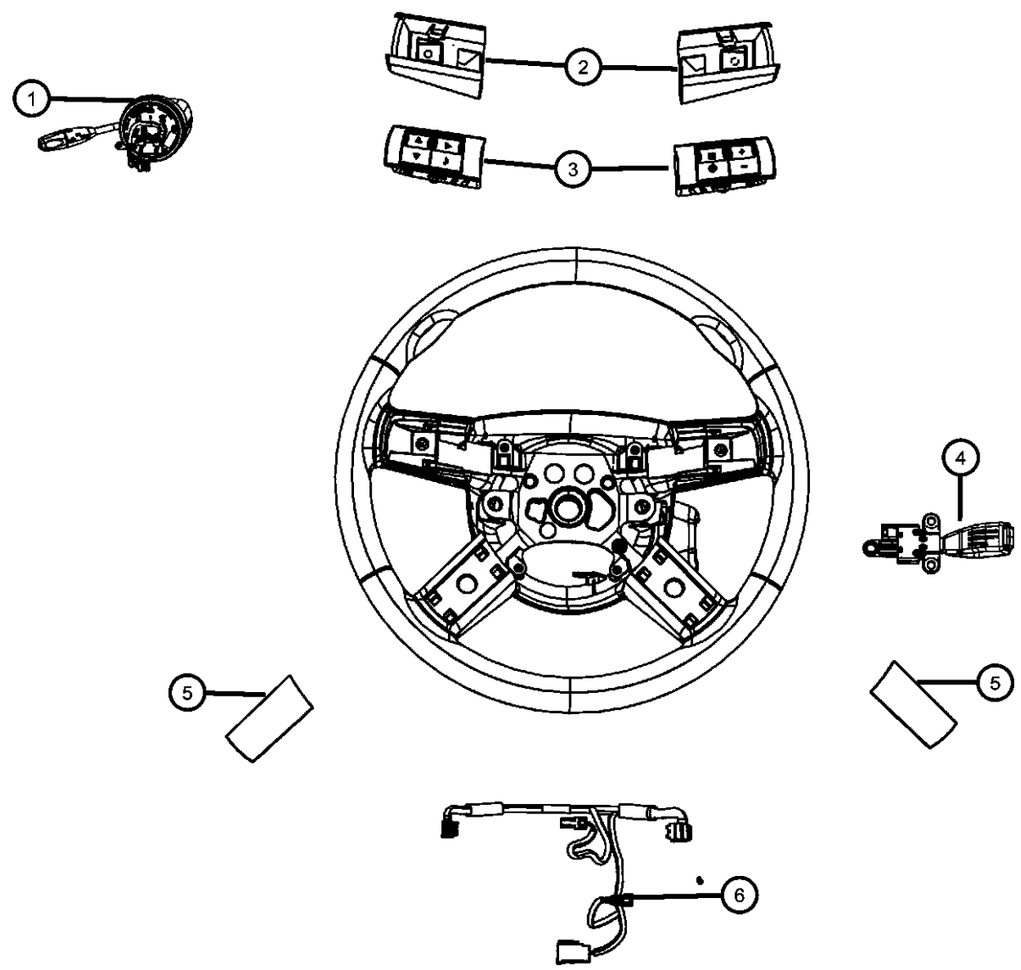

ITEM	PART NUMBER	QTY	LINE	SERIES	BODY	ENGINE	TRANS	TRIM	DESCRIPTION
1	68034897AA	1	D		22				SWITCH, Multifunction
2									BEZEL, Steering Wheel Switch
	1CJ951DVAA	1	D		22				Left
	1CJ941DVAA	1	D		22				Right
3									SWITCH, Steering Wheel, Reconfigurable
	0UZ571ZAAD	1	D		22				Left
	0UZ561ZAAD	1	D		22				Right
4	56046079AB	1	D		22				SWITCH, Speed Control
5									COVER, Switch Opening
	0ZL51XZAAA	1	D		22				Left
	0ZL50XZAAA	1	D		22				Right
6	68039387AA	1	D		22				WIRING, Steering Wheel

DODGE CHALLENGER (LC)

SERIES	LINE	BODY	ENGINE	TRANSMISSION
H = HIGHLINE P = PREMIUM X = SPECIAL	D = DODGE	22 = 2-DR SEDAN TYPE #2	EGG = 3.5L High Output V6 24V MPI Engine ESF = 6.1L SRT HEMI V8 Engine EZC = 5.7L HEMI VCT Engine EZD = 5.7L Hemi VCT MDS Engine	DEC = 6-Speed Manual TREMEC Transmission DGJ = 5-Speed Auto W5A580 Transmission DGV = 4-Spd. Automatic VLP 42RLE Trans

Switches Powertrain
Figure 8-835

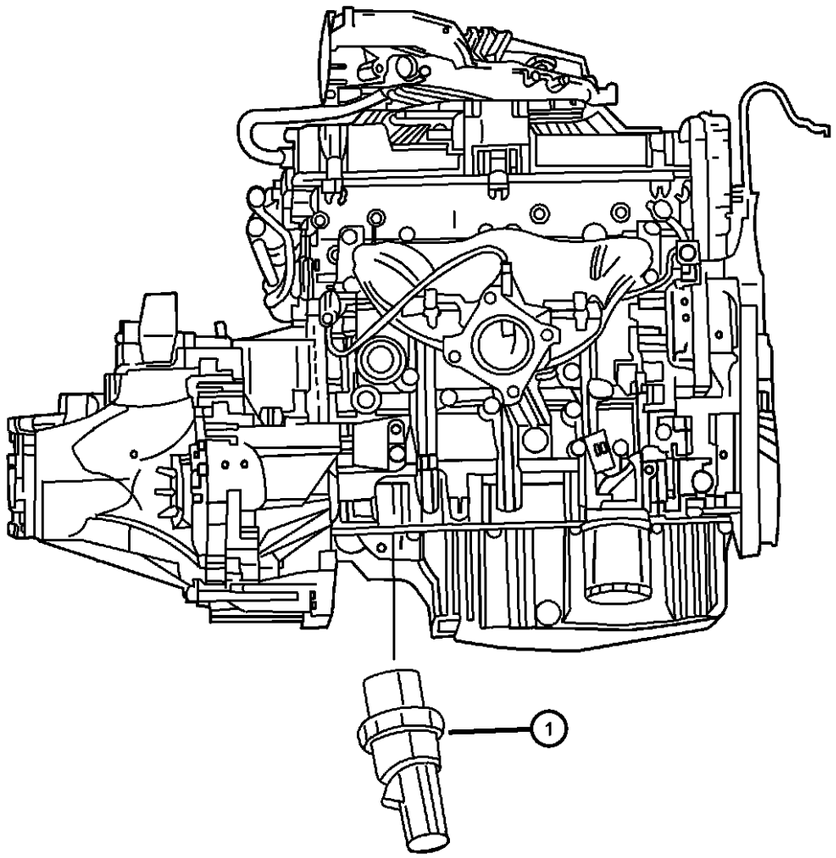

ITEM	PART NUMBER	QTY	LINE	SERIES	BODY	ENGINE	TRANS	TRIM	DESCRIPTION
1									SENDING UNIT, Oil Pressure
	05149062AA	1	D		22	ESF			
	05149098AA	1	D		22	EGG			
	68060337AA	1	D		22	EZC, EZD			
		1	D		22	EZH			
-2	68056417AA	1	D		22	ESF, EZC, EZD	DEC		SWITCH, Back Up Lamp

DODGE CHALLENGER (LC)

SERIES	LINE	BODY	ENGINE	TRANSMISSION
H = HIGHLINE P = PREMIUM X = SPECIAL	D = DODGE	22 = 2-DR SEDAN TYPE #2	EGG = 3.5L High Output V6 24V MPI Engine ESF = 6.1L SRT HEMI V8 Engine EZC = 5.7L HEMI VCT Engine EZD = 5.7L Hemi VCT MDS Engine	DEC = 6-Speed Manual TREMEC Transmission DGJ = 5-Speed Auto W5A580 Transmission DGV = 4-Spd. Automatic VLP 42RLE Trans

Switches Heating and Air Conditioning
Figure 8-840

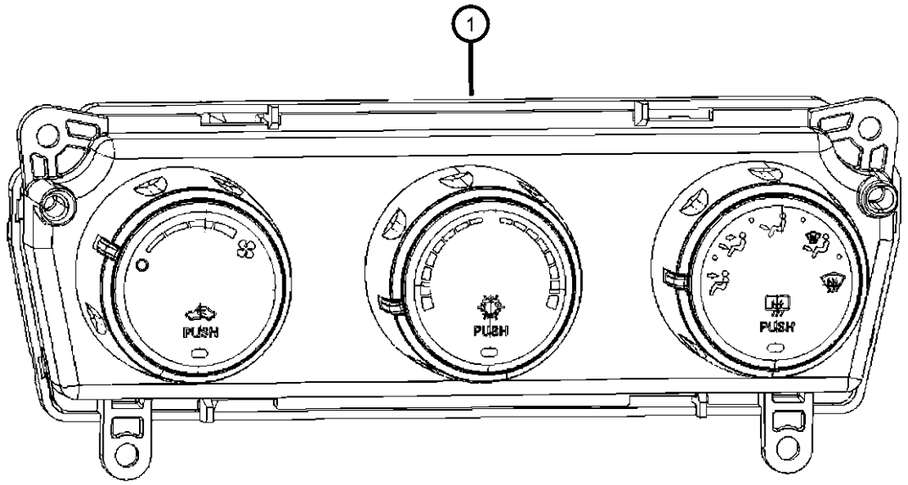

ITEM	PART NUMBER	QTY	LINE	SERIES	BODY	ENGINE	TRANS	TRIM	DESCRIPTION
1									CONTROL, A/C And Heater
	55111904AE	1	D		22				Up to 02/02/2009
	55111952AA	1	D		22				After 02/02/2009

DODGE CHALLENGER (LC)

SERIES	LINE	BODY	ENGINE	TRANSMISSION
H = HIGHLINE	D = DODGE	22 = 2-DR SEDAN TYPE #2	EGG = 3.5L High Output V6 24V MPI Engine	DEC = 6-Speed Manual TREMEC Transmission
P = PREMIUM			ESF = 6.1L SRT HEMI V8 Engine	DGJ = 5-Speed Auto W5A580 Transmission
X = SPECIAL			EZC = 5.7L HEMI VCT Engine	DGV = 4-Spd. Automatic VLP 42RLE Trans
			EZD = 5.7L Hemi VCT MDS Engine	

Switches Lighting
Figure 8-845

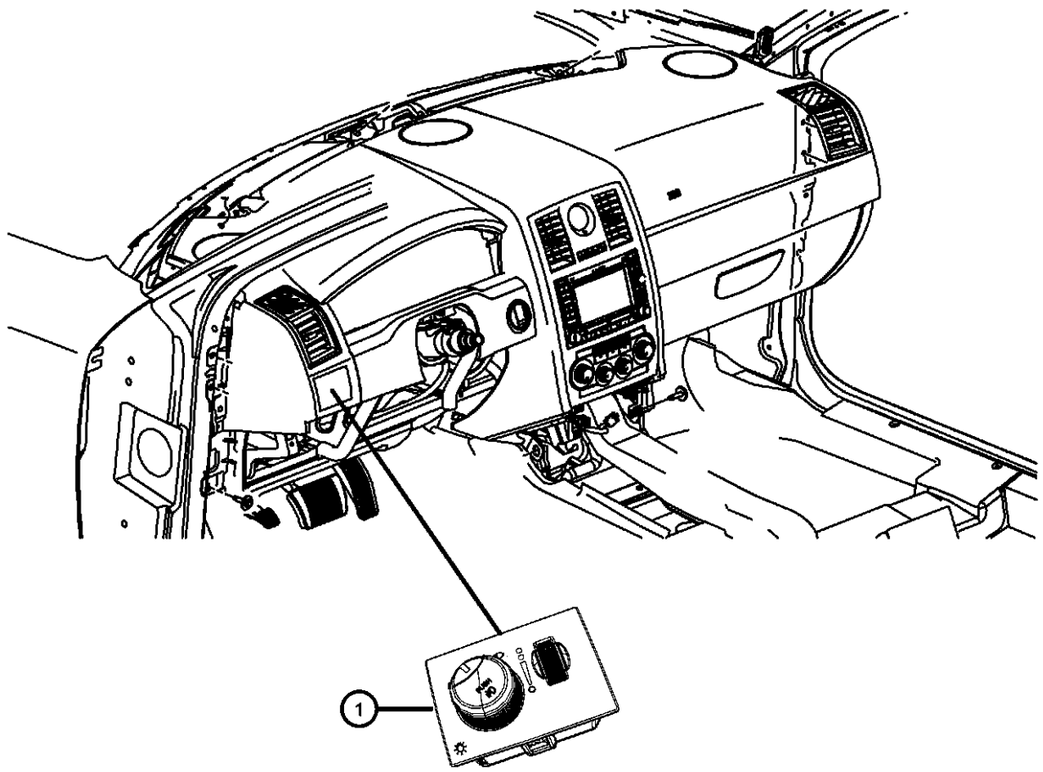

ITEM	PART NUMBER	QTY	LINE	SERIES	BODY	ENGINE	TRANS	TRIM	DESCRIPTION
1									SWITCH, Headlamp
	68019567AC	1	D		22				
	68019678AC	1	D		22				[LNJ]
	68019789AC	1	D		22				[LMG][LNJ]

DODGE CHALLENGER (LC)

SERIES	LINE	BODY	ENGINE	TRANSMISSION
H = HIGHLINE	D = DODGE	22 = 2-DR SEDAN TYPE #2	EGG = 3.5L High Output V6 24V MPI Engine	DEC = 6-Speed Manual TREMEC Transmission
P = PREMIUM			ESF = 6.1L SRT HEMI V8 Engine	DGJ = 5-Speed Auto W5A580 Transmission
X = SPECIAL			EZC = 5.7L HEMI VCT Engine	DGV = 4-Spd. Automatic VLP 42RLE Trans
			EZD = 5.7L Hemi VCT MDS Engine	

Horns
Figure 8-905

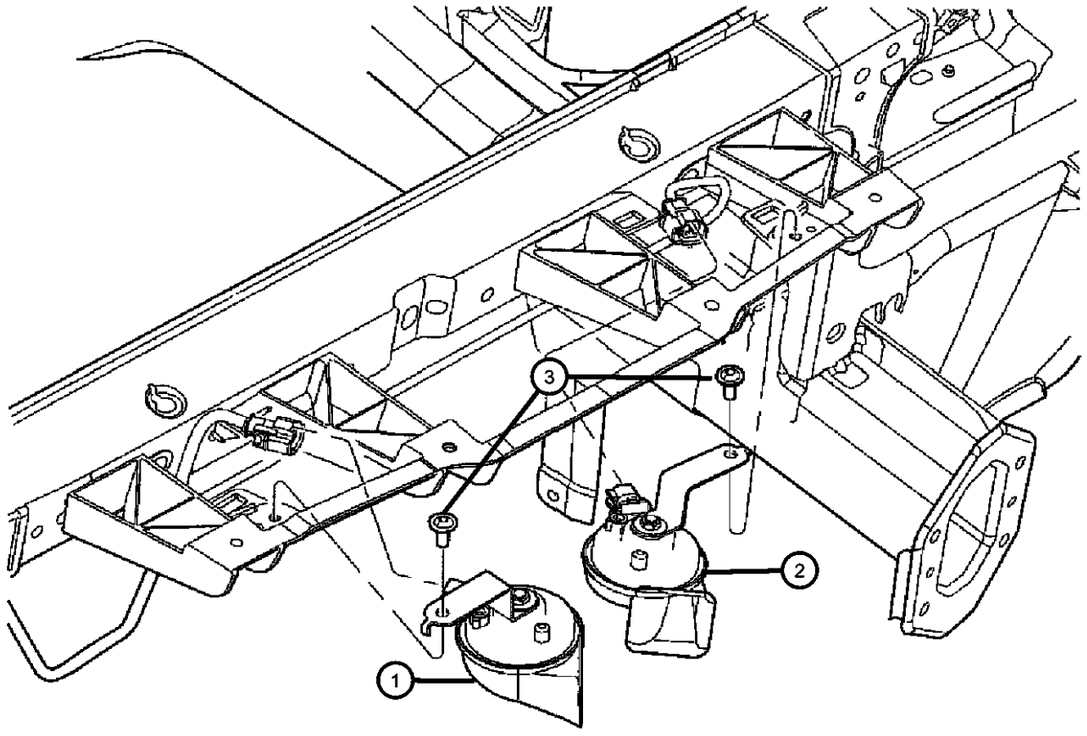

ITEM	PART NUMBER	QTY	LINE	SERIES	BODY	ENGINE	TRANS	TRIM	DESCRIPTION
1	05026212AD	1	D		22				HORN AND BRACKET, Low Note
2	05026213AC	1	D		22				HORN AND BRACKET, High Note
3	06505903AA	2	D		22				SCREW AND WASHER, Self Tapping, M6x1x22

DODGE CHALLENGER (LC)

SERIES	LINE	BODY	ENGINE	TRANSMISSION
H = HIGHLINE P = PREMIUM X = SPECIAL	D = DODGE	22 = 2-DR SEDAN TYPE #2	EGG = 3.5L High Output V6 24V MPI Engine ESF = 6.1L SRT HEMI V8 Engine EZC = 5.7L HEMI VCT Engine EZD = 5.7L Hemi VCT MDS Engine	DEC = 6-Speed Manual TREMEC Transmission DGJ = 5-Speed Auto W5A580 Transmission DGV = 4-Spd. Automatic VLP 42RLE Trans

Battery Tray and Support
Figure 8-1005

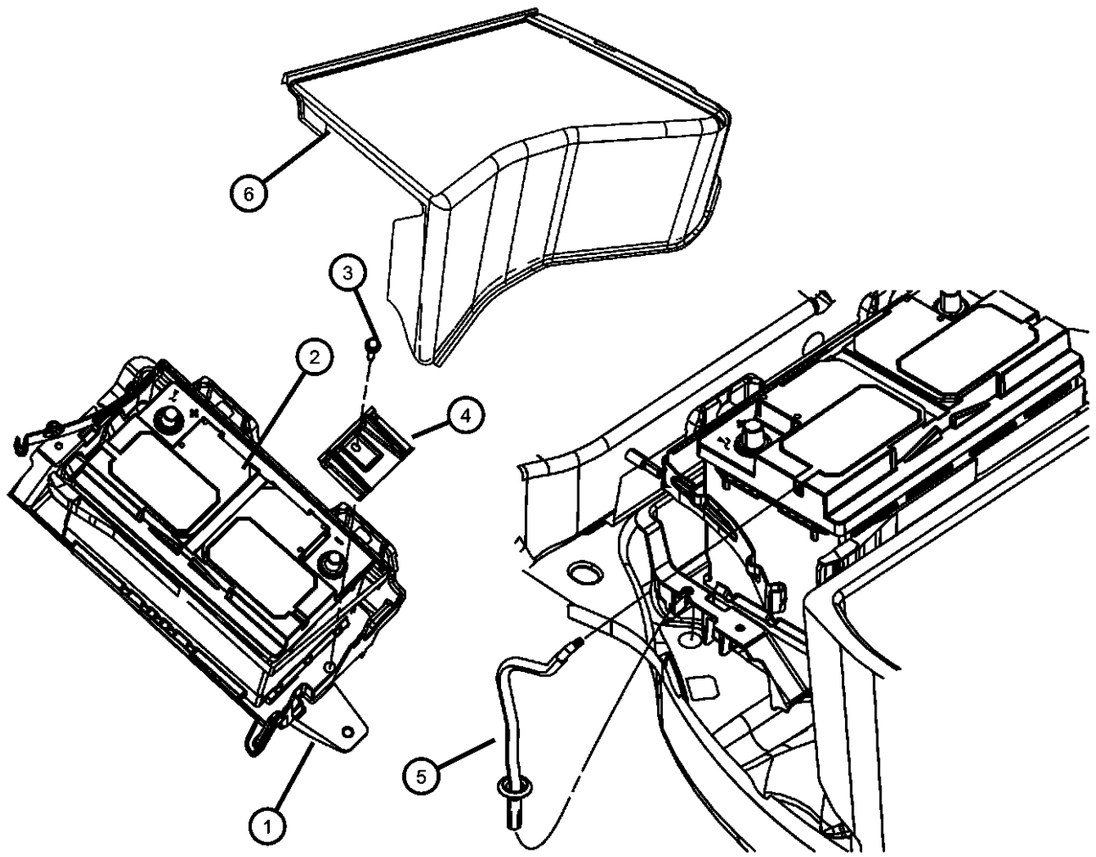

ITEM	PART NUMBER	QTY	LINE	SERIES	BODY	ENGINE	TRANS	TRIM	DESCRIPTION
1	05065355AK	1	D		22				TRAY, Battery
2	BB94R750AA	1	D		22				BATTERY, Storage
3	06508065AA	1	D		22				BOLT AND CONED WASHER, Hex Head, M6X1.00X23.00
4	04780789AC	1	D		22				BRACKET, Battery
5	04608914AA	1	D		22				HOSE, Battery Vent
6	05000042AB	1	D		22				COVER, Battery

DODGE CHALLENGER (LC)

SERIES	LINE	BODY	ENGINE	TRANSMISSION
H = HIGHLINE	D = DODGE	22 = 2-DR SEDAN TYPE #2	EGG = 3.5L High Output V6 24V MPI Engine	DEC = 6-Speed Manual TREMEC Transmission
P = PREMIUM			ESF = 6.1L SRT HEMI V8 Engine	DGJ = 5-Speed Auto W5A580 Transmission
X = SPECIAL			EZC = 5.7L HEMI VCT Engine	DGV = 4-Spd. Automatic VLP 42RLE Trans
			EZD = 5.7L Hemi VCT MDS Engine	

AR = use ase required - = Non illustrrated part

Battery Wiring
Figure 8-1010

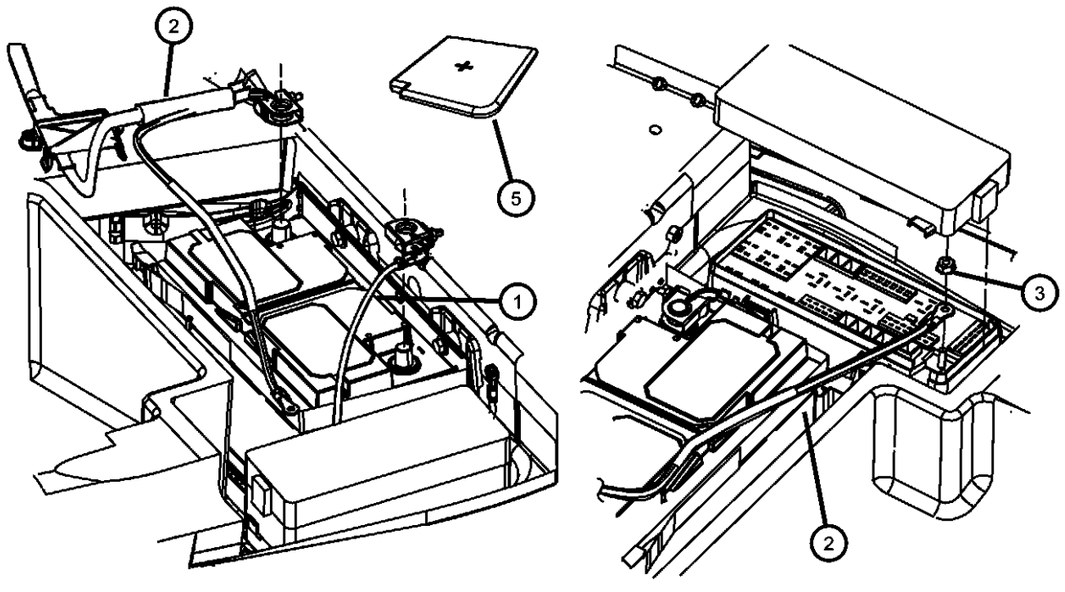

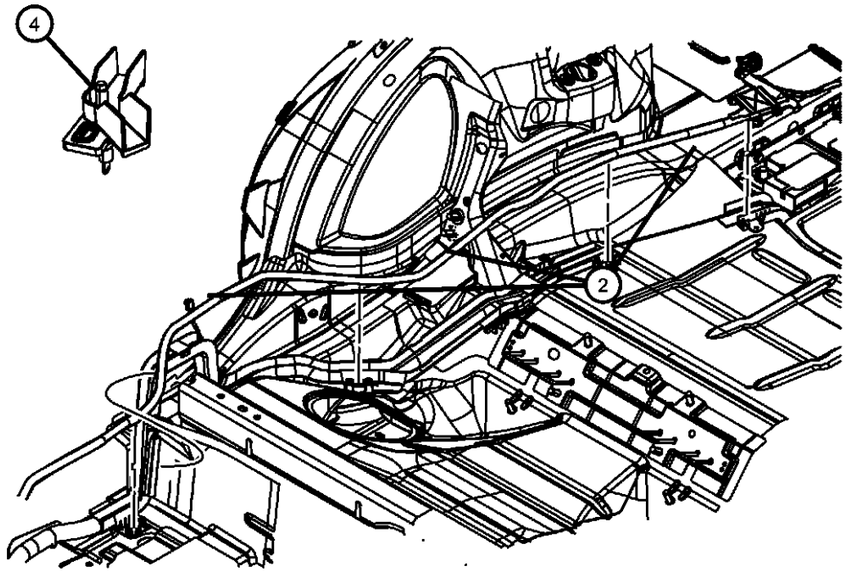

ITEM	PART NUMBER	QTY	LINE	SERIES	BODY	ENGINE	TRANS	TRIM	DESCRIPTION
1	04607550AA	1	D		22				WIRING, Battery Negative
2	04607677AA	1	D		22				WIRING, Battery Positive
3	06101802	1	D		22				NUT AND WASHER, Hex, M6X1.00
4	05059113AC	1	D		22				ISOLATOR, Battery Positive
5	04606858AA	1	D		22				COVER, Battery Terminal

DODGE CHALLENGER (LC)

SERIES	LINE	BODY	ENGINE	TRANSMISSION
H = HIGHLINE P = PREMIUM X = SPECIAL	D = DODGE	22 = 2-DR SEDAN TYPE #2	EGG = 3.5L High Output V6 24V MPI Engine ESF = 6.1L SRT HEMI V8 Engine EZC = 5.7L HEMI VCT Engine EZD = 5.7L Hemi VCT MDS Engine	DEC = 6-Speed Manual TREMEC Transmission DGJ = 5-Speed Auto W5A580 Transmission DGV = 4-Spd. Automatic VLP 42RLE Trans

Lamps Front
Figure 8-1105

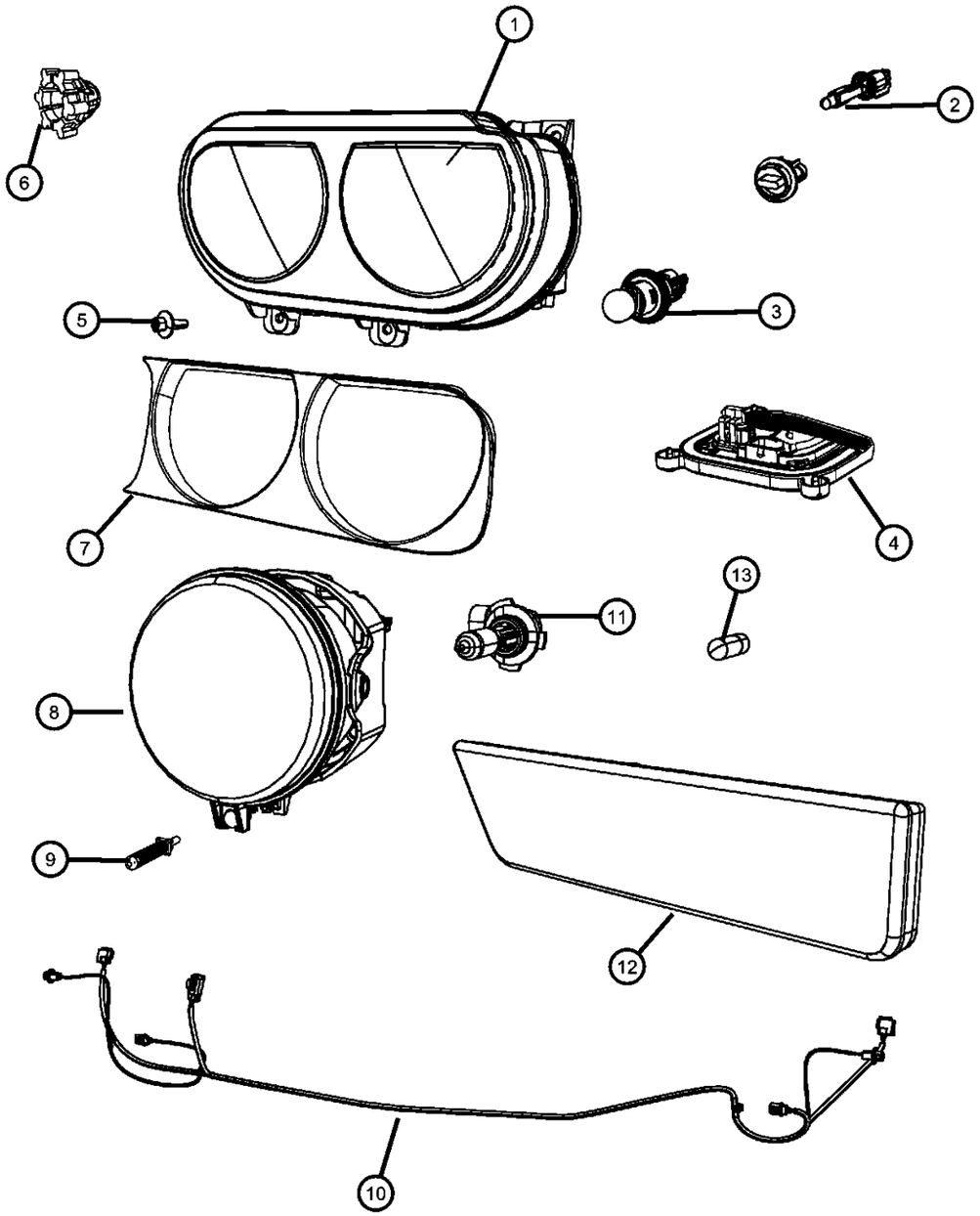

ITEM	PART NUMBER	QTY	LINE	SERIES	BODY	ENGINE	TRANS	TRIM	DESCRIPTION
1									HEADLAMP
	05028777AA	1	D		22				[LMB], Left
	05028778AA	1	D		22				[LMP], Right
	05028779AA	1	D		22				[LMP], Left
	05028776AA	1	D		22				[LMB], Right
2									BULB, Headlamp
	04865941AC	1	D		22				[LMP]
	L0000H13	1	D		22				[LMB]
3	L004157NAK	1	D		22				BULB, 4157 NAK
4	68033739AA	1	D		22				MODULE, HID Ballast
5	06507843AA	6	D		22				SCREW, Headlamp Mounting
6	04806111AA	2	D		22				RETAINER, Ball Stud
7									BEZEL, Headlamp
	68051526AA	1	D	H	22				Right
	68051527AA	1	D	P	22				Left
		1	D	P	22				Right
		1	D	X	22				Right
		1	D	X	22				Left
		1	D	H	22				Left
8									LAMP, Front Fog
	04805857AB	2	D	X	22				
		2	D	P	22				
		2	D	H	22				
9	06506579AA	4	D	X	22				SCREW, Tapping, M6X2.69X21.55
10									WIRING, Front End Lighting
	68043391AA	1	D	X	22				
	68051384AA	1	D	P	22				
11									BULB, 9145
	L0009145	2	D	H	22				
		2	D	X	22				
		2	D	P	22				
12									LAMP, Side Marker
	68043394AA	1	D	X	22				Right

DODGE CHALLENGER (LC)

SERIES	LINE	BODY	ENGINE	TRANSMISSION
H = HIGHLINE P = PREMIUM X = SPECIAL	D = DODGE	22 = 2-DR SEDAN TYPE #2	EGG = 3.5L High Output V6 24V MPI Engine ESF = 6.1L SRT HEMI V8 Engine EZC = 5.7L HEMI VCT Engine EZD = 5.7L Hemi VCT MDS Engine	DEC = 6-Speed Manual TREMEC Transmission DGJ = 5-Speed Auto W5A580 Transmission DGV = 4-Spd. Automatic VLP 42RLE Trans

Lamps Front
Figure 8-1105

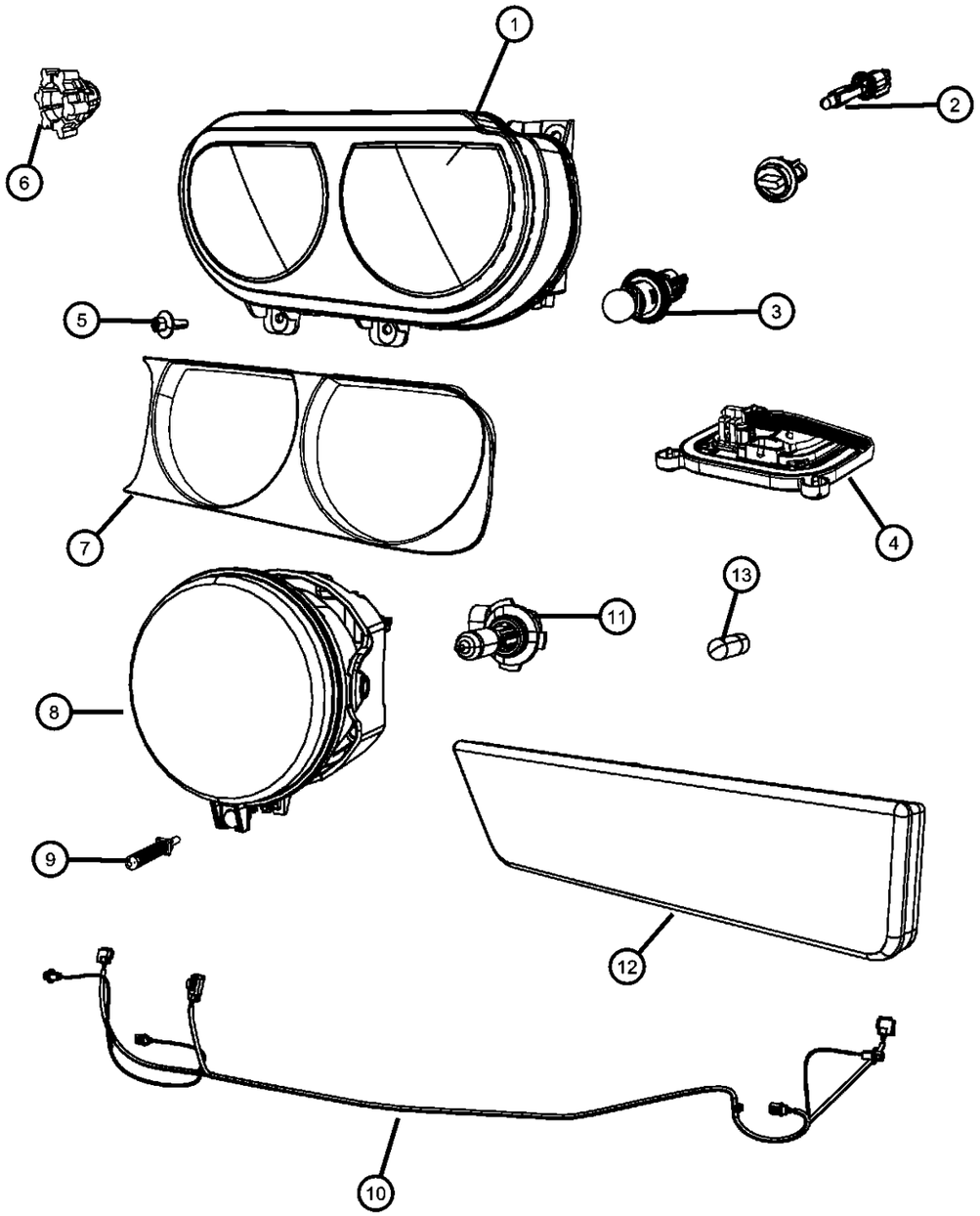

ITEM	PART NUMBER	QTY	LINE	SERIES	BODY	ENGINE	TRANS	TRIM	DESCRIPTION
		1	D	P	22				Right
	68043395AA	1	D	P	22				Left
		1	D	H	22				Left
		1	D	H	22				Right
		1	D	X	22				Left
13	L0000168	1	D		22				BULB, 168

DODGE CHALLENGER (LC)

SERIES	LINE	BODY	ENGINE	TRANSMISSION
H = HIGHLINE P = PREMIUM X = SPECIAL	D = DODGE	22 = 2-DR SEDAN TYPE #2	EGG = 3.5L High Output V6 24V MPI Engine ESF = 6.1L SRT HEMI V8 Engine EZC = 5.7L HEMI VCT Engine EZD = 5.7L Hemi VCT MDS Engine	DEC = 6-Speed Manual TREMEC Transmission DGJ = 5-Speed Auto W5A580 Transmission DGV = 4-Spd. Automatic VLP 42RLE Trans

Lamps Rear
Figure 8-1110

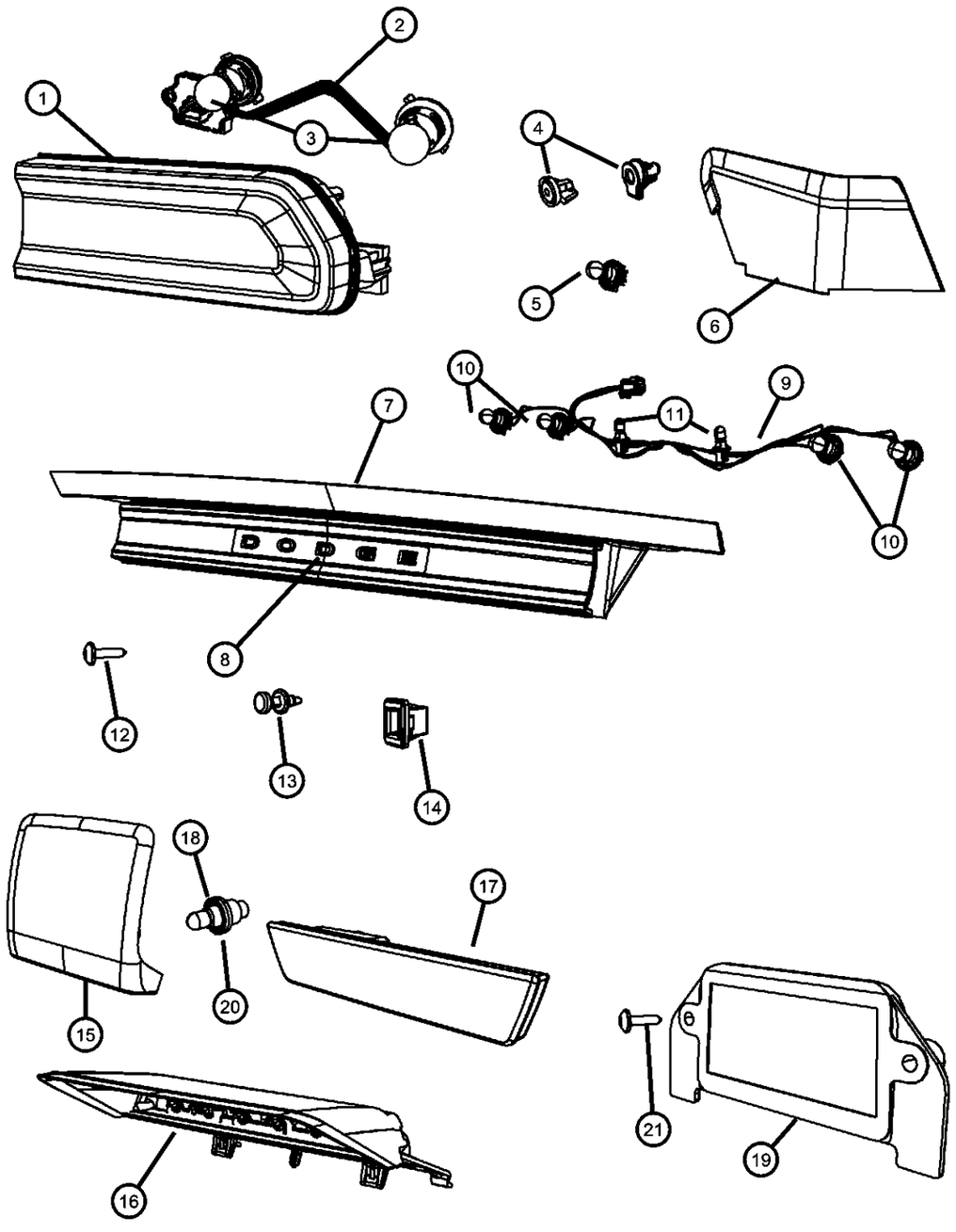

ITEM	PART NUMBER	QTY	LINE	SERIES	BODY	ENGINE	TRANS	TRIM	DESCRIPTION
1									LAMP, Tail Stop Turn
	05028780AB	1	D		22				Right
	05028781AB	1	D		22				Left
2		1							WIRING, Tail Lamp, serviced in lamp assembly, (NOT SERVICED)
3	L0003057	2	D		22				BULB, 3057
	P003157STS								SilverStar
4	06507357AA	8	D		22				NUT, Wing, M6x1
5	05113359AA	2	D		22				GROMMET, Tail Lamp, [Tail Lamp to Quarter]
6									PANEL, Close out
	68040112AB	1	D		22				Right
	68040113AB	1	D		22				Left
7	05028775AB	1	D		22				LAMP, Tail Backup
8	68060402AA	1	D		22				DECAL, Dodge
9	68046866AA	1	D		22				WIRING, Tail Lamp
10	L0003057	4	D		22				BULB, 3057
	P003157STS								SilverStar
11	L000921E	2	D		22				BULB, 921
	P000921STS								SilverStar
12	06104568AA	2	D		22				SCREW, Tapping Round Head, M4.2X1.4X19.0
13	04857345AA	2	D		22				FASTENER, Tail Lamp, .190-16 x .625
14	05113360AA	3	D		22				GROMMET, Tail Lamp, [Center, Clear, Panel]
15	05028782AB	1	D		22				LAMP, Center High Mounted Stop
16	68048883AA	1	D		22				COVER, High Mounted Stop Lamp
17									LAMP, Side Marker
	68039504AA	1	D		22				Right
	68039505AA	1	D		22				Left
18	L0000168	1	D		22				BULB, 168
19	04805846AA	1	D		22				LAMP, Licence Plate
20	L002825W5W	1	D		22				BULB, W5W
21	06035204	2	D		22				SCREW, Tapping, .19-16x.75

DODGE CHALLENGER (LC)

SERIES	LINE	BODY	ENGINE	TRANSMISSION
H = HIGHLINE P = PREMIUM X = SPECIAL	D = DODGE	22 = 2-DR SEDAN TYPE #2	EGG = 3.5L High Output V6 24V MPI Engine ESF = 6.1L SRT HEMI V8 Engine EZC = 5.7L HEMI VCT Engine EZD = 5.7L Hemi VCT MDS Engine	DEC = 6-Speed Manual TREMEC Transmission DGJ = 5-Speed Auto W5A580 Transmission DGV = 4-Spd. Automatic VLP 42RLE Trans

AR = use ase required - = Non illustrrated part

Lamps Interior
Figure 8-1115

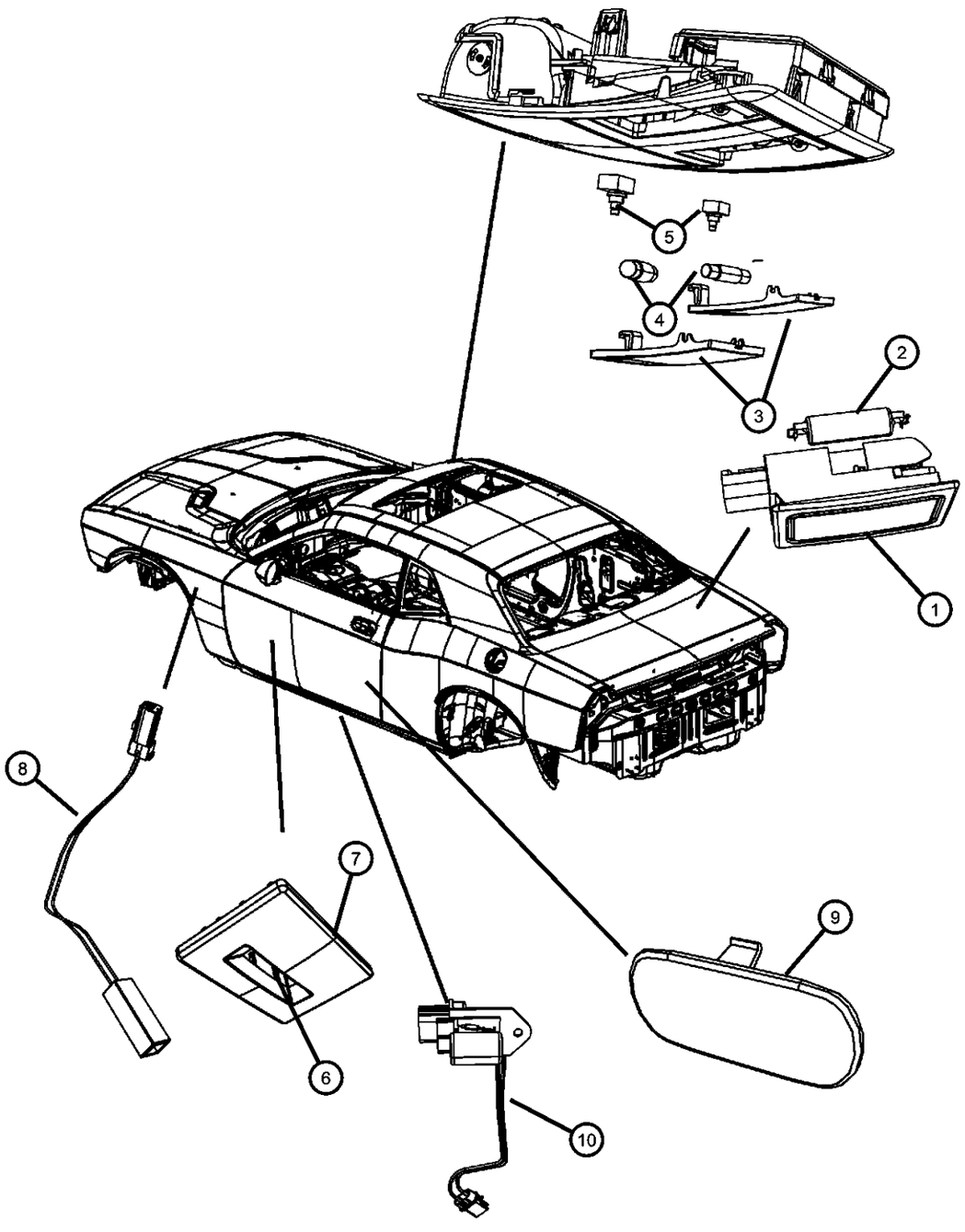

ITEM	PART NUMBER	QTY	LINE	SERIES	BODY	ENGINE	TRANS	TRIM	DESCRIPTION
1	04608528AC	1	D		22				LAMP, Courtesy
2	L0000562	1	D		22				BULB, 562
3									LENS
	05137527AA	1	D		22				Left
	05137526AA	1	D		22				Right
4	L0000578	2	D		22				BULB, 578
5	05137535AA	2	D		22				SWITCH, Map Light
6									LAMP, LED
	68042209AA	1	D		22				
		1	D	X	22				
		1	D	P	22				
7									BEZEL, LED
	1MV601DVAB	1	D	P	22				Right
		1	D	X	22				Right
	1MV611DVAB	1	D	P	22				Left
		1	D	X	22				Left
8	68054658AA	1	D	P	22				CABLE, Jumper, LED lamp door
9	68046499AA	1	D		22				REFLECTOR, Door Trim Panel
10	68052246AA	1	D		22				LAMP, LED, In seat back

DODGE CHALLENGER (LC)

SERIES	LINE	BODY	ENGINE	TRANSMISSION
H = HIGHLINE P = PREMIUM X = SPECIAL	D = DODGE	22 = 2-DR SEDAN TYPE #2	EGG = 3.5L High Output V6 24V MPI Engine ESF = 6.1L SRT HEMI V8 Engine EZC = 5.7L HEMI VCT Engine EZD = 5.7L Hemi VCT MDS Engine	DEC = 6-Speed Manual TREMEC Transmission DGJ = 5-Speed Auto W5A580 Transmission DGV = 4-Spd. Automatic VLP 42RLE Trans

AR = use ase required - = Non illustrrated part

Wiring Engine
Figure 8-1205

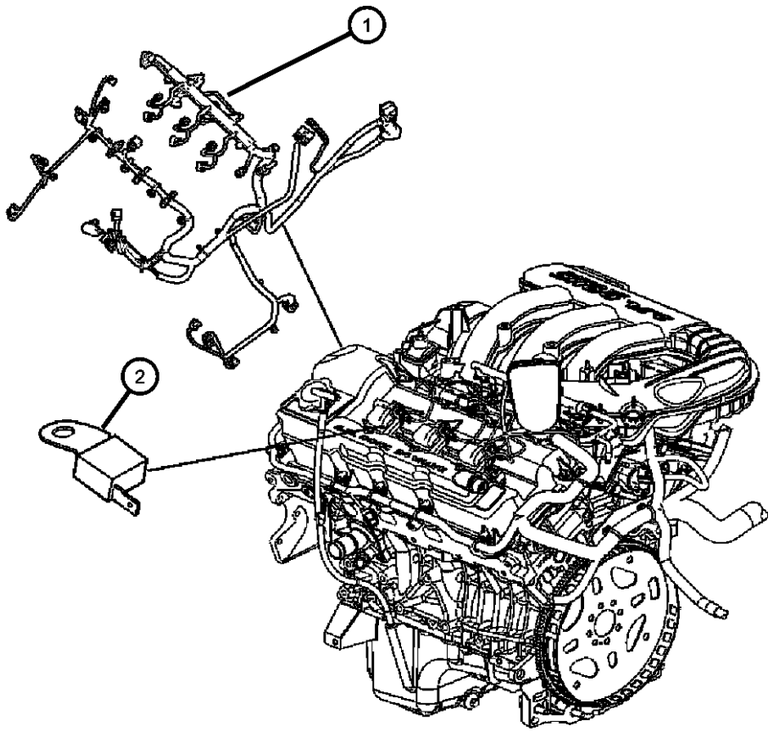

ITEM	PART NUMBER	QTY	LINE	SERIES	BODY	ENGINE	TRANS	TRIM	DESCRIPTION
1									WIRING, Engine
	04801655AC	1	D		22	EG0			Up to 12/17/07
	05148096AB	1	D		22	EGG	DGJ		After 12/17/07
	05148098AB	1	D		22	EGG	DGV		
2	05149061AA	1	D		22	EGG			CAPACITOR, Ignition

DODGE CHALLENGER (LC)

SERIES	LINE	BODY	ENGINE	TRANSMISSION
H = HIGHLINE	D = DODGE	22 = 2-DR SEDAN TYPE #2	EGG = 3.5L High Output V6 24V MPI Engine	DEC = 6-Speed Manual TREMEC Transmission
P = PREMIUM			ESF = 6.1L SRT HEMI V8 Engine	DGJ = 5-Speed Auto W5A580 Transmission
X = SPECIAL			EZC = 5.7L HEMI VCT Engine	DGV = 4-Spd. Automatic VLP 42RLE Trans
			EZD = 5.7L Hemi VCT MDS Engine	

Wiring Engine
Figure 8-1206

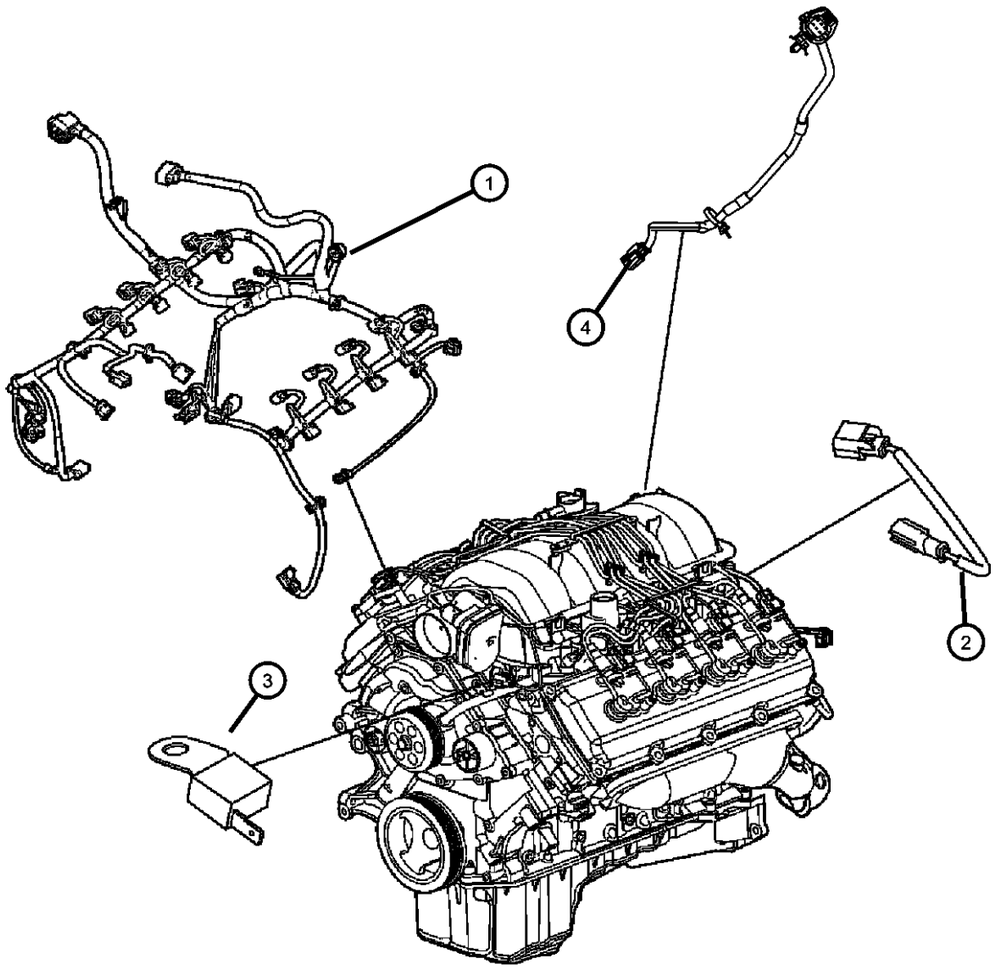

ITEM	PART NUMBER	QTY	LINE	SERIES	BODY	ENGINE	TRANS	TRIM	DESCRIPTION
1	04801823AD	1	D		22	EZC, EZD			WIRING, Engine
2	04801719AB	1	D		22	EZD, EZH	DGJ		WIRING, Jumper, Multiple displacement solenoid
3	04606866AA	2	D		22	EZC, EZD			CAPACITOR, Ignition
4	04801784AB	1	D		22	EZC	DEC		WIRING, Jumper, Variable Timing Solenoid

DODGE CHALLENGER (LC)

SERIES	LINE	BODY	ENGINE	TRANSMISSION
H = HIGHLINE P = PREMIUM X = SPECIAL	D = DODGE	22 = 2-DR SEDAN TYPE #2	EGG = 3.5L High Output V6 24V MPI Engine ESF = 6.1L SRT HEMI V8 Engine EZC = 5.7L HEMI VCT Engine EZD = 5.7L Hemi VCT MDS Engine	DEC = 6-Speed Manual TREMEC Transmission DGJ = 5-Speed Auto W5A580 Transmission DGV = 4-Spd. Automatic VLP 42RLE Trans

Wiring Engine
Figure 8-1207

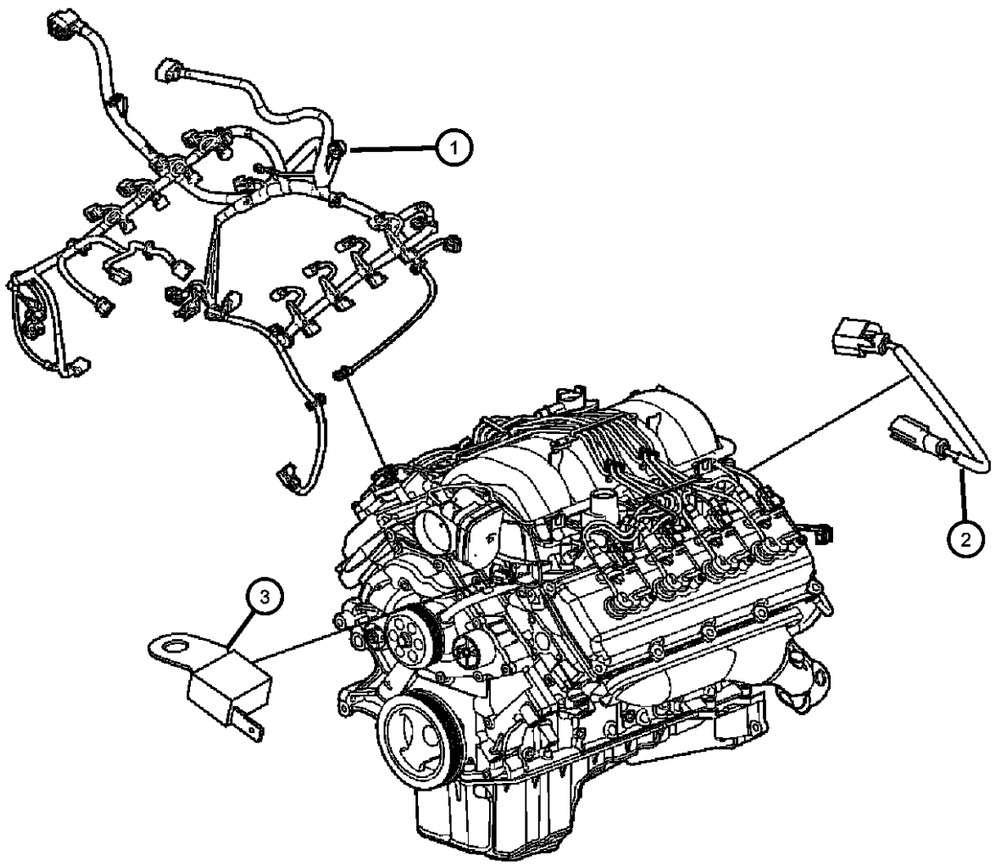

ITEM	PART NUMBER	QTY	LINE	SERIES	BODY	ENGINE	TRANS	TRIM	DESCRIPTION
1	68041677AA	1	D		22	ESF			WIRING, Engine
2	04801317AA	1	D		22				WIRING, Jumper, Ground
3	05149011AA	1	D		22	ESF			CAPACITOR, Ignition

DODGE CHALLENGER (LC)

SERIES	LINE	BODY	ENGINE	TRANSMISSION
H = HIGHLINE P = PREMIUM X = SPECIAL	D = DODGE	22 = 2-DR SEDAN TYPE #2	EGG = 3.5L High Output V6 24V MPI Engine ESF = 6.1L SRT HEMI V8 Engine EZC = 5.7L HEMI VCT Engine EZD = 5.7L Hemi VCT MDS Engine	DEC = 6-Speed Manual TREMEC Transmission DGJ = 5-Speed Auto W5A580 Transmission DGV = 4-Spd. Automatic VLP 42RLE Trans

Wiring Transmission
Figure 8-1215

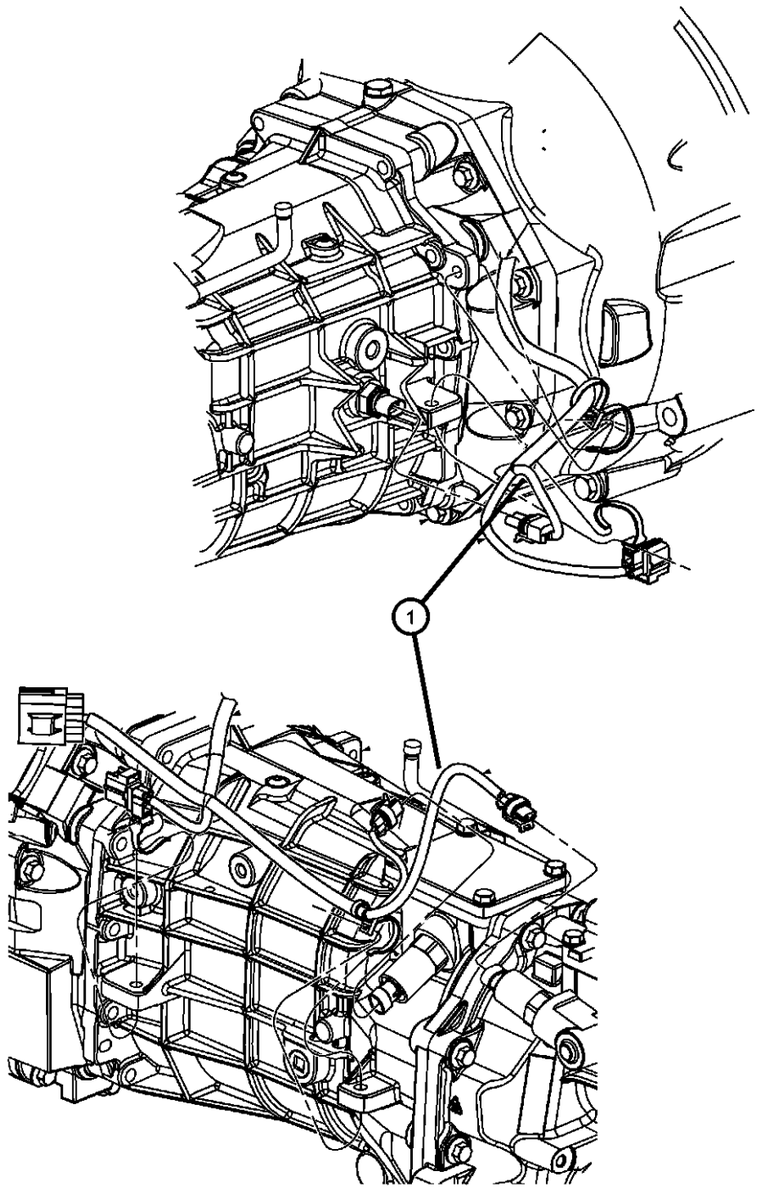

ITEM	PART NUMBER	QTY	LINE	SERIES	BODY	ENGINE	TRANS	TRIM	DESCRIPTION
1	04607829AD	1	D		22		DEC		WIRING, Transmission, [DEC]

DODGE CHALLENGER (LC)

SERIES	LINE	BODY	ENGINE	TRANSMISSION
H = HIGHLINE P = PREMIUM X = SPECIAL	D = DODGE	22 = 2-DR SEDAN TYPE #2	EGG = 3.5L High Output V6 24V MPI Engine ESF = 6.1L SRT HEMI V8 Engine EZC = 5.7L HEMI VCT Engine EZD = 5.7L Hemi VCT MDS Engine	DEC = 6-Speed Manual TREMEC Transmission DGJ = 5-Speed Auto W5A580 Transmission DGV = 4-Spd. Automatic VLP 42RLE Trans

Ground Straps
Figure 8-1220

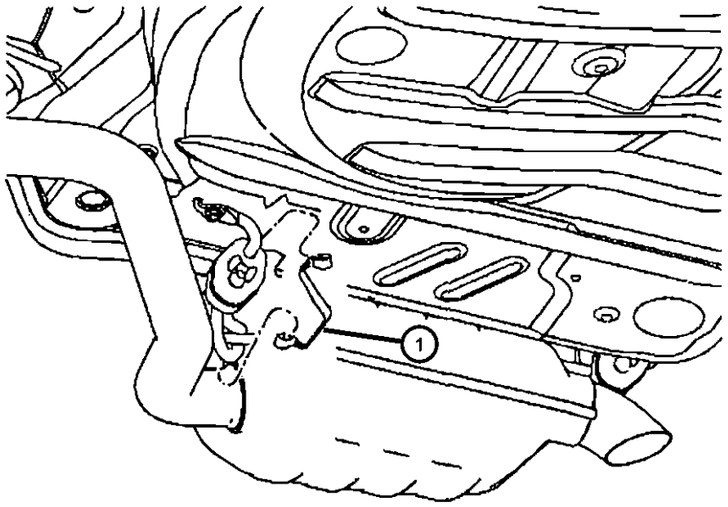

ITEM	PART NUMBER	QTY	LINE	SERIES	BODY	ENGINE	TRANS	TRIM	DESCRIPTION
1									STRAP, Ground
	05059001AC	1	D		22	EG0, ES0, EZ0			MUFFLER
	05064426AA	1	D		22	EG0			GROUND ENGINE LEFT

DODGE CHALLENGER (LC)

SERIES	LINE	BODY	ENGINE	TRANSMISSION
H = HIGHLINE P = PREMIUM X = SPECIAL	D = DODGE	22 = 2-DR SEDAN TYPE #2	EGG = 3.5L High Output V6 24V MPI Engine ESF = 6.1L SRT HEMI V8 Engine EZC = 5.7L HEMI VCT Engine EZD = 5.7L Hemi VCT MDS Engine	DEC = 6-Speed Manual TREMEC Transmission DGJ = 5-Speed Auto W5A580 Transmission DGV = 4-Spd. Automatic VLP 42RLE Trans

Wiring Headlamp to Dash
Figure 8-1305

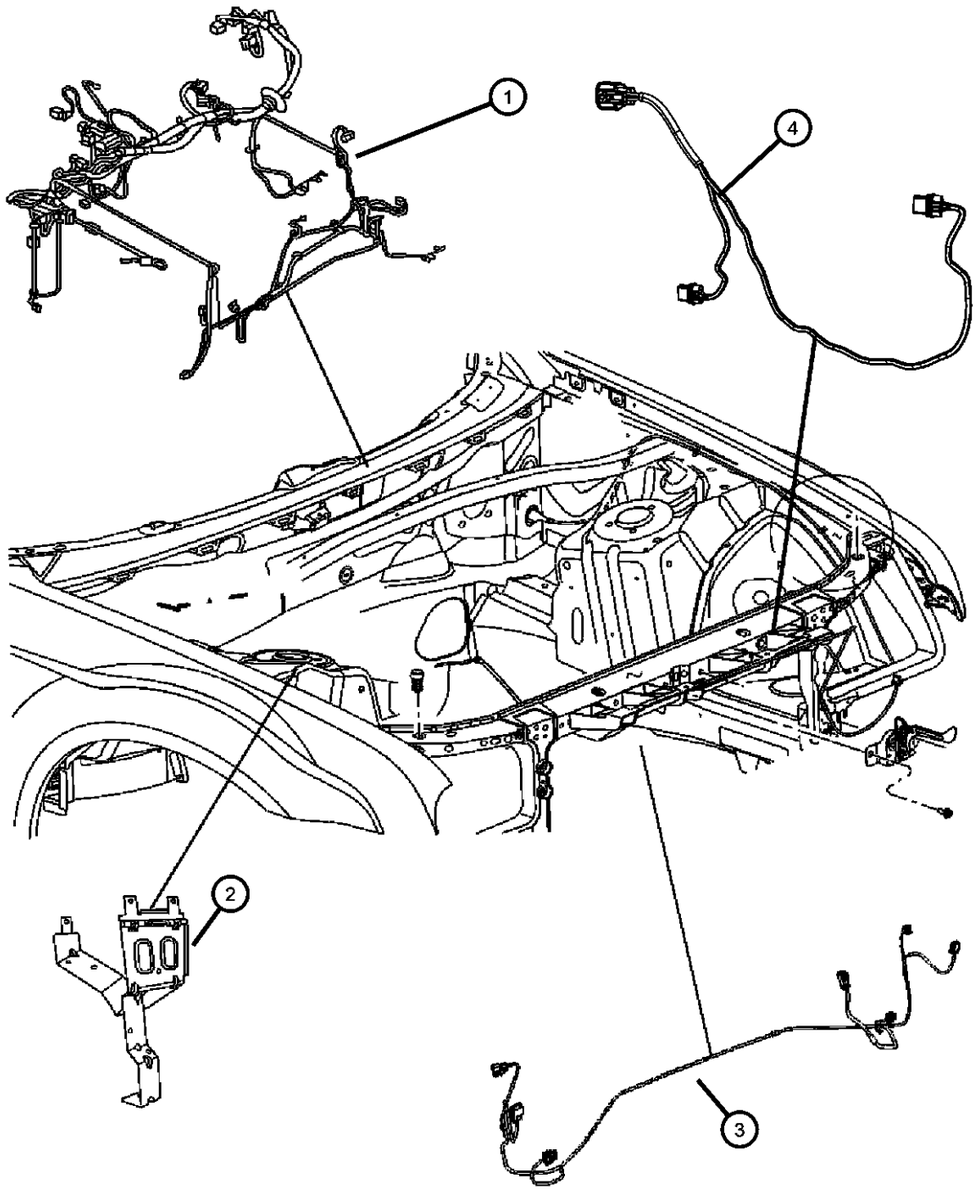

ITEM	PART NUMBER	QTY	LINE	SERIES	BODY	ENGINE	TRANS	TRIM	DESCRIPTION
1									WIRING, Headlamp to Dash
	04607642AG	1	D		22	ES0, EZ0	DGJ		[LMP]
	04607639AF	1	D		22	EG0			[NAA]
	04607640AF	1	D		22	EG0			[NAA,BNB]
	04607641AG	1	D		22	ES0, EZ0	DGJ		[LMB]
	04607643AG	1	D		22	ES0, EZ0	DEC		[LMP]
	04607644AG	1	D		22	ES0, EZ0	DEC		[LMB]
	04607859AB	1	D		22	EG0			[NAE]
	04607860AB	1	D		22	EG0			[NAE,BNB]
2	04607125AB	1	D		22				BRACKET, Power Distribution Center
3									WIRING, Front End Lighting, Includes Sockets
	68043391AA	1	D	X	22				
	68051384AA	1	D	P	22				
		1	D	H	22				
4									WIRING, Fan Motor
	68050128AA	1	D		22				[NMC] Includes:Resistor
	68050137AA	1	D		22				[XDL]

DODGE CHALLENGER (LC)

SERIES	LINE	BODY	ENGINE	TRANSMISSION
H = HIGHLINE P = PREMIUM X = SPECIAL	D = DODGE	22 = 2-DR SEDAN TYPE #2	EGG = 3.5L High Output V6 24V MPI Engine ESF = 6.1L SRT HEMI V8 Engine EZC = 5.7L HEMI VCT Engine EZD = 5.7L Hemi VCT MDS Engine	DEC = 6-Speed Manual TREMEC Transmission DGJ = 5-Speed Auto W5A580 Transmission DGV = 4-Spd. Automatic VLP 42RLE Trans

Wiring Instrument Panel
Figure 8-1405

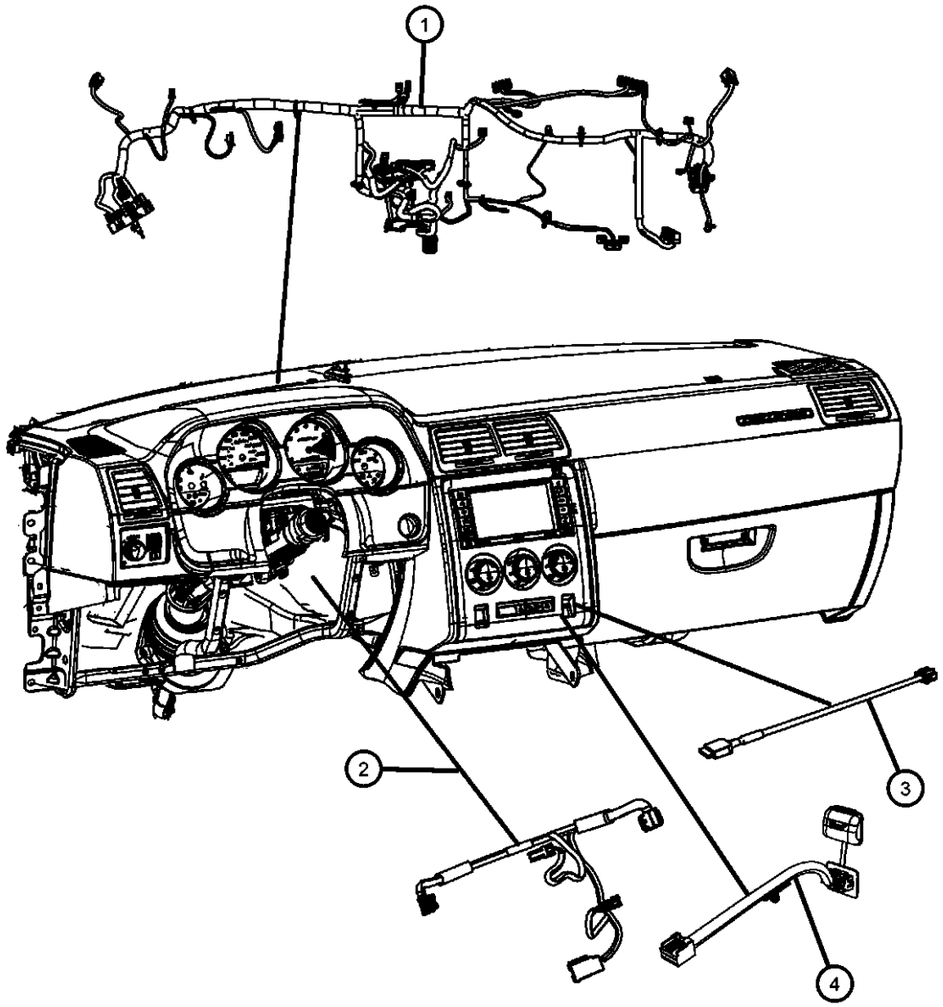

ITEM	PART NUMBER	QTY	LINE	SERIES	BODY	ENGINE	TRANS	TRIM	DESCRIPTION
1									WIRING, Instrument Panel
	04607654AG	1	D		22				[RCD]
	04607655AG	1	D		22				[RCD,JLN,RSC]
	04607657AG	1	D		22				[RCD,JLN,LMG,RSC]
	04607683AF	1	D		22				[RC5,RC6,RC7,JLN,GX4,LMG,RSC
	04607684AG	1	D		22				[RC5,RC6,RC7]
	04607685AF	1	D		22				[RC5,RC6,RC7,RSP,LMG,GX4]
	04607686AF	1	D		22				[RC5,RC6,RC7,JLN,RSC]
	04607819AD	1	D		22				[RC5,RC6,RC7,RSP,LMG.GX4]
	04607822AD	1	D		22				[RC5,RC6,RC7,GX4,LMG]
	04607823AG	1	D		22				[RCD,RSP,GX4,LMG]
	04607871AA	1	D		22				[RCD,RSC]
	04607874AA	1	D		22				[RCD,LMG.RSC,GX4]
	04607872AA	1	D		22				[RC5,RC6,RC7,LMG,GX4,RSC]
	04607873AA	1	D		22				[RC5,RC6,RC7,RSC]
2									WIRING, Steering Wheel
	68039387AA	1	D		22				[SCV,LAZ]
	68039635AA	1	D		22				[SCA]
		1	D		22				[SCV]
		1	D		22				[SCC,NHM]
3	68046566AA	1	D		22				WIRING, Jumper, IPOD
4	04607861AB	1	D		22				WIRING, IPOD Interface

DODGE CHALLENGER (LC)

SERIES	LINE	BODY	ENGINE	TRANSMISSION
H = HIGHLINE	D = DODGE	22 = 2-DR SEDAN TYPE #2	EGG = 3.5L High Output V6 24V MPI Engine	DEC = 6-Speed Manual TREMEC Transmission
P = PREMIUM			ESF = 6.1L SRT HEMI V8 Engine	DGJ = 5-Speed Auto W5A580 Transmission
X = SPECIAL			EZC = 5.7L HEMI VCT Engine	DGV = 4-Spd. Automatic VLP 42RLE Trans
			EZD = 5.7L Hemi VCT MDS Engine	

Wiring Body
Figure 8-1505

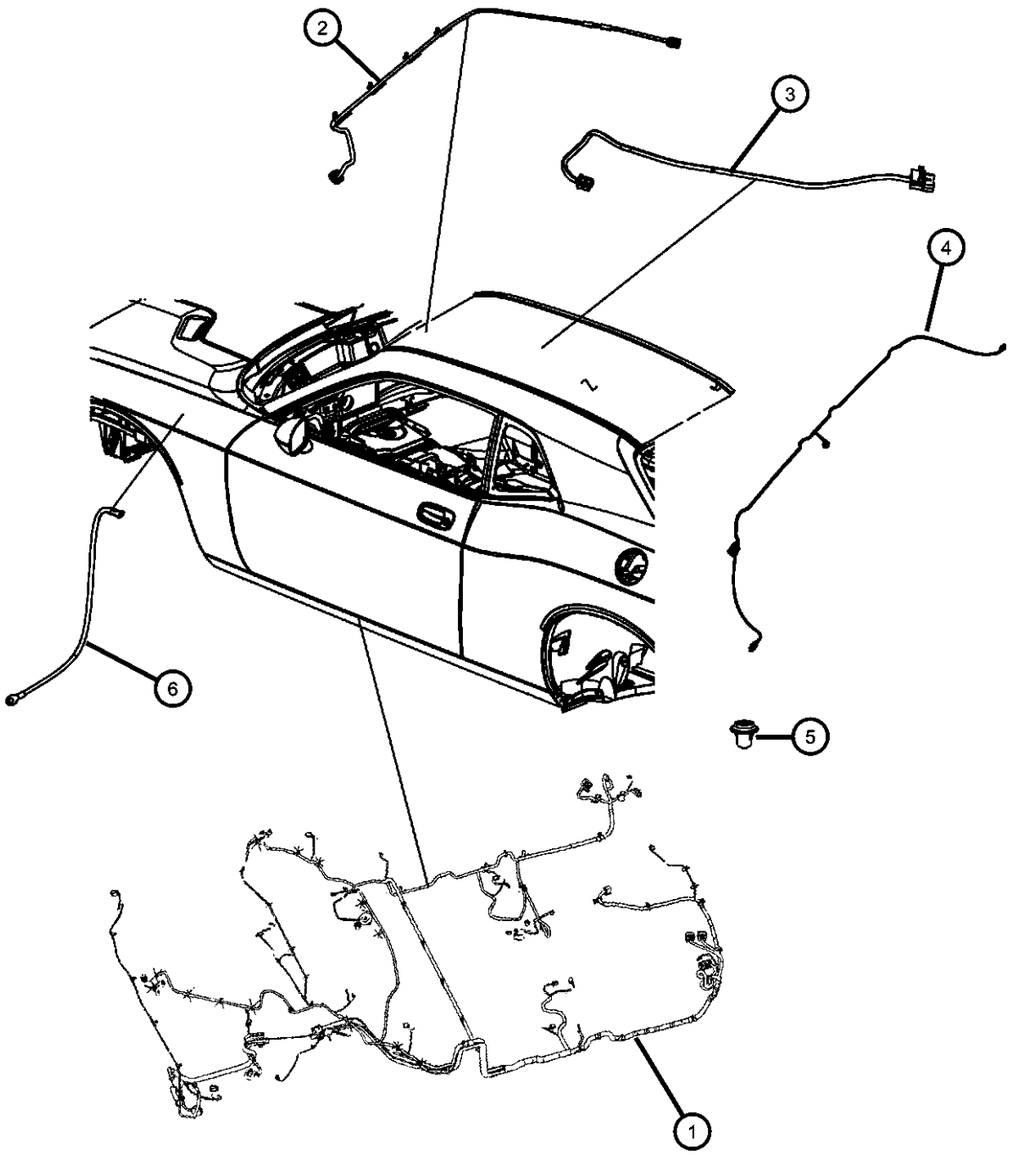

ITEM	PART NUMBER	QTY	LINE	SERIES	BODY	ENGINE	TRANS	TRIM	DESCRIPTION
1									WIRING, Unified Body
	04607674AI	1	D		22		DGJ		[JPM] After 12/16/08
	04607675AG	1	D		22		DGJ		[JPM,GX4,XGM]
	04607827AG	1	D		22		DEC		[JPM,GX4,XGM]
	04607828AG	1	D		22		DEC		[JPM,GK4,XGM,RC5]
	05081732AE	1	D		22		DGJ		[JPM,GX4,XGM,GWA]
	05081734AG	1	D		22		DEC		[JPM,GWA] Up to 12/16/08
	04607669AG	1	D		22		DGV		Base
	04607670AG	1	D		22		DGV		[BNB]
	04607671AG	1	D		22		DGV		[BNB,JPM]
	04607672AG	1	D		22		DGJ		Base
	04607673AG	1	D		22		DGJ		[GWA]
	04607674AH	1	D		22		DGJ		[JPM] Up to 12/16/08
	04607818AG	1	D		22		DEC		Base
	04607825AG	1	D		22		DEC		[GWA]
	04607826AH	1	D		22		DEC		[JPM] Up to 12/16/08
	04607826AI	1	D		22		DEC		[JPM] After 12/16/08
	05081729AF	1	D		22		DGV		[BNB,GWA]
	05081730AF	1	D		22		DGV		[BNB,JPM,GWA]
	05081731AG	1	D		22		DGJ		[JPM,GWA] Up to 12/16/08
	05081731AH	1	D		22		DGJ		[JPM,GWA] After 12/16/08
	05081734AH	1	D		22		DEC		[JPM,GWA] After 12/16/08
	05081735AF	1	D		22		DEC		[JPM,GX4,XGM,GWA]
	05081736AF	1	D		22		DEC		[JPM,GX4,XGM,RC5,GWA]
	05089222AB	1	D		22		DGJ		[JPM,GX4,XGM,RC5,GWA] Up to 03/09/09
	05089222AC	1	D		22		DGJ		[JPM,GX4,XGM,RC5,GWA] After 03/09/09
	68051111AA	1	D		22		DGJ		[JPM,GX4,XGM,RC5]
2	04607680AA	1	D		22				WIRING, Mirror Jumper
3	68036051AA	1	D		22				WIRING, Sunroof
4	68039503AA	1	D		22				WIRING, Rear Fascia
5	04608717AA	1	D		22				GROMMET
6	04801317AA	1	D		22				WIRING, Jumper, Ground

DODGE CHALLENGER (LC)

SERIES	LINE	BODY	ENGINE	TRANSMISSION
H = HIGHLINE P = PREMIUM X = SPECIAL	D = DODGE	22 = 2-DR SEDAN TYPE #2	EGG = 3.5L High Output V6 24V MPI Engine ESF = 6.1L SRT HEMI V8 Engine EZC = 5.7L HEMI VCT Engine EZD = 5.7L Hemi VCT MDS Engine	DEC = 6-Speed Manual TREMEC Transmission DGJ = 5-Speed Auto W5A580 Transmission DGV = 4-Spd. Automatic VLP 42RLE Trans

Wiring Door, Deck Lid, and Liftgate
Figure 8-1515

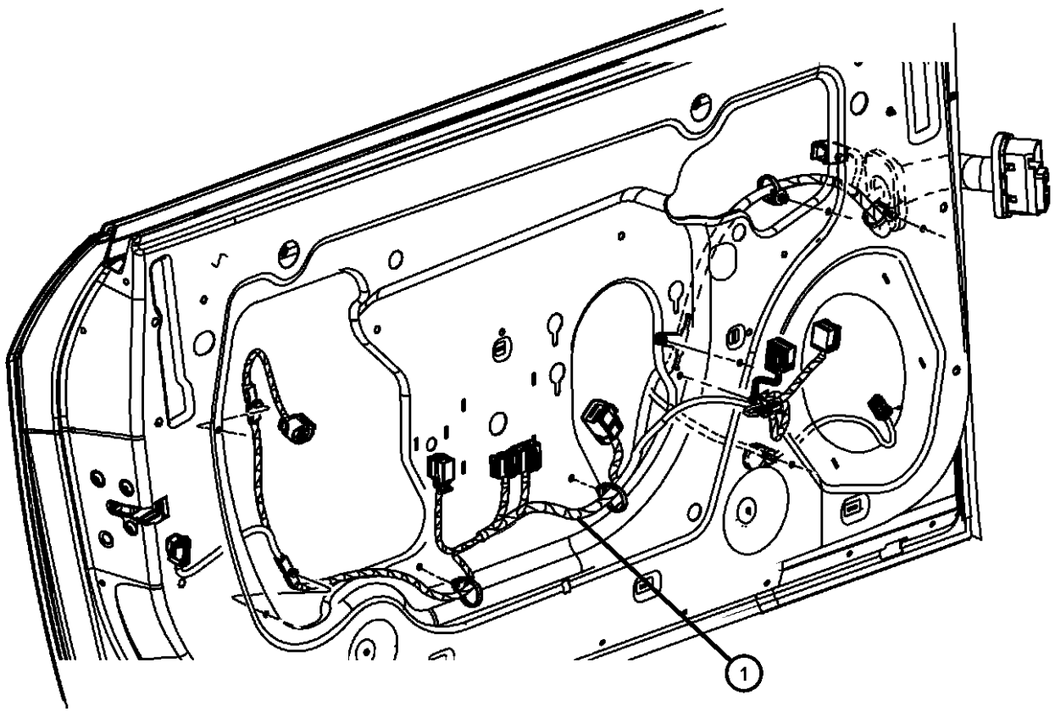

ITEM	PART NUMBER	QTY	LINE	SERIES	BODY	ENGINE	TRANS	TRIM	DESCRIPTION
1									WIRING, Front Door
	04607679AG	1	D		22				After 07/07/08, Left
	04607679AF	1	D		22				Up to 07/07/08, Left
	04607649AE	1	D		22				[LPP], Left
	04607649AG	1	D		22				[LNK], Right
	04607650AE	1	D		22				[LPP], Right
	04607650AG	1	D		22				[LNK], Left
	04607678AE	1	D		22				Right

DODGE CHALLENGER (LC)

SERIES	LINE	BODY	ENGINE	TRANSMISSION
H = HIGHLINE	D = DODGE	22 = 2-DR SEDAN TYPE #2	EGG = 3.5L High Output V6 24V MPI Engine	DEC = 6-Speed Manual TREMEC Transmission
P = PREMIUM			ESF = 6.1L SRT HEMI V8 Engine	DGJ = 5-Speed Auto W5A580 Transmission
X = SPECIAL			EZC = 5.7L HEMI VCT Engine	DGV = 4-Spd. Automatic VLP 42RLE Trans
			EZD = 5.7L Hemi VCT MDS Engine	

Wiring Seats, Front
Figure 8-1520

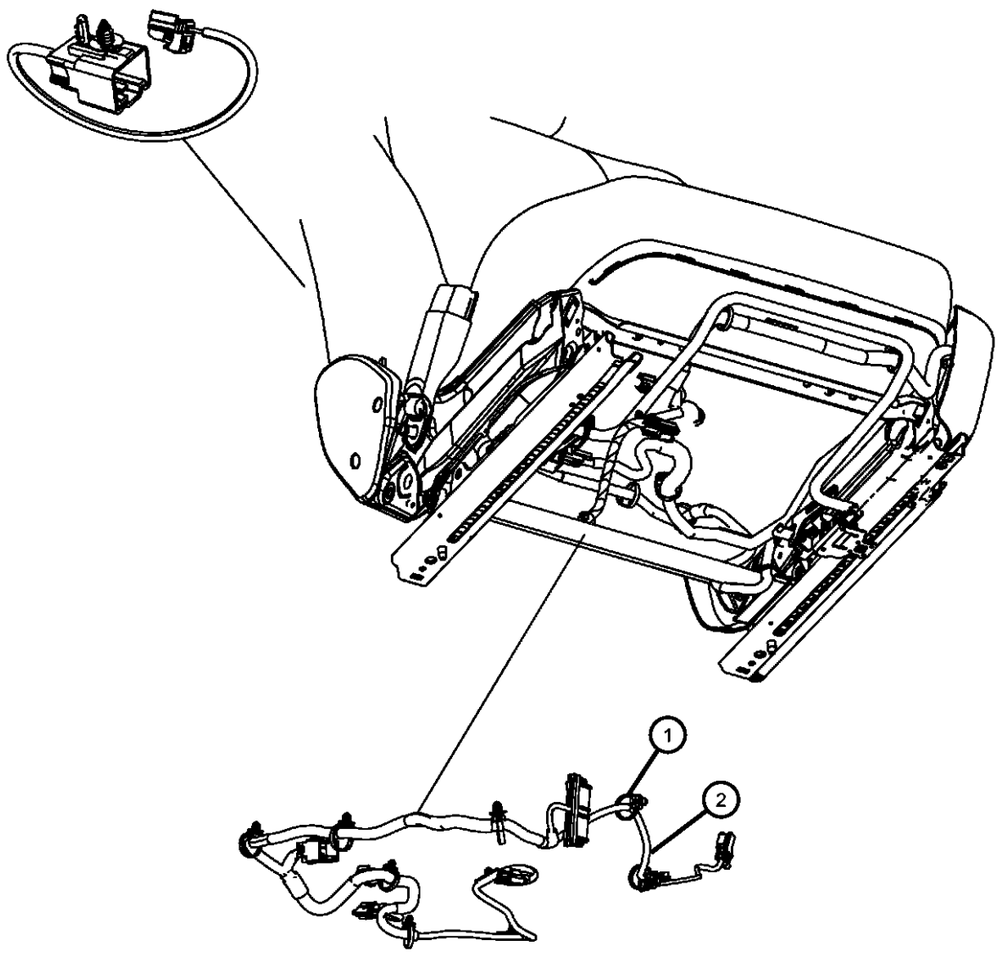

ITEM	PART NUMBER	QTY	LINE	SERIES	BODY	ENGINE	TRANS	TRIM	DESCRIPTION
1									WIRING, Seat
	68052253AA	1	D		22				Heated, Recliner
	68052248AA	1	D		22				Heated, Right or Left
2									WIRING, Power Seat
	68052249AA	1	D		22				Heated, Light
	68052247AA	1	D		22				Driver

DODGE CHALLENGER (LC)

SERIES	LINE	BODY	ENGINE	TRANSMISSION
H = HIGHLINE	D = DODGE	22 = 2-DR SEDAN TYPE #2	EGG = 3.5L High Output V6 24V MPI Engine	DEC = 6-Speed Manual TREMEC Transmission
P = PREMIUM			ESF = 6.1L SRT HEMI V8 Engine	DGJ = 5-Speed Auto W5A580 Transmission
X = SPECIAL			EZC = 5.7L HEMI VCT Engine	DGV = 4-Spd. Automatic VLP 42RLE Trans
			EZD = 5.7L Hemi VCT MDS Engine	

Wiring Heater and Air Conditioning
Figure 8-1530

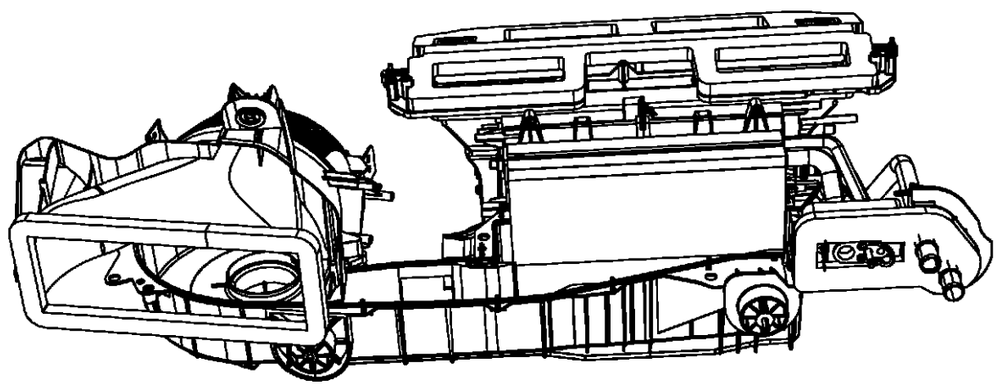

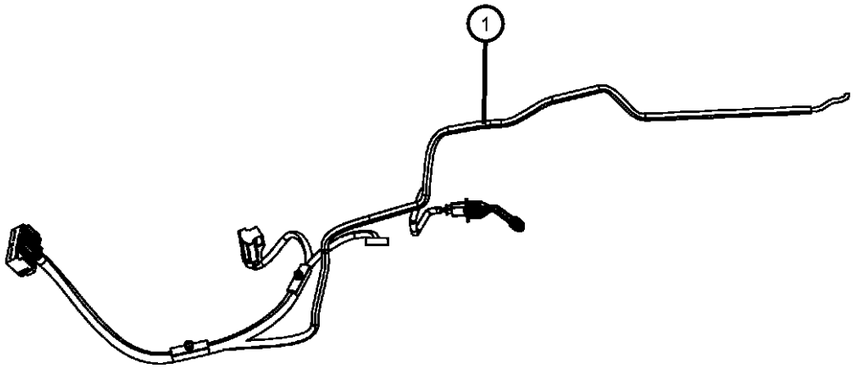

ITEM	PART NUMBER	QTY	LINE	SERIES	BODY	ENGINE	TRANS	TRIM	DESCRIPTION
1	68037309AA	1	D		22				WIRING, A/C and HEATER

DODGE CHALLENGER (LC)

SERIES	LINE	BODY	ENGINE	TRANSMISSION
H = HIGHLINE P = PREMIUM X = SPECIAL	D = DODGE	22 = 2-DR SEDAN TYPE #2	EGG = 3.5L High Output V6 24V MPI Engine ESF = 6.1L SRT HEMI V8 Engine EZC = 5.7L HEMI VCT Engine EZD = 5.7L Hemi VCT MDS Engine	DEC = 6-Speed Manual TREMEC Transmission DGJ = 5-Speed Auto W5A580 Transmission DGV = 4-Spd. Automatic VLP 42RLE Trans

AR = use ase required - = Non illustrrated part

ITEM	PART NUMBER	QTY	LINE	SERIES	BODY	ENGINE	TRANS	TRIM	DESCRIPTION
-1		1							WIRING PACKAGE, Underhood Connector Repair, For Electrical Connector Repair Information visit the World Wide Web at http://dto.vftis.com/mopar/dis-claimer.asp, (NOT SERVICED)
-2	05073039AA	1	D		22				STRAP, Tie
-3									CONNECTOR ASSEMBLY, Electrical
	52108308AB	1	D		22	EZC, EZD	DGJ		
	52108308AC	1	D		22	ESF	DGJ		
-4	04760770	1	D		22				TERMINAL, Male, Fuse block

For Electrical Connector Repair Information visit the World Wide Web at

http://dto.vftis.com/mopar/disclaimer.asp

DODGE CHALLENGER (LC)

SERIES	LINE	BODY	ENGINE	TRANSMISSION
H = HIGHLINE P = PREMIUM X = SPECIAL	D = DODGE	22 = 2-DR SEDAN TYPE #2	EGG = 3.5L High Output V6 24V MPI Engine ESF = 6.1L SRT HEMI V8 Engine EZC = 5.7L HEMI VCT Engine EZD = 5.7L Hemi VCT MDS Engine	DEC = 6-Speed Manual TREMEC Transmission DGJ = 5-Speed Auto W5A580 Transmission DGV = 4-Spd. Automatic VLP 42RLE Trans

Spark Plugs, Ignition Coil and Cables
Figure 8-1905

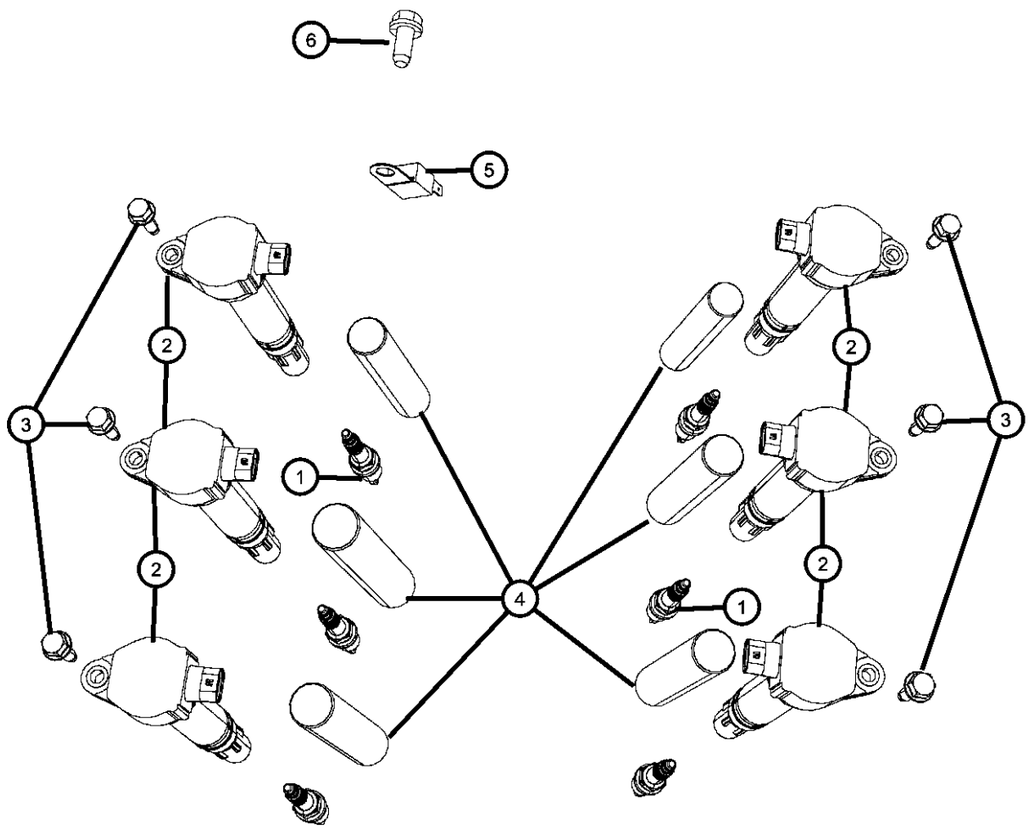

ITEM	PART NUMBER	QTY	LINE	SERIES	BODY	ENGINE	TRANS	TRIM	DESCRIPTION
1	SZFR5LP13G	6	D		22	EGG			SPARK PLUG
2	04606869AB	6	D		22	EGG			COIL, Ignition
3	06508683AA	6	D		22	EGG			SCREW, Hex Flange Head, M6x1x20
4	04648604	6	D		22	EGG			TUBE, Spark Plug
5	05149061AA	1	D		22	EGG			CAPACITOR, Ignition
6		1							SCREW, Hex Head, M10X1.50X16.00, (NOT SERVICED)

DODGE CHALLENGER (LC)

SERIES	LINE	BODY	ENGINE	TRANSMISSION
H = HIGHLINE	D = DODGE	22 = 2-DR SEDAN TYPE #2	EGG = 3.5L High Output V6 24V MPI Engine	DEC = 6-Speed Manual TREMEC Transmission
P = PREMIUM			ESF = 6.1L SRT HEMI V8 Engine	DGJ = 5-Speed Auto W5A580 Transmission
X = SPECIAL			EZC = 5.7L HEMI VCT Engine	DGV = 4-Spd. Automatic VLP 42RLE Trans
			EZD = 5.7L Hemi VCT MDS Engine	

Spark Plugs, Ignition Coil and Cables
Figure 8-1906

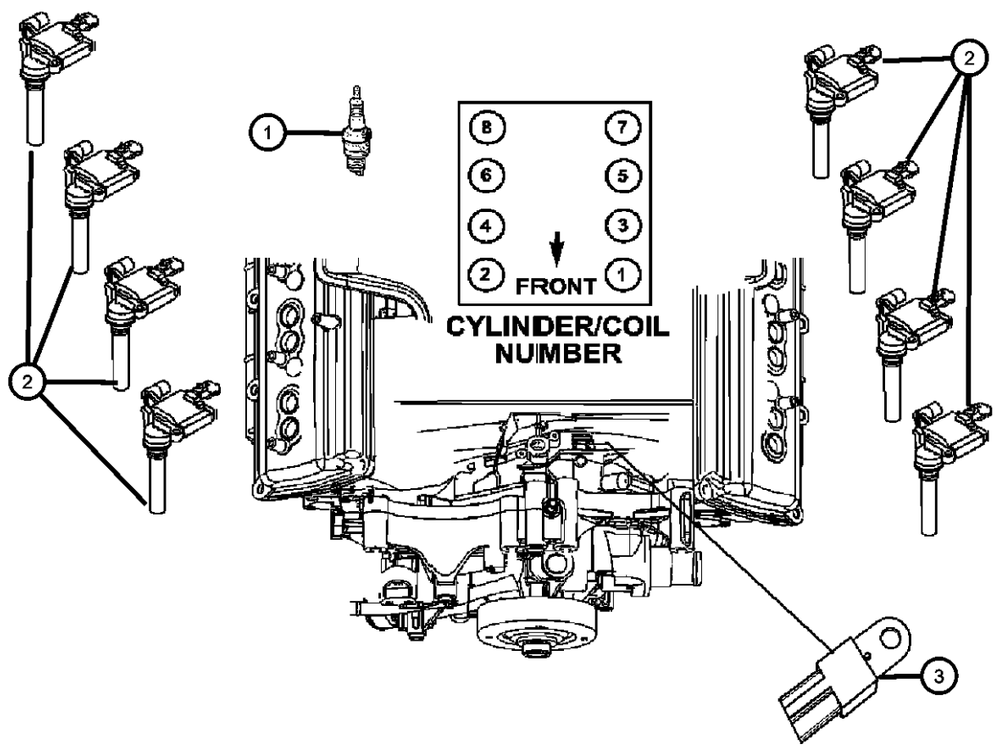

ITEM	PART NUMBER	QTY	LINE	SERIES	BODY	ENGINE	TRANS	TRIM	DESCRIPTION
1									SPARK PLUG
	SPLZFR5C11	16	D		22	EZC			
		16	D		22	EZD, EZH			
2	68060346AA	8	D		22	EZC, EZD, EZH			COIL, Ignition
3	04606866AA	2	D		22	EZC, EZD, EZH			CAPACITOR, Ignition

DODGE CHALLENGER (LC)

SERIES	LINE	BODY	ENGINE	TRANSMISSION
H = HIGHLINE	D = DODGE	22 = 2-DR SEDAN TYPE #2	EGG = 3.5L High Output V6 24V MPI Engine	DEC = 6-Speed Manual TREMEC Transmission
P = PREMIUM			ESF = 6.1L SRT HEMI V8 Engine	DGJ = 5-Speed Auto W5A580 Transmission
X = SPECIAL			EZC = 5.7L HEMI VCT Engine	DGV = 4-Spd. Automatic VLP 42RLE Trans
			EZD = 5.7L Hemi VCT MDS Engine	

Spark Plugs and Ignition Coil
Figure 8-1910

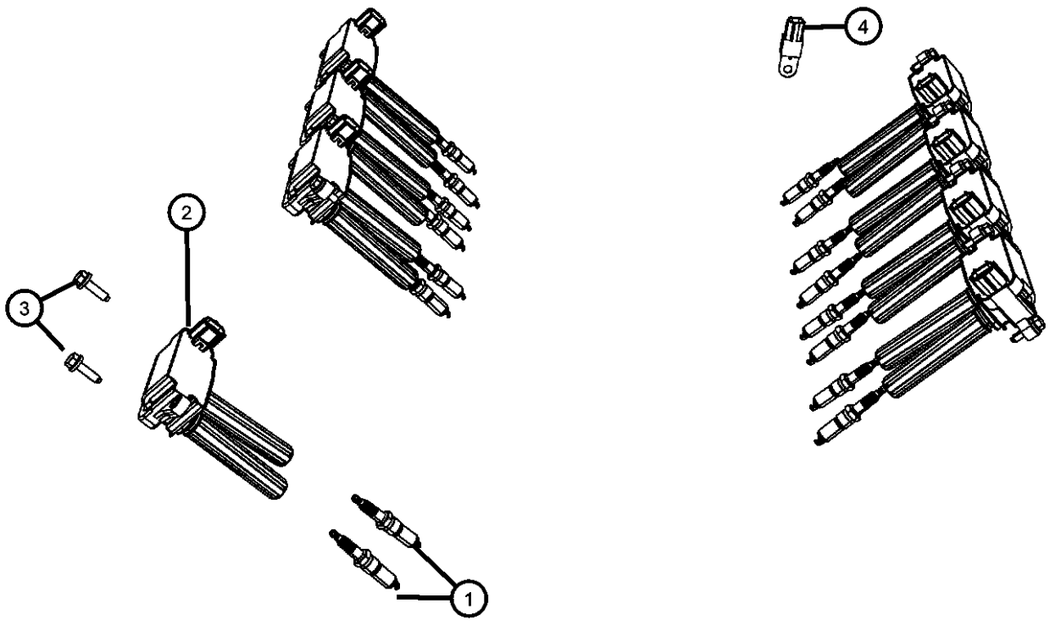

ITEM	PART NUMBER	QTY	LINE	SERIES	BODY	ENGINE	TRANS	TRIM	DESCRIPTION
1	SPLZTR5A13	16	D		22	ESF			SPARK PLUG
2	56029129AB	8	D		22	ESF			COIL, Ignition
3	06508513AA	16	D		22	ESF			SCREW AND WASHER, Hex Head, M6X1.00X24.75, Coil mounting
4	05149011AA	1	D		22	ESF			CAPACITOR, Ignition

DODGE CHALLENGER (LC)

SERIES	LINE	BODY	ENGINE	TRANSMISSION
H = HIGHLINE	D = DODGE	22 = 2-DR SEDAN TYPE #2	EGG = 3.5L High Output V6 24V MPI Engine	DEC = 6-Speed Manual TREMEC Transmission
P = PREMIUM			ESF = 6.1L SRT HEMI V8 Engine	DGJ = 5-Speed Auto W5A580 Transmission
X = SPECIAL			EZC = 5.7L HEMI VCT Engine	DGV = 4-Spd. Automatic VLP 42RLE Trans
			EZD = 5.7L Hemi VCT MDS Engine	

Instrument Panel Cluster
Figure 8-2105

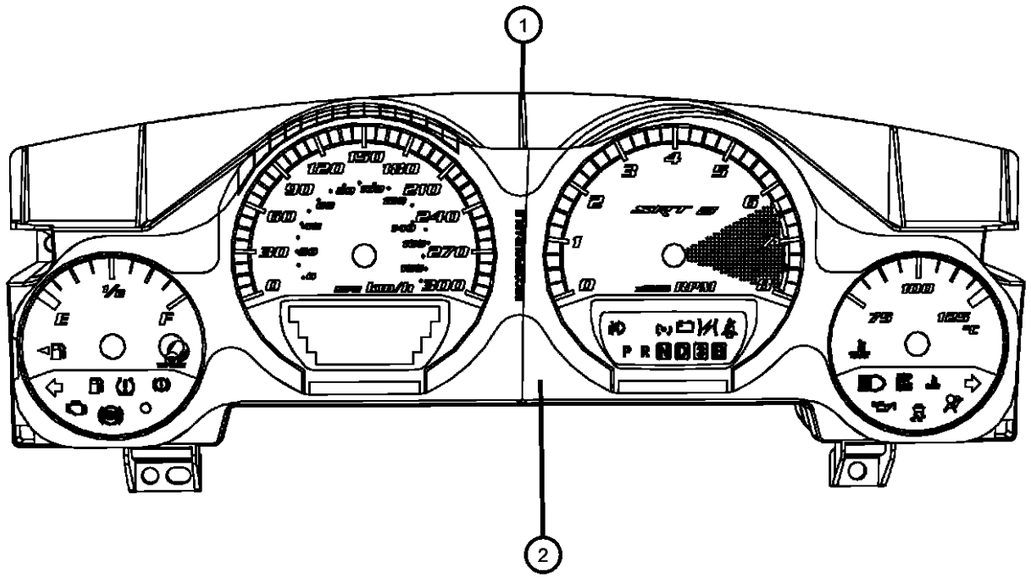

ITEM	PART NUMBER	QTY	LINE	SERIES	BODY	ENGINE	TRANS	TRIM	DESCRIPTION
1									CLUSTER, Instrument Panel
	05172645AD	1	D		22				[JDG]
	05172647AD	1	D		22		DGJ, DGV		[JDN]
	05172648AD	1	D		22		DGJ, DGV		[JDN,LAZ]
	05172650AC	1	D		22		DGJ, DGV		[JCG]
	05172651AC	1	D		22		DGJ, DGV		[JDU]
	05030989AB	1	D		22				[JDU]
	05172112AE	1	D		22				[JDN]
	05172640AD	1	D		22				[JCE]
	05172642AD	1	D		22		DGJ, DGV		[JCC]
	05172643AD	1	D		22		DGJ, DGV		[JCC,LAZ]
	68050721AA	1	D		22		DEC		[JCC,LAZ]
	68050722AA	1	D		22		DEC		[JCC]
	68050723AA	1	D		22		DEC		[JDN,LAZ]
	68050724AA	1	D		22		DEC		[JDN]
	68050725AA	1	D		22		DEC		[JCG]
	68050726AA	1	D		22		DEC		[JDU]
	68056382AA	1	D		22		DGJ, DGV		[JDU,ABD]
2									MASK AND LENS, Instrument Cluster
	68031296AA	1	D		22				Gray
	05102270AA	1	D		22				White

DODGE CHALLENGER (LC)

SERIES	LINE	BODY	ENGINE	TRANSMISSION
H = HIGHLINE	D = DODGE	22 = 2-DR SEDAN TYPE #2	EGG = 3.5L High Output V6 24V MPI Engine	DEC = 6-Speed Manual TREMEC Transmission
P = PREMIUM			ESF = 6.1L SRT HEMI V8 Engine	DGJ = 5-Speed Auto W5A580 Transmission
X = SPECIAL			EZC = 5.7L HEMI VCT Engine	DGV = 4-Spd. Automatic VLP 42RLE Trans
			EZD = 5.7L Hemi VCT MDS Engine	

Radio
Figure 8-2205

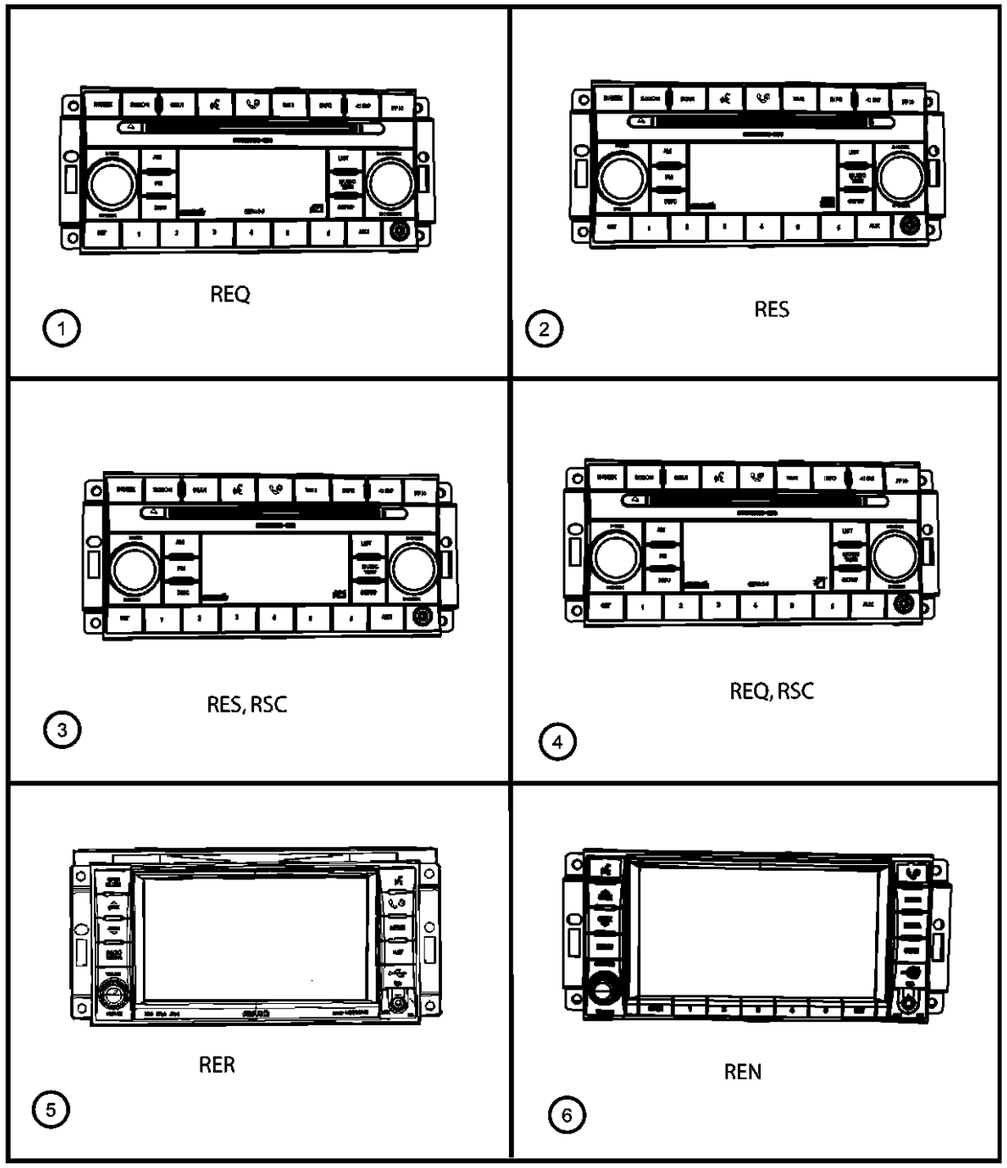

ITEM	PART NUMBER	QTY	LINE	SERIES	BODY	ENGINE	TRANS	TRIM	DESCRIPTION
1	05064941AC	1	D		22				RADIO, AM/FM/6 DVD, [REQ]
2	68021159AC	1	D		22				RADIO, AM/FM with CD, [RES]
3	68021161AC	1	D		22				RADIO, AM/FM/CD/SDARS, [RES,RSC]
4	05064933AC	1	D		22				RADIO, AM/FM/6 DVD/SDARS, [REQ,RSC]
5	05064737AB	1	D		22				RADIO, AM/FM/DVD/HDD/NAV/SDARS, [RER]
6	05064756AB	1	D		22				RADIO, AM/FM/DVD/HDD/MP3/RR CAMERA, [REN]

DODGE CHALLENGER (LC)

SERIES	LINE	BODY	ENGINE	TRANSMISSION
H = HIGHLINE	D = DODGE	22 = 2-DR SEDAN TYPE #2	EGG = 3.5L High Output V6 24V MPI Engine	DEC = 6-Speed Manual TREMEC Transmission
P = PREMIUM			ESF = 6.1L SRT HEMI V8 Engine	DGJ = 5-Speed Auto W5A580 Transmission
X = SPECIAL			EZC = 5.7L HEMI VCT Engine	DGV = 4-Spd. Automatic VLP 42RLE Trans
			EZD = 5.7L Hemi VCT MDS Engine	

Antenna
Figure 8-2210

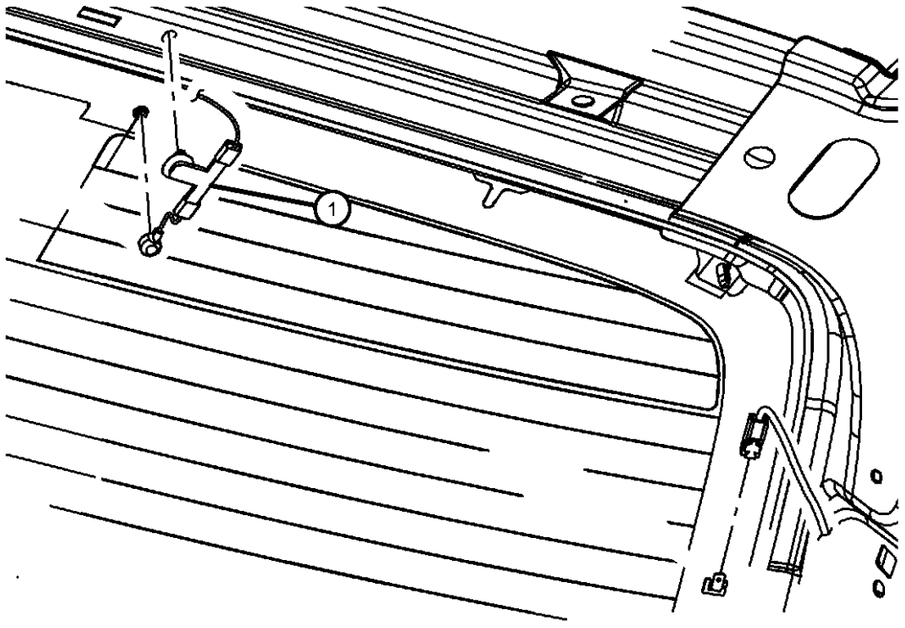

ITEM	PART NUMBER	QTY	LINE	SERIES	BODY	ENGINE	TRANS	TRIM	DESCRIPTION
1	05064579AC	1	D		22				MODULE, Radio Antenna

DODGE CHALLENGER (LC)

SERIES	LINE	BODY	ENGINE	TRANSMISSION
H = HIGHLINE P = PREMIUM X = SPECIAL	D = DODGE	22 = 2-DR SEDAN TYPE #2	EGG = 3.5L High Output V6 24V MPI Engine ESF = 6.1L SRT HEMI V8 Engine EZC = 5.7L HEMI VCT Engine EZD = 5.7L Hemi VCT MDS Engine	DEC = 6-Speed Manual TREMEC Transmission DGJ = 5-Speed Auto W5A580 Transmission DGV = 4-Spd. Automatic VLP 42RLE Trans

Satellite Radio System
Figure 8-2215

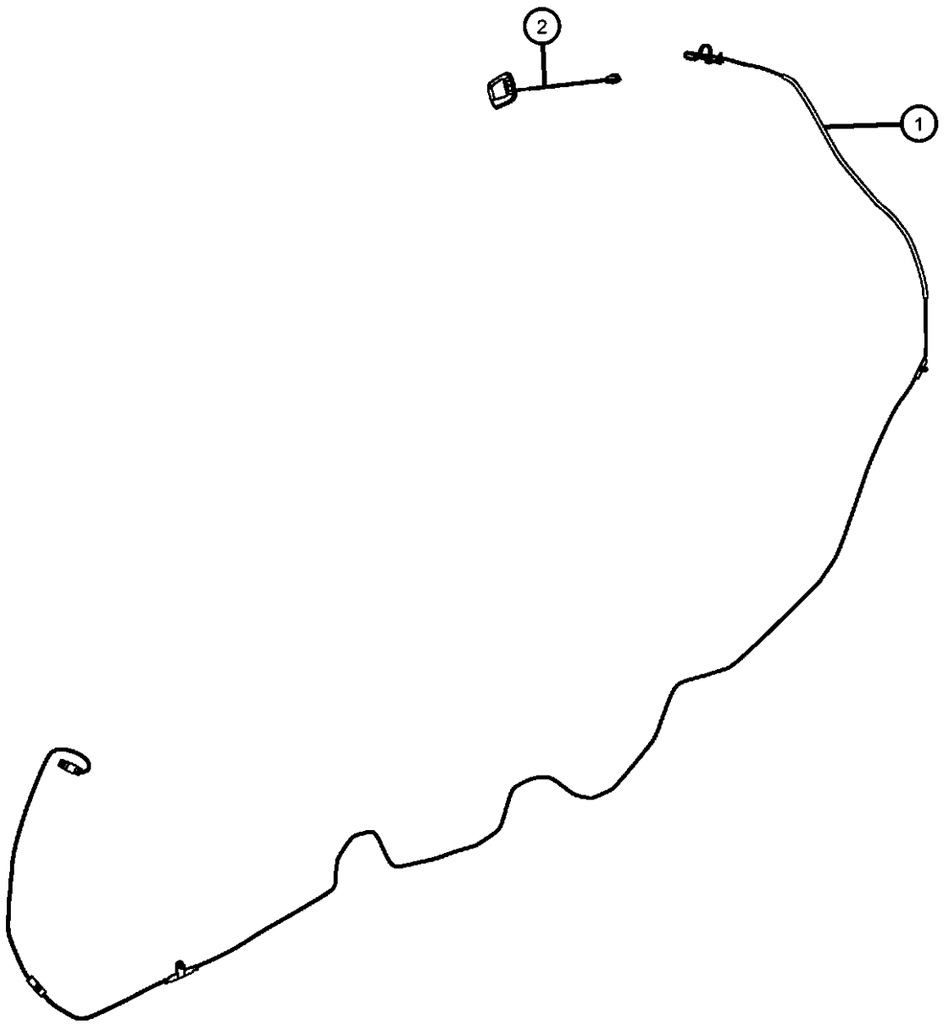

ITEM	PART NUMBER	QTY	LINE	SERIES	BODY	ENGINE	TRANS	TRIM	DESCRIPTION
1	05064474AB	1	D		22				CABLE, Satellite Radio
2									ANTENNA, Satellite
	05064724AA	1	D		22				Up to 07/07/08
	05064754AB	1	D		22				After 07/07/08

DODGE CHALLENGER (LC)

SERIES	LINE	BODY	ENGINE	TRANSMISSION
H = HIGHLINE P = PREMIUM X = SPECIAL	D = DODGE	22 = 2-DR SEDAN TYPE #2	EGG = 3.5L High Output V6 24V MPI Engine ESF = 6.1L SRT HEMI V8 Engine EZC = 5.7L HEMI VCT Engine EZD = 5.7L Hemi VCT MDS Engine	DEC = 6-Speed Manual TREMEC Transmission DGJ = 5-Speed Auto W5A580 Transmission DGV = 4-Spd. Automatic VLP 42RLE Trans

AR = use ase required - = Non illustrrated part

Speakers and Amplifiers
Figure 8-2220

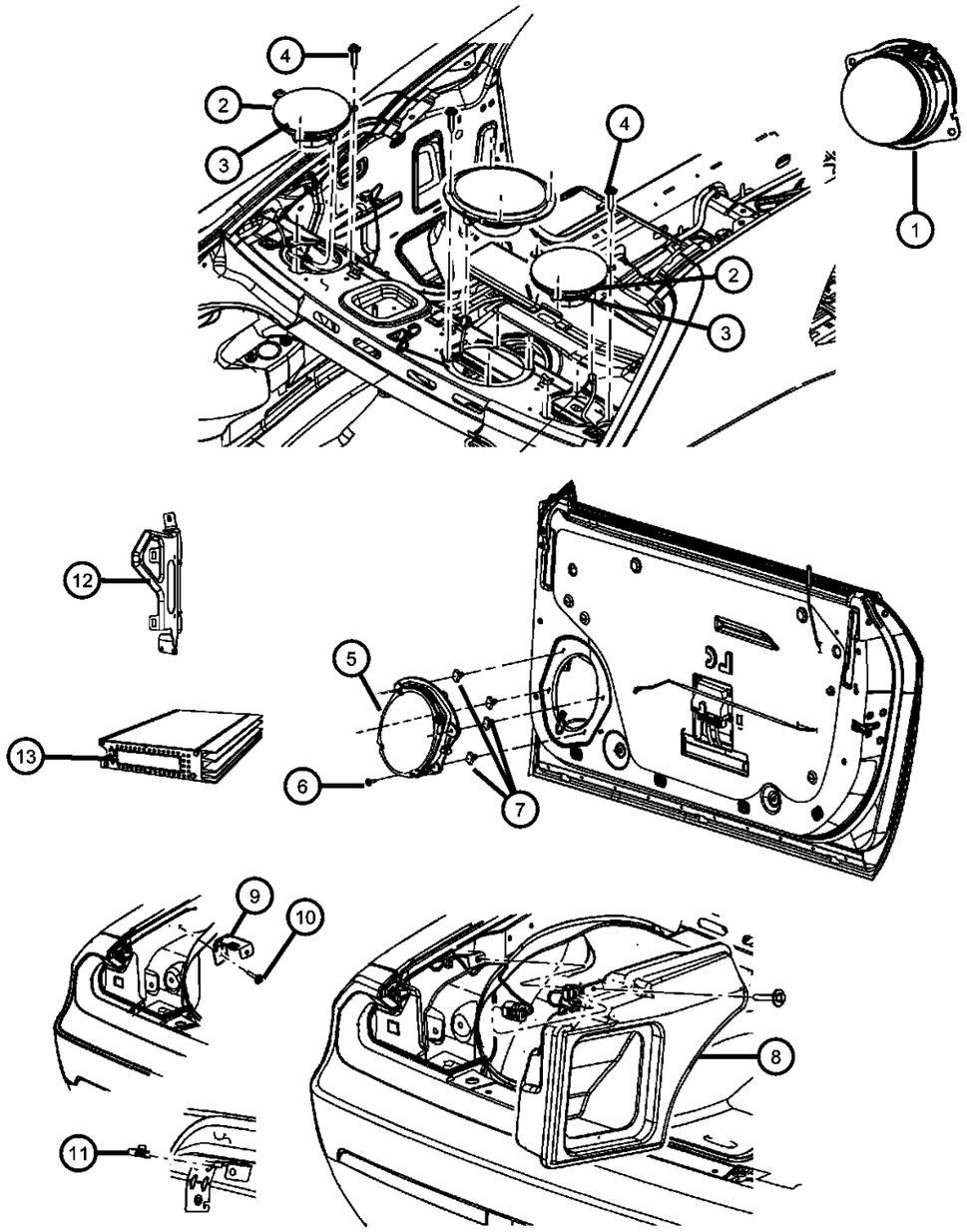

ITEM	PART NUMBER	QTY	LINE	SERIES	BODY	ENGINE	TRANS	TRIM	DESCRIPTION
1									SPEAKER, 3.5"
	05029930AC	3	D		22				[RC5] Up to 09/01/08
	05059068AB	2	D		22				[RC6]
		3	D		22				[RC7]
	68039662AA	3	D		22				[RC5] After 09/01/08
2									SPEAKER, 6.5"
	05081670AB	1	D		22				[RC6]
	05091020AB	1	D		22				[RCD]
3									SPEAKER, Sub Woofer
	68025300AA	1	D		22				[RC5]
	05059064AB	1	D		22				[RC7]
4		1							SCREW, Tapping Hex Head, M4.2X1.70X22.00, (NOT SERVICED),
5									SPEAKER, 6"X9"
	05030126AB	1	D		22				[RC5]
	05059067AC	1	D		22				[RC6,RC7]
	05064035AB	1	D		22				[RCD]
6	06032723	4	D		22				SCREW, Self Tapping, M4.2x1.69x19.05
7	06506878AA	6	D		22				NUT, Snap In
8	68021319AB	1	D		22				ENCLOSURE, Speaker
9	68038754AA	1	D		22				BRACKET, Speaker
10	06503929	2	D		22				SCREW AND WASHER, Coned Pilot, M6x1x30
11	06507559AA	1	D		22				U-NUT, M6 x 1.00, M6x1.00
12	05081027AA	1	D		22		DGJ		BRACKET, Amplifier
13									AMPLIFIER
	05035022AC	1	D		22				[RFC] SRT Amplifier
	05064353AF	1	D		22				[RDF,RD7]
	68036703AB	1	D		22				[RFF] Subwoofer

DODGE CHALLENGER (LC)

SERIES	LINE	BODY	ENGINE	TRANSMISSION
H = HIGHLINE P = PREMIUM X = SPECIAL	D = DODGE	22 = 2-DR SEDAN TYPE #2	EGG = 3.5L High Output V6 24V MPI Engine ESF = 6.1L SRT HEMI V8 Engine EZC = 5.7L HEMI VCT Engine EZD = 5.7L Hemi VCT MDS Engine	DEC = 6-Speed Manual TREMEC Transmission DGJ = 5-Speed Auto W5A580 Transmission DGV = 4-Spd. Automatic VLP 42RLE Trans

AR = use ase required - = Non illustrrated part

Navigation System
Figure 8-2405

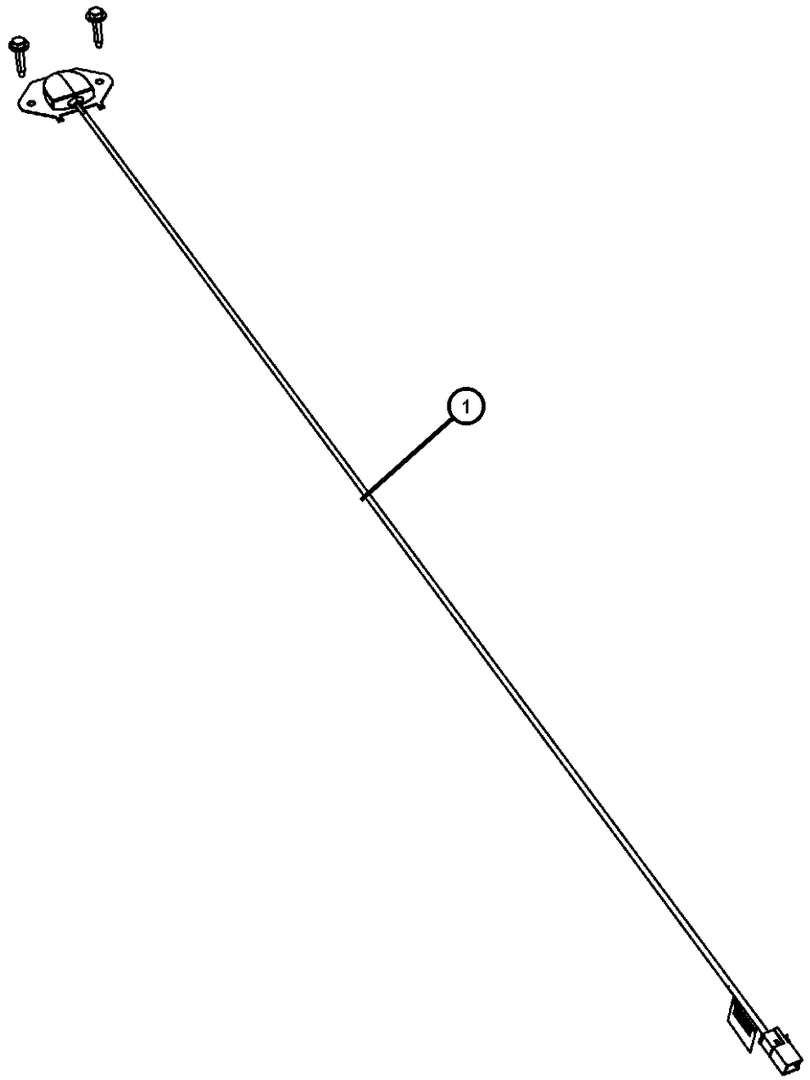

ITEM	PART NUMBER	QTY	LINE	SERIES	BODY	ENGINE	TRANS	TRIM	DESCRIPTION
1	05064186AA	1	D		22				ANTENNA, Global Positioning

DODGE CHALLENGER (LC)

SERIES	LINE	BODY	ENGINE	TRANSMISSION
H = HIGHLINE P = PREMIUM X = SPECIAL	D = DODGE	22 = 2-DR SEDAN TYPE #2	EGG = 3.5L High Output V6 24V MPI Engine ESF = 6.1L SRT HEMI V8 Engine EZC = 5.7L HEMI VCT Engine EZD = 5.7L Hemi VCT MDS Engine	DEC = 6-Speed Manual TREMEC Transmission DGJ = 5-Speed Auto W5A580 Transmission DGV = 4-Spd. Automatic VLP 42RLE Trans

AR = use ase required - = Non illustrrated part

Telecommunications
Figure 8-2505

ITEM	PART NUMBER	QTY	LINE	SERIES	BODY	ENGINE	TRANS	TRIM	DESCRIPTION
1	05064448AG	1	D		22				MODULE, Telematics
2	06034743	2	D		22				SCREW, Hex Flange Head Tapping, .164-15x.75

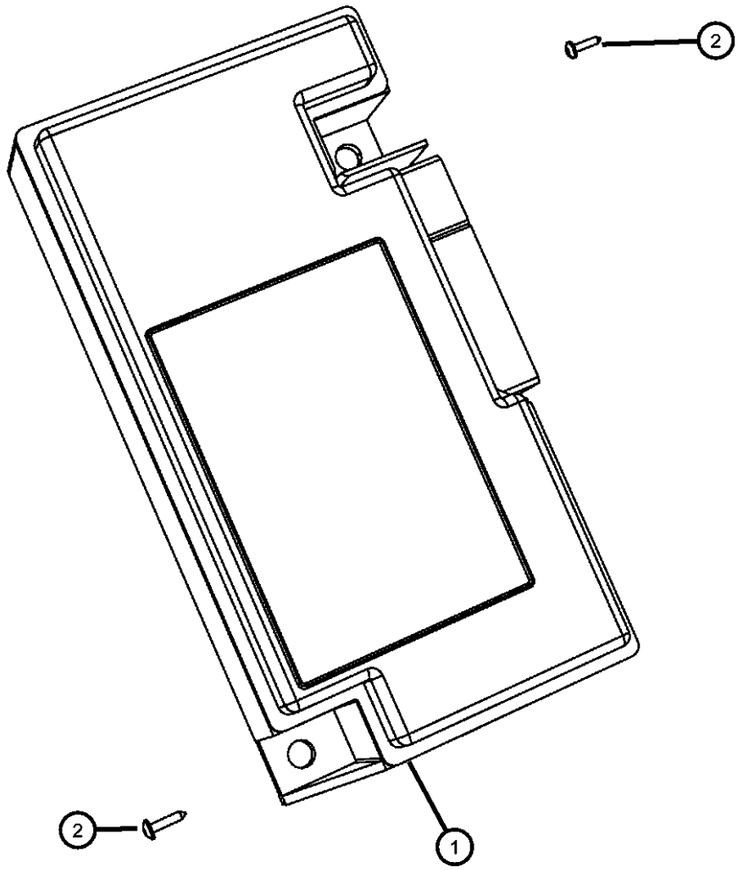

DODGE CHALLENGER (LC)

SERIES	LINE	BODY	ENGINE	TRANSMISSION
H = HIGHLINE P = PREMIUM X = SPECIAL	D = DODGE	22 = 2-DR SEDAN TYPE #2	EGG = 3.5L High Output V6 24V MPI Engine ESF = 6.1L SRT HEMI V8 Engine EZC = 5.7L HEMI VCT Engine EZD = 5.7L Hemi VCT MDS Engine	DEC = 6-Speed Manual TREMEC Transmission DGJ = 5-Speed Auto W5A580 Transmission DGV = 4-Spd. Automatic VLP 42RLE Trans

AR = use ase required - = Non illustrrated part

Speed Control
Figure 8-2705

ITEM	PART NUMBER	QTY	LINE	SERIES	BODY	ENGINE	TRANS	TRIM	DESCRIPTION
1	56046079AB	1	D		22				SWITCH, Speed Control

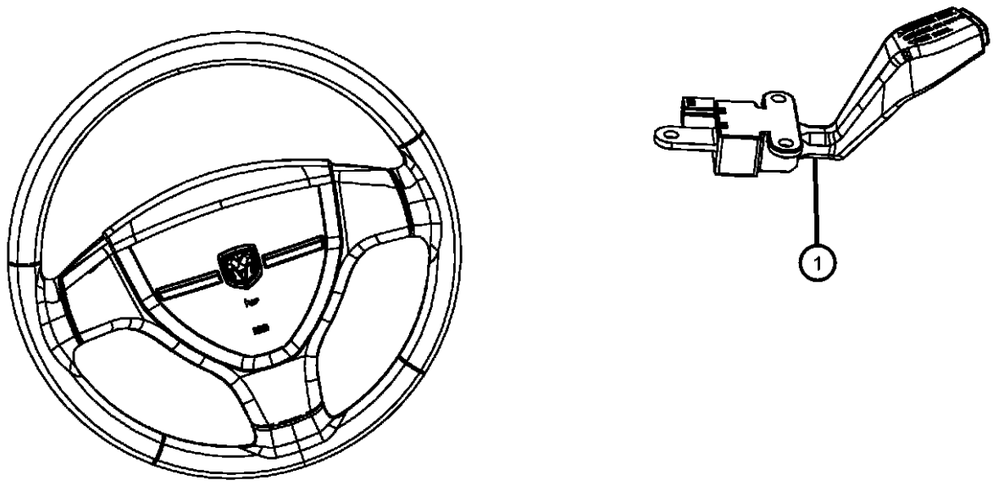

DODGE CHALLENGER (LC)

SERIES	LINE	BODY	ENGINE	TRANSMISSION
H = HIGHLINE P = PREMIUM X = SPECIAL	D = DODGE	22 = 2-DR SEDAN TYPE #2	EGG = 3.5L High Output V6 24V MPI Engine ESF = 6.1L SRT HEMI V8 Engine EZC = 5.7L HEMI VCT Engine EZD = 5.7L Hemi VCT MDS Engine	DEC = 6-Speed Manual TREMEC Transmission DGJ = 5-Speed Auto W5A580 Transmission DGV = 4-Spd. Automatic VLP 42RLE Trans

AR = use ase required - = Non illustrrated part

Group - 009EGG

3.5L Gas; Engine

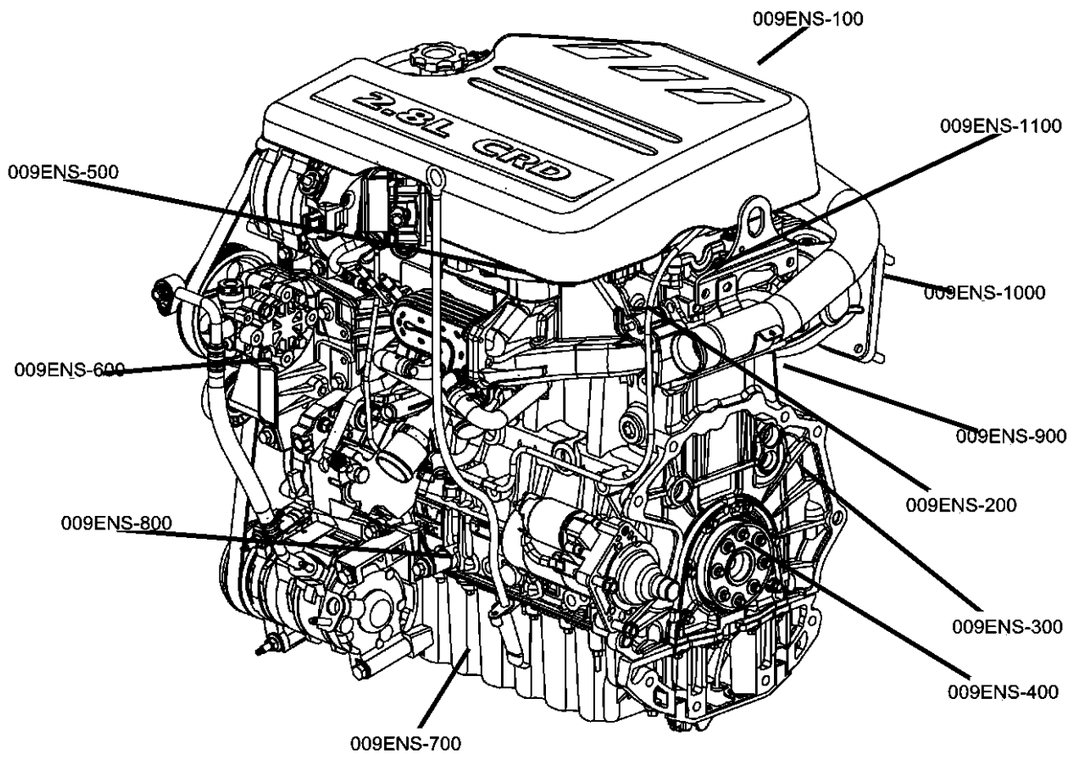

009EGG-100 Engine Identification 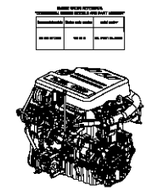	**009EGG-1000** Manifolds and Vacuum Fittings 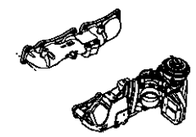	**009EGG-1100** Crankcase Ventilation 	**009EGG-1200** Engine Mounting 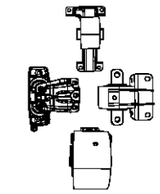
009EGG-200 Cylinder Head 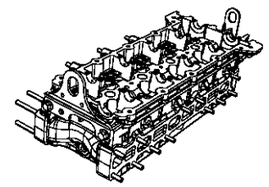	**009EGG-300** Cylinder Block 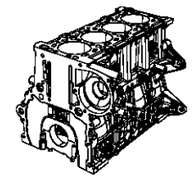	**009EGG-400** Crankshaft, Piston, Drive Plate, Flywheel, and Damper 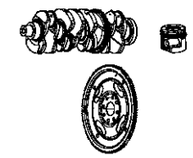	**009EGG-500** Camshaft and Valve
009EGG-600 Timing Belt/Chain and Cover and Balance Shaft 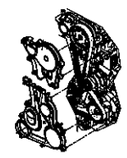	**009EGG-700** Engine Oiling, Oil Pan and Indicator (Dipstick) 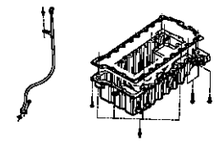	**009EGG-800** Engine Oil Cooler 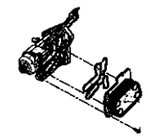	

Group - 009EGG 3.5L Gas; Engine

Illustration Title — Group-Fig. No.

Engine Identification
Engine Identification 3.5L [EGG] ..... Fig. 009EGG - 105
Engine Assembly And Service Long Block 3.5L [EGG] ..... Fig. 009EGG - 115
Engine Gasket Kits 3.5L [EGG] ..... Fig. 009EGG - 145

Cylinder Head
Cylinder Head Covers 3.5L [EGG] ..... Fig. 009EGG - 205
Cylinder Heads 3.5L [EGG] ..... Fig. 009EGG - 225

Cylinder Block
Engine Cylinder Block And Hardware 3.5L [EGG] ..... Fig. 009EGG - 305
Engine Cylinder Block Heater 3.5L [EGG] ..... Fig. 009EGG - 325

Crankshaft, Piston, Drive Plate, Flywheel, and Damper
Crankshaft, Crankshaft Bearings, Damper And Flexplate 3.5L [EGG] ..... Fig. 009EGG - 405
Pistons, Piston Rings, Connecting Rods And Connecting Rod Bearings 3.5L [EGG] ..... Fig. 009EGG - 425

Camshaft and Valve
Camshafts And Valvetrain 3.5L [EGG] ..... Fig. 009EGG - 505

Timing Belt/Chain and Cover and Balance Shaft
Timing Case Cover 3.5L [EGG] ..... Fig. 009EGG - 605
Timing System 3.5L [EGG] ..... Fig. 009EGG - 625

Engine Oiling, Oil Pan and Indicator (Dipstick)
Engine Oiling Pump 3.5L [EGG] ..... Fig. 009EGG - 705
Engine Oil Pan, Engine Oil Level Indicator And Related Parts 3.5L [EGG] ..... Fig. 009EGG - 725
Engine Oil Filter And Engine Oil 3.5L [EGG] ..... Fig. 009EGG - 745

Engine Oil Cooler
Engine Oil Cooler And Hoses/Tubes 3.5L [EGG] ..... Fig. 009EGG - 805

Manifolds and Vacuum Fittings
Exhaust Manifolds And Heat Shields 3.5L [EGG] ..... Fig. 009EGG - 1005
Intake Manifold Plenum 3.5L [EGG] ..... Fig. 009EGG - 1045
Lower Intake Manifold 3.5L [EGG] ..... Fig. 009EGG - 1065

Crankcase Ventilation
Crankcase Ventilation 3.5L [EGG] ..... Fig. 009EGG - 1105

Engine Mounting
Engine Mounting Right Side RWD/2WD 3.5L [EGG] ..... Fig. 009EGG - 1220
Engine Mounting Left Side RWD/2WD 3.5L [EGG] ..... Fig. 009EGG - 1235

Engine Identification 3.5L [EGG]
Figure 009EGG-105

ITEM	PART NUMBER	QTY	LINE	SERIES	BODY	ENGINE	TRANS	TRIM	DESCRIPTION
									Note: The Engine Identification Label Is Attached To One Of The Cylinder Head Covers. The Production Engine Part Number Is Not A Servicable Part Number. A Engine Is Usally Serviced By A Long Block Or Short Block Engine.
1		1							LABEL, Engine Identification, See Note:, (NOT SERVICED)

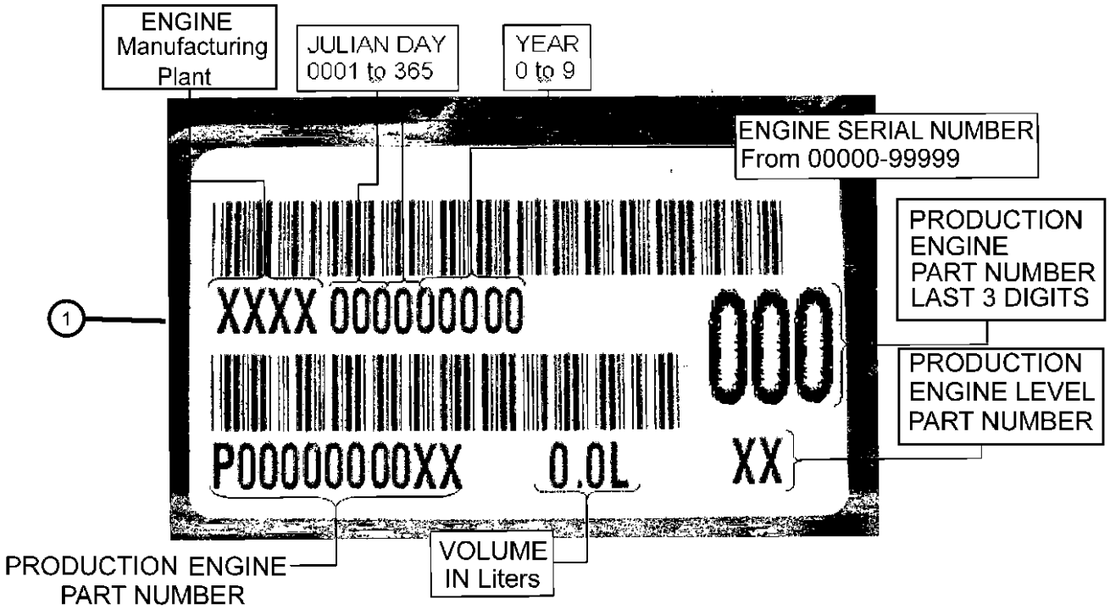

DODGE CHALLENGER (LC)

SERIES	LINE	BODY	ENGINE	TRANSMISSION
H = HIGHLINE P = PREMIUM X = SPECIAL	D = DODGE	22 = 2-DR SEDAN TYPE #2	EGG = 3.5L High Output V6 24V MPI Engine ESF = 6.1L SRT HEMI V8 Engine EZC = 5.7L HEMI VCT Engine EZD = 5.7L Hemi VCT MDS Engine	DEC = 6-Speed Manual TREMEC Transmission DGJ = 5-Speed Auto W5A580 Transmission DGV = 4-Spd. Automatic VLP 42RLE Trans

Engine Assembly And Service Long Block 3.5L [EGG]
Figure 009EGG-115

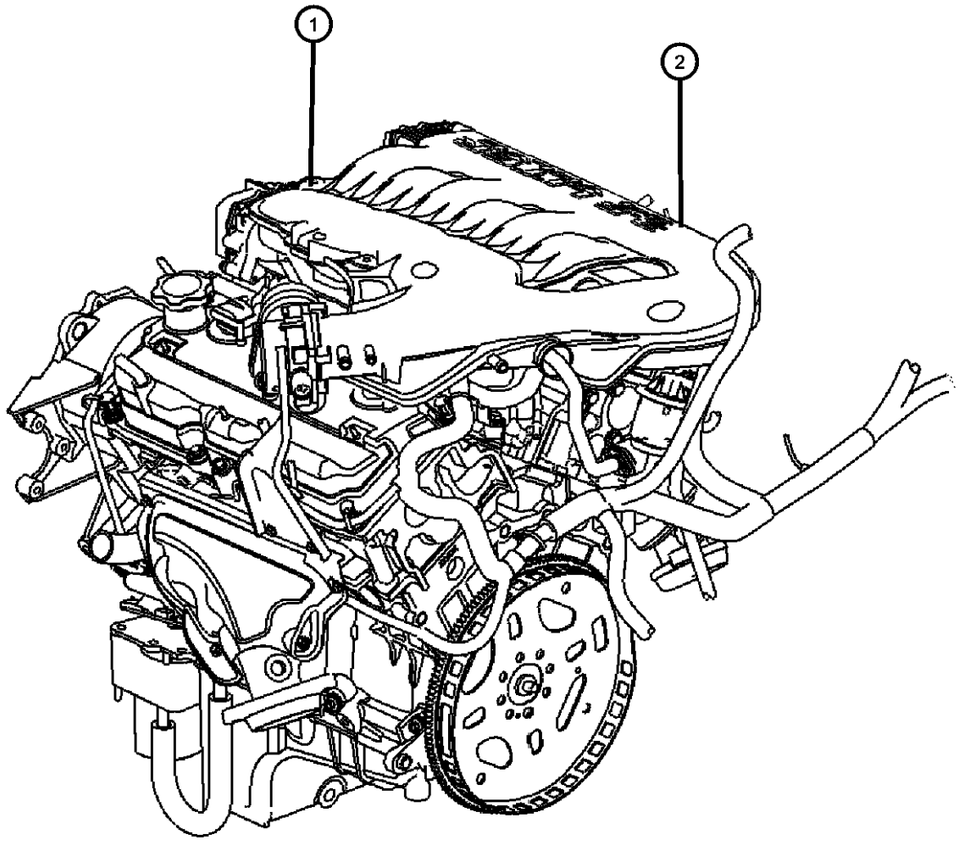

ITEM	PART NUMBER	QTY	LINE	SERIES	BODY	ENGINE	TRANS	TRIM	DESCRIPTION

NOTE:
The Engine Identifaction Label Contains: The Production Assembly Part Number And Displacement.
Vechile I.D. Is Located On The Left Bank At The Rear Of The Block Just Below The Head.
Sales Codes:
[DEC] = 6-Speed Manual TR6060 Transmission
[DEH] = 6-Speed Manual NSG370 Transmission
[DF9] = AHS-T RWD Automatic Transmission
[DGJ] = 5-Speed Automatic W5A580 Transmission
[DGQ] = 5-Speed Automatic 545RFE Transmission
[DGV] = 4-Speed Automatic VLP 42RLE Transmission
[DG0] = All Automatic Transmissions
[DHR] = Single Speed On Demand MP3010 Transfer Case
[DHU] = AWD Electronic Shift Two Speed NVG 244 H/D Transfer Case
[DHZ] = Full Time Single Mode NVG 140 Transfer Case
[EGG] = 3.5L High Output V-6 24 Valve MPI Engine
[EGS] = 4.0L SOHC V-6 Engine
[EG0] = All 3.5L And 4.0L 6-Cylinder Engines
[EKG] = 3.7L [Magnum] V-6 Engine
[EK0] = All 3.7L 6-Cylinder Gas Engines
[ENS] = 2.8L 4 Cylinder Turbo Diesel Engine
[EN0] = All 2.8L 4 Cylinder Turbo Diesel Engines
[ESF] = 6.1L SRT V-8 Hemi Engine
[ES0] = All 6.1L 8-Cylinder Engines
[EVA] = 4.7L [Magnum] V-8 Engine
[EVD] = 4.7L V-8 FFV Engine
[EVE] = 4.7L V-8 Engine
[EV0] = All 4.7L 8-Cylinder Engines
[EZA] = 5.7L Hemi V-8 Engine
[EZB] = 5.7L Hemi V-8 Multi-Displacement Engine
[EZC] = 5.7L Hemi V-8 VCT Non Multi-Displacement Engine
[EZD] = 5.7L Hemi V-8 VCT Multi-Displacement Engine
[EZE] = 5.7L Hemi V-8 HEV Engine
[EZ0] = All 5.7L 8-Cylinder Engines
[NAA] = Federal Emissions
[NAE] = California Emissions
[NAS] = 50 State Emissions
[NA1] = Export Emissions
[NHK] = Engine Cylinder Block Heater
[XEF] = Transfer Case Skid Plate Sheild

1	1	ENGINE, Complete, (NOT SERVICED)
2	1	ENGINE, Long Block, (NOT SERVICED)

DODGE CHALLENGER (LC)

SERIES	LINE	BODY	ENGINE	TRANSMISSION
H = HIGHLINE P = PREMIUM X = SPECIAL	D = DODGE	22 = 2-DR SEDAN TYPE #2	EGG = 3.5L High Output V6 24V MPI Engine ESF = 6.1L SRT HEMI V8 Engine EZC = 5.7L HEMI VCT Engine EZD = 5.7L Hemi VCT MDS Engine	DEC = 6-Speed Manual TREMEC Transmission DGJ = 5-Speed Auto W5A580 Transmission DGV = 4-Spd. Automatic VLP 42RLE Trans

Engine Gasket Kits 3.5L [EGG]
Figure 009EGG-145

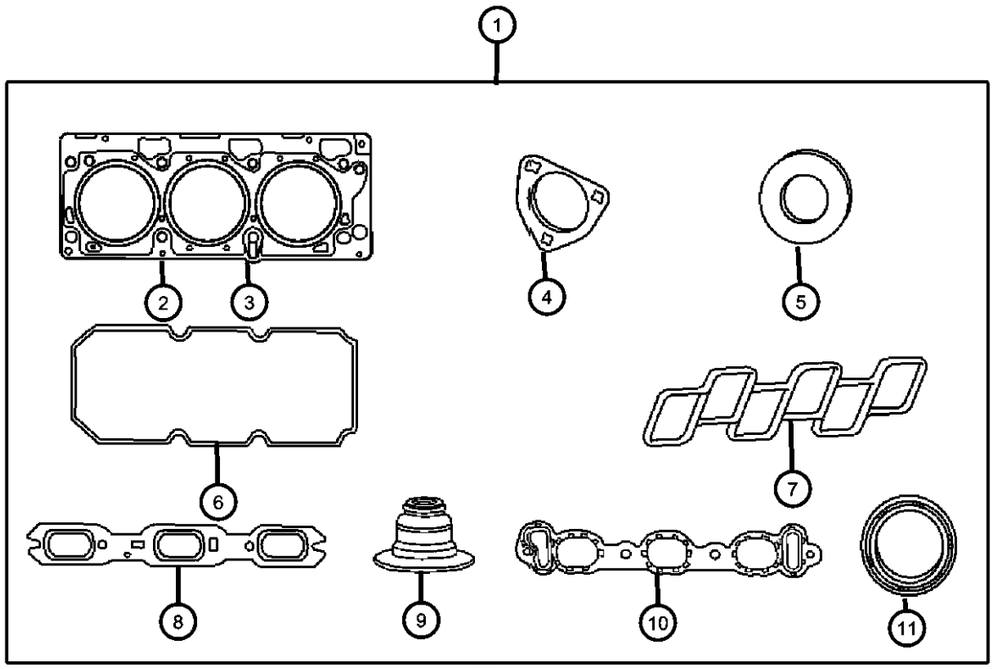

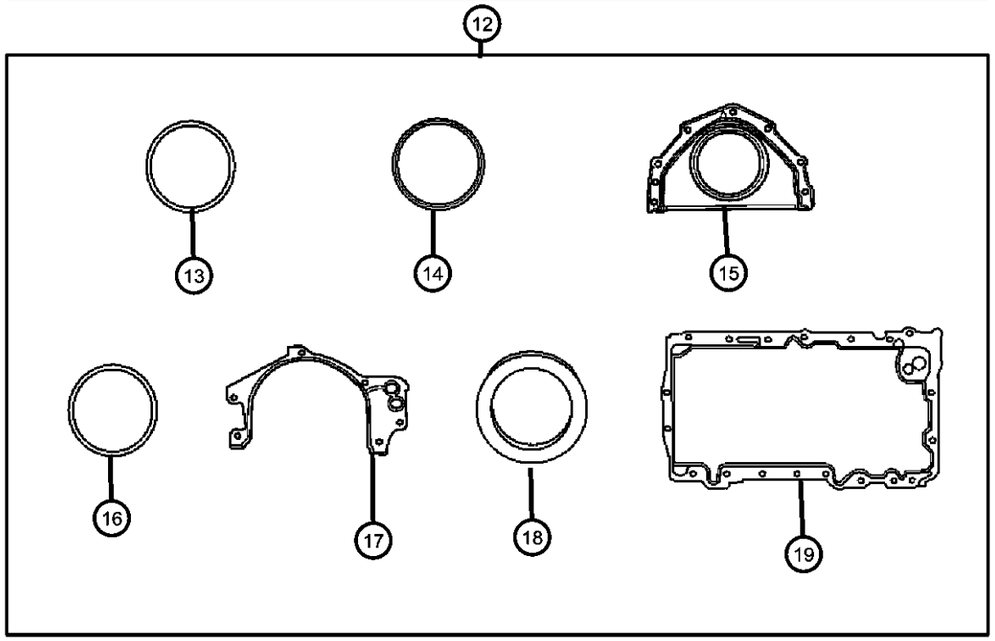

ITEM	PART NUMBER	QTY	LINE	SERIES	BODY	ENGINE	TRANS	TRIM	DESCRIPTION

NOTE:
Sales Codes:
[DEC] = 6-Speed Manual TR6060 Transmission
[DEH] = 6-Speed Manual NSG370 Transmission
[DF9] = AHS-T RWD Automatic Transmission
[DGJ] = 5-Speed Automatic W5A580 Transmission
[DGQ] = 5-Speed Automatic 545RFE Transmission
[DGV] = 4-Speed Automatic VLP 42RLE Transmission
[DG0] = All Automatic Transmissions
[DHR] = Single Speed On Demand MP3010 Transfer Case
[DHU] = AWD Electronic Shift Two Speed NVG 244 H/D Transfer Case
[DHZ] = Full Time Single Mode NVG 140 Transfer Case
[EGG] = 3.5L High Output V-6 24 Valve MPI Engine
[EGS] = 4.0L SOHC V-6 Engine
[EG0] = All 3.5L And 4.0L 6-Cylinder Engines
[EKG] = 3.7L [Magnum] V-6 Engine
[EK0] = All 3.7L 6-Cylinder Gas Engines
[ENS] = 2.8L 4 Cylinder Turbo Diesel Engine
[EN0] = All 2.8L 4 Cylinder Turbo Diesel Engines
[ESF] = 6.1L SRT V-8 Hemi Engine
[ES0] = All 6.1L 8-Cylinder Engines
[EVA] = 4.7L [Magnum] V-8 Engine
[EVD] = 4.7L V-8 FFV Engine
[EVE] = 4.7L V-8 Engine
[EV0] = All 4.7L 8-Cylinder Engines
[EZA] = 5.7L Hemi V-8 Engine
[EZB] = 5.7L Hemi V-8 Multi-Displacement Engine
[EZC] = 5.7L Hemi V-8 VCT Non Multi-Displacement Engine
[EZD] = 5.7L Hemi V-8 VCT Multi-Displacement Engine
[EZE] = 5.7L Hemi V-8 HEV Engine
[EZ0] = All 5.7L 8-Cylinder Engines
[NAA] = Federal Emissions
[NAE] = California Emissions
[NAS] = 50 State Emissions
[NA1] = Export Emissions
[NHK] = Engine Cylinder Block Heater
[XEF] = Transfer Case Skid Plate Sheild

1	68003769AC	1	D			EGG	DGV		GASKET PACKAGE, Engine Upper
2	04792752AE	1	D			EGG			GASKET, Cylinder Head, Right
3	04792753AE	1	D			EGG			GASKET, Cylinder Head, Left
4	04536492AB	2	D			EGG			SEAL, Camshaft Thrust
5									SEAL, Spark Plug Tube
	04777042AB	3	D			EGG			Right Cylinder Head
		3	D			EGG			Left Cylinder Head

DODGE CHALLENGER (LC)

SERIES	LINE	BODY	ENGINE	TRANSMISSION
H = HIGHLINE P = PREMIUM X = SPECIAL	D = DODGE	22 = 2-DR SEDAN TYPE #2	EGG = 3.5L High Output V6 24V MPI Engine ESF = 6.1L SRT HEMI V8 Engine EZC = 5.7L HEMI VCT Engine EZD = 5.7L Hemi VCT MDS Engine	DEC = 6-Speed Manual TREMEC Transmission DGJ = 5-Speed Auto W5A580 Transmission DGV = 4-Spd. Automatic VLP 42RLE Trans

AR = use ase required - = Non illustrrated part

Engine Gasket Kits 3.5L [EGG]
Figure 009EGG-145

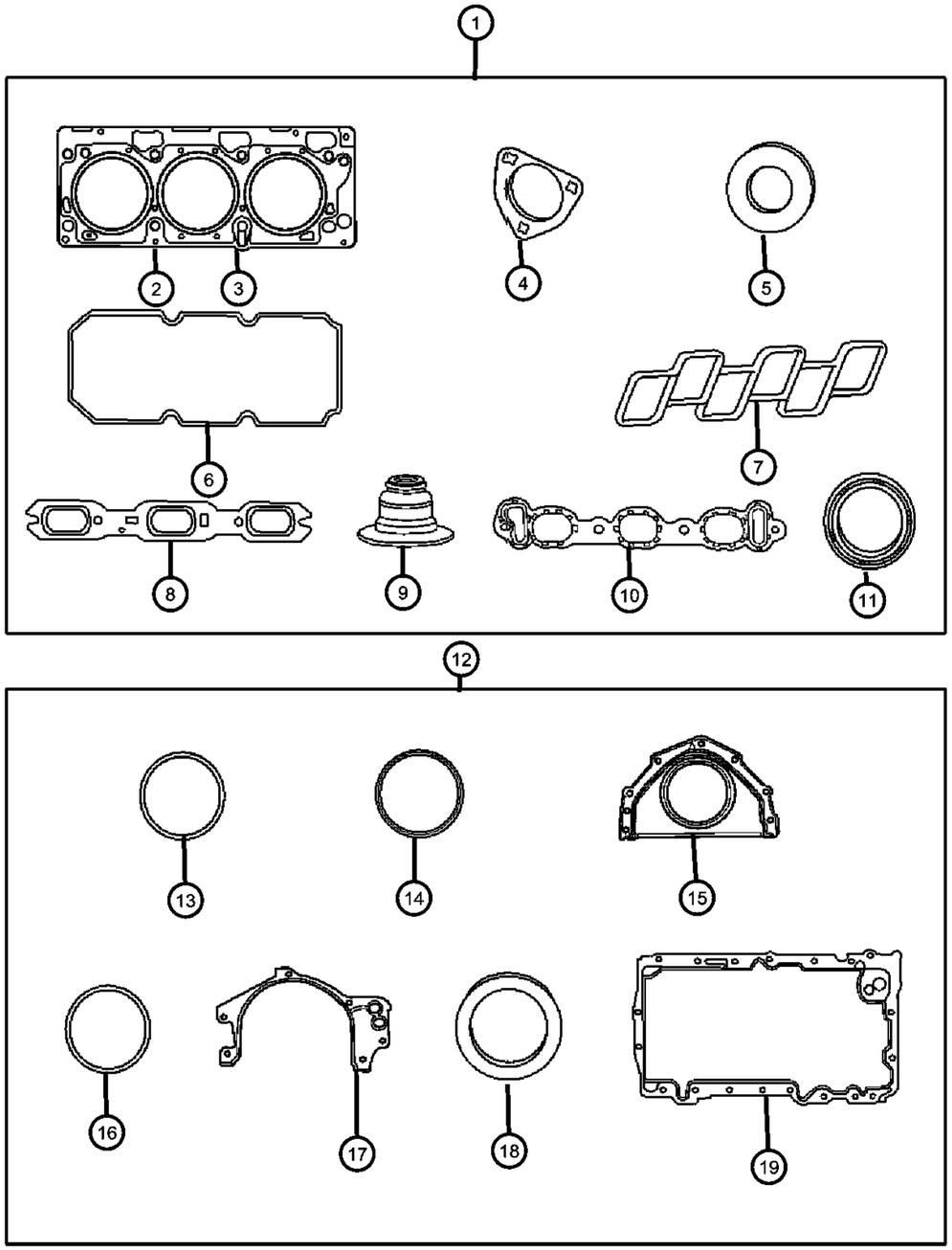

ITEM	PART NUMBER	QTY	LINE	SERIES	BODY	ENGINE	TRANS	TRIM	DESCRIPTION
6									GASKET, Cylinder head Cover
	04892146AA	1	D			EGG			Right Cylinder Head
		1	D			EGG			Left Cylinder Head
7	04663851	1	D			EGG			GASKET, Intake Plenum
8	04663958	2	D			EGG			GASKET, Exhaust Manifold
9	04892292AA	24	D			EGG			SEAL, Valve Guide
10	04663852AB	2	D			EGG			GASKET, Intake Manifold
11	04792318AB	2	D			EGG			SEAL, Camshaft
12	68002252AA	1	D			EGG	DGV		GASKET PACKAGE, Engine Lower
13	04792068	1	D			EGG			O RING, Oil Pick Up Tube
14	04659430AB	1	D			EGG			SEAL, Water Pump To Front Cover
15	04663870AB	1	D			EGG			RETAINER AND SEAL, Crankshaft Rear Oil
16	04483443	2	D			EGG			GASKET, Timing Case Cover
17	04648938AC	1	D			EGG			GASKET, Oil Pump
18	04792317AB	1	D			EGG			SEAL, Crankshaft Oil, Front
19	04792869AA	1	D			EGG			GASKET, Oil Pan

DODGE CHALLENGER (LC)

SERIES	LINE	BODY	ENGINE	TRANSMISSION
H = HIGHLINE P = PREMIUM X = SPECIAL	D = DODGE	22 = 2-DR SEDAN TYPE #2	EGG = 3.5L High Output V6 24V MPI Engine ESF = 6.1L SRT HEMI V8 Engine EZC = 5.7L HEMI VCT Engine EZD = 5.7L Hemi VCT MDS Engine	DEC = 6-Speed Manual TREMEC Transmission DGJ = 5-Speed Auto W5A580 Transmission DGV = 4-Spd. Automatic VLP 42RLE Trans

Cylinder Head Covers 3.5L [EGG]
Figure 009EGG-205

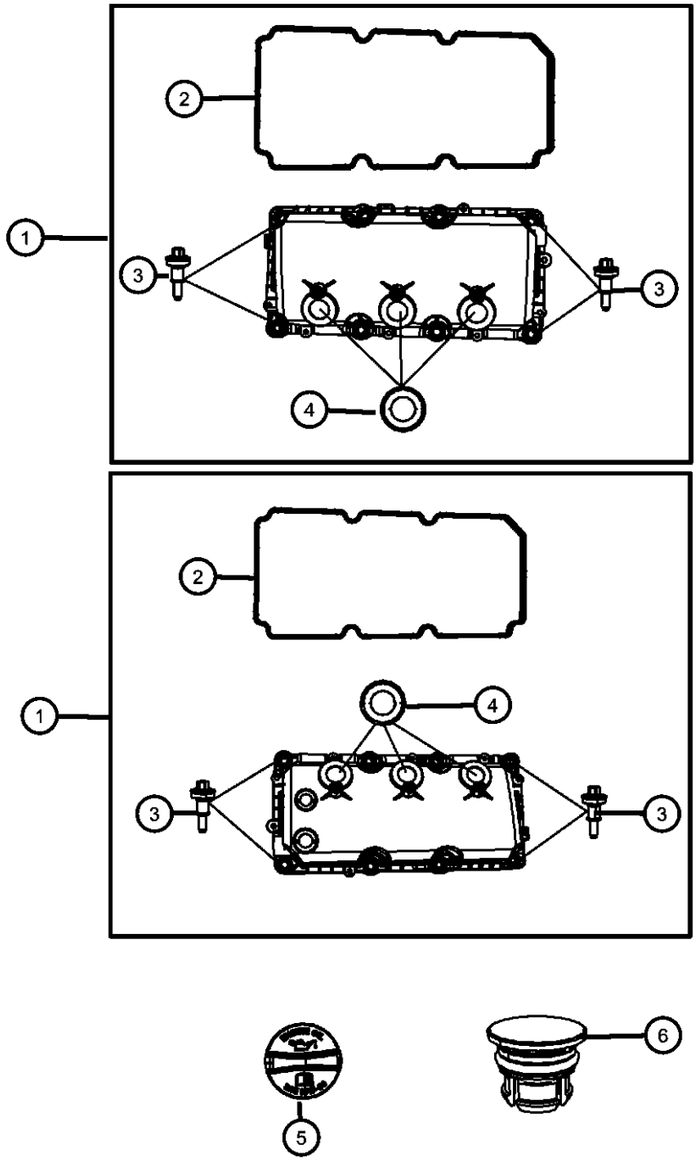

ITEM	PART NUMBER	QTY	LINE	SERIES	BODY	ENGINE	TRANS	TRIM	DESCRIPTION

NOTE:
Sales Codes:
[DEC] = 6-Speed Manual TR6060 Transmission
[DEH] = 6-Speed Manual NSG370 Transmission
[DF9] = AHS-T RWD Automatic Transmission
[DGJ] = 5-Speed Automatic W5A580 Transmission
[DGQ] = 5-Speed Automatic 545RFE Transmission
[DGV] = 4-Speed Automatic VLP 42RLE Transmission
[DG0] = All Automatic Transmissions
[DHR] = Single Speed On Demand MP3010 Transfer Case
[DHU] = AWD Electronic Shift Two Speed NVG 244 H/D Transfer Case
[DHZ] = Full Time Single Mode NVG 140 Transfer Case
[EGG] = 3.5L High Output V-6 24 Valve MPI Engine
[EGS] = 4.0L SOHC V-6 Engine
[EG0] = All 3.5L And 4.0L 6-Cylinder Engines
[EKG] = 3.7L [Magnum] V-6 Engine
[EK0] = All 3.7L 6-Cylinder Gas Engines
[ENS] = 2.8L 4 Cylinder Turbo Diesel Engine
[EN0] = All 2.8L 4 Cylinder Turbo Diesel Engines
[ESF] = 6.1L SRT V-8 Hemi Engine
[ES0] = All 6.1L 8-Cylinder Engines
[EVA] = 4.7L [Magnum] V-8 Engine
[EVD] = 4.7L V-8 FFV Engine
[EVE] = 4.7L V-8 Engine
[EV0] = All 4.7L 8-Cylinder Engines
[EZA] = 5.7L Hemi V-8 Engine
[EZB] = 5.7L Hemi V-8 Multi-Displacement Engine
[EZC] = 5.7L Hemi V-8 VCT Non Multi-Displacement Engine
[EZD] = 5.7L Hemi V-8 VCT Multi-Displacement Engine
[EZE] = 5.7L Hemi V-8 HEV Engine
[EZ0] = All 5.7L 8-Cylinder Engines
[NAA] = Federal Emissions
[NAE] = California Emissions
[NAS] = 50 State Emissions
[NA1] = Export Emissions
[NHK] = Engine Cylinder Block Heater
[XEF] = Transfer Case Skid Plate Sheild

1									COVER, Cylinder Head, Includes items 2,3,4
	04892203AA	1	D			EGG			Left Cylinder Head
	04892206AB	1	D			EGG			Right Cylinder Head
2									GASKET, Cylinder head Cover
	04892146AA	1	D			EGG			Right Cylinder Head
		1	D			EGG			Left Cylinder Head
3									ISOLATOR, Cylinder Head Cover, Grommet And Bolt

DODGE CHALLENGER (LC)

SERIES	LINE	BODY	ENGINE	TRANSMISSION
H = HIGHLINE P = PREMIUM X = SPECIAL	D = DODGE	22 = 2-DR SEDAN TYPE #2	EGG = 3.5L High Output V6 24V MPI Engine ESF = 6.1L SRT HEMI V8 Engine EZC = 5.7L HEMI VCT Engine EZD = 5.7L Hemi VCT MDS Engine	DEC = 6-Speed Manual TREMEC Transmission DGJ = 5-Speed Auto W5A580 Transmission DGV = 4-Spd. Automatic VLP 42RLE Trans

AR = use ase required - = Non illustrrated part

Cylinder Head Covers 3.5L [EGG]
Figure 009EGG-205

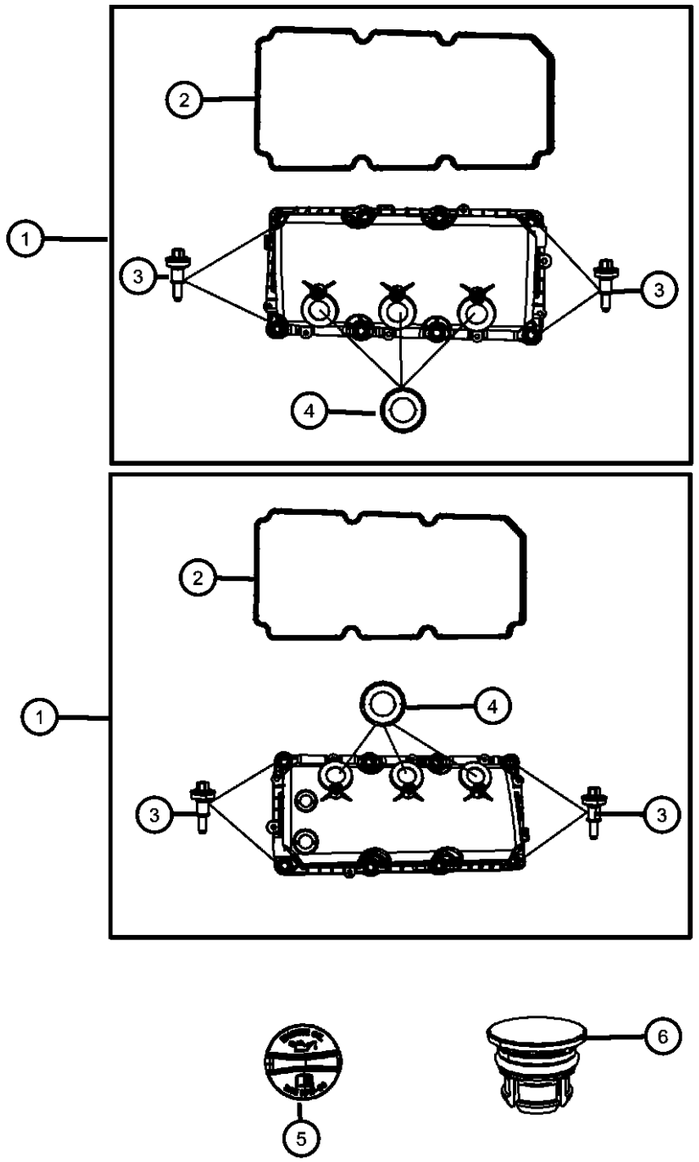

ITEM	PART NUMBER	QTY	LINE	SERIES	BODY	ENGINE	TRANS	TRIM	DESCRIPTION
	04892294AA	8	D			EGG			Left Cylinder Head
		8	D			EGG			
4									SEAL, Spark Plug Tube
	04777042AB	3	D			EGG			Right Cylinder Head
		3	D			EGG			Left Cylinder Head
5	04892289AA	1	D			EGG			CAP, Oil Filler
6	04892282AA	1	D			EGG			CAP, Make Up Air Plug

DODGE CHALLENGER (LC)

SERIES	LINE	BODY	ENGINE	TRANSMISSION
H = HIGHLINE	D = DODGE	22 = 2-DR SEDAN TYPE #2	EGG = 3.5L High Output V6 24V MPI Engine	DEC = 6-Speed Manual TREMEC Transmission
P = PREMIUM			ESF = 6.1L SRT HEMI V8 Engine	DGJ = 5-Speed Auto W5A580 Transmission
X = SPECIAL			EZC = 5.7L HEMI VCT Engine	DGV = 4-Spd. Automatic VLP 42RLE Trans
			EZD = 5.7L Hemi VCT MDS Engine	

AR = use ase required - = Non illustrrated part

Cylinder Heads 3.5L [EGG]
Figure 009EGG-225

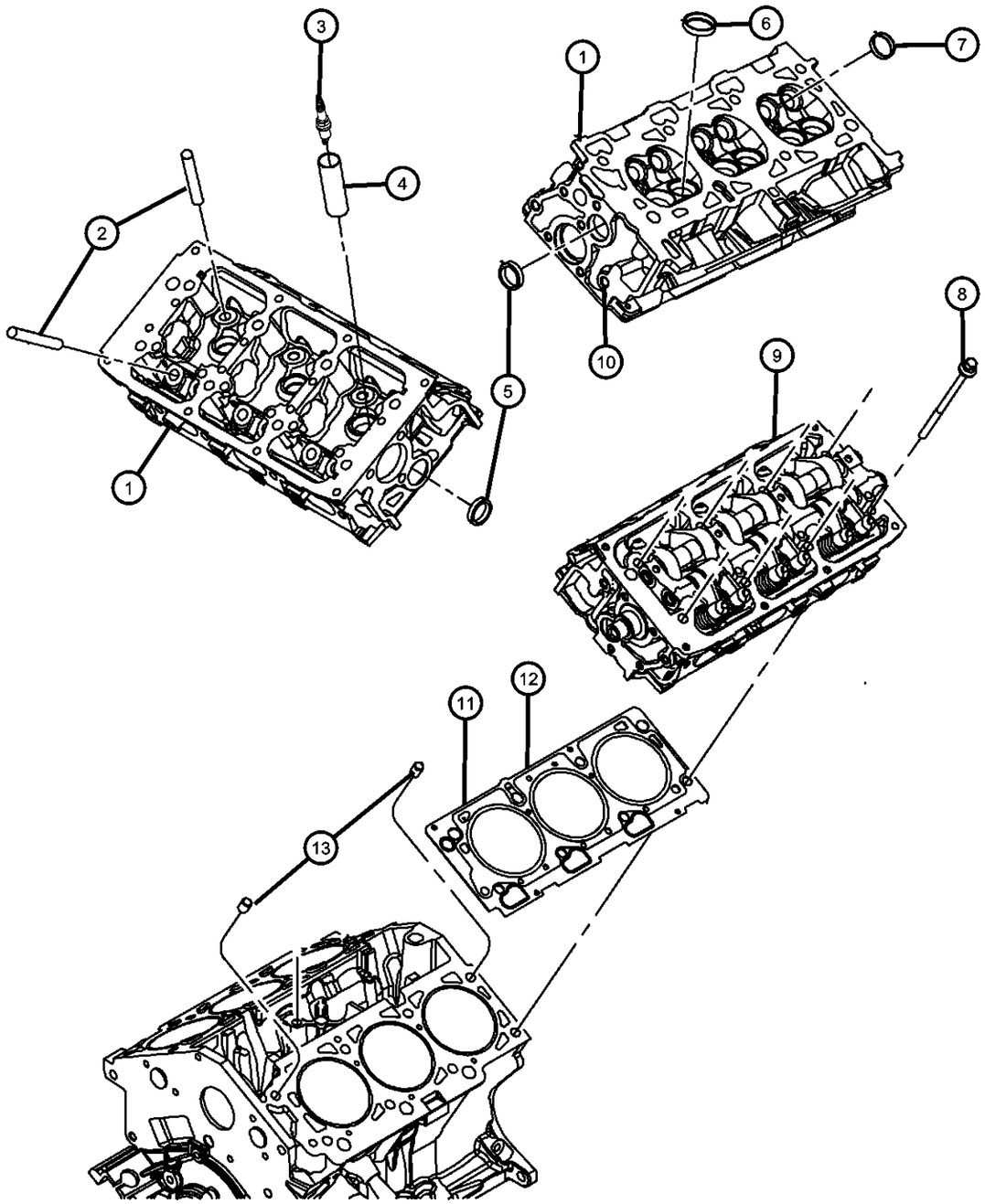

ITEM	PART NUMBER	QTY	LINE	SERIES	BODY	ENGINE	TRANS	TRIM	DESCRIPTION

NOTE:
Sales Codes:
[DEC] = 6-Speed Manual TR6060 Transmission
[DEH] = 6-Speed Manual NSG370 Transmission
[DF9] = AHS-T RWD Automatic Transmission
[DGJ] = 5-Speed Automatic W5A580 Transmission
[DGQ] = 5-Speed Automatic 545RFE Transmission
[DGV] = 4-Speed Automatic VLP 42RLE Transmission
[DG0] = All Automatic Transmissions
[DHR] = Single Speed On Demand MP3010 Transfer Case
[DHU] = AWD Electronic Shift Two Speed NVG 244 H/D Transfer Case
[DHZ] = Full Time Single Mode NVG 140 Transfer Case
[EGG] = 3.5L High Output V-6 24 Valve MPI Engine
[EGS] = 4.0L SOHC V-6 Engine
[EG0] = All 3.5L And 4.0L 6-Cylinder Engines
[EKG] = 3.7L [Magnum] V-6 Engine
[EK0] = All 3.7L 6-Cylinder Gas Engines
[ENS] = 2.8L 4 Cylinder Turbo Diesel Engine
[EN0] = All 2.8L 4 Cylinder Turbo Diesel Engines
[ESF] = 6.1L SRT V-8 Hemi Engine
[ES0] = All 6.1L 8-Cylinder Engines
[EVA] = 4.7L [Magnum] V-8 Engine
[EVD] = 4.7L V-8 FFV Engine
[EVE] = 4.7L V-8 Engine
[EV0] = All 4.7L 8-Cylinder Engines
[EZA] = 5.7L Hemi V-8 Engine
[EZB] = 5.7L Hemi V-8 Multi-Displacement Engine
[EZC] = 5.7L Hemi V-8 VCT Non Multi-Displacement Engine
[EZD] = 5.7L Hemi V-8 VCT Multi-Displacement Engine
[EZE] = 5.7L Hemi V-8 HEV Engine
[EZ0] = All 5.7L 8-Cylinder Engines
[NAA] = Federal Emissions
[NAE] = California Emissions
[NAS] = 50 State Emissions
[NA1] = Export Emissions
[NHK] = Engine Cylinder Block Heater
[XEF] = Transfer Case Skid Plate Sheild

1	04792925AA	2	D			EGG			HEAD, Cylinder, See Note
2		2							GUIDE, Valve, Serviced With Cylinder Head, (NOT SERVICED)
3	SZFR5LP13G	6	D			EGG			SPARK PLUG
4	04648604	6	D			EGG			TUBE, Spark Plug
5	04556020AB	4	D			EGG			PLUG, Core, 1.25 Diameter
6		4							SEAT, Intake Valve, Serviced with Cylinder Head, (NOT SERVICED)

DODGE CHALLENGER (LC)

SERIES	LINE	BODY	ENGINE	TRANSMISSION
H = HIGHLINE P = PREMIUM X = SPECIAL	D = DODGE	22 = 2-DR SEDAN TYPE #2	EGG = 3.5L High Output V6 24V MPI Engine ESF = 6.1L SRT HEMI V8 Engine EZC = 5.7L HEMI VCT Engine EZD = 5.7L Hemi VCT MDS Engine	DEC = 6-Speed Manual TREMEC Transmission DGJ = 5-Speed Auto W5A580 Transmission DGV = 4-Spd. Automatic VLP 42RLE Trans

Cylinder Heads 3.5L [EGG]
Figure 009EGG-225

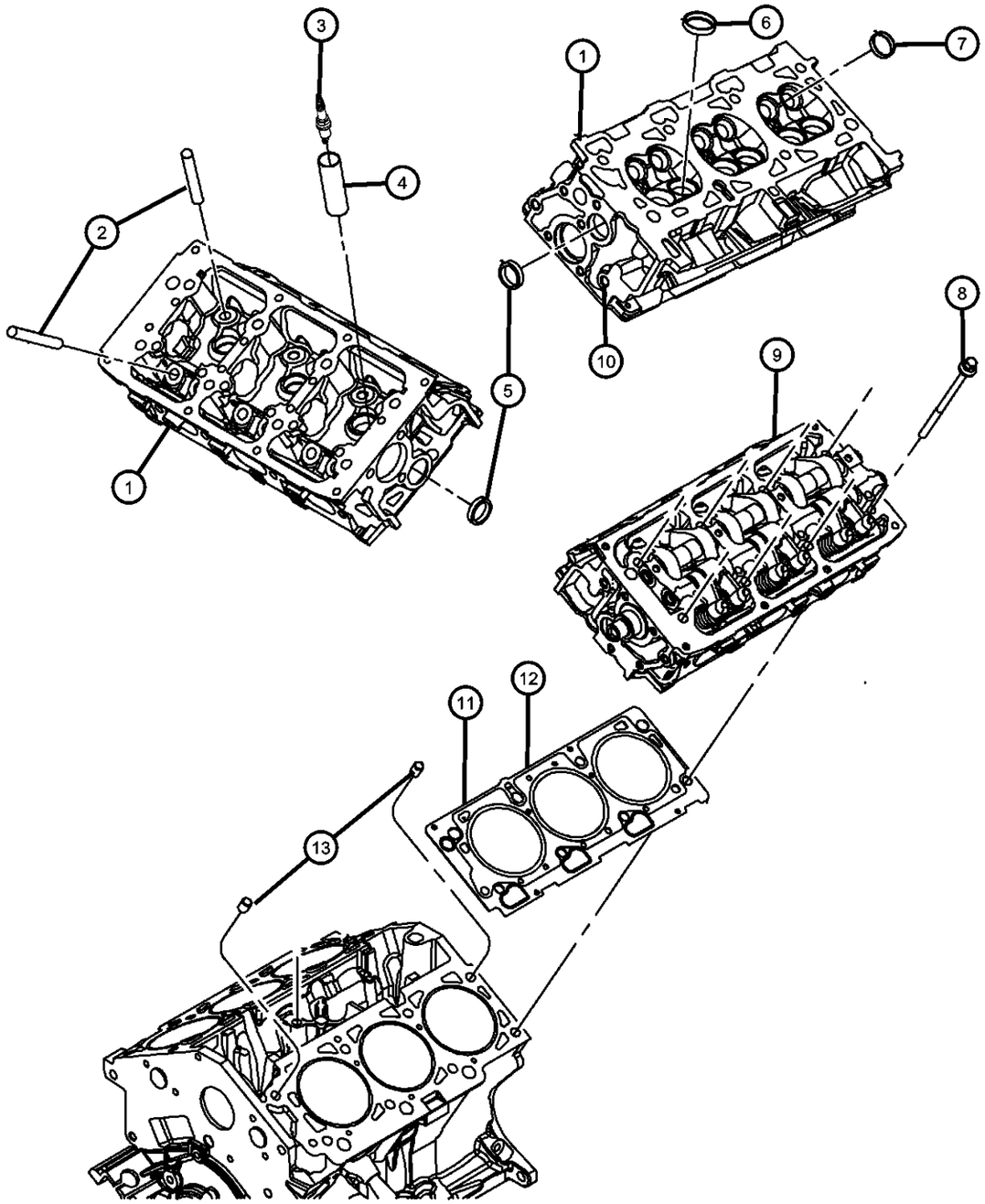

ITEM	PART NUMBER	QTY	LINE	SERIES	BODY	ENGINE	TRANS	TRIM	DESCRIPTION
7		4							SEAT, Exhaust Valve, Serviced With Cylinder Head, (NOT SERVICED)
8	06504329	16	D			EGG			BOLT, Hex Flange Head, M11X1.50X205.00, Cylinder Head To Cylinder Block, Mounting
9		16							CYLINDER HEAD, Complete, Serviced By Partial Cylinder Head Only. All Parts Serviced Seperate., (NOT SERVICED)
10	06034331	2	D			EGG			PLUG, Hex Socket, 3/8-18NPTx.475, Cylinder Head EGR Hole
11	04792752AE	1	D			EGG			GASKET, Cylinder Head, Right
12	04792753AE	1	D			EGG			GASKET, Cylinder Head, Left
13	04448856	4	D			EGG			DOWEL PIN, Cylinder Head To Cylinder Block, Mounting

DODGE CHALLENGER (LC)

SERIES	LINE	BODY	ENGINE	TRANSMISSION
H = HIGHLINE P = PREMIUM X = SPECIAL	D = DODGE	22 = 2-DR SEDAN TYPE #2	EGG = 3.5L High Output V6 24V MPI Engine ESF = 6.1L SRT HEMI V8 Engine EZC = 5.7L HEMI VCT Engine EZD = 5.7L Hemi VCT MDS Engine	DEC = 6-Speed Manual TREMEC Transmission DGJ = 5-Speed Auto W5A580 Transmission DGV = 4-Spd. Automatic VLP 42RLE Trans

AR = use ase required - = Non illustrrated part

Engine Cylinder Block And Hardware 3.5L [EGG]
Figure 009EGG-305

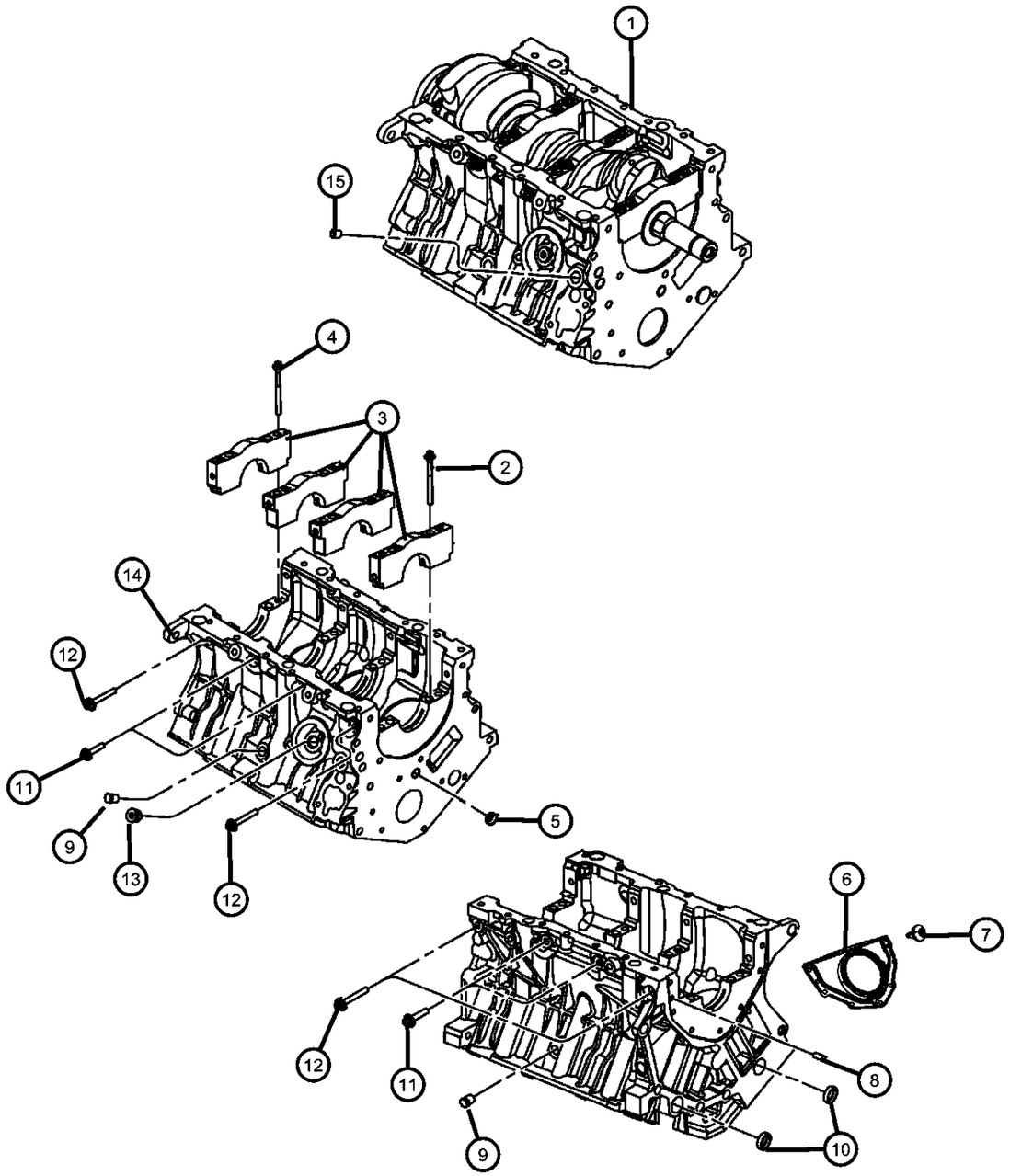

ITEM	PART NUMBER	QTY	LINE	SERIES	BODY	ENGINE	TRANS	TRIM	DESCRIPTION

NOTE:
Sales Codes:
[DEC] = 6-Speed Manual TR6060 Transmission
[DEH] = 6-Speed Manual NSG370 Transmission
[DF9] = AHS-T RWD Automatic Transmission
[DGJ] = 5-Speed Automatic W5A580 Transmission
[DGQ] = 5-Speed Automatic 545RFE Transmission
[DGV] = 4-Speed Automatic VLP 42RLE Transmission
[DG0] = All Automatic Transmissions
[DHR] = Single Speed On Demand MP3010 Transfer Case
[DHU] = AWD Electronic Shift Two Speed NVG 244 H/D Transfer Case
[DHZ] = Full Time Single Mode NVG 140 Transfer Case
[EGG] = 3.5L High Output V-6 24 Valve MPI Engine
[EGS] = 4.0L SOHC V-6 Engine
[EG0] = All 3.5L And 4.0L 6-Cylinder Engines
[EKG] = 3.7L [Magnum] V-6 Engine
[EK0] = All 3.7L 6-Cylinder Gas Engines
[ENS] = 2.8L 4 Cylinder Turbo Diesel Engine
[EN0] = All 2.8L 4 Cylinder Turbo Diesel Engines
[ESF] = 6.1L SRT V-8 Hemi Engine
[ES0] = All 6.1L 8-Cylinder Engines
[EVA] = 4.7L [Magnum] V-8 Engine
[EVD] = 4.7L V-8 FFV Engine
[EVE] = 4.7L V-8 Engine
[EV0] = All 4.7L 8-Cylinder Engines
[EZA] = 5.7L Hemi V-8 Engine
[EZB] = 5.7L Hemi V-8 Multi-Displacement Engine
[EZC] = 5.7L Hemi V-8 VCT Non Multi-Displacement Engine
[EZD] = 5.7L Hemi V-8 VCT Multi-Displacement Engine
[EZE] = 5.7L Hemi V-8 HEV Engine
[EZ0] = All 5.7L 8-Cylinder Engines
[NAA] = Federal Emissions
[NAE] = California Emissions
[NAS] = 50 State Emissions
[NA1] = Export Emissions
[NHK] = Engine Cylinder Block Heater
[XEF] = Transfer Case Skid Plate Sheild

1									ENGINE, Short Block
	68039264AA	1	D			EGG	DGJ		
	68039265AA	1	D			EGG	DGV		
2	06504630	8	D			EGG			BOLT, Hex Flange Head, M10X1.50X100.00, Main Bearing Cap To Cylinder Block, Mounting
3		8							CAP, Main, Serviced In Item 1 Short Block, (NOT SERVICED)

DODGE CHALLENGER (LC)

SERIES	LINE	BODY	ENGINE	TRANSMISSION
H = HIGHLINE P = PREMIUM X = SPECIAL	D = DODGE	22 = 2-DR SEDAN TYPE #2	EGG = 3.5L High Output V6 24V MPI Engine ESF = 6.1L SRT HEMI V8 Engine EZC = 5.7L HEMI VCT Engine EZD = 5.7L Hemi VCT MDS Engine	DEC = 6-Speed Manual TREMEC Transmission DGJ = 5-Speed Auto W5A580 Transmission DGV = 4-Spd. Automatic VLP 42RLE Trans

AR = use ase required - = Non illustrrated part

Engine Cylinder Block And Hardware 3.5L [EGG]
Figure 009EGG-305

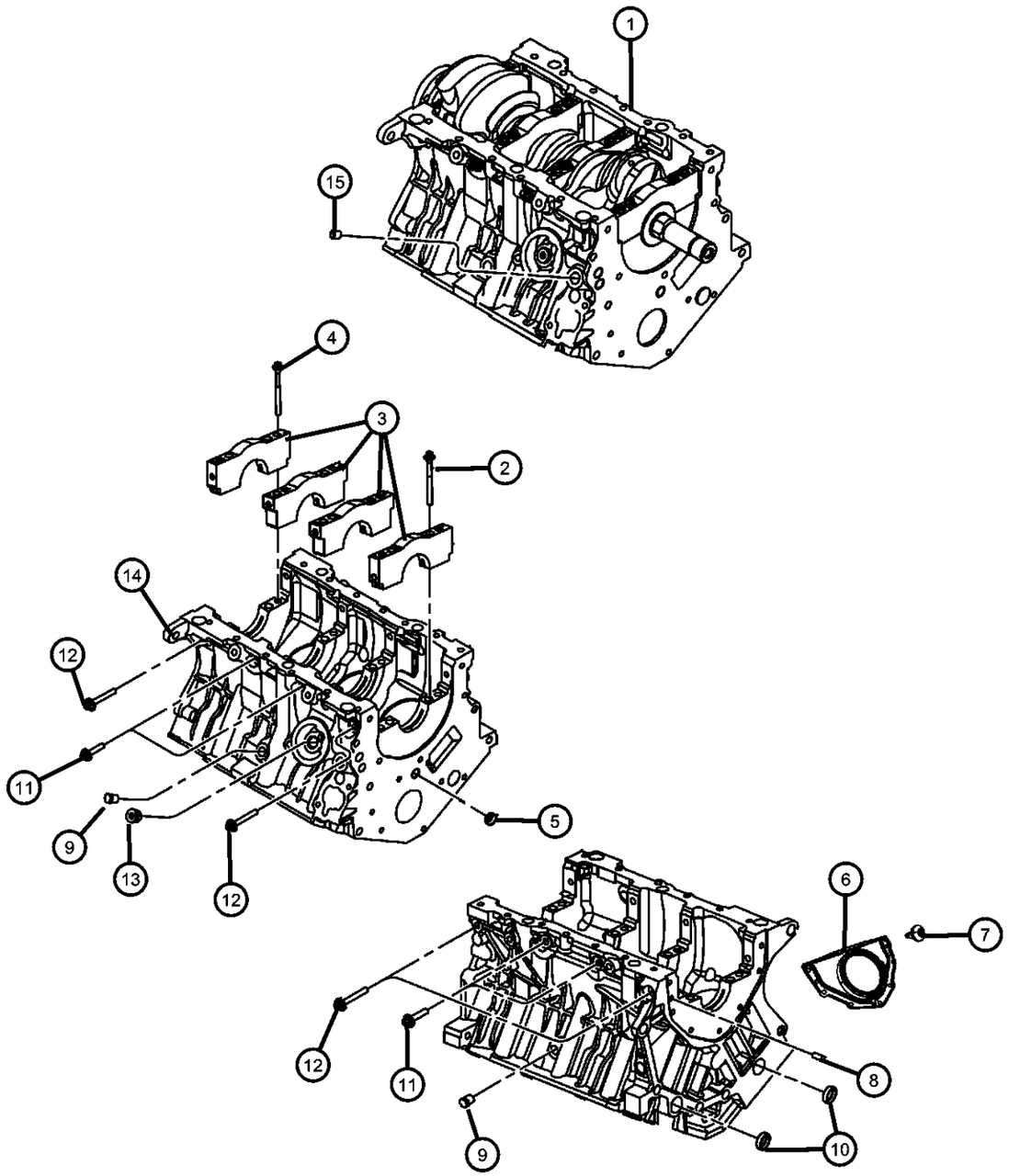

ITEM	PART NUMBER	QTY	LINE	SERIES	BODY	ENGINE	TRANS	TRIM	DESCRIPTION
4	06503948	8	D			EGG			BOLT, Hex Flange Head, M8X1.25X90.00, Main Bearing Cap To Cylinder Block, Mounting
5	04556018AB	1	D			EGG			PLUG, Core, [5/8], Oil Gallery
6	04663870AB	1	D			EGG			RETAINER AND SEAL, Crankshaft Rear Oil
7	06507847AA	7	D			EGG			BOLT, Torx Head, M6X1.00X17.00, Rear Crankshaft Oil Seal Retainer To Cylinder Block, Mounting
8	06100902	1	D			EGG			DOWEL PIN, M6x14, Rear Crankshaft Oil Seal Retainer To Cylinder Block, Mounting
9	06035743	2	D			EGG			PLUG, Core, Cylinder Block Coolant Drain
10	04663941AB	2	D			EGG			PLUG, Core, [.250-18X.560]
11	06506808AA	4	D			EGG			BOLT & WASHER, Hex Head, M8x1.25x40.00, Cylinder Block To Main Bearing Cap Cross, Mounting
12	06505357AA	4	D			EGG			BOLT & WASHER, Hex Head, M8x1.25x55.00, Cylinder Block To Main Bearing Cap Cross, Mounting
13		4							PLUG, [Theard 3/4-16 UNF-2A], (NOT SERVICED)
14	06505643AA	2	D			EGG			DOWEL, Block To Clutch Housing
15	06034331	1	D			EGG			PLUG, Hex Socket, 3/8-18NPTx.475

DODGE CHALLENGER (LC)

SERIES	LINE	BODY	ENGINE	TRANSMISSION
H = HIGHLINE P = PREMIUM X = SPECIAL	D = DODGE	22 = 2-DR SEDAN TYPE #2	EGG = 3.5L High Output V6 24V MPI Engine ESF = 6.1L SRT HEMI V8 Engine EZC = 5.7L HEMI VCT Engine EZD = 5.7L Hemi VCT MDS Engine	DEC = 6-Speed Manual TREMEC Transmission DGJ = 5-Speed Auto W5A580 Transmission DGV = 4-Spd. Automatic VLP 42RLE Trans

Engine Cylinder Block Heater 3.5L [EGG]
Figure 009EGG-325

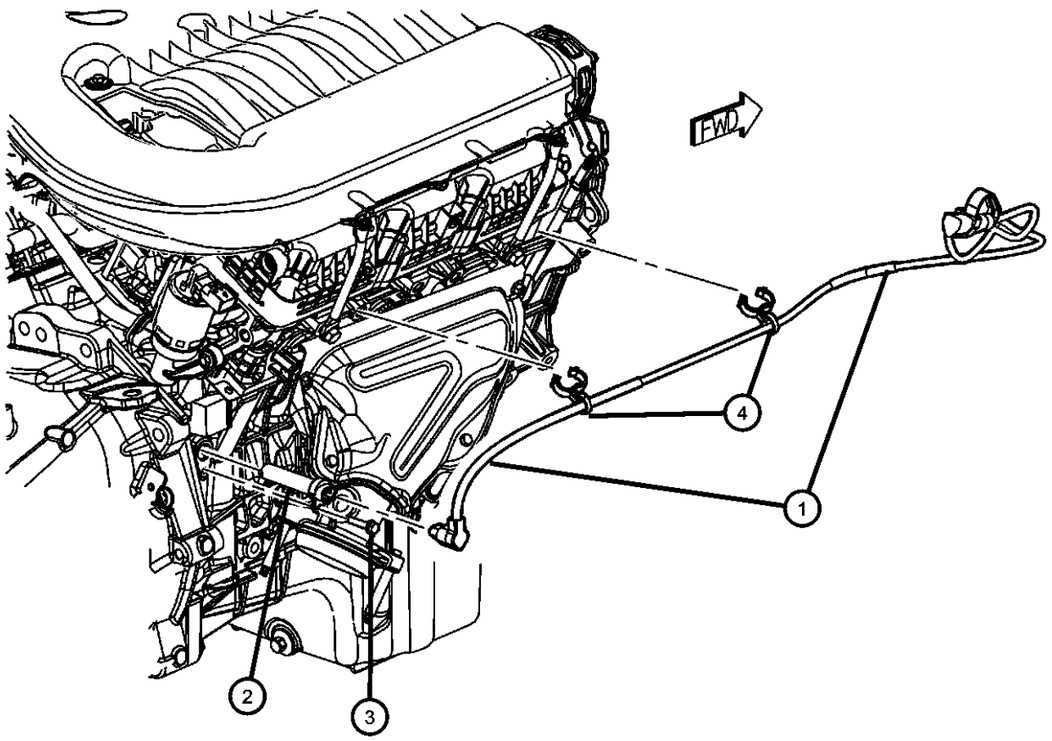

ITEM	PART NUMBER	QTY	LINE	SERIES	BODY	ENGINE	TRANS	TRIM	DESCRIPTION

NOTE:
Sales Codes:
[DEC] = 6-Speed Manual TR6060 Transmission
[DEH] = 6-Speed Manual NSG370 Transmission
[DF9] = AHS-T RWD Automatic Transmission
[DGJ] = 5-Speed Automatic W5A580 Transmission
[DGQ] = 5-Speed Automatic 545RFE Transmission
[DGV] = 4-Speed Automatic VLP 42RLE Transmission
[DG0] = All Automatic Transmissions
[DHR] = Single Speed On Demand MP3010 Transfer Case
[DHU] = AWD Electronic Shift Two Speed NVG 244 H/D Transfer Case
[DHZ] = Full Time Single Mode NVG 140 Transfer Case
[EGG] = 3.5L High Output V-6 24 Valve MPI Engine
[EGS] = 4.0L SOHC V-6 Engine
[EG0] = All 3.5L And 4.0L 6-Cylinder Engines
[EKG] = 3.7L [Magnum] V-6 Engine
[EK0] = All 3.7L 6-Cylinder Gas Engines
[ENS] = 2.8L 4 Cylinder Turbo Diesel Engine
[EN0] = All 2.8L 4 Cylinder Turbo Diesel Engines
[ESF] = 6.1L SRT V-8 Hemi Engine
[ES0] = All 6.1L 8-Cylinder Engines
[EVA] = 4.7L [Magnum] V-8 Engine
[EVD] = 4.7L V-8 FFV Engine
[EVE] = 4.7L V-8 Engine
[EV0] = All 4.7L 8-Cylinder Engines
[EZA] = 5.7L Hemi V-8 Engine
[EZB] = 5.7L Hemi V-8 Multi-Displacement Engine
[EZC] = 5.7L Hemi V-8 VCT Non Multi-Displacement Engine
[EZD] = 5.7L Hemi V-8 VCT Multi-Displacement Engine
[EZE] = 5.7L Hemi V-8 HEV Engine
[EZ0] = All 5.7L 8-Cylinder Engines
[NAA] = Federal Emissions
[NAE] = California Emissions
[NAS] = 50 State Emissions
[NA1] = Export Emissions
[NHK] = Engine Cylinder Block Heater
[XEF] = Transfer Case Skid Plate Sheild

1	04608793AB	1	D			EGG			CORD, Engine Block Heater
2	04609325AB	1	D			EGG			HEATER, Engine Block
3	06501957	1	D			EGG			BOLT AND WASHER, Hex Head, M6X1.00X20.00, Engine Cylinder Block Heater To Cylinder Block, Mounting
4		1							CLIP, Serviced With Cord, (NOT SERVICED)

DODGE CHALLENGER (LC)

SERIES	LINE	BODY	ENGINE	TRANSMISSION
H = HIGHLINE P = PREMIUM X = SPECIAL	D = DODGE	22 = 2-DR SEDAN TYPE #2	EGG = 3.5L High Output V6 24V MPI Engine ESF = 6.1L SRT HEMI V8 Engine EZC = 5.7L HEMI VCT Engine EZD = 5.7L Hemi VCT MDS Engine	DEC = 6-Speed Manual TREMEC Transmission DGJ = 5-Speed Auto W5A580 Transmission DGV = 4-Spd. Automatic VLP 42RLE Trans

Crankshaft, Crankshaft Bearings, Damper And Flexplate 3.5L [EGG]
Figure 009EGG-405

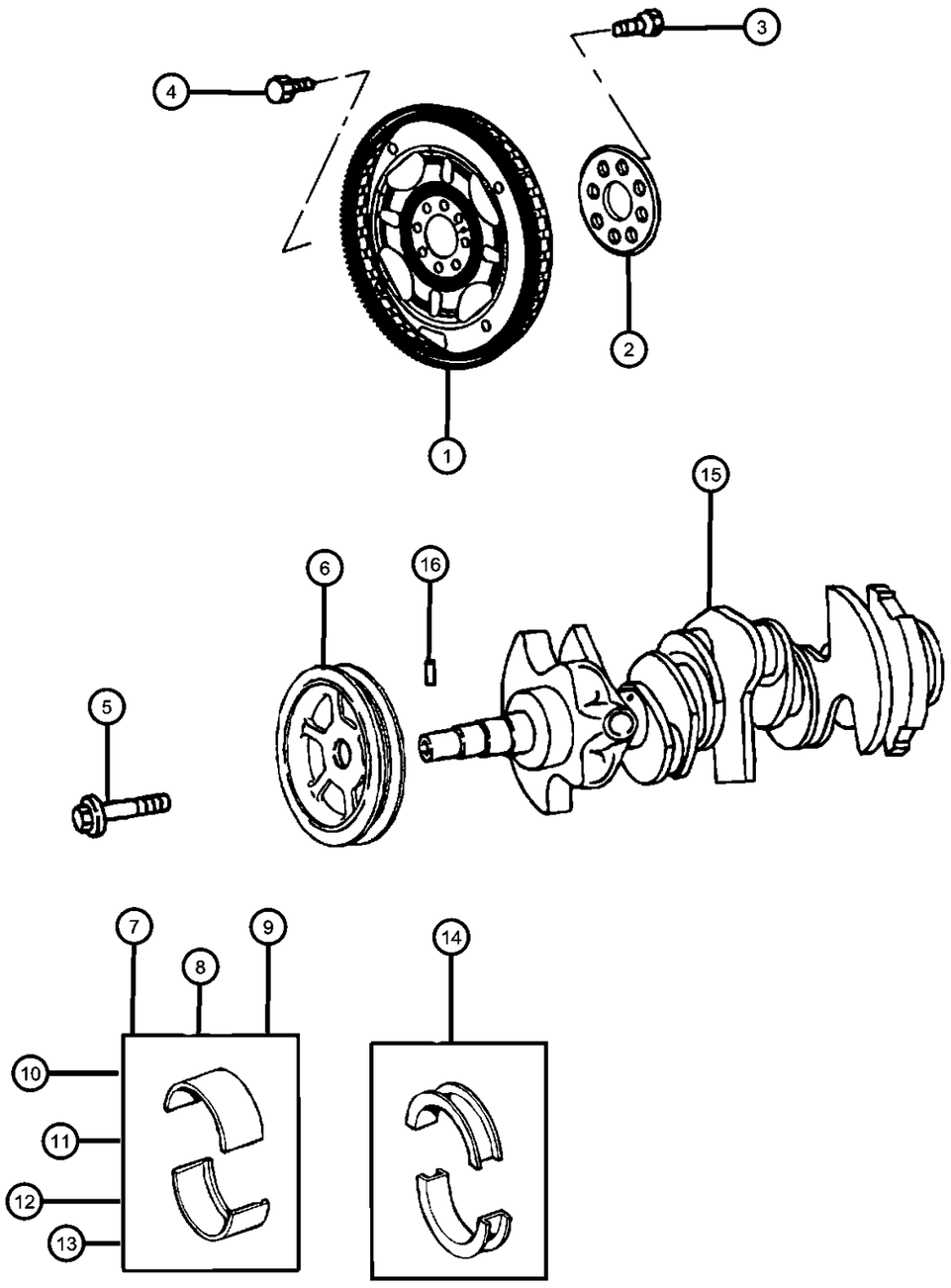

ITEM	PART NUMBER	QTY	LINE	SERIES	BODY	ENGINE	TRANS	TRIM	DESCRIPTION

NOTE: For Crankshaft Indentification, Stamping Location And Bearing Information Refer To The Service Manual.
For Bearing Selection Sizes Please Refer To Service Manual Group 9, Bearings Crankshaft Main, [Select Fit Identification]
Sales Codes:
[DEC] = 6-Speed Manual TR6060 Transmission
[DEH] = 6-Speed Manual NSG370 Transmission
[DF9] = AHS-T RWD Automatic Transmission
[DGJ] = 5-Speed Automatic W5A580 Transmission
[DGQ] = 5-Speed Automatic 545RFE Transmission
[DGV] = 4-Speed Automatic VLP 42RLE Transmission
[DG0] = All Automatic Transmissions
[DHR] = Single Speed On Demand MP3010 Transfer Case
[DHU] = AWD Electronic Shift Two Speed NVG 244 H/D Transfer Case
[DHZ] = Full Time Single Mode NVG 140 Transfer Case
[EGS] = 4.0L SOHC V-6 Engine
[EG0] = All 4.0L Engines
[EKG] = 3.7L [Magnum] V-6 Engine
[EK0] = All 3.7L 6-Cylinder Gas Engines
[ENS] = 2.8L 4 Cylinder Turbo Diesel Engine
[EN0] = All 2.8L 4 Cylinder Turbo Diesel Engines
[ESF] = 6.1L SRT V-8 Hemi Engine
[ES0] = All 6.1L 8-Cylinder Engines
[EVA] = 4.7L [Magnum] V-8 Engine
[EVD] = 4.7L V-8 FFV Engine
[EVE] = 4.7L V-8 Engine
[EV0] = All 4.7L 8-Cylinder Engines
[EZA] = 5.7L Hemi V-8 Engine
[EZB] = 5.7L Hemi V-8 Multi-Displacement Engine
[EZC] = 5.7L Hemi V-8 VCT Non Multi-Displacement Engine
[EZD] = 5.7L Hemi V-8 VCT Multi-Displacement Engine
[EZE] = 5.7L Hemi V-8 HEV Engine
[EZ0] = All 5.7L 8-Cylinder Engines
[NAA] = Federal Emissions
[NAE] = California Emissions
[NAS] = 50 State Emissions
[NA1] = Export Emissions
[NHK] = Engine Cylinder Block Heater
[XEF] = Transfer Case Skid Plate Sheild

1	04736299AB	1	D			EGG	DGV		FLEXPLATE
2	04471933	1	D			EGG			PLATE, Flexplate or Flywheel Backing
3	06503465	8	D			EGG			BOLT, Hex Head Lock, M10X1.00X18.00, Flexplate To Crankshaft, Mounting
4	06504383	4	D			EGG	DGV		BOLT, Hex Head Lock, M10X1.50X13.20, Flexplate To Torque Converter, Mounting

DODGE CHALLENGER (LC)

SERIES	LINE	BODY	ENGINE	TRANSMISSION
H = HIGHLINE P = PREMIUM X = SPECIAL	D = DODGE	22 = 2-DR SEDAN TYPE #2	EGG = 3.5L High Output V6 24V MPI Engine ESF = 6.1L SRT HEMI V8 Engine EZC = 5.7L HEMI VCT Engine EZD = 5.7L Hemi VCT MDS Engine	DEC = 6-Speed Manual TREMEC Transmission DGJ = 5-Speed Auto W5A580 Transmission DGV = 4-Spd. Automatic VLP 42RLE Trans

AR = use ase required - = Non illustrrated part

Crankshaft, Crankshaft Bearings, Damper And Flexplate 3.5L [EGG]
Figure 009EGG-405

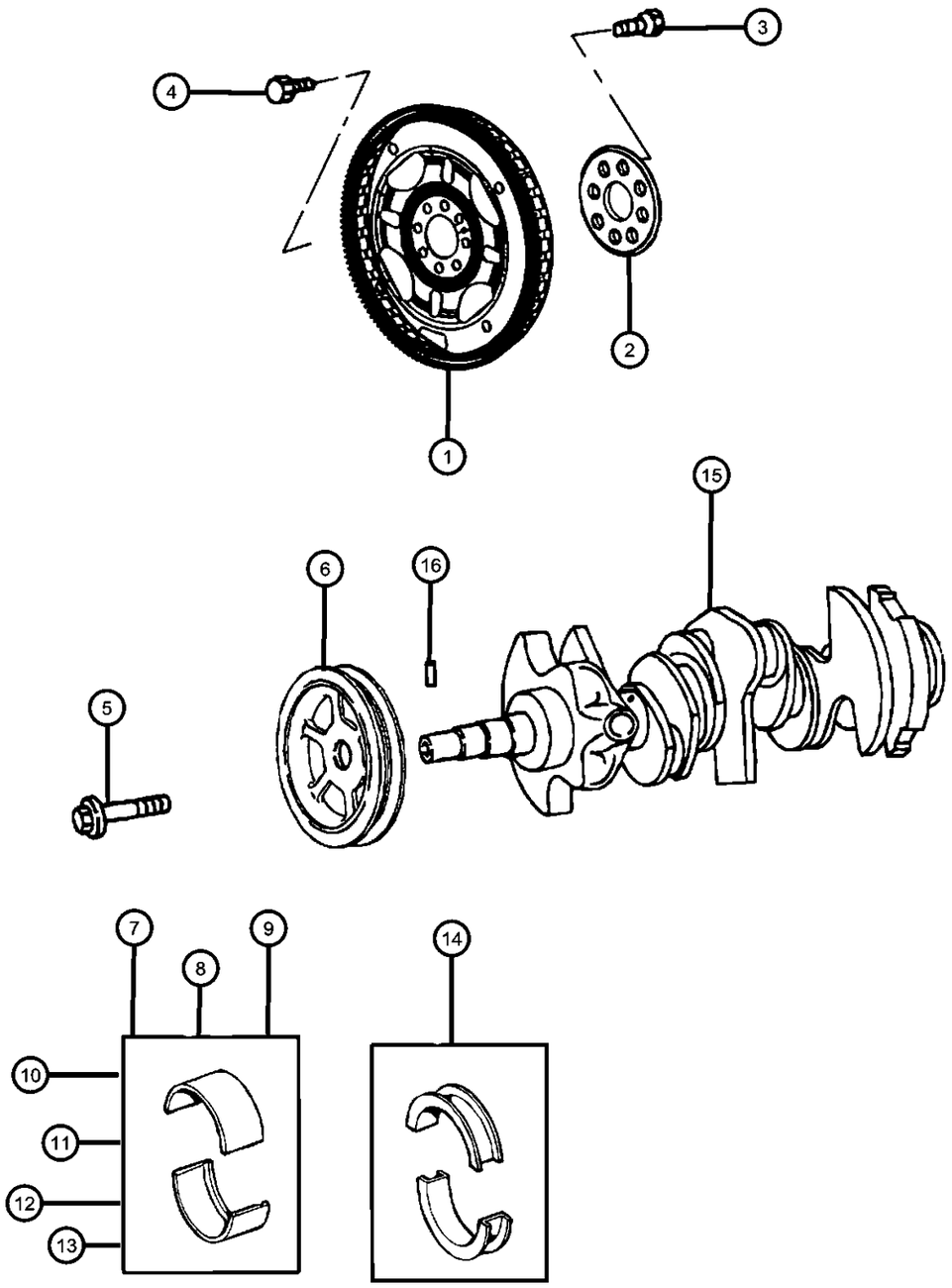

ITEM	PART NUMBER	QTY	LINE	SERIES	BODY	ENGINE	TRANS	TRIM	DESCRIPTION
5	06101984	1	D			EGG			BOLT AND WASHER, Hex Head, M12X1.75X70.00, Damper To Crankshaft, Mounting
6	04792811AB	1	D			EGG			DAMPER, Crankshaft
7	05003962AC	AR	D			EGG			BEARING PACKAGE, Crankshaft, Standard, See Note
8	05010135AD	AR	D			EGG			BEARING PACKAGE, Crankshaft, +.003mm, See Note
9	05010134AD	AR	D			EGG			BEARING PACKAGE, Crankshaft, +.006mm, See Note
10	05010136AD	AR	D			EGG			BEARING PACKAGE, Crankshaft, -.003mm, See Note
11	05010137AD	AR	D			EGG			BEARING PACKAGE, Crankshaft, -.006mm, See Note
12	05003964AC	AR	D			EGG			BEARING PACKAGE, Crankshaft, .025mm Undersize, See Note
13	05003965AC	AR	D			EGG			BEARING PACKAGE, Crankshaft, .25 mm Undersize, See Note
14	04792020AB	2	D			EGG			BEARING, Crankshaft Thrust, See Note
15	04792692AB	1	D			EGG			CRANKSHAFT
16	04448557	1	D			EGG			DOWEL PIN

DODGE CHALLENGER (LC)

SERIES	LINE	BODY	ENGINE	TRANSMISSION
H = HIGHLINE	D = DODGE	22 = 2-DR SEDAN TYPE #2	EGG = 3.5L High Output V6 24V MPI Engine	DEC = 6-Speed Manual TREMEC Transmission
P = PREMIUM			ESF = 6.1L SRT HEMI V8 Engine	DGJ = 5-Speed Auto W5A580 Transmission
X = SPECIAL			EZC = 5.7L HEMI VCT Engine	DGV = 4-Spd. Automatic VLP 42RLE Trans
			EZD = 5.7L Hemi VCT MDS Engine	

AR = use ase required - = Non illustrrated part

Pistons, Piston Rings, Connecting Rods And Connecting Rod Bearings 3.5L [EGG]
Figure 009EGG-425

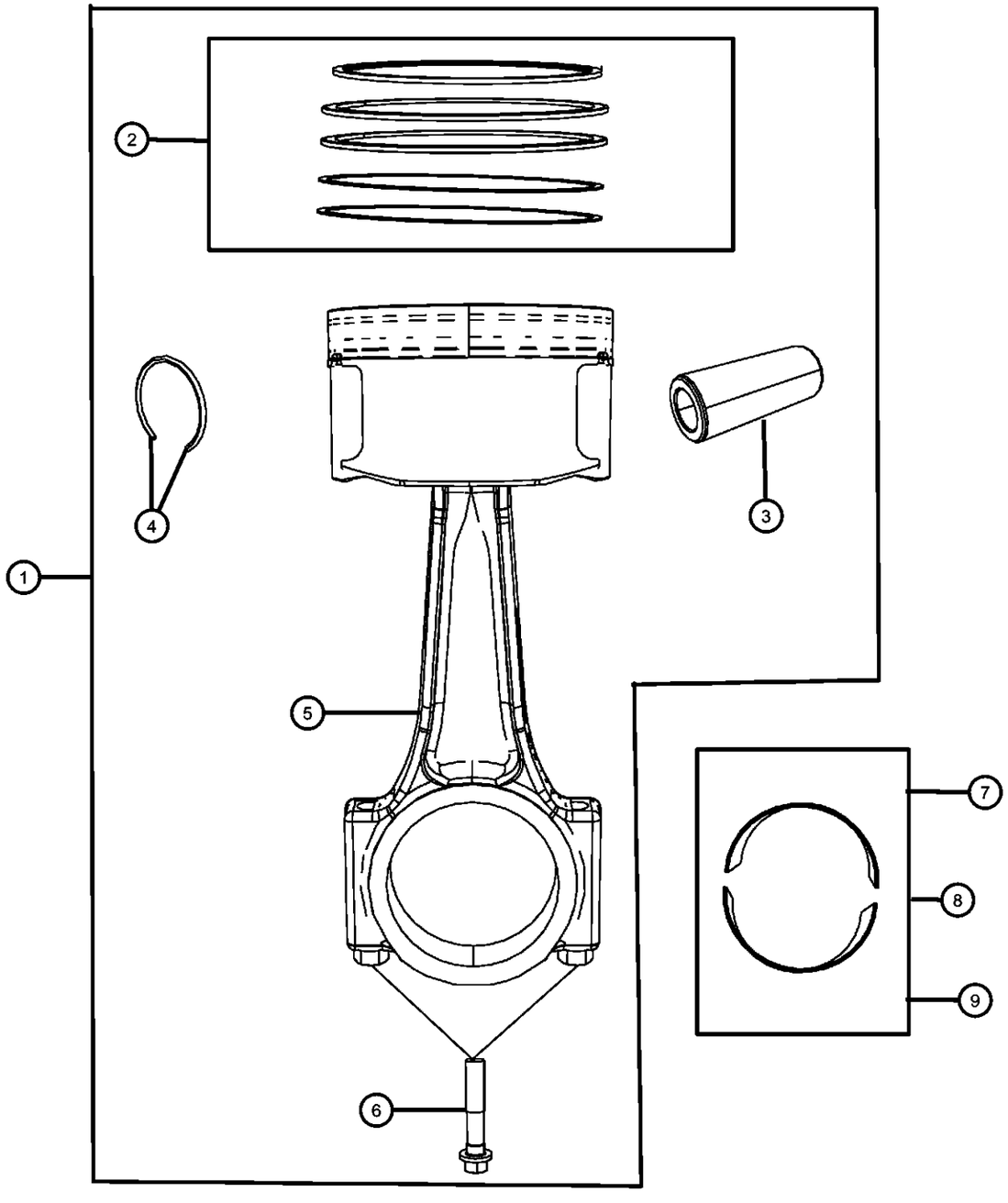

ITEM	PART NUMBER	QTY	LINE	SERIES	BODY	ENGINE	TRANS	TRIM	DESCRIPTION

NOTE: For Crankshaft Indentification, Stamping Location And Bearing Information Refer To The Service Manual.
For Bearing Selection Sizes Please Refer To Service Manual Group 9, Bearings Crankshaft Main, [Select Fit Identification]
Sales Codes:
[DEC] = 6-Speed Manual TR6060 Transmission
[DEH] = 6-Speed Manual NSG370 Transmission
[DF9] = AHS-T RWD Automatic Transmission
[DGJ] = 5-Speed Automatic W5A580 Transmission
[DGQ] = 5-Speed Automatic 545RFE Transmission
[DGV] = 4-Speed Automatic VLP 42RLE Transmission
[DG0] = All Automatic Transmissions
[DHR] = Single Speed On Demand MP3010 Transfer Case
[DHU] = AWD Electronic Shift Two Speed NVG 244 H/D Transfer Case
[DHZ] = Full Time Single Mode NVG 140 Transfer Case
[EGG] = 3.5L High Output V-6 24 Valve MPI Engine
[EGS] = 4.0L SOHC V-6 Engine
[EG0] = All 3.5L And 4.0L 6-Cylinder Engines
[EKG] = 3.7L [Magnum] V-6 Engine
[EK0] = All 3.7L 6-Cylinder Gas Engines
[ENS] = 2.8L 4 Cylinder Turbo Diesel Engine
[EN0] = All 2.8L 4 Cylinder Turbo Diesel Engines
[ESF] = 6.1L SRT V-8 Hemi Engine
[ES0] = All 6.1L 8-Cylinder Engines
[EVA] = 4.7L [Magnum] V-8 Engine
[EVD] = 4.7L V-8 FFV Engine
[EVE] = 4.7L V-8 Engine
[EV0] = All 4.7L 8-Cylinder Engines
[EZA] = 5.7L Hemi V-8 Engine
[EZB] = 5.7L Hemi V-8 Multi-Displacement Engine
[EZC] = 5.7L Hemi V-8 VCT Non Multi-Displacement Engine
[EZD] = 5.7L Hemi V-8 VCT Multi-Displacement Engine
[EZE] = 5.7L Hemi V-8 HEV Engine
[EZ0] = All 5.7L 8-Cylinder Engines
[NAA] = Federal Emissions
[NAE] = California Emissions
[NAS] = 50 State Emissions
[NA1] = Export Emissions
[NHK] = Engine Cylinder Block Heater
[XEF] = Transfer Case Skid Plate Sheild

1	04892194AB	6	D			EGG			PISTON PIN AND ROD
2	04897035AB	1	D			EGG	DGV		PISTON RING SET, COMPLETE ENGINE, STD.
3		1							PIN, Piston, Serviced With Piston Package, (NOT SERVICED)
4		1							RING, Piston Pin, Serviced With Piston Package, (NOT SERVICED)
5		1							ROD, Connecting, Serviced With Piston Package, (NOT SERVICED)

DODGE CHALLENGER (LC)

SERIES	LINE	BODY	ENGINE	TRANSMISSION
H = HIGHLINE P = PREMIUM X = SPECIAL	D = DODGE	22 = 2-DR SEDAN TYPE #2	EGG = 3.5L High Output V6 24V MPI Engine ESF = 6.1L SRT HEMI V8 Engine EZC = 5.7L HEMI VCT Engine EZD = 5.7L Hemi VCT MDS Engine	DEC = 6-Speed Manual TREMEC Transmission DGJ = 5-Speed Auto W5A580 Transmission DGV = 4-Spd. Automatic VLP 42RLE Trans

AR = use ase required - = Non illustrrated part

Pistons, Piston Rings, Connecting Rods And Connecting Rod Bearings 3.5L [EGG]
Figure 009EGG-425

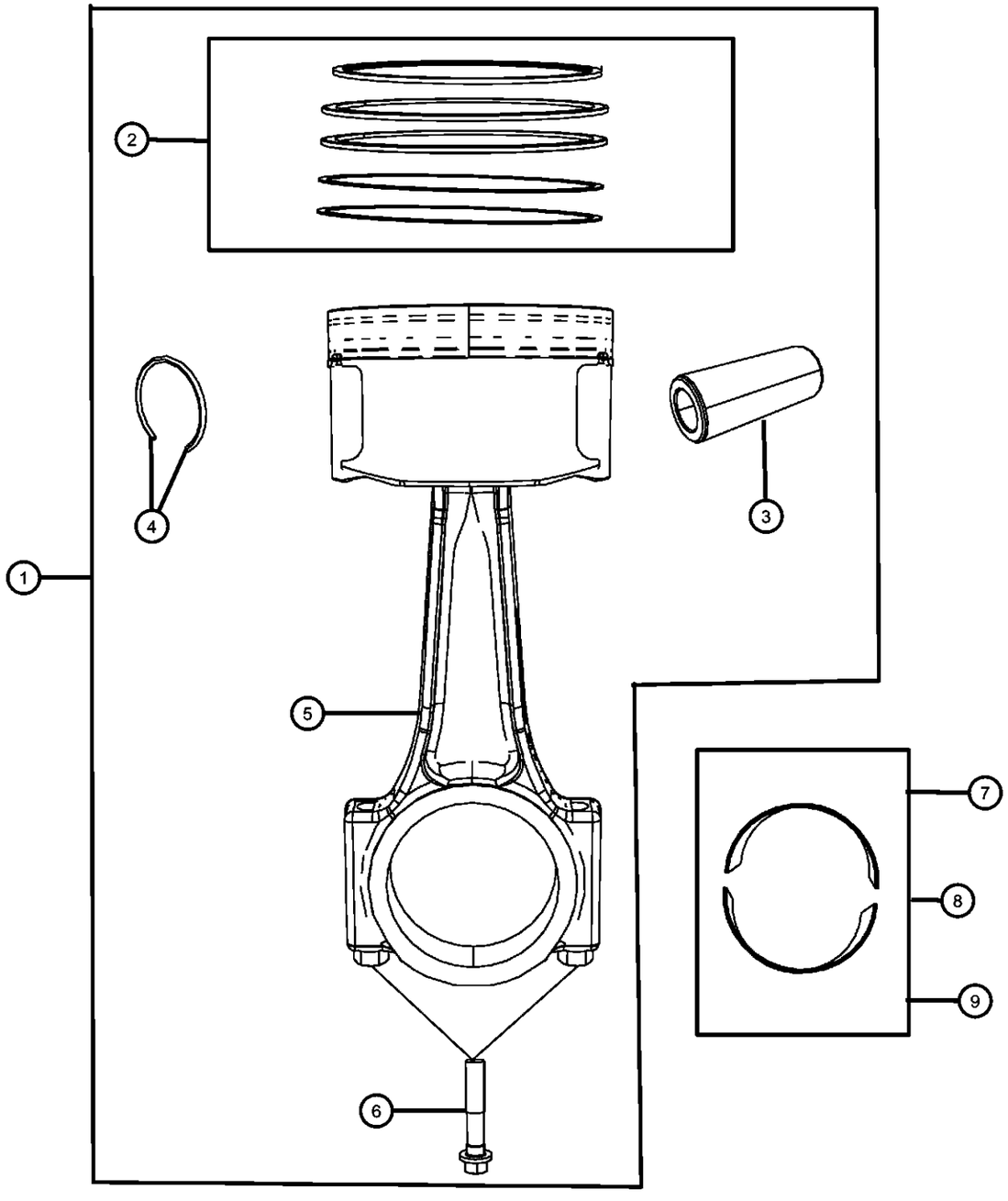

ITEM	PART NUMBER	QTY	LINE	SERIES	BODY	ENGINE	TRANS	TRIM	DESCRIPTION
6	06508501AA	12	D			EGG			BOLT, Connecting Rod
7	68002286AA	AR	D			EGG			BEARING KIT, Connecting Rod, Standard, See Note
8	68002287AA	AR	D			EGG			BEARING KIT, Connecting Rod, -0.0035 MM, See Note
9	68002288AA	AR	D			EGG			BEARING KIT, Connecting Rod, +0.0035 MM, See Note

DODGE CHALLENGER (LC)

SERIES	LINE	BODY	ENGINE	TRANSMISSION
H = HIGHLINE P = PREMIUM X = SPECIAL	D = DODGE	22 = 2-DR SEDAN TYPE #2	EGG = 3.5L High Output V6 24V MPI Engine ESF = 6.1L SRT HEMI V8 Engine EZC = 5.7L HEMI VCT Engine EZD = 5.7L Hemi VCT MDS Engine	DEC = 6-Speed Manual TREMEC Transmission DGJ = 5-Speed Auto W5A580 Transmission DGV = 4-Spd. Automatic VLP 42RLE Trans

AR = use ase required - = Non illustrrated part

Camshafts And Valvetrain 3.5L [EGG]
Figure 009EGG-505

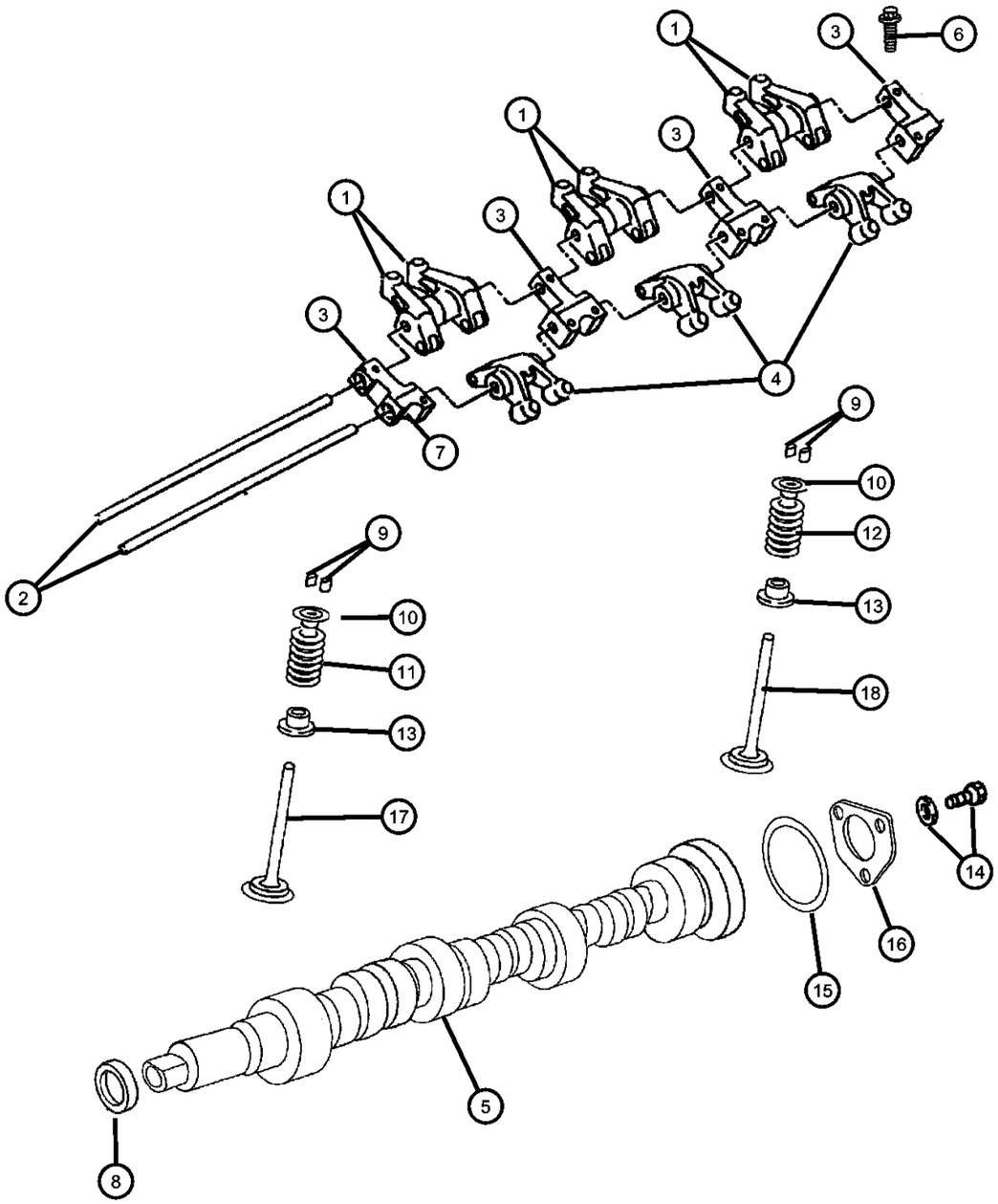

ITEM	PART NUMBER	QTY	LINE	SERIES	BODY	ENGINE	TRANS	TRIM	DESCRIPTION

NOTE:
Sales Codes:
[DEC] = 6-Speed Manual TR6060 Transmission
[DEH] = 6-Speed Manual NSG370 Transmission
[DF9] = AHS-T RWD Automatic Transmission
[DGJ] = 5-Speed Automatic W5A580 Transmission
[DGQ] = 5-Speed Automatic 545RFE Transmission
[DGV] = 4-Speed Automatic VLP 42RLE Transmission
[DG0] = All Automatic Transmissions
[DHR] = Single Speed On Demand MP3010 Transfer Case
[DHU] = AWD Electronic Shift Two Speed NVG 244 H/D Transfer Case
[DHZ] = Full Time Single Mode NVG 140 Transfer Case
[EGG] = 3.5L High Output V-6 24 Valve MPI Engine
[EGS] = 4.0L SOHC V-6 Engine
[EG0] = All 3.5L And 4.0L 6-Cylinder Engines
[EKG] = 3.7L [Magnum] V-6 Engine
[EK0] = All 3.7L 6-Cylinder Gas Engines
[ENS] = 2.8L 4 Cylinder Turbo Diesel Engine
[EN0] = All 2.8L 4 Cylinder Turbo Diesel Engines
[ESF] = 6.1L SRT V-8 Hemi Engine
[ES0] = All 6.1L 8-Cylinder Engines
[EVA] = 4.7L [Magnum] V-8 Engine
[EVD] = 4.7L V-8 FFV Engine
[EVE] = 4.7L V-8 Engine
[EV0] = All 4.7L 8-Cylinder Engines
[EZA] = 5.7L Hemi V-8 Engine
[EZB] = 5.7L Hemi V-8 Multi-Displacement Engine
[EZC] = 5.7L Hemi V-8 VCT Non Multi-Displacement Engine
[EZD] = 5.7L Hemi V-8 VCT Multi-Displacement Engine
[EZE] = 5.7L Hemi V-8 HEV Engine
[EZ0] = All 5.7L 8-Cylinder Engines
[NAA] = Federal Emissions
[NAE] = California Emissions
[NAS] = 50 State Emissions
[NA1] = Export Emissions
[NHK] = Engine Cylinder Block Heater
[XEF] = Transfer Case Skid Plate Sheild

1						ROCKER ARM, Intake
	04573459	6	D		EGG	Left
	04573460	6	D		EGG	Right
2						SHAFT, Rocker Arm
	04663998	2	D		EGG	Exhaust
	04315823	2	D		EGG	Intake

DODGE CHALLENGER (LC)

SERIES	LINE	BODY	ENGINE	TRANSMISSION
H = HIGHLINE P = PREMIUM X = SPECIAL	D = DODGE	22 = 2-DR SEDAN TYPE #2	EGG = 3.5L High Output V6 24V MPI Engine ESF = 6.1L SRT HEMI V8 Engine EZC = 5.7L HEMI VCT Engine EZD = 5.7L Hemi VCT MDS Engine	DEC = 6-Speed Manual TREMEC Transmission DGJ = 5-Speed Auto W5A580 Transmission DGV = 4-Spd. Automatic VLP 42RLE Trans

AR = use ase required - = Non illustrrated part

Camshafts And Valvetrain 3.5L [EGG]
Figure 009EGG-505

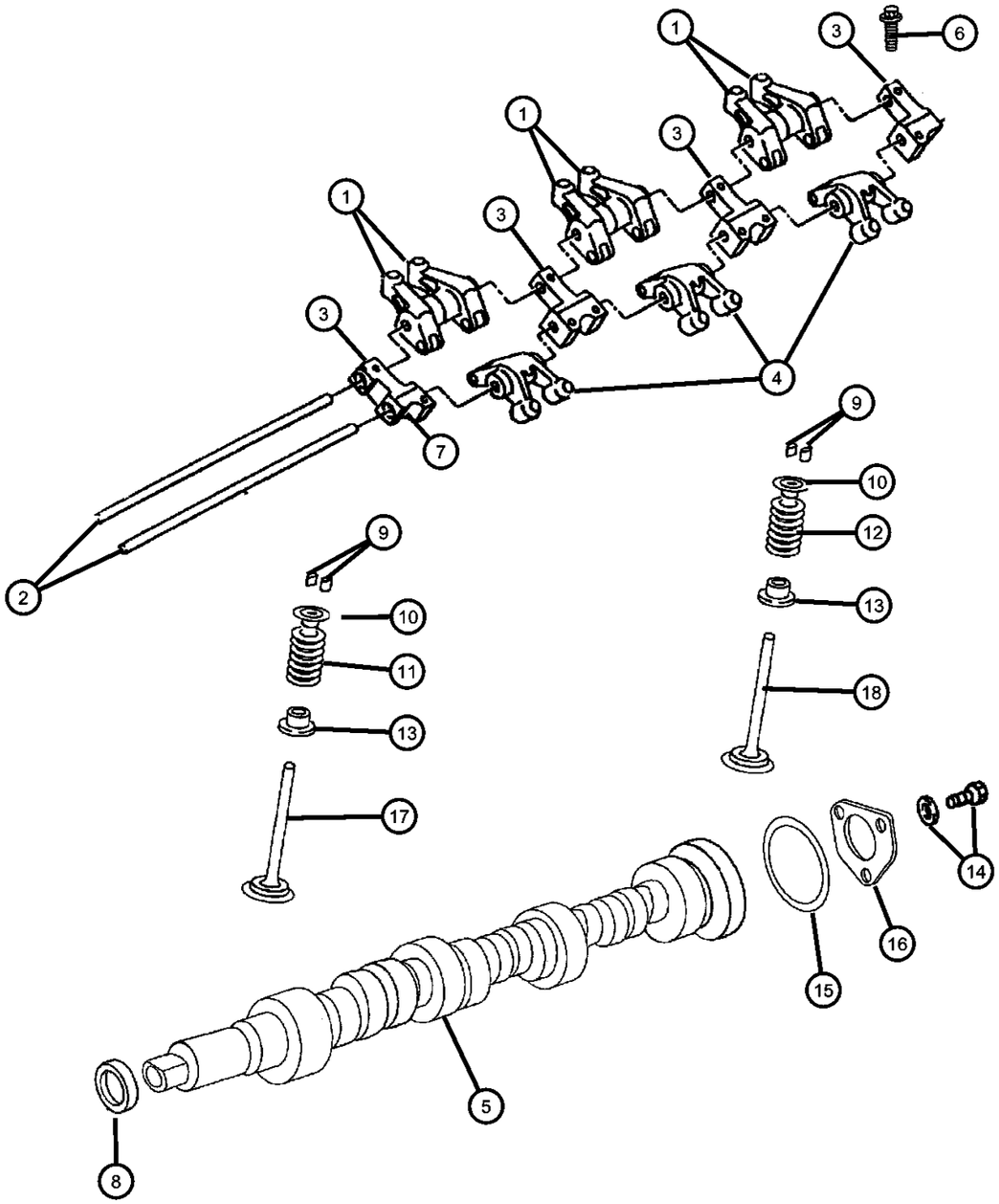

ITEM	PART NUMBER	QTY	LINE	SERIES	BODY	ENGINE	TRANS	TRIM	DESCRIPTION
3	05191332AB	2	D			EGG			PEDESTAL PACKAGE, Rocker Arm Shaft, Includes Both Ends And Intermediate Pedestals Plus Dowels
4	04663996	6	D			EGG			ROCKER ARM, Exhaust
5									CAMSHAFT
	04792743AB	1	D			EGG			Left
	04792744AA	1	D			EGG			Right
6	06503279	20	D			EGG			BOLT, Hex Flange Head, M8X1.25X55.00, Pedestal To Cylinder Head, Mounting
7	04573379	4	D			EGG			DOWEL, Rocker
8	04792318AB	2	D			EGG			SEAL, Camshaft
9	53022277AA	48	D			EGG			LOCK, Valve Spring Retainer
10	04556547	24	D			EGG			RETAINER, Valve Spring
11	04792215	12	D			EGG			SPRING, Intake Valve
12	04892082AA	12	D			EGG			SPRING, Exhaust Valve
13	04892292AA	24	D			EGG			SEAL, Valve Guide
14	06502847	6	D			EGG			BOLT AND WASHER, Hex Head, M8X1.25X25.00, Camshaft Thrust Plate To Cylinder Head, Mounting
15	04536492AB	2	D			EGG			SEAL, Camshaft Thrust
16	04556518AB	2	D			EGG			PLATE, Camshaft Thrust
17	04663836	12	D			EGG			VALVE, Intake, Standard
18	04892094AB	12	D			EGG			VALVE, Exhaust, Standard

DODGE CHALLENGER (LC)

SERIES	LINE	BODY	ENGINE	TRANSMISSION
H = HIGHLINE P = PREMIUM X = SPECIAL	D = DODGE	22 = 2-DR SEDAN TYPE #2	EGG = 3.5L High Output V6 24V MPI Engine ESF = 6.1L SRT HEMI V8 Engine EZC = 5.7L HEMI VCT Engine EZD = 5.7L Hemi VCT MDS Engine	DEC = 6-Speed Manual TREMEC Transmission DGJ = 5-Speed Auto W5A580 Transmission DGV = 4-Spd. Automatic VLP 42RLE Trans

Timing Case Cover 3.5L [EGG]
Figure 009EGG-605

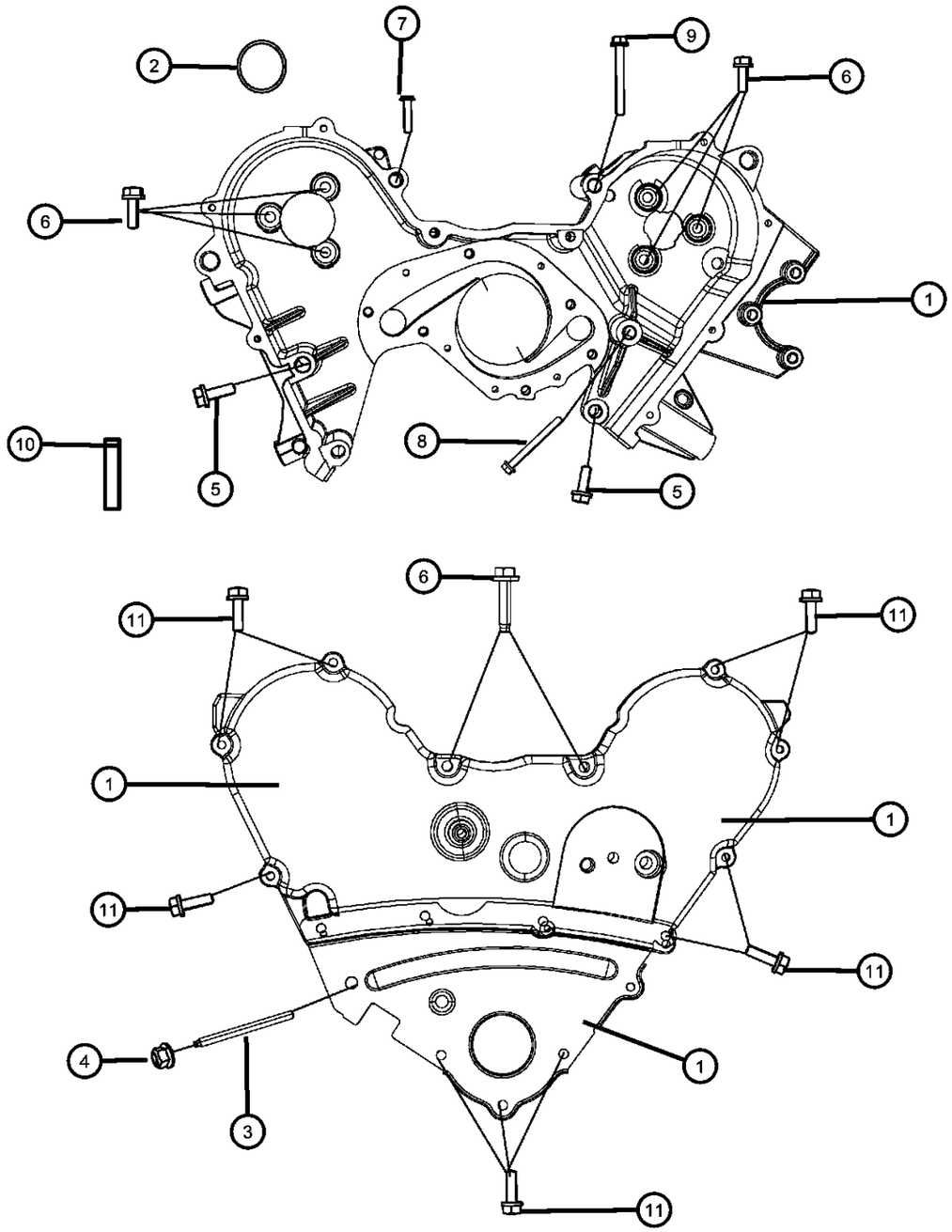

ITEM	PART NUMBER	QTY	LINE	SERIES	BODY	ENGINE	TRANS	TRIM	DESCRIPTION

NOTE:
Sales Codes:
[DEC] = 6-Speed Manual TR6060 Transmission
[DEH] = 6-Speed Manual NSG370 Transmission
[DF9] = AHS-T RWD Automatic Transmission
[DGJ] = 5-Speed Automatic W5A580 Transmission
[DGQ] = 5-Speed Automatic 545RFE Transmission
[DGV] = 4-Speed Automatic VLP 42RLE Transmission
[DG0] = All Automatic Transmissions
[DHR] = Single Speed On Demand MP3010 Transfer Case
[DHU] = AWD Electronic Shift Two Speed NVG 244 H/D Transfer Case
[DHZ] = Full Time Single Mode NVG 140 Transfer Case
[EGG] = 3.5L High Output V-6 24 Valve MPI Engine
[EGS] = 4.0L SOHC V-6 Engine
[EG0] = All 3.5L And 4.0L 6-Cylinder Engines
[EKG] = 3.7L [Magnum] V-6 Engine
[EK0] = All 3.7L 6-Cylinder Gas Engines
[ENS] = 2.8L 4 Cylinder Turbo Diesel Engine
[EN0] = All 2.8L 4 Cylinder Turbo Diesel Engines
[ESF] = 6.1L SRT V-8 Hemi Engine
[ES0] = All 6.1L 8-Cylinder Engines
[EVA] = 4.7L [Magnum] V-8 Engine
[EVD] = 4.7L V-8 FFV Engine
[EVE] = 4.7L V-8 Engine
[EV0] = All 4.7L 8-Cylinder Engines
[EZA] = 5.7L Hemi V-8 Engine
[EZB] = 5.7L Hemi V-8 Multi-Displacement Engine
[EZC] = 5.7L Hemi V-8 VCT Non Multi-Displacement Engine
[EZD] = 5.7L Hemi V-8 VCT Multi-Displacement Engine
[EZE] = 5.7L Hemi V-8 HEV Engine
[EZ0] = All 5.7L 8-Cylinder Engines
[NAA] = Federal Emissions
[NAE] = California Emissions
[NAS] = 50 State Emissions
[NA1] = Export Emissions
[NHK] = Engine Cylinder Block Heater
[XEF] = Transfer Case Skid Plate Sheild

1						COVER, Timing Case
	04792897AC	1	D		EGG	Outer Lower
	04792924AC	1	D		EGG	Inner
	04792797AD	1	D		EGG	Outer Upper
2	04483443	2	D		EGG	GASKET, Timing Case Cover
3	06507085AA	1	D		EGG	STUD, Double Ended, Outer Timing Case Cover To Cylinder Block, Mounting

DODGE CHALLENGER (LC)

SERIES	LINE	BODY	ENGINE	TRANSMISSION
H = HIGHLINE P = PREMIUM X = SPECIAL	D = DODGE	22 = 2-DR SEDAN TYPE #2	EGG = 3.5L High Output V6 24V MPI Engine ESF = 6.1L SRT HEMI V8 Engine EZC = 5.7L HEMI VCT Engine EZD = 5.7L Hemi VCT MDS Engine	DEC = 6-Speed Manual TREMEC Transmission DGJ = 5-Speed Auto W5A580 Transmission DGV = 4-Spd. Automatic VLP 42RLE Trans

Timing Case Cover 3.5L [EGG]
Figure 009EGG-605

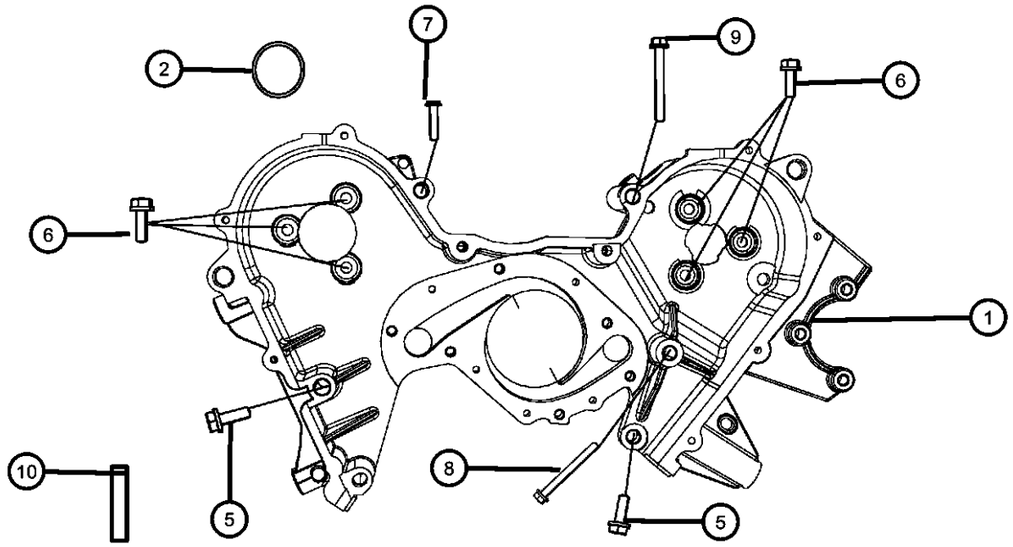

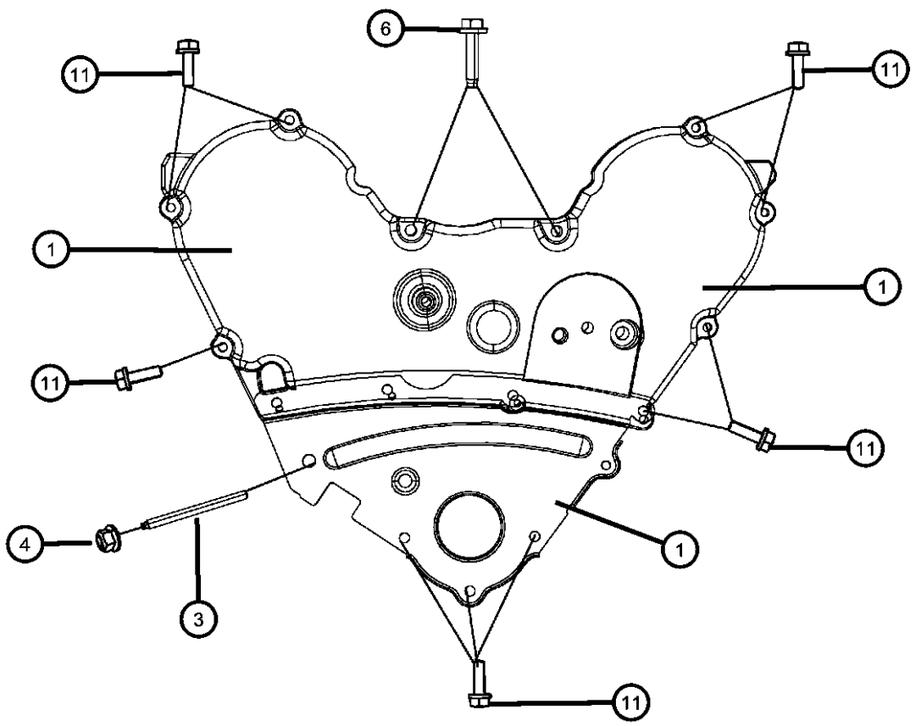

ITEM	PART NUMBER	QTY	LINE	SERIES	BODY	ENGINE	TRANS	TRIM	DESCRIPTION
4	06101510	1	D			EGG			NUT, Flange Lock, M10x1.50, Outer Timing Case Cover To Cylinder Block, Mounting
5	06506860AA	2	D			EGG			BOLT AND WASHER, Hex Head Lock, M10x1.50x50.00, Timing Case Cover To Cylinder Block, Mounting
6									BOLT AND WASHER, Hex Head, M8X1.25X25.00
	06502847	2	D			EGG			Outer Timing Case Cover To Inner Cover, Mounting
		6	D			EGG			Timing Case Cover To Cylinder Head Left Rear, Mounting
7	06101330	1	D			EGG			BOLT AND WASHER, Hex Head, M10x1.50x85.00, Timing Case Cover To Cylinder Head, Mounting
8	06503703	1	D			EGG			BOLT, Hex Head, M10x1.50x100, Outer Timing Case Cover To Cylinder Block, Mounting
9	06101623	1	D			EGG			BOLT AND WASHER, Hex Head, M10X1.50X105.00, Timing Cover To Cylinder Block, Mounting
10		1							SPACER, (NOT SERVICED)
11	06101682	12	D			EGG			BOLT AND CONED WASHER, Hex head, M6X1.00X20.00, Outer Timing Case Cover To Inner Cover, Mounting

DODGE CHALLENGER (LC)

SERIES	LINE	BODY	ENGINE	TRANSMISSION
H = HIGHLINE P = PREMIUM X = SPECIAL	D = DODGE	22 = 2-DR SEDAN TYPE #2	EGG = 3.5L High Output V6 24V MPI Engine ESF = 6.1L SRT HEMI V8 Engine EZC = 5.7L HEMI VCT Engine EZD = 5.7L Hemi VCT MDS Engine	DEC = 6-Speed Manual TREMEC Transmission DGJ = 5-Speed Auto W5A580 Transmission DGV = 4-Spd. Automatic VLP 42RLE Trans

Timing System 3.5L [EGG]
Figure 009EGG-625

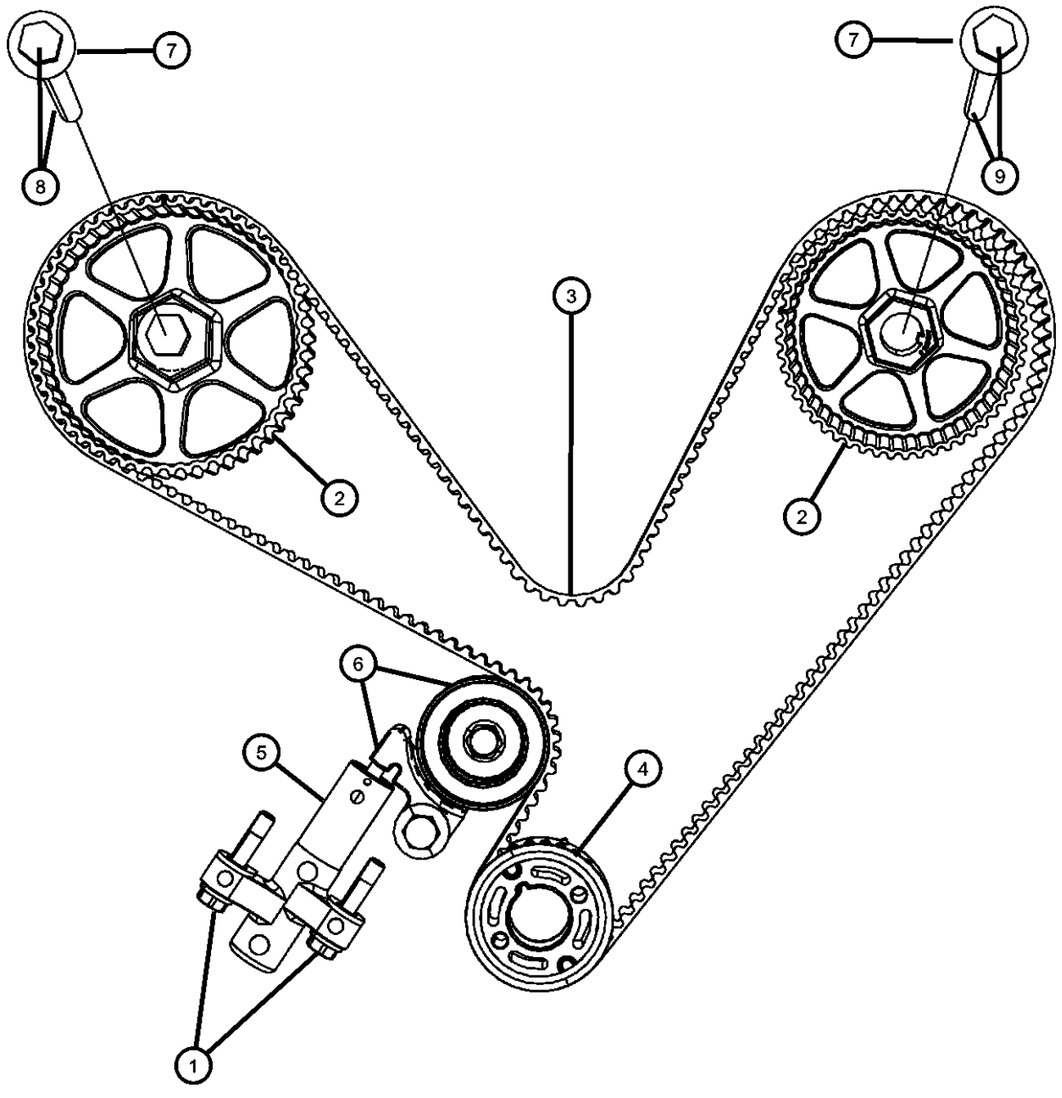

ITEM	PART NUMBER	QTY	LINE	SERIES	BODY	ENGINE	TRANS	TRIM	DESCRIPTION

NOTE:
Sales Codes:
[DEC] = 6-Speed Manual TR6060 Transmission
[DEH] = 6-Speed Manual NSG370 Transmission
[DF9] = AHS-T RWD Automatic Transmission
[DGJ] = 5-Speed Automatic W5A580 Transmission
[DGQ] = 5-Speed Automatic 545RFE Transmission
[DGV] = 4-Speed Automatic VLP 42RLE Transmission
[DG0] = All Automatic Transmissions
[DHR] = Single Speed On Demand MP3010 Transfer Case
[DHU] = AWD Electronic Shift Two Speed NVG 244 H/D Transfer Case
[DHZ] = Full Time Single Mode NVG 140 Transfer Case
[EGG] = 3.5L High Output V-6 24 Valve MPI Engine
[EGS] = 4.0L SOHC V-6 Engine
[EG0] = All 3.5L And 4.0L 6-Cylinder Engines
[EKG] = 3.7L [Magnum] V-6 Engine
[EK0] = All 3.7L 6-Cylinder Gas Engines
[ENS] = 2.8L 4 Cylinder Turbo Diesel Engine
[EN0] = All 2.8L 4 Cylinder Turbo Diesel Engines
[ESF] = 6.1L SRT V-8 Hemi Engine
[ES0] = All 6.1L 8-Cylinder Engines
[EVA] = 4.7L [Magnum] V-8 Engine
[EVD] = 4.7L V-8 FFV Engine
[EVE] = 4.7L V-8 Engine
[EV0] = All 4.7L 8-Cylinder Engines
[EZA] = 5.7L Hemi V-8 Engine
[EZB] = 5.7L Hemi V-8 Multi-Displacement Engine
[EZC] = 5.7L Hemi V-8 VCT Non Multi-Displacement Engine
[EZD] = 5.7L Hemi V-8 VCT Multi-Displacement Engine
[EZE] = 5.7L Hemi V-8 HEV Engine
[EZ0] = All 5.7L 8-Cylinder Engines
[NAA] = Federal Emissions
[NAE] = California Emissions
[NAS] = 50 State Emissions
[NA1] = Export Emissions
[NHK] = Engine Cylinder Block Heater
[XEF] = Transfer Case Skid Plate Sheild

1	06101940	2	D			EGG			BOLT AND CONED WASHER, Hex Head, M8X1.25X45.00Mounting
2									SPROCKET, Camshaft
	04792025AB	1	D			EGG			Right
	04792580AC	1	D			EGG			Left
3	04792353	1	D			EGG			BELT, Timing
4	04536479	1	D			EGG			SPROCKET, Crankshaft
5	04892109AA	1	D			EGG			TENSIONER, Belt

DODGE CHALLENGER (LC)

SERIES	LINE	BODY	ENGINE	TRANSMISSION
H = HIGHLINE P = PREMIUM X = SPECIAL	D = DODGE	22 = 2-DR SEDAN TYPE #2	EGG = 3.5L High Output V6 24V MPI Engine ESF = 6.1L SRT HEMI V8 Engine EZC = 5.7L HEMI VCT Engine EZD = 5.7L Hemi VCT MDS Engine	DEC = 6-Speed Manual TREMEC Transmission DGJ = 5-Speed Auto W5A580 Transmission DGV = 4-Spd. Automatic VLP 42RLE Trans

Timing System 3.5L [EGG]
Figure 009EGG-625

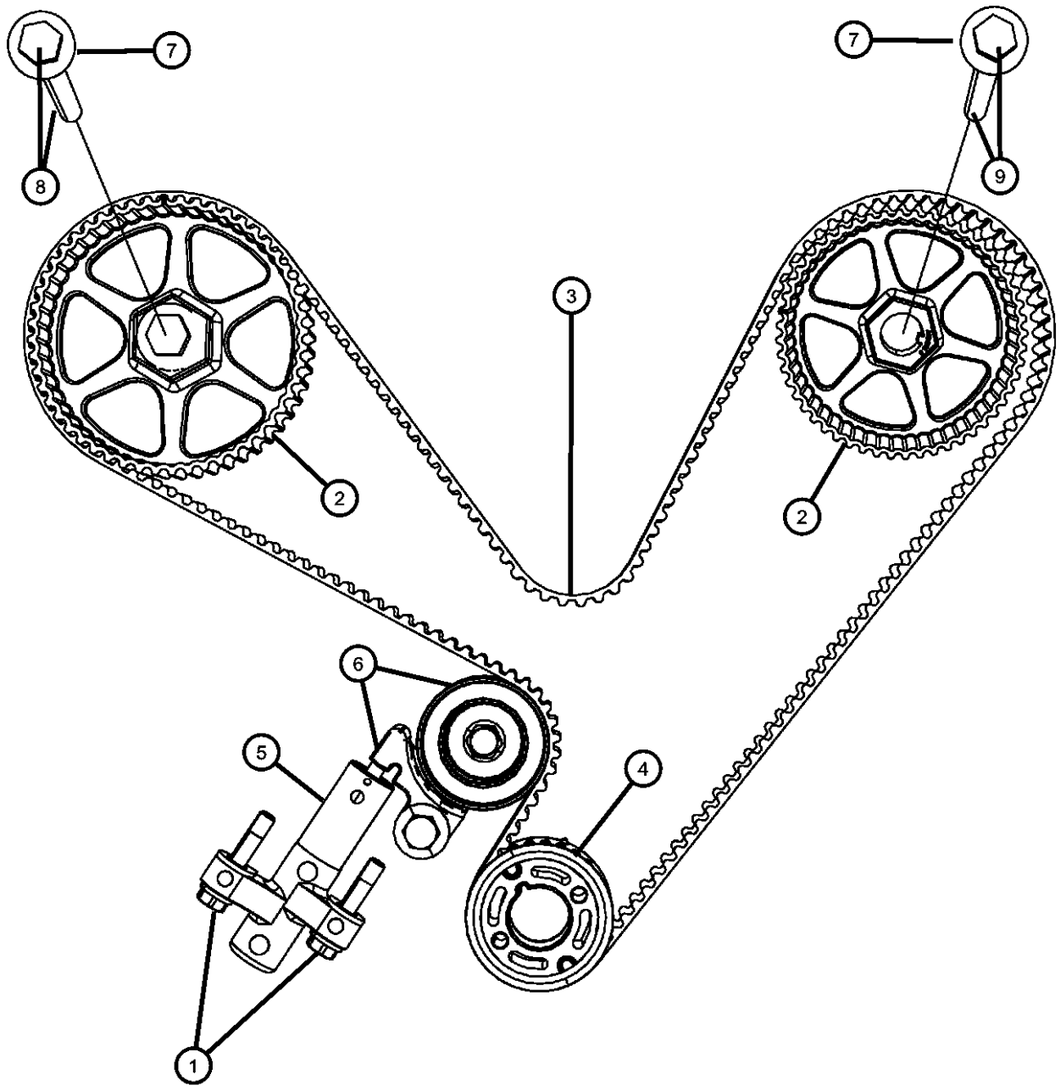

ITEM	PART NUMBER	QTY	LINE	SERIES	BODY	ENGINE	TRANS	TRIM	DESCRIPTION
6	04663515AC	1	D			EGG			TENSIONER ARM, Pivot
7	06503435	2	D			EGG			WASHER, Flat, ID=M13 OD=31.00 THK=5.71, Camshaft Sprocket To Camshaft, Mounting, Right And Left
8	06502916	1	D			EGG			BOLT, Hex Head Lock, M12X1.50X215.00, Camshaft Sprocket To Camshaft, Mounting, Right Side
9	06502917	1	D			EGG			BOLT, Hex Head Lock, M12X1.50X258.00, Camshaft Sprocket To Camshaft, Mounting, Left Side

DODGE CHALLENGER (LC)

SERIES	LINE	BODY	ENGINE	TRANSMISSION
H = HIGHLINE P = PREMIUM X = SPECIAL	D = DODGE	22 = 2-DR SEDAN TYPE #2	EGG = 3.5L High Output V6 24V MPI Engine ESF = 6.1L SRT HEMI V8 Engine EZC = 5.7L HEMI VCT Engine EZD = 5.7L Hemi VCT MDS Engine	DEC = 6-Speed Manual TREMEC Transmission DGJ = 5-Speed Auto W5A580 Transmission DGV = 4-Spd. Automatic VLP 42RLE Trans

Engine Oiling Pump 3.5L [EGG]
Figure 009EGG-705

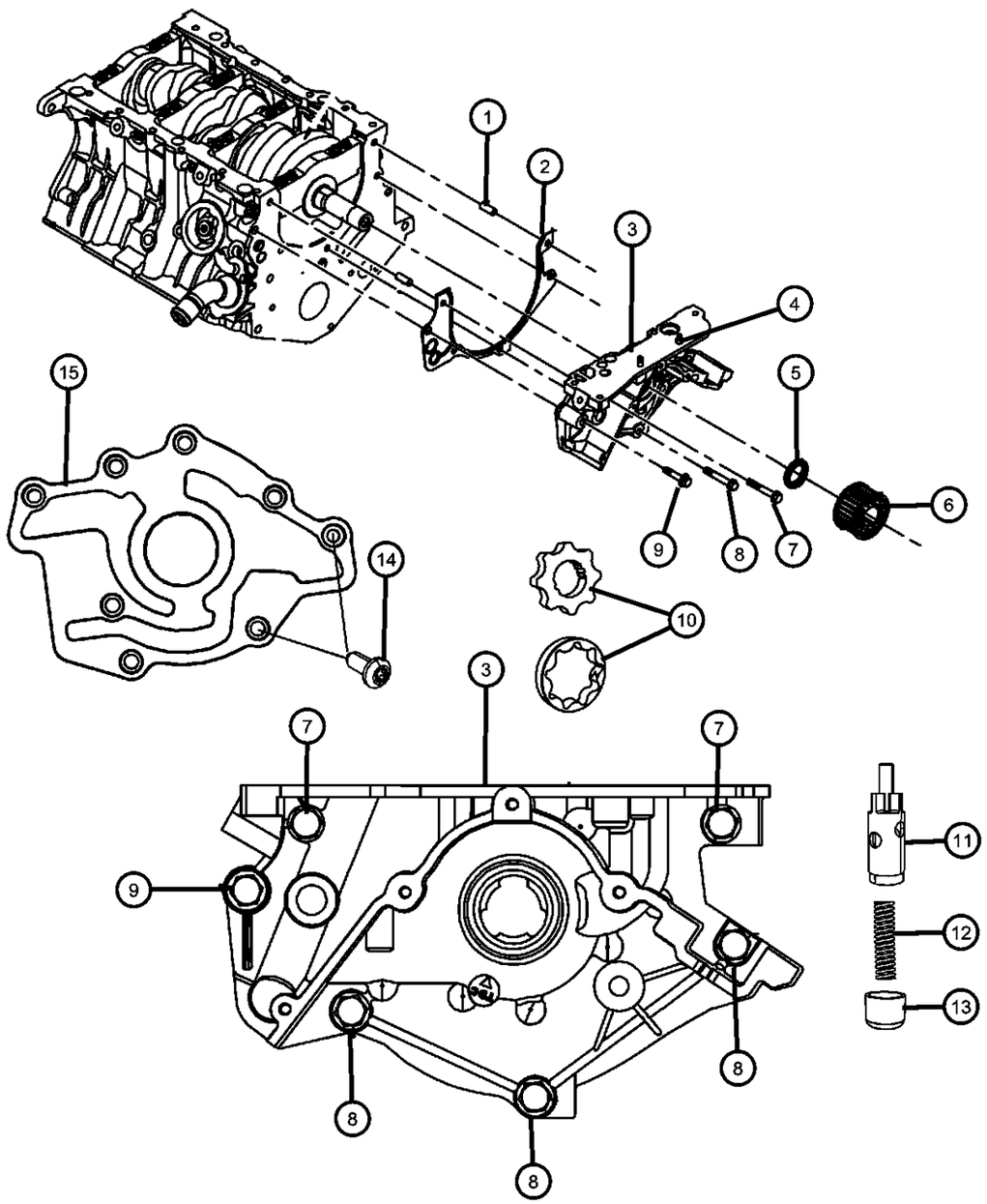

ITEM	PART NUMBER	QTY	LINE	SERIES	BODY	ENGINE	TRANS	TRIM	DESCRIPTION

NOTE:
Sales Codes:
[DEC] = 6-Speed Manual TR6060 Transmission
[DEH] = 6-Speed Manual NSG370 Transmission
[DF9] = AHS-T RWD Automatic Transmission
[DGJ] = 5-Speed Automatic W5A580 Transmission
[DGQ] = 5-Speed Automatic 545RFE Transmission
[DGV] = 4-Speed Automatic VLP 42RLE Transmission
[DG0] = All Automatic Transmissions
[DHR] = Single Speed On Demand MP3010 Transfer Case
[DHU] = AWD Electronic Shift Two Speed NVG 244 H/D Transfer Case
[DHZ] = Full Time Single Mode NVG 140 Transfer Case
[EGG] = 3.5L High Output V-6 24 Valve MPI Engine
[EGS] = 4.0L SOHC V-6 Engine
[EG0] = All 3.5L And 4.0L 6-Cylinder Engines
[EKG] = 3.7L [Magnum] V-6 Engine
[EK0] = All 3.7L 6-Cylinder Gas Engines
[ENS] = 2.8L 4 Cylinder Turbo Diesel Engine
[EN0] = All 2.8L 4 Cylinder Turbo Diesel Engines
[ESF] = 6.1L SRT V-8 Hemi Engine
[ES0] = All 6.1L 8-Cylinder Engines
[EVA] = 4.7L [Magnum] V-8 Engine
[EVD] = 4.7L V-8 FFV Engine
[EVE] = 4.7L V-8 Engine
[EV0] = All 4.7L 8-Cylinder Engines
[EZA] = 5.7L Hemi V-8 Engine
[EZB] = 5.7L Hemi V-8 Multi-Displacement Engine
[EZC] = 5.7L Hemi V-8 VCT Non Multi-Displacement Engine
[EZD] = 5.7L Hemi V-8 VCT Multi-Displacement Engine
[EZE] = 5.7L Hemi V-8 HEV Engine
[EZ0] = All 5.7L 8-Cylinder Engines
[NAA] = Federal Emissions
[NAE] = California Emissions
[NAS] = 50 State Emissions
[NA1] = Export Emissions
[NHK] = Engine Cylinder Block Heater
[XEF] = Transfer Case Skid Plate Sheild

1		1							PIN, Dowel, Serviced In Engine Short Block, (NOT SERVICED)
2	04648938AC	1	D			EGG			GASKET, Oil Pump
3	04663844AF	1	D			EGG			PUMP, Engine Oil, Includes Items 10,11,12,13,14,15
4	06508464AA	2	D			EGG			STUD, Double Ended, M8X1.25X35.00, Oil Pump To Oil Pan, Mounting
5	04792317AB	1	D			EGG			SEAL, Crankshaft Oil, Front

DODGE CHALLENGER (LC)

SERIES	LINE	BODY	ENGINE	TRANSMISSION
H = HIGHLINE P = PREMIUM X = SPECIAL	D = DODGE	22 = 2-DR SEDAN TYPE #2	EGG = 3.5L High Output V6 24V MPI Engine ESF = 6.1L SRT HEMI V8 Engine EZC = 5.7L HEMI VCT Engine EZD = 5.7L Hemi VCT MDS Engine	DEC = 6-Speed Manual TREMEC Transmission DGJ = 5-Speed Auto W5A580 Transmission DGV = 4-Spd. Automatic VLP 42RLE Trans

AR = use ase required - = Non illustrrated part

Engine Oiling Pump 3.5L [EGG]
Figure 009EGG-705

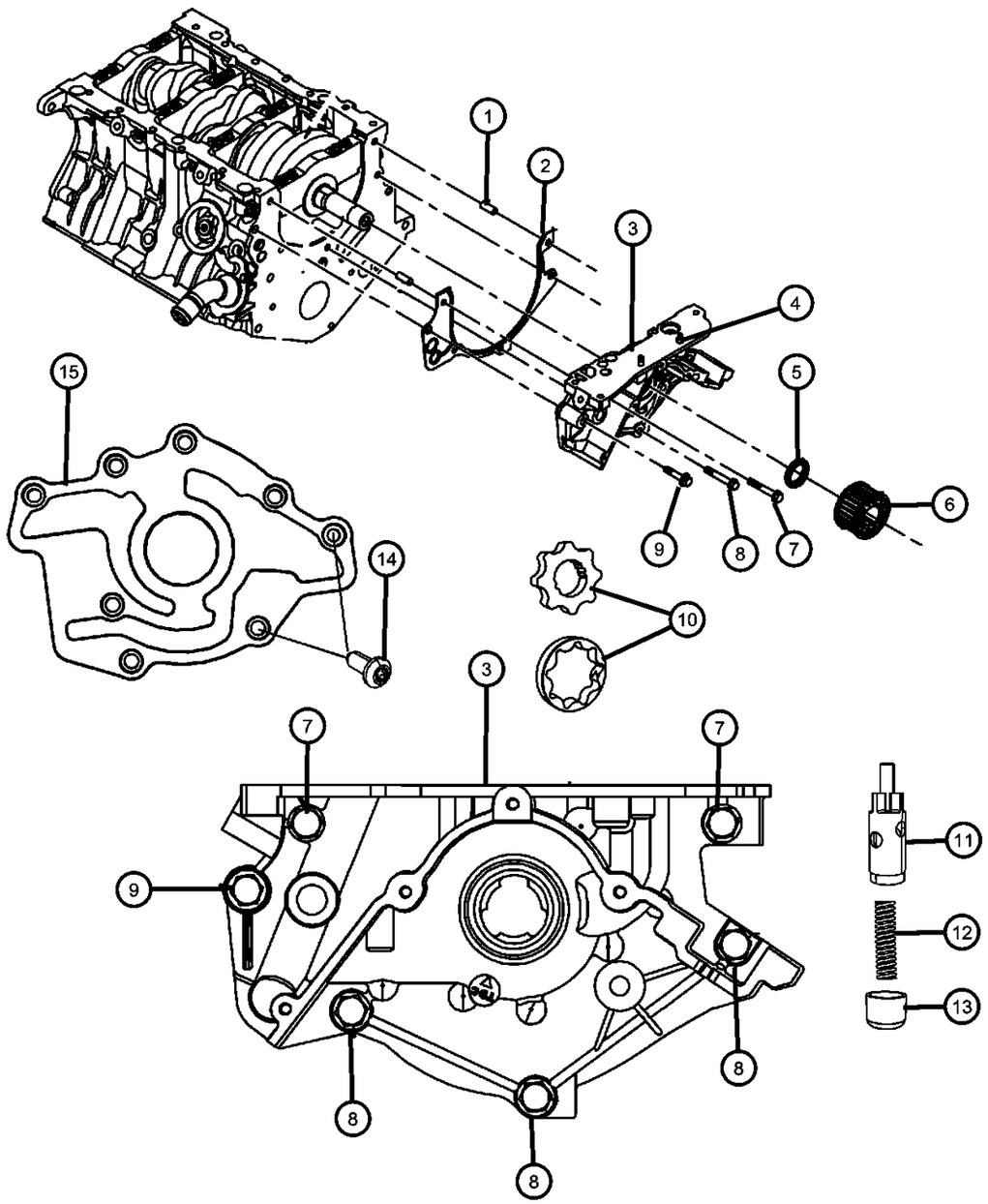

ITEM	PART NUMBER	QTY	LINE	SERIES	BODY	ENGINE	TRANS	TRIM	DESCRIPTION
6	04536479	1	D			EGG			SPROCKET, Crankshaft
7	06101745	1	D			EGG			BOLT AND WASHER, Hex Head, M8X1.25X55.00, Oil Pump To Cylinder Block, Mounting
8	06100306	3	D			EGG			BOLT AND CONED WASHER, Hex Head, M8X1.25X35.00, Oil Pump To Cylinder Block, Mounting
9	06101702	1	D			EGG			BOLT AND WASHER, Hex Head, M10X1.50X70.00, Oil Pump To Cylinder Block, Mounting
10	05134631AA	1	D			EGG			ROTOR SET, Oil Pump
11	02843208	1	D			EGG			PLUNGER, Oil Pressure Relief Valve
12	02402473AB	1	D			EGG			SPRING, Oil Pressure Relief Valve
13	02806273	1	D			EGG			CAP, Oil Pressure Relief Valve
14	04892090AA	8	D			EGG			SCREW, Torx Head, M6x1.00x15.00, Oil Pump Back Cover To Oil Pump Body, Mounting
15		8							COVER, Oil Pump Back, Serviced With Item 3 Pump, (NOT SERVICED)

DODGE CHALLENGER (LC)

SERIES	LINE	BODY	ENGINE	TRANSMISSION
H = HIGHLINE	D = DODGE	22 = 2-DR SEDAN TYPE #2	EGG = 3.5L High Output V6 24V MPI Engine	DEC = 6-Speed Manual TREMEC Transmission
P = PREMIUM			ESF = 6.1L SRT HEMI V8 Engine	DGJ = 5-Speed Auto W5A580 Transmission
X = SPECIAL			EZC = 5.7L HEMI VCT Engine	DGV = 4-Spd. Automatic VLP 42RLE Trans
			EZD = 5.7L Hemi VCT MDS Engine	

AR = use ase required - = Non illustrrated part

Engine Oil Pan, Engine Oil Level Indicator And Related Parts 3.5L [EGG]
Figure 009EGG-725

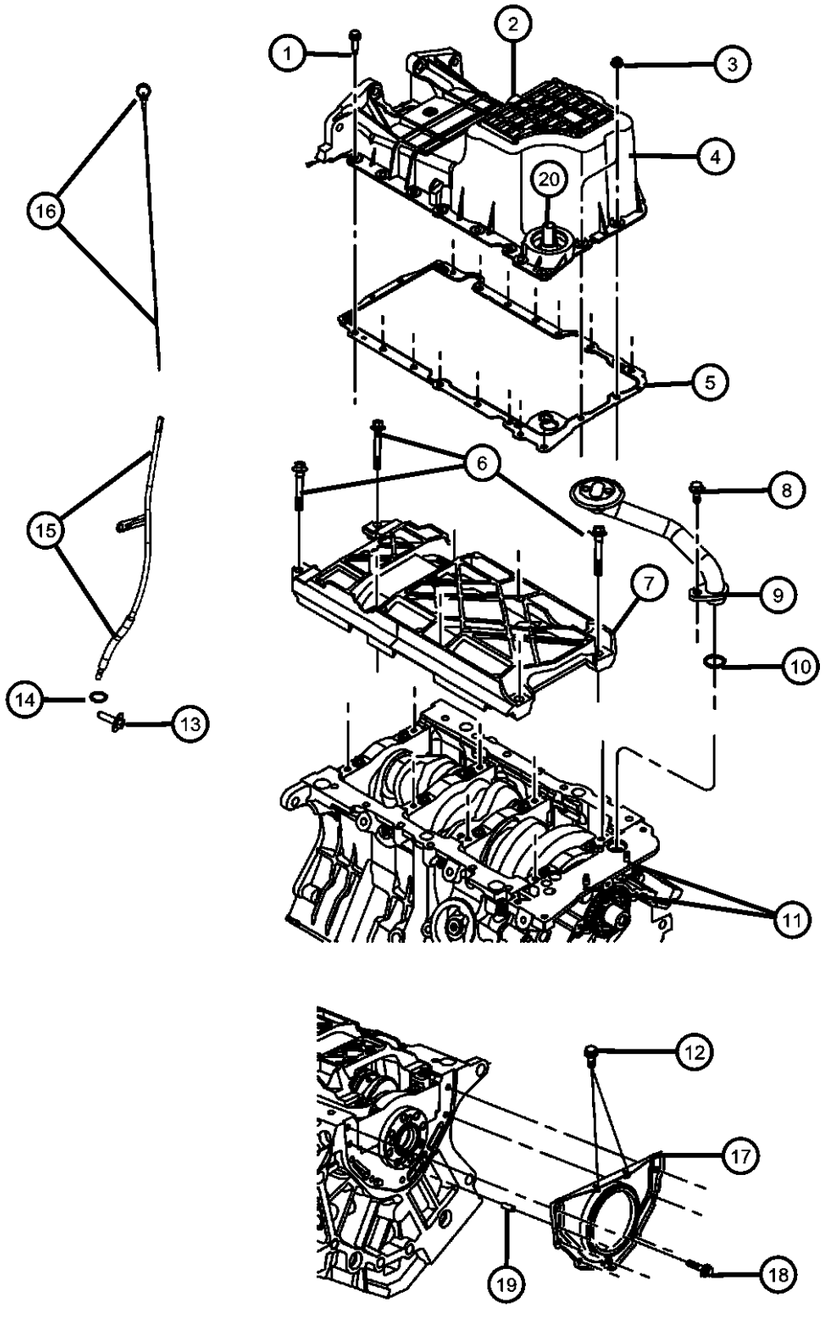

ITEM	PART NUMBER	QTY	LINE	SERIES	BODY	ENGINE	TRANS	TRIM	DESCRIPTION

NOTE:
Sales Codes:
[DEC] = 6-Speed Manual TR6060 Transmission
[DEH] = 6-Speed Manual NSG370 Transmission
[DF9] = AHS-T RWD Automatic Transmission
[DGJ] = 5-Speed Automatic W5A580 Transmission
[DGQ] = 5-Speed Automatic 545RFE Transmission
[DGV] = 4-Speed Automatic VLP 42RLE Transmission
[DG0] = All Automatic Transmissions
[DHR] = Single Speed On Demand MP3010 Transfer Case
[DHU] = AWD Electronic Shift Two Speed NVG 244 H/D Transfer Case
[DHZ] = Full Time Single Mode NVG 140 Transfer Case
[EGG] = 3.5L High Output V-6 24 Valve MPI Engine
[EGS] = 4.0L SOHC V-6 Engine
[EG0] = All 3.5L And 4.0L 6-Cylinder Engines
[EKG] = 3.7L [Magnum] V-6 Engine
[EK0] = All 3.7L 6-Cylinder Gas Engines
[ENS] = 2.8L 4 Cylinder Turbo Diesel Engine
[EN0] = All 2.8L 4 Cylinder Turbo Diesel Engines
[ESF] = 6.1L SRT V-8 Hemi Engine
[ES0] = All 6.1L 8-Cylinder Engines
[EVA] = 4.7L [Magnum] V-8 Engine
[EVD] = 4.7L V-8 FFV Engine
[EVE] = 4.7L V-8 Engine
[EV0] = All 4.7L 8-Cylinder Engines
[EZA] = 5.7L Hemi V-8 Engine
[EZB] = 5.7L Hemi V-8 Multi-Displacement Engine
[EZC] = 5.7L Hemi V-8 VCT Non Multi-Displacement Engine
[EZD] = 5.7L Hemi V-8 VCT Multi-Displacement Engine
[EZE] = 5.7L Hemi V-8 HEV Engine
[EZ0] = All 5.7L 8-Cylinder Engines
[NAA] = Federal Emissions
[NAE] = California Emissions
[NAS] = 50 State Emissions
[NA1] = Export Emissions
[NHK] = Engine Cylinder Block Heater
[XEF] = Transfer Case Skid Plate Sheild

1	06105052AA	16	D			EGG			BOLT, Hex Flange Head, M8X1.25X40.00, Oil Pan To Cylinder Block, Mounting
2	06507741AA	1	D			EGG	DGV		PLUG, Oil Drain, [M14X1.50X21.50]
3	06104709AA	2	D			EGG			NUT, Hex Flange, M8x1.25, Oil Pan To Oil Pump, Mounting
4									PAN, Oil
	04792865AD	1	D			EGG	DGV		[DGV]

DODGE CHALLENGER (LC)

SERIES	LINE	BODY	ENGINE	TRANSMISSION
H = HIGHLINE P = PREMIUM X = SPECIAL	D = DODGE	22 = 2-DR SEDAN TYPE #2	EGG = 3.5L High Output V6 24V MPI Engine ESF = 6.1L SRT HEMI V8 Engine EZC = 5.7L HEMI VCT Engine EZD = 5.7L Hemi VCT MDS Engine	DEC = 6-Speed Manual TREMEC Transmission DGJ = 5-Speed Auto W5A580 Transmission DGV = 4-Spd. Automatic VLP 42RLE Trans

AR = use ase required - = Non illustrrated part

Engine Oil Pan, Engine Oil Level Indicator And Related Parts 3.5L [EGG]
Figure 009EGG-725

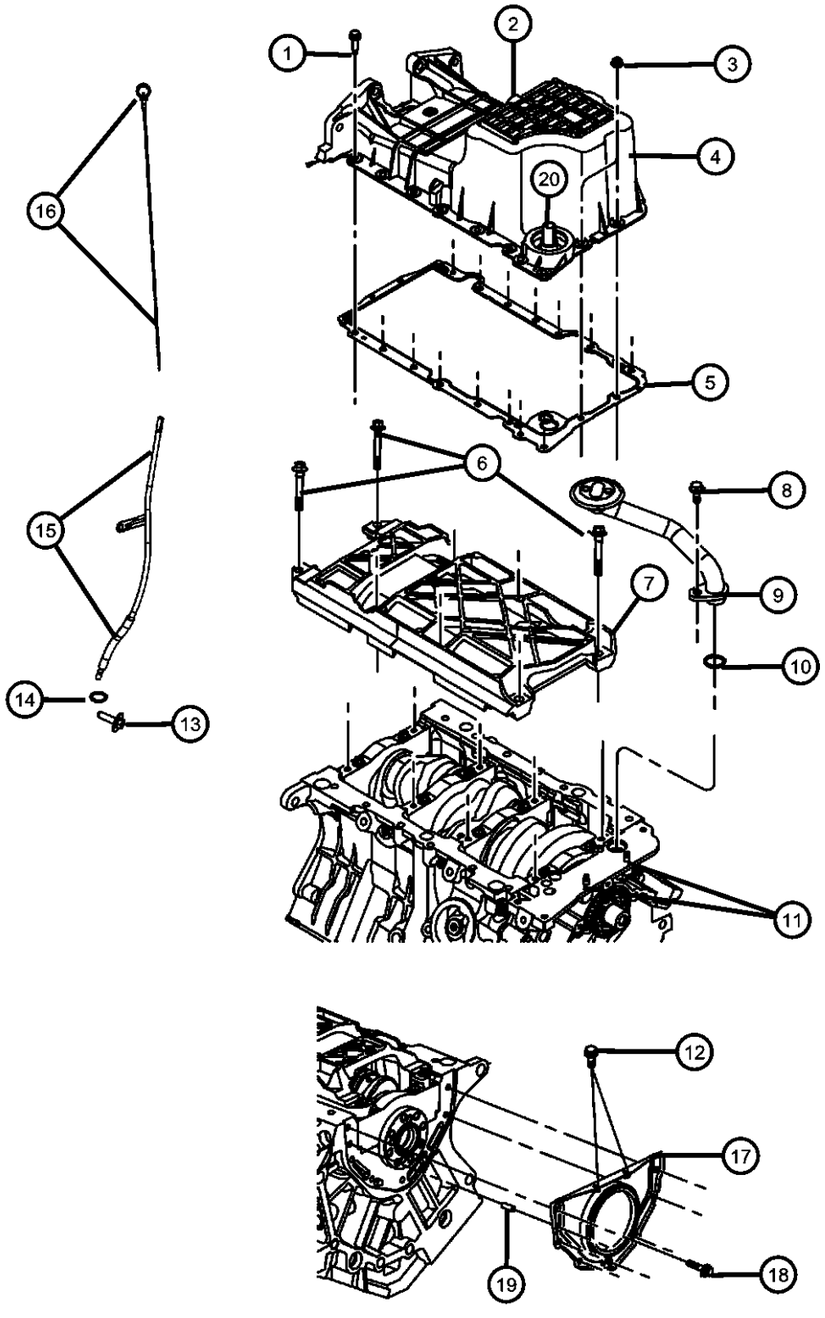

ITEM	PART NUMBER	QTY	LINE	SERIES	BODY	ENGINE	TRANS	TRIM	DESCRIPTION
	04892171AE	1	D			EGG	DGJ		[DGJ]
5	04792869AA	1	D			EGG			GASKET, Oil Pan
6	06504630	8	D			EGG			BOLT, Hex Flange Head, M10X1.50X100.00, Windage Tray To Cylinder Block Inner, Mounting
7	04663938AD	1	D			EGG			TRAY, Windage
8	06500070	1	D			EGG			BOLT, Hex Head Locking, M8X1.25X25.25, Oil Pick Up Tube, Mounting
9	04792854AA	1	D			EGG			TUBE, Oil Pickup
10	04792068	1	D			EGG			O RING, Oil Pick Up Tube
11	06508464AA	2	D			EGG			STUD, Double Ended, M8X1.25X35.00, Oil Pump To Oil Pan, Mounting
12	06504327	2	D			EGG			BOLT AND WASHER, Hex Head, M6X1.00X23.00, Oil Pan To Rear Retainer, Mounting
13		2							SCREW, [M5.74X1.81X21.5], (NOT SERVICED)
14	05003905AA	1	D			EGG	DGV		O RING, Engine Oil Indicator Tube
15	04792868AA	1	D			EGG			TUBE, Engine Oil Indicator
16	04792867AB	1	D			EGG			INDICATOR, Engine Oil Level
17	04663870AB	1	D			EGG			RETAINER AND SEAL, Crankshaft Rear Oil
18	06507847AA	7	D			EGG			BOLT, Torx Head, M6X1.00X17.00, Crankshaft Rear Seal Retainer To Cylinder Block, Mounting
19	06100902	1	D			EGG			DOWEL PIN, [M6x14], Crankshaft Rear Seal Retainer To Cylinder Block, Mounting
20	04892338AB	1	D			EGG	DGV		CONNECTOR, Oil Filter, M22X1.50

DODGE CHALLENGER (LC)

SERIES	LINE	BODY	ENGINE	TRANSMISSION
H = HIGHLINE P = PREMIUM X = SPECIAL	D = DODGE	22 = 2-DR SEDAN TYPE #2	EGG = 3.5L High Output V6 24V MPI Engine ESF = 6.1L SRT HEMI V8 Engine EZC = 5.7L HEMI VCT Engine EZD = 5.7L Hemi VCT MDS Engine	DEC = 6-Speed Manual TREMEC Transmission DGJ = 5-Speed Auto W5A580 Transmission DGV = 4-Spd. Automatic VLP 42RLE Trans

Engine Oil Filter And Engine Oil 3.5L [EGG]
Figure 009EGG-745

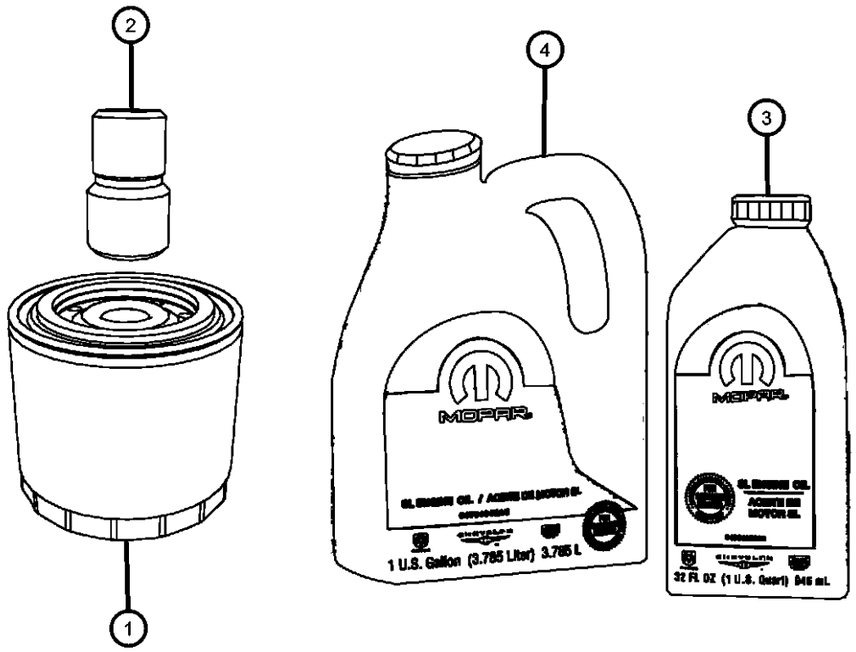

ITEM	PART NUMBER	QTY	LINE	SERIES	BODY	ENGINE	TRANS	TRIM	DESCRIPTION

NOTE:
Sales Codes:
[DEC] = 6-Speed Manual TR6060 Transmission
[DEH] = 6-Speed Manual NSG370 Transmission
[DF9] = AHS-T RWD Automatic Transmission
[DGJ] = 5-Speed Automatic W5A580 Transmission
[DGQ] = 5-Speed Automatic 545RFE Transmission
[DGV] = 4-Speed Automatic VLP 42RLE Transmission
[DG0] = All Automatic Transmissions
[DHR] = Single Speed On Demand MP3010 Transfer Case
[DHU] = AWD Electronic Shift Two Speed NVG 244 H/D Transfer Case
[DHZ] = Full Time Single Mode NVG 140 Transfer Case
[EGG] = 3.5L High Output V-6 24 Valve MPI Engine
[EGS] = 4.0L SOHC V-6 Engine
[EG0] = All 3.5L And 4.0L 6-Cylinder Engines
[EKG] = 3.7L [Magnum] V-6 Engine
[EK0] = All 3.7L 6-Cylinder Gas Engines
[ENS] = 2.8L 4 Cylinder Turbo Diesel Engine
[EN0] = All 2.8L 4 Cylinder Turbo Diesel Engines
[ESF] = 6.1L SRT V-8 Hemi Engine
[ES0] = All 6.1L 8-Cylinder Engines
[EVA] = 4.7L [Magnum] V-8 Engine
[EVD] = 4.7L V-8 FFV Engine
[EVE] = 4.7L V-8 Engine
[EV0] = All 4.7L 8-Cylinder Engines
[EZA] = 5.7L Hemi V-8 Engine
[EZB] = 5.7L Hemi V-8 Multi-Displacement Engine
[EZC] = 5.7L Hemi V-8 VCT Non Multi-Displacement Engine
[EZD] = 5.7L Hemi V-8 VCT Multi-Displacement Engine
[EZE] = 5.7L Hemi V-8 HEV Engine
[EZ0] = All 5.7L 8-Cylinder Engines
[NAA] = Federal Emissions
[NAE] = California Emissions
[NAS] = 50 State Emissions
[NA1] = Export Emissions
[NHK] = Engine Cylinder Block Heater
[XEF] = Transfer Case Skid Plate Sheild

1	04892339AA	1	D			EGG		FILTER, Engine Oil
2	04892338AB	1	D			EGG	DGV	CONNECTOR, Oil Filter, M22X1.50
3		1						ENGINE OIL, 10W30, Quart, MS-6395 [API SM ILSAC GF-4], (NOT SERVICED)
4		1						ENGINE OIL, 10W30, Gallon, MS-6395 [API SM ILSAC GF-4], (NOT SERVICED)

DODGE CHALLENGER (LC)

SERIES	LINE	BODY	ENGINE	TRANSMISSION
H = HIGHLINE P = PREMIUM X = SPECIAL	D = DODGE	22 = 2-DR SEDAN TYPE #2	EGG = 3.5L High Output V6 24V MPI Engine ESF = 6.1L SRT HEMI V8 Engine EZC = 5.7L HEMI VCT Engine EZD = 5.7L Hemi VCT MDS Engine	DEC = 6-Speed Manual TREMEC Transmission DGJ = 5-Speed Auto W5A580 Transmission DGV = 4-Spd. Automatic VLP 42RLE Trans

AR = use ase required - = Non illustrrated part

Engine Oil Cooler And Hoses/Tubes 3.5L [EGG]
Figure 009EGG-805

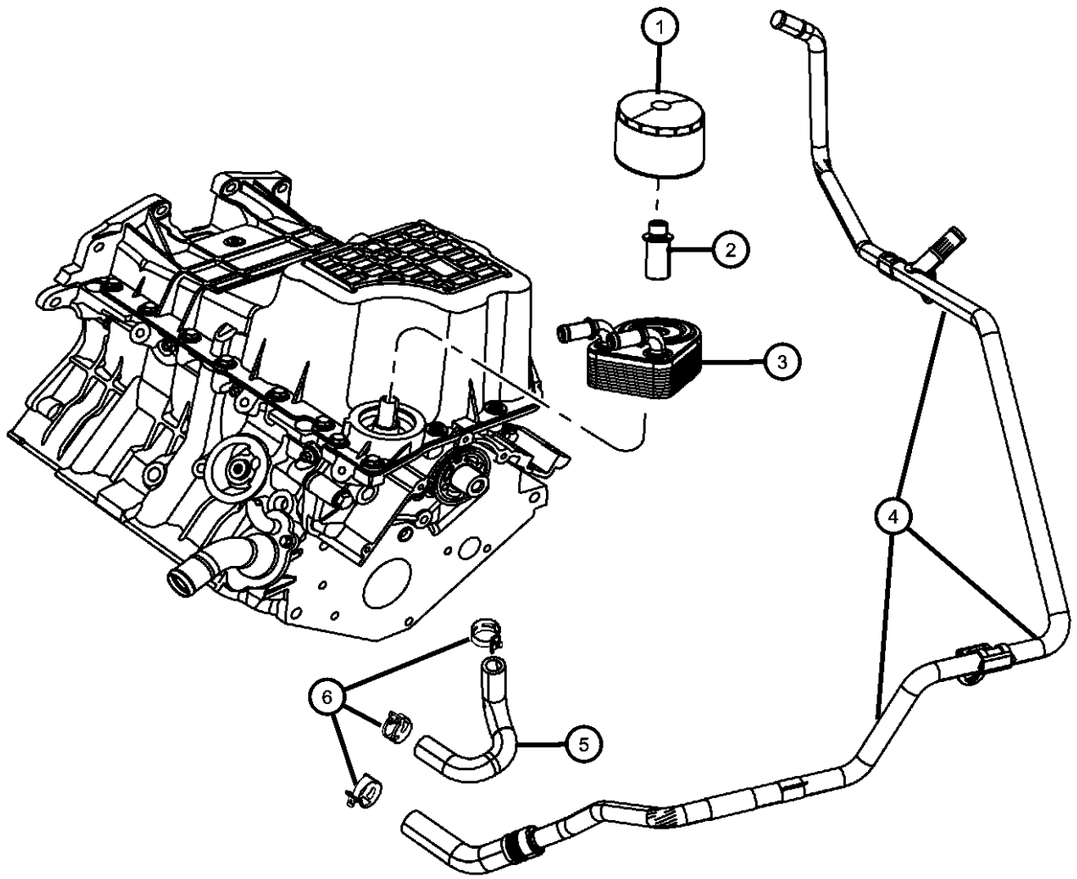

ITEM	PART NUMBER	QTY	LINE	SERIES	BODY	ENGINE	TRANS	TRIM	DESCRIPTION
1	04892339AA	1	D			EGG			FILTER, Engine Oil
2	04892419AA	1	D			EGG			FITTING, Engine Oil Cooler
3	04892422AA	1	D			EGG			COOLER, Engine Oil
4	55038125AA	1	D			EG0	DGJ		TUBE & HOSE, HEATER RETURN
5	55038143AA	1	D			EGG			TUBE, Oil Cooler
6	06502017	1	D			EG0			CLAMP, Hose, 24X15

DODGE CHALLENGER (LC)

SERIES	LINE	BODY	ENGINE	TRANSMISSION
H = HIGHLINE	D = DODGE	22 = 2-DR SEDAN TYPE #2	EGG = 3.5L High Output V6 24V MPI Engine	DEC = 6-Speed Manual TREMEC Transmission
P = PREMIUM			ESF = 6.1L SRT HEMI V8 Engine	DGJ = 5-Speed Auto W5A580 Transmission
X = SPECIAL			EZC = 5.7L HEMI VCT Engine	DGV = 4-Spd. Automatic VLP 42RLE Trans
			EZD = 5.7L Hemi VCT MDS Engine	

AR = use ase required - = Non illustrrated part

Exhaust Manifolds And Heat Shields 3.5L [EGG]
Figure 009EGG-1005

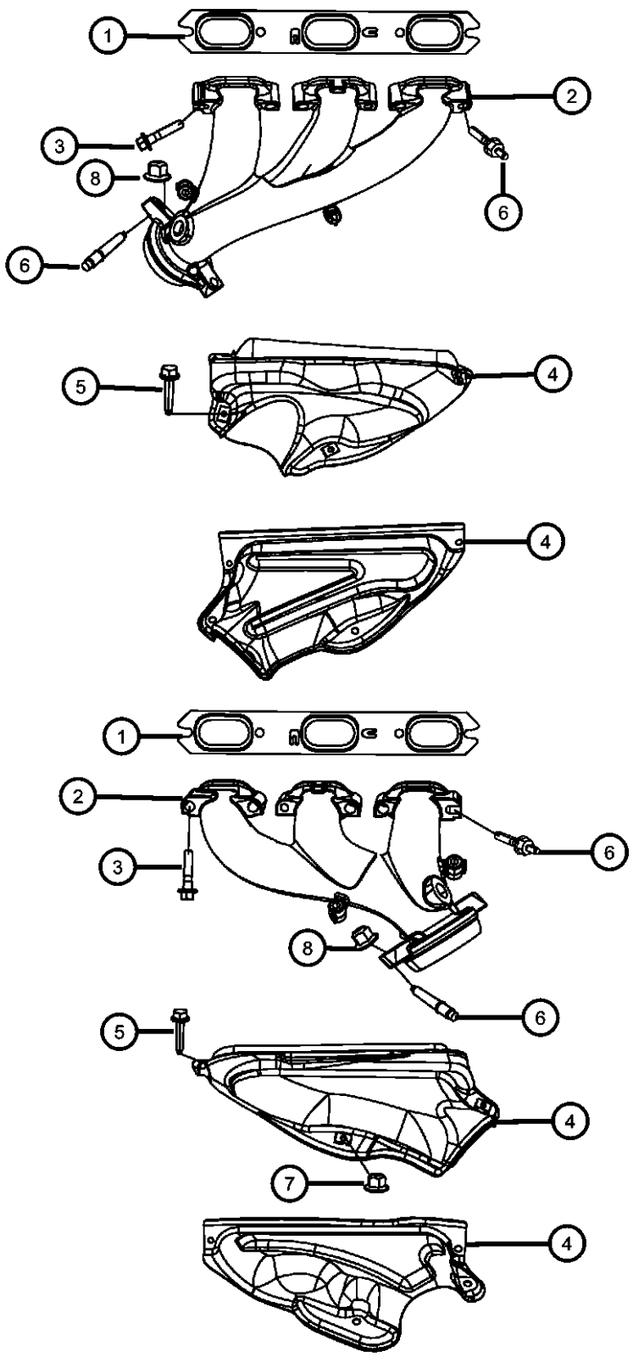

ITEM	PART NUMBER	QTY	LINE	SERIES	BODY	ENGINE	TRANS	TRIM	DESCRIPTION

NOTE:
Sales Codes:
[DEC] = 6-Speed Manual TR6060 Transmission
[DEH] = 6-Speed Manual NSG370 Transmission
[DF9] = AHS-T RWD Automatic Transmission
[DGJ] = 5-Speed Automatic W5A580 Transmission
[DGQ] = 5-Speed Automatic 545RFE Transmission
[DGV] = 4-Speed Automatic VLP 42RLE Transmission
[DG0] = All Automatic Transmissions
[DHR] = Single Speed On Demand MP3010 Transfer Case
[DHU] = AWD Electronic Shift Two Speed NVG 244 H/D Transfer Case
[DHZ] = Full Time Single Mode NVG 140 Transfer Case
[EGG] = 3.5L High Output V-6 24 Valve MPI Engine
[EGS] = 4.0L SOHC V-6 Engine
[EG0] = All 3.5L And 4.0L 6-Cylinder Engines
[EKG] = 3.7L [Magnum] V-6 Engine
[EK0] = All 3.7L 6-Cylinder Gas Engines
[ENS] = 2.8L 4 Cylinder Turbo Diesel Engine
[EN0] = All 2.8L 4 Cylinder Turbo Diesel Engines
[ESF] = 6.1L SRT V-8 Hemi Engine
[ES0] = All 6.1L 8-Cylinder Engines
[EVA] = 4.7L [Magnum] V-8 Engine
[EVD] = 4.7L V-8 FFV Engine
[EVE] = 4.7L V-8 Engine
[EV0] = All 4.7L 8-Cylinder Engines
[EZA] = 5.7L Hemi V-8 Engine
[EZB] = 5.7L Hemi V-8 Multi-Displacement Engine
[EZC] = 5.7L Hemi V-8 VCT Non Multi-Displacement Engine
[EZD] = 5.7L Hemi V-8 VCT Multi-Displacement Engine
[EZE] = 5.7L Hemi V-8 HEV Engine
[EZ0] = All 5.7L 8-Cylinder Engines
[NAA] = Federal Emissions
[NAE] = California Emissions
[NAS] = 50 State Emissions
[NA1] = Export Emissions
[NHK] = Engine Cylinder Block Heater
[XEF] = Transfer Case Skid Plate Sheild

1	04663958	2	D			EGG			GASKET, Exhaust ManifoldRight And Left
2									MANIFOLD, Exhaust
	04792778AA	1	D			EGG			Right
	04792779AA	1	D			EGG			Left
3	06505429AA	8	D			EGG			BOLT, Hex Flange Head, M8X1.25X40, Exhaust Manifold To Cylinder Head, Mounting
4									SHIELD, Exhaust Manifold

DODGE CHALLENGER (LC)

SERIES	LINE	BODY	ENGINE	TRANSMISSION
H = HIGHLINE P = PREMIUM X = SPECIAL	D = DODGE	22 = 2-DR SEDAN TYPE #2	EGG = 3.5L High Output V6 24V MPI Engine ESF = 6.1L SRT HEMI V8 Engine EZC = 5.7L HEMI VCT Engine EZD = 5.7L Hemi VCT MDS Engine	DEC = 6-Speed Manual TREMEC Transmission DGJ = 5-Speed Auto W5A580 Transmission DGV = 4-Spd. Automatic VLP 42RLE Trans

AR = use ase required - = Non illustrrated part

Exhaust Manifolds And Heat Shields 3.5L [EGG]
Figure 009EGG-1005

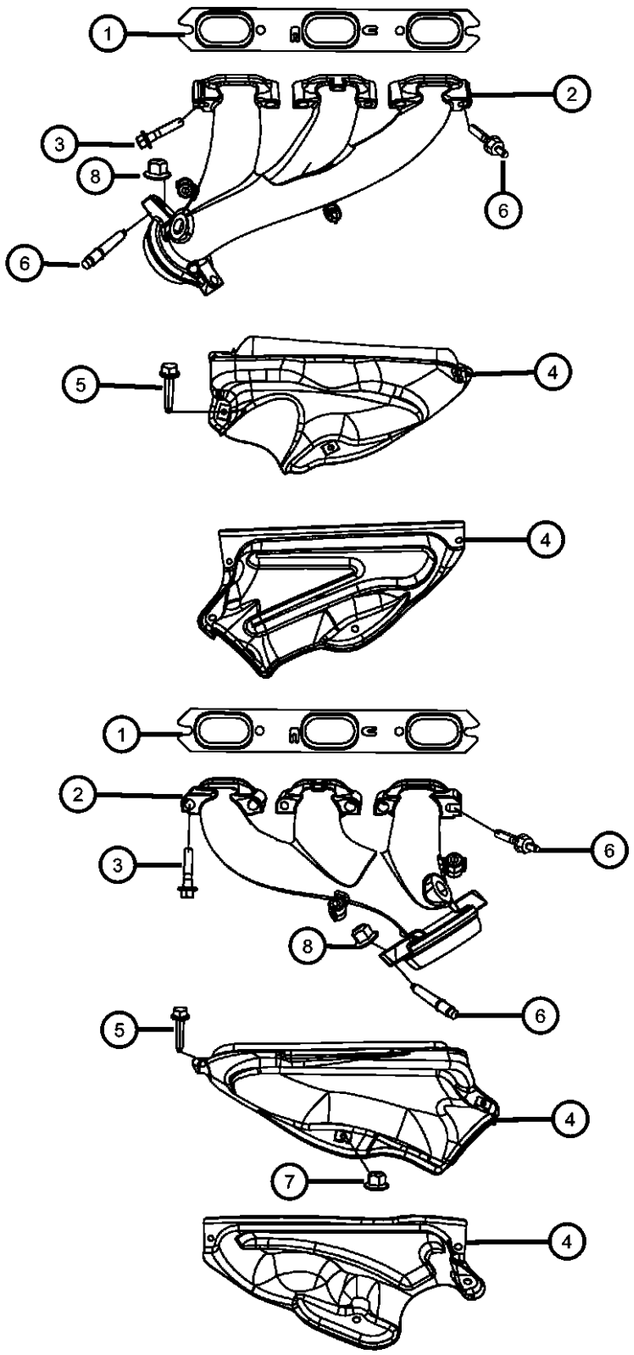

ITEM	PART NUMBER	QTY	LINE	SERIES	BODY	ENGINE	TRANS	TRIM	DESCRIPTION
	04792780AA	1	D			EGG			Upper Right
	04792781AA	1	D			EGG			Upper Left
	04792782AA	1	D			EGG			Lower Right
	04792783AA	1	D			EGG			Lower Left
5	06105040AA	4	D			EGG			BOLT, Hex Flange Head, M6X1.00X35.00, Heat Sheild To Exhaust Manifold, Mounting
6									STUD, Double Ended
	06507644AA	4	D			EGG			Exhaust Manifold To Cylinder Head, Mounting
	06507880AA	4	D			EGG, EZC, EZD			Exhaust Maninfold To Front Exhaust Pipe, Mounting
7	06505316AA	4	D			EGG			NUT, Hex Flange Lock, M6X1.00, Heat Shield To Exhaust Manifold Stud, Mounting
8	06104710AA	4	D			EG0			NUT, Hex Flange Lock, M10x1.50, Exhaust Maninfold To Front Exhaust Pipe, Mounting

DODGE CHALLENGER (LC)

SERIES	LINE	BODY	ENGINE	TRANSMISSION
H = HIGHLINE P = PREMIUM X = SPECIAL	D = DODGE	22 = 2-DR SEDAN TYPE #2	EGG = 3.5L High Output V6 24V MPI Engine ESF = 6.1L SRT HEMI V8 Engine EZC = 5.7L HEMI VCT Engine EZD = 5.7L Hemi VCT MDS Engine	DEC = 6-Speed Manual TREMEC Transmission DGJ = 5-Speed Auto W5A580 Transmission DGV = 4-Spd. Automatic VLP 42RLE Trans

AR = use ase required - = Non illustrrated part

Intake Manifold Plenum 3.5L [EGG]
Figure 009EGG-1045

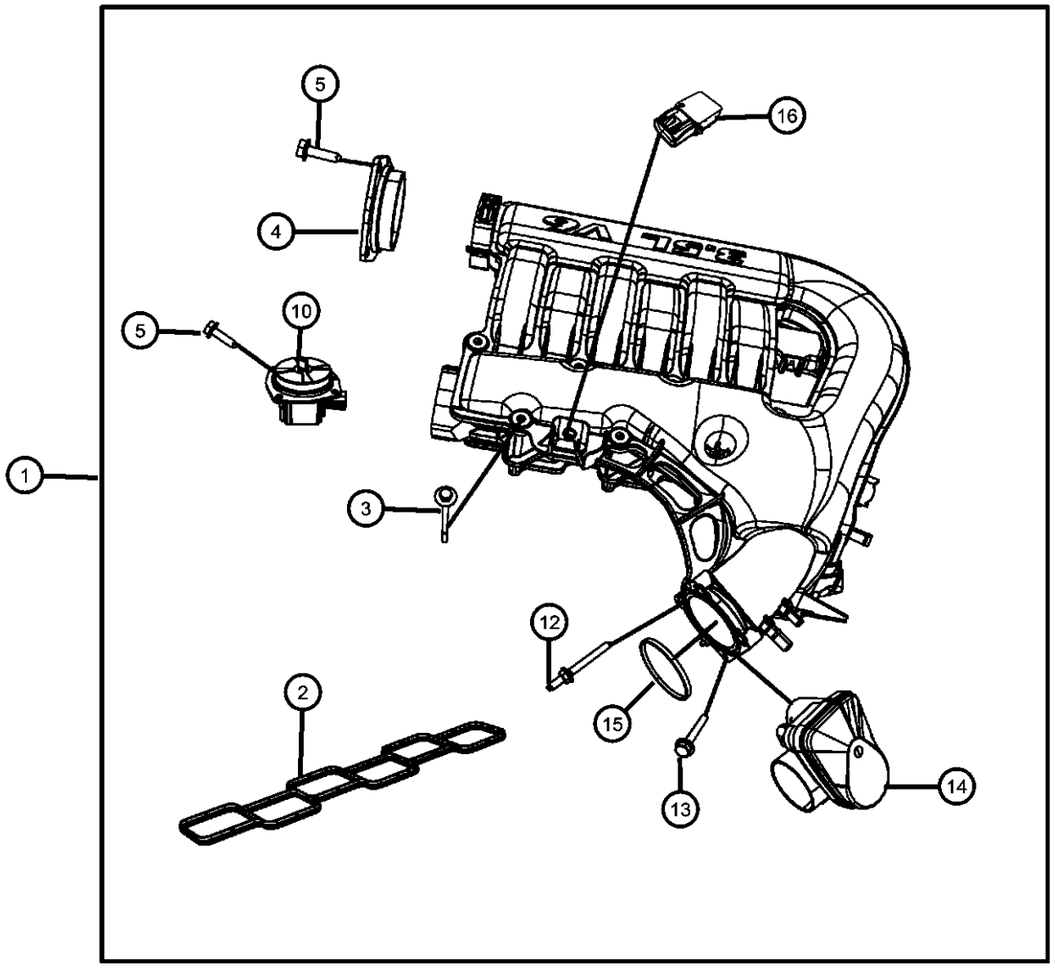

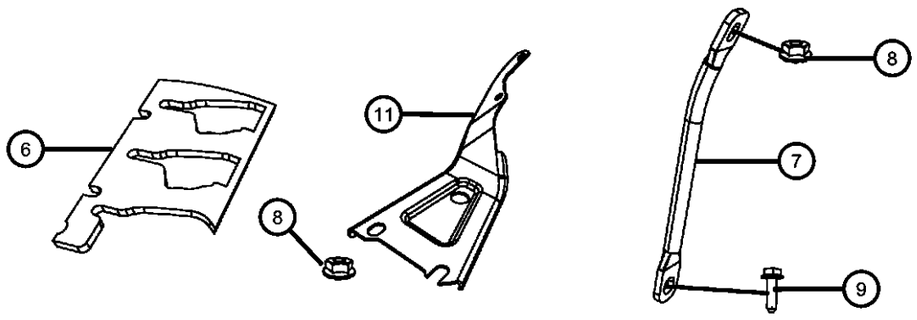

ITEM	PART NUMBER	QTY	LINE	SERIES	BODY	ENGINE	TRANS	TRIM	DESCRIPTION

NOTE:
Sales Codes:
[DEC] = 6-Speed Manual TR6060 Transmission
[DEH] = 6-Speed Manual NSG370 Transmission
[DF9] = AHS-T RWD Automatic Transmission
[DGJ] = 5-Speed Automatic W5A580 Transmission
[DGQ] = 5-Speed Automatic 545RFE Transmission
[DGV] = 4-Speed Automatic VLP 42RLE Transmission
[DG0] = All Automatic Transmissions
[DHR] = Single Speed On Demand MP3010 Transfer Case
[DHU] = AWD Electronic Shift Two Speed NVG 244 H/D Transfer Case
[DHZ] = Full Time Single Mode NVG 140 Transfer Case
[EGG] = 3.5L High Output V-6 24 Valve MPI Engine
[EGS] = 4.0L SOHC V-6 Engine
[EG0] = All 3.5L And 4.0L 6-Cylinder Engines
[EKG] = 3.7L [Magnum] V-6 Engine
[EK0] = All 3.7L 6-Cylinder Gas Engines
[ENS] = 2.8L 4 Cylinder Turbo Diesel Engine
[EN0] = All 2.8L 4 Cylinder Turbo Diesel Engines
[ESF] = 6.1L SRT V-8 Hemi Engine
[ES0] = All 6.1L 8-Cylinder Engines
[EVA] = 4.7L [Magnum] V-8 Engine
[EVD] = 4.7L V-8 FFV Engine
[EVE] = 4.7L V-8 Engine
[EV0] = All 4.7L 8-Cylinder Engines
[EZA] = 5.7L Hemi V-8 Engine
[EZB] = 5.7L Hemi V-8 Multi-Displacement Engine
[EZC] = 5.7L Hemi V-8 VCT Non Multi-Displacement Engine
[EZD] = 5.7L Hemi V-8 VCT Multi-Displacement Engine
[EZE] = 5.7L Hemi V-8 HEV Engine
[EZ0] = All 5.7L 8-Cylinder Engines
[NAA] = Federal Emissions
[NAE] = California Emissions
[NAS] = 50 State Emissions
[NA1] = Export Emissions
[NHK] = Engine Cylinder Block Heater
[XEF] = Transfer Case Skid Plate Sheild

1	04591863AL	1	D			EGG			PLENUM, Intake Manifold
2	04663851	1	D			EGG			GASKET, Intake Plenum
3	06508027AA	7	D			EGG			BOLT AND CONED WASHER, Hex Head, M6X1.00X130.00, Plenum To Lower Intake Manifold, Mounting
4	04593870AA	1	D			EGG			COVER, Manifold Tuning Valve
5									BOLT, Hex Flange Head, M6X1.00X17.00

DODGE CHALLENGER (LC)

SERIES	LINE	BODY	ENGINE	TRANSMISSION
H = HIGHLINE P = PREMIUM X = SPECIAL	D = DODGE	22 = 2-DR SEDAN TYPE #2	EGG = 3.5L High Output V6 24V MPI Engine ESF = 6.1L SRT HEMI V8 Engine EZC = 5.7L HEMI VCT Engine EZD = 5.7L Hemi VCT MDS Engine	DEC = 6-Speed Manual TREMEC Transmission DGJ = 5-Speed Auto W5A580 Transmission DGV = 4-Spd. Automatic VLP 42RLE Trans

AR = use ase required - = Non illustrrated part

Intake Manifold Plenum 3.5L [EGG]
Figure 009EGG-1045

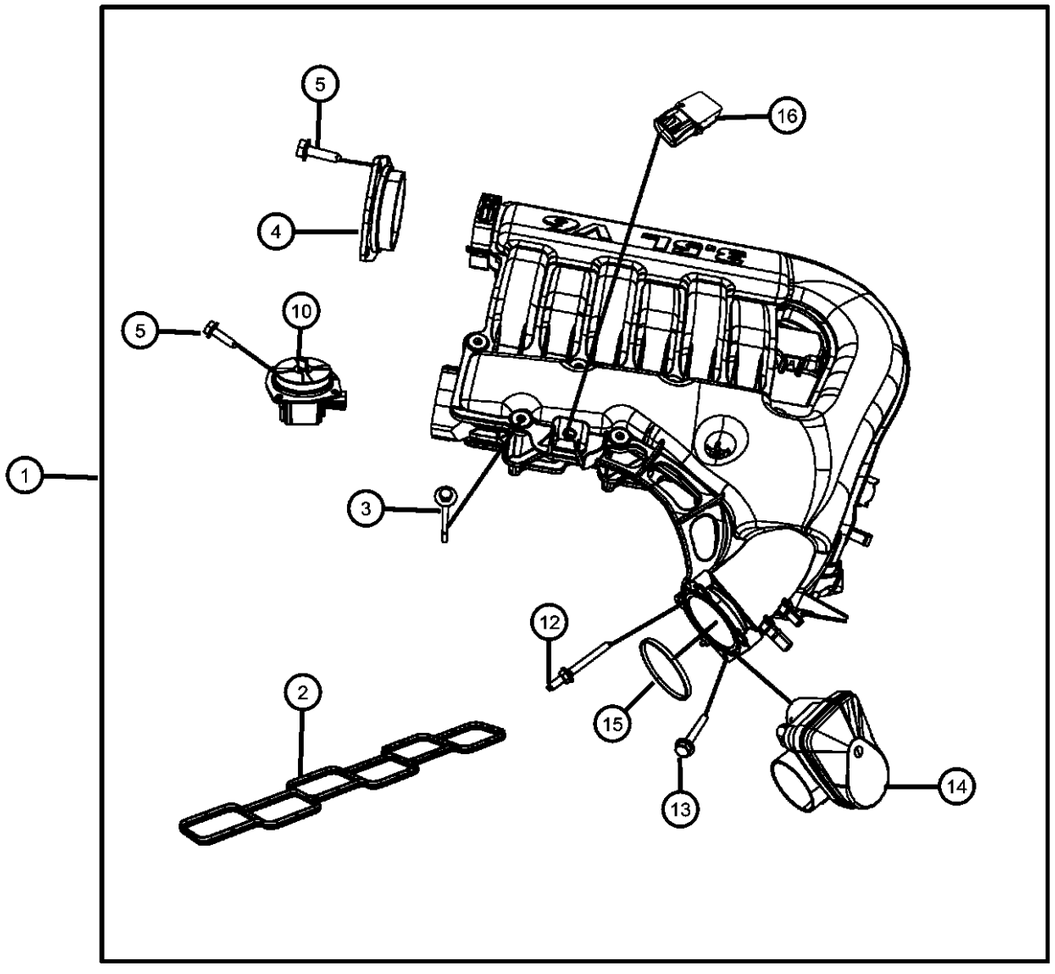

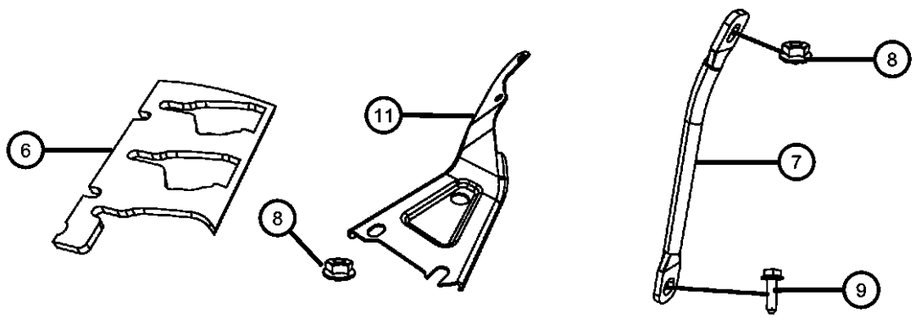

ITEM	PART NUMBER	QTY	LINE	SERIES	BODY	ENGINE	TRANS	TRIM	DESCRIPTION
	06507736AA	4	D			EGG			Secondary Runner Valve To Intake Plenum, Mounting
		4	D			EGG			Manifold Tuning Valve Cover To Intake Plenum, Mounting
6	04593573AB	1	D			EGG			PAD, Engine
7	04593562AA	2	D			EGG			STRUT, Intake Manifold
8									NUT, Hex Flange Serration, M6x1
	06502493	2	D			EGG			Intake Manifold Bracket To Throttle Body, Mounting
		2	D			EGG			Intake Manifold Strut Bracket, Mounting
9	06101503	4	D			EGG			BOLT AND WASHER, Hex Head, M10X1.50X25.00, Intake Manifold Strut Bracket, Mounting
10	04593839AB	1	D			EGG			ACTUATOR, INTAKE SHORT RUNNING VALVE
11	04591945AD	1	D			EGG			BRACKET, Intake Manifold
12	06507726AA	2	D			EGG			STUD, Double Ended, Throttle Body To Intake Plenum, Mounting
13	06507725AA	2	D			EGG			BOLT, Hex Head Flat Washer, M5.74X1.81X49.00, Throttle Body To Intake Plenum, Mounting
14	04861691AA	1	D			EGG			THROTTLE BODY
15	04591873AA	1	D			EGG			GASKET, Throttle Body
16	05033310AC	1	D			EGG			SENSOR, MAP

DODGE CHALLENGER (LC)

SERIES	LINE	BODY	ENGINE	TRANSMISSION
H = HIGHLINE	D = DODGE	22 = 2-DR SEDAN TYPE #2	EGG = 3.5L High Output V6 24V MPI Engine	DEC = 6-Speed Manual TREMEC Transmission
P = PREMIUM			ESF = 6.1L SRT HEMI V8 Engine	DGJ = 5-Speed Auto W5A580 Transmission
X = SPECIAL			EZC = 5.7L HEMI VCT Engine	DGV = 4-Spd. Automatic VLP 42RLE Trans
			EZD = 5.7L Hemi VCT MDS Engine	

AR = use ase required - = Non illustrrated part

Lower Intake Manifold 3.5L [EGG]
Figure 009EGG-1065

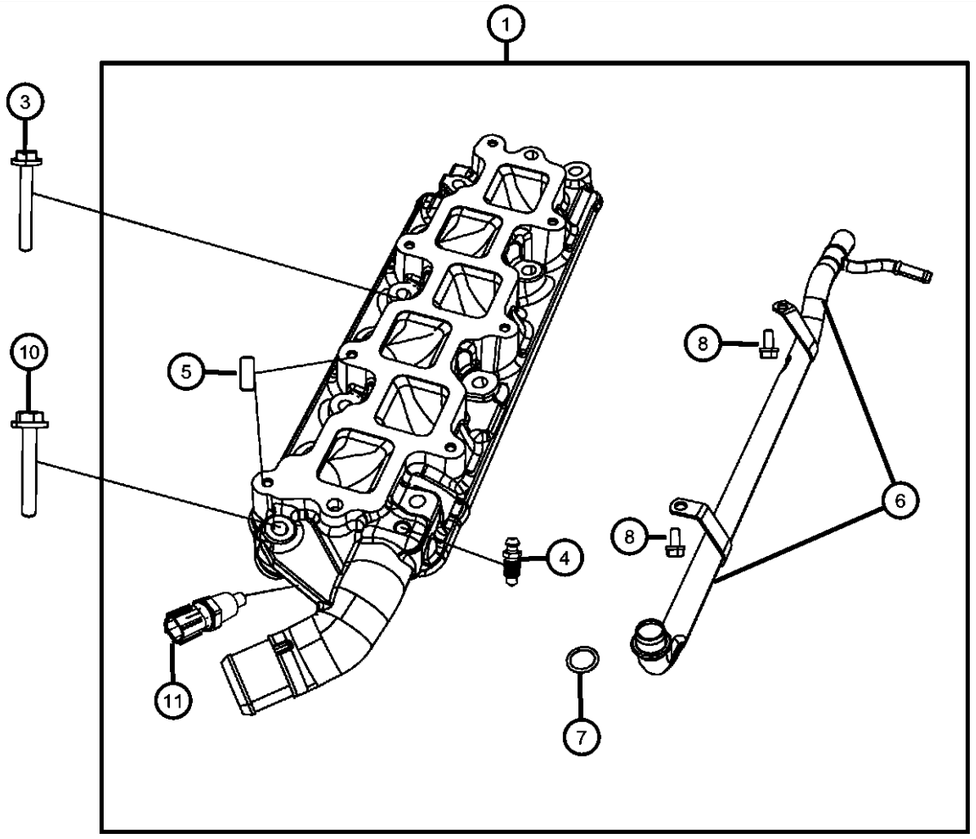

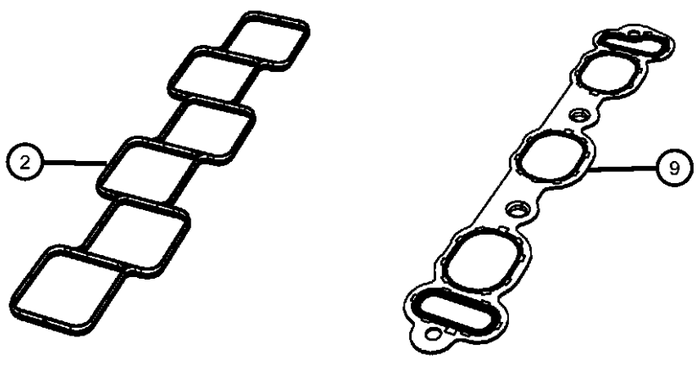

ITEM	PART NUMBER	QTY	LINE	SERIES	BODY	ENGINE	TRANS	TRIM	DESCRIPTION

NOTE:
Sales Codes:
[DEC] = 6-Speed Manual TR6060 Transmission
[DEH] = 6-Speed Manual NSG370 Transmission
[DF9] = AHS-T RWD Automatic Transmission
[DGJ] = 5-Speed Automatic W5A580 Transmission
[DGQ] = 5-Speed Automatic 545RFE Transmission
[DGV] = 4-Speed Automatic VLP 42RLE Transmission
[DG0] = All Automatic Transmissions
[DHR] = Single Speed On Demand MP3010 Transfer Case
[DHU] = AWD Electronic Shift Two Speed NVG 244 H/D Transfer Case
[DHZ] = Full Time Single Mode NVG 140 Transfer Case
[EGG] = 3.5L High Output V-6 24 Valve MPI Engine
[EGS] = 4.0L SOHC V-6 Engine
[EG0] = All 3.5L And 4.0L 6-Cylinder Engines
[EKG] = 3.7L [Magnum] V-6 Engine
[EK0] = All 3.7L 6-Cylinder Gas Engines
[ENS] = 2.8L 4 Cylinder Turbo Diesel Engine
[EN0] = All 2.8L 4 Cylinder Turbo Diesel Engines
[ESF] = 6.1L SRT V-8 Hemi Engine
[ES0] = All 6.1L 8-Cylinder Engines
[EVA] = 4.7L [Magnum] V-8 Engine
[EVD] = 4.7L V-8 FFV Engine
[EVE] = 4.7L V-8 Engine
[EV0] = All 4.7L 8-Cylinder Engines
[EZA] = 5.7L Hemi V-8 Engine
[EZB] = 5.7L Hemi V-8 Multi-Displacement Engine
[EZC] = 5.7L Hemi V-8 VCT Non Multi-Displacement Engine
[EZD] = 5.7L Hemi V-8 VCT Multi-Displacement Engine
[EZE] = 5.7L Hemi V-8 HEV Engine
[EZ0] = All 5.7L 8-Cylinder Engines
[NAA] = Federal Emissions
[NAE] = California Emissions
[NAS] = 50 State Emissions
[NA1] = Export Emissions
[NHK] = Engine Cylinder Block Heater
[XEF] = Transfer Case Skid Plate Sheild

1	04792184AG	1	D			EG0			MANIFOLD, Intake
2	04663851	1	D			EGG			GASKET, Intake Plenum
3	06101746	2	D			EGG			BOLT AND WASHER, Hex Head, M8x1.25x65, Lower Intake Manifold To Cylinder Head, Mounting
4	05174319AA	1	D						SCREW, Bleeder, Coolant Bleed
5	06100902	1	D			EGG	DGV		DOWEL PIN
6	04792185AC	1	D			EG0			TUBE, Heater Feed

DODGE CHALLENGER (LC)

SERIES	LINE	BODY	ENGINE	TRANSMISSION
H = HIGHLINE P = PREMIUM X = SPECIAL	D = DODGE	22 = 2-DR SEDAN TYPE #2	EGG = 3.5L High Output V6 24V MPI Engine ESF = 6.1L SRT HEMI V8 Engine EZC = 5.7L HEMI VCT Engine EZD = 5.7L Hemi VCT MDS Engine	DEC = 6-Speed Manual TREMEC Transmission DGJ = 5-Speed Auto W5A580 Transmission DGV = 4-Spd. Automatic VLP 42RLE Trans

AR = use ase required - = Non illustrrated part

Lower Intake Manifold 3.5L [EGG]
Figure 009EGG-1065

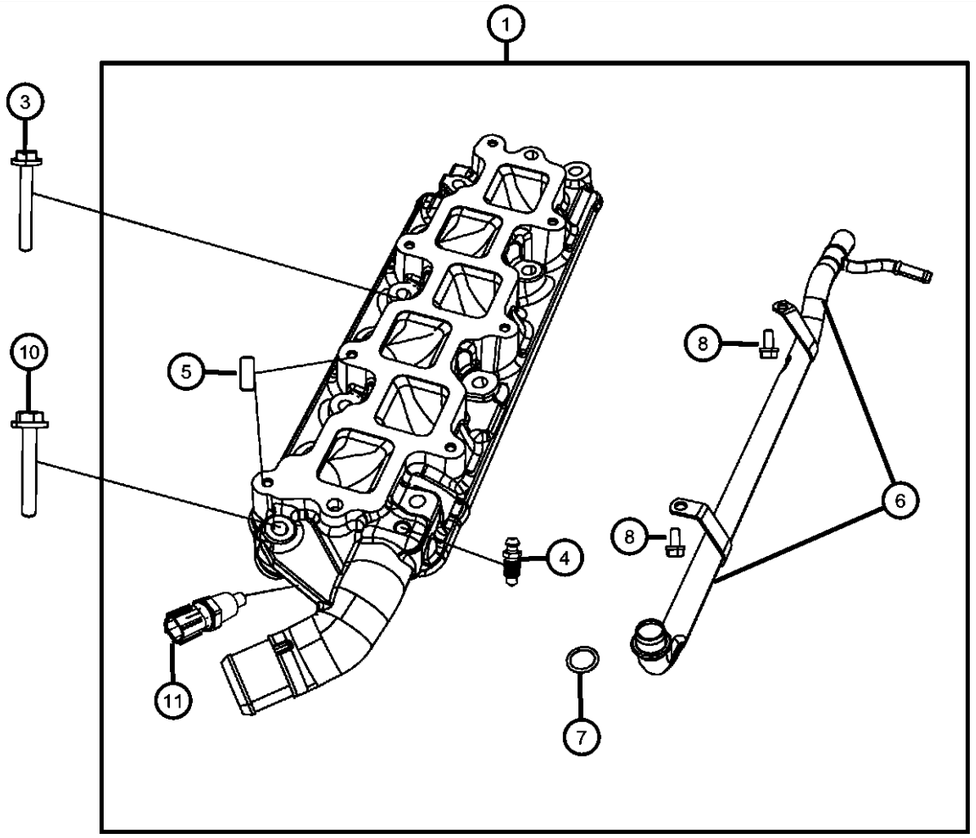

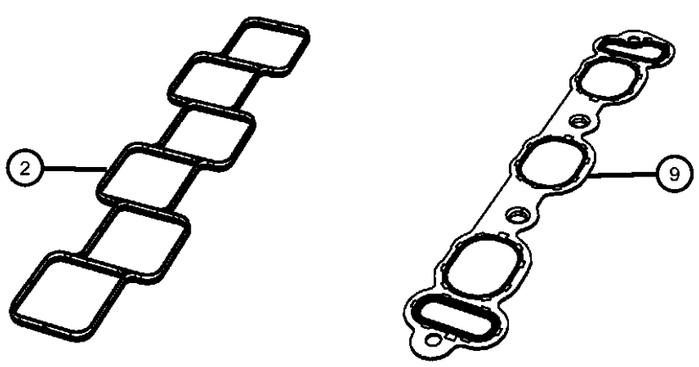

ITEM	PART NUMBER	QTY	LINE	SERIES	BODY	ENGINE	TRANS	TRIM	DESCRIPTION
7	06505692AA	1	D			EG0			O RING, Heater Feed Tube
8	06100264	2	D			EG0			BOLT AND CONED WASHER, Hex Head, M6x14x12.5, Heater Feed Tube To Lower Intake Manifold, Mounting
9	04663852AB	2	D			EGG			GASKET, Intake Manifold
10	06101745	6	D			EGG			BOLT AND WASHER, Hex Head, M8X1.25X55.00, Lower Intake Manifold To Cylinder Head, Mounting
11	05149096AB	1	D			EG0			SENSOR, Coolant Temperature

DODGE CHALLENGER (LC)

SERIES	LINE	BODY	ENGINE	TRANSMISSION
H = HIGHLINE	D = DODGE	22 = 2-DR SEDAN TYPE #2	EGG = 3.5L High Output V6 24V MPI Engine	DEC = 6-Speed Manual TREMEC Transmission
P = PREMIUM			ESF = 6.1L SRT HEMI V8 Engine	DGJ = 5-Speed Auto W5A580 Transmission
X = SPECIAL			EZC = 5.7L HEMI VCT Engine	DGV = 4-Spd. Automatic VLP 42RLE Trans
			EZD = 5.7L Hemi VCT MDS Engine	

AR = use ase required - = Non illustrrated part

Crankcase Ventilation 3.5L [EGG]
Figure 009EGG-1105

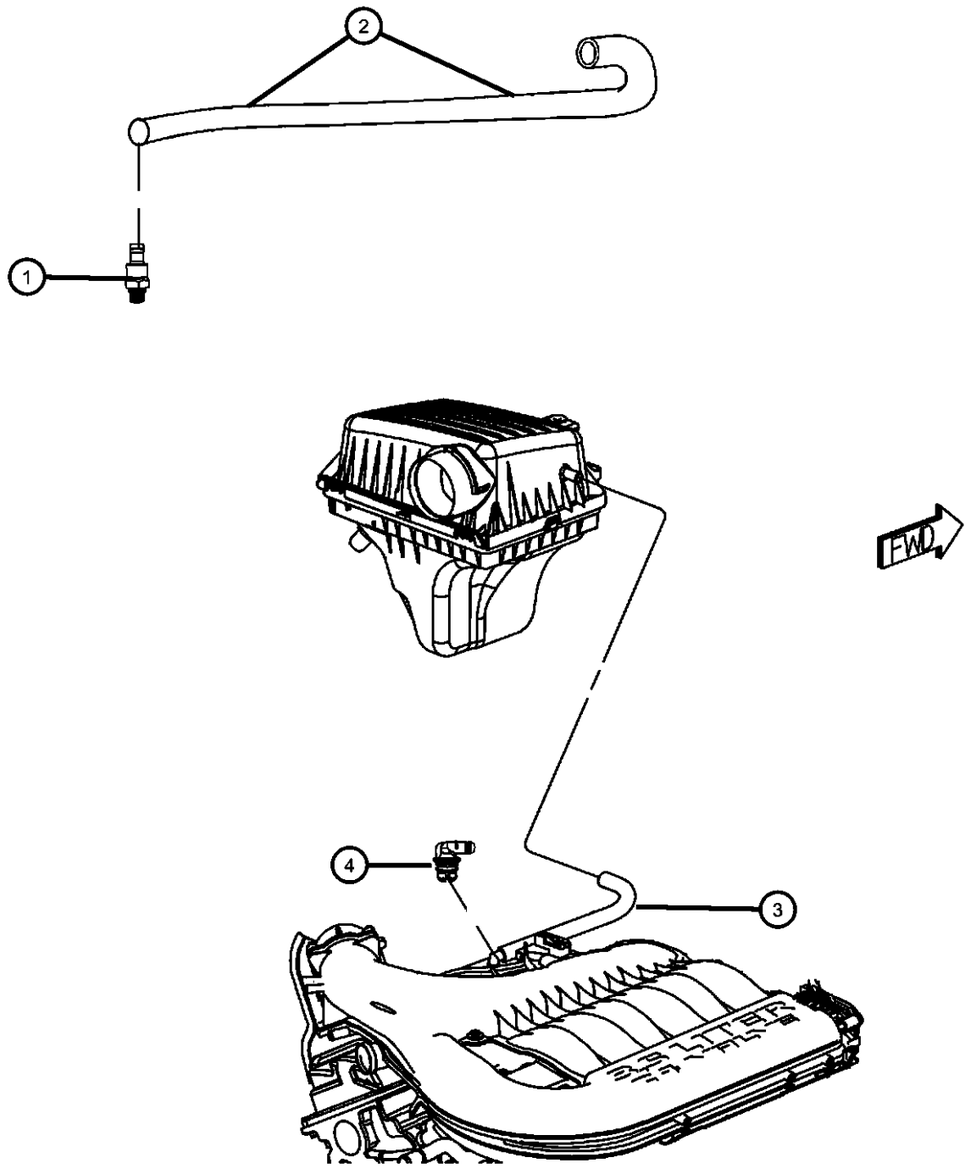

ITEM	PART NUMBER	QTY	LINE	SERIES	BODY	ENGINE	TRANS	TRIM	DESCRIPTION

NOTE:
Sales Codes:
[DEC] = 6-Speed Manual TR6060 Transmission
[DEH] = 6-Speed Manual NSG370 Transmission
[DF9] = AHS-T RWD Automatic Transmission
[DGJ] = 5-Speed Automatic W5A580 Transmission
[DGQ] = 5-Speed Automatic 545RFE Transmission
[DGV] = 4-Speed Automatic VLP 42RLE Transmission
[DG0] = All Automatic Transmissions
[DHR] = Single Speed On Demand MP3010 Transfer Case
[DHU] = AWD Electronic Shift Two Speed NVG 244 H/D Transfer Case
[DHZ] = Full Time Single Mode NVG 140 Transfer Case
[EGG] = 3.5L High Output V-6 24 Valve MPI Engine
[EGS] = 4.0L SOHC V-6 Engine
[EG0] = All 3.5L And 4.0L 6-Cylinder Engines
[EKG] = 3.7L [Magnum] V-6 Engine
[EK0] = All 3.7L 6-Cylinder Gas Engines
[ENS] = 2.8L 4 Cylinder Turbo Diesel Engine
[EN0] = All 2.8L 4 Cylinder Turbo Diesel Engines
[ESF] = 6.1L SRT V-8 Hemi Engine
[ES0] = All 6.1L 8-Cylinder Engines
[EVA] = 4.7L [Magnum] V-8 Engine
[EVD] = 4.7L V-8 FFV Engine
[EVE] = 4.7L V-8 Engine
[EV0] = All 4.7L 8-Cylinder Engines
[EZA] = 5.7L Hemi V-8 Engine
[EZB] = 5.7L Hemi V-8 Multi-Displacement Engine
[EZC] = 5.7L Hemi V-8 VCT Non Multi-Displacement Engine
[EZD] = 5.7L Hemi V-8 VCT Multi-Displacement Engine
[EZE] = 5.7L Hemi V-8 HEV Engine
[EZ0] = All 5.7L 8-Cylinder Engines
[NAA] = Federal Emissions
[NAE] = California Emissions
[NAS] = 50 State Emissions
[NA1] = Export Emissions
[NHK] = Engine Cylinder Block Heater
[XEF] = Transfer Case Skid Plate Sheild

1	04792962AA	1	D			EGG			VALVE, PCV
2	04792850AA	1	D			EGG			HOSE, PCV Tube
3	04892336AA	1	D			EGG			HOSE, Make Up Air
4		1							NIPPLE, Crankcase Vent, Serviced With Make Up Air Hose, (NOT SERVICED)

DODGE CHALLENGER (LC)

SERIES	LINE	BODY	ENGINE	TRANSMISSION
H = HIGHLINE P = PREMIUM X = SPECIAL	D = DODGE	22 = 2-DR SEDAN TYPE #2	EGG = 3.5L High Output V6 24V MPI Engine ESF = 6.1L SRT HEMI V8 Engine EZC = 5.7L HEMI VCT Engine EZD = 5.7L Hemi VCT MDS Engine	DEC = 6-Speed Manual TREMEC Transmission DGJ = 5-Speed Auto W5A580 Transmission DGV = 4-Spd. Automatic VLP 42RLE Trans

AR = use ase required - = Non illustrrated part

Engine Mounting Right Side RWD/2WD 3.5L [EGG]
Figure 009EGG-1220

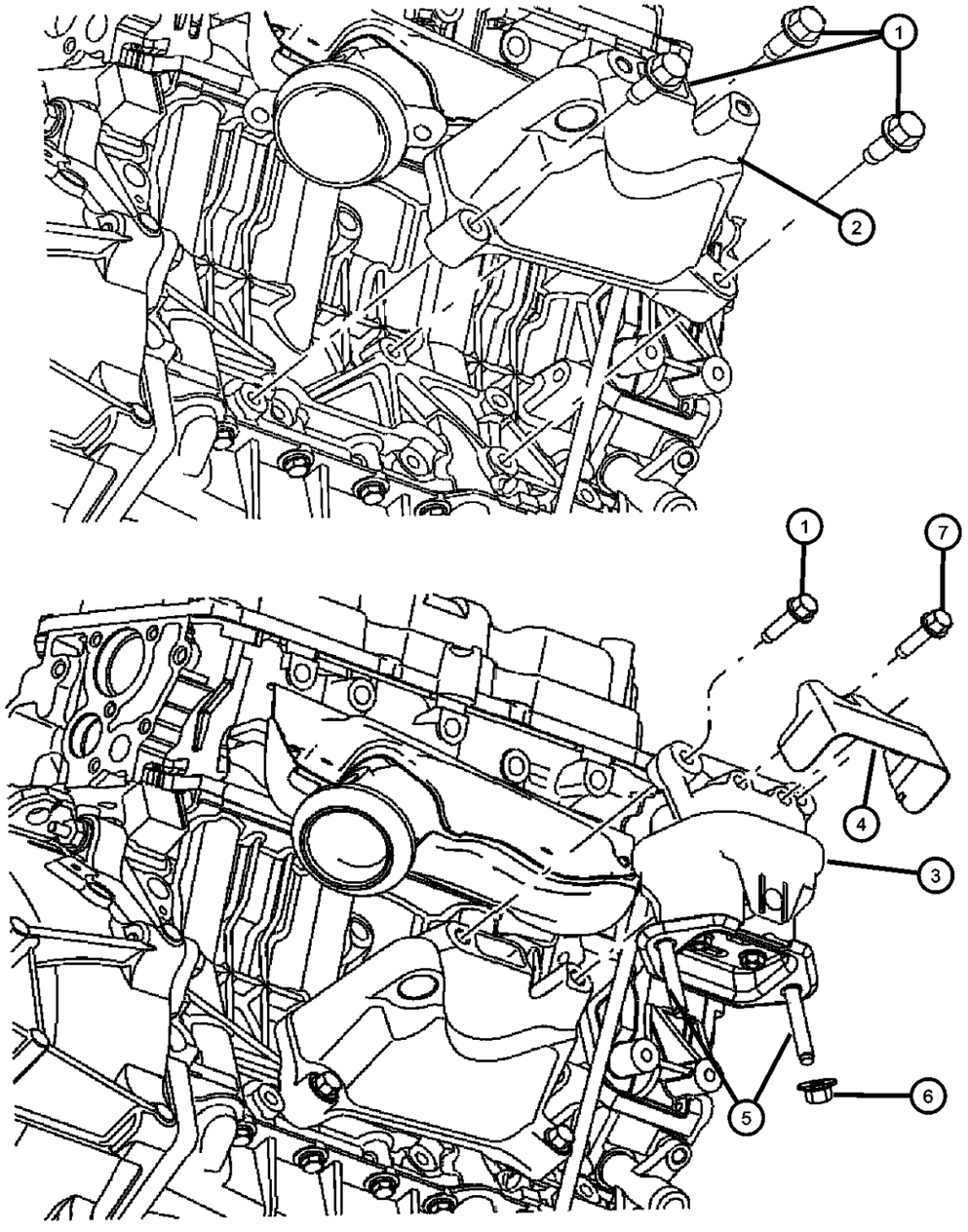

ITEM	PART NUMBER	QTY	LINE	SERIES	BODY	ENGINE	TRANS	TRIM	DESCRIPTION

NOTE:
Sales Codes:
[DEC] = 6-Speed Manual TR6060 Transmission
[DEH] = 6-Speed Manual NSG370 Transmission
[DF9] = AHS-T RWD Automatic Transmission
[DGJ] = 5-Speed Automatic W5A580 Transmission
[DGQ] = 5-Speed Automatic 545RFE Transmission
[DGV] = 4-Speed Automatic VLP 42RLE Transmission
[DG0] = All Automatic Transmissions
[DHR] = Single Speed On Demand MP3010 Transfer Case
[DHU] = AWD Electronic Shift Two Speed NVG 244 H/D Transfer Case
[DHZ] = Full Time Single Mode NVG 140 Transfer Case
[EGG] = 3.5L High Output V-6 24 Valve MPI Engine
[EGS] = 4.0L SOHC V-6 Engine
[EG0] = All 3.5L And 4.0L 6-Cylinder Engines
[EKG] = 3.7L [Magnum] V-6 Engine
[EK0] = All 3.7L 6-Cylinder Gas Engines
[ENS] = 2.8L 4 Cylinder Turbo Diesel Engine
[EN0] = All 2.8L 4 Cylinder Turbo Diesel Engines
[ESF] = 6.1L SRT V-8 Hemi Engine
[ES0] = All 6.1L 8-Cylinder Engines
[EVA] = 4.7L [Magnum] V-8 Engine
[EVD] = 4.7L V-8 FFV Engine
[EVE] = 4.7L V-8 Engine
[EV0] = All 4.7L 8-Cylinder Engines
[EZA] = 5.7L Hemi V-8 Engine
[EZB] = 5.7L Hemi V-8 Multi-Displacement Engine
[EZC] = 5.7L Hemi V-8 VCT Non Multi-Displacement Engine
[EZD] = 5.7L Hemi V-8 VCT Multi-Displacement Engine
[EZE] = 5.7L Hemi V-8 HEV Engine
[EZ0] = All 5.7L 8-Cylinder Engines
[NAA] = Federal Emissions
[NAE] = California Emissions
[NAS] = 50 State Emissions
[NA1] = Export Emissions
[NHK] = Engine Cylinder Block Heater
[XEF] = Transfer Case Skid Plate Sheild

1						BOLT, Hex Flange Head, M10X1.50X55.00
	06101622	6	D		EGG	Engine Mount Bracket To Cylinder Block, Mounting
		4	D		EGG	Engine Mount To Engine Mount Bracket, Mounting
2	04578050AB	1	D		EG0	BRACKET, Engine MountRight
3	04578044AE	1	D		EGG	CUSHION, Engine Support
4	04578349AA	1	D		EG0, ES0, DGJ, DGV EZ0	SHIELD, Heat

DODGE CHALLENGER (LC)

SERIES	LINE	BODY	ENGINE	TRANSMISSION
H = HIGHLINE P = PREMIUM X = SPECIAL	D = DODGE	22 = 2-DR SEDAN TYPE #2	EGG = 3.5L High Output V6 24V MPI Engine ESF = 6.1L SRT HEMI V8 Engine EZC = 5.7L HEMI VCT Engine EZD = 5.7L Hemi VCT MDS Engine	DEC = 6-Speed Manual TREMEC Transmission DGJ = 5-Speed Auto W5A580 Transmission DGV = 4-Spd. Automatic VLP 42RLE Trans

Engine Mounting Right Side RWD/2WD 3.5L [EGG]
Figure 009EGG-1220

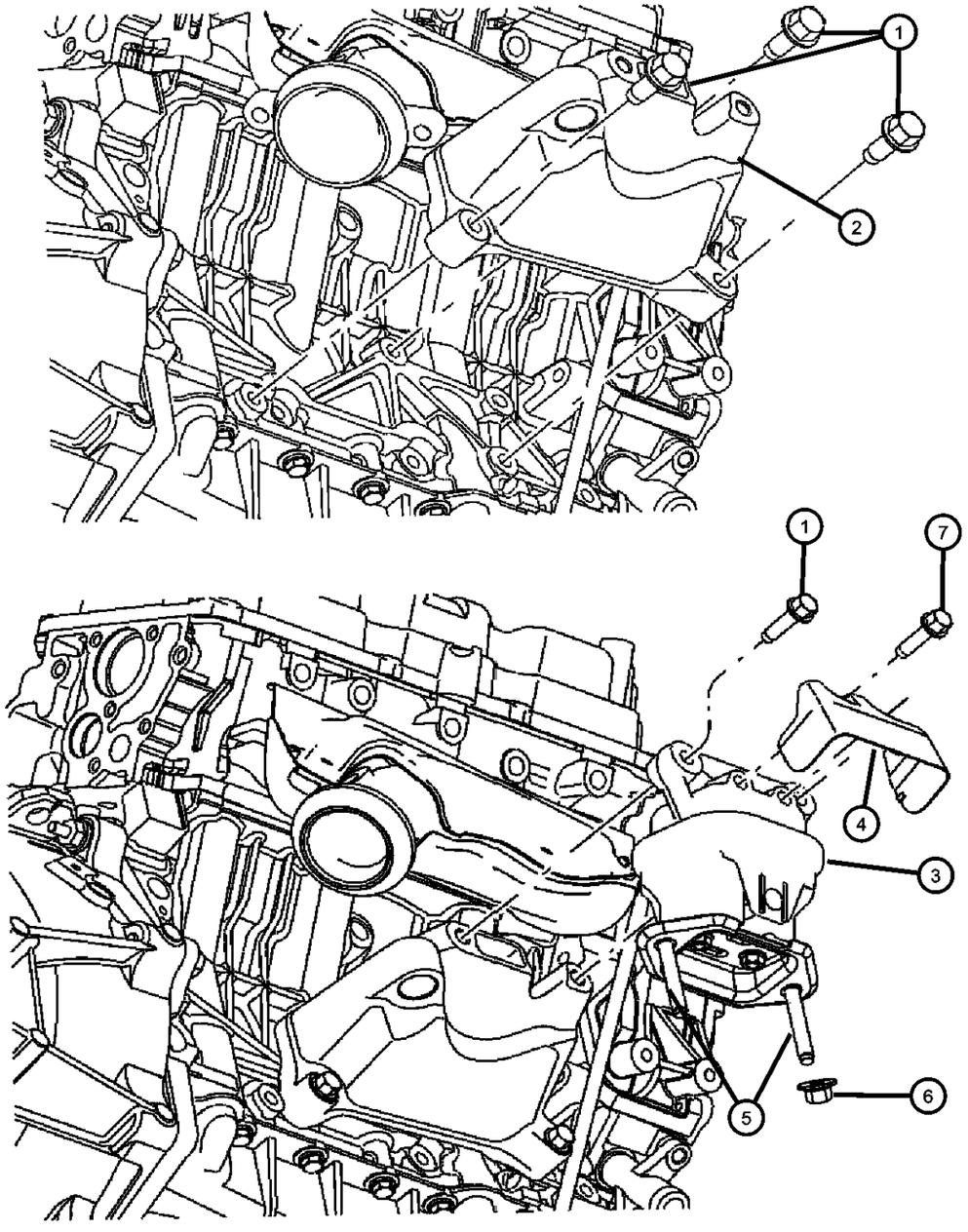

ITEM	PART NUMBER	QTY	LINE	SERIES	BODY	ENGINE	TRANS	TRIM	DESCRIPTION
5	06508025AA	4	D			EG0, ES0, EZ0	DGJ, DGV		STUD, Double Ended, Engine Mount To Cradle, Mounting
6	06508120AA	4	D						NUT, M10x1.50, Engine Mount To Cradle, Mounting
7	06507210AA	4	D				DGJ, DGV		BOLT, Hex Head, M6X1.00X11.00, Heat Shield To Engine Mount, Mounting

DODGE CHALLENGER (LC)

SERIES	LINE	BODY	ENGINE	TRANSMISSION
H = HIGHLINE	D = DODGE	22 = 2-DR SEDAN TYPE #2	EGG = 3.5L High Output V6 24V MPI Engine	DEC = 6-Speed Manual TREMEC Transmission
P = PREMIUM			ESF = 6.1L SRT HEMI V8 Engine	DGJ = 5-Speed Auto W5A580 Transmission
X = SPECIAL			EZC = 5.7L HEMI VCT Engine	DGV = 4-Spd. Automatic VLP 42RLE Trans
			EZD = 5.7L Hemi VCT MDS Engine	

Engine Mounting Left Side RWD/2WD 3.5L [EGG]
Figure 009EGG-1235

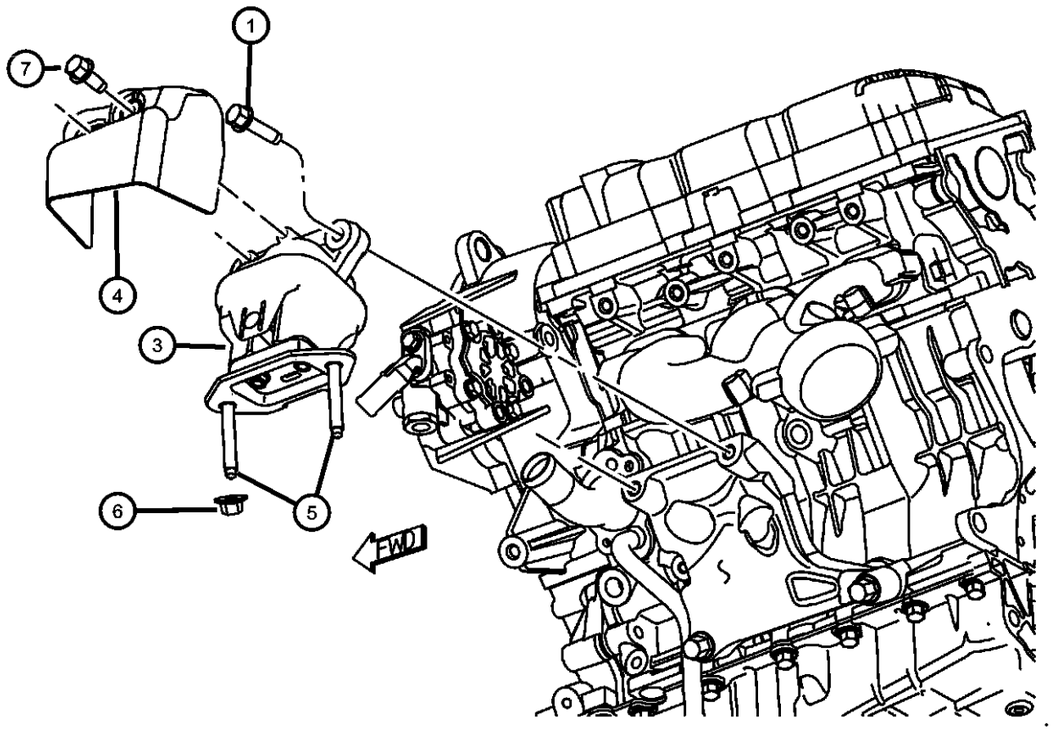

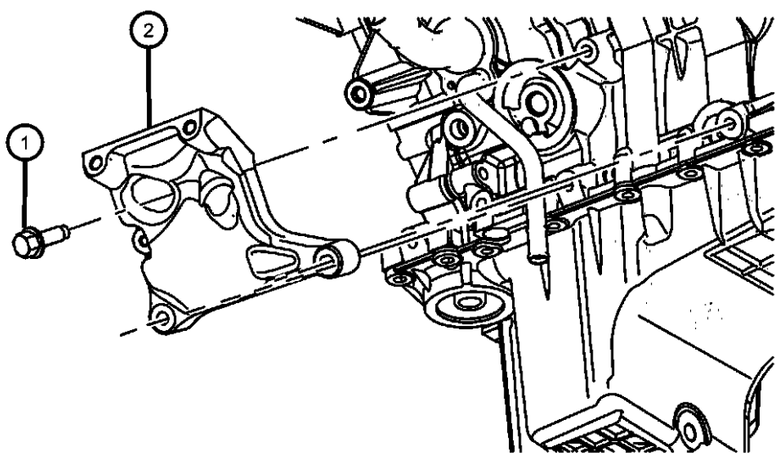

ITEM	PART NUMBER	QTY	LINE	SERIES	BODY	ENGINE	TRANS	TRIM	DESCRIPTION

NOTE:
Sales Codes:
[DEC] = 6-Speed Manual TR6060 Transmission
[DEH] = 6-Speed Manual NSG370 Transmission
[DF9] = AHS-T RWD Automatic Transmission
[DGJ] = 5-Speed Automatic W5A580 Transmission
[DGQ] = 5-Speed Automatic 545RFE Transmission
[DGV] = 4-Speed Automatic VLP 42RLE Transmission
[DG0] = All Automatic Transmissions
[DHR] = Single Speed On Demand MP3010 Transfer Case
[DHU] = AWD Electronic Shift Two Speed NVG 244 H/D Transfer Case
[DHZ] = Full Time Single Mode NVG 140 Transfer Case
[EGG] = 3.5L High Output V-6 24 Valve MPI Engine
[EGS] = 4.0L SOHC V-6 Engine
[EG0] = All 3.5L And 4.0L 6-Cylinder Engines
[EKG] = 3.7L [Magnum] V-6 Engine
[EK0] = All 3.7L 6-Cylinder Gas Engines
[ENS] = 2.8L 4 Cylinder Turbo Diesel Engine
[EN0] = All 2.8L 4 Cylinder Turbo Diesel Engines
[ESF] = 6.1L SRT V-8 Hemi Engine
[ES0] = All 6.1L 8-Cylinder Engines
[EVA] = 4.7L [Magnum] V-8 Engine
[EVD] = 4.7L V-8 FFV Engine
[EVE] = 4.7L V-8 Engine
[EV0] = All 4.7L 8-Cylinder Engines
[EZA] = 5.7L Hemi V-8 Engine
[EZB] = 5.7L Hemi V-8 Multi-Displacement Engine
[EZC] = 5.7L Hemi V-8 VCT Non Multi-Displacement Engine
[EZD] = 5.7L Hemi V-8 VCT Multi-Displacement Engine
[EZE] = 5.7L Hemi V-8 HEV Engine
[EZ0] = All 5.7L 8-Cylinder Engines
[NAA] = Federal Emissions
[NAE] = California Emissions
[NAS] = 50 State Emissions
[NA1] = Export Emissions
[NHK] = Engine Cylinder Block Heater
[XEF] = Transfer Case Skid Plate Sheild

ITEM	PART NUMBER	QTY	LINE	SERIES	BODY	ENGINE	TRANS	TRIM	DESCRIPTION
1									BOLT, Hex Flange Head, M10X1.50X55.00
	06101622	6	D			EGG			Engine Mount Bracket To Cylinder Block, Mounting
		4	D			EGG			Engine Mount To Engine Mount Bracket, Mounting
2	04578051AC	1	D			EGG			BRACKET, Engine MountLeft
3	04578044AE	1	D			EGG			CUSHION, Engine Support
4	04578331AA	1	D			EG0, EZ0	DGJ, DGV		SHIELD, HeatLeft

DODGE CHALLENGER (LC)

SERIES	LINE	BODY	ENGINE	TRANSMISSION
H = HIGHLINE P = PREMIUM X = SPECIAL	D = DODGE	22 = 2-DR SEDAN TYPE #2	EGG = 3.5L High Output V6 24V MPI Engine ESF = 6.1L SRT HEMI V8 Engine EZC = 5.7L HEMI VCT Engine EZD = 5.7L Hemi VCT MDS Engine	DEC = 6-Speed Manual TREMEC Transmission DGJ = 5-Speed Auto W5A580 Transmission DGV = 4-Spd. Automatic VLP 42RLE Trans

AR = use ase required - = Non illustrrated part

Engine Mounting Left Side RWD/2WD 3.5L [EGG]
Figure 009EGG-1235

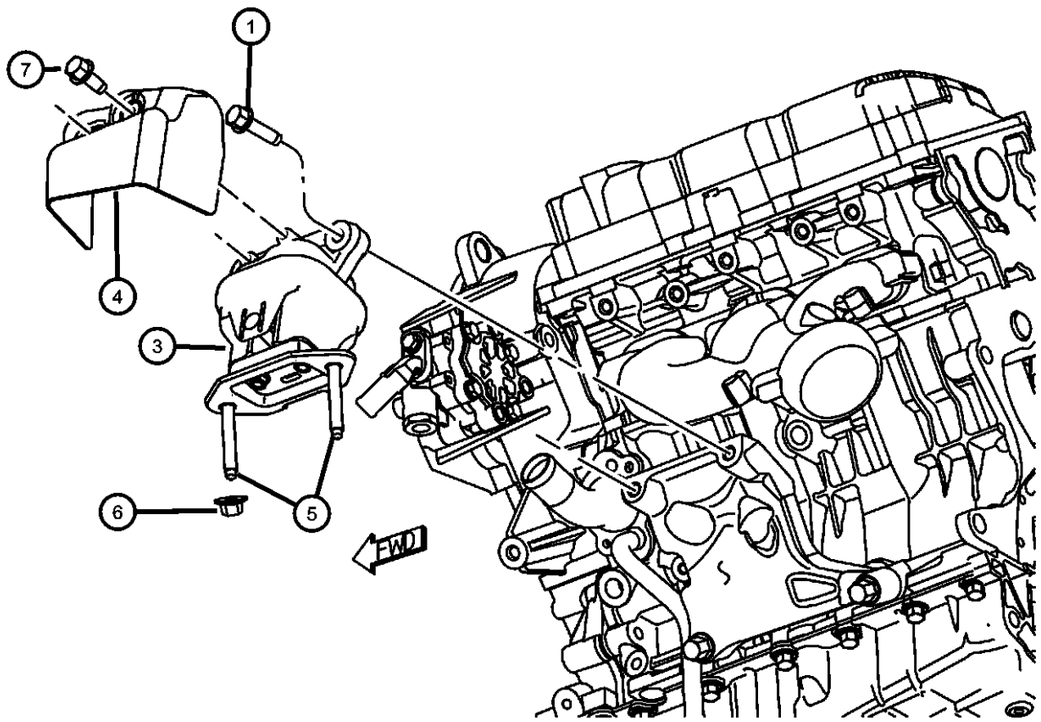

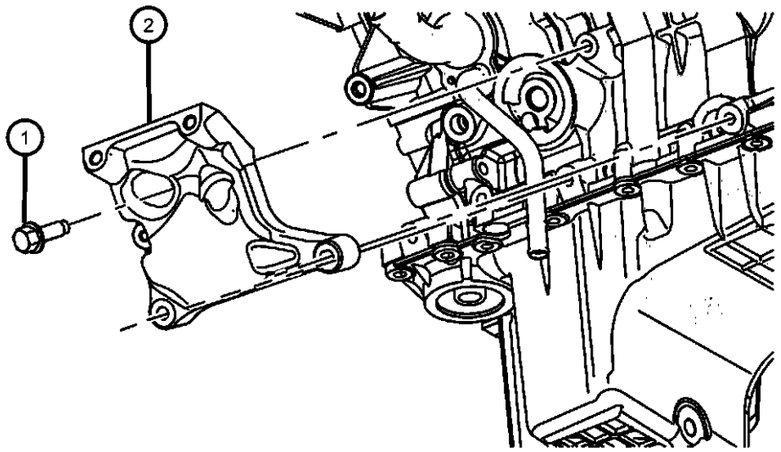

ITEM	PART NUMBER	QTY	LINE	SERIES	BODY	ENGINE	TRANS	TRIM	DESCRIPTION
5	06508025AA	4	D			EG0, ES0, EZ0	DGJ, DGV		STUD, Double Ended, Engine Mount To Cradle, Mounting
6	06508120AA	4	D						NUT, M10x1.50, Engine Mount To Cradle, Mounting
7	06507210AA	4	D				DGJ, DGV		BOLT, Hex Head, M6X1.00X11.00, Heat Sheild To Engine Mount, Mounting

DODGE CHALLENGER (LC)

SERIES	LINE	BODY	ENGINE	TRANSMISSION
H = HIGHLINE P = PREMIUM X = SPECIAL	D = DODGE	22 = 2-DR SEDAN TYPE #2	EGG = 3.5L High Output V6 24V MPI Engine ESF = 6.1L SRT HEMI V8 Engine EZC = 5.7L HEMI VCT Engine EZD = 5.7L Hemi VCT MDS Engine	DEC = 6-Speed Manual TREMEC Transmission DGJ = 5-Speed Auto W5A580 Transmission DGV = 4-Spd. Automatic VLP 42RLE Trans

AR = use ase required - = Non illustrrated part

Group - 009ESF

6.1L Gas; Engine

009ESF-100 Engine Identification	**009ESF-1000** Manifolds and Vacuum Fittings	**009ESF-1100** Crankcase Ventilation	**009ESF-1200** Engine Mounting
009ESF-200 Cylinder Head	**009ESF-300** Cylinder Block	**009ESF-400** Crankshaft, Piston, Drive Plate, Flywheel, and Damper	**009ESF-500** Camshaft and Valve
009ESF-600 Timing Belt/Chain and Cover and Balance Shaft	**009ESF-700** Engine Oiling, Oil Pan and Indicator (Dipstick)		

Group - 009ESF 6.1L Gas; Engine

Illustration Title — Group-Fig. No.

Engine Identification
Engine Identification 6.1L [ESF] ..... Fig. 009ESF - 105
Engine Assembly 6.1L [ESF] ..... Fig. 009ESF - 115
Engine Gasket Kits 6.1L [ESF] ..... Fig. 009ESF - 135
Engine Covers And Related Parts 6.1L [ESF] ..... Fig. 009ESF - 145

Cylinder Head
Cylinder Head Covers 6.1L [ESF] ..... Fig. 009ESF - 205
Cylinder Heads 6.1L [ESF] ..... Fig. 009ESF - 225

Cylinder Block
Engine Cylinder Block And Hardware 6.1L [ESF] ..... Fig. 009ESF - 305

Crankshaft, Piston, Drive Plate, Flywheel, and Damper
Crankshaft, Crankshaft Bearings, Damper And Flywheel 6.1L [ESF] ..... Fig. 009ESF - 405
Pistons, Connecting Rods, And Connecting Rod Bearings 6.1L [ESF] ..... Fig. 009ESF - 425

Camshaft and Valve
Camshaft And Valvetrain 6.1L [ESF] ..... Fig. 009ESF - 505

Timing Belt/Chain and Cover and Balance Shaft
Timing Case Cover 6.1L [ESF] ..... Fig. 009ESF - 605
Timing System 6.1L [ESF] ..... Fig. 009ESF - 625

Engine Oiling, Oil Pan and Indicator (Dipstick)
Engine Oiling Pump 6.1L [ESF] ..... Fig. 009ESF - 705
Engine Oil Pan, Engine Oil Level Indicator And Related Parts 6.1L [ESF] ..... Fig. 009ESF - 725
Engine Oil, Engine Oil Filter And Adapter 6.1L [ESF] ..... Fig. 009ESF - 745

Manifolds and Vacuum Fittings
Exhaust Manifolds And Heat Shields 6.1L [ESF] ..... Fig. 009ESF - 1005
Intake Manifold 6.1L [ESF] ..... Fig. 009ESF - 1025

Crankcase Ventilation
Crankcase Ventilation 6.1L [ESF] ..... Fig. 009ESF - 1105

Engine Mounting
Engine Mounting Right Side RWD/2WD 6.1L [ESF] ..... Fig. 009ESF - 1220
Engine Mounting Left Side RWD/2WD 6.1L [ESF] ..... Fig. 009ESF - 1235

Engine Identification 6.1L [ESF]
Figure 009ESF-105

ITEM	PART NUMBER	QTY	LINE	SERIES	BODY	ENGINE	TRANS	TRIM	DESCRIPTION
1		4							LABEL, Engine Identification, See Note:, (NOT SERVICED)

Note:
The Engine Identification Label Is Attached To One Of The Cylinder Head Covers.
The Production Engine Part Number Is Not A Servicable Part Number.
A Engine Is Usally Serviced By A Long Block Or Short Block Engine.

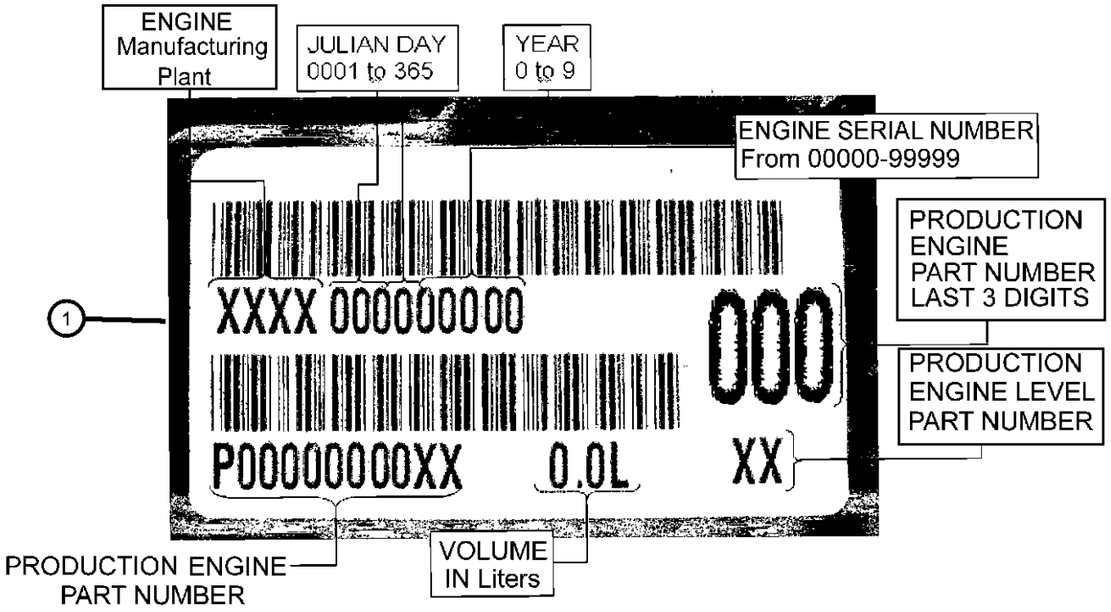

DODGE CHALLENGER (LC)

SERIES	LINE	BODY	ENGINE	TRANSMISSION
H = HIGHLINE P = PREMIUM X = SPECIAL	D = DODGE	22 = 2-DR SEDAN TYPE #2	EGG = 3.5L High Output V6 24V MPI Engine ESF = 6.1L SRT HEMI V8 Engine EZC = 5.7L HEMI VCT Engine EZD = 5.7L Hemi VCT MDS Engine	DEC = 6-Speed Manual TREMEC Transmission DGJ = 5-Speed Auto W5A580 Transmission DGV = 4-Spd. Automatic VLP 42RLE Trans

Engine Assembly 6.1L [ESF]
Figure 009ESF-115

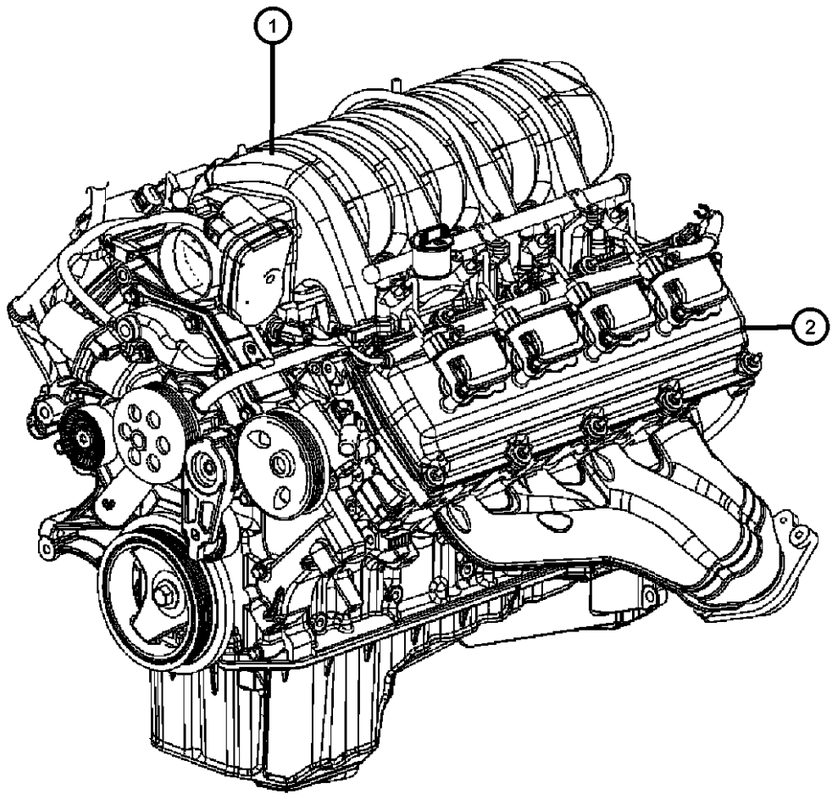

ITEM	PART NUMBER	QTY	LINE	SERIES	BODY	ENGINE	TRANS	TRIM	DESCRIPTION

NOTE:
The Engine Identifaction Label Contains: The Production Assembly Part Number And Displacement.
Sales Codes:
[DEC] = 6-Speed Manual TR6060 Transmission
[DEH] = 6-Speed Manual NSG370 Transmission
[DF9] = AHS-T RWD Automatic Transmission
[DGJ] = 5-Speed Automatic W5A580 Transmission
[DGQ] = 5-Speed Automatic 545RFE Transmission
[DGV] = 4-Speed Automatic VLP 42RLE Transmission
[DG0] = All Automatic Transmissions
[DHR] = Single Speed On Demand MP3010 Transfer Case
[DHU] = AWD Electronic Shift Two Speed NVG 244 H/D Transfer Case
[DHZ] = Full Time Single Mode NVG 140 Transfer Case
[EGS] = 4.0L SOHC V-6 Engine
[EG0] = All 4.0L Engines
[EKG] = 3.7L [Magnum] V-6 Engine
[EK0] = All 3.7L 6-Cylinder Gas Engines
[ENS] = 2.8L 4 Cylinder Turbo Diesel Engine
[EN0] = All 2.8L 4 Cylinder Turbo Diesel Engines
[ESF] = 6.1L SRT V-8 Hemi Engine
[ES0] = All 6.1L 8-Cylinder Engines
[EVA] = 4.7L [Magnum] V-8 Engine
[EVD] = 4.7L V-8 FFV Engine
[EVE] = 4.7L V-8 Engine
[EV0] = All 4.7L 8-Cylinder Engines
[EZA] = 5.7L Hemi V-8 Engine
[EZB] = 5.7L Hemi V-8 Multi-Displacement Engine
[EZC] = 5.7L Hemi V-8 VCT Non Multi-Displacement Engine
[EZD] = 5.7L Hemi V-8 VCT Multi-Displacement Engine
[EZE] = 5.7L Hemi V-8 HEV Engine
[EZ0] = All 5.7L 8-Cylinder Engines
[NAA] = Federal Emissions
[NAE] = California Emissions
[NAS] = 50 State Emissions
[NA1] = Export Emissions
[NHK] = Engine Cylinder Block Heater
[XEF] = Transfer Case Skid Plate Sheild

1	4	ENGINE, Complete, Serviced By New Short Block Only, (NOT SERVICED)
2	4	ENGINE, Long Block, (NOT SERVICED)

DODGE CHALLENGER (LC)

SERIES	LINE	BODY	ENGINE	TRANSMISSION
H = HIGHLINE P = PREMIUM X = SPECIAL	D = DODGE	22 = 2-DR SEDAN TYPE #2	EGG = 3.5L High Output V6 24V MPI Engine ESF = 6.1L SRT HEMI V8 Engine EZC = 5.7L HEMI VCT Engine EZD = 5.7L Hemi VCT MDS Engine	DEC = 6-Speed Manual TREMEC Transmission DGJ = 5-Speed Auto W5A580 Transmission DGV = 4-Spd. Automatic VLP 42RLE Trans

Engine Gasket Kits 6.1L [ESF]
Figure 009ESF-135

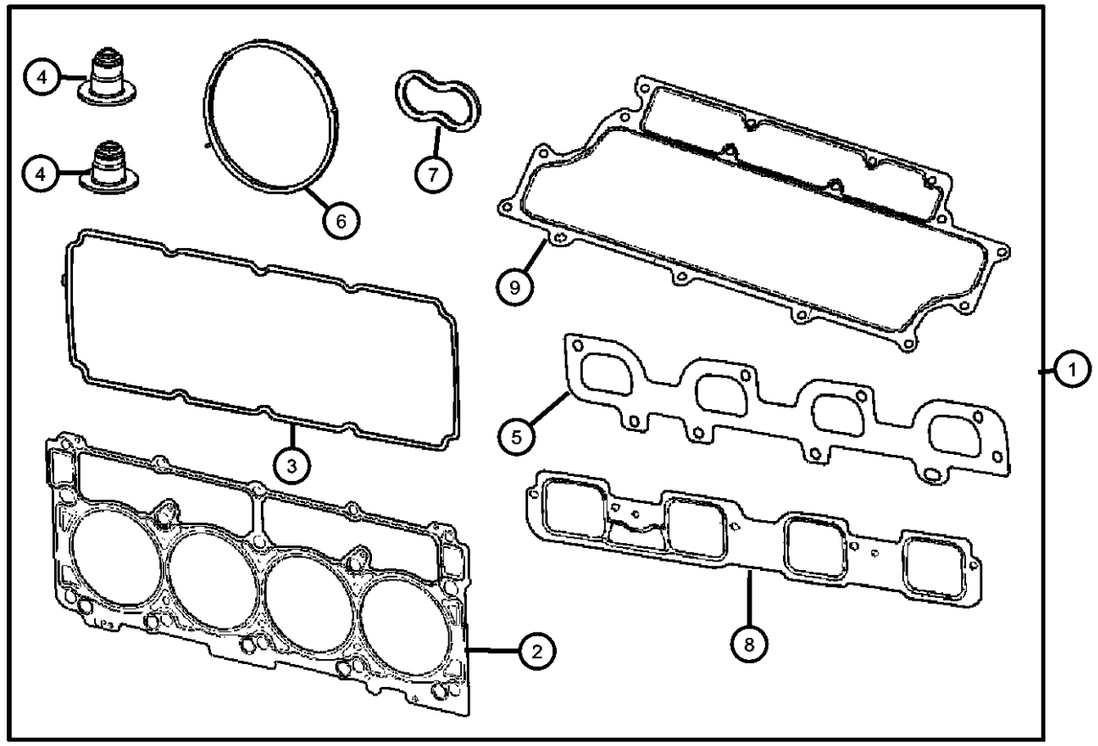

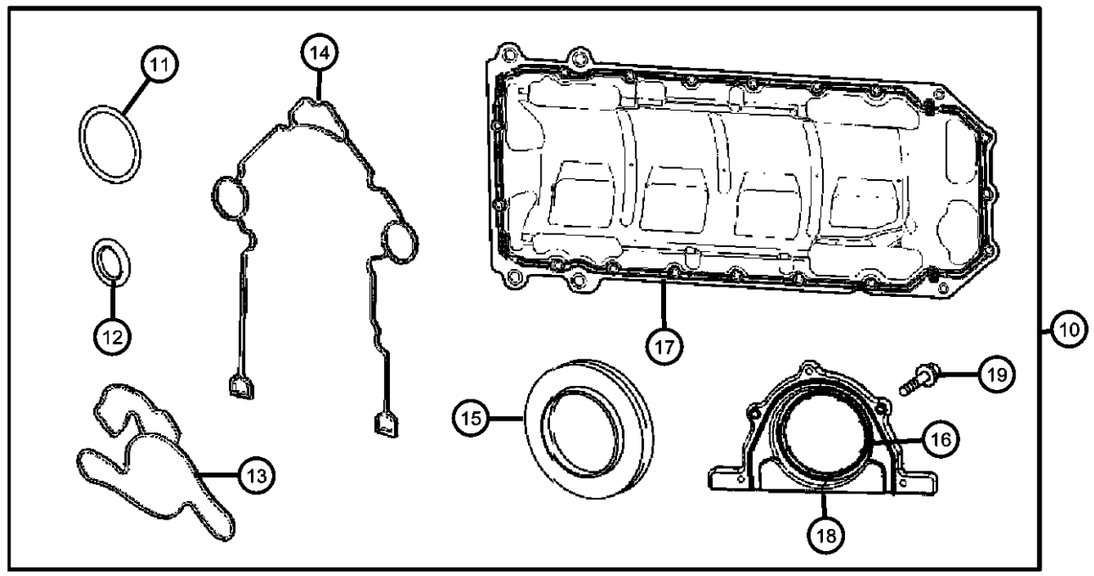

ITEM	PART NUMBER	QTY	LINE	SERIES	BODY	ENGINE	TRANS	TRIM	DESCRIPTION

NOTE:
Sales Codes:
[DEC] = 6-Speed Manual TR6060 Transmission
[DEH] = 6-Speed Manual NSG370 Transmission
[DF9] = AHS-T RWD Automatic Transmission
[DGJ] = 5-Speed Automatic W5A580 Transmission
[DGQ] = 5-Speed Automatic 545RFE Transmission
[DGV] = 4-Speed Automatic VLP 42RLE Transmission
[DG0] = All Automatic Transmissions
[DHR] = Single Speed On Demand MP3010 Transfer Case
[DHU] = AWD Electronic Shift Two Speed NVG 244 H/D Transfer Case
[DHZ] = Full Time Single Mode NVG 140 Transfer Case
[EGS] = 4.0L SOHC V-6 Engine
[EG0] = All 4.0L Engines
[EKG] = 3.7L [Magnum] V-6 Engine
[EK0] = All 3.7L 6-Cylinder Gas Engines
[ENS] = 2.8L 4 Cylinder Turbo Diesel Engine
[EN0] = All 2.8L 4 Cylinder Turbo Diesel Engines
[ESF] = 6.1L SRT V-8 Hemi Engine
[ES0] = All 6.1L 8-Cylinder Engines
[EVA] = 4.7L [Magnum] V-8 Engine
[EVD] = 4.7L V-8 FFV Engine
[EVE] = 4.7L V-8 Engine
[EV0] = All 4.7L 8-Cylinder Engines
[EZA] = 5.7L Hemi V-8 Engine
[EZB] = 5.7L Hemi V-8 Multi-Displacement Engine
[EZC] = 5.7L Hemi V-8 VCT Non Multi-Displacement Engine
[EZD] = 5.7L Hemi V-8 VCT Multi-Displacement Engine
[EZE] = 5.7L Hemi V-8 HEV Engine
[EZ0] = All 5.7L 8-Cylinder Engines
[NAA] = Federal Emissions
[NAE] = California Emissions
[NAS] = 50 State Emissions
[NA1] = Export Emissions
[NHK] = Engine Cylinder Block Heater
[XEF] = Transfer Case Skid Plate Sheild

1									GASKET PACKAGE, Engine Upper
	05170961AB	1	D			ESF	DGJ		
		1	D			ESF	DEC		
2	05037592AC	2	D			ESF			GASKET, Cylinder Head
3	05114179AB	2	D			ESF			GASKET KIT, Cylinder Head Cover
4									SEAL, Valve Guide
	05037798AA	8	D			ESF			Intake
	53021578AA	8	D			ESF			Exhaust

DODGE CHALLENGER (LC)

SERIES	LINE	BODY	ENGINE	TRANSMISSION
H = HIGHLINE P = PREMIUM X = SPECIAL	D = DODGE	22 = 2-DR SEDAN TYPE #2	EGG = 3.5L High Output V6 24V MPI Engine ESF = 6.1L SRT HEMI V8 Engine EZC = 5.7L HEMI VCT Engine EZD = 5.7L Hemi VCT MDS Engine	DEC = 6-Speed Manual TREMEC Transmission DGJ = 5-Speed Auto W5A580 Transmission DGV = 4-Spd. Automatic VLP 42RLE Trans

AR = use ase required - = Non illustrrated part

Engine Gasket Kits 6.1L [ESF]
Figure 009ESF-135

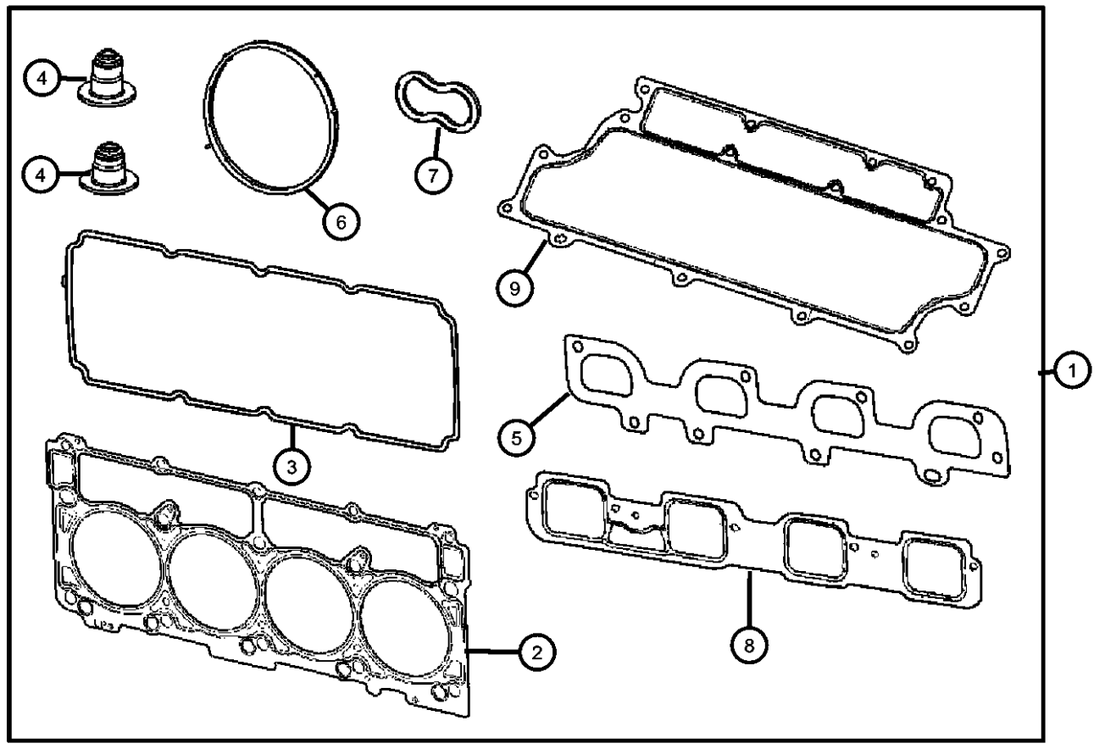

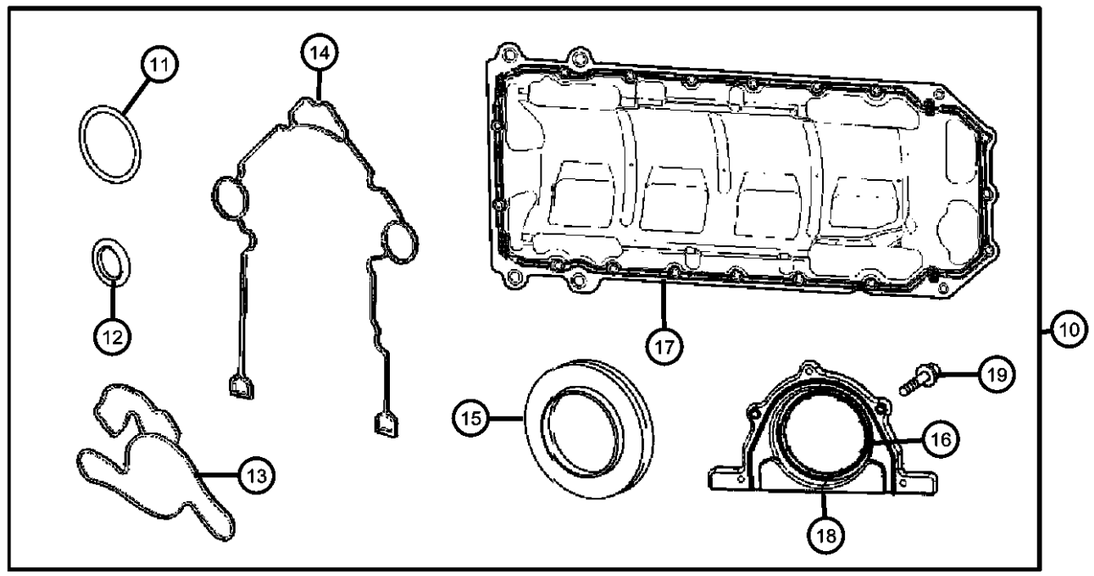

ITEM	PART NUMBER	QTY	LINE	SERIES	BODY	ENGINE	TRANS	TRIM	DESCRIPTION
5									GASKET, Exhaust Manifold
	05038098AA	1	D			ESF			Right
	05038099AA	1	D			ESF			Left
6	53032383AB	1	D			ESF			SEAL, Throttle Body to Intake
7	53021569AD	8	D			ESF			GASKET, Spark Plug Well
8	05037503AA	2	D			ESF			GASKET, Intake Manifold
9	05037555AA	1	D			ESF			GASKET, Intake Manifold Pan
10									GASKET PACKAGE, Engine Lower
	05170861AB	1	D			ESF	DGJ		
	05170861AC	1	D			ESF	DEC		
11	53020861	1	D			ESF			SEAL, Oil Pick Up Tube
12	53021144AA	1	D			ESF			O RING, Engine Oil Indicator Tube
13	04792922AA	1	D			ESF			GASKET, Water Pump
14	05139933AB	1	D			ESF			GASKET PACKAGE, Front Cover
15	53021585AD	1	D			ESF			SEAL, Crankshaft Oil, Front
16		1							SEAL, Crankshaft Oil, Rear, Serviced With Rear Crankshaft Retainer, (NOT SERVICED)
17	05037636AB	1	D			ESF			GASKET, Oil Pan
18	05140028AA	1	D			ESF			RETAINER PACKAGE, Crankshaft Rear Oil Seal, Includes Items 16,19
19	06104005AA	5	D			ESF			BOLT, 6 Lobe External Head, M6X1.00X16.00, Rear Crankshaft Seal Retainer To Cylinder Block, Mounting

DODGE CHALLENGER (LC)

SERIES	LINE	BODY	ENGINE	TRANSMISSION
H = HIGHLINE P = PREMIUM X = SPECIAL	D = DODGE	22 = 2-DR SEDAN TYPE #2	EGG = 3.5L High Output V6 24V MPI Engine ESF = 6.1L SRT HEMI V8 Engine EZC = 5.7L HEMI VCT Engine EZD = 5.7L Hemi VCT MDS Engine	DEC = 6-Speed Manual TREMEC Transmission DGJ = 5-Speed Auto W5A580 Transmission DGV = 4-Spd. Automatic VLP 42RLE Trans

AR = use ase required - = Non illustrrated part

Engine Covers And Related Parts 6.1L [ESF]
Figure 009ESF-145

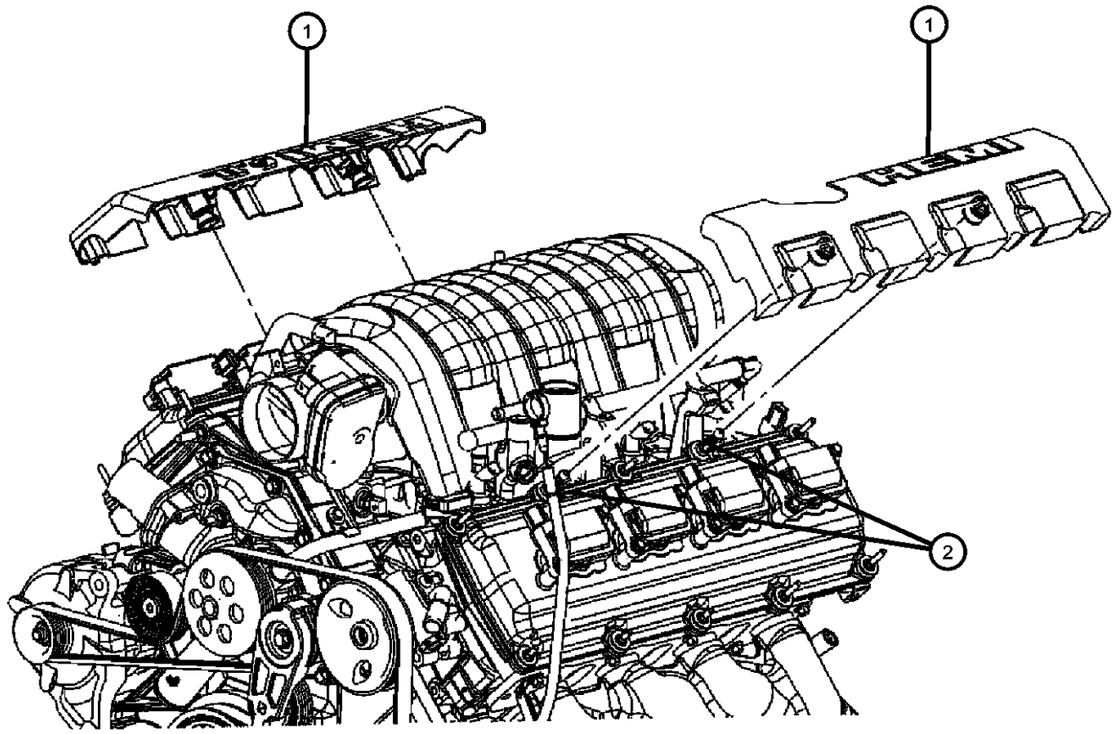

ITEM	PART NUMBER	QTY	LINE	SERIES	BODY	ENGINE	TRANS	TRIM	DESCRIPTION

NOTE:
Sales Codes:
[DEC] = 6-Speed Manual TR6060 Transmission
[DEH] = 6-Speed Manual NSG370 Transmission
[DF9] = AHS-T RWD Automatic Transmission
[DGJ] = 5-Speed Automatic W5A580 Transmission
[DGQ] = 5-Speed Automatic 545RFE Transmission
[DGV] = 4-Speed Automatic VLP 42RLE Transmission
[DG0] = All Automatic Transmissions
[DHR] = Single Speed On Demand MP3010 Transfer Case
[DHU] = AWD Electronic Shift Two Speed NVG 244 H/D Transfer Case
[DHZ] = Full Time Single Mode NVG 140 Transfer Case
[EGS] = 4.0L SOHC V-6 Engine
[EG0] = All 4.0L Engines
[EKG] = 3.7L [Magnum] V-6 Engine
[EK0] = All 3.7L 6-Cylinder Gas Engines
[ENS] = 2.8L 4 Cylinder Turbo Diesel Engine
[EN0] = All 2.8L 4 Cylinder Turbo Diesel Engines
[ESF] = 6.1L SRT V-8 Hemi Engine
[ES0] = All 6.1L 8-Cylinder Engines
[EVA] = 4.7L [Magnum] V-8 Engine
[EVD] = 4.7L V-8 FFV Engine
[EVE] = 4.7L V-8 Engine
[EV0] = All 4.7L 8-Cylinder Engines
[EZA] = 5.7L Hemi V-8 Engine
[EZB] = 5.7L Hemi V-8 Multi-Displacement Engine
[EZC] = 5.7L Hemi V-8 VCT Non Multi-Displacement Engine
[EZD] = 5.7L Hemi V-8 VCT Multi-Displacement Engine
[EZE] = 5.7L Hemi V-8 HEV Engine
[EZ0] = All 5.7L 8-Cylinder Engines
[NAA] = Federal Emissions
[NAE] = California Emissions
[NAS] = 50 State Emissions
[NA1] = Export Emissions
[NHK] = Engine Cylinder Block Heater
[XEF] = Transfer Case Skid Plate Sheild

ITEM	PART NUMBER	QTY	LINE	SERIES	BODY	ENGINE	TRANS	TRIM	DESCRIPTION
1									COVER, Wiring Protector
	05037534AB	1	D			ESF			With [Hemi 6.1L], Right
	05037535AB	1	D			ESF			With [Hemi], Left
2	05037581AB	4	D			ESF			BALL STUD, [42.04 MM], Wiring Protector Cover, Mounting

DODGE CHALLENGER (LC)

SERIES	LINE	BODY	ENGINE	TRANSMISSION
H = HIGHLINE P = PREMIUM X = SPECIAL	D = DODGE	22 = 2-DR SEDAN TYPE #2	EGG = 3.5L High Output V6 24V MPI Engine ESF = 6.1L SRT HEMI V8 Engine EZC = 5.7L HEMI VCT Engine EZD = 5.7L Hemi VCT MDS Engine	DEC = 6-Speed Manual TREMEC Transmission DGJ = 5-Speed Auto W5A580 Transmission DGV = 4-Spd. Automatic VLP 42RLE Trans

Cylinder Head Covers 6.1L [ESF]
Figure 009ESF-205

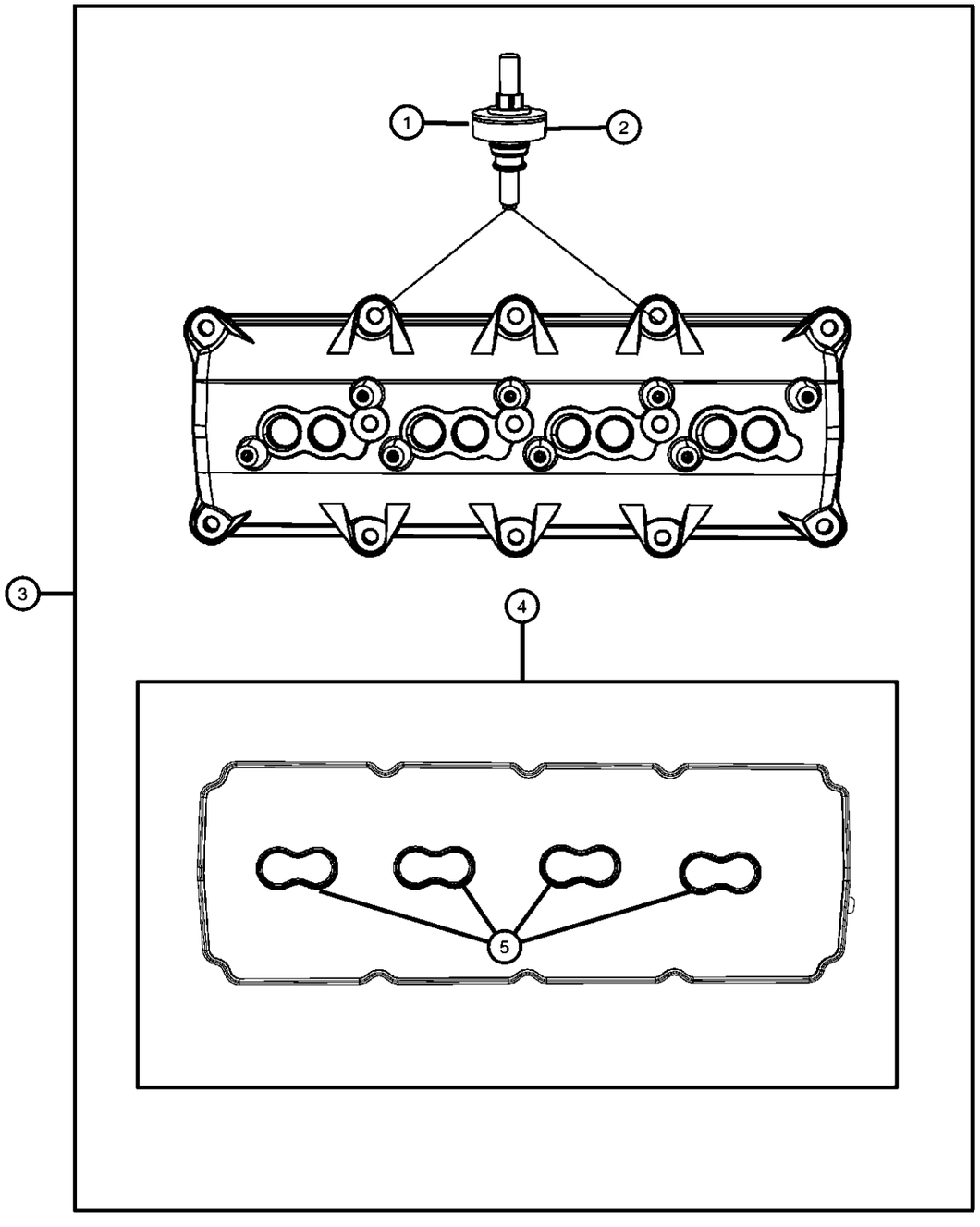

ITEM	PART NUMBER	QTY	LINE	SERIES	BODY	ENGINE	TRANS	TRIM	DESCRIPTION

NOTE:
Sales Codes:
[DEC] = 6-Speed Manual TR6060 Transmission
[DEH] = 6-Speed Manual NSG370 Transmission
[DF9] = AHS-T RWD Automatic Transmission
[DGJ] = 5-Speed Automatic W5A580 Transmission
[DGQ] = 5-Speed Automatic 545RFE Transmission
[DGV] = 4-Speed Automatic VLP 42RLE Transmission
[DG0] = All Automatic Transmissions
[DHR] = Single Speed On Demand MP3010 Transfer Case
[DHU] = AWD Electronic Shift Two Speed NVG 244 H/D Transfer Case
[DHZ] = Full Time Single Mode NVG 140 Transfer Case
[EGS] = 4.0L SOHC V-6 Engine
[EG0] = All 4.0L Engines
[EKG] = 3.7L [Magnum] V-6 Engine
[EK0] = All 3.7L 6-Cylinder Gas Engines
[ENS] = 2.8L 4 Cylinder Turbo Diesel Engine
[EN0] = All 2.8L 4 Cylinder Turbo Diesel Engines
[ESF] = 6.1L SRT V-8 Hemi Engine
[ES0] = All 6.1L 8-Cylinder Engines
[EVA] = 4.7L [Magnum] V-8 Engine
[EVD] = 4.7L V-8 FFV Engine
[EVE] = 4.7L V-8 Engine
[EV0] = All 4.7L 8-Cylinder Engines
[EZA] = 5.7L Hemi V-8 Engine
[EZB] = 5.7L Hemi V-8 Multi-Displacement Engine
[EZC] = 5.7L Hemi V-8 VCT Non Multi-Displacement Engine
[EZD] = 5.7L Hemi V-8 VCT Multi-Displacement Engine
[EZE] = 5.7L Hemi V-8 HEV Engine
[EZ0] = All 5.7L 8-Cylinder Engines
[NAA] = Federal Emissions
[NAE] = California Emissions
[NAS] = 50 State Emissions
[NA1] = Export Emissions
[NHK] = Engine Cylinder Block Heater
[XEF] = Transfer Case Skid Plate Sheild

1	06508330AA	8	D			ESF			STUD AND GROMMET, Special, M6X1.00X80.00, Cylinder Head Cover To Cylinder Head, Mounting
2	06508861AA	12	D			ESF			STUD AND GROMMET, Special, M6X1.00X45.00, Cylinder Head Cover To Cylinder Head, Mounting
3	05037531AC	2	D			ESF			COVER, Cylinder HeadRight And Left
4	05114179AB	2	D			ESF			GASKET KIT, Cylinder Head CoverRight And Left
5	53021569AD	8	D			ESF			GASKET, Spark Plug WellRight And Left

DODGE CHALLENGER (LC)

SERIES	LINE	BODY	ENGINE	TRANSMISSION
H = HIGHLINE P = PREMIUM X = SPECIAL	D = DODGE	22 = 2-DR SEDAN TYPE #2	EGG = 3.5L High Output V6 24V MPI Engine ESF = 6.1L SRT HEMI V8 Engine EZC = 5.7L HEMI VCT Engine EZD = 5.7L Hemi VCT MDS Engine	DEC = 6-Speed Manual TREMEC Transmission DGJ = 5-Speed Auto W5A580 Transmission DGV = 4-Spd. Automatic VLP 42RLE Trans

Cylinder Heads 6.1L [ESF]
Figure 009ESF-225

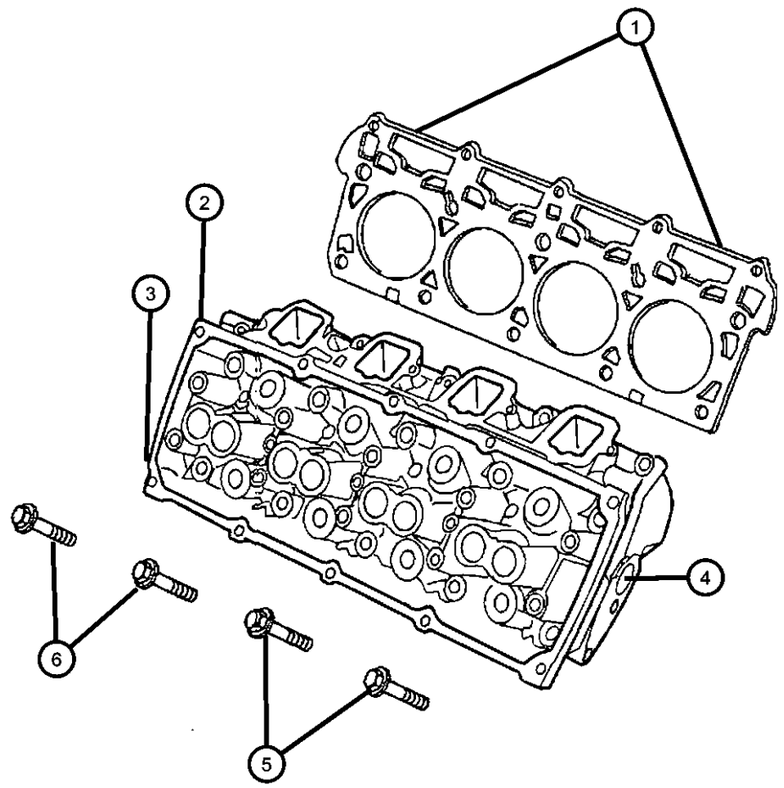

ITEM	PART NUMBER	QTY	LINE	SERIES	BODY	ENGINE	TRANS	TRIM	DESCRIPTION

NOTE:
Sales Codes:
[DEC] = 6-Speed Manual TR6060 Transmission
[DEH] = 6-Speed Manual NSG370 Transmission
[DF9] = AHS-T RWD Automatic Transmission
[DGJ] = 5-Speed Automatic W5A580 Transmission
[DGQ] = 5-Speed Automatic 545RFE Transmission
[DGV] = 4-Speed Automatic VLP 42RLE Transmission
[DG0] = All Automatic Transmissions
[DHR] = Single Speed On Demand MP3010 Transfer Case
[DHU] = AWD Electronic Shift Two Speed NVG 244 H/D Transfer Case
[DHZ] = Full Time Single Mode NVG 140 Transfer Case
[EGS] = 4.0L SOHC V-6 Engine
[EG0] = All 4.0L Engines
[EKG] = 3.7L [Magnum] V-6 Engine
[EK0] = All 3.7L 6-Cylinder Gas Engines
[ENS] = 2.8L 4 Cylinder Turbo Diesel Engine
[EN0] = All 2.8L 4 Cylinder Turbo Diesel Engines
[ESF] = 6.1L SRT V-8 Hemi Engine
[ES0] = All 6.1L 8-Cylinder Engines
[EVA] = 4.7L [Magnum] V-8 Engine
[EVD] = 4.7L V-8 FFV Engine
[EVE] = 4.7L V-8 Engine
[EV0] = All 4.7L 8-Cylinder Engines
[EZA] = 5.7L Hemi V-8 Engine
[EZB] = 5.7L Hemi V-8 Multi-Displacement Engine
[EZC] = 5.7L Hemi V-8 VCT Non Multi-Displacement Engine
[EZD] = 5.7L Hemi V-8 VCT Multi-Displacement Engine
[EZE] = 5.7L Hemi V-8 HEV Engine
[EZ0] = All 5.7L 8-Cylinder Engines
[NAA] = Federal Emissions
[NAE] = California Emissions
[NAS] = 50 State Emissions
[NA1] = Export Emissions
[NHK] = Engine Cylinder Block Heater
[XEF] = Transfer Case Skid Plate Sheild

1	05037592AC	2	D			ESF			GASKET, Cylinder HeadRight And Left
2	05170620AA	1	D			ESF			HEAD, Cylinder, Right
3	05170621AA	1	D			ESF			HEAD, Cylinder, Left
4									PLUG, Core
	06036308AA	2	D			ESF			375-18X.475, Left Cylinder Head
		2	D			ESF			375-18X.475, Right Cylinder Head

DODGE CHALLENGER (LC)

SERIES	LINE	BODY	ENGINE	TRANSMISSION
H = HIGHLINE P = PREMIUM X = SPECIAL	D = DODGE	22 = 2-DR SEDAN TYPE #2	EGG = 3.5L High Output V6 24V MPI Engine ESF = 6.1L SRT HEMI V8 Engine EZC = 5.7L HEMI VCT Engine EZD = 5.7L Hemi VCT MDS Engine	DEC = 6-Speed Manual TREMEC Transmission DGJ = 5-Speed Auto W5A580 Transmission DGV = 4-Spd. Automatic VLP 42RLE Trans

Cylinder Heads 6.1L [ESF]
Figure 009ESF-225

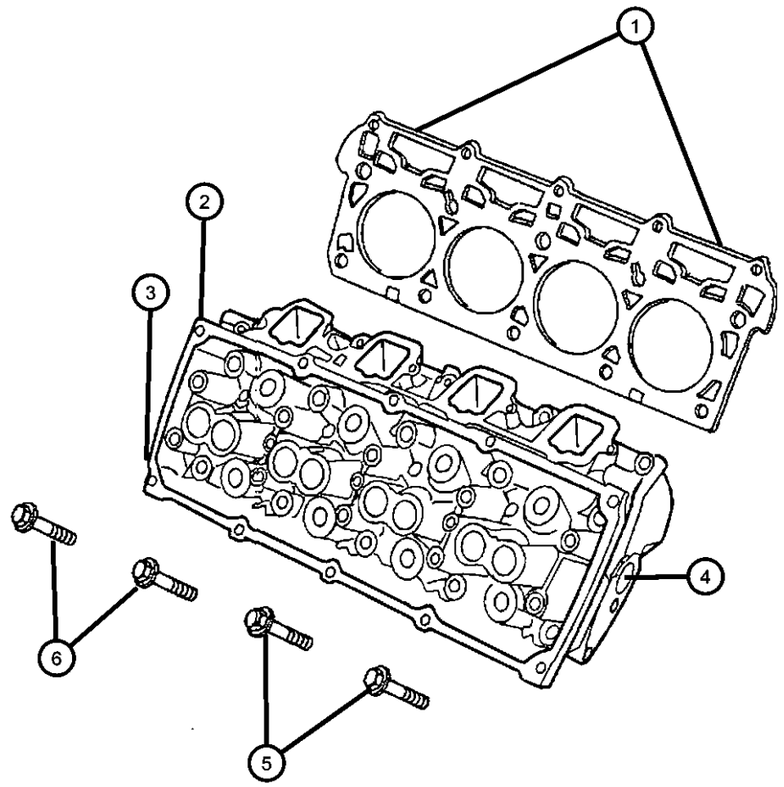

ITEM	PART NUMBER	QTY	LINE	SERIES	BODY	ENGINE	TRANS	TRIM	DESCRIPTION
5	06506334AA	10	D			ESF			BOLT, Hex Flange Head, M8X1.25X45.00, Cylinder Head To Cylinder Block, Mounting
6	06506694AA	20	D			ESF			BOLT AND CONED WASHER, Hex Head, M12X1.50X135.00, Cylinder Head To Cylinder Block, Mounting

DODGE CHALLENGER (LC)

SERIES	LINE	BODY	ENGINE	TRANSMISSION
H = HIGHLINE P = PREMIUM X = SPECIAL	D = DODGE	22 = 2-DR SEDAN TYPE #2	EGG = 3.5L High Output V6 24V MPI Engine ESF = 6.1L SRT HEMI V8 Engine EZC = 5.7L HEMI VCT Engine EZD = 5.7L Hemi VCT MDS Engine	DEC = 6-Speed Manual TREMEC Transmission DGJ = 5-Speed Auto W5A580 Transmission DGV = 4-Spd. Automatic VLP 42RLE Trans

Engine Cylinder Block And Hardware 6.1L [ESF]
Figure 009ESF-305

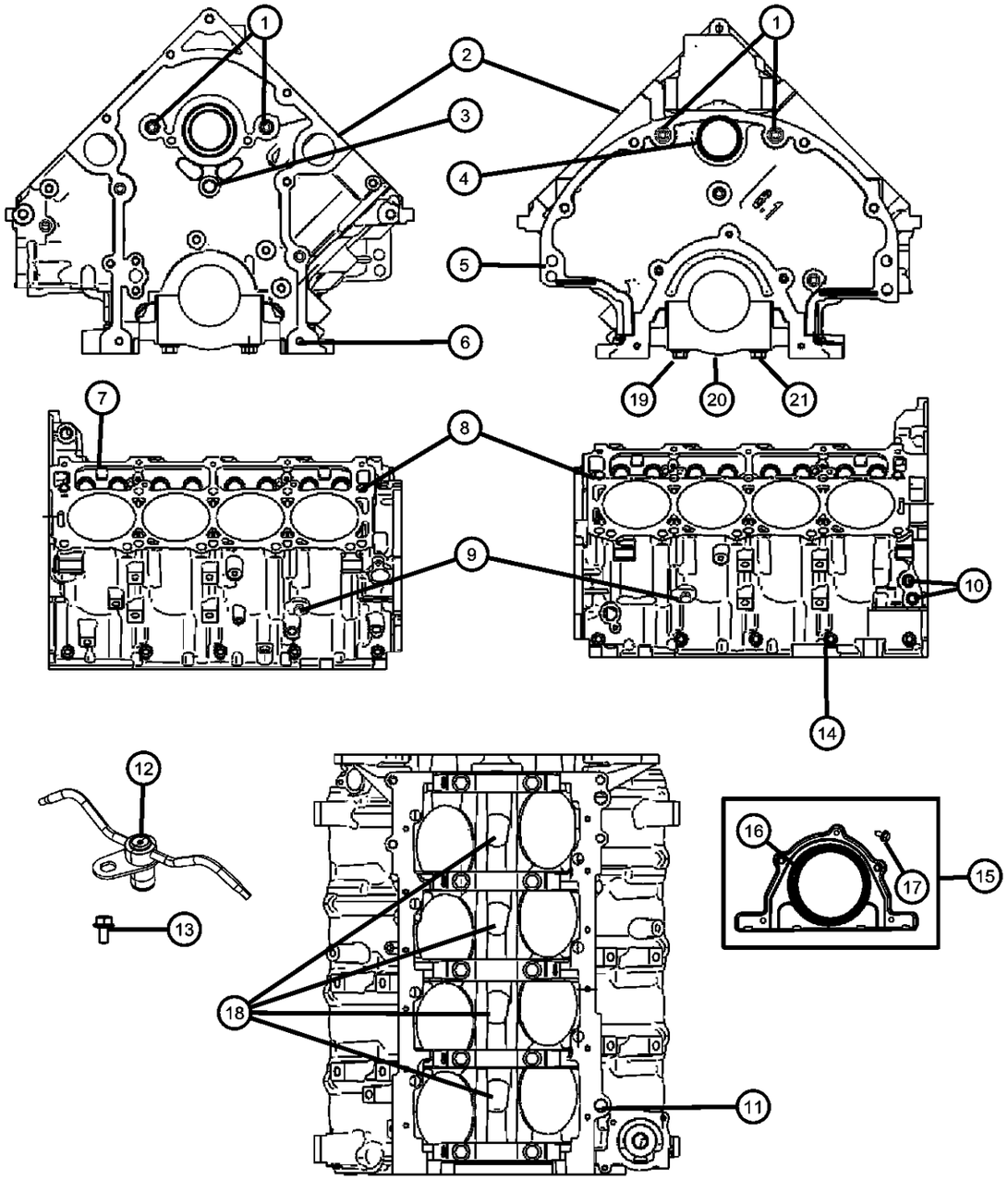

ITEM	PART NUMBER	QTY	LINE	SERIES	BODY	ENGINE	TRANS	TRIM	DESCRIPTION

NOTE:
Shortblock Does Not Include Camshaft, Lifters, Oil Pump Or Oil Pan,But Does Include The Camshaft Bearings.
Sales Codes:
[DEC] = 6-Speed Manual TR6060 Transmission
[DEH] = 6-Speed Manual NSG370 Transmission
[DF9] = AHS-T RWD Automatic Transmission
[DGJ] = 5-Speed Automatic W5A580 Transmission
[DGQ] = 5-Speed Automatic 545RFE Transmission
[DGV] = 4-Speed Automatic VLP 42RLE Transmission
[DG0] = All Automatic Transmissions
[DHR] = Single Speed On Demand MP3010 Transfer Case
[DHU] = AWD Electronic Shift Two Speed NVG 244 H/D Transfer Case
[DHZ] = Full Time Single Mode NVG 140 Transfer Case
[EGS] = 4.0L SOHC V-6 Engine
[EG0] = All 4.0L Engines
[EKG] = 3.7L [Magnum] V-6 Engine
[EK0] = All 3.7L 6-Cylinder Gas Engines
[ENS] = 2.8L 4 Cylinder Turbo Diesel Engine
[EN0] = All 2.8L 4 Cylinder Turbo Diesel Engines
[ESF] = 6.1L SRT V-8 Hemi Engine
[ES0] = All 6.1L 8-Cylinder Engines
[EVA] = 4.7L [Magnum] V-8 Engine
[EVD] = 4.7L V-8 FFV Engine
[EVE] = 4.7L V-8 Engine
[EV0] = All 4.7L 8-Cylinder Engines
[EZA] = 5.7L Hemi V-8 Engine
[EZB] = 5.7L Hemi V-8 Multi-Displacement Engine
[EZC] = 5.7L Hemi V-8 VCT Non Multi-Displacement Engine
[EZD] = 5.7L Hemi V-8 VCT Multi-Displacement Engine
[EZE] = 5.7L Hemi V-8 HEV Engine
[EZ0] = All 5.7L 8-Cylinder Engines
[NAA] = Federal Emissions
[NAE] = California Emissions
[NAS] = 50 State Emissions
[NA1] = Export Emissions
[NHK] = Engine Cylinder Block Heater
[XEF] = Transfer Case Skid Plate Sheild

ITEM	PART NUMBER	QTY	LINE	SERIES	BODY	ENGINE	TRANS	TRIM	DESCRIPTION
1		20							PLUG, Cylinder Block, [.375-18X1.343] Serviced In Short Block, (NOT SERVICED)
2									ENGINE, Short Block, See Note
	05159561AD	1	D			ESF	DEC		
		1	D			ESF	DGJ		
3		1							PLUG, Cylinder Block, [.562x.280] Stainless, (NOT SERVICED)

DODGE CHALLENGER (LC)

SERIES	LINE	BODY	ENGINE	TRANSMISSION
H = HIGHLINE P = PREMIUM X = SPECIAL	D = DODGE	22 = 2-DR SEDAN TYPE #2	EGG = 3.5L High Output V6 24V MPI Engine ESF = 6.1L SRT HEMI V8 Engine EZC = 5.7L HEMI VCT Engine EZD = 5.7L Hemi VCT MDS Engine	DEC = 6-Speed Manual TREMEC Transmission DGJ = 5-Speed Auto W5A580 Transmission DGV = 4-Spd. Automatic VLP 42RLE Trans

AR = use ase required - = Non illustrrated part

Engine Cylinder Block And Hardware 6.1L [ESF]
Figure 009ESF-305

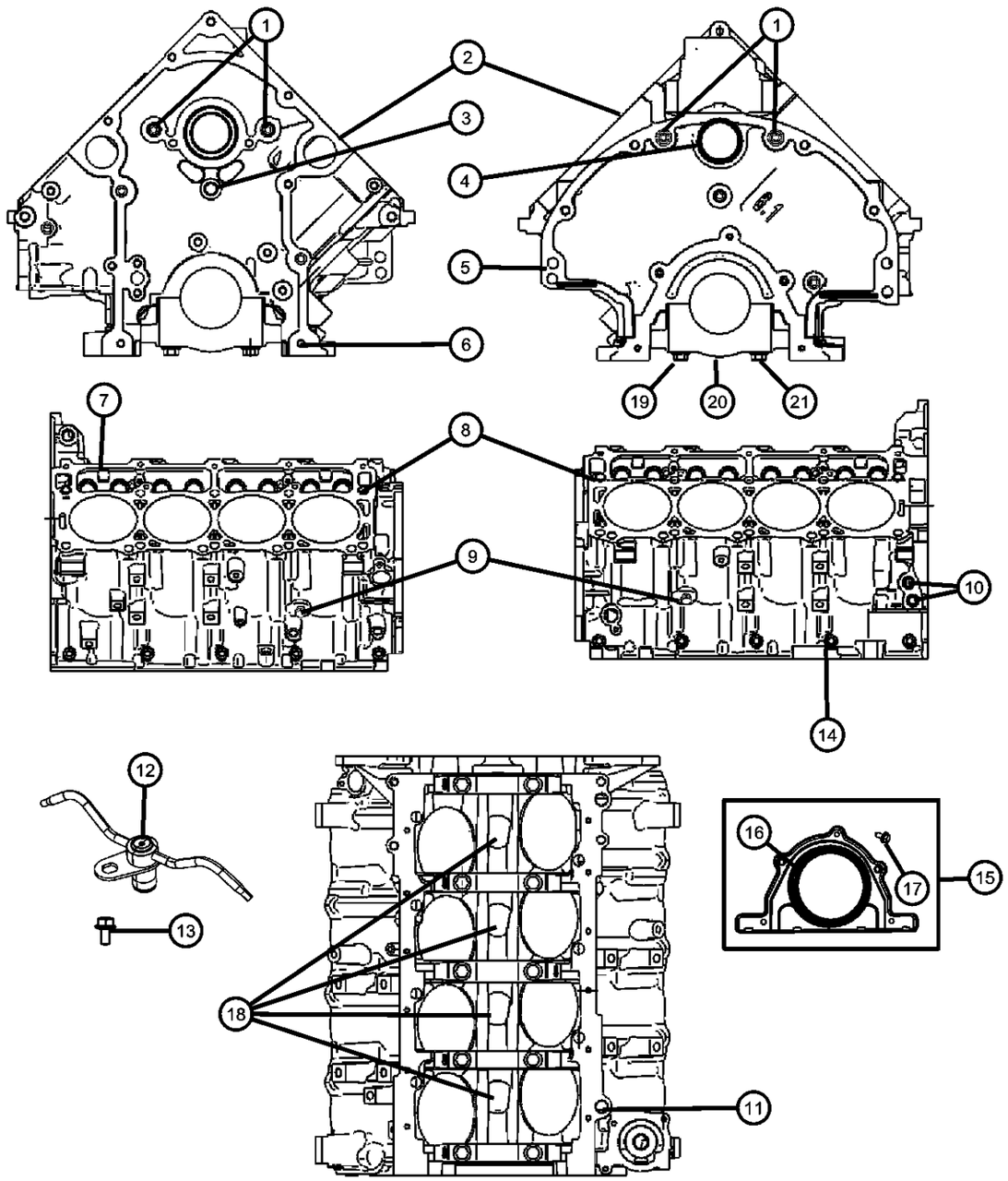

ITEM	PART NUMBER	QTY	LINE	SERIES	BODY	ENGINE	TRANS	TRIM	DESCRIPTION
4	06507663AA	1	D			ESF			PLUG, Camshaft, [M47.93 OD 6.4 THK 51.5 FLG OD]
5	01122532	2	D			ESF			DOWEL, Block to Clutch Housing, 1/2X3/4
6	05203466	2	D			ESF			PIN, Dowel, [M8X10.0], Front Cover To Cylinder Block
7	53032221AA	4	D			ESF, EZC			PLUG, Cylinder Block, Multiple Displacment Solenoid
8	05240849	4	D			ESF			DOWEL PIN, Cylinder Head To Cylinder Block, Mounting
9	06036592AA	2	D			ESF			PLUG, .250-18X.690, Cylinder Block Coolant Drain
10	06034331	4	D			ESF			PLUG, Hex Socket, 3/8-18NPTx.475
11	06036307AA	2	D			ESF			PLUG, Pipe, .250-18X.413, Oil Gallery Block Off
12	05037524AB	4	D			ESF			JET, Piston Oil Cooler
13	06104179AA	4	D			ESF			BOLT, Hex Flange Head, M6x1.00x12.00, Piston Oil Jet Cooler To Cylinder Block, Mounting
14	06036458AA	1	D			ESF			PLUG, OIL INDICATOR TUBE, .415X.280
15	05140028AA	1	D			ESF			RETAINER PACKAGE, Crankshaft Rear Oil Seal
16		1							SEAL, Crankshaft Oil, Rear, Serviced In Retainer Package, (NOT SERVICED)
17	06104005AA	5	D			ESF			BOLT, 6 Lobe External Head, M6X1.00X16.00, Rear Crankshaft Oil Seal Retainer To Cylinder Block, Mounting
18	53032221AA	4	D			ESF, EZC			PLUG, Cylinder Block, For Engines Without MDS Only
19	06506333AA	1	D			ESF			STUD, Double Ended, M12&M8, Main Bearing Cap To Cylinder Block, Mounting
20		1							CAP, Main, Serviced With Short Block Engine, (NOT SERVICED)
21	06506272AA	10	D			ESF			BOLT, Hex Flange Head, M12X1.75X91.50, Main Bearing Cap To Cylinder Block, Mounting

DODGE CHALLENGER (LC)

SERIES	LINE	BODY	ENGINE	TRANSMISSION
H = HIGHLINE P = PREMIUM X = SPECIAL	D = DODGE	22 = 2-DR SEDAN TYPE #2	EGG = 3.5L High Output V6 24V MPI Engine ESF = 6.1L SRT HEMI V8 Engine EZC = 5.7L HEMI VCT Engine EZD = 5.7L Hemi VCT MDS Engine	DEC = 6-Speed Manual TREMEC Transmission DGJ = 5-Speed Auto W5A580 Transmission DGV = 4-Spd. Automatic VLP 42RLE Trans

AR = use ase required - = Non illustrrated part

Crankshaft, Crankshaft Bearings, Damper And Flywheel 6.1L [ESF]
Figure 009ESF-405

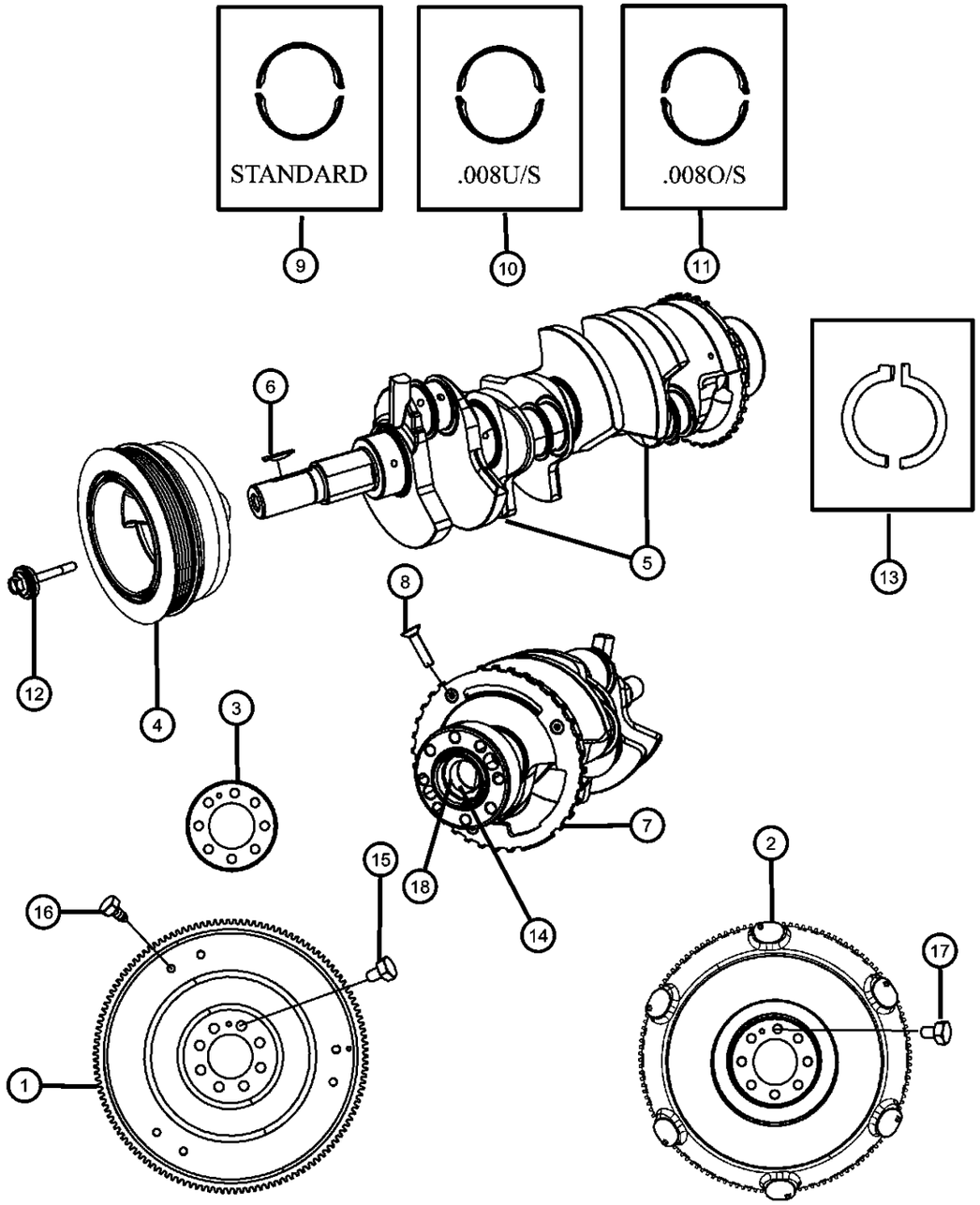

ITEM	PART NUMBER	QTY	LINE	SERIES	BODY	ENGINE	TRANS	TRIM	DESCRIPTION

NOTE: For Crankshaft Indentification, Stamping Location And Bearing Information Refer To The Service Manual.
For Bearing Selection Sizes Please Refer To Service Manual Group 9, Bearings Crankshaft Main, [Select Fit Identification]
Sales Codes:
[DEC] = 6-Speed Manual TR6060 Transmission
[DEH] = 6-Speed Manual NSG370 Transmission
[DF9] = AHS-T RWD Automatic Transmission
[DGJ] = 5-Speed Automatic W5A580 Transmission
[DGQ] = 5-Speed Automatic 545RFE Transmission
[DGV] = 4-Speed Automatic VLP 42RLE Transmission
[DG0] = All Automatic Transmissions
[DHR] = Single Speed On Demand MP3010 Transfer Case
[DHU] = AWD Electronic Shift Two Speed NVG 244 H/D Transfer Case
[DHZ] = Full Time Single Mode NVG 140 Transfer Case
[EGS] = 4.0L SOHC V-6 Engine
[EG0] = All 4.0L Engines
[EKG] = 3.7L [Magnum] V-6 Engine
[EK0] = All 3.7L 6-Cylinder Gas Engines
[ENS] = 2.8L 4 Cylinder Turbo Diesel Engine
[EN0] = All 2.8L 4 Cylinder Turbo Diesel Engines
[ESF] = 6.1L SRT V-8 Hemi Engine
[ES0] = All 6.1L 8-Cylinder Engines
[EVA] = 4.7L [Magnum] V-8 Engine
[EVD] = 4.7L V-8 FFV Engine
[EVE] = 4.7L V-8 Engine
[EV0] = All 4.7L 8-Cylinder Engines
[EZA] = 5.7L Hemi V-8 Engine
[EZB] = 5.7L Hemi V-8 Multi-Displacement Engine
[EZC] = 5.7L Hemi V-8 VCT Non Multi-Displacement Engine
[EZD] = 5.7L Hemi V-8 VCT Multi-Displacement Engine
[EZE] = 5.7L Hemi V-8 HEV Engine
[EZ0] = All 5.7L 8-Cylinder Engines
[NAA] = Federal Emissions
[NAE] = California Emissions
[NAS] = 50 State Emissions
[NA1] = Export Emissions
[NHK] = Engine Cylinder Block Heater
[XEF] = Transfer Case Skid Plate Sheild

1	04752455AA	1	D			ESF			PLATE, Torque Converter Drive, Automatic Transmission
2	05038113AB	1	D			ESF, EZC, EZD	DEC		FLYWHEEL, Manual Transmission
3	04736613AA	1	D			ESF, EZD	DGJ		PLATE, Flexplate or Flywheel Backing
4	05037394AA	1	D			ESF			DAMPER, Crankshaft
5	05037458AB	1	D			ESF			CRANKSHAFT, See Note
6	06506397AA	1	D			ESF			KEY, Woodruff

DODGE CHALLENGER (LC)

SERIES	LINE	BODY	ENGINE	TRANSMISSION
H = HIGHLINE P = PREMIUM X = SPECIAL	D = DODGE	22 = 2-DR SEDAN TYPE #2	EGG = 3.5L High Output V6 24V MPI Engine ESF = 6.1L SRT HEMI V8 Engine EZC = 5.7L HEMI VCT Engine EZD = 5.7L Hemi VCT MDS Engine	DEC = 6-Speed Manual TREMEC Transmission DGJ = 5-Speed Auto W5A580 Transmission DGV = 4-Spd. Automatic VLP 42RLE Trans

Crankshaft, Crankshaft Bearings, Damper And Flywheel 6.1L [ESF]
Figure 009ESF-405

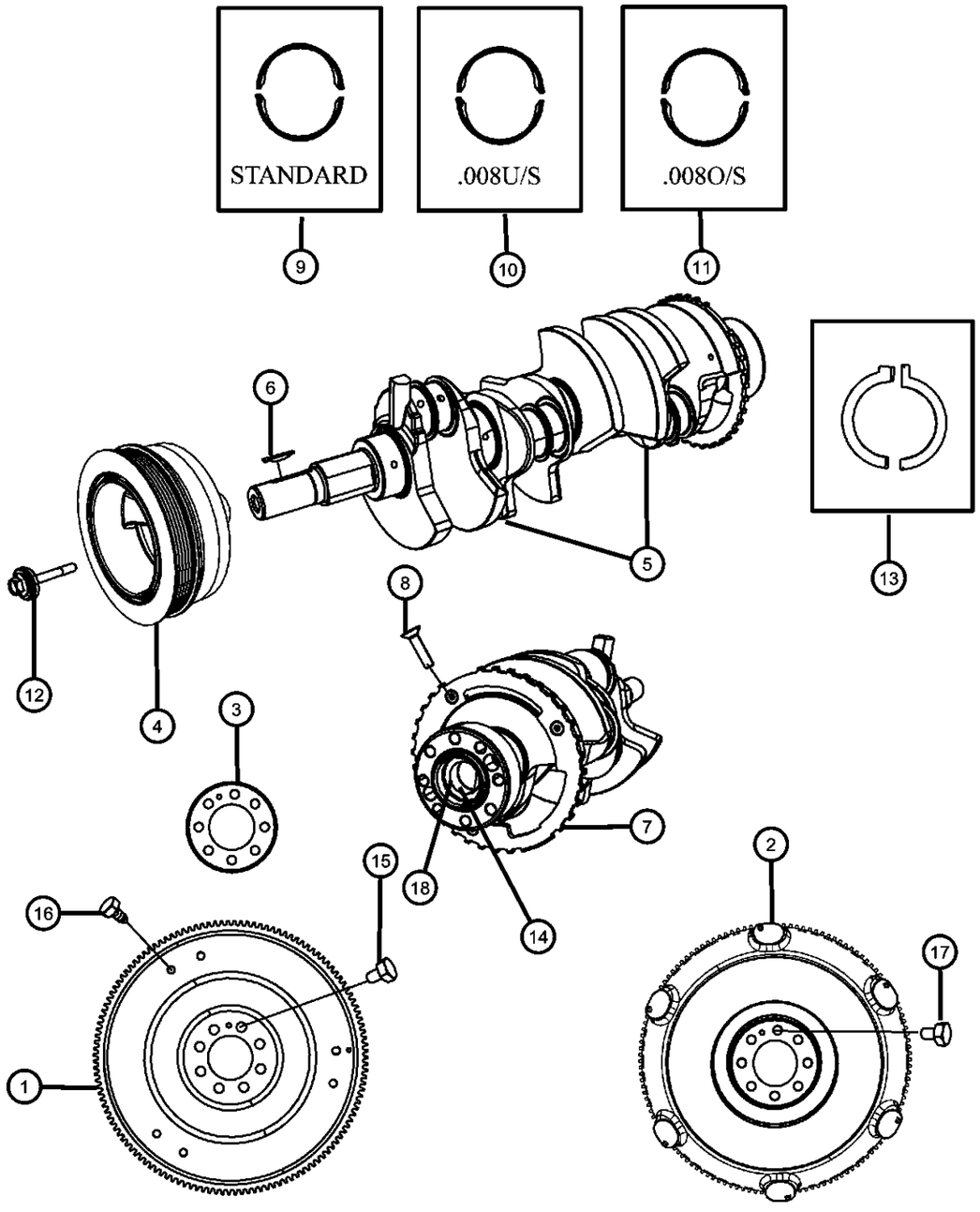

ITEM	PART NUMBER	QTY	LINE	SERIES	BODY	ENGINE	TRANS	TRIM	DESCRIPTION
7		1							TONE RING, Sensor, Serviced With Crankshaft, (NOT SERVICED)
8		1							SCREW, M6x1x25, Serviced With Crankshaft, (NOT SERVICED)
9	68046263AA	5	D			ESF			BEARING KIT, Crankshaft, B Grade, Standard
10									BEARING KIT, Crankshaft, .008mm U/S
	68048304AA	AR	D			ESF	DEC		
		AR	D			ESF	DGJ		
11									BEARING KIT, Crankshaft, .008mm O/S
	68048303AA	AR	D			ESF	DGJ		
		AR	D			ESF	DEC		
12	06508400AA	1	D			ESF			BOLT AND CONED WASHER, Hex Head, M14X1.5X102.00, Damper To Crankshaft, Mounting
13	05083979AA	1	D			ESF			THRUST WASHER PACKAGE, Crankshaft
14	53009180AB	1	D			ESF, EZC	DEC		BEARING, Pilot
15	06503465	8	D			ESF, EZC, EZD			BOLT, Hex Head Lock, M10X1.00X18.00, Automatic TransmissionTorque Converter Drive Plate To Crankshaft, Mounting
16	06507095AA	6	D			ESF	DGJ		BOLT, Hex Head, M8x1.25x18.00, Automatic Transmission Drive Plate To Torque Converter, Mounting
17	06504398	8	D			ESF, EZC, EZD	DEC		BOLT, Hex Head, M10X1.00X26.00, Manual Trans-mission Flywheel To Crankshaft, Mounting
18	04736283AA	1	D			ESF	DGJ		SLEEVECrankshaft

DODGE CHALLENGER (LC)

SERIES	LINE	BODY	ENGINE	TRANSMISSION
H = HIGHLINE P = PREMIUM X = SPECIAL	D = DODGE	22 = 2-DR SEDAN TYPE #2	EGG = 3.5L High Output V6 24V MPI Engine ESF = 6.1L SRT HEMI V8 Engine EZC = 5.7L HEMI VCT Engine EZD = 5.7L Hemi VCT MDS Engine	DEC = 6-Speed Manual TREMEC Transmission DGJ = 5-Speed Auto W5A580 Transmission DGV = 4-Spd. Automatic VLP 42RLE Trans

AR = use ase required - = Non illustrrated part

Pistons, Connecting Rods, And Connecting Rod Bearings 6.1L [ESF]
Figure 009ESF-425

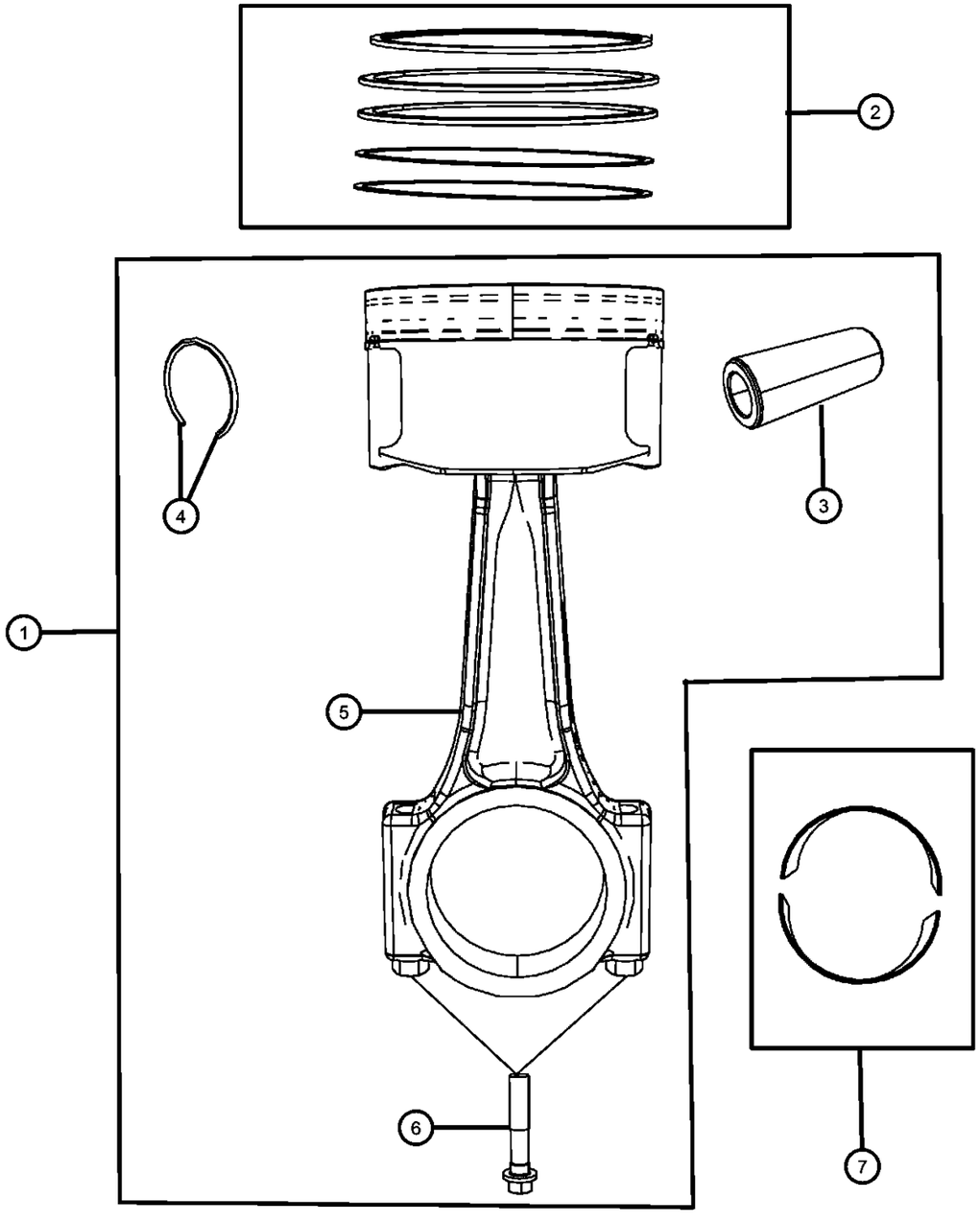

ITEM	PART NUMBER	QTY	LINE	SERIES	BODY	ENGINE	TRANS	TRIM	DESCRIPTION

NOTE: For Crankshaft Indentification, Stamping Location And Bearing Information Refer To The Service Manual.
For Bearing Selection Sizes Please Refer To Service Manual Group 9, Bearings Crankshaft Main, [Select Fit Identification]
Sales Codes:
[DEC] = 6-Speed Manual TR6060 Transmission
[DEH] = 6-Speed Manual NSG370 Transmission
[DF9] = AHS-T RWD Automatic Transmission
[DGJ] = 5-Speed Automatic W5A580 Transmission
[DGQ] = 5-Speed Automatic 545RFE Transmission
[DGV] = 4-Speed Automatic VLP 42RLE Transmission
[DG0] = All Automatic Transmissions
[DHR] = Single Speed On Demand MP3010 Transfer Case
[DHU] = AWD Electronic Shift Two Speed NVG 244 H/D Transfer Case
[DHZ] = Full Time Single Mode NVG 140 Transfer Case
[EGS] = 4.0L SOHC V-6 Engine
[EG0] = All 4.0L Engines
[EKG] = 3.7L [Magnum] V-6 Engine
[EK0] = All 3.7L 6-Cylinder Gas Engines
[ENS] = 2.8L 4 Cylinder Turbo Diesel Engine
[EN0] = All 2.8L 4 Cylinder Turbo Diesel Engines
[ESF] = 6.1L SRT V-8 Hemi Engine
[ES0] = All 6.1L 8-Cylinder Engines
[EVA] = 4.7L [Magnum] V-8 Engine
[EVD] = 4.7L V-8 FFV Engine
[EVE] = 4.7L V-8 Engine
[EV0] = All 4.7L 8-Cylinder Engines
[EZA] = 5.7L Hemi V-8 Engine
[EZB] = 5.7L Hemi V-8 Multi-Displacement Engine
[EZC] = 5.7L Hemi V-8 VCT Non Multi-Displacement Engine
[EZD] = 5.7L Hemi V-8 VCT Multi-Displacement Engine
[EZE] = 5.7L Hemi V-8 HEV Engine
[EZ0] = All 5.7L 8-Cylinder Engines
[NAA] = Federal Emissions
[NAE] = California Emissions
[NAS] = 50 State Emissions
[NA1] = Export Emissions
[NHK] = Engine Cylinder Block Heater
[XEF] = Transfer Case Skid Plate Sheild

1									PISTON PIN AND ROD
	68031890AC	4	D			ESF			Cylinders 2,4,6,8
	68031891AC	4	D			ESF			Cylinders 1,3,5,7
2									RING PACKAGE, Piston, Standard Size
	05159661AA	1	D			ESF	DGJ		One [1] Package Services The Complete Engine
		1	D			ESF	DEC		

DODGE CHALLENGER (LC)

SERIES	LINE	BODY	ENGINE	TRANSMISSION
H = HIGHLINE P = PREMIUM X = SPECIAL	D = DODGE	22 = 2-DR SEDAN TYPE #2	EGG = 3.5L High Output V6 24V MPI Engine ESF = 6.1L SRT HEMI V8 Engine EZC = 5.7L HEMI VCT Engine EZD = 5.7L Hemi VCT MDS Engine	DEC = 6-Speed Manual TREMEC Transmission DGJ = 5-Speed Auto W5A580 Transmission DGV = 4-Spd. Automatic VLP 42RLE Trans

AR = use ase required - = Non illustrrated part

Pistons, Connecting Rods, And Connecting Rod Bearings 6.1L [ESF]
Figure 009ESF-425

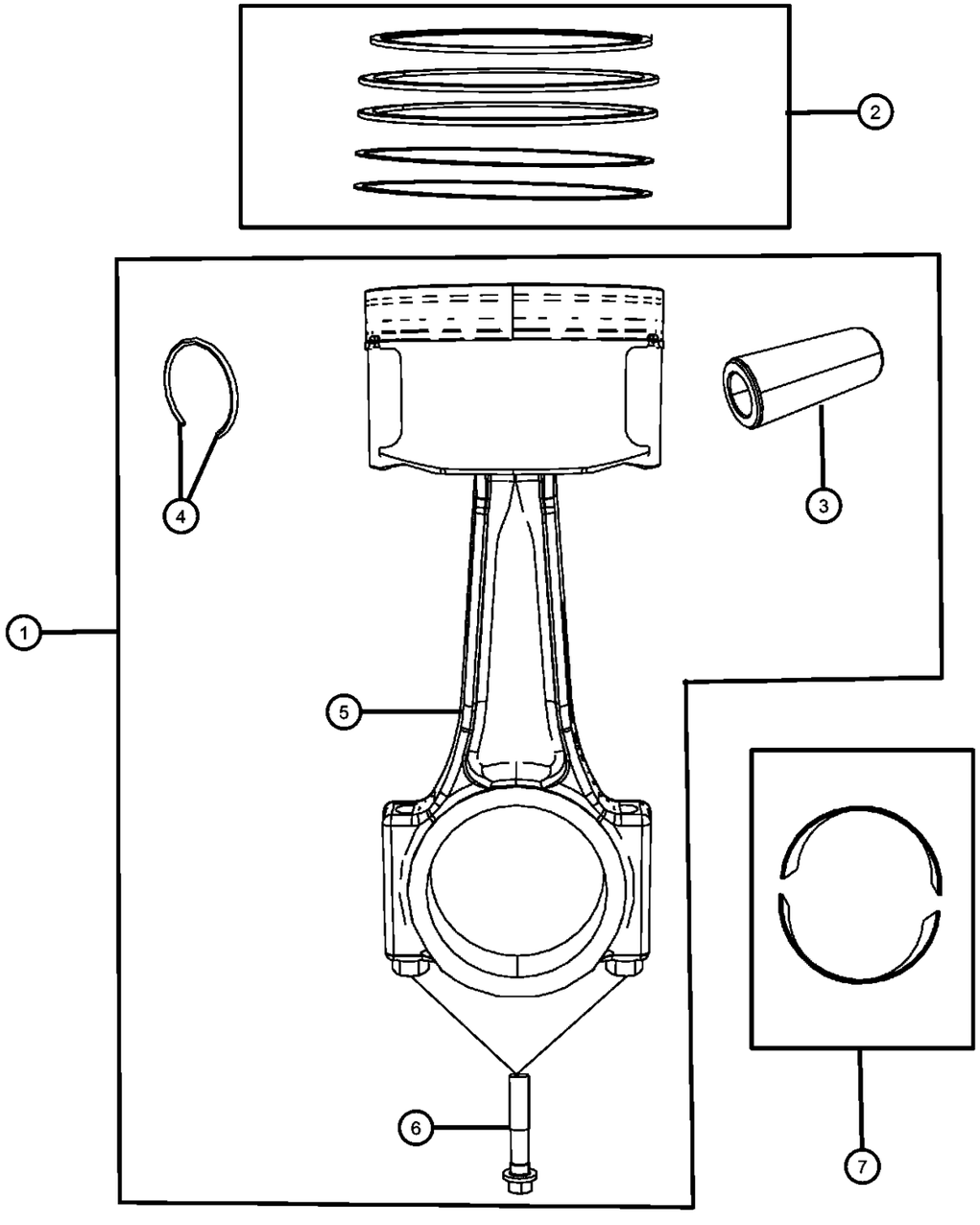

ITEM	PART NUMBER	QTY	LINE	SERIES	BODY	ENGINE	TRANS	TRIM	DESCRIPTION
3		1							PIN, Piston, Serviced With Piston Package, (NOT SERVICED)
4		1							RING, Piston Pin, Serviced With Piston Package, (NOT SERVICED)
5		1							ROD, Connecting, Serviced With Piston Package, (NOT SERVICED)
6	06508245AA	8	D			ESF			BOLT, Connecting Rod
7	05086003AC	AR	D			ESF			BEARING PACKAGE, Connecting Rod, Standard, See Note

DODGE CHALLENGER (LC)

SERIES	LINE	BODY	ENGINE	TRANSMISSION
H = HIGHLINE	D = DODGE	22 = 2-DR SEDAN TYPE #2	EGG = 3.5L High Output V6 24V MPI Engine	DEC = 6-Speed Manual TREMEC Transmission
P = PREMIUM			ESF = 6.1L SRT HEMI V8 Engine	DGJ = 5-Speed Auto W5A580 Transmission
X = SPECIAL			EZC = 5.7L HEMI VCT Engine	DGV = 4-Spd. Automatic VLP 42RLE Trans
			EZD = 5.7L Hemi VCT MDS Engine	

AR = use ase required - = Non illustrrated part

Camshaft And Valvetrain 6.1L [ESF]
Figure 009ESF-505

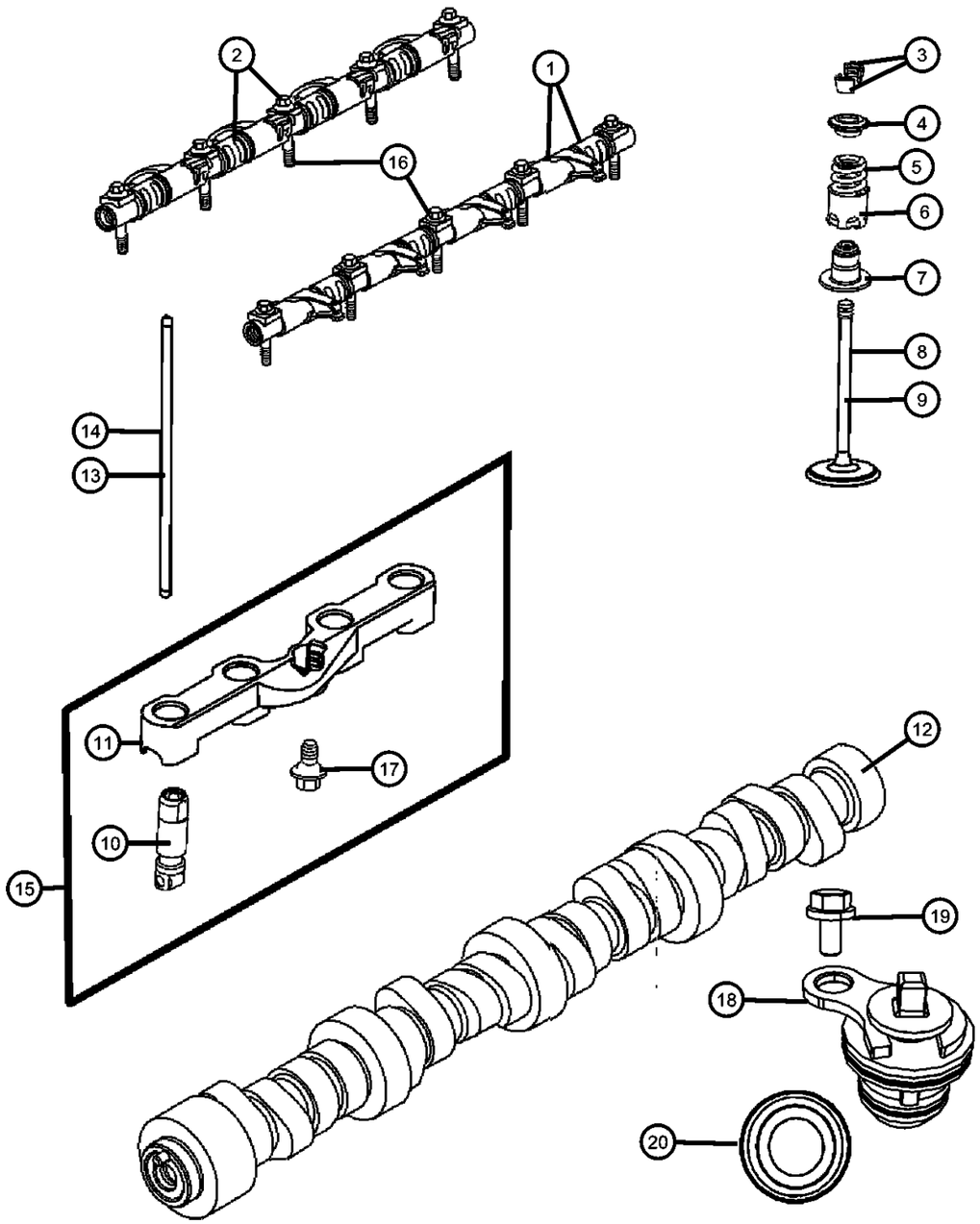

ITEM	PART NUMBER	QTY	LINE	SERIES	BODY	ENGINE	TRANS	TRIM	DESCRIPTION

NOTE:
Sales Codes:
[DEC] = 6-Speed Manual TR6060 Transmission
[DEH] = 6-Speed Manual NSG370 Transmission
[DF9] = AHS-T RWD Automatic Transmission
[DGJ] = 5-Speed Automatic W5A580 Transmission
[DGQ] = 5-Speed Automatic 545RFE Transmission
[DGV] = 4-Speed Automatic VLP 42RLE Transmission
[DG0] = All Automatic Transmissions
[DHR] = Single Speed On Demand MP3010 Transfer Case
[DHU] = AWD Electronic Shift Two Speed NVG 244 H/D Transfer Case
[DHZ] = Full Time Single Mode NVG 140 Transfer Case
[EGS] = 4.0L SOHC V-6 Engine
[EG0] = All 4.0L Engines
[EKG] = 3.7L [Magnum] V-6 Engine
[EK0] = All 3.7L 6-Cylinder Gas Engines
[ENS] = 2.8L 4 Cylinder Turbo Diesel Engine
[EN0] = All 2.8L 4 Cylinder Turbo Diesel Engines
[ESF] = 6.1L SRT V-8 Hemi Engine
[ES0] = All 6.1L 8-Cylinder Engines
[EVA] = 4.7L [Magnum] V-8 Engine
[EVD] = 4.7L V-8 FFV Engine
[EVE] = 4.7L V-8 Engine
[EV0] = All 4.7L 8-Cylinder Engines
[EZA] = 5.7L Hemi V-8 Engine
[EZB] = 5.7L Hemi V-8 Multi-Displacement Engine
[EZC] = 5.7L Hemi V-8 VCT Non Multi-Displacement Engine
[EZD] = 5.7L Hemi V-8 VCT Multi-Displacement Engine
[EZE] = 5.7L Hemi V-8 HEV Engine
[EZ0] = All 5.7L 8-Cylinder Engines
[NAA] = Federal Emissions
[NAE] = California Emissions
[NAS] = 50 State Emissions
[NA1] = Export Emissions
[NHK] = Engine Cylinder Block Heater
[XEF] = Transfer Case Skid Plate Sheild

1	53021553AA	2	D			ESF			ROCKER ARM, Exhaust, Includes Four [4] Rocker Arms, Spacers, [5] Bolts, Retainers And Shaft, Right And Left
2	53021552AA	2	D			ESF			ROCKER ARM, Intake, Includes Four [4] Rocker Arms, Spacers, [5] Bolts, Retainers And Shaft, Right And Left
3	53010515AA	32	D			ESF			LOCK, Valve Spring Retainer
4	53021676AB	16	D			ESF			RETAINER, Valve Spring

DODGE CHALLENGER (LC)

SERIES	LINE	BODY	ENGINE	TRANSMISSION
H = HIGHLINE P = PREMIUM X = SPECIAL	D = DODGE	22 = 2-DR SEDAN TYPE #2	EGG = 3.5L High Output V6 24V MPI Engine ESF = 6.1L SRT HEMI V8 Engine EZC = 5.7L HEMI VCT Engine EZD = 5.7L Hemi VCT MDS Engine	DEC = 6-Speed Manual TREMEC Transmission DGJ = 5-Speed Auto W5A580 Transmission DGV = 4-Spd. Automatic VLP 42RLE Trans

AR = use ase required - = Non illustrrated part

Camshaft And Valvetrain 6.1L [ESF]
Figure 009ESF-505

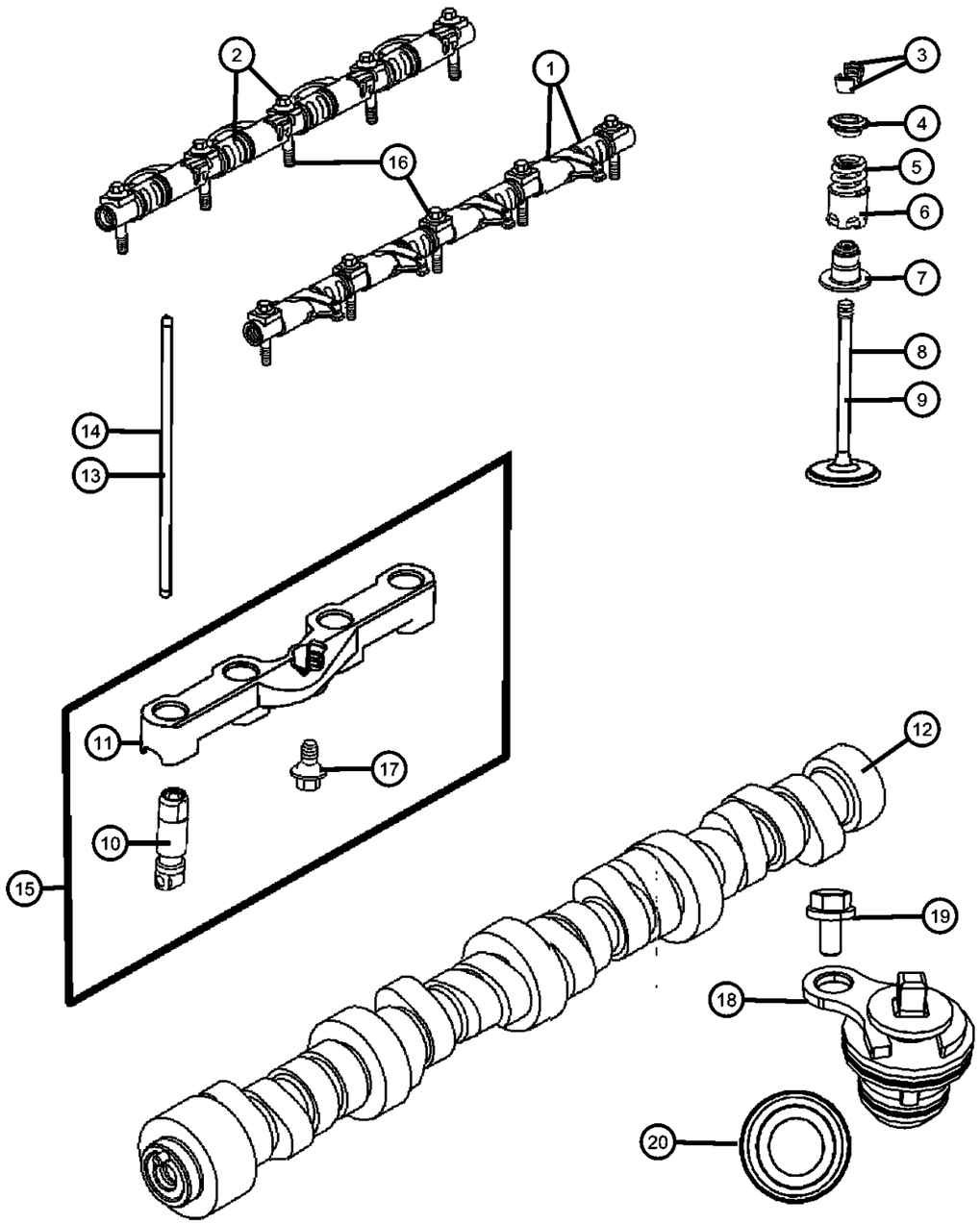

ITEM	PART NUMBER	QTY	LINE	SERIES	BODY	ENGINE	TRANS	TRIM	DESCRIPTION
5	05037382AD	8	D			ESF			SPRING, Intake Valve
6	05037477AD	8	D			ESF			SPRING, Exhaust Valve
7									SEAL, Valve Guide
	05037798AA	8	D			ESF			Intake
	53021578AA	8	D			ESF			Exhaust
8	05037372AB	8	D			ESF			VALVE, Intake, Standard
9	05037373AB	8	D			ESF			VALVE, Exhaust, Standard
10		8							TAPPET, Hyd. Roller, Serviced With Lifters And Yoke, (NOT SERVICED)
11	53021721AA	4	D			ESF, EZC			YOKE, Tappet Aligning
12	05037379AD	1	D			ESF			CAMSHAFT, Engine
13	05037476AB	8	D			ESF			PUSH ROD, Intake Valve
14	05037475AB	8	D			ESF			PUSH ROD, Exhaust Valve
15	53021720AD	4	D			ESF, EZC			LIFTERS AND YOKE, Hydraulic, Engine
16	06507072AA	10	D			ESF			BOLT, Hex Flange Head, M8X1.25X50.00, Rocker Arm Shaft To Cylinder Head, Mounting
17	06509208AA	4	D			ESF, EZC			BOLT, Hex Flange Head, M6x1.00x14.00, Lifter Guide To Cylinder Block, Mounting
18	53032221AA	4	D			ESF, EZC			PLUG, Cylinder Block, For Engines Without Multi-Displacement System
19	06102164AA	4	D			ESF			BOLT AND CONED WASHER, Hex Head, M6X1.00X14.00, MDS Plug To Cylinder Block, Mounting
20	06507663AA	1	D			ESF			PLUG, Camshaft

DODGE CHALLENGER (LC)

SERIES	LINE	BODY	ENGINE	TRANSMISSION
H = HIGHLINE	D = DODGE	22 = 2-DR SEDAN TYPE #2	EGG = 3.5L High Output V6 24V MPI Engine	DEC = 6-Speed Manual TREMEC Transmission
P = PREMIUM			ESF = 6.1L SRT HEMI V8 Engine	DGJ = 5-Speed Auto W5A580 Transmission
X = SPECIAL			EZC = 5.7L HEMI VCT Engine	DGV = 4-Spd. Automatic VLP 42RLE Trans
			EZD = 5.7L Hemi VCT MDS Engine	

AR = use ase required - = Non illustrrated part

Timing Case Cover 6.1L [ESF]
Figure 009ESF-605

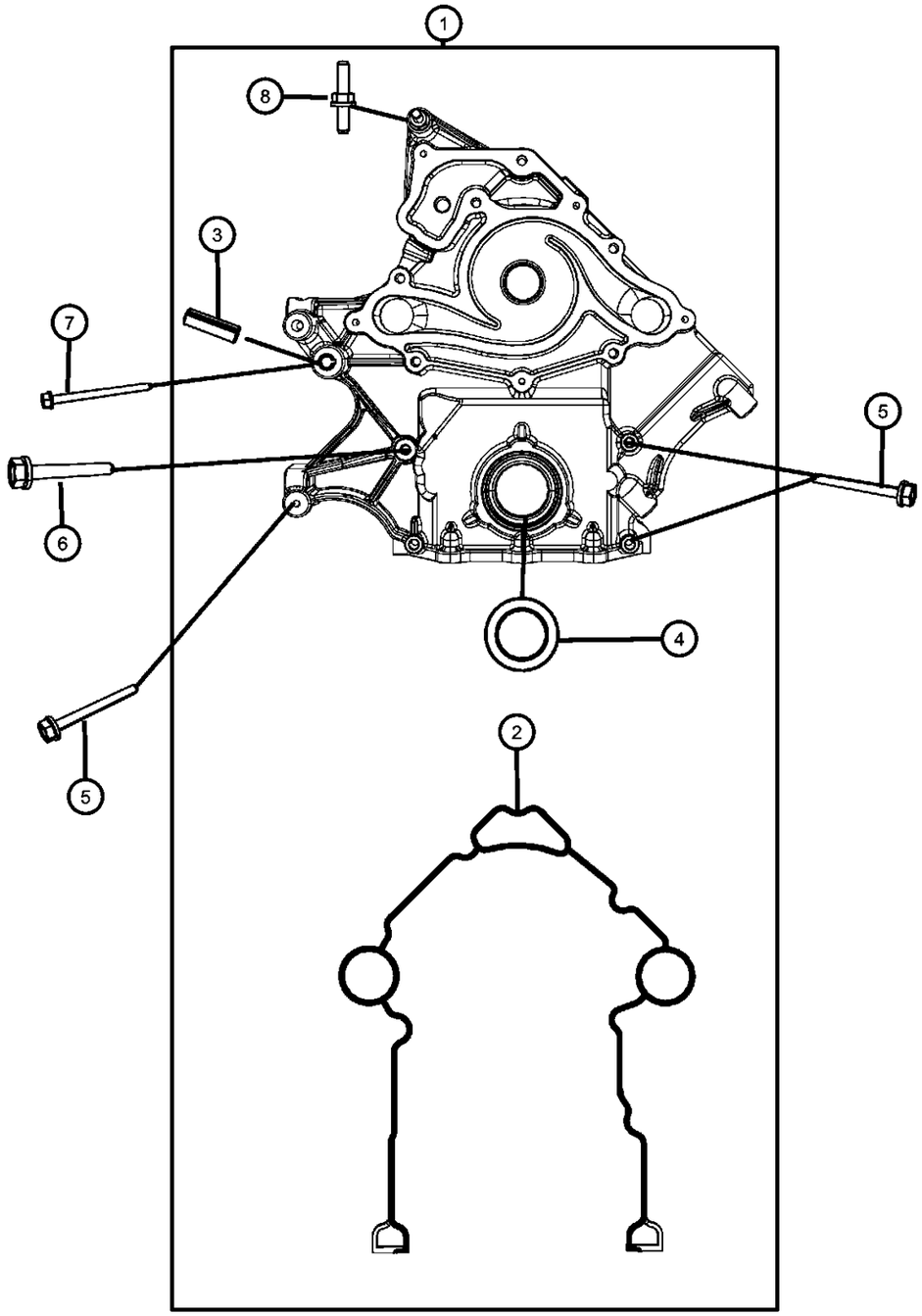

ITEM	PART NUMBER	QTY	LINE	SERIES	BODY	ENGINE	TRANS	TRIM	DESCRIPTION

NOTE:
Sales Codes:
[DEC] = 6-Speed Manual TR6060 Transmission
[DEH] = 6-Speed Manual NSG370 Transmission
[DF9] = AHS-T RWD Automatic Transmission
[DGJ] = 5-Speed Automatic W5A580 Transmission
[DGQ] = 5-Speed Automatic 545RFE Transmission
[DGV] = 4-Speed Automatic VLP 42RLE Transmission
[DG0] = All Automatic Transmissions
[DHR] = Single Speed On Demand MP3010 Transfer Case
[DHU] = AWD Electronic Shift Two Speed NVG 244 H/D Transfer Case
[DHZ] = Full Time Single Mode NVG 140 Transfer Case
[EGS] = 4.0L SOHC V-6 Engine
[EG0] = All 4.0L Engines
[EKG] = 3.7L [Magnum] V-6 Engine
[EK0] = All 3.7L 6-Cylinder Gas Engines
[ENS] = 2.8L 4 Cylinder Turbo Diesel Engine
[EN0] = All 2.8L 4 Cylinder Turbo Diesel Engines
[ESF] = 6.1L SRT V-8 Hemi Engine
[ES0] = All 6.1L 8-Cylinder Engines
[EVA] = 4.7L [Magnum] V-8 Engine
[EVD] = 4.7L V-8 FFV Engine
[EVE] = 4.7L V-8 Engine
[EV0] = All 4.7L 8-Cylinder Engines
[EZA] = 5.7L Hemi V-8 Engine
[EZB] = 5.7L Hemi V-8 Multi-Displacement Engine
[EZC] = 5.7L Hemi V-8 VCT Non Multi-Displacement Engine
[EZD] = 5.7L Hemi V-8 VCT Multi-Displacement Engine
[EZE] = 5.7L Hemi V-8 HEV Engine
[EZ0] = All 5.7L 8-Cylinder Engines
[NAA] = Federal Emissions
[NAE] = California Emissions
[NAS] = 50 State Emissions
[NA1] = Export Emissions
[NHK] = Engine Cylinder Block Heater
[XEF] = Transfer Case Skid Plate Sheild

1	04792795AD	1	D			ESF			COVER, Timing Case, Includes Gasket, Bushing And Front Crankshaft Seal
2	05139933AB	1	D			ESF			GASKET PACKAGE, Front Cover
3	06506697AA	2	D			ESF			BUSHING, Timing Cover
4	53021585AD	1	D			ESF			SEAL, Crankshaft Oil, Front
5									BOLT AND CONED WASHER, Hex Head, M8X1.25X80.00
	06506270AA	5	D			ESF			Water Pump, Mounting

DODGE CHALLENGER (LC)

SERIES	LINE	BODY	ENGINE	TRANSMISSION
H = HIGHLINE P = PREMIUM X = SPECIAL	D = DODGE	22 = 2-DR SEDAN TYPE #2	EGG = 3.5L High Output V6 24V MPI Engine ESF = 6.1L SRT HEMI V8 Engine EZC = 5.7L HEMI VCT Engine EZD = 5.7L Hemi VCT MDS Engine	DEC = 6-Speed Manual TREMEC Transmission DGJ = 5-Speed Auto W5A580 Transmission DGV = 4-Spd. Automatic VLP 42RLE Trans

Timing Case Cover 6.1L [ESF]
Figure 009ESF-605

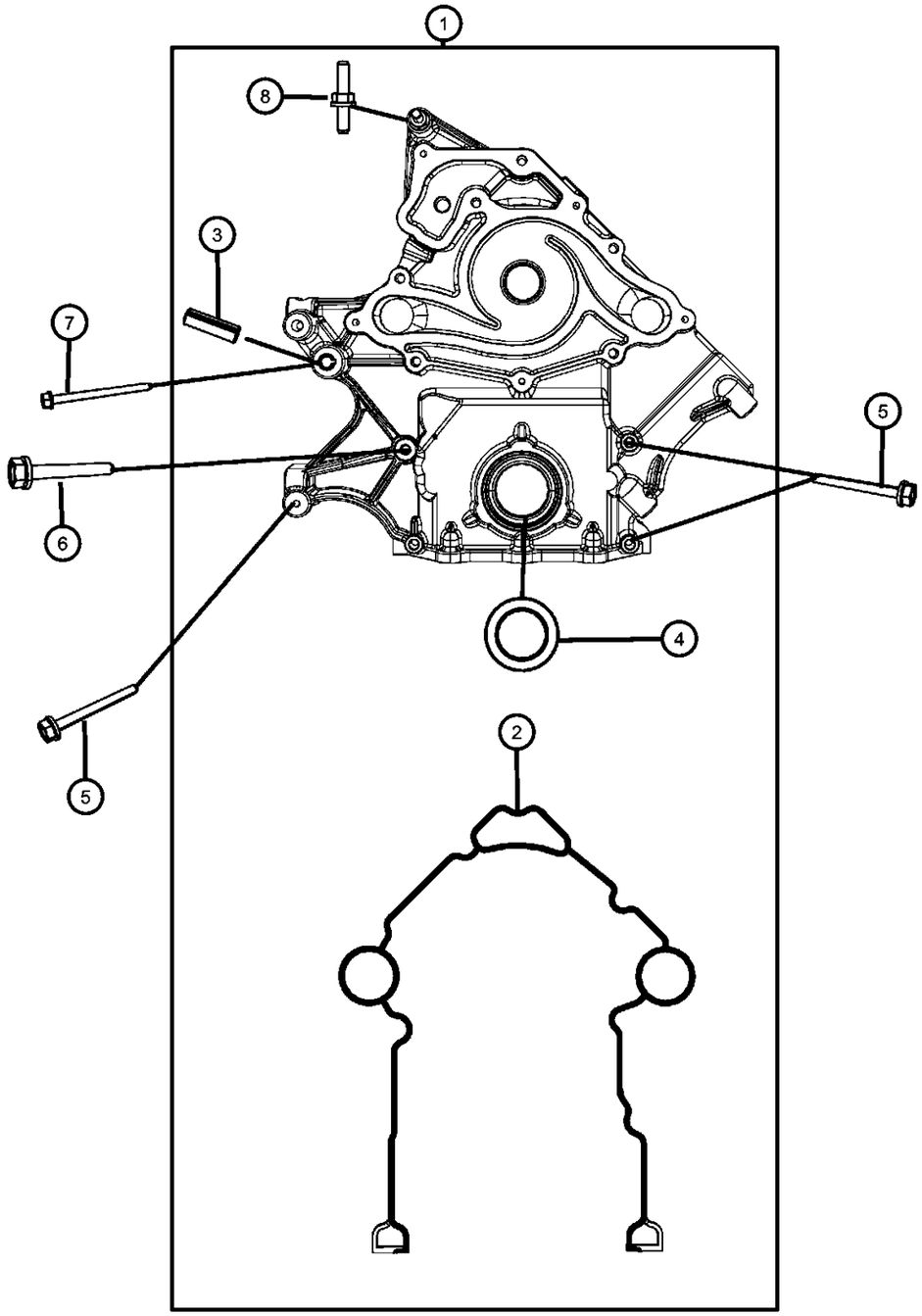

ITEM	PART NUMBER	QTY	LINE	SERIES	BODY	ENGINE	TRANS	TRIM	DESCRIPTION
		3	D			ESF			Front Timing Case Cover To Cylinder Block, Mounting
6	06102157AA	1	D			ESF			BOLT AND CONED WASHER, Hex Head, M8X1.25X58.00, Front Timing Case Cover To Cylinder Block, Mounting
7	06502929	1	D			ESF			BOLT, Hex Head Locking, M8X1.25X119.00, Front Timing Case Cover To Cylinder And Slide Bushing Block, Mounting
8	06506343AA	1	D			ESF			STUD, Double Ended, M10X1.50X25.00, Cover/Lifting Stud, Mounting

DODGE CHALLENGER (LC)

SERIES	LINE	BODY	ENGINE	TRANSMISSION
H = HIGHLINE P = PREMIUM X = SPECIAL	D = DODGE	22 = 2-DR SEDAN TYPE #2	EGG = 3.5L High Output V6 24V MPI Engine ESF = 6.1L SRT HEMI V8 Engine EZC = 5.7L HEMI VCT Engine EZD = 5.7L Hemi VCT MDS Engine	DEC = 6-Speed Manual TREMEC Transmission DGJ = 5-Speed Auto W5A580 Transmission DGV = 4-Spd. Automatic VLP 42RLE Trans

Timing System 6.1L [ESF]
Figure 009ESF-625

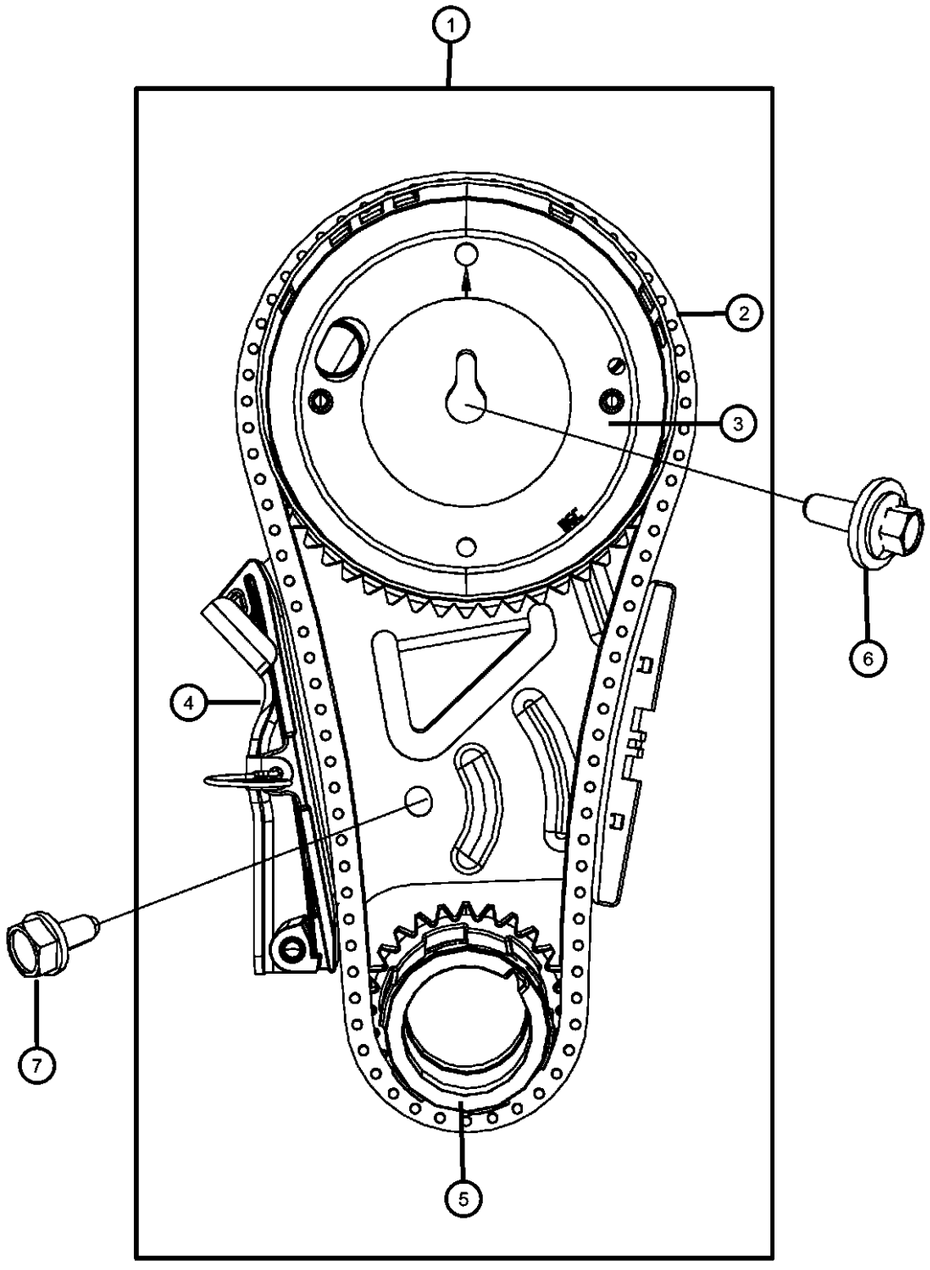

ITEM	PART NUMBER	QTY	LINE	SERIES	BODY	ENGINE	TRANS	TRIM	DESCRIPTION

NOTE:
Sales Codes:
[DEC] = 6-Speed Manual TR6060 Transmission
[DEH] = 6-Speed Manual NSG370 Transmission
[DF9] = AHS-T RWD Automatic Transmission
[DGJ] = 5-Speed Automatic W5A580 Transmission
[DGQ] = 5-Speed Automatic 545RFE Transmission
[DGV] = 4-Speed Automatic VLP 42RLE Transmission
[DG0] = All Automatic Transmissions
[DHR] = Single Speed On Demand MP3010 Transfer Case
[DHU] = AWD Electronic Shift Two Speed NVG 244 H/D Transfer Case
[DHZ] = Full Time Single Mode NVG 140 Transfer Case
[EGS] = 4.0L SOHC V-6 Engine
[EG0] = All 4.0L Engines
[EKG] = 3.7L [Magnum] V-6 Engine
[EK0] = All 3.7L 6-Cylinder Gas Engines
[ENS] = 2.8L 4 Cylinder Turbo Diesel Engine
[EN0] = All 2.8L 4 Cylinder Turbo Diesel Engines
[ESF] = 6.1L SRT V-8 Hemi Engine
[ES0] = All 6.1L 8-Cylinder Engines
[EVA] = 4.7L [Magnum] V-8 Engine
[EVD] = 4.7L V-8 FFV Engine
[EVE] = 4.7L V-8 Engine
[EV0] = All 4.7L 8-Cylinder Engines
[EZA] = 5.7L Hemi V-8 Engine
[EZB] = 5.7L Hemi V-8 Multi-Displacement Engine
[EZC] = 5.7L Hemi V-8 VCT Non Multi-Displacement Engine
[EZD] = 5.7L Hemi V-8 VCT Multi-Displacement Engine
[EZE] = 5.7L Hemi V-8 HEV Engine
[EZ0] = All 5.7L 8-Cylinder Engines
[NAA] = Federal Emissions
[NAE] = California Emissions
[NAS] = 50 State Emissions
[NA1] = Export Emissions
[NHK] = Engine Cylinder Block Heater
[XEF] = Transfer Case Skid Plate Sheild

1	05037579AB	1	D			ESF			TIMING DRIVE KIT, Engine
2		1							CHAIN, Timing, Serviced in Kit, (NOT SERVICED)
3		1							SPROCKET, Camshaft, Serviced In Kit, (NOT SERVICED)
4	05037593AB	1	D			ESF			TENSIONER, Chain, Also Serviced In Kit
5		1							SPROCKET, Crankshaft, Serviced In Kit, (NOT SERVICED)

DODGE CHALLENGER (LC)

SERIES	LINE	BODY	ENGINE	TRANSMISSION
H = HIGHLINE P = PREMIUM X = SPECIAL	D = DODGE	22 = 2-DR SEDAN TYPE #2	EGG = 3.5L High Output V6 24V MPI Engine ESF = 6.1L SRT HEMI V8 Engine EZC = 5.7L HEMI VCT Engine EZD = 5.7L Hemi VCT MDS Engine	DEC = 6-Speed Manual TREMEC Transmission DGJ = 5-Speed Auto W5A580 Transmission DGV = 4-Spd. Automatic VLP 42RLE Trans

Timing System 6.1L [ESF]
Figure 009ESF-625

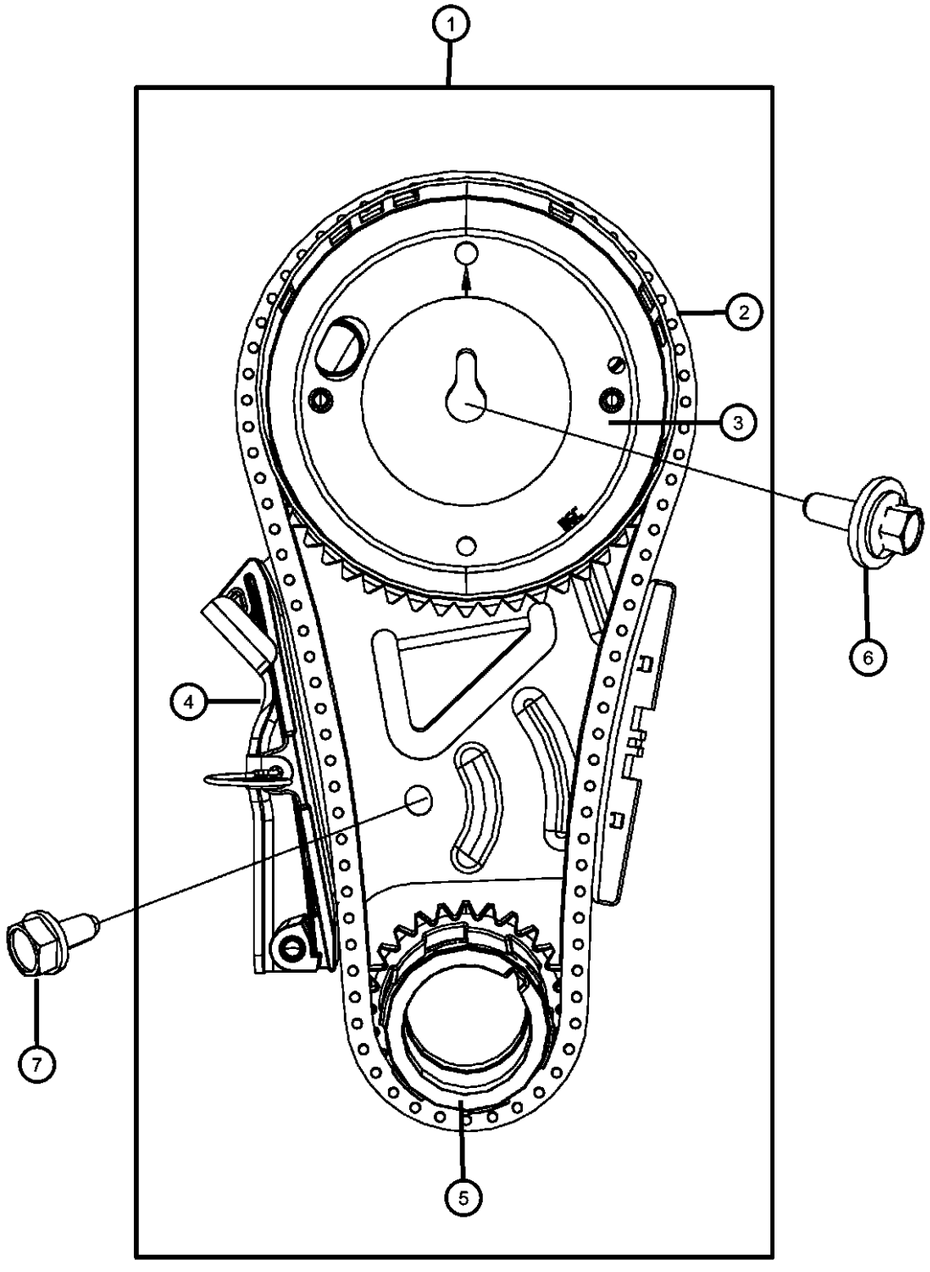

ITEM	PART NUMBER	QTY	LINE	SERIES	BODY	ENGINE	TRANS	TRIM	DESCRIPTION
6	06507480AA	1	D			ESF			BOLT, Hex Flange Head, M12X1.75X37.00, Sprocket To Camshaft, Mounting
7	06507479AA	3	D			ESF			BOLT AND WASHER, Hex Head, M8x1.25x20.00, Tensioner To Cylinder Block, Mounting

DODGE CHALLENGER (LC)

SERIES	LINE	BODY	ENGINE	TRANSMISSION
H = HIGHLINE	D = DODGE	22 = 2-DR SEDAN TYPE #2	EGG = 3.5L High Output V6 24V MPI Engine	DEC = 6-Speed Manual TREMEC Transmission
P = PREMIUM			ESF = 6.1L SRT HEMI V8 Engine	DGJ = 5-Speed Auto W5A580 Transmission
X = SPECIAL			EZC = 5.7L HEMI VCT Engine	DGV = 4-Spd. Automatic VLP 42RLE Trans
			EZD = 5.7L Hemi VCT MDS Engine	

AR = use ase required - = Non illustrrated part

Engine Oiling Pump 6.1L [ESF]
Figure 009ESF-705

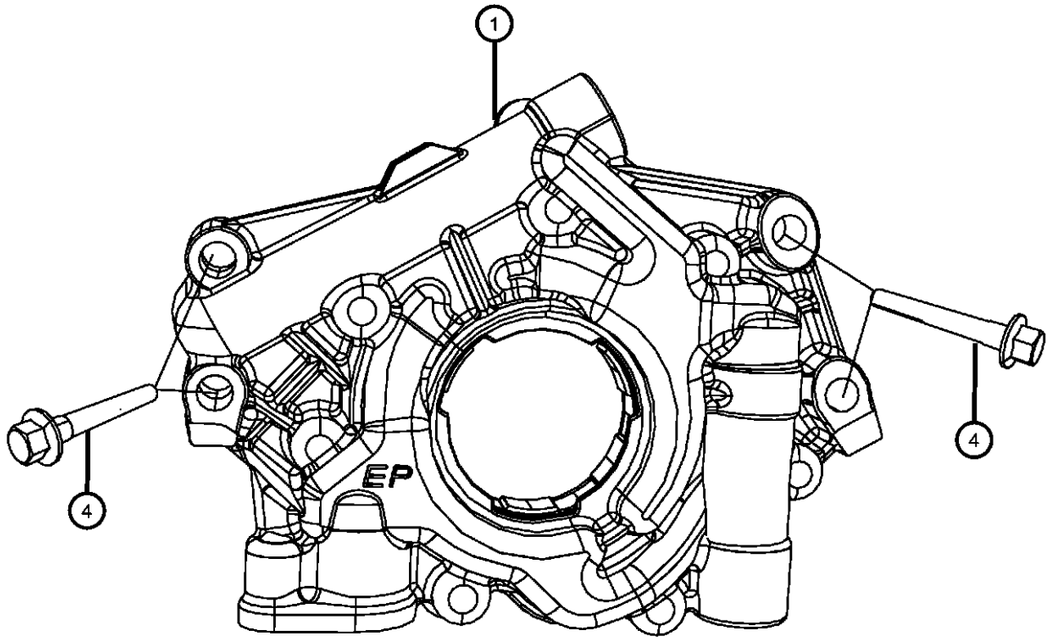

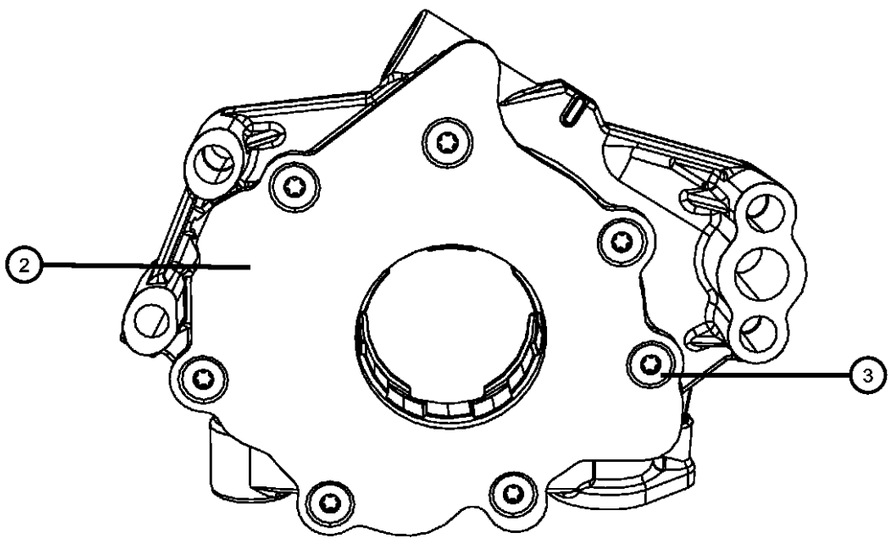

ITEM	PART NUMBER	QTY	LINE	SERIES	BODY	ENGINE	TRANS	TRIM	DESCRIPTION

NOTE:
Sales Codes:
[DEC] = 6-Speed Manual TR6060 Transmission
[DEH] = 6-Speed Manual NSG370 Transmission
[DF9] = AHS-T RWD Automatic Transmission
[DGJ] = 5-Speed Automatic W5A580 Transmission
[DGQ] = 5-Speed Automatic 545RFE Transmission
[DGV] = 4-Speed Automatic VLP 42RLE Transmission
[DG0] = All Automatic Transmissions
[DHR] = Single Speed On Demand MP3010 Transfer Case
[DHU] = AWD Electronic Shift Two Speed NVG 244 H/D Transfer Case
[DHZ] = Full Time Single Mode NVG 140 Transfer Case
[EGS] = 4.0L SOHC V-6 Engine
[EG0] = All 4.0L Engines
[EKG] = 3.7L [Magnum] V-6 Engine
[EK0] = All 3.7L 6-Cylinder Gas Engines
[ENS] = 2.8L 4 Cylinder Turbo Diesel Engine
[EN0] = All 2.8L 4 Cylinder Turbo Diesel Engines
[ESF] = 6.1L SRT V-8 Hemi Engine
[ES0] = All 6.1L 8-Cylinder Engines
[EVA] = 4.7L [Magnum] V-8 Engine
[EVD] = 4.7L V-8 FFV Engine
[EVE] = 4.7L V-8 Engine
[EV0] = All 4.7L 8-Cylinder Engines
[EZA] = 5.7L Hemi V-8 Engine
[EZB] = 5.7L Hemi V-8 Multi-Displacement Engine
[EZC] = 5.7L Hemi V-8 VCT Non Multi-Displacement Engine
[EZD] = 5.7L Hemi V-8 VCT Multi-Displacement Engine
[EZE] = 5.7L Hemi V-8 HEV Engine
[EZ0] = All 5.7L 8-Cylinder Engines
[NAA] = Federal Emissions
[NAE] = California Emissions
[NAS] = 50 State Emissions
[NA1] = Export Emissions
[NHK] = Engine Cylinder Block Heater
[XEF] = Transfer Case Skid Plate Sheild

1	05037687AB	1	D			ESF			PUMP, Engine Oil
2		1							COVER, Engine Oil Pump, Serviced With Oil Pump, (NOT SERVICED)
3		1							SCREW, Torx Head, Serviced With Oil Pump, (NOT SERVICED)
4	06101383	4	D			ESF			BOLT AND CONED WASHER, Hex Head, M8X1.25X55.00, Oil Pump To Cylinder Block, Mounting

DODGE CHALLENGER (LC)

SERIES	LINE	BODY	ENGINE	TRANSMISSION
H = HIGHLINE P = PREMIUM X = SPECIAL	D = DODGE	22 = 2-DR SEDAN TYPE #2	EGG = 3.5L High Output V6 24V MPI Engine ESF = 6.1L SRT HEMI V8 Engine EZC = 5.7L HEMI VCT Engine EZD = 5.7L Hemi VCT MDS Engine	DEC = 6-Speed Manual TREMEC Transmission DGJ = 5-Speed Auto W5A580 Transmission DGV = 4-Spd. Automatic VLP 42RLE Trans

Engine Oil Pan, Engine Oil Level Indicator And Related Parts 6.1L [ESF]
Figure 009ESF-725

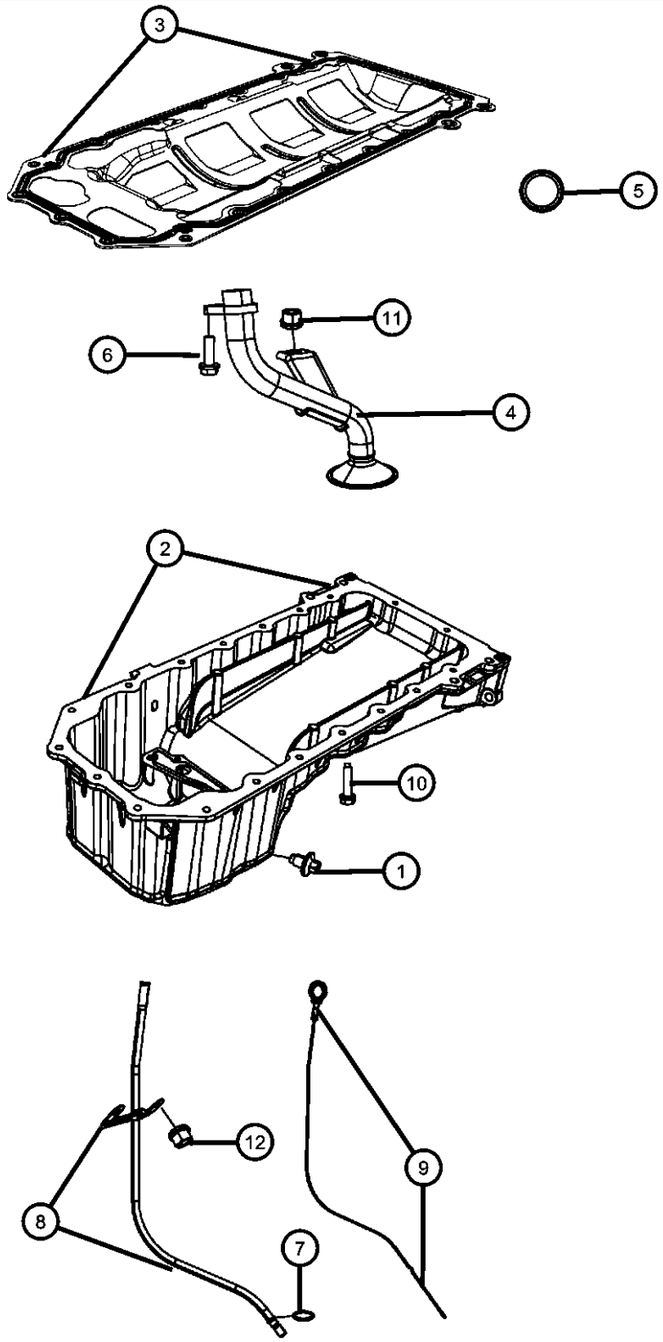

ITEM	PART NUMBER	QTY	LINE	SERIES	BODY	ENGINE	TRANS	TRIM	DESCRIPTION

NOTE:
Sales Codes:
[DEC] = 6-Speed Manual TR6060 Transmission
[DEH] = 6-Speed Manual NSG370 Transmission
[DF9] = AHS-T RWD Automatic Transmission
[DGJ] = 5-Speed Automatic W5A580 Transmission
[DGQ] = 5-Speed Automatic 545RFE Transmission
[DGV] = 4-Speed Automatic VLP 42RLE Transmission
[DG0] = All Automatic Transmissions
[DHR] = Single Speed On Demand MP3010 Transfer Case
[DHU] = AWD Electronic Shift Two Speed NVG 244 H/D Transfer Case
[DHZ] = Full Time Single Mode NVG 140 Transfer Case
[EGS] = 4.0L SOHC V-6 Engine
[EG0] = All 4.0L Engines
[EKG] = 3.7L [Magnum] V-6 Engine
[EK0] = All 3.7L 6-Cylinder Gas Engines
[ENS] = 2.8L 4 Cylinder Turbo Diesel Engine
[EN0] = All 2.8L 4 Cylinder Turbo Diesel Engines
[ESF] = 6.1L SRT V-8 Hemi Engine
[ES0] = All 6.1L 8-Cylinder Engines
[EVA] = 4.7L [Magnum] V-8 Engine
[EVD] = 4.7L V-8 FFV Engine
[EVE] = 4.7L V-8 Engine
[EV0] = All 4.7L 8-Cylinder Engines
[EZA] = 5.7L Hemi V-8 Engine
[EZB] = 5.7L Hemi V-8 Multi-Displacement Engine
[EZC] = 5.7L Hemi V-8 VCT Non Multi-Displacement Engine
[EZD] = 5.7L Hemi V-8 VCT Multi-Displacement Engine
[EZE] = 5.7L Hemi V-8 HEV Engine
[EZ0] = All 5.7L 8-Cylinder Engines
[NAA] = Federal Emissions
[NAE] = California Emissions
[NAS] = 50 State Emissions
[NA1] = Export Emissions
[NHK] = Engine Cylinder Block Heater
[XEF] = Transfer Case Skid Plate Sheild

1	06507741AA	1	D			ESF			PLUG, Oil Drain
2	05037634AA	1	D			ESF			PAN, Engine Oil
3	05037636AB	1	D			ESF			GASKET, Oil Pan
4	05037837AC	1	D			ESF			TUBE, Oil Pickup
5	53020861	1	D			ESF			SEAL, Oil Pick Up Tube
6	06102046AA	1	D			ESF			BOLT AND CONED WASHER, Hex Head, M8X1.25X27.00, Oil Pickup Tube To Cylinder Block, Mounting
7	53021144AA	1	D			ESF			O RING, Engine Oil Indicator Tube

DODGE CHALLENGER (LC)

SERIES	LINE	BODY	ENGINE	TRANSMISSION
H = HIGHLINE P = PREMIUM X = SPECIAL	D = DODGE	22 = 2-DR SEDAN TYPE #2	EGG = 3.5L High Output V6 24V MPI Engine ESF = 6.1L SRT HEMI V8 Engine EZC = 5.7L HEMI VCT Engine EZD = 5.7L Hemi VCT MDS Engine	DEC = 6-Speed Manual TREMEC Transmission DGJ = 5-Speed Auto W5A580 Transmission DGV = 4-Spd. Automatic VLP 42RLE Trans

Engine Oil Pan, Engine Oil Level Indicator And Related Parts 6.1L [ESF]
Figure 009ESF-725

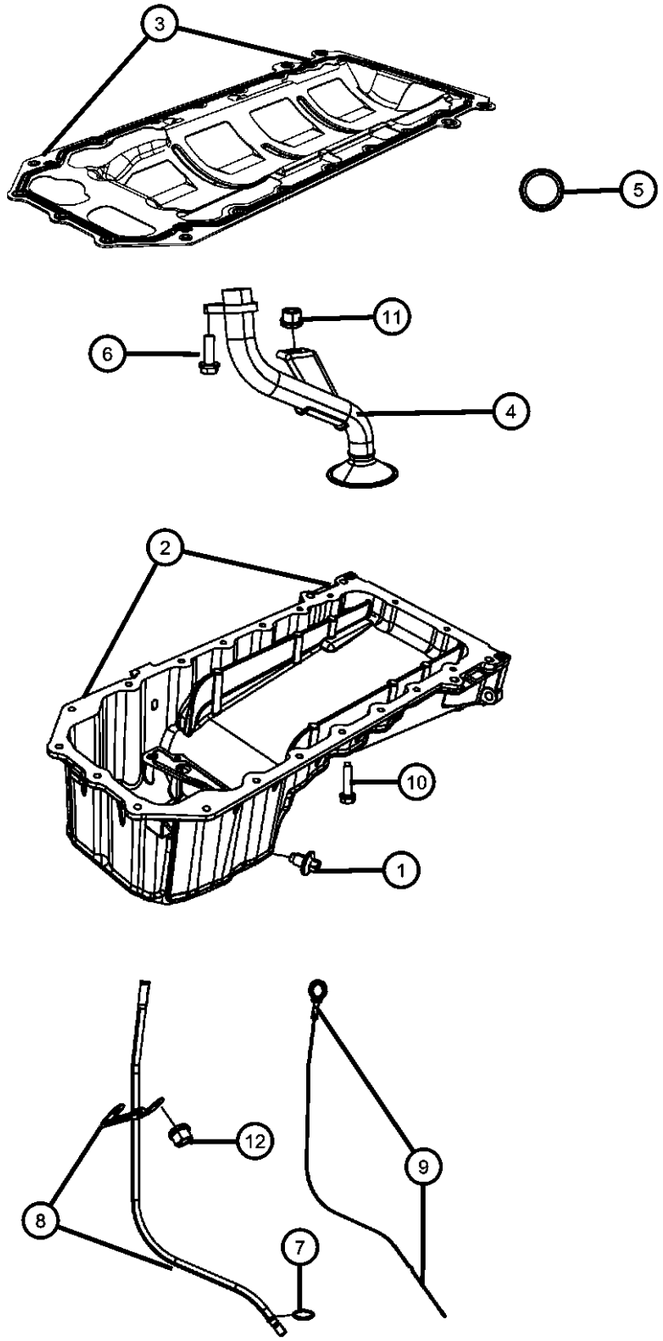

ITEM	PART NUMBER	QTY	LINE	SERIES	BODY	ENGINE	TRANS	TRIM	DESCRIPTION
8	05037660AE	1	D			ESF			TUBE, Engine Oil Indicator
9	05037739AA	1	D			ESF			INDICATOR, Engine Oil Level
10	06508448AA	19	D			ESF			BOLT AND CONED WASHER, Hex Head, M6X1.00X25.00, Oil Pan To Cylinder Block, Mounting
11	06502756	1	D			ESF			NUT, Hex Lock, M8x1.25, Oil Pickup Tube To Cylinder Block, Mounting
12	06104715AA	2	D			ESF			NUT, Hex Flange Lock, M6X1.00, Engine Oil Indicator Tube, Mounting

DODGE CHALLENGER (LC)

SERIES	LINE	BODY	ENGINE	TRANSMISSION
H = HIGHLINE	D = DODGE	22 = 2-DR SEDAN TYPE #2	EGG = 3.5L High Output V6 24V MPI Engine	DEC = 6-Speed Manual TREMEC Transmission
P = PREMIUM			ESF = 6.1L SRT HEMI V8 Engine	DGJ = 5-Speed Auto W5A580 Transmission
X = SPECIAL			EZC = 5.7L HEMI VCT Engine	DGV = 4-Spd. Automatic VLP 42RLE Trans
			EZD = 5.7L Hemi VCT MDS Engine	

AR = use ase required - = Non illustrrated part

Engine Oil, Engine Oil Filter And Adapter 6.1L [ESF]
Figure 009ESF-745

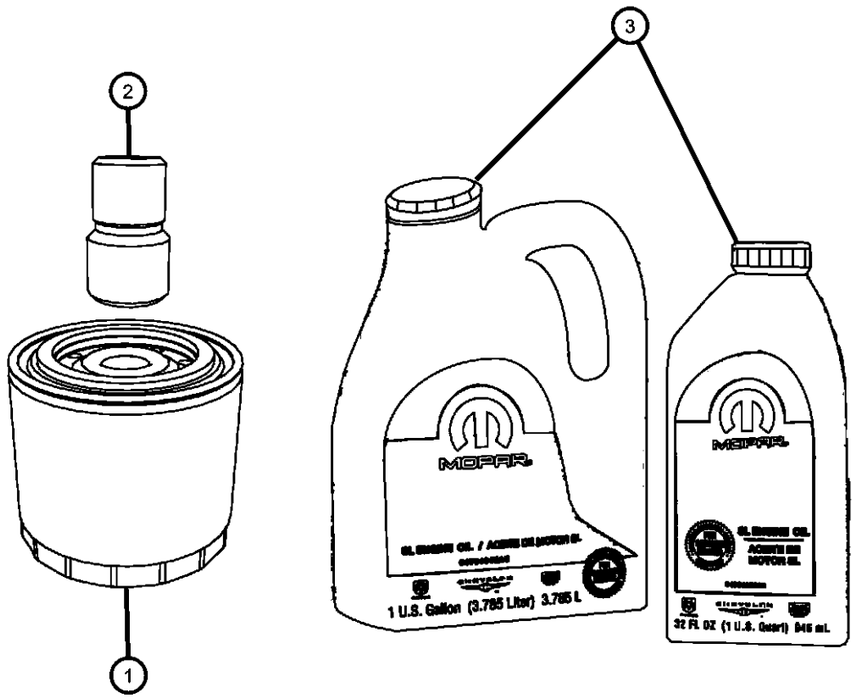

ITEM	PART NUMBER	QTY	LINE	SERIES	BODY	ENGINE	TRANS	TRIM	DESCRIPTION

NOTE:
Sales Codes:
[DEC] = 6-Speed Manual TR6060 Transmission
[DEH] = 6-Speed Manual NSG370 Transmission
[DF9] = AHS-T RWD Automatic Transmission
[DGJ] = 5-Speed Automatic W5A580 Transmission
[DGQ] = 5-Speed Automatic 545RFE Transmission
[DGV] = 4-Speed Automatic VLP 42RLE Transmission
[DG0] = All Automatic Transmissions
[DHR] = Single Speed On Demand MP3010 Transfer Case
[DHU] = AWD Electronic Shift Two Speed NVG 244 H/D Transfer Case
[DHZ] = Full Time Single Mode NVG 140 Transfer Case
[EGS] = 4.0L SOHC V-6 Engine
[EG0] = All 4.0L Engines
[EKG] = 3.7L [Magnum] V-6 Engine
[EK0] = All 3.7L 6-Cylinder Gas Engines
[ENS] = 2.8L 4 Cylinder Turbo Diesel Engine
[EN0] = All 2.8L 4 Cylinder Turbo Diesel Engines
[ESF] = 6.1L SRT V-8 Hemi Engine
[ES0] = All 6.1L 8-Cylinder Engines
[EVA] = 4.7L [Magnum] V-8 Engine
[EVD] = 4.7L V-8 FFV Engine
[EVE] = 4.7L V-8 Engine
[EV0] = All 4.7L 8-Cylinder Engines
[EZA] = 5.7L Hemi V-8 Engine
[EZB] = 5.7L Hemi V-8 Multi-Displacement Engine
[EZC] = 5.7L Hemi V-8 VCT Non Multi-Displacement Engine
[EZD] = 5.7L Hemi V-8 VCT Multi-Displacement Engine
[EZE] = 5.7L Hemi V-8 HEV Engine
[EZ0] = All 5.7L 8-Cylinder Engines
[NAA] = Federal Emissions
[NAE] = California Emissions
[NAS] = 50 State Emissions
[NA1] = Export Emissions
[NHK] = Engine Cylinder Block Heater
[XEF] = Transfer Case Skid Plate Sheild

1	04884899AB	1	D			ESF			FILTER, Engine Oil, [22MM]
2	04892338AA	1	D			ESF			CONNECTOR, Oil Filter, M22X1.50
3		1							OIL, 0W40, (NOT SERVICED)

DODGE CHALLENGER (LC)

SERIES	LINE	BODY	ENGINE	TRANSMISSION
H = HIGHLINE P = PREMIUM X = SPECIAL	D = DODGE	22 = 2-DR SEDAN TYPE #2	EGG = 3.5L High Output V6 24V MPI Engine ESF = 6.1L SRT HEMI V8 Engine EZC = 5.7L HEMI VCT Engine EZD = 5.7L Hemi VCT MDS Engine	DEC = 6-Speed Manual TREMEC Transmission DGJ = 5-Speed Auto W5A580 Transmission DGV = 4-Spd. Automatic VLP 42RLE Trans

AR = use ase required - = Non illustrrated part

Exhaust Manifolds And Heat Shields 6.1L [ESF]
Figure 009ESF-1005

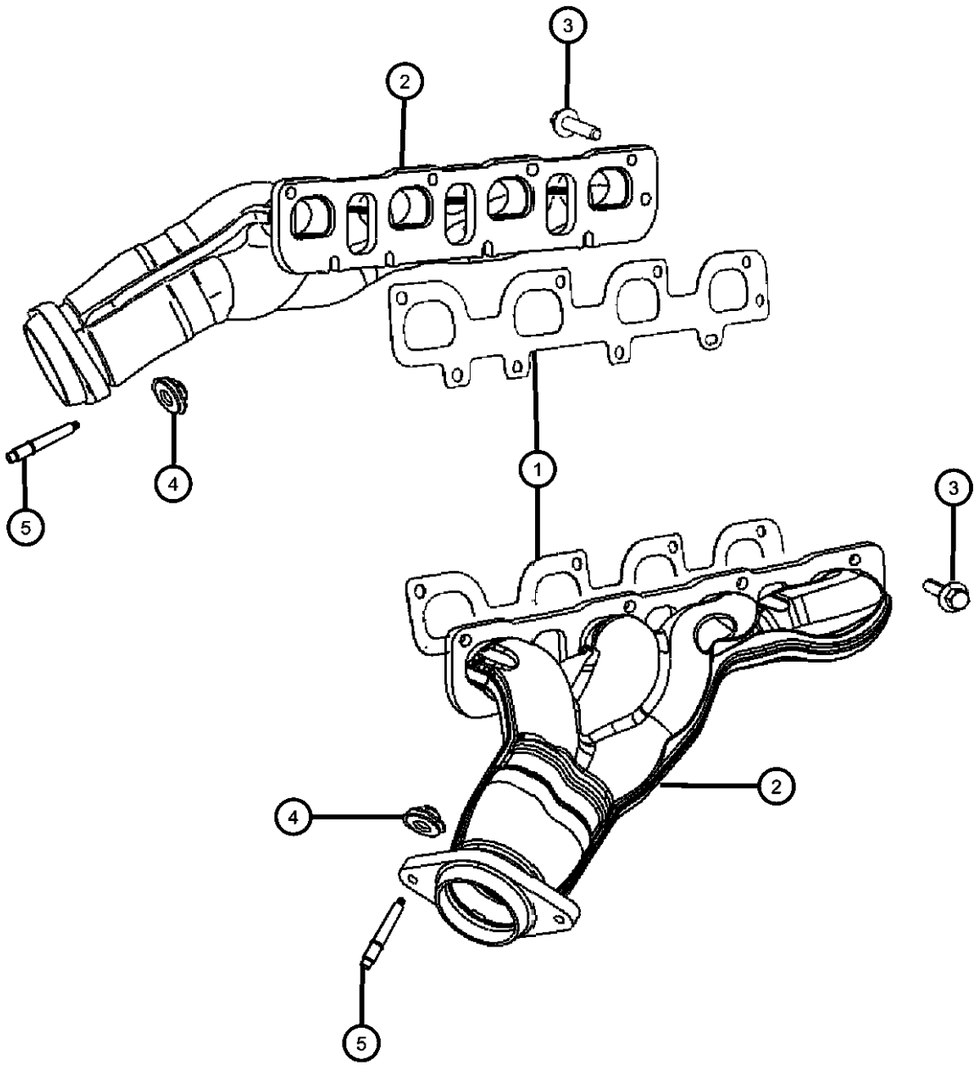

ITEM	PART NUMBER	QTY	LINE	SERIES	BODY	ENGINE	TRANS	TRIM	DESCRIPTION

NOTE:
Sales Codes:
[DEC] = 6-Speed Manual TR6060 Transmission
[DEH] = 6-Speed Manual NSG370 Transmission
[DF9] = AHS-T RWD Automatic Transmission
[DGJ] = 5-Speed Automatic W5A580 Transmission
[DGQ] = 5-Speed Automatic 545RFE Transmission
[DGV] = 4-Speed Automatic VLP 42RLE Transmission
[DG0] = All Automatic Transmissions
[DHR] = Single Speed On Demand MP3010 Transfer Case
[DHU] = AWD Electronic Shift Two Speed NVG 244 H/D Transfer Case
[DHZ] = Full Time Single Mode NVG 140 Transfer Case
[EGS] = 4.0L SOHC V-6 Engine
[EG0] = All 4.0L Engines
[EKG] = 3.7L [Magnum] V-6 Engine
[EK0] = All 3.7L 6-Cylinder Gas Engines
[ENS] = 2.8L 4 Cylinder Turbo Diesel Engine
[EN0] = All 2.8L 4 Cylinder Turbo Diesel Engines
[ESF] = 6.1L SRT V-8 Hemi Engine
[ES0] = All 6.1L 8-Cylinder Engines
[EVA] = 4.7L [Magnum] V-8 Engine
[EVD] = 4.7L V-8 FFV Engine
[EVE] = 4.7L V-8 Engine
[EV0] = All 4.7L 8-Cylinder Engines
[EZA] = 5.7L Hemi V-8 Engine
[EZB] = 5.7L Hemi V-8 Multi-Displacement Engine
[EZC] = 5.7L Hemi V-8 VCT Non Multi-Displacement Engine
[EZD] = 5.7L Hemi V-8 VCT Multi-Displacement Engine
[EZE] = 5.7L Hemi V-8 HEV Engine
[EZ0] = All 5.7L 8-Cylinder Engines
[NAA] = Federal Emissions
[NAE] = California Emissions
[NAS] = 50 State Emissions
[NA1] = Export Emissions
[NHK] = Engine Cylinder Block Heater
[XEF] = Transfer Case Skid Plate Sheild

1						GASKET, Exhaust Manifold
	05038098AA	1	D		ESF	Right
	05038099AA	1	D		ESF	Left
2						MANIFOLD, Exhaust
	05037632AF	1	D		ESF	Right
	05037633AF	1	D		ESF	Left
3						BOLT, Hex Flange Head, M8x1.25x30

DODGE CHALLENGER (LC)

SERIES	LINE	BODY	ENGINE	TRANSMISSION
H = HIGHLINE P = PREMIUM X = SPECIAL	D = DODGE	22 = 2-DR SEDAN TYPE #2	EGG = 3.5L High Output V6 24V MPI Engine ESF = 6.1L SRT HEMI V8 Engine EZC = 5.7L HEMI VCT Engine EZD = 5.7L Hemi VCT MDS Engine	DEC = 6-Speed Manual TREMEC Transmission DGJ = 5-Speed Auto W5A580 Transmission DGV = 4-Spd. Automatic VLP 42RLE Trans

Exhaust Manifolds And Heat Shields 6.1L [ESF]
Figure 009ESF-1005

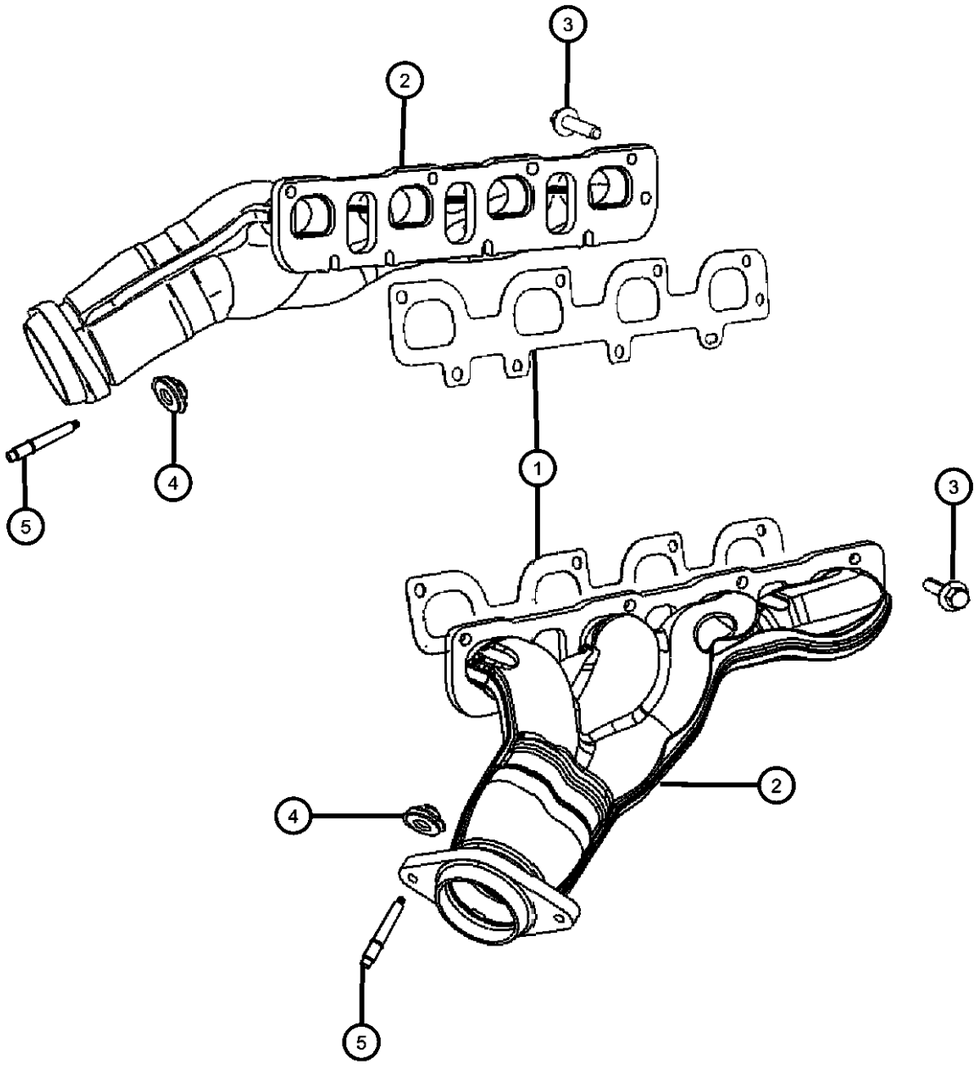

ITEM	PART NUMBER	QTY	LINE	SERIES	BODY	ENGINE	TRANS	TRIM	DESCRIPTION
	06503131	10	D			ESF			Exhaust Manifold To Cylinder Head, Mounting, Upper
		6	D			ESF			Exhaust Manifold To Cylinder Head, Mounting, Lower
4	06104717AA	4	D			ES0, EZ0			NUT, Hex Flange Lock, M10x1.50, Mounting Front Exhaust Pipe To Exhaust Manifold, Mounting
5	06507880AA	4	D			ESF			STUD, Double Ended, [M10X1.50X77.74], Mounting Front Exhaust Pipe To Exhaust Manifold, Mounting

DODGE CHALLENGER (LC)

SERIES	LINE	BODY	ENGINE	TRANSMISSION
H = HIGHLINE	D = DODGE	22 = 2-DR SEDAN TYPE #2	EGG = 3.5L High Output V6 24V MPI Engine	DEC = 6-Speed Manual TREMEC Transmission
P = PREMIUM			ESF = 6.1L SRT HEMI V8 Engine	DGJ = 5-Speed Auto W5A580 Transmission
X = SPECIAL			EZC = 5.7L HEMI VCT Engine	DGV = 4-Spd. Automatic VLP 42RLE Trans
			EZD = 5.7L Hemi VCT MDS Engine	

AR = use ase required - = Non illustrrated part

Intake Manifold 6.1L [ESF]
Figure 009ESF-1025

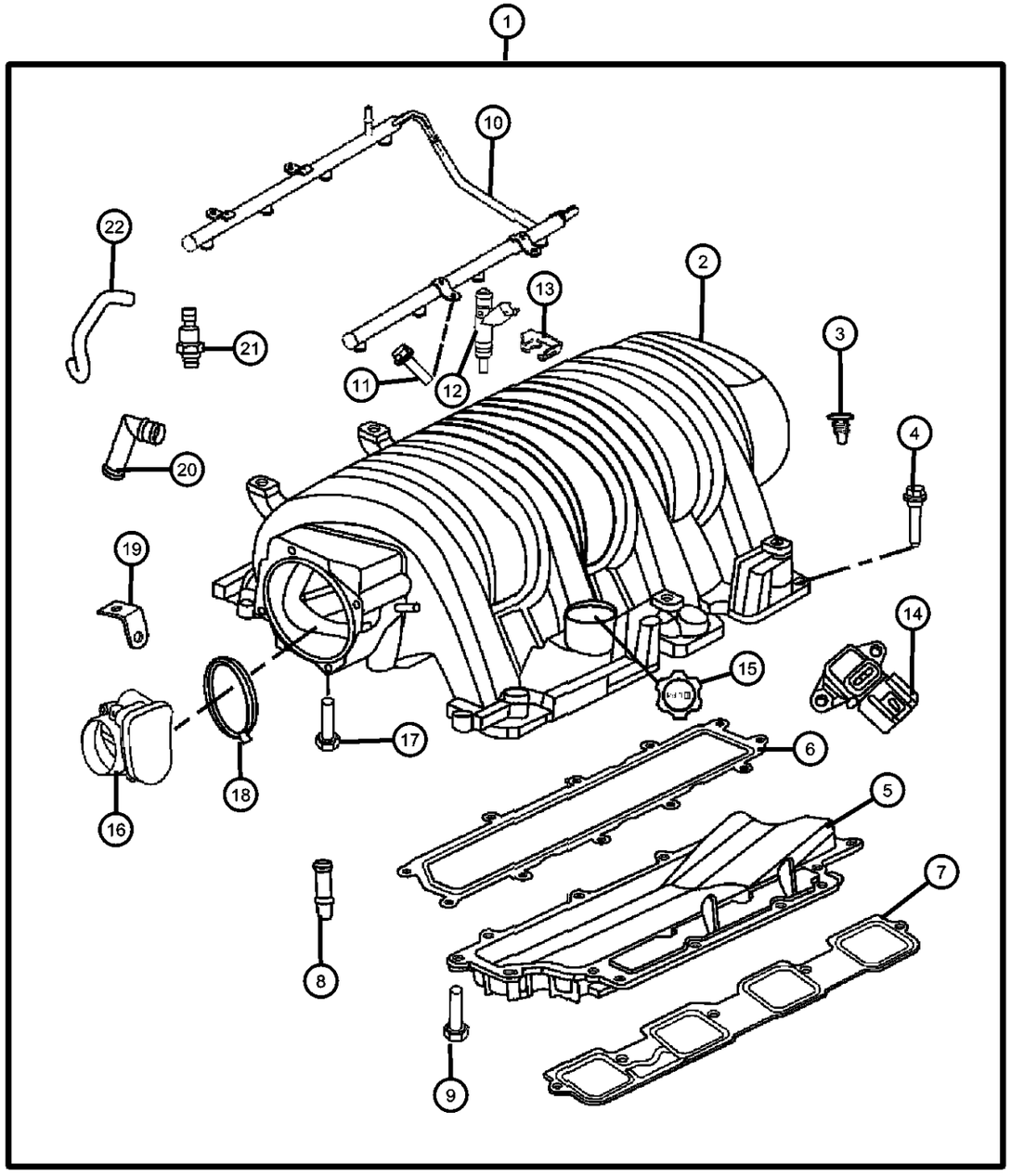

ITEM	PART NUMBER	QTY	LINE	SERIES	BODY	ENGINE	TRANS	TRIM	DESCRIPTION

NOTE:
Sales Codes:
[DEC] = 6-Speed Manual TR6060 Transmission
[DEH] = 6-Speed Manual NSG370 Transmission
[DF9] = AHS-T RWD Automatic Transmission
[DGJ] = 5-Speed Automatic W5A580 Transmission
[DGQ] = 5-Speed Automatic 545RFE Transmission
[DGV] = 4-Speed Automatic VLP 42RLE Transmission
[DG0] = All Automatic Transmissions
[DHR] = Single Speed On Demand MP3010 Transfer Case
[DHU] = AWD Electronic Shift Two Speed NVG 244 H/D Transfer Case
[DHZ] = Full Time Single Mode NVG 140 Transfer Case
[EGS] = 4.0L SOHC V-6 Engine
[EG0] = All 4.0L Engines
[EKG] = 3.7L [Magnum] V-6 Engine
[EK0] = All 3.7L 6-Cylinder Gas Engines
[ENS] = 2.8L 4 Cylinder Turbo Diesel Engine
[EN0] = All 2.8L 4 Cylinder Turbo Diesel Engines
[ESF] = 6.1L SRT V-8 Hemi Engine
[ES0] = All 6.1L 8-Cylinder Engines
[EVA] = 4.7L [Magnum] V-8 Engine
[EVD] = 4.7L V-8 FFV Engine
[EVE] = 4.7L V-8 Engine
[EV0] = All 4.7L 8-Cylinder Engines
[EZA] = 5.7L Hemi V-8 Engine
[EZB] = 5.7L Hemi V-8 Multi-Displacement Engine
[EZC] = 5.7L Hemi V-8 VCT Non Multi-Displacement Engine
[EZD] = 5.7L Hemi V-8 VCT Multi-Displacement Engine
[EZE] = 5.7L Hemi V-8 HEV Engine
[EZ0] = All 5.7L 8-Cylinder Engines
[NAA] = Federal Emissions
[NAE] = California Emissions
[NAS] = 50 State Emissions
[NA1] = Export Emissions
[NHK] = Engine Cylinder Block Heater
[XEF] = Transfer Case Skid Plate Sheild

1	05037510AI	1	D			ESF			MANIFOLD, Intake, This Package Contains All Parts Listed Below
2		1							MANIFOLD, Engine Intake, Seviced In Item 1 Package Only, (NOT SERVICED)
3	56009338AB	4	D			ESF			RIVET
4	06509098AA	10	D			ESF			BOLT, Hex Flange Head, M6X1.00X35.00, Intake Manifold To Cylinder Head, Mounting

DODGE CHALLENGER (LC)

SERIES	LINE	BODY	ENGINE	TRANSMISSION
H = HIGHLINE P = PREMIUM X = SPECIAL	D = DODGE	22 = 2-DR SEDAN TYPE #2	EGG = 3.5L High Output V6 24V MPI Engine ESF = 6.1L SRT HEMI V8 Engine EZC = 5.7L HEMI VCT Engine EZD = 5.7L Hemi VCT MDS Engine	DEC = 6-Speed Manual TREMEC Transmission DGJ = 5-Speed Auto W5A580 Transmission DGV = 4-Spd. Automatic VLP 42RLE Trans

Intake Manifold 6.1L [ESF]
Figure 009ESF-1025

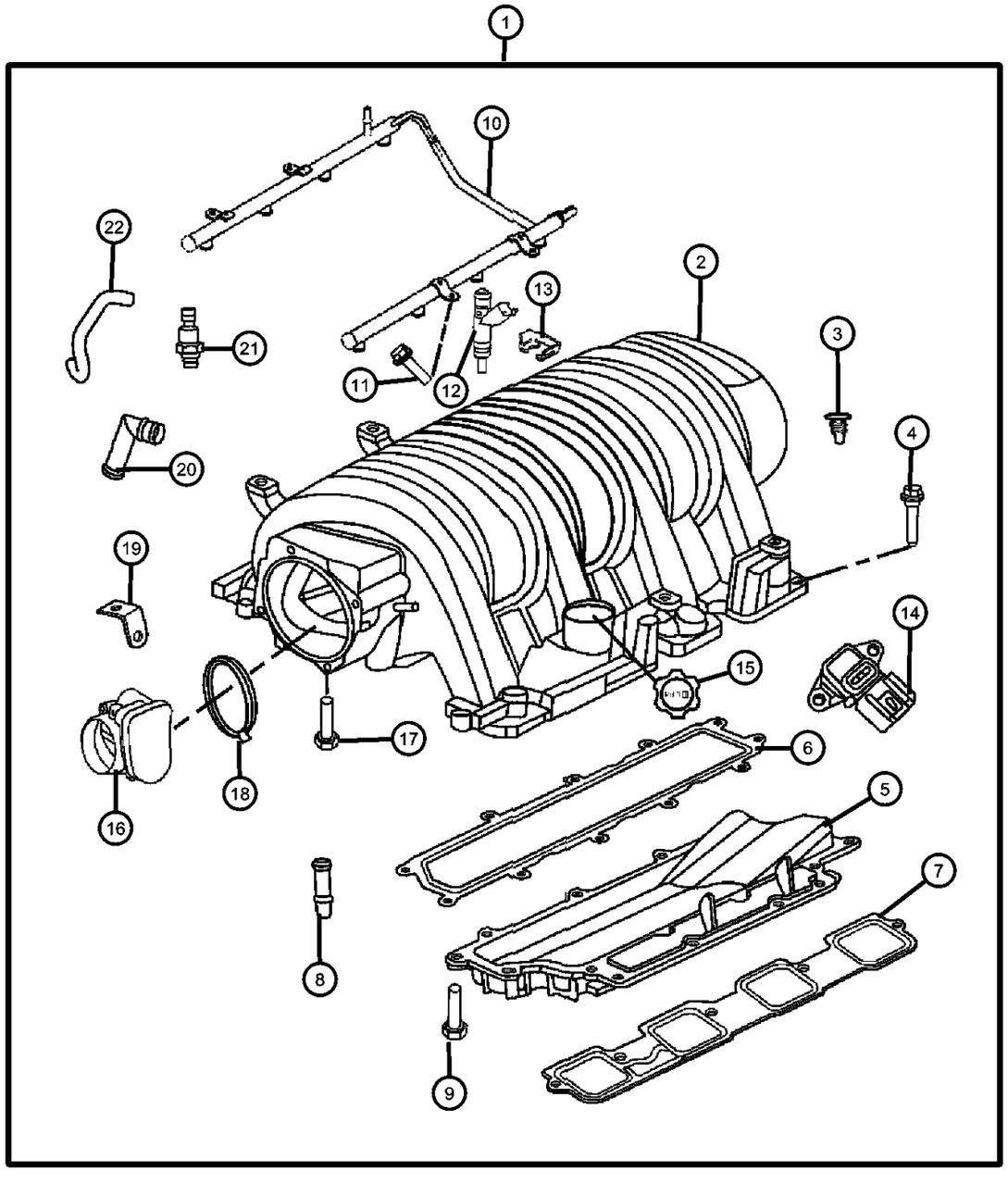

ITEM	PART NUMBER	QTY	LINE	SERIES	BODY	ENGINE	TRANS	TRIM	DESCRIPTION
5		10							PAN, Intake Manifold, Seviced In Item 1 Package Only, (NOT SERVICED)
6	05037555AA	1	D			ESF			GASKET, Intake Manifold Pan
7	05037503AA	2	D			ESF			GASKET, Intake Manifold
8		2							NIPPLE, Intake Manifold, For Power Brake Booster, Seviced In Item 1 Package Only, (NOT SERVICED)
9	06101451	16	D			ESF			BOLT AND WASHER, Hex Head, M6X1.00X25.00, Valley Pan To Intake Manifold, Mounting
10	05037480AA	1	D			ESF			RAIL, Fuel
11	05133476AA	4	D			ESF			BOLT, Hex Flange Head, M6X1.00X20.00, Fuel Rail To Intake Manifold
12	05037479AA	8	D			ESF			INJECTOR, Fuel
13	53030058AC	8	D			ESF			CLIP, Fuel Injector
14	56041018AD	1	D			ESF			SENSOR, MAP
15	05037665AA	1	D			ESF			CAP, Oil Filler
16	04591847AC	1	D			ESF			THROTTLE BODY
17	06104186AA	4	D			ESF			BOLT, Hex Flange Head, M6X1.00X45.00, Throttle Body To Intake Manifold, Mounting
18	53032383AB	1	D			ESF			SEAL, Throttle Body to Intake
19	05037679AA	1	D			ESF			BRACKET, Wire Harness
20		1							NIPPLE, Crankcase Vent, Seviced In Item 1 Package Only, (NOT SERVICED)
21	05037831AA	1	D			ESF			VALVE, PCV
22	05037515AA	1	D			ESF			HOSE, PCV Valve To intake Manifold

DODGE CHALLENGER (LC)

SERIES	LINE	BODY	ENGINE	TRANSMISSION
H = HIGHLINE	D = DODGE	22 = 2-DR SEDAN TYPE #2	EGG = 3.5L High Output V6 24V MPI Engine	DEC = 6-Speed Manual TREMEC Transmission
P = PREMIUM			ESF = 6.1L SRT HEMI V8 Engine	DGJ = 5-Speed Auto W5A580 Transmission
X = SPECIAL			EZC = 5.7L HEMI VCT Engine	DGV = 4-Spd. Automatic VLP 42RLE Trans
			EZD = 5.7L Hemi VCT MDS Engine	

AR = use ase required - = Non illustrrated part

Crankcase Ventilation 6.1L [ESF]
Figure 009ESF-1105

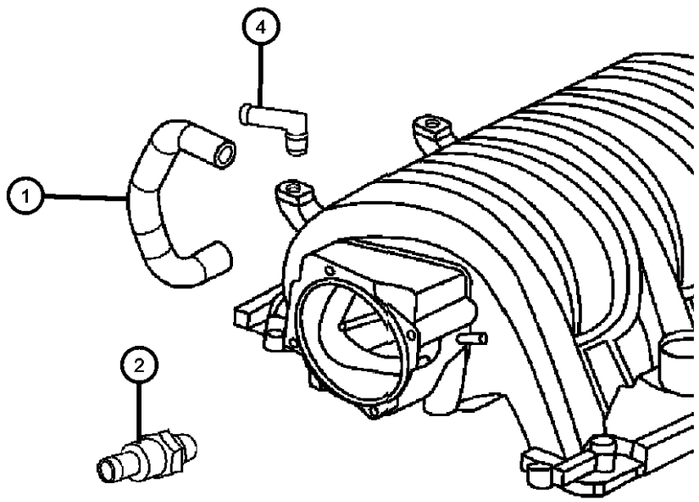

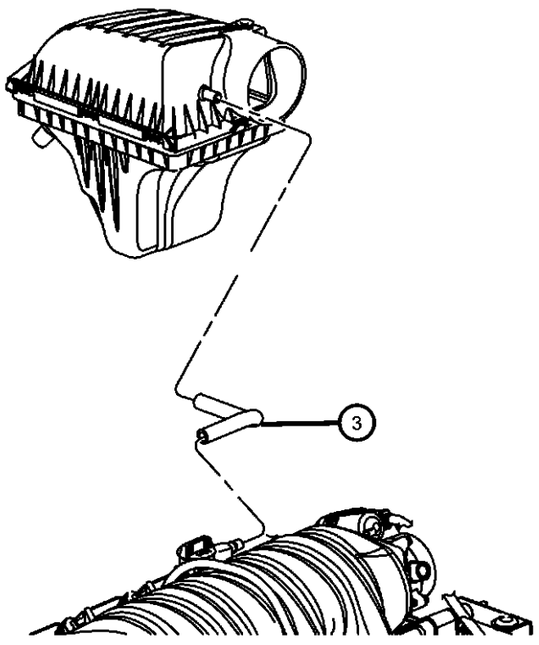

ITEM	PART NUMBER	QTY	LINE	SERIES	BODY	ENGINE	TRANS	TRIM	DESCRIPTION

NOTE:
Sales Codes:
[DEC] = 6-Speed Manual TR6060 Transmission
[DEH] = 6-Speed Manual NSG370 Transmission
[DF9] = AHS-T RWD Automatic Transmission
[DGJ] = 5-Speed Automatic W5A580 Transmission
[DGQ] = 5-Speed Automatic 545RFE Transmission
[DGV] = 4-Speed Automatic VLP 42RLE Transmission
[DG0] = All Automatic Transmissions
[DHR] = Single Speed On Demand MP3010 Transfer Case
[DHU] = AWD Electronic Shift Two Speed NVG 244 H/D Transfer Case
[DHZ] = Full Time Single Mode NVG 140 Transfer Case
[EGS] = 4.0L SOHC V-6 Engine
[EG0] = All 4.0L Engines
[EKG] = 3.7L [Magnum] V-6 Engine
[EK0] = All 3.7L 6-Cylinder Gas Engines
[ENS] = 2.8L 4 Cylinder Turbo Diesel Engine
[EN0] = All 2.8L 4 Cylinder Turbo Diesel Engines
[ESF] = 6.1L SRT V-8 Hemi Engine
[ES0] = All 6.1L 8-Cylinder Engines
[EVA] = 4.7L [Magnum] V-8 Engine
[EVD] = 4.7L V-8 FFV Engine
[EVE] = 4.7L V-8 Engine
[EV0] = All 4.7L 8-Cylinder Engines
[EZA] = 5.7L Hemi V-8 Engine
[EZB] = 5.7L Hemi V-8 Multi-Displacement Engine
[EZC] = 5.7L Hemi V-8 VCT Non Multi-Displacement Engine
[EZD] = 5.7L Hemi V-8 VCT Multi-Displacement Engine
[EZE] = 5.7L Hemi V-8 HEV Engine
[EZ0] = All 5.7L 8-Cylinder Engines
[NAA] = Federal Emissions
[NAE] = California Emissions
[NAS] = 50 State Emissions
[NA1] = Export Emissions
[NHK] = Engine Cylinder Block Heater
[XEF] = Transfer Case Skid Plate Sheild

1	05037515AA	1	D			ESF			HOSE, PCV Valve To intake Manifold
2	05037831AA	1	D			ESF			VALVE, PCV
3	05037554AC	1	D			ESF			HOSE, Make Up Air
4		1							NIPPLE, Intake Manifold, Serviced With Intake Manifold, (NOT SERVICED)

DODGE CHALLENGER (LC)

SERIES	LINE	BODY	ENGINE	TRANSMISSION
H = HIGHLINE P = PREMIUM X = SPECIAL	D = DODGE	22 = 2-DR SEDAN TYPE #2	EGG = 3.5L High Output V6 24V MPI Engine ESF = 6.1L SRT HEMI V8 Engine EZC = 5.7L HEMI VCT Engine EZD = 5.7L Hemi VCT MDS Engine	DEC = 6-Speed Manual TREMEC Transmission DGJ = 5-Speed Auto W5A580 Transmission DGV = 4-Spd. Automatic VLP 42RLE Trans

Engine Mounting Right Side RWD/2WD 6.1L [ESF]
Figure 009ESF-1220

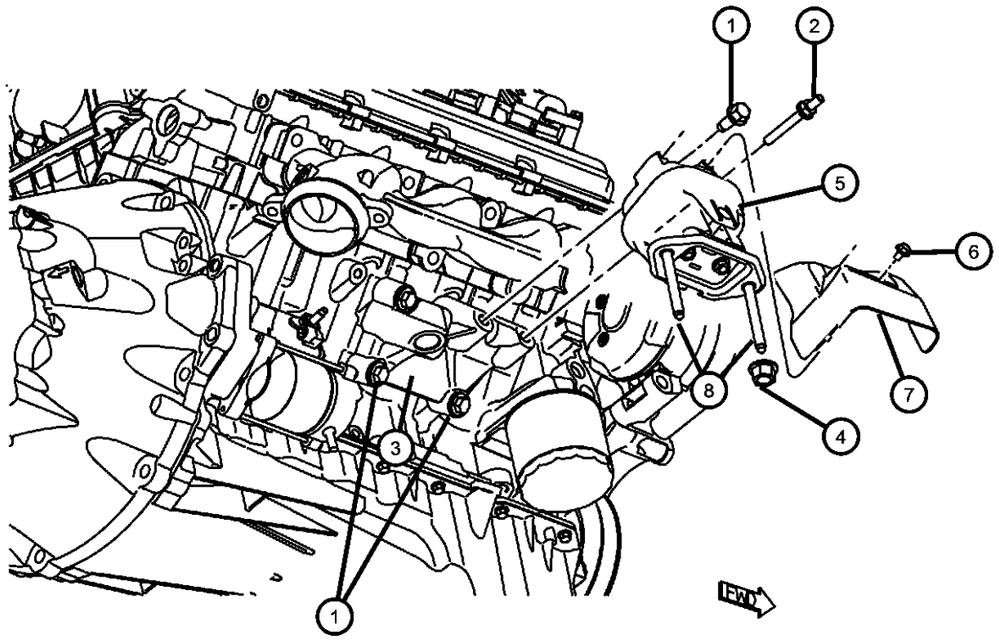

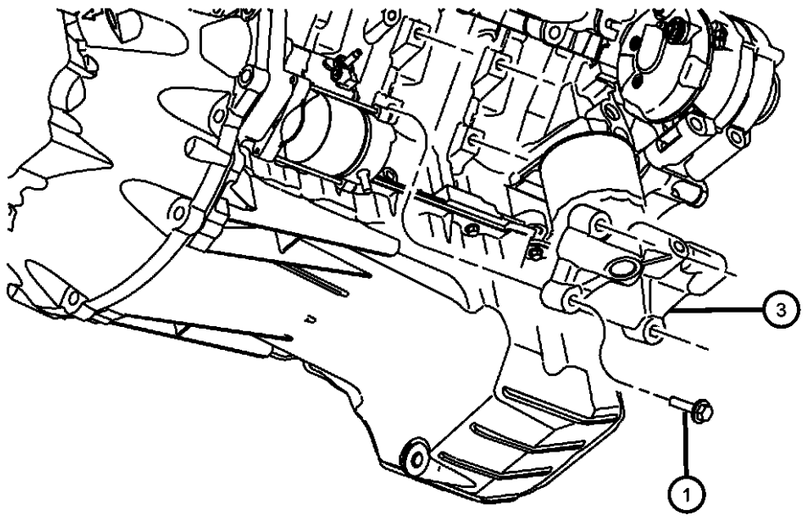

ITEM	PART NUMBER	QTY	LINE	SERIES	BODY	ENGINE	TRANS	TRIM	DESCRIPTION

NOTE:
Sales Codes:
[DEC] = 6-Speed Manual TR6060 Transmission
[DEH] = 6-Speed Manual NSG370 Transmission
[DF9] = AHS-T RWD Automatic Transmission
[DGJ] = 5-Speed Automatic W5A580 Transmission
[DGQ] = 5-Speed Automatic 545RFE Transmission
[DGV] = 4-Speed Automatic VLP 42RLE Transmission
[DG0] = All Automatic Transmissions
[DHR] = Single Speed On Demand MP3010 Transfer Case
[DHU] = AWD Electronic Shift Two Speed NVG 244 H/D Transfer Case
[DHZ] = Full Time Single Mode NVG 140 Transfer Case
[EGS] = 4.0L SOHC V-6 Engine
[EG0] = All 4.0L Engines
[EKG] = 3.7L [Magnum] V-6 Engine
[EK0] = All 3.7L 6-Cylinder Gas Engines
[ENS] = 2.8L 4 Cylinder Turbo Diesel Engine
[EN0] = All 2.8L 4 Cylinder Turbo Diesel Engines
[ESF] = 6.1L SRT V-8 Hemi Engine
[ES0] = All 6.1L 8-Cylinder Engines
[EVA] = 4.7L [Magnum] V-8 Engine
[EVD] = 4.7L V-8 FFV Engine
[EVE] = 4.7L V-8 Engine
[EV0] = All 4.7L 8-Cylinder Engines
[EZA] = 5.7L Hemi V-8 Engine
[EZB] = 5.7L Hemi V-8 Multi-Displacement Engine
[EZC] = 5.7L Hemi V-8 VCT Non Multi-Displacement Engine
[EZD] = 5.7L Hemi V-8 VCT Multi-Displacement Engine
[EZE] = 5.7L Hemi V-8 HEV Engine
[EZ0] = All 5.7L 8-Cylinder Engines
[NAA] = Federal Emissions
[NAE] = California Emissions
[NAS] = 50 State Emissions
[NA1] = Export Emissions
[NHK] = Engine Cylinder Block Heater
[XEF] = Transfer Case Skid Plate Sheild

ITEM	PART NUMBER	QTY	LINE	SERIES	BODY	ENGINE	TRANS	TRIM	DESCRIPTION
1									BOLT, Hex Flange Head, M10X1.50X55.00
	06101622	8	D			ESF, EZC, EZD			Engine Mount Bracket To Cylinder Block, Mounting
		3	D			ESF, EZC, EZD			Engine Mount To Engine Bracket, Mounting
2	06508787AA	1	D			ESF			STUD, [M10X1.50X86.63], Engine Mount To Engine Mount Bracket, Mounting
3									BRACKET, Engine Mount

DODGE CHALLENGER (LC)

SERIES	LINE	BODY	ENGINE	TRANSMISSION
H = HIGHLINE P = PREMIUM X = SPECIAL	D = DODGE	22 = 2-DR SEDAN TYPE #2	EGG = 3.5L High Output V6 24V MPI Engine ESF = 6.1L SRT HEMI V8 Engine EZC = 5.7L HEMI VCT Engine EZD = 5.7L Hemi VCT MDS Engine	DEC = 6-Speed Manual TREMEC Transmission DGJ = 5-Speed Auto W5A580 Transmission DGV = 4-Spd. Automatic VLP 42RLE Trans

Engine Mounting Right Side RWD/2WD 6.1L [ESF]
Figure 009ESF-1220

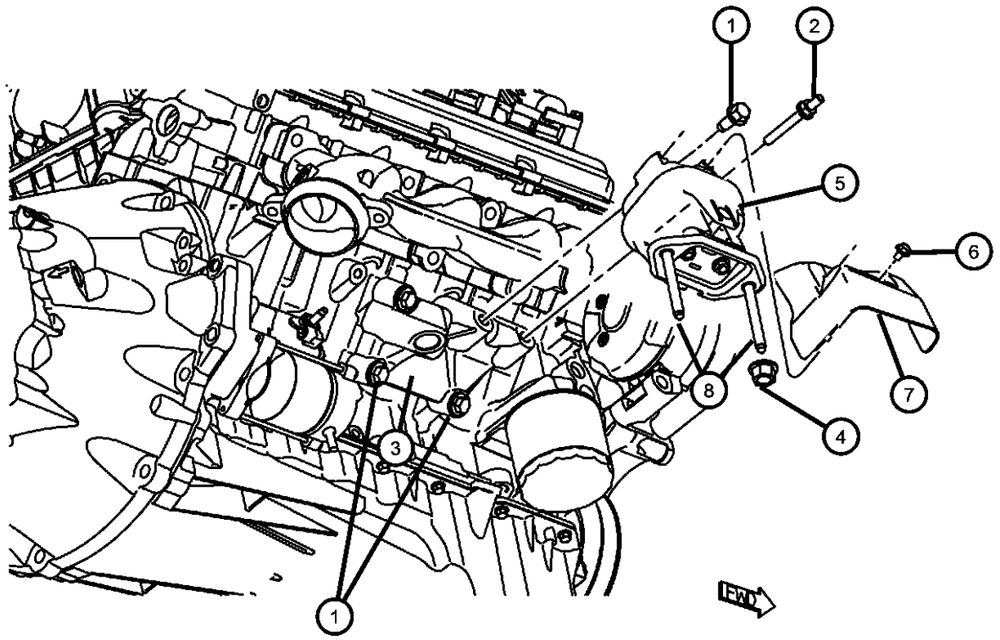

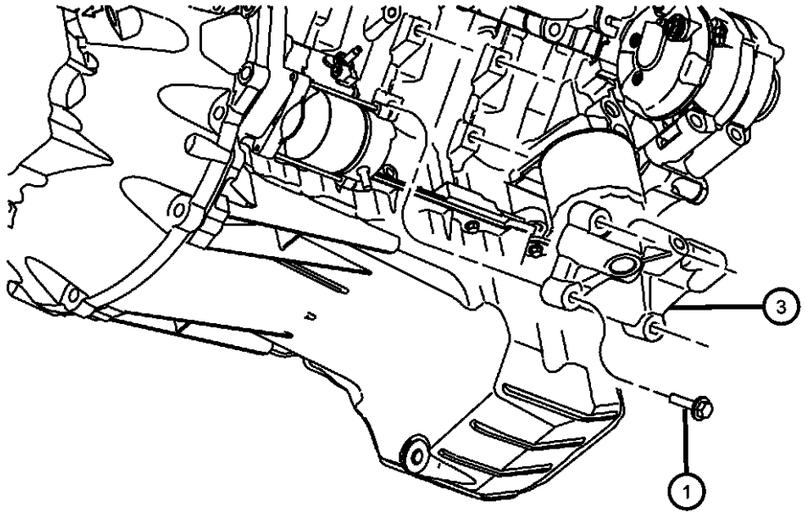

ITEM	PART NUMBER	QTY	LINE	SERIES	BODY	ENGINE	TRANS	TRIM	DESCRIPTION
	04578052AB	1	D			ESF, EZC, EZD			Automatic Transmission
	05180488AA	1	D			ESF	DEC		Manual Transmission
4	06508120AA	4	D						NUT, M10x1.50, Engine Mount To Cradle, Mounting
5									INSULATOR, Engine Mount
	04578943AB	1	D			ESF	DEC		Manual Transmission, Right Side
	05037794AB	1	D			ESF	DGJ		Automatic Transmission, Right Side
6	06507210AA	4	D				DGJ, DGV		BOLT, Hex Head, M6X1.00X11.00, Heat Shield To Engine Mount, Mounting
7	04578349AA	1	D			EG0, ES0, EZ0	DGJ, DGV		SHIELD, Heat
8	06508025AA	4	D			EG0, ES0, EZ0	DGJ, DGV		STUD, Double Ended, [M10X1.5X110.0], Engine Mount To Cradle, Mounting

DODGE CHALLENGER (LC)

SERIES	LINE	BODY	ENGINE	TRANSMISSION
H = HIGHLINE P = PREMIUM X = SPECIAL	D = DODGE	22 = 2-DR SEDAN TYPE #2	EGG = 3.5L High Output V6 24V MPI Engine ESF = 6.1L SRT HEMI V8 Engine EZC = 5.7L HEMI VCT Engine EZD = 5.7L Hemi VCT MDS Engine	DEC = 6-Speed Manual TREMEC Transmission DGJ = 5-Speed Auto W5A580 Transmission DGV = 4-Spd. Automatic VLP 42RLE Trans

Engine Mounting Left Side RWD/2WD 6.1L [ESF]
Figure 009ESF-1235

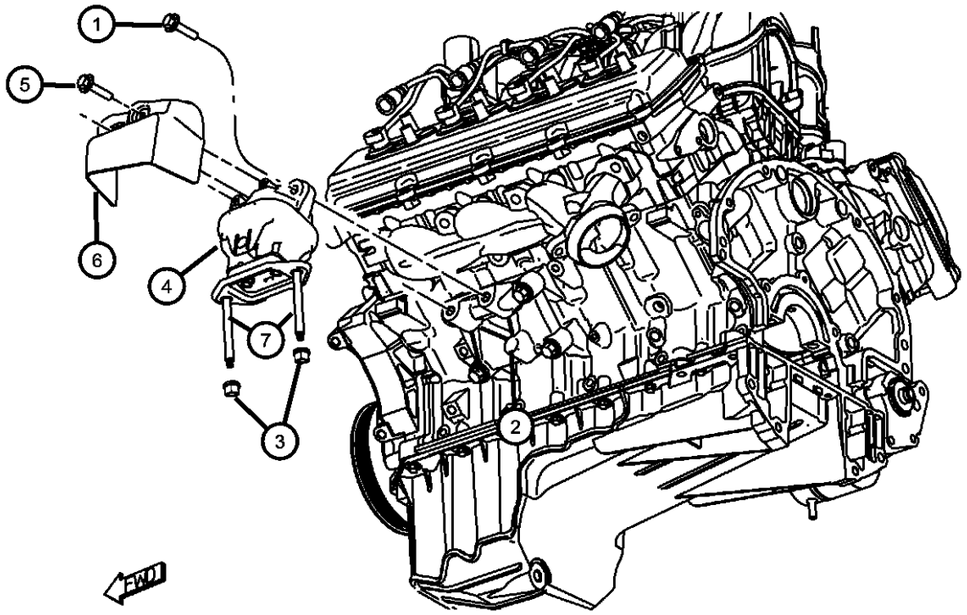

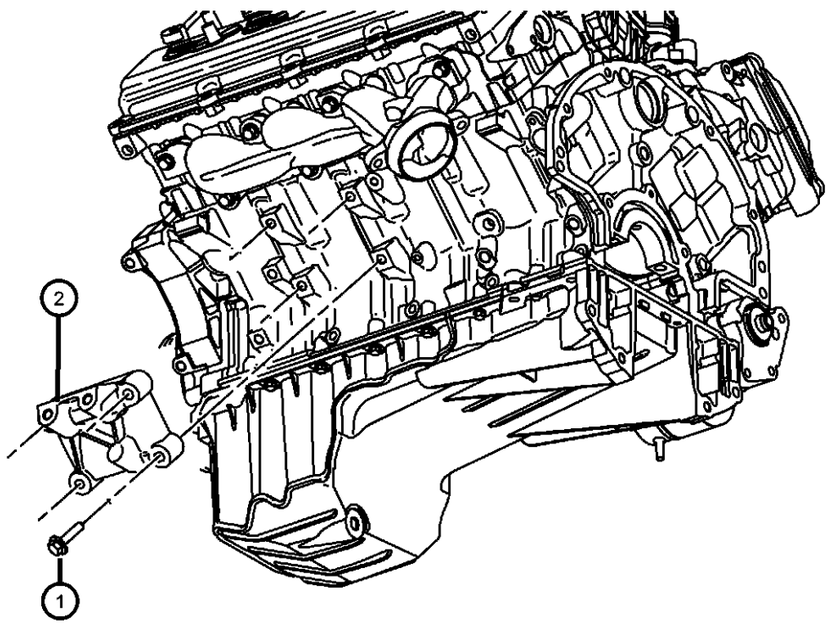

ITEM	PART NUMBER	QTY	LINE	SERIES	BODY	ENGINE	TRANS	TRIM	DESCRIPTION

NOTE:
Sales Codes:
[DEC] = 6-Speed Manual TR6060 Transmission
[DEH] = 6-Speed Manual NSG370 Transmission
[DF9] = AHS-T RWD Automatic Transmission
[DGJ] = 5-Speed Automatic W5A580 Transmission
[DGQ] = 5-Speed Automatic 545RFE Transmission
[DGV] = 4-Speed Automatic VLP 42RLE Transmission
[DG0] = All Automatic Transmissions
[DHR] = Single Speed On Demand MP3010 Transfer Case
[DHU] = AWD Electronic Shift Two Speed NVG 244 H/D Transfer Case
[DHZ] = Full Time Single Mode NVG 140 Transfer Case
[EGS] = 4.0L SOHC V-6 Engine
[EG0] = All 4.0L Engines
[EKG] = 3.7L [Magnum] V-6 Engine
[EK0] = All 3.7L 6-Cylinder Gas Engines
[ENS] = 2.8L 4 Cylinder Turbo Diesel Engine
[EN0] = All 2.8L 4 Cylinder Turbo Diesel Engines
[ESF] = 6.1L SRT V-8 Hemi Engine
[ES0] = All 6.1L 8-Cylinder Engines
[EVA] = 4.7L [Magnum] V-8 Engine
[EVD] = 4.7L V-8 FFV Engine
[EVE] = 4.7L V-8 Engine
[EV0] = All 4.7L 8-Cylinder Engines
[EZA] = 5.7L Hemi V-8 Engine
[EZB] = 5.7L Hemi V-8 Multi-Displacement Engine
[EZC] = 5.7L Hemi V-8 VCT Non Multi-Displacement Engine
[EZD] = 5.7L Hemi V-8 VCT Multi-Displacement Engine
[EZE] = 5.7L Hemi V-8 HEV Engine
[EZ0] = All 5.7L 8-Cylinder Engines
[NAA] = Federal Emissions
[NAE] = California Emissions
[NAS] = 50 State Emissions
[NA1] = Export Emissions
[NHK] = Engine Cylinder Block Heater
[XEF] = Transfer Case Skid Plate Sheild

ITEM	PART NUMBER	QTY	LINE	SERIES	BODY	ENGINE	TRANS	TRIM	DESCRIPTION
1									BOLT, Hex Flange Head, M10X1.50X55.00
	06101622	8	D			ESF, EZC, EZD			Engine Mount Bracket To Cylinder Block, Mounting
		3	D			ESF, EZC, EZD			Engine Mount To Engine Bracket, Mounting
2	04578053AC	1	D			ESF, EZC, EZD, EZH			BRACKET, Engine Mount
3	06508120AA	4	D						NUT, M10x1.50, Engine Mount To Cradle, Mounting
4									INSULATOR, Engine Mount

DODGE CHALLENGER (LC)

SERIES	LINE	BODY	ENGINE	TRANSMISSION
H = HIGHLINE P = PREMIUM X = SPECIAL	D = DODGE	22 = 2-DR SEDAN TYPE #2	EGG = 3.5L High Output V6 24V MPI Engine ESF = 6.1L SRT HEMI V8 Engine EZC = 5.7L HEMI VCT Engine EZD = 5.7L Hemi VCT MDS Engine	DEC = 6-Speed Manual TREMEC Transmission DGJ = 5-Speed Auto W5A580 Transmission DGV = 4-Spd. Automatic VLP 42RLE Trans

Engine Mounting Left Side RWD/2WD 6.1L [ESF]
Figure 009ESF-1235

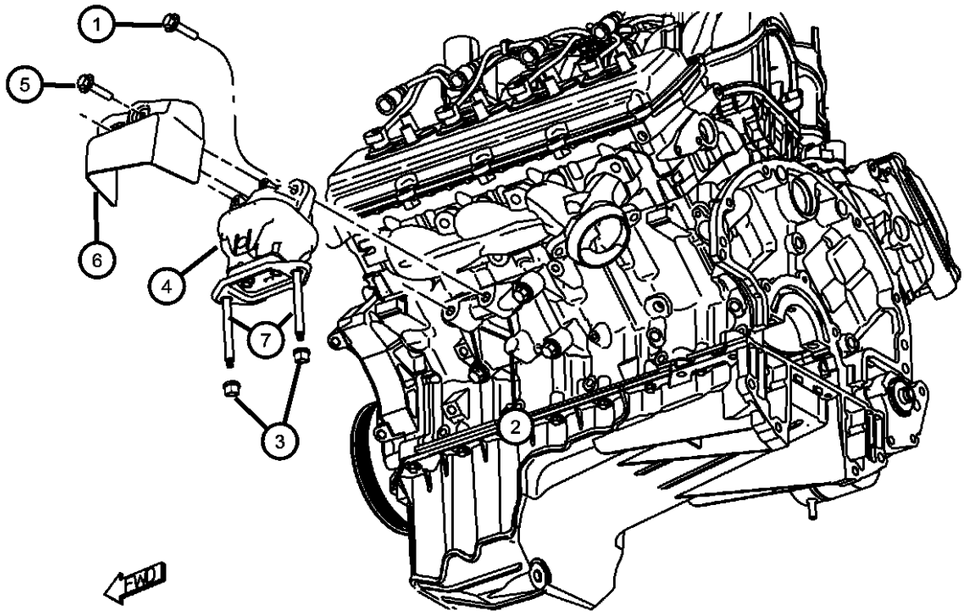

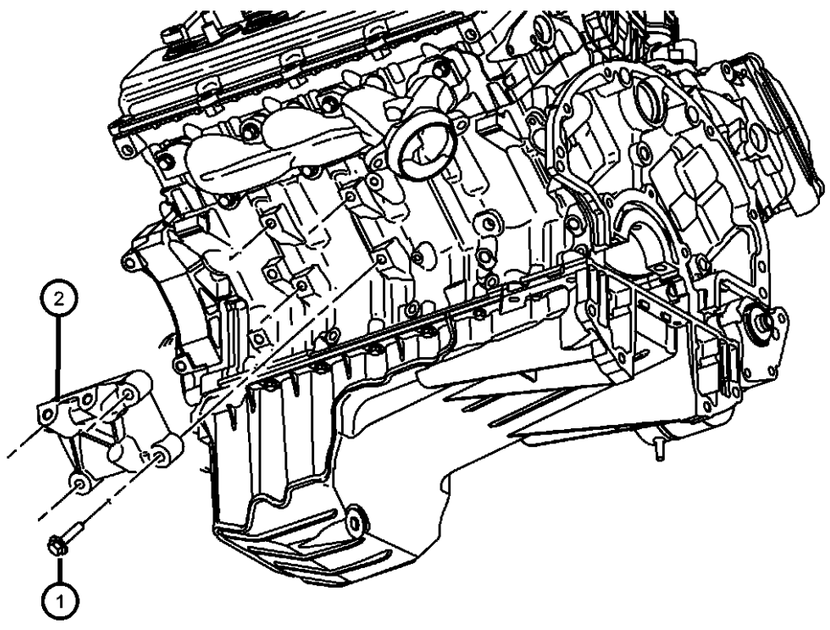

ITEM	PART NUMBER	QTY	LINE	SERIES	BODY	ENGINE	TRANS	TRIM	DESCRIPTION
	05037794AB	1	D			ESF	DGJ		Automatic Transmission, Left Side
	04578943AB	1	D			ESF	DEC		Manual Transmission, Left Side
5	06507210AA	4	D				DGJ, DGV		BOLT, Hex Head, M6X1.00X11.00, Heat Shield To Engine Mount, Mounting
6	04578349AA	1	D			EG0, ES0, EZ0	DGJ, DGV		SHIELD, Heat
7	06508025AA	4	D			EG0, ES0, EZ0	DGJ, DGV		STUD, Double Ended, [M10X1.5X110.0], Engine Mount To Cradle, Mounting

DODGE CHALLENGER (LC)

SERIES	LINE	BODY	ENGINE	TRANSMISSION
H = HIGHLINE P = PREMIUM X = SPECIAL	D = DODGE	22 = 2-DR SEDAN TYPE #2	EGG = 3.5L High Output V6 24V MPI Engine ESF = 6.1L SRT HEMI V8 Engine EZC = 5.7L HEMI VCT Engine EZD = 5.7L Hemi VCT MDS Engine	DEC = 6-Speed Manual TREMEC Transmission DGJ = 5-Speed Auto W5A580 Transmission DGV = 4-Spd. Automatic VLP 42RLE Trans

AR = use ase required - = Non illustrrated part

Group - 009EZC

5.7L Gas; Engine

009EZC-100 Engine Identification	**009EZC-1000** Manifolds and Vacuum Fittings	**009EZC-1100** Crankcase Ventilation	**009EZC-1200** Engine Mounting
009EZC-200 Cylinder Head	**009EZC-300** Cylinder Block	**009EZC-400** Crankshaft, Piston, Drive Plate, Flywheel, and Damper	**009EZC-500** Camshaft and Valve
009EZC-600 Timing Belt/Chain and Cover and Balance Shaft	**009EZC-700** Engine Oiling, Oil Pan and Indicator (Dipstick)		

Group - 009EZC 5.7L Gas; Engine

Illustration Title — Group-Fig. No.

Engine Identification
Engine Identification 5.7L [EZC] Without MDS ..... Fig. 009EZC - 105
Engine Assembly And Service Long Block 5.7L [EZC] Without MDS ..... Fig. 009EZC - 115
Engine Cover And Related Parts 5.7L [EZC] Without MDS ..... Fig. 009EZC - 125
Engine Gasket Kits 5.7L [EZC] Without MDS ..... Fig. 009EZC - 145

Cylinder Head
Cylinder Head Covers 5.7L [EZC] Without MDS ..... Fig. 009EZC - 205
Cylinder Heads 5.7L [EZC] Without MDS ..... Fig. 009EZC - 225

Cylinder Block
Engine Cylinder Block And Hardware 5.7L [EZC] Without MDS ..... Fig. 009EZC - 305
Engine Cylinder Block Heater 5.7L [EZC] Without MDS ..... Fig. 009EZC - 325

Crankshaft, Piston, Drive Plate, Flywheel, and Damper
Crankshaft, Crankshaft Bearings, Damper And Flywheel 5.7L [EZC] Without MDS ..... Fig. 009EZC - 405
Pistons, Piston Rings, Connecting Rods And Connecting Rod Bearings 5.7L [EZC] Without MDS ..... Fig. 009EZC - 425

Camshaft and Valve
Camshaft And Valvetrain 5.7L [EZC] Without MDS ..... Fig. 009EZC - 505

Timing Belt/Chain and Cover and Balance Shaft
Timing Case Cover 5.7L [EZC] Without MDS ..... Fig. 009EZC - 605
Timing System 5.7L [EZC] Without MDS ..... Fig. 009EZC - 625

Engine Oiling, Oil Pan and Indicator (Dipstick)
Engine Oiling Pump 5.7L [EZC] Without MDS ..... Fig. 009EZC - 705
Engine Oil Pan, Engine Oil Level Indicator And Related Parts 5.7L [EZC] Without MDS ..... Fig. 009EZC - 725
Engine Oil, Engine Oil Filter And Adapter 5.7L [EZC] Without MDS ..... Fig. 009EZC - 745

Manifolds and Vacuum Fittings
Exhaust Manifolds And Heat Shields 5.7L [EZC] Without MDS ..... Fig. 009EZC - 1005
Intake Manifold 5.7L [EZC] Without MDS ..... Fig. 009EZC - 1025

Crankcase Ventilation
Crankcase Ventilation 5.7L [EZC] Without MDS ..... Fig. 009EZC - 1105

Engine Mounting
Engine Mounting Right Side RWD/2WD 5.7L [EZC] Without MDS ..... Fig. 009EZC - 1220
Engine Mounting Left Side RWD/2WD 5.7L [EZC] Without MDS ..... Fig. 009EZC - 1235

Engine Identification 5.7L [EZC] Without MDS
Figure 009EZC-105

ITEM	PART NUMBER	QTY	LINE	SERIES	BODY	ENGINE	TRANS	TRIM	DESCRIPTION
									Note:
									The Engine Identification Label Is Attached To One Of The Cylinder Head Covers.
									The Production Engine Part Number Is Not A Servicable Part Number.
									A Engine Is Usally Serviced By A Long Block Or Short Block Engine.
1		4							LABEL, Engine Identification, See Note:, (NOT SERVICED)

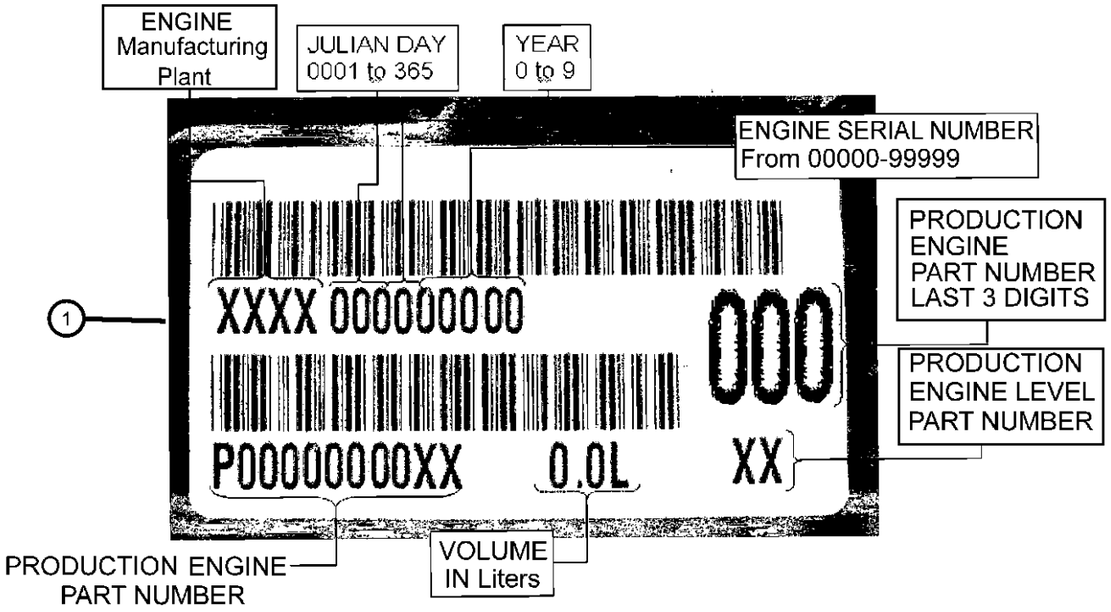

DODGE CHALLENGER (LC)

SERIES	LINE	BODY	ENGINE	TRANSMISSION
H = HIGHLINE	D = DODGE	22 = 2-DR SEDAN TYPE #2	EGG = 3.5L High Output V6 24V MPI Engine	DEC = 6-Speed Manual TREMEC Transmission
P = PREMIUM			ESF = 6.1L SRT HEMI V8 Engine	DGJ = 5-Speed Auto W5A580 Transmission
X = SPECIAL			EZC = 5.7L HEMI VCT Engine	DGV = 4-Spd. Automatic VLP 42RLE Trans
			EZD = 5.7L Hemi VCT MDS Engine	

Engine Assembly And Service Long Block 5.7L [EZC] Without MDS
Figure 009EZC-115

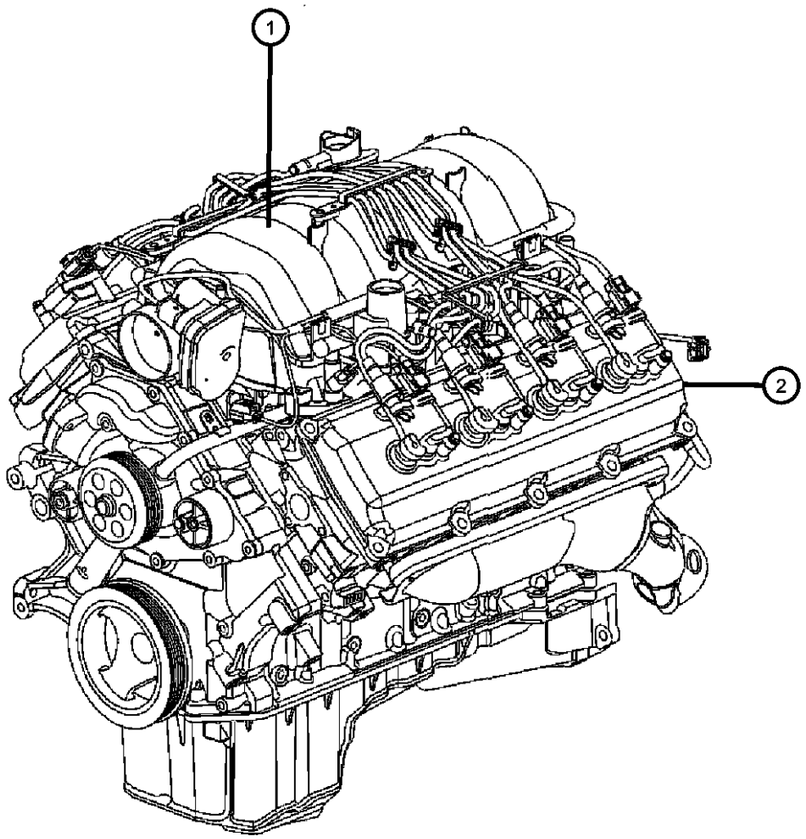

ITEM	PART NUMBER	QTY	LINE	SERIES	BODY	ENGINE	TRANS	TRIM	DESCRIPTION

NOTE:
The Engine Identifaction Label Contains: The Production Assembly Part Number And Displacement. It is located On The Left Front Cylinder Head
Sales Codes:
[DEC] = 6-Speed Manual TR6060 Transmission
[DEH] = 6-Speed Manual NSG370 Transmission
[DF9] = AHS-T RWD Automatic Transmission
[DGJ] = 5-Speed Automatic W5A580 Transmission
[DGQ] = 5-Speed Automatic 545RFE Transmission
[DGV] = 4-Speed Automatic VLP 42RLE Transmission
[DG0] = All Automatic Transmissions
[DHR] = Single Speed On Demand MP3010 Transfer Case
[DHU] = AWD Electronic Shift Two Speed NVG 244 H/D Transfer Case
[DHZ] = Full Time Single Mode NVG 140 Transfer Case
[EGS] = 4.0L SOHC V-6 Engine
[EG0] = All 4.0L Engines
[EKG] = 3.7L [Magnum] V-6 Engine
[EK0] = All 3.7L 6-Cylinder Gas Engines
[ENS] = 2.8L 4 Cylinder Turbo Diesel Engine
[EN0] = All 2.8L 4 Cylinder Turbo Diesel Engines
[ESF] = 6.1L SRT V-8 Hemi Engine
[ES0] = All 6.1L 8-Cylinder Engines
[EVA] = 4.7L [Magnum] V-8 Engine
[EVD] = 4.7L V-8 FFV Engine
[EVE] = 4.7L V-8 Engine
[EV0] = All 4.7L 8-Cylinder Engines
[EZA] = 5.7L Hemi V-8 Engine
[EZB] = 5.7L Hemi V-8 Multi-Displacement Engine
[EZC] = 5.7L Hemi V-8 VCT Non Multi-Displacement Engine
[EZD] = 5.7L Hemi V-8 VCT Multi-Displacement Engine
[EZE] = 5.7L Hemi V-8 HEV Engine
[EZ0] = All 5.7L 8-Cylinder Engines
[NAA] = Federal Emissions
[NAE] = California Emissions
[NAS] = 50 State Emissions
[NA1] = Export Emissions
[NHK] = Engine Cylinder Block Heater
[XEF] = Transfer Case Skid Plate Sheild

1	4	ENGINE, Complete, Serviced By New short Block Only, (NOT SERVICED)
2	4	ENGINE, Long Block, (NOT SERVICED)

DODGE CHALLENGER (LC)

SERIES	LINE	BODY	ENGINE	TRANSMISSION
H = HIGHLINE P = PREMIUM X = SPECIAL	D = DODGE	22 = 2-DR SEDAN TYPE #2	EGG = 3.5L High Output V6 24V MPI Engine ESF = 6.1L SRT HEMI V8 Engine EZC = 5.7L HEMI VCT Engine EZD = 5.7L Hemi VCT MDS Engine	DEC = 6-Speed Manual TREMEC Transmission DGJ = 5-Speed Auto W5A580 Transmission DGV = 4-Spd. Automatic VLP 42RLE Trans

Engine Cover And Related Parts 5.7L [EZC] Without MDS
Figure 009EZC-125

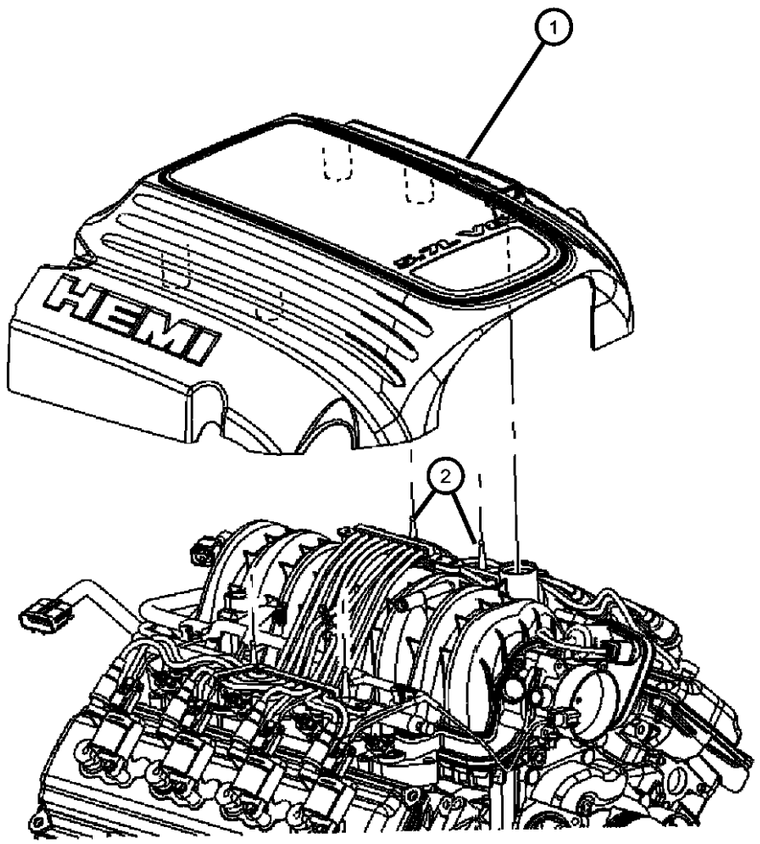

ITEM	PART NUMBER	QTY	LINE	SERIES	BODY	ENGINE	TRANS	TRIM	DESCRIPTION

NOTE:
Sales Codes:
[DEC] = 6-Speed Manual TR6060 Transmission
[DEH] = 6-Speed Manual NSG370 Transmission
[DF9] = AHS-T RWD Automatic Transmission
[DGJ] = 5-Speed Automatic W5A580 Transmission
[DGQ] = 5-Speed Automatic 545RFE Transmission
[DGV] = 4-Speed Automatic VLP 42RLE Transmission
[DG0] = All Automatic Transmissions
[DHR] = Single Speed On Demand MP3010 Transfer Case
[DHU] = AWD Electronic Shift Two Speed NVG 244 H/D Transfer Case
[DHZ] = Full Time Single Mode NVG 140 Transfer Case
[EGS] = 4.0L SOHC V-6 Engine
[EG0] = All 4.0L Engines
[EKG] = 3.7L [Magnum] V-6 Engine
[EK0] = All 3.7L 6-Cylinder Gas Engines
[ENS] = 2.8L 4 Cylinder Turbo Diesel Engine
[EN0] = All 2.8L 4 Cylinder Turbo Diesel Engines
[ESF] = 6.1L SRT V-8 Hemi Engine
[ES0] = All 6.1L 8-Cylinder Engines
[EVA] = 4.7L [Magnum] V-8 Engine
[EVD] = 4.7L V-8 FFV Engine
[EVE] = 4.7L V-8 Engine
[EV0] = All 4.7L 8-Cylinder Engines
[EZA] = 5.7L Hemi V-8 Engine
[EZB] = 5.7L Hemi V-8 Multi-Displacement Engine
[EZC] = 5.7L Hemi V-8 VCT Non Multi-Displacement Engine
[EZD] = 5.7L Hemi V-8 VCT Multi-Displacement Engine
[EZE] = 5.7L Hemi V-8 HEV Engine
[EZ0] = All 5.7L 8-Cylinder Engines
[NAA] = Federal Emissions
[NAE] = California Emissions
[NAS] = 50 State Emissions
[NA1] = Export Emissions
[NHK] = Engine Cylinder Block Heater
[XEF] = Transfer Case Skid Plate Sheild

1	04591895AH	1	D			EZC, EZD			COVER, Engine
2	53013748AD	4	D			EZC, EZD			BALL STUD, 60X2.14X21.59

DODGE CHALLENGER (LC)

SERIES	LINE	BODY	ENGINE	TRANSMISSION
H = HIGHLINE P = PREMIUM X = SPECIAL	D = DODGE	22 = 2-DR SEDAN TYPE #2	EGG = 3.5L High Output V6 24V MPI Engine ESF = 6.1L SRT HEMI V8 Engine EZC = 5.7L HEMI VCT Engine EZD = 5.7L Hemi VCT MDS Engine	DEC = 6-Speed Manual TREMEC Transmission DGJ = 5-Speed Auto W5A580 Transmission DGV = 4-Spd. Automatic VLP 42RLE Trans

Engine Gasket Kits 5.7L [EZC] Without MDS
Figure 009EZC-145

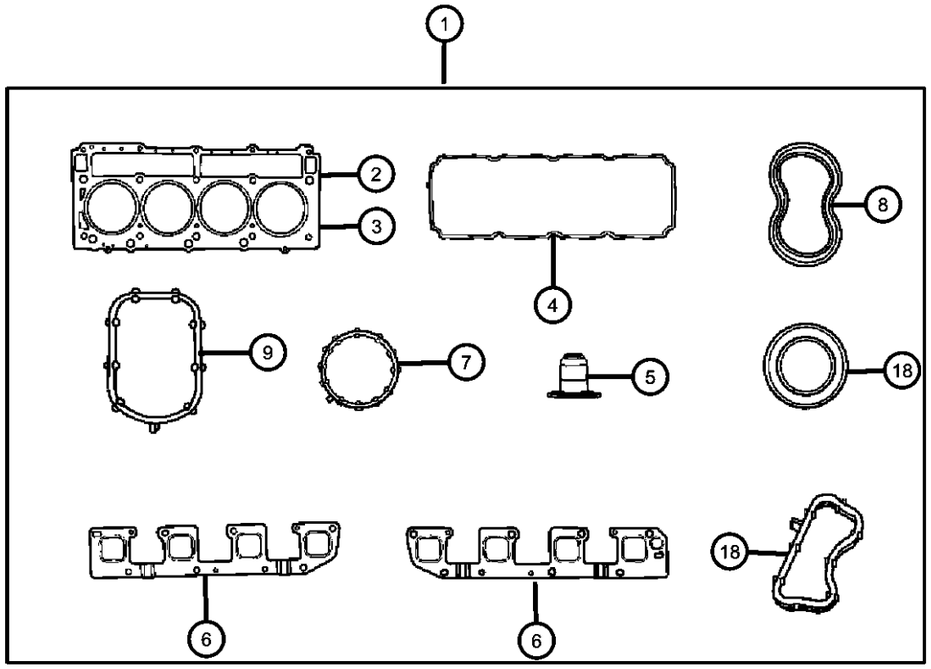

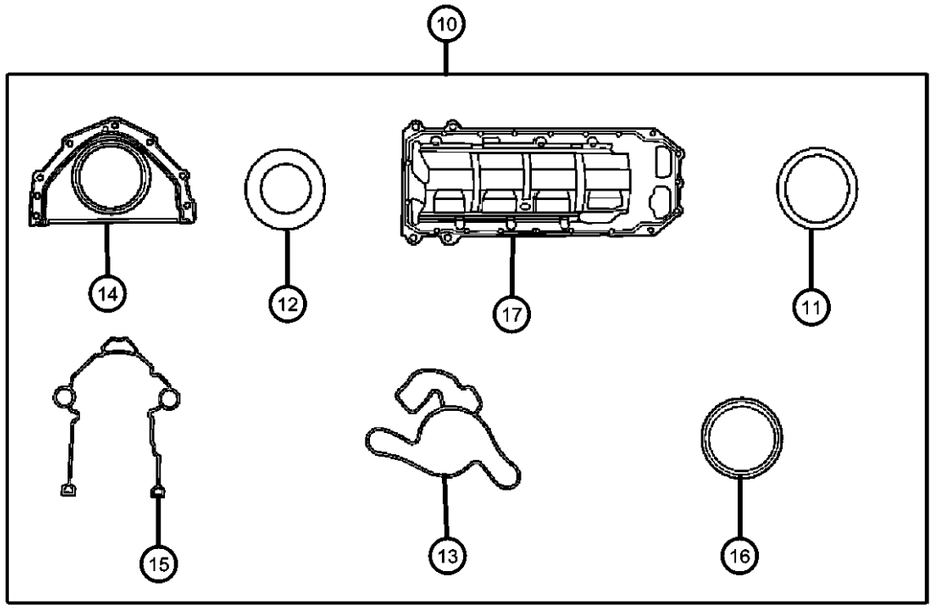

ITEM	PART NUMBER	QTY	LINE	SERIES	BODY	ENGINE	TRANS	TRIM	DESCRIPTION

NOTE:
Sales Codes:
[DEC] = 6-Speed Manual TR6060 Transmission
[DEH] = 6-Speed Manual NSG370 Transmission
[DF9] = AHS-T RWD Automatic Transmission
[DGJ] = 5-Speed Automatic W5A580 Transmission
[DGQ] = 5-Speed Automatic 545RFE Transmission
[DGV] = 4-Speed Automatic VLP 42RLE Transmission
[DG0] = All Automatic Transmissions
[DHR] = Single Speed On Demand MP3010 Transfer Case
[DHU] = AWD Electronic Shift Two Speed NVG 244 H/D Transfer Case
[DHZ] = Full Time Single Mode NVG 140 Transfer Case
[EGS] = 4.0L SOHC V-6 Engine
[EG0] = All 4.0L Engines
[EKG] = 3.7L [Magnum] V-6 Engine
[EK0] = All 3.7L 6-Cylinder Gas Engines
[ENS] = 2.8L 4 Cylinder Turbo Diesel Engine
[EN0] = All 2.8L 4 Cylinder Turbo Diesel Engines
[ESF] = 6.1L SRT V-8 Hemi Engine
[ES0] = All 6.1L 8-Cylinder Engines
[EVA] = 4.7L [Magnum] V-8 Engine
[EVD] = 4.7L V-8 FFV Engine
[EVE] = 4.7L V-8 Engine
[EV0] = All 4.7L 8-Cylinder Engines
[EZA] = 5.7L Hemi V-8 Engine
[EZB] = 5.7L Hemi V-8 Multi-Displacement Engine
[EZC] = 5.7L Hemi V-8 VCT Non Multi-Displacement Engine
[EZD] = 5.7L Hemi V-8 VCT Multi-Displacement Engine
[EZE] = 5.7L Hemi V-8 HEV Engine
[EZ0] = All 5.7L 8-Cylinder Engines
[NAA] = Federal Emissions
[NAE] = California Emissions
[NAS] = 50 State Emissions
[NA1] = Export Emissions
[NHK] = Engine Cylinder Block Heater
[XEF] = Transfer Case Skid Plate Sheild

1	68046260AA	1	D			EZC	DEC		GASKET PACKAGE, Engine Upper
2	53022306AA	1	D			EZC, EZD			GASKET, Cylinder Head, Right
3	53022307AA	1	D			EZC, EZD			GASKET, Cylinder Head, Left
4									GASKET KIT, Cylinder Head Cover
	68060360AA	2	D			EZC, EZD			
		2	D			EZC, EZD, EZH			
5	53022090AB	16	D			EZC, EZD			SEAL, Valve Guide
6									GASKET, Exhaust Manifold

DODGE CHALLENGER (LC)

SERIES	LINE	BODY	ENGINE	TRANSMISSION
H = HIGHLINE P = PREMIUM X = SPECIAL	D = DODGE	22 = 2-DR SEDAN TYPE #2	EGG = 3.5L High Output V6 24V MPI Engine ESF = 6.1L SRT HEMI V8 Engine EZC = 5.7L HEMI VCT Engine EZD = 5.7L Hemi VCT MDS Engine	DEC = 6-Speed Manual TREMEC Transmission DGJ = 5-Speed Auto W5A580 Transmission DGV = 4-Spd. Automatic VLP 42RLE Trans

AR = use ase required - = Non illustrrated part

Engine Gasket Kits 5.7L [EZC] Without MDS
Figure 009EZC-145

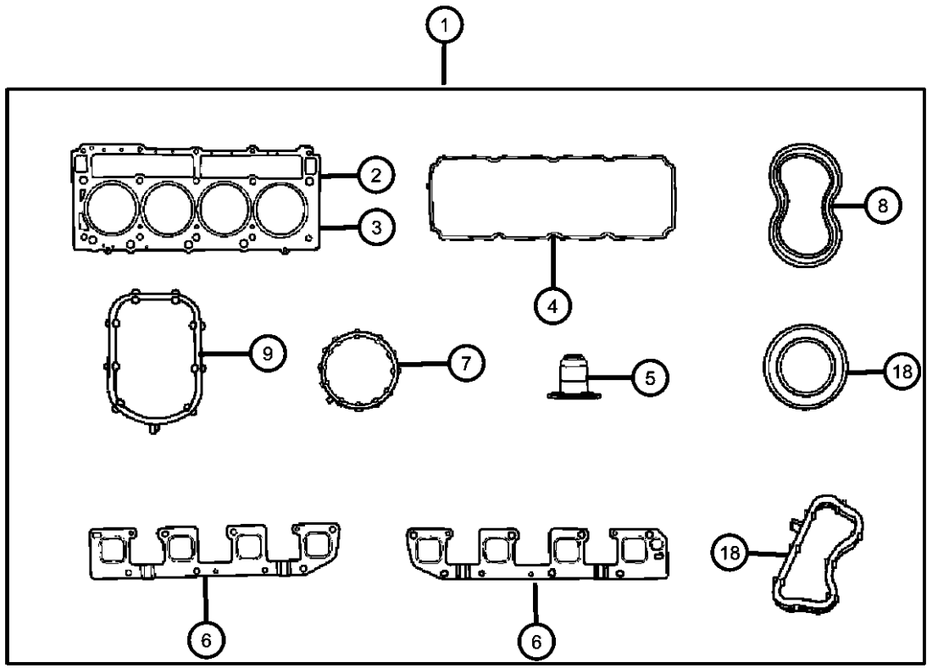

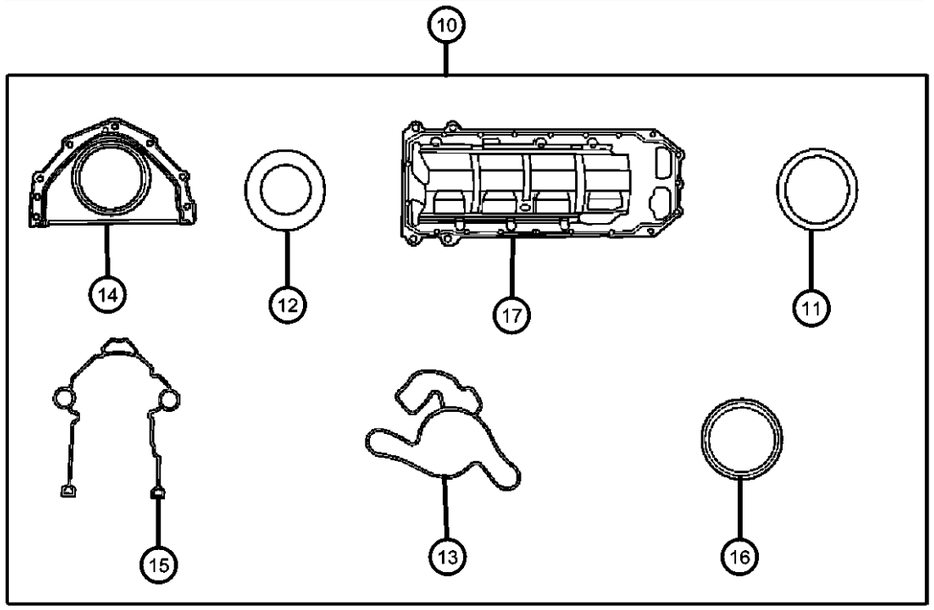

ITEM	PART NUMBER	QTY	LINE	SERIES	BODY	ENGINE	TRANS	TRIM	DESCRIPTION
	53032965AF	1	D			EZC, EZD			Left
	53032966AF	1	D			EZC, EZD			Right
7	53022320AB	1	D			EZC, EZD			SEAL, Throttle Body to Intake
8	53021569AD	8	D			EZC, EZD			GASKET, Spark Plug Well
9	53022143AB	8	D			EZC, EZD			SEAL, Intake Manifold
10	68060361AA	1	D			EZC	DEC		GASKET PACKAGE, Engine Lower
11	53020861	1	D			EZC, EZD			SEAL, Oil Pick Up Tube
12	53021144AA	1	D			EZC, EZD			O RING, Engine Oil Indicator Tube
13	04792922AB	1	D			EZC, EZD			GASKET, Water Pump
14									RETAINER PACKAGE, Crankshaft Rear Oil Seal
	68060342AA	1	D			EZC, EZD			
		1	D			EZC, EZD, EZH			
15									GASKET PACKAGE, Front Cover
	68060362AA	1	D			EZC, EZD			
		1	D			EZC, EZD, EZH			
16	53021585AD	1	D			EZC, EZD			SEAL, Crankshaft Oil, Front
17	04792874AA	1	D			EZC	DEC		GASKET, Oil Pan
18									SEAL, PCV
	53022142AB	2	D			EZC, EZD			Square
	53032448AC	1	D			EZC, EZD			Round PCV To Intake

DODGE CHALLENGER (LC)

SERIES	LINE	BODY	ENGINE	TRANSMISSION
H = HIGHLINE P = PREMIUM X = SPECIAL	D = DODGE	22 = 2-DR SEDAN TYPE #2	EGG = 3.5L High Output V6 24V MPI Engine ESF = 6.1L SRT HEMI V8 Engine EZC = 5.7L HEMI VCT Engine EZD = 5.7L Hemi VCT MDS Engine	DEC = 6-Speed Manual TREMEC Transmission DGJ = 5-Speed Auto W5A580 Transmission DGV = 4-Spd. Automatic VLP 42RLE Trans

Cylinder Head Covers 5.7L [EZC] Without MDS
Figure 009EZC-205

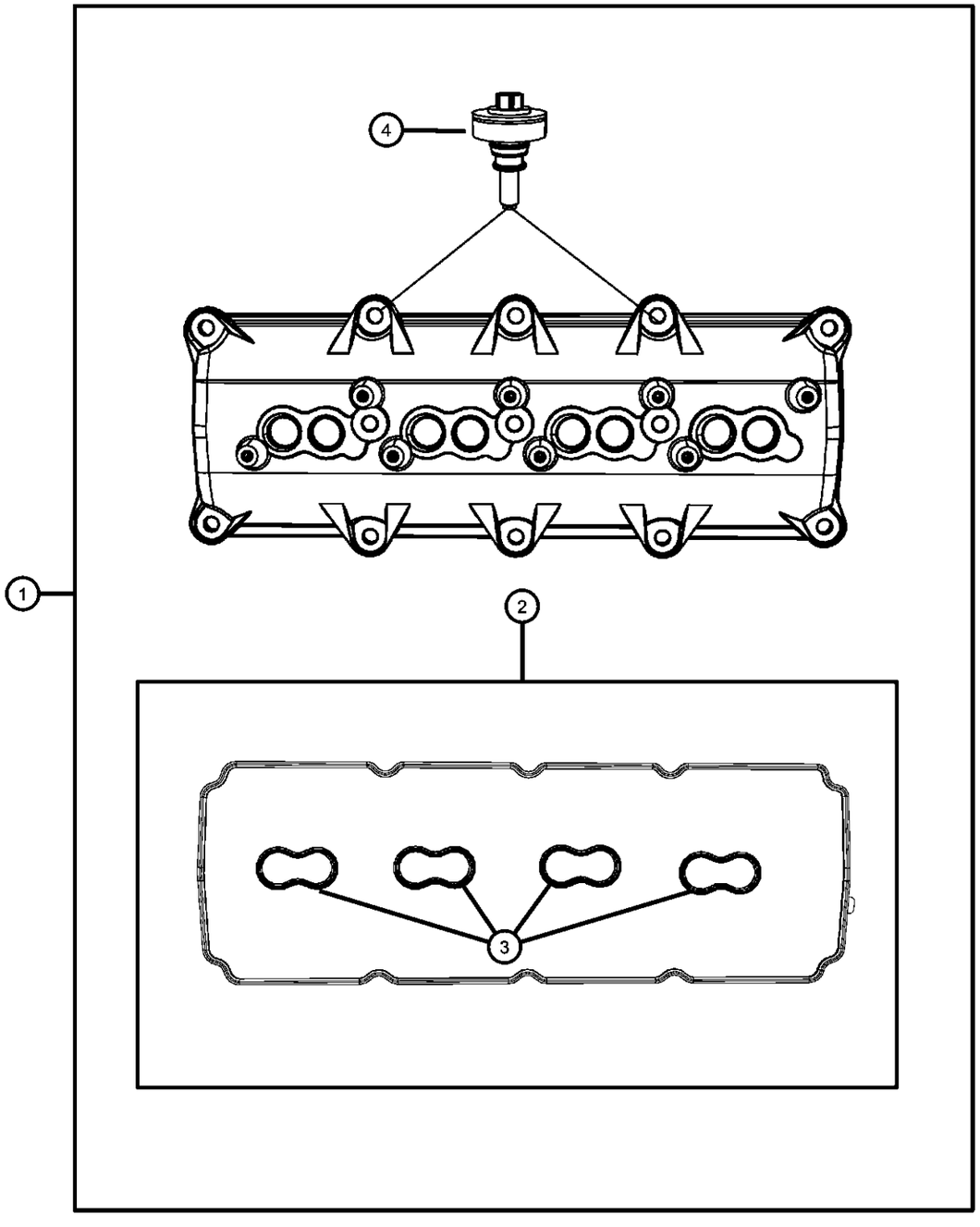

ITEM	PART NUMBER	QTY	LINE	SERIES	BODY	ENGINE	TRANS	TRIM	DESCRIPTION

NOTE:
Sales Codes:
[DEC] = 6-Speed Manual TR6060 Transmission
[DEH] = 6-Speed Manual NSG370 Transmission
[DF9] = AHS-T RWD Automatic Transmission
[DGJ] = 5-Speed Automatic W5A580 Transmission
[DGQ] = 5-Speed Automatic 545RFE Transmission
[DGV] = 4-Speed Automatic VLP 42RLE Transmission
[DG0] = All Automatic Transmissions
[DHR] = Single Speed On Demand MP3010 Transfer Case
[DHU] = AWD Electronic Shift Two Speed NVG 244 H/D Transfer Case
[DHZ] = Full Time Single Mode NVG 140 Transfer Case
[EGS] = 4.0L SOHC V-6 Engine
[EG0] = All 4.0L Engines
[EKG] = 3.7L [Magnum] V-6 Engine
[EK0] = All 3.7L 6-Cylinder Gas Engines
[ENS] = 2.8L 4 Cylinder Turbo Diesel Engine
[EN0] = All 2.8L 4 Cylinder Turbo Diesel Engines
[ESF] = 6.1L SRT V-8 Hemi Engine
[ES0] = All 6.1L 8-Cylinder Engines
[EVA] = 4.7L [Magnum] V-8 Engine
[EVD] = 4.7L V-8 FFV Engine
[EVE] = 4.7L V-8 Engine
[EV0] = All 4.7L 8-Cylinder Engines
[EZA] = 5.7L Hemi V-8 Engine
[EZB] = 5.7L Hemi V-8 Multi-Displacement Engine
[EZC] = 5.7L Hemi V-8 VCT Non Multi-Displacement Engine
[EZD] = 5.7L Hemi V-8 VCT Multi-Displacement Engine
[EZE] = 5.7L Hemi V-8 HEV Engine
[EZ0] = All 5.7L 8-Cylinder Engines
[NAA] = Federal Emissions
[NAE] = California Emissions
[NAS] = 50 State Emissions
[NA1] = Export Emissions
[NHK] = Engine Cylinder Block Heater
[XEF] = Transfer Case Skid Plate Sheild

1	53022085AC	2	D			EZC, EZD			COVER, Cylinder Head
2									GASKET KIT, Cylinder Head Cover
	68060360AA	2	D			EZC, EZD			
		2	D			EZC, EZD, EZH			
3	53021569AD	8	D			EZC, EZD			GASKET, Spark Plug Well
4	06509387AA	20	D			EZC, EZD			BOLT AND GROMMET, Special, M6X1.00X30.00, Cylinder Head Cover To Cylinder Head, Mounting

DODGE CHALLENGER (LC)

SERIES	LINE	BODY	ENGINE	TRANSMISSION
H = HIGHLINE P = PREMIUM X = SPECIAL	D = DODGE	22 = 2-DR SEDAN TYPE #2	EGG = 3.5L High Output V6 24V MPI Engine ESF = 6.1L SRT HEMI V8 Engine EZC = 5.7L HEMI VCT Engine EZD = 5.7L Hemi VCT MDS Engine	DEC = 6-Speed Manual TREMEC Transmission DGJ = 5-Speed Auto W5A580 Transmission DGV = 4-Spd. Automatic VLP 42RLE Trans

Cylinder Heads 5.7L [EZC] Without MDS
Figure 009EZC-225

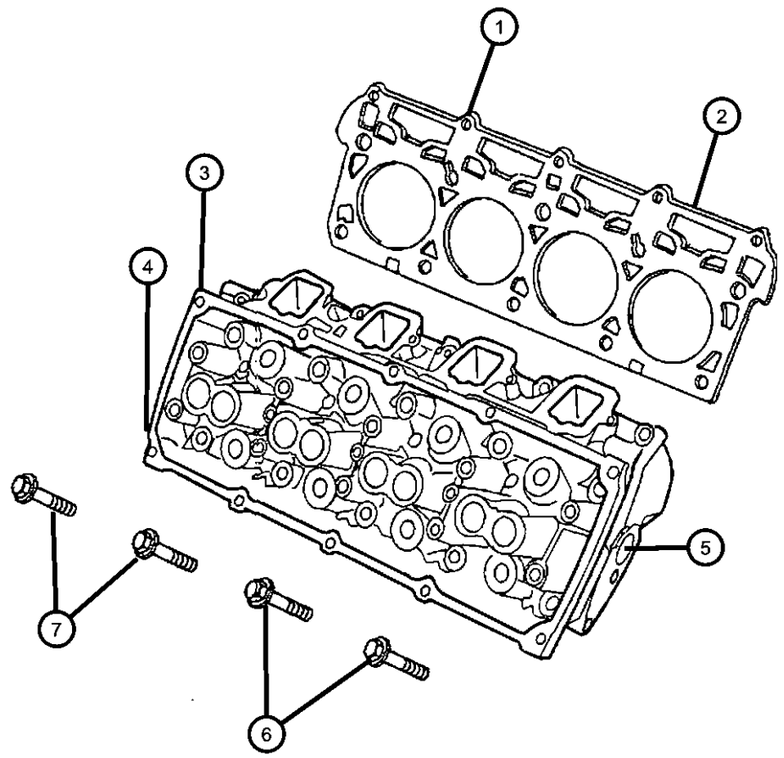

ITEM	PART NUMBER	QTY	LINE	SERIES	BODY	ENGINE	TRANS	TRIM	DESCRIPTION

NOTE:
Sales Codes:
[DEC] = 6-Speed Manual TR6060 Transmission
[DEH] = 6-Speed Manual NSG370 Transmission
[DF9] = AHS-T RWD Automatic Transmission
[DGJ] = 5-Speed Automatic W5A580 Transmission
[DGQ] = 5-Speed Automatic 545RFE Transmission
[DGV] = 4-Speed Automatic VLP 42RLE Transmission
[DG0] = All Automatic Transmissions
[DHR] = Single Speed On Demand MP3010 Transfer Case
[DHU] = AWD Electronic Shift Two Speed NVG 244 H/D Transfer Case
[DHZ] = Full Time Single Mode NVG 140 Transfer Case
[EGS] = 4.0L SOHC V-6 Engine
[EG0] = All 4.0L Engines
[EKG] = 3.7L [Magnum] V-6 Engine
[EK0] = All 3.7L 6-Cylinder Gas Engines
[ENS] = 2.8L 4 Cylinder Turbo Diesel Engine
[EN0] = All 2.8L 4 Cylinder Turbo Diesel Engines
[ESF] = 6.1L SRT V-8 Hemi Engine
[ES0] = All 6.1L 8-Cylinder Engines
[EVA] = 4.7L [Magnum] V-8 Engine
[EVD] = 4.7L V-8 FFV Engine
[EVE] = 4.7L V-8 Engine
[EV0] = All 4.7L 8-Cylinder Engines
[EZA] = 5.7L Hemi V-8 Engine
[EZB] = 5.7L Hemi V-8 Multi-Displacement Engine
[EZC] = 5.7L Hemi V-8 VCT Non Multi-Displacement Engine
[EZD] = 5.7L Hemi V-8 VCT Multi-Displacement Engine
[EZE] = 5.7L Hemi V-8 HEV Engine
[EZ0] = All 5.7L 8-Cylinder Engines
[NAA] = Federal Emissions
[NAE] = California Emissions
[NAS] = 50 State Emissions
[NA1] = Export Emissions
[NHK] = Engine Cylinder Block Heater
[XEF] = Transfer Case Skid Plate Sheild

1	53022306AA	1	D			EZC, EZD			GASKET, Cylinder Head, Right
2	53022307AA	1	D			EZC, EZD			GASKET, Cylinder Head, Left
3	53021608DD	1	D			EZC, EZD			HEAD, Cylinder, Right
4	53021609DD	1	D			EZC, EZD			HEAD, Cylinder, Left
5									PLUG, Core
	68060349AA	2	D			EZC, EZD			Right Cylinder Head
		2	D			EZC, EZD			Left Cylinder Head

DODGE CHALLENGER (LC)

SERIES	LINE	BODY	ENGINE	TRANSMISSION
H = HIGHLINE P = PREMIUM X = SPECIAL	D = DODGE	22 = 2-DR SEDAN TYPE #2	EGG = 3.5L High Output V6 24V MPI Engine ESF = 6.1L SRT HEMI V8 Engine EZC = 5.7L HEMI VCT Engine EZD = 5.7L Hemi VCT MDS Engine	DEC = 6-Speed Manual TREMEC Transmission DGJ = 5-Speed Auto W5A580 Transmission DGV = 4-Spd. Automatic VLP 42RLE Trans

Cylinder Heads 5.7L [EZC] Without MDS
Figure 009EZC-225

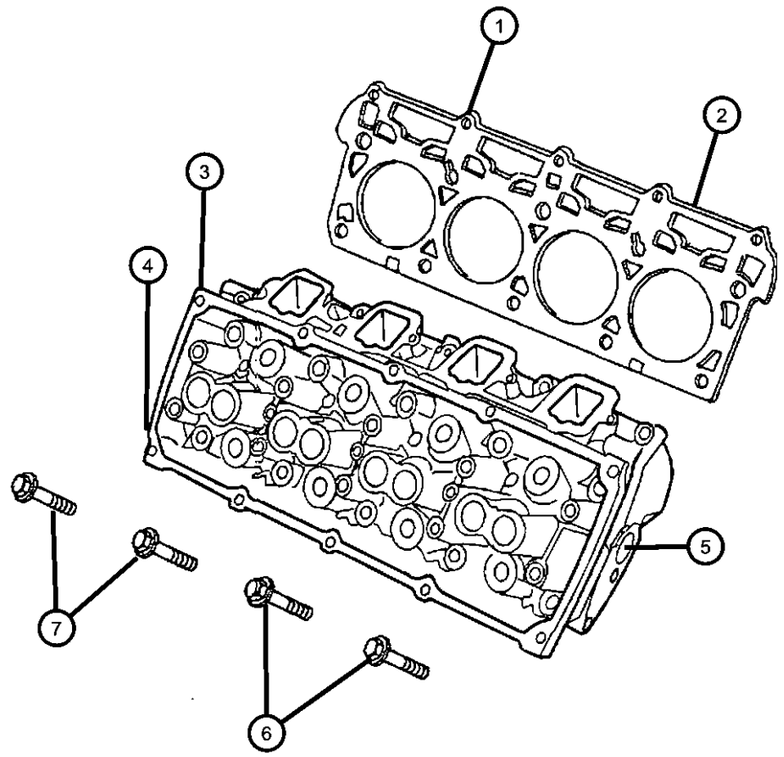

ITEM	PART NUMBER	QTY	LINE	SERIES	BODY	ENGINE	TRANS	TRIM	DESCRIPTION
6	06506334AA	10	D			EZC, EZD			BOLT, Hex Flange Head, M8X1.25X45.00, Cylinder Head To Cylinder Block, Mounting
7	06506694AA	20	D			EZC, EZD			BOLT AND CONED WASHER, Hex Head, M12X1.50X135.00, Cylinder Head To Cylinder Block, Mounting

DODGE CHALLENGER (LC)

SERIES	LINE	BODY	ENGINE	TRANSMISSION
H = HIGHLINE P = PREMIUM X = SPECIAL	D = DODGE	22 = 2-DR SEDAN TYPE #2	EGG = 3.5L High Output V6 24V MPI Engine ESF = 6.1L SRT HEMI V8 Engine EZC = 5.7L HEMI VCT Engine EZD = 5.7L Hemi VCT MDS Engine	DEC = 6-Speed Manual TREMEC Transmission DGJ = 5-Speed Auto W5A580 Transmission DGV = 4-Spd. Automatic VLP 42RLE Trans

Engine Cylinder Block And Hardware 5.7L [EZC] Without MDS
Figure 009EZC-305

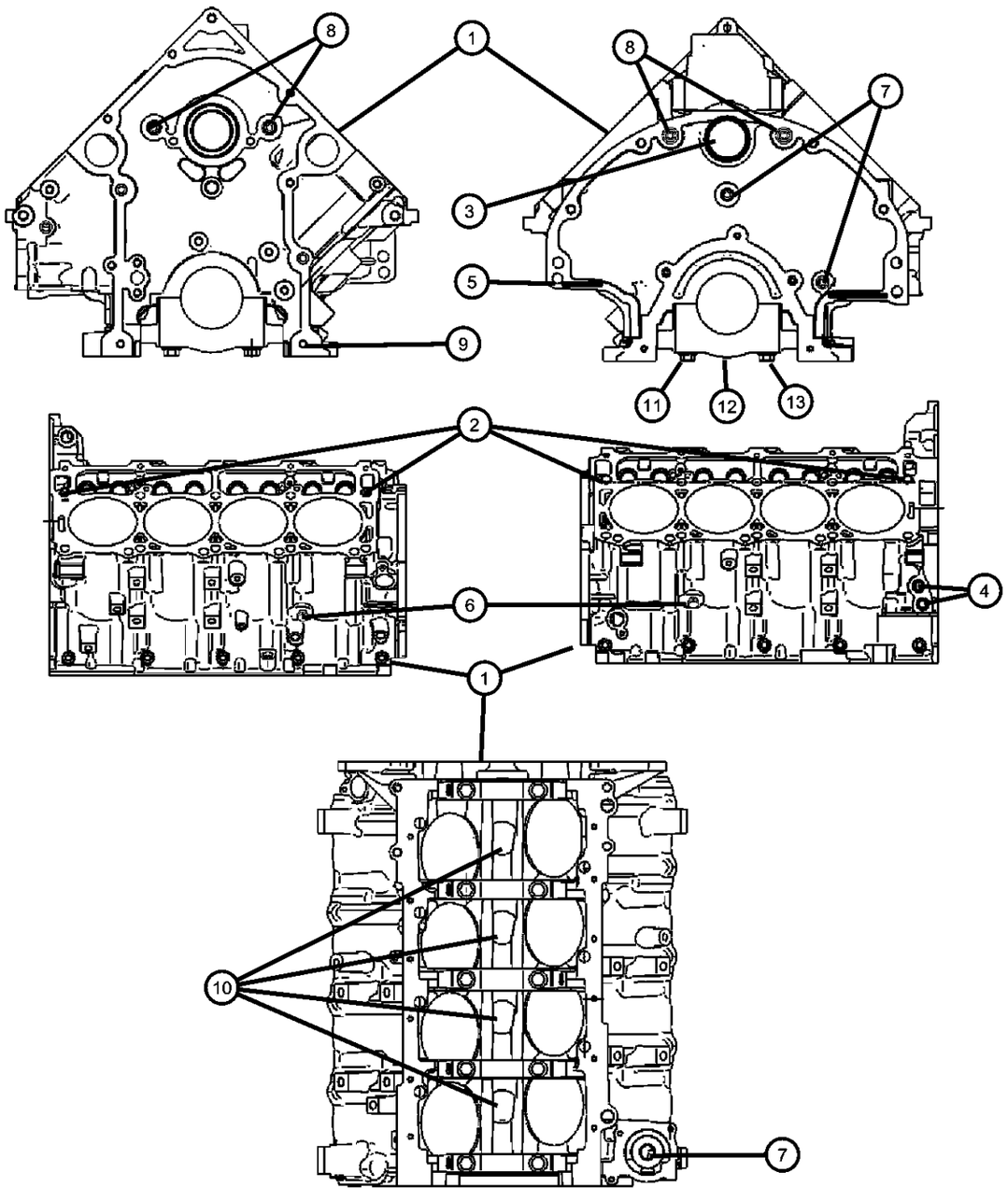

ITEM	PART NUMBER	QTY	LINE	SERIES	BODY	ENGINE	TRANS	TRIM	DESCRIPTION

NOTE:
Shortblock Does Not Include Camshaft, Lifters, Oil Pump Or Oil Pan,But Does Include The Camshaft Bearings.
Sales Codes:
[DEC] = 6-Speed Manual TR6060 Transmission
[DEH] = 6-Speed Manual NSG370 Transmission
[DF9] = AHS-T RWD Automatic Transmission
[DGJ] = 5-Speed Automatic W5A580 Transmission
[DGQ] = 5-Speed Automatic 545RFE Transmission
[DGV] = 4-Speed Automatic VLP 42RLE Transmission
[DG0] = All Automatic Transmissions
[DHR] = Single Speed On Demand MP3010 Transfer Case
[DHU] = AWD Electronic Shift Two Speed NVG 244 H/D Transfer Case
[DHZ] = Full Time Single Mode NVG 140 Transfer Case
[EGS] = 4.0L SOHC V-6 Engine
[EG0] = All 4.0L Engines
[EKG] = 3.7L [Magnum] V-6 Engine
[EK0] = All 3.7L 6-Cylinder Gas Engines
[ENS] = 2.8L 4 Cylinder Turbo Diesel Engine
[EN0] = All 2.8L 4 Cylinder Turbo Diesel Engines
[ESF] = 6.1L SRT V-8 Hemi Engine
[ES0] = All 6.1L 8-Cylinder Engines
[EVA] = 4.7L [Magnum] V-8 Engine
[EVD] = 4.7L V-8 FFV Engine
[EVE] = 4.7L V-8 Engine
[EV0] = All 4.7L 8-Cylinder Engines
[EZA] = 5.7L Hemi V-8 Engine
[EZB] = 5.7L Hemi V-8 Multi-Displacement Engine
[EZC] = 5.7L Hemi V-8 VCT Non Multi-Displacement Engine
[EZD] = 5.7L Hemi V-8 VCT Multi-Displacement Engine
[EZE] = 5.7L Hemi V-8 HEV Engine
[EZ0] = All 5.7L 8-Cylinder Engines
[NAA] = Federal Emissions
[NAE] = California Emissions
[NAS] = 50 State Emissions
[NA1] = Export Emissions
[NHK] = Engine Cylinder Block Heater
[XEF] = Transfer Case Skid Plate Sheild

1	68044957AA	1	D			EZC	DEC		ENGINE, Short Block, See Note
2	05240849	4	D			EZC, EZD			DOWEL PIN, Cylinder Head To Cylinder Block, Mounting
3	06507663AA	1	D			EZC, EZD			PLUG, Camshaft, [M47.93 OD 6.4 THK 51.5 FLG OD]Rear
4	06034331	2	D			EZD, EZC			PLUG, Hex Socket, 3/8-18NPTx.475, Oil Gallery
5	01122532	2	D			EZC, EZD			DOWEL, Block to Clutch Housing, 1/2X3/4

DODGE CHALLENGER (LC)

SERIES	LINE	BODY	ENGINE	TRANSMISSION
H = HIGHLINE P = PREMIUM X = SPECIAL	D = DODGE	22 = 2-DR SEDAN TYPE #2	EGG = 3.5L High Output V6 24V MPI Engine ESF = 6.1L SRT HEMI V8 Engine EZC = 5.7L HEMI VCT Engine EZD = 5.7L Hemi VCT MDS Engine	DEC = 6-Speed Manual TREMEC Transmission DGJ = 5-Speed Auto W5A580 Transmission DGV = 4-Spd. Automatic VLP 42RLE Trans

AR = use ase required - = Non illustrrated part

Engine Cylinder Block And Hardware 5.7L [EZC] Without MDS
Figure 009EZC-305

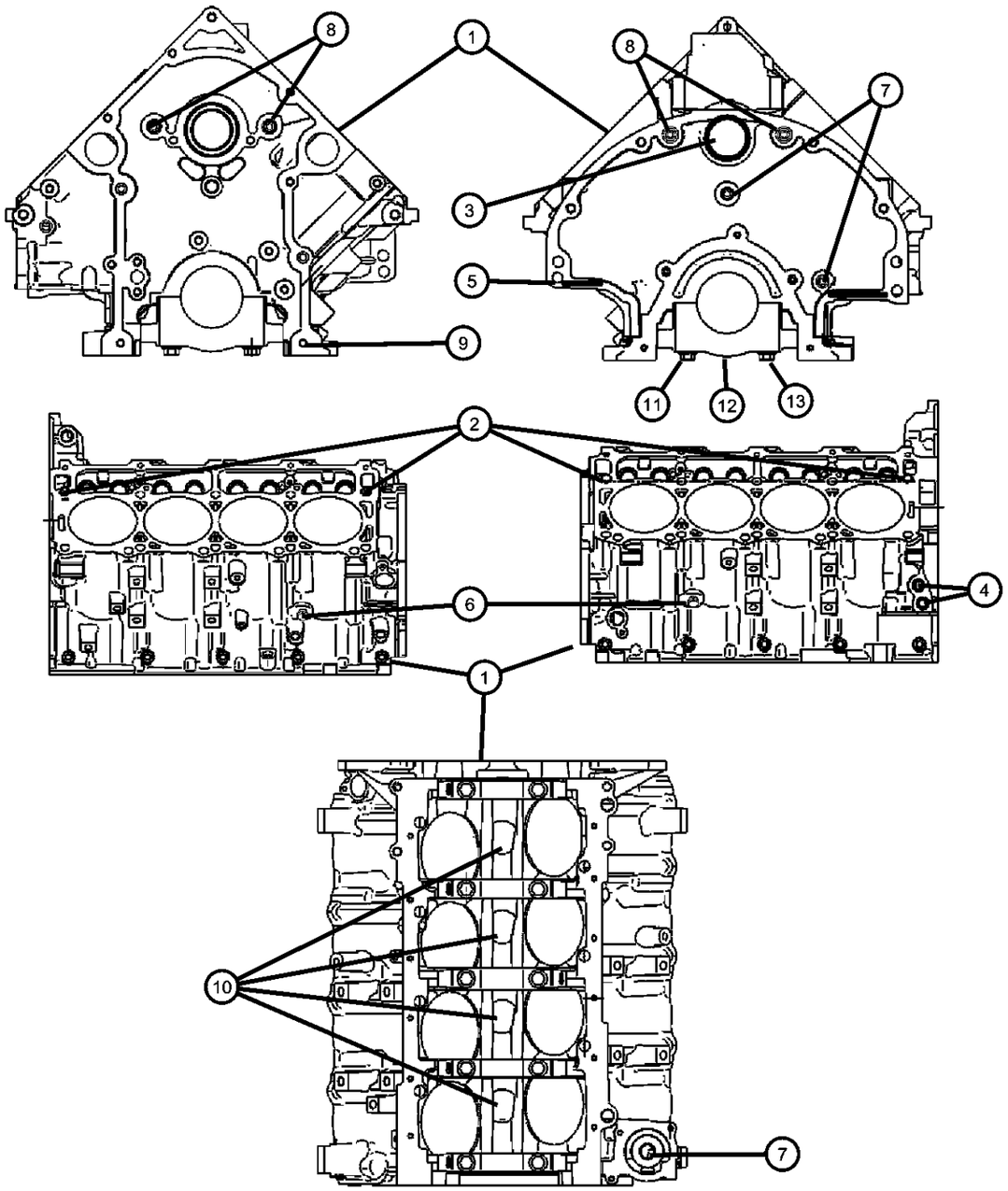

ITEM	PART NUMBER	QTY	LINE	SERIES	BODY	ENGINE	TRANS	TRIM	DESCRIPTION
6	06036592AA	2	D			EZC, EZD			PLUG, .250-18X.690, Cylinder Block Coolant Drain
7	06036307AA	2	D			EZC, EZD			PLUG, Pipe, .250-18X.413
8	06036417AA	4	D			EZC, EZD			PLUG, Cylinder Block, .375-18X1.343, Oil Gallery
9	06506332AA	2	D			EZC, EZD			PIN, Dowel, M8X10.00, Timing Chain Case Cover To Cylinder Block
10	53032221AA	4	D			ESF, EZC			PLUG, Cylinder Block, For Vechiles Without The MDS System
11		4							STUD, Double Ended, M12&M8, (NOT SERVICED)
12		4							CAP, Main, Serviced With Short Block Engine, (NOT SERVICED)
13	06506272AA	10	D			EZC, EZD			BOLT, Hex Flange Head, M12X1.75X91.50, Main Bearing Cap To Cylinder Block, Mounting

DODGE CHALLENGER (LC)

SERIES	LINE	BODY	ENGINE	TRANSMISSION
H = HIGHLINE	D = DODGE	22 = 2-DR SEDAN TYPE #2	EGG = 3.5L High Output V6 24V MPI Engine	DEC = 6-Speed Manual TREMEC Transmission
P = PREMIUM			ESF = 6.1L SRT HEMI V8 Engine	DGJ = 5-Speed Auto W5A580 Transmission
X = SPECIAL			EZC = 5.7L HEMI VCT Engine	DGV = 4-Spd. Automatic VLP 42RLE Trans
			EZD = 5.7L Hemi VCT MDS Engine	

AR = use ase required - = Non illustrrated part

Engine Cylinder Block Heater 5.7L [EZC] Without MDS
Figure 009EZC-325

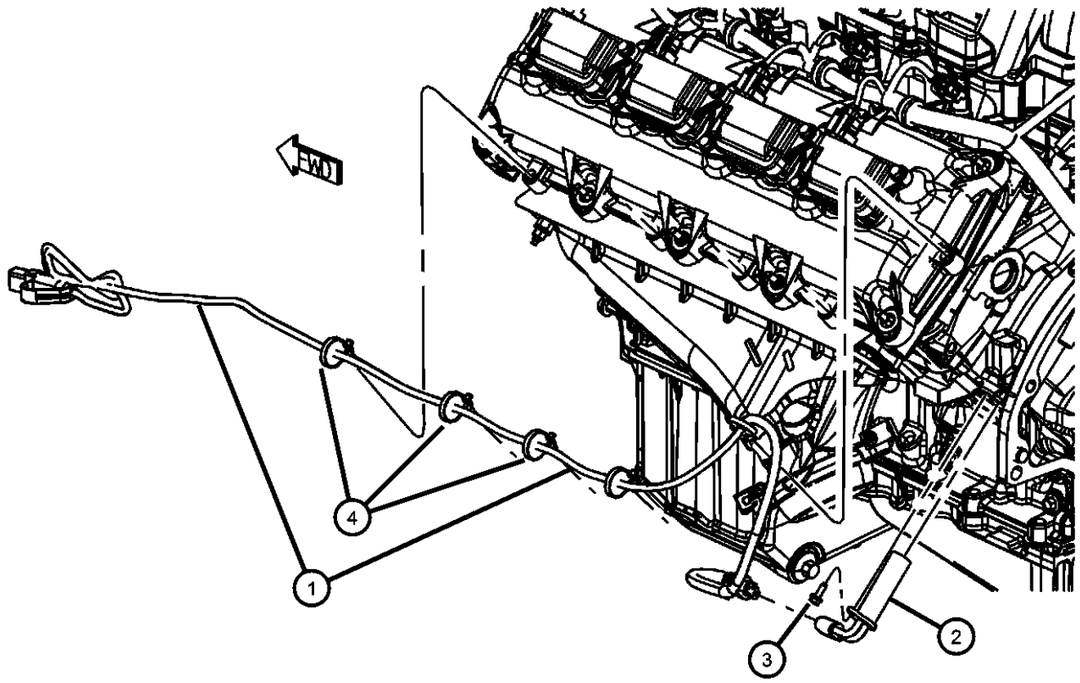

ITEM	PART NUMBER	QTY	LINE	SERIES	BODY	ENGINE	TRANS	TRIM	DESCRIPTION

NOTE:
Sales Codes:
[DEC] = 6-Speed Manual TR6060 Transmission
[DEH] = 6-Speed Manual NSG370 Transmission
[DF9] = AHS-T RWD Automatic Transmission
[DGJ] = 5-Speed Automatic W5A580 Transmission
[DGQ] = 5-Speed Automatic 545RFE Transmission
[DGV] = 4-Speed Automatic VLP 42RLE Transmission
[DG0] = All Automatic Transmissions
[DHR] = Single Speed On Demand MP3010 Transfer Case
[DHU] = AWD Electronic Shift Two Speed NVG 244 H/D Transfer Case
[DHZ] = Full Time Single Mode NVG 140 Transfer Case
[EGS] = 4.0L SOHC V-6 Engine
[EG0] = All 4.0L Engines
[EKG] = 3.7L [Magnum] V-6 Engine
[EK0] = All 3.7L 6-Cylinder Gas Engines
[ENS] = 2.8L 4 Cylinder Turbo Diesel Engine
[EN0] = All 2.8L 4 Cylinder Turbo Diesel Engines
[ESF] = 6.1L SRT V-8 Hemi Engine
[ES0] = All 6.1L 8-Cylinder Engines
[EVA] = 4.7L [Magnum] V-8 Engine
[EVD] = 4.7L V-8 FFV Engine
[EVE] = 4.7L V-8 Engine
[EV0] = All 4.7L 8-Cylinder Engines
[EZA] = 5.7L Hemi V-8 Engine
[EZB] = 5.7L Hemi V-8 Multi-Displacement Engine
[EZC] = 5.7L Hemi V-8 VCT Non Multi-Displacement Engine
[EZD] = 5.7L Hemi V-8 VCT Multi-Displacement Engine
[EZE] = 5.7L Hemi V-8 HEV Engine
[EZ0] = All 5.7L 8-Cylinder Engines
[NAA] = Federal Emissions
[NAE] = California Emissions
[NAS] = 50 State Emissions
[NA1] = Export Emissions
[NHK] = Engine Cylinder Block Heater
[XEF] = Transfer Case Skid Plate Sheild

1	05148099AB	1	D			EZC, EZD			CORD, Engine Block Heater
2	05149022AB	1	D			EZC, EZD			HEATER, Engine Block
3	06501373	1	D			EZC, EZD			BOLT, Hex Head, M6x1.00x20.00, Heater To Cylinder Block, Mounting
4		1							CLIP, Serviced With Cord Only, (NOT SERVICED)

DODGE CHALLENGER (LC)

SERIES	LINE	BODY	ENGINE	TRANSMISSION
H = HIGHLINE P = PREMIUM X = SPECIAL	D = DODGE	22 = 2-DR SEDAN TYPE #2	EGG = 3.5L High Output V6 24V MPI Engine ESF = 6.1L SRT HEMI V8 Engine EZC = 5.7L HEMI VCT Engine EZD = 5.7L Hemi VCT MDS Engine	DEC = 6-Speed Manual TREMEC Transmission DGJ = 5-Speed Auto W5A580 Transmission DGV = 4-Spd. Automatic VLP 42RLE Trans

Crankshaft, Crankshaft Bearings, Damper And Flywheel 5.7L [EZC] Without MDS
Figure 009EZC-405

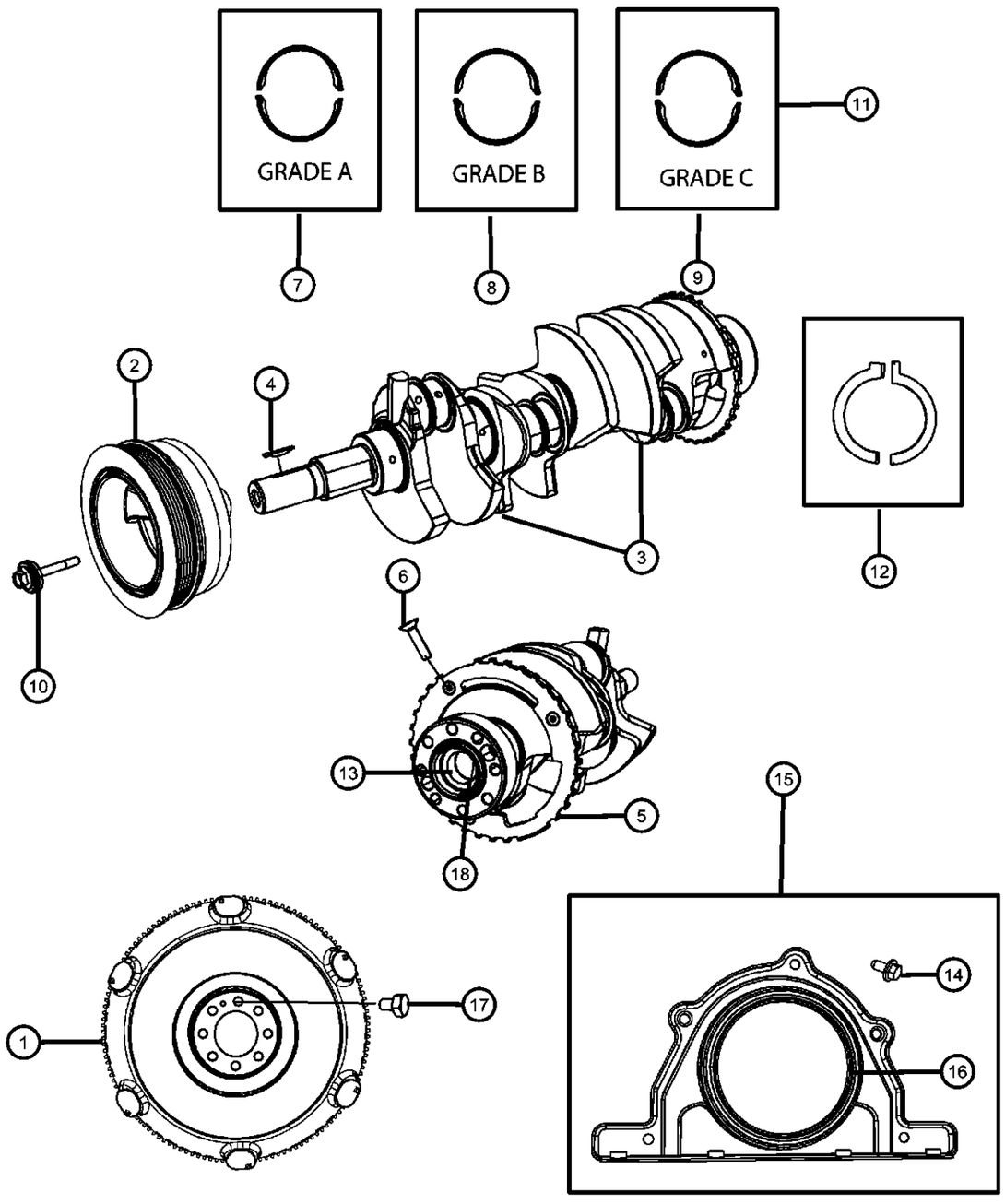

ITEM	PART NUMBER	QTY	LINE	SERIES	BODY	ENGINE	TRANS	TRIM	DESCRIPTION

NOTE: For Crankshaft Indentification, Stamping Location And Bearing Information Refer To The Service Manual.
For Bearing Selection Sizes Please Refer To Service Manual Group 9, Bearings Crankshaft Main, [Select Fit Identification]
Sales Codes:
[DEC] = 6-Speed Manual TR6060 Transmission
[DEH] = 6-Speed Manual NSG370 Transmission
[DF9] = AHS-T RWD Automatic Transmission
[DGJ] = 5-Speed Automatic W5A580 Transmission
[DGQ] = 5-Speed Automatic 545RFE Transmission
[DGV] = 4-Speed Automatic VLP 42RLE Transmission
[DG0] = All Automatic Transmissions
[DHR] = Single Speed On Demand MP3010 Transfer Case
[DHU] = AWD Electronic Shift Two Speed NVG 244 H/D Transfer Case
[DHZ] = Full Time Single Mode NVG 140 Transfer Case
[EGS] = 4.0L SOHC V-6 Engine
[EG0] = All 4.0L Engines
[EKG] = 3.7L [Magnum] V-6 Engine
[EK0] = All 3.7L 6-Cylinder Gas Engines
[ENS] = 2.8L 4 Cylinder Turbo Diesel Engine
[EN0] = All 2.8L 4 Cylinder Turbo Diesel Engines
[ESF] = 6.1L SRT V-8 Hemi Engine
[ES0] = All 6.1L 8-Cylinder Engines
[EVA] = 4.7L [Magnum] V-8 Engine
[EVD] = 4.7L V-8 FFV Engine
[EVE] = 4.7L V-8 Engine
[EV0] = All 4.7L 8-Cylinder Engines
[EZA] = 5.7L Hemi V-8 Engine
[EZB] = 5.7L Hemi V-8 Multi-Displacement Engine
[EZC] = 5.7L Hemi V-8 VCT Non Multi-Displacement Engine
[EZD] = 5.7L Hemi V-8 VCT Multi-Displacement Engine
[EZE] = 5.7L Hemi V-8 HEV Engine
[EZ0] = All 5.7L 8-Cylinder Engines
[NAA] = Federal Emissions
[NAE] = California Emissions
[NAS] = 50 State Emissions
[NA1] = Export Emissions
[NHK] = Engine Cylinder Block Heater
[XEF] = Transfer Case Skid Plate Sheild

1	05038113AB	1	D			ESF, EZC, EZD	DEC		FLYWHEEL, Ring Gear Is Serviced With The Flywheel Only
2	53022084AA	1	D			EZC, EZD			DAMPER, Vibration
3	53021302BB	1	D			EZD, EZC			CRANKSHAFT, See Note
4	06506397AA	1	D			EZC, EZD			KEY, Woodruff
5		1							TONE RING, Sensor, Serviced With Crankshaft, (NOT SERVICED)
6		1							SCREW, M6x1x25, Serviced With Crankshaft, (NOT SERVICED)

DODGE CHALLENGER (LC)

SERIES	LINE	BODY	ENGINE	TRANSMISSION
H = HIGHLINE P = PREMIUM X = SPECIAL	D = DODGE	22 = 2-DR SEDAN TYPE #2	EGG = 3.5L High Output V6 24V MPI Engine ESF = 6.1L SRT HEMI V8 Engine EZC = 5.7L HEMI VCT Engine EZD = 5.7L Hemi VCT MDS Engine	DEC = 6-Speed Manual TREMEC Transmission DGJ = 5-Speed Auto W5A580 Transmission DGV = 4-Spd. Automatic VLP 42RLE Trans

Crankshaft, Crankshaft Bearings, Damper And Flywheel 5.7L [EZC] Without MDS
Figure 009EZC-405

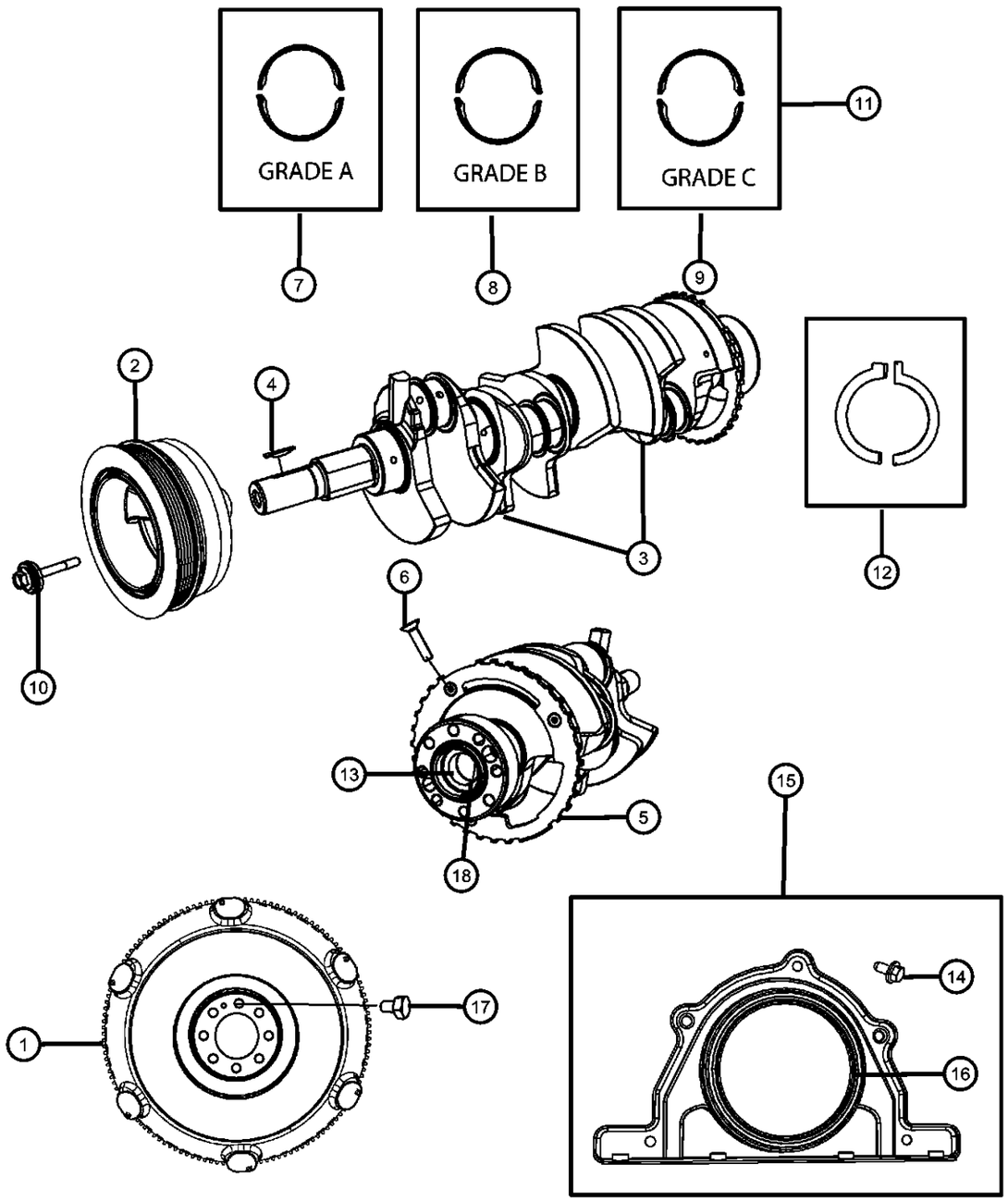

ITEM	PART NUMBER	QTY	LINE	SERIES	BODY	ENGINE	TRANS	TRIM	DESCRIPTION
7	68060355AA	AR	D			EZC	DEC		BEARING KIT, Crankshaft, A Grade, See Note
8	68060357AA	AR	D			EZC	DEC		BEARING KIT, Crankshaft, B Grade, See Note
9	68046331AA	AR	D			EZC	DEC		BEARING KIT, Crankshaft, C Grade, See Note
10	06508400AA	1	D			EZC, EZD			BOLT AND CONED WASHER, Hex Head, M14X1.5X102.00, Damper To Crankshaft, Mounting
11	68060358AA	5	D			EZD, EZC			BEARING KIT, Crankshaft, .008mm O/S
12	05083979AA	1	D			EZC, EZD			THRUST WASHER PACKAGE, Crankshaft
13	53009180AB	1	D			ESF, EZC	DEC		BEARING, Pilot
14	06104005AA	5	D			EZC, EZD			BOLT, 6 Lobe External Head, M6X1.00X16.00, Rear Crankshaft Oil Retainer To Cylinder Block, Mounting
15									RETAINER PACKAGE, Crankshaft Rear Oil Seal
	68060342AA	1	D			EZC, EZD, EZH			
		1	D			EZC, EZD			
16		1							SEAL, Crankshaft Oil, Rear, Serviced In Rear Retainer Package, (NOT SERVICED)
17	06504398	8	D			ESF, EZC, EZD	DEC		BOLT, Hex Head, M10X1.00X26.00, Flywheel To Crankshaft, Mounting
18	04736283AA	1	D			EZC, EZD	DGJ		SLEEVECrankshaft

DODGE CHALLENGER (LC)

SERIES	LINE	BODY	ENGINE	TRANSMISSION
H = HIGHLINE P = PREMIUM X = SPECIAL	D = DODGE	22 = 2-DR SEDAN TYPE #2	EGG = 3.5L High Output V6 24V MPI Engine ESF = 6.1L SRT HEMI V8 Engine EZC = 5.7L HEMI VCT Engine EZD = 5.7L Hemi VCT MDS Engine	DEC = 6-Speed Manual TREMEC Transmission DGJ = 5-Speed Auto W5A580 Transmission DGV = 4-Spd. Automatic VLP 42RLE Trans

AR = use ase required - = Non illustrrated part

Pistons, Piston Rings, Connecting Rods And Connecting Rod Bearings 5.7L [EZC] Without MDS
Figure 009EZC-425

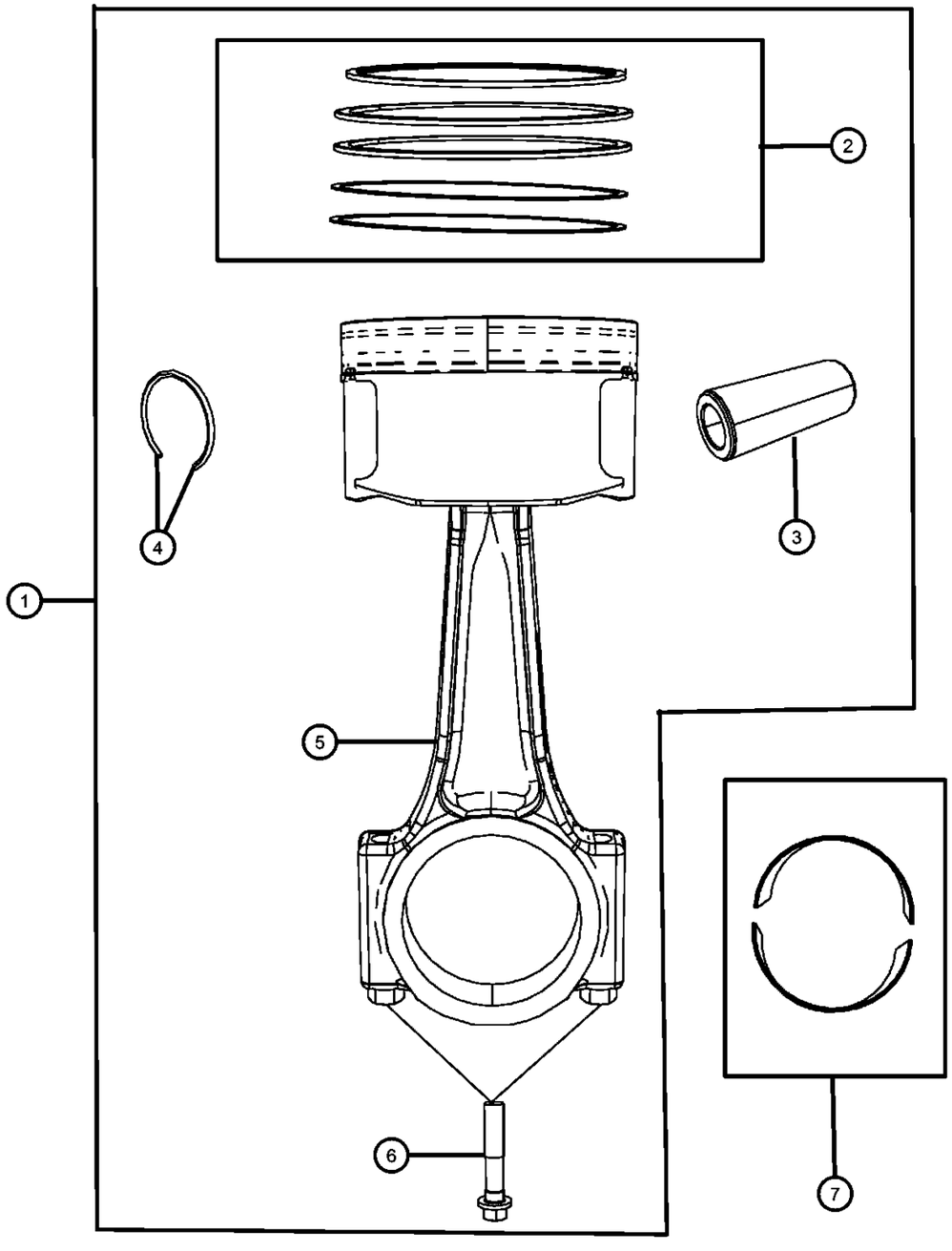

ITEM	PART NUMBER	QTY	LINE	SERIES	BODY	ENGINE	TRANS	TRIM	DESCRIPTION

NOTE: For Crankshaft Indentification, Stamping Location And Bearing Information Refer To The Service Manual.
For Bearing Selection Sizes Please Refer To Service Manual Group 9, Bearings Crankshaft Main, [Select Fit Identification]
Sales Codes:
[DEC] = 6-Speed Manual TR6060 Transmission
[DEH] = 6-Speed Manual NSG370 Transmission
[DF9] = AHS-T RWD Automatic Transmission
[DGJ] = 5-Speed Automatic W5A580 Transmission
[DGQ] = 5-Speed Automatic 545RFE Transmission
[DGV] = 4-Speed Automatic VLP 42RLE Transmission
[DG0] = All Automatic Transmissions
[DHR] = Single Speed On Demand MP3010 Transfer Case
[DHU] = AWD Electronic Shift Two Speed NVG 244 H/D Transfer Case
[DHZ] = Full Time Single Mode NVG 140 Transfer Case
[EGS] = 4.0L SOHC V-6 Engine
[EG0] = All 4.0L Engines
[EKG] = 3.7L [Magnum] V-6 Engine
[EK0] = All 3.7L 6-Cylinder Gas Engines
[ENS] = 2.8L 4 Cylinder Turbo Diesel Engine
[EN0] = All 2.8L 4 Cylinder Turbo Diesel Engines
[ESF] = 6.1L SRT V-8 Hemi Engine
[ES0] = All 6.1L 8-Cylinder Engines
[EVA] = 4.7L [Magnum] V-8 Engine
[EVD] = 4.7L V-8 FFV Engine
[EVE] = 4.7L V-8 Engine
[EV0] = All 4.7L 8-Cylinder Engines
[EZA] = 5.7L Hemi V-8 Engine
[EZB] = 5.7L Hemi V-8 Multi-Displacement Engine
[EZC] = 5.7L Hemi V-8 VCT Non Multi-Displacement Engine
[EZD] = 5.7L Hemi V-8 VCT Multi-Displacement Engine
[EZE] = 5.7L Hemi V-8 HEV Engine
[EZ0] = All 5.7L 8-Cylinder Engines
[NAA] = Federal Emissions
[NAE] = California Emissions
[NAS] = 50 State Emissions
[NA1] = Export Emissions
[NHK] = Engine Cylinder Block Heater
[XEF] = Transfer Case Skid Plate Sheild

1								PISTON PIN AND ROD
	53022257AA	4	D		EZC, EZD			Cylinders 1,3,5,7
	53022258AA	4	D		EZC, EZD			Cylinders 2,4,6.8
2	68046210AA	1	D		EZC	DEC		RING PACKAGE, Piston, Standard Size
3		1						PIN, Piston, Serviced With Piston Package, (NOT SERVICED)
4		1						RING, Piston Pin, Serviced With Piston Package, (NOT SERVICED)

DODGE CHALLENGER (LC)

SERIES	LINE	BODY	ENGINE	TRANSMISSION
H = HIGHLINE P = PREMIUM X = SPECIAL	D = DODGE	22 = 2-DR SEDAN TYPE #2	EGG = 3.5L High Output V6 24V MPI Engine ESF = 6.1L SRT HEMI V8 Engine EZC = 5.7L HEMI VCT Engine EZD = 5.7L Hemi VCT MDS Engine	DEC = 6-Speed Manual TREMEC Transmission DGJ = 5-Speed Auto W5A580 Transmission DGV = 4-Spd. Automatic VLP 42RLE Trans

AR = use ase required - = Non illustrrated part

Pistons, Piston Rings, Connecting Rods And Connecting Rod Bearings 5.7L [EZC] Without MDS
Figure 009EZC-425

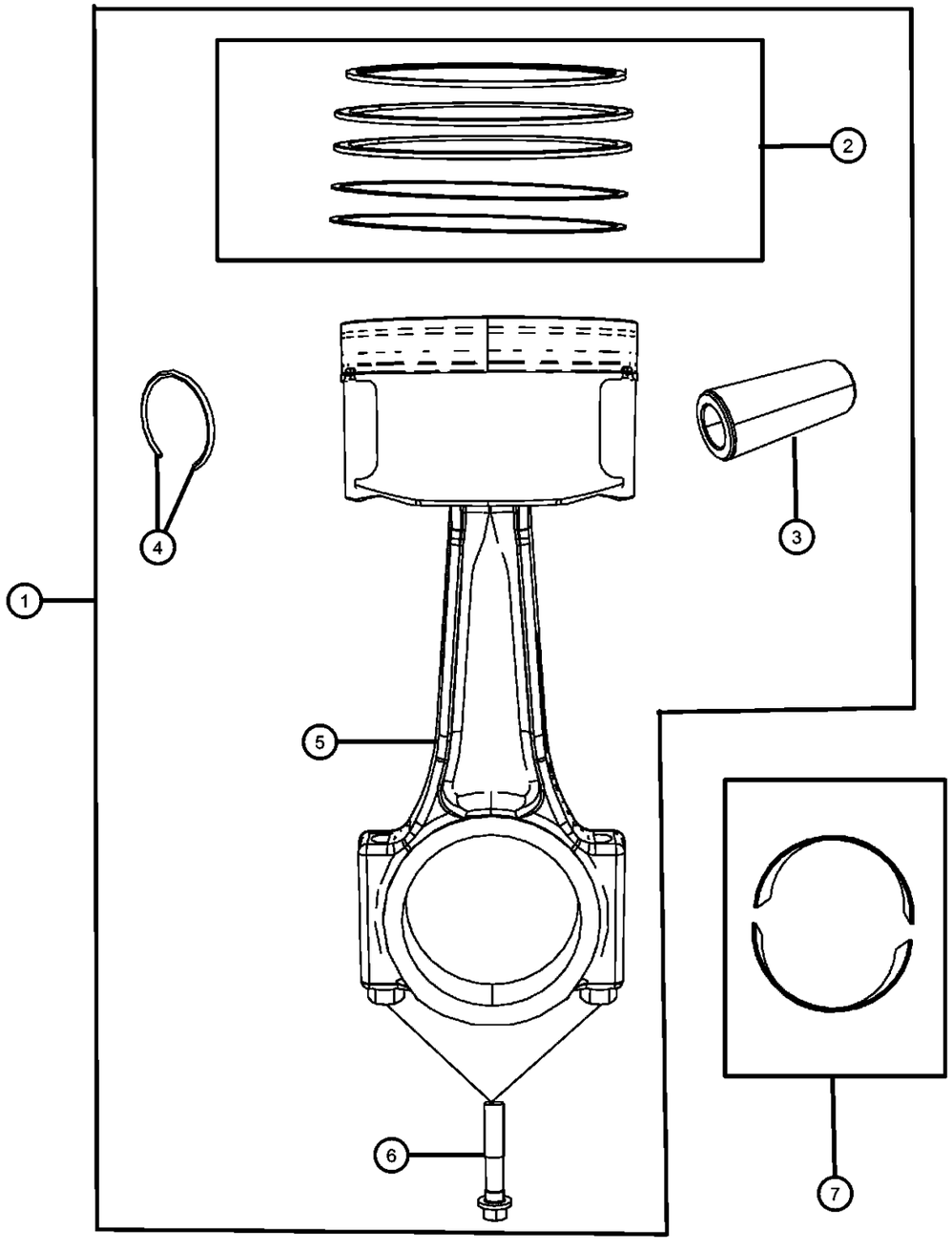

ITEM	PART NUMBER	QTY	LINE	SERIES	BODY	ENGINE	TRANS	TRIM	DESCRIPTION
5		1							ROD, Connecting, Serviced With Piston Package, (NOT SERVICED)
6	06506335AA	8	D			EZC, EZD			BOLT, Connecting Rod
7	68060359AA	8	D			EZC, EZD			BEARING PACKAGE, Connecting Rod, Standard, See Note

DODGE CHALLENGER (LC)

SERIES	LINE	BODY	ENGINE	TRANSMISSION
H = HIGHLINE P = PREMIUM X = SPECIAL	D = DODGE	22 = 2-DR SEDAN TYPE #2	EGG = 3.5L High Output V6 24V MPI Engine ESF = 6.1L SRT HEMI V8 Engine EZC = 5.7L HEMI VCT Engine EZD = 5.7L Hemi VCT MDS Engine	DEC = 6-Speed Manual TREMEC Transmission DGJ = 5-Speed Auto W5A580 Transmission DGV = 4-Spd. Automatic VLP 42RLE Trans

Camshaft And Valvetrain 5.7L [EZC] Without MDS
Figure 009EZC-505

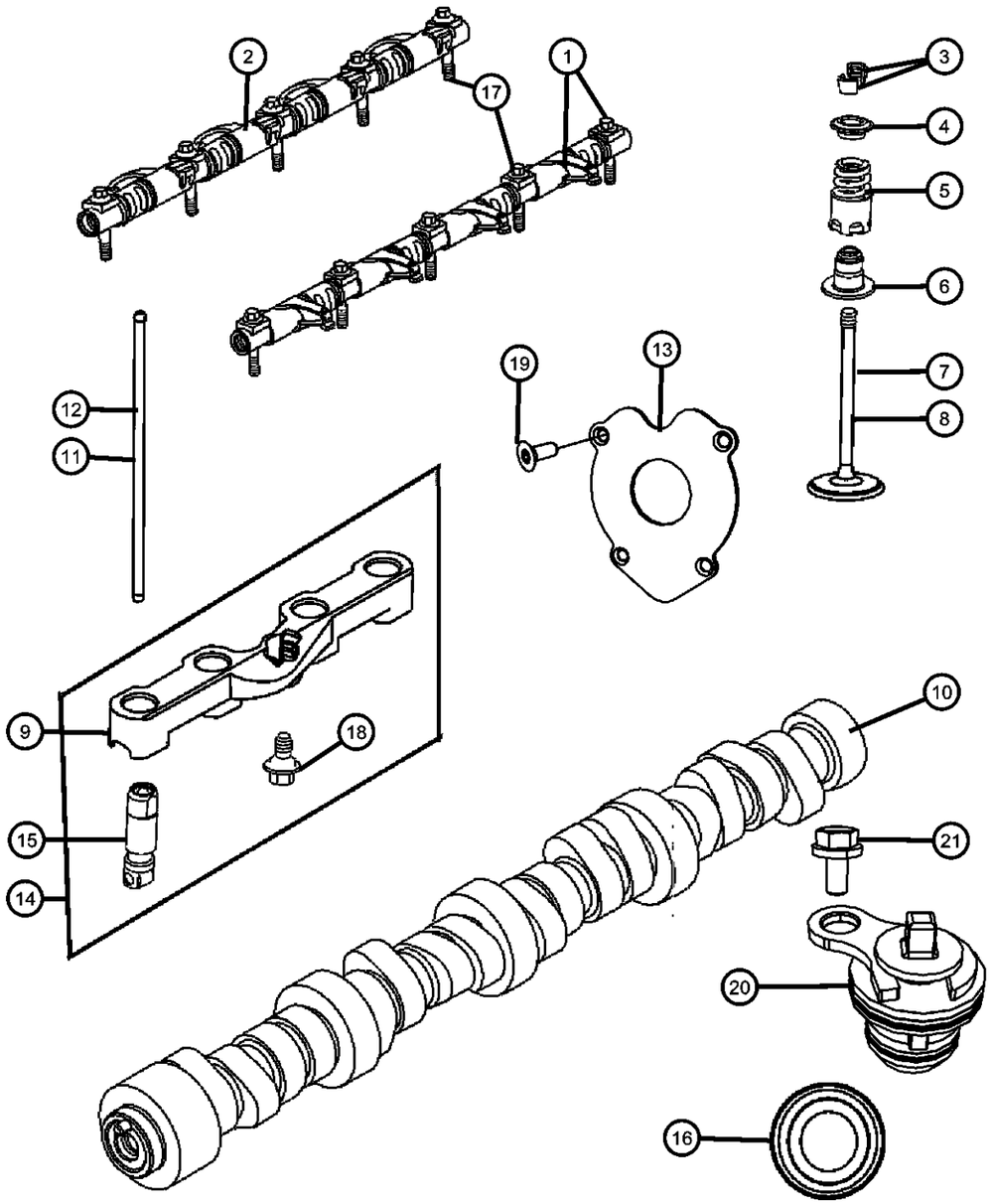

ITEM	PART NUMBER	QTY	LINE	SERIES	BODY	ENGINE	TRANS	TRIM	DESCRIPTION
1									ROCKER ARM, Exhaust
	68060344AA	2	D			EZC, EZD			
		2	D			EZC, EZD, EZH			
2									ROCKER ARM, Intake
	68060343AA	2	D			EZC, EZD			
		2	D			EZC, EZD, EZH			
3									LOCK, Valve Spring Retainer
	68060350AA	32	D			EZC, EZD			
		32	D			EZC, EZD, EZH			
4	68060351AA	16	D			EZC, EZD			RETAINER, Valve Spring
5	53022089AD	16	D			EZC, EZD			SPRING, Valve
6	53022225AB	16	D			EZC, EZD			SEAT, Valve Spring
7	53022090AB	16	D			EZC, EZD			SEAL, Valve Guide
8	53022087AA	8	D			EZC, EZD			VALVE, Intake, Standard
9	53022088AB	8	D			EZC, EZD			VALVE, Exhaust, Standard
10	53021721AA	4	D			ESF, EZC			YOKE, Tappet Aligning
11	53022064BD	1	D			EZC			CAMSHAFT, Engine
12	53021556BB	8	D			EZD, EZC			PUSH ROD, Intake Valve
13	53021557BB	8	D			EZC, EZD			PUSH ROD, Exhaust Valve
14	53022178AE	1	D			EZC, EZD			PLATE, Camshaft Thrust
15	68060699AA	4	D			EZC			LIFTERS AND YOKE, Hydraulic, Engine, Used On Engines Without MDS Only
16		4							LIFTER, Hydraulic Roller Deactivating, Serviced In Item 14, (NOT SERVICED)
17	06507663AA	1	D			EZC, EZD			PLUG, Camshaft
18	06507072AA	10	D			EZC, EZD			BOLT, Hex Flange Head, M8X1.25X50.00, Rocker Arm Shaft To Cylinder Head, Mounting
19	06509208AA	4	D			ESF, EZC			BOLT, Hex Flange Head, M6x1.00x14.00, Lifter Guide To Cylinder Block, Mounting
20	06102205AA	4	D			EZC, EZD			BOLT, Recessed Torx head, M6X1.00X15.00, Camshaft Thrust Plate To Cylinder Block, Mounting

DODGE CHALLENGER (LC)

SERIES	LINE	BODY	ENGINE	TRANSMISSION
H = HIGHLINE P = PREMIUM X = SPECIAL	D = DODGE	22 = 2-DR SEDAN TYPE #2	EGG = 3.5L High Output V6 24V MPI Engine ESF = 6.1L SRT HEMI V8 Engine EZC = 5.7L HEMI VCT Engine EZD = 5.7L Hemi VCT MDS Engine	DEC = 6-Speed Manual TREMEC Transmission DGJ = 5-Speed Auto W5A580 Transmission DGV = 4-Spd. Automatic VLP 42RLE Trans

AR = use ase required - = Non illustrrated part

Camshaft And Valvetrain 5.7L [EZC] Without MDS
Figure 009EZC-505

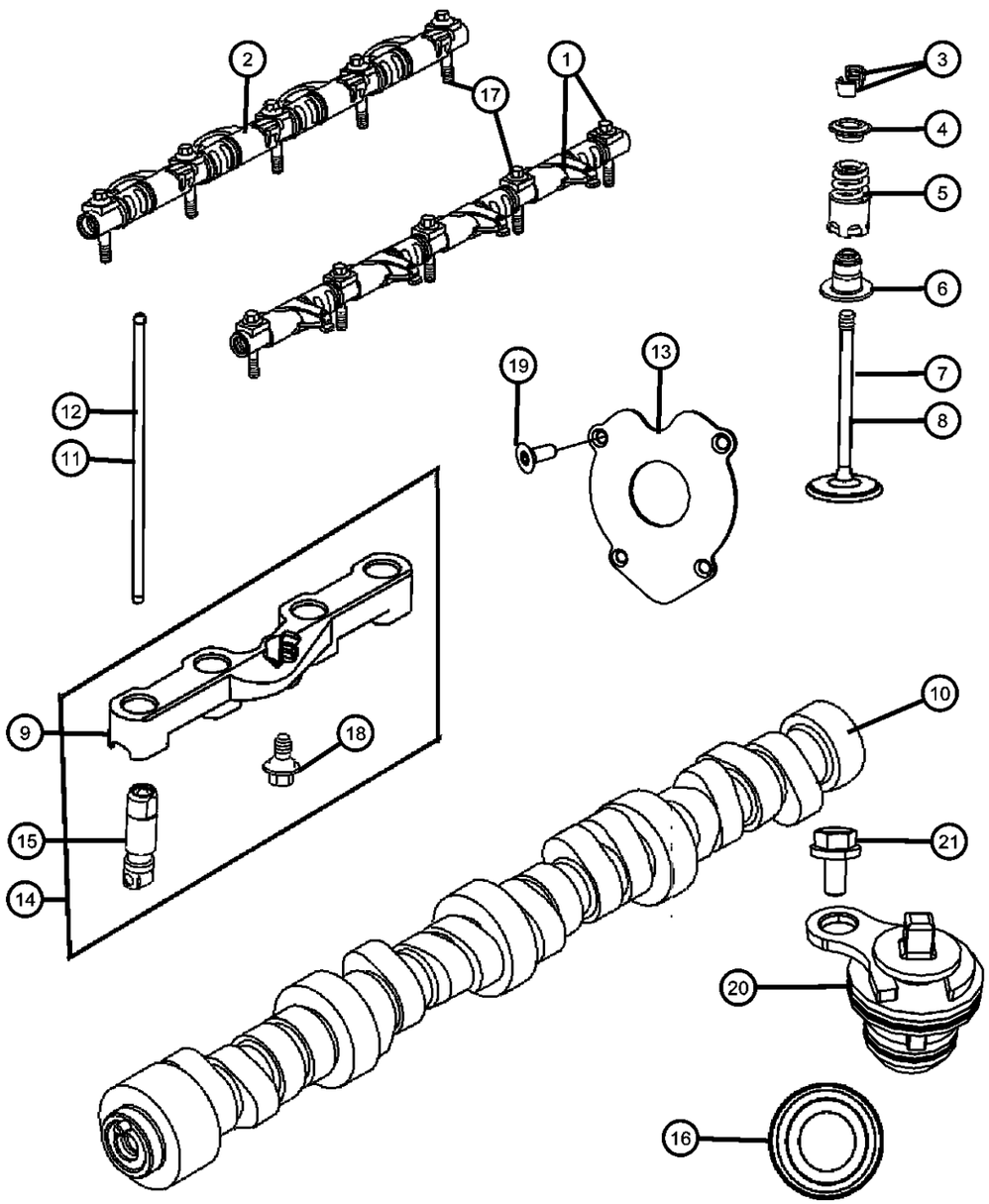

ITEM	PART NUMBER	QTY	LINE	SERIES	BODY	ENGINE	TRANS	TRIM	DESCRIPTION
21	53032221AA	4	D			ESF, EZC			PLUG, Cylinder Block, For Engines Without Multi-Displacement System
22									BOLT AND CONED WASHER, Hex Head, M6X1.00X14.00
	06102164AA	4	D			EZC, EZD			MDS Plug To Cylinder Block, Mounting
		1	D			EZC, EZD, EZH			Variable Valve Timing Solenoid To Cylinder Block, Mounting
		4	D			EZC, EZD, EZH			MDS Plug To Cylinder Block, Mounting
		1	D			EZC, EZD			Variable Valve Timing Solenoid To Cylinder Block, Mounting
-23	53022338AA	1	D			EZC			SOLENOID, Variable Valve Timing, Exhaust

DODGE CHALLENGER (LC)

SERIES	LINE	BODY	ENGINE	TRANSMISSION
H = HIGHLINE	D = DODGE	22 = 2-DR SEDAN TYPE #2	EGG = 3.5L High Output V6 24V MPI Engine	DEC = 6-Speed Manual TREMEC Transmission
P = PREMIUM			ESF = 6.1L SRT HEMI V8 Engine	DGJ = 5-Speed Auto W5A580 Transmission
X = SPECIAL			EZC = 5.7L HEMI VCT Engine	DGV = 4-Spd. Automatic VLP 42RLE Trans
			EZD = 5.7L Hemi VCT MDS Engine	

AR = use ase required - = Non illustrrated part

Timing Case Cover 5.7L [EZC] Without MDS
Figure 009EZC-605

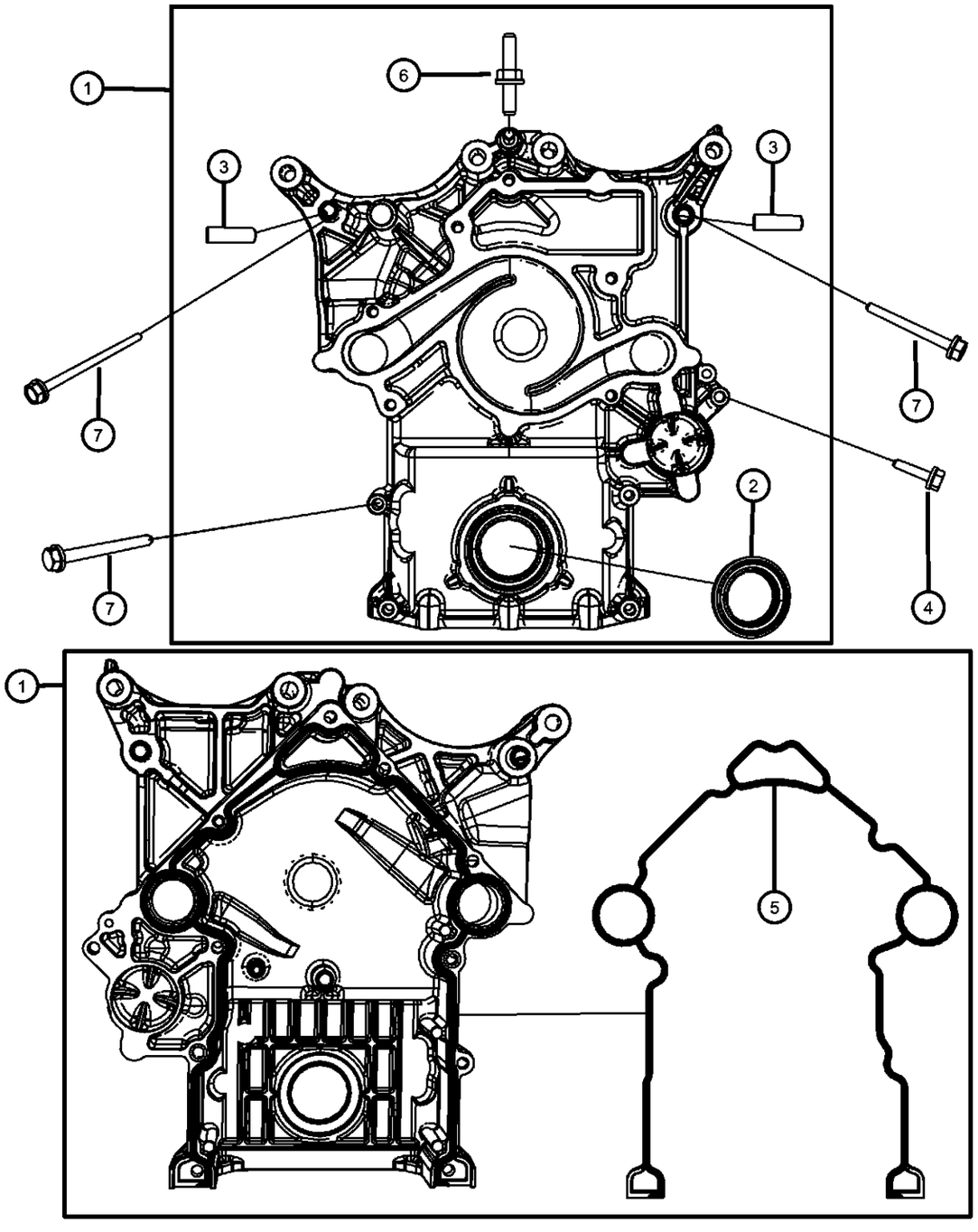

ITEM	PART NUMBER	QTY	LINE	SERIES	BODY	ENGINE	TRANS	TRIM	DESCRIPTION

NOTE:
Sales Codes:
[DEC] = 6-Speed Manual TR6060 Transmission
[DEH] = 6-Speed Manual NSG370 Transmission
[DF9] = AHS-T RWD Automatic Transmission
[DGJ] = 5-Speed Automatic W5A580 Transmission
[DGQ] = 5-Speed Automatic 545RFE Transmission
[DGV] = 4-Speed Automatic VLP 42RLE Transmission
[DG0] = All Automatic Transmissions
[DHR] = Single Speed On Demand MP3010 Transfer Case
[DHU] = AWD Electronic Shift Two Speed NVG 244 H/D Transfer Case
[DHZ] = Full Time Single Mode NVG 140 Transfer Case
[EGS] = 4.0L SOHC V-6 Engine
[EG0] = All 4.0L Engines
[EKG] = 3.7L [Magnum] V-6 Engine
[EK0] = All 3.7L 6-Cylinder Gas Engines
[ENS] = 2.8L 4 Cylinder Turbo Diesel Engine
[EN0] = All 2.8L 4 Cylinder Turbo Diesel Engines
[ESF] = 6.1L SRT V-8 Hemi Engine
[ES0] = All 6.1L 8-Cylinder Engines
[EVA] = 4.7L [Magnum] V-8 Engine
[EVD] = 4.7L V-8 FFV Engine
[EVE] = 4.7L V-8 Engine
[EV0] = All 4.7L 8-Cylinder Engines
[EZA] = 5.7L Hemi V-8 Engine
[EZB] = 5.7L Hemi V-8 Multi-Displacement Engine
[EZC] = 5.7L Hemi V-8 VCT Non Multi-Displacement Engine
[EZD] = 5.7L Hemi V-8 VCT Multi-Displacement Engine
[EZE] = 5.7L Hemi V-8 HEV Engine
[EZ0] = All 5.7L 8-Cylinder Engines
[NAA] = Federal Emissions
[NAE] = California Emissions
[NAS] = 50 State Emissions
[NA1] = Export Emissions
[NHK] = Engine Cylinder Block Heater
[XEF] = Transfer Case Skid Plate Sheild

1	53022096AF	1	D			EZC, EZD			COVER, Timing Case
2	53021585AD	1	D			EZC, EZD			SEAL, Crankshaft Oil, Front
3	06506697AA	2	D			EZC, EZD			BUSHING, Timing Cover
4									BOLT AND CONED WASHER, Hex Head, M8X1.25X35.00
	06506269AA	5	D			EZC, EZD			Water Pump To Front Cover, Mounting
		5	D			EZC, EZD			Cover To Cylinder Block, Mounting
5									GASKET PACKAGE, Front Cover

DODGE CHALLENGER (LC)

SERIES	LINE	BODY	ENGINE	TRANSMISSION
H = HIGHLINE P = PREMIUM X = SPECIAL	D = DODGE	22 = 2-DR SEDAN TYPE #2	EGG = 3.5L High Output V6 24V MPI Engine ESF = 6.1L SRT HEMI V8 Engine EZC = 5.7L HEMI VCT Engine EZD = 5.7L Hemi VCT MDS Engine	DEC = 6-Speed Manual TREMEC Transmission DGJ = 5-Speed Auto W5A580 Transmission DGV = 4-Spd. Automatic VLP 42RLE Trans

Timing Case Cover 5.7L [EZC] Without MDS
Figure 009EZC-605

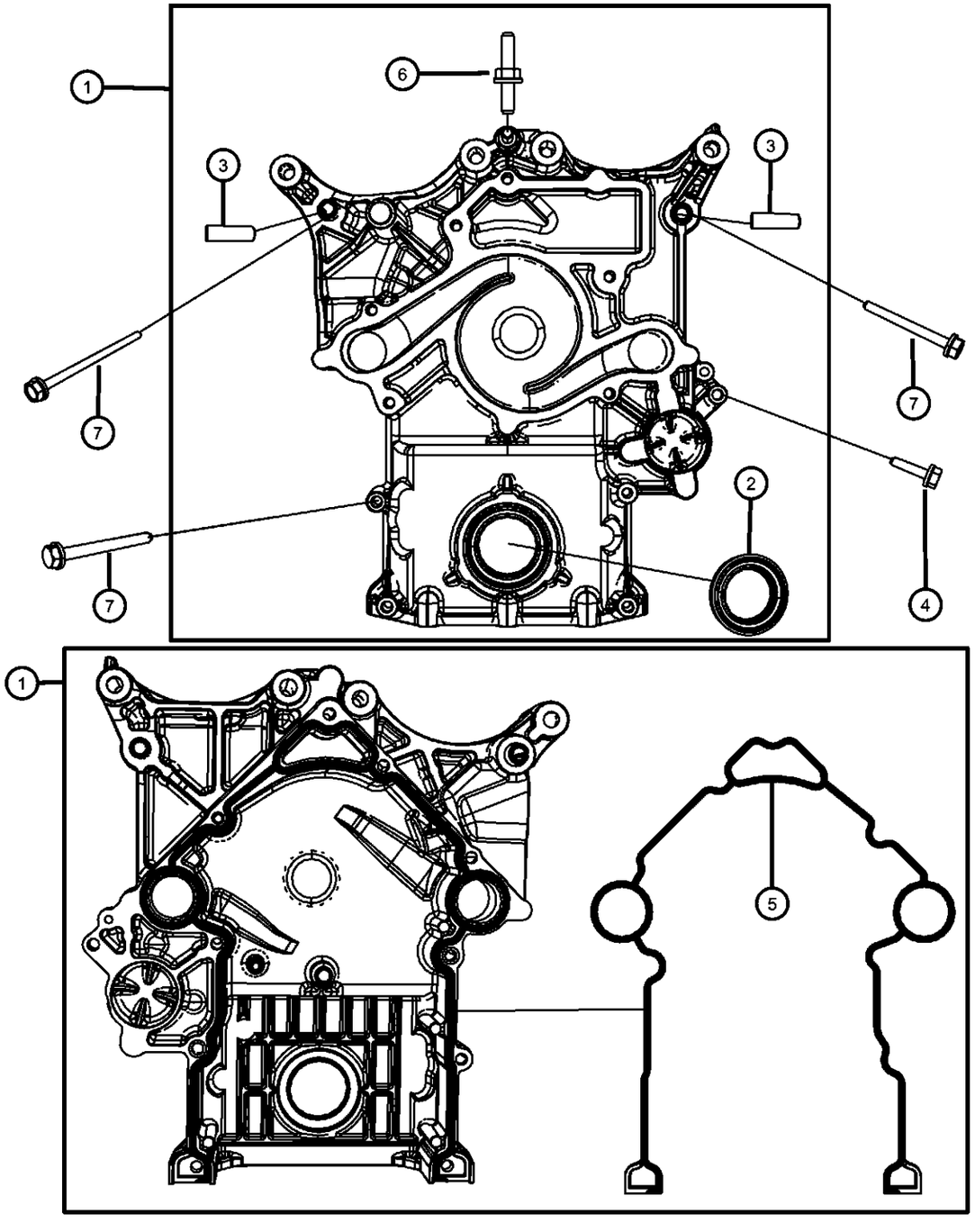

ITEM	PART NUMBER	QTY	LINE	SERIES	BODY	ENGINE	TRANS	TRIM	DESCRIPTION
	68060362AA	1	D			EZC, EZD			
		1	D			EZC, EZD, EZH			
6	06506343AA	1	D			EZC, EZD			STUD, Double Ended, M10X1.50X25.00, Cover/ Lifting Stud, Mounting
7									BOLT AND CONED WASHER, Hex Head, M8X1.25X85.00
	06102184AA	4	D			EZC, EZD			Water Pump To Front Cover, Mounting
		4	D			EZC, EZD			Cover To Cylinder Block, Mounting

DODGE CHALLENGER (LC)

SERIES	LINE	BODY	ENGINE	TRANSMISSION
H = HIGHLINE	D = DODGE	22 = 2-DR SEDAN TYPE #2	EGG = 3.5L High Output V6 24V MPI Engine	DEC = 6-Speed Manual TREMEC Transmission
P = PREMIUM			ESF = 6.1L SRT HEMI V8 Engine	DGJ = 5-Speed Auto W5A580 Transmission
X = SPECIAL			EZC = 5.7L HEMI VCT Engine	DGV = 4-Spd. Automatic VLP 42RLE Trans
			EZD = 5.7L Hemi VCT MDS Engine	

AR = use ase required - = Non illustrrated part

Timing System 5.7L [EZC] Without MDS
Figure 009EZC-625

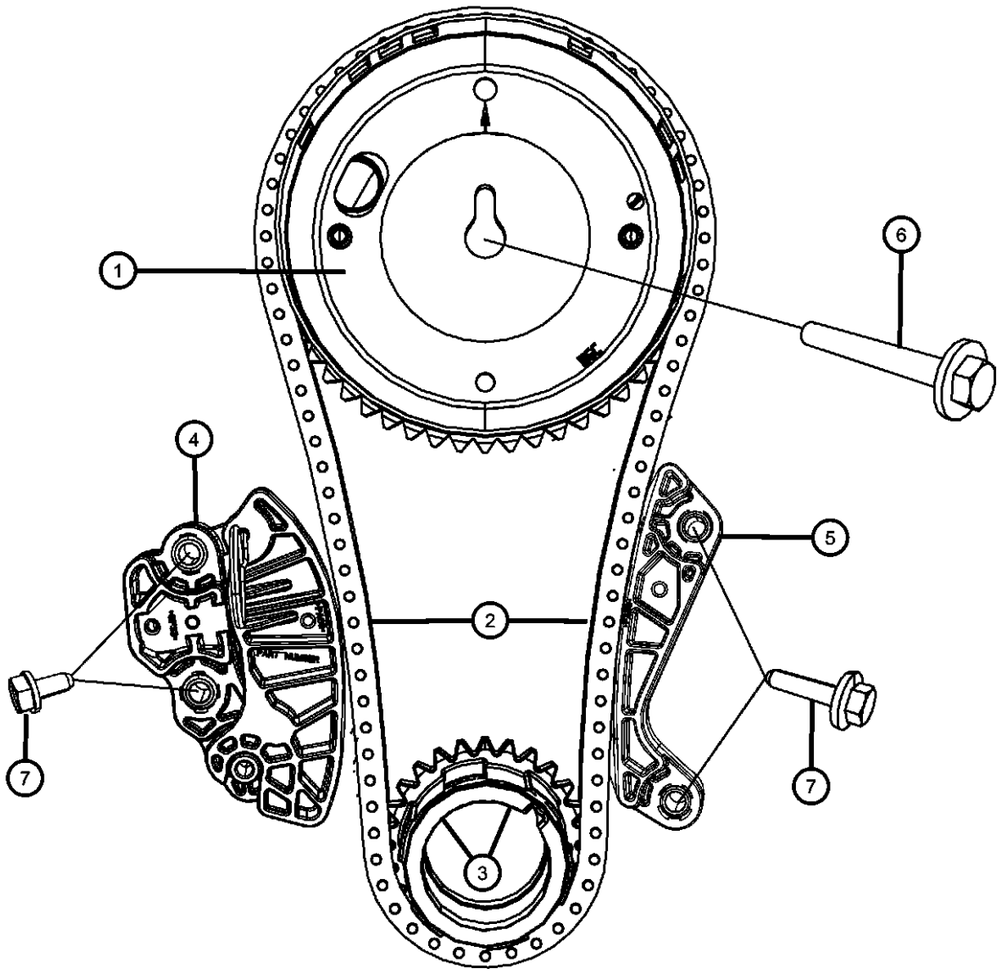

ITEM	PART NUMBER	QTY	LINE	SERIES	BODY	ENGINE	TRANS	TRIM	DESCRIPTION

NOTE:
Sales Codes:
[DEC] = 6-Speed Manual TR6060 Transmission
[DEH] = 6-Speed Manual NSG370 Transmission
[DF9] = AHS-T RWD Automatic Transmission
[DGJ] = 5-Speed Automatic W5A580 Transmission
[DGQ] = 5-Speed Automatic 545RFE Transmission
[DGV] = 4-Speed Automatic VLP 42RLE Transmission
[DG0] = All Automatic Transmissions
[DHR] = Single Speed On Demand MP3010 Transfer Case
[DHU] = AWD Electronic Shift Two Speed NVG 244 H/D Transfer Case
[DHZ] = Full Time Single Mode NVG 140 Transfer Case
[EGS] = 4.0L SOHC V-6 Engine
[EG0] = All 4.0L Engines
[EKG] = 3.7L [Magnum] V-6 Engine
[EK0] = All 3.7L 6-Cylinder Gas Engines
[ENS] = 2.8L 4 Cylinder Turbo Diesel Engine
[EN0] = All 2.8L 4 Cylinder Turbo Diesel Engines
[ESF] = 6.1L SRT V-8 Hemi Engine
[ES0] = All 6.1L 8-Cylinder Engines
[EVA] = 4.7L [Magnum] V-8 Engine
[EVD] = 4.7L V-8 FFV Engine
[EVE] = 4.7L V-8 Engine
[EV0] = All 4.7L 8-Cylinder Engines
[EZA] = 5.7L Hemi V-8 Engine
[EZB] = 5.7L Hemi V-8 Multi-Displacement Engine
[EZC] = 5.7L Hemi V-8 VCT Non Multi-Displacement Engine
[EZD] = 5.7L Hemi V-8 VCT Multi-Displacement Engine
[EZE] = 5.7L Hemi V-8 HEV Engine
[EZ0] = All 5.7L 8-Cylinder Engines
[NAA] = Federal Emissions
[NAE] = California Emissions
[NAS] = 50 State Emissions
[NA1] = Export Emissions
[NHK] = Engine Cylinder Block Heater
[XEF] = Transfer Case Skid Plate Sheild

1	53022243AE	1	D		EZD, EZC	PHASER, Camshaft
2	53022316AC	1	D		EZC, EZD	CHAIN, Timing
3	53022317AC	1	D		EZC, EZD	SPROCKET, Crankshaft
4	53022115AG	1	D		EZC, EZD	TENSIONER, Chain
5	53022315AD	1	D		EZC, EZD	GUIDE, Timing Chain

DODGE CHALLENGER (LC)

SERIES	LINE	BODY	ENGINE	TRANSMISSION
H = HIGHLINE P = PREMIUM X = SPECIAL	D = DODGE	22 = 2-DR SEDAN TYPE #2	EGG = 3.5L High Output V6 24V MPI Engine ESF = 6.1L SRT HEMI V8 Engine EZC = 5.7L HEMI VCT Engine EZD = 5.7L Hemi VCT MDS Engine	DEC = 6-Speed Manual TREMEC Transmission DGJ = 5-Speed Auto W5A580 Transmission DGV = 4-Spd. Automatic VLP 42RLE Trans

Timing System 5.7L [EZC] Without MDS
Figure 009EZC-625

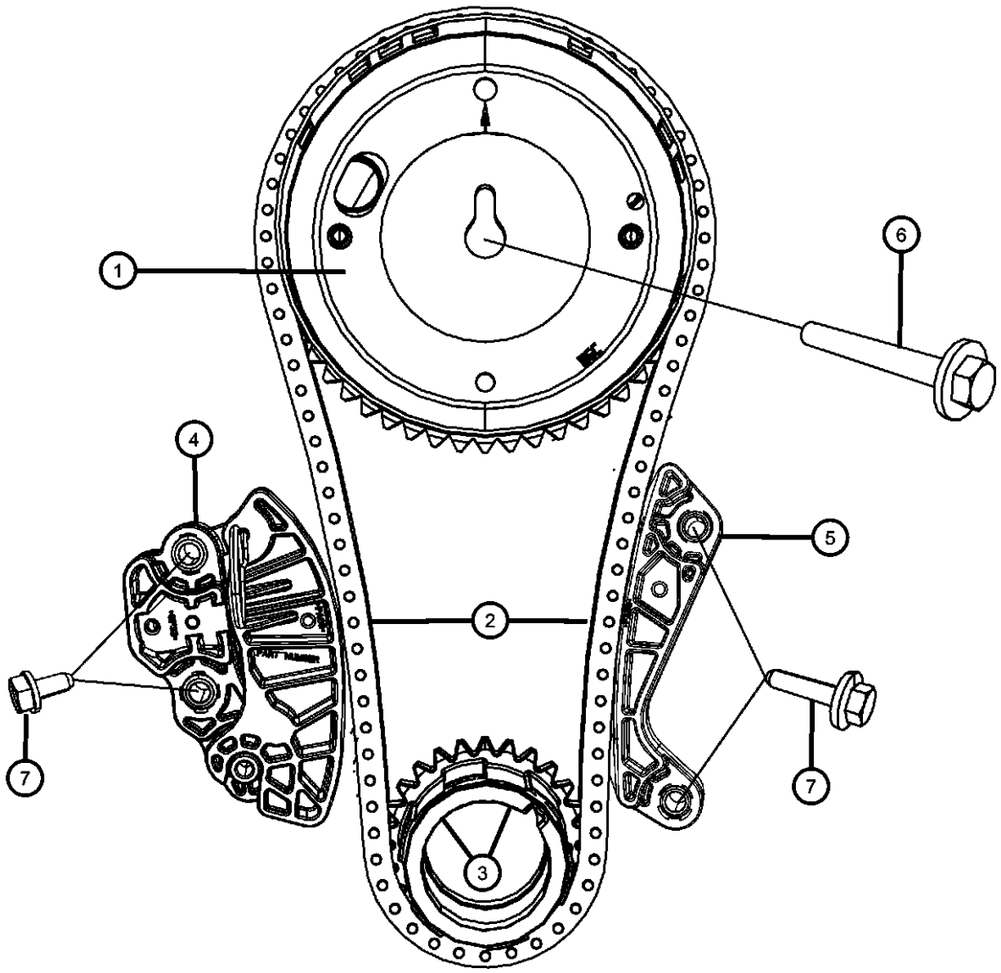

ITEM	PART NUMBER	QTY	LINE	SERIES	BODY	ENGINE	TRANS	TRIM	DESCRIPTION
6	06102430AA	1	D			EZC, EZD			BOLT AND CONED WASHER, Hex Head, M12X1.75X95.00, Phaser To Camshaft, Mounting
7	06509174AA	4	D			EZC, EZD			BOLT AND CONED WASHER, Hex Head, M6x1.00x30.00, Chain Guide To Cylinder Block, Mounting

DODGE CHALLENGER (LC)

SERIES	LINE	BODY	ENGINE	TRANSMISSION
H = HIGHLINE P = PREMIUM X = SPECIAL	D = DODGE	22 = 2-DR SEDAN TYPE #2	EGG = 3.5L High Output V6 24V MPI Engine ESF = 6.1L SRT HEMI V8 Engine EZC = 5.7L HEMI VCT Engine EZD = 5.7L Hemi VCT MDS Engine	DEC = 6-Speed Manual TREMEC Transmission DGJ = 5-Speed Auto W5A580 Transmission DGV = 4-Spd. Automatic VLP 42RLE Trans

Engine Oiling Pump 5.7L [EZC] Without MDS
Figure 009EZC-705

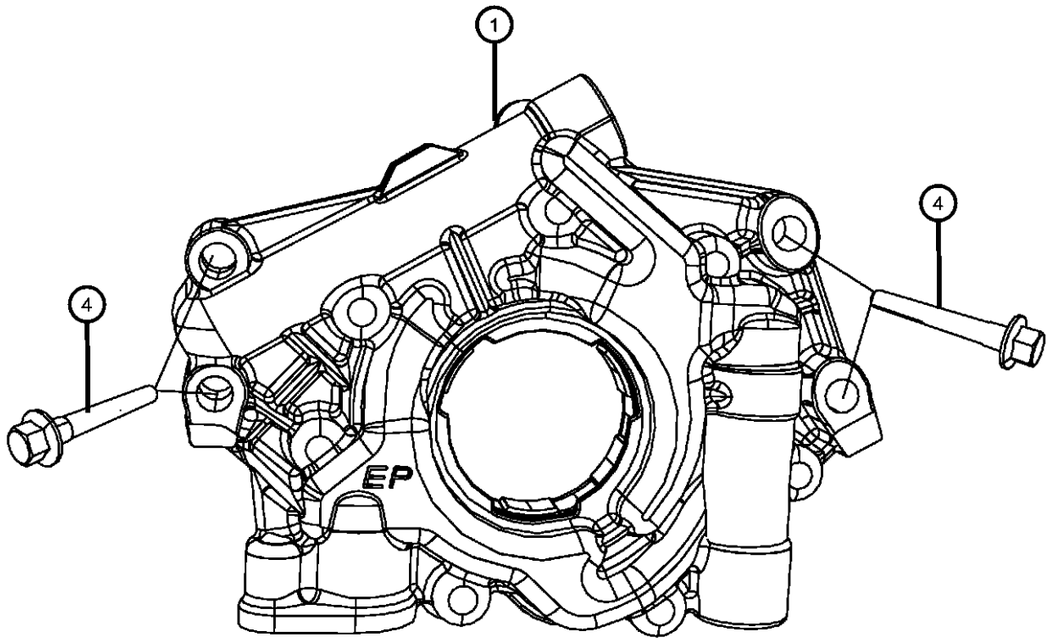

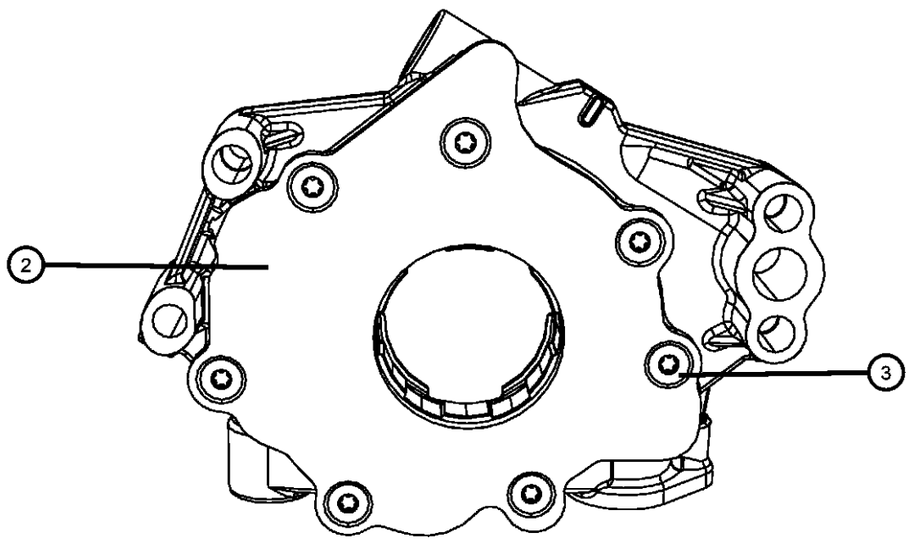

ITEM	PART NUMBER	QTY	LINE	SERIES	BODY	ENGINE	TRANS	TRIM	DESCRIPTION

NOTE:
Sales Codes:
[DEC] = 6-Speed Manual TR6060 Transmission
[DEH] = 6-Speed Manual NSG370 Transmission
[DF9] = AHS-T RWD Automatic Transmission
[DGJ] = 5-Speed Automatic W5A580 Transmission
[DGQ] = 5-Speed Automatic 545RFE Transmission
[DGV] = 4-Speed Automatic VLP 42RLE Transmission
[DG0] = All Automatic Transmissions
[DHR] = Single Speed On Demand MP3010 Transfer Case
[DHU] = AWD Electronic Shift Two Speed NVG 244 H/D Transfer Case
[DHZ] = Full Time Single Mode NVG 140 Transfer Case
[EGS] = 4.0L SOHC V-6 Engine
[EG0] = All 4.0L Engines
[EKG] = 3.7L [Magnum] V-6 Engine
[EK0] = All 3.7L 6-Cylinder Gas Engines
[ENS] = 2.8L 4 Cylinder Turbo Diesel Engine
[EN0] = All 2.8L 4 Cylinder Turbo Diesel Engines
[ESF] = 6.1L SRT V-8 Hemi Engine
[ES0] = All 6.1L 8-Cylinder Engines
[EVA] = 4.7L [Magnum] V-8 Engine
[EVD] = 4.7L V-8 FFV Engine
[EVE] = 4.7L V-8 Engine
[EV0] = All 4.7L 8-Cylinder Engines
[EZA] = 5.7L Hemi V-8 Engine
[EZB] = 5.7L Hemi V-8 Multi-Displacement Engine
[EZC] = 5.7L Hemi V-8 VCT Non Multi-Displacement Engine
[EZD] = 5.7L Hemi V-8 VCT Multi-Displacement Engine
[EZE] = 5.7L Hemi V-8 HEV Engine
[EZ0] = All 5.7L 8-Cylinder Engines
[NAA] = Federal Emissions
[NAE] = California Emissions
[NAS] = 50 State Emissions
[NA1] = Export Emissions
[NHK] = Engine Cylinder Block Heater
[XEF] = Transfer Case Skid Plate Sheild

1	53021622BE	1	D			EZC, EZD			PUMP, Engine Oil
2		1							COVER, Engine Oil Pump, Serviced With Oil Pump, (NOT SERVICED)
3		1							SCREW, Torx Head, Serviced With Oil Pump, (NOT SERVICED)
4	06101233	4	D			EZC, EZD			BOLT AND CONED WASHER, Hex Head, M8X1.25X65.00, Oil Pump To Cylinder Block, Mounting

DODGE CHALLENGER (LC)

SERIES	LINE	BODY	ENGINE	TRANSMISSION
H = HIGHLINE P = PREMIUM X = SPECIAL	D = DODGE	22 = 2-DR SEDAN TYPE #2	EGG = 3.5L High Output V6 24V MPI Engine ESF = 6.1L SRT HEMI V8 Engine EZC = 5.7L HEMI VCT Engine EZD = 5.7L Hemi VCT MDS Engine	DEC = 6-Speed Manual TREMEC Transmission DGJ = 5-Speed Auto W5A580 Transmission DGV = 4-Spd. Automatic VLP 42RLE Trans

Engine Oil Pan, Engine Oil Level Indicator And Related Parts 5.7L [EZC] Without MDS
Figure 009EZC-725

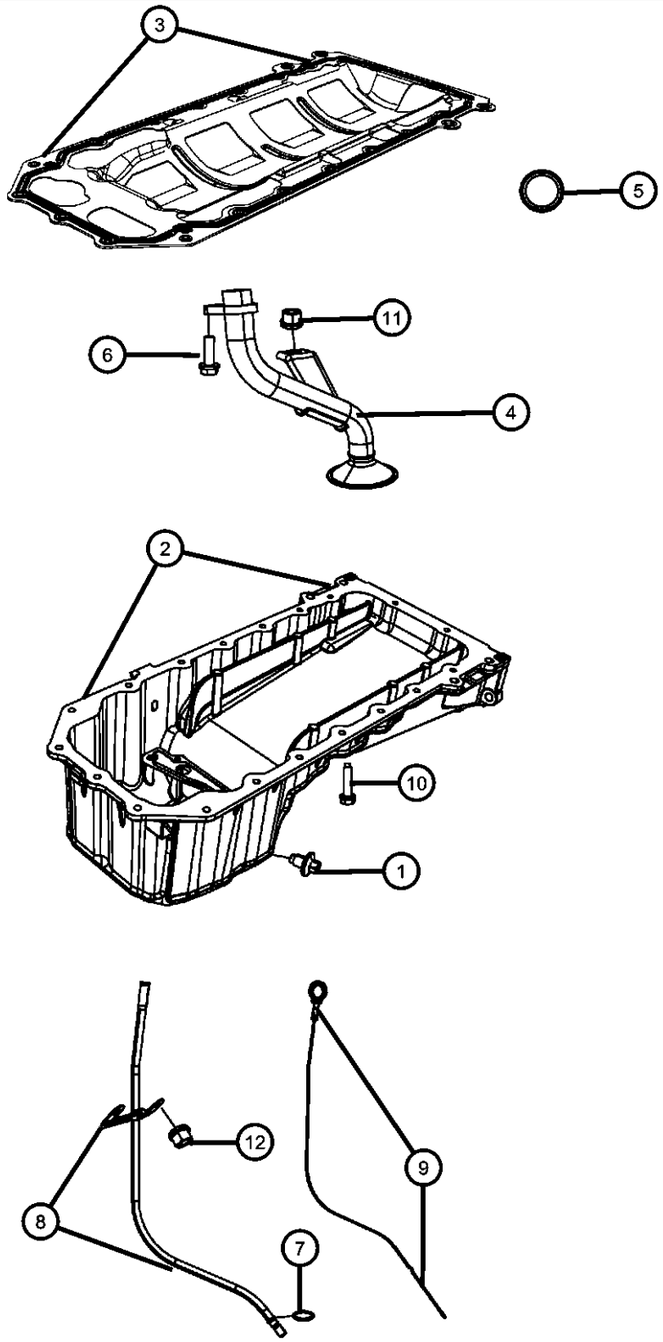

ITEM	PART NUMBER	QTY	LINE	SERIES	BODY	ENGINE	TRANS	TRIM	DESCRIPTION

NOTE:
Sales Codes:
[DEC] = 6-Speed Manual TR6060 Transmission
[DEH] = 6-Speed Manual NSG370 Transmission
[DF9] = AHS-T RWD Automatic Transmission
[DGJ] = 5-Speed Automatic W5A580 Transmission
[DGQ] = 5-Speed Automatic 545RFE Transmission
[DGV] = 4-Speed Automatic VLP 42RLE Transmission
[DG0] = All Automatic Transmissions
[DHR] = Single Speed On Demand MP3010 Transfer Case
[DHU] = AWD Electronic Shift Two Speed NVG 244 H/D Transfer Case
[DHZ] = Full Time Single Mode NVG 140 Transfer Case
[EGS] = 4.0L SOHC V-6 Engine
[EG0] = All 4.0L Engines
[EKG] = 3.7L [Magnum] V-6 Engine
[EK0] = All 3.7L 6-Cylinder Gas Engines
[ENS] = 2.8L 4 Cylinder Turbo Diesel Engine
[EN0] = All 2.8L 4 Cylinder Turbo Diesel Engines
[ESF] = 6.1L SRT V-8 Hemi Engine
[ES0] = All 6.1L 8-Cylinder Engines
[EVA] = 4.7L [Magnum] V-8 Engine
[EVD] = 4.7L V-8 FFV Engine
[EVE] = 4.7L V-8 Engine
[EV0] = All 4.7L 8-Cylinder Engines
[EZA] = 5.7L Hemi V-8 Engine
[EZB] = 5.7L Hemi V-8 Multi-Displacement Engine
[EZC] = 5.7L Hemi V-8 VCT Non Multi-Displacement Engine
[EZD] = 5.7L Hemi V-8 VCT Multi-Displacement Engine
[EZE] = 5.7L Hemi V-8 HEV Engine
[EZ0] = All 5.7L 8-Cylinder Engines
[NAA] = Federal Emissions
[NAE] = California Emissions
[NAS] = 50 State Emissions
[NA1] = Export Emissions
[NHK] = Engine Cylinder Block Heater
[XEF] = Transfer Case Skid Plate Sheild

1	06507741AA	1	D			EZC, EZD			PLUG, Oil Drain
2	04792870AA	1	D			EZC, EZD			PAN, Engine Oil
3	04792874AA	1	D			EZC	DEC		GASKET, Oil Pan
4	04792857BB	1	D			EZC, EZD			TUBE, Oil Pickup
5	53020861	1	D			EZC, EZD			SEAL, Oil Pick Up Tube
6	06102046AA	1	D			EZC, EZD			BOLT AND CONED WASHER, Hex Head, M8X1.25X27.00, Oil Pickup Tube To Cylinder Block, Mounting
7	53021144AA	1	D			EZD, EZC			O RING, Engine Oil Indicator Tube

DODGE CHALLENGER (LC)

SERIES	LINE	BODY	ENGINE	TRANSMISSION
H = HIGHLINE P = PREMIUM X = SPECIAL	D = DODGE	22 = 2-DR SEDAN TYPE #2	EGG = 3.5L High Output V6 24V MPI Engine ESF = 6.1L SRT HEMI V8 Engine EZC = 5.7L HEMI VCT Engine EZD = 5.7L Hemi VCT MDS Engine	DEC = 6-Speed Manual TREMEC Transmission DGJ = 5-Speed Auto W5A580 Transmission DGV = 4-Spd. Automatic VLP 42RLE Trans

AR = use ase required - = Non illustrrated part

Engine Oil Pan, Engine Oil Level Indicator And Related Parts 5.7L [EZC] Without MDS
Figure 009EZC-725

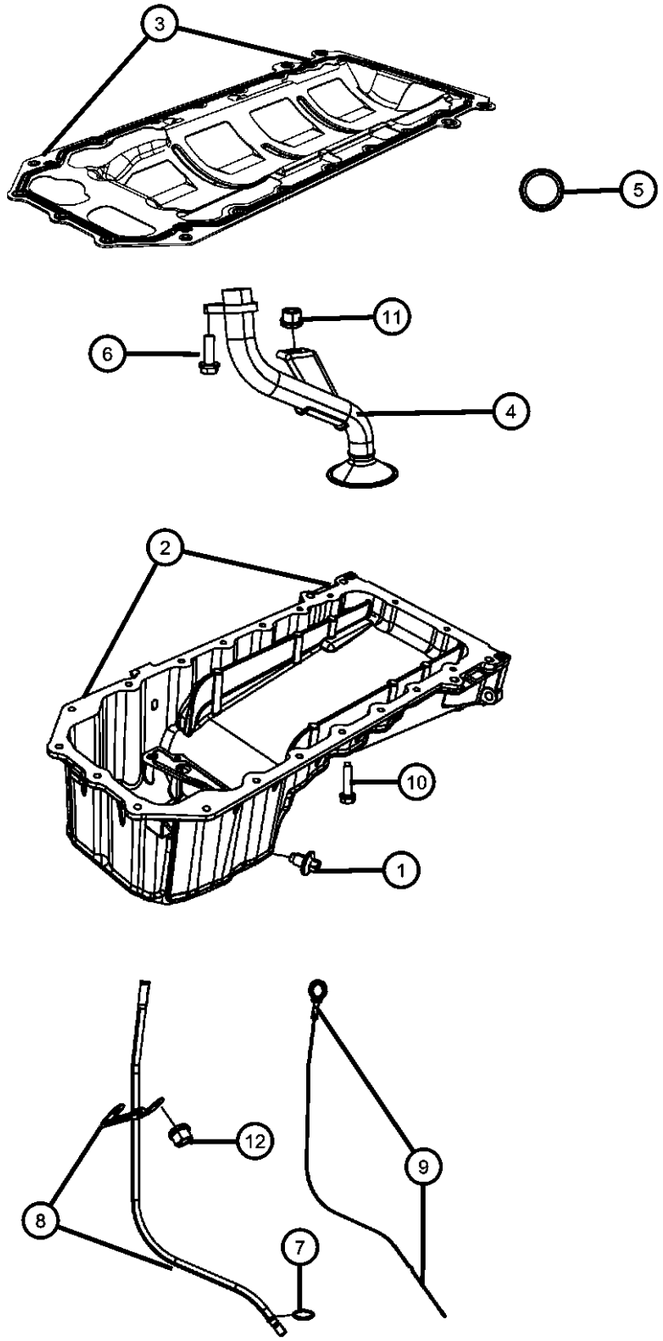

ITEM	PART NUMBER	QTY	LINE	SERIES	BODY	ENGINE	TRANS	TRIM	DESCRIPTION
8	53013977AB	1	D			EZC, EZD			TUBE, Engine Oil Indicator
9	04792872AE	1	D			EZC, EZD			INDICATOR, Engine Oil Level
10	06508448AA	19	D			EZC, EZD			BOLT AND CONED WASHER, Hex Head, M6X1.00X25.00, Oil Pan To Cylinder Block, Mounting
11	06502756	3	D						NUT, Hex Lock, M8x1.25, Pickup Tube To Cylinder Block, Mounting
12	06104715AA	2	D						NUT, Hex Flange Lock, M6X1.00, Engine Oil Level Indicator Tube, Mounting

DODGE CHALLENGER (LC)

SERIES	LINE	BODY	ENGINE	TRANSMISSION
H = HIGHLINE	D = DODGE	22 = 2-DR SEDAN TYPE #2	EGG = 3.5L High Output V6 24V MPI Engine	DEC = 6-Speed Manual TREMEC Transmission
P = PREMIUM			ESF = 6.1L SRT HEMI V8 Engine	DGJ = 5-Speed Auto W5A580 Transmission
X = SPECIAL			EZC = 5.7L HEMI VCT Engine	DGV = 4-Spd. Automatic VLP 42RLE Trans
			EZD = 5.7L Hemi VCT MDS Engine	

AR = use ase required - = Non illustrrated part

Engine Oil, Engine Oil Filter And Adapter 5.7L [EZC] Without MDS
Figure 009EZC-745

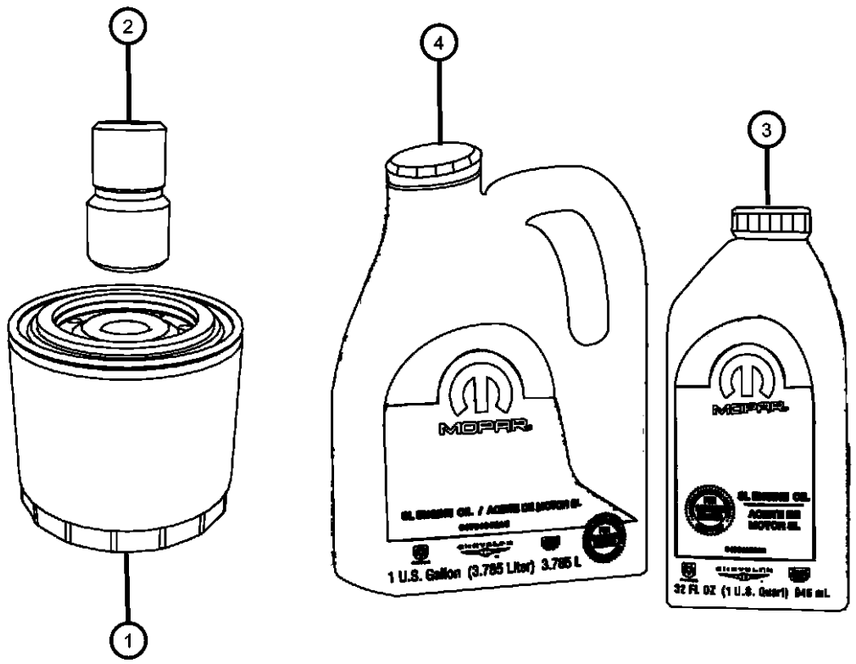

ITEM	PART NUMBER	QTY	LINE	SERIES	BODY	ENGINE	TRANS	TRIM	DESCRIPTION

NOTE:
Sales Codes:
[DEC] = 6-Speed Manual TR6060 Transmission
[DEH] = 6-Speed Manual NSG370 Transmission
[DF9] = AHS-T RWD Automatic Transmission
[DGJ] = 5-Speed Automatic W5A580 Transmission
[DGQ] = 5-Speed Automatic 545RFE Transmission
[DGV] = 4-Speed Automatic VLP 42RLE Transmission
[DG0] = All Automatic Transmissions
[DHR] = Single Speed On Demand MP3010 Transfer Case
[DHU] = AWD Electronic Shift Two Speed NVG 244 H/D Transfer Case
[DHZ] = Full Time Single Mode NVG 140 Transfer Case
[EGS] = 4.0L SOHC V-6 Engine
[EG0] = All 4.0L Engines
[EKG] = 3.7L [Magnum] V-6 Engine
[EK0] = All 3.7L 6-Cylinder Gas Engines
[ENS] = 2.8L 4 Cylinder Turbo Diesel Engine
[EN0] = All 2.8L 4 Cylinder Turbo Diesel Engines
[ESF] = 6.1L SRT V-8 Hemi Engine
[ES0] = All 6.1L 8-Cylinder Engines
[EVA] = 4.7L [Magnum] V-8 Engine
[EVD] = 4.7L V-8 FFV Engine
[EVE] = 4.7L V-8 Engine
[EV0] = All 4.7L 8-Cylinder Engines
[EZA] = 5.7L Hemi V-8 Engine
[EZB] = 5.7L Hemi V-8 Multi-Displacement Engine
[EZC] = 5.7L Hemi V-8 VCT Non Multi-Displacement Engine
[EZD] = 5.7L Hemi V-8 VCT Multi-Displacement Engine
[EZE] = 5.7L Hemi V-8 HEV Engine
[EZ0] = All 5.7L 8-Cylinder Engines
[NAA] = Federal Emissions
[NAE] = California Emissions
[NAS] = 50 State Emissions
[NA1] = Export Emissions
[NHK] = Engine Cylinder Block Heater
[XEF] = Transfer Case Skid Plate Sheild

1	04884899AB	1	D			EZC, EZD			FILTER, Engine Oil
2	04892338AA	1	D			EZC, EZD			CONNECTOR, Oil Filter, M22X1.50
3	04761872AC	AR	D			EZC, EZD			ENGINE OIL, 5W20, Quart, MS-10797 [API SM ILSAC GF-4], [32 Fluid Ounces] Minimum Ship Quanity Of 12
4	04761851AD	AR	D			EZC, EZD			ENGINE OIL, 5W20, Gallon, MS-10797 [API SM ILSAC GF-4], [128 Fluid Ounces] Minimum Ship Quanity Of 4

DODGE CHALLENGER (LC)

SERIES	LINE	BODY	ENGINE	TRANSMISSION
H = HIGHLINE P = PREMIUM X = SPECIAL	D = DODGE	22 = 2-DR SEDAN TYPE #2	EGG = 3.5L High Output V6 24V MPI Engine ESF = 6.1L SRT HEMI V8 Engine EZC = 5.7L HEMI VCT Engine EZD = 5.7L Hemi VCT MDS Engine	DEC = 6-Speed Manual TREMEC Transmission DGJ = 5-Speed Auto W5A580 Transmission DGV = 4-Spd. Automatic VLP 42RLE Trans

AR = use ase required - = Non illustrrated part

Exhaust Manifolds And Heat Shields 5.7L [EZC] Without MDS
Figure 009EZC-1005

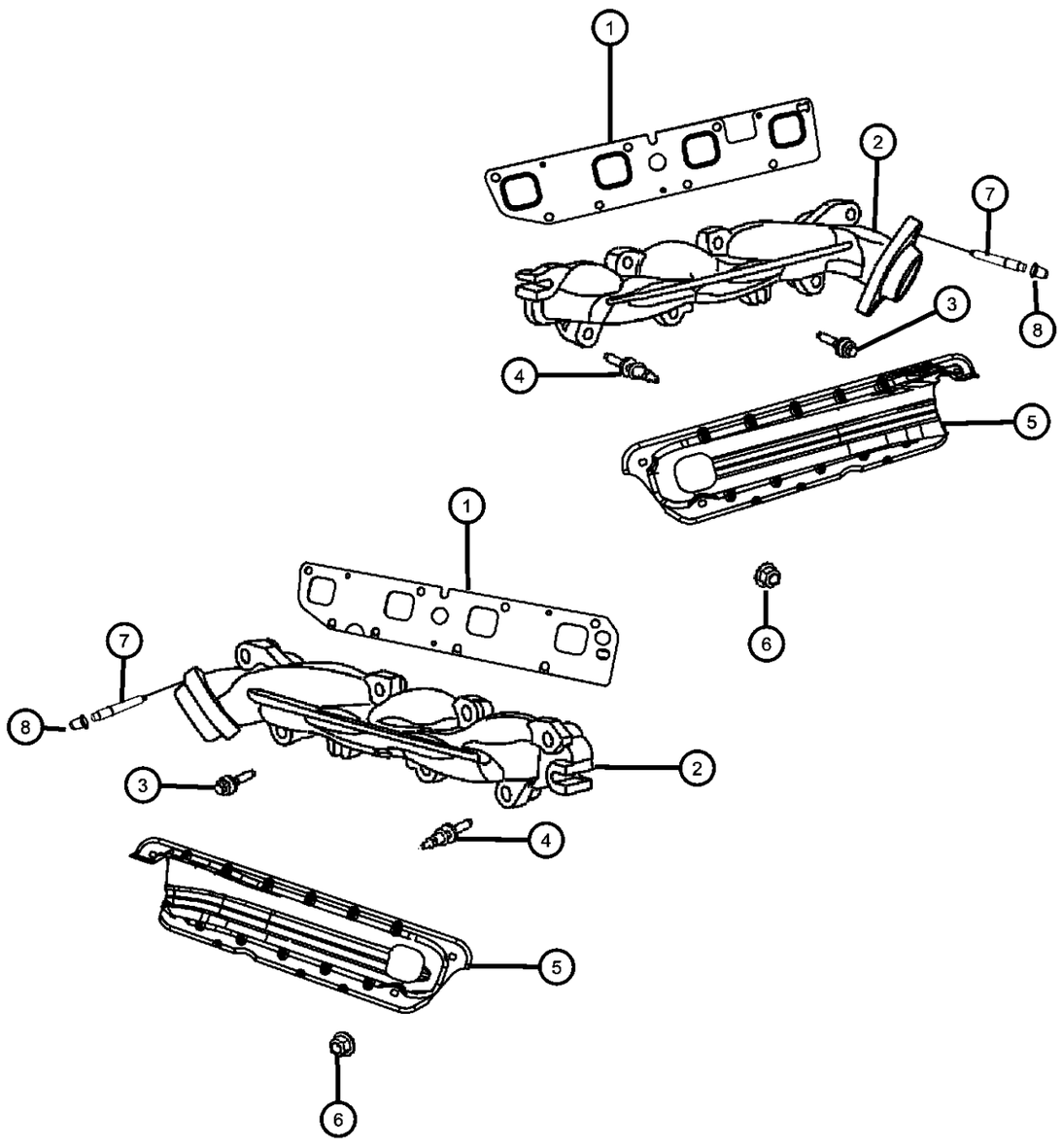

ITEM	PART NUMBER	QTY	LINE	SERIES	BODY	ENGINE	TRANS	TRIM	DESCRIPTION

NOTE:
Sales Codes:
[DEC] = 6-Speed Manual TR6060 Transmission
[DEH] = 6-Speed Manual NSG370 Transmission
[DF9] = AHS-T RWD Automatic Transmission
[DGJ] = 5-Speed Automatic W5A580 Transmission
[DGQ] = 5-Speed Automatic 545RFE Transmission
[DGV] = 4-Speed Automatic VLP 42RLE Transmission
[DG0] = All Automatic Transmissions
[DHR] = Single Speed On Demand MP3010 Transfer Case
[DHU] = AWD Electronic Shift Two Speed NVG 244 H/D Transfer Case
[DHZ] = Full Time Single Mode NVG 140 Transfer Case
[EGS] = 4.0L SOHC V-6 Engine
[EG0] = All 4.0L Engines
[EKG] = 3.7L [Magnum] V-6 Engine
[EK0] = All 3.7L 6-Cylinder Gas Engines
[ENS] = 2.8L 4 Cylinder Turbo Diesel Engine
[EN0] = All 2.8L 4 Cylinder Turbo Diesel Engines
[ESF] = 6.1L SRT V-8 Hemi Engine
[ES0] = All 6.1L 8-Cylinder Engines
[EVA] = 4.7L [Magnum] V-8 Engine
[EVD] = 4.7L V-8 FFV Engine
[EVE] = 4.7L V-8 Engine
[EV0] = All 4.7L 8-Cylinder Engines
[EZA] = 5.7L Hemi V-8 Engine
[EZB] = 5.7L Hemi V-8 Multi-Displacement Engine
[EZC] = 5.7L Hemi V-8 VCT Non Multi-Displacement Engine
[EZD] = 5.7L Hemi V-8 VCT Multi-Displacement Engine
[EZE] = 5.7L Hemi V-8 HEV Engine
[EZ0] = All 5.7L 8-Cylinder Engines
[NAA] = Federal Emissions
[NAE] = California Emissions
[NAS] = 50 State Emissions
[NA1] = Export Emissions
[NHK] = Engine Cylinder Block Heater
[XEF] = Transfer Case Skid Plate Sheild

1						GASKET, Exhaust Manifold
	53032965AF	1	D		EZC, EZD	Left
	53032966AF	1	D		EZC, EZD	Right
2						MANIFOLD, Exhaust
	53013848AE	1	D		EZC, EZD	Right
	53013849AE	1	D		EZC, EZD	Left
3	06507746AA	9	D		EZC, EZD	BOLT, Exhaust Manifold, M8x1.25x46.00, Exhaust Manifold To Cylinder Head, Mounting

DODGE CHALLENGER (LC)

SERIES	LINE	BODY	ENGINE	TRANSMISSION
H = HIGHLINE P = PREMIUM X = SPECIAL	D = DODGE	22 = 2-DR SEDAN TYPE #2	EGG = 3.5L High Output V6 24V MPI Engine ESF = 6.1L SRT HEMI V8 Engine EZC = 5.7L HEMI VCT Engine EZD = 5.7L Hemi VCT MDS Engine	DEC = 6-Speed Manual TREMEC Transmission DGJ = 5-Speed Auto W5A580 Transmission DGV = 4-Spd. Automatic VLP 42RLE Trans

Exhaust Manifolds And Heat Shields 5.7L [EZC] Without MDS
Figure 009EZC-1005

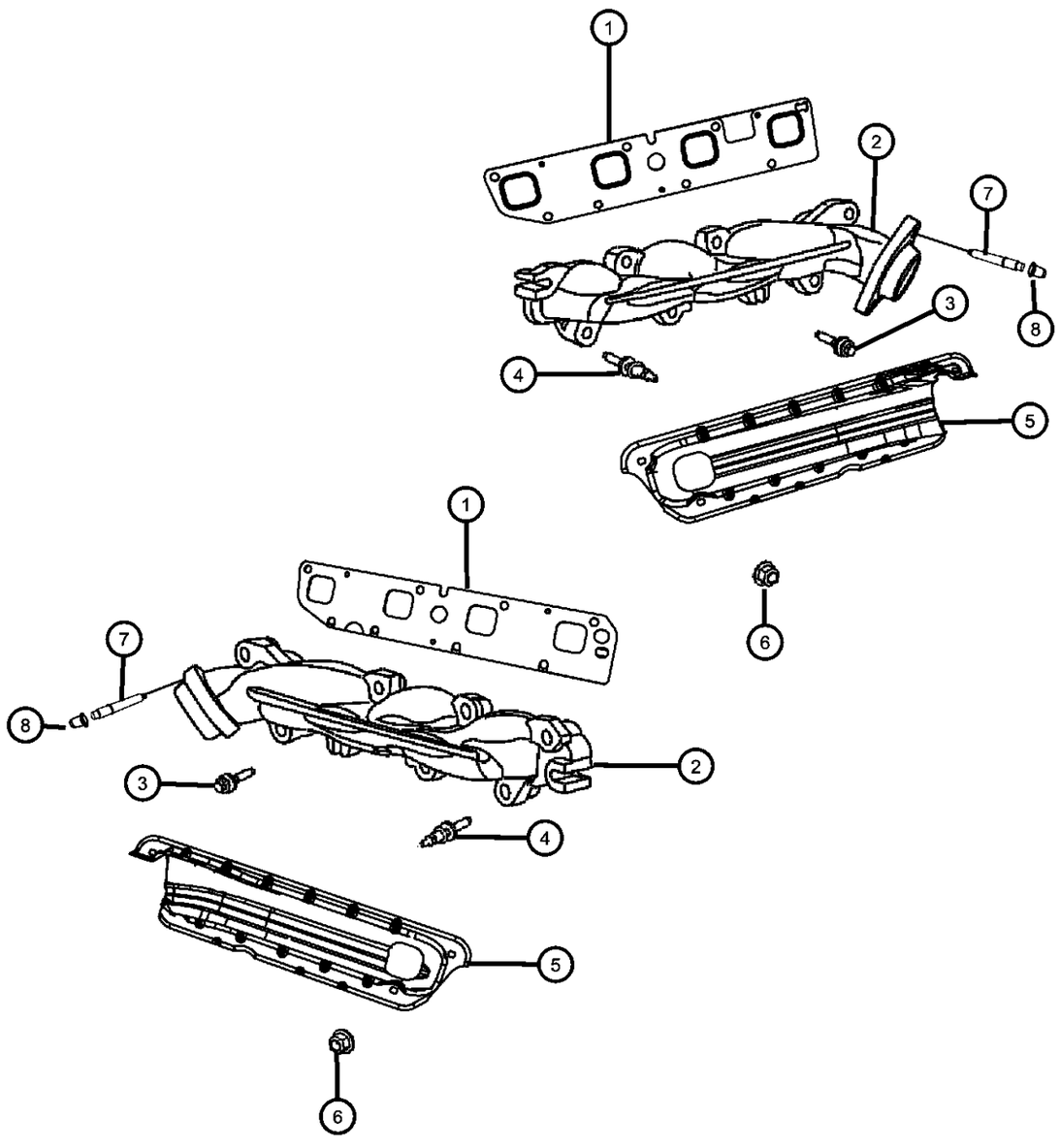

ITEM	PART NUMBER	QTY	LINE	SERIES	BODY	ENGINE	TRANS	TRIM	DESCRIPTION
4	06509544AA	8	D			EZC, EZD, EZH			STUD, Double Ended, M8X1.25XM6X1.00X73.00, Exhaust Manifold To Cylinder Head, Mounting
5									SHIELD, Exhaust Manifold
	53013856AC	1	D			EZC, EZD			Right
	53013855AC	1	D			EZC, EZD			Left
6	06505316AA	8	D			EZC, EZD			NUT, Hex Flange Lock, M6X1.00, Heat Shield To Exhaust Manifold, Mounting
7	06507880AA	4	D			EGG, EZC, EZD			STUD, Double Ended, Front Exhaust Pipe To Exhaust Manifold, Mounting
8	06104710AA	4	D			ES0, EZ0			NUT, Hex Flange Lock, M10x1.50, Front Exhaust Pipe To Exhaust Manifold, Mounting

DODGE CHALLENGER (LC)

SERIES	LINE	BODY	ENGINE	TRANSMISSION
H = HIGHLINE P = PREMIUM X = SPECIAL	D = DODGE	22 = 2-DR SEDAN TYPE #2	EGG = 3.5L High Output V6 24V MPI Engine ESF = 6.1L SRT HEMI V8 Engine EZC = 5.7L HEMI VCT Engine EZD = 5.7L Hemi VCT MDS Engine	DEC = 6-Speed Manual TREMEC Transmission DGJ = 5-Speed Auto W5A580 Transmission DGV = 4-Spd. Automatic VLP 42RLE Trans

AR = use ase required - = Non illustrrated part

Intake Manifold 5.7L [EZC] Without MDS
Figure 009EZC-1025

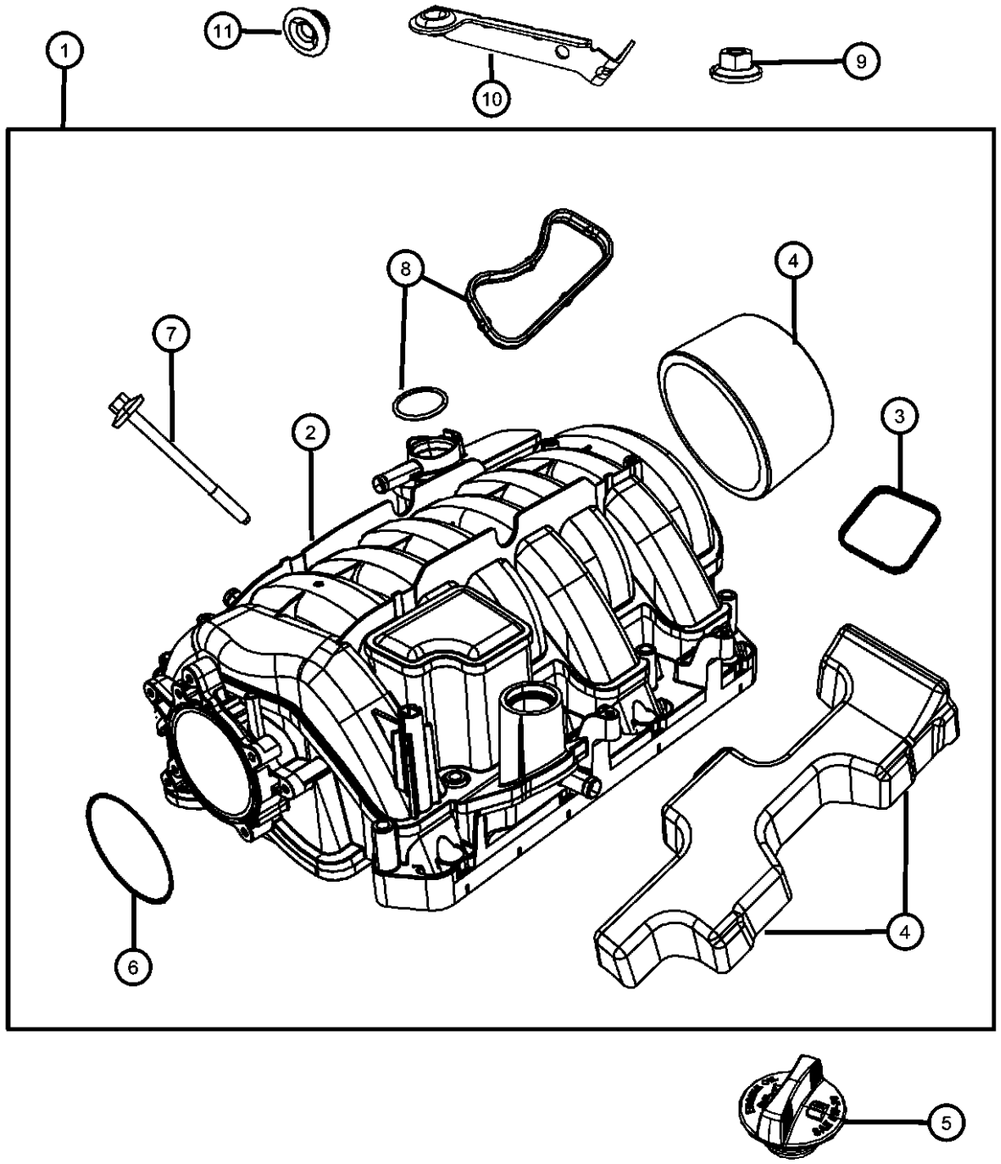

ITEM	PART NUMBER	QTY	LINE	SERIES	BODY	ENGINE	TRANS	TRIM	DESCRIPTION

NOTE:
Sales Codes:
[DEC] = 6-Speed Manual TR6060 Transmission
[DEH] = 6-Speed Manual NSG370 Transmission
[DF9] = AHS-T RWD Automatic Transmission
[DGJ] = 5-Speed Automatic W5A580 Transmission
[DGQ] = 5-Speed Automatic 545RFE Transmission
[DGV] = 4-Speed Automatic VLP 42RLE Transmission
[DG0] = All Automatic Transmissions
[DHR] = Single Speed On Demand MP3010 Transfer Case
[DHU] = AWD Electronic Shift Two Speed NVG 244 H/D Transfer Case
[DHZ] = Full Time Single Mode NVG 140 Transfer Case
[EGS] = 4.0L SOHC V-6 Engine
[EG0] = All 4.0L Engines
[EKG] = 3.7L [Magnum] V-6 Engine
[EK0] = All 3.7L 6-Cylinder Gas Engines
[ENS] = 2.8L 4 Cylinder Turbo Diesel Engine
[EN0] = All 2.8L 4 Cylinder Turbo Diesel Engines
[ESF] = 6.1L SRT V-8 Hemi Engine
[ES0] = All 6.1L 8-Cylinder Engines
[EVA] = 4.7L [Magnum] V-8 Engine
[EVD] = 4.7L V-8 FFV Engine
[EVE] = 4.7L V-8 Engine
[EV0] = All 4.7L 8-Cylinder Engines
[EZA] = 5.7L Hemi V-8 Engine
[EZB] = 5.7L Hemi V-8 Multi-Displacement Engine
[EZC] = 5.7L Hemi V-8 VCT Non Multi-Displacement Engine
[EZD] = 5.7L Hemi V-8 VCT Multi-Displacement Engine
[EZE] = 5.7L Hemi V-8 HEV Engine
[EZ0] = All 5.7L 8-Cylinder Engines
[NAA] = Federal Emissions
[NAE] = California Emissions
[NAS] = 50 State Emissions
[NA1] = Export Emissions
[NHK] = Engine Cylinder Block Heater
[XEF] = Transfer Case Skid Plate Sheild

1	68048131AA	1	D			EZC, EZD			MANIFOLD KIT, Intake
2		1							MANIFOLD, Engine Intake, Serviced In Intake Manifold Kit, (NOT SERVICED)
3	53022143AB	8	D			EZC, EZD			SEAL, Intake Manifold
4									PAD, Engine
	53013735AB	1	D			EZC, EZD			Rear Of Intake Manifold [Round]
	53013981AD	1	D			EZC, EZD			Engine Valley Cover
5	53013775AA	1	D			EZC, EZD			CAP, Oil Filler

DODGE CHALLENGER (LC)

SERIES	LINE	BODY	ENGINE	TRANSMISSION
H = HIGHLINE P = PREMIUM X = SPECIAL	D = DODGE	22 = 2-DR SEDAN TYPE #2	EGG = 3.5L High Output V6 24V MPI Engine ESF = 6.1L SRT HEMI V8 Engine EZC = 5.7L HEMI VCT Engine EZD = 5.7L Hemi VCT MDS Engine	DEC = 6-Speed Manual TREMEC Transmission DGJ = 5-Speed Auto W5A580 Transmission DGV = 4-Spd. Automatic VLP 42RLE Trans

AR = use ase required - = Non illustrrated part

Intake Manifold 5.7L [EZC] Without MDS
Figure 009EZC-1025

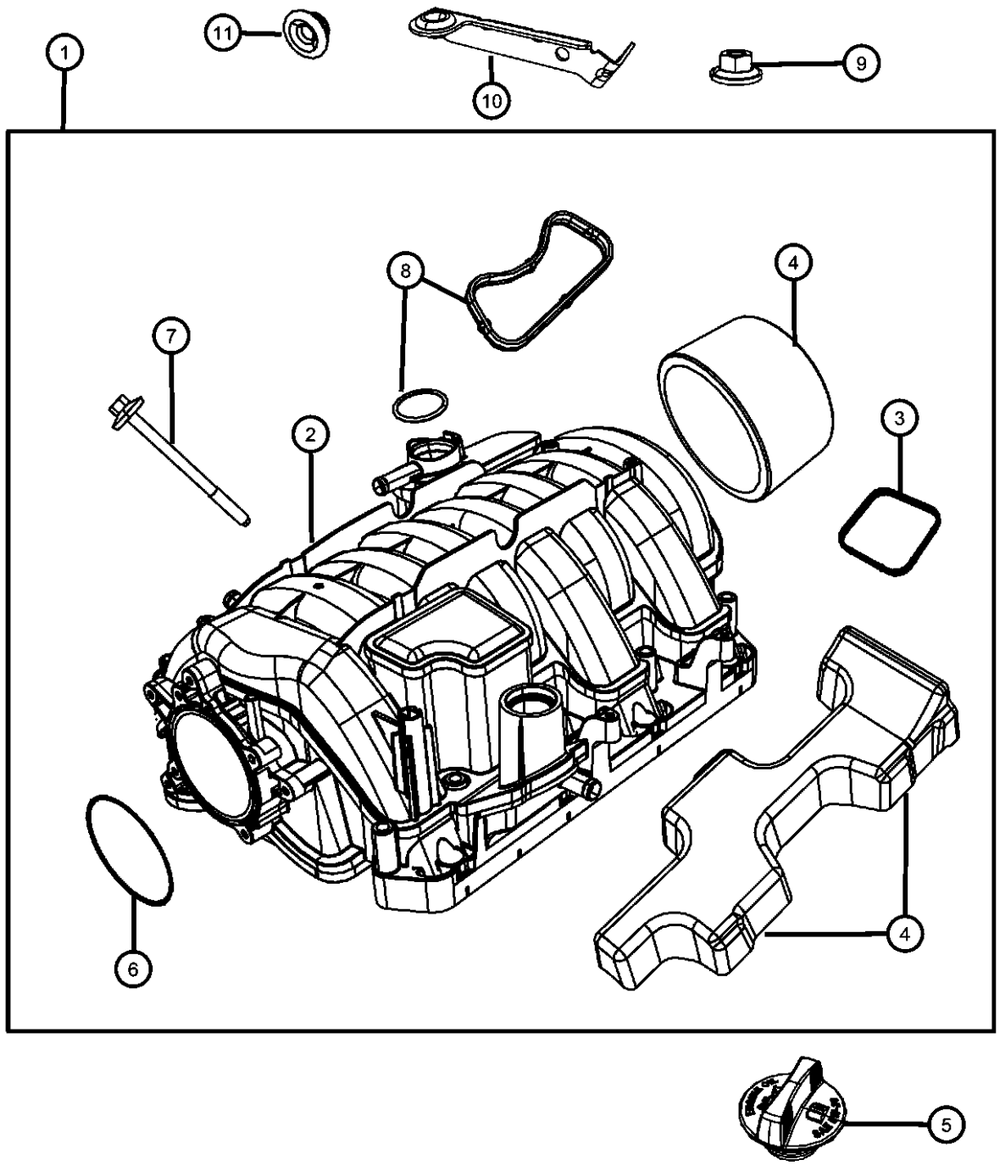

ITEM	PART NUMBER	QTY	LINE	SERIES	BODY	ENGINE	TRANS	TRIM	DESCRIPTION
6	53022320AB	1	D			EZC, EZD			SEAL, Throttle Body to Intake
7	06509246AA	10	D			EZD, EZC			BOLT AND CONED WASHER, Hex Head, M6X1.00X81.00, Intake Manifold To Cylinder Head, Mounting
8									SEAL, PCV
	53022142AB	2	D			EZC, EZD			Rectangle
	53032448AC	1	D			EZC, EZD			Round On PCV Valve
9	06104727AA	1	D			EZC, EZD	DEC, DGJ		NUT, M10x1.5, Air Cleaner Bracket, Mounting
10	04627017AA	1	D			EZC, EZD	DEC, DGJ		BRACKET, Resonator
11	53032732AA	1	D			EZC, EZD	DEC, DGJ		GROMMET, Air Cleaner Bracket

DODGE CHALLENGER (LC)

SERIES	LINE	BODY	ENGINE	TRANSMISSION
H = HIGHLINE P = PREMIUM X = SPECIAL	D = DODGE	22 = 2-DR SEDAN TYPE #2	EGG = 3.5L High Output V6 24V MPI Engine ESF = 6.1L SRT HEMI V8 Engine EZC = 5.7L HEMI VCT Engine EZD = 5.7L Hemi VCT MDS Engine	DEC = 6-Speed Manual TREMEC Transmission DGJ = 5-Speed Auto W5A580 Transmission DGV = 4-Spd. Automatic VLP 42RLE Trans

Crankcase Ventilation 5.7L [EZC] Without MDS
Figure 009EZC-1105

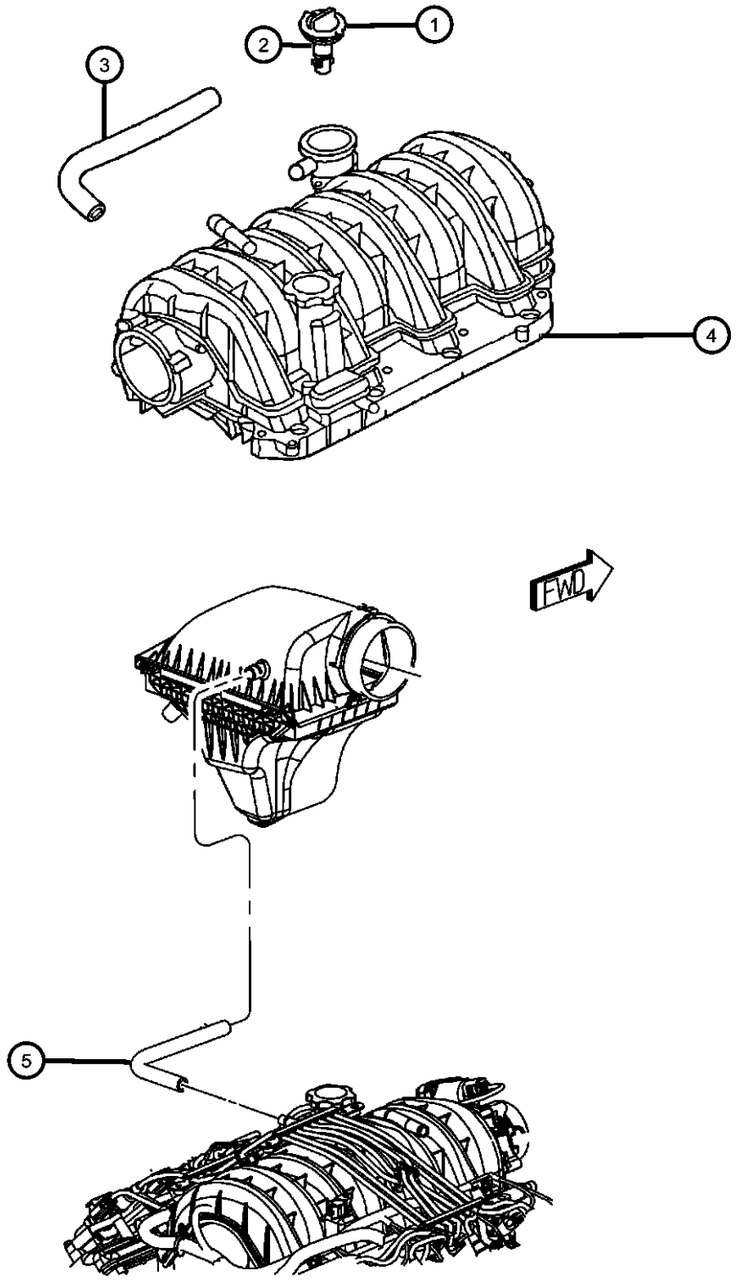

ITEM	PART NUMBER	QTY	LINE	SERIES	BODY	ENGINE	TRANS	TRIM	DESCRIPTION

NOTE:
Sales Codes:
[DEC] = 6-Speed Manual TR6060 Transmission
[DEH] = 6-Speed Manual NSG370 Transmission
[DF9] = AHS-T RWD Automatic Transmission
[DGJ] = 5-Speed Automatic W5A580 Transmission
[DGQ] = 5-Speed Automatic 545RFE Transmission
[DGV] = 4-Speed Automatic VLP 42RLE Transmission
[DG0] = All Automatic Transmissions
[DHR] = Single Speed On Demand MP3010 Transfer Case
[DHU] = AWD Electronic Shift Two Speed NVG 244 H/D Transfer Case
[DHZ] = Full Time Single Mode NVG 140 Transfer Case
[EGS] = 4.0L SOHC V-6 Engine
[EG0] = All 4.0L Engines
[EKG] = 3.7L [Magnum] V-6 Engine
[EK0] = All 3.7L 6-Cylinder Gas Engines
[ENS] = 2.8L 4 Cylinder Turbo Diesel Engine
[EN0] = All 2.8L 4 Cylinder Turbo Diesel Engines
[ESF] = 6.1L SRT V-8 Hemi Engine
[ES0] = All 6.1L 8-Cylinder Engines
[EVA] = 4.7L [Magnum] V-8 Engine
[EVD] = 4.7L V-8 FFV Engine
[EVE] = 4.7L V-8 Engine
[EV0] = All 4.7L 8-Cylinder Engines
[EZA] = 5.7L Hemi V-8 Engine
[EZB] = 5.7L Hemi V-8 Multi-Displacement Engine
[EZC] = 5.7L Hemi V-8 VCT Non Multi-Displacement Engine
[EZD] = 5.7L Hemi V-8 VCT Multi-Displacement Engine
[EZE] = 5.7L Hemi V-8 HEV Engine
[EZ0] = All 5.7L 8-Cylinder Engines
[NAA] = Federal Emissions
[NAE] = California Emissions
[NAS] = 50 State Emissions
[NA1] = Export Emissions
[NHK] = Engine Cylinder Block Heater
[XEF] = Transfer Case Skid Plate Sheild

ITEM	PART NUMBER	QTY	LINE	SERIES	BODY	ENGINE	TRANS	TRIM	DESCRIPTION
1	68061029AA	1	D			EZC, EZD, EZH			VALVE, Crankcase Vent
2									SEAL, PCV
	53022142AB	2	D			EZC, EZD			Rectangle
	53032448AC	1	D			EZC, EZD			Round On PCV Valve
3	04591961AC	1	D			EZC, EZD			HOSE, Cylinder Head To Intake Manifold PCV
4		1							MANIFOLD, Engine Intake, Reference, (NOT SERVICED)
5	04593692AA	1	D			EZC, EZD			HOSE, Make Up Air

DODGE CHALLENGER (LC)

SERIES	LINE	BODY	ENGINE	TRANSMISSION
H = HIGHLINE P = PREMIUM X = SPECIAL	D = DODGE	22 = 2-DR SEDAN TYPE #2	EGG = 3.5L High Output V6 24V MPI Engine ESF = 6.1L SRT HEMI V8 Engine EZC = 5.7L HEMI VCT Engine EZD = 5.7L Hemi VCT MDS Engine	DEC = 6-Speed Manual TREMEC Transmission DGJ = 5-Speed Auto W5A580 Transmission DGV = 4-Spd. Automatic VLP 42RLE Trans

Engine Mounting Right Side RWD/2WD 5.7L [EZC] Without MDS
Figure 009EZC-1220

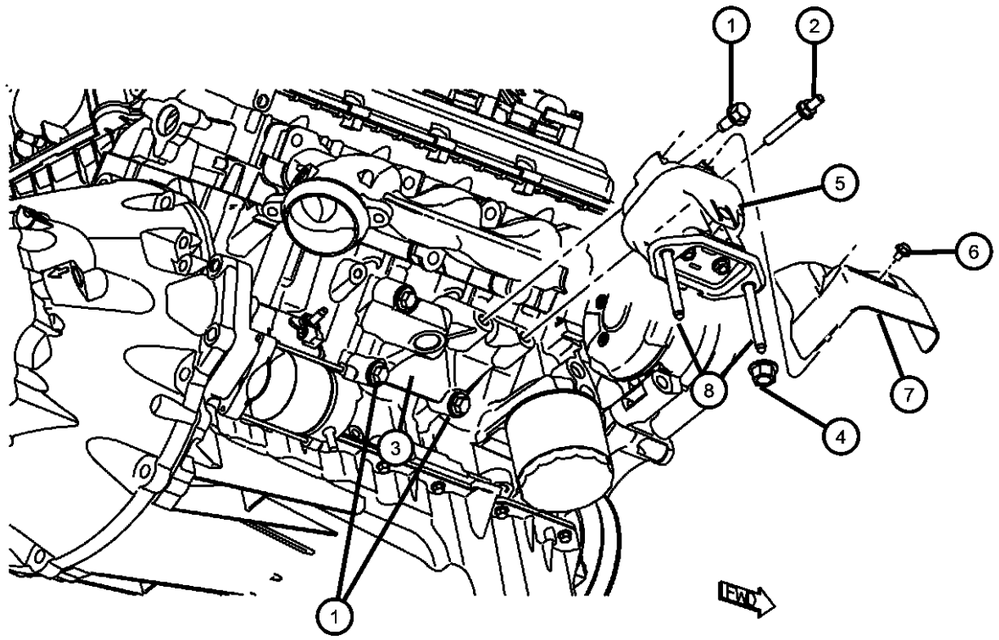

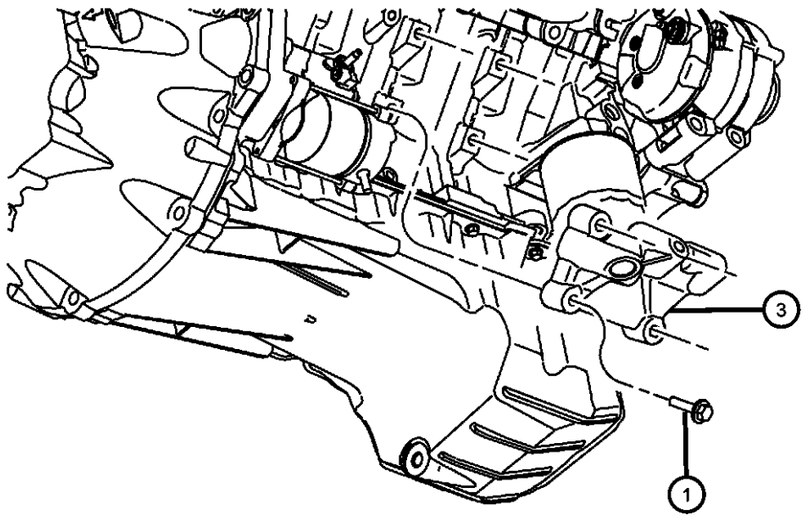

ITEM	PART NUMBER	QTY	LINE	SERIES	BODY	ENGINE	TRANS	TRIM	DESCRIPTION

NOTE:
Sales Codes:
[DEC] = 6-Speed Manual TR6060 Transmission
[DEH] = 6-Speed Manual NSG370 Transmission
[DF9] = AHS-T RWD Automatic Transmission
[DGJ] = 5-Speed Automatic W5A580 Transmission
[DGQ] = 5-Speed Automatic 545RFE Transmission
[DGV] = 4-Speed Automatic VLP 42RLE Transmission
[DG0] = All Automatic Transmissions
[DHR] = Single Speed On Demand MP3010 Transfer Case
[DHU] = AWD Electronic Shift Two Speed NVG 244 H/D Transfer Case
[DHZ] = Full Time Single Mode NVG 140 Transfer Case
[EGS] = 4.0L SOHC V-6 Engine
[EG0] = All 4.0L Engines
[EKG] = 3.7L [Magnum] V-6 Engine
[EK0] = All 3.7L 6-Cylinder Gas Engines
[ENS] = 2.8L 4 Cylinder Turbo Diesel Engine
[EN0] = All 2.8L 4 Cylinder Turbo Diesel Engines
[ESF] = 6.1L SRT V-8 Hemi Engine
[ES0] = All 6.1L 8-Cylinder Engines
[EVA] = 4.7L [Magnum] V-8 Engine
[EVD] = 4.7L V-8 FFV Engine
[EVE] = 4.7L V-8 Engine
[EV0] = All 4.7L 8-Cylinder Engines
[EZA] = 5.7L Hemi V-8 Engine
[EZB] = 5.7L Hemi V-8 Multi-Displacement Engine
[EZC] = 5.7L Hemi V-8 VCT Non Multi-Displacement Engine
[EZD] = 5.7L Hemi V-8 VCT Multi-Displacement Engine
[EZE] = 5.7L Hemi V-8 HEV Engine
[EZ0] = All 5.7L 8-Cylinder Engines
[NAA] = Federal Emissions
[NAE] = California Emissions
[NAS] = 50 State Emissions
[NA1] = Export Emissions
[NHK] = Engine Cylinder Block Heater
[XEF] = Transfer Case Skid Plate Sheild

ITEM	PART NUMBER	QTY	LINE	SERIES	BODY	ENGINE	TRANS	TRIM	DESCRIPTION
1									BOLT, Hex Flange Head, M10X1.50X55.00
	06101622	3	D			ESF, EZC, EZD			Engine Mount To Engine Bracket, Mounting
		8	D			ESF, EZC, EZD			Engine Mount To Engine Bracket, Mounting
2	06505653AA	1	D			EZC, EZD			STUD, [M10X1.50X86.63], Engine Mount To Engine Mount Bracket, Mounting
3	05180488AA	1	D			EZC	DEC		BRACKET, Engine Mount

DODGE CHALLENGER (LC)

SERIES	LINE	BODY	ENGINE	TRANSMISSION
H = HIGHLINE P = PREMIUM X = SPECIAL	D = DODGE	22 = 2-DR SEDAN TYPE #2	EGG = 3.5L High Output V6 24V MPI Engine ESF = 6.1L SRT HEMI V8 Engine EZC = 5.7L HEMI VCT Engine EZD = 5.7L Hemi VCT MDS Engine	DEC = 6-Speed Manual TREMEC Transmission DGJ = 5-Speed Auto W5A580 Transmission DGV = 4-Spd. Automatic VLP 42RLE Trans

Engine Mounting Right Side RWD/2WD 5.7L [EZC] Without MDS
Figure 009EZC-1220

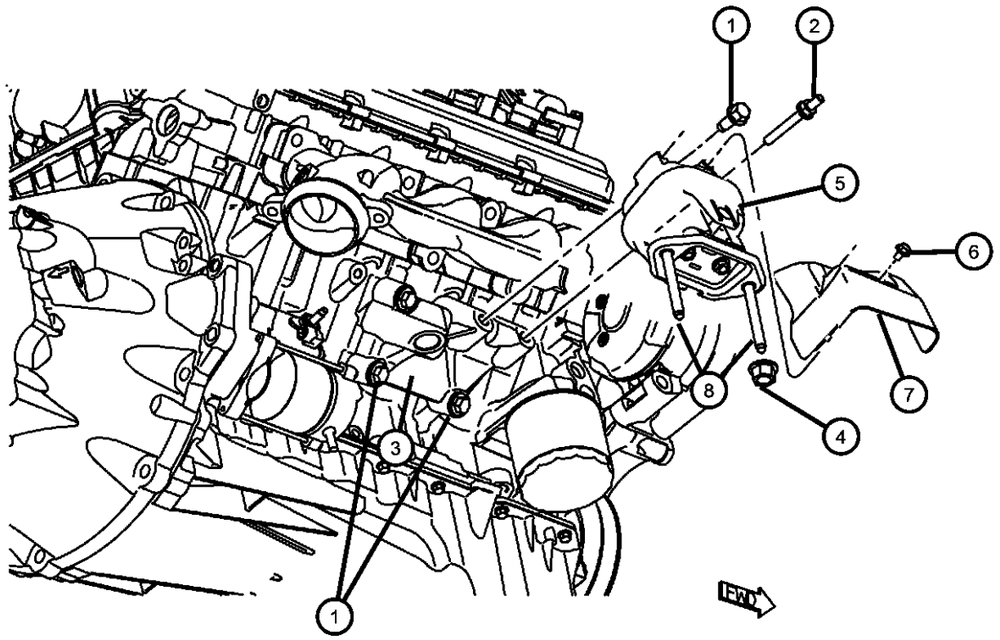

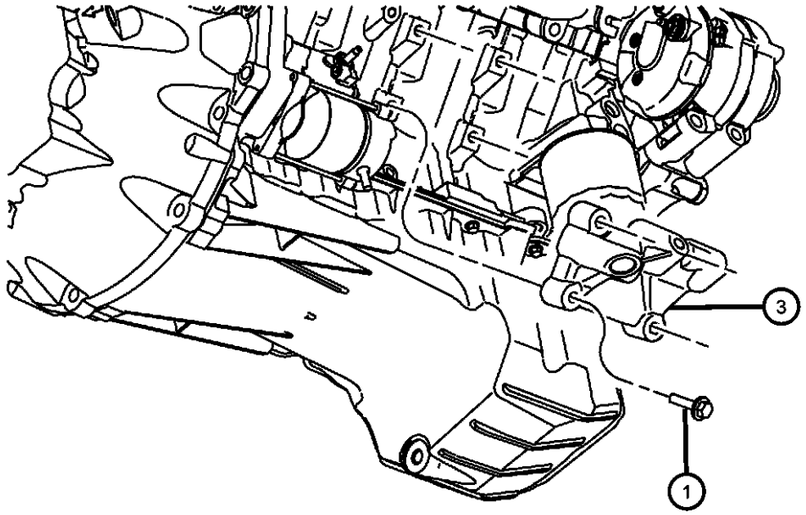

ITEM	PART NUMBER	QTY	LINE	SERIES	BODY	ENGINE	TRANS	TRIM	DESCRIPTION
4	06508120AA	4	D						NUT, M10x1.50, Engine Mount To Cradle, Mounting
5	05180406AE	1	D			EZC	DEC		INSULATOR, Engine Mount
6	06507210AA	4	D				DGJ, DGV		BOLT, Hex Head, M6X1.00X11.00, Heat Shield To Engine Mount, Mounting
7	04578349AA	1	D			EG0, ES0, EZ0	DGJ, DGV		SHIELD, Heat
8	06508025AA	4	D			EG0, ES0, EZ0	DGJ, DGV		STUD, Double Ended, [M10X1.5X110.0], Engine Mount To Cradle, Mounting

DODGE CHALLENGER (LC)

SERIES	LINE	BODY	ENGINE	TRANSMISSION
H = HIGHLINE	D = DODGE	22 = 2-DR SEDAN TYPE #2	EGG = 3.5L High Output V6 24V MPI Engine	DEC = 6-Speed Manual TREMEC Transmission
P = PREMIUM			ESF = 6.1L SRT HEMI V8 Engine	DGJ = 5-Speed Auto W5A580 Transmission
X = SPECIAL			EZC = 5.7L HEMI VCT Engine	DGV = 4-Spd. Automatic VLP 42RLE Trans
			EZD = 5.7L Hemi VCT MDS Engine	

Engine Mounting Left Side RWD/2WD 5.7L [EZC] Without MDS
Figure 009EZC-1235

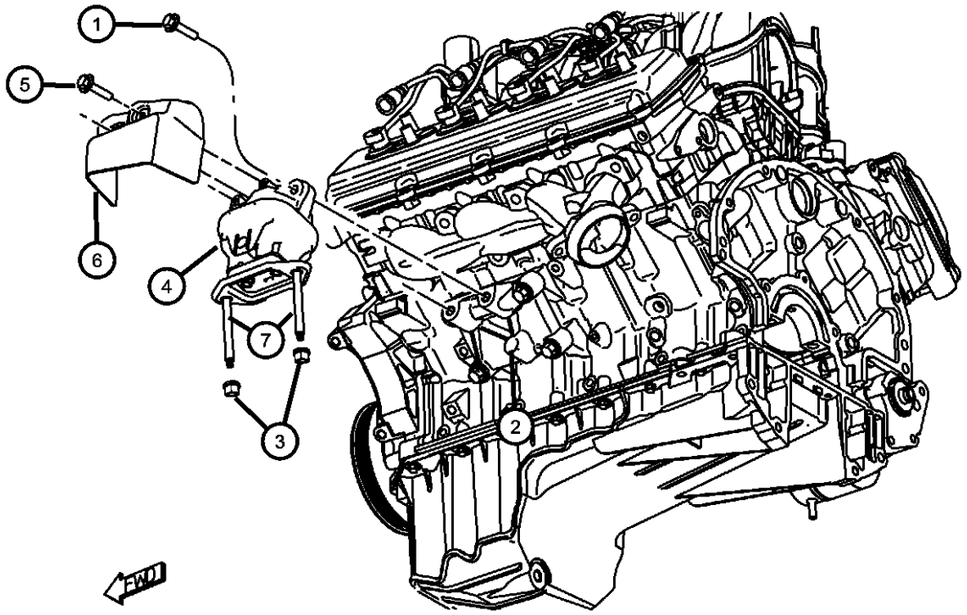

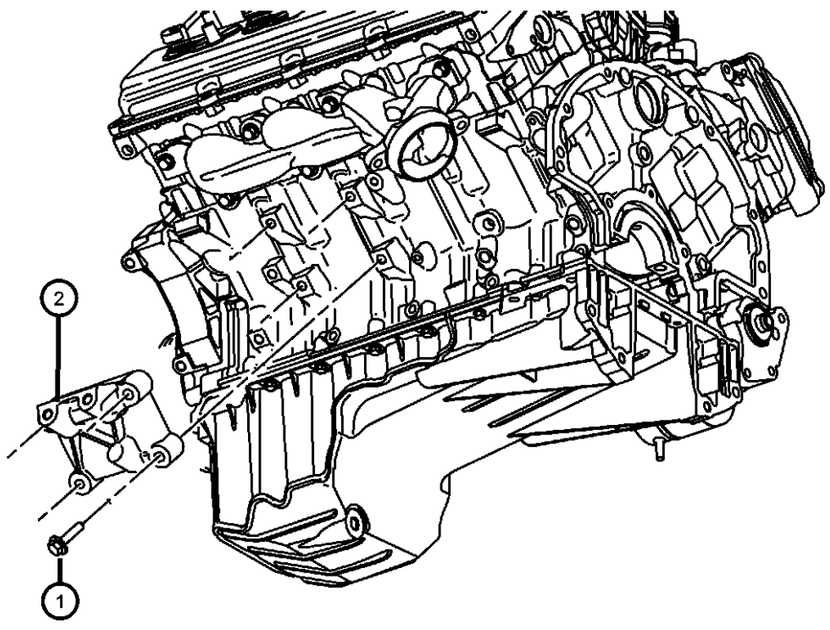

ITEM	PART NUMBER	QTY	LINE	SERIES	BODY	ENGINE	TRANS	TRIM	DESCRIPTION

NOTE:
Sales Codes:
[DEC] = 6-Speed Manual TR6060 Transmission
[DEH] = 6-Speed Manual NSG370 Transmission
[DF9] = AHS-T RWD Automatic Transmission
[DGJ] = 5-Speed Automatic W5A580 Transmission
[DGQ] = 5-Speed Automatic 545RFE Transmission
[DGV] = 4-Speed Automatic VLP 42RLE Transmission
[DG0] = All Automatic Transmissions
[DHR] = Single Speed On Demand MP3010 Transfer Case
[DHU] = AWD Electronic Shift Two Speed NVG 244 H/D Transfer Case
[DHZ] = Full Time Single Mode NVG 140 Transfer Case
[EGS] = 4.0L SOHC V-6 Engine
[EG0] = All 4.0L Engines
[EKG] = 3.7L [Magnum] V-6 Engine
[EK0] = All 3.7L 6-Cylinder Gas Engines
[ENS] = 2.8L 4 Cylinder Turbo Diesel Engine
[EN0] = All 2.8L 4 Cylinder Turbo Diesel Engines
[ESF] = 6.1L SRT V-8 Hemi Engine
[ES0] = All 6.1L 8-Cylinder Engines
[EVA] = 4.7L [Magnum] V-8 Engine
[EVD] = 4.7L V-8 FFV Engine
[EVE] = 4.7L V-8 Engine
[EV0] = All 4.7L 8-Cylinder Engines
[EZA] = 5.7L Hemi V-8 Engine
[EZB] = 5.7L Hemi V-8 Multi-Displacement Engine
[EZC] = 5.7L Hemi V-8 VCT Non Multi-Displacement Engine
[EZD] = 5.7L Hemi V-8 VCT Multi-Displacement Engine
[EZE] = 5.7L Hemi V-8 HEV Engine
[EZ0] = All 5.7L 8-Cylinder Engines
[NAA] = Federal Emissions
[NAE] = California Emissions
[NAS] = 50 State Emissions
[NA1] = Export Emissions
[NHK] = Engine Cylinder Block Heater
[XEF] = Transfer Case Skid Plate Sheild

1									BOLT, Hex Flange Head, M10X1.50X55.00
	06101622	8	D			ESF, EZC, EZD			Engine Mount Bracket To Cylinder Block, Mounting
		3	D			ESF, EZC, EZD			Engine Mount To Engine Bracket, Mounting
2									BRACKET, Engine Mount
	04578053AC	1	D			ESF, EZC, EZD			Left
	04578052AB	1	D			ESF, EZC, EZD			Right

DODGE CHALLENGER (LC)

SERIES	LINE	BODY	ENGINE	TRANSMISSION
H = HIGHLINE P = PREMIUM X = SPECIAL	D = DODGE	22 = 2-DR SEDAN TYPE #2	EGG = 3.5L High Output V6 24V MPI Engine ESF = 6.1L SRT HEMI V8 Engine EZC = 5.7L HEMI VCT Engine EZD = 5.7L Hemi VCT MDS Engine	DEC = 6-Speed Manual TREMEC Transmission DGJ = 5-Speed Auto W5A580 Transmission DGV = 4-Spd. Automatic VLP 42RLE Trans

Engine Mounting Left Side RWD/2WD 5.7L [EZC] Without MDS
Figure 009EZC-1235

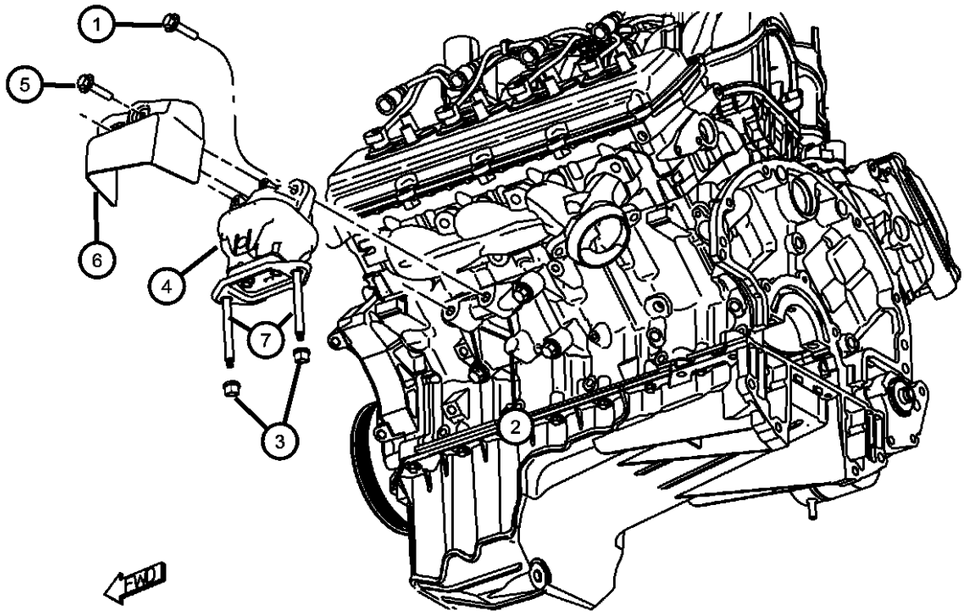

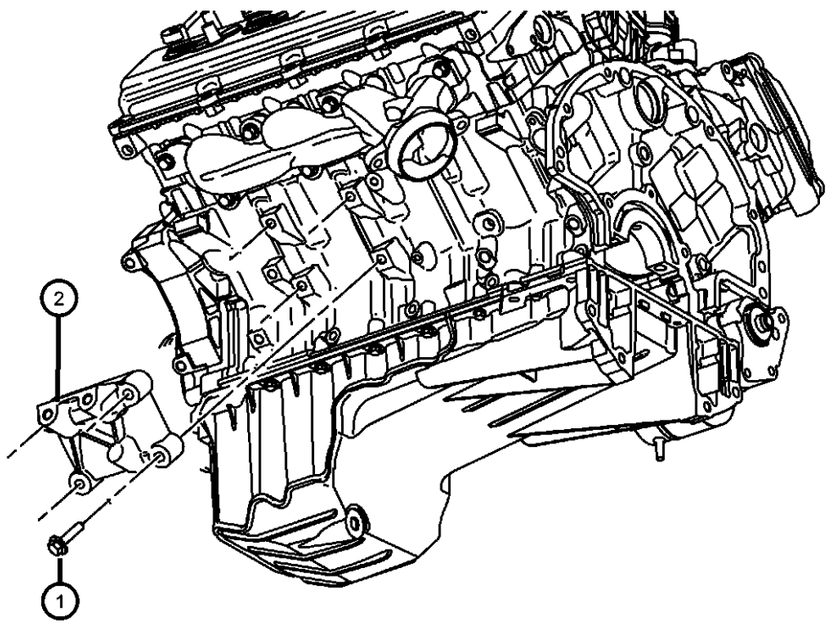

ITEM	PART NUMBER	QTY	LINE	SERIES	BODY	ENGINE	TRANS	TRIM	DESCRIPTION
3	06508120AA	4	D						NUT, M10x1.50, Engine Mount To Cradle, Mounting
4	05180406AE	1	D			EZC	DEC		INSULATOR, Engine Mount
5	06507210AA	4	D				DGJ, DGV		BOLT, Hex Head, M6X1.00X11.00, Heat Shield To Engine Mount, Mounting
6	04578349AA	1	D			EG0, ES0, EZ0	DGJ, DGV		SHIELD, Heat
7	06508025AA	4	D			EG0, ES0, EZ0	DGJ, DGV		STUD, Double Ended, [M10X1.5X110.0], Engine Mount To Cradle, Mounting

DODGE CHALLENGER (LC)

SERIES	LINE	BODY	ENGINE	TRANSMISSION
H = HIGHLINE P = PREMIUM X = SPECIAL	D = DODGE	22 = 2-DR SEDAN TYPE #2	EGG = 3.5L High Output V6 24V MPI Engine ESF = 6.1L SRT HEMI V8 Engine EZC = 5.7L HEMI VCT Engine EZD = 5.7L Hemi VCT MDS Engine	DEC = 6-Speed Manual TREMEC Transmission DGJ = 5-Speed Auto W5A580 Transmission DGV = 4-Spd. Automatic VLP 42RLE Trans

AR = use ase required - = Non illustrrated part

Group - 009EZD

5.7L Gas; Engine

009EZD-100 Engine Identification	**009EZD-1000** Manifolds and Vacuum Fittings	**009EZD-1100** Crankcase Ventilation	**009EZD-1200** Engine Mounting
009EZD-200 Cylinder Head	**009EZD-300** Cylinder Block	**009EZD-400** Crankshaft, Piston, Drive Plate, Flywheel, and Damper	**009EZD-500** Camshaft and Valve
009EZD-600 Timing Belt/Chain and Cover and Balance Shaft	**009EZD-700** Engine Oiling, Oil Pan and Indicator (Dipstick)		

Group - 009EZD 5.7L Gas; Engine

Illustration Title — Group-Fig. No.

Engine Identification
Engine Identification 5.7L [EZD] With MDS ..... Fig. 009EZD - 105
Engine Assembly And Service Long Block 5.7L [EZD] With MDS ..... Fig. 009EZD - 115
Engine Cover And Related Parts 5.7L [EZD] With MDS ..... Fig. 009EZD - 125
Engine Gasket Kits 5.7L [EZD] With MDS ..... Fig. 009EZD - 145

Cylinder Head
Cylinder Head Covers 5.7L [EZD] With MDS ..... Fig. 009EZD - 205
Cylinder Heads 5.7L [EZD] With MDS ..... Fig. 009EZD - 225

Cylinder Block
Engine Cylinder Block And Hardware 5.7L [EZD] With MDS ..... Fig. 009EZD - 305
Engine Cylinder Block Heater 5.7L [EZD] With MDS ..... Fig. 009EZD - 325

Crankshaft, Piston, Drive Plate, Flywheel, and Damper
Crankshaft, Crankshaft Bearings, Damper And Flywheel 5.7L [EZD] With MDS ..... Fig. 009EZD - 405
Pistons, Piston Rings, Connecting Rods, Connecting Rod Bearings 5.7L [EZD] With MDS ..... Fig. 009EZD - 425

Camshaft and Valve
Camshaft And Valvetrain 5.7L [EZD] With MDS ..... Fig. 009EZD - 505

Timing Belt/Chain and Cover and Balance Shaft
Timing Case Cover 5.7L [EZD] With MDS ..... Fig. 009EZD - 605
Timing System 5.7L [EZD] With MDS ..... Fig. 009EZD - 625

Engine Oiling, Oil Pan and Indicator (Dipstick)
Engine Oiling Pump 5.7L [EZD] With MDS ..... Fig. 009EZD - 705
Engine Oil Pan, Engine Oil Level Indicator And Related Parts 5.7L [EZD] With MDS ..... Fig. 009EZD - 725
Engine Oil, Engine Oil Filter And Adapter 5.7L [EZD] With MDS ..... Fig. 009EZD - 745

Manifolds and Vacuum Fittings
Exhaust Manifolds And Heat Shields 5.7L [EZD] With MDS ..... Fig. 009EZD - 1005
Intake Manifold 5.7L [EZD] With MDS ..... Fig. 009EZD - 1025

Crankcase Ventilation
Crankcase Ventilation 5.7L [EZD] With MDS ..... Fig. 009EZD - 1105

Engine Mounting
Engine Mounting Right Side RWD/2WD 5.7L [EZD] With MDS ..... Fig. 009EZD - 1220
Engine Mounting Left Side RWD/2WD 5.7L [EZD] With MDS ..... Fig. 009EZD - 1235

Engine Identification 5.7L [EZD] With MDS
Figure 009EZD-105

ITEM	PART NUMBER	QTY	LINE	SERIES	BODY	ENGINE	TRANS	TRIM	DESCRIPTION
									Note: The Engine Identification Label Is Attached To One Of The Cylinder Head Covers. The Production Engine Part Number Is Not A Servicable Part Number. A Engine Is Usally Serviced By A Long Block Or Short Block Engine.
1		4							LABEL, Engine Identification, See Note:, (NOT SERVICED)

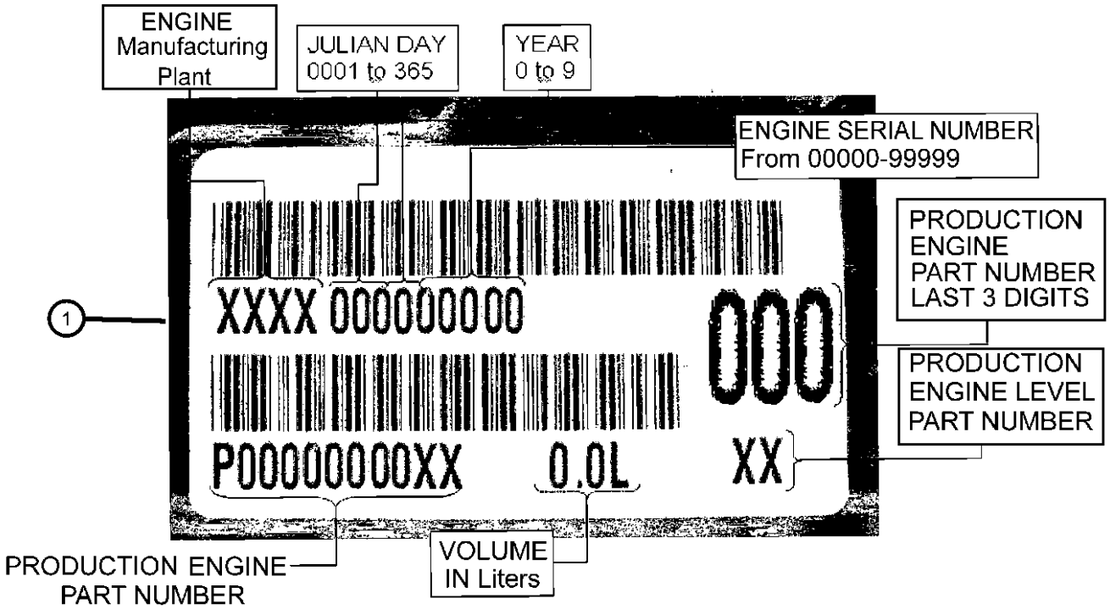

DODGE CHALLENGER (LC)

SERIES	LINE	BODY	ENGINE	TRANSMISSION
H = HIGHLINE P = PREMIUM X = SPECIAL	D = DODGE	22 = 2-DR SEDAN TYPE #2	EGG = 3.5L High Output V6 24V MPI Engine ESF = 6.1L SRT HEMI V8 Engine EZC = 5.7L HEMI VCT Engine EZD = 5.7L Hemi VCT MDS Engine	DEC = 6-Speed Manual TREMEC Transmission DGJ = 5-Speed Auto W5A580 Transmission DGV = 4-Spd. Automatic VLP 42RLE Trans

Engine Assembly And Service Long Block 5.7L [EZD] With MDS
Figure 009EZD-115

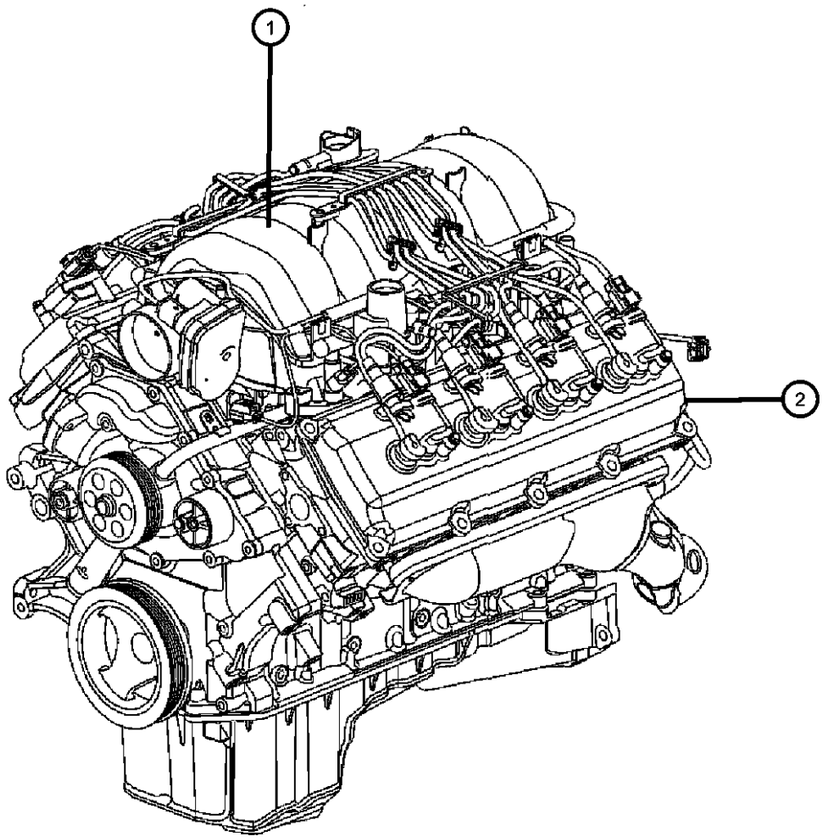

ITEM	PART NUMBER	QTY	LINE	SERIES	BODY	ENGINE	TRANS	TRIM	DESCRIPTION

NOTE:
The Engine Identifaction Label Contains: The Production Assembly Part Number And Displacement. It is located On The Left Front Cylinder Head
Sales Codes:
[DEC] = 6-Speed Manual TR6060 Transmission
[DEH] = 6-Speed Manual NSG370 Transmission
[DF9] = AHS-T RWD Automatic Transmission
[DGJ] = 5-Speed Automatic W5A580 Transmission
[DGQ] = 5-Speed Automatic 545RFE Transmission
[DGV] = 4-Speed Automatic VLP 42RLE Transmission
[DG0] = All Automatic Transmissions
[DHR] = Single Speed On Demand MP3010 Transfer Case
[DHU] = AWD Electronic Shift Two Speed NVG 244 H/D Transfer Case
[DHZ] = Full Time Single Mode NVG 140 Transfer Case
[EGS] = 4.0L SOHC V-6 Engine
[EG0] = All 4.0L Engines
[EKG] = 3.7L [Magnum] V-6 Engine
[EK0] = All 3.7L 6-Cylinder Gas Engines
[ENS] = 2.8L 4 Cylinder Turbo Diesel Engine
[EN0] = All 2.8L 4 Cylinder Turbo Diesel Engines
[ESF] = 6.1L SRT V-8 Hemi Engine
[ES0] = All 6.1L 8-Cylinder Engines
[EVA] = 4.7L [Magnum] V-8 Engine
[EVD] = 4.7L V-8 FFV Engine
[EVE] = 4.7L V-8 Engine
[EV0] = All 4.7L 8-Cylinder Engines
[EZA] = 5.7L Hemi V-8 Engine
[EZB] = 5.7L Hemi V-8 Multi-Displacement Engine
[EZC] = 5.7L Hemi V-8 VCT Non Multi-Displacement Engine
[EZD] = 5.7L Hemi V-8 VCT Multi-Displacement Engine
[EZE] = 5.7L Hemi V-8 HEV Engine
[EZ0] = All 5.7L 8-Cylinder Engines
[NAA] = Federal Emissions
[NAE] = California Emissions
[NAS] = 50 State Emissions
[NA1] = Export Emissions
[NHK] = Engine Cylinder Block Heater
[XEF] = Transfer Case Skid Plate Sheild

1	4	ENGINE, Complete, Serviced By New short Block Only, (NOT SERVICED)
2	4	ENGINE, Long Block, (NOT SERVICED)

DODGE CHALLENGER (LC)

SERIES	LINE	BODY	ENGINE	TRANSMISSION
H = HIGHLINE P = PREMIUM X = SPECIAL	D = DODGE	22 = 2-DR SEDAN TYPE #2	EGG = 3.5L High Output V6 24V MPI Engine ESF = 6.1L SRT HEMI V8 Engine EZC = 5.7L HEMI VCT Engine EZD = 5.7L Hemi VCT MDS Engine	DEC = 6-Speed Manual TREMEC Transmission DGJ = 5-Speed Auto W5A580 Transmission DGV = 4-Spd. Automatic VLP 42RLE Trans

Engine Cover And Related Parts 5.7L [EZD] With MDS
Figure 009EZD-125

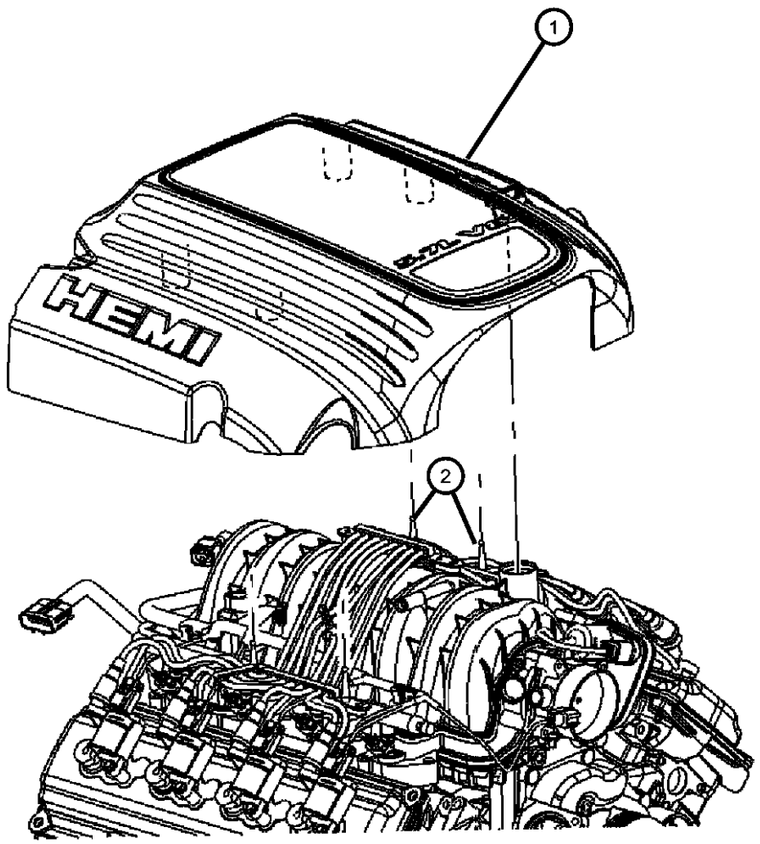

ITEM	PART NUMBER	QTY	LINE	SERIES	BODY	ENGINE	TRANS	TRIM	DESCRIPTION

NOTE:
Sales Codes:
[DEC] = 6-Speed Manual TR6060 Transmission
[DEH] = 6-Speed Manual NSG370 Transmission
[DF9] = AHS-T RWD Automatic Transmission
[DGJ] = 5-Speed Automatic W5A580 Transmission
[DGQ] = 5-Speed Automatic 545RFE Transmission
[DGV] = 4-Speed Automatic VLP 42RLE Transmission
[DG0] = All Automatic Transmissions
[DHR] = Single Speed On Demand MP3010 Transfer Case
[DHU] = AWD Electronic Shift Two Speed NVG 244 H/D Transfer Case
[DHZ] = Full Time Single Mode NVG 140 Transfer Case
[EGS] = 4.0L SOHC V-6 Engine
[EG0] = All 4.0L Engines
[EKG] = 3.7L [Magnum] V-6 Engine
[EK0] = All 3.7L 6-Cylinder Gas Engines
[ENS] = 2.8L 4 Cylinder Turbo Diesel Engine
[EN0] = All 2.8L 4 Cylinder Turbo Diesel Engines
[ESF] = 6.1L SRT V-8 Hemi Engine
[ES0] = All 6.1L 8-Cylinder Engines
[EVA] = 4.7L [Magnum] V-8 Engine
[EVD] = 4.7L V-8 FFV Engine
[EVE] = 4.7L V-8 Engine
[EV0] = All 4.7L 8-Cylinder Engines
[EZA] = 5.7L Hemi V-8 Engine
[EZB] = 5.7L Hemi V-8 Multi-Displacement Engine
[EZC] = 5.7L Hemi V-8 VCT Non Multi-Displacement Engine
[EZD] = 5.7L Hemi V-8 VCT Multi-Displacement Engine
[EZE] = 5.7L Hemi V-8 HEV Engine
[EZ0] = All 5.7L 8-Cylinder Engines
[NAA] = Federal Emissions
[NAE] = California Emissions
[NAS] = 50 State Emissions
[NA1] = Export Emissions
[NHK] = Engine Cylinder Block Heater
[XEF] = Transfer Case Skid Plate Sheild

1	04591895AH	1	D			EZC, EZD			COVER, Engine
2	53013748AD	4	D			EZC, EZD			BALL STUD, 60X2.14X21.59

DODGE CHALLENGER (LC)

SERIES	LINE	BODY	ENGINE	TRANSMISSION
H = HIGHLINE P = PREMIUM X = SPECIAL	D = DODGE	22 = 2-DR SEDAN TYPE #2	EGG = 3.5L High Output V6 24V MPI Engine ESF = 6.1L SRT HEMI V8 Engine EZC = 5.7L HEMI VCT Engine EZD = 5.7L Hemi VCT MDS Engine	DEC = 6-Speed Manual TREMEC Transmission DGJ = 5-Speed Auto W5A580 Transmission DGV = 4-Spd. Automatic VLP 42RLE Trans

Engine Gasket Kits 5.7L [EZD] With MDS
Figure 009EZD-145

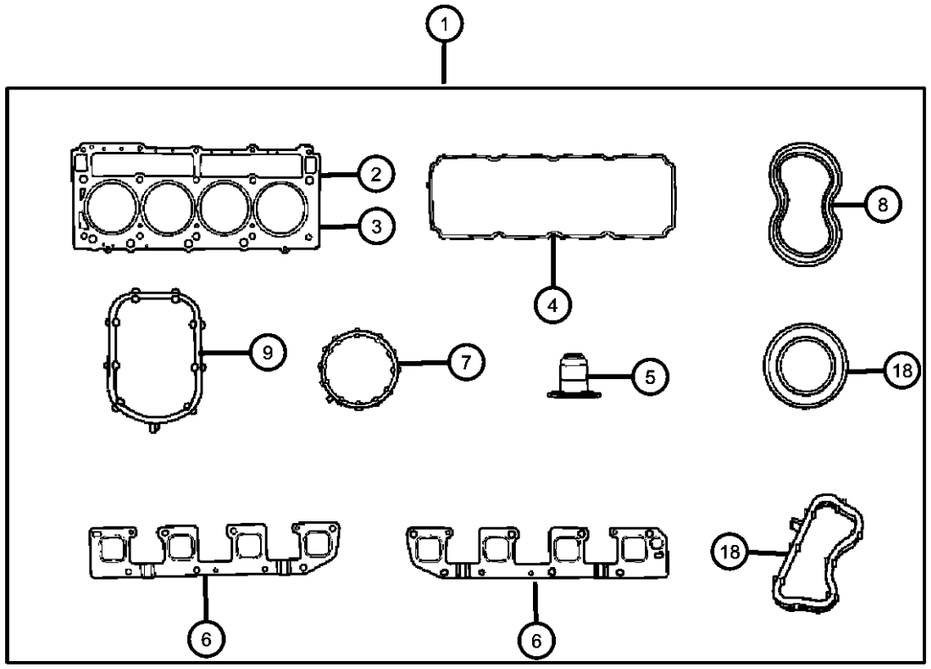

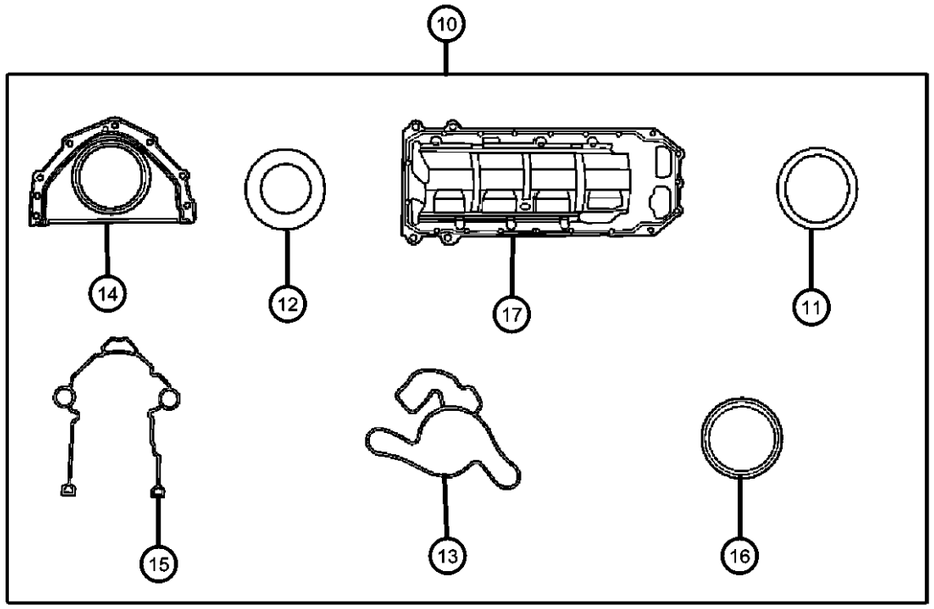

ITEM	PART NUMBER	QTY	LINE	SERIES	BODY	ENGINE	TRANS	TRIM	DESCRIPTION

NOTE:
Sales Codes:
[DEC] = 6-Speed Manual TR6060 Transmission
[DEH] = 6-Speed Manual NSG370 Transmission
[DF9] = AHS-T RWD Automatic Transmission
[DGJ] = 5-Speed Automatic W5A580 Transmission
[DGQ] = 5-Speed Automatic 545RFE Transmission
[DGV] = 4-Speed Automatic VLP 42RLE Transmission
[DG0] = All Automatic Transmissions
[DHR] = Single Speed On Demand MP3010 Transfer Case
[DHU] = AWD Electronic Shift Two Speed NVG 244 H/D Transfer Case
[DHZ] = Full Time Single Mode NVG 140 Transfer Case
[EGS] = 4.0L SOHC V-6 Engine
[EG0] = All 4.0L Engines
[EKG] = 3.7L [Magnum] V-6 Engine
[EK0] = All 3.7L 6-Cylinder Gas Engines
[ENS] = 2.8L 4 Cylinder Turbo Diesel Engine
[EN0] = All 2.8L 4 Cylinder Turbo Diesel Engines
[ESF] = 6.1L SRT V-8 Hemi Engine
[ES0] = All 6.1L 8-Cylinder Engines
[EVA] = 4.7L [Magnum] V-8 Engine
[EVD] = 4.7L V-8 FFV Engine
[EVE] = 4.7L V-8 Engine
[EV0] = All 4.7L 8-Cylinder Engines
[EZA] = 5.7L Hemi V-8 Engine
[EZB] = 5.7L Hemi V-8 Multi-Displacement Engine
[EZC] = 5.7L Hemi V-8 VCT Non Multi-Displacement Engine
[EZD] = 5.7L Hemi V-8 VCT Multi-Displacement Engine
[EZE] = 5.7L Hemi V-8 HEV Engine
[EZ0] = All 5.7L 8-Cylinder Engines
[NAA] = Federal Emissions
[NAE] = California Emissions
[NAS] = 50 State Emissions
[NA1] = Export Emissions
[NHK] = Engine Cylinder Block Heater
[XEF] = Transfer Case Skid Plate Sheild

1	68046260AA	1	D			EZD	DGJ		GASKET PACKAGE, Engine Upper
2	53022306AA	1	D			EZC, EZD			GASKET, Cylinder Head, Right
3	53022307AA	1	D			EZC, EZD			GASKET, Cylinder Head, Left
4									GASKET KIT, Cylinder Head Cover
	68060360AA	2	D			EZD	DGJ		
		2	D			EZC, EZD			
		1	D			EZD	DGJ		
		2	D			EZC, EZD, EZH			

DODGE CHALLENGER (LC)

SERIES	LINE	BODY	ENGINE	TRANSMISSION
H = HIGHLINE P = PREMIUM X = SPECIAL	D = DODGE	22 = 2-DR SEDAN TYPE #2	EGG = 3.5L High Output V6 24V MPI Engine ESF = 6.1L SRT HEMI V8 Engine EZC = 5.7L HEMI VCT Engine EZD = 5.7L Hemi VCT MDS Engine	DEC = 6-Speed Manual TREMEC Transmission DGJ = 5-Speed Auto W5A580 Transmission DGV = 4-Spd. Automatic VLP 42RLE Trans

AR = use ase required - = Non illustrrated part

Engine Gasket Kits 5.7L [EZD] With MDS
Figure 009EZD-145

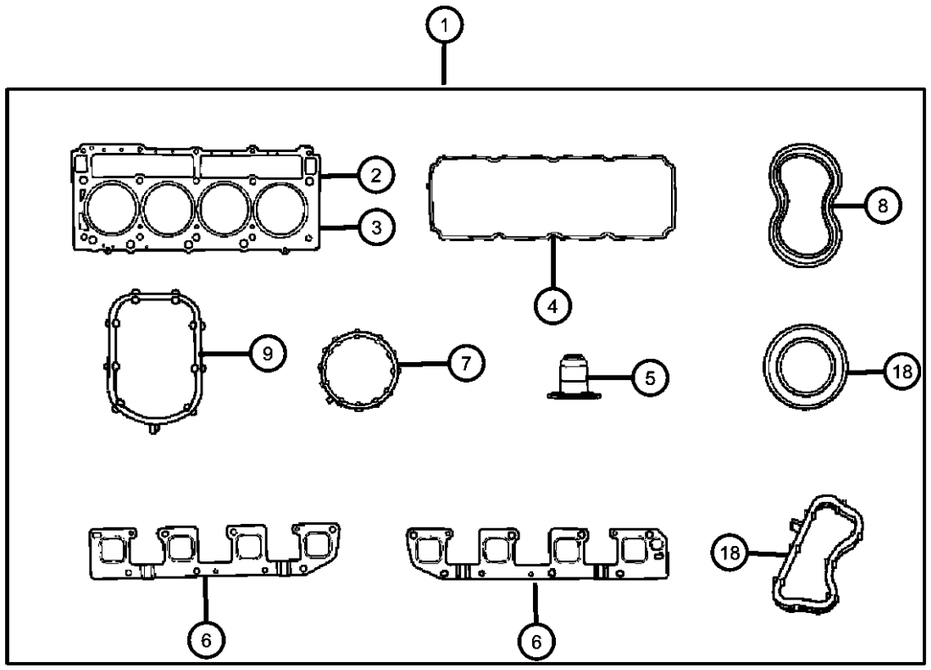

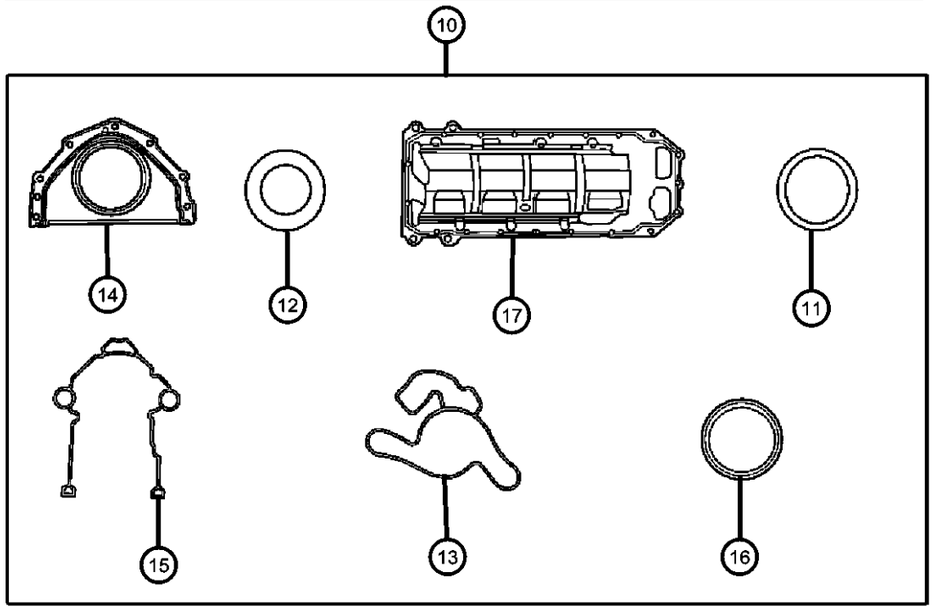

ITEM	PART NUMBER	QTY	LINE	SERIES	BODY	ENGINE	TRANS	TRIM	DESCRIPTION
5	53022090AB	16	D			EZC, EZD			SEAL, Valve Guide
6									GASKET, Exhaust Manifold
	53032966AF	1	D			EZC, EZD			Right
	53032965AF	1	D			EZC, EZD			Left
7	53022320AB	1	D			EZC, EZD			SEAL, Throttle Body to Intake
8	53021569AD	8	D			EZC, EZD			GASKET, Spark Plug Well
9	53022143AB	8	D			EZC, EZD			SEAL, Intake Manifold
10	68060361AA	1	D			EZD	DGJ		GASKET PACKAGE, Engine Lower
11	53020861	1	D			EZC, EZD			SEAL, Oil Pick Up Tube
12	53021144AA	1	D			EZC, EZD			O RING, Engine Oil Indicator Tube
13	04792922AB	1	D			EZC, EZD			GASKET, Water Pump
14									RETAINER PACKAGE, Crankshaft Rear Oil Seal
	68060342AA	1	D			EZC, EZD			
		1	D			EZC, EZD, EZH			
15									GASKET PACKAGE, Front Cover
	68060362AA	1	D			EZC, EZD			
		1	D			EZC, EZD, EZH			
16	53021585AD	1	D			EZC, EZD			SEAL, Crankshaft Oil, Front
17	04792874AA	1	D			EZD			GASKET, Oil Pan
18									SEAL, PCV
	53032448AC	1	D			EZC, EZD			
	53022142AB	2	D			EZC, EZD			Square

DODGE CHALLENGER (LC)

SERIES	LINE	BODY	ENGINE	TRANSMISSION
H = HIGHLINE	D = DODGE	22 = 2-DR SEDAN TYPE #2	EGG = 3.5L High Output V6 24V MPI Engine	DEC = 6-Speed Manual TREMEC Transmission
P = PREMIUM			ESF = 6.1L SRT HEMI V8 Engine	DGJ = 5-Speed Auto W5A580 Transmission
X = SPECIAL			EZC = 5.7L HEMI VCT Engine	DGV = 4-Spd. Automatic VLP 42RLE Trans
			EZD = 5.7L Hemi VCT MDS Engine	

Cylinder Head Covers 5.7L [EZD] With MDS
Figure 009EZD-205

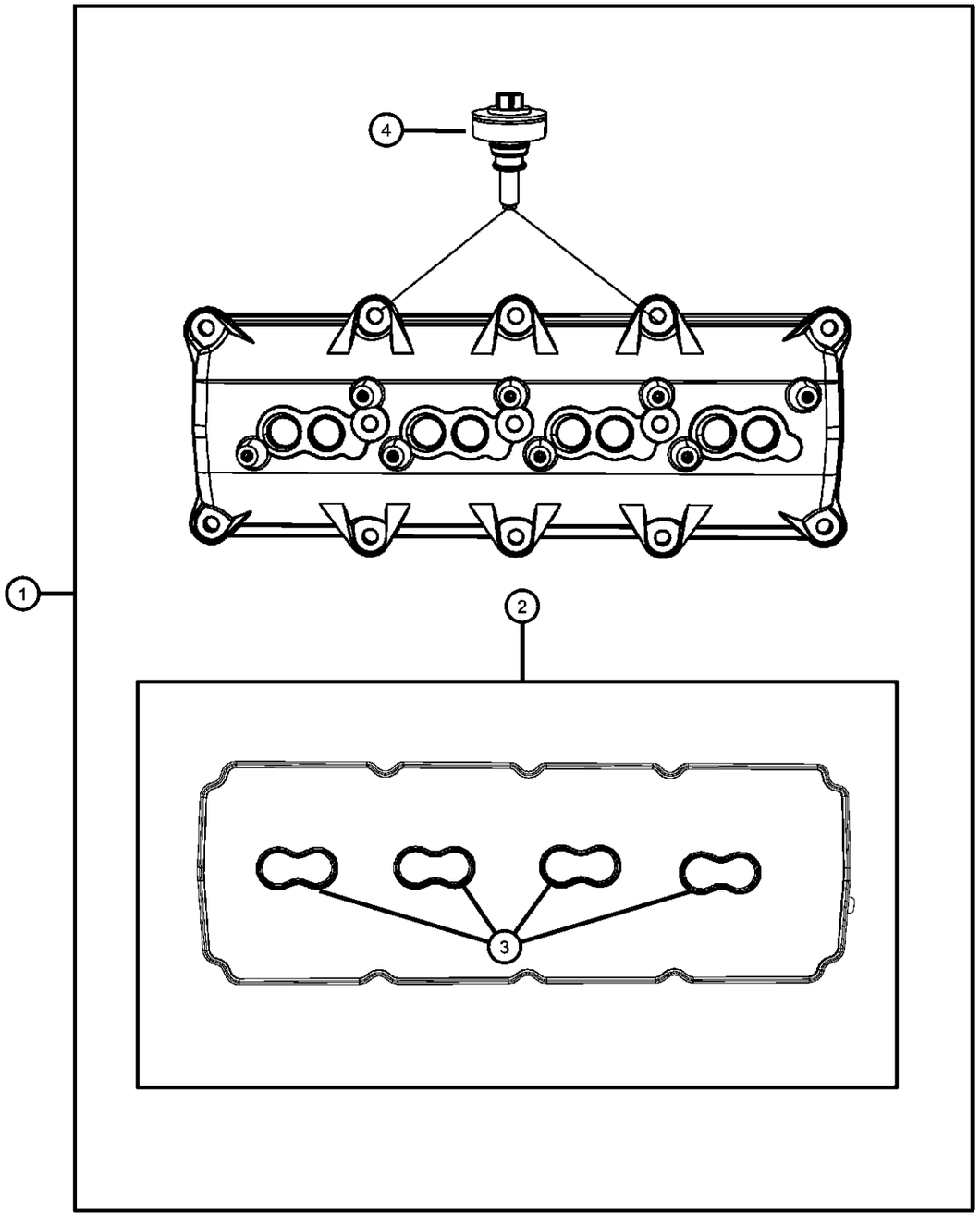

ITEM	PART NUMBER	QTY	LINE	SERIES	BODY	ENGINE	TRANS	TRIM	DESCRIPTION

NOTE:
Sales Codes:
[DEC] = 6-Speed Manual TR6060 Transmission
[DEH] = 6-Speed Manual NSG370 Transmission
[DF9] = AHS-T RWD Automatic Transmission
[DGJ] = 5-Speed Automatic W5A580 Transmission
[DGQ] = 5-Speed Automatic 545RFE Transmission
[DGV] = 4-Speed Automatic VLP 42RLE Transmission
[DG0] = All Automatic Transmissions
[DHR] = Single Speed On Demand MP3010 Transfer Case
[DHU] = AWD Electronic Shift Two Speed NVG 244 H/D Transfer Case
[DHZ] = Full Time Single Mode NVG 140 Transfer Case
[EGS] = 4.0L SOHC V-6 Engine
[EG0] = All 4.0L Engines
[EKG] = 3.7L [Magnum] V-6 Engine
[EK0] = All 3.7L 6-Cylinder Gas Engines
[ENS] = 2.8L 4 Cylinder Turbo Diesel Engine
[EN0] = All 2.8L 4 Cylinder Turbo Diesel Engines
[ESF] = 6.1L SRT V-8 Hemi Engine
[ES0] = All 6.1L 8-Cylinder Engines
[EVA] = 4.7L [Magnum] V-8 Engine
[EVD] = 4.7L V-8 FFV Engine
[EVE] = 4.7L V-8 Engine
[EV0] = All 4.7L 8-Cylinder Engines
[EZA] = 5.7L Hemi V-8 Engine
[EZB] = 5.7L Hemi V-8 Multi-Displacement Engine
[EZC] = 5.7L Hemi V-8 VCT Non Multi-Displacement Engine
[EZD] = 5.7L Hemi V-8 VCT Multi-Displacement Engine
[EZE] = 5.7L Hemi V-8 HEV Engine
[EZ0] = All 5.7L 8-Cylinder Engines
[NAA] = Federal Emissions
[NAE] = California Emissions
[NAS] = 50 State Emissions
[NA1] = Export Emissions
[NHK] = Engine Cylinder Block Heater
[XEF] = Transfer Case Skid Plate Sheild

1	53022085AC	2	D			EZC, EZD			COVER, Cylinder Head
2									GASKET KIT, Cylinder Head Cover
	68060360AA	2	D			EZD	DGJ		
		2	D			EZC, EZD			
		1	D			EZD	DGJ		
		2	D			EZC, EZD, EZH			

DODGE CHALLENGER (LC)

SERIES	LINE	BODY	ENGINE	TRANSMISSION
H = HIGHLINE P = PREMIUM X = SPECIAL	D = DODGE	22 = 2-DR SEDAN TYPE #2	EGG = 3.5L High Output V6 24V MPI Engine ESF = 6.1L SRT HEMI V8 Engine EZC = 5.7L HEMI VCT Engine EZD = 5.7L Hemi VCT MDS Engine	DEC = 6-Speed Manual TREMEC Transmission DGJ = 5-Speed Auto W5A580 Transmission DGV = 4-Spd. Automatic VLP 42RLE Trans

Cylinder Head Covers 5.7L [EZD] With MDS
Figure 009EZD-205

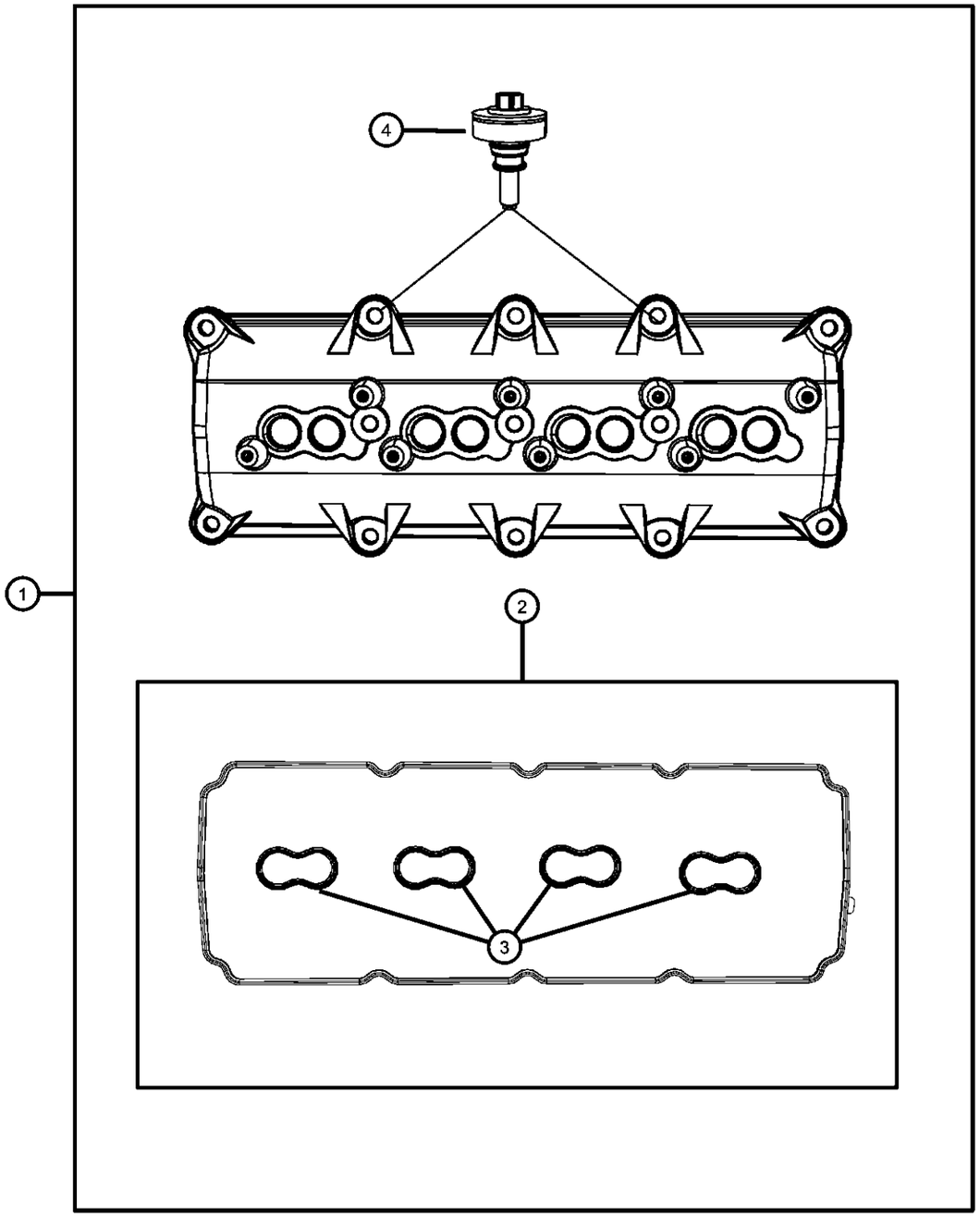

ITEM	PART NUMBER	QTY	LINE	SERIES	BODY	ENGINE	TRANS	TRIM	DESCRIPTION
3	53021569AD	8	D			EZC, EZD			GASKET, Spark Plug Well
4	06509213AA	20	D			EZC, EZD			BOLT AND GROMMET, Special, M6X1.00X30.00, Cylinder Head Cover To Cylinder Head, Mounting

DODGE CHALLENGER (LC)

SERIES	LINE	BODY	ENGINE	TRANSMISSION
H = HIGHLINE P = PREMIUM X = SPECIAL	D = DODGE	22 = 2-DR SEDAN TYPE #2	EGG = 3.5L High Output V6 24V MPI Engine ESF = 6.1L SRT HEMI V8 Engine EZC = 5.7L HEMI VCT Engine EZD = 5.7L Hemi VCT MDS Engine	DEC = 6-Speed Manual TREMEC Transmission DGJ = 5-Speed Auto W5A580 Transmission DGV = 4-Spd. Automatic VLP 42RLE Trans

Cylinder Heads 5.7L [EZD] With MDS
Figure 009EZD-225

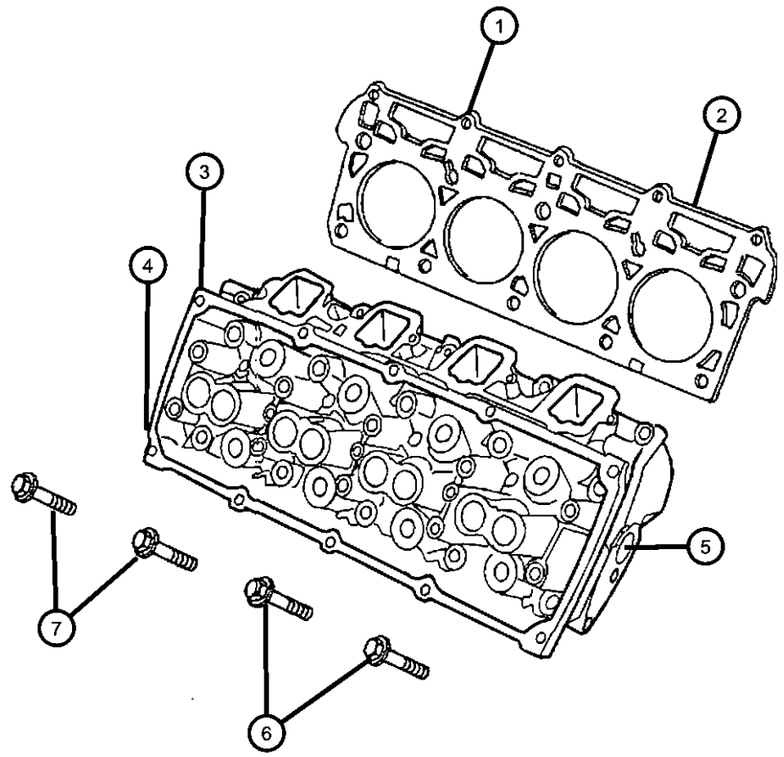

ITEM	PART NUMBER	QTY	LINE	SERIES	BODY	ENGINE	TRANS	TRIM	DESCRIPTION

NOTE:
Sales Codes:
[DEC] = 6-Speed Manual TR6060 Transmission
[DEH] = 6-Speed Manual NSG370 Transmission
[DF9] = AHS-T RWD Automatic Transmission
[DGJ] = 5-Speed Automatic W5A580 Transmission
[DGQ] = 5-Speed Automatic 545RFE Transmission
[DGV] = 4-Speed Automatic VLP 42RLE Transmission
[DG0] = All Automatic Transmissions
[DHR] = Single Speed On Demand MP3010 Transfer Case
[DHU] = AWD Electronic Shift Two Speed NVG 244 H/D Transfer Case
[DHZ] = Full Time Single Mode NVG 140 Transfer Case
[EGS] = 4.0L SOHC V-6 Engine
[EG0] = All 4.0L Engines
[EKG] = 3.7L [Magnum] V-6 Engine
[EK0] = All 3.7L 6-Cylinder Gas Engines
[ENS] = 2.8L 4 Cylinder Turbo Diesel Engine
[EN0] = All 2.8L 4 Cylinder Turbo Diesel Engines
[ESF] = 6.1L SRT V-8 Hemi Engine
[ES0] = All 6.1L 8-Cylinder Engines
[EVA] = 4.7L [Magnum] V-8 Engine
[EVD] = 4.7L V-8 FFV Engine
[EVE] = 4.7L V-8 Engine
[EV0] = All 4.7L 8-Cylinder Engines
[EZA] = 5.7L Hemi V-8 Engine
[EZB] = 5.7L Hemi V-8 Multi-Displacement Engine
[EZC] = 5.7L Hemi V-8 VCT Non Multi-Displacement Engine
[EZD] = 5.7L Hemi V-8 VCT Multi-Displacement Engine
[EZE] = 5.7L Hemi V-8 HEV Engine
[EZ0] = All 5.7L 8-Cylinder Engines
[NAA] = Federal Emissions
[NAE] = California Emissions
[NAS] = 50 State Emissions
[NA1] = Export Emissions
[NHK] = Engine Cylinder Block Heater
[XEF] = Transfer Case Skid Plate Sheild

1	53022306AA	1	D			EZC, EZD			GASKET, Cylinder Head, Right
2	53022307AA	1	D			EZC, EZD			GASKET, Cylinder Head, Left
3	53021608DD	1	D			EZC, EZD			HEAD, Cylinder, Right
4	53021609DD	1	D			EZC, EZD			HEAD, Cylinder, Left
5									PLUG, Core
	68060349AA	2	D			EZC, EZD			Right Cylinder Head
		2	D			EZC, EZD			Left Cylinder Head

DODGE CHALLENGER (LC)

SERIES	LINE	BODY	ENGINE	TRANSMISSION
H = HIGHLINE P = PREMIUM X = SPECIAL	D = DODGE	22 = 2-DR SEDAN TYPE #2	EGG = 3.5L High Output V6 24V MPI Engine ESF = 6.1L SRT HEMI V8 Engine EZC = 5.7L HEMI VCT Engine EZD = 5.7L Hemi VCT MDS Engine	DEC = 6-Speed Manual TREMEC Transmission DGJ = 5-Speed Auto W5A580 Transmission DGV = 4-Spd. Automatic VLP 42RLE Trans

Cylinder Heads 5.7L [EZD] With MDS
Figure 009EZD-225

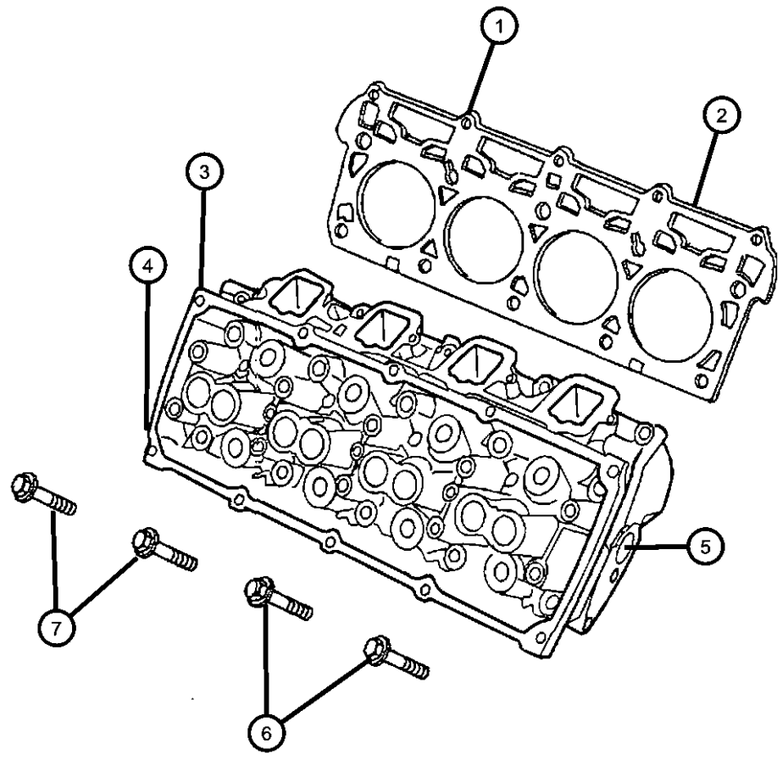

ITEM	PART NUMBER	QTY	LINE	SERIES	BODY	ENGINE	TRANS	TRIM	DESCRIPTION
6	06506334AA	10	D			EZC, EZD			BOLT, Hex Flange Head, M8X1.25X45.00, Cylinder Head To Cylinder Block, Mounting
7	06506694AA	20	D			EZC, EZD			BOLT AND CONED WASHER, Hex Head, M12X1.50X135.00, Cylinder Head To Cylinder Block, Mounting

DODGE CHALLENGER (LC)

SERIES	LINE	BODY	ENGINE	TRANSMISSION
H = HIGHLINE P = PREMIUM X = SPECIAL	D = DODGE	22 = 2-DR SEDAN TYPE #2	EGG = 3.5L High Output V6 24V MPI Engine ESF = 6.1L SRT HEMI V8 Engine EZC = 5.7L HEMI VCT Engine EZD = 5.7L Hemi VCT MDS Engine	DEC = 6-Speed Manual TREMEC Transmission DGJ = 5-Speed Auto W5A580 Transmission DGV = 4-Spd. Automatic VLP 42RLE Trans

Engine Cylinder Block And Hardware 5.7L [EZD] With MDS
Figure 009EZD-305

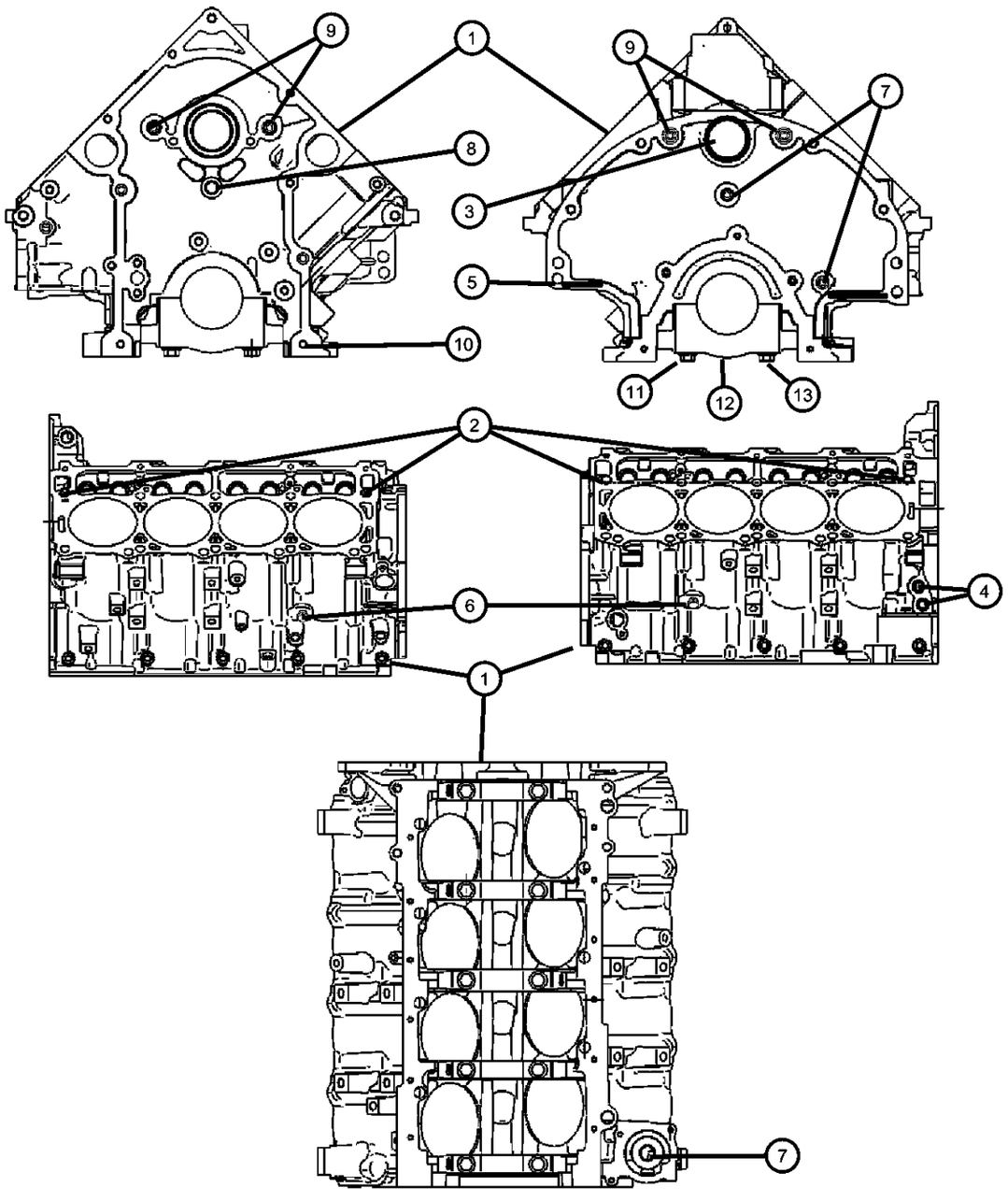

ITEM	PART NUMBER	QTY	LINE	SERIES	BODY	ENGINE	TRANS	TRIM	DESCRIPTION

NOTE:
Shortblock Does Not Include Camshaft, Lifters, Oil Pump Or Oil Pan,But Does Include The Camshaft Bearings.
Sales Codes:
[DEC] = 6-Speed Manual TR6060 Transmission
[DEH] = 6-Speed Manual NSG370 Transmission
[DF9] = AHS-T RWD Automatic Transmission
[DGJ] = 5-Speed Automatic W5A580 Transmission
[DGQ] = 5-Speed Automatic 545RFE Transmission
[DGV] = 4-Speed Automatic VLP 42RLE Transmission
[DG0] = All Automatic Transmissions
[DHR] = Single Speed On Demand MP3010 Transfer Case
[DHU] = AWD Electronic Shift Two Speed NVG 244 H/D Transfer Case
[DHZ] = Full Time Single Mode NVG 140 Transfer Case
[EGS] = 4.0L SOHC V-6 Engine
[EG0] = All 4.0L Engines
[EKG] = 3.7L [Magnum] V-6 Engine
[EK0] = All 3.7L 6-Cylinder Gas Engines
[ENS] = 2.8L 4 Cylinder Turbo Diesel Engine
[EN0] = All 2.8L 4 Cylinder Turbo Diesel Engines
[ESF] = 6.1L SRT V-8 Hemi Engine
[ES0] = All 6.1L 8-Cylinder Engines
[EVA] = 4.7L [Magnum] V-8 Engine
[EVD] = 4.7L V-8 FFV Engine
[EVE] = 4.7L V-8 Engine
[EV0] = All 4.7L 8-Cylinder Engines
[EZA] = 5.7L Hemi V-8 Engine
[EZB] = 5.7L Hemi V-8 Multi-Displacement Engine
[EZC] = 5.7L Hemi V-8 VCT Non Multi-Displacement Engine
[EZD] = 5.7L Hemi V-8 VCT Multi-Displacement Engine
[EZE] = 5.7L Hemi V-8 HEV Engine
[EZ0] = All 5.7L 8-Cylinder Engines
[NAA] = Federal Emissions
[NAE] = California Emissions
[NAS] = 50 State Emissions
[NA1] = Export Emissions
[NHK] = Engine Cylinder Block Heater
[XEF] = Transfer Case Skid Plate Sheild

1	68044957AA	1	D			EZD	DGJ		ENGINE, Short Block, See Note
2	05240849	4	D			EZC, EZD			DOWEL PIN, Cylinder Head To Cylinder Block, Mounting
3	06507663AA	1	D			EZC, EZD			PLUG, Camshaft, [M47.93 OD 6.4 THK 51.5 FLG OD]Rear
4	06034331	2	D			EZC, EZD			PLUG, Hex Socket, 3/8-18NPTx.475, Oil Gallery
5	01122532	2	D			EZC, EZD			DOWEL, Block to Clutch Housing, 1/2X3/4

DODGE CHALLENGER (LC)

SERIES	LINE	BODY	ENGINE	TRANSMISSION
H = HIGHLINE P = PREMIUM X = SPECIAL	D = DODGE	22 = 2-DR SEDAN TYPE #2	EGG = 3.5L High Output V6 24V MPI Engine ESF = 6.1L SRT HEMI V8 Engine EZC = 5.7L HEMI VCT Engine EZD = 5.7L Hemi VCT MDS Engine	DEC = 6-Speed Manual TREMEC Transmission DGJ = 5-Speed Auto W5A580 Transmission DGV = 4-Spd. Automatic VLP 42RLE Trans

AR = use ase required - = Non illustrrated part

Engine Cylinder Block And Hardware 5.7L [EZD] With MDS
Figure 009EZD-305

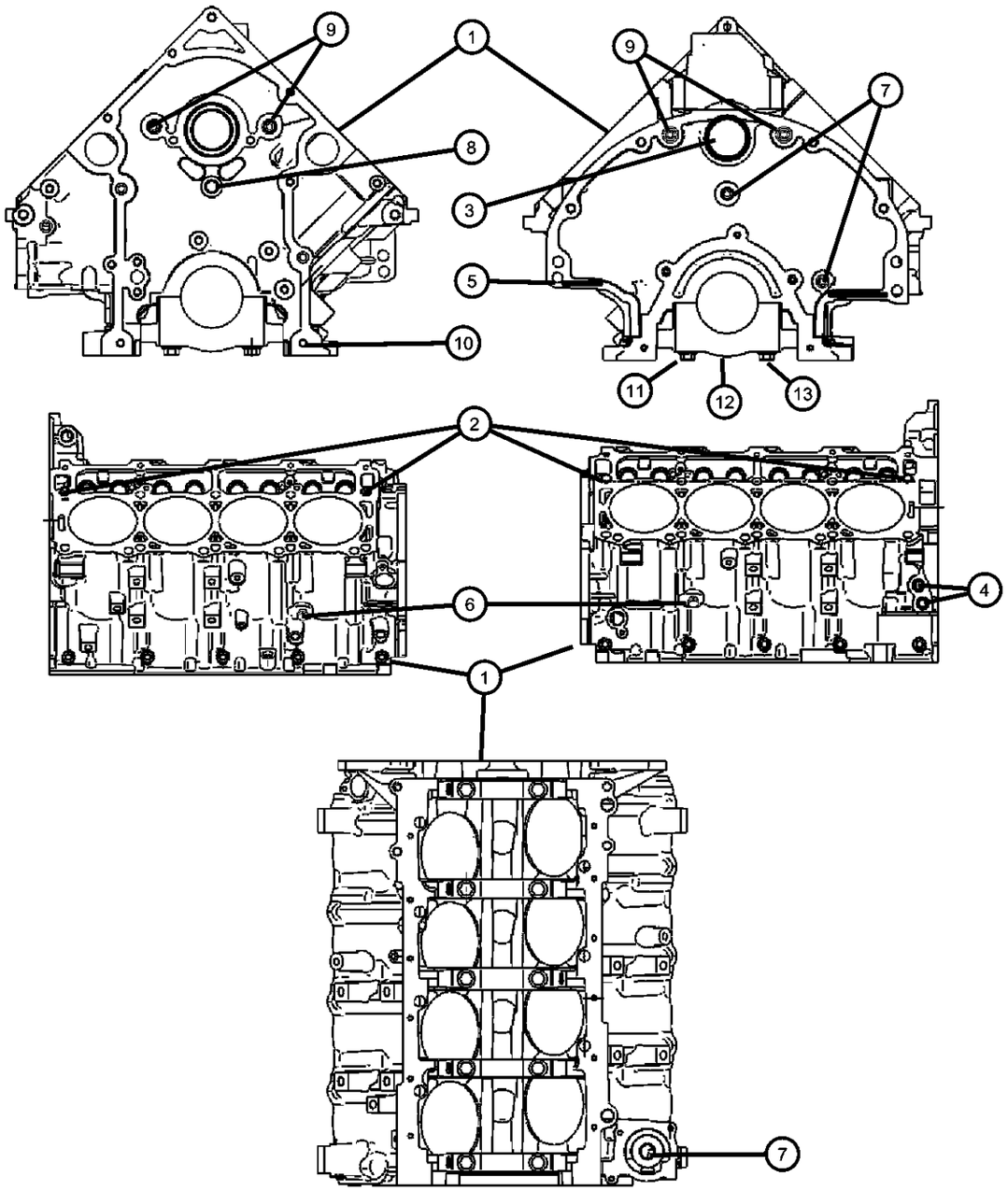

ITEM	PART NUMBER	QTY	LINE	SERIES	BODY	ENGINE	TRANS	TRIM	DESCRIPTION
6	06036592AA	2	D			EZC, EZD			PLUG, .250-18X.690, Cylinder Block Coolant Drain
7	06036307AA	2	D			EZC, EZD			PLUG, Pipe, .250-18X.413
8		2							PLUG, Cylinder Block, .562X.280 Stainless, (NOT SERVICED)
9	06036417AA	4	D			EZC, EZD			PLUG, Cylinder Block, .375-18X1.343, Oil Gallery
10	06506332AA	2	D			EZC, EZD			PIN, Dowel, M8X10.00, Timing Chain Case Cover To Cylinder Block
11		2							STUD, Double Ended, M12&M8, (NOT SERVICED)
12		2							CAP, Main, Serviced With Short Block Engine, (NOT SERVICED)
13	06506272AA	10	D			EZC, EZD, EZH			BOLT, Hex Flange Head, M12X1.75X91.50, Main Bearing Cap To Cylinder Block, Mounting

DODGE CHALLENGER (LC)

SERIES	LINE	BODY	ENGINE	TRANSMISSION
H = HIGHLINE	D = DODGE	22 = 2-DR SEDAN TYPE #2	EGG = 3.5L High Output V6 24V MPI Engine	DEC = 6-Speed Manual TREMEC Transmission
P = PREMIUM			ESF = 6.1L SRT HEMI V8 Engine	DGJ = 5-Speed Auto W5A580 Transmission
X = SPECIAL			EZC = 5.7L HEMI VCT Engine	DGV = 4-Spd. Automatic VLP 42RLE Trans
			EZD = 5.7L Hemi VCT MDS Engine	

AR = use ase required - = Non illustrrated part

Engine Cylinder Block Heater 5.7L [EZD] With MDS
Figure 009EZD-325

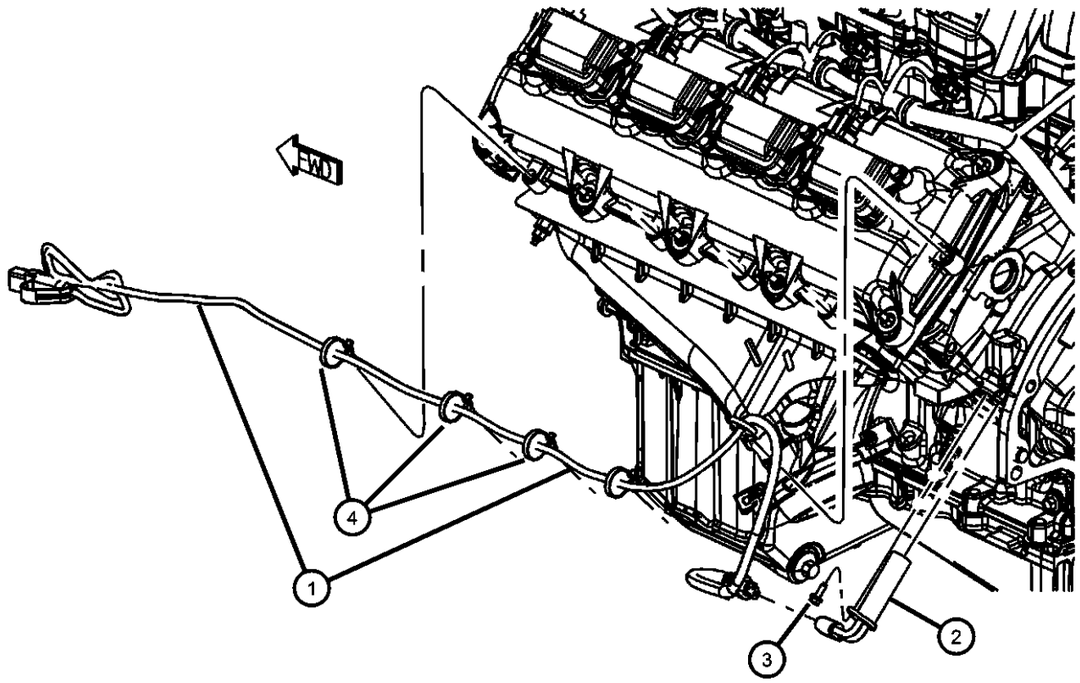

ITEM	PART NUMBER	QTY	LINE	SERIES	BODY	ENGINE	TRANS	TRIM	DESCRIPTION

NOTE:
Sales Codes:
[DEC] = 6-Speed Manual TR6060 Transmission
[DEH] = 6-Speed Manual NSG370 Transmission
[DF9] = AHS-T RWD Automatic Transmission
[DGJ] = 5-Speed Automatic W5A580 Transmission
[DGQ] = 5-Speed Automatic 545RFE Transmission
[DGV] = 4-Speed Automatic VLP 42RLE Transmission
[DG0] = All Automatic Transmissions
[DHR] = Single Speed On Demand MP3010 Transfer Case
[DHU] = AWD Electronic Shift Two Speed NVG 244 H/D Transfer Case
[DHZ] = Full Time Single Mode NVG 140 Transfer Case
[EGS] = 4.0L SOHC V-6 Engine
[EG0] = All 4.0L Engines
[EKG] = 3.7L [Magnum] V-6 Engine
[EK0] = All 3.7L 6-Cylinder Gas Engines
[ENS] = 2.8L 4 Cylinder Turbo Diesel Engine
[EN0] = All 2.8L 4 Cylinder Turbo Diesel Engines
[ESF] = 6.1L SRT V-8 Hemi Engine
[ES0] = All 6.1L 8-Cylinder Engines
[EVA] = 4.7L [Magnum] V-8 Engine
[EVD] = 4.7L V-8 FFV Engine
[EVE] = 4.7L V-8 Engine
[EV0] = All 4.7L 8-Cylinder Engines
[EZA] = 5.7L Hemi V-8 Engine
[EZB] = 5.7L Hemi V-8 Multi-Displacement Engine
[EZC] = 5.7L Hemi V-8 VCT Non Multi-Displacement Engine
[EZD] = 5.7L Hemi V-8 VCT Multi-Displacement Engine
[EZE] = 5.7L Hemi V-8 HEV Engine
[EZ0] = All 5.7L 8-Cylinder Engines
[NAA] = Federal Emissions
[NAE] = California Emissions
[NAS] = 50 State Emissions
[NA1] = Export Emissions
[NHK] = Engine Cylinder Block Heater
[XEF] = Transfer Case Skid Plate Sheild

1	05148099AB	1	D			EZC, EZD			CORD, Engine Block Heater
2	05149022AB	1	D			EZC, EZD			HEATER, Engine Block
3	06501373	1	D			EZC, EZD			BOLT, Hex Head, M6x1.00x20.00, Heater To Cylinder Block, Mounting
4		1							CLIP, Serviced With Cord Only, (NOT SERVICED)

DODGE CHALLENGER (LC)

SERIES	LINE	BODY	ENGINE	TRANSMISSION
H = HIGHLINE P = PREMIUM X = SPECIAL	D = DODGE	22 = 2-DR SEDAN TYPE #2	EGG = 3.5L High Output V6 24V MPI Engine ESF = 6.1L SRT HEMI V8 Engine EZC = 5.7L HEMI VCT Engine EZD = 5.7L Hemi VCT MDS Engine	DEC = 6-Speed Manual TREMEC Transmission DGJ = 5-Speed Auto W5A580 Transmission DGV = 4-Spd. Automatic VLP 42RLE Trans

Crankshaft, Crankshaft Bearings, Damper And Flywheel 5.7L [EZD] With MDS
Figure 009EZD-405

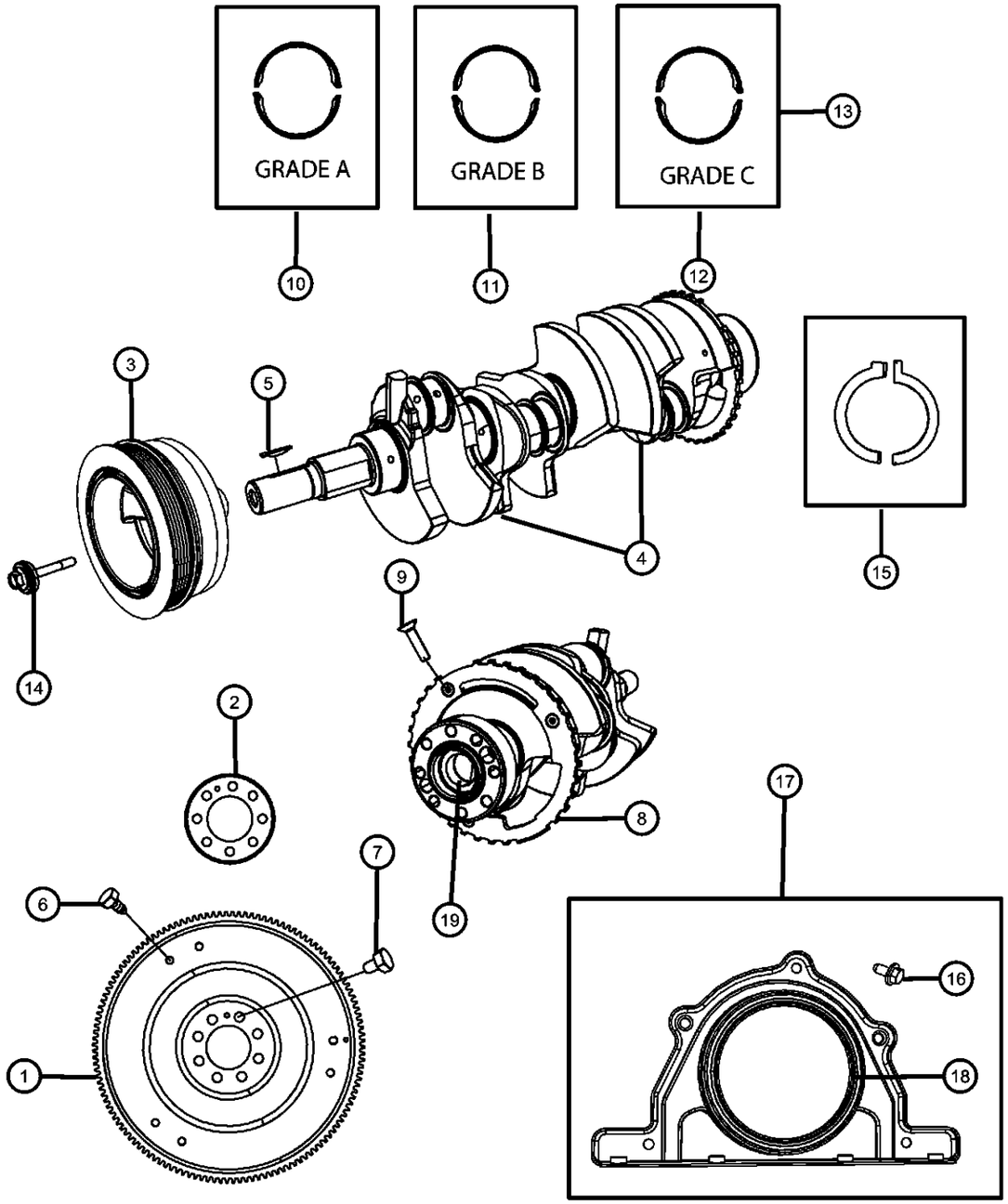

ITEM	PART NUMBER	QTY	LINE	SERIES	BODY	ENGINE	TRANS	TRIM	DESCRIPTION

NOTE: For Crankshaft Indentification, Stamping Location And Bearing Information Refer To The Service Manual.
For Bearing Selection Sizes Please Refer To Service Manual Group 9, Bearings Crankshaft Main, [Select Fit Identification]
Sales Codes:
[DEC] = 6-Speed Manual TR6060 Transmission
[DEH] = 6-Speed Manual NSG370 Transmission
[DF9] = AHS-T RWD Automatic Transmission
[DGJ] = 5-Speed Automatic W5A580 Transmission
[DGQ] = 5-Speed Automatic 545RFE Transmission
[DGV] = 4-Speed Automatic VLP 42RLE Transmission
[DG0] = All Automatic Transmissions
[DHR] = Single Speed On Demand MP3010 Transfer Case
[DHU] = AWD Electronic Shift Two Speed NVG 244 H/D Transfer Case
[DHZ] = Full Time Single Mode NVG 140 Transfer Case
[EGS] = 4.0L SOHC V-6 Engine
[EG0] = All 4.0L Engines
[EKG] = 3.7L [Magnum] V-6 Engine
[EK0] = All 3.7L 6-Cylinder Gas Engines
[ENS] = 2.8L 4 Cylinder Turbo Diesel Engine
[EN0] = All 2.8L 4 Cylinder Turbo Diesel Engines
[ESF] = 6.1L SRT V-8 Hemi Engine
[ES0] = All 6.1L 8-Cylinder Engines
[EVA] = 4.7L [Magnum] V-8 Engine
[EVD] = 4.7L V-8 FFV Engine
[EVE] = 4.7L V-8 Engine
[EV0] = All 4.7L 8-Cylinder Engines
[EZA] = 5.7L Hemi V-8 Engine
[EZB] = 5.7L Hemi V-8 Multi-Displacement Engine
[EZC] = 5.7L Hemi V-8 VCT Non Multi-Displacement Engine
[EZD] = 5.7L Hemi V-8 VCT Multi-Displacement Engine
[EZE] = 5.7L Hemi V-8 HEV Engine
[EZ0] = All 5.7L 8-Cylinder Engines
[NAA] = Federal Emissions
[NAE] = California Emissions
[NAS] = 50 State Emissions
[NA1] = Export Emissions
[NHK] = Engine Cylinder Block Heater
[XEF] = Transfer Case Skid Plate Sheild

1	04752574AB	1	D			EZC, EZD			PLATE, Torque Converter Drive
2	04736613AA	1	D			ESF, EZD	DGJ		PLATE, Flexplate or Flywheel Backing
3	53022084AA	1	D			EZC, EZD			DAMPER, Vibration
4	53021302BB	1	D			EZC, EZD			CRANKSHAFT, See Note
5	06506397AA	1	D			EZC, EZD			KEY, Woodruff
6	06507095AA	6	D			EZD	DGJ		BOLT, Hex Head, M8x1.25x18.00, Torque Converter Drive Plate To Torque Converter, Mounting

DODGE CHALLENGER (LC)

SERIES	LINE	BODY	ENGINE	TRANSMISSION
H = HIGHLINE P = PREMIUM X = SPECIAL	D = DODGE	22 = 2-DR SEDAN TYPE #2	EGG = 3.5L High Output V6 24V MPI Engine ESF = 6.1L SRT HEMI V8 Engine EZC = 5.7L HEMI VCT Engine EZD = 5.7L Hemi VCT MDS Engine	DEC = 6-Speed Manual TREMEC Transmission DGJ = 5-Speed Auto W5A580 Transmission DGV = 4-Spd. Automatic VLP 42RLE Trans

Crankshaft, Crankshaft Bearings, Damper And Flywheel 5.7L [EZD] With MDS
Figure 009EZD-405

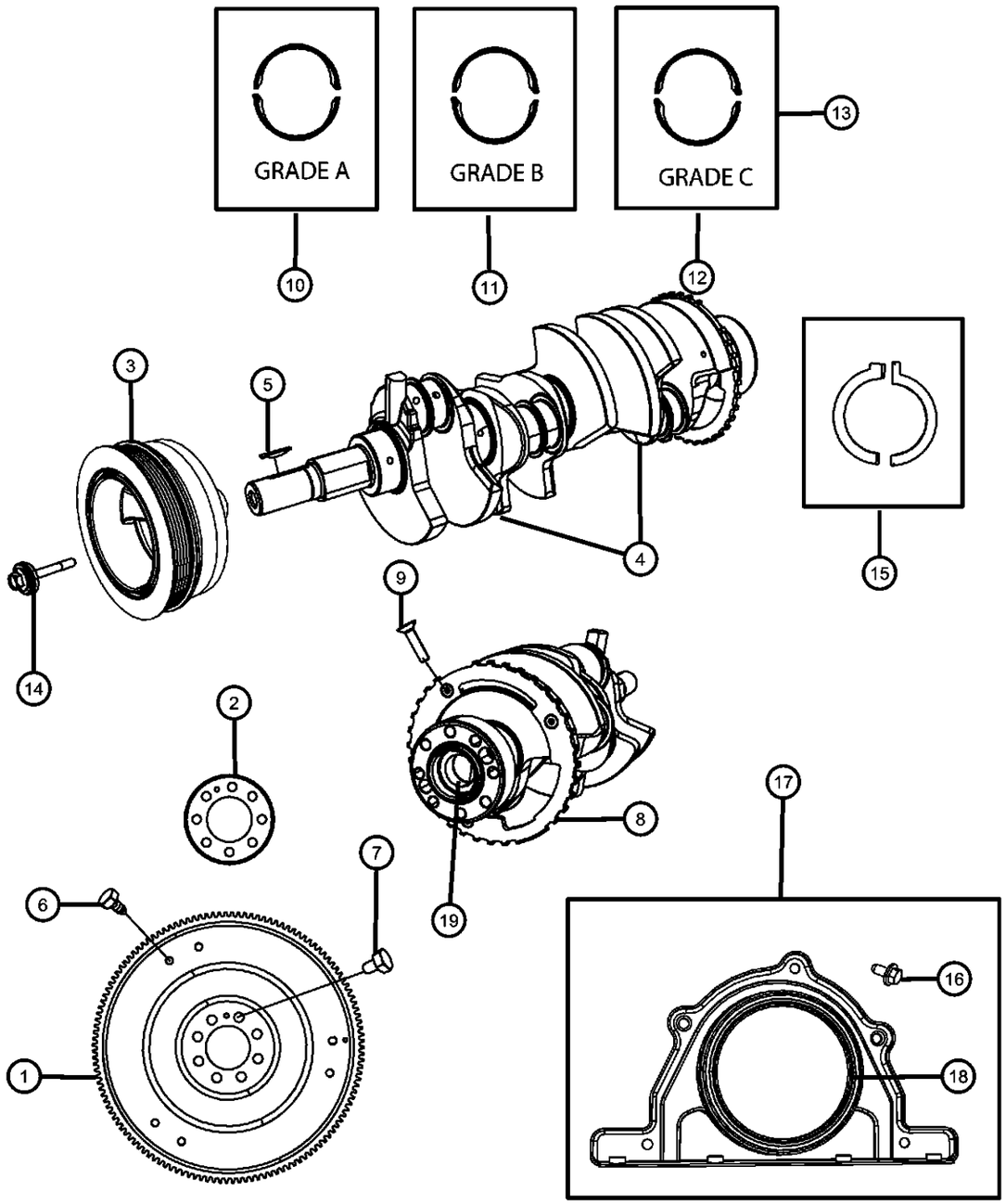

ITEM	PART NUMBER	QTY	LINE	SERIES	BODY	ENGINE	TRANS	TRIM	DESCRIPTION
7	06503465	8	D			ESF, EZC, EZD			BOLT, Hex Head Lock, M10X1.00X18.00, Torque Converter Drive Plate To Crankshaft, Mounting
8		8							TONE RING, Sensor, Serviced With Crankshaft, (NOT SERVICED)
9		8							SCREW, M6x1x25, Serviced With Crankshaft, (NOT SERVICED)
10	68060355AA	AR	D			EZD	DGJ		BEARING KIT, Crankshaft, A Grade, See Note
11	68060357AA	AR	D			EZD	DGJ		BEARING KIT, Crankshaft, B Grade, See Note
12	68046331AA	AR	D			EZD	DGJ		BEARING KIT, Crankshaft, C Grade, See Note
13	68060358AA	5	D			EZC, EZD			BEARING KIT, Crankshaft, .008mm O/S
14	06508400AA	1	D			EZC, EZD			BOLT AND CONED WASHER, Hex Head, M14X1.5X102.00, Damper To Crankshaft, Mounting
15	05083979AA	1	D			EZD	DGJ		THRUST WASHER PACKAGE, Crankshaft
16	06104005AA	5	D			EZC, EZD			BOLT, 6 Lobe External Head, M6X1.00X16.00, Rear Crankshaft Oil Retainer To Cylinder Block, Mounting
17									RETAINER PACKAGE, Crankshaft Rear Oil Seal
	68060342AA	1	D			EZC, EZD			
		1	D			EZD, EZH, EZC			
18		1							SEAL, Crankshaft Oil, Rear, Serviced In Rear Retainer Package, (NOT SERVICED)
19	04736283AA	1	D			EZC, EZD	DGJ		SLEEVECrankshaft

DODGE CHALLENGER (LC)

SERIES	LINE	BODY	ENGINE	TRANSMISSION
H = HIGHLINE P = PREMIUM X = SPECIAL	D = DODGE	22 = 2-DR SEDAN TYPE #2	EGG = 3.5L High Output V6 24V MPI Engine ESF = 6.1L SRT HEMI V8 Engine EZC = 5.7L HEMI VCT Engine EZD = 5.7L Hemi VCT MDS Engine	DEC = 6-Speed Manual TREMEC Transmission DGJ = 5-Speed Auto W5A580 Transmission DGV = 4-Spd. Automatic VLP 42RLE Trans

AR = use ase required - = Non illustrrated part

Pistons, Piston Rings, Connecting Rods, Connecting Rod Bearings 5.7L [EZD] With MDS
Figure 009EZD-425

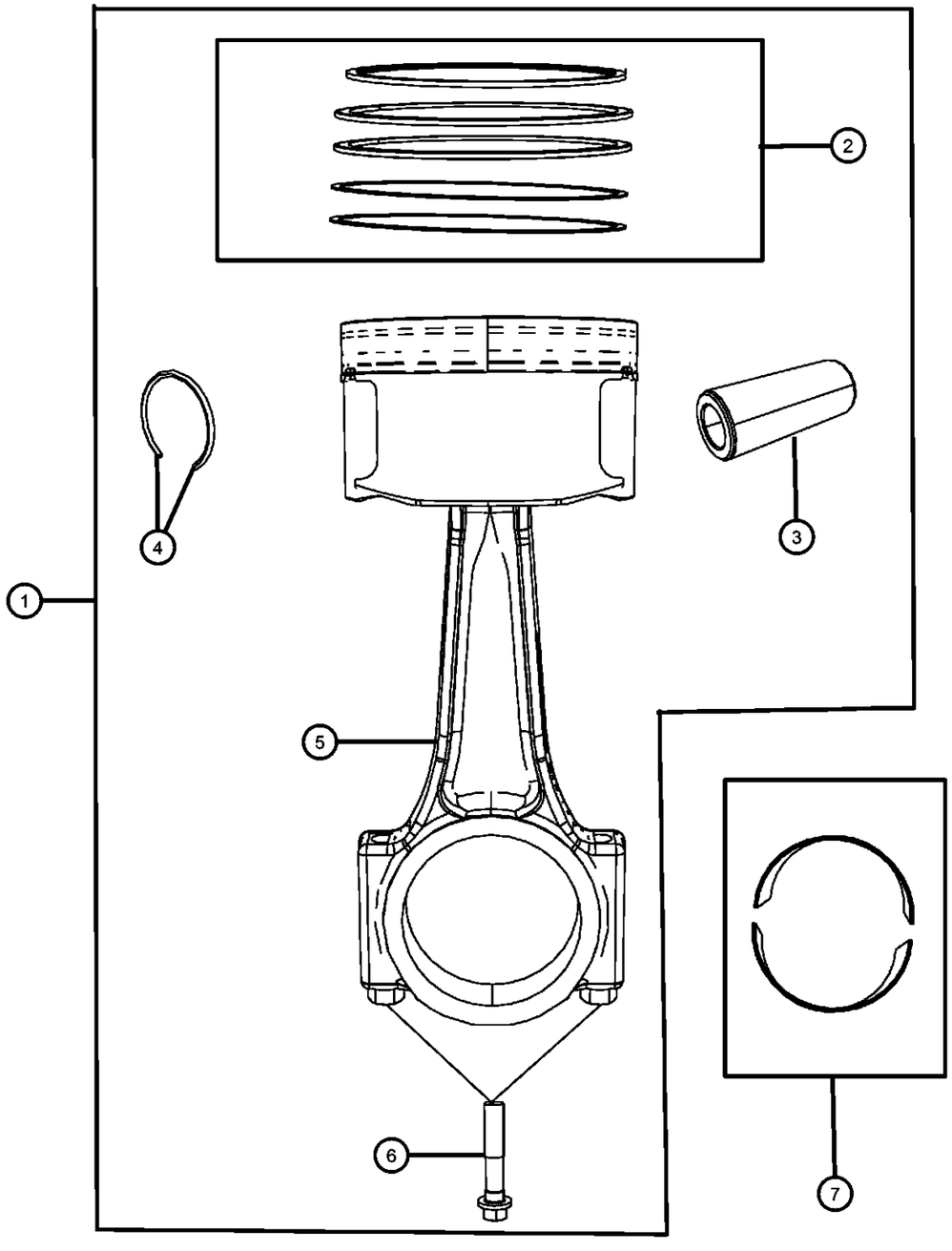

ITEM	PART NUMBER	QTY	LINE	SERIES	BODY	ENGINE	TRANS	TRIM	DESCRIPTION

NOTE: For Crankshaft Indentification, Stamping Location And Bearing Information Refer To The Service Manual.
For Bearing Selection Sizes Please Refer To Service Manual Group 9, Bearings Crankshaft Main, [Select Fit Identification]
Sales Codes:
[DEC] = 6-Speed Manual TR6060 Transmission
[DEH] = 6-Speed Manual NSG370 Transmission
[DF9] = AHS-T RWD Automatic Transmission
[DGJ] = 5-Speed Automatic W5A580 Transmission
[DGQ] = 5-Speed Automatic 545RFE Transmission
[DGV] = 4-Speed Automatic VLP 42RLE Transmission
[DG0] = All Automatic Transmissions
[DHR] = Single Speed On Demand MP3010 Transfer Case
[DHU] = AWD Electronic Shift Two Speed NVG 244 H/D Transfer Case
[DHZ] = Full Time Single Mode NVG 140 Transfer Case
[EGS] = 4.0L SOHC V-6 Engine
[EG0] = All 4.0L Engines
[EKG] = 3.7L [Magnum] V-6 Engine
[EK0] = All 3.7L 6-Cylinder Gas Engines
[ENS] = 2.8L 4 Cylinder Turbo Diesel Engine
[EN0] = All 2.8L 4 Cylinder Turbo Diesel Engines
[ESF] = 6.1L SRT V-8 Hemi Engine
[ES0] = All 6.1L 8-Cylinder Engines
[EVA] = 4.7L [Magnum] V-8 Engine
[EVD] = 4.7L V-8 FFV Engine
[EVE] = 4.7L V-8 Engine
[EV0] = All 4.7L 8-Cylinder Engines
[EZA] = 5.7L Hemi V-8 Engine
[EZB] = 5.7L Hemi V-8 Multi-Displacement Engine
[EZC] = 5.7L Hemi V-8 VCT Non Multi-Displacement Engine
[EZD] = 5.7L Hemi V-8 VCT Multi-Displacement Engine
[EZE] = 5.7L Hemi V-8 HEV Engine
[EZ0] = All 5.7L 8-Cylinder Engines
[NAA] = Federal Emissions
[NAE] = California Emissions
[NAS] = 50 State Emissions
[NA1] = Export Emissions
[NHK] = Engine Cylinder Block Heater
[XEF] = Transfer Case Skid Plate Sheild

1									PISTON PIN AND ROD
	53022258AA	4	D			EZC, EZD			Cylinders 2,4,6.8
	53022257AA	4	D			EZC, EZD			Cylinders 1,3,5,7
2	68046210AA	1	D			EZD	DGJ		RING PACKAGE, Piston, Standard Size
3		1							PIN, Piston, Serviced With Piston Package, (NOT SERVICED)
4		1							RING, Piston Pin, Serviced With Piston Package, (NOT SERVICED)

DODGE CHALLENGER (LC)

SERIES	LINE	BODY	ENGINE	TRANSMISSION
H = HIGHLINE P = PREMIUM X = SPECIAL	D = DODGE	22 = 2-DR SEDAN TYPE #2	EGG = 3.5L High Output V6 24V MPI Engine ESF = 6.1L SRT HEMI V8 Engine EZC = 5.7L HEMI VCT Engine EZD = 5.7L Hemi VCT MDS Engine	DEC = 6-Speed Manual TREMEC Transmission DGJ = 5-Speed Auto W5A580 Transmission DGV = 4-Spd. Automatic VLP 42RLE Trans

AR = use ase required - = Non illustrrated part

Pistons, Piston Rings, Connecting Rods, Connecting Rod Bearings 5.7L [EZD] With MDS
Figure 009EZD-425

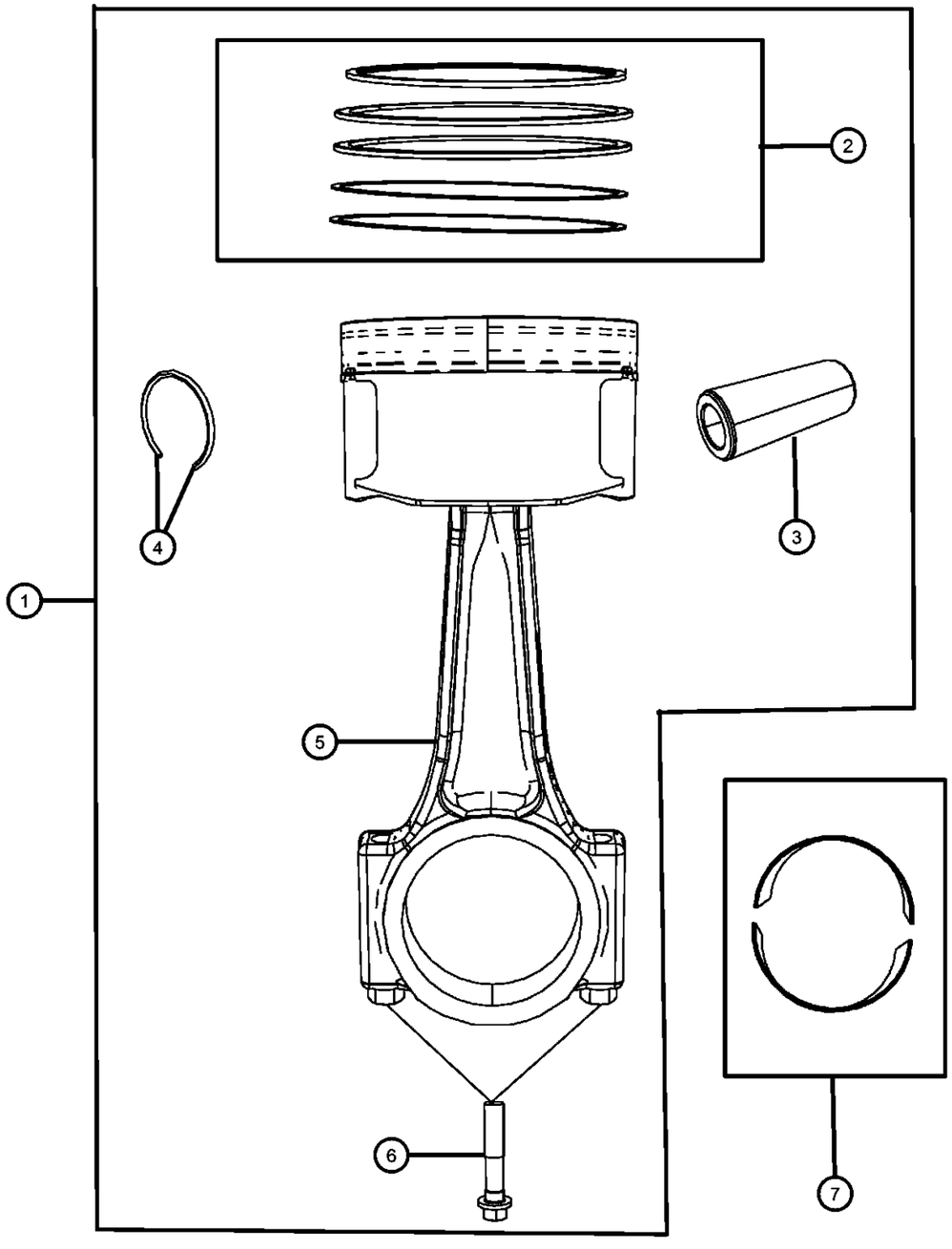

ITEM	PART NUMBER	QTY	LINE	SERIES	BODY	ENGINE	TRANS	TRIM	DESCRIPTION
5		1							ROD, Connecting, Serviced With Piston Package, (NOT SERVICED)
6	06506335AA	8	D			EZC, EZD			BOLT, Connecting Rod
7	68060359AA	8	D			EZC, EZD			BEARING PACKAGE, Connecting Rod, Standard, See Note

DODGE CHALLENGER (LC)

SERIES	LINE	BODY	ENGINE	TRANSMISSION
H = HIGHLINE P = PREMIUM X = SPECIAL	D = DODGE	22 = 2-DR SEDAN TYPE #2	EGG = 3.5L High Output V6 24V MPI Engine ESF = 6.1L SRT HEMI V8 Engine EZC = 5.7L HEMI VCT Engine EZD = 5.7L Hemi VCT MDS Engine	DEC = 6-Speed Manual TREMEC Transmission DGJ = 5-Speed Auto W5A580 Transmission DGV = 4-Spd. Automatic VLP 42RLE Trans

Camshaft And Valvetrain 5.7L [EZD] With MDS
Figure 009EZD-505

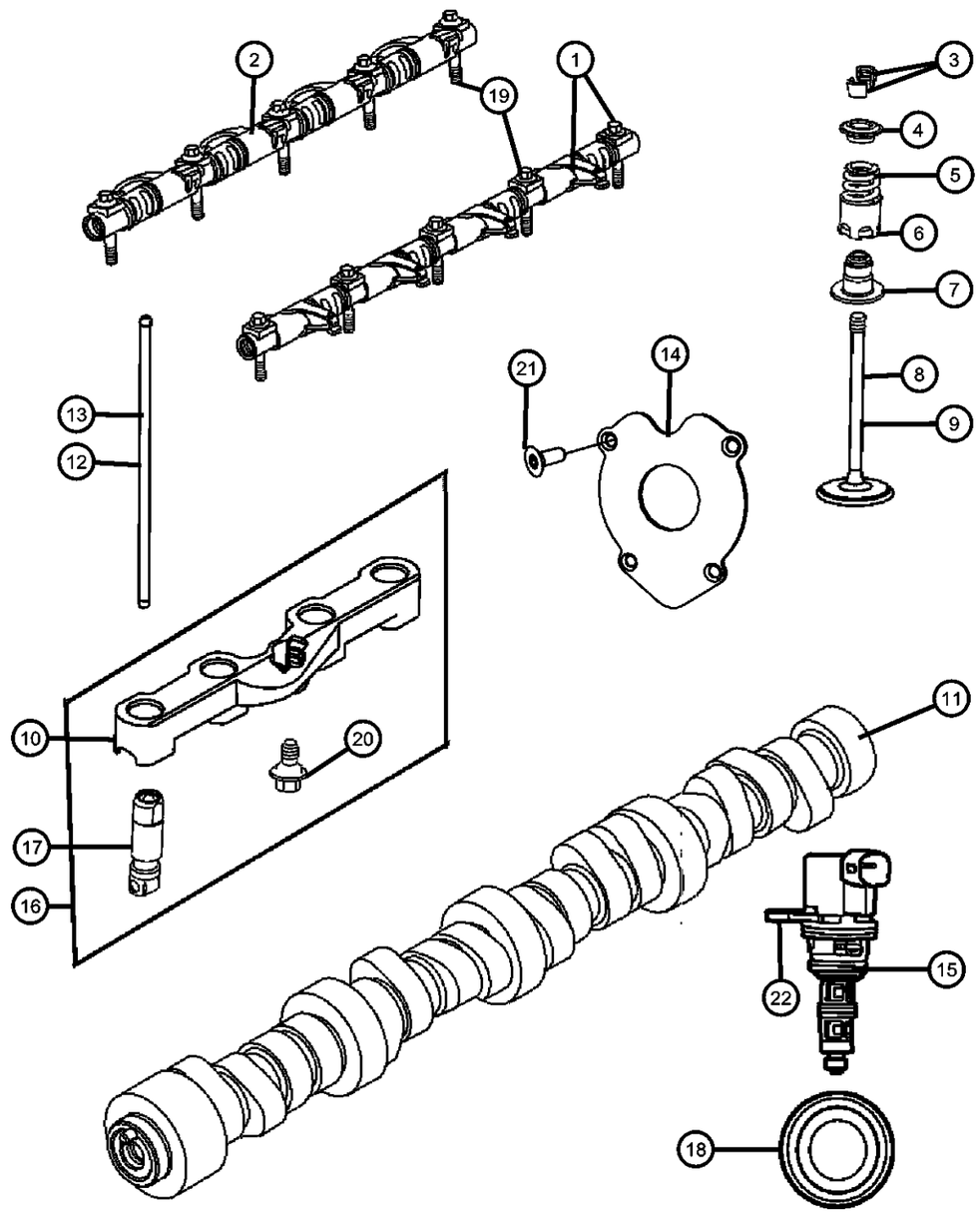

ITEM	PART NUMBER	QTY	LINE	SERIES	BODY	ENGINE	TRANS	TRIM	DESCRIPTION
1									ROCKER ARM, Exhaust
	68060344AA	2	D			EZD, EZC			
		2	D			EZC, EZD, EZH			
2									ROCKER ARM, Intake
	68060343AA	2	D			EZC, EZD			
		2	D			EZC, EZD, EZH			
3									LOCK, Valve Spring Retainer
	68060350AA	32	D			EZC, EZD, EZH			
		32	D			EZC, EZD			
4									RETAINER, Valve Spring
	68060351AA	16	D			EZC, EZD, EZH			
		16	D			EZC, EZD			
5	53022089AD	16	D			EZC, EZD			SPRING, Valve
6	53022225AB	16	D			EZC, EZD			SEAT, Valve Spring
7	53022090AB	16	D			EZC, EZD			SEAL, Valve Guide
8	53022087AA	8	D			EZC, EZD			VALVE, Intake, Standard
9	53022088AB	8	D			EZC, EZD			VALVE, Exhaust, Standard
10									YOKE, Tappet Aligning
	53021727AC	2	D			EZD			Front
	53021729AC	2	D			EZD			Rear
11	53022372AA	1	D			EZD			CAMSHAFT, Engine
12	53021556BB	8	D			EZC, EZD			PUSH ROD, Intake Valve
13	53021557BB	8	D			EZC, EZD			PUSH ROD, Exhaust Valve
14	53022178AE	1	D			EZC, EZD			PLATE, Camshaft Thrust
15	53032152AC	4	D			EZD			SOLENOID, Multiple Displacement
16									LIFTERS AND YOKE, Hydraulic, Engine
	68060714AA	2	D			EZD, EZH			Front
	68060715AA	2	D			EZD, EZH			Rear
17		2							LIFTER, Hydraulic Roller Deactivating, Serviced In Lifters And Yoke, (NOT SERVICED)
18	06507663AA	1	D			EZD, EZC			PLUG, Camshaft

DODGE CHALLENGER (LC)

SERIES	LINE	BODY	ENGINE	TRANSMISSION
H = HIGHLINE P = PREMIUM X = SPECIAL	D = DODGE	22 = 2-DR SEDAN TYPE #2	EGG = 3.5L High Output V6 24V MPI Engine ESF = 6.1L SRT HEMI V8 Engine EZC = 5.7L HEMI VCT Engine EZD = 5.7L Hemi VCT MDS Engine	DEC = 6-Speed Manual TREMEC Transmission DGJ = 5-Speed Auto W5A580 Transmission DGV = 4-Spd. Automatic VLP 42RLE Trans

AR = use ase required - = Non illustrrated part

Camshaft And Valvetrain 5.7L [EZD] With MDS
Figure 009EZD-505

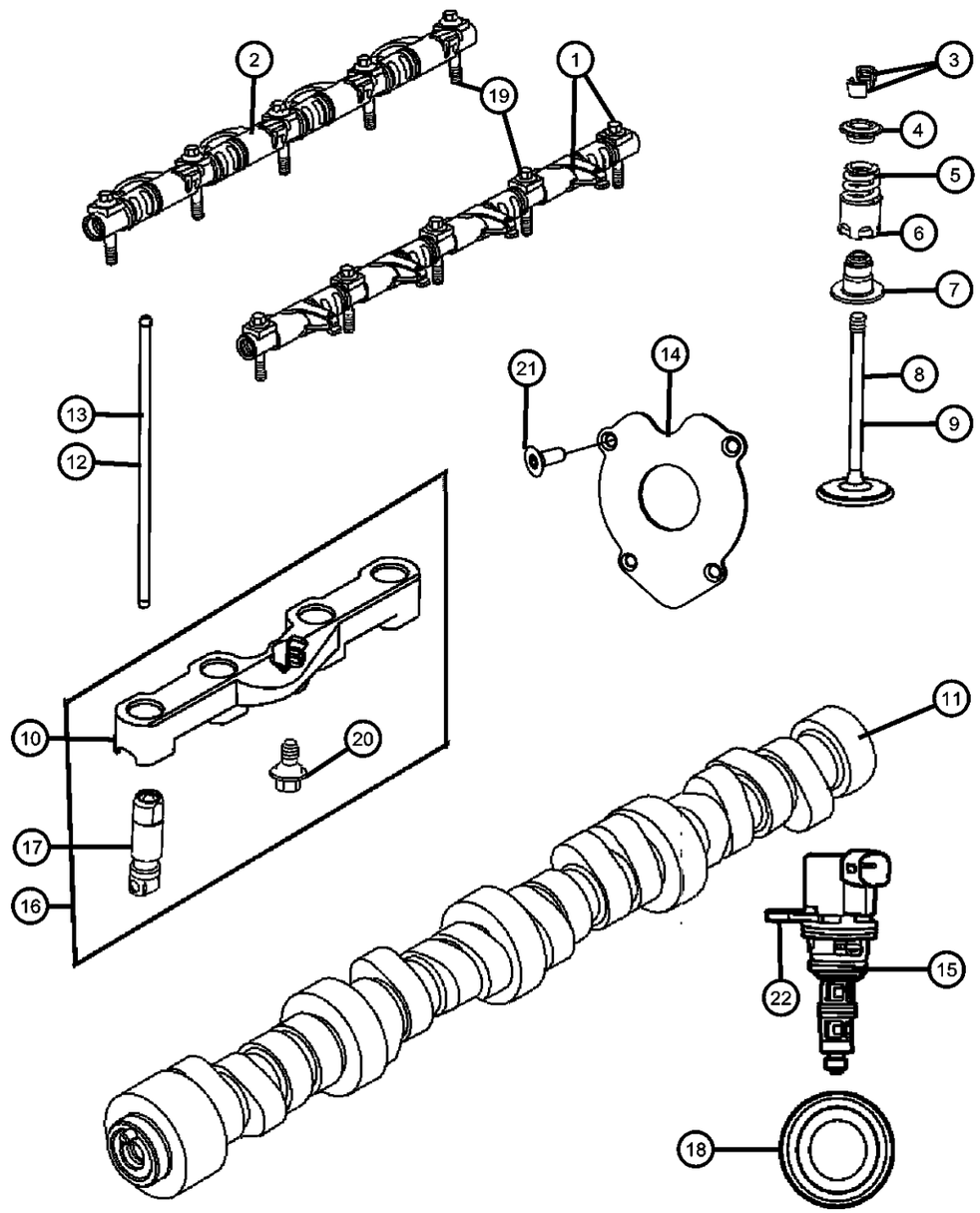

ITEM	PART NUMBER	QTY	LINE	SERIES	BODY	ENGINE	TRANS	TRIM	DESCRIPTION
19	06507072AA	10	D			EZC, EZD			BOLT, Hex Flange Head, M8X1.25X50.00, Rocker Arm Shaft To Cylinder Head, Mounting
20	06509208AA	2	D			EZD			BOLT, Hex Flange Head, M6x1.00x14.00, Lifter Guide To Cylinder Block, Mounting
21	06102205AA	4	D			EZC, EZD			BOLT, Recessed Torx head, M6X1.00X15.00, Camshaft Thrust Plate To Cylinder Block, Mounting
22									BOLT AND CONED WASHER, Hex Head, M6X1.00X14.00
	06102164AA	1	D			EZC, EZD			Variable Valve Timing Solenoid To Cylinder Block, Mounting
		4	D			EZC, EZD, EZH			MDS Soleniod To Cylinder Block, Mounting
		4	D			EZC, EZD			MDS Soleniod To Cylinder Block, Mounting
		1	D			EZD, EZH, EZC			Variable Valve Timing Solenoid To Cylinder Block, Mounting
-23									SOLENOID, Variable Valve Timing, Exhaust
	53022338AA	1	D			EZD			
		1	D			EZD, EZH			

DODGE CHALLENGER (LC)

SERIES	LINE	BODY	ENGINE	TRANSMISSION
H = HIGHLINE	D = DODGE	22 = 2-DR SEDAN TYPE #2	EGG = 3.5L High Output V6 24V MPI Engine	DEC = 6-Speed Manual TREMEC Transmission
P = PREMIUM			ESF = 6.1L SRT HEMI V8 Engine	DGJ = 5-Speed Auto W5A580 Transmission
X = SPECIAL			EZC = 5.7L HEMI VCT Engine	DGV = 4-Spd. Automatic VLP 42RLE Trans
			EZD = 5.7L Hemi VCT MDS Engine	

AR = use ase required - = Non illustrrated part

Timing Case Cover 5.7L [EZD] With MDS
Figure 009EZD-605

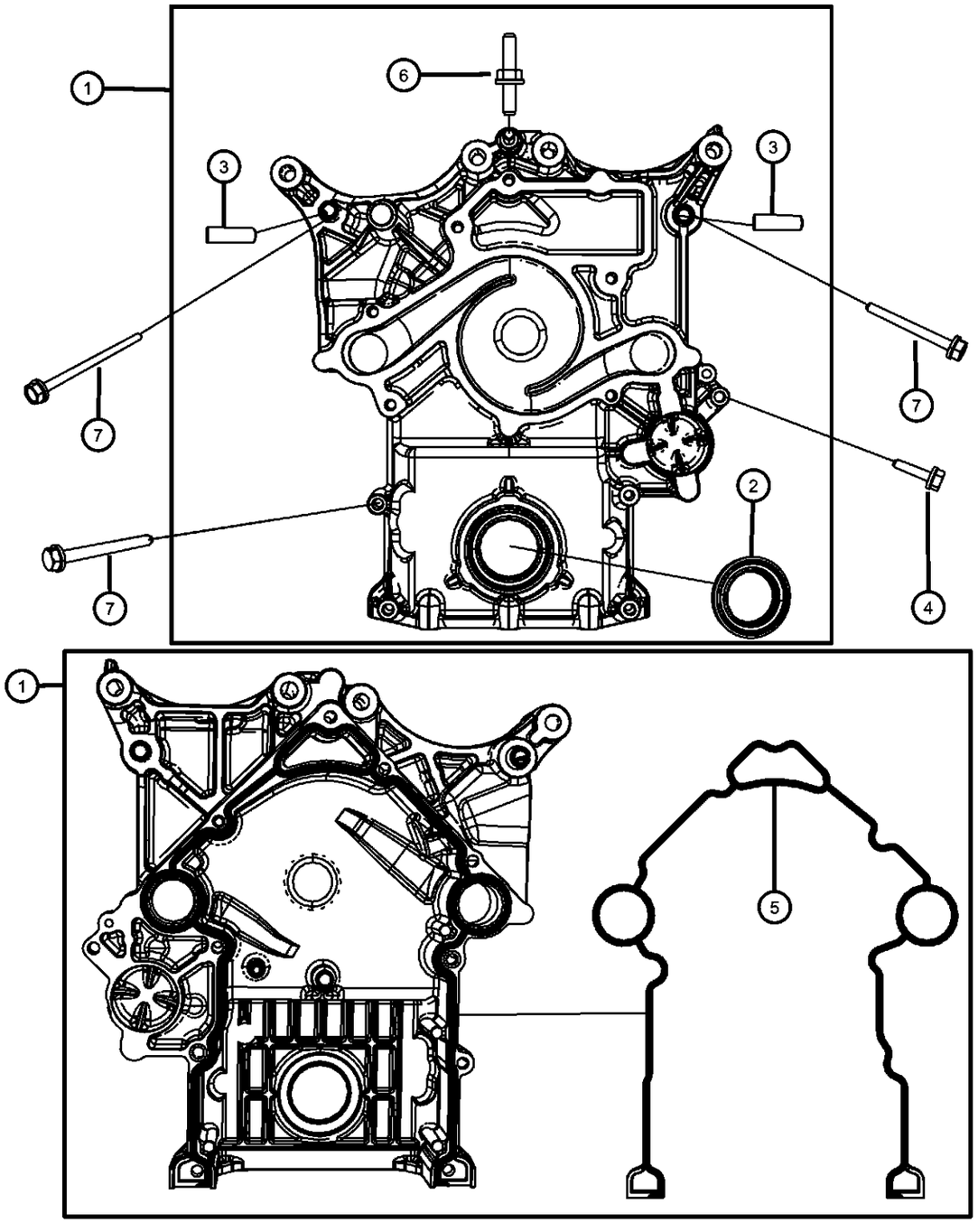

ITEM	PART NUMBER	QTY	LINE	SERIES	BODY	ENGINE	TRANS	TRIM	DESCRIPTION

NOTE:
Sales Codes:
[DEC] = 6-Speed Manual TR6060 Transmission
[DEH] = 6-Speed Manual NSG370 Transmission
[DF9] = AHS-T RWD Automatic Transmission
[DGJ] = 5-Speed Automatic W5A580 Transmission
[DGQ] = 5-Speed Automatic 545RFE Transmission
[DGV] = 4-Speed Automatic VLP 42RLE Transmission
[DG0] = All Automatic Transmissions
[DHR] = Single Speed On Demand MP3010 Transfer Case
[DHU] = AWD Electronic Shift Two Speed NVG 244 H/D Transfer Case
[DHZ] = Full Time Single Mode NVG 140 Transfer Case
[EGS] = 4.0L SOHC V-6 Engine
[EG0] = All 4.0L Engines
[EKG] = 3.7L [Magnum] V-6 Engine
[EK0] = All 3.7L 6-Cylinder Gas Engines
[ENS] = 2.8L 4 Cylinder Turbo Diesel Engine
[EN0] = All 2.8L 4 Cylinder Turbo Diesel Engines
[ESF] = 6.1L SRT V-8 Hemi Engine
[ES0] = All 6.1L 8-Cylinder Engines
[EVA] = 4.7L [Magnum] V-8 Engine
[EVD] = 4.7L V-8 FFV Engine
[EVE] = 4.7L V-8 Engine
[EV0] = All 4.7L 8-Cylinder Engines
[EZA] = 5.7L Hemi V-8 Engine
[EZB] = 5.7L Hemi V-8 Multi-Displacement Engine
[EZC] = 5.7L Hemi V-8 VCT Non Multi-Displacement Engine
[EZD] = 5.7L Hemi V-8 VCT Multi-Displacement Engine
[EZE] = 5.7L Hemi V-8 HEV Engine
[EZ0] = All 5.7L 8-Cylinder Engines
[NAA] = Federal Emissions
[NAE] = California Emissions
[NAS] = 50 State Emissions
[NA1] = Export Emissions
[NHK] = Engine Cylinder Block Heater
[XEF] = Transfer Case Skid Plate Sheild

1	53022096AF	1	D			EZC, EZD			COVER, Timing Case
2	53021585AD	1	D			EZC, EZD			SEAL, Crankshaft Oil, Front
3	06506697AA	2	D			EZC, EZD			BUSHING, Timing Cover
4									BOLT AND CONED WASHER, Hex Head, M8X1.25X35.00
	06506269AA	5	D			EZC, EZD			Water Pump To Front Cover, Mounting
		5	D			EZC, EZD			Cover To Cylinder Block, Mounting
5									GASKET PACKAGE, Front Cover

DODGE CHALLENGER (LC)

SERIES	LINE	BODY	ENGINE	TRANSMISSION
H = HIGHLINE P = PREMIUM X = SPECIAL	D = DODGE	22 = 2-DR SEDAN TYPE #2	EGG = 3.5L High Output V6 24V MPI Engine ESF = 6.1L SRT HEMI V8 Engine EZC = 5.7L HEMI VCT Engine EZD = 5.7L Hemi VCT MDS Engine	DEC = 6-Speed Manual TREMEC Transmission DGJ = 5-Speed Auto W5A580 Transmission DGV = 4-Spd. Automatic VLP 42RLE Trans

Timing Case Cover 5.7L [EZD] With MDS
Figure 009EZD-605

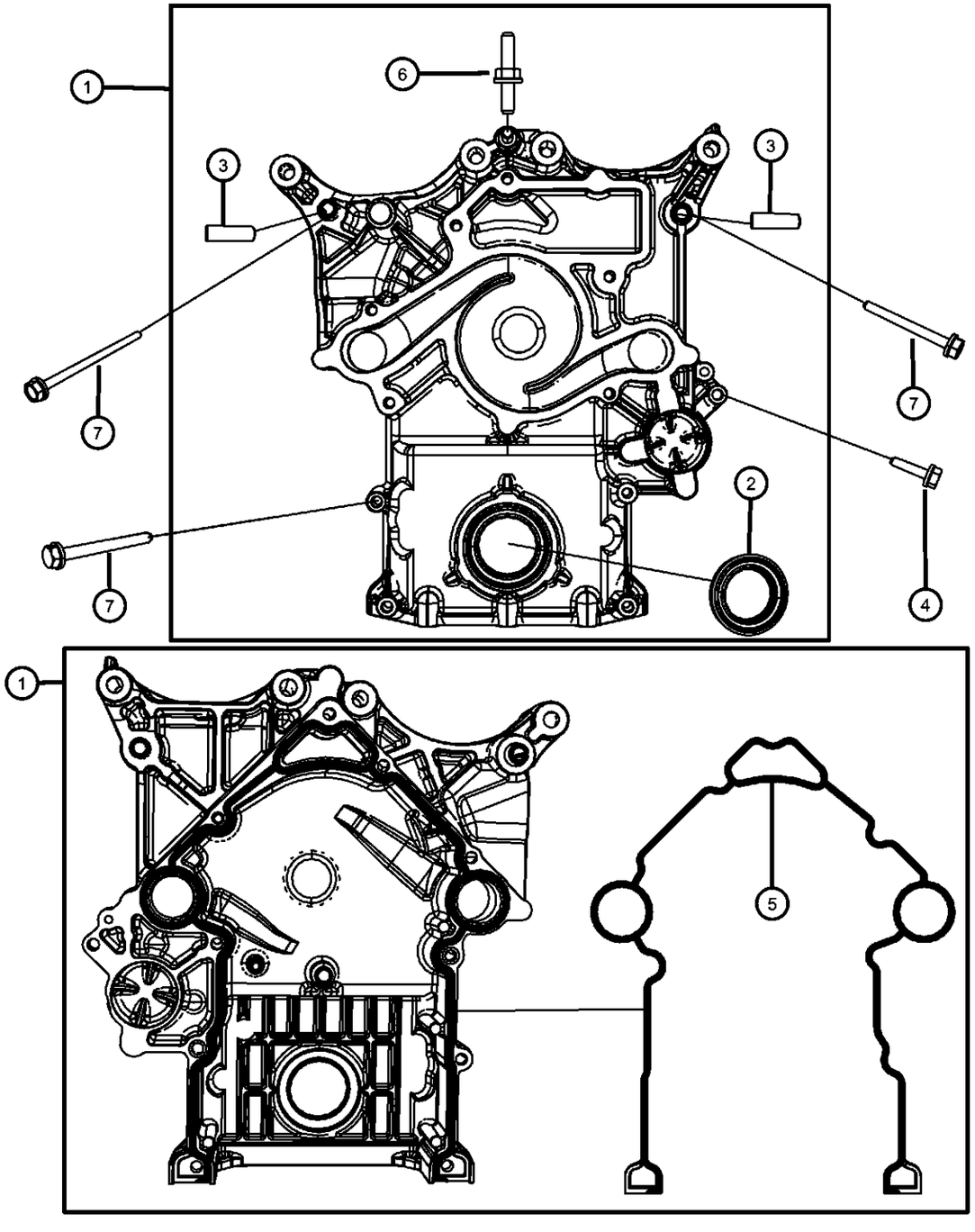

ITEM	PART NUMBER	QTY	LINE	SERIES	BODY	ENGINE	TRANS	TRIM	DESCRIPTION
	68060362AA	1	D			EZC, EZD, EZH			
		1	D			EZC, EZD			
6	06506343AA	1	D			EZC, EZD			STUD, Double Ended, M10X1.50X25.00, Cover/ Lifting Stud, Mounting
7									BOLT AND CONED WASHER, Hex Head, M8X1.25X85.00
	06102184AA	4	D			EZC, EZD			Cover To Cylinder Block, Mounting
		4	D			EZC, EZD			Water Pump To Front Cover, Mounting

DODGE CHALLENGER (LC)

SERIES	LINE	BODY	ENGINE	TRANSMISSION
H = HIGHLINE	D = DODGE	22 = 2-DR SEDAN TYPE #2	EGG = 3.5L High Output V6 24V MPI Engine	DEC = 6-Speed Manual TREMEC Transmission
P = PREMIUM			ESF = 6.1L SRT HEMI V8 Engine	DGJ = 5-Speed Auto W5A580 Transmission
X = SPECIAL			EZC = 5.7L HEMI VCT Engine	DGV = 4-Spd. Automatic VLP 42RLE Trans
			EZD = 5.7L Hemi VCT MDS Engine	

AR = use ase required - = Non illustrrated part

Timing System 5.7L [EZD] With MDS
Figure 009EZD-625

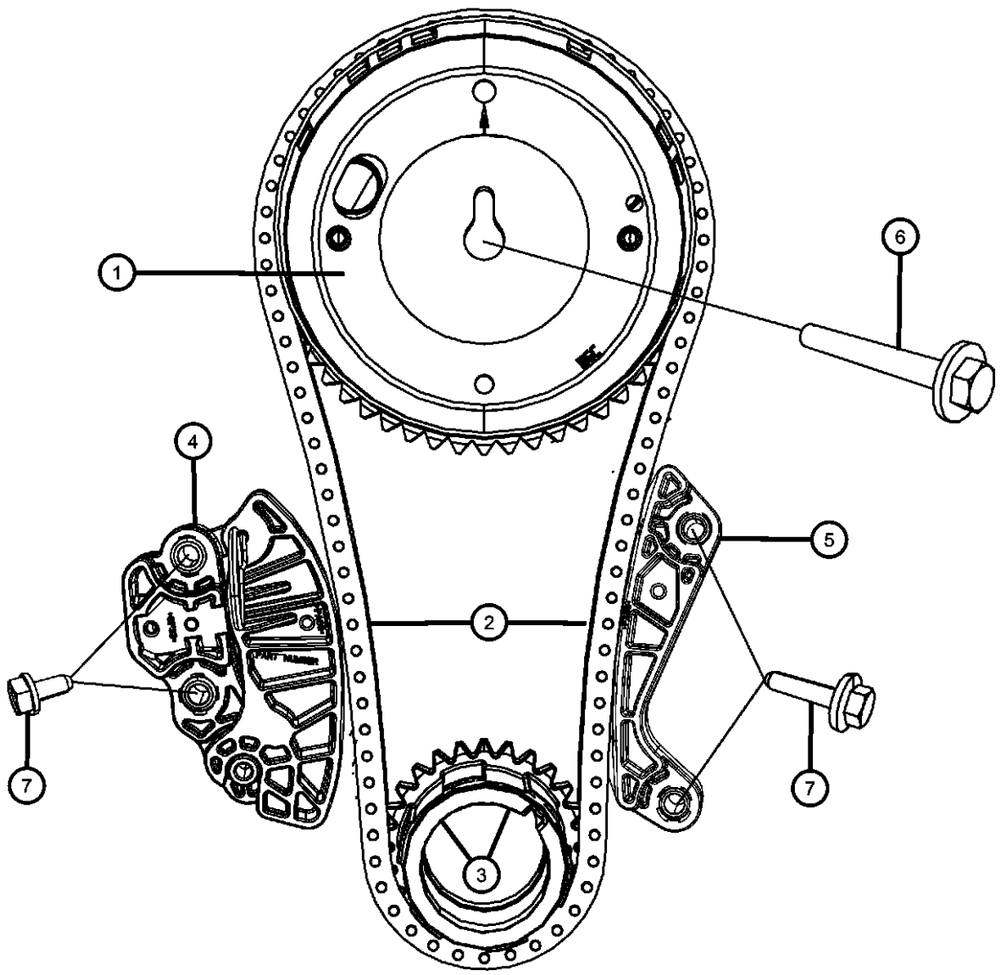

ITEM	PART NUMBER	QTY	LINE	SERIES	BODY	ENGINE	TRANS	TRIM	DESCRIPTION

NOTE:
Sales Codes:
[DEC] = 6-Speed Manual TR6060 Transmission
[DEH] = 6-Speed Manual NSG370 Transmission
[DF9] = AHS-T RWD Automatic Transmission
[DGJ] = 5-Speed Automatic W5A580 Transmission
[DGQ] = 5-Speed Automatic 545RFE Transmission
[DGV] = 4-Speed Automatic VLP 42RLE Transmission
[DG0] = All Automatic Transmissions
[DHR] = Single Speed On Demand MP3010 Transfer Case
[DHU] = AWD Electronic Shift Two Speed NVG 244 H/D Transfer Case
[DHZ] = Full Time Single Mode NVG 140 Transfer Case
[EGS] = 4.0L SOHC V-6 Engine
[EG0] = All 4.0L Engines
[EKG] = 3.7L [Magnum] V-6 Engine
[EK0] = All 3.7L 6-Cylinder Gas Engines
[ENS] = 2.8L 4 Cylinder Turbo Diesel Engine
[EN0] = All 2.8L 4 Cylinder Turbo Diesel Engines
[ESF] = 6.1L SRT V-8 Hemi Engine
[ES0] = All 6.1L 8-Cylinder Engines
[EVA] = 4.7L [Magnum] V-8 Engine
[EVD] = 4.7L V-8 FFV Engine
[EVE] = 4.7L V-8 Engine
[EV0] = All 4.7L 8-Cylinder Engines
[EZA] = 5.7L Hemi V-8 Engine
[EZB] = 5.7L Hemi V-8 Multi-Displacement Engine
[EZC] = 5.7L Hemi V-8 VCT Non Multi-Displacement Engine
[EZD] = 5.7L Hemi V-8 VCT Multi-Displacement Engine
[EZE] = 5.7L Hemi V-8 HEV Engine
[EZ0] = All 5.7L 8-Cylinder Engines
[NAA] = Federal Emissions
[NAE] = California Emissions
[NAS] = 50 State Emissions
[NA1] = Export Emissions
[NHK] = Engine Cylinder Block Heater
[XEF] = Transfer Case Skid Plate Sheild

1	53022243AE	1	D			EZC, EZD			PHASER, Camshaft
2	53022316AC	1	D			EZC, EZD			CHAIN, Timing
3	53022317AC	1	D			EZC, EZD			SPROCKET, Crankshaft
4	53022115AG	1	D			EZC, EZD			TENSIONER, Chain
5	53022315AD	1	D			EZC, EZD			GUIDE, Timing Chain

DODGE CHALLENGER (LC)

SERIES	LINE	BODY	ENGINE	TRANSMISSION
H = HIGHLINE P = PREMIUM X = SPECIAL	D = DODGE	22 = 2-DR SEDAN TYPE #2	EGG = 3.5L High Output V6 24V MPI Engine ESF = 6.1L SRT HEMI V8 Engine EZC = 5.7L HEMI VCT Engine EZD = 5.7L Hemi VCT MDS Engine	DEC = 6-Speed Manual TREMEC Transmission DGJ = 5-Speed Auto W5A580 Transmission DGV = 4-Spd. Automatic VLP 42RLE Trans

Timing System 5.7L [EZD] With MDS
Figure 009EZD-625

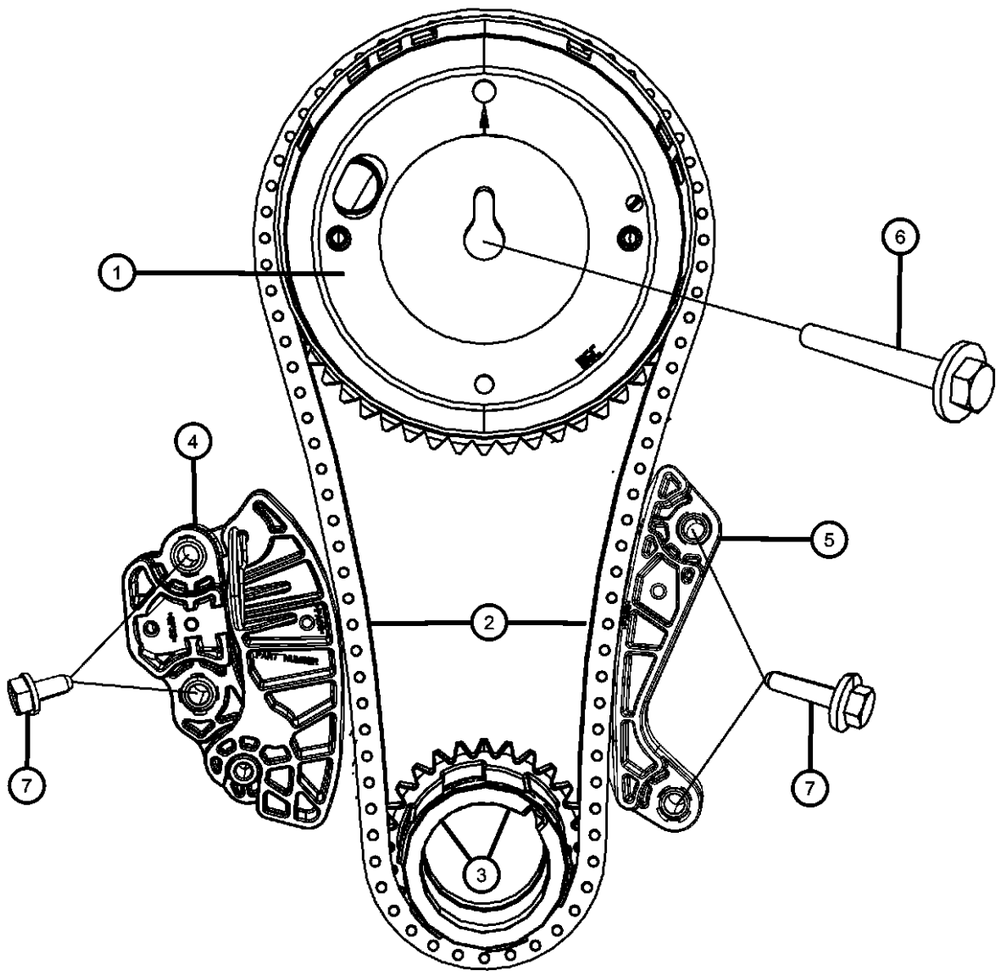

ITEM	PART NUMBER	QTY	LINE	SERIES	BODY	ENGINE	TRANS	TRIM	DESCRIPTION
6	06102430AA	1	D			EZC, EZD			BOLT AND CONED WASHER, Hex Head, M12X1.75X95.00, Phaser To Camshaft, Mounting
7	06509174AA	4	D			EZC, EZD			BOLT AND CONED WASHER, Hex Head, M6x1.00x30.00, Chain Guide To Cylinder Block, Mounting

DODGE CHALLENGER (LC)

SERIES	LINE	BODY	ENGINE	TRANSMISSION
H = HIGHLINE P = PREMIUM X = SPECIAL	D = DODGE	22 = 2-DR SEDAN TYPE #2	EGG = 3.5L High Output V6 24V MPI Engine ESF = 6.1L SRT HEMI V8 Engine EZC = 5.7L HEMI VCT Engine EZD = 5.7L Hemi VCT MDS Engine	DEC = 6-Speed Manual TREMEC Transmission DGJ = 5-Speed Auto W5A580 Transmission DGV = 4-Spd. Automatic VLP 42RLE Trans

Engine Oiling Pump 5.7L [EZD] With MDS
Figure 009EZD-705

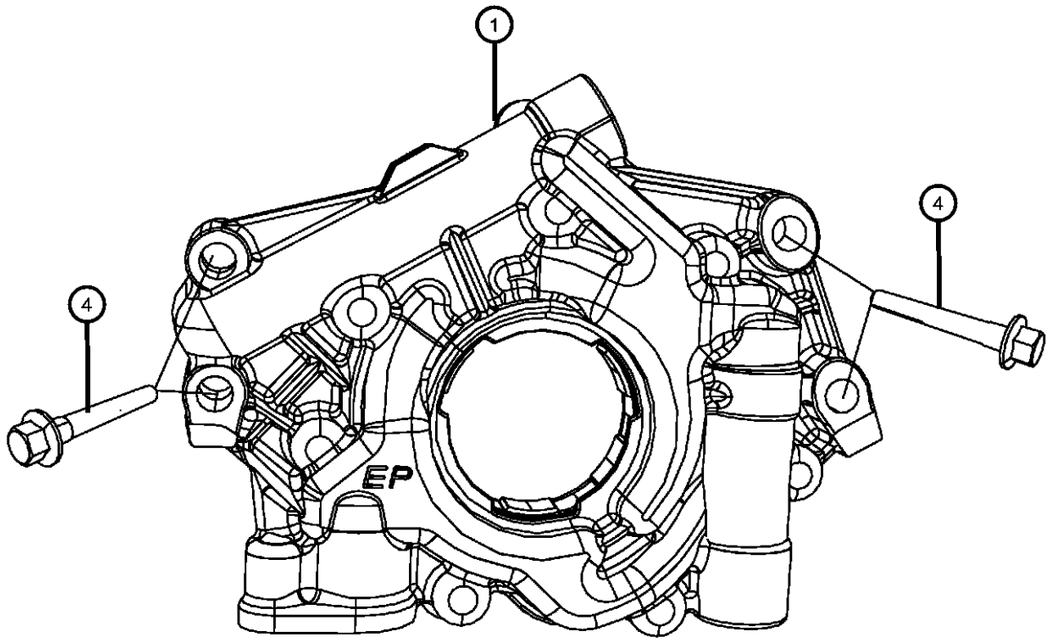

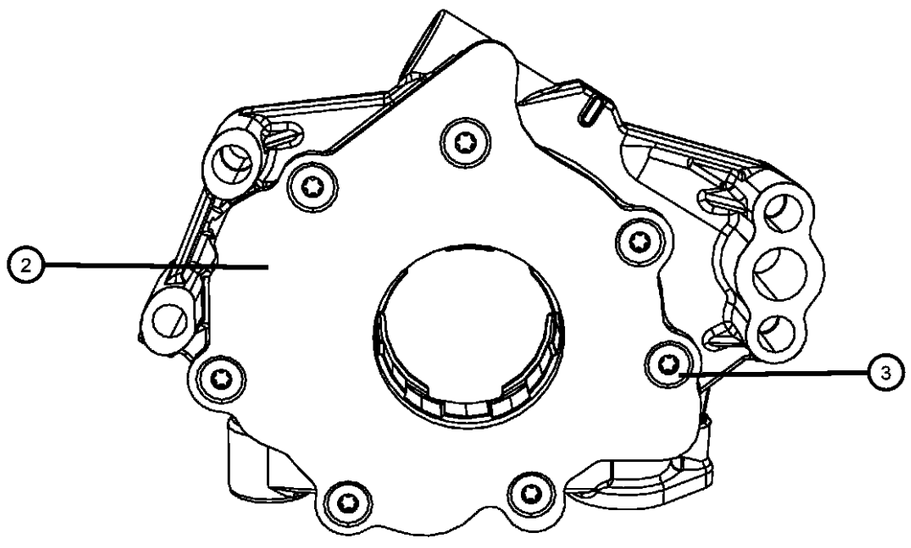

ITEM	PART NUMBER	QTY	LINE	SERIES	BODY	ENGINE	TRANS	TRIM	DESCRIPTION

NOTE:
Sales Codes:
[DEC] = 6-Speed Manual TR6060 Transmission
[DEH] = 6-Speed Manual NSG370 Transmission
[DF9] = AHS-T RWD Automatic Transmission
[DGJ] = 5-Speed Automatic W5A580 Transmission
[DGQ] = 5-Speed Automatic 545RFE Transmission
[DGV] = 4-Speed Automatic VLP 42RLE Transmission
[DG0] = All Automatic Transmissions
[DHR] = Single Speed On Demand MP3010 Transfer Case
[DHU] = AWD Electronic Shift Two Speed NVG 244 H/D Transfer Case
[DHZ] = Full Time Single Mode NVG 140 Transfer Case
[EGS] = 4.0L SOHC V-6 Engine
[EG0] = All 4.0L Engines
[EKG] = 3.7L [Magnum] V-6 Engine
[EK0] = All 3.7L 6-Cylinder Gas Engines
[ENS] = 2.8L 4 Cylinder Turbo Diesel Engine
[EN0] = All 2.8L 4 Cylinder Turbo Diesel Engines
[ESF] = 6.1L SRT V-8 Hemi Engine
[ES0] = All 6.1L 8-Cylinder Engines
[EVA] = 4.7L [Magnum] V-8 Engine
[EVD] = 4.7L V-8 FFV Engine
[EVE] = 4.7L V-8 Engine
[EV0] = All 4.7L 8-Cylinder Engines
[EZA] = 5.7L Hemi V-8 Engine
[EZB] = 5.7L Hemi V-8 Multi-Displacement Engine
[EZC] = 5.7L Hemi V-8 VCT Non Multi-Displacement Engine
[EZD] = 5.7L Hemi V-8 VCT Multi-Displacement Engine
[EZE] = 5.7L Hemi V-8 HEV Engine
[EZ0] = All 5.7L 8-Cylinder Engines
[NAA] = Federal Emissions
[NAE] = California Emissions
[NAS] = 50 State Emissions
[NA1] = Export Emissions
[NHK] = Engine Cylinder Block Heater
[XEF] = Transfer Case Skid Plate Sheild

1	53021622BE	1	D			EZC, EZD			PUMP, Engine Oil
2		1							COVER, Engine Oil Pump, Serviced With Oil Pump, (NOT SERVICED)
3		1							SCREW, Torx Head, Serviced With Oil Pump, (NOT SERVICED)
4	06101233	4	D			EZC, EZD			BOLT AND CONED WASHER, Hex Head, M8X1.25X65.00, Oil Pump To Cylinder Block, Mounting

DODGE CHALLENGER (LC)

SERIES	LINE	BODY	ENGINE	TRANSMISSION
H = HIGHLINE P = PREMIUM X = SPECIAL	D = DODGE	22 = 2-DR SEDAN TYPE #2	EGG = 3.5L High Output V6 24V MPI Engine ESF = 6.1L SRT HEMI V8 Engine EZC = 5.7L HEMI VCT Engine EZD = 5.7L Hemi VCT MDS Engine	DEC = 6-Speed Manual TREMEC Transmission DGJ = 5-Speed Auto W5A580 Transmission DGV = 4-Spd. Automatic VLP 42RLE Trans

Engine Oil Pan, Engine Oil Level Indicator And Related Parts 5.7L [EZD] With MDS
Figure 009EZD-725

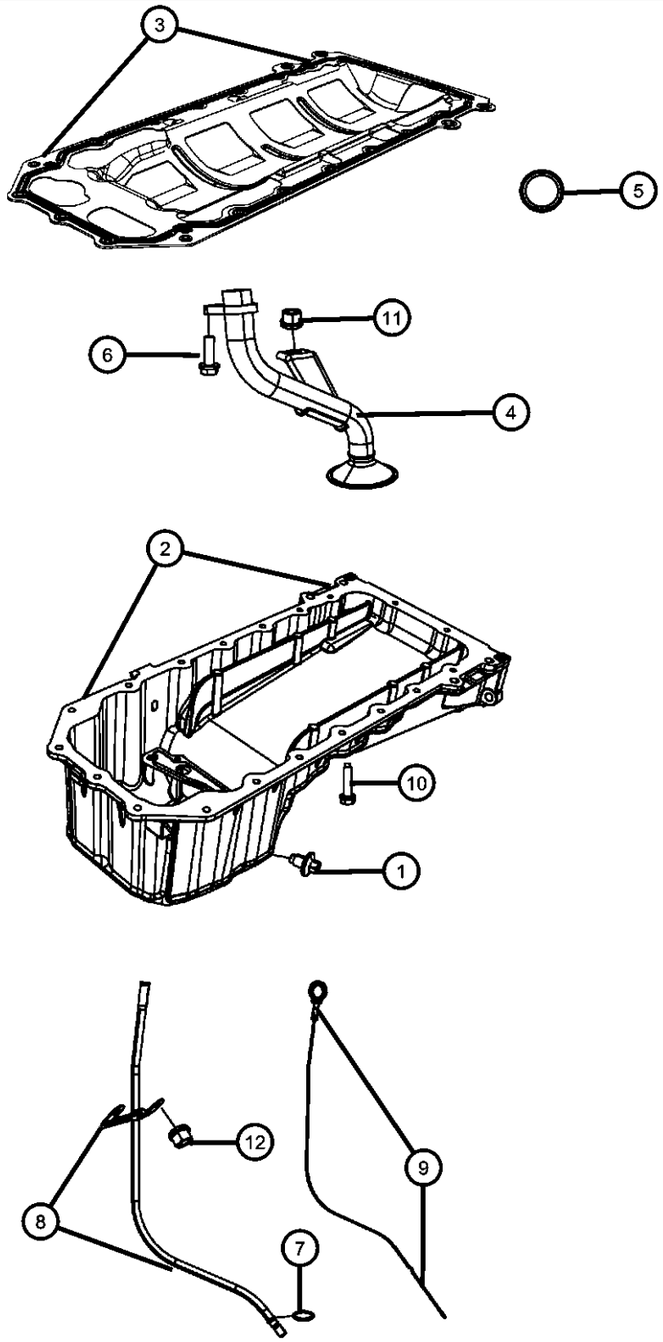

ITEM	PART NUMBER	QTY	LINE	SERIES	BODY	ENGINE	TRANS	TRIM	DESCRIPTION

NOTE:
Sales Codes:
[DEC] = 6-Speed Manual TR6060 Transmission
[DEH] = 6-Speed Manual NSG370 Transmission
[DF9] = AHS-T RWD Automatic Transmission
[DGJ] = 5-Speed Automatic W5A580 Transmission
[DGQ] = 5-Speed Automatic 545RFE Transmission
[DGV] = 4-Speed Automatic VLP 42RLE Transmission
[DG0] = All Automatic Transmissions
[DHR] = Single Speed On Demand MP3010 Transfer Case
[DHU] = AWD Electronic Shift Two Speed NVG 244 H/D Transfer Case
[DHZ] = Full Time Single Mode NVG 140 Transfer Case
[EGS] = 4.0L SOHC V-6 Engine
[EG0] = All 4.0L Engines
[EKG] = 3.7L [Magnum] V-6 Engine
[EK0] = All 3.7L 6-Cylinder Gas Engines
[ENS] = 2.8L 4 Cylinder Turbo Diesel Engine
[EN0] = All 2.8L 4 Cylinder Turbo Diesel Engines
[ESF] = 6.1L SRT V-8 Hemi Engine
[ES0] = All 6.1L 8-Cylinder Engines
[EVA] = 4.7L [Magnum] V-8 Engine
[EVD] = 4.7L V-8 FFV Engine
[EVE] = 4.7L V-8 Engine
[EV0] = All 4.7L 8-Cylinder Engines
[EZA] = 5.7L Hemi V-8 Engine
[EZB] = 5.7L Hemi V-8 Multi-Displacement Engine
[EZC] = 5.7L Hemi V-8 VCT Non Multi-Displacement Engine
[EZD] = 5.7L Hemi V-8 VCT Multi-Displacement Engine
[EZE] = 5.7L Hemi V-8 HEV Engine
[EZ0] = All 5.7L 8-Cylinder Engines
[NAA] = Federal Emissions
[NAE] = California Emissions
[NAS] = 50 State Emissions
[NA1] = Export Emissions
[NHK] = Engine Cylinder Block Heater
[XEF] = Transfer Case Skid Plate Sheild

1	06507741AA	1	D			EZC, EZD			PLUG, Oil Drain
2	04792870AA	1	D			EZC, EZD			PAN, Engine Oil
3	04792874AA	1	D			EZD			GASKET, Oil Pan
4	04792857BB	1	D			EZC, EZD			TUBE, Oil Pickup
5	53020861	1	D			EZC, EZD			SEAL, Oil Pick Up Tube
6	06102046AA	1	D			EZC, EZD			BOLT AND CONED WASHER, Hex Head, M8X1.25X27.00, Oil Pickup Tube To Cylinder Block, Mounting
7	53021144AA	1	D			EZC, EZD			O RING, Engine Oil Indicator Tube

DODGE CHALLENGER (LC)

SERIES	LINE	BODY	ENGINE	TRANSMISSION
H = HIGHLINE P = PREMIUM X = SPECIAL	D = DODGE	22 = 2-DR SEDAN TYPE #2	EGG = 3.5L High Output V6 24V MPI Engine ESF = 6.1L SRT HEMI V8 Engine EZC = 5.7L HEMI VCT Engine EZD = 5.7L Hemi VCT MDS Engine	DEC = 6-Speed Manual TREMEC Transmission DGJ = 5-Speed Auto W5A580 Transmission DGV = 4-Spd. Automatic VLP 42RLE Trans

AR = use ase required - = Non illustrrated part

Engine Oil Pan, Engine Oil Level Indicator And Related Parts 5.7L [EZD] With MDS
Figure 009EZD-725

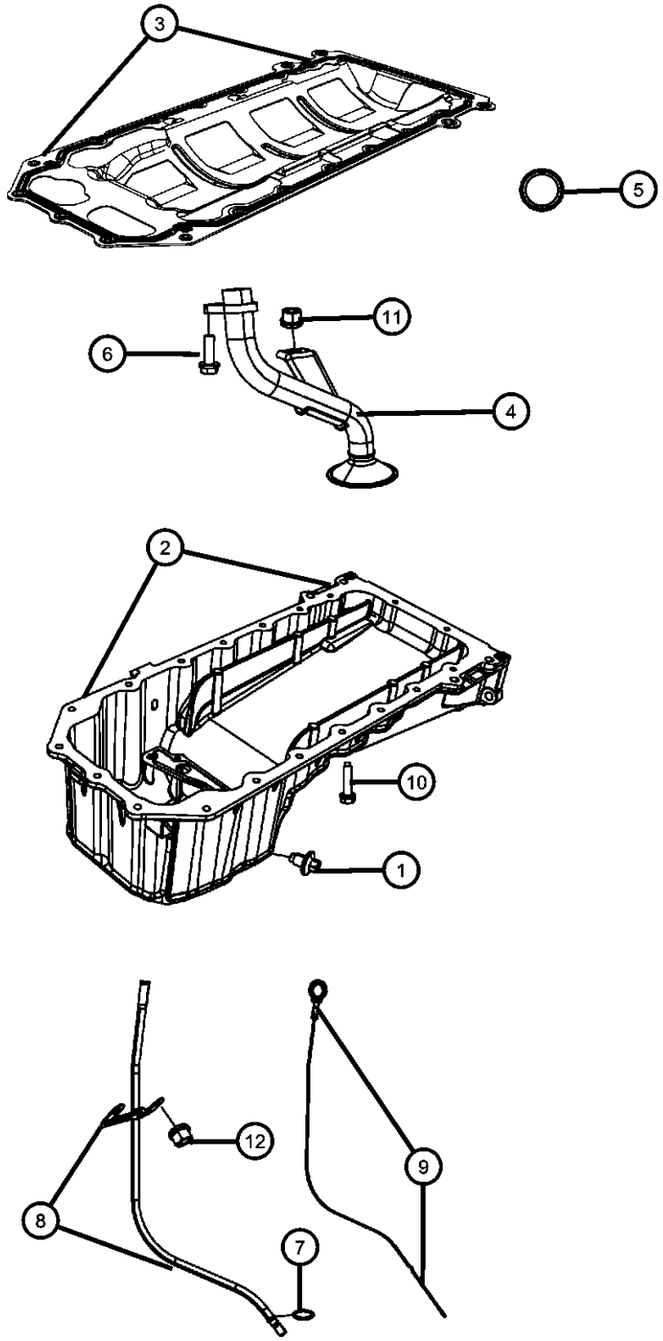

ITEM	PART NUMBER	QTY	LINE	SERIES	BODY	ENGINE	TRANS	TRIM	DESCRIPTION
8	53013977AB	1	D			EZC, EZD			TUBE, Engine Oil Indicator
9	04792872AE	1	D			EZC, EZD			INDICATOR, Engine Oil Level
10	06508448AA	19	D			EZC, EZD			BOLT AND CONED WASHER, Hex Head, M6X1.00X25.00, Oil Pan To Cylinder Block, Mounting
11	06502756	3	D						NUT, Hex Lock, M8x1.25, Pickup Tube To Cylinder Block, Mounting
12	06104715AA	2	D						NUT, Hex Flange Lock, M6X1.00, Engine Oil Level Indicator Tube, Mounting

DODGE CHALLENGER (LC)

SERIES	LINE	BODY	ENGINE	TRANSMISSION
H = HIGHLINE	D = DODGE	22 = 2-DR SEDAN TYPE #2	EGG = 3.5L High Output V6 24V MPI Engine	DEC = 6-Speed Manual TREMEC Transmission
P = PREMIUM			ESF = 6.1L SRT HEMI V8 Engine	DGJ = 5-Speed Auto W5A580 Transmission
X = SPECIAL			EZC = 5.7L HEMI VCT Engine	DGV = 4-Spd. Automatic VLP 42RLE Trans
			EZD = 5.7L Hemi VCT MDS Engine	

AR = use ase required - = Non illustrrated part

Engine Oil, Engine Oil Filter And Adapter 5.7L [EZD] With MDS
Figure 009EZD-745

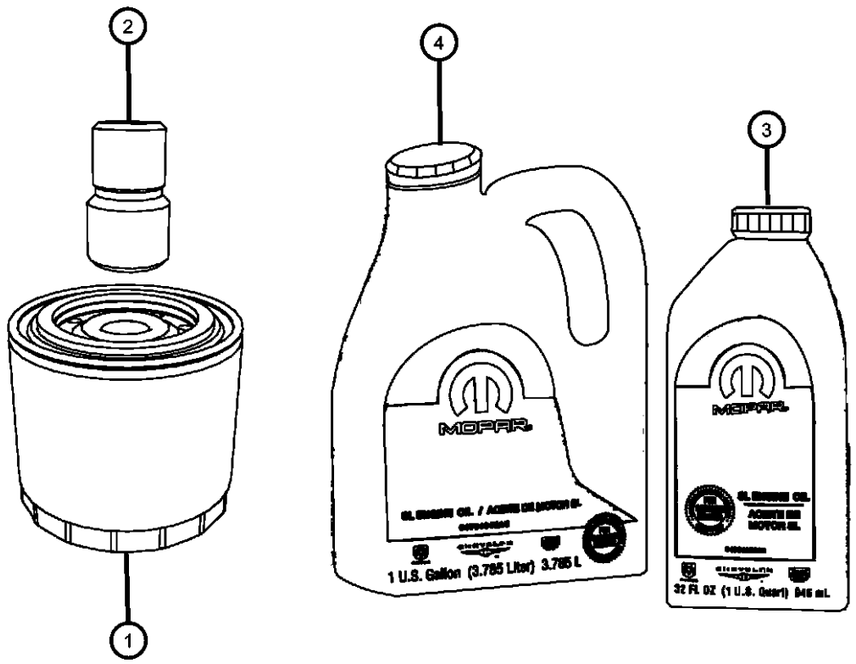

ITEM	PART NUMBER	QTY	LINE	SERIES	BODY	ENGINE	TRANS	TRIM	DESCRIPTION

NOTE:
Sales Codes:
[DEC] = 6-Speed Manual TR6060 Transmission
[DEH] = 6-Speed Manual NSG370 Transmission
[DF9] = AHS-T RWD Automatic Transmission
[DGJ] = 5-Speed Automatic W5A580 Transmission
[DGQ] = 5-Speed Automatic 545RFE Transmission
[DGV] = 4-Speed Automatic VLP 42RLE Transmission
[DG0] = All Automatic Transmissions
[DHR] = Single Speed On Demand MP3010 Transfer Case
[DHU] = AWD Electronic Shift Two Speed NVG 244 H/D Transfer Case
[DHZ] = Full Time Single Mode NVG 140 Transfer Case
[EGS] = 4.0L SOHC V-6 Engine
[EG0] = All 4.0L Engines
[EKG] = 3.7L [Magnum] V-6 Engine
[EK0] = All 3.7L 6-Cylinder Gas Engines
[ENS] = 2.8L 4 Cylinder Turbo Diesel Engine
[EN0] = All 2.8L 4 Cylinder Turbo Diesel Engines
[ESF] = 6.1L SRT V-8 Hemi Engine
[ES0] = All 6.1L 8-Cylinder Engines
[EVA] = 4.7L [Magnum] V-8 Engine
[EVD] = 4.7L V-8 FFV Engine
[EVE] = 4.7L V-8 Engine
[EV0] = All 4.7L 8-Cylinder Engines
[EZA] = 5.7L Hemi V-8 Engine
[EZB] = 5.7L Hemi V-8 Multi-Displacement Engine
[EZC] = 5.7L Hemi V-8 VCT Non Multi-Displacement Engine
[EZD] = 5.7L Hemi V-8 VCT Multi-Displacement Engine
[EZE] = 5.7L Hemi V-8 HEV Engine
[EZ0] = All 5.7L 8-Cylinder Engines
[NAA] = Federal Emissions
[NAE] = California Emissions
[NAS] = 50 State Emissions
[NA1] = Export Emissions
[NHK] = Engine Cylinder Block Heater
[XEF] = Transfer Case Skid Plate Sheild

1	04884899AB	1	D			EZC, EZD			FILTER, Engine Oil
2	04892338AA	1	D			EZC, EZD			CONNECTOR, Oil Filter, M22X1.50
3	04761872AC	AR	D			EZC, EZD			ENGINE OIL, 5W20, Quart, MS-10797 [API SM ILSAC GF-4], [32 Fluid Ounces] Minimum Ship Quanity Of 12
4	04761851AD	AR	D			EZC, EZD			ENGINE OIL, 5W20, Gallon, MS-10797 [API SM ILSAC GF-4], [128 Fluid Ounces] Minimum Ship Quanity Of 4

DODGE CHALLENGER (LC)

SERIES	LINE	BODY	ENGINE	TRANSMISSION
H = HIGHLINE P = PREMIUM X = SPECIAL	D = DODGE	22 = 2-DR SEDAN TYPE #2	EGG = 3.5L High Output V6 24V MPI Engine ESF = 6.1L SRT HEMI V8 Engine EZC = 5.7L HEMI VCT Engine EZD = 5.7L Hemi VCT MDS Engine	DEC = 6-Speed Manual TREMEC Transmission DGJ = 5-Speed Auto W5A580 Transmission DGV = 4-Spd. Automatic VLP 42RLE Trans

AR = use ase required - = Non illustrrated part

Exhaust Manifolds And Heat Shields 5.7L [EZD] With MDS
Figure 009EZD-1005

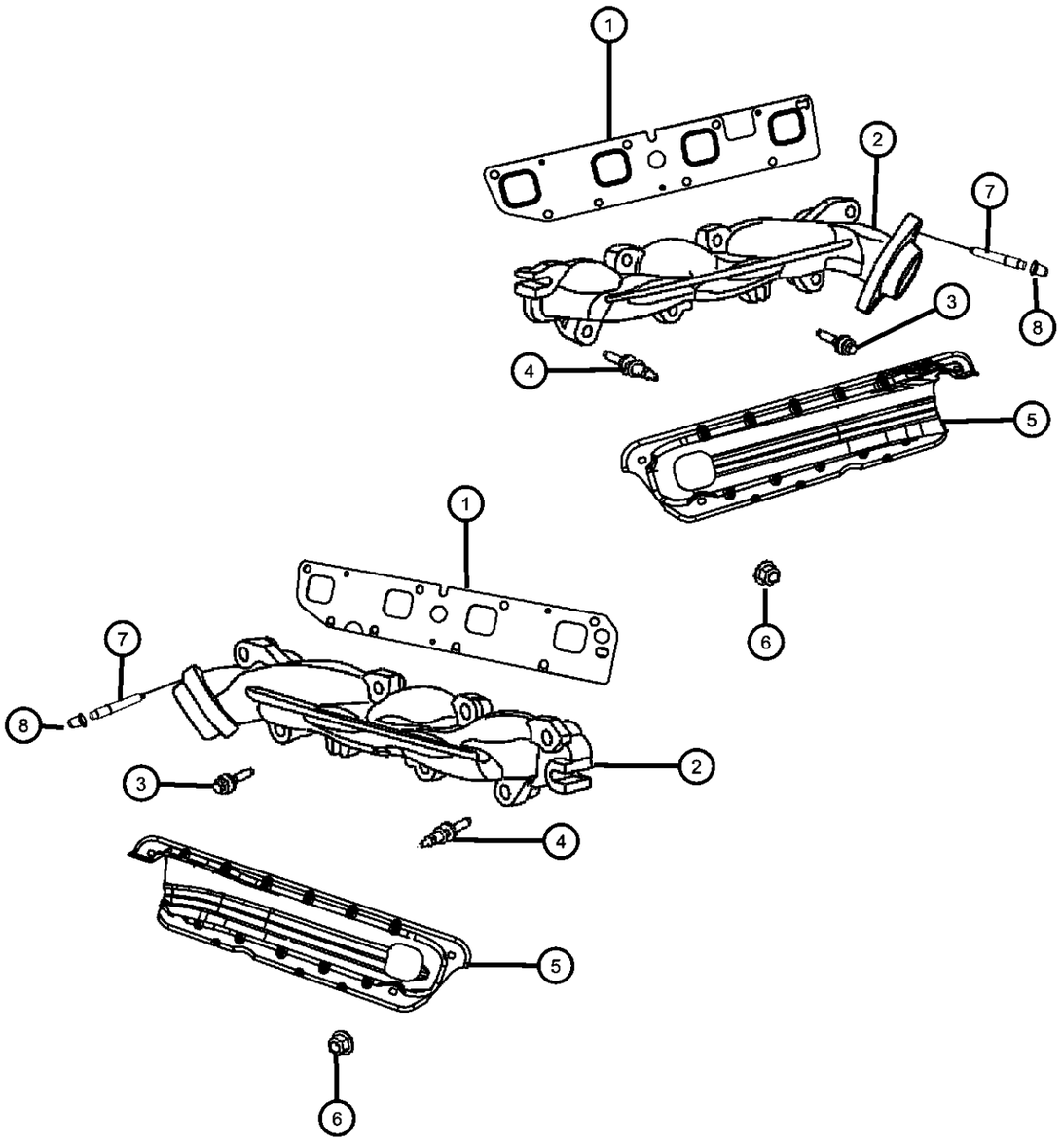

ITEM	PART NUMBER	QTY	LINE	SERIES	BODY	ENGINE	TRANS	TRIM	DESCRIPTION

NOTE:
Sales Codes:
[DEC] = 6-Speed Manual TR6060 Transmission
[DEH] = 6-Speed Manual NSG370 Transmission
[DF9] = AHS-T RWD Automatic Transmission
[DGJ] = 5-Speed Automatic W5A580 Transmission
[DGQ] = 5-Speed Automatic 545RFE Transmission
[DGV] = 4-Speed Automatic VLP 42RLE Transmission
[DG0] = All Automatic Transmissions
[DHR] = Single Speed On Demand MP3010 Transfer Case
[DHU] = AWD Electronic Shift Two Speed NVG 244 H/D Transfer Case
[DHZ] = Full Time Single Mode NVG 140 Transfer Case
[EGS] = 4.0L SOHC V-6 Engine
[EG0] = All 4.0L Engines
[EKG] = 3.7L [Magnum] V-6 Engine
[EK0] = All 3.7L 6-Cylinder Gas Engines
[ENS] = 2.8L 4 Cylinder Turbo Diesel Engine
[EN0] = All 2.8L 4 Cylinder Turbo Diesel Engines
[ESF] = 6.1L SRT V-8 Hemi Engine
[ES0] = All 6.1L 8-Cylinder Engines
[EVA] = 4.7L [Magnum] V-8 Engine
[EVD] = 4.7L V-8 FFV Engine
[EVE] = 4.7L V-8 Engine
[EV0] = All 4.7L 8-Cylinder Engines
[EZA] = 5.7L Hemi V-8 Engine
[EZB] = 5.7L Hemi V-8 Multi-Displacement Engine
[EZC] = 5.7L Hemi V-8 VCT Non Multi-Displacement Engine
[EZD] = 5.7L Hemi V-8 VCT Multi-Displacement Engine
[EZE] = 5.7L Hemi V-8 HEV Engine
[EZ0] = All 5.7L 8-Cylinder Engines
[NAA] = Federal Emissions
[NAE] = California Emissions
[NAS] = 50 State Emissions
[NA1] = Export Emissions
[NHK] = Engine Cylinder Block Heater
[XEF] = Transfer Case Skid Plate Sheild

1						GASKET, Exhaust Manifold
	53032966AF	1	D		EZC, EZD	Right
	53032965AF	1	D		EZC, EZD	Left
2						MANIFOLD, Exhaust
	53013848AE	1	D		EZC, EZD	Right
	53013849AE	1	D		EZC, EZD	Left
3	06507746AA	9	D		EZC, EZD	BOLT, Exhaust Manifold, M8x1.25x46.00, Exhaust Manifold To Cylinder Head, Mounting

DODGE CHALLENGER (LC)

SERIES	LINE	BODY	ENGINE	TRANSMISSION
H = HIGHLINE P = PREMIUM X = SPECIAL	D = DODGE	22 = 2-DR SEDAN TYPE #2	EGG = 3.5L High Output V6 24V MPI Engine ESF = 6.1L SRT HEMI V8 Engine EZC = 5.7L HEMI VCT Engine EZD = 5.7L Hemi VCT MDS Engine	DEC = 6-Speed Manual TREMEC Transmission DGJ = 5-Speed Auto W5A580 Transmission DGV = 4-Spd. Automatic VLP 42RLE Trans

Exhaust Manifolds And Heat Shields 5.7L [EZD] With MDS
Figure 009EZD-1005

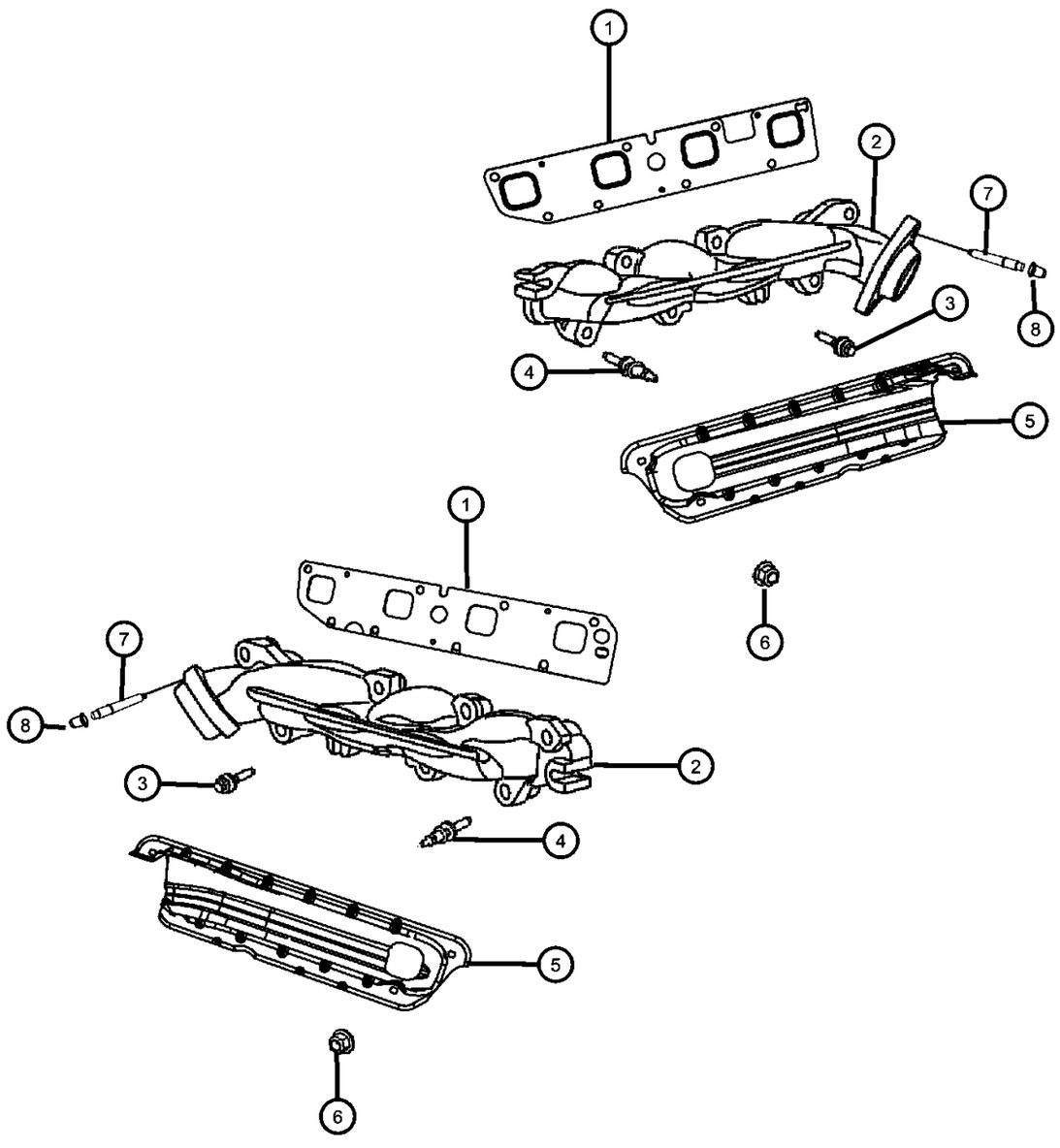

ITEM	PART NUMBER	QTY	LINE	SERIES	BODY	ENGINE	TRANS	TRIM	DESCRIPTION
4	06509544AA	8	D			EZC, EZD, EZH			STUD, Double Ended, M8X1.25XM6X1.00X73.00, Exhaust Manifold To Cylinder Head, Mounting
5									SHIELD, Exhaust Manifold
	53013855AC	1	D			EZC, EZD			Left
	53013856AC	1	D			EZC, EZD			Right
6	06505316AA	8	D			EZC, EZD			NUT, Hex Flange Lock, M6X1.00, Heat Shield To Exhaust Manifold, Mounting
7	06507880AA	4	D			EGG, EZC, EZD			STUD, Double Ended, Front Exhaust Pipe To Exhaust Manifold, Mounting
8	06104710AA	4	D			ES0, EZ0			NUT, Hex Flange Lock, M10x1.50, Front Exhaust Pipe To Exhaust Manifold, Mounting

DODGE CHALLENGER (LC)

SERIES	LINE	BODY	ENGINE	TRANSMISSION
H = HIGHLINE P = PREMIUM X = SPECIAL	D = DODGE	22 = 2-DR SEDAN TYPE #2	EGG = 3.5L High Output V6 24V MPI Engine ESF = 6.1L SRT HEMI V8 Engine EZC = 5.7L HEMI VCT Engine EZD = 5.7L Hemi VCT MDS Engine	DEC = 6-Speed Manual TREMEC Transmission DGJ = 5-Speed Auto W5A580 Transmission DGV = 4-Spd. Automatic VLP 42RLE Trans

AR = use ase required - = Non illustrrated part

Intake Manifold 5.7L [EZD] With MDS
Figure 009EZD-1025

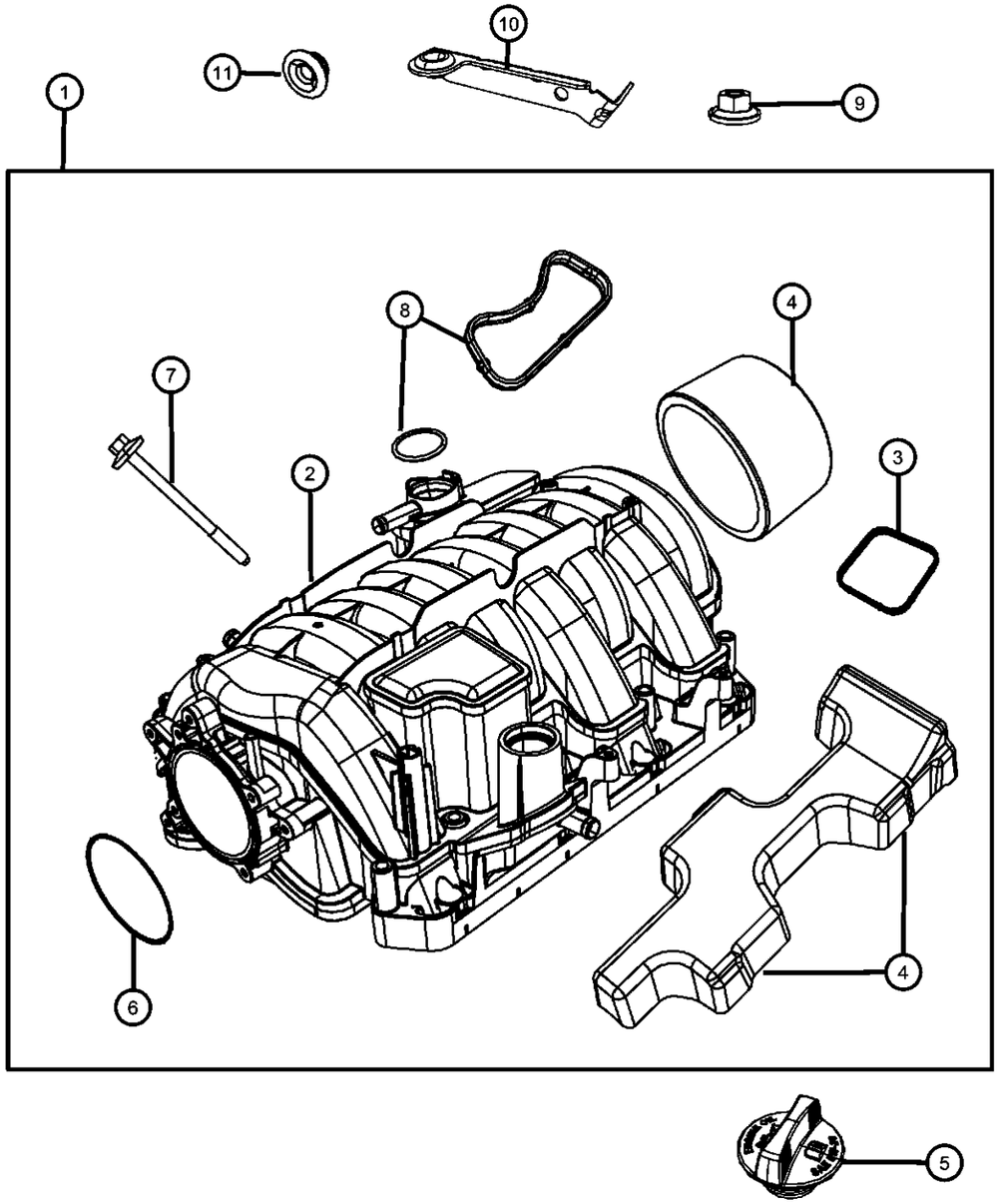

ITEM	PART NUMBER	QTY	LINE	SERIES	BODY	ENGINE	TRANS	TRIM	DESCRIPTION

NOTE:
Sales Codes:
[DEC] = 6-Speed Manual TR6060 Transmission
[DEH] = 6-Speed Manual NSG370 Transmission
[DF9] = AHS-T RWD Automatic Transmission
[DGJ] = 5-Speed Automatic W5A580 Transmission
[DGQ] = 5-Speed Automatic 545RFE Transmission
[DGV] = 4-Speed Automatic VLP 42RLE Transmission
[DG0] = All Automatic Transmissions
[DHR] = Single Speed On Demand MP3010 Transfer Case
[DHU] = AWD Electronic Shift Two Speed NVG 244 H/D Transfer Case
[DHZ] = Full Time Single Mode NVG 140 Transfer Case
[EGS] = 4.0L SOHC V-6 Engine
[EG0] = All 4.0L Engines
[EKG] = 3.7L [Magnum] V-6 Engine
[EK0] = All 3.7L 6-Cylinder Gas Engines
[ENS] = 2.8L 4 Cylinder Turbo Diesel Engine
[EN0] = All 2.8L 4 Cylinder Turbo Diesel Engines
[ESF] = 6.1L SRT V-8 Hemi Engine
[ES0] = All 6.1L 8-Cylinder Engines
[EVA] = 4.7L [Magnum] V-8 Engine
[EVD] = 4.7L V-8 FFV Engine
[EVE] = 4.7L V-8 Engine
[EV0] = All 4.7L 8-Cylinder Engines
[EZA] = 5.7L Hemi V-8 Engine
[EZB] = 5.7L Hemi V-8 Multi-Displacement Engine
[EZC] = 5.7L Hemi V-8 VCT Non Multi-Displacement Engine
[EZD] = 5.7L Hemi V-8 VCT Multi-Displacement Engine
[EZE] = 5.7L Hemi V-8 HEV Engine
[EZ0] = All 5.7L 8-Cylinder Engines
[NAA] = Federal Emissions
[NAE] = California Emissions
[NAS] = 50 State Emissions
[NA1] = Export Emissions
[NHK] = Engine Cylinder Block Heater
[XEF] = Transfer Case Skid Plate Sheild

1	68048131AA	1	D			EZC, EZD			MANIFOLD KIT, Intake
2		1							MANIFOLD, Engine Intake, Serviced In Intake Manifold Kit, (NOT SERVICED)
3	53022143AB	8	D			EZC, EZD			SEAL, Intake Manifold
4									PAD, Engine
	53013735AB	1	D			EZC, EZD			Rear Of Intake Manifold [Round]
	53013981AD	1	D			EZC, EZD			Engine Valley Cover
5	53013775AA	1	D			EZC, EZD			CAP, Oil Filler

DODGE CHALLENGER (LC)

SERIES	LINE	BODY	ENGINE	TRANSMISSION
H = HIGHLINE P = PREMIUM X = SPECIAL	D = DODGE	22 = 2-DR SEDAN TYPE #2	EGG = 3.5L High Output V6 24V MPI Engine ESF = 6.1L SRT HEMI V8 Engine EZC = 5.7L HEMI VCT Engine EZD = 5.7L Hemi VCT MDS Engine	DEC = 6-Speed Manual TREMEC Transmission DGJ = 5-Speed Auto W5A580 Transmission DGV = 4-Spd. Automatic VLP 42RLE Trans

AR = use ase required - = Non illustrrated part

Intake Manifold 5.7L [EZD] With MDS
Figure 009EZD-1025

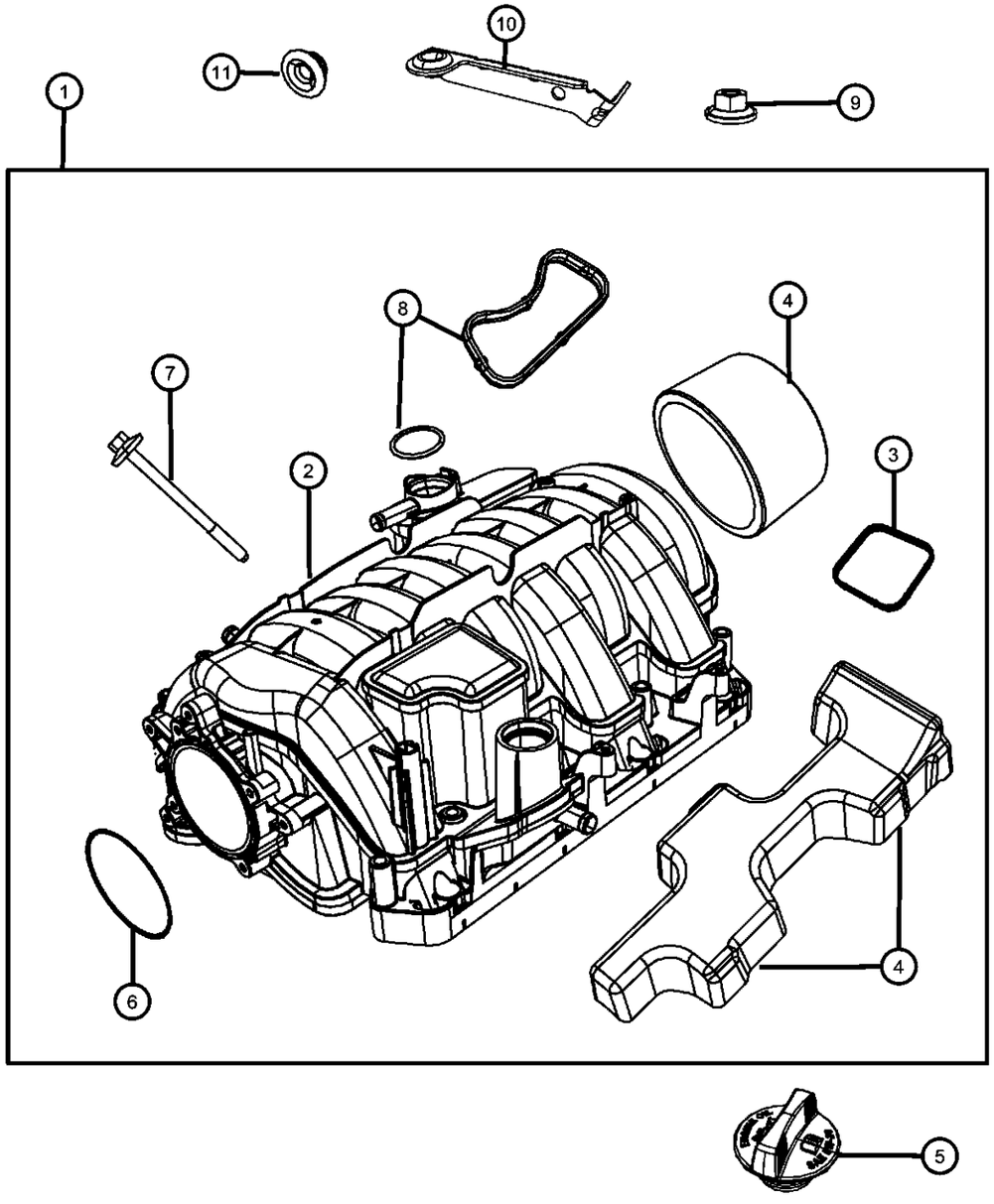

ITEM	PART NUMBER	QTY	LINE	SERIES	BODY	ENGINE	TRANS	TRIM	DESCRIPTION
6	53022320AB	1	D			EZC, EZD			SEAL, Throttle Body to Intake
7	06509246AA	10	D			EZC, EZD			BOLT AND CONED WASHER, Hex Head, M6X1.00X81.00, Intake Manifold To Cylinder Head, Mounting
8									SEAL, PCV
	53022142AB	2	D			EZC, EZD			Rectangle
	53032448AC	1	D			EZC, EZD			Round On PCV Valve
9	06104727AA	1	D			EZC, EZD	DEC, DGJ		NUT, M10x1.5, Air Cleaner Bracket, Mounting
10		1							BRACKET, Air Cleaner, (NOT SERVICED)
11	53032732AA	1	D			EZC, EZD	DEC, DGJ		GROMMET, Air Cleaner Bracket

DODGE CHALLENGER (LC)

SERIES	LINE	BODY	ENGINE	TRANSMISSION
H = HIGHLINE P = PREMIUM X = SPECIAL	D = DODGE	22 = 2-DR SEDAN TYPE #2	EGG = 3.5L High Output V6 24V MPI Engine ESF = 6.1L SRT HEMI V8 Engine EZC = 5.7L HEMI VCT Engine EZD = 5.7L Hemi VCT MDS Engine	DEC = 6-Speed Manual TREMEC Transmission DGJ = 5-Speed Auto W5A580 Transmission DGV = 4-Spd. Automatic VLP 42RLE Trans

Crankcase Ventilation 5.7L [EZD] With MDS
Figure 009EZD-1105

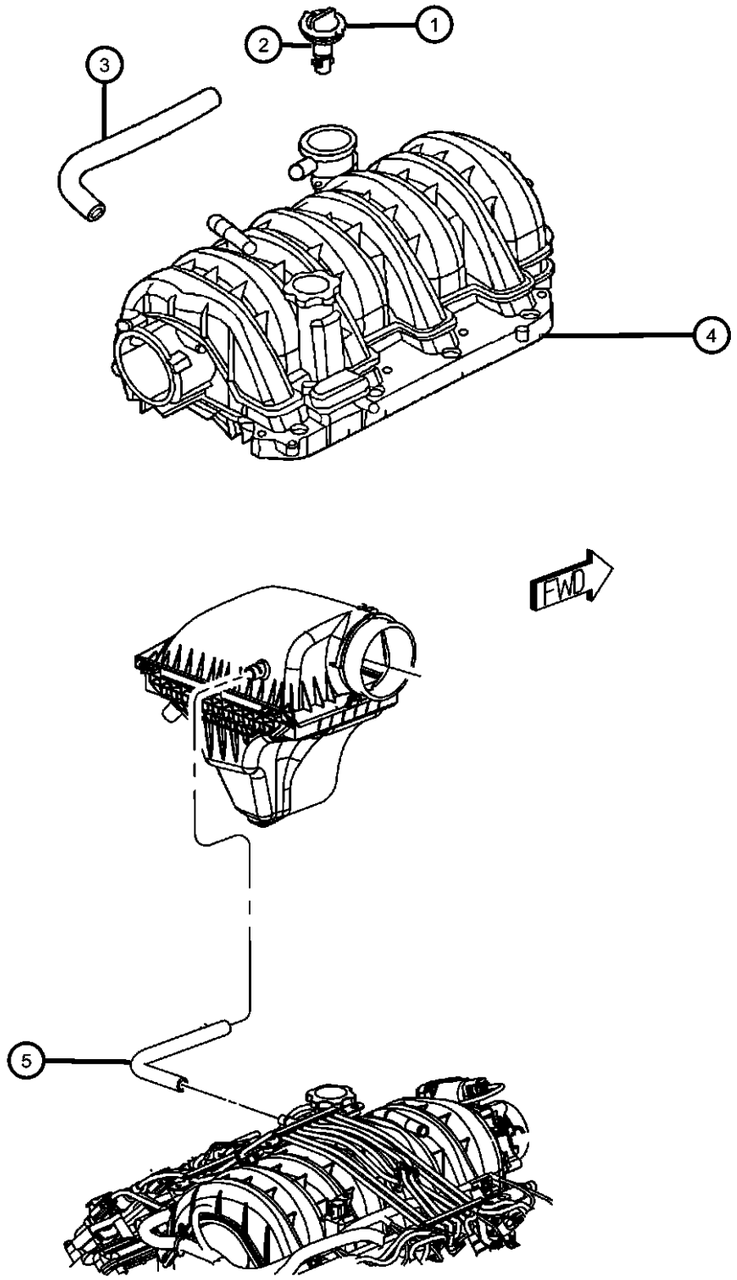

ITEM	PART NUMBER	QTY	LINE	SERIES	BODY	ENGINE	TRANS	TRIM	DESCRIPTION

NOTE:
Sales Codes:
[DEC] = 6-Speed Manual TR6060 Transmission
[DEH] = 6-Speed Manual NSG370 Transmission
[DF9] = AHS-T RWD Automatic Transmission
[DGJ] = 5-Speed Automatic W5A580 Transmission
[DGQ] = 5-Speed Automatic 545RFE Transmission
[DGV] = 4-Speed Automatic VLP 42RLE Transmission
[DG0] = All Automatic Transmissions
[DHR] = Single Speed On Demand MP3010 Transfer Case
[DHU] = AWD Electronic Shift Two Speed NVG 244 H/D Transfer Case
[DHZ] = Full Time Single Mode NVG 140 Transfer Case
[EGS] = 4.0L SOHC V-6 Engine
[EG0] = All 4.0L Engines
[EKG] = 3.7L [Magnum] V-6 Engine
[EK0] = All 3.7L 6-Cylinder Gas Engines
[ENS] = 2.8L 4 Cylinder Turbo Diesel Engine
[EN0] = All 2.8L 4 Cylinder Turbo Diesel Engines
[ESF] = 6.1L SRT V-8 Hemi Engine
[ES0] = All 6.1L 8-Cylinder Engines
[EVA] = 4.7L [Magnum] V-8 Engine
[EVD] = 4.7L V-8 FFV Engine
[EVE] = 4.7L V-8 Engine
[EV0] = All 4.7L 8-Cylinder Engines
[EZA] = 5.7L Hemi V-8 Engine
[EZB] = 5.7L Hemi V-8 Multi-Displacement Engine
[EZC] = 5.7L Hemi V-8 VCT Non Multi-Displacement Engine
[EZD] = 5.7L Hemi V-8 VCT Multi-Displacement Engine
[EZE] = 5.7L Hemi V-8 HEV Engine
[EZ0] = All 5.7L 8-Cylinder Engines
[NAA] = Federal Emissions
[NAE] = California Emissions
[NAS] = 50 State Emissions
[NA1] = Export Emissions
[NHK] = Engine Cylinder Block Heater
[XEF] = Transfer Case Skid Plate Sheild

ITEM	PART NUMBER	QTY	LINE	SERIES	BODY	ENGINE	TRANS	TRIM	DESCRIPTION
1	68061029AA	1	D			EZC, EZD, EZH			VALVE, Crankcase Vent
2									SEAL, PCV
	53022142AB	2	D			EZC, EZD			Rectangle
	53032448AC	1	D			EZC, EZD			Round On PCV Valve
3	04591961AC	1	D			EZC, EZD			HOSE, Cylinder Head To Intake Manifold PCV
4		1							MANIFOLD, Engine Intake, Reference, (NOT SERVICED)
5	04593692AA	1	D			EZC, EZD			HOSE, Make Up Air

DODGE CHALLENGER (LC)

SERIES	LINE	BODY	ENGINE	TRANSMISSION
H = HIGHLINE P = PREMIUM X = SPECIAL	D = DODGE	22 = 2-DR SEDAN TYPE #2	EGG = 3.5L High Output V6 24V MPI Engine ESF = 6.1L SRT HEMI V8 Engine EZC = 5.7L HEMI VCT Engine EZD = 5.7L Hemi VCT MDS Engine	DEC = 6-Speed Manual TREMEC Transmission DGJ = 5-Speed Auto W5A580 Transmission DGV = 4-Spd. Automatic VLP 42RLE Trans

Engine Mounting Right Side RWD/2WD 5.7L [EZD] With MDS
Figure 009EZD-1220

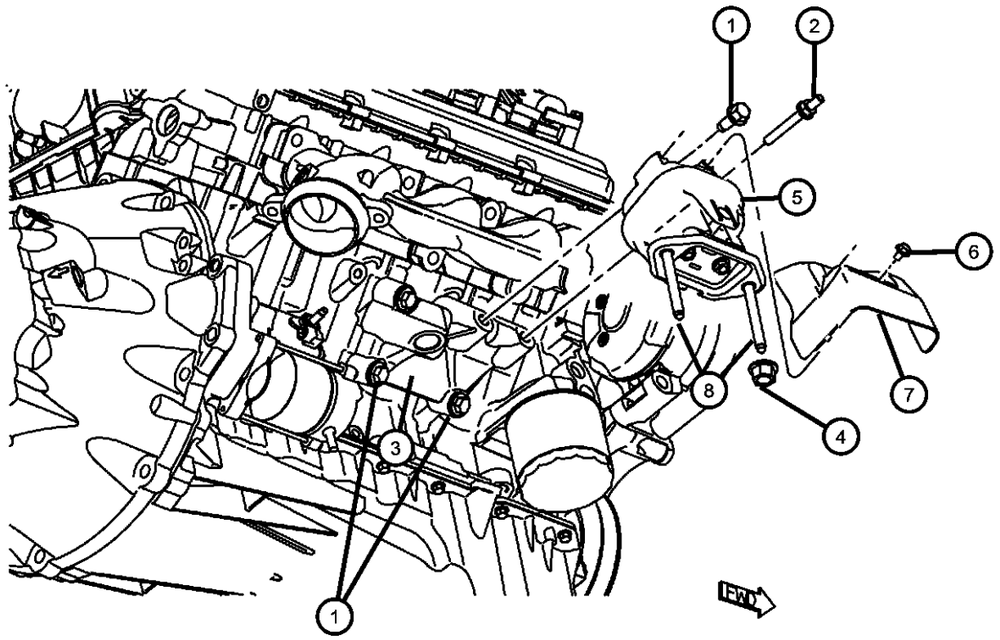

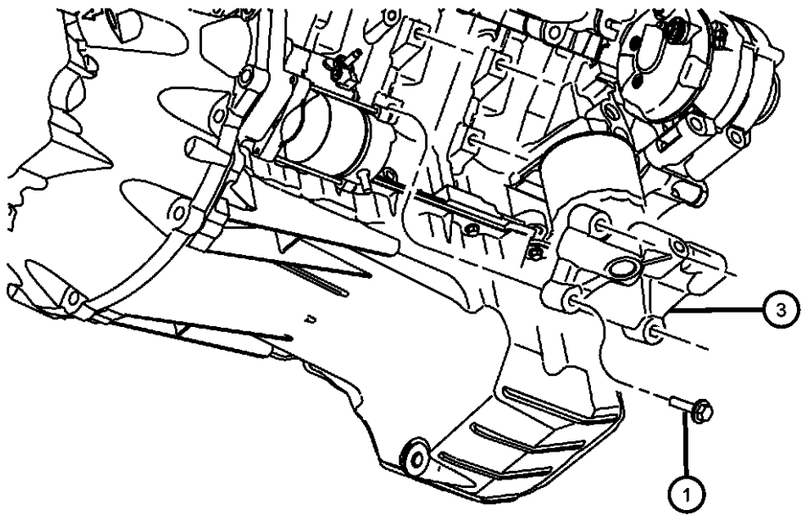

ITEM	PART NUMBER	QTY	LINE	SERIES	BODY	ENGINE	TRANS	TRIM	DESCRIPTION

NOTE:
Sales Codes:
[DEC] = 6-Speed Manual TR6060 Transmission
[DEH] = 6-Speed Manual NSG370 Transmission
[DF9] = AHS-T RWD Automatic Transmission
[DGJ] = 5-Speed Automatic W5A580 Transmission
[DGQ] = 5-Speed Automatic 545RFE Transmission
[DGV] = 4-Speed Automatic VLP 42RLE Transmission
[DG0] = All Automatic Transmissions
[DHR] = Single Speed On Demand MP3010 Transfer Case
[DHU] = AWD Electronic Shift Two Speed NVG 244 H/D Transfer Case
[DHZ] = Full Time Single Mode NVG 140 Transfer Case
[EGS] = 4.0L SOHC V-6 Engine
[EG0] = All 4.0L Engines
[EKG] = 3.7L [Magnum] V-6 Engine
[EK0] = All 3.7L 6-Cylinder Gas Engines
[ENS] = 2.8L 4 Cylinder Turbo Diesel Engine
[EN0] = All 2.8L 4 Cylinder Turbo Diesel Engines
[ESF] = 6.1L SRT V-8 Hemi Engine
[ES0] = All 6.1L 8-Cylinder Engines
[EVA] = 4.7L [Magnum] V-8 Engine
[EVD] = 4.7L V-8 FFV Engine
[EVE] = 4.7L V-8 Engine
[EV0] = All 4.7L 8-Cylinder Engines
[EZA] = 5.7L Hemi V-8 Engine
[EZB] = 5.7L Hemi V-8 Multi-Displacement Engine
[EZC] = 5.7L Hemi V-8 VCT Non Multi-Displacement Engine
[EZD] = 5.7L Hemi V-8 VCT Multi-Displacement Engine
[EZE] = 5.7L Hemi V-8 HEV Engine
[EZ0] = All 5.7L 8-Cylinder Engines
[NAA] = Federal Emissions
[NAE] = California Emissions
[NAS] = 50 State Emissions
[NA1] = Export Emissions
[NHK] = Engine Cylinder Block Heater
[XEF] = Transfer Case Skid Plate Sheild

1									BOLT, Hex Flange Head, M10X1.50X55.00
	06101622	8	D			ESF, EZC, EZD			Engine Mount To Engine Bracket, Mounting
		3	D			ESF, EZC, EZD			Engine Mount To Engine Bracket, Mounting
2	06505653AA	1	D			EZC, EZD			STUD, [M10X1.50X86.63], Engine Mount To Engine Mount Bracket, Mounting
3	04578052AB	1	D			ESF, EZC, EZD			BRACKET, Engine Mount

DODGE CHALLENGER (LC)

SERIES	LINE	BODY	ENGINE	TRANSMISSION
H = HIGHLINE P = PREMIUM X = SPECIAL	D = DODGE	22 = 2-DR SEDAN TYPE #2	EGG = 3.5L High Output V6 24V MPI Engine ESF = 6.1L SRT HEMI V8 Engine EZC = 5.7L HEMI VCT Engine EZD = 5.7L Hemi VCT MDS Engine	DEC = 6-Speed Manual TREMEC Transmission DGJ = 5-Speed Auto W5A580 Transmission DGV = 4-Spd. Automatic VLP 42RLE Trans

Engine Mounting Right Side RWD/2WD 5.7L [EZD] With MDS
Figure 009EZD-1220

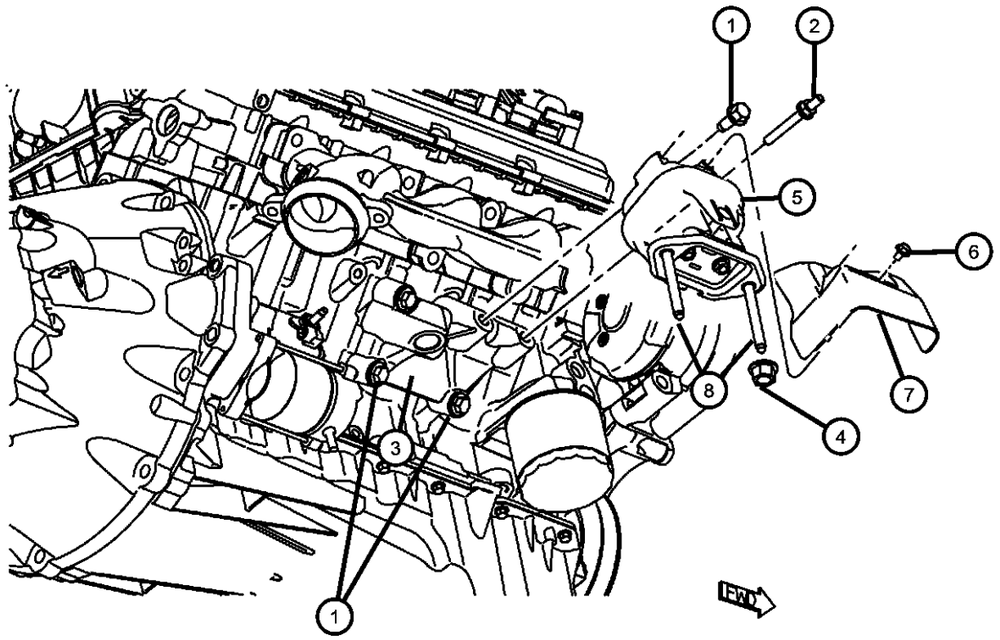

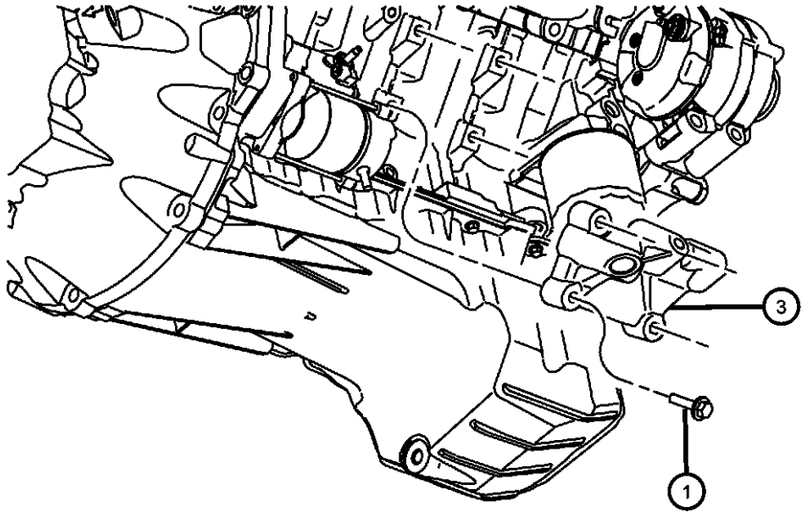

ITEM	PART NUMBER	QTY	LINE	SERIES	BODY	ENGINE	TRANS	TRIM	DESCRIPTION
4	06508120AA	4	D						NUT, M10x1.50, Engine Mount To Cradle, Mounting
5	04578046AF	1	D			EZC, EZD	DGJ		INSULATOR, Engine Mount
6	06507210AA	4	D				DGJ, DGV		BOLT, Hex Head, M6X1.00X11.00, Heat Shield To Engine Mount, Mounting
7	04578349AA	1	D			EG0, ES0, EZ0	DGJ, DGV		SHIELD, Heat
8	06508025AA	4	D			EG0, ES0, EZ0	DGJ, DGV		STUD, Double Ended, [M10X1.5X110.0], Engine Mount To Cradle, Mounting

DODGE CHALLENGER (LC)

SERIES	LINE	BODY	ENGINE	TRANSMISSION
H = HIGHLINE	D = DODGE	22 = 2-DR SEDAN TYPE #2	EGG = 3.5L High Output V6 24V MPI Engine	DEC = 6-Speed Manual TREMEC Transmission
P = PREMIUM			ESF = 6.1L SRT HEMI V8 Engine	DGJ = 5-Speed Auto W5A580 Transmission
X = SPECIAL			EZC = 5.7L HEMI VCT Engine	DGV = 4-Spd. Automatic VLP 42RLE Trans
			EZD = 5.7L Hemi VCT MDS Engine	

Engine Mounting Left Side RWD/2WD 5.7L [EZD] With MDS
Figure 009EZD-1235

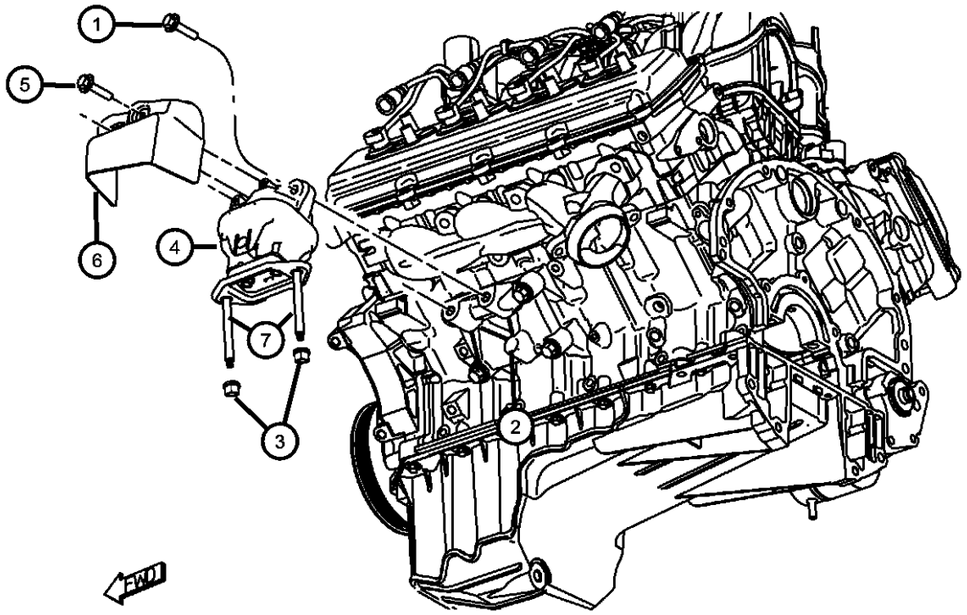

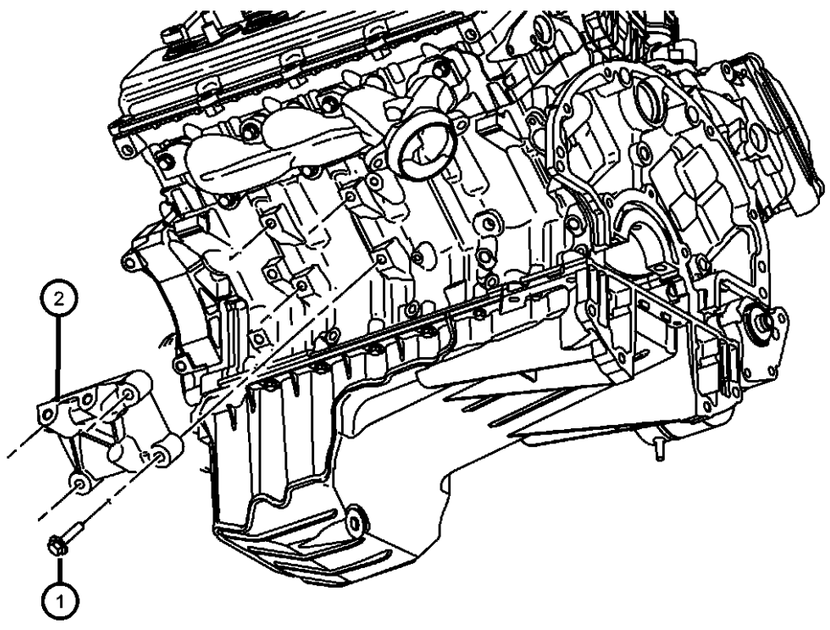

ITEM	PART NUMBER	QTY	LINE	SERIES	BODY	ENGINE	TRANS	TRIM	DESCRIPTION

NOTE:
Sales Codes:
[DEC] = 6-Speed Manual TR6060 Transmission
[DEH] = 6-Speed Manual NSG370 Transmission
[DF9] = AHS-T RWD Automatic Transmission
[DGJ] = 5-Speed Automatic W5A580 Transmission
[DGQ] = 5-Speed Automatic 545RFE Transmission
[DGV] = 4-Speed Automatic VLP 42RLE Transmission
[DG0] = All Automatic Transmissions
[DHR] = Single Speed On Demand MP3010 Transfer Case
[DHU] = AWD Electronic Shift Two Speed NVG 244 H/D Transfer Case
[DHZ] = Full Time Single Mode NVG 140 Transfer Case
[EGS] = 4.0L SOHC V-6 Engine
[EG0] = All 4.0L Engines
[EKG] = 3.7L [Magnum] V-6 Engine
[EK0] = All 3.7L 6-Cylinder Gas Engines
[ENS] = 2.8L 4 Cylinder Turbo Diesel Engine
[EN0] = All 2.8L 4 Cylinder Turbo Diesel Engines
[ESF] = 6.1L SRT V-8 Hemi Engine
[ES0] = All 6.1L 8-Cylinder Engines
[EVA] = 4.7L [Magnum] V-8 Engine
[EVD] = 4.7L V-8 FFV Engine
[EVE] = 4.7L V-8 Engine
[EV0] = All 4.7L 8-Cylinder Engines
[EZA] = 5.7L Hemi V-8 Engine
[EZB] = 5.7L Hemi V-8 Multi-Displacement Engine
[EZC] = 5.7L Hemi V-8 VCT Non Multi-Displacement Engine
[EZD] = 5.7L Hemi V-8 VCT Multi-Displacement Engine
[EZE] = 5.7L Hemi V-8 HEV Engine
[EZ0] = All 5.7L 8-Cylinder Engines
[NAA] = Federal Emissions
[NAE] = California Emissions
[NAS] = 50 State Emissions
[NA1] = Export Emissions
[NHK] = Engine Cylinder Block Heater
[XEF] = Transfer Case Skid Plate Sheild

ITEM	PART NUMBER	QTY	LINE	SERIES	BODY	ENGINE	TRANS	TRIM	DESCRIPTION
1									BOLT, Hex Flange Head, M10X1.50X55.00
	06101622	3	D			ESF, EZC, EZD			Engine Mount To Engine Bracket, Mounting
		8	D			ESF, EZC, EZD			Engine Mount Bracket To Cylinder Block, Mounting
2	04578053AC	1	D			ESF, EZC, EZD			BRACKET, Engine Mount
3	06508120AA	4	D						NUT, M10x1.50, Engine Mount To Cradle, Mounting
4	04578046AF	1	D			EZC, EZD	DGJ		INSULATOR, Engine Mount

DODGE CHALLENGER (LC)

SERIES	LINE	BODY	ENGINE	TRANSMISSION
H = HIGHLINE P = PREMIUM X = SPECIAL	D = DODGE	22 = 2-DR SEDAN TYPE #2	EGG = 3.5L High Output V6 24V MPI Engine ESF = 6.1L SRT HEMI V8 Engine EZC = 5.7L HEMI VCT Engine EZD = 5.7L Hemi VCT MDS Engine	DEC = 6-Speed Manual TREMEC Transmission DGJ = 5-Speed Auto W5A580 Transmission DGV = 4-Spd. Automatic VLP 42RLE Trans

AR = use ase required - = Non illustrrated part

Engine Mounting Left Side RWD/2WD 5.7L [EZD] With MDS
Figure 009EZD-1235

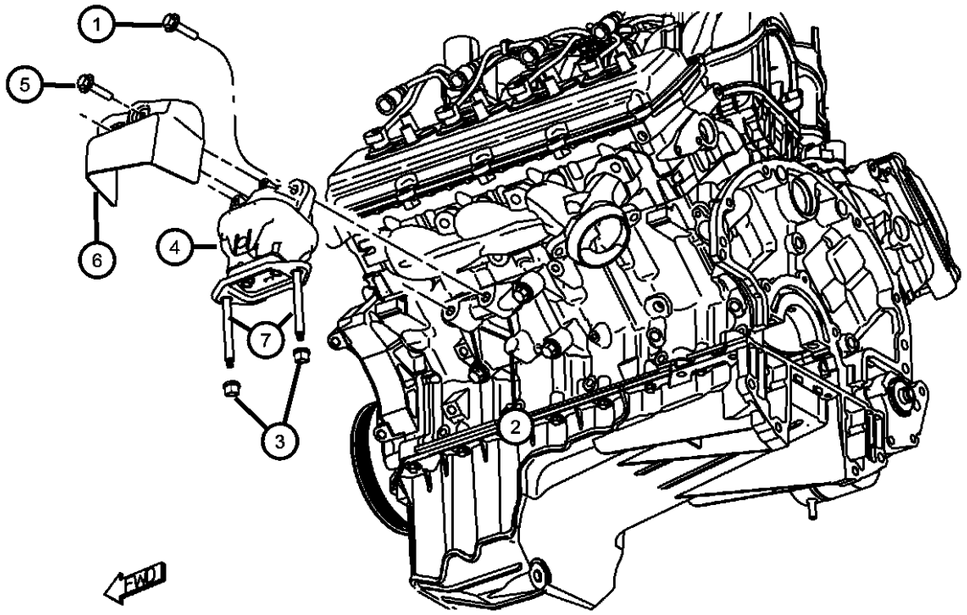

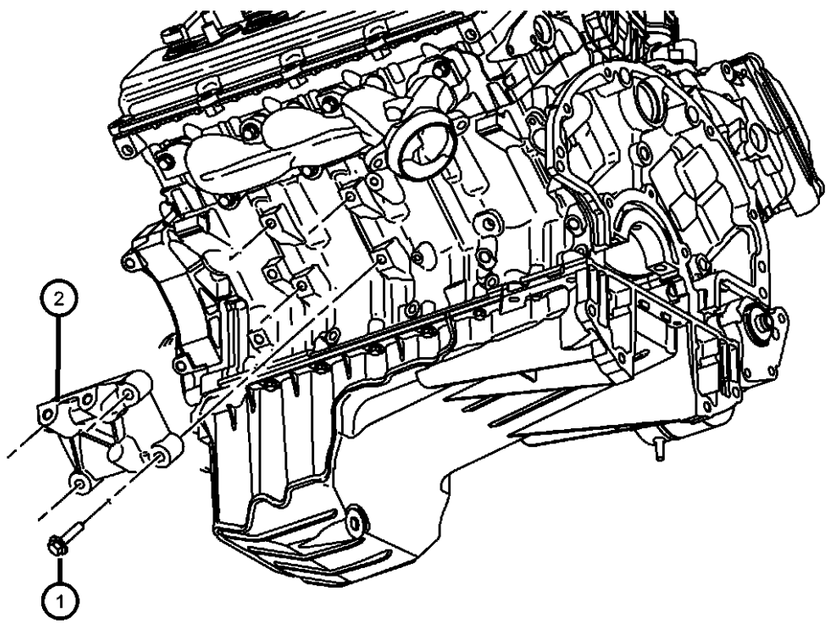

ITEM	PART NUMBER	QTY	LINE	SERIES	BODY	ENGINE	TRANS	TRIM	DESCRIPTION
5	06507210AA	4	D				DGJ, DGV		BOLT, Hex Head, M6X1.00X11.00, Heat Shield To Engine Mount, Mounting
6	04578349AA	1	D			EG0, ES0, EZ0	DGJ, DGV		SHIELD, Heat
7	06508025AA	4	D			EG0, ES0, EZ0	DGJ, DGV		STUD, Double Ended, [M10X1.5X110.0], Engine Mount To Cradle, Mounting

DODGE CHALLENGER (LC)

SERIES	LINE	BODY	ENGINE	TRANSMISSION
H = HIGHLINE	D = DODGE	22 = 2-DR SEDAN TYPE #2	EGG = 3.5L High Output V6 24V MPI Engine	DEC = 6-Speed Manual TREMEC Transmission
P = PREMIUM			ESF = 6.1L SRT HEMI V8 Engine	DGJ = 5-Speed Auto W5A580 Transmission
X = SPECIAL			EZC = 5.7L HEMI VCT Engine	DGV = 4-Spd. Automatic VLP 42RLE Trans
			EZD = 5.7L Hemi VCT MDS Engine	

AR = use ase required - = Non illustrrated part

Group - 009EZH

5.7L Gas; Engine

009EZH-100 Engine Identification	**009EZH-1000** Manifolds and Vacuum Fittings	**009EZH-1100** Crankcase Ventilation	**009EZH-1200** Engine Mounting
009EZH-200 Cylinder Head	**009EZH-300** Cylinder Block	**009EZH-400** Crankshaft, Piston, Drive Plate, Flywheel, and Damper	**009EZH-500** Camshaft and Valve
009EZH-600 Timing Belt/Chain and Cover and Balance Shaft	**009EZH-700** Engine Oiling, Oil Pan and Indicator (Dipstick)		

Group - 009EZH 5.7L Gas; Engine

Illustration Title — Group-Fig. No.

Engine Identification
Engine Identification 5.7L [EZH] With MDS ..... Fig. 009EZH - 105
Engine Assembly And Service Long Block 5.7L [EZH] With MDS ..... Fig. 009EZH - 115
Engine Cover And Related Parts 5.7L [EZH] With MDS ..... Fig. 009EZH - 125
Engine Gasket Kits 5.7L [EZH] With MDS ..... Fig. 009EZH - 145

Cylinder Head
Cylinder Head Covers 5.7L [EZH] With MDS ..... Fig. 009EZH - 205
Cylinder Heads 5.7L [EZH] With MDS ..... Fig. 009EZH - 225

Cylinder Block
Engine Cylinder Block And Hardware 5.7L [EZH] With MDS ..... Fig. 009EZH - 305
Engine Cylinder Block Heater 5.7L [EZH] With MDS ..... Fig. 009EZH - 325

Crankshaft, Piston, Drive Plate, Flywheel, and Damper
Crankshaft, Crankshaft Bearings, Damper And Flywheel 5.7L [EZH] With MDS ..... Fig. 009EZH - 405
Pistons, Piston Rings, Connecting Rods, Connecting Rod Bearings 5.7L [EZH] With MDS ..... Fig. 009EZH - 425

Camshaft and Valve
Camshaft And Valvetrain 5.7L [EZH] With MDS ..... Fig. 009EZH - 505

Timing Belt/Chain and Cover and Balance Shaft
Timing Case Cover 5.7L [EZH] With MDS ..... Fig. 009EZH - 605
Timing System 5.7L [EZH] With MDS ..... Fig. 009EZH - 625

Engine Oiling, Oil Pan and Indicator (Dipstick)
Engine Oiling Pump 5.7L [EZH] With MDS ..... Fig. 009EZH - 705
Enging Oil Pan, Engine Oil Level Indicator And Related Parts 5.7L [EZH] With MDS ..... Fig. 009EZH - 725
Engine Oil, Engine Oil Filter And Adapter 5.7L [EZH] With MDS ..... Fig. 009EZH - 745

Manifolds and Vacuum Fittings
Exhaust Manifolds And Heat Shields 5.7L [EZH] With MDS ..... Fig. 009EZH - 1005
Intake Manifold 5.7L [EZH] With MDS ..... Fig. 009EZH - 1025

Crankcase Ventilation
Crankcase Ventilation 5.7L [EZH] With MDS ..... Fig. 009EZH - 1105

Engine Mounting
Engine Mounting Right Side RWD/2WD 5.7L [EZH] With MDS ..... Fig. 009EZH - 1220
Engine Mounting Left Side RWD/2WD 5.7L [EZH] With MDS ..... Fig. 009EZH - 1235

Engine Identification 5.7L [EZH] With MDS
Figure 009EZH-105

ITEM	PART NUMBER	QTY	LINE	SERIES	BODY	ENGINE	TRANS	TRIM	DESCRIPTION
									Note: The Engine Identification Label Is Attached To One Of The Cylinder Head Covers. The Production Engine Part Number Is Not A Servicable Part Number. A Engine Is Usally Serviced By A Long Block Or Short Block Engine.
1		4							LABEL, Engine Identification, See Note:, (NOT SERVICED)

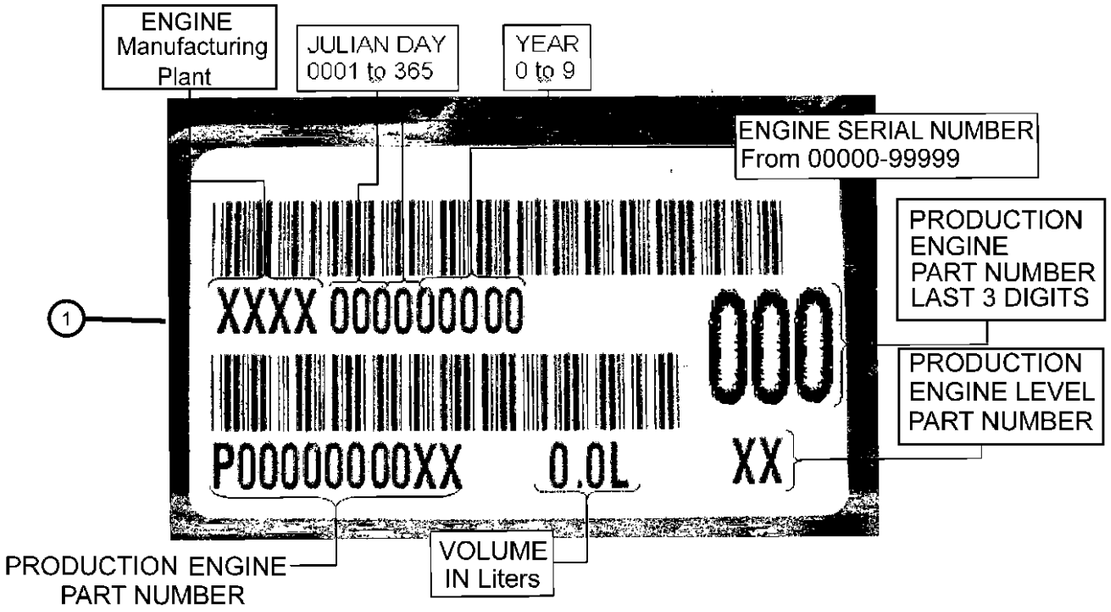

DODGE CHALLENGER (LC)

SERIES	LINE	BODY	ENGINE	TRANSMISSION
H = HIGHLINE P = PREMIUM X = SPECIAL	D = DODGE	22 = 2-DR SEDAN TYPE #2	EGG = 3.5L High Output V6 24V MPI Engine ESF = 6.1L SRT HEMI V8 Engine EZC = 5.7L HEMI VCT Engine EZD = 5.7L Hemi VCT MDS Engine	DEC = 6-Speed Manual TREMEC Transmission DGJ = 5-Speed Auto W5A580 Transmission DGV = 4-Spd. Automatic VLP 42RLE Trans

Engine Assembly And Service Long Block 5.7L [EZH] With MDS
Figure 009EZH-115

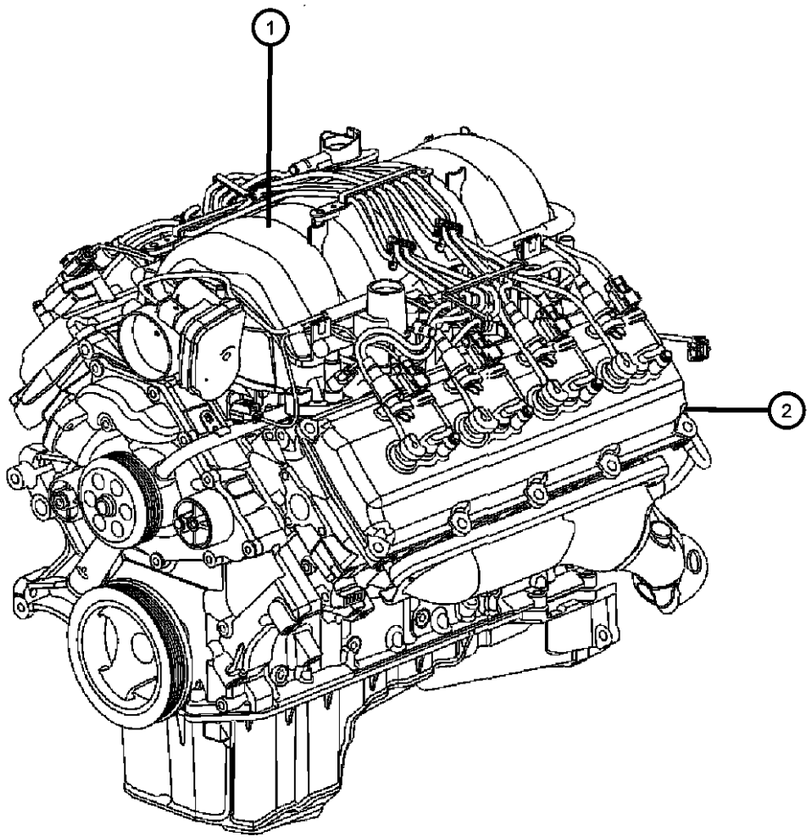

ITEM	PART NUMBER	QTY	LINE	SERIES	BODY	ENGINE	TRANS	TRIM	DESCRIPTION

NOTE:
The Engine Identifaction Label Contains: The Production Assembly Part Number And Displacement. It is located On The Left Front Cylinder Head
Sales Codes:
[DEC] = 6-Speed Manual TR6060 Transmission
[DEH] = 6-Speed Manual NSG370 Transmissi

1	4	ENGINE, Complete, Serviced By New short Block Only, (NOT SERVICED)
2	4	ENGINE, Long Block, (NOT SERVICED)

DODGE CHALLENGER (LC)

SERIES	LINE	BODY	ENGINE	TRANSMISSION
H = HIGHLINE	D = DODGE	22 = 2-DR SEDAN TYPE #2	EGG = 3.5L High Output V6 24V MPI Engine	DEC = 6-Speed Manual TREMEC Transmission
P = PREMIUM			ESF = 6.1L SRT HEMI V8 Engine	DGJ = 5-Speed Auto W5A580 Transmission
X = SPECIAL			EZC = 5.7L HEMI VCT Engine	DGV = 4-Spd. Automatic VLP 42RLE Trans
			EZD = 5.7L Hemi VCT MDS Engine	

AR = use ase required - = Non illustrrated part

Engine Cover And Related Parts 5.7L [EZH] With MDS
Figure 009EZH-125

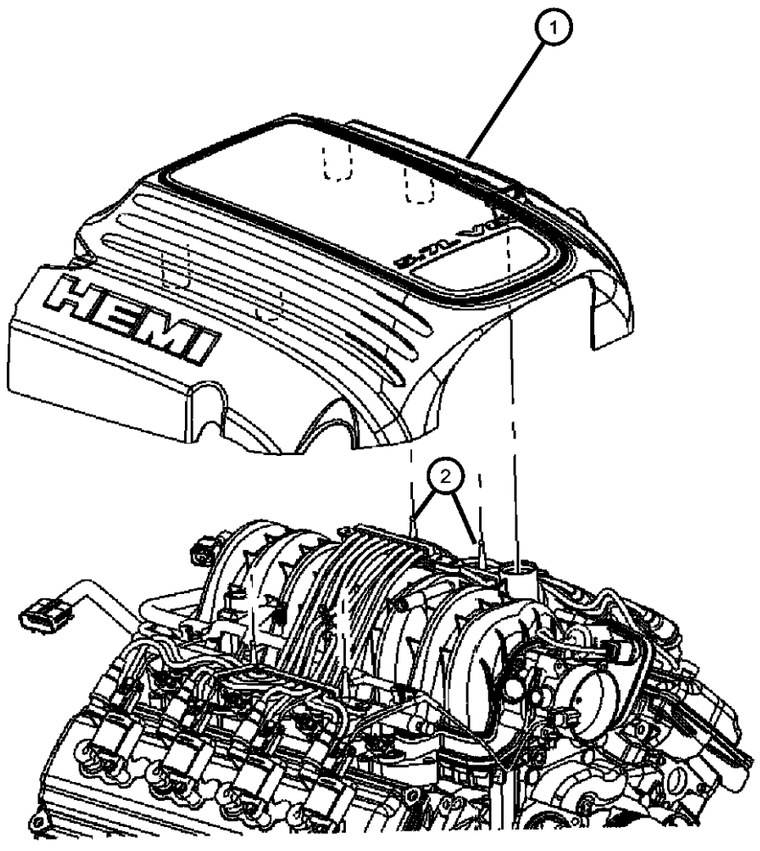

ITEM	PART NUMBER	QTY	LINE	SERIES	BODY	ENGINE	TRANS	TRIM	DESCRIPTION

NOTE:
Sales Codes:
[DEC] = 6-Speed Manual TR6060 Transmission
[DEH] = 6-Speed Manual NSG370 Transmission
[DF9] = AHS-T RWD Automatic Transmission
[DGJ] = 5-Speed Automatic W5A580 Transmission
[DGQ] = 5-Speed Automatic 545RFE Transmission
[

1	04591895AH	1	D			EZC, EZD, EZH			COVER, Engine
2	53013748AD	4	D			EZC, EZD, EZH			BALL STUD, 60X2.14X21.59

DODGE CHALLENGER (LC)

SERIES	LINE	BODY	ENGINE	TRANSMISSION
H = HIGHLINE P = PREMIUM X = SPECIAL	D = DODGE	22 = 2-DR SEDAN TYPE #2	EGG = 3.5L High Output V6 24V MPI Engine ESF = 6.1L SRT HEMI V8 Engine EZC = 5.7L HEMI VCT Engine EZD = 5.7L Hemi VCT MDS Engine	DEC = 6-Speed Manual TREMEC Transmission DGJ = 5-Speed Auto W5A580 Transmission DGV = 4-Spd. Automatic VLP 42RLE Trans

AR = use ase required - = Non illustrrated part

Engine Gasket Kits 5.7L [EZH] With MDS
Figure 009EZH-145

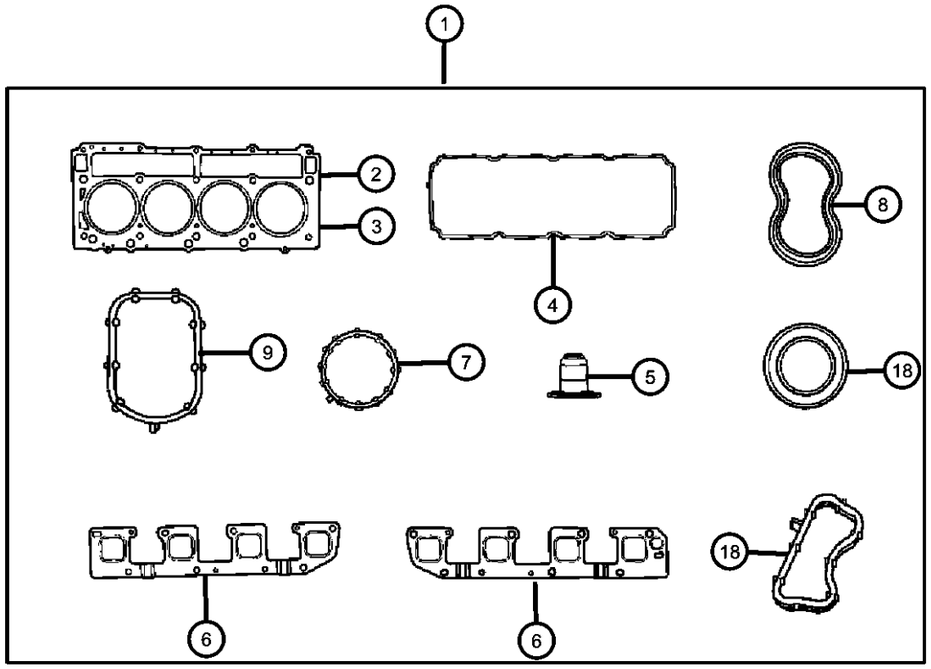

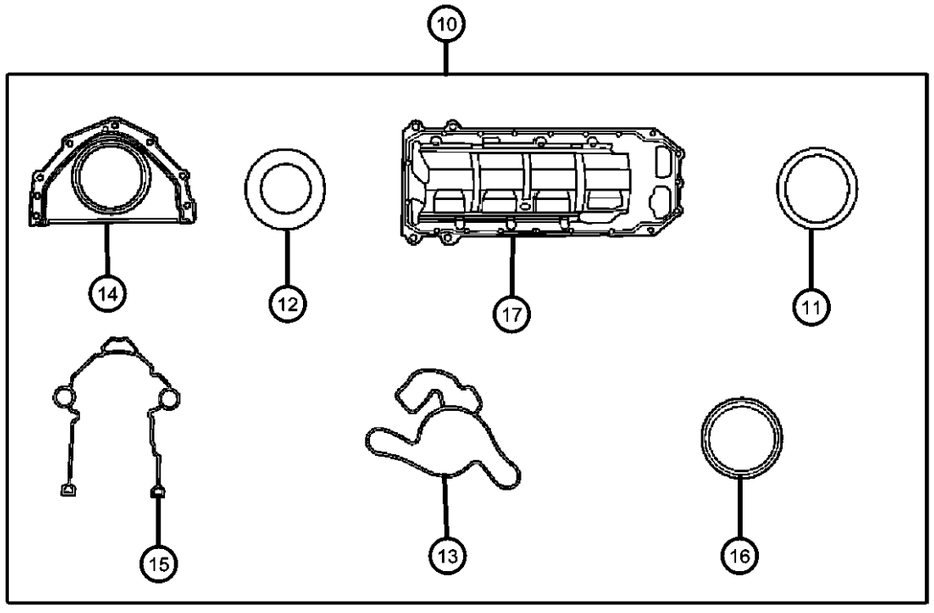

ITEM	PART NUMBER	QTY	LINE	SERIES	BODY	ENGINE	TRANS	TRIM	DESCRIPTION
NOTE:									
Sales Codes:									
[DEC] = 6-Speed Manual TR6060 Transmission									
[DEH] = 6-Speed Manual NSG370 Transmission									
[DF9] = AHS-T RWD Automatic Transmission									
[DGJ] = 5-Speed Automatic W5A580 Transmission									
[DGQ] = 5-Speed Automatic 545RFE Transmission									
[									
1	68046260AA	1	D			EZH	DGJ		GASKET PACKAGE, Engine Upper
2	53022306AA	1	D			EZC, EZD, EZH			GASKET, Cylinder Head, Right
3	53022307AA	1	D			EZC, EZD, EZH			GASKET, Cylinder Head, Left
4	68060360AA	2	D			EZC, EZD, EZH			GASKET KIT, Cylinder Head Cover
5	53022090AB	16	D			EZC, EZD, EZH			SEAL, Valve Guide
6									GASKET, Exhaust Manifold
	53032965AF	1	D			EZC, EZD, EZH			Left
	53032966AF	1	D			EZC, EZD, EZH			Right
7	53022320AB	1	D			EZC, EZD, EZH			SEAL, Throttle Body to Intake
8	53021569AD	8	D			EZC, EZD, EZH			GASKET, Spark Plug Well
9	53022143AB	8	D			EZC, EZD, EZH			SEAL, Intake Manifold
10	68060361AA	1	D			EZH	DGJ		GASKET PACKAGE, Engine Lower
11	53020861	1	D			EZC, EZD, EZH			SEAL, Oil Pick Up Tube
12	53021144AA	1	D			EZC, EZD, EZH			O RING, Engine Oil Indicator Tube
13	04792922AB	1	D			EZC, EZD, EZH			GASKET, Water Pump
14	68060342AA	1	D			EZC, EZD, EZH			RETAINER PACKAGE, Crankshaft Rear Oil Seal
15	68060362AA	1	D			EZC, EZD, EZH			GASKET PACKAGE, Front Cover
16	53021585AD	1	D			EZD, EZH, EZC			SEAL, Crankshaft Oil, Front
17	04792874AA	1	D			EZD, EZH			GASKET, Oil Pan
18									SEAL, PCV

DODGE CHALLENGER (LC)

SERIES	LINE	BODY	ENGINE	TRANSMISSION
H = HIGHLINE P = PREMIUM X = SPECIAL	D = DODGE	22 = 2-DR SEDAN TYPE #2	EGG = 3.5L High Output V6 24V MPI Engine ESF = 6.1L SRT HEMI V8 Engine EZC = 5.7L HEMI VCT Engine EZD = 5.7L Hemi VCT MDS Engine	DEC = 6-Speed Manual TREMEC Transmission DGJ = 5-Speed Auto W5A580 Transmission DGV = 4-Spd. Automatic VLP 42RLE Trans

AR = use ase required - = Non illustrrated part

Engine Gasket Kits 5.7L [EZH] With MDS
Figure 009EZH-145

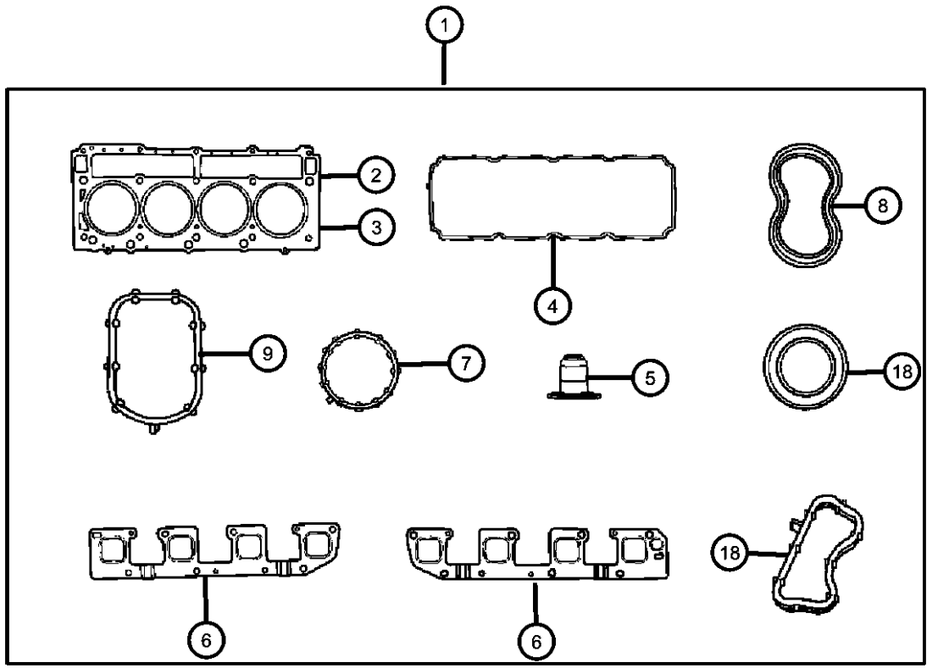

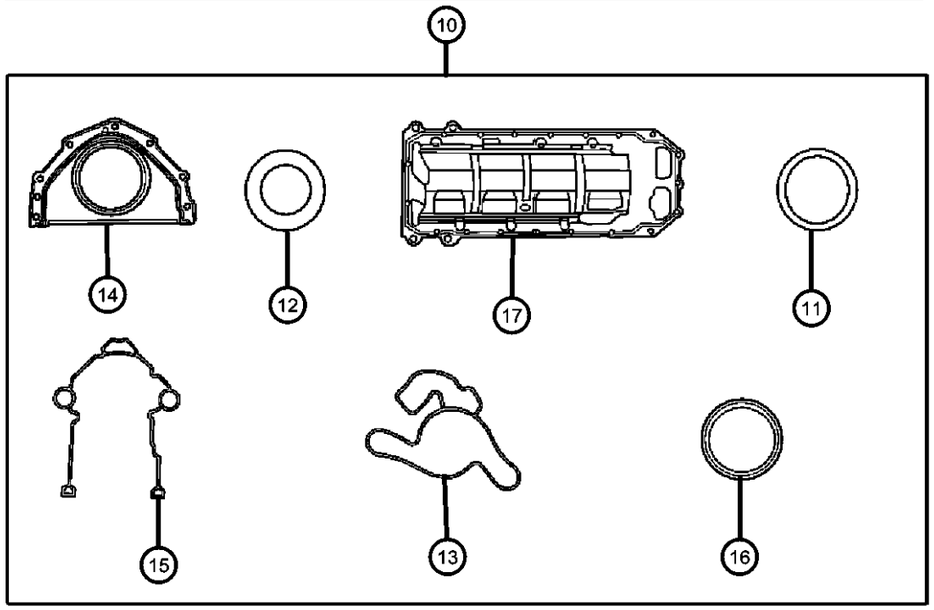

ITEM	PART NUMBER	QTY	LINE	SERIES	BODY	ENGINE	TRANS	TRIM	DESCRIPTION
	53022142AB	2	D			EZC, EZD, EZH			Square
	53032448AC	1	D			EZC, EZD, EZH			Round

DODGE CHALLENGER (LC)

SERIES	LINE	BODY	ENGINE	TRANSMISSION
H = HIGHLINE P = PREMIUM X = SPECIAL	D = DODGE	22 = 2-DR SEDAN TYPE #2	EGG = 3.5L High Output V6 24V MPI Engine ESF = 6.1L SRT HEMI V8 Engine EZC = 5.7L HEMI VCT Engine EZD = 5.7L Hemi VCT MDS Engine	DEC = 6-Speed Manual TREMEC Transmission DGJ = 5-Speed Auto W5A580 Transmission DGV = 4-Spd. Automatic VLP 42RLE Trans

Cylinder Head Covers 5.7L [EZH] With MDS
Figure 009EZH-205

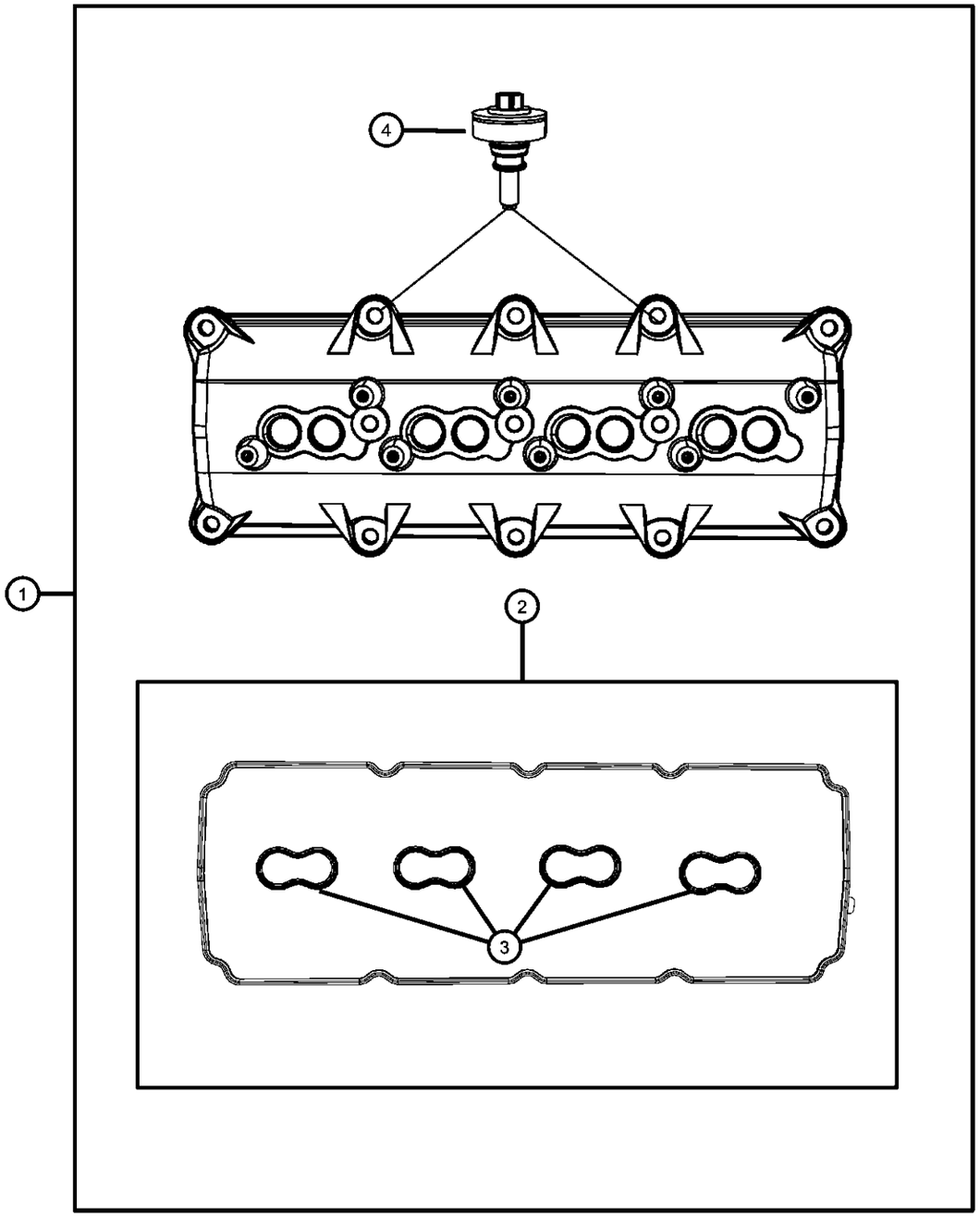

ITEM	PART NUMBER	QTY	LINE	SERIES	BODY	ENGINE	TRANS	TRIM	DESCRIPTION

NOTE:
Sales Codes:
[DEC] = 6-Speed Manual TR6060 Transmission
[DEH] = 6-Speed Manual NSG370 Transmission
[DF9] = AHS-T RWD Automatic Transmission
[DGJ] = 5-Speed Automatic W5A580 Transmission
[DGQ] = 5-Speed Automatic 545RFE Transmission
[

1	53022085AC	2	D			EZC, EZD, EZH			COVER, Cylinder Head
2	68060360AA	2	D			EZC, EZD, EZH			GASKET KIT, Cylinder Head Cover
3	53021569AD	8	D			EZC, EZD, EZH			GASKET, Spark Plug Well
4	06509387AA	20	D			EZC, EZD, EZH			BOLT AND GROMMET, Special, M6X1.00X30.00, Cylinder Head Cover To Cylinder Head, Mounting

DODGE CHALLENGER (LC)

SERIES	LINE	BODY	ENGINE	TRANSMISSION
H = HIGHLINE P = PREMIUM X = SPECIAL	D = DODGE	22 = 2-DR SEDAN TYPE #2	EGG = 3.5L High Output V6 24V MPI Engine ESF = 6.1L SRT HEMI V8 Engine EZC = 5.7L HEMI VCT Engine EZD = 5.7L Hemi VCT MDS Engine	DEC = 6-Speed Manual TREMEC Transmission DGJ = 5-Speed Auto W5A580 Transmission DGV = 4-Spd. Automatic VLP 42RLE Trans

Cylinder Heads 5.7L [EZH] With MDS
Figure 009EZH-225

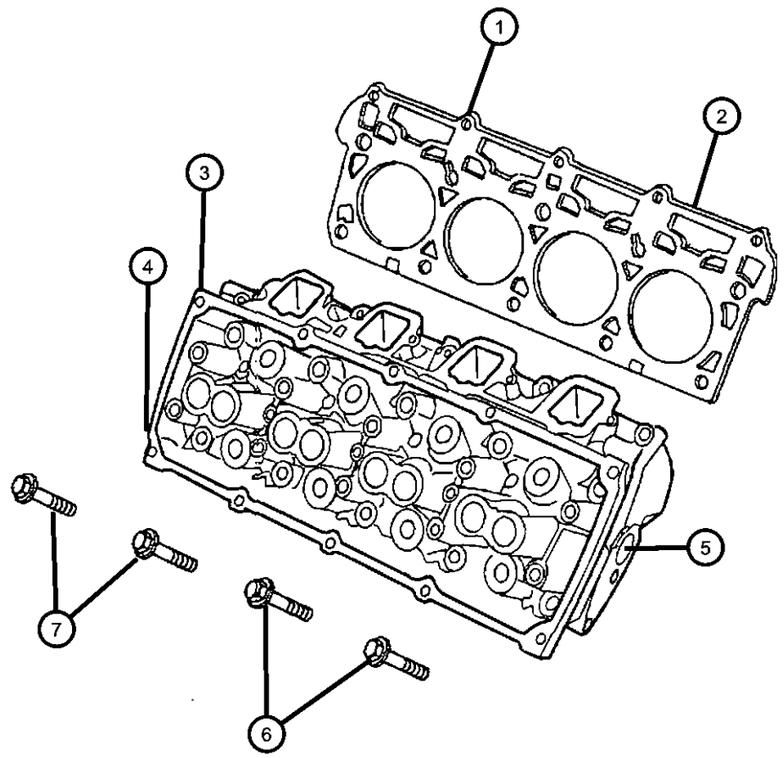

ITEM	PART NUMBER	QTY	LINE	SERIES	BODY	ENGINE	TRANS	TRIM	DESCRIPTION
NOTE:									
Sales Codes:									
[DEC] = 6-Speed Manual TR6060 Transmission									
[DEH] = 6-Speed Manual NSG370 Transmission									
[DF9] = AHS-T RWD Automatic Transmission									
[DGJ] = 5-Speed Automatic W5A580 Transmission									
[DGQ] = 5-Speed Automatic 545RFE Transmission									
[									
1	53022306AA	1	D			EZC, EZD, EZH			GASKET, Cylinder Head, Right
2	53022307AA	1	D			EZC, EZD, EZH			GASKET, Cylinder Head, Left
3	53021608DD	1	D			EZC, EZD, EZH			HEAD, Cylinder, Right
4	53021609DD	1	D			EZC, EZD, EZH			HEAD, Cylinder, Left
5									PLUG, Core
	68060349AA	1	D			EZC, EZD, EZH			Right Cylinder Head
		1	D			EZC, EZD, EZH			Left Cylinder Head
6	06506334AA	10	D			EZC, EZD, EZH			BOLT, Hex Flange Head, M8X1.25X45.00, Cylinder Head To Cylinder Block, Mounting
7	06506694AA	20	D			EZC, EZD, EZH			BOLT AND CONED WASHER, Hex Head, M12X1.50X135.00, Cylinder Head To Cylinder Block, Mounting

DODGE CHALLENGER (LC)

SERIES	LINE	BODY	ENGINE	TRANSMISSION
H = HIGHLINE	D = DODGE	22 = 2-DR SEDAN TYPE #2	EGG = 3.5L High Output V6 24V MPI Engine	DEC = 6-Speed Manual TREMEC Transmission
P = PREMIUM			ESF = 6.1L SRT HEMI V8 Engine	DGJ = 5-Speed Auto W5A580 Transmission
X = SPECIAL			EZC = 5.7L HEMI VCT Engine	DGV = 4-Spd. Automatic VLP 42RLE Trans
			EZD = 5.7L Hemi VCT MDS Engine	

Engine Cylinder Block And Hardware 5.7L [EZH] With MDS
Figure 009EZH-305

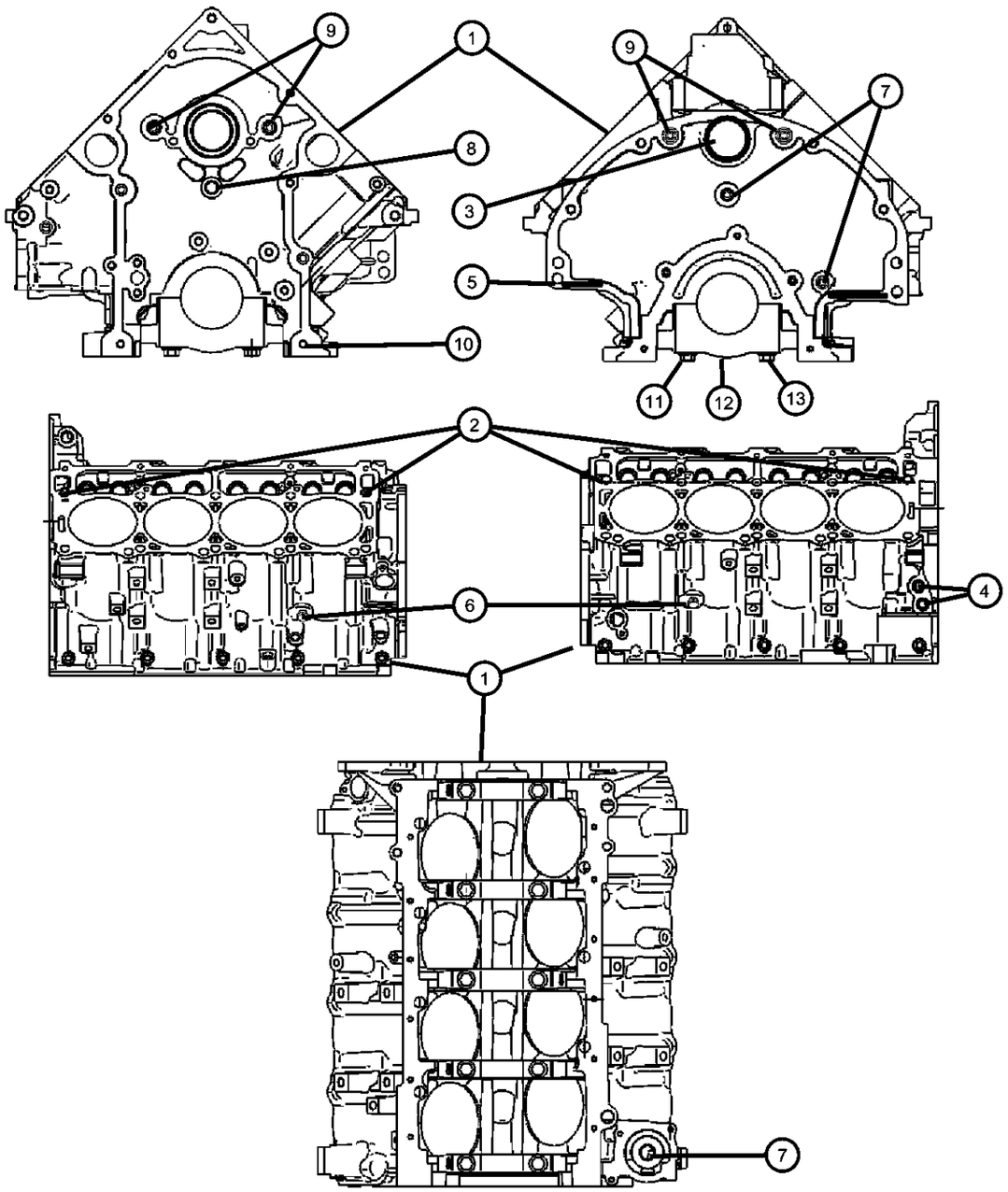

ITEM	PART NUMBER	QTY	LINE	SERIES	BODY	ENGINE	TRANS	TRIM	DESCRIPTION
NOTE: Shortblock Does Not Include Camshaft, Lifters, Oil Pump Or Oil Pan,But Does Include The Camshaft Bearings. Sales Codes: [DEC] = 6-Speed Manual TR6060 Transmission [DEH] = 6-Speed Manual NSG370 Transmission [DF9] = AHS-T RWD Automatic Transmi									
1	68061157AA	1	D			EZH	DGJ		ENGINE, Short Block, See Note
2	05240849	4	D			EZC, EZD, EZH			DOWEL PIN, Cylinder Head To Cylinder Block, Mounting
3	06507663AA	1	D			EZC, EZD, EZH			PLUG, Camshaft, [M47.93 OD 6.4 THK 51.5 FLG OD]Rear
4	06034331	2	D			EZC, EZD, EZH			PLUG, Hex Socket, 3/8-18NPTx.475
5	01122532	2	D			EZC, EZD, EZH			DOWEL, Block to Clutch Housing, 1/2X3/4
6	06036592AA	2	D			EZC, EZD, EZH			PLUG, .250-18X.690, Cylinder Block Coolant Drain
7	06036307AA	2	D			EZC, EZD, EZH			PLUG, Pipe, .250-18X.413
8		2							PLUG, Cylinder Block, .562X.280 Stainless, (NOT SERVICED)
9	06036417AA	4	D			EZC, EZD, EZH			PLUG, Cylinder Block, .375-18X1.343, Oil Gallery
10	06506332AA	2	D			EZC, EZD, EZH			PIN, Dowel, M8X10.00, Timing Chain Case Cover To Cylinder Block
11		2							STUD, Double Ended, M12&M8, (NOT SERVICED)
12		2							CAP, Main, Serviced With Short Block Engine, (NOT SERVICED)
13	06506272AA	10	D			EZD, EZH, EZC			BOLT, Hex Flange Head, M12X1.75X91.50, Main Bearing Cap To Cylinder Block, Mounting

DODGE CHALLENGER (LC)

SERIES	LINE	BODY	ENGINE	TRANSMISSION
H = HIGHLINE P = PREMIUM X = SPECIAL	D = DODGE	22 = 2-DR SEDAN TYPE #2	EGG = 3.5L High Output V6 24V MPI Engine ESF = 6.1L SRT HEMI V8 Engine EZC = 5.7L HEMI VCT Engine EZD = 5.7L Hemi VCT MDS Engine	DEC = 6-Speed Manual TREMEC Transmission DGJ = 5-Speed Auto W5A580 Transmission DGV = 4-Spd. Automatic VLP 42RLE Trans

Engine Cylinder Block Heater 5.7L [EZH] With MDS
Figure 009EZH-325

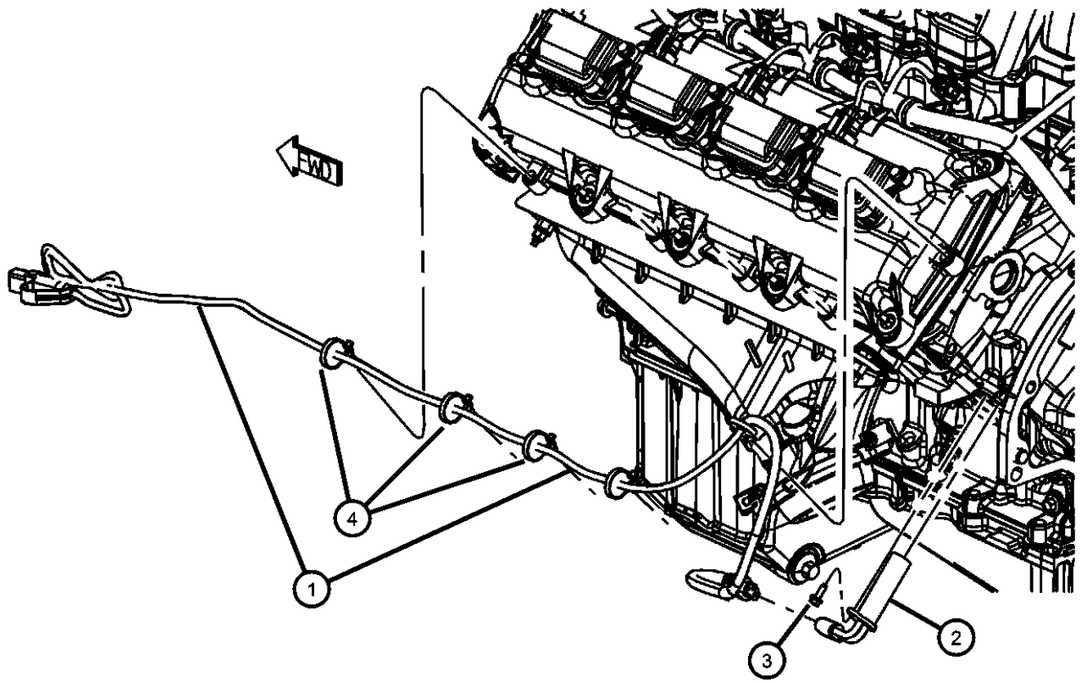

ITEM	PART NUMBER	QTY	LINE	SERIES	BODY	ENGINE	TRANS	TRIM	DESCRIPTION

NOTE:
Sales Codes:
[DEC] = 6-Speed Manual TR6060 Transmission
[DEH] = 6-Speed Manual NSG370 Transmission
[DF9] = AHS-T RWD Automatic Transmission
[DGJ] = 5-Speed Automatic W5A580 Transmission
[DGQ] = 5-Speed Automatic 545RFE Transmission
[

1	05148099AB	1	D			EZC, EZD, EZH			CORD, Engine Block Heater
2	05149022AB	1	D			EZC, EZD, EZH			HEATER, Engine Block
3	06501373	1	D			EZC, EZD, EZH			BOLT, Hex Head, M6x1.00x20.00, Heater To Cylinder Block, Mounting
4		1							CLIP, Serviced With Cord Only, (NOT SERVICED)

DODGE CHALLENGER (LC)

SERIES	LINE	BODY	ENGINE	TRANSMISSION
H = HIGHLINE P = PREMIUM X = SPECIAL	D = DODGE	22 = 2-DR SEDAN TYPE #2	EGG = 3.5L High Output V6 24V MPI Engine ESF = 6.1L SRT HEMI V8 Engine EZC = 5.7L HEMI VCT Engine EZD = 5.7L Hemi VCT MDS Engine	DEC = 6-Speed Manual TREMEC Transmission DGJ = 5-Speed Auto W5A580 Transmission DGV = 4-Spd. Automatic VLP 42RLE Trans

Crankshaft, Crankshaft Bearings, Damper And Flywheel 5.7L [EZH] With MDS
Figure 009EZH-405

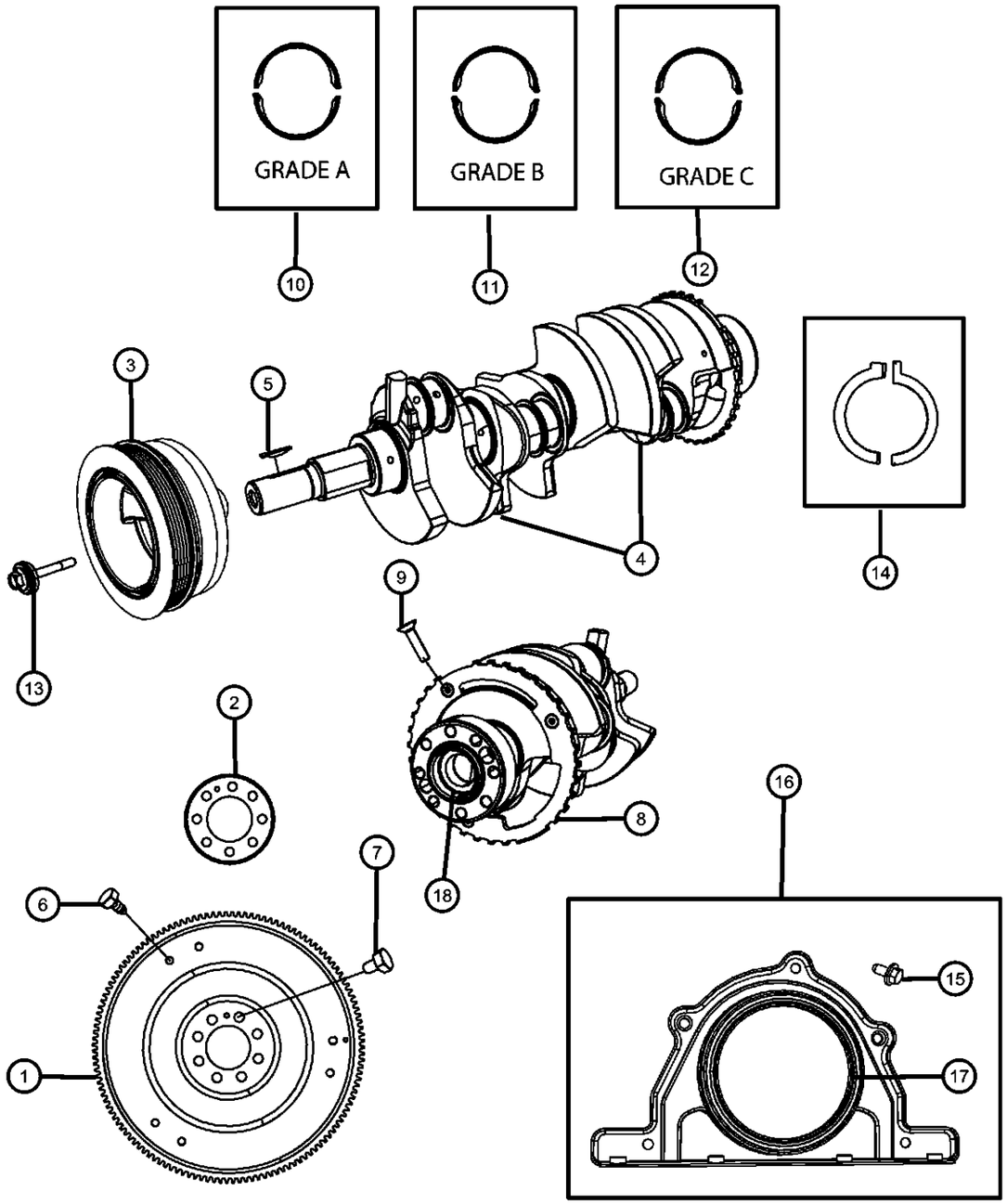

ITEM	PART NUMBER	QTY	LINE	SERIES	BODY	ENGINE	TRANS	TRIM	DESCRIPTION
NOTE: For Crankshaft Indentification, Stamping Location And Bearing Information Refer To The Service Manual. For Bearing Selection Sizes Please Refer To Service Manual Group 9, Bearings Crankshaft Main, [Select Fit Identification] Sales Codes: [DEC]									
1	04752574AB	1	D			EZH			PLATE, Torque Converter Drive
2	04736613AA	1	D			EZH	DGJ		PLATE, Flexplate or Flywheel Backing
3	53022084AA	1	D			EZC, EZD, EZH			DAMPER, Vibration
4	53021302BB	1	D			EZC, EZD, EZH			CRANKSHAFT, See Note
5	06506397AA	1	D			EZC, EZD, EZH			KEY, Woodruff
6	06507095AA	6	D				DGJ		BOLT, Hex Head, M8x1.25x18.00, Torque Converter Drive Plate To Torque Converter, Mounting
7	06503465	8	D			ESF, EZC, EZH			BOLT, Hex Head Lock, M10X1.00X18.00, Torque Converter Drive Plate To Crankshaft, Mounting
8		8							TONE RING, Sensor, Serviced With Crankshaft, (NOT SERVICED)
9		8							SCREW, M6x1x25, Serviced With Crankshaft, (NOT SERVICED)
10	68060355AA	5	D			EZC, EZH			BEARING KIT, Crankshaft, A Grade, See Note
11	68060357AA	5	D			EZC, EZH			BEARING KIT, Crankshaft, B Grade, See Note
12	68060358AA	5	D			EZC, EZH			BEARING KIT, Crankshaft, .008mm O/S, See Note
13	06508400AA	1	D			EZC, EZD, EZH			BOLT AND CONED WASHER, Hex Head, M14X1.5X102.00, Damper To Crankshaft, Mounting
14	05083979AA	1	D			EZC, EZD, EZH			THRUST WASHER PACKAGE, Crankshaft
15	06104005AA	2	D			EZ0	DGJ		BOLT, 6 Lobe External Head, M6X1.00X16.00, Rear Crankshaft Oil Retainer To Cylinder Block, Mounting
16	68060342AA	1	D			EZC, EZD, EZH			RETAINER PACKAGE, Crankshaft Rear Oil Seal
17		1							SEAL, Crankshaft Oil, Rear, Serviced In Rear Retainer Package, (NOT SERVICED)
18	04736283AA	1	D			EZH	DGJ		SLEEVECrankshaft

DODGE CHALLENGER (LC)

SERIES	LINE	BODY	ENGINE	TRANSMISSION
H = HIGHLINE P = PREMIUM X = SPECIAL	D = DODGE	22 = 2-DR SEDAN TYPE #2	EGG = 3.5L High Output V6 24V MPI Engine ESF = 6.1L SRT HEMI V8 Engine EZC = 5.7L HEMI VCT Engine EZD = 5.7L Hemi VCT MDS Engine	DEC = 6-Speed Manual TREMEC Transmission DGJ = 5-Speed Auto W5A580 Transmission DGV = 4-Spd. Automatic VLP 42RLE Trans

AR = use ase required - = Non illustrrated part

Pistons, Piston Rings, Connecting Rods, Connecting Rod Bearings 5.7L [EZH] With MDS
Figure 009EZH-425

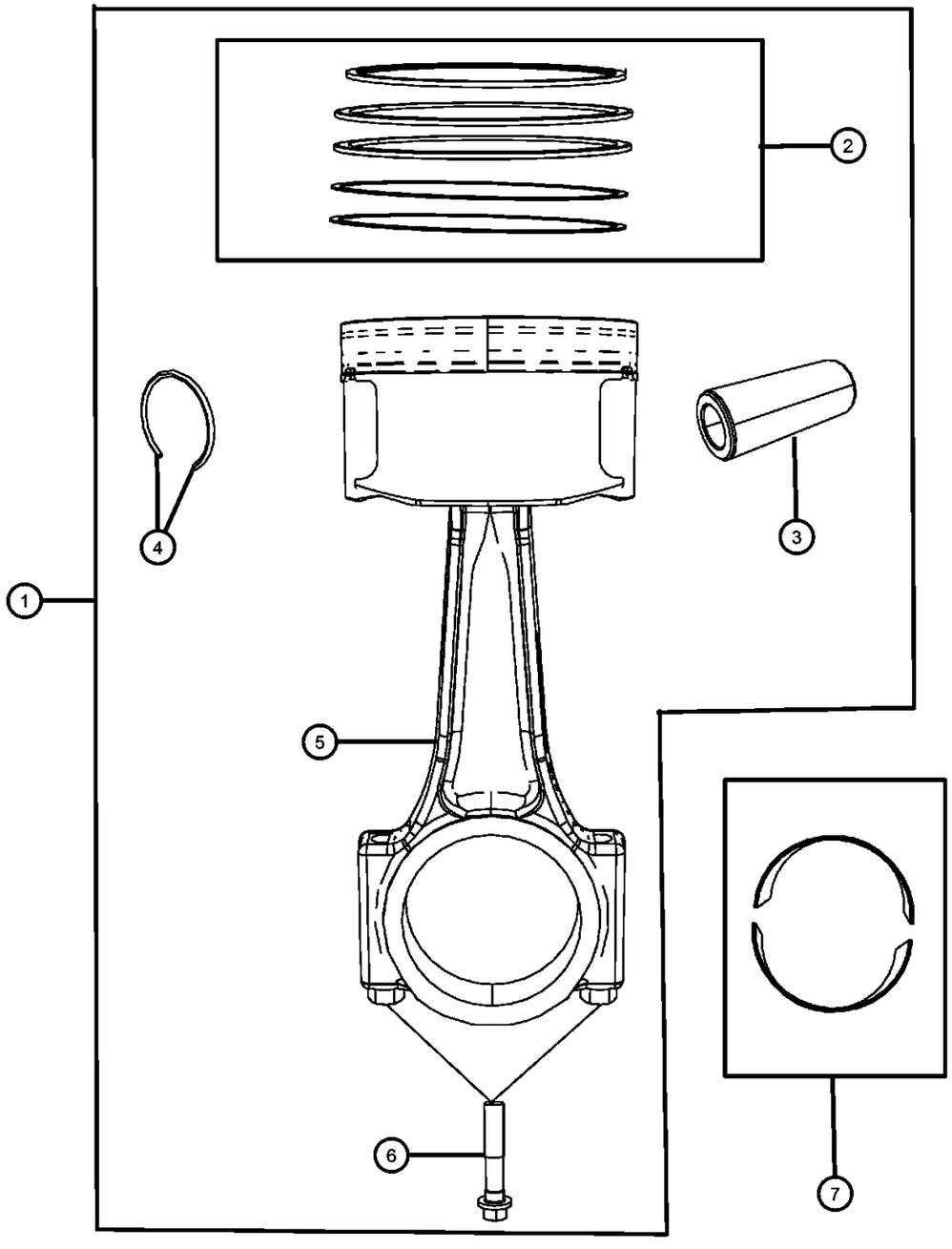

ITEM	PART NUMBER	QTY	LINE	SERIES	BODY	ENGINE	TRANS	TRIM	DESCRIPTION
NOTE: For Crankshaft Indentification, Stamping Location And Bearing Information Refer To The Service Manual. For Bearing Selection Sizes Please Refer To Service Manual Group 9, Bearings Crankshaft Main, [Select Fit Identification] Sales Codes: [DEC]									
1									PISTON PIN AND ROD
	53022257AD	4	D			EZH			Cylinders 1,3,5,7
	53022258AD	4	D			EZH			Cylinders 2,4,6.8
2	68046210AB	1	D			EZH	DGJ		RING PACKAGE, Piston, Standard Size
3		1							PIN, Piston, Serviced With Piston Package, (NOT SERVICED)
4		1							RING, Piston Pin, Serviced With Piston Package, (NOT SERVICED)
5		1							ROD, Connecting, Serviced With Piston Package, (NOT SERVICED)
6	06506335AA	8	D			EZH			BOLT, Connecting Rod
7	68060359AA	4	D			EZH			BEARING PACKAGE, Connecting Rod, Standard, See Note

DODGE CHALLENGER (LC)

SERIES	LINE	BODY	ENGINE	TRANSMISSION
H = HIGHLINE P = PREMIUM X = SPECIAL	D = DODGE	22 = 2-DR SEDAN TYPE #2	EGG = 3.5L High Output V6 24V MPI Engine ESF = 6.1L SRT HEMI V8 Engine EZC = 5.7L HEMI VCT Engine EZD = 5.7L Hemi VCT MDS Engine	DEC = 6-Speed Manual TREMEC Transmission DGJ = 5-Speed Auto W5A580 Transmission DGV = 4-Spd. Automatic VLP 42RLE Trans

Camshaft And Valvetrain 5.7L [EZH] With MDS
Figure 009EZH-505

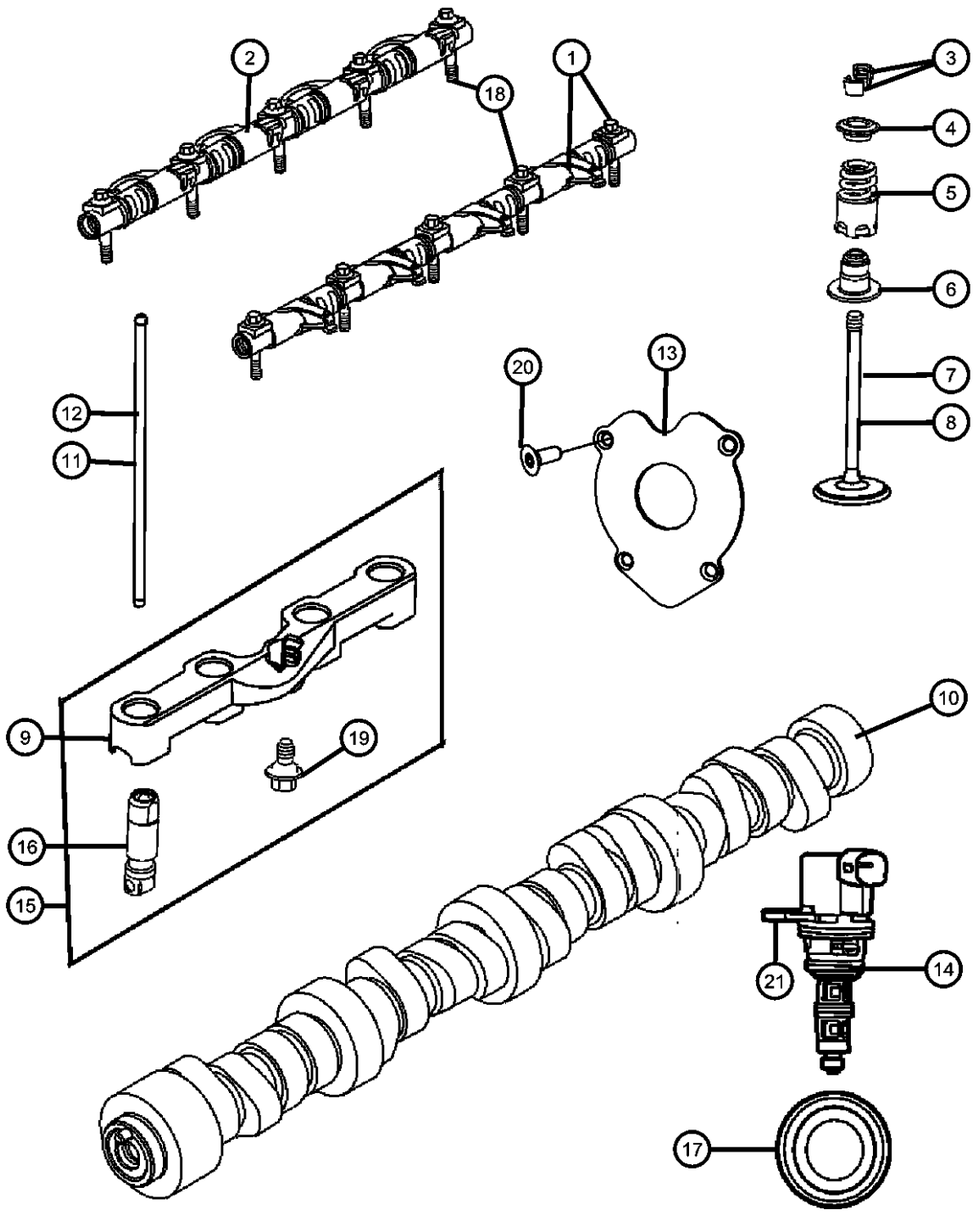

ITEM	PART NUMBER	QTY	LINE	SERIES	BODY	ENGINE	TRANS	TRIM	DESCRIPTION
1	68060344AA	2	D			EZC, EZD, EZH			ROCKER ARM, Exhaust
2	68060343AA	2	D			EZC, EZD, EZH			ROCKER ARM, Intake
3	68060350AA	32	D			EZC, EZD, EZH			LOCK, Valve Spring Retainer
4	68060351AA	16	D			EZC, EZD, EZH			RETAINER, Valve Spring
5	53022089AD	16	D			EZC, EZD, EZH			SPRING, Valve
6	53022225AB	16	D			EZC, EZD, EZH			SEAT, Valve Spring
7	53022090AB	16	D			EZD, EZH, EZC			SEAL, Valve Guide
8	53022087AA	8	D			EZC, EZD, EZH			VALVE, Intake, Standard
9	53022088AB	8	D			EZC, EZD, EZH			VALVE, Exhaust, Standard
10									YOKE, Tappet Aligning
	53021727AC	2	D			EZD, EZH			Front
	53021729AC	2	D			EZD, EZH			Rear
11	53022372AA	1	D			EZD, EZH			CAMSHAFT, Engine
12	53021556BB	8	D			EZC, EZD, EZH			PUSH ROD, Intake Valve
13	53021557BB	8	D			EZC, EZD, EZH			PUSH ROD, Exhaust Valve
14	53022178AE	1	D			EZC, EZD, EZH			PLATE, Camshaft Thrust
15	68060345AA	4	D			EZH			SOLENOID, Multiple Displacement
16									LIFTERS AND YOKE, Hydraulic, Engine
	68060714AA	2	D			EZD, EZH			Front
	68060715AA	2	D			EZD, EZH			Rear
17		2							LIFTER, Hydraulic Roller Deactivating, Serviced In Lifters And Yoke, (NOT SERVICED)
18	06507663AA	1	D			EZC, EZD, EZH			PLUG, Camshaft
19	06507072AA	10	D			EZC, EZD, EZH			BOLT, Hex Flange Head, M8X1.25X50.00, Rocker Arm Shaft To Cylinder Head, Mounting
20	06509208AA	2	D			EZD, EZH			BOLT, Hex Flange Head, M6x1.00x14.00, Lifter Guide To Cylinder Block, Mounting

DODGE CHALLENGER (LC)

SERIES	LINE	BODY	ENGINE	TRANSMISSION
H = HIGHLINE P = PREMIUM X = SPECIAL	D = DODGE	22 = 2-DR SEDAN TYPE #2	EGG = 3.5L High Output V6 24V MPI Engine ESF = 6.1L SRT HEMI V8 Engine EZC = 5.7L HEMI VCT Engine EZD = 5.7L Hemi VCT MDS Engine	DEC = 6-Speed Manual TREMEC Transmission DGJ = 5-Speed Auto W5A580 Transmission DGV = 4-Spd. Automatic VLP 42RLE Trans

AR = use ase required - = Non illustrrated part

Camshaft And Valvetrain 5.7L [EZH] With MDS
Figure 009EZH-505

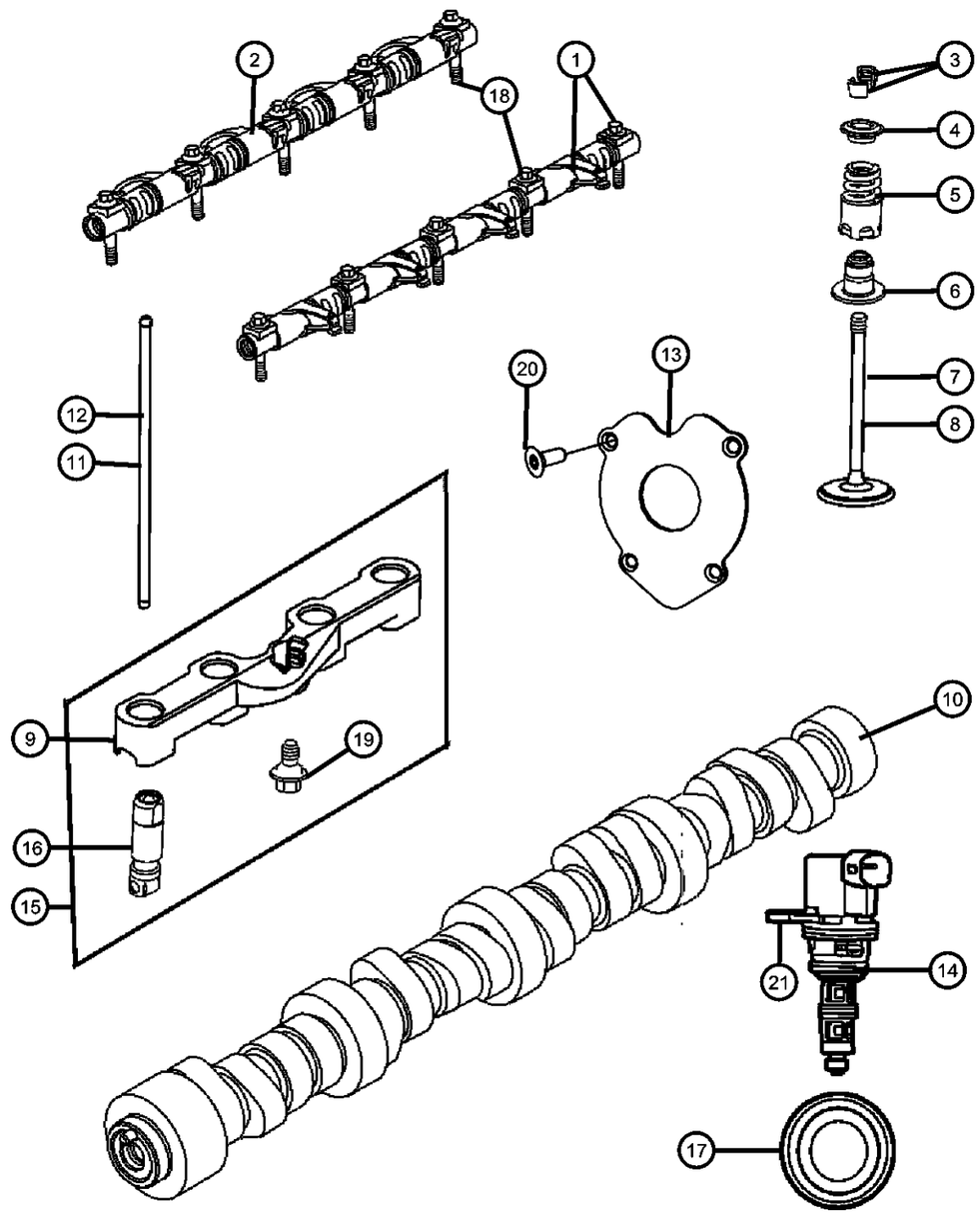

ITEM	PART NUMBER	QTY	LINE	SERIES	BODY	ENGINE	TRANS	TRIM	DESCRIPTION
21	06102205AA	4	D			EZC, EZD, EZH			BOLT, Recessed Torx head, M6X1.00X15.00, Camshaft Thrust Plate To Cylinder Block, Mounting
22									BOLT AND CONED WASHER, Hex Head, M6X1.00X14.00
	06102164AA	4	D			EZC, EZD, EZH			MDS Soleniod To Cylinder Block, Mounting
		1	D			EZC, EZD, EZH			Variable Valve Timing Solenoid To Cylinder Block, Mounting
-23	53022338AA	1	D			EZD, EZH			SOLENOID, Variable Valve Timing, Exhaust

DODGE CHALLENGER (LC)

SERIES	LINE	BODY	ENGINE	TRANSMISSION
H = HIGHLINE	D = DODGE	22 = 2-DR SEDAN TYPE #2	EGG = 3.5L High Output V6 24V MPI Engine	DEC = 6-Speed Manual TREMEC Transmission
P = PREMIUM			ESF = 6.1L SRT HEMI V8 Engine	DGJ = 5-Speed Auto W5A580 Transmission
X = SPECIAL			EZC = 5.7L HEMI VCT Engine	DGV = 4-Spd. Automatic VLP 42RLE Trans
			EZD = 5.7L Hemi VCT MDS Engine	

AR = use ase required - = Non illustrrated part

Timing Case Cover 5.7L [EZH] With MDS
Figure 009EZH-605

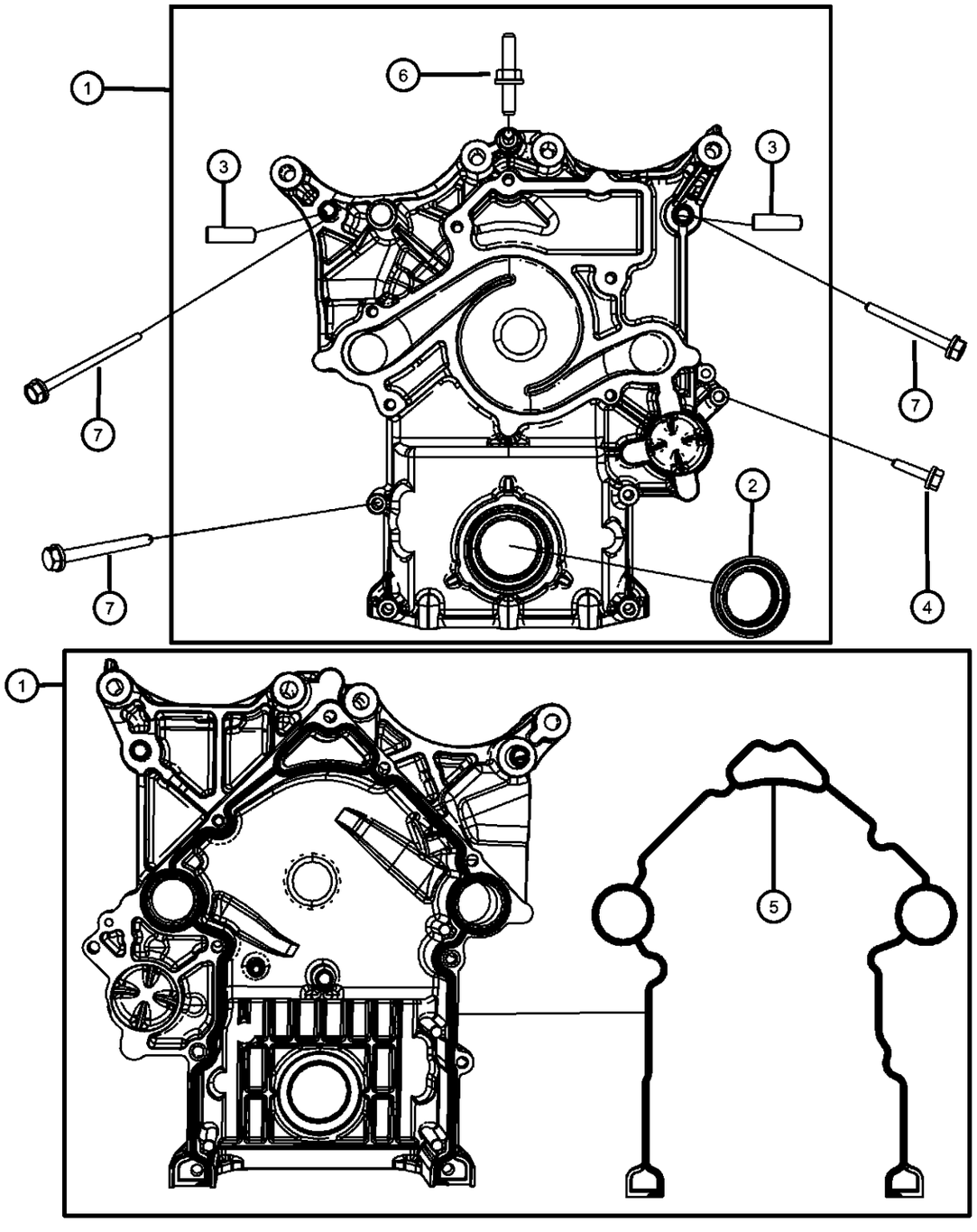

ITEM	PART NUMBER	QTY	LINE	SERIES	BODY	ENGINE	TRANS	TRIM	DESCRIPTION

NOTE:
Sales Codes:
[DEC] = 6-Speed Manual TR6060 Transmission
[DEH] = 6-Speed Manual NSG370 Transmission
[DF9] = AHS-T RWD Automatic Transmission
[DGJ] = 5-Speed Automatic W5A580 Transmission
[DGQ] = 5-Speed Automatic 545RFE Transmission
[

1	53022096AF	1	D			EZC, EZD, EZH			COVER, Timing Case
2	53021585AD	1	D			EZC, EZD, EZH			SEAL, Crankshaft Oil, Front
3	06506697AA	2	D			EZC, EZD, EZH			BUSHING, Timing Cover
4	06506269AA	5	D			EZC, EZD, EZH			BOLT AND CONED WASHER, Hex Head, M8X1.25X35.00, Water Pump To Front Cover, Mounting
5	68060362AA	1	D			EZC, EZD, EZH			GASKET PACKAGE, Front Cover
6	06506343AA	1	D			EZC, EZD, EZH			STUD, Double Ended, M10X1.50X25.00, Cover/ Lifting Stud, Mounting
7									BOLT AND CONED WASHER, Hex Head, M8X1.25X85.00
	06102184AA	4	D			EZC, EZD, EZH			Water Pump To Front Cover, Mounting
		4	D			EZC, EZD, EZH			Cover To Cylinder Block, Mounting

DODGE CHALLENGER (LC)

SERIES	LINE	BODY	ENGINE	TRANSMISSION
H = HIGHLINE P = PREMIUM X = SPECIAL	D = DODGE	22 = 2-DR SEDAN TYPE #2	EGG = 3.5L High Output V6 24V MPI Engine ESF = 6.1L SRT HEMI V8 Engine EZC = 5.7L HEMI VCT Engine EZD = 5.7L Hemi VCT MDS Engine	DEC = 6-Speed Manual TREMEC Transmission DGJ = 5-Speed Auto W5A580 Transmission DGV = 4-Spd. Automatic VLP 42RLE Trans

Timing System 5.7L [EZH] With MDS
Figure 009EZH-625

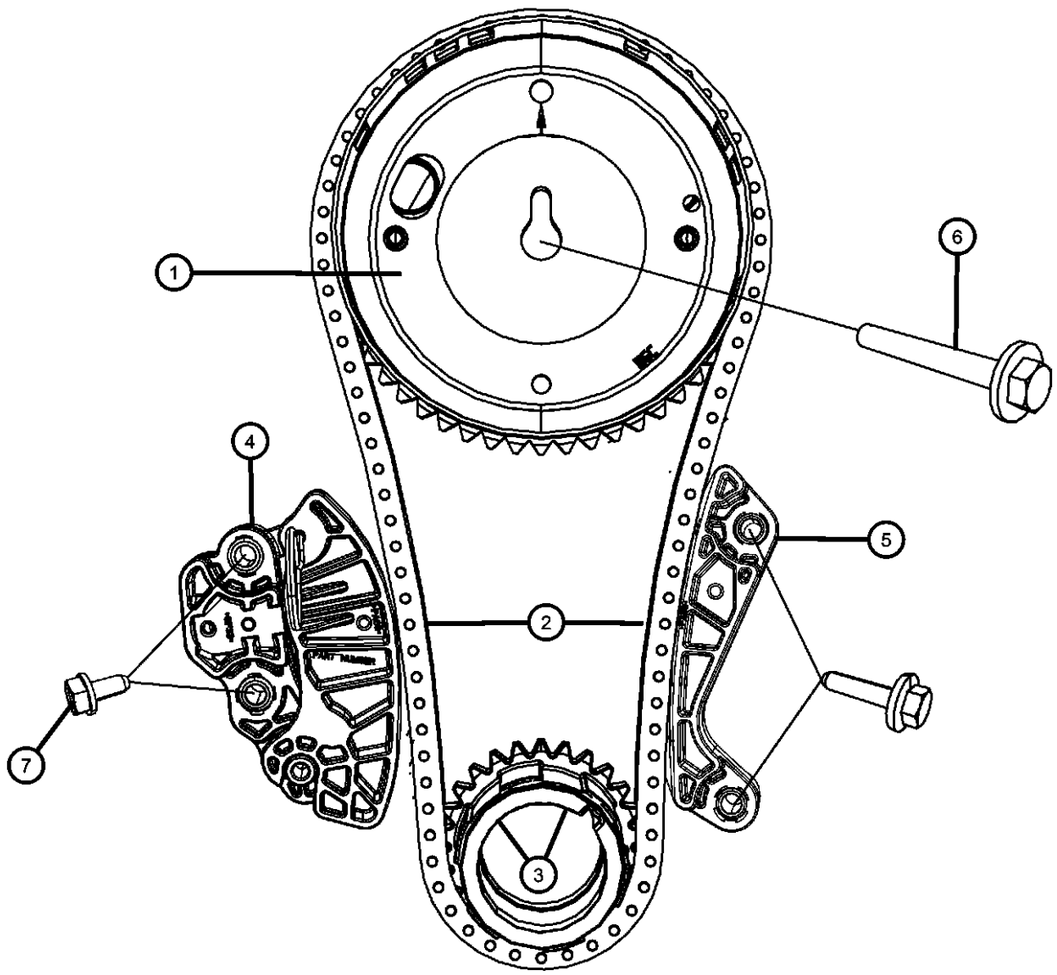

ITEM	PART NUMBER	QTY	LINE	SERIES	BODY	ENGINE	TRANS	TRIM	DESCRIPTION

NOTE:
Sales Codes:
[DEC] = 6-Speed Manual TR6060 Transmission
[DEH] = 6-Speed Manual NSG370 Transmission
[DF9] = AHS-T RWD Automatic Transmission
[DGJ] = 5-Speed Automatic W5A580 Transmission
[DGQ] = 5-Speed Automatic 545RFE Transmission
[

1	53022243AF	1	D			EZC, EZD, EZH			PHASER, Camshaft
2	53022316AC	1	D			EZC, EZD, EZH			CHAIN, Timing
3	53022317AC	1	D			EZC, EZD, EZH			SPROCKET, Crankshaft
4	53022115AG	1	D			EZC, EZD, EZH			TENSIONER, Chain
5	53022315AD	1	D			EZC, EZD, EZH			GUIDE, Timing Chain
6	06102430AA	1	D			EZC, EZD, EZH			BOLT AND CONED WASHER, Hex Head, M12X1.75X95.00, Phaser To Camshaft, Mounting
7	06102205AA	4	D			EZC, EZD, EZH			BOLT, Recessed Torx head, M6X1.00X15.00, Chain Guide To Cylinder Block, Mounting

DODGE CHALLENGER (LC)

SERIES	LINE	BODY	ENGINE	TRANSMISSION
H = HIGHLINE P = PREMIUM X = SPECIAL	D = DODGE	22 = 2-DR SEDAN TYPE #2	EGG = 3.5L High Output V6 24V MPI Engine ESF = 6.1L SRT HEMI V8 Engine EZC = 5.7L HEMI VCT Engine EZD = 5.7L Hemi VCT MDS Engine	DEC = 6-Speed Manual TREMEC Transmission DGJ = 5-Speed Auto W5A580 Transmission DGV = 4-Spd. Automatic VLP 42RLE Trans

Engine Oiling Pump 5.7L [EZH] With MDS
Figure 009EZH-705

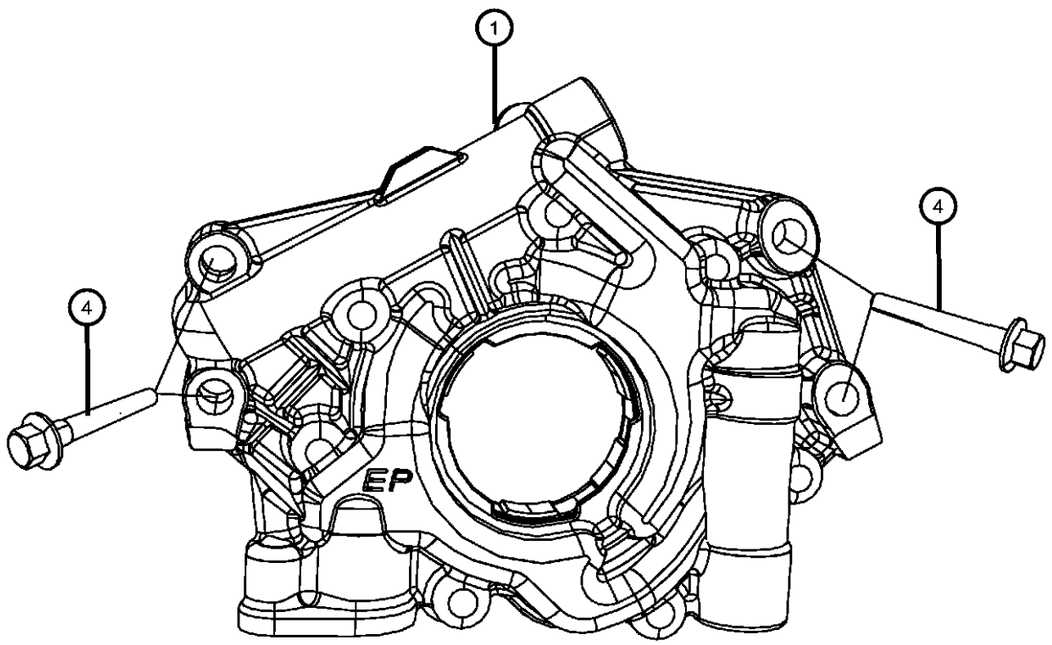

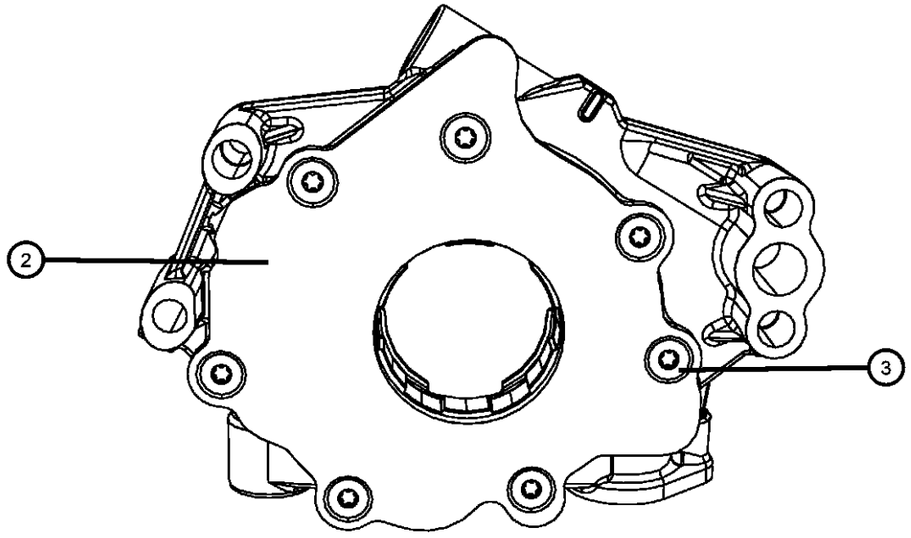

ITEM	PART NUMBER	QTY	LINE	SERIES	BODY	ENGINE	TRANS	TRIM	DESCRIPTION

NOTE:
Sales Codes:
[DEC] = 6-Speed Manual TR6060 Transmission
[DEH] = 6-Speed Manual NSG370 Transmission
[DF9] = AHS-T RWD Automatic Transmission
[DGJ] = 5-Speed Automatic W5A580 Transmission
[DGQ] = 5-Speed Automatic 545RFE Transmission
[

1	53021622BF	1	D			EZC, EZD, EZH			PUMP, Engine Oil
2		1							COVER, Engine Oil Pump, Serviced With Oil Pump, (NOT SERVICED)
3		1							SCREW, Torx Head, Serviced With Oil Pump, (NOT SERVICED)
4	06101233	4	D			EZC, EZD, EZH			BOLT AND CONED WASHER, Hex Head, M8X1.25X65.00, Oil Pump To Cylinder Block, Mounting

DODGE CHALLENGER (LC)

SERIES	LINE	BODY	ENGINE	TRANSMISSION
H = HIGHLINE P = PREMIUM X = SPECIAL	D = DODGE	22 = 2-DR SEDAN TYPE #2	EGG = 3.5L High Output V6 24V MPI Engine ESF = 6.1L SRT HEMI V8 Engine EZC = 5.7L HEMI VCT Engine EZD = 5.7L Hemi VCT MDS Engine	DEC = 6-Speed Manual TREMEC Transmission DGJ = 5-Speed Auto W5A580 Transmission DGV = 4-Spd. Automatic VLP 42RLE Trans

AR = use ase required - = Non illustrrated part

Enging Oil Pan, Engine Oil Level Indicator And Related Parts 5.7L [EZH] With MDS
Figure 009EZH-725

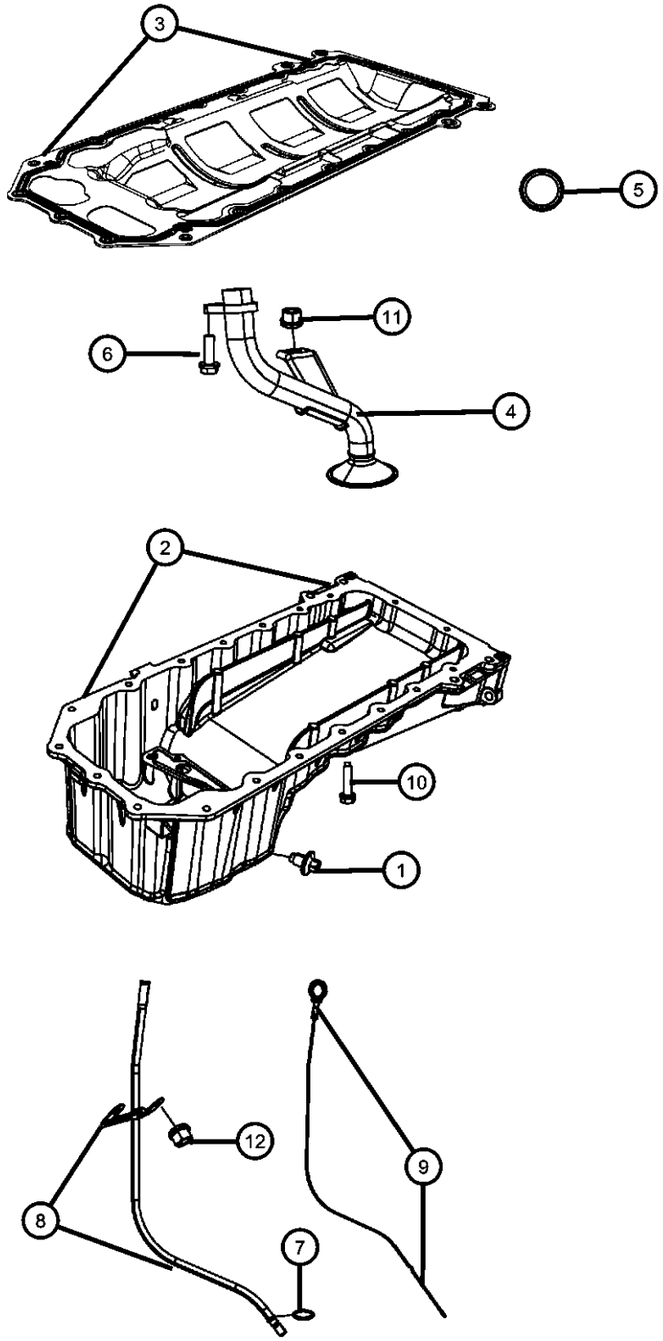

ITEM	PART NUMBER	QTY	LINE	SERIES	BODY	ENGINE	TRANS	TRIM	DESCRIPTION
NOTE:									
Sales Codes:									
[DEC] = 6-Speed Manual TR6060 Transmission									
[DEH] = 6-Speed Manual NSG370 Transmission									
[DF9] = AHS-T RWD Automatic Transmission									
[DGJ] = 5-Speed Automatic W5A580 Transmission									
[DGQ] = 5-Speed Automatic 545RFE Transmission									
[									
1	06507741AA	1	D			EZC, EZD, EZH			PLUG, Oil Drain
2	04792870AA	1	D			EZC, EZD, EZH			PAN, Engine Oil
3	04792874AA	1	D			EZD, EZH			GASKET, Oil Pan
4	04792857BB	1	D			EZC, EZD, EZH			TUBE, Oil Pickup
5	53020861	1	D			EZC, EZD, EZH			SEAL, Oil Pick Up Tube
6	06102046AA	1	D			EZC, EZD, EZH			BOLT AND CONED WASHER, Hex Head, M8X1.25X27.00, Oil Pickup Tube To Cylinder Block, Mounting
7	53021144AA	1	D			EZC, EZD, EZH			O RING, Engine Oil Indicator Tube
8	53013977AB	1	D			EZC, EZD, EZH			TUBE, Engine Oil Indicator
9	04792872AE	1	D			EZC, EZD, EZH			INDICATOR, Engine Oil Level
10	06508448AA	19	D			EZC, EZD, EZH			BOLT AND CONED WASHER, Hex Head, M6X1.00X25.00, Oil Pan To Cylinder Block, Mounting
11	06502756	3	D						NUT, Hex Lock, M8x1.25, Pickup Tube To Cylinder Block, Mounting
12	06104715AA	2	D						NUT, Hex Flange Lock, M6X1.00, Engine Oil Level Indicator Tube, Mounting

DODGE CHALLENGER (LC)

SERIES	LINE	BODY	ENGINE	TRANSMISSION
H = HIGHLINE	D = DODGE	22 = 2-DR SEDAN TYPE #2	EGG = 3.5L High Output V6 24V MPI Engine	DEC = 6-Speed Manual TREMEC Transmission
P = PREMIUM			ESF = 6.1L SRT HEMI V8 Engine	DGJ = 5-Speed Auto W5A580 Transmission
X = SPECIAL			EZC = 5.7L HEMI VCT Engine	DGV = 4-Spd. Automatic VLP 42RLE Trans
			EZD = 5.7L Hemi VCT MDS Engine	

AR = use ase required - = Non illustrrated part

Engine Oil, Engine Oil Filter And Adapter 5.7L [EZH] With MDS
Figure 009EZH-745

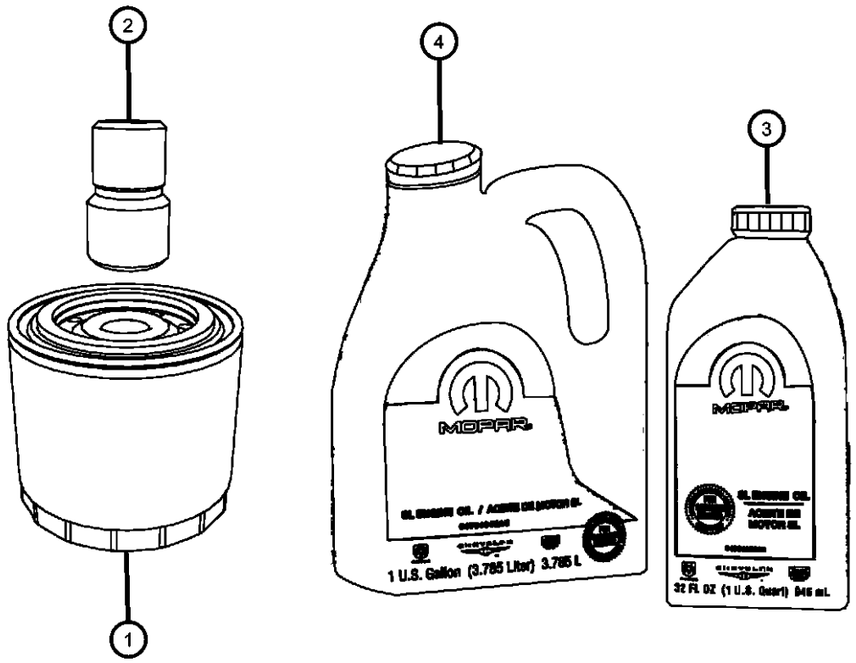

ITEM	PART NUMBER	QTY	LINE	SERIES	BODY	ENGINE	TRANS	TRIM	DESCRIPTION

NOTE:
Sales Codes:
[DEC] = 6-Speed Manual TR6060 Transmission
[DEH] = 6-Speed Manual NSG370 Transmission
[DF9] = AHS-T RWD Automatic Transmission
[DGJ] = 5-Speed Automatic W5A580 Transmission
[DGQ] = 5-Speed Automatic 545RFE Transmission
[

1	04884899AB	1	D			EZ0			FILTER, Engine Oil
2	04892338AA	1	D			EZC, EZD, EZH			CONNECTOR, Oil Filter, M22X1.50
3	04761872AC	AR	D			EZC, EZD, EZH			ENGINE OIL, 5W20, Quart, MS-10797 [API SM ILSAC GF-4], [32 Fluid Ounces] Minimum Ship Quanity Of 12
4	04761851AD	AR	D			EZC, EZD, EZH			ENGINE OIL, 5W20, Gallon, MS-10797 [API SM ILSAC GF-4], [128 Fluid Ounces] Minimum Ship Quantity Of 4 D A A EZC,EZD 22

DODGE CHALLENGER (LC)

SERIES	LINE	BODY	ENGINE	TRANSMISSION
H = HIGHLINE P = PREMIUM X = SPECIAL	D = DODGE	22 = 2-DR SEDAN TYPE #2	EGG = 3.5L High Output V6 24V MPI Engine ESF = 6.1L SRT HEMI V8 Engine EZC = 5.7L HEMI VCT Engine EZD = 5.7L Hemi VCT MDS Engine	DEC = 6-Speed Manual TREMEC Transmission DGJ = 5-Speed Auto W5A580 Transmission DGV = 4-Spd. Automatic VLP 42RLE Trans

AR = use ase required - = Non illustrrated part

Exhaust Manifolds And Heat Shields 5.7L [EZH] With MDS
Figure 009EZH-1005

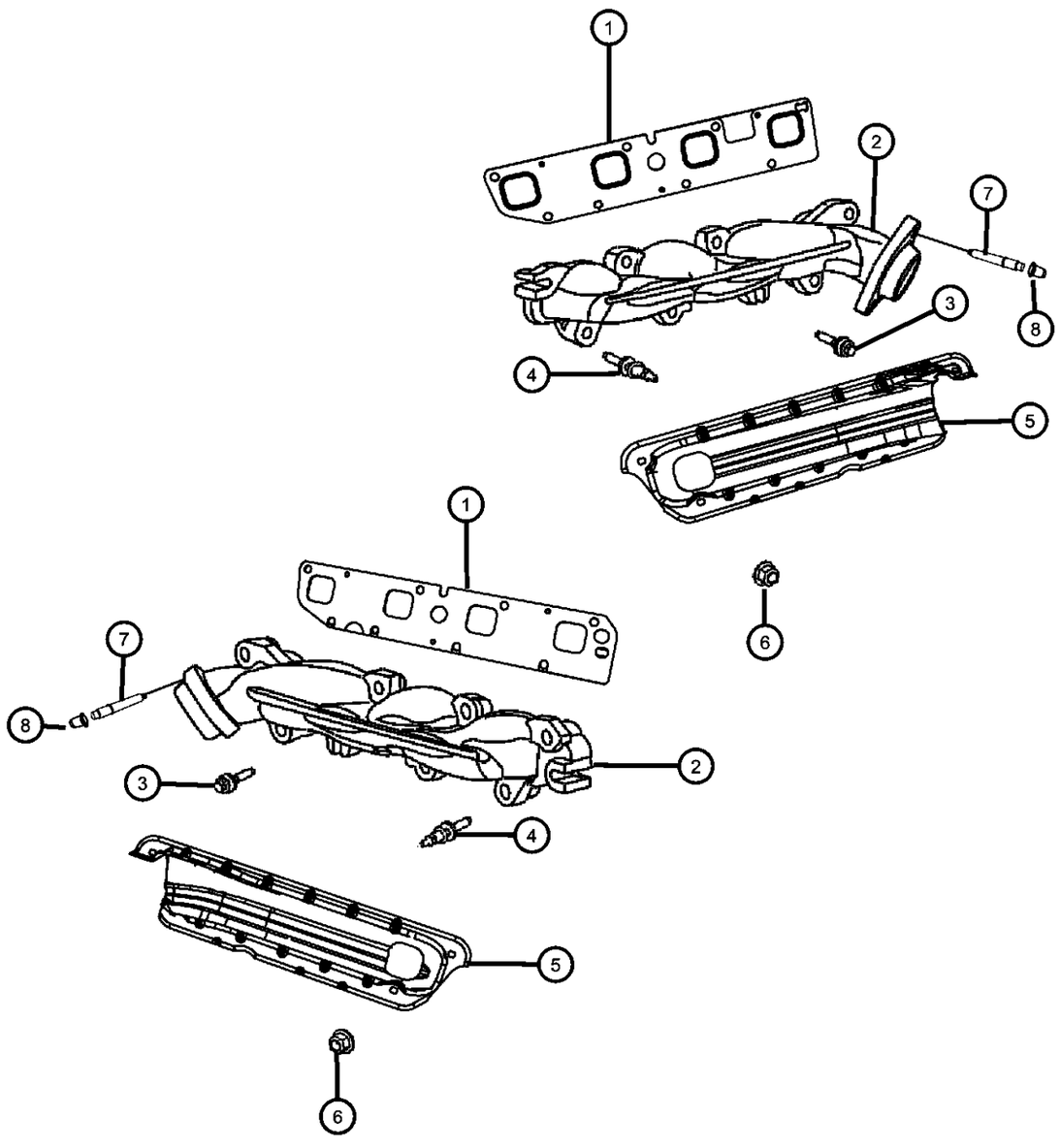

ITEM	PART NUMBER	QTY	LINE	SERIES	BODY	ENGINE	TRANS	TRIM	DESCRIPTION
NOTE:									
Sales Codes:									
[DEC] = 6-Speed Manual TR6060 Transmission									
[DEH] = 6-Speed Manual NSG370 Transmission									
[DF9] = AHS-T RWD Automatic Transmission									
[DGJ] = 5-Speed Automatic W5A580 Transmission									
[DGQ] = 5-Speed Automatic 545RFE Transmission									
[									
1									GASKET, Exhaust Manifold
	53032965AF	1	D			EZC, EZD, EZH			Left
	53032966AF	1	D			EZH, EZC, EZD			Right
2									MANIFOLD, Exhaust
	53013848AE	1	D			EZC, EZD, EZH			Right
	53013849AE	1	D			EZC, EZD, EZH			Left
3	06507746AA	9	D			EZC, EZD, EZH			BOLT, Exhaust Manifold, M8x1.25x46.00, Exhaust Manifold To Cylinder Head, Mounting
4	06509544AA	8	D			EZC, EZD, EZH			STUD, Double Ended, M8X1.25XM6X1.00X73.00, Exhaust Manifold To Cylinder Head, Mounting
5									SHIELD, Exhaust Manifold
	53013855AC	1	D			EZC, EZD, EZH			Left
	53013856AC	1	D			EZC, EZD, EZH			Right
6	06104715AA	2	D						NUT, Hex Flange Lock, M6X1.00, Heat Shield To Exhaust Manifold, Mounting
7	06507880AA	4	D			EZH			STUD, Double Ended, Front Exhaust Pipe To Exhaust Manifold, Mounting
8	06104710AA	4	D			ES0, EZ0			NUT, Hex Flange Lock, M10x1.50, Front Exhaust Pipe To Exhaust Manifold, Mounting

DODGE CHALLENGER (LC)

SERIES	LINE	BODY	ENGINE	TRANSMISSION
H = HIGHLINE	D = DODGE	22 = 2-DR SEDAN TYPE #2	EGG = 3.5L High Output V6 24V MPI Engine	DEC = 6-Speed Manual TREMEC Transmission
P = PREMIUM			ESF = 6.1L SRT HEMI V8 Engine	DGJ = 5-Speed Auto W5A580 Transmission
X = SPECIAL			EZC = 5.7L HEMI VCT Engine	DGV = 4-Spd. Automatic VLP 42RLE Trans
			EZD = 5.7L Hemi VCT MDS Engine	

Intake Manifold 5.7L [EZH] With MDS
Figure 009EZH-1025

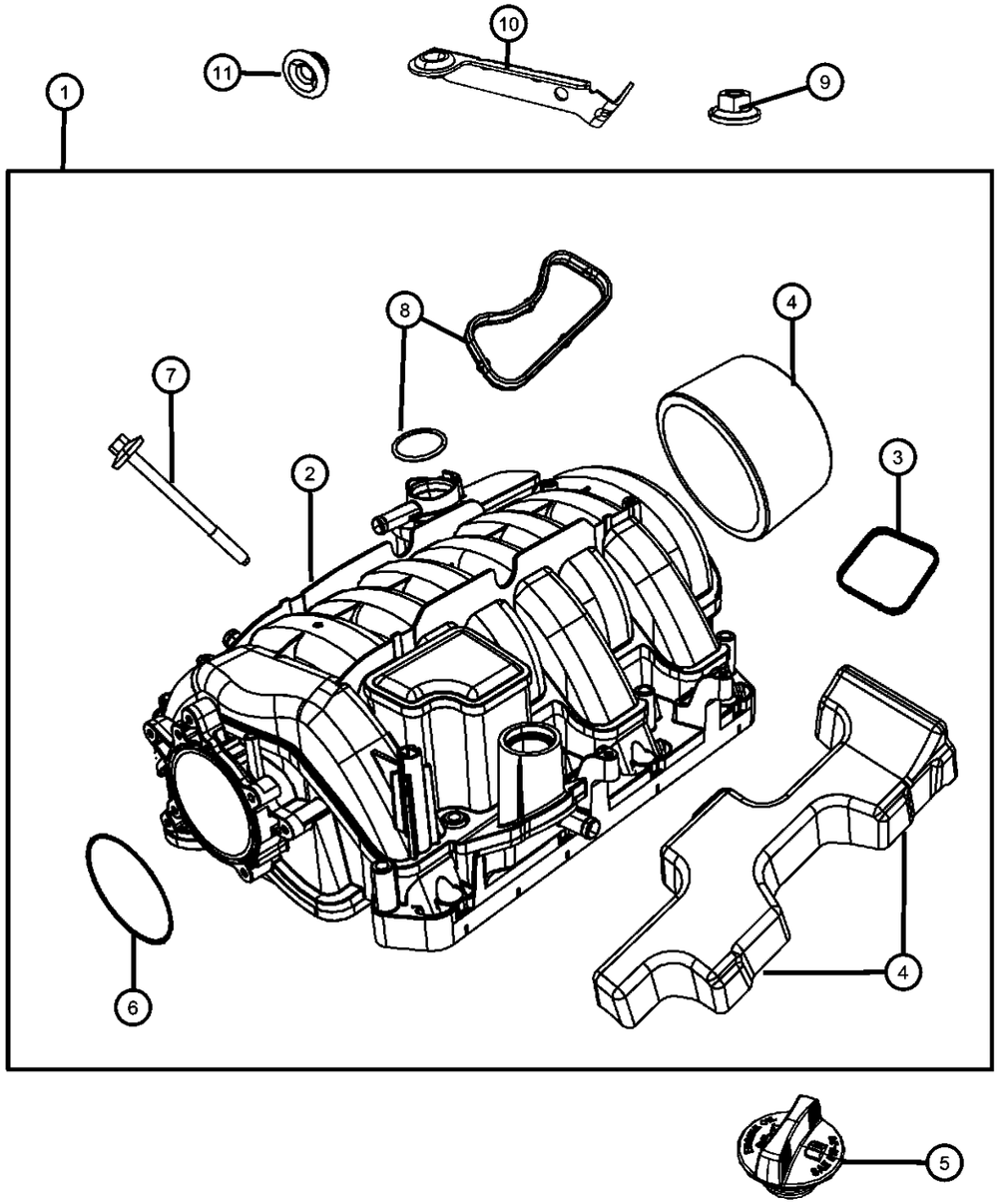

ITEM	PART NUMBER	QTY	LINE	SERIES	BODY	ENGINE	TRANS	TRIM	DESCRIPTION
NOTE:									
Sales Codes:									
[DEC] = 6-Speed Manual TR6060 Transmission									
[DEH] = 6-Speed Manual NSG370 Transmission									
[DF9] = AHS-T RWD Automatic Transmission									
[DGJ] = 5-Speed Automatic W5A580 Transmission									
[DGQ] = 5-Speed Automatic 545RFE Transmission									
[									
1	68048131AA	1	D			EZC, EZD, EZH			MANIFOLD KIT, Intake
2		1							MANIFOLD, Engine Intake, Serviced In Intake Manifold Kit, (NOT SERVICED)
3	53022143AB	8	D			EZC, EZD, EZH			SEAL, Intake Manifold
4									PAD, Engine
	53013735AB	1	D			EZC, EZD, EZH			Rear Of Intake Manifold [Round]
	53013981AD	1	D			EZC, EZD, EZH			Engine Valley Cover
5	53013775AA	1	D			EZC, EZD, EZH			CAP, Oil Filler
6	53022320AB	1	D			EZC, EZD, EZH			SEAL, Throttle Body to Intake
7	06509246AA	10	D			EZC, EZD, EZH			BOLT AND CONED WASHER, Hex Head, M6X1.00X81.00
8									SEAL, PCV
	53022142AB	2	D			EZC, EZD, EZH			Rectangle
	53032448AC	1	D			EZC, EZD, EZH			Round On PCV Valve
9	06104710AA	1	D			EG0, EZ0			NUT, Hex Flange Lock, M10x1.50, Air Cleaner Bracket, Mounting
10		1							BRACKET, Air Cleaner, (NOT SERVICED)
11	53032732AA	1	D			EZC, EZD, DEC, DGJ EZH			GROMMET, Air Cleaner Bracket

DODGE CHALLENGER (LC)

SERIES	LINE	BODY	ENGINE	TRANSMISSION
H = HIGHLINE	D = DODGE	22 = 2-DR SEDAN TYPE #2	EGG = 3.5L High Output V6 24V MPI Engine	DEC = 6-Speed Manual TREMEC Transmission
P = PREMIUM			ESF = 6.1L SRT HEMI V8 Engine	DGJ = 5-Speed Auto W5A580 Transmission
X = SPECIAL			EZC = 5.7L HEMI VCT Engine	DGV = 4-Spd. Automatic VLP 42RLE Trans
			EZD = 5.7L Hemi VCT MDS Engine	

Crankcase Ventilation 5.7L [EZH] With MDS
Figure 009EZH-1105

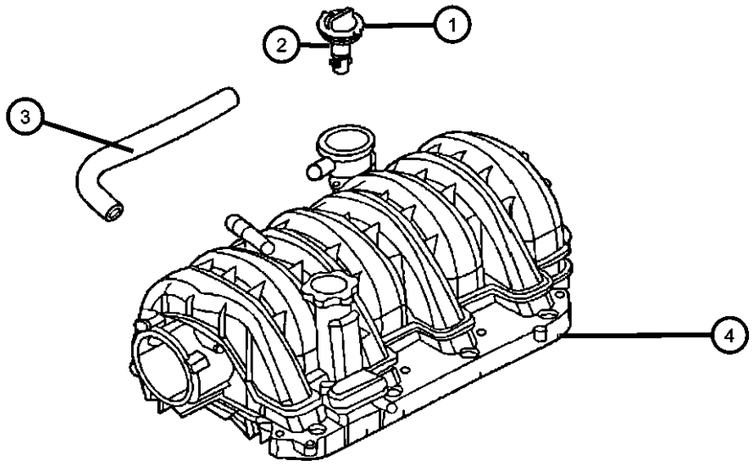

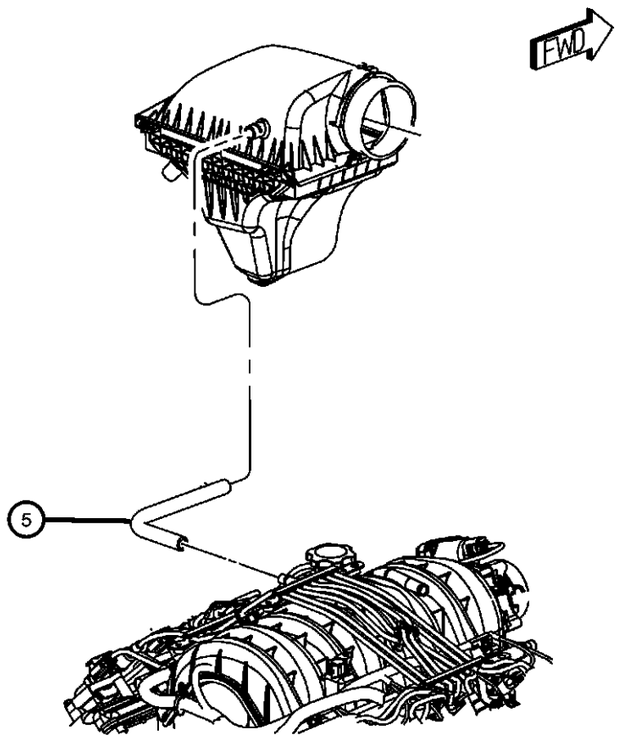

ITEM	PART NUMBER	QTY	LINE	SERIES	BODY	ENGINE	TRANS	TRIM	DESCRIPTION

NOTE:
Sales Codes:
[DEC] = 6-Speed Manual TR6060 Transmission
[DEH] = 6-Speed Manual NSG370 Transmission
[DF9] = AHS-T RWD Automatic Transmission
[DGJ] = 5-Speed Automatic W5A580 Transmission
[DGQ] = 5-Speed Automatic 545RFE Transmission
[

1	68061029AA	1	D			EZC, EZD, EZH			VALVE, Crankcase Vent
2									SEAL, PCV
	53022142AB	2	D			EZC, EZD, EZH			Rectangle
	53032448AC	1	D			EZC, EZD, EZH			Round On PCV Valve
3	04591961AD	1	D			EZC, EZD, EZH			HOSE, PCV Valve To intake Manifold
4		1							MANIFOLD, Engine Intake, Reference, (NOT SERVICED)
5	04593692AA	1	D			EZC, EZD, EZH			HOSE, Make Up Air

DODGE CHALLENGER (LC)

SERIES	LINE	BODY	ENGINE	TRANSMISSION
H = HIGHLINE P = PREMIUM X = SPECIAL	D = DODGE	22 = 2-DR SEDAN TYPE #2	EGG = 3.5L High Output V6 24V MPI Engine ESF = 6.1L SRT HEMI V8 Engine EZC = 5.7L HEMI VCT Engine EZD = 5.7L Hemi VCT MDS Engine	DEC = 6-Speed Manual TREMEC Transmission DGJ = 5-Speed Auto W5A580 Transmission DGV = 4-Spd. Automatic VLP 42RLE Trans

Engine Mounting Right Side RWD/2WD 5.7L [EZH] With MDS
Figure 009EZH-1220

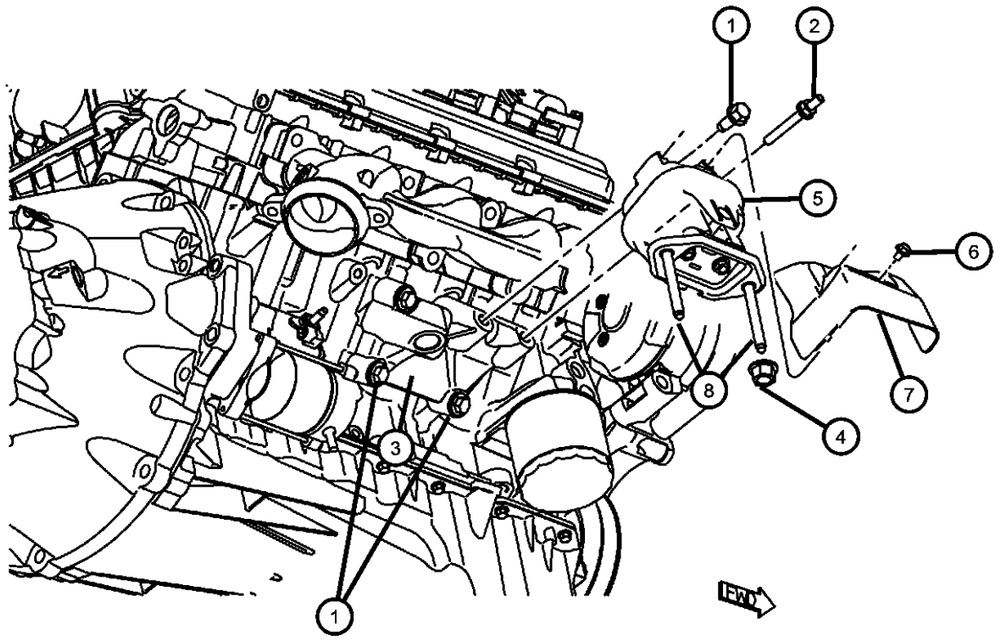

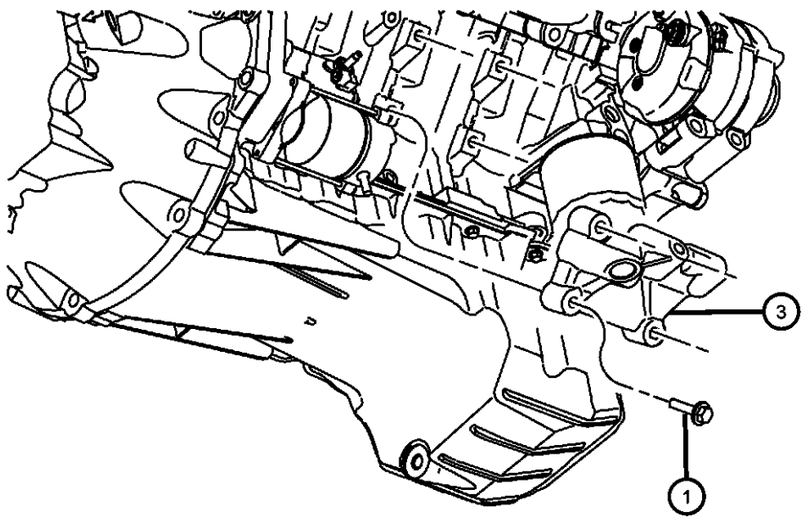

ITEM	PART NUMBER	QTY	LINE	SERIES	BODY	ENGINE	TRANS	TRIM	DESCRIPTION
NOTE:									
Sales Codes:									
[DEC] = 6-Speed Manual TR6060 Transmission									
[DEH] = 6-Speed Manual NSG370 Transmission									
[DF9] = AHS-T RWD Automatic Transmission									
[DGJ] = 5-Speed Automatic W5A580 Transmission									
[DGQ] = 5-Speed Automatic 545RFE Transmission									
[									
1									BOLT, Hex Flange Head, M10X1.50X55.00
	06101622	3	D			ESF, EZC, EZD, EZH			Engine Mount To Engine Bracket, Mounting
		8	D			ESF, EZC, EZD, EZH			Engine Mount To Engine Bracket, Mounting
2	06505653AA	1	D			EZC, EZD, EZH			STUD, [M10X1.50X86.63], Engine Mount To Engine Mount Bracket, Mounting
3	04578052AB	1	D			ESF, EZC, EZD, EZH			BRACKET, Engine Mount
4	06508120AA	4	D						NUT, M10x1.50, Engine Mount To Cradle, Mounting
5	04578046AF	1	D			EZC, EZD, EZH	DGJ		INSULATOR, Engine Mount
6	06507210AA	4	D				DGJ, DGV		BOLT, Hex Head, M6X1.00X11.00, Heat Shield To Engine Mount, Mounting
7	04578349AA	1	D			EG0, ES0, EZ0	DGJ, DGV		SHIELD, Heat
8	06508025AA	4	D			EG0, ES0, EZ0	DGJ, DGV		STUD, Double Ended, [M10X1.5X110.0], Engine Mount To Cradle, Mounting

DODGE CHALLENGER (LC)

SERIES	LINE	BODY	ENGINE	TRANSMISSION
H = HIGHLINE	D = DODGE	22 = 2-DR SEDAN TYPE #2	EGG = 3.5L High Output V6 24V MPI Engine	DEC = 6-Speed Manual TREMEC Transmission
P = PREMIUM			ESF = 6.1L SRT HEMI V8 Engine	DGJ = 5-Speed Auto W5A580 Transmission
X = SPECIAL			EZC = 5.7L HEMI VCT Engine	DGV = 4-Spd. Automatic VLP 42RLE Trans
			EZD = 5.7L Hemi VCT MDS Engine	

Engine Mounting Left Side RWD/2WD 5.7L [EZH] With MDS
Figure 009EZH-1235

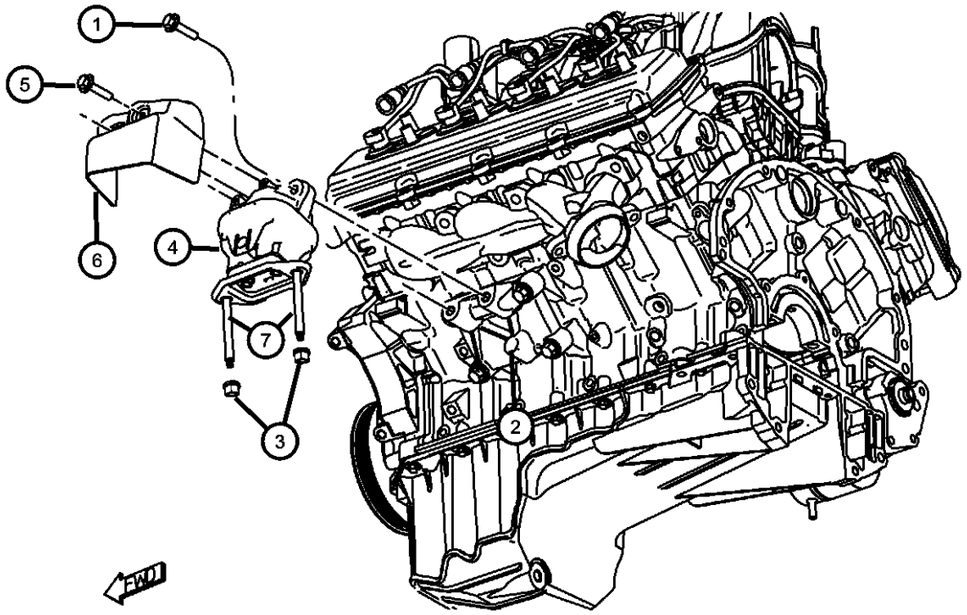

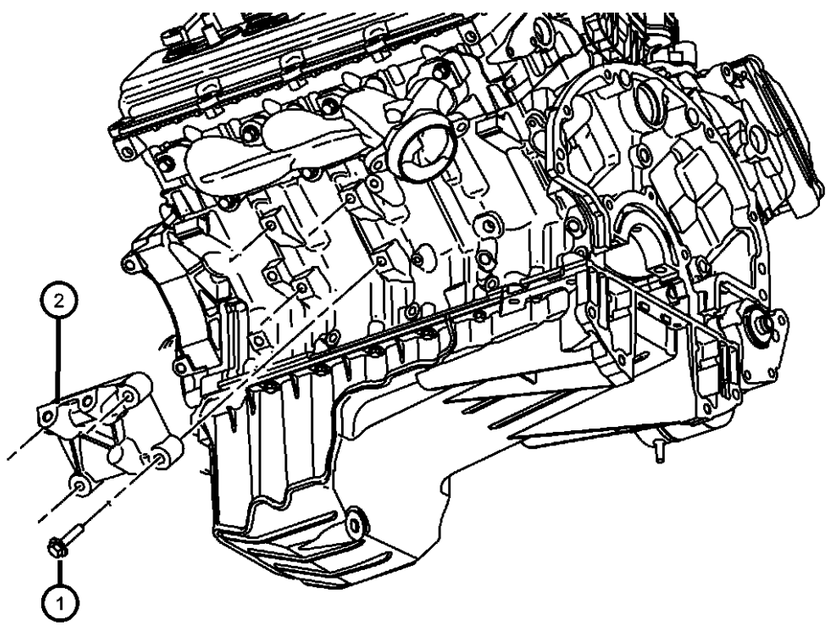

ITEM	PART NUMBER	QTY	LINE	SERIES	BODY	ENGINE	TRANS	TRIM	DESCRIPTION
NOTE: Sales Codes: [DEC] = 6-Speed Manual TR6060 Transmission [DEH] = 6-Speed Manual NSG370 Transmission [DF9] = AHS-T RWD Automatic Transmission [DGJ] = 5-Speed Automatic W5A580 Transmission [DGQ] = 5-Speed Automatic 545RFE Transmission [									
1									BOLT, Hex Flange Head, M10X1.50X55.00
	06101622	8	D			ESF, EZC, EZD, EZH			Engine Mount Bracket To Cylinder Block, Mounting
		3	D			ESF, EZC, EZD, EZH			Engine Mount To Engine Bracket, Mounting
2	04578053AC	1	D			ES0, EZ0			BRACKET, Engine Mount
3	06508120AA	4	D						NUT, M10x1.50, Engine Mount To Cradle, Mounting
4	04578046AF	1	D			EZC, EZD, EZH	DGJ		INSULATOR, Engine Mount
5	06507210AA	4	D				DGJ, DGV		BOLT, Hex Head, M6X1.00X11.00, Heat Shield To Engine Mount, Mounting
6	04578349AA	1	D			EG0, ES0, EZ0	DGJ, DGV		SHIELD, Heat
7	06508025AA	4	D			EG0, ES0, EZ0	DGJ, DGV		STUD, Double Ended, [M10X1.5X110.0], Engine Mount To Cradle, Mounting

DODGE CHALLENGER (LC)

SERIES	LINE	BODY	ENGINE	TRANSMISSION
H = HIGHLINE P = PREMIUM X = SPECIAL	D = DODGE	22 = 2-DR SEDAN TYPE #2	EGG = 3.5L High Output V6 24V MPI Engine ESF = 6.1L SRT HEMI V8 Engine EZC = 5.7L HEMI VCT Engine EZD = 5.7L Hemi VCT MDS Engine	DEC = 6-Speed Manual TREMEC Transmission DGJ = 5-Speed Auto W5A580 Transmission DGV = 4-Spd. Automatic VLP 42RLE Trans

AR = use ase required - = Non illustrrated part

Group - 10

Restraints

010-200 Air Bags	**010-300** Seat Belts		

Group - 10 Restraints

Illustration Title — Group-Fig. No.

Air Bags

Air Bag Modules, Impact Sensor and Clock Springs ..... Fig. 10 - 205
Air Bags Front ..... Fig. 10 - 210
Air Bag Side ..... Fig. 10 - 215

Seat Belts

Seat Belts, Front ..... Fig. 10 - 305
Seat Belt Rear ..... Fig. 10 - 310

Air Bag Modules, Impact Sensor and Clock Springs
Figure 10-205

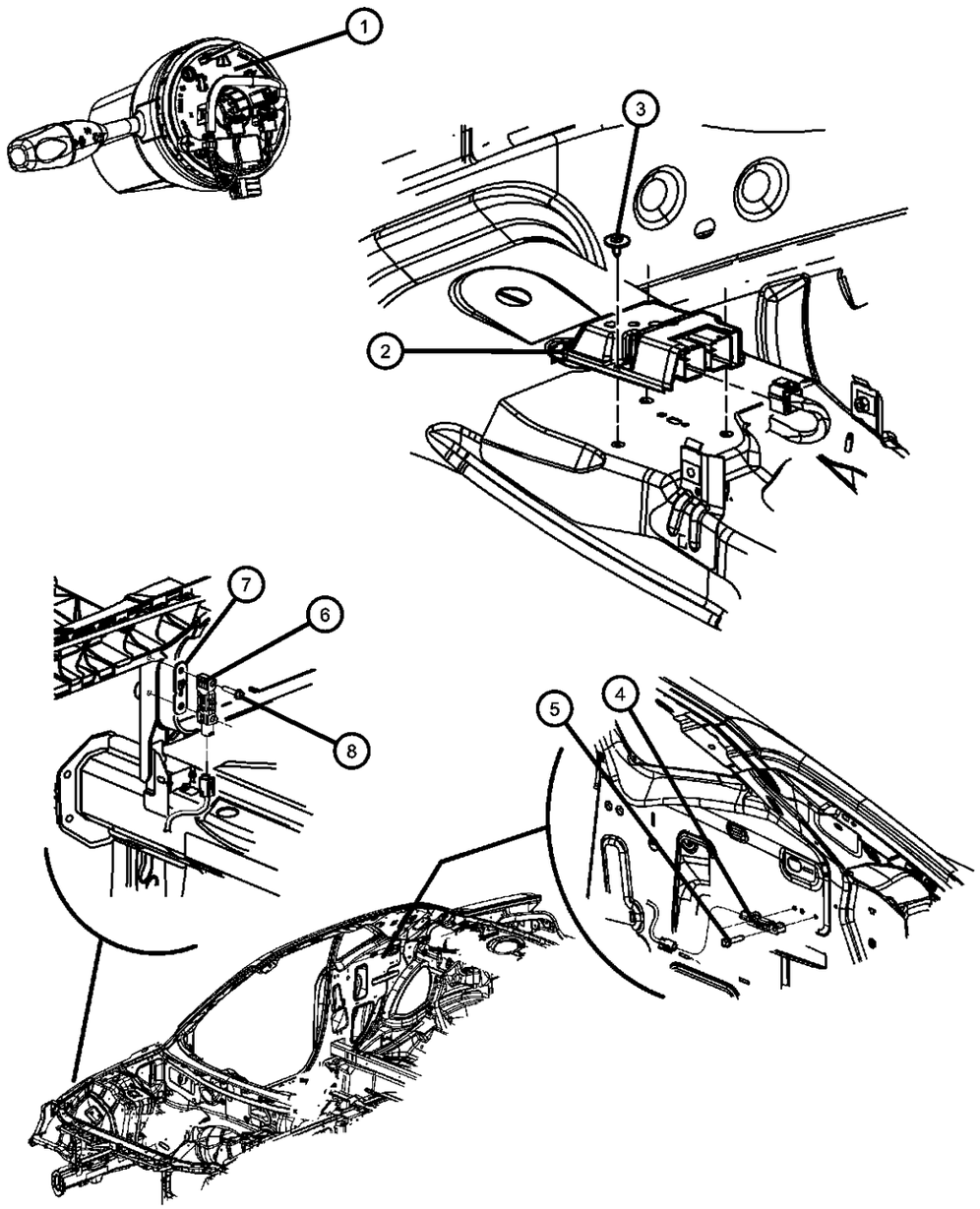

ITEM	PART NUMBER	QTY	LINE	SERIES	BODY	ENGINE	TRANS	TRIM	DESCRIPTION
1	68034898AA	1	D		22				CLOCKSPRING, Steering Column Control Module
2	56054679AD	1	D		22				MODULE, Occupant Restraint
3	06504341	3	D		22				SCREW, Tapping, M6x1.00x15.00
4	04896173AA	2	D		22				SENSOR, Impact
5	06104124AA	4	D		22				BOLT, Hex Flange Head, M6X1.0X30.00
6	04896173AA	2	D		22				SENSOR, Impact
7	05081049AB	2	D		22				TAPPING PLATE, FRONT IMPACT SENSOR
8	06104124AA	4	D		22				BOLT, Hex Flange Head, M6X1.0X30.00

DODGE CHALLENGER (LC)

SERIES	LINE	BODY	ENGINE	TRANSMISSION
H = HIGHLINE P = PREMIUM X = SPECIAL	D = DODGE	22 = 2-DR SEDAN TYPE #2	EGG = 3.5L High Output V6 24V MPI Engine ESF = 6.1L SRT HEMI V8 Engine EZC = 5.7L HEMI VCT Engine EZD = 5.7L Hemi VCT MDS Engine	DEC = 6-Speed Manual TREMEC Transmission DGJ = 5-Speed Auto W5A580 Transmission DGV = 4-Spd. Automatic VLP 42RLE Trans

Air Bags Front
Figure 10-210

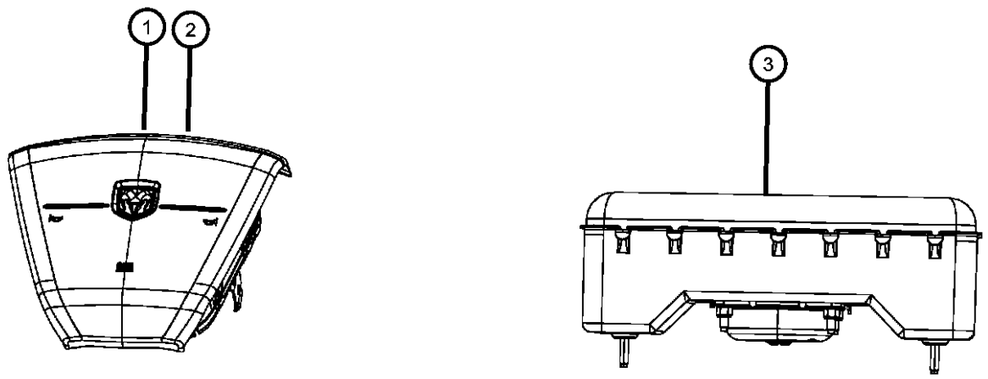

ITEM	PART NUMBER	QTY	LINE	SERIES	BODY	ENGINE	TRANS	TRIM	DESCRIPTION
1	0UW70XD-VAG	1	D		22				AIR BAG, Driver
2	1AF32XDVAB	1	D		22				COVER, Air Bag Module
3	05108873AB	1	D		22				AIR BAG, Passenger

DODGE CHALLENGER (LC)

SERIES	LINE	BODY	ENGINE	TRANSMISSION
H = HIGHLINE	D = DODGE	22 = 2-DR SEDAN TYPE #2	EGG = 3.5L High Output V6 24V MPI Engine	DEC = 6-Speed Manual TREMEC Transmission
P = PREMIUM			ESF = 6.1L SRT HEMI V8 Engine	DGJ = 5-Speed Auto W5A580 Transmission
X = SPECIAL			EZC = 5.7L HEMI VCT Engine	DGV = 4-Spd. Automatic VLP 42RLE Trans
			EZD = 5.7L Hemi VCT MDS Engine	

Air Bag Side
Figure 10-215

ITEM	PART NUMBER	QTY	LINE	SERIES	BODY	ENGINE	TRANS	TRIM	DESCRIPTION
1	05108016AE	1	D		22				AIR BAG, Right Side, With [CJ2]
2	05108017AE	1	D		22				AIR BAG, Left Side, With [CJ2]
3	06508332AA	4	D		22				SCREW
4	06507559AA	10	D		22				U-NUT, M6 x 1.00, M6x1.00
5	06030441	2	D		22				PIN, Retainer
6									SUPPORT, Side Air Bag
	04662048AE	1	D		22				Right
	04662045AE	1	D		22				Left

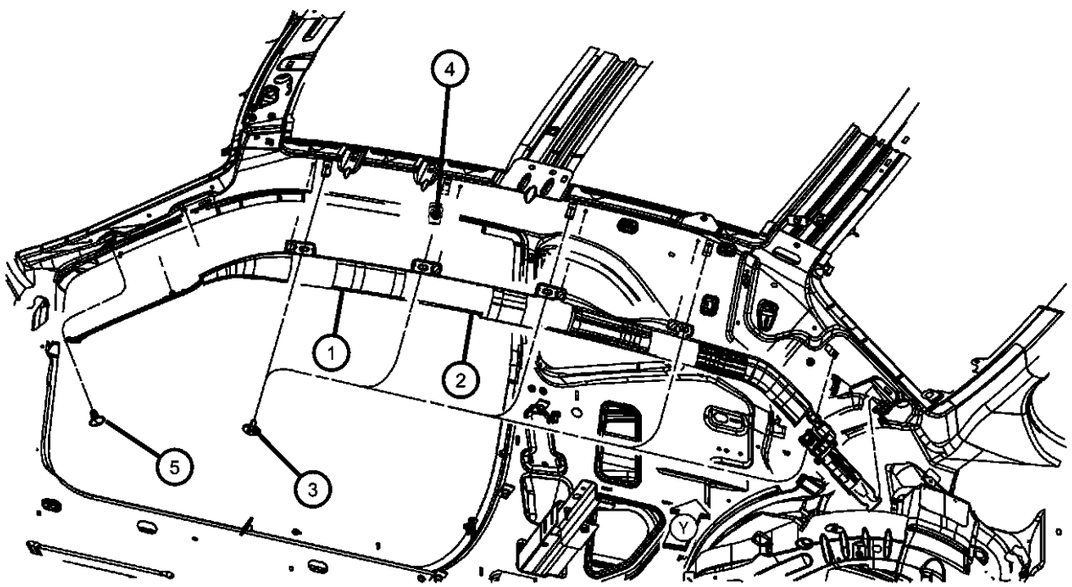

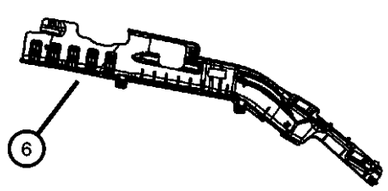

DODGE CHALLENGER (LC)

SERIES	LINE	BODY	ENGINE	TRANSMISSION
H = HIGHLINE P = PREMIUM X = SPECIAL	D = DODGE	22 = 2-DR SEDAN TYPE #2	EGG = 3.5L High Output V6 24V MPI Engine ESF = 6.1L SRT HEMI V8 Engine EZC = 5.7L HEMI VCT Engine EZD = 5.7L Hemi VCT MDS Engine	DEC = 6-Speed Manual TREMEC Transmission DGJ = 5-Speed Auto W5A580 Transmission DGV = 4-Spd. Automatic VLP 42RLE Trans

AR = use ase required - = Non illustrrated part

Seat Belts, Front
Figure 10-305

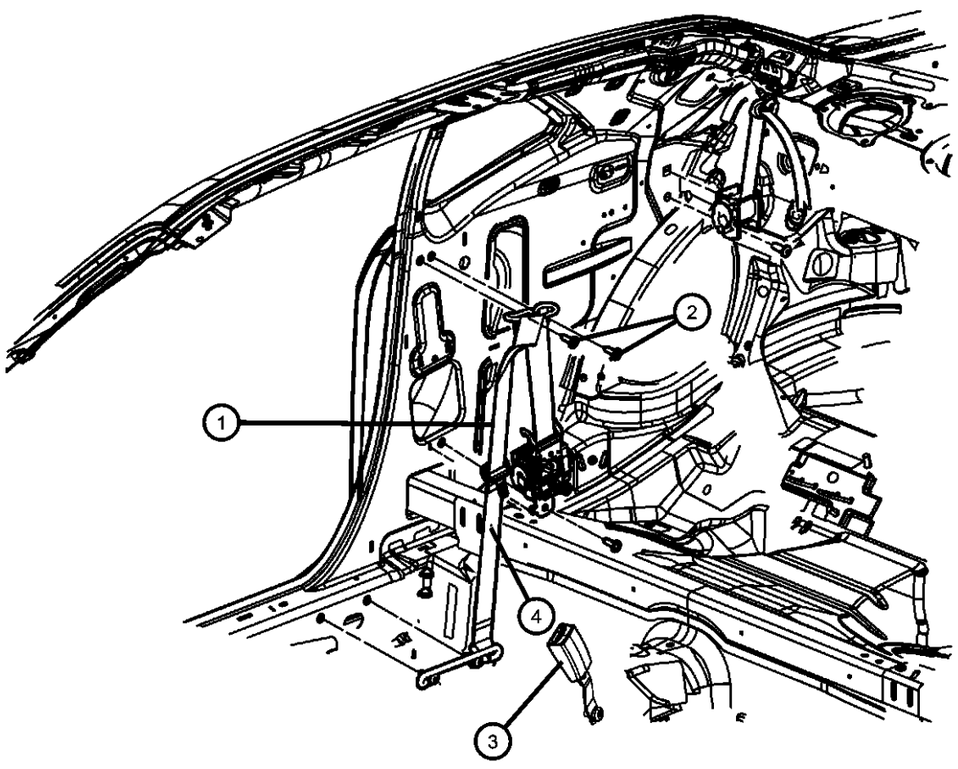

ITEM	PART NUMBER	QTY	LINE	SERIES	BODY	ENGINE	TRANS	TRIM	DESCRIPTION
1									SEAT BELT, Front Outer
	1GN431DVAD	1	D		22				Up to 07/07/08, Left
	1GN431DVAF	1	D		22				After 07/07/08, Left
	1GN421DVAE	1	D		22				Up to 07/07/08, Right
	1GN421DVAF	1	D		22				After 07/07/08, Right
2	06036187AA	2	D		22				SCREW, Pan Head, .437-20X1.45
3									SEAT BELT, Front Inner
	1JZ721DVAB	1	D	X	22				After 07/07/08, Right
	1BX251DVAB	1	D		22				[-JPS], Left
	1MX351DVAB	1	D		22				After 07/07/08, Left
	1JZ721DVAA	1	D		22				Up to 07/07/08, Right
		1	D		22				Up to 07/07/08, Right
		1	D	X	22				Up to 07/07/08, Right
		1	D		22				After 07/07/08, Right
		1	D		22				After 07/07/08, Right
		1	D	X	22				After 07/07/08, Left
		1	D		22				After 07/07/08, Left
	1MX351DVAA	1	D		22				Up to 07/07/08, Left
		1	D	X	22				Up to 07/07/08, Left
		1	D		22				Up to 07/07/08, Left
4		1							BUTTON, BELT WEBBING, (NOT SERVICED),
-5	00153634	2	D		22				SCREW, Tapping, .190-16X.750
-6	05135197AA	1							EXTENDER, Seat Belt

DODGE CHALLENGER (LC)

SERIES	LINE	BODY	ENGINE	TRANSMISSION
H = HIGHLINE	D = DODGE	22 = 2-DR SEDAN TYPE #2	EGG = 3.5L High Output V6 24V MPI Engine	DEC = 6-Speed Manual TREMEC Transmission
P = PREMIUM			ESF = 6.1L SRT HEMI V8 Engine	DGJ = 5-Speed Auto W5A580 Transmission
X = SPECIAL			EZC = 5.7L HEMI VCT Engine	DGV = 4-Spd. Automatic VLP 42RLE Trans
			EZD = 5.7L Hemi VCT MDS Engine	

AR = use ase required - = Non illustrrated part

Seat Belt Rear
Figure 10-310

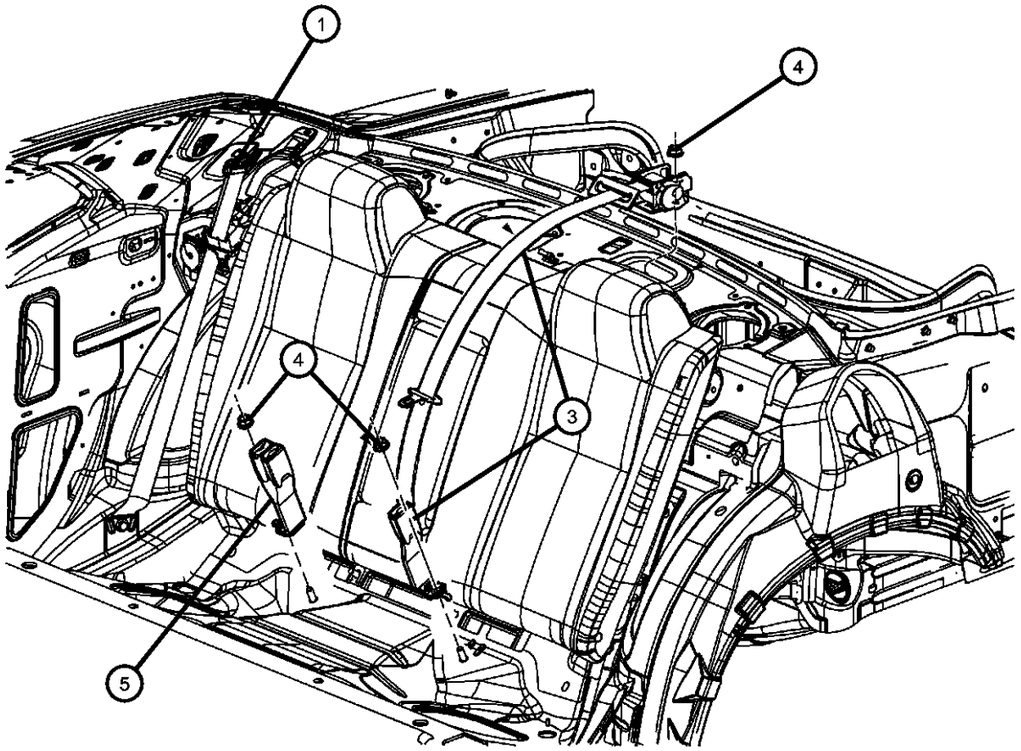

ITEM	PART NUMBER	QTY	LINE	SERIES	BODY	ENGINE	TRANS	TRIM	DESCRIPTION
1									SEAT BELT, Rear Outer
	0UX54XDVAF	1	D		22				Left
	0UX54XD-VAG	1	D		22				Right
-2	06036187AA	2	D		22				SCREW, Pan Head, .437-20X1.45
3	1BY501DVAD	1	D		22				SEAT BELT, Rear Center Shoulder
4	06502724	2	D		22				NUT, Hex Flange, M12x1.75
5	1BY491DVAA	1	D		22				SEAT BELT, Rear Inner

DODGE CHALLENGER (LC)

SERIES	LINE	BODY	ENGINE	TRANSMISSION
H = HIGHLINE	D = DODGE	22 = 2-DR SEDAN TYPE #2	EGG = 3.5L High Output V6 24V MPI Engine	DEC = 6-Speed Manual TREMEC Transmission
P = PREMIUM			ESF = 6.1L SRT HEMI V8 Engine	DGJ = 5-Speed Auto W5A580 Transmission
X = SPECIAL			EZC = 5.7L HEMI VCT Engine	DGV = 4-Spd. Automatic VLP 42RLE Trans
			EZD = 5.7L Hemi VCT MDS Engine	

AR = use ase required - = Non illustrrated part

Group - 11

Exhaust

Illustration Title | Group-Fig. No.

Exhaust System

Exhaust System ..... Fig. 11 - 105
Exhaust System ..... Fig. 11 - 110
Exhaust System Heat Shields ..... Fig. 11 - 150

011-100 Exhaust System 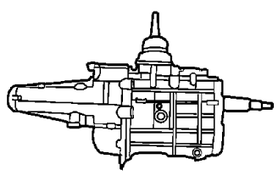			

Exhaust System
Figure 11-105

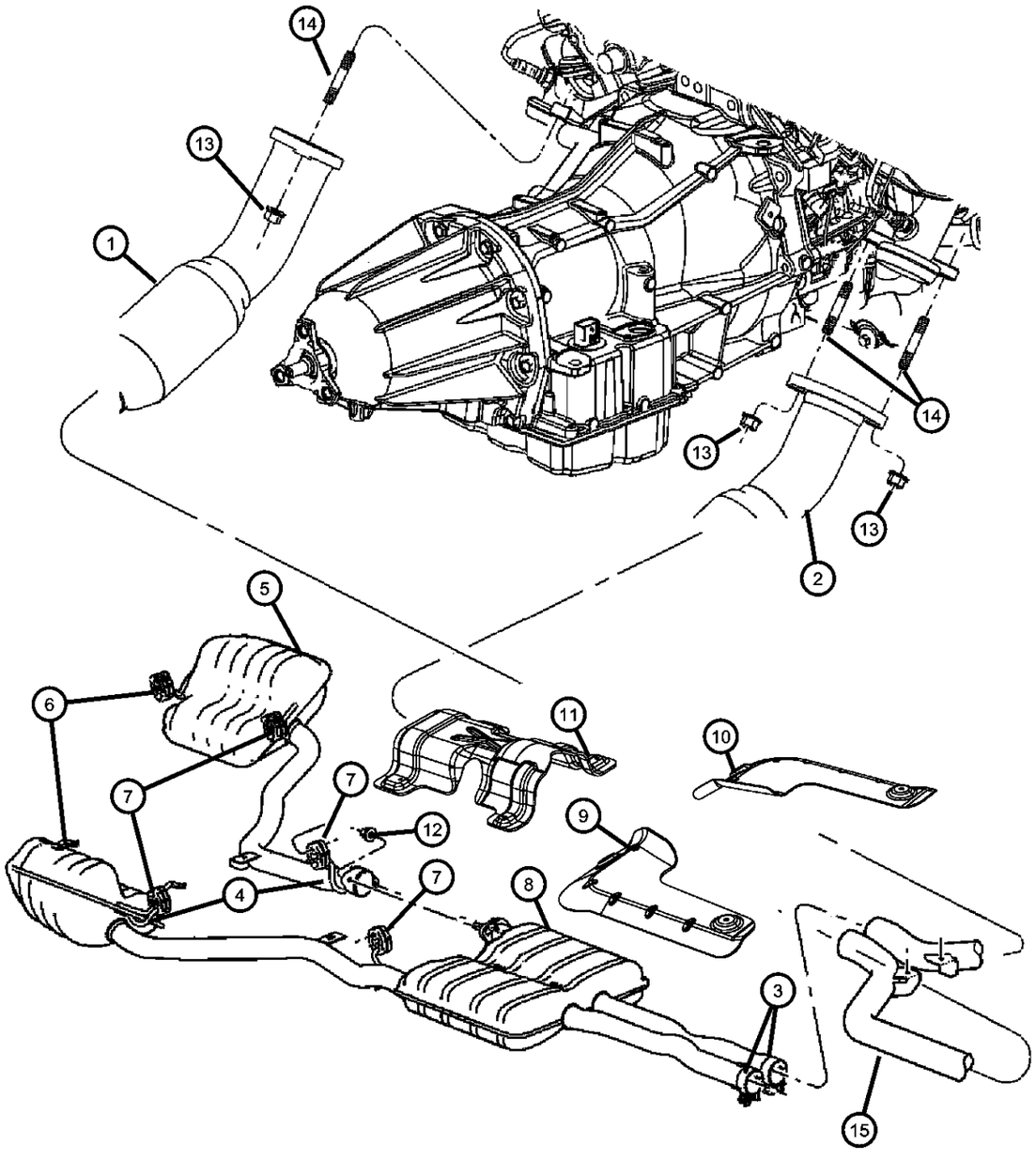

ITEM	PART NUMBER	QTY	LINE	SERIES	BODY	ENGINE	TRANS	TRIM	DESCRIPTION
Note Sale Codes;									
[ES0] = All 6.1L 8 Cylinder Gas engines									
[EZ0]= ALL 5.7L V8 ENGINES									
1									PIPE AND CONVERTER, Exhaust
	04578447AC	1	D		22	EZ0			Left
	05290593AC	1	D		22	ES0			Left
2									PIPE AND CONVERTER, Exhaust
	04578446AC	1	D		22	EZ0			Right
	05290594AC	1	D		22	ES0			Right
3									CLAMP, Exhaust
	04848935AA	2	D		22	EZ0	DGJ		
		2	D		22	EZ0	DEC		
	05290531AA	2	D		22	ES0	DEC		
		2	D		22	ES0	DGJ		
4									BRACKET, Exhaust
	04581722AB	1	D		22	EZ0	DGJ		Right
		1	D		22	ES0	DGJ		Right
	04854575AA	1	D		22	EZ0	DGJ		Left
		1	D		22	EZ0	DEC		Left
		1	D		22	ES0	DEC		Left
		1	D		22	ES0	DGJ		Left
		1	D		22	EZ0	DEC		Right
		1	D		22	ES0	DGJ		Left
		1	D		22	EZ0	DEC		Right
		1	D		22	ES0	DEC		Right
5									RESONATOR AND PIPE, Exhaust
	04578701AC	1	D		22	EZ0	DGJ		Rear Left
	04578911AC	1	D		22	EZ0	DEC		Rear Left
	05040333AB	1	D		22	ES0	DEC		Rear Left
	05181355AB	1	D		22	ES0	DGJ		Rear Left
6									ISOLATOR, Exhaust Support
	04578893AA	1	D		22	ES0	DEC		
		1	D		22	ES0	DGJ		
7									ISOLATOR, Exhaust Support
	04581790AB	2	D		22	ES0	DEC		
		2	D		22	ES0	DGJ		

DODGE CHALLENGER (LC)

SERIES	LINE	BODY	ENGINE	TRANSMISSION
H = HIGHLINE	D = DODGE	22 = 2-DR SEDAN TYPE #2	EGG = 3.5L High Output V6 24V MPI Engine	DEC = 6-Speed Manual TREMEC Transmission
P = PREMIUM			ESF = 6.1L SRT HEMI V8 Engine	DGJ = 5-Speed Auto W5A580 Transmission
X = SPECIAL			EZC = 5.7L HEMI VCT Engine	DGV = 4-Spd. Automatic VLP 42RLE Trans
			EZD = 5.7L Hemi VCT MDS Engine	

Exhaust System
Figure 11-105

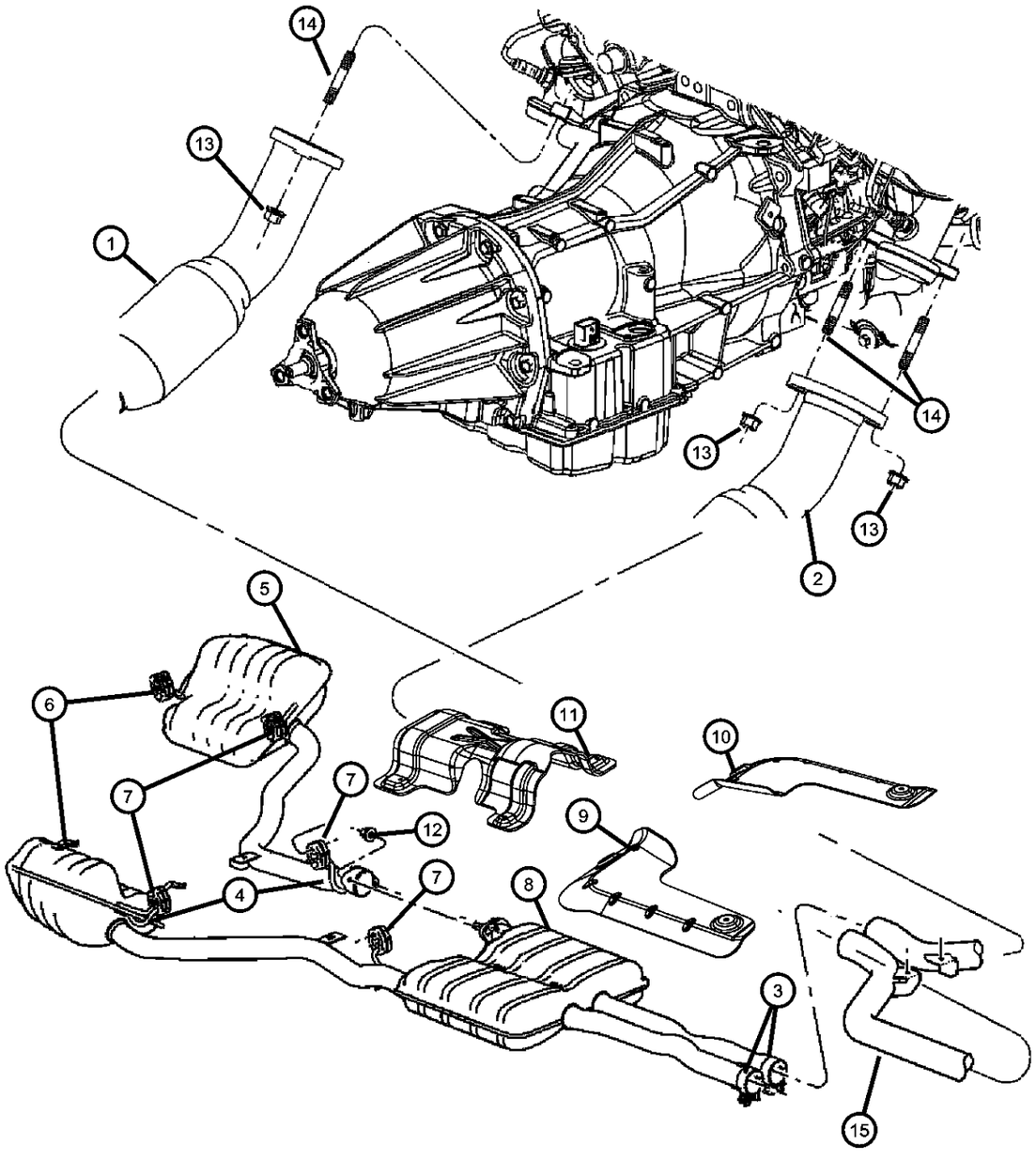

ITEM	PART NUMBER	QTY	LINE	SERIES	BODY	ENGINE	TRANS	TRIM	DESCRIPTION
8									MUFFLER AND RESONATOR, Exhaust
	05040334AB	1	D		22	ES0	DEC		Rear Right
	05181358AB	1	D		22	ES0	DGJ		Rear Right
	04578700AD	1	D		22	EZ0	DGJ		Rear Right
	04578910AC	1	D		22	EZ0	DEC		RWD, Rear Right
9	04780854AC	1	D		22				SHIELD, HeatRight
10	04780855AC	1	D		22				SHIELD, HeatLeft
11	04780892AC	1	D		22				SHIELD, Heat
12	04578604AA	2	D		22	EZ0, ES0			NUT, Spring
13	06104717AA	2	D		22	ES0	DGJ		NUT, Hex Flange Lock, M10x1.50
14	06508025AA	4	D		22	EG0, ES0, EZ0	DGJ, DGV		STUD, Double Ended
15									EXHAUST TIP, Tailpipe
	04578912AC	1	D		22	ES0	DGJ		Right
		1	D		22	EZ0	DGJ		Right
	04578913AC	1	D		22	EZ0	DGJ		Left
		1	D		22	ES0	DEC		Left
		1	D		22	ES0	DEC		Right
		1	D		22	ES0	DGJ		Left

DODGE CHALLENGER (LC)

SERIES	LINE	BODY	ENGINE	TRANSMISSION
H = HIGHLINE P = PREMIUM X = SPECIAL	D = DODGE	22 = 2-DR SEDAN TYPE #2	EGG = 3.5L High Output V6 24V MPI Engine ESF = 6.1L SRT HEMI V8 Engine EZC = 5.7L HEMI VCT Engine EZD = 5.7L Hemi VCT MDS Engine	DEC = 6-Speed Manual TREMEC Transmission DGJ = 5-Speed Auto W5A580 Transmission DGV = 4-Spd. Automatic VLP 42RLE Trans

Exhaust System
Figure 11-110

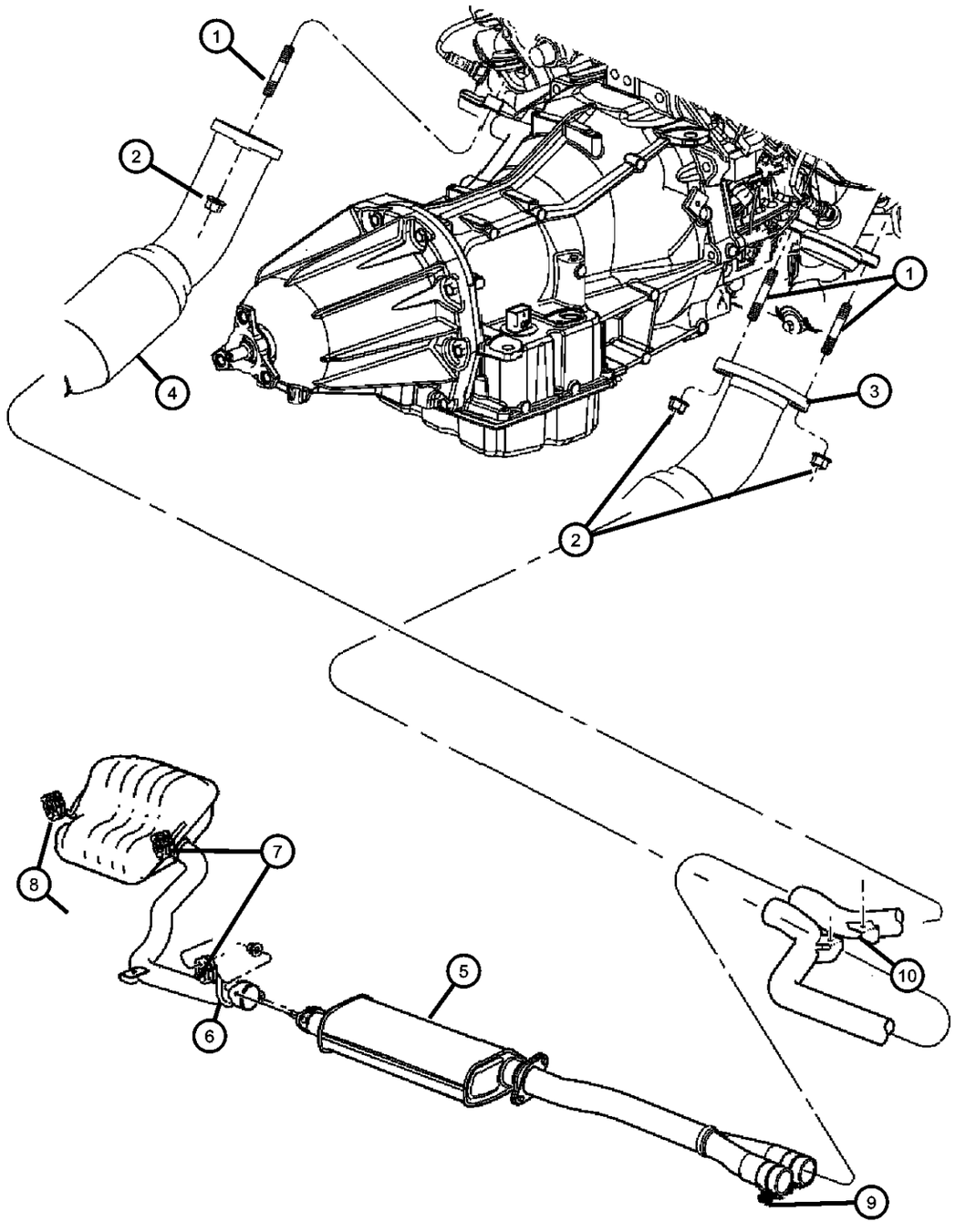

ITEM	PART NUMBER	QTY	LINE	SERIES	BODY	ENGINE	TRANS	TRIM	DESCRIPTION
Note Sale:Codes: [EG0] = All 3.5L 6 Cylinder Gas Engines [NAS] = U.S. 50 State Emissions [NA1] = Export Emissions									
1	06507880AA	4	D		22	EGG, EZC, EZD			STUD, Double Ended
2	06104710AA	4	D		22	EG0			NUT, Hex Flange Lock, M10x1.50
3									CONVERTER, Catalytic
	04578934AB	1	D		22	EG0			[NAE], Right
	04581744AD	1	D		22	EG0			[NAA], Right
4									CONVERTER, Catalytic
	04578935AB	1	D		22	EG0			[NAE], Left
	04581745AE	1	D		22	EG0			[NAA], Left
5	04726900AB	1	D		22	EG0			MUFFLER AND RESONATOR, Exhaust
6	04581722AB	2	D		22	EG0			BRACKET, Exhaust
7	04581790AB	2	D		22	EG0			ISOLATOR, Exhaust Support
8	04578340AA	1	D		22	EG0			ISOLATOR, Exhaust Support
9	04695220AB	2	D		22	EG0			CLAMP, Exhaust
10	04578287AB	1	D		22	EG0			BRACE, Exhaust Pipe
-11	06504179	2	D		22	EG0			SCREW AND WASHER, Hex Head, M8-1.25x40, Exhaust Bracket to underbody

DODGE CHALLENGER (LC)

SERIES	LINE	BODY	ENGINE	TRANSMISSION
H = HIGHLINE P = PREMIUM X = SPECIAL	D = DODGE	22 = 2-DR SEDAN TYPE #2	EGG = 3.5L High Output V6 24V MPI Engine ESF = 6.1L SRT HEMI V8 Engine EZC = 5.7L HEMI VCT Engine EZD = 5.7L Hemi VCT MDS Engine	DEC = 6-Speed Manual TREMEC Transmission DGJ = 5-Speed Auto W5A580 Transmission DGV = 4-Spd. Automatic VLP 42RLE Trans

Exhaust System Heat Shields
Figure 11-150

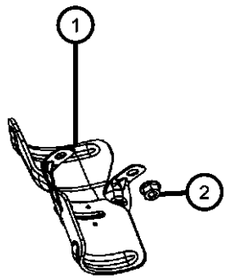

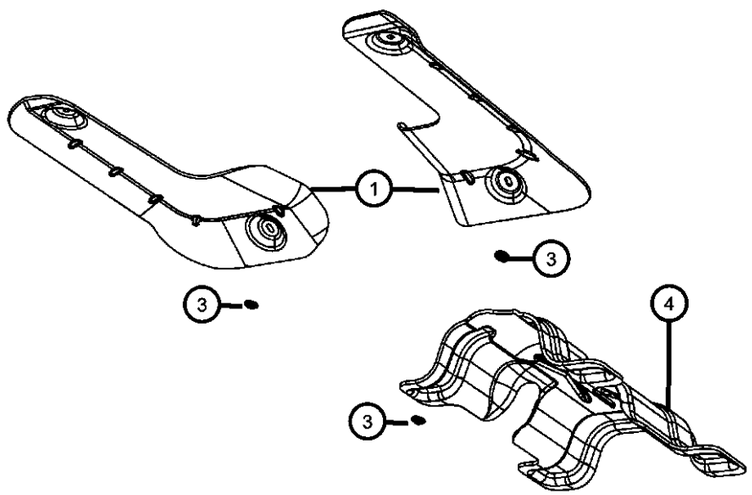

ITEM	PART NUMBER	QTY	LINE	SERIES	BODY	ENGINE	TRANS	TRIM	DESCRIPTION
1									SHIELD, Exhaust, Front Pipe or Converter
	04578334AB	1	D		22	EG0			Upstream Heat Shield To Front Pipe
		1	D		22	EZ0			Upstream Heat Shield To Front Pipe
	04780854AC	1	D		22				Downstream Heat Shield To Floor Pan, Right
	04780855AC	1	D		22				Downstream Heat Shield To Floor Pan, Left
2									NUT, Hex Flange Lock, M10x1.50
	06104710AA	4	D		22	EG0			Heat Shield To Front Pipe, Mounting
		4	D		22	ES0, EZ0			Heat Shield To Front Pipe, Mounting
3	06505199AA	8	D		22				NUT, Stamped Hex Flange, M5x1.60, Heat Shield To Floor Pan, Mounting
4	04780892AC	1	D		22				SHIELD, Exhaust, Tailpipe

DODGE CHALLENGER (LC)

SERIES	LINE	BODY	ENGINE	TRANSMISSION
H = HIGHLINE	D = DODGE	22 = 2-DR SEDAN TYPE #2	EGG = 3.5L High Output V6 24V MPI Engine	DEC = 6-Speed Manual TREMEC Transmission
P = PREMIUM			ESF = 6.1L SRT HEMI V8 Engine	DGJ = 5-Speed Auto W5A580 Transmission
X = SPECIAL			EZC = 5.7L HEMI VCT Engine	DGV = 4-Spd. Automatic VLP 42RLE Trans
			EZD = 5.7L Hemi VCT MDS Engine	

Group - 13

Frame, Bumper, and Fascia

013-100 Frames	013-200 Front Bumper and Fascia	013-300 Rear Bumper and Fascia	
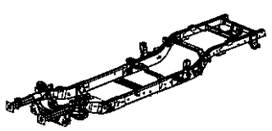		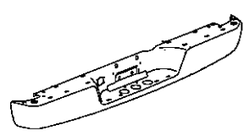	

Group - 13 Frame, Bumper, and Fascia

Illustration Title — Group-Fig. No.

Frames
Frame Complete ..... Fig. 13 - 105

Front Bumper and Fascia
Fascia, Front ..... Fig. 13 - 205

Rear Bumper and Fascia
Fascia, Rear ..... Fig. 13 - 305

Frame Complete
Figure 13-105

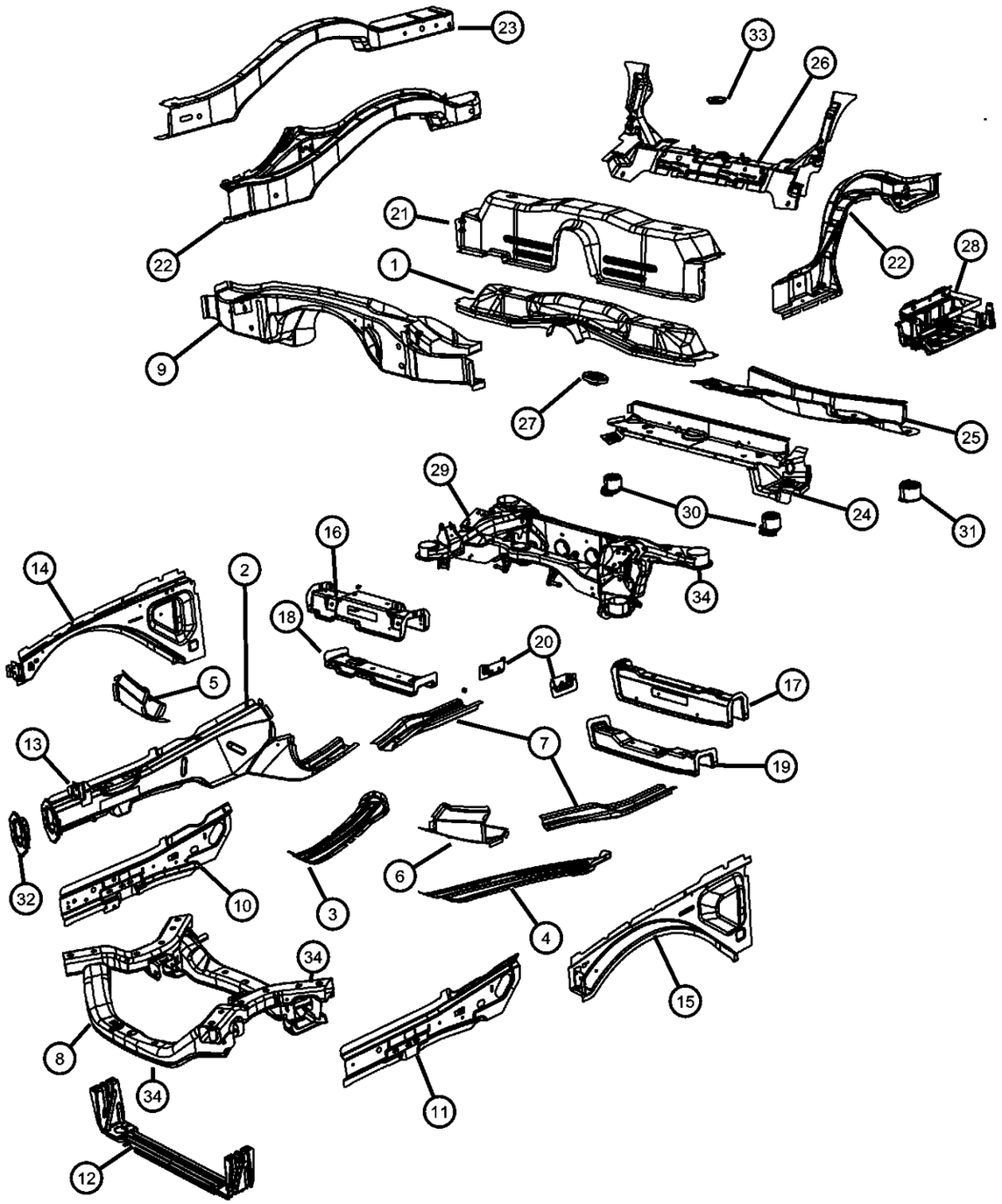

ITEM	PART NUMBER	QTY	LINE	SERIES	BODY	ENGINE	TRANS	TRIM	DESCRIPTION
1	04780792AD	1	D		22				REINFORCEMENT, Crossmember, Kick-Up
2									RAIL, Front Side Rail Front
	04780768AH	1	D		22				Right
	04780769AH	1	D		22				Left
3	04780832AA	1	D		22				EXTENSION, Front Side Rail, Right
4	04780833AA	1	D		22				EXTENSION, Front Side Rail, Left
5	04780912AB	1	D		22				EXTENSION, Front Side Rail, To Sill, Right
6	04780913AB	1	D		22				EXTENSION, Front Side Rail, To Sill, Left
7									REINFORCEMENT, Side Rail
	05112077AA	1	D		22				Left
	05112076AA	1	D		22				Right
8	04782700AD	1	D		22				CROSSMEMBER, Front Suspension
9	04780841AE	1	D		22				CROSSMEMBER, Floor Pan, Toeboard
10	68030786AA	1	D		22				PANEL, Underbody Front, Rail Cover, Right
11	68030787AA	1	D		22				PANEL, Underbody Front, Rail Cover, Left
12	05065240AE	1	D		22				CROSSMEMBER, Radiator, Radiator, Lower
13									BRACKET, Headlamp Mounting
	05065533AB	1	D		22				Left
	05065532AB	1	D		22				Right
14	05065504AD	1	D		22				BEAM, Upper Load Path, Right
15	05065505AD	1	D		22				BEAM, Upper Load Path, Left
16	05112696AA	1	D		22				CROSSMEMBER, Front Floor, Front Seat, Front, Right
17	05112697AA	1	D		22				CROSSMEMBER, Front Floor, Front Seat, Front, Left
18	05112702AA	1	D		22				CROSSMEMBER, Front Floor, Front Seat, Rear, Right
19	05112703AA	1	D		22				CROSSMEMBER, Front Floor, Front Seat, Rear, Left
20									BRACKET, Drive Shaft Center Bearing
	05065210AA	1	D		22				Right

DODGE CHALLENGER (LC)

SERIES	LINE	BODY	ENGINE	TRANSMISSION
H = HIGHLINE P = PREMIUM X = SPECIAL	D = DODGE	22 = 2-DR SEDAN TYPE #2	EGG = 3.5L High Output V6 24V MPI Engine ESF = 6.1L SRT HEMI V8 Engine EZC = 5.7L HEMI VCT Engine EZD = 5.7L Hemi VCT MDS Engine	DEC = 6-Speed Manual TREMEC Transmission DGJ = 5-Speed Auto W5A580 Transmission DGV = 4-Spd. Automatic VLP 42RLE Trans

Frame Complete
Figure 13-105

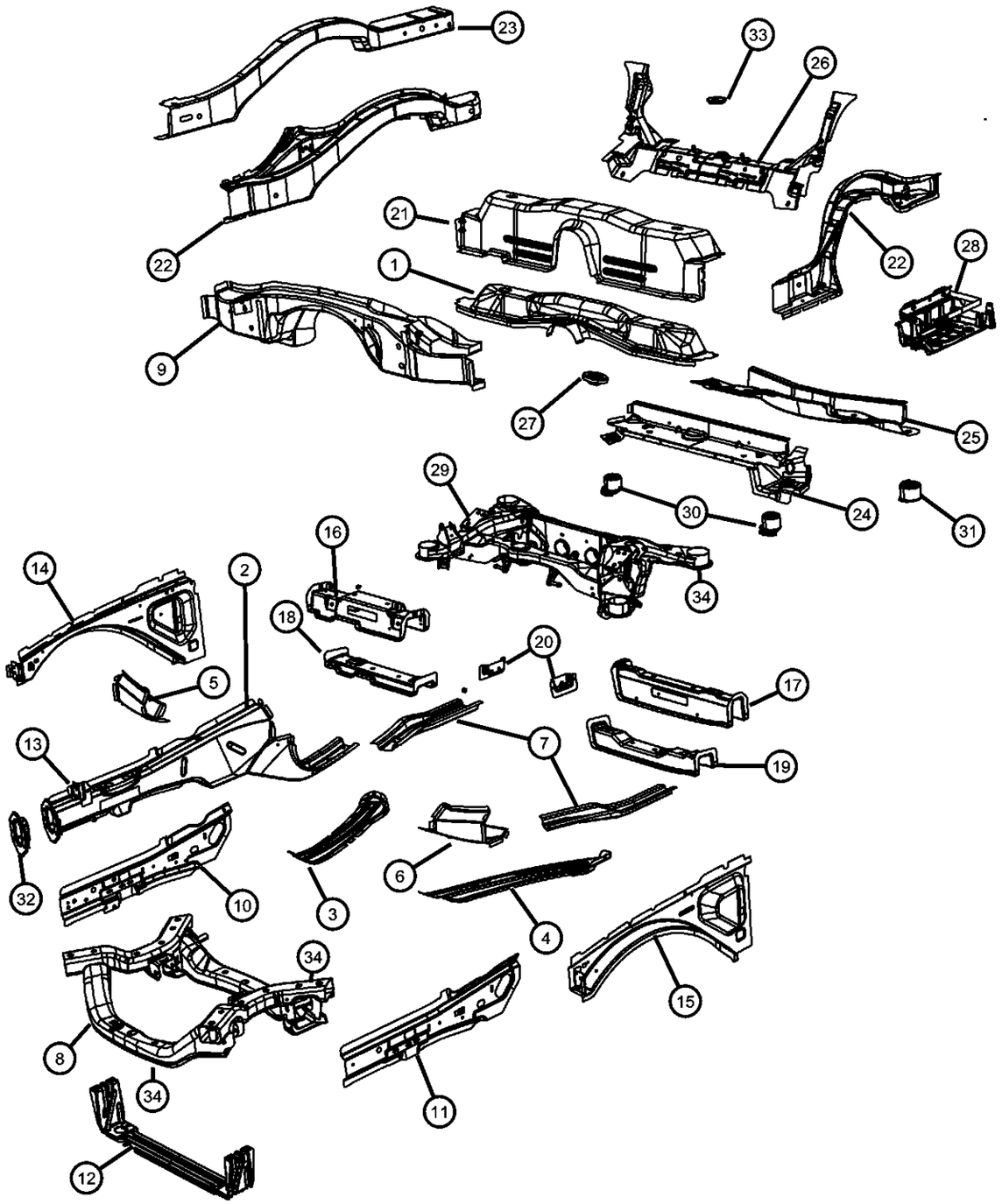

ITEM	PART NUMBER	QTY	LINE	SERIES	BODY	ENGINE	TRANS	TRIM	DESCRIPTION
	05065211AA	1	D		22				Left
21	04780800AA	1	D		22				CROSSMEMBER, Floor Pan, Rear Kick-Up
22									RAIL, Rear, Outer
	68026048AA	1	D		22				Right
	68026049AA	1	D		22				Left
23									RAIL, Rear, Inner
	68020264AA	1	D		22				Right
	68020265AA	1	D		22				Left
24	68030677AA	1	D		22				CROSSMEMBER, Rear Suspension, Front
25	04780812AC	1	D		22				CROSSMEMBER, Rear Suspension, Rear
26	04780840AJ	1	D		22				CROSSMEMBER, Floor Pan, ISO Fix
27	04780826AB	2	D		22				REINFORCEMENT, Jounce Bumper
28	05065355AK	1	D		22				TRAY, Battery
29									SUBFRAME, Rear axle
	68049371AA	1	D		22				[SDC], [BR3] Or [BRD]
	68067046AA	1	D		22				[SDD], [BR5]
		1	D		22				[SDD], [BR6]
	68067047AA	1	D		22				[SDX], [BR4]
30									ISOLATOR, Crossmember, Front
	04895390AB	1	D		22				With Sales Code [SDC] or [SDD], Right
	04895488AB	1	D		22				With Sales Code [SDX], Right
	04895489AB	1	D		22				With Sales Code [SDX], Left
	04895391AB	1	D		22				With Sales Code [SDC] or [SDD], Left
31	04782861AA	2	D		22				ISOLATOR, Crossmember, Rear
32									REINFORCEMENT, Front Bumper
	05065268AB	1	D		22				Right
	05065269AB	1	D		22				Left
33	04578296AA	1	D		22				CAP, Dust Shield
34									BOLT, Hex Flange Head, M14x2.00x180.00

DODGE CHALLENGER (LC)

SERIES	LINE	BODY	ENGINE	TRANSMISSION
H = HIGHLINE P = PREMIUM X = SPECIAL	D = DODGE	22 = 2-DR SEDAN TYPE #2	EGG = 3.5L High Output V6 24V MPI Engine ESF = 6.1L SRT HEMI V8 Engine EZC = 5.7L HEMI VCT Engine EZD = 5.7L Hemi VCT MDS Engine	DEC = 6-Speed Manual TREMEC Transmission DGJ = 5-Speed Auto W5A580 Transmission DGV = 4-Spd. Automatic VLP 42RLE Trans

Frame Complete
Figure 13-105

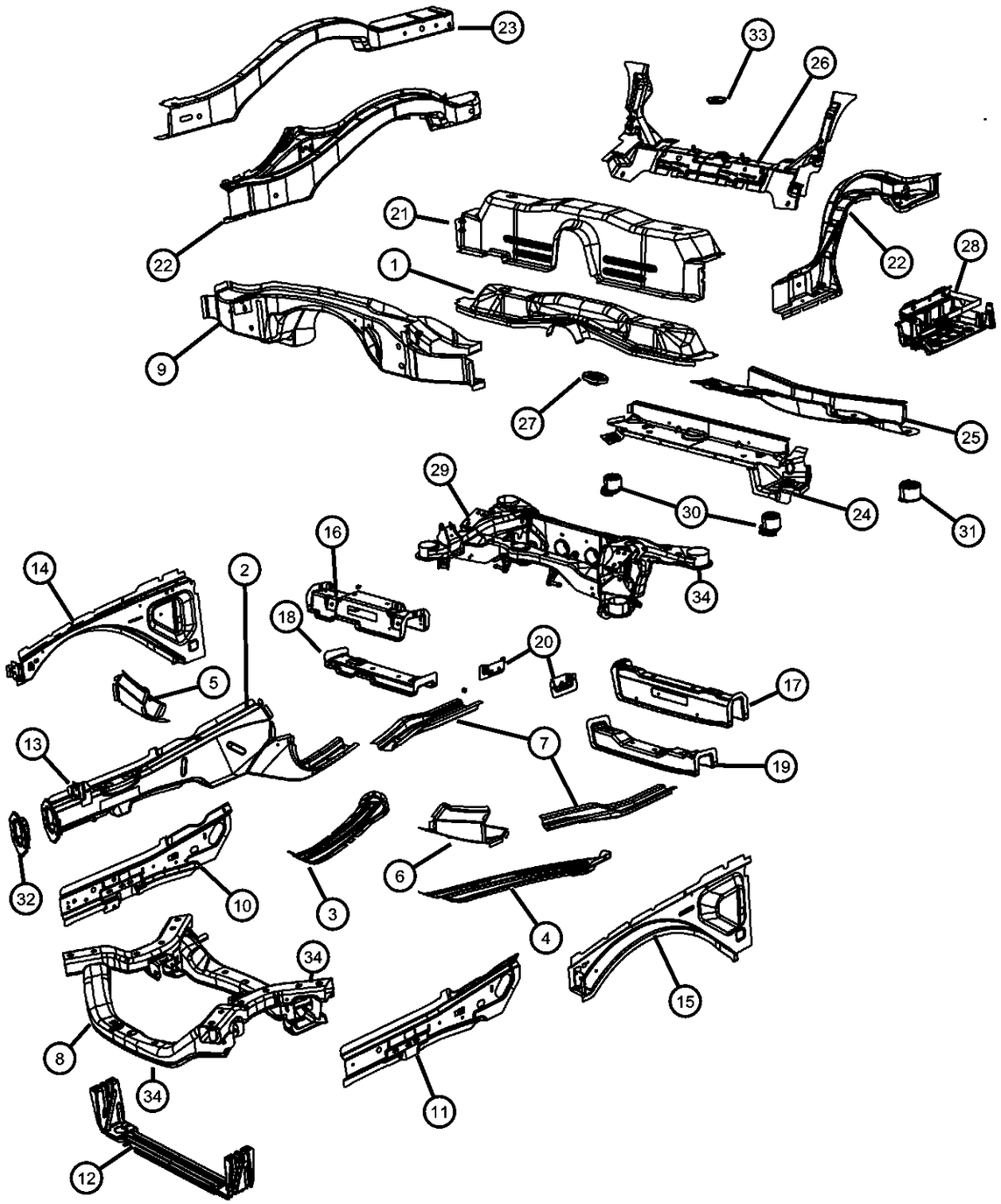

ITEM	PART NUMBER	QTY	LINE	SERIES	BODY	ENGINE	TRANS	TRIM	DESCRIPTION
	06508734AA	4	D		22				Subframe To Frame Rail, Mounting, Front
		2	D		22				Subframe To Frame Rail, Mounting, Rear

DODGE CHALLENGER (LC)

SERIES	LINE	BODY	ENGINE	TRANSMISSION
H = HIGHLINE P = PREMIUM X = SPECIAL	D = DODGE	22 = 2-DR SEDAN TYPE #2	EGG = 3.5L High Output V6 24V MPI Engine ESF = 6.1L SRT HEMI V8 Engine EZC = 5.7L HEMI VCT Engine EZD = 5.7L Hemi VCT MDS Engine	DEC = 6-Speed Manual TREMEC Transmission DGJ = 5-Speed Auto W5A580 Transmission DGV = 4-Spd. Automatic VLP 42RLE Trans

Fascia, Front
Figure 13-205

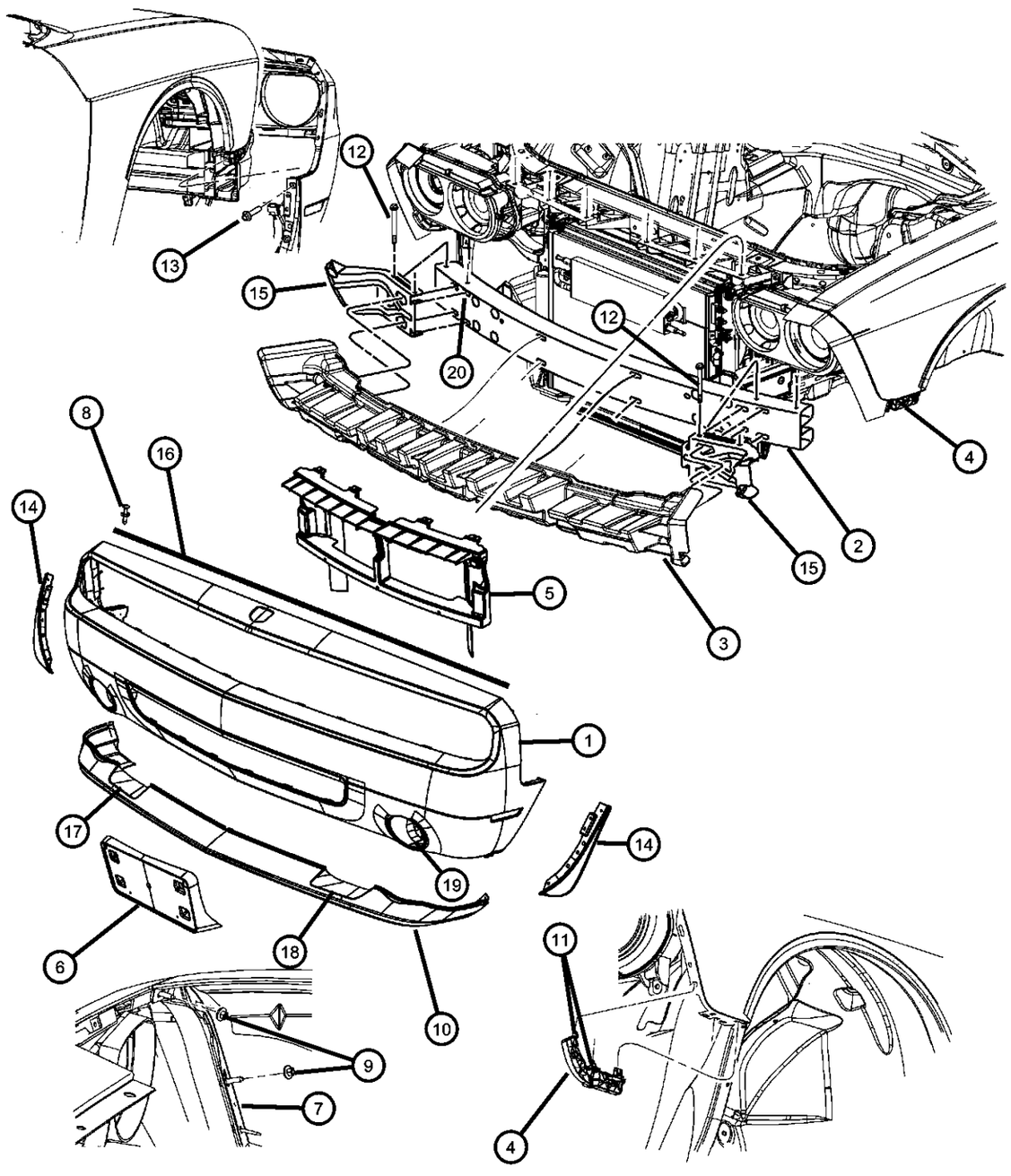

ITEM	PART NUMBER	QTY	LINE	SERIES	BODY	ENGINE	TRANS	TRIM	DESCRIPTION
1									FASCIA, Front, Primed
	68043387AA	1	D	X	22				
		1	D	P	22				
		1	D	H	22				
2	04805726AC	1	D		22				BEAM, Front Bumper
3									ABSORBER, Front Energy
	05028810AB	1	D		22				
	68051389AA	1	D	P	22				Stamped LC22-133AA
		1	D	X	22				Stamped LC22-133AA
		1	D	H	22				Stamped LC22-133AA
4									BRACKET, Fascia Support
	68024342AB	1	D		22				Right
	68024343AB	1	D		22				Left
5	68043965AA	1	D		22				SUPPORT, Front Fascia
6	68027815AA	1	D		22				LICENSE PLATE KIT
7									BRACKET, Fascia Support
	68043392AA	1	D	H	22				[MFH+LNJ], Right
		1	D	H	22				[MFH-LNJ], Right
		1	D	X	22				Right
		1	D	P	22				[MFH+LNJ], Right
	68043393AA	1	D	X	22				Left
		1	D	P	22				[MFH+LNJ], Left
		1	D	H	22				[MFH+LNJ], Left
		1	D	H	22				[MFH-LNJ], Left
8	05116530AA	6	D		22				PIN, Push
9	34201358	4	D		22				NUT AND WASHER, Hex Nut-Sealing Washer, M6 x 1.00, Fascia to Fender
10									PANEL, Lower Fascia
	68043390AA	1	D	X	22				
	68051388AA	1	D	P	22				
		1	D	H	22				
11	06507238AA	2	D		22				SCREW, Hex Flange Head Tapping, M4.2x1.7x25

DODGE CHALLENGER (LC)

SERIES	LINE	BODY	ENGINE	TRANSMISSION
H = HIGHLINE	D = DODGE	22 = 2-DR SEDAN TYPE #2	EGG = 3.5L High Output V6 24V MPI Engine	DEC = 6-Speed Manual TREMEC Transmission
P = PREMIUM			ESF = 6.1L SRT HEMI V8 Engine	DGJ = 5-Speed Auto W5A580 Transmission
X = SPECIAL			EZC = 5.7L HEMI VCT Engine	DGV = 4-Spd. Automatic VLP 42RLE Trans
			EZD = 5.7L Hemi VCT MDS Engine	

AR = use ase required - = Non illustrrated part

Fascia, Front
Figure 13-205

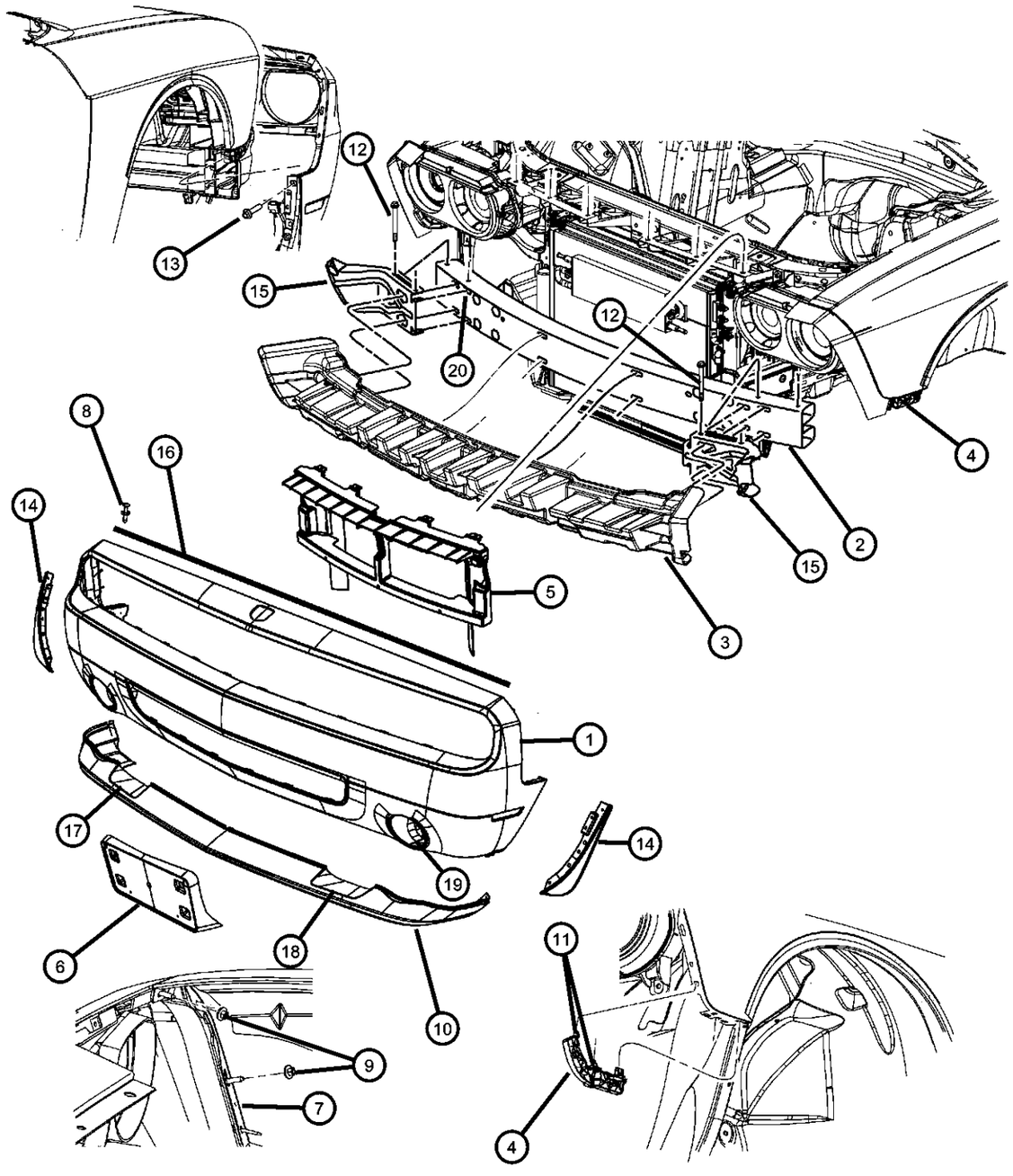

ITEM	PART NUMBER	QTY	LINE	SERIES	BODY	ENGINE	TRANS	TRIM	DESCRIPTION
12	06509235AA	4	D		22				SCREW AND WASHER, Hex Head, M6x1.00x135.00
13	06503929	2	D		22				SCREW AND WASHER, Coned Pilot, M6x1x30, Fascia to Fender Bracket
14									EXTENSION, Fender
	68043398AA	1	D	P	22				Right
	68043399AA	1	D	X	22				Left
		1	D	P	22				Left
		1	D	X	22				Right
15									EXTENSION, Bumper
	68032707AA	1	D		22				Left
	68032706AA	1	D		22				Right
16									SEAL, Hood
	68051392AA	1	D	P	22				
		1	D	X	22				
		1	D	H	22				
17	68051390AA	1	D	X	22				DUCT
18	68051391AA	1	D	X	22				DUCT
19	04806184AA	2	D	H	22				PLUG, Fog Lamp Hole, Without [LNJ], Right & Left
20	06505145AA	8	D		22				SCREW AND WASHER, Hex Head, M8 x 1.25 x 23.00, Bumper To Frame
-21									CLIP, U Type
	68051431AA	9	D	P	22				Air Dam To Fascia Attachment
		9	D	X	22				Air Dam To Fascia Attachment
		9	D	H	22				Air Dam To Fascia Attachment
-22									SCREW, Hex Head
	68051432AA	9	D	P	22				Air Dam To Fascia Attachment
		9	D	H	22				Air Dam To Fascia Attachment
		9	D	X	22				Air Dam To Fascia Attachment
-23									U-NUT
	68051433AA	2	D	X	22				Air Dam To Fascia Attachment
		2	D	P	22				Air Dam To Fascia Attachment

DODGE CHALLENGER (LC)

SERIES	LINE	BODY	ENGINE	TRANSMISSION
H = HIGHLINE	D = DODGE	22 = 2-DR SEDAN TYPE #2	EGG = 3.5L High Output V6 24V MPI Engine	DEC = 6-Speed Manual TREMEC Transmission
P = PREMIUM			ESF = 6.1L SRT HEMI V8 Engine	DGJ = 5-Speed Auto W5A580 Transmission
X = SPECIAL			EZC = 5.7L HEMI VCT Engine	DGV = 4-Spd. Automatic VLP 42RLE Trans
			EZD = 5.7L Hemi VCT MDS Engine	

AR = use ase required - = Non illustrrated part

Fascia, Front
Figure 13-205

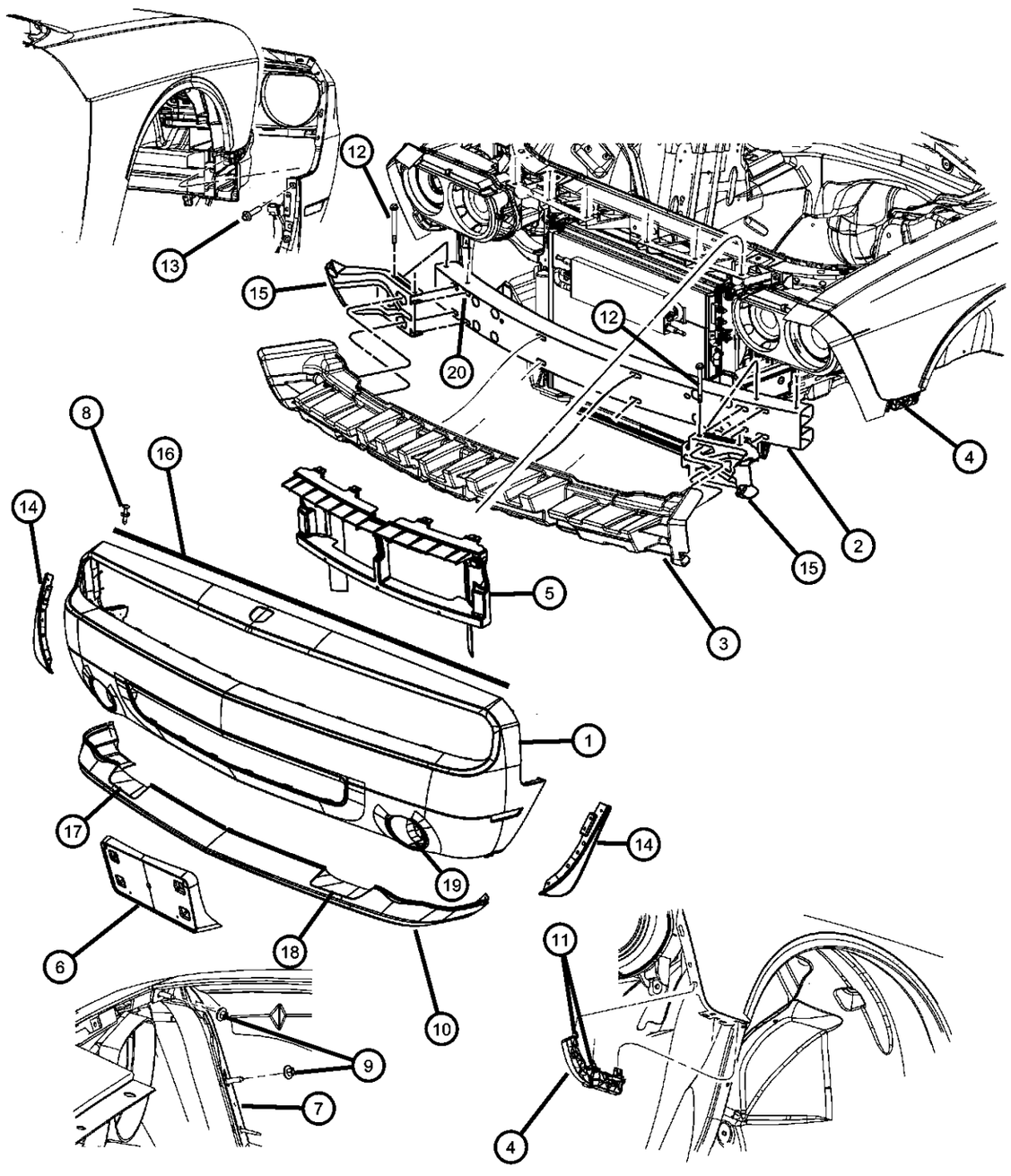

ITEM	PART NUMBER	QTY	LINE	SERIES	BODY	ENGINE	TRANS	TRIM	DESCRIPTION
		2	D	H	22				Air Dam To Fascia Attachment
-24									SCREW
	68051434AA	2	D	P	22				Air Dam To Fascia Attachment
		2	D	H	22				Air Dam To Fascia Attachment
		2	D	X	22				Air Dam To Fascia Attachment

DODGE CHALLENGER (LC)

SERIES	LINE	BODY	ENGINE	TRANSMISSION
H = HIGHLINE	D = DODGE	22 = 2-DR SEDAN TYPE #2	EGG = 3.5L High Output V6 24V MPI Engine	DEC = 6-Speed Manual TREMEC Transmission
P = PREMIUM			ESF = 6.1L SRT HEMI V8 Engine	DGJ = 5-Speed Auto W5A580 Transmission
X = SPECIAL			EZC = 5.7L HEMI VCT Engine	DGV = 4-Spd. Automatic VLP 42RLE Trans
			EZD = 5.7L Hemi VCT MDS Engine	

Fascia, Rear
Figure 13-305

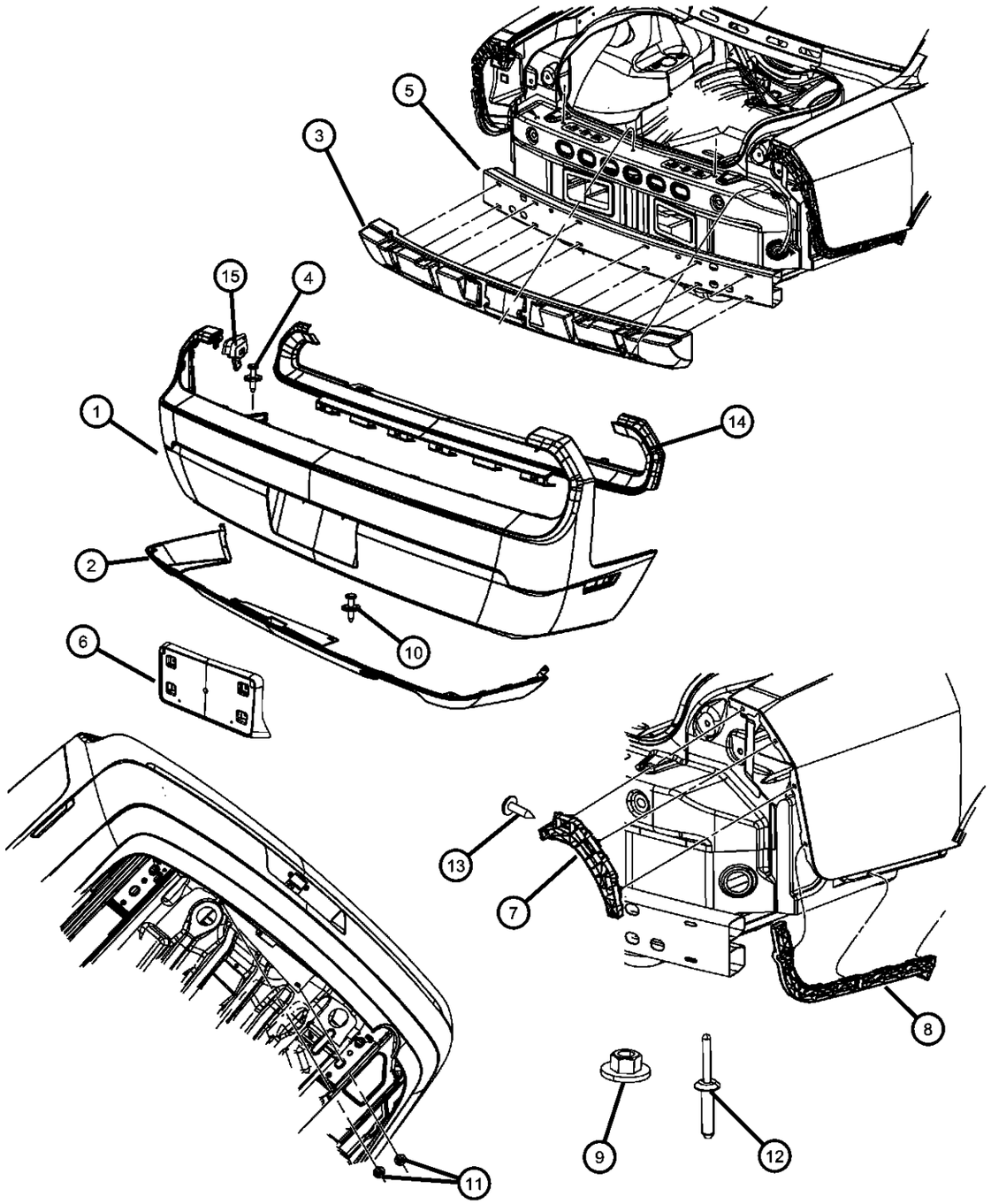

ITEM	PART NUMBER	QTY	LINE	SERIES	BODY	ENGINE	TRANS	TRIM	DESCRIPTION
1	68039500AB	1	D		22				FASCIA, Rear
2									FASCIA, Rear Lower
	68039501AB	1	D		22				With Sales Code [NER]
	68048308AA	1	D		22				Without Sales Code [NER]
3	68020697AB	1	D		22				ABSORBER, Rear Energy
4	05116530AA	5	D		22				PIN, Push
5	68020711AA	1	D		22				REINFORCEMENT, Rear Bumper
6	06034866	4	D		22				SCREW, Tapping Hex Flange Head, .250-14X.750, License Plate to Fascia
7									BRACKET, Fascia Support
	68026644AB	1	D		22				Right
	68026645AB	1	D		22				Left
8									BRACKET, Fascia Support
	68024340AB	1	D		22				Right
	68024341AB	1	D		22				Left
9	06101446	6	D		22				NUT AND WASHER, Bumper to Rail
10	06500859	4	D		22				RIVET, Lower Fascia to Upper Fascia
11	06102398AA	2	D		22				NUT, Hex, Fascia to Tire Tub
12									RIVET, Plastic
	06504737	4	D		22				Fascia to Splash Shield
		2	D		22				Fascia to Splash Shield
13	06035204	2	D		22				SCREW, Tapping, .19-16x.75
14	68039502AA	1	D		22				SURROUND
15									BRACKET, Fascia
	68049488AA	1	D		22				Right
	68049489AA	1	D		22				Left
-16	68049495AA	4	D		22				RIVET, Surround Bracket Mounting
-17	68048309AA	1	D		22				SHIELD, Heat, Fascia

DODGE CHALLENGER (LC)

SERIES	LINE	BODY	ENGINE	TRANSMISSION
H = HIGHLINE P = PREMIUM X = SPECIAL	D = DODGE	22 = 2-DR SEDAN TYPE #2	EGG = 3.5L High Output V6 24V MPI Engine ESF = 6.1L SRT HEMI V8 Engine EZC = 5.7L HEMI VCT Engine EZD = 5.7L Hemi VCT MDS Engine	DEC = 6-Speed Manual TREMEC Transmission DGJ = 5-Speed Auto W5A580 Transmission DGV = 4-Spd. Automatic VLP 42RLE Trans

AR = use ase required - = Non illustrrated part

Group - 14

Fuel

014-100 Fuel Tank 	**014-1000** Accelerator Pedal 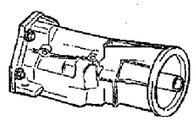	**014-200** Fuel Tank Filler Tube 	**014-300** Fuel Lines
014-400 Fuel Rail and Injectors 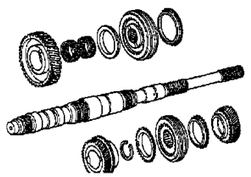	**014-500** Fuel Pump and Sending Unit 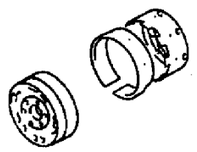	**014-600** Throttle Body 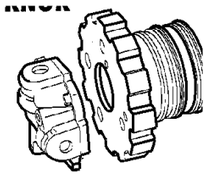	**014-800** Air Cleaner 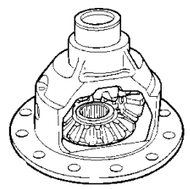

Group - 14 Fuel

Illustration Title — Group-Fig. No.

Fuel Tank
Fuel Tank and Related ..... Fig. 14 - 105

Fuel Tank Filler Tube
Fuel Filler Tube and Related ..... Fig. 14 - 205

Fuel Lines
Fuel Lines and Related ..... Fig. 14 - 305

Fuel Rail and Injectors
Fuel Rail and Related ..... Fig. 14 - 405

Fuel Pump and Sending Unit
Fuel Pump Module ..... Fig. 14 - 505

Throttle Body
Throttle Body and Related ..... Fig. 14 - 605

Air Cleaner
Air Cleaner and Related ..... Fig. 14 - 805
Air Cleaner and Related ..... Fig. 14 - 810

Accelerator Pedal
Accelerator Pedal and Related ..... Fig. 14 - 1005

Fuel Tank and Related
Figure 14-105

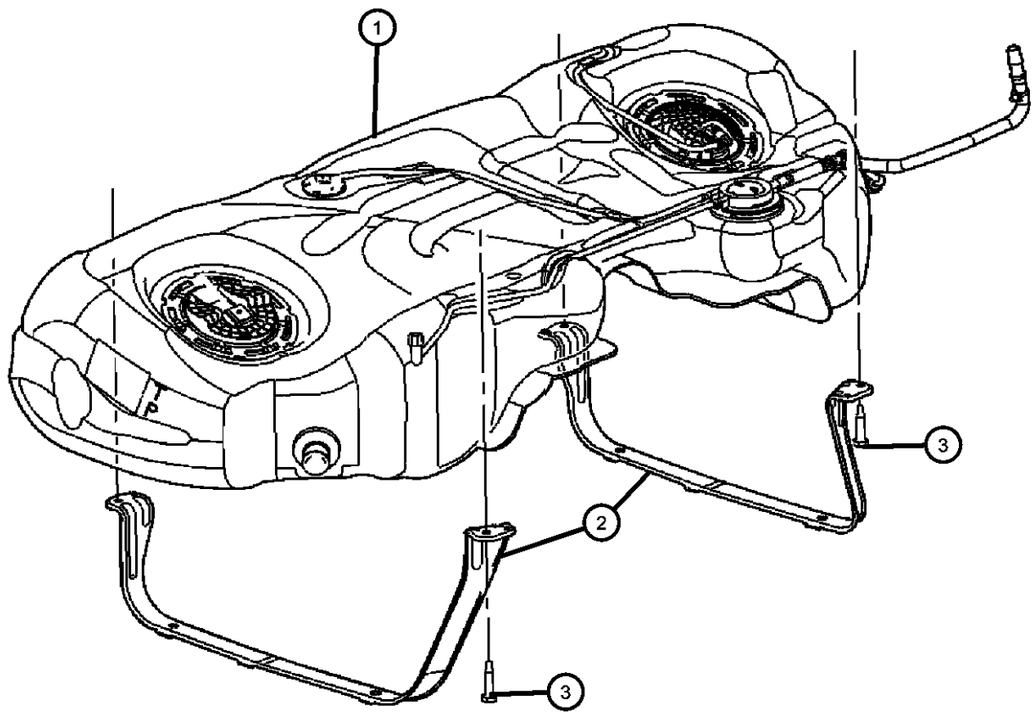

ITEM	PART NUMBER	QTY	LINE	SERIES	BODY	ENGINE	TRANS	TRIM	DESCRIPTION
Note; Sales Codes; [NFK] = 19 Gallon Tank With Tether									
1									TANK, Fuel
	05135172AD	1	D		22	ES0			[NFK]
	05135173AE	1	D		22	EG0, EZ0			[NF2]
	68051891AA	1	D		22	EG0, EZ0			[NFK]
2									STRAP, Fuel Tank
	04581414AB	1	D		22				Right
	04581413AC	1	D		22				Left
3	06504179	2	D		22				BOLT AND CONED WASHER, Hex Head, M8X1.25X40.00
-4	04578294AA	6	D		22	ES0			RETAINER, Fuel Tank Heat Shield
-5	05140548AA	1	D		22	EG0, EZ0			SHIELD KIT, Heat

DODGE CHALLENGER (LC)

SERIES	LINE	BODY	ENGINE	TRANSMISSION
H = HIGHLINE P = PREMIUM X = SPECIAL	D = DODGE	22 = 2-DR SEDAN TYPE #2	EGG = 3.5L High Output V6 24V MPI Engine ESF = 6.1L SRT HEMI V8 Engine EZC = 5.7L HEMI VCT Engine EZD = 5.7L Hemi VCT MDS Engine	DEC = 6-Speed Manual TREMEC Transmission DGJ = 5-Speed Auto W5A580 Transmission DGV = 4-Spd. Automatic VLP 42RLE Trans

Fuel Filler Tube and Related
Figure 14-205

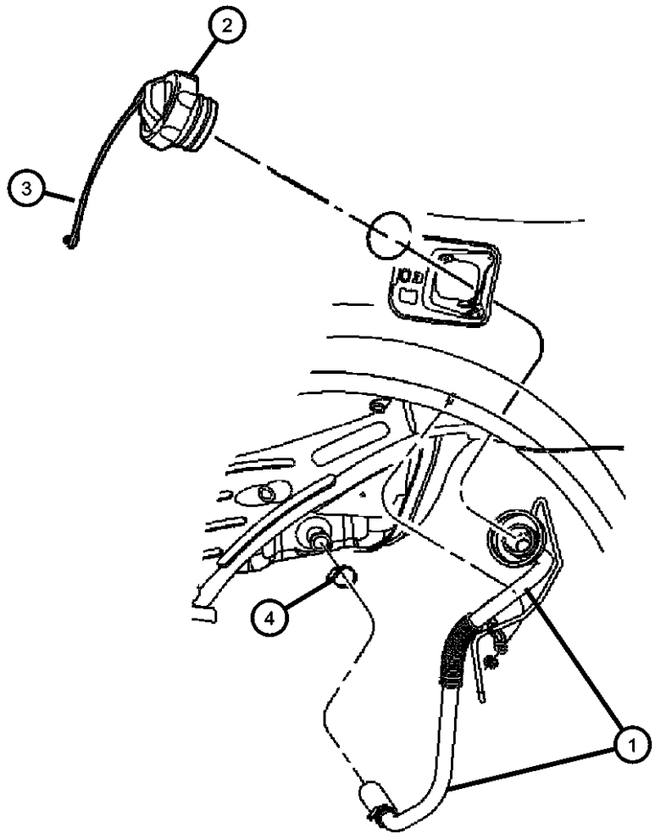

ITEM	PART NUMBER	QTY	LINE	SERIES	BODY	ENGINE	TRANS	TRIM	DESCRIPTION
1	04578989AA	1	D		22				TUBE, Fuel Filler
2	05278632AG	1	D		22				CAP, Fuel Filler
3	04682676	1	D		22				TETHER, Fuel Filler Cap
4		1							CLAMP, Hose, (NOT SERVICED)

DODGE CHALLENGER (LC)

SERIES	LINE	BODY	ENGINE	TRANSMISSION
H = HIGHLINE P = PREMIUM X = SPECIAL	D = DODGE	22 = 2-DR SEDAN TYPE #2	EGG = 3.5L High Output V6 24V MPI Engine ESF = 6.1L SRT HEMI V8 Engine EZC = 5.7L HEMI VCT Engine EZD = 5.7L Hemi VCT MDS Engine	DEC = 6-Speed Manual TREMEC Transmission DGJ = 5-Speed Auto W5A580 Transmission DGV = 4-Spd. Automatic VLP 42RLE Trans

Fuel Lines and Related
Figure 14-305

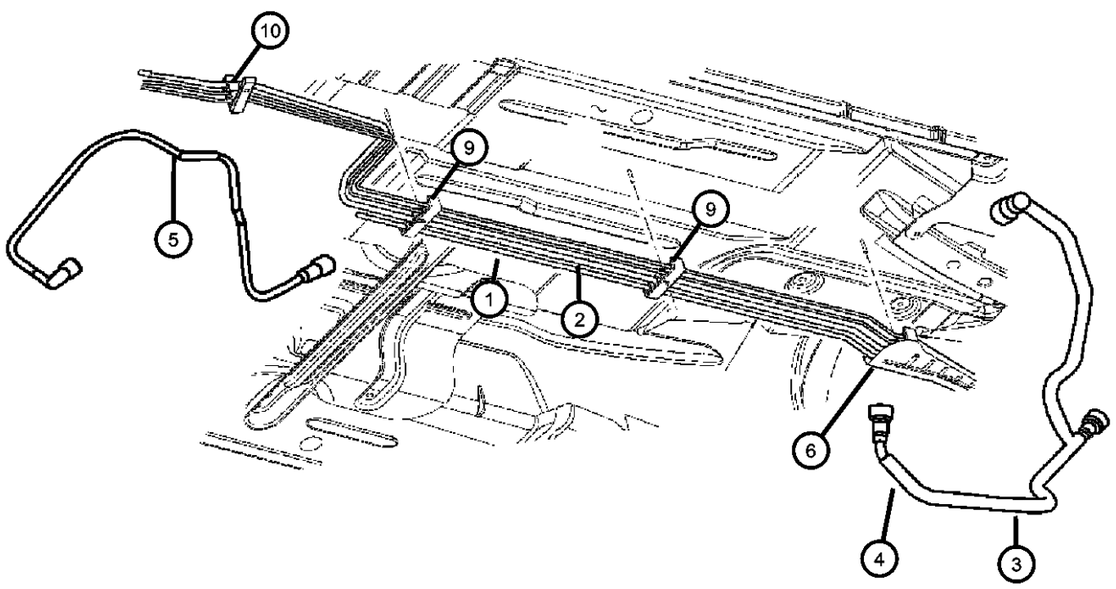

ITEM	PART NUMBER	QTY	LINE	SERIES	BODY	ENGINE	TRANS	TRIM	DESCRIPTION
1	68047022AA	1	D		22				TUBE, Fuel Supply
2	68047023AA	1	D		22				TUBE, Fuel Vapor
3									TUBE, Fuel Supply
	04578197AC	1	D		22	EG0			
	04578198AC	1	D		22	ES0			
4	04578614AC	1	D		22	EZ0			HOSE, Fuel Supply
5	04581407AC	1	D		22	EG0, EZ0			TUBE, Fuel Supply
6	05137754AA	1	D		22				SHIELD, Fuel and Brake Bundle
-7	05137752AA	4	D		22				CLIP, Fuel Bundle
-8	05137751AA	1	D		22				CLIP, Fuel Bundle
9	05137753AA	1	D		22				CLIP, Fuel Bundle
10	04582074	2	D		22				CLIP, Fuel Bundle

DODGE CHALLENGER (LC)

SERIES	LINE	BODY	ENGINE	TRANSMISSION
H = HIGHLINE	D = DODGE	22 = 2-DR SEDAN TYPE #2	EGG = 3.5L High Output V6 24V MPI Engine	DEC = 6-Speed Manual TREMEC Transmission
P = PREMIUM			ESF = 6.1L SRT HEMI V8 Engine	DGJ = 5-Speed Auto W5A580 Transmission
X = SPECIAL			EZC = 5.7L HEMI VCT Engine	DGV = 4-Spd. Automatic VLP 42RLE Trans
			EZD = 5.7L Hemi VCT MDS Engine	

Fuel Rail and Related
Figure 14-405

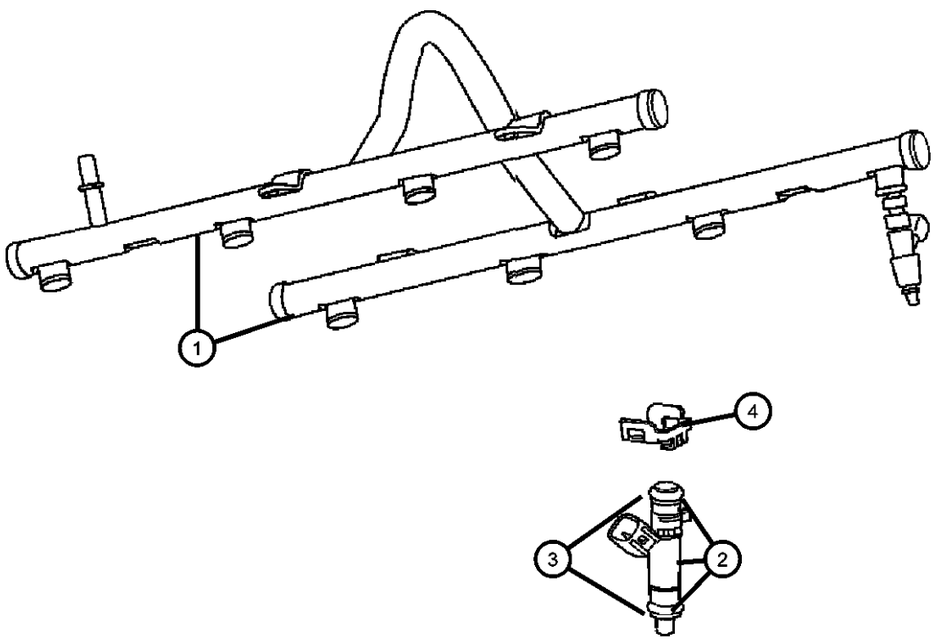

ITEM	PART NUMBER	QTY	LINE	SERIES	BODY	ENGINE	TRANS	TRIM	DESCRIPTION
Note; Sales Codes; [ESF] = 6.1L SRT Hemi SMPI V-8 Engine									
1									RAIL, Fuel
	04591889AA	1	D		22	EGG			
	05037480AA	1	D		22	ESF			
	53013888AC	1	D		22	EZC, EZD			
2									INJECTOR, Fuel
	04591986AA	6	D		22	EGG			
	68000880AA								Wholesale Bulk Injector Package - 70 pieces of 04591986AA
	05037479AA	8	D		22	ESF			
	68060335AA	8	D		22	EZC, EZD, EZH			
3									O RING KIT, Fuel Injector
	05103377AA	6	D		22	EGG			
		1	D		22	ESF	DGJ		
		1	D		22	EZD	DGJ		
4									CLIP, Fuel Injector
	04418257AB	6	D		22	EGG			
	53030058AC	8	D		22	ESF			
	53032905AA	8	D		22	EZC, EZD			

DODGE CHALLENGER (LC)

SERIES	LINE	BODY	ENGINE	TRANSMISSION
H = HIGHLINE P = PREMIUM X = SPECIAL	D = DODGE	22 = 2-DR SEDAN TYPE #2	EGG = 3.5L High Output V6 24V MPI Engine ESF = 6.1L SRT HEMI V8 Engine EZC = 5.7L HEMI VCT Engine EZD = 5.7L Hemi VCT MDS Engine	DEC = 6-Speed Manual TREMEC Transmission DGJ = 5-Speed Auto W5A580 Transmission DGV = 4-Spd. Automatic VLP 42RLE Trans

Fuel Pump Module
Figure 14-505

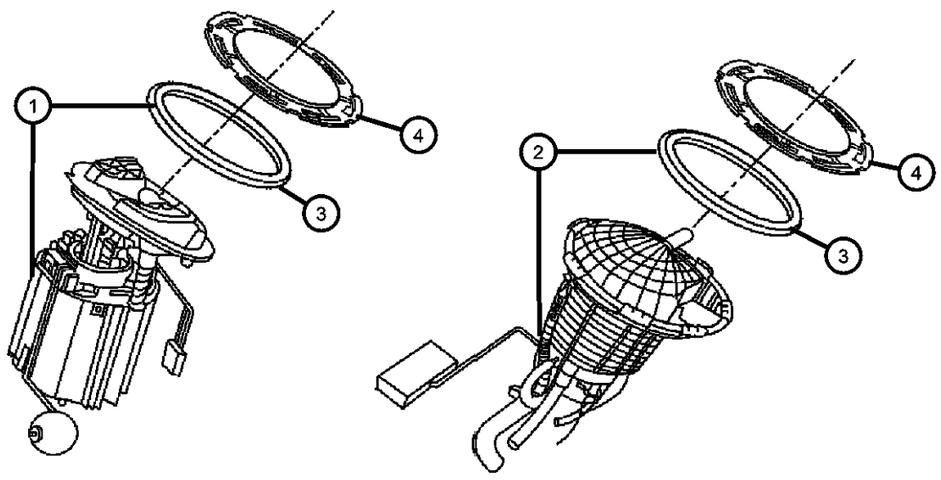

ITEM	PART NUMBER	QTY	LINE	SERIES	BODY	ENGINE	TRANS	TRIM	DESCRIPTION
Note; Sales Codes; [NFK] = 19 Gallon Tank With Tether									
1									MODULE PACKAGE, Fuel Pump/Level Unit
	05136021AF	1	D		22	EG0, EZ0			[NF2], Left
	05136022AF	1	D		22	EG0, EZ0			[NFK], Left
	05161808AD	1	D		22	ES0			[NFK], Left
2									MODULE KIT, Auxiliary Fuel Pump
	05136023AC	1	D		22	EG0, EZ0			[NF2], Right
		1	D		22	EG0, EZ0			[NFK], Right
		1	D		22	ES0			[NFK], Right
3									O RING, Fuel Pump and Level Unit
	55366298AA	2	D		22	ES0			
		2	D		22	EG0, EZ0			
4									RING, Lock, Fuel Module
	52110282AA	2	D		22	ES0			
		2	D		22	EG0, EZ0			

DODGE CHALLENGER (LC)

SERIES	LINE	BODY	ENGINE	TRANSMISSION
H = HIGHLINE	D = DODGE	22 = 2-DR SEDAN TYPE #2	EGG = 3.5L High Output V6 24V MPI Engine	DEC = 6-Speed Manual TREMEC Transmission
P = PREMIUM			ESF = 6.1L SRT HEMI V8 Engine	DGJ = 5-Speed Auto W5A580 Transmission
X = SPECIAL			EZC = 5.7L HEMI VCT Engine	DGV = 4-Spd. Automatic VLP 42RLE Trans
			EZD = 5.7L Hemi VCT MDS Engine	

Throttle Body and Related
Figure 14-605

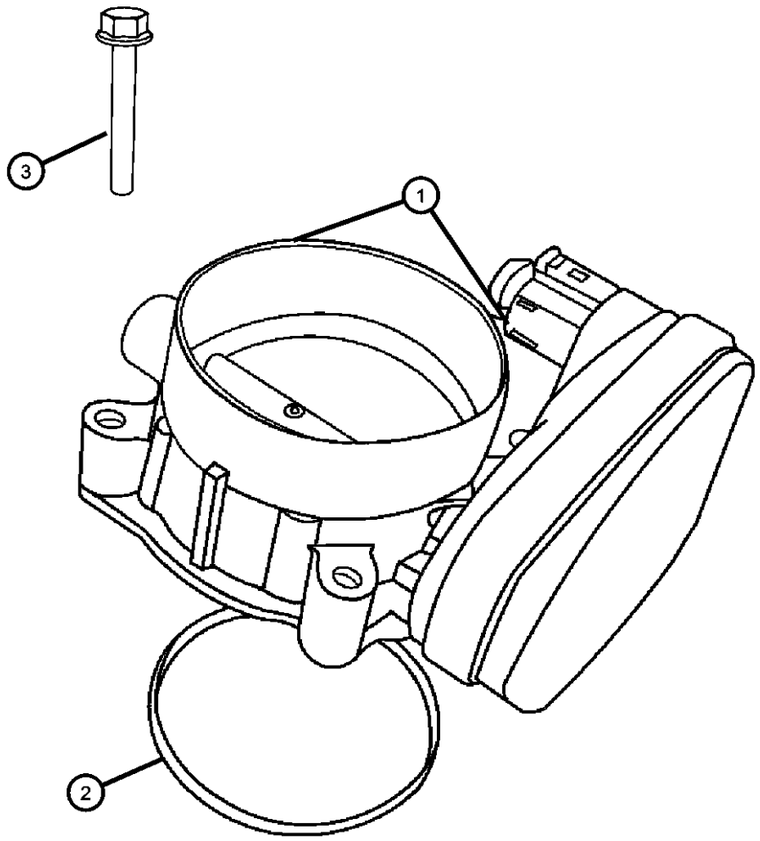

ITEM	PART NUMBER	QTY	LINE	SERIES	BODY	ENGINE	TRANS	TRIM	DESCRIPTION
Note; Sales Codes; [ESF] = 6.1L SRT Hemi SMPI V-8 Engine									
1									THROTTLE BODY
	04591847AC	1	D		22	ESF			
	04861691AA	1	D		22	EGG			
	68060354AA	1	D		22	EZC, EZD			
		1	D		22	EZC, EZD, EZH			
2									SEAL, Throttle Body to Intake
	53022320AB	1	D		22	EZC, EZD			
	53032383AB	1	D		22	ESF			
3	06104186AA	4	D		22	ESF			BOLT, Hex Flange Head, M6X1.00X45.00

DODGE CHALLENGER (LC)

SERIES	LINE	BODY	ENGINE	TRANSMISSION
H = HIGHLINE P = PREMIUM X = SPECIAL	D = DODGE	22 = 2-DR SEDAN TYPE #2	EGG = 3.5L High Output V6 24V MPI Engine ESF = 6.1L SRT HEMI V8 Engine EZC = 5.7L HEMI VCT Engine EZD = 5.7L Hemi VCT MDS Engine	DEC = 6-Speed Manual TREMEC Transmission DGJ = 5-Speed Auto W5A580 Transmission DGV = 4-Spd. Automatic VLP 42RLE Trans

Air Cleaner and Related
Figure 14-805

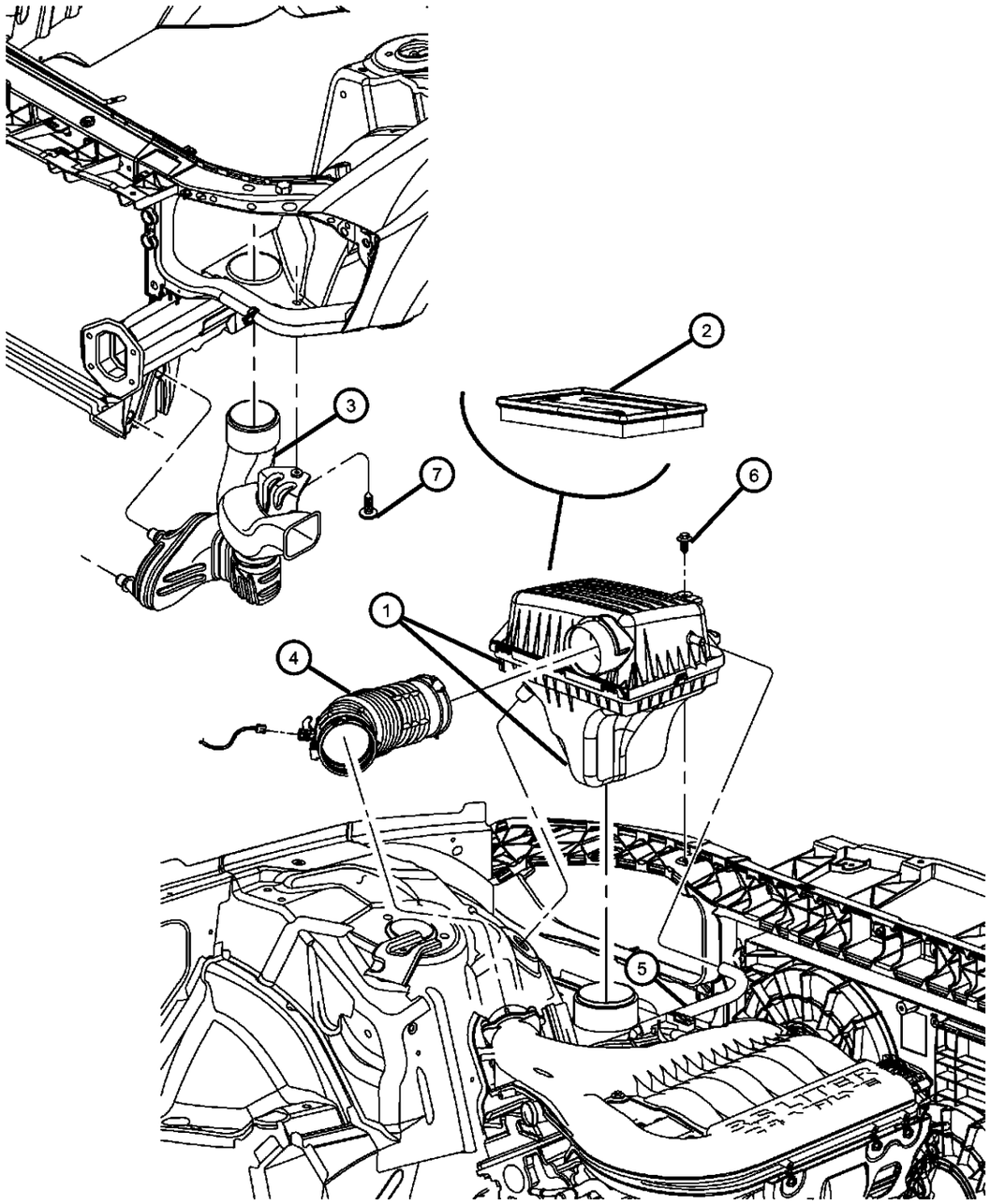

ITEM	PART NUMBER	QTY	LINE	SERIES	BODY	ENGINE	TRANS	TRIM	DESCRIPTION
1	04591867AC	1	D		22	EGG			AIR CLEANER
2	05019002AA	1	D		22	EGG			FILTER, Air
	VMLX30K1AA								Mopar HEMI 5.7L Maintenance Kit 30,000 Mile (Air/Oil Filters, Plugs, PCV)
	VMLX60K1AA								Mopar HEMI 5.7L Maintenance Kit 60,000 Mile (Air/Oil Filters, Plugs, PCV, Drive Belt, LX Cabin Filter)
3	04591871AB	1	D		22	EGG			RESONATOR, Air Cleaner
4	04591868AB	1	D		22	EGG			DUCT, Clean Air
5	04892336AA	1	D		22	EGG			HOSE, Make Up Air
6	06504289	1	D		22				SCREW, Hex Head
7		1							SCREW, M6X1.00X35.00, (NOT SERVICED)

DODGE CHALLENGER (LC)

SERIES	LINE	BODY	ENGINE	TRANSMISSION
H = HIGHLINE	D = DODGE	22 = 2-DR SEDAN TYPE #2	EGG = 3.5L High Output V6 24V MPI Engine	DEC = 6-Speed Manual TREMEC Transmission
P = PREMIUM			ESF = 6.1L SRT HEMI V8 Engine	DGJ = 5-Speed Auto W5A580 Transmission
X = SPECIAL			EZC = 5.7L HEMI VCT Engine	DGV = 4-Spd. Automatic VLP 42RLE Trans
			EZD = 5.7L Hemi VCT MDS Engine	

Air Cleaner and Related
Figure 14-810

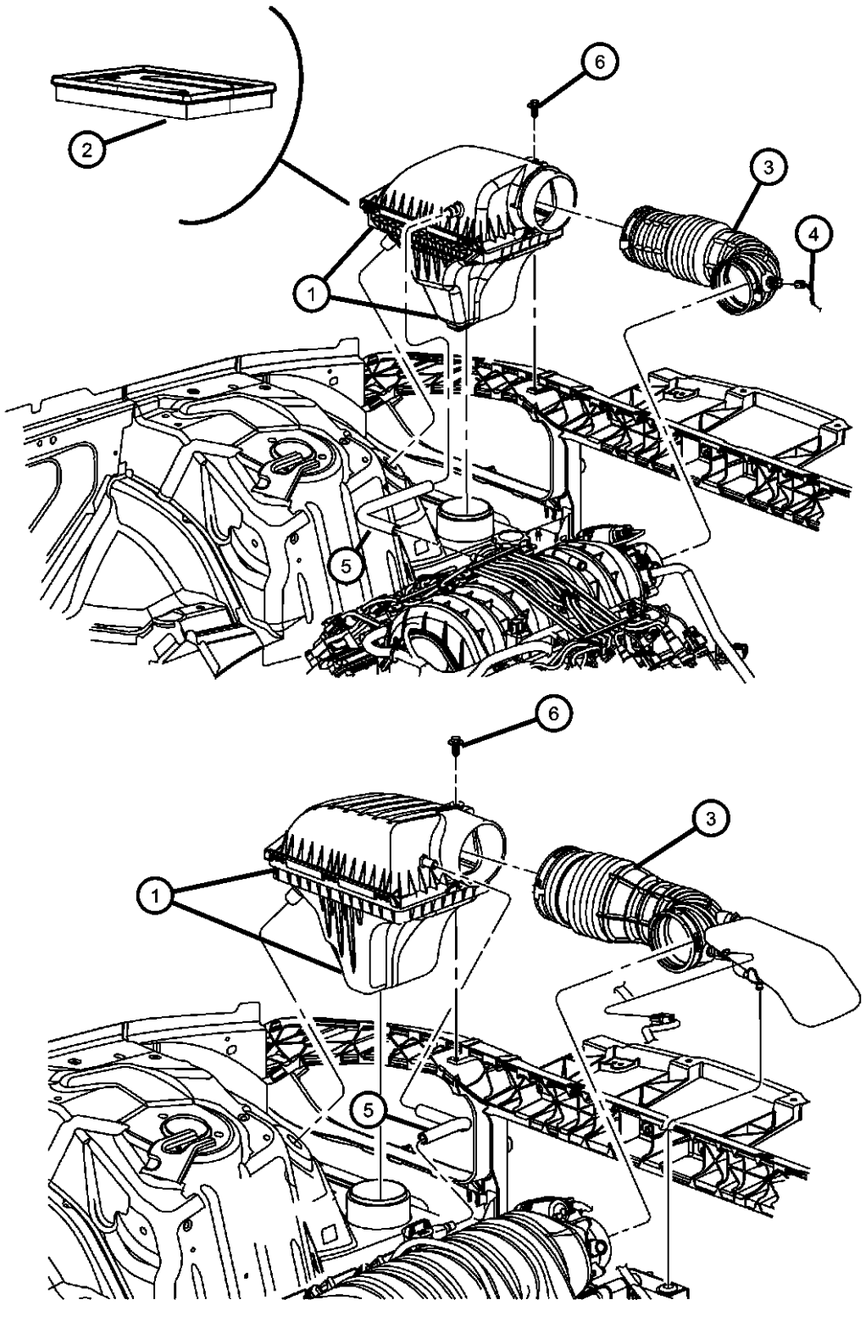

ITEM	PART NUMBER	QTY	LINE	SERIES	BODY	ENGINE	TRANS	TRIM	DESCRIPTION
Note; Sales Codes; [EZ0]= ALL 5.7L V8 ENGINES [ESF] = 6.1L SRT Hemi SMPI V-8 Engine									
1									AIR CLEANER
	04861704AA	1	D		22	EZC, EZD			
	05038040AA	1	D		22	ESF			
2									FILTER, Air
	05037615AA	1	D		22	EZC, EZD			
		1	D		22	ESF			
3									DUCT, Clean Air
	04593798AA	1	D		22	ESF			
	04861950AA	1	D		22	EZD, EZH	DGJ		
	04861960AA	1	D		22	EZC	DEC		
4		1							SENSOR, Air Temperature, See Group 08-606, (NOT SERVICED)
5									HOSE, Make Up Air
	04593692AA	1	D		22	EZC, EZD			
	05037554AC	1	D		22	ESF			
6	06504289	1	D		22				SCREW, Hex Head

DODGE CHALLENGER (LC)

SERIES	LINE	BODY	ENGINE	TRANSMISSION
H = HIGHLINE P = PREMIUM X = SPECIAL	D = DODGE	22 = 2-DR SEDAN TYPE #2	EGG = 3.5L High Output V6 24V MPI Engine ESF = 6.1L SRT HEMI V8 Engine EZC = 5.7L HEMI VCT Engine EZD = 5.7L Hemi VCT MDS Engine	DEC = 6-Speed Manual TREMEC Transmission DGJ = 5-Speed Auto W5A580 Transmission DGV = 4-Spd. Automatic VLP 42RLE Trans

AR = use ase required - = Non illustrrated part

Accelerator Pedal and Related
Figure 14-1005

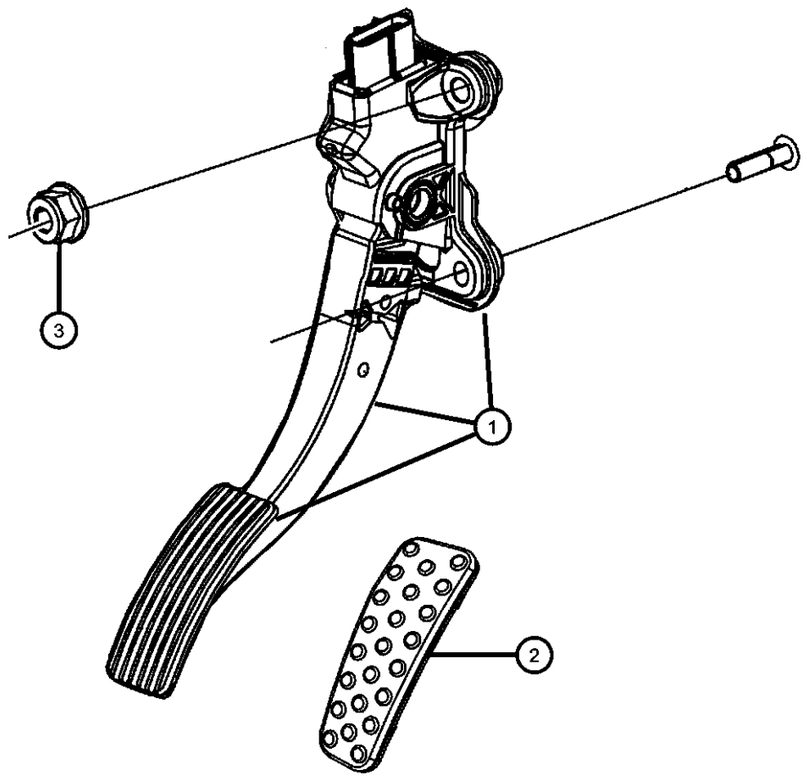

ITEM	PART NUMBER	QTY	LINE	SERIES	BODY	ENGINE	TRANS	TRIM	DESCRIPTION
Note: Sales Codes: [XAM] = Power Adjustable [XAP] = Power Adjustable With Memory [XA8] = Non Adjustable									
1	04861714AB	1	D		22				PEDAL, Accelerator, With Pad
2	04861727AA	1	D		22		DEC		PAD, Accelerator Pedal, [XA8] Manual Transmission
3	06502756	3	D		22				NUT, Hex Lock, M8x1.25

DODGE CHALLENGER (LC)

SERIES	LINE	BODY	ENGINE	TRANSMISSION
H = HIGHLINE P = PREMIUM X = SPECIAL	D = DODGE	22 = 2-DR SEDAN TYPE #2	EGG = 3.5L High Output V6 24V MPI Engine ESF = 6.1L SRT HEMI V8 Engine EZC = 5.7L HEMI VCT Engine EZD = 5.7L Hemi VCT MDS Engine	DEC = 6-Speed Manual TREMEC Transmission DGJ = 5-Speed Auto W5A580 Transmission DGV = 4-Spd. Automatic VLP 42RLE Trans

AR = use ase required - = Non illustrrated part

Group - 17

Rear Suspension

017-100 Rear Suspension and Cradle	017-200 Rear Stabilizer 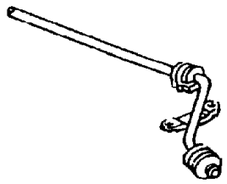		

Group - 17 Rear Suspension

Illustration Title — Group-Fig. No.

Rear Suspension and Cradle

Rear Shocks ..... Fig. 17 - 105
Suspension, Rear ..... Fig. 17 - 110

Rear Stabilizer

Stabilizer Bar, Rear ..... Fig. 17 - 205

Rear Shocks
Figure 17-105

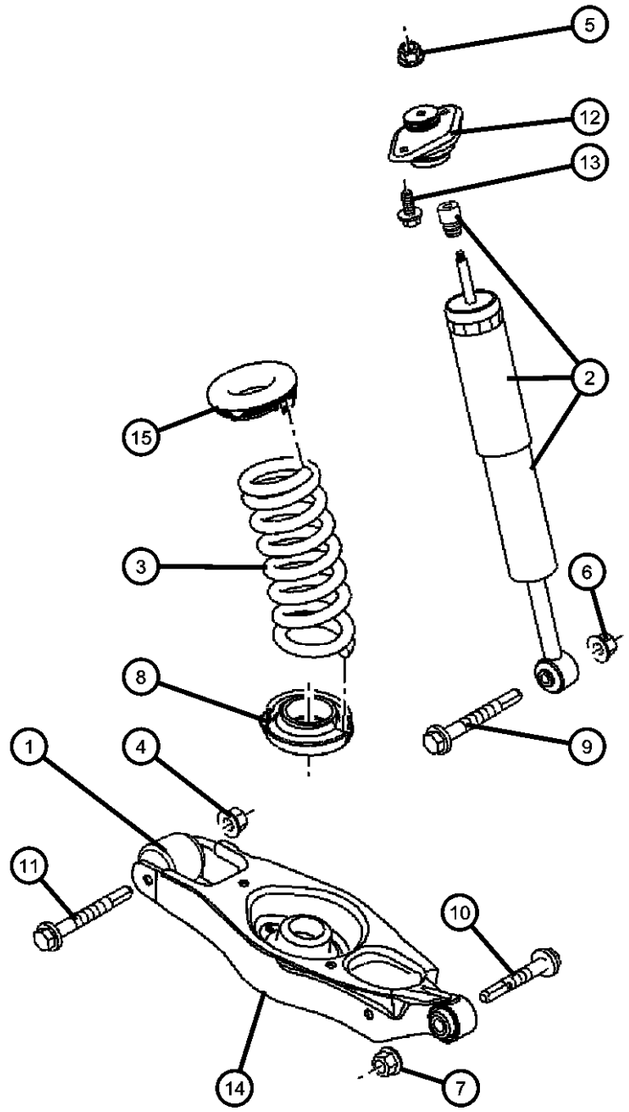

ITEM	PART NUMBER	QTY	LINE	SERIES	BODY	ENGINE	TRANS	TRIM	DESCRIPTION
NOTE:Sales codes [SDC]=Touring Suspension [SDD]=Performance Suspension [SDG]=4-Wheel Independent Suspension [SDX]=High Perfromance Suspension [EE0]=2.5L or 2.7L V6 Gas [EG0]=Engines - All 3.3L,3.5L, & 3.8L 6 Cylinder [ES0]=Engines - All 6 L									
1	04895235AA	2				ES0	DEC		BUSHING, Spring Link
2									SHOCK ABSORBER KIT, Suspension, Rear
	05180697AB	2					DEC		[SDD]
	68034901AA	2							[SDC]
	68034903AA	2					DGJ, DGV		[SDD]
	05039355AG	2				ES0			[SDX]
3									SPRING, Rear Coil
	04895314AD	1							[ZYU] [ZKU]
	05181369AC	1							[ZJX][ZXX]
	04895324AD	1							[ZPU] [ZBU]
	04895325AD	1							[ZBV] [ZPV]
4	06502835	2				ES0	DEC		NUT, Hex Flange Lock, M12x1.75
5	06502337	2					DEC		NUT AND WASHER, Hex Locking, M10x1.50
6	06502697	2							NUT, Hex Flange Lock, M12x1.75
7	06502502	2				ES0	DEC		NUT, Hex Flange Lock, M14x2
8	04895382AA	2							ISOLATOR, Spring
9	06504863AA	2							BOLT, Hex Flange Head, M12x1.75x89.50
10	06507089AA	2				ES0	DEC		BOLT, Hex Head, M14x2.00x120.00
11	06506021AA	2				EZ0	DGJ		BOLT, Hex Flange Head Lock, M12x1.75x110.00
12									MOUNT, Strut
	68042668AA	2					DEC		[SDD][DEC]
	04782387AB	2							[SDC]
13	06104424AA	4							BOLT AND WASHER, Hex Head, M10x1.50x55.00
14	04782598AF	2				ES0	DEC		SPRING LINK
15	04895372AA	2							ISOLATOR, SpringUpper

DODGE CHALLENGER (LC)

SERIES	LINE	BODY	ENGINE	TRANSMISSION
H = HIGHLINE P = PREMIUM X = SPECIAL	D = DODGE	22 = 2-DR SEDAN TYPE #2	EGG = 3.5L High Output V6 24V MPI Engine ESF = 6.1L SRT HEMI V8 Engine EZC = 5.7L HEMI VCT Engine EZD = 5.7L Hemi VCT MDS Engine	DEC = 6-Speed Manual TREMEC Transmission DGJ = 5-Speed Auto W5A580 Transmission DGV = 4-Spd. Automatic VLP 42RLE Trans

Suspension, Rear
Figure 17-110

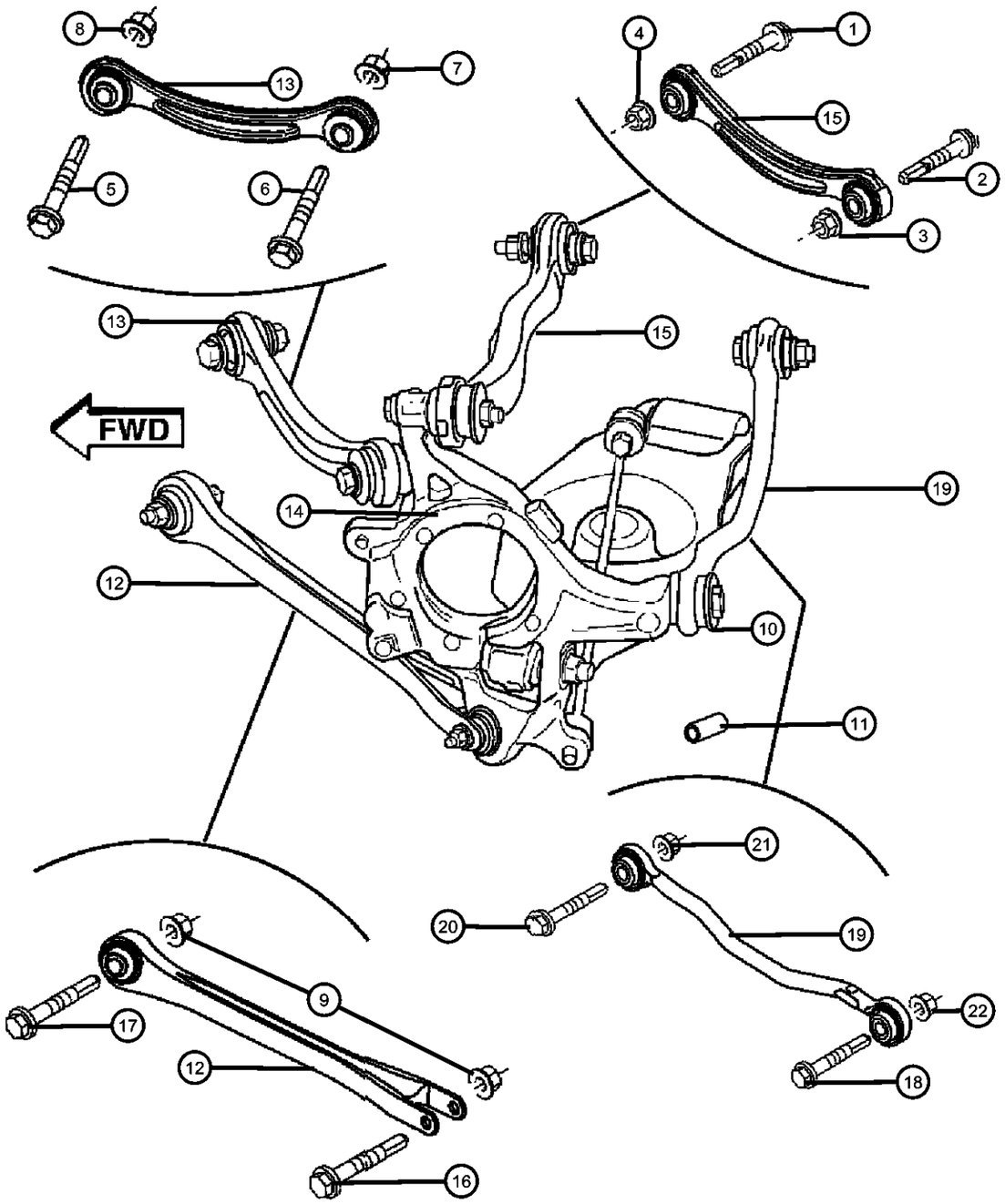

ITEM	PART NUMBER	QTY	LINE	SERIES	BODY	ENGINE	TRANS	TRIM	DESCRIPTION
NOTE:Sales codes [EE0]=2.5L OR 2.7L V6 GAS [EG0]=3.3L,3.5L, & 3.8L 6CY [ES0]=ALL 6 L ENGINES [EX0]=ALL 3.0/3.1L TURBO DIESELS ENGINES [EZ0]= 5.7L 8CYL GAS [SDC]=TOURING SUSPENSION [SDD]=PERFORMANCE SUSPENSION									
1	06507097AA	2				ES0	DEC		BOLT AND WASHER, Hex Head, M12X1.75X70.00
2	06507099AA	2				ES0	DEC		BOLT AND WASHER, Hex Head, M12x1.75x85.00
3	06507108AA	2				ES0	DEC		NUT AND WASHER, Hex, M12x1.75
4	06502835	2				ES0	DEC		NUT, Hex Flange Lock, M12x1.75
5	06507097AA	2				ES0	DEC		BOLT AND WASHER, Hex Head, M12X1.75X70.00
6	06507099AA	2				ES0	DEC		BOLT AND WASHER, Hex Head, M12x1.75x85.00
7	06507108AA	2				ES0	DEC		NUT AND WASHER, Hex, M12x1.75
8	06502835	2				ES0	DEC		NUT, Hex Flange Lock, M12x1.75
9	06502835	2				ES0	DEC		NUT, Hex Flange Lock, M12x1.75
10	06507539AA	2				ES0	DEC		WASHER, Flat
11	04743263AA	1				ES0	DEC		SLEEVE
12	05180480AB	2				ES0	DEC		LINK ASSEMBLY, Compression
13	04782745AB	2				ES0	DEC		LINK ASSEMBLY, Tension
14									KNUCKLE, Rear
	04782587AC	1				EG0	DGV		[EG0], Left
		1				EZ0	DEC		[EZ0], Left
	04782586AD	1				EZ0	DGJ		[EZ0], Right
		1				EG0	DGV		[EG0], Right
	04854458AC	1				ES0	DEC		[ES0], Right
	04854459AC	1				ES0	DEC		[ES0], Left
15									LINK ASSEMBLY, Camber
	04895546AA	AR							Repair Minus 1 mm, Right
	04895547AA	AR							Repair Minus 1 mm, Left
	04782537AB	1				ES0	DEC		Left
	04782536AB	1				ES0	DEC		Right

DODGE CHALLENGER (LC)

SERIES	LINE	BODY	ENGINE	TRANSMISSION
H = HIGHLINE P = PREMIUM X = SPECIAL	D = DODGE	22 = 2-DR SEDAN TYPE #2	EGG = 3.5L High Output V6 24V MPI Engine ESF = 6.1L SRT HEMI V8 Engine EZC = 5.7L HEMI VCT Engine EZD = 5.7L Hemi VCT MDS Engine	DEC = 6-Speed Manual TREMEC Transmission DGJ = 5-Speed Auto W5A580 Transmission DGV = 4-Spd. Automatic VLP 42RLE Trans

AR = use ase required - = Non illustrrated part

Suspension, Rear
Figure 17-110

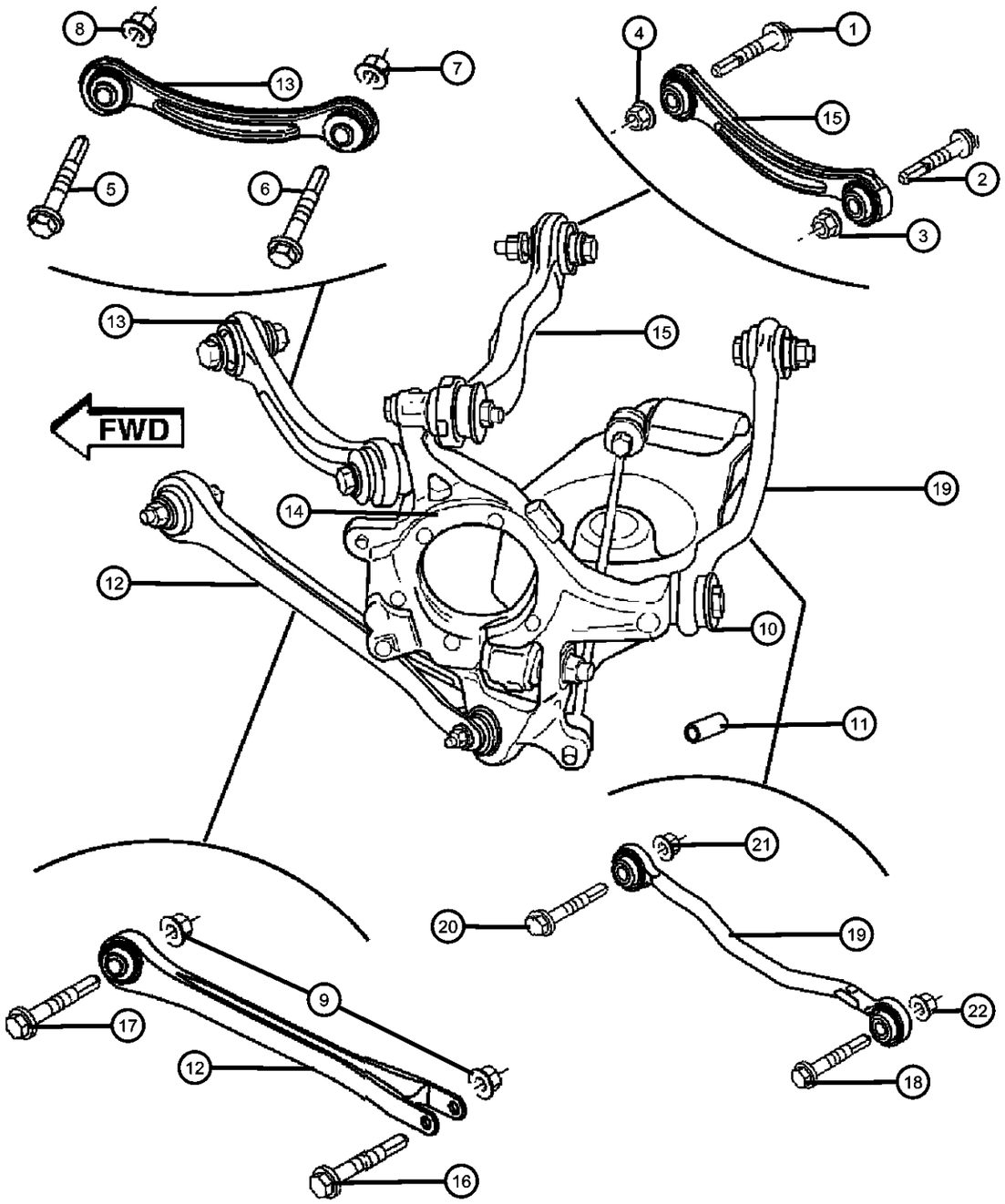

ITEM	PART NUMBER	QTY	LINE	SERIES	BODY	ENGINE	TRANS	TRIM	DESCRIPTION
16	06507098AA	2				ES0	DEC		BOLT AND WASHER, Hex Head, M12x1.75x75.00
17	06507097AA	2				ES0	DEC		BOLT AND WASHER, Hex Head, M12X1.75X70.00
18	06507107AA	2				ES0	DEC		BOLT AND WASHER, Hex Head, M12x1.75x75.00
19									TOE LINK
	04782936AA	1				EZ0	DGJ		Right
	04782937AA	1				EZ0	DGJ		Left
20	06507538AA	2				ES0	DEC		BOLT AND WASHER, Hex Head, M12x1.75x123.00
21	06507207AA	2				EG0	DGV		NUT, Hex Flange Lock, M12x1.75
22	06502835	2				EG0	DGV		NUT, Hex Flange Lock, M12x1.75

DODGE CHALLENGER (LC)

SERIES	LINE	BODY	ENGINE	TRANSMISSION
H = HIGHLINE P = PREMIUM X = SPECIAL	D = DODGE	22 = 2-DR SEDAN TYPE #2	EGG = 3.5L High Output V6 24V MPI Engine ESF = 6.1L SRT HEMI V8 Engine EZC = 5.7L HEMI VCT Engine EZD = 5.7L Hemi VCT MDS Engine	DEC = 6-Speed Manual TREMEC Transmission DGJ = 5-Speed Auto W5A580 Transmission DGV = 4-Spd. Automatic VLP 42RLE Trans

Stabilizer Bar, Rear
Figure 17-205

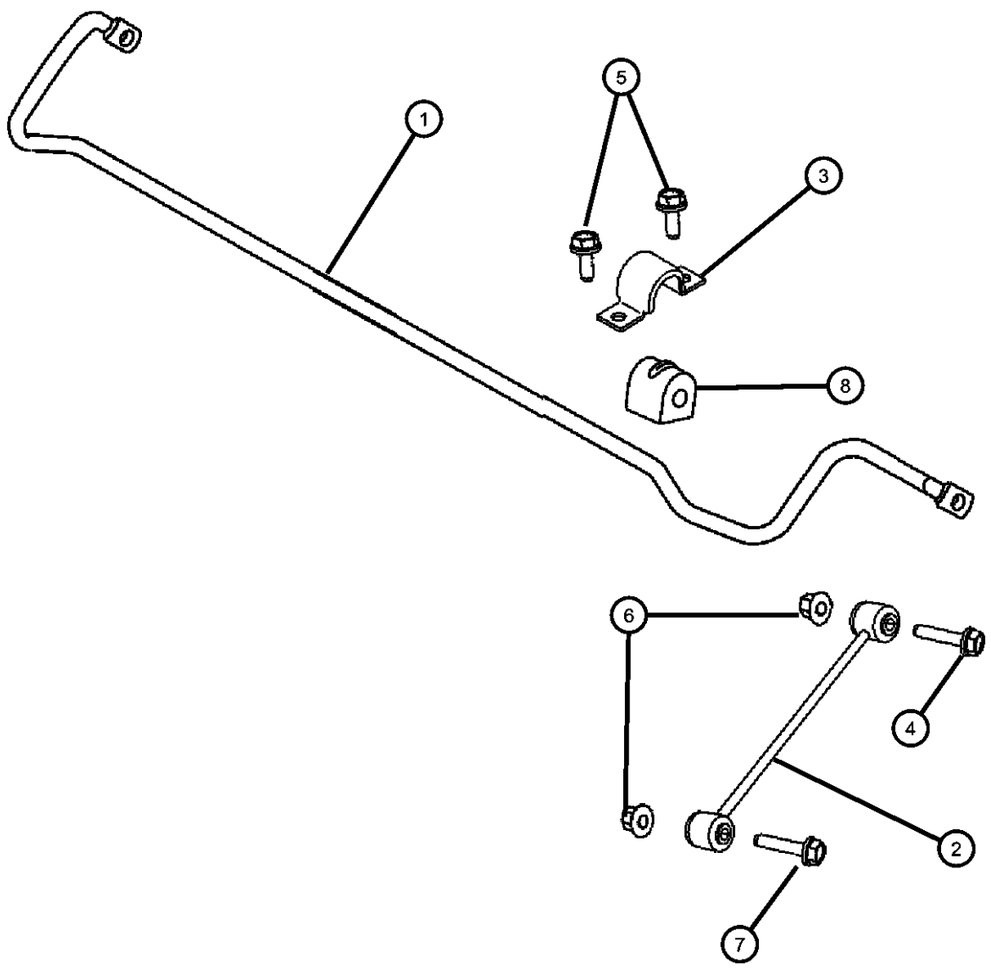

ITEM	PART NUMBER	QTY	LINE	SERIES	BODY	ENGINE	TRANS	TRIM	DESCRIPTION
Note: Sales Codes [EEO]=2.5L OR 2.7L V6 GAS [EGO]=3.3L,3.5L, & 3.8L 6CY [ESO]=ALL 6 L ENGINES [EXO]=ALL 3.0/3.1L TURBO DIESELS ENGINES [BR3]=ANTI-LOCK 4-WHEEL DISC BRAKES [BR5]=ANTI-LOCK 4-WHEEL DISC PERF BRAKES [BR8]=4-WHEEL DISC HEAVY DUTY BRAKES									
1									STABILIZER BAR, Rear Suspension
	04782872AB	1				EZ0	DEC		[EZ0], [DEC], [SDD], [BR6]
		1				EZ0	DEC		[EZ0], [DEC], [SDD], [BR5]
		1				EZ0	DGJ		[EZ0], [DGJ], [SDD], [BR5]
		1				EG0	DGV		[EG0], [DGV], [SDC], [BRD]
		1				ES0	DGJ		[ES0], [DGJ], [SDX], [BR4]
		1				EG0	DGJ		[EG0], [DGJ], [SDC], [BR3]
	04782873AB	1				ES0	DEC		[ES0], [DEC], [SDX], [BR4]
		1				EG0	DGV		[EG0], [DGV], [SDC], [BR3]
2	04766866AA	2				ES0	DEC		LINK, Sway Eliminator
3	04228786	2				ES0	DEC		BRACKET, Stabilizer Bar
4	06102239AA	2				ES0	DEC		SCREW AND WASHER, Hex Head, Link to Stabilizer Bar
5	06500399	4				ES0			BOLT, Hex Head, M10x1.5x20, Sway Bar to Frame
6	06104717AA	2				ES0	DEC		NUT, Hex Flange Lock, M10x1.50
7	06102222AA	2				ES0	DEC		SCREW AND WASHER, Hex Head, M10x1.5x75, Link to Knuckle
8									ISOLATOR
	04782893AB	2				EZ0	DEC		[DEC], [SDD], [BR5]
		2				EZ0	DEC		[SDD], [BR6]
		2				EZ0	DGJ		[DGJ], [SDD], [BR5]
		2				ES0	DEC		[DEC], [SDX], [BR4]
		2				ES0	DGJ		[DGJ], [SDX], [BR4]
	04782892AB	2				EG0	DGJ		[SDC], [BR3]

DODGE CHALLENGER (LC)

SERIES	LINE	BODY	ENGINE	TRANSMISSION
H = HIGHLINE P = PREMIUM X = SPECIAL	D = DODGE	22 = 2-DR SEDAN TYPE #2	EGG = 3.5L High Output V6 24V MPI Engine ESF = 6.1L SRT HEMI V8 Engine EZC = 5.7L HEMI VCT Engine EZD = 5.7L Hemi VCT MDS Engine	DEC = 6-Speed Manual TREMEC Transmission DGJ = 5-Speed Auto W5A580 Transmission DGV = 4-Spd. Automatic VLP 42RLE Trans

Group - 19

Steering

019-100 Steering Wheel	**019-200** Steering Column and Intermediate Shaft	**019-300** Steering Gear	**019-500** Power Steering Pump and Reservoir
019-600 Power Steering Hoses			

Group - 19 Steering

Illustration Title — Group-Fig. No.

Steering Wheel
Steering Wheel Assembly ..... Fig. 19 - 105

Steering Column and Intermediate Shaft
Steering Column ..... Fig. 19 - 205

Steering Gear
Gear Rack and Pinion ..... Fig. 19 - 305

Power Steering Pump and Reservoir
Power Steering Pump ..... Fig. 19 - 505
Power Steering Reservoir ..... Fig. 19 - 510

Power Steering Hoses
Power Steering Hoses ..... Fig. 19 - 605

Steering Wheel Assembly
Figure 19-105

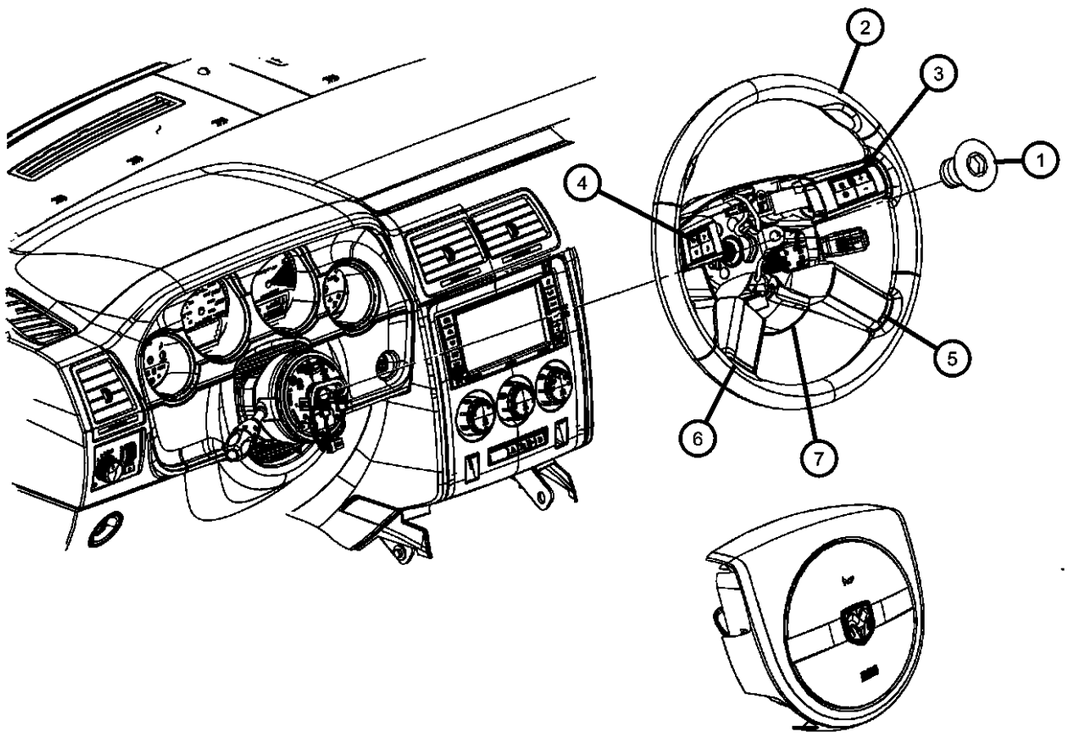

ITEM	PART NUMBER	QTY	LINE	SERIES	BODY	ENGINE	TRANS	TRIM	DESCRIPTION
1	04649132AA	1	D		22				BOLT, BOLT, Steering Wheel Mounting
2									WHEEL, Steering
	1CE781DVAB	1	D		22				[DV] [SCC,NHM]
	1LD381DVAA	1	D		22				[DV][SCV]
	1AG511DVAB	1	D		22				[DV][SCA]
3	0WU96XZAAB	1	D		22				COVER, Switch OpeningUpper Right
4	0WU97XZAAB	1	D		22				COVER, Switch OpeningUpper Left
5	0ZL50XZAAA	1	D		22				COVER, Switch OpeningLower Right
6	0ZL51XZAAA	1	D		22				COVER, Switch OpeningLower Left
7	1KS031DVAA	1	D		22				COVER, Steering Wheel Back, [DV]
-8									BEZEL, Steering Wheel Switch
	1CJ941DVAA	1	D		22				Right
	1CJ951DVAA	1	D		22				Left

DODGE CHALLENGER (LC)

SERIES	LINE	BODY	ENGINE	TRANSMISSION
H = HIGHLINE	D = DODGE	22 = 2-DR SEDAN TYPE #2	EGG = 3.5L High Output V6 24V MPI Engine	DEC = 6-Speed Manual TREMEC Transmission
P = PREMIUM			ESF = 6.1L SRT HEMI V8 Engine	DGJ = 5-Speed Auto W5A580 Transmission
X = SPECIAL			EZC = 5.7L HEMI VCT Engine	DGV = 4-Spd. Automatic VLP 42RLE Trans
			EZD = 5.7L Hemi VCT MDS Engine	

Steering Column
Figure 19-205

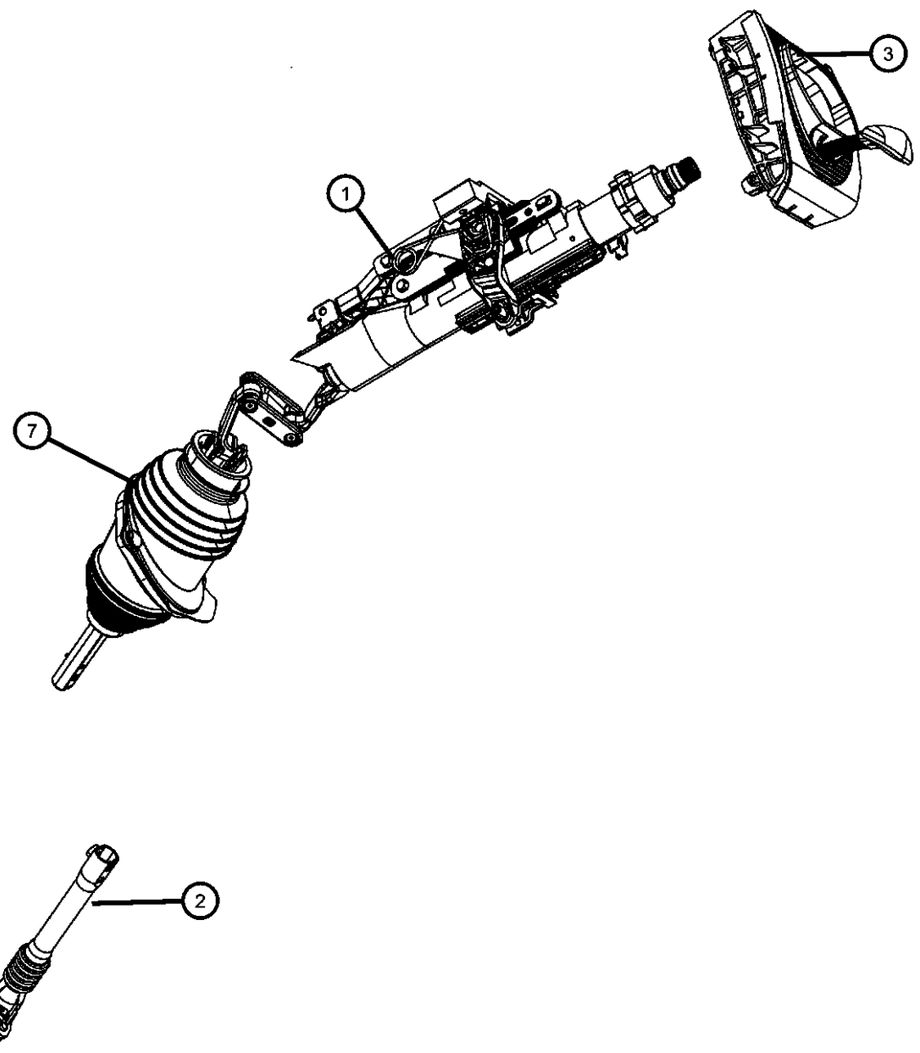

ITEM	PART NUMBER	QTY	LINE	SERIES	BODY	ENGINE	TRANS	TRIM	DESCRIPTION
1	05057471AC	1	D		22				COLUMN, Steering
2	05057616AA	1	D		22				COUPLING, Steering
3	0UU281DVAB	1	D	X	22				SHROUD, Steering Column, [DV]
-4	06507656AA	1	D		22				SCREW, Hex Flange Head, M8x1.25x40
-5	06101695	1	D		22				NUT, Hex Flange Lock, M8X1.25, Steering Column to IP Beam
-6	05097674AA	2	D		22				NUT, Hex, Steering Column Dash Seal
7	05170263AB	1	D		22				BOOT PACKAGE, Steering Column

DODGE CHALLENGER (LC)

SERIES	LINE	BODY	ENGINE	TRANSMISSION
H = HIGHLINE	D = DODGE	22 = 2-DR SEDAN TYPE #2	EGG = 3.5L High Output V6 24V MPI Engine	DEC = 6-Speed Manual TREMEC Transmission
P = PREMIUM			ESF = 6.1L SRT HEMI V8 Engine	DGJ = 5-Speed Auto W5A580 Transmission
X = SPECIAL			EZC = 5.7L HEMI VCT Engine	DGV = 4-Spd. Automatic VLP 42RLE Trans
			EZD = 5.7L Hemi VCT MDS Engine	

AR = use ase required - = Non illustrrated part

Gear Rack and Pinion
Figure 19-305

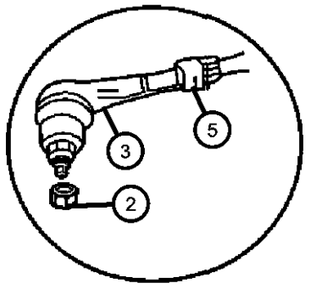

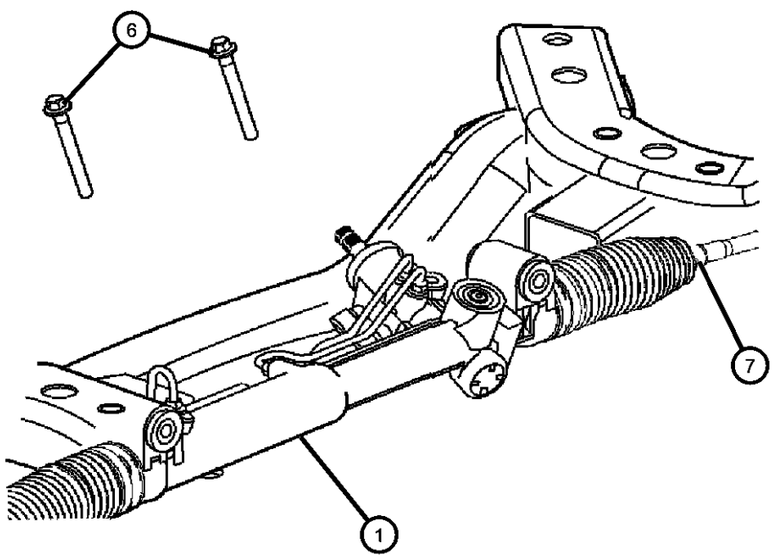

ITEM	PART NUMBER	QTY	LINE	SERIES	BODY	ENGINE	TRANS	TRIM	DESCRIPTION
1									GEAR, Rack and Pinion
	68043033AA	1	D		22	EZ0			[SDD,SBF]
		1	D		22	EZ0	DEC		[SDD]
	68043342AA	1	D		22	EG0			[SDC]
		1	D		22	EZ0			[SDC]
	04854551AE	1	D		22	ES0			[SDX]
		1	D		22	EZ0	DGJ, DGV		[SDD]
2	06505623AA	2	D		22				NUT, Hex Lock, M14x1.50
3									TIE ROD END, Outer
	52013468AC	1	D		22	EZ0	DGJ, DGV		
		1	D		22	EG0			
		1	D		22	ES0			
-4									TIE ROD PACKAGE, Inner tie rod end
	68028831AB	1	D		22	EZ0	DGJ		
		1	D		22	EG0			
		1	D		22	ES0			
5									NUT, Steering Gear Lock
	06507287AA	2	D		22	ES0			
		1	D		22	EZ0			
		1	D		22	EG0			
6									BOLT, Hex Flange Head, M12x1.75x100.00
	06102378AA	2	D		22	ES0			
		2	D		22	EG0			
		2	D		22	EZ0			
7									CLAMP, SMALL BELLOW CLAMP
	68028823AA	1	D		22	EG0			
		1	D		22	ES0			
		1	D		22	EZ0	DGJ		

DODGE CHALLENGER (LC)

SERIES	LINE	BODY	ENGINE	TRANSMISSION
H = HIGHLINE P = PREMIUM X = SPECIAL	D = DODGE	22 = 2-DR SEDAN TYPE #2	EGG = 3.5L High Output V6 24V MPI Engine ESF = 6.1L SRT HEMI V8 Engine EZC = 5.7L HEMI VCT Engine EZD = 5.7L Hemi VCT MDS Engine	DEC = 6-Speed Manual TREMEC Transmission DGJ = 5-Speed Auto W5A580 Transmission DGV = 4-Spd. Automatic VLP 42RLE Trans

AR = use ase required - = Non illustrrated part

Power Steering Pump
Figure 19-505

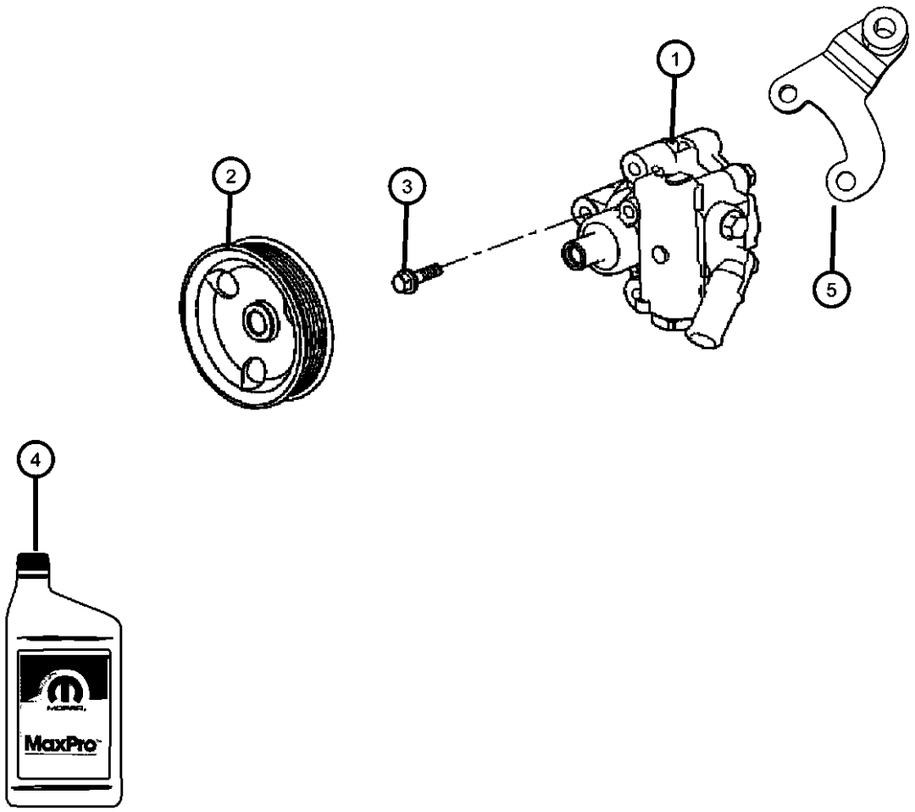

ITEM	PART NUMBER	QTY	LINE	SERIES	BODY	ENGINE	TRANS	TRIM	DESCRIPTION
1									PUMP, Power Steering
	04578766AC	1	D		22	EZ0	DEC		
	04782523AF	1	D		22	EG0			
	04782524AF	1	D		22	EZ0	DGJ		
	05290845AB	1	D		22	ES0			
2									PULLEY, Power Steering Pump
	04892093AA	1	D		22	EGG			
	04578769AA	1	D		22	EZC			
		1	D		22	ESF			
3		1							SCREW, M8x1.25x75.00, (NOT SERVICED)
4	05013457AA	AR	D		22				FLUID, Automatic Transmission ATF+4, Quart, Standard MS-9602-F, [32oz] Minimum Ship Quantity 12
5	04578754AB	1	D		22	EZ0	DEC		BRACKET, Power Steering Pump

DODGE CHALLENGER (LC)

SERIES	LINE	BODY	ENGINE	TRANSMISSION
H = HIGHLINE P = PREMIUM X = SPECIAL	D = DODGE	22 = 2-DR SEDAN TYPE #2	EGG = 3.5L High Output V6 24V MPI Engine ESF = 6.1L SRT HEMI V8 Engine EZC = 5.7L HEMI VCT Engine EZD = 5.7L Hemi VCT MDS Engine	DEC = 6-Speed Manual TREMEC Transmission DGJ = 5-Speed Auto W5A580 Transmission DGV = 4-Spd. Automatic VLP 42RLE Trans

AR = use ase required - = Non illustrrated part

Power Steering Reservoir
Figure 19-510

ITEM	PART NUMBER	QTY	LINE	SERIES	BODY	ENGINE	TRANS	TRIM	DESCRIPTION
1	04782345AC	1	D		22				RESERVOIR, Power Steering Fluid
2	52106856AC	1	D		22				CAP, Power Steering Reservoir
3	05013457AA	AR	D		22				FLUID, Automatic Transmission ATF+4, Quart

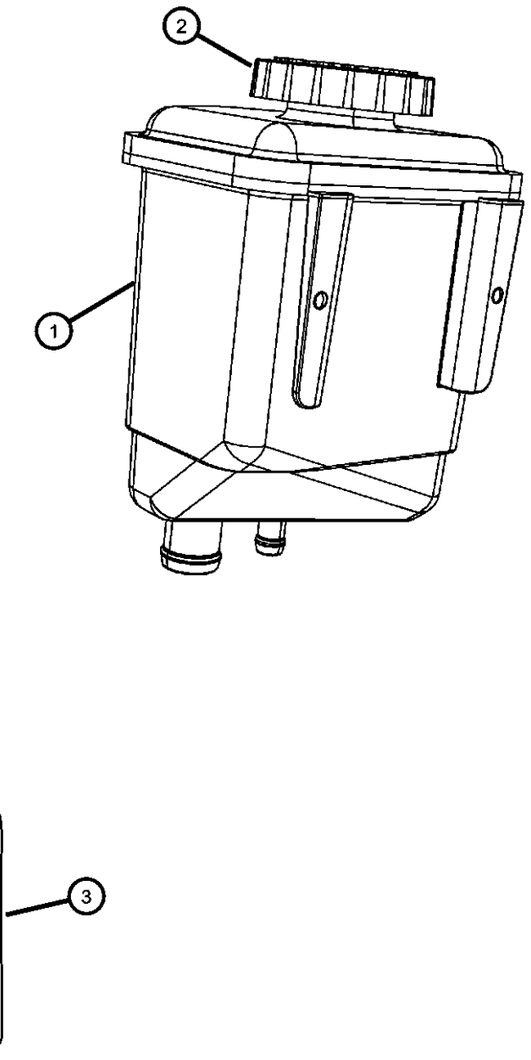

DODGE CHALLENGER (LC)

SERIES	LINE	BODY	ENGINE	TRANSMISSION
H = HIGHLINE P = PREMIUM X = SPECIAL	D = DODGE	22 = 2-DR SEDAN TYPE #2	EGG = 3.5L High Output V6 24V MPI Engine ESF = 6.1L SRT HEMI V8 Engine EZC = 5.7L HEMI VCT Engine EZD = 5.7L Hemi VCT MDS Engine	DEC = 6-Speed Manual TREMEC Transmission DGJ = 5-Speed Auto W5A580 Transmission DGV = 4-Spd. Automatic VLP 42RLE Trans

AR = use ase required - = Non illustrrated part

Power Steering Hoses
Figure 19-605

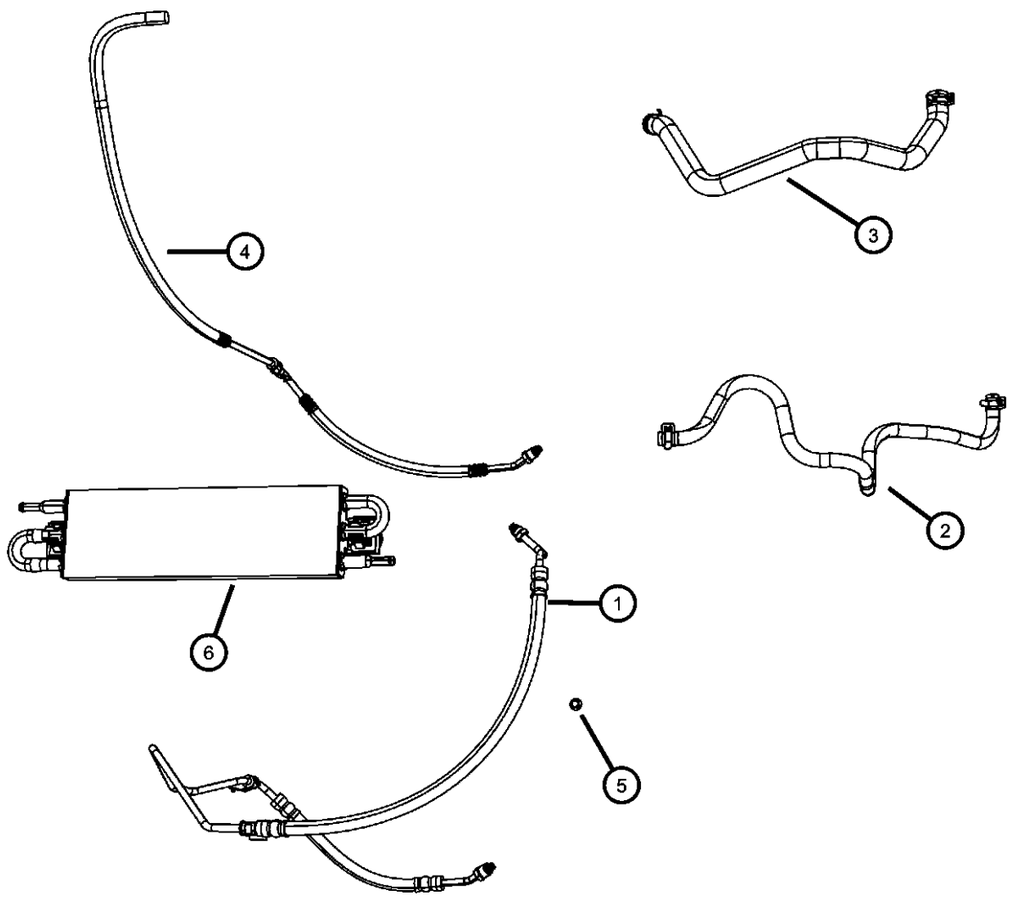

ITEM	PART NUMBER	QTY	LINE	SERIES	BODY	ENGINE	TRANS	TRIM	DESCRIPTION
1									HOSE, Power Steering Pressure
	04578752AB	1	D		22	EZ0	DEC		[SDD]
	05180007AC	1	D		22	EG0			
	68043618AA	1	D		22	EZ0			[SDC]
		1	D		22	ES0			[SDX]
		1	D		22	EZ0	DGJ		[SDD]
2									HOSE, Power Steering Return
	68044362AA	1	D		22	EG0, EZ0			
		1	D		22	ES0			
3	04782350AC	1	D		22	ES0			HOSE, Power Steering Supply, Reservoir to Pump
4									HOSE, Power Steering Return
	68043769AA	1	D		22	EZ0	DEC		Gear to cooler
	68044363AA	1	D		22	EG0			
		1	D		22	ES0			
		1	D		22	EZ0	DGJ		Gear to cooler
5									SCREW, Hex Head, M6x1x15
	06102142AA	1	D		22	EG0			
		1	D		22	EZ0			
		1	D		22	ES0			
6	05137721AA	1							COOLER, Power Steering

DODGE CHALLENGER (LC)

SERIES	LINE	BODY	ENGINE	TRANSMISSION
H = HIGHLINE	D = DODGE	22 = 2-DR SEDAN TYPE #2	EGG = 3.5L High Output V6 24V MPI Engine	DEC = 6-Speed Manual TREMEC Transmission
P = PREMIUM			ESF = 6.1L SRT HEMI V8 Engine	DGJ = 5-Speed Auto W5A580 Transmission
X = SPECIAL			EZC = 5.7L HEMI VCT Engine	DGV = 4-Spd. Automatic VLP 42RLE Trans
			EZD = 5.7L Hemi VCT MDS Engine	

Group - 021DEC

TR6060; 6-Speed; Manual Transmission

021DEC-100 Manual Transmission / Transaxle	**021DEC-1000** Fork and Rails	**021DEC-1100** Gearshift Controls and Related Parts	**021DEC-1200** Mounting and Skid Plate
021DEC-200 Case, and Extension	**021DEC-600** Gear Train		

Group - 021DEC TR6060; 6-Speed; Manual Transmission

Illustration Title — Group-Fig. No.

Manual Transmission / Transaxle
Transmission / Transaxle Assembly ..... Fig. 021DEC - 105

Case, and Extension
Case ..... Fig. 021DEC - 205
Sensors, Switches And Vents ..... Fig. 021DEC - 215

Gear Train
Input Shaft Assembly ..... Fig. 021DEC - 606
Main Shaft ..... Fig. 021DEC - 610
Counter Shaft Assembly ..... Fig. 021DEC - 615
Reverse Idler Shaft Assembly ..... Fig. 021DEC - 620

Fork and Rails
Forks and Rails ..... Fig. 021DEC - 1010

Gearshift Controls and Related Parts
Gear Shift Boot, Knob and Bezel ..... Fig. 021DEC - 1110

Mounting and Skid Plate
Transmission Mount ..... Fig. 021DEC - 1210
Mounting Bolts ..... Fig. 021DEC - 1215

Transmission / Transaxle Assembly
Figure 021DEC-105

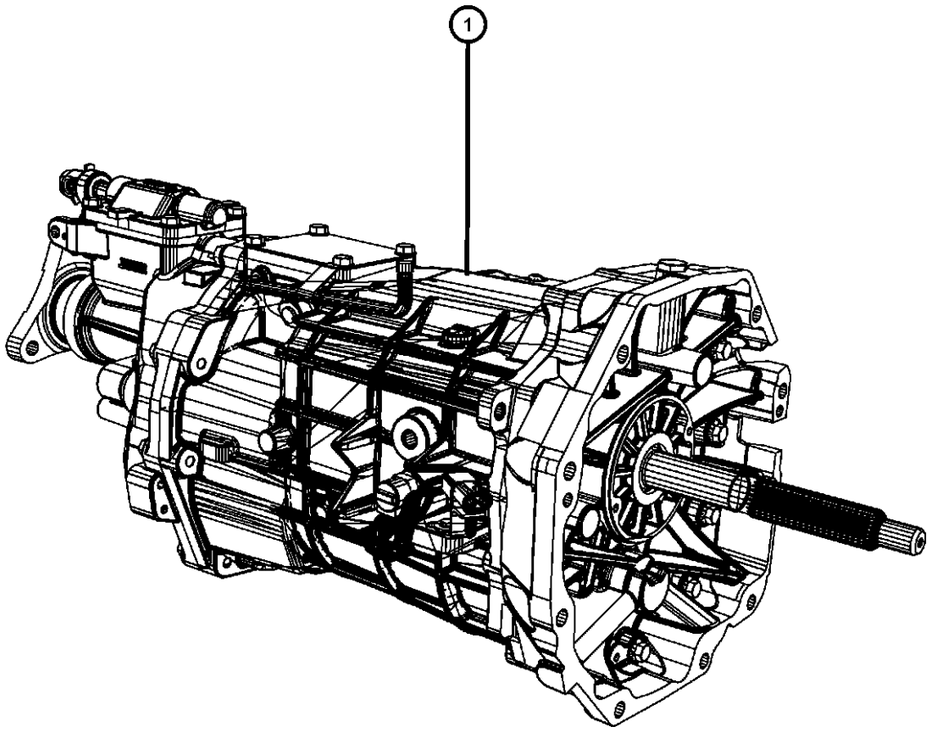

ITEM	PART NUMBER	QTY	LINE	SERIES	BODY	ENGINE	TRANS	TRIM	DESCRIPTION
1	68058752AA	1	D			ESF, EZC, EZD	DEC		TRANSMISSION
2	05013457AA	AR	D						FLUID, Automatic Transmission ATF+4, Quart, Standard MS-9602-F, [32oz] Minimum Ship Quantity 12

DODGE CHALLENGER (LC)

SERIES	LINE	BODY	ENGINE	TRANSMISSION
H = HIGHLINE P = PREMIUM X = SPECIAL	D = DODGE	22 = 2-DR SEDAN TYPE #2	EGG = 3.5L High Output V6 24V MPI Engine ESF = 6.1L SRT HEMI V8 Engine EZC = 5.7L HEMI VCT Engine EZD = 5.7L Hemi VCT MDS Engine	DEC = 6-Speed Manual TREMEC Transmission DGJ = 5-Speed Auto W5A580 Transmission DGV = 4-Spd. Automatic VLP 42RLE Trans

AR = use ase required - = Non illustrrated part

Case
Figure 021DEC-205

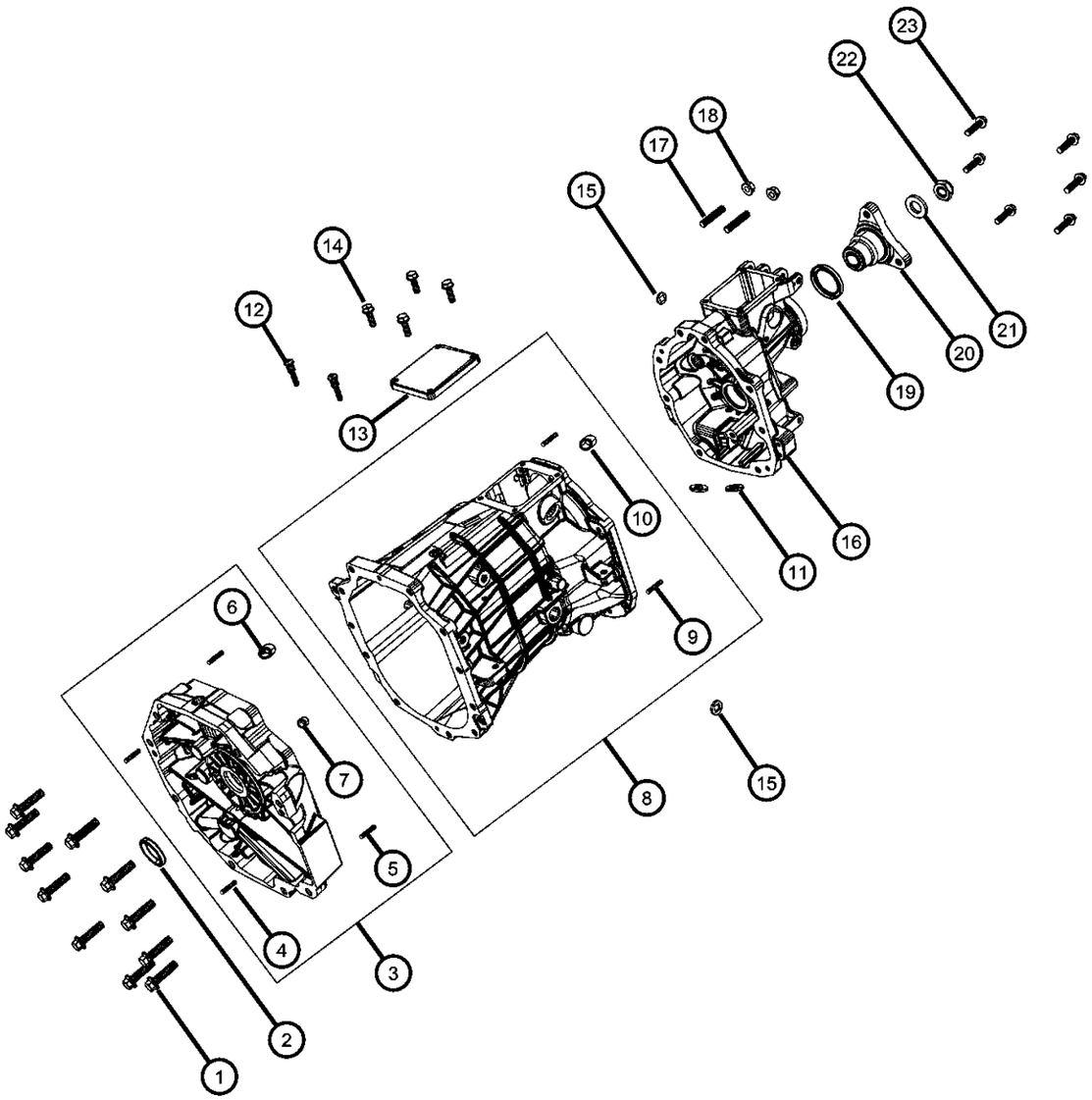

ITEM	PART NUMBER	QTY	LINE	SERIES	BODY	ENGINE	TRANS	TRIM	DESCRIPTION
1	04626520	17	D			ESF, EZC, EZD	DEC		BOLT, Transmission Case
2	68056415AA	1	D			ESF, EZC, EZD	DEC		SEAL, Input Shaft
3	68028430AA	1	D			ESF, EZC, EZD	DEC		ADAPTER, Transmission
4	04626514	2	D			ESF, EZC, EZD	DEC		DOWEL, Transmission Case, Adapter to Clutch Housing
5	04626513	2	D			ESF, EZC, EZD	DEC		DOWEL, Transmission Case, Adapter to Case
6	68028429AA	1	D			ESF, EZC, EZD	DEC		SLEEVE, Selector Shaft
7	68028433AA	1	D			ESF, EZC, EZD	DEC		BUSHING, Reverse Rail
8	68045190AA	1	D			ESF, EZC, EZD	DEC		CASE, Transmission
9	04626513	2	D			ESF, EZC, EZD	DEC		DOWEL, Transmission Case
10	68028429AA	1	D			ESF, EZC, EZD	DEC		SLEEVE, Selector Shaft
11	04626567	2	D			ESF, EZC, EZD	DEC		MAGNET, Transmission
12	04626527	2	D			ESF, EZC, EZD	DEC		BOLT, Shift Guide Plate
13	68029154AA	1	D			ESF, EZC, EZD	DEC		PLATE, Transmission Shifter
14	68027838AA	8	D			ESF, EZC, EZD	DEC		BOLT
15	04626591	2	D			ESF, EZC, EZD	DEC		PLUG, Transmission Drain
16	68056510AA	1	D			ESF, EZC, EZD	DEC		EXTENSION HOUSING, Transmission
17	04626461	2	D			ESF, EZC, EZD	DEC		STUD
18	04626568	2	D			ESF, EZC, EZD	DEC		NUT, Transmission Case
19	68056416AA	1	D			ESF, EZC, EZD	DEC		SEAL, Output Shaft
20	68056426AA	1	D			ESF, EZC, EZD	DEC		FLANGE, Output
21	68056411AA	1	D			EZC, EZD, ESF	DEC		WASHER
22	68056412AA	1	D			ESF, EZC, EZD	DEC		LOCK NUT
23	04626520	17	D			ESF, EZC, EZD	DEC		BOLT, Transmission Case

DODGE CHALLENGER (LC)

SERIES	LINE	BODY	ENGINE	TRANSMISSION
H = HIGHLINE P = PREMIUM X = SPECIAL	D = DODGE	22 = 2-DR SEDAN TYPE #2	EGG = 3.5L High Output V6 24V MPI Engine ESF = 6.1L SRT HEMI V8 Engine EZC = 5.7L HEMI VCT Engine EZD = 5.7L Hemi VCT MDS Engine	DEC = 6-Speed Manual TREMEC Transmission DGJ = 5-Speed Auto W5A580 Transmission DGV = 4-Spd. Automatic VLP 42RLE Trans

AR = use ase required - = Non illustrrated part

Sensors, Switches And Vents
Figure 021DEC-215

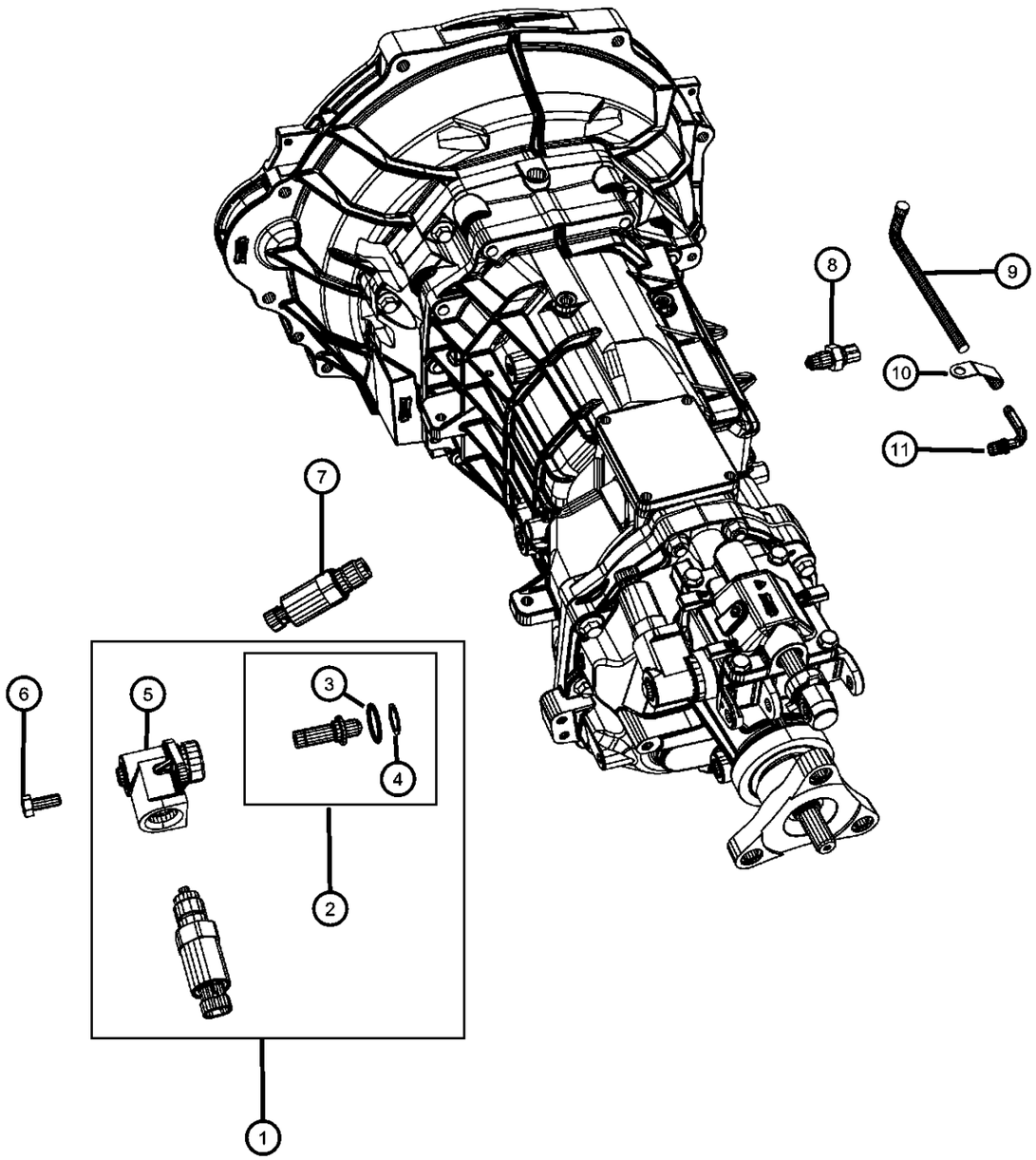

ITEM	PART NUMBER	QTY	LINE	SERIES	BODY	ENGINE	TRANS	TRIM	DESCRIPTION
1	68029168AA	1	D			ESF, EZC, EZD	DEC		SOLENOID ASSEMBLY, Reverse Lockout
2	68045194AA	1	D			ESF, EZD, EZC	DEC		PLUNGER ASSEMBLY, Reverse Lockout Solenoid
3	04626587	1	D			ESF, EZC, EZD	DEC		O RING, Reverse Inhibitor, Manual Transmission
4	04626586	1	D			ESF, EZC, EZD	DEC		SNAP RING, Reverse Inhibitor
5		1							HOUSING, Sensor, (NOT SERVICED)
6	04762008	1	D			ESF, EZC, EZD	DEC		BOLT
7	68029166AA	1	D			ESF, EZC, EZD	DEC		SOLENOID, Transmission Skip Shift
8	68056417AA	1	D			ESF, EZC, EZD	DEC		SWITCH, Back Up Lamp
9	04626592	1	D			ESF, EZC, EZD	DEC		VENT, Transmission Pipe
10	04626570	1	D			ESF, EZC, EZD	DEC		CLIP, Vent Tube
11	04626573	1	D			ESF, EZC, EZD	DEC		BREATHER, Transmission Case

DODGE CHALLENGER (LC)

SERIES	LINE	BODY	ENGINE	TRANSMISSION
H = HIGHLINE P = PREMIUM X = SPECIAL	D = DODGE	22 = 2-DR SEDAN TYPE #2	EGG = 3.5L High Output V6 24V MPI Engine ESF = 6.1L SRT HEMI V8 Engine EZC = 5.7L HEMI VCT Engine EZD = 5.7L Hemi VCT MDS Engine	DEC = 6-Speed Manual TREMEC Transmission DGJ = 5-Speed Auto W5A580 Transmission DGV = 4-Spd. Automatic VLP 42RLE Trans

Input Shaft Assembly
Figure 021DEC-606

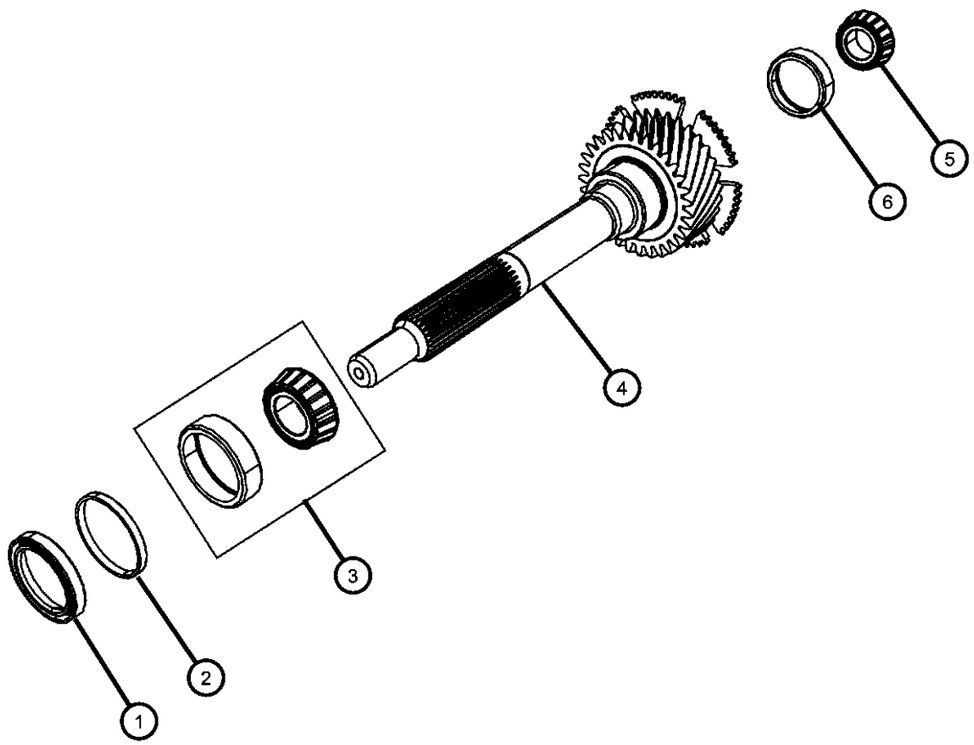

ITEM	PART NUMBER	QTY	LINE	SERIES	BODY	ENGINE	TRANS	TRIM	DESCRIPTION
1	68056415AA	1	D			ESF, EZC, EZD	DEC		SEAL, Input Shaft
2									SHIM
	68029152AA	1	D			ESF, EZC, EZD	DEC		[0.86 mm]
	68045234AA	1	D			ESF, EZC, EZD	DEC		[0.8128 mm]
	68045239AA	1	D			ESF, EZC, EZD	DEC		[0.6096 mm]
	68029149AA	1	D			ESF, EZC, EZD	DEC		[0.56 mm]
	68029150AA	1	D			ESF, EZC, EZD	DEC		[0.66 mm]
	68029151AA	1	D			ESF, EZC, EZD	DEC		[0.76 mm]
	68045237AA	1	D			ESF, EZC, EZD	DEC		[0.3180 mm]
	68045238AA	1	D			ESF, EZC, EZD	DEC		[0.5080 mm]
	68045236AA	1	D			ESF, EZC, EZD	DEC		[0.7112 mm]
	68029148AA	1	D			EZC, EZD, ESF	DEC		[0.46 mm]
	68045235AA	1	D			ESF, EZC, EZD	DEC		[0.8890 mm]
3	68045323AA	1	D			ESF, EZC, EZD	DEC		BEARING KIT, Input Shaft
4	68056758AA	1	D			ESF, EZC, EZD	DEC		SHAFT, Input
5	04626468	1	D			EZD, ESF, EZC	DEC		BEARING
6	04626544	1	D			ESF, EZC, EZD	DEC		CUP

DODGE CHALLENGER (LC)

SERIES	LINE	BODY	ENGINE	TRANSMISSION
H = HIGHLINE P = PREMIUM X = SPECIAL	D = DODGE	22 = 2-DR SEDAN TYPE #2	EGG = 3.5L High Output V6 24V MPI Engine ESF = 6.1L SRT HEMI V8 Engine EZC = 5.7L HEMI VCT Engine EZD = 5.7L Hemi VCT MDS Engine	DEC = 6-Speed Manual TREMEC Transmission DGJ = 5-Speed Auto W5A580 Transmission DGV = 4-Spd. Automatic VLP 42RLE Trans

Main Shaft
Figure 021DEC-610

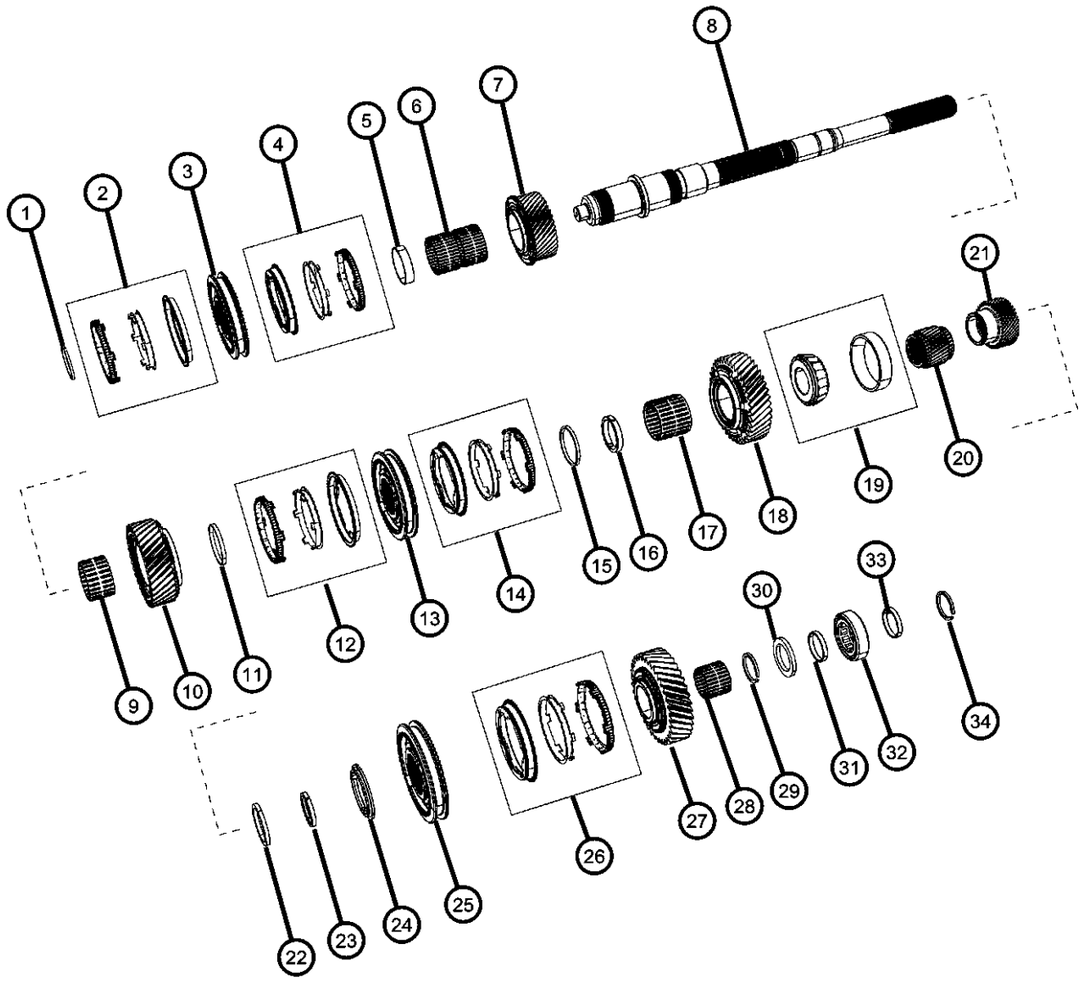

ITEM	PART NUMBER	QTY	LINE	SERIES	BODY	ENGINE	TRANS	TRIM	DESCRIPTION
Check Transmission Tag/Production Part Number Prior To Ordering The Following Parts: First Gear Second Gear 1st and 2nd Synchronizer									
1	04626487	1	D			ESF, EZC, EZD	DEC		SNAP RING
2	68028947AA	1	D			ESF, EZC, EZD	DEC		BLOCKER RING, 3rd To 4th, [89 mm]
3	68028950AA	1	D			ESF, EZC, EZD	DEC		SYNCHRONIZER
4	68028947AA	1	D			ESF, EZC, EZD	DEC		BLOCKER RING, 3rd To 4th, [89 mm]
5	68029144AA	1	D			ESF, EZC, EZD	DEC		SPACER, Third Gear
6	04626469	1	D			ESF, EZC, EZD	DEC		NEEDLE BEARING
7	68056773AA	1	D			EZD, ESF, EZC	DEC		GEAR, Third
8	68056759AA	1	D			ESF, EZC, EZD	DEC		MAINSHAFT, Transmission
9	04626469	1	D			ESF, EZC, EZD	DEC		NEEDLE BEARING
10									GEAR, Second
	68056774AA	1	D			ESF, EZC, EZD	DEC		Compatible With Transmission P/N 05038209AE, 05038209AF or 68058752AA
	68056774AB	1	D			ESF, EZC, EZD	DEC		Compatible With Transmission P/N 05038209AG or 68058752AB
11	68027839AA	1	D			ESF, EZC, EZD	DEC		BEARING
12	68028592AA	1	D			ESF, EZC, EZD	DEC		BLOCKER RING, 1st To 2nd, [89 mm]
13									SYNCHRONIZER
	68028950AA	1	D			ESF, EZC, EZD	DEC		Compatible With Transmission P/N 05038209AE, 05038209AF or 68058752AA
	68080314AA	1	D			ESF, EZC, EZD	DEC		Compatible With Transmission P/N 05038209AG or 68058752AB
14	68028592AA	1	D			ESF, EZC, EZD	DEC		BLOCKER RING, 1st To 2nd, [89 mm]
15	68029158AA	1	D			ESF, EZC, EZH	DEC		SNAP RING
16	68029159AA	2	D			ESF, EZC, EZD	DEC		WASHER

DODGE CHALLENGER (LC)

SERIES	LINE	BODY	ENGINE	TRANSMISSION
H = HIGHLINE P = PREMIUM X = SPECIAL	D = DODGE	22 = 2-DR SEDAN TYPE #2	EGG = 3.5L High Output V6 24V MPI Engine ESF = 6.1L SRT HEMI V8 Engine EZC = 5.7L HEMI VCT Engine EZD = 5.7L Hemi VCT MDS Engine	DEC = 6-Speed Manual TREMEC Transmission DGJ = 5-Speed Auto W5A580 Transmission DGV = 4-Spd. Automatic VLP 42RLE Trans

AR = use ase required - = Non illustrrated part

Main Shaft
Figure 021DEC-610

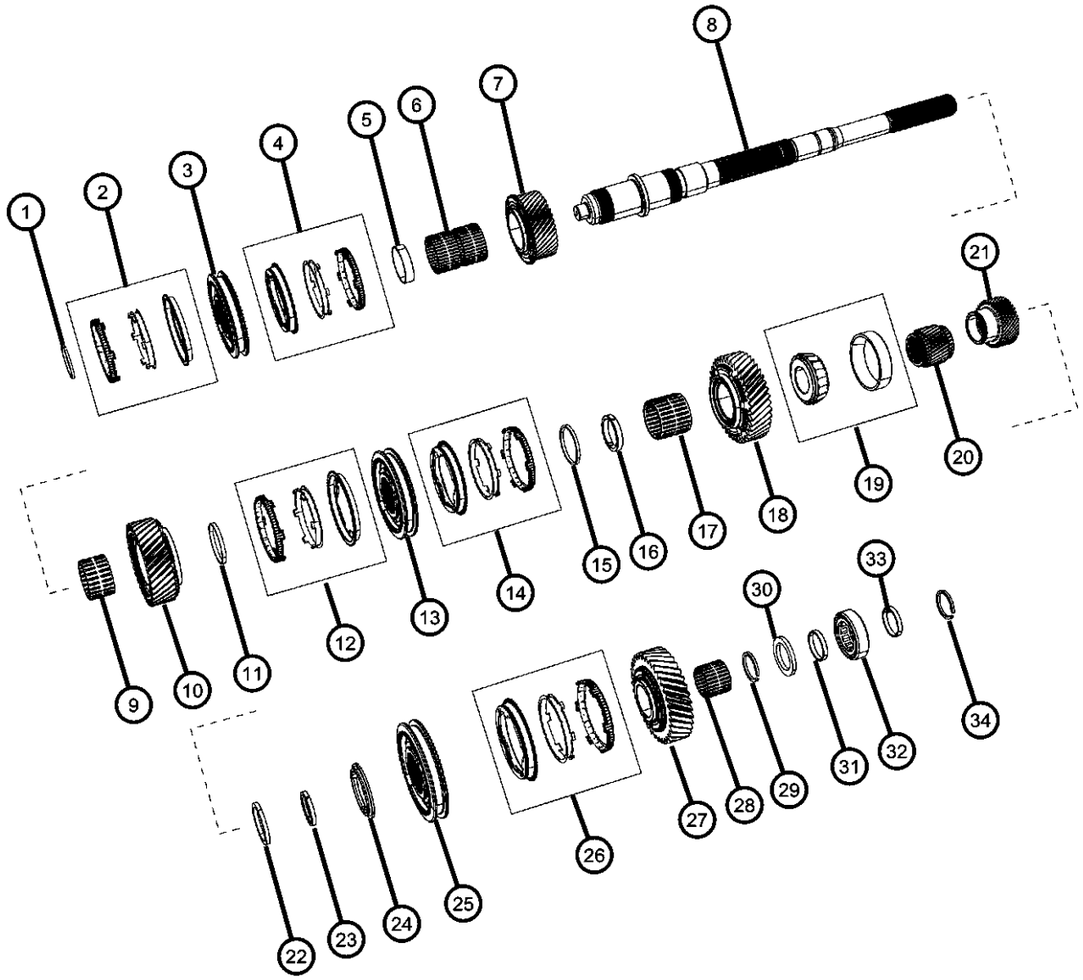

ITEM	PART NUMBER	QTY	LINE	SERIES	BODY	ENGINE	TRANS	TRIM	DESCRIPTION
17	04626488	1	D			ESF, EZC, EZD	DEC		NEEDLE BEARING, First Gear
18									GEAR, First
	68056777AA	1	D			ESF, EZC, EZD	DEC		Compatible With Transmission P/N 05038209AE, 05038209AF or 68058752AA
	68056777AB	1	D			ESF, EZC, EZD	DEC		Compatible With Transmission P/N 05038209AG or 68058752AB
19	68055741AA	1	D			ESF, EZC, EZD	DEC		BEARING KIT, Transmission
20	68056795AA	1	D			ESF, EZC, EZD	DEC		GEAR, Sixth
21	68056791AA	1	D			ESF, EZC, EZD	DEC		GEAR, Fifth
22	68029161AA	1	D			EZC, EZD, ESF	DEC		SNAP RING
23	68029160AA	2	D			ESF, EZC, EZD	DEC		WASHER
24	68029147AA	1	D			ESF, EZC, EZD	DEC		RETAINER
25	68028594AA	1	D			ESF, EZC, EZD	DEC		SYNCHRONIZER, Fifth and Sixth
26	68028593AA	1	D			ESF, EZC, EZD	DEC		BLOCKER RING, 5th To 6th
27	68056778AA	1	D			ESF, EZC, EZH	DEC		GEAR, Reverse
28	04626558	1	D			ESF, EZC, EZD	DEC		NEEDLE BEARING, Reverse Gear
29	04626560	1	D			ESF, EZC, EZD	DEC		WASHER, Reverse Thrust
30	04626586	1	D			ESF, EZC, EZD	DEC		SNAP RING, Reverse Inhibitor
31	04626562	1	D			ESF, EZC, EZD	DEC		WASHER, Mainshaft
32	04626563	1	D			ESF, EZC, EZD	DEC		BEARING
33	04626562	1	D			ESF, EZC, EZD	DEC		WASHER, Mainshaft
34	04626586	1	D			ESF, EZC, EZD	DEC		SNAP RING, Reverse Inhibitor

DODGE CHALLENGER (LC)

SERIES	LINE	BODY	ENGINE	TRANSMISSION
H = HIGHLINE P = PREMIUM X = SPECIAL	D = DODGE	22 = 2-DR SEDAN TYPE #2	EGG = 3.5L High Output V6 24V MPI Engine ESF = 6.1L SRT HEMI V8 Engine EZC = 5.7L HEMI VCT Engine EZD = 5.7L Hemi VCT MDS Engine	DEC = 6-Speed Manual TREMEC Transmission DGJ = 5-Speed Auto W5A580 Transmission DGV = 4-Spd. Automatic VLP 42RLE Trans

AR = use ase required - = Non illustrrated part

Counter Shaft Assembly
Figure 021DEC-615

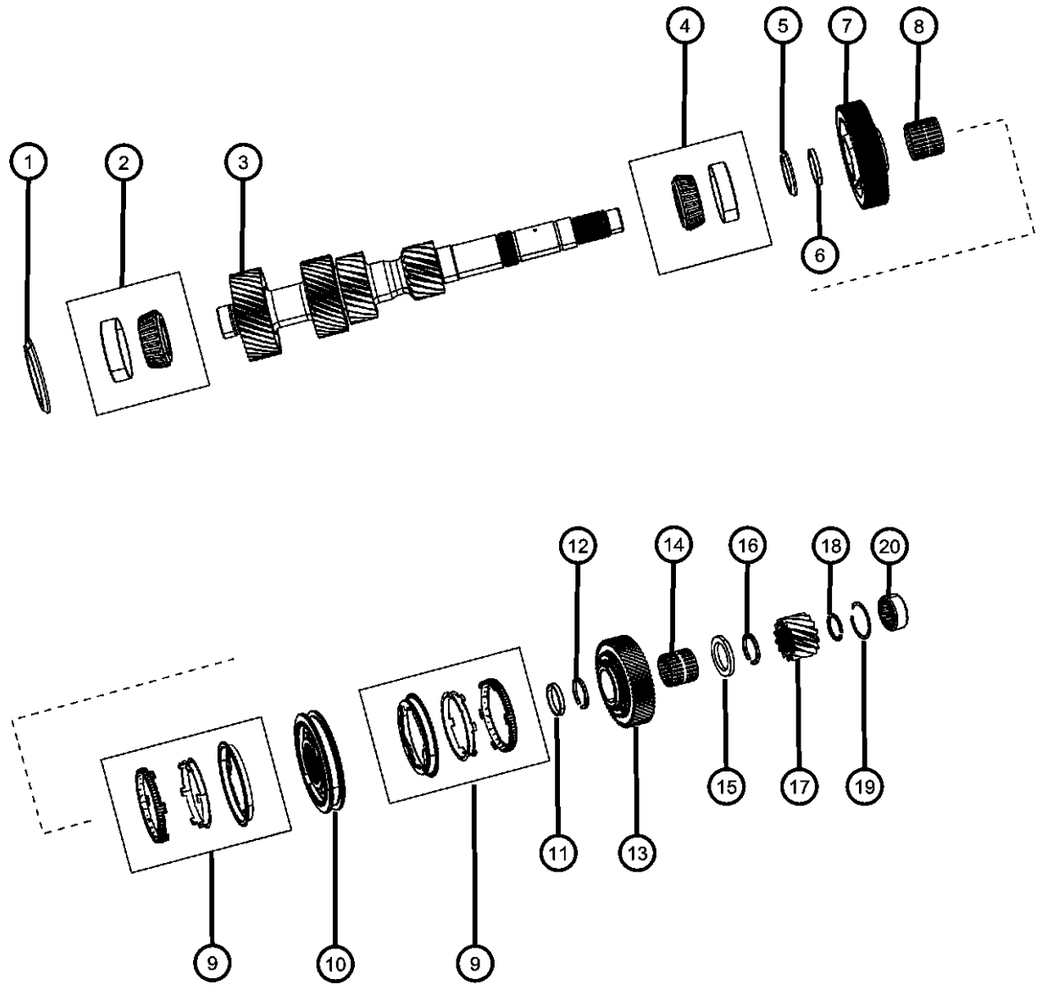

ITEM	PART NUMBER	QTY	LINE	SERIES	BODY	ENGINE	TRANS	TRIM	DESCRIPTION
Check Transmission Tag/Production Part Number Prior To Ordering The Countershaft Item #3									
1									SHIM
	68045201AA	1	D			ESF, EZC, EZD	DEC		[0.55 mm]
	68045202AA	1	D			ESF, EZC, EZD	DEC		[0.61 mm]
2	68045325AA	1	D			ESF, EZC, EZD	DEC		BEARING KIT, Countershaft Front
3									COUNTERSHAFT
	68056775AB	1	D			ESF, EZC, EZD	DEC		Compatible With Transmission P/N 05038209AG or 68058752AB
	68056775AA	1	D			ESF, EZC, EZD	DEC		Compatible With Transmission P/N 05038209AE, 05038209AF or 68058752AA
4	68045326AA	1	D			ESF, EZC, EZD	DEC		BEARING KIT, Countershaft Mid
5	68029162AA	1	D			ESF, EZC, EZD	DEC		SEPARATOR
6	68029146AA	1	D			ESF, EZC, EZD	DEC		SPACER, Sixth Gear
7	68056797AA	1	D			ESF, EZC, EZD	DEC		GEAR, Sixth
8	04626530	1	D			ESF, EZC, EZD	DEC		NEEDLE BEARING, Fifth Gear
9	68028593AA	1	D			ESF, EZC, EZD	DEC		BLOCKER RING, 5th To 6th, [67.5 mm]
10	68028594AA	1	D			ESF, EZC, EZD	DEC		SYNCHRONIZER, Fifth and Sixth
11	68029145AA	1	D			ESF, EZC, EZD	DEC		SPACER, Fifth Gear
12	68055743AA	5	D			ESF, EZC, EZD	DEC		SNAP RING
13	68056796AA	1	D			ESF, EZC, EZD	DEC		GEAR, Fifth
14	04626538	1	D			ESF, EZC, EZD	DEC		BEARING, Sixth Gear
15	04626560	2	D			ESF, EZC, EZD	DEC		WASHER, Reverse Thrust
16	68055743AA	5	D			ESF, EZC, EZD	DEC		SNAP RING
17	68056779AA	1	D			ESF, EZC, EZD	DEC		GEAR, Reverse
18	05093289AA	1	D			ESF, EZC, EZD	DEC		SNAP RING

DODGE CHALLENGER (LC)

SERIES	LINE	BODY	ENGINE	TRANSMISSION
H = HIGHLINE P = PREMIUM X = SPECIAL	D = DODGE	22 = 2-DR SEDAN TYPE #2	EGG = 3.5L High Output V6 24V MPI Engine ESF = 6.1L SRT HEMI V8 Engine EZC = 5.7L HEMI VCT Engine EZD = 5.7L Hemi VCT MDS Engine	DEC = 6-Speed Manual TREMEC Transmission DGJ = 5-Speed Auto W5A580 Transmission DGV = 4-Spd. Automatic VLP 42RLE Trans

Counter Shaft Assembly
Figure 021DEC-615

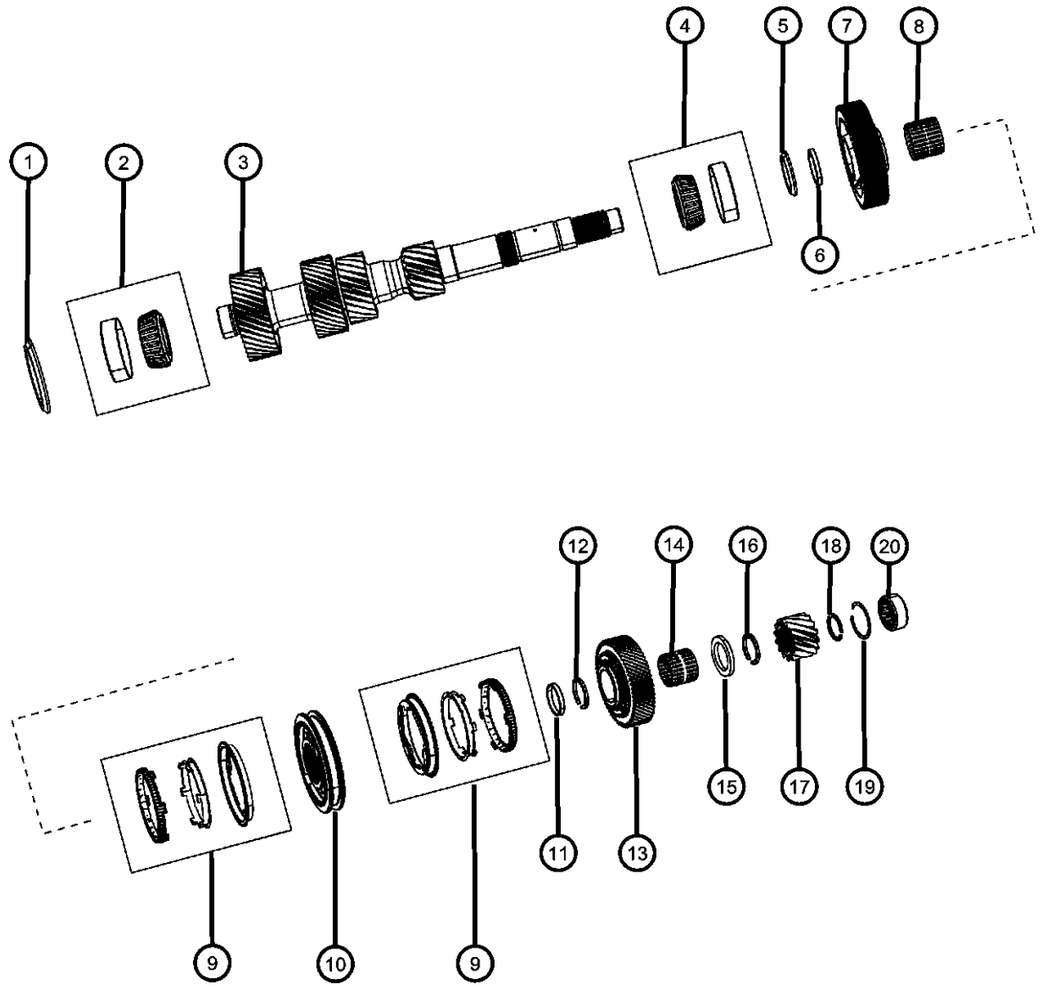

ITEM	PART NUMBER	QTY	LINE	SERIES	BODY	ENGINE	TRANS	TRIM	DESCRIPTION
19	68027837AA	1	D			ESF, EZC, EZD	DEC		SNAP RING
20	68055742AA	1	D			ESF, EZC, EZD	DEC		BEARING

DODGE CHALLENGER (LC)

SERIES	LINE	BODY	ENGINE	TRANSMISSION
H = HIGHLINE P = PREMIUM X = SPECIAL	D = DODGE	22 = 2-DR SEDAN TYPE #2	EGG = 3.5L High Output V6 24V MPI Engine ESF = 6.1L SRT HEMI V8 Engine EZC = 5.7L HEMI VCT Engine EZD = 5.7L Hemi VCT MDS Engine	DEC = 6-Speed Manual TREMEC Transmission DGJ = 5-Speed Auto W5A580 Transmission DGV = 4-Spd. Automatic VLP 42RLE Trans

Reverse Idler Shaft Assembly
Figure 021DEC-620

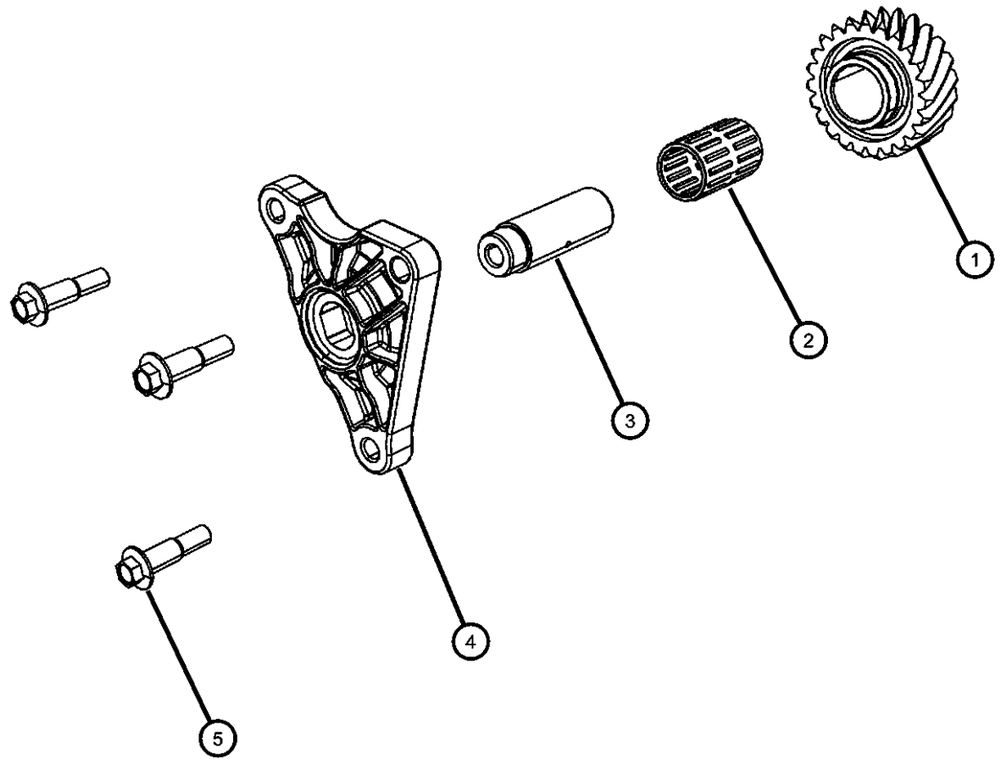

ITEM	PART NUMBER	QTY	LINE	SERIES	BODY	ENGINE	TRANS	TRIM	DESCRIPTION
1	68056780AA	1	D			ESF, EZC, EZD	DEC		GEAR, Reverse Idler
2	04626549	1	D			ESF, EZC, EZD	DEC		BEARING CONE, Idler Gear
3	68027840AA	1	D			ESF, EZC, EZD	DEC		SHAFT, SHAFT-REVERSE IDLER GEAR
4	68029163AA	1	D			ESF, EZC, EZD	DEC		BRACKET, Reverse Idler Shaft
5	68029170AA	3	D			ESF, EZC, EZD	DEC		BOLT

DODGE CHALLENGER (LC)

SERIES	LINE	BODY	ENGINE	TRANSMISSION
H = HIGHLINE P = PREMIUM X = SPECIAL	D = DODGE	22 = 2-DR SEDAN TYPE #2	EGG = 3.5L High Output V6 24V MPI Engine ESF = 6.1L SRT HEMI V8 Engine EZC = 5.7L HEMI VCT Engine EZD = 5.7L Hemi VCT MDS Engine	DEC = 6-Speed Manual TREMEC Transmission DGJ = 5-Speed Auto W5A580 Transmission DGV = 4-Spd. Automatic VLP 42RLE Trans

AR = use ase required - = Non illustrrated part

Forks and Rails
Figure 021DEC-1010

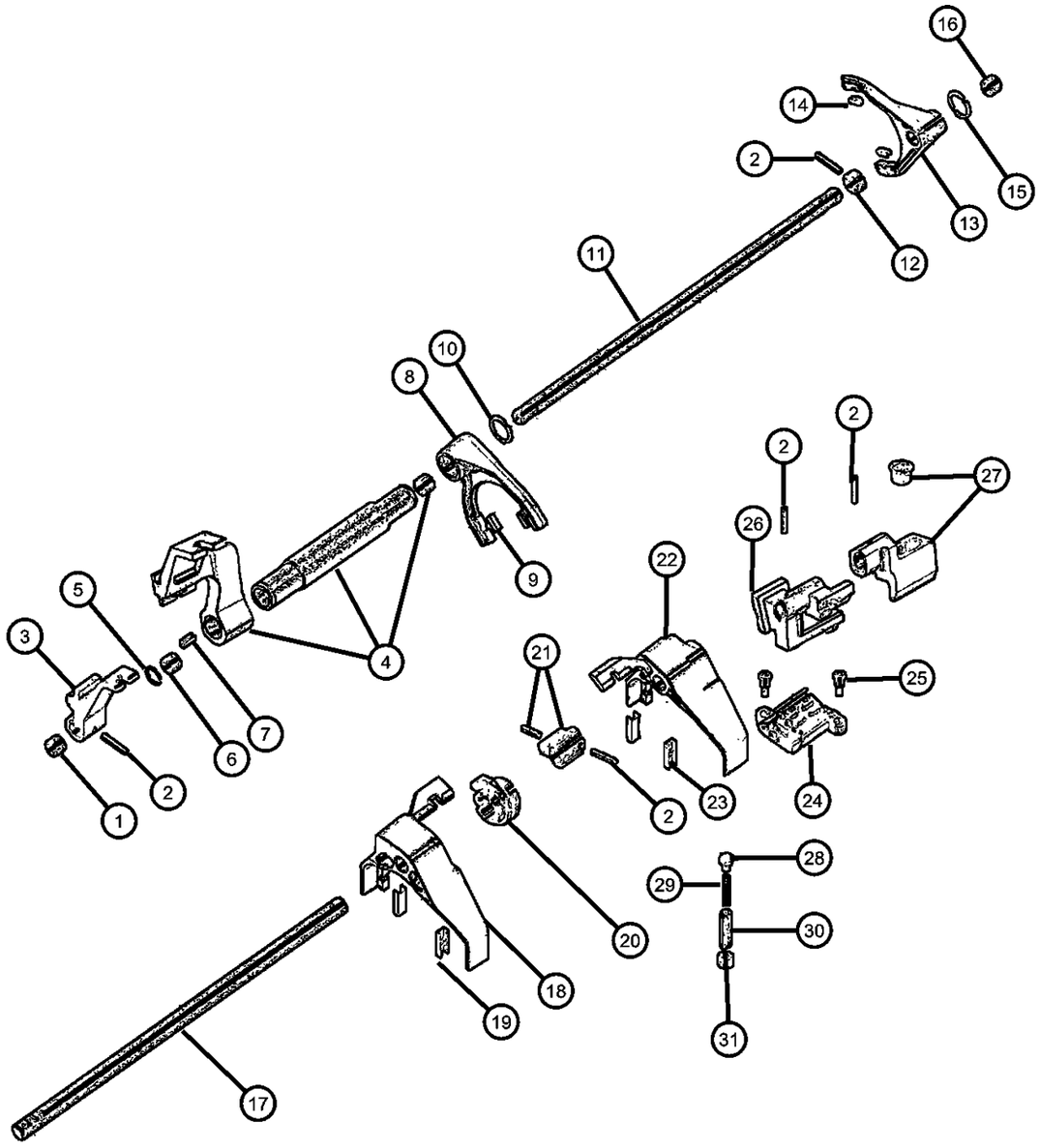

ITEM	PART NUMBER	QTY	LINE	SERIES	BODY	ENGINE	TRANS	TRIM	DESCRIPTION
1	68028433AA	1	D			ESF, EZC, EZD	DEC		BUSHING
2	04626493	4	D			ESF, EZC, EZD	DEC		PIN, Roll
3	68056770AA	1	D			ESF, EZC, EZD	DEC		LEVER
4	68028349AA	1	D			ESF, EZC, EZD	DEC		RAIL, Reverse Shift
5	68045187AA	1	D			ESF, EZC, EZD	DEC		SNAP RING, Shift Fork
6	04626512	1	D			ESF, EZC, EZD	DEC		BUSHING, Shift Rail
7	04626496	1	D			ESF, EZC, EZD	DEC		PAD, Shift Fork
8	68028954AB	1	D			ESF, EZC, EZD	DEC		FORK, Fifth and Sixth
9	04626496	1	D			ESF, EZC, EZD	DEC		PAD, Shift Fork
10	04626542	1	D			ESF, EZC, EZD	DEC		SNAP RING, Shift Fork
11	68028340AA	1	D			ESF, EZC, EZD	DEC		RAIL, Reverse Shift
12	68032076AA	1	D			ESF, EZC, EZD	DEC		SPACER, Reverse Rail Shift
13	68028955AB	1	D			ESF, EZC, EZD	DEC		FORK, Reverse
14	04626502	1	D			ESF, EZC, EZD	DEC		PAD, Shift Fork
15	04626561	1	D			ESF, EZC, EZD	DEC		SNAP RING, Shift Fork
16	68028433AA	1	D			ESF, EZC, EZD	DEC		BUSHING, Reverse Rail
17	68056511AA	1	D			ESF, EZC, EZD	DEC		RAIL, Top
18	68028953AB	1	D			ESF, EZC, EZD	DEC		FORK, Third and Fourth
19	04626502	1	D			ESF, EZC, EZD	DEC		PAD, Shift Fork
20	04626507	1	D			ESF, EZC, EZD	DEC		PLATE, Interlock
21	04626506	1	D			ESF, EZC, EZD	DEC		HOUSING, Gearshift Selector
22	68028956AB	1	D			EZH, ESF, EZC	DEC		FORK, First and Second
23	04626502	1	D			ESF, EZC, EZD	DEC		PAD, Shift Fork

DODGE CHALLENGER (LC)

SERIES	LINE	BODY	ENGINE	TRANSMISSION
H = HIGHLINE P = PREMIUM X = SPECIAL	D = DODGE	22 = 2-DR SEDAN TYPE #2	EGG = 3.5L High Output V6 24V MPI Engine ESF = 6.1L SRT HEMI V8 Engine EZC = 5.7L HEMI VCT Engine EZD = 5.7L Hemi VCT MDS Engine	DEC = 6-Speed Manual TREMEC Transmission DGJ = 5-Speed Auto W5A580 Transmission DGV = 4-Spd. Automatic VLP 42RLE Trans

AR = use ase required - = Non illustrrated part

Forks and Rails
Figure 021DEC-1010

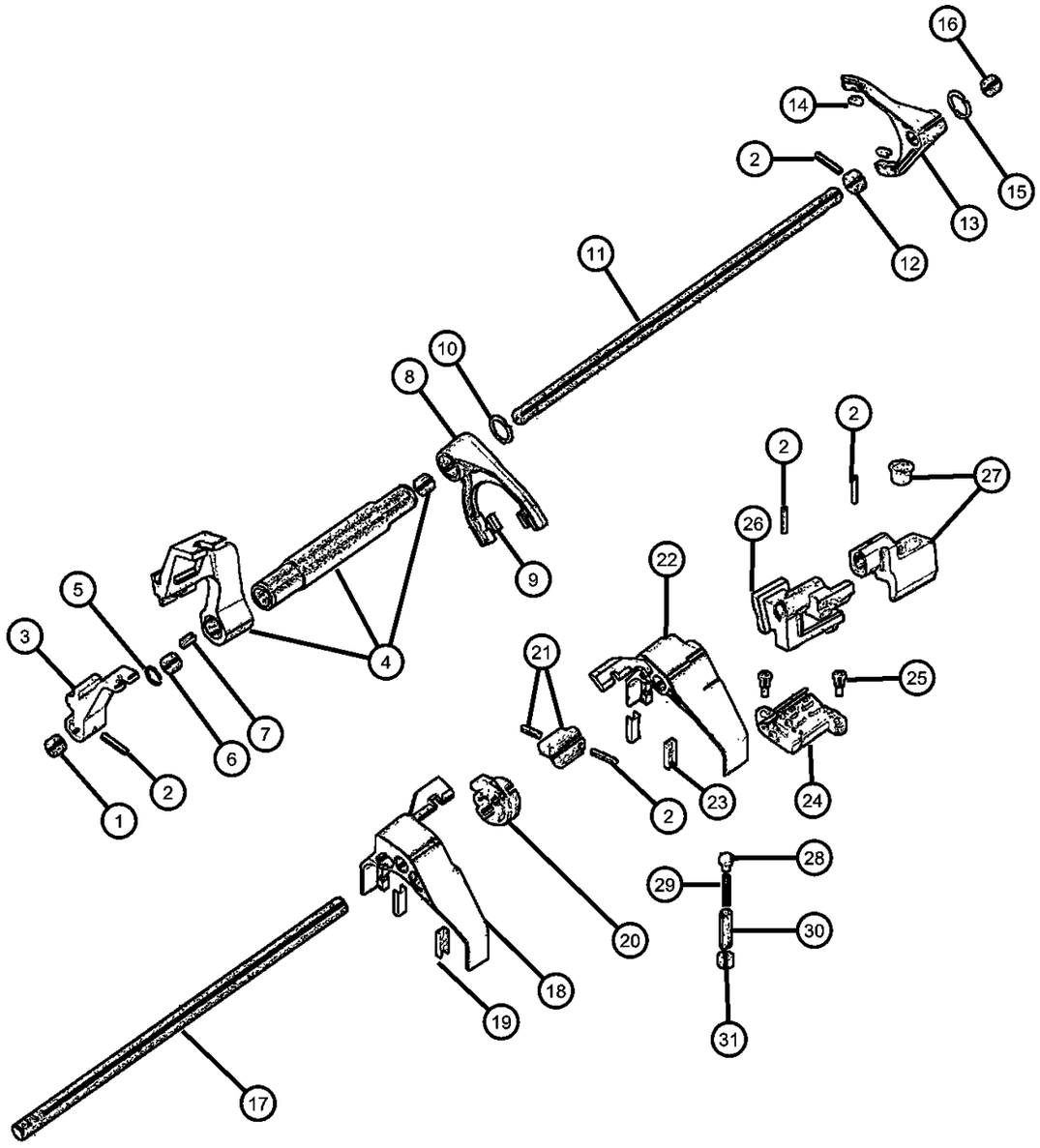

ITEM	PART NUMBER	QTY	LINE	SERIES	BODY	ENGINE	TRANS	TRIM	DESCRIPTION
24	68029155AA	1	D			ESF, EZC, EZD	DEC		PLATE, Transmission Shifter
25	04626527	2	D			ESF, EZC, EZD	DEC		BOLT, Shift Guide Plate
26	68056776AA	1	D			ESF, EZC, EZH	DEC		LEVER, Offset
27	04626579	1	D			ESF, EZC, EZD	DEC		LEVER, Offset
28	68029169AA	1	D			ESF, EZC, EZD	DEC		BOLT, Roller Detent
29	68029164AA	1	D			ESF, EZC, EZD	DEC		SPRING, Shift Detent
30	68029153AA	1	D			ESF, EZC, EZD	DEC		DETENT
31									BUSHING, Roller Detent
	68029165AA	2	D			ESF, EZC, EZD	DEC		
		1	D			ESF, EZC, EZD	DEC		

DODGE CHALLENGER (LC)

SERIES	LINE	BODY	ENGINE	TRANSMISSION
H = HIGHLINE P = PREMIUM X = SPECIAL	D = DODGE	22 = 2-DR SEDAN TYPE #2	EGG = 3.5L High Output V6 24V MPI Engine ESF = 6.1L SRT HEMI V8 Engine EZC = 5.7L HEMI VCT Engine EZD = 5.7L Hemi VCT MDS Engine	DEC = 6-Speed Manual TREMEC Transmission DGJ = 5-Speed Auto W5A580 Transmission DGV = 4-Spd. Automatic VLP 42RLE Trans

AR = use ase required - = Non illustrrated part

Gear Shift Boot, Knob and Bezel
Figure 021DEC-1110

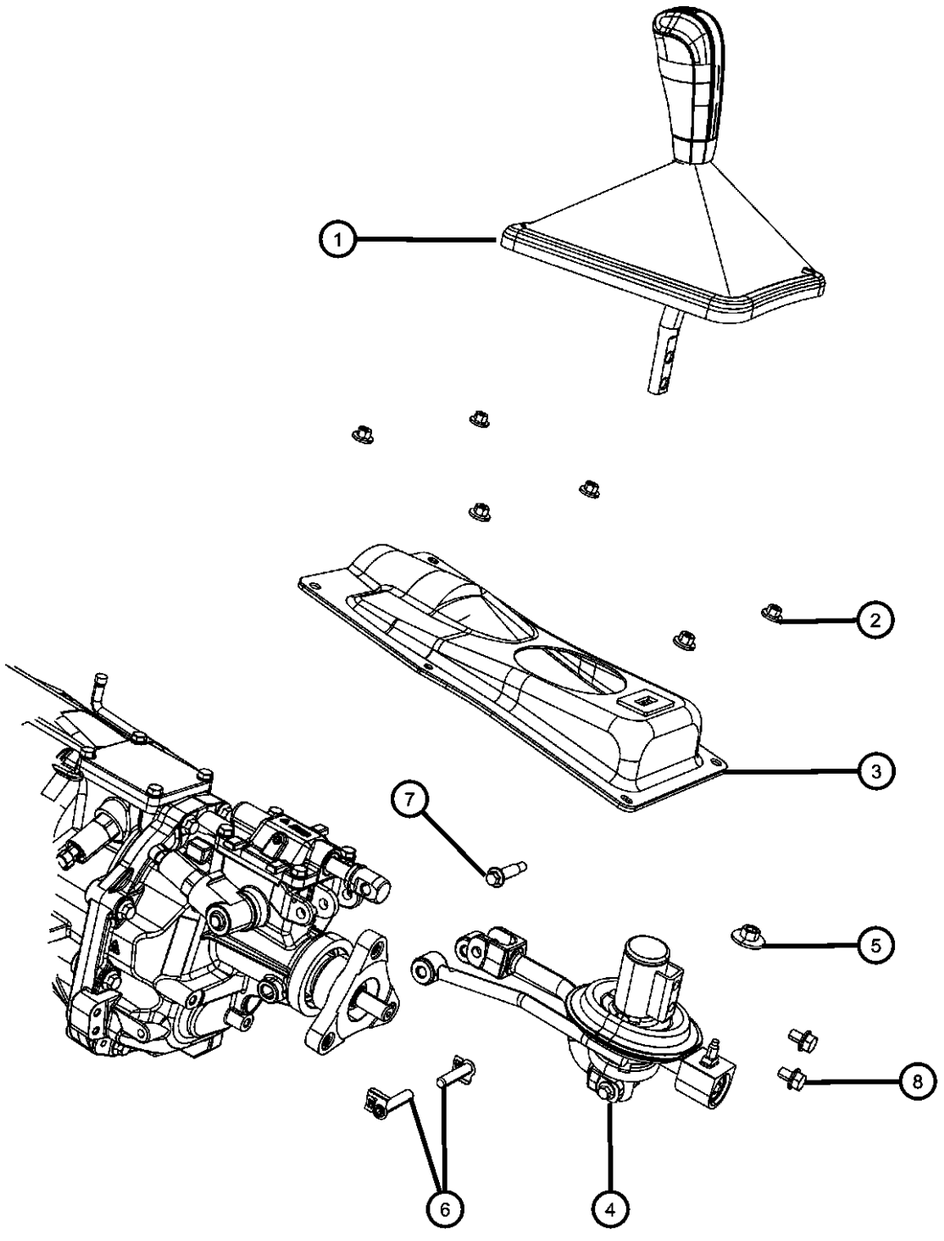

ITEM	PART NUMBER	QTY	LINE	SERIES	BODY	ENGINE	TRANS	TRIM	DESCRIPTION
1									KNOB, Gearshift
	04779570AC	1	D			EZ0	DEC		
	68052009AA	1	D			ES0	DEC		
2	06506456AA	6	D				DEC		NUT AND WASHER, Hex, M6x1.0
3	04779566AA	1	D				DEC		BRACKET, Gearshift
4	05038191AG	1	D				DEC		SHIFTER, Transmission
5	06506707AA	1	D				DEC		NUT AND WASHER, Hex Lock Coned Washer, M8x1.25
6	05038338AB	2	D				DEC		PIN, Shifter
7	06509545AA	1	D				DEC		BOLT, Hex Flange Head, M8X1.25X43.00
8	06104021AA	2	D				DEC		BOLT, Hex Flange Head, M8X1.25X12.00

DODGE CHALLENGER (LC)

SERIES	LINE	BODY	ENGINE	TRANSMISSION
H = HIGHLINE P = PREMIUM X = SPECIAL	D = DODGE	22 = 2-DR SEDAN TYPE #2	EGG = 3.5L High Output V6 24V MPI Engine ESF = 6.1L SRT HEMI V8 Engine EZC = 5.7L HEMI VCT Engine EZD = 5.7L Hemi VCT MDS Engine	DEC = 6-Speed Manual TREMEC Transmission DGJ = 5-Speed Auto W5A580 Transmission DGV = 4-Spd. Automatic VLP 42RLE Trans

AR = use ase required - = Non illustrrated part

Transmission Mount
Figure 021DEC-1210

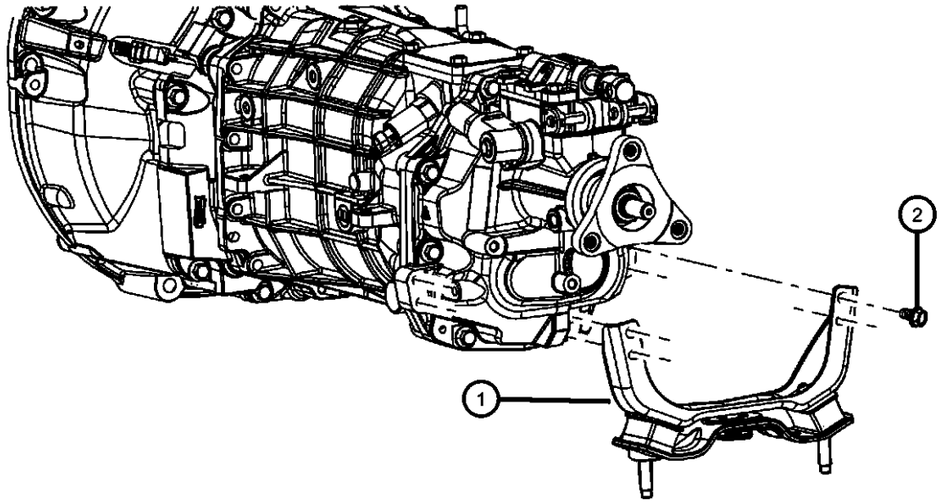

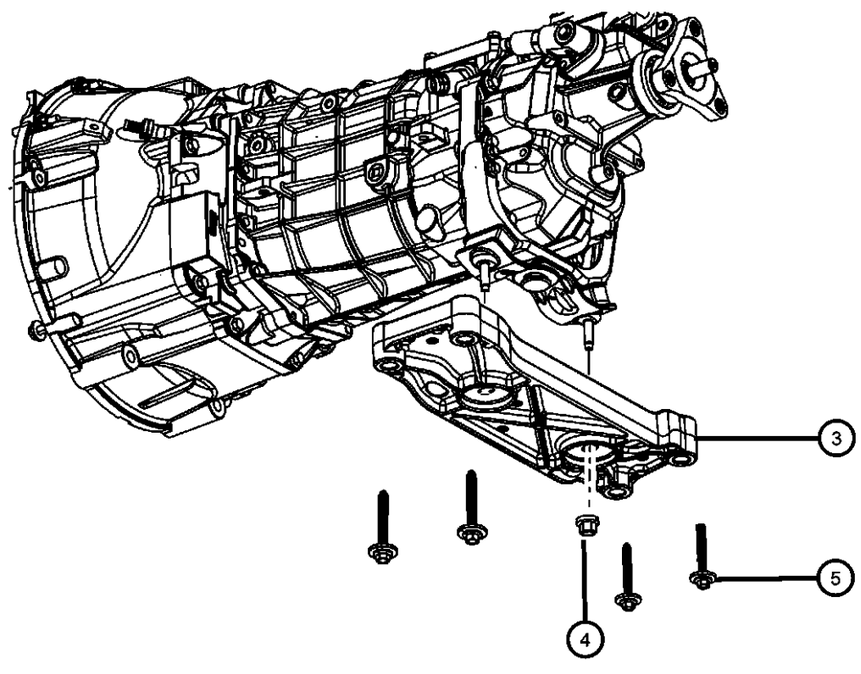

ITEM	PART NUMBER	QTY	LINE	SERIES	BODY	ENGINE	TRANS	TRIM	DESCRIPTION
1	05180484AB	1	D			ES0, EZ0	DEC		MOUNT, Transmission
2	06507788AA	4	D						SCREW
3	05180304AA	1	D			ES0, EZ0	DEC		CROSSMEMBER, Transmission
4	06502979	2	D				DEC		NUT AND WASHER, Hex, M10x1.5
5	06507788AA	4	D						SCREW

DODGE CHALLENGER (LC)

SERIES	LINE	BODY	ENGINE	TRANSMISSION
H = HIGHLINE P = PREMIUM X = SPECIAL	D = DODGE	22 = 2-DR SEDAN TYPE #2	EGG = 3.5L High Output V6 24V MPI Engine ESF = 6.1L SRT HEMI V8 Engine EZC = 5.7L HEMI VCT Engine EZD = 5.7L Hemi VCT MDS Engine	DEC = 6-Speed Manual TREMEC Transmission DGJ = 5-Speed Auto W5A580 Transmission DGV = 4-Spd. Automatic VLP 42RLE Trans

AR = use ase required - = Non illustrrated part

Mounting Bolts
Figure 021DEC-1215

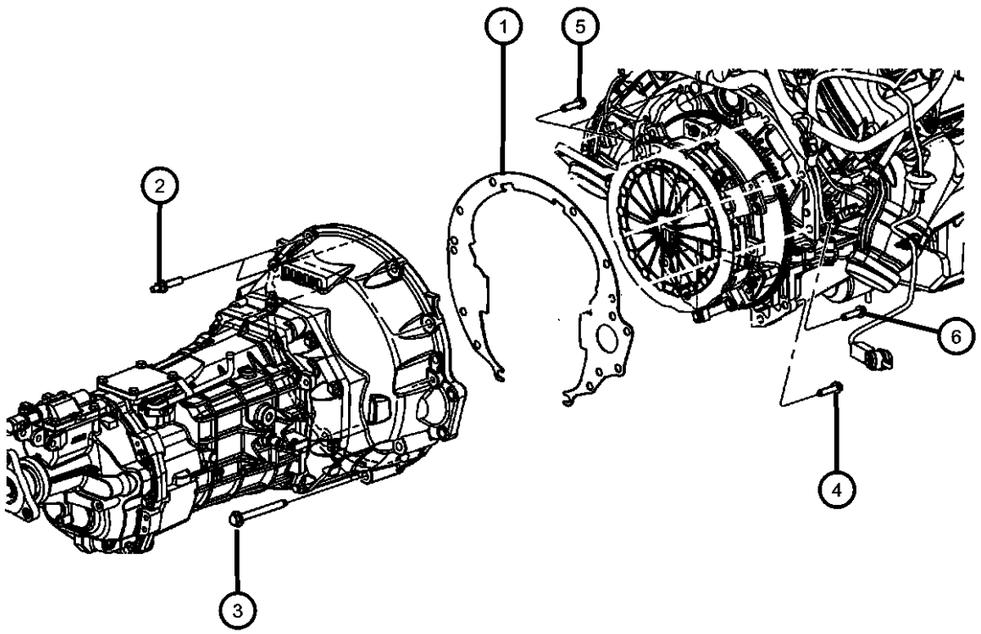

ITEM	PART NUMBER	QTY	LINE	SERIES	BODY	ENGINE	TRANS	TRIM	DESCRIPTION
1	04591910AA	1	D				DEC, DGJ		COVER, Transmission Dust
2	06507890AA	4	D			EZD, ESF, EZC	DEC		STUD, Double Ended
3	06036385AA	2	D				DEC		BOLT AND WASHER, Hex Head Lock, 0.437-14x2.00
4									BOLT AND CONED WASHER, Hex Head, M10X1.50X45.00
	06102123AA	2	D			EZC	DEC		
		2	D			ESF	DEC		
5	06505475AA	1	D				DEC		SCREW AND WASHER, Hex Head
6	06505475AA	2	D				DEC		SCREW AND WASHER, Hex Head

DODGE CHALLENGER (LC)

SERIES	LINE	BODY	ENGINE	TRANSMISSION
H = HIGHLINE P = PREMIUM X = SPECIAL	D = DODGE	22 = 2-DR SEDAN TYPE #2	EGG = 3.5L High Output V6 24V MPI Engine ESF = 6.1L SRT HEMI V8 Engine EZC = 5.7L HEMI VCT Engine EZD = 5.7L Hemi VCT MDS Engine	DEC = 6-Speed Manual TREMEC Transmission DGJ = 5-Speed Auto W5A580 Transmission DGV = 4-Spd. Automatic VLP 42RLE Trans

AR = use ase required - = Non illustrrated part

Group - 021DGJ

NAG1; W5A580; 5-Speed; Automatic Transmission

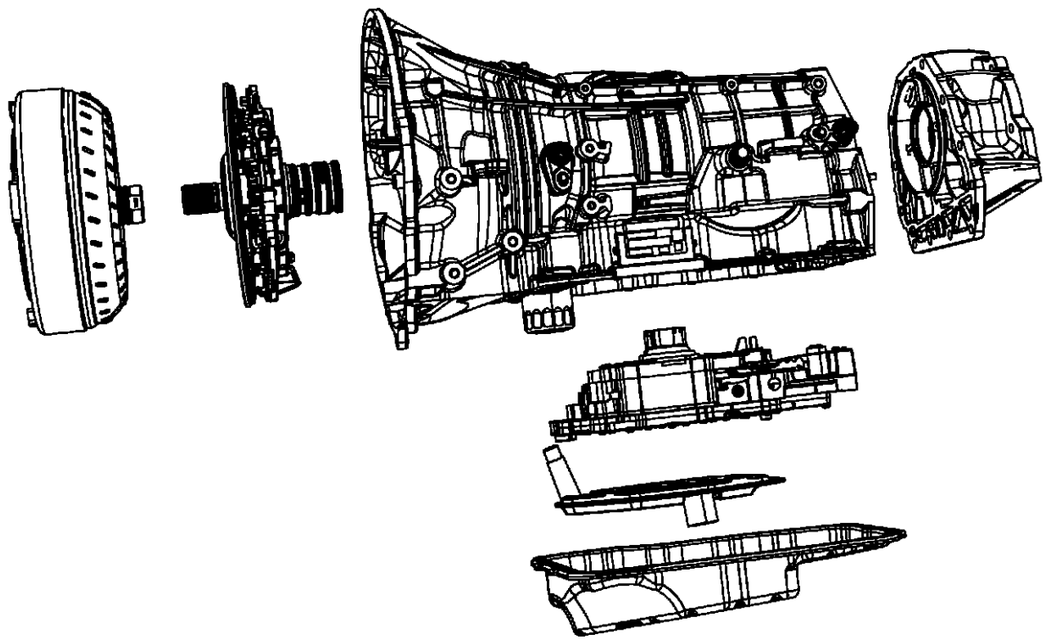

021DGJ-100 Automatic Transmission / Transaxle and Torque Converter 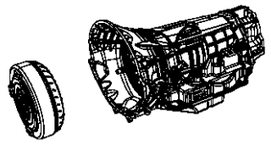	**021DGJ-1100** Gearshift Controls and Related Parts	**021DGJ-1200** Mounting and Skid Plate	**021DGJ-200** Case, Extension, Oil Pan, and Indicator (Dipstick) 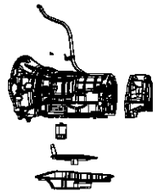
021DGJ-300 Seal and Shim Packages	**021DGJ-400** Oil Pump 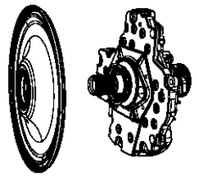	**021DGJ-500** Clutches 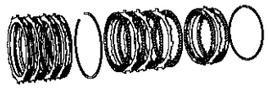	**021DGJ-600** Gear Train
021DGJ-800 Valve Body, Accumulator, Solenoid and Parking Sprag 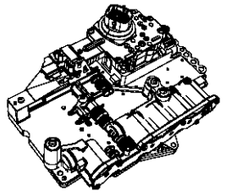			

Group - 021DGJ NAG1; W5A580; 5-Speed; Automatic Transmission

Illustration Title — Group-Fig. No.

Automatic Transmission / Transaxle and Torque Converter
Transmission / Transaxle Assembly ..... Fig. 021DGJ - 105
Torque Converter ..... Fig. 021DGJ - 110

Case, Extension, Oil Pan, and Indicator (Dipstick)
Case ..... Fig. 021DGJ - 210
Extension RWD ..... Fig. 021DGJ - 222
Oil Fill Tube And Related Parts ..... Fig. 021DGJ - 225
Oil Pan, Cover And Related Parts ..... Fig. 021DGJ - 230
Filters ..... Fig. 021DGJ - 235
Sensors, Vents And Quick Connectors ..... Fig. 021DGJ - 240

Seal and Shim Packages
Seal And Shim Packages ..... Fig. 021DGJ - 305

Oil Pump
Oil Pump and Related Parts ..... Fig. 021DGJ - 420

Clutches
B1 Brake Clutch ..... Fig. 021DGJ - 526
K1 Clutch Assembly ..... Fig. 021DGJ - 527
K2 Clutch Assembly ..... Fig. 021DGJ - 528
K3 Clutch Assembly ..... Fig. 021DGJ - 529
B3 Clutch Assembly ..... Fig. 021DGJ - 530
B2 Clutch Assembly ..... Fig. 021DGJ - 531
B2 Clutch Assembly ..... Fig. 021DGJ - 532

Gear Train
Front Planetary Carrier ..... Fig. 021DGJ - 611
Output Shaft With Center And Rear Planetary Gear Sets ..... Fig. 021DGJ - 612

Valve Body, Accumulator, Solenoid and Parking Sprag
Valve Body And Related Parts ..... Fig. 021DGJ - 825
Parking Sprag And Related Parts ..... Fig. 021DGJ - 860

Gearshift Controls and Related Parts
Gearshift Controls ..... Fig. 021DGJ - 1105
Gearshift Lever, Cable and Bracket ..... Fig. 021DGJ - 1115

Mounting and Skid Plate
Mounting Covers And Shields ..... Fig. 021DGJ - 1205
Structural Collar ..... Fig. 021DGJ - 1210
Mounting Bolts ..... Fig. 021DGJ - 1215

Transmission / Transaxle Assembly
Figure 021DGJ-105

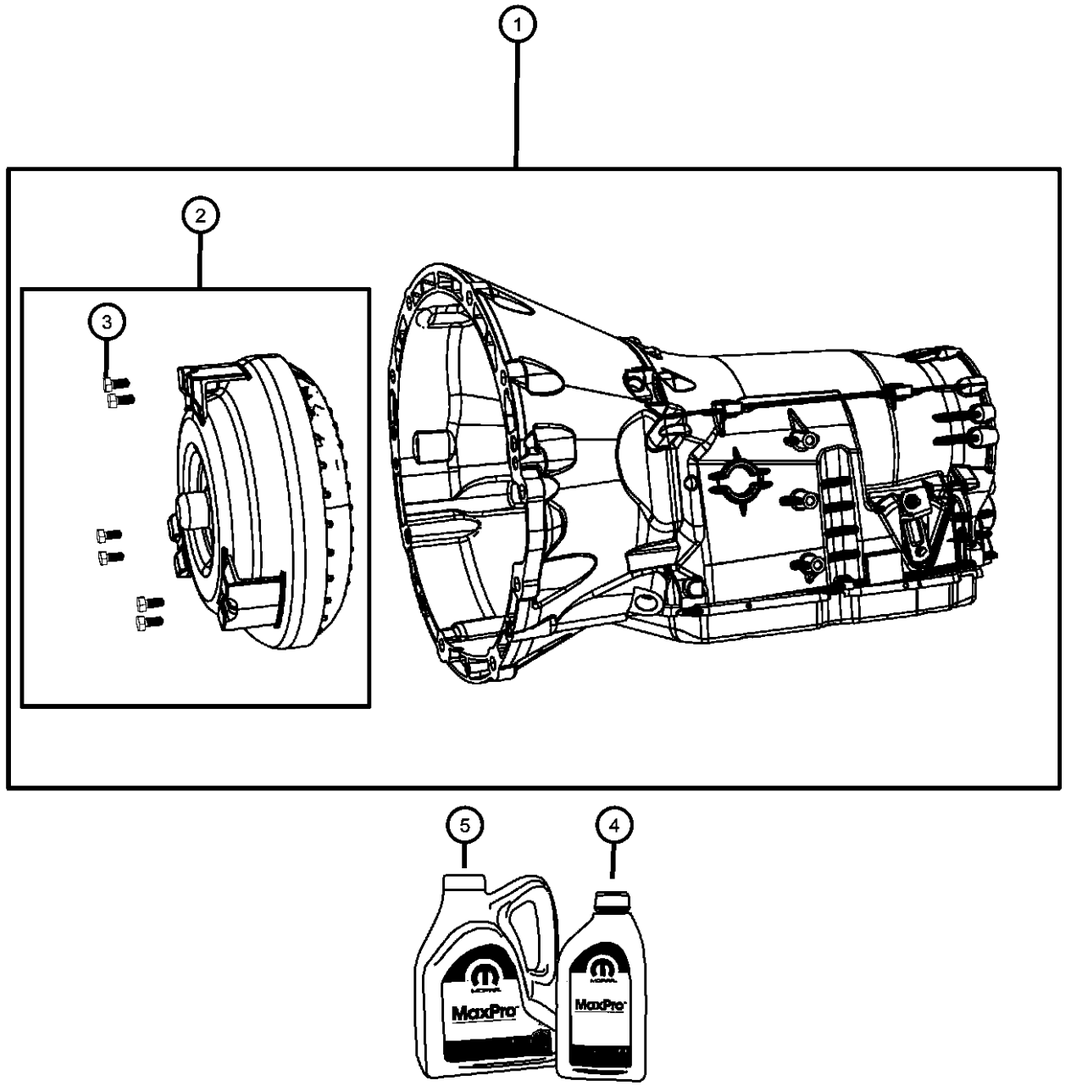

ITEM	PART NUMBER	QTY	LINE	SERIES	BODY	ENGINE	TRANS	TRIM	DESCRIPTION
1									TRANSMISSION KIT, With Torque Converter
	68003110AC	1	D			EZC, EZD	DGJ		
		1	D			EZH	DGJ		
	68003115AC	1	D			ESF	DGJ		
2									CONVERTER KIT, Torque
	68004096AA	1	D			ESF	DGJ		
		1	D			EZC, EZD	DGJ		
		1	D			EZH	DGJ		
3	06507095AA	6	D				DGJ		BOLT, Hex Head, M8x1.25x18.00
4	05013457AA	AR	D						FLUID, Automatic Transmission ATF+4, Quart, Standard MS-9602-F, [32 Fluid Ounces] Minimum Ship Quantity Of 12
5	05013458AA	AR	D						FLUID, Automatic Transmission ATF+4, Gallon, Standard MS-9602-F, [128 Fluid Ounces] Minimum Ship Quantity Of 4

DODGE CHALLENGER (LC)

SERIES	LINE	BODY	ENGINE	TRANSMISSION
H = HIGHLINE P = PREMIUM X = SPECIAL	D = DODGE	22 = 2-DR SEDAN TYPE #2	EGG = 3.5L High Output V6 24V MPI Engine ESF = 6.1L SRT HEMI V8 Engine EZC = 5.7L HEMI VCT Engine EZD = 5.7L Hemi VCT MDS Engine	DEC = 6-Speed Manual TREMEC Transmission DGJ = 5-Speed Auto W5A580 Transmission DGV = 4-Spd. Automatic VLP 42RLE Trans

AR = use ase required - = Non illustrrated part

Torque Converter
Figure 021DGJ-110

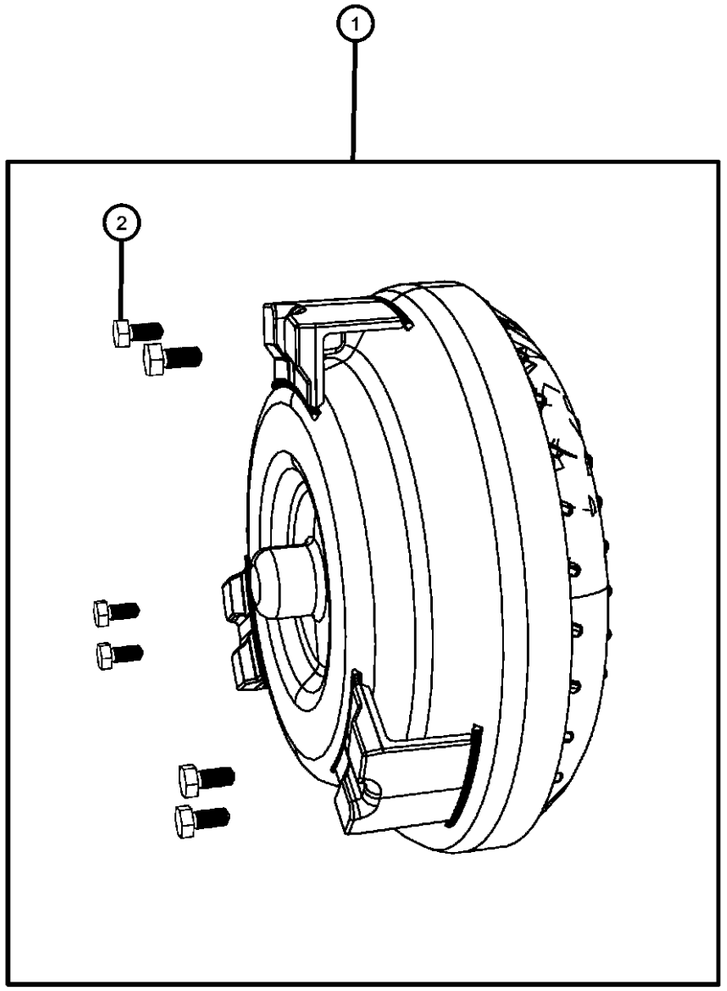

ITEM	PART NUMBER	QTY	LINE	SERIES	BODY	ENGINE	TRANS	TRIM	DESCRIPTION
1									CONVERTER KIT, Torque
	68004096AA	1	D			ESF	DGJ		
		1	D			EZH	DGJ		
		1	D			EZC, EZD	DGJ		
2	06507095AA	6	D				DGJ		BOLT, Hex Head, M8x1.25x18.00

DODGE CHALLENGER (LC)

SERIES	LINE	BODY	ENGINE	TRANSMISSION
H = HIGHLINE P = PREMIUM X = SPECIAL	D = DODGE	22 = 2-DR SEDAN TYPE #2	EGG = 3.5L High Output V6 24V MPI Engine ESF = 6.1L SRT HEMI V8 Engine EZC = 5.7L HEMI VCT Engine EZD = 5.7L Hemi VCT MDS Engine	DEC = 6-Speed Manual TREMEC Transmission DGJ = 5-Speed Auto W5A580 Transmission DGV = 4-Spd. Automatic VLP 42RLE Trans

Case
Figure 021DGJ-210

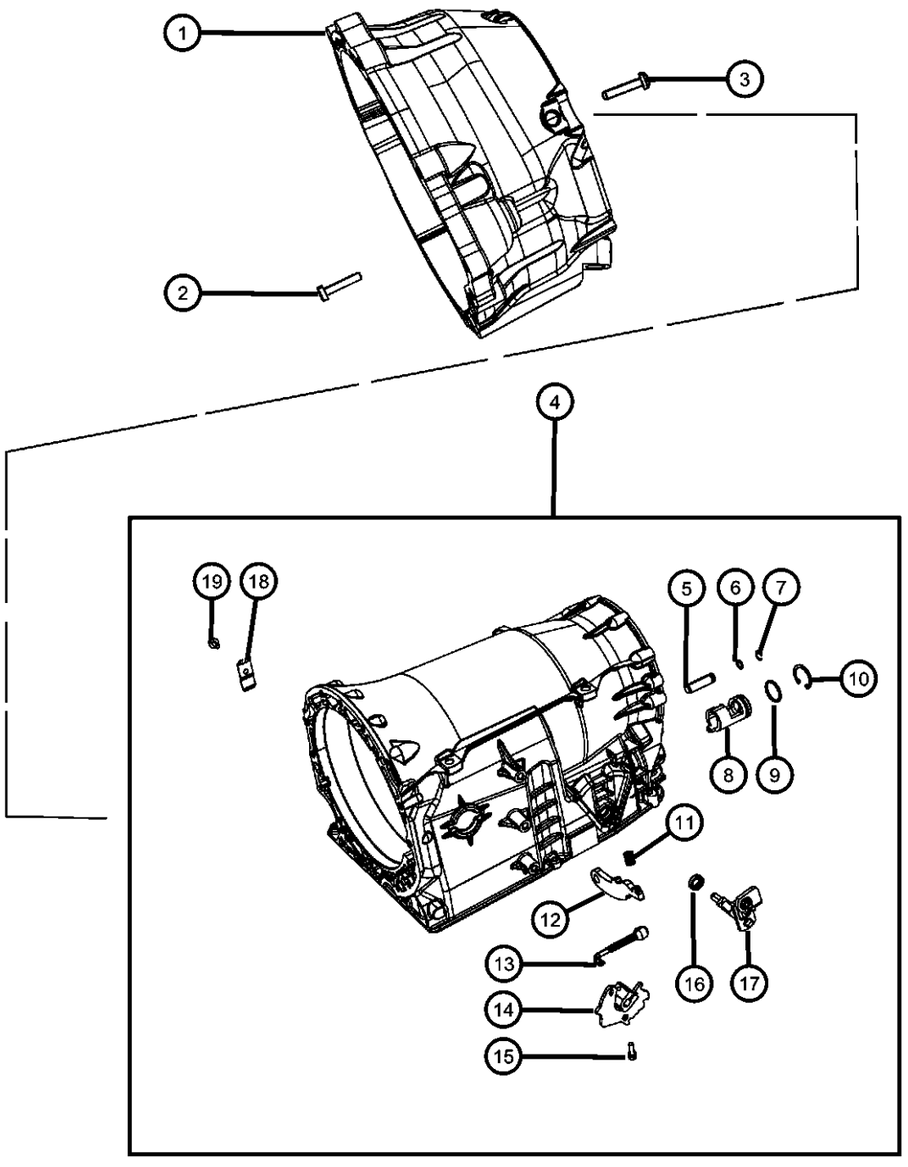

ITEM	PART NUMBER	QTY	LINE	SERIES	BODY	ENGINE	TRANS	TRIM	DESCRIPTION
1									HOUSING, Torque Converter
	52107911AA	1	D			EZC, EZD	DGJ		
		1	D			ESF	DGJ		
		1	D			EZH	DGJ		
2									BOLT, Socket Head, M8x40
	52108206AA	15	D			EZC, EZD	DGJ		
		15	D			ESF	DGJ		
		15	D			EZH	DGJ		
3									BOLT, Torx Head, M8x1.25x40, Case to Bell Housing
	06104158AA	2	D			EZC, EZD	DGJ		
		2	D			ESF	DGJ		
		2	D			EZH	DGJ		
4									CASE, Transmission
	52108099AA	1	D			EZC, EZD	DGJ		
		1	D			ESF	DGJ		
		1	D			EZH	DGJ		
5									SHAFT, Parking Pawl
	52108155AA	1	D			EZC, EZD	DGJ		
		1	D			ESF	DGJ		
		1	D			EZH	DGJ		
6									O RING
	52108156AB	1	D			EZC, EZD	DGJ		
		1	D			ESF	DGJ		
		1	D			EZH	DGJ		
7									SNAP RING
	52107975AA	1	D			EZC, EZD	DGJ		
		1	D			ESF	DGJ		
		1	D			EZH	DGJ		
8									GUIDE
	52108176AA	1	D			EZC, EZD	DGJ		
		1	D			ESF	DGJ		
		1	D			EZH	DGJ		
9									O RING

DODGE CHALLENGER (LC)

SERIES	LINE	BODY	ENGINE	TRANSMISSION
H = HIGHLINE P = PREMIUM X = SPECIAL	D = DODGE	22 = 2-DR SEDAN TYPE #2	EGG = 3.5L High Output V6 24V MPI Engine ESF = 6.1L SRT HEMI V8 Engine EZC = 5.7L HEMI VCT Engine EZD = 5.7L Hemi VCT MDS Engine	DEC = 6-Speed Manual TREMEC Transmission DGJ = 5-Speed Auto W5A580 Transmission DGV = 4-Spd. Automatic VLP 42RLE Trans

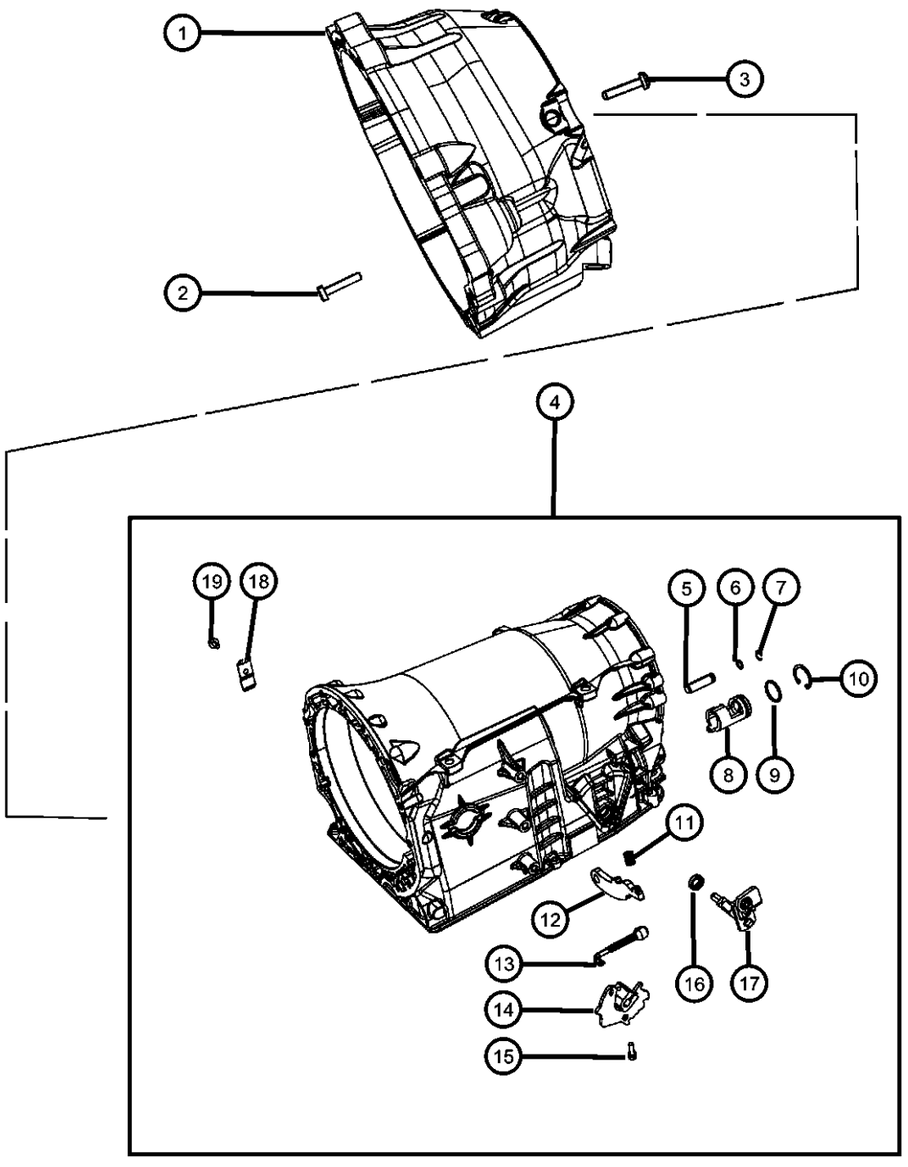

ITEM	PART NUMBER	QTY	LINE	SERIES	BODY	ENGINE	TRANS	TRIM	DESCRIPTION
	52108177AA	1	D			EZC, EZD	DGJ		
		1	D			EZH	DGJ		
		1	D			ESF	DGJ		
10									SNAP RING
	52107976AA	1	D			EZC, EZD	DGJ		
		1	D			ESF	DGJ		
		1	D			EZH	DGJ		
11									SPRING
	52108157AA	1	D			EZC, EZD	DGJ		
		1	D			ESF	DGJ		
		1	D			EZH	DGJ		
12									PAWL, Parking Sprag
	52108154AA	1	D			EZH	DGJ		
		1	D			EZC, EZD	DGJ		
		1	D			ESF	DGJ		
13									LINKAGE, Transmission
	52108166AA	1	D			EZC, EZD	DGJ		
		1	D			ESF	DGJ		
		1	D			EZH	DGJ		
14									DETENT, Gearshift
	52108349AB	1	D			EZC, EZD	DGJ		
		1	D			ESF	DGJ		
		1	D			EZH	DGJ		
15									BOLT, Torx Head, M6x20
	52108178AA	1	D			EZC, EZD	DGJ		
		1	D			ESF	DGJ		
		1	D			EZH	DGJ		
16									SEAL, Transmission
	05134933AA	1	D			EZC, EZD	DGJ		
		1	D			ESF	DGJ		
		1	D			EZH	DGJ		
17									SHAFT, Shift Lever
	52108172AA	1	D			ESF	DGJ		

DODGE CHALLENGER (LC)

SERIES	LINE	BODY	ENGINE	TRANSMISSION
H = HIGHLINE P = PREMIUM X = SPECIAL	D = DODGE	22 = 2-DR SEDAN TYPE #2	EGG = 3.5L High Output V6 24V MPI Engine ESF = 6.1L SRT HEMI V8 Engine EZC = 5.7L HEMI VCT Engine EZD = 5.7L Hemi VCT MDS Engine	DEC = 6-Speed Manual TREMEC Transmission DGJ = 5-Speed Auto W5A580 Transmission DGV = 4-Spd. Automatic VLP 42RLE Trans

Case
Figure 021DGJ-210

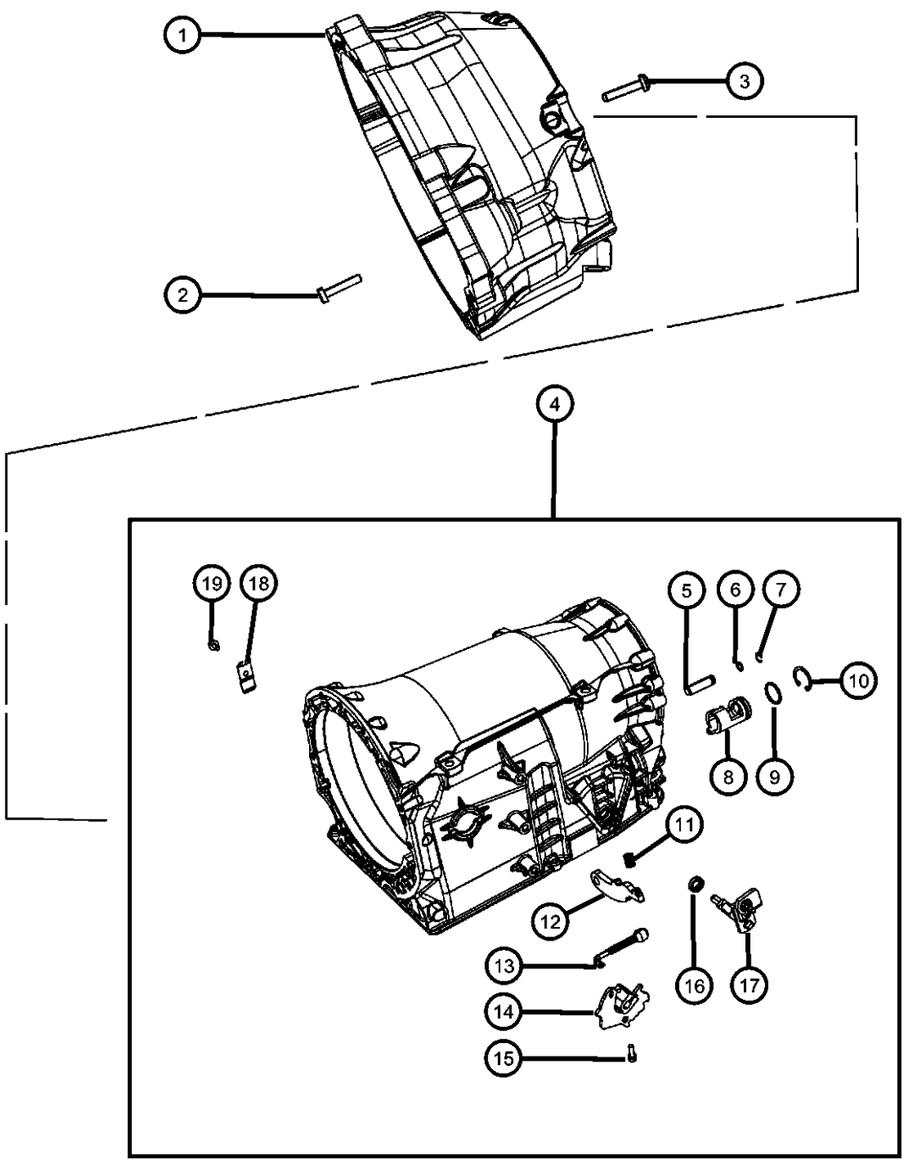

ITEM	PART NUMBER	QTY	LINE	SERIES	BODY	ENGINE	TRANS	TRIM	DESCRIPTION
		1	D			EZC, EZD	DGJ		
		1	D			EZH	DGJ		
18									SPRING
	52108157AA	1	D			EZD, EZC	DGJ		
		1	D			EZH	DGJ		
		1	D			ESF	DGJ		
19		1							SCREW AND WASHER, Hex Head, M6x1x14, (NOT SERVICED)

DODGE CHALLENGER (LC)

SERIES	LINE	BODY	ENGINE	TRANSMISSION
H = HIGHLINE P = PREMIUM X = SPECIAL	D = DODGE	22 = 2-DR SEDAN TYPE #2	EGG = 3.5L High Output V6 24V MPI Engine ESF = 6.1L SRT HEMI V8 Engine EZC = 5.7L HEMI VCT Engine EZD = 5.7L Hemi VCT MDS Engine	DEC = 6-Speed Manual TREMEC Transmission DGJ = 5-Speed Auto W5A580 Transmission DGV = 4-Spd. Automatic VLP 42RLE Trans

AR = use ase required - = Non illustrrated part

Extension RWD
Figure 021DGJ-222

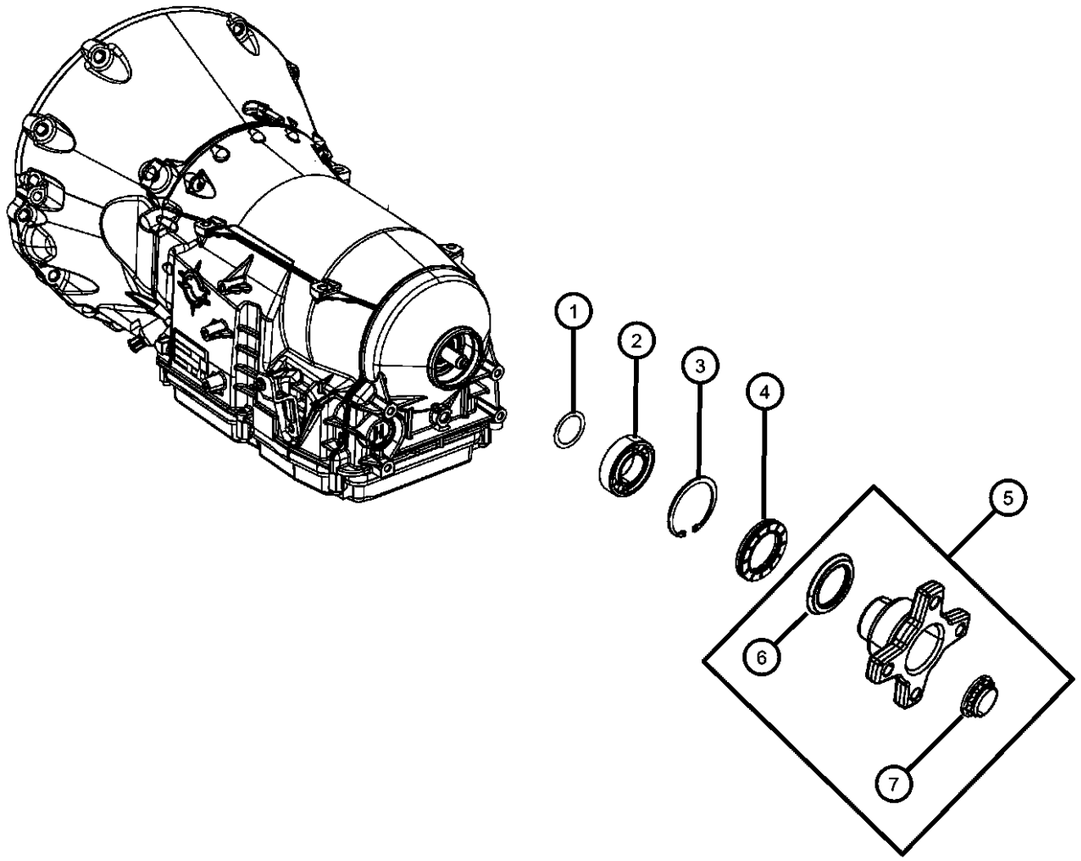

ITEM	PART NUMBER	QTY	LINE	SERIES	BODY	ENGINE	TRANS	TRIM	DESCRIPTION
1									SHIM PACKAGE, Park & output bearing
	68001917AA	AR	D			EZC, EZD	DGJ		
		1	D			EZH	DGJ		
		AR	D			ESF	DGJ		
2									BEARING, Output Shaft
	52108207AA	1	D			EZC, EZD	DGJ		
		1	D			ESF	DGJ		
		1	D			EZH	DGJ		
3									SNAP RING PACKAGE, Transmission
	68008210AA	AR	D			ESF	DGJ		
		1	D			EZH	DGJ		
		AR	D			EZC, EZD	DGJ		
4									SEAL, Output Shaft
	52108428AA	1	D			ESF	DGJ		
		1	D			EZH	DGJ		
		1	D			EZC, EZD	DGJ		
5									FLANGE PACKAGE, Drive Shaft
	05135158AC	1	D			EZC, EZD	DGJ		
		1	D			EZH	DGJ		
	05170003AB	1	D			ESF	DGJ		
6									SLINGER, Output Shaft Seal
	52108626AA	1	D			EZC, EZD	DGJ		
		1	D			EZH	DGJ		
		1	D			ESF	DGJ		
7									NUT, Flange to Output Shaft, M26x1.5
	52108234AA	1	D			EZC, EZD	DGJ		
		1	D			ESF	DGJ		
		1	D			EZH	DGJ		

DODGE CHALLENGER (LC)

SERIES	LINE	BODY	ENGINE	TRANSMISSION
H = HIGHLINE P = PREMIUM X = SPECIAL	D = DODGE	22 = 2-DR SEDAN TYPE #2	EGG = 3.5L High Output V6 24V MPI Engine ESF = 6.1L SRT HEMI V8 Engine EZC = 5.7L HEMI VCT Engine EZD = 5.7L Hemi VCT MDS Engine	DEC = 6-Speed Manual TREMEC Transmission DGJ = 5-Speed Auto W5A580 Transmission DGV = 4-Spd. Automatic VLP 42RLE Trans

AR = use ase required - = Non illustrrated part

Oil Fill Tube And Related Parts
Figure 021DGJ-225

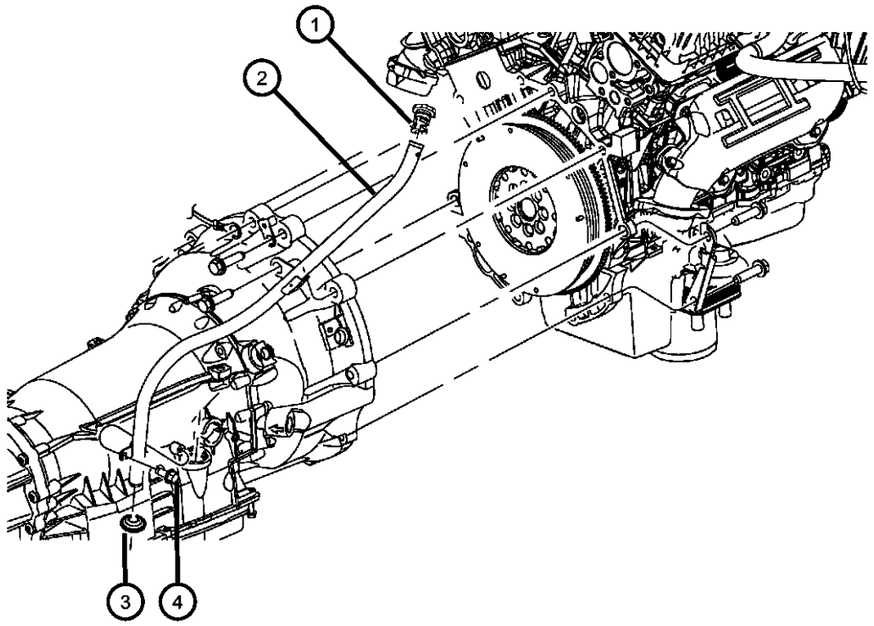

ITEM	PART NUMBER	QTY	LINE	SERIES	BODY	ENGINE	TRANS	TRIM	DESCRIPTION
1									CAP, Oil Filler
	04591959AA	1	D			EZD	DGJ		
		1	D			EZH	DGJ		
		1	D			ESF	DGJ		
2									TUBE, Transmission Oil Filler
	04591880AE	1	D			EZH	DGJ		
	05037793AC	1	D			ESF	DGJ		
		1	D			EZD	DGJ		
3									GROMMET
	04810021AB	1	D			EZC, EZD	DGJ		
		1	D			ESF	DGJ		
		1	D			EZH	DGJ		
4									SCREW AND WASHER, Hex Head, M6x1x12
	06101221	1	D			EZD, EGG, ESF, EZC			
		1	D			EZH			

DODGE CHALLENGER (LC)

SERIES	LINE	BODY	ENGINE	TRANSMISSION
H = HIGHLINE	D = DODGE	22 = 2-DR SEDAN TYPE #2	EGG = 3.5L High Output V6 24V MPI Engine	DEC = 6-Speed Manual TREMEC Transmission
P = PREMIUM			ESF = 6.1L SRT HEMI V8 Engine	DGJ = 5-Speed Auto W5A580 Transmission
X = SPECIAL			EZC = 5.7L HEMI VCT Engine	DGV = 4-Spd. Automatic VLP 42RLE Trans
			EZD = 5.7L Hemi VCT MDS Engine	

AR = use ase required - = Non illustrrated part

Oil Pan, Cover And Related Parts
Figure 021DGJ-230

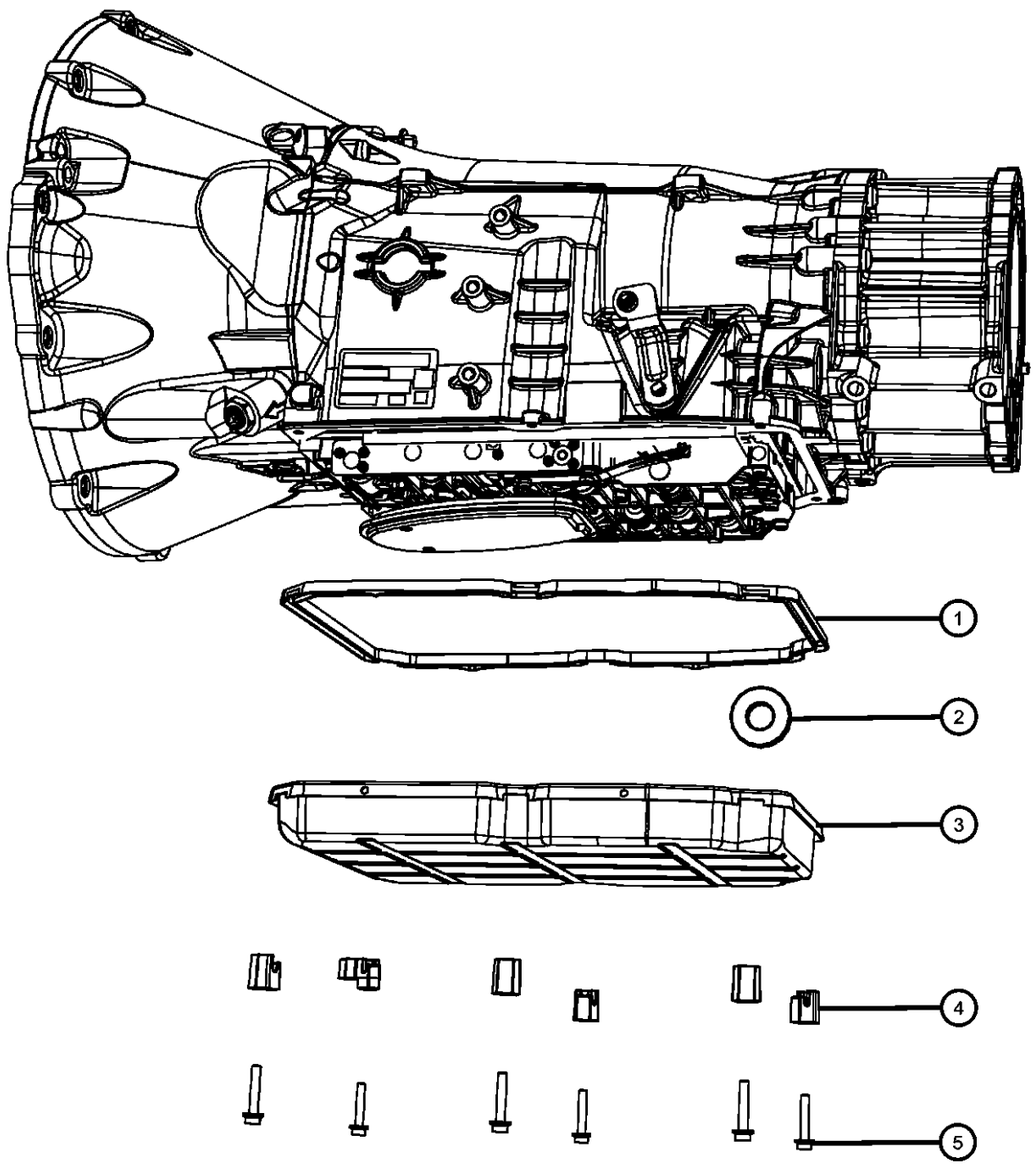

ITEM	PART NUMBER	QTY	LINE	SERIES	BODY	ENGINE	TRANS	TRIM	DESCRIPTION
1									GASKET, Oil Pan
	52108332AA	1	D			EZC, EZD	DGJ		
		1	D			ESF	DGJ		
		1	D			EZH	DGJ		
2									MAGNET, Transmission
	03681601	1	D			EZC, EZD	DGJ		
		1	D			ESF	DGJ		
		1	D			EZH	DGJ		
3									PAN, Transmission Oil
	52108327AA	1	D			EZC, EZD	DGJ		
		1	D			ESF	DGJ		
		1	D			EZH	DGJ		
4									CLAMP, Oil Pan
	52108334AA	6	D			ESF	DGJ		
		6	D			EZH	DGJ		
		6	D			EZC, EZD	DGJ		
5									BOLT, Torx Head, M6x32
	52108270AA	6	D			EZH	DGJ		
		6	D			EZC, EZD	DGJ		
		6	D			ESF	DGJ		

DODGE CHALLENGER (LC)

SERIES	LINE	BODY	ENGINE	TRANSMISSION
H = HIGHLINE	D = DODGE	22 = 2-DR SEDAN TYPE #2	EGG = 3.5L High Output V6 24V MPI Engine	DEC = 6-Speed Manual TREMEC Transmission
P = PREMIUM			ESF = 6.1L SRT HEMI V8 Engine	DGJ = 5-Speed Auto W5A580 Transmission
X = SPECIAL			EZC = 5.7L HEMI VCT Engine	DGV = 4-Spd. Automatic VLP 42RLE Trans
			EZD = 5.7L Hemi VCT MDS Engine	

AR = use ase required - = Non illustrrated part

Filters
Figure 021DGJ-235

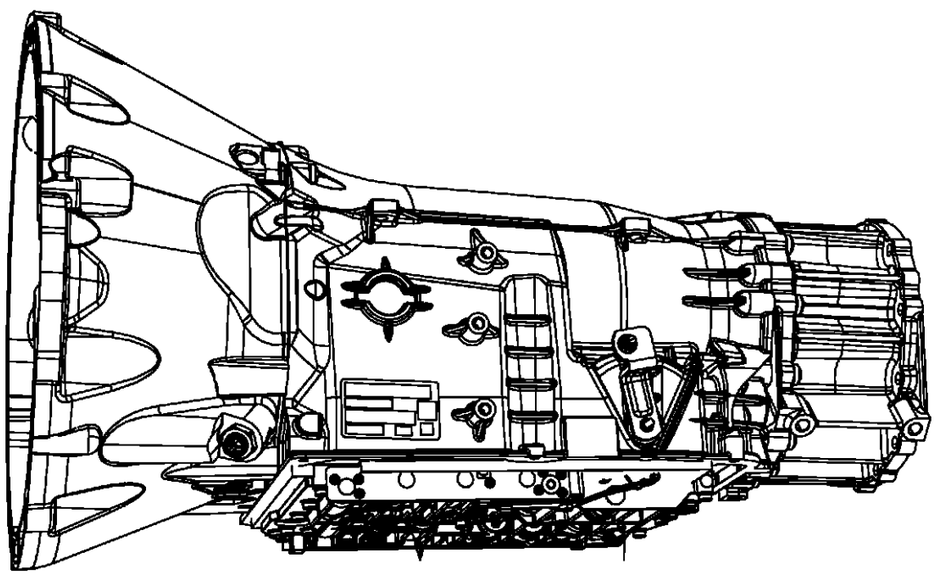

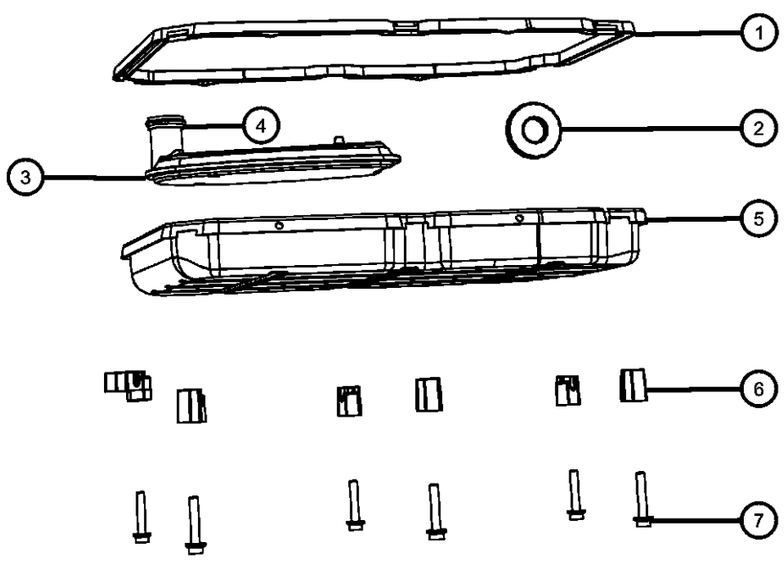

ITEM	PART NUMBER	QTY	LINE	SERIES	BODY	ENGINE	TRANS	TRIM	DESCRIPTION
1									GASKET, Oil Pan
	52108332AA	1	D			EZC, EZD	DGJ		
		1	D			ESF	DGJ		
		1	D			EZH	DGJ		
2									MAGNET, Transmission
	03681601	1	D			ESF	DGJ		
		1	D			EZH	DGJ		
		1	D			EZC, EZD	DGJ		
3									FILTER, Transmission Oil
	52108325AA	1	D			EZC, EZD	DGJ		
		1	D			ESF	DGJ		
		1	D			EZH	DGJ		
4		1							O RING, (NOT SERVICED)
5									PAN, Transmission Oil
	52108327AA	1	D			ESF	DGJ		
		1	D			EZH	DGJ		
		1	D			EZC, EZD	DGJ		
6									CLAMP, Oil Pan
	52108334AA	6	D			EZC, EZD	DGJ		
		6	D			ESF	DGJ		
		6	D			EZH	DGJ		
7									BOLT, Torx Head, M6x32
	52108270AA	6	D			EZC, EZD	DGJ		
		6	D			ESF	DGJ		
		6	D			EZH	DGJ		

DODGE CHALLENGER (LC)

SERIES	LINE	BODY	ENGINE	TRANSMISSION
H = HIGHLINE P = PREMIUM X = SPECIAL	D = DODGE	22 = 2-DR SEDAN TYPE #2	EGG = 3.5L High Output V6 24V MPI Engine ESF = 6.1L SRT HEMI V8 Engine EZC = 5.7L HEMI VCT Engine EZD = 5.7L Hemi VCT MDS Engine	DEC = 6-Speed Manual TREMEC Transmission DGJ = 5-Speed Auto W5A580 Transmission DGV = 4-Spd. Automatic VLP 42RLE Trans

Sensors, Vents And Quick Connectors
Figure 021DGJ-240

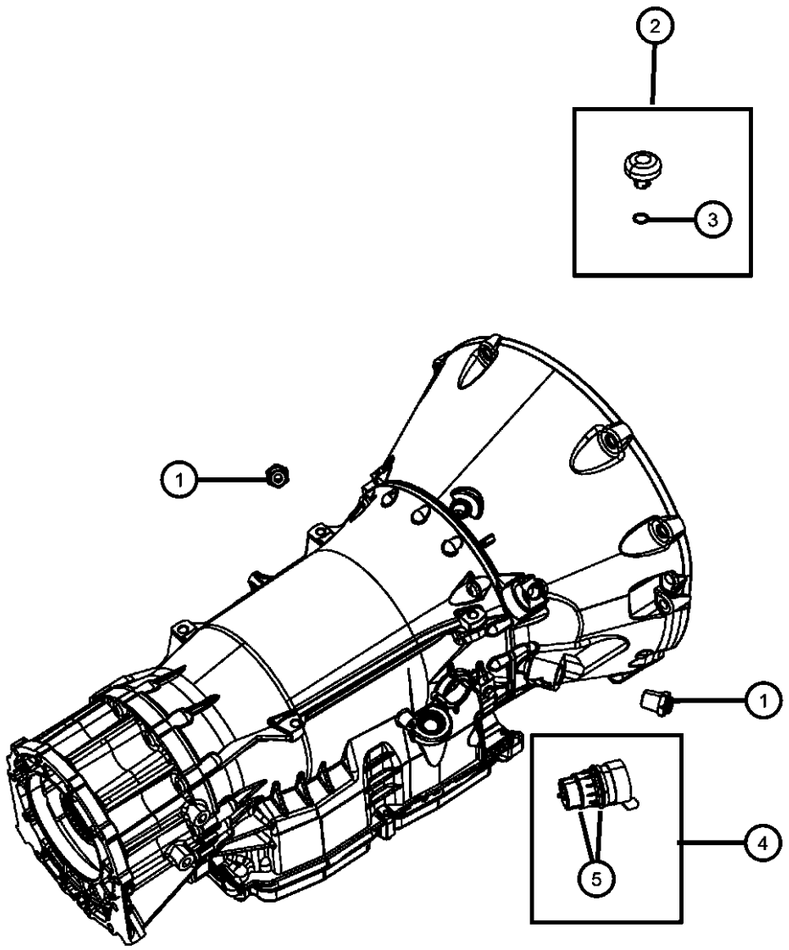

ITEM	PART NUMBER	QTY	LINE	SERIES	BODY	ENGINE	TRANS	TRIM	DESCRIPTION
1									FITTING, Quick Connect
	52119547AA	2	D			EZC, EZD	DGJ		
		2	D			ESF	DGJ		
		2	D			EZH	DGJ		
2									BREATHER, Transmission
	52108364AA	1	D			ESF	DGJ		
		1	D			EZH	DGJ		
		1	D			EZC, EZD	DGJ		
3									O RING
	52108367AA	2	D			EZH	DGJ		
		1	D			EZD, EZC	DGJ		
		1	D			ESF	DGJ		
4									PLUG, Adapter
	68021352AA	1	D			EZC, EZD	DGJ		
		1	D			ESF	DGJ		
		1	D			EZH	DGJ		
5		1							O RING, Adapter Plug, (NOT SERVICED)

DODGE CHALLENGER (LC)

SERIES	LINE	BODY	ENGINE	TRANSMISSION
H = HIGHLINE P = PREMIUM X = SPECIAL	D = DODGE	22 = 2-DR SEDAN TYPE #2	EGG = 3.5L High Output V6 24V MPI Engine ESF = 6.1L SRT HEMI V8 Engine EZC = 5.7L HEMI VCT Engine EZD = 5.7L Hemi VCT MDS Engine	DEC = 6-Speed Manual TREMEC Transmission DGJ = 5-Speed Auto W5A580 Transmission DGV = 4-Spd. Automatic VLP 42RLE Trans

AR = use ase required - = Non illustrrated part

Seal And Shim Packages
Figure 021DGJ-305

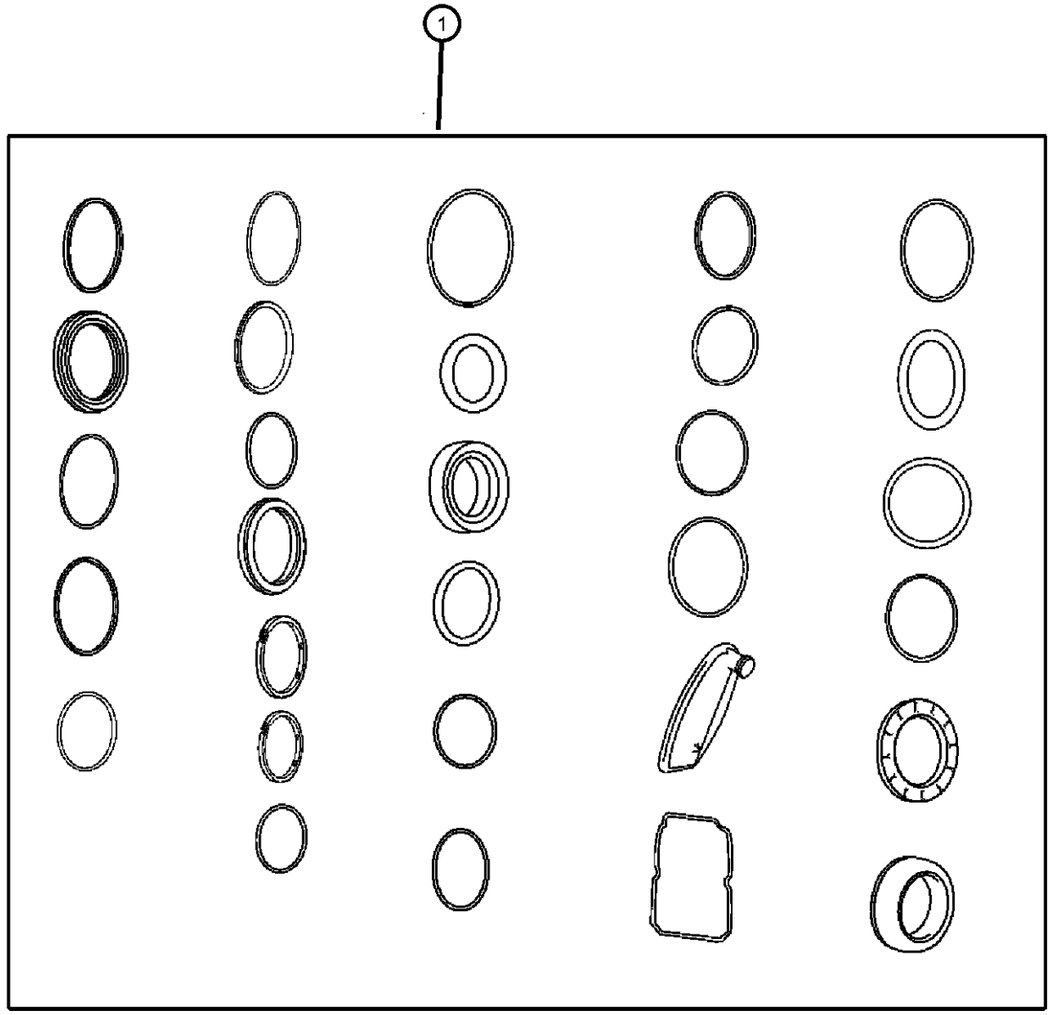

ITEM	PART NUMBER	QTY	LINE	SERIES	BODY	ENGINE	TRANS	TRIM	DESCRIPTION
NOTE:PARTS ILLUSTRATED ARE NOT IN SCALE OR IN CORRECT SIZE. THIS IS A GASKET AND SEAL PACKAGE. IT DOES NOT INCLUDE									
1									SEAL AND GASKET PACKAGE, Transmission, See Note:
	05139580AJ	1	D			EZC, EZD	DGJ		
		1	D			EZH	DGJ		
		1	D			ESF	DGJ		

DODGE CHALLENGER (LC)

SERIES	LINE	BODY	ENGINE	TRANSMISSION
H = HIGHLINE	D = DODGE	22 = 2-DR SEDAN TYPE #2	EGG = 3.5L High Output V6 24V MPI Engine	DEC = 6-Speed Manual TREMEC Transmission
P = PREMIUM			ESF = 6.1L SRT HEMI V8 Engine	DGJ = 5-Speed Auto W5A580 Transmission
X = SPECIAL			EZC = 5.7L HEMI VCT Engine	DGV = 4-Spd. Automatic VLP 42RLE Trans
			EZD = 5.7L Hemi VCT MDS Engine	

Oil Pump and Related Parts
Figure 021DGJ-420

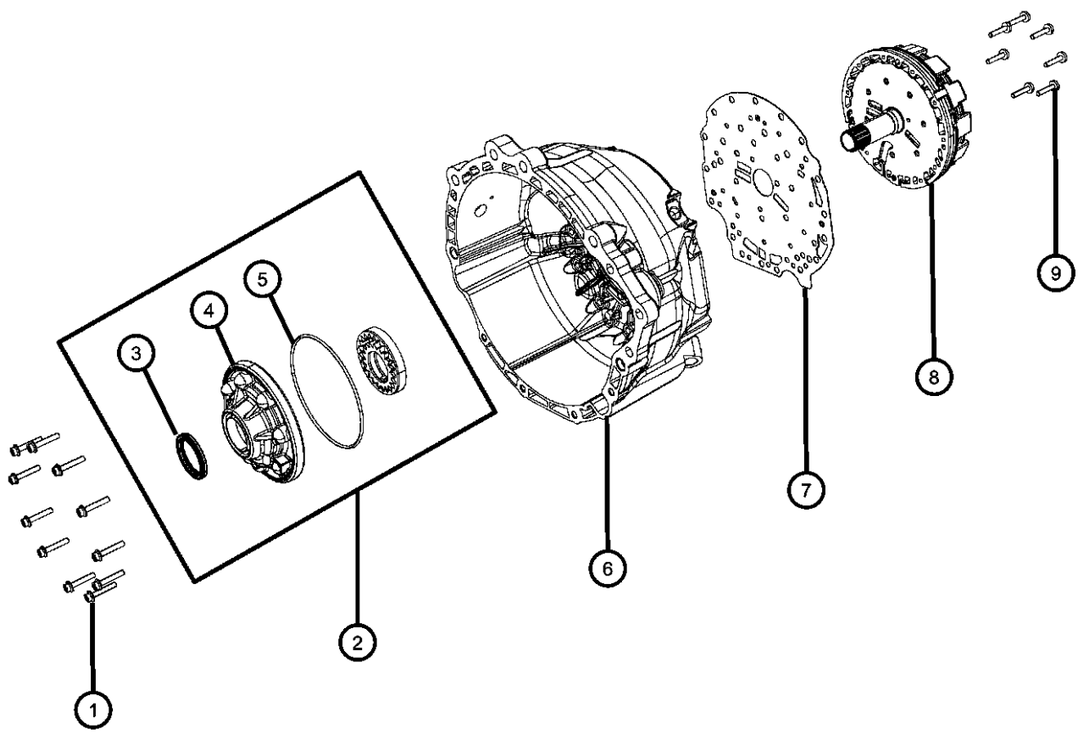

ITEM	PART NUMBER	QTY	LINE	SERIES	BODY	ENGINE	TRANS	TRIM	DESCRIPTION
1									BOLT, Torx Head, M6x32
	52107934AA	11	D			EZC, EZD	DGJ		
		11	D			ESF	DGJ		
		11	D			EZH	DGJ		
2									PUMP, Transmission Oil
	05080070AA	1	D			ESF	DGJ		
		1	D			EZH	DGJ		
		1	D			EZC, EZD	DGJ		
3									SEAL
	52108424AA	1	D			EZC, EZD	DGJ		
		1	D			ESF	DGJ		
		1	D			EZH	DGJ		
4									HOUSING, Transmission Oil Pump
	52107892AB	1	D			ESF	DGJ		
		1	D			EZH	DGJ		
		1	D			EZC, EZD	DGJ		
5									O RING, Transmission Oil Pump
	52107900AA	1	D			EZC, EZD	DGJ		
		1	D			ESF	DGJ		
		1	D			EZH	DGJ		
6									HOUSING, Torque Converter
	52107911AA	1	D			EZH	DGJ		
		1	D			ESF	DGJ		
		1	D			EZC, EZD	DGJ		
7									PLATE, Intermediate
	52108147AA	1	D			ESF	DGJ		
		1	D			EZC, EZD	DGJ		
		1	D			EZH	DGJ		
8									HOLDING CLUTCH, Outer carrier, B1
	52108539AC	1	D			EZH	DGJ		
		1	D			EZC, EZD	DGJ		
		1	D			ESF	DGJ		
9									BOLT, Torx Head, M8x35

DODGE CHALLENGER (LC)

SERIES	LINE	BODY	ENGINE	TRANSMISSION
H = HIGHLINE P = PREMIUM X = SPECIAL	D = DODGE	22 = 2-DR SEDAN TYPE #2	EGG = 3.5L High Output V6 24V MPI Engine ESF = 6.1L SRT HEMI V8 Engine EZC = 5.7L HEMI VCT Engine EZD = 5.7L Hemi VCT MDS Engine	DEC = 6-Speed Manual TREMEC Transmission DGJ = 5-Speed Auto W5A580 Transmission DGV = 4-Spd. Automatic VLP 42RLE Trans

AR = use ase required - = Non illustrrated part

<< RETURN TO GROUP INDEX

Oil Pump and Related Parts
Figure 021DGJ-420

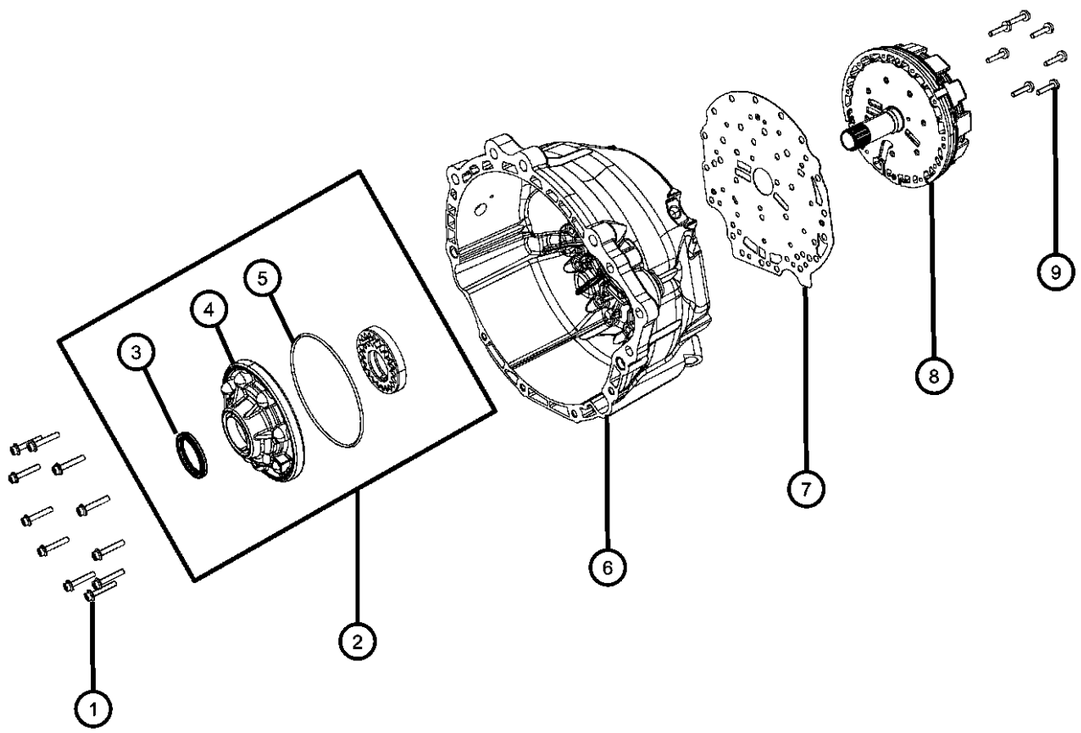

ITEM	PART NUMBER	QTY	LINE	SERIES	BODY	ENGINE	TRANS	TRIM	DESCRIPTION
	52107933AA	7	D			ESF	DGJ		
		7	D			EZH	DGJ		
		7	D			EZC, EZD	DGJ		

DODGE CHALLENGER (LC)

SERIES	LINE	BODY	ENGINE	TRANSMISSION
H = HIGHLINE P = PREMIUM X = SPECIAL	D = DODGE	22 = 2-DR SEDAN TYPE #2	EGG = 3.5L High Output V6 24V MPI Engine ESF = 6.1L SRT HEMI V8 Engine EZC = 5.7L HEMI VCT Engine EZD = 5.7L Hemi VCT MDS Engine	DEC = 6-Speed Manual TREMEC Transmission DGJ = 5-Speed Auto W5A580 Transmission DGV = 4-Spd. Automatic VLP 42RLE Trans

AR = use ase required - = Non illustrrated part

B1 Brake Clutch
Figure 021DGJ-526

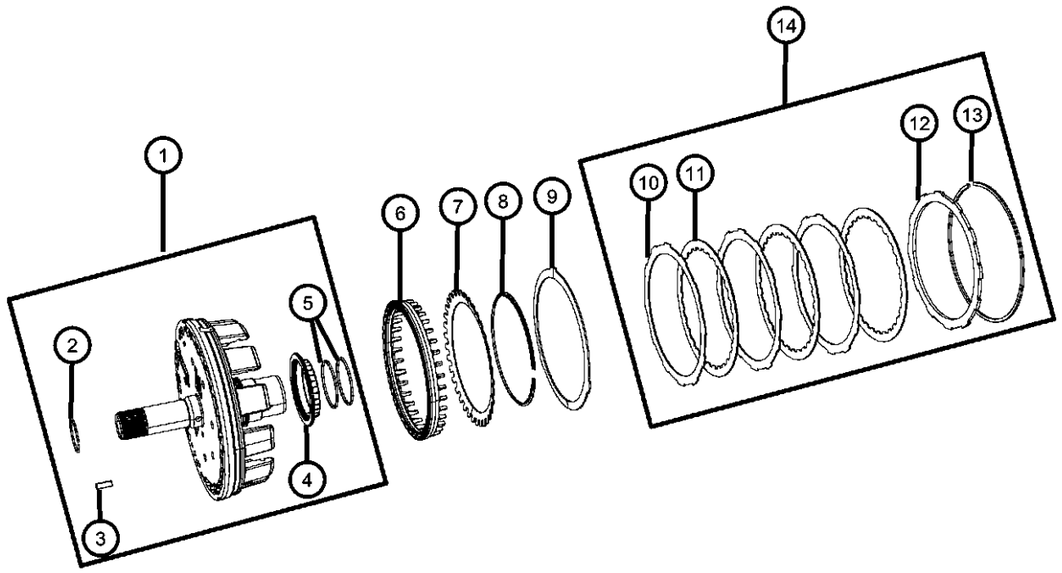

ITEM	PART NUMBER	QTY	LINE	SERIES	BODY	ENGINE	TRANS	TRIM	DESCRIPTION
1									HOLDING CLUTCH, Outer carrier, B1
	52108539AC	1	D			EZH	DGJ		
		1	D			EZC, EZD	DGJ		
		1	D			ESF	DGJ		
2									SNAP RING
	52107948AA	1	D			EZH	DGJ		
		1	D			ESF	DGJ		
		1	D			EZC, EZD	DGJ		
3									DOWEL
	06507381AA	1	D			ESF	DGJ		
		1	D			EZH	DGJ		
		1	D			EZC, EZD	DGJ		
4		1							BEARING, Needle, (NOT SERVICED)
5									SEAL, Transmission
	52108028AA	2	D			EZC, EZD	DGJ		
		2	D			ESF	DGJ		
		2	D			EZH	DGJ		
6									PISTON, B1 Clutch
	52108506AA	1	D			ESF	DGJ		
		1	D			EZH	DGJ		
		1	D			EZC, EZD	DGJ		
7									SPRING, Piston Return
	52108023AA	1	D			EZH	DGJ		
		1	D			EZC, EZD	DGJ		
		1	D			ESF	DGJ		
8									SNAP RING
	52107936AA	1	D			EZH	DGJ		
		1	D			EZC, EZD	DGJ		
		1	D			ESF	DGJ		
9									DISC, Spring
	52108024AA	1	D			EZH	DGJ		
		1	D			ESF	DGJ		

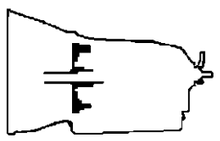

DODGE CHALLENGER (LC)

SERIES	LINE	BODY	ENGINE	TRANSMISSION
H = HIGHLINE P = PREMIUM X = SPECIAL	D = DODGE	22 = 2-DR SEDAN TYPE #2	EGG = 3.5L High Output V6 24V MPI Engine ESF = 6.1L SRT HEMI V8 Engine EZC = 5.7L HEMI VCT Engine EZD = 5.7L Hemi VCT MDS Engine	DEC = 6-Speed Manual TREMEC Transmission DGJ = 5-Speed Auto W5A580 Transmission DGV = 4-Spd. Automatic VLP 42RLE Trans

AR = use ase required - = Non illustrrated part

B1 Brake Clutch
Figure 021DGJ-526

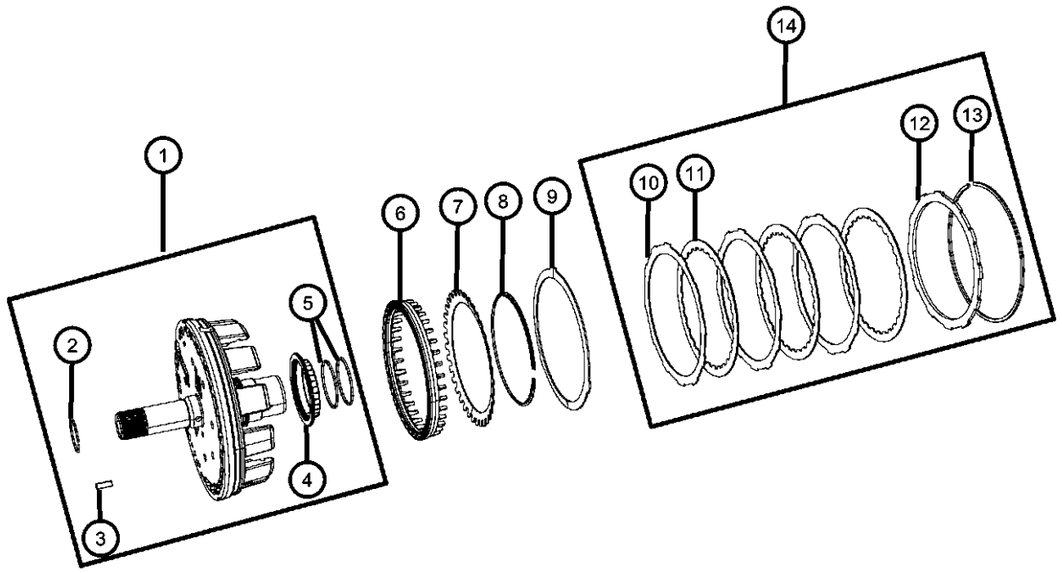

ITEM	PART NUMBER	QTY	LINE	SERIES	BODY	ENGINE	TRANS	TRIM	DESCRIPTION
		1	D			EZC, EZD	DGJ		
10									DISC, Outer
	52108508AA	4	D			ESF	DGJ		
		4	D			EZH	DGJ		
		4	D			EZC, EZD	DGJ		
11									DISC, Inner
	52108507AA	6	D			EZH	DGJ		
		6	D			EZC, EZD	DGJ		
		6	D			ESF	DGJ		
12									PLATE, Transmission Clutch Reaction
	68039901AA	1	D			EZC, EZD	DGJ		
		1	D			EZH	DGJ		
13									SNAP RING
	52107949AA	AR	D			EZH	DGJ		[2.6MM]
	52107950AA	AR	D			EZC, EZD	DGJ		[2.9MM]
		AR	D			ESF	DGJ		[2.9MM]
	52107952AA	AR	D			ESF	DGJ		[3.5MM]
	52107951AA	AR	D			EZH	DGJ		[3.2MM]
		AR	D			EZC, EZD	DGJ		[3.5MM]
		AR	D			EZC, EZD	DGJ		[2.6MM]
		AR	D			ESF	DGJ		[2.6MM]
		AR	D			EZC, EZD	DGJ		[3.2MM]
		AR	D			ESF	DGJ		[3.2MM]
		AR	D			EZH	DGJ		[2.9MM]
		AR	D			EZH	DGJ		[3.5MM]
14									CLUTCH PACKAGE, B1 Brake Clutch
	68028659AA	1	D			ESF	DGJ		
		1	D			EZC, EZD	DGJ		
		1	D			EZH	DGJ		

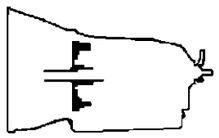

DODGE CHALLENGER (LC)

SERIES	LINE	BODY	ENGINE	TRANSMISSION
H = HIGHLINE P = PREMIUM X = SPECIAL	D = DODGE	22 = 2-DR SEDAN TYPE #2	EGG = 3.5L High Output V6 24V MPI Engine ESF = 6.1L SRT HEMI V8 Engine EZC = 5.7L HEMI VCT Engine EZD = 5.7L Hemi VCT MDS Engine	DEC = 6-Speed Manual TREMEC Transmission DGJ = 5-Speed Auto W5A580 Transmission DGV = 4-Spd. Automatic VLP 42RLE Trans

AR = use ase required - = Non illustrrated part

K1 Clutch Assembly
Figure 021DGJ-527

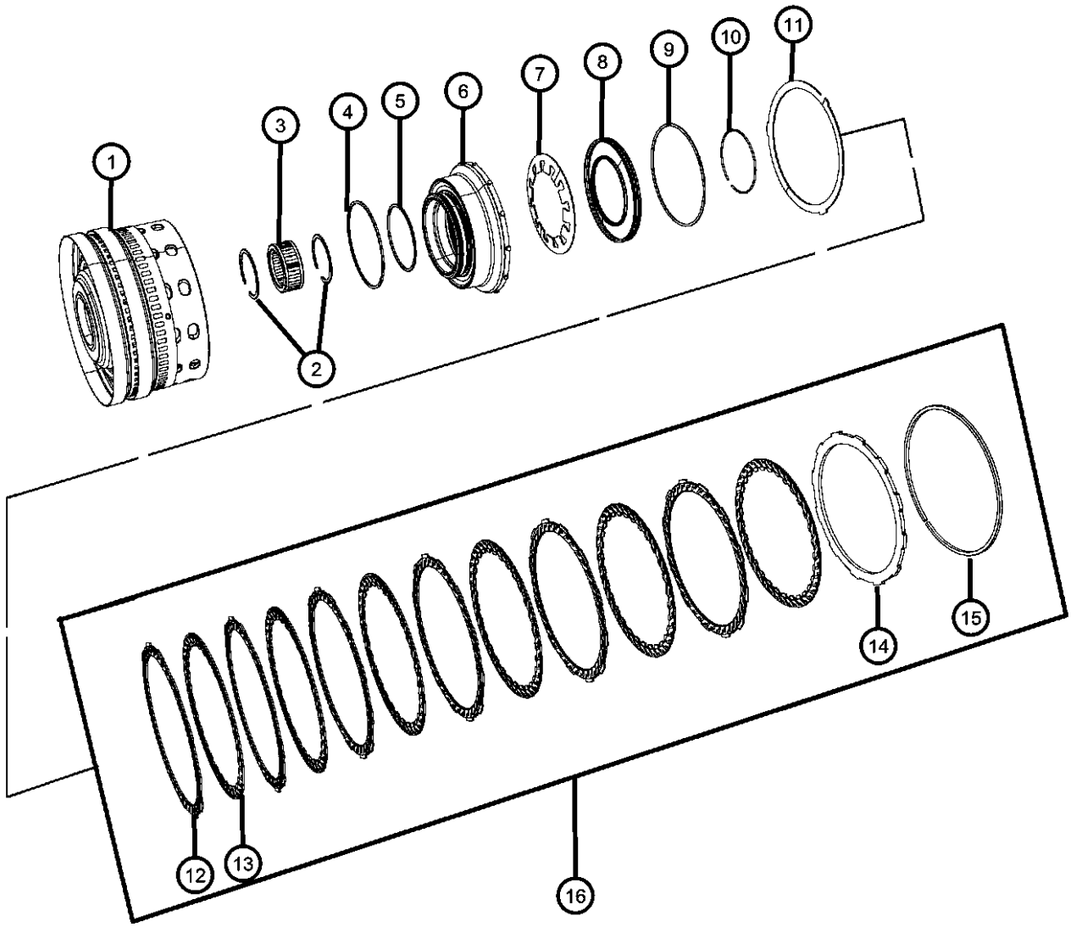

ITEM	PART NUMBER	QTY	LINE	SERIES	BODY	ENGINE	TRANS	TRIM	DESCRIPTION
1									RETAINER, K1 Clutch
	52108541AC	1	D			EZC, EZD	DGJ		
		1	D			ESF	DGJ		
		1	D			EZH	DGJ		
2									SNAP RING
	52107955AA	2	D			EZC, EZD	DGJ		
		2	D			ESF	DGJ		
		2	D			EZH	DGJ		
3									CLUTCH, Front Sun Gear Sprag
	52108342AC	1	D			EZH	DGJ		
		1	D			ESF	DGJ		
	52108342AB	1	D			EZC, EZD	DGJ		
4									SEAL, Transmission, Large
	52107939AA	1	D			EZC, EZD	DGJ		
		1	D			ESF	DGJ		
		1	D			EZH	DGJ		
5									SEAL, Transmission, Small
	52107938AA	1	D			EZC, EZD	DGJ		
		1	D			ESF	DGJ		
		1	D			EZH	DGJ		
6									PISTON, K1 Clutch
	52108059AA	1	D			EZC, EZD	DGJ		
		1	D			ESF	DGJ		
		1	D			EZH	DGJ		
7									SPRING, Piston Return
	52108057AA	1	D			EZC, EZD	DGJ		
		1	D			ESF	DGJ		
		1	D			EZH	DGJ		
8									RETAINER, Spring
	52108058AA	1	D			ESF	DGJ		
		1	D			EZH	DGJ		
		1	D			EZC, EZD	DGJ		
9									O RING

DODGE CHALLENGER (LC)

SERIES	LINE	BODY	ENGINE	TRANSMISSION
H = HIGHLINE P = PREMIUM X = SPECIAL	D = DODGE	22 = 2-DR SEDAN TYPE #2	EGG = 3.5L High Output V6 24V MPI Engine ESF = 6.1L SRT HEMI V8 Engine EZC = 5.7L HEMI VCT Engine EZD = 5.7L Hemi VCT MDS Engine	DEC = 6-Speed Manual TREMEC Transmission DGJ = 5-Speed Auto W5A580 Transmission DGV = 4-Spd. Automatic VLP 42RLE Trans

AR = use ase required - = Non illustrrated part

K1 Clutch Assembly
Figure 021DGJ-527

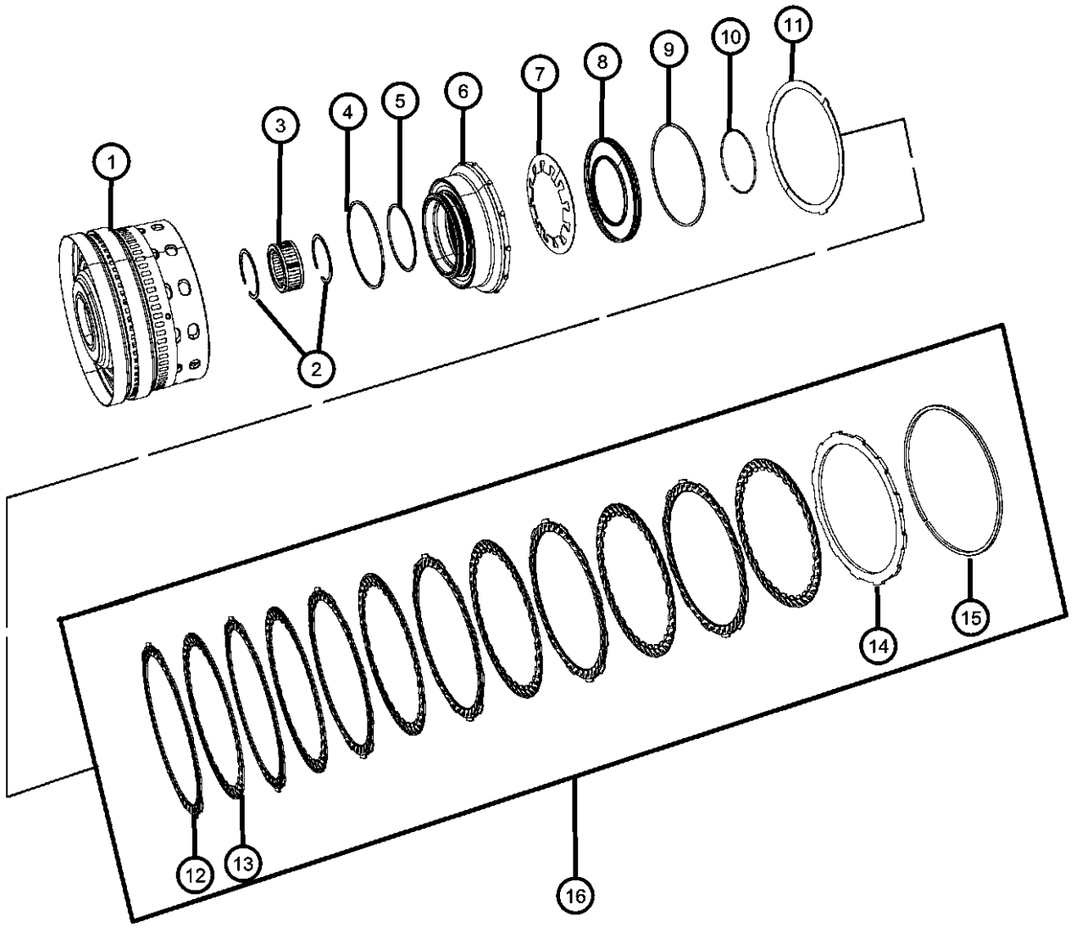

ITEM	PART NUMBER	QTY	LINE	SERIES	BODY	ENGINE	TRANS	TRIM	DESCRIPTION
	52107941AA	1	D			EZC, EZD	DGJ		
		1	D			ESF	DGJ		
		1	D			EZH	DGJ		
10									SNAP RING
	52107954AA	1	D			EZC, EZD	DGJ		
		1	D			ESF	DGJ		
		1	D			EZH	DGJ		
11									DISC, Spring
	52108024AA	1	D			EZC, EZD	DGJ		
		1	D			ESF	DGJ		
		1	D			EZH	DGJ		
12									DISC, Outer
	52108508AA	6	D			ESF	DGJ		
		6	D			EZC, EZD	DGJ		
		6	D			EZH	DGJ		
13									DISC, Inner
	52108507AA	6	D			EZC, EZD	DGJ		
		6	D			EZH	DGJ		
		6	D			ESF	DGJ		
14									PLATE, Transmission Clutch Reaction
	68039901AA	1	D			EZC, EZD	DGJ		
		1	D			ESF	DGJ		
		1	D			EZH	DGJ		
15									SNAP RING
	52107949AA	AR	D			EZC, EZD	DGJ		[2.6MM]
	52107950AA	AR	D			EZH	DGJ		[2.9MM]
	52107951AA	AR	D			EZC, EZD	DGJ		[3.2MM]
		AR	D			EZC, EZD	DGJ		[2.9MM]
		AR	D			ESF	DGJ		[2.9MM]
	52107952AA	AR	D			EZD, EZC	DGJ		[3.5MM]
		AR	D			ESF	DGJ		[3.5MM]
		AR	D			EZH	DGJ		[3.5MM]

DODGE CHALLENGER (LC)

SERIES	LINE	BODY	ENGINE	TRANSMISSION
H = HIGHLINE P = PREMIUM X = SPECIAL	D = DODGE	22 = 2-DR SEDAN TYPE #2	EGG = 3.5L High Output V6 24V MPI Engine ESF = 6.1L SRT HEMI V8 Engine EZC = 5.7L HEMI VCT Engine EZD = 5.7L Hemi VCT MDS Engine	DEC = 6-Speed Manual TREMEC Transmission DGJ = 5-Speed Auto W5A580 Transmission DGV = 4-Spd. Automatic VLP 42RLE Trans

AR = use ase required - = Non illustrrated part

K1 Clutch Assembly
Figure 021DGJ-527

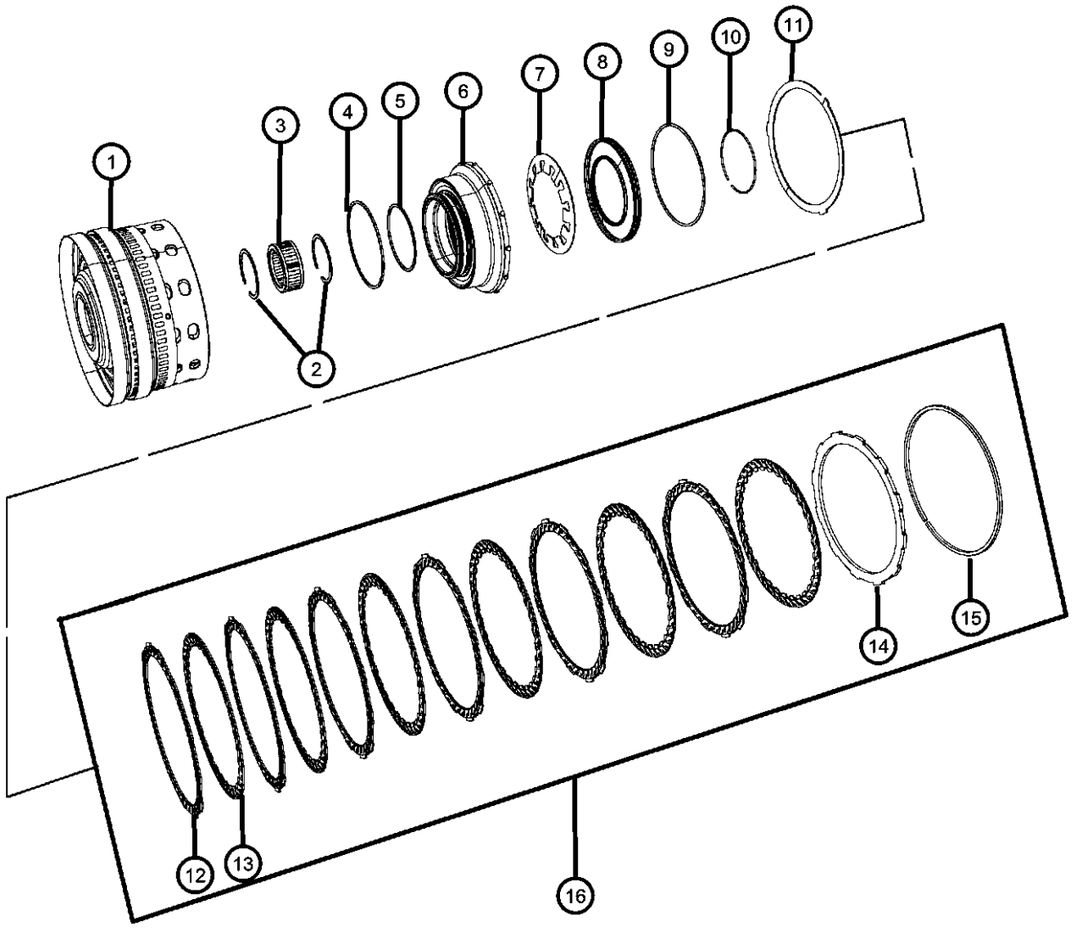

ITEM	PART NUMBER	QTY	LINE	SERIES	BODY	ENGINE	TRANS	TRIM	DESCRIPTION
	52108373AA	AR	D			EZC, EZD	DGJ		[3.8MM]
		AR	D			ESF	DGJ		[3.2MM]
		AR	D			EZH	DGJ		[3.2MM]
		AR	D			ESF	DGJ		[2.6MM]
		AR	D			EZH	DGJ		[2.6MM]
		AR	D			ESF	DGJ		[3.8MM]
		AR	D			EZH	DGJ		[3.8MM]
16									CLUTCH PACKAGE, K1 Input Clutch
	68027270AA	1	D			ESF	DGJ		
		1	D			EZC, EZD	DGJ		
		1	D			EZH	DGJ		

DODGE CHALLENGER (LC)

SERIES	LINE	BODY	ENGINE	TRANSMISSION
H = HIGHLINE P = PREMIUM X = SPECIAL	D = DODGE	22 = 2-DR SEDAN TYPE #2	EGG = 3.5L High Output V6 24V MPI Engine ESF = 6.1L SRT HEMI V8 Engine EZC = 5.7L HEMI VCT Engine EZD = 5.7L Hemi VCT MDS Engine	DEC = 6-Speed Manual TREMEC Transmission DGJ = 5-Speed Auto W5A580 Transmission DGV = 4-Spd. Automatic VLP 42RLE Trans

AR = use ase required - = Non illustrrated part

K2 Clutch Assembly
Figure 021DGJ-528

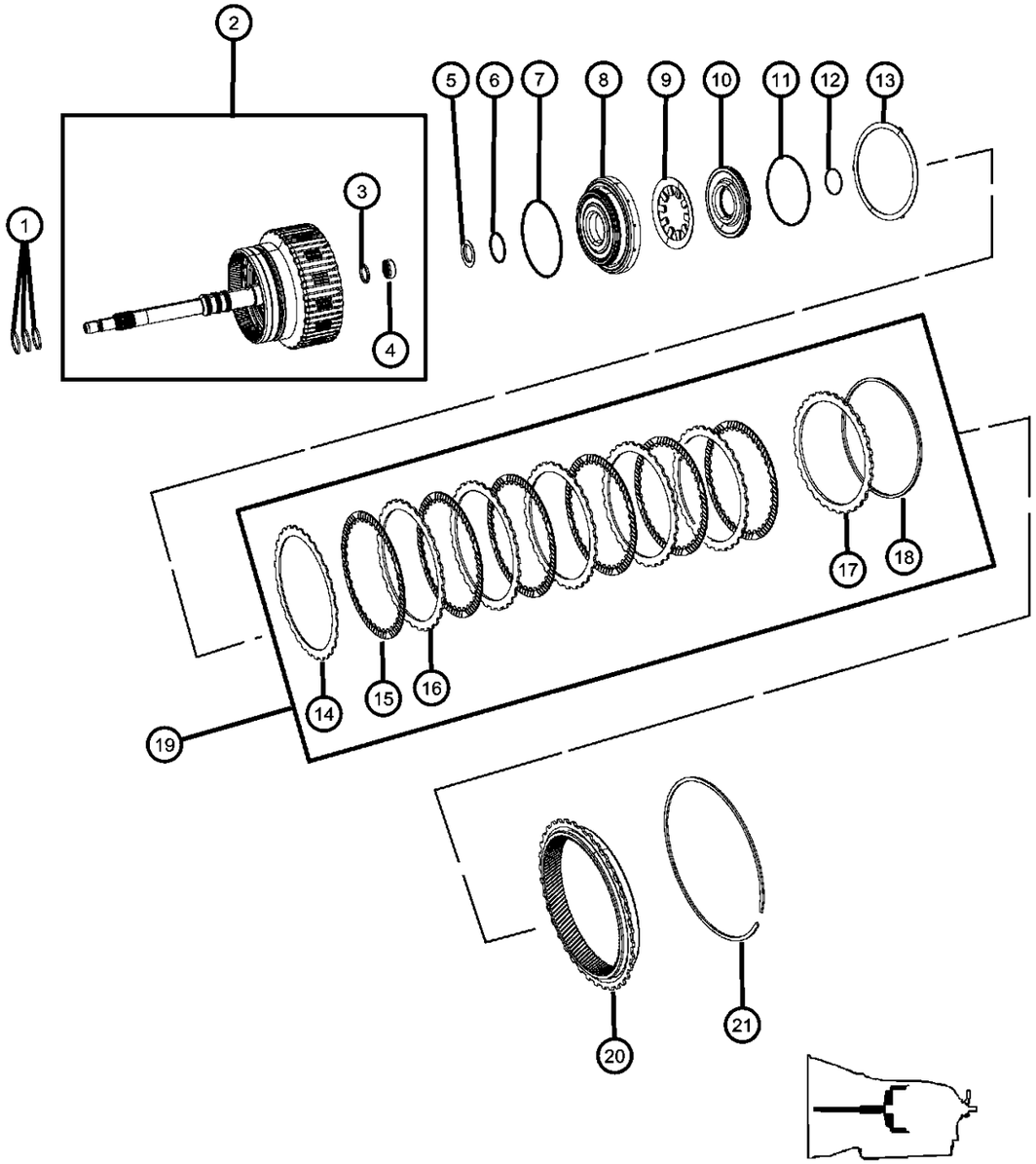

ITEM	PART NUMBER	QTY	LINE	SERIES	BODY	ENGINE	TRANS	TRIM	DESCRIPTION
1									SEAL, Transmission
	05179366AB	3	D			EZC, EZD	DGJ		
		3	D			EZH	DGJ		
		3	D			ESF	DGJ		
2									SHAFT, Input
	52108044AA	1	D			ESF	DGJ		
		1	D			EZH	DGJ		
		1	D			EZC, EZD	DGJ		
3									SEAL, Transmission
	52108127AA	1	D			EZH	DGJ		
		1	D			ESF	DGJ		
		1	D			EZC, EZD	DGJ		
4									NEEDLE BEARING
	52108126AA	1	D			EZC, EZD	DGJ		
		1	D			ESF	DGJ		
		1	D			EZH	DGJ		
5									RETAINER, Bearing
	52107928AA	1	D			EZH	DGJ		
		1	D			ESF	DGJ		
		1	D			EZC, EZD	DGJ		
6									SEAL, Transmission
	52108134AA	1	D			EZH	DGJ		
		1	D			ESF	DGJ		
		1	D			EZC, EZD	DGJ		
7									SEAL, Input Shaft
	52108135AA	1	D			EZH	DGJ		
		1	D			EZC, EZD	DGJ		
		1	D			ESF	DGJ		
8									PISTON, K2 Clutch
	52108136AA	1	D			EZC, EZD	DGJ		
		1	D			ESF	DGJ		
		1	D			EZH	DGJ		
9									SPRING, Piston Return

DODGE CHALLENGER (LC)

SERIES	LINE	BODY	ENGINE	TRANSMISSION
H = HIGHLINE P = PREMIUM X = SPECIAL	D = DODGE	22 = 2-DR SEDAN TYPE #2	EGG = 3.5L High Output V6 24V MPI Engine ESF = 6.1L SRT HEMI V8 Engine EZC = 5.7L HEMI VCT Engine EZD = 5.7L Hemi VCT MDS Engine	DEC = 6-Speed Manual TREMEC Transmission DGJ = 5-Speed Auto W5A580 Transmission DGV = 4-Spd. Automatic VLP 42RLE Trans

AR = use ase required - = Non illustrrated part

K2 Clutch Assembly
Figure 021DGJ-528

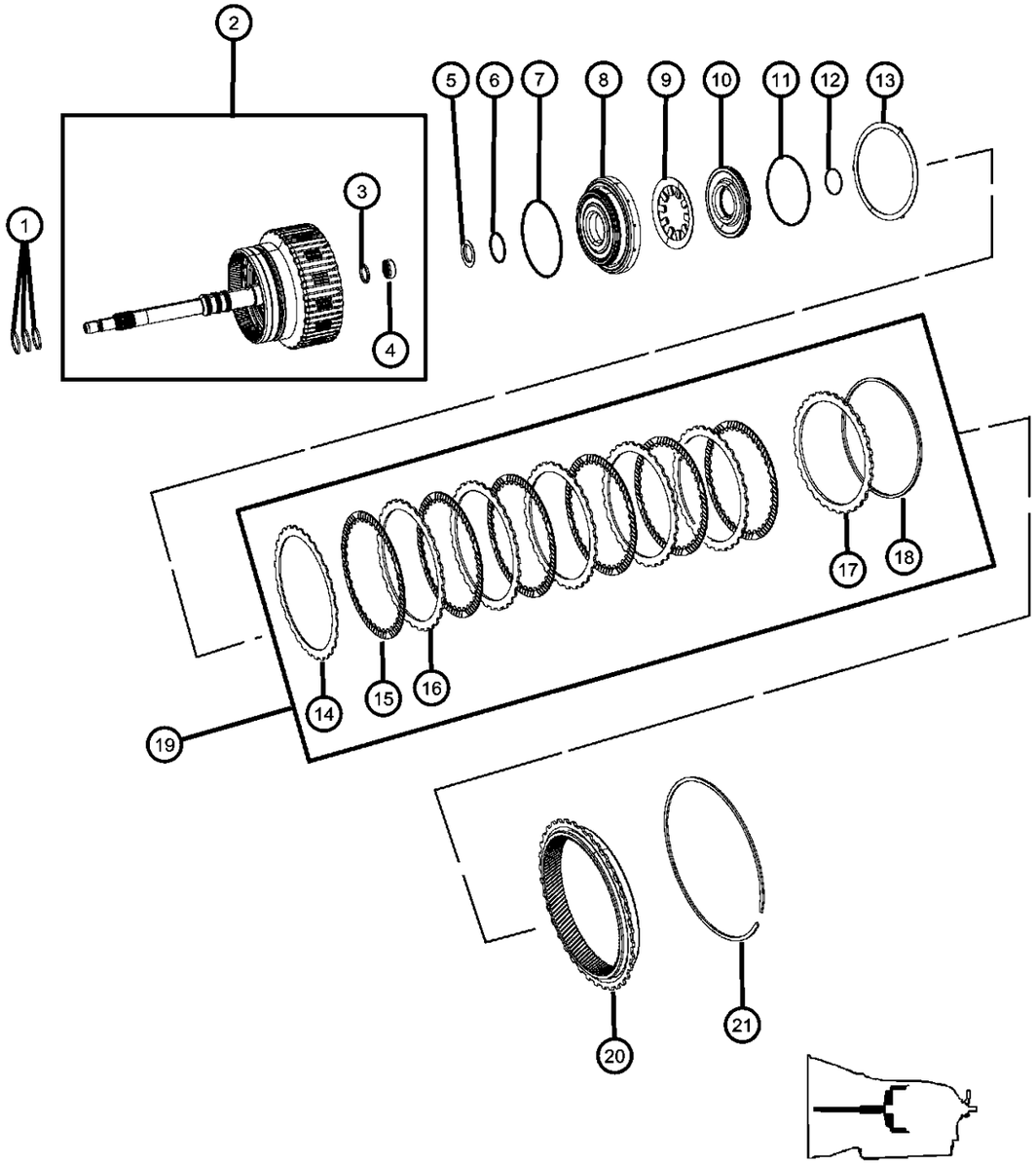

ITEM	PART NUMBER	QTY	LINE	SERIES	BODY	ENGINE	TRANS	TRIM	DESCRIPTION
	52108137AA	1	D			ESF	DGJ		
		1	D			EZH	DGJ		
		1	D			EZC, EZD	DGJ		
10									RETAINER, Spring
	52108138AB	1	D			EZH	DGJ		
		1	D			EZC, EZD	DGJ		
		1	D			ESF	DGJ		
11									O RING
	52108140AA	1	D			EZH	DGJ		
		1	D			EZC, EZD	DGJ		
		1	D			ESF	DGJ		
12									SNAP RING
	52108533AA	1	D			EZC, EZD	DGJ		
		1	D			ESF	DGJ		
		1	D			EZH	DGJ		
13									DISC, Spring
	52108346AA	1	D			ESF	DGJ		
		1	D			EZH	DGJ		
		1	D			EZC, EZD	DGJ		
14									DISC, Outer
	52107996AA	1	D			EZC, EZD	DGJ		
		1	D			EZH	DGJ		
		1	D			ESF	DGJ		
15									DISC, Inner
	52108141AB	6	D			EZH	DGJ		
		6	D			EZC, EZD	DGJ		
		6	D			ESF	DGJ		
16									DISC, Outer
	52107997AA	5	D			ESF	DGJ		
		5	D			EZC, EZD	DGJ		
		5	D			EZH	DGJ		
17									DISC, Outer
	52107998AA	1	D			ESF	DGJ		

DODGE CHALLENGER (LC)

SERIES	LINE	BODY	ENGINE	TRANSMISSION
H = HIGHLINE P = PREMIUM X = SPECIAL	D = DODGE	22 = 2-DR SEDAN TYPE #2	EGG = 3.5L High Output V6 24V MPI Engine ESF = 6.1L SRT HEMI V8 Engine EZC = 5.7L HEMI VCT Engine EZD = 5.7L Hemi VCT MDS Engine	DEC = 6-Speed Manual TREMEC Transmission DGJ = 5-Speed Auto W5A580 Transmission DGV = 4-Spd. Automatic VLP 42RLE Trans

AR = use ase required - = Non illustrrated part

K2 Clutch Assembly
Figure 021DGJ-528

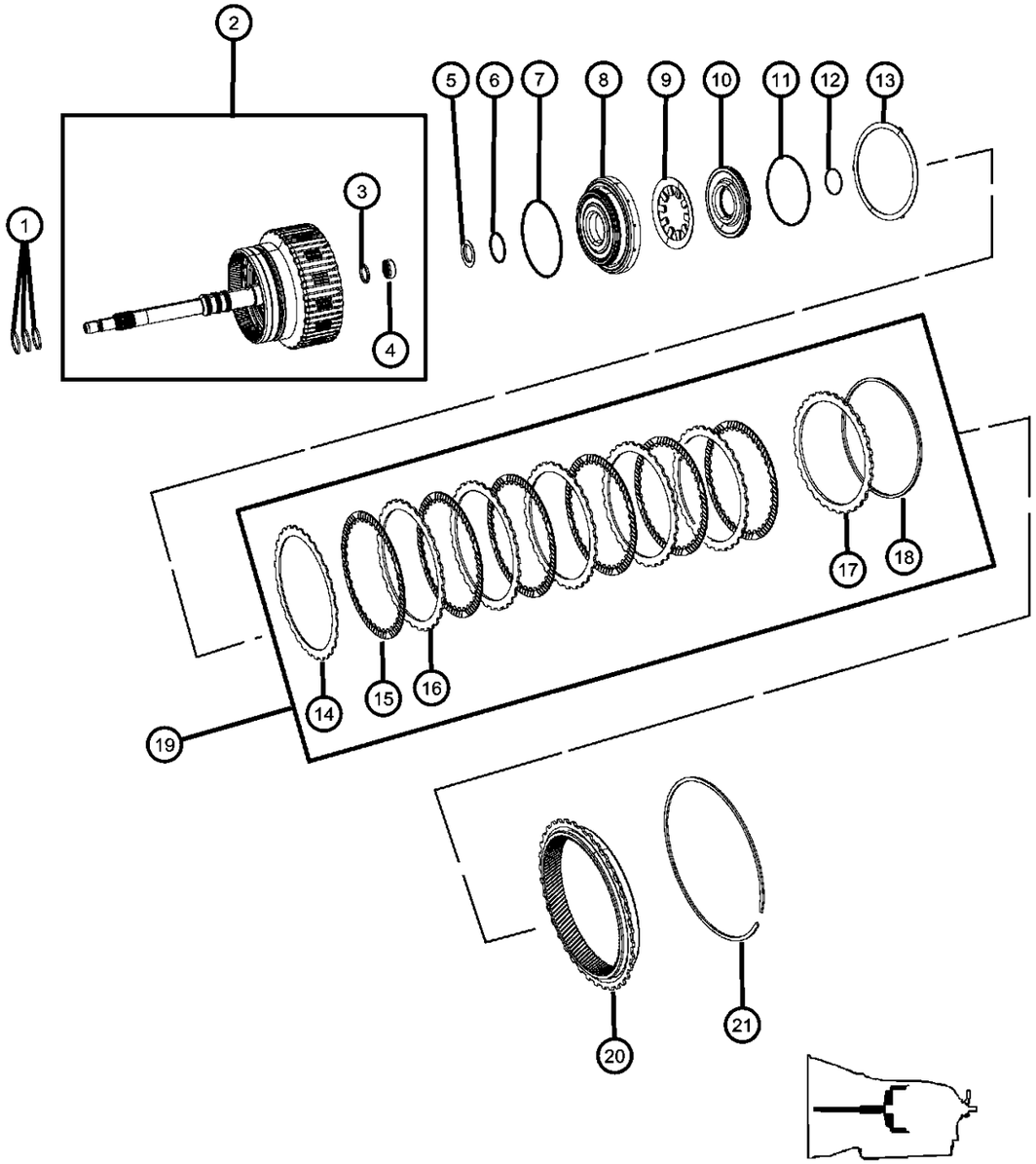

ITEM	PART NUMBER	QTY	LINE	SERIES	BODY	ENGINE	TRANS	TRIM	DESCRIPTION
		1	D			EZH	DGJ		
		1	D			EZC, EZD	DGJ		
18									SNAP RING
	52107958AA	AR	D			EZC, EZD	DGJ		[2.3 MM]
		AR	D			EZH	DGJ		[2.3 MM]
		AR	D			ESF	DGJ		[2.3 MM]
	52107959AA	AR	D			EZH	DGJ		[2.6 MM]
	52107960AA	AR	D			EZC, EZD	DGJ		[2.9 MM]
		AR	D			ESF	DGJ		[2.9 MM]
	52107962AA	AR	D			EZC, EZD	DGJ		[3.5 MM]
	52107961AA	AR	D			EZC, EZD	DGJ		[3.2 MM]
		AR	D			ESF	DGJ		[3.2 MM]
		AR	D			EZH	DGJ		[3.2 MM]
		AR	D			ESF	DGJ		[3.5 MM]
		AR	D			EZH	DGJ		[3.5 MM]
		AR	D			EZC, EZD	DGJ		[2.6 MM]
		AR	D			ESF	DGJ		[2.6 MM]
		AR	D			EZH	DGJ		[2.9 MM]
19									CLUTCH PACKAGE, K2 Input Clutch
	68028565AA	1	D			EZC, EZD	DGJ		
		1	D			EZH	DGJ		
		1	D			ESF	DGJ		
20									GEAR, Rear Annulus
	52107922AA	1	D			ESF	DGJ		
		1	D			EZC, EZD	DGJ		
		1	D			EZH	DGJ		
21									SNAP RING
	52107926AA	1	D			EZH	DGJ		
		1	D			EZC, EZD	DGJ		
		1	D			ESF	DGJ		

DODGE CHALLENGER (LC)

SERIES	LINE	BODY	ENGINE	TRANSMISSION
H = HIGHLINE P = PREMIUM X = SPECIAL	D = DODGE	22 = 2-DR SEDAN TYPE #2	EGG = 3.5L High Output V6 24V MPI Engine ESF = 6.1L SRT HEMI V8 Engine EZC = 5.7L HEMI VCT Engine EZD = 5.7L Hemi VCT MDS Engine	DEC = 6-Speed Manual TREMEC Transmission DGJ = 5-Speed Auto W5A580 Transmission DGV = 4-Spd. Automatic VLP 42RLE Trans

AR = use ase required - = Non illustrrated part

K3 Clutch Assembly
Figure 021DGJ-529

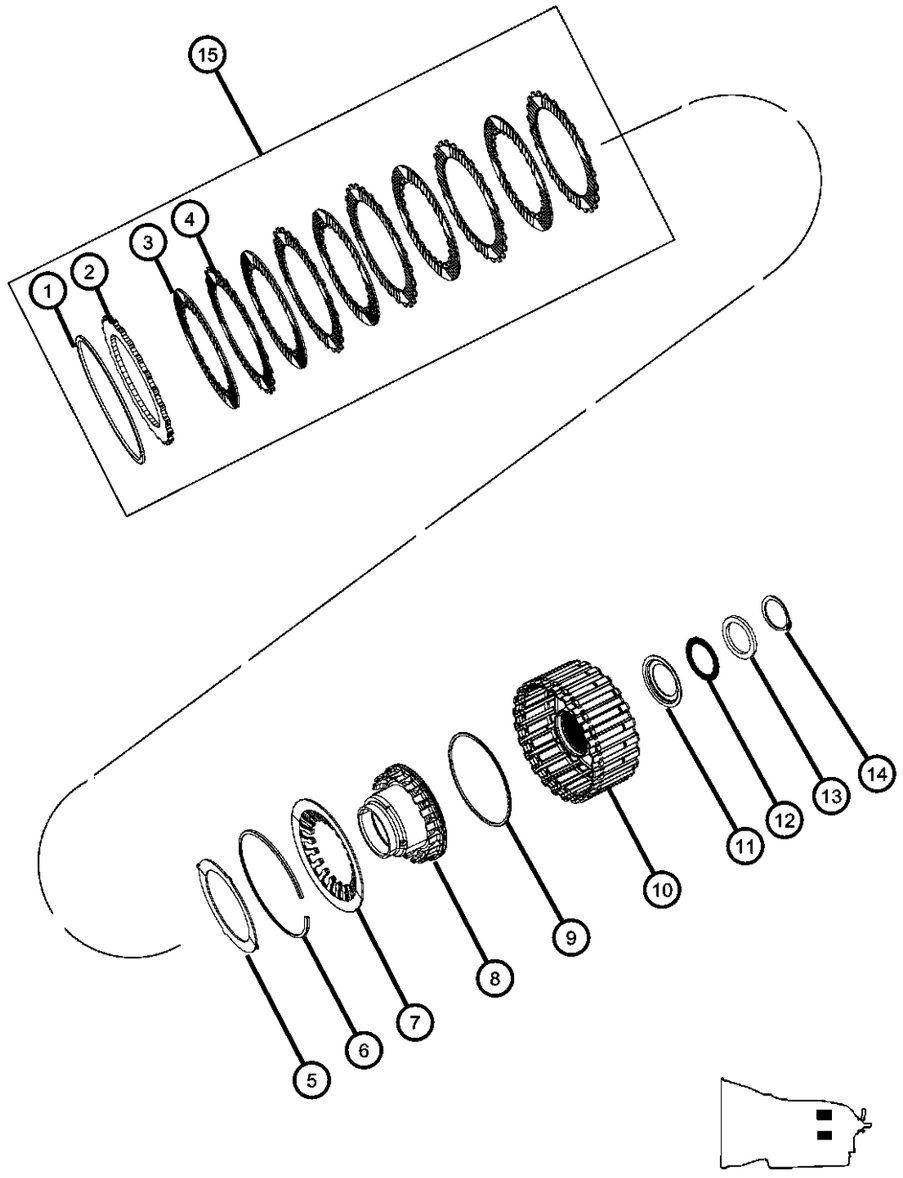

ITEM	PART NUMBER	QTY	LINE	SERIES	BODY	ENGINE	TRANS	TRIM	DESCRIPTION
1									SNAP RING
	52107970AA	AR	D			EZC, EZD	DGJ		[2.3 MM]
		AR	D			ESF	DGJ		[2.3 MM]
		AR	D			EZH	DGJ		[2.3 MM]
	52107972AA	AR	D			ESF	DGJ		[2.9 MM]
		AR	D			EZH	DGJ		[2.9 MM]
	52107974AA	AR	D			EZC, EZD	DGJ		[2.0 MM]
		AR	D			EZC, EZD	DGJ		[2.9 MM]
	52107971AA	AR	D			EZC, EZD	DGJ		[2.6 MM]
		AR	D			ESF	DGJ		[2.6 MM]
		AR	D			EZH	DGJ		[2.6 MM]
		AR	D			ESF	DGJ		[2.0 MM]
		AR	D			EZH	DGJ		[2.0 MM]
2									DISC, Outer
	52108011AA	1	D			ESF	DGJ		
		1	D			EZH	DGJ		
		1	D			EZC, EZD	DGJ		
3									DISC, Inner
	52108528AA	5	D			EZH	DGJ		
		5	D			EZC, EZD	DGJ		
		5	D			ESF	DGJ		
4									DISC, Outer
	52108529AA	5	D			ESF	DGJ		
		5	D			EZH	DGJ		
		5	D			EZC, EZD	DGJ		
5									DISC, Spring
	52108096AA	1	D			EZC, EZD	DGJ		
		1	D			ESF	DGJ		
		1	D			EZH	DGJ		
6									SNAP RING
	52107968AA	1	D			ESF	DGJ		
		1	D			EZH	DGJ		
		1	D			EZC, EZD	DGJ		

DODGE CHALLENGER (LC)

SERIES	LINE	BODY	ENGINE	TRANSMISSION
H = HIGHLINE P = PREMIUM X = SPECIAL	D = DODGE	22 = 2-DR SEDAN TYPE #2	EGG = 3.5L High Output V6 24V MPI Engine ESF = 6.1L SRT HEMI V8 Engine EZC = 5.7L HEMI VCT Engine EZD = 5.7L Hemi VCT MDS Engine	DEC = 6-Speed Manual TREMEC Transmission DGJ = 5-Speed Auto W5A580 Transmission DGV = 4-Spd. Automatic VLP 42RLE Trans

AR = use ase required - = Non illustrrated part

K3 Clutch Assembly
Figure 021DGJ-529

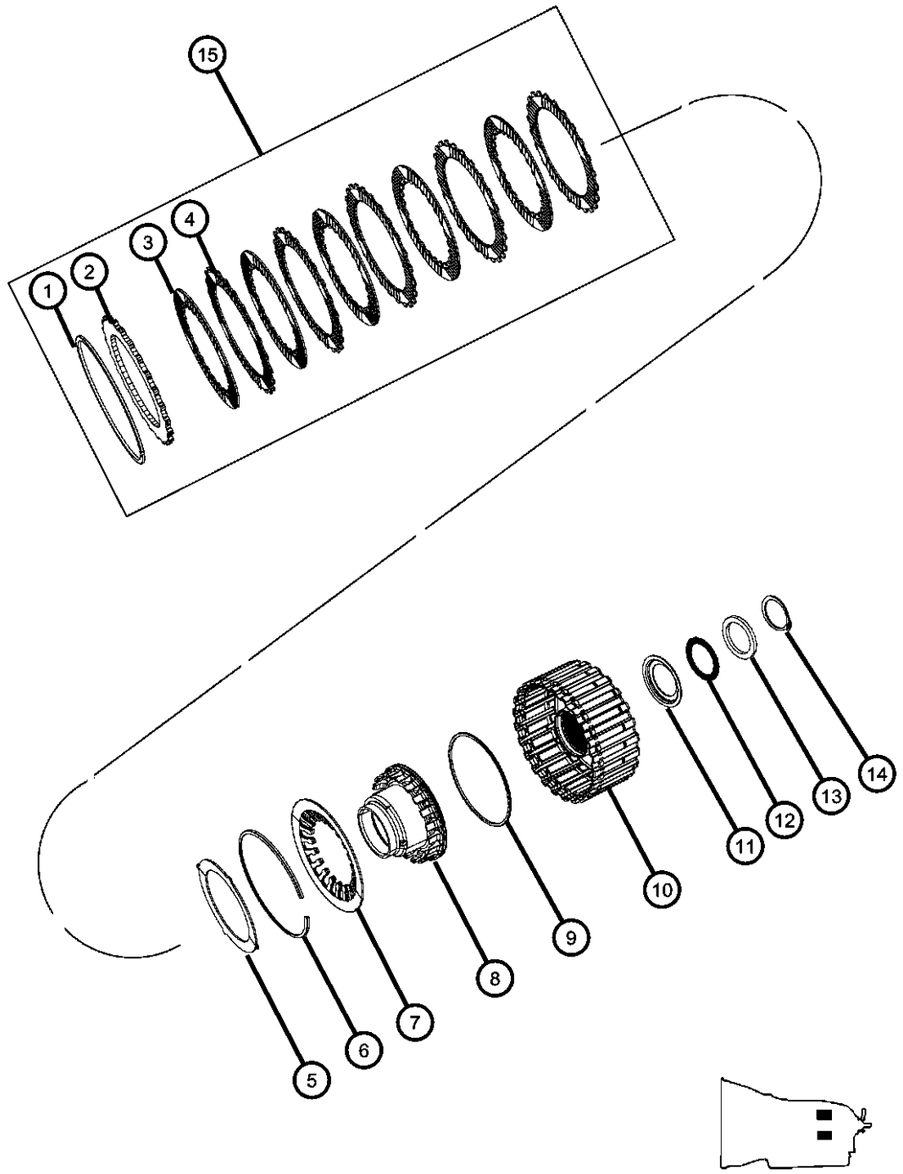

ITEM	PART NUMBER	QTY	LINE	SERIES	BODY	ENGINE	TRANS	TRIM	DESCRIPTION
7									SPRING, Piston Return
	52108095AA	1	D			EZC, EZD	DGJ		
		1	D			ESF	DGJ		
		1	D			EZH	DGJ		
8									PISTON, K3 Clutch
	52108094AA	1	D			ESF	DGJ		
		1	D			EZH	DGJ		
		1	D			EZC, EZD	DGJ		
9									SEAL, Transmission
	52108093AA	1	D			EZC, EZD	DGJ		
		1	D			ESF	DGJ		
		1	D			EZH	DGJ		
10									RETAINER, K3 Clutch
	52108548AB	1	D			EZC, EZD	DGJ		
		1	D			ESF	DGJ		
		1	D			EZH	DGJ		
11									RETAINER, Bearing
	52108148AA	1	D			EZC, EZD	DGJ		
		1	D			ESF	DGJ		
		1	D			EZH	DGJ		
12									NEEDLE BEARING
	52108152AA	1	D			EZH	DGJ		
		1	D			EZC, EZD	DGJ		
		1	D			ESF	DGJ		
13									SPACER
	52108149AA	AR	D			EZC, EZD	DGJ		[3.7 MM]
		AR	D			ESF	DGJ		[3.7 MM]
	52108150AA	AR	D			EZH	DGJ		[3.1 MM]
		AR	D			EZC, EZD	DGJ		[3.1 MM]
		AR	D			ESF	DGJ		[3.1 MM]
		AR	D			EZH	DGJ		[3.7 MM]
	52108151AA	AR	D			ESF	DGJ		[3.4 MM]
		AR	D			EZH	DGJ		[3.4 MM]

DODGE CHALLENGER (LC)

SERIES	LINE	BODY	ENGINE	TRANSMISSION
H = HIGHLINE P = PREMIUM X = SPECIAL	D = DODGE	22 = 2-DR SEDAN TYPE #2	EGG = 3.5L High Output V6 24V MPI Engine ESF = 6.1L SRT HEMI V8 Engine EZC = 5.7L HEMI VCT Engine EZD = 5.7L Hemi VCT MDS Engine	DEC = 6-Speed Manual TREMEC Transmission DGJ = 5-Speed Auto W5A580 Transmission DGV = 4-Spd. Automatic VLP 42RLE Trans

AR = use ase required - = Non illustrrated part

K3 Clutch Assembly
Figure 021DGJ-529

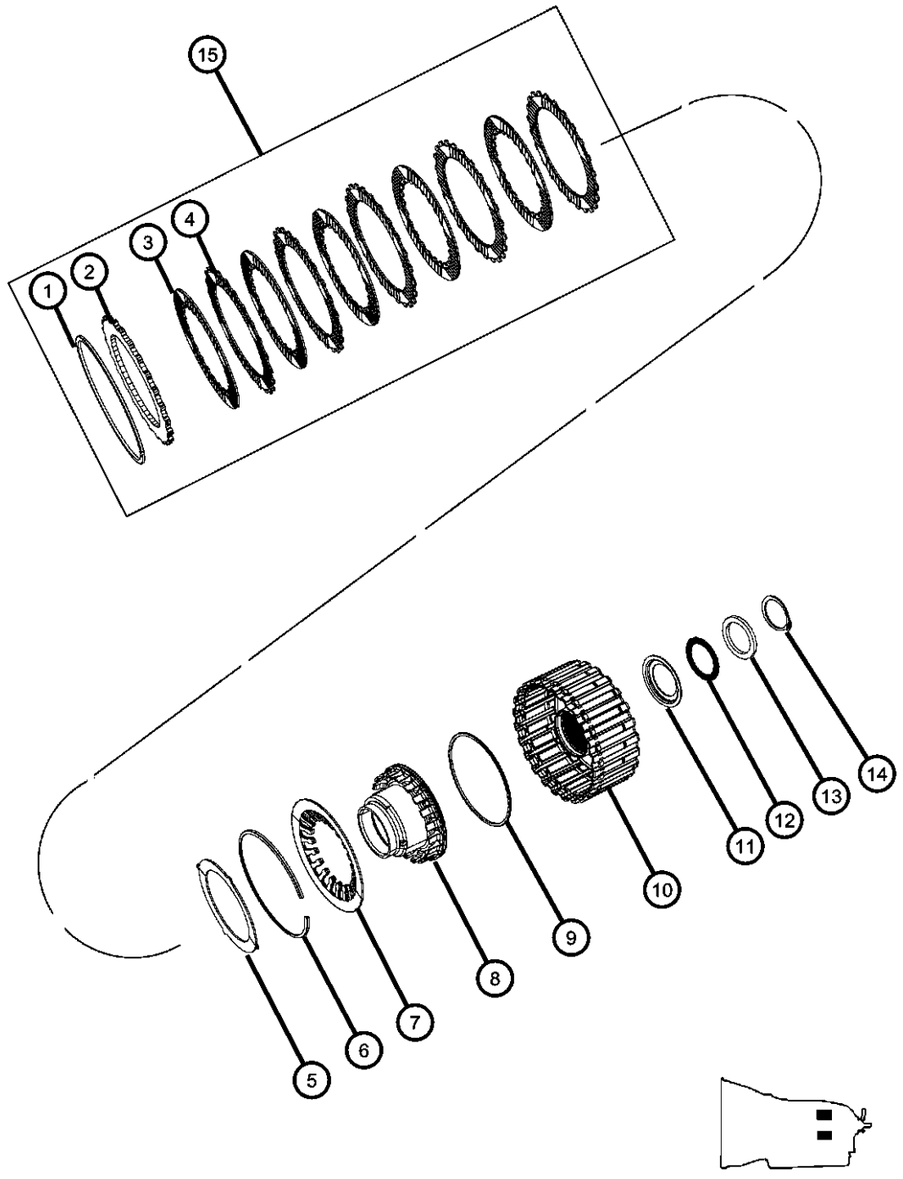

ITEM	PART NUMBER	QTY	LINE	SERIES	BODY	ENGINE	TRANS	TRIM	DESCRIPTION
		AR	D			EZC, EZD	DGJ		[3.4 MM]
14									SNAP RING, M35x2.5x1.5
	06507358AA	1	D			EZH	DGJ		
		1	D			EZC, EZD	DGJ		
		1	D			ESF	DGJ		
15									CLUTCH PACKAGE, K3 Input Clutch
	68028572AA	1	D			ESF	DGJ		
		1	D			EZH	DGJ		
		1	D			EZC, EZD	DGJ		

DODGE CHALLENGER (LC)

SERIES	LINE	BODY	ENGINE	TRANSMISSION
H = HIGHLINE P = PREMIUM X = SPECIAL	D = DODGE	22 = 2-DR SEDAN TYPE #2	EGG = 3.5L High Output V6 24V MPI Engine ESF = 6.1L SRT HEMI V8 Engine EZC = 5.7L HEMI VCT Engine EZD = 5.7L Hemi VCT MDS Engine	DEC = 6-Speed Manual TREMEC Transmission DGJ = 5-Speed Auto W5A580 Transmission DGV = 4-Spd. Automatic VLP 42RLE Trans

AR = use ase required - = Non illustrrated part

B3 Clutch Assembly
Figure 021DGJ-530

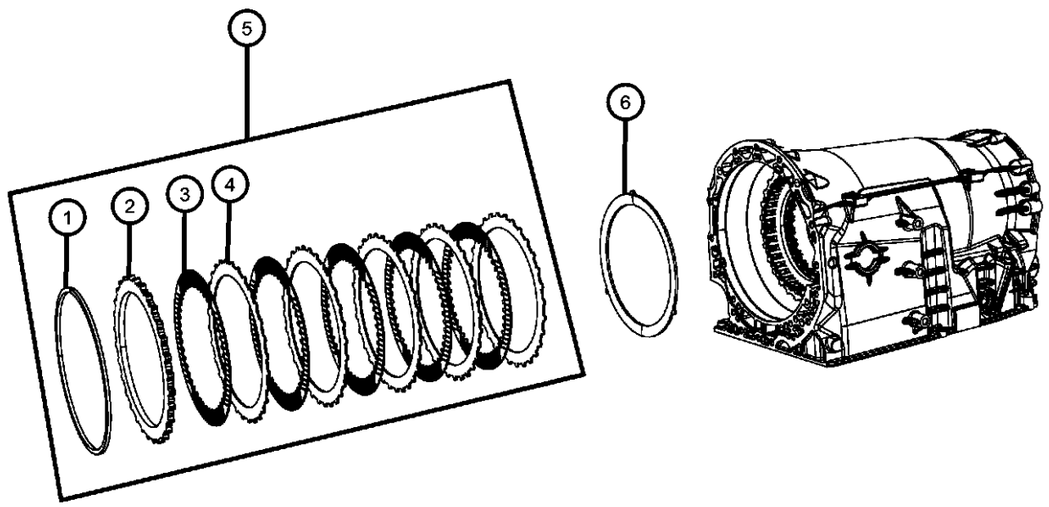

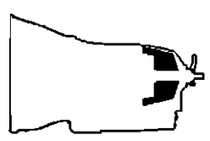

ITEM	PART NUMBER	QTY	LINE	SERIES	BODY	ENGINE	TRANS	TRIM	DESCRIPTION
1									SNAP RING
	52107985AA	AR	D			EZC, EZD	DGJ		[3.2 MM]
		AR	D			ESF	DGJ		[3.2 MM]
	52107986AA	AR	D			ESF	DGJ		[3.5 MM]
		AR	D			EZH	DGJ		[3.5 MM]
	52107988AA	AR	D			ESF	DGJ		[4.1 MM]
		AR	D			EZH	DGJ		[4.1 MM]
	52107990AA	AR	D			ESF	DGJ		[4.9 MM]
		AR	D			EZH	DGJ		[4.9 MM]
		AR	D			EZH	DGJ		[3.2 MM]
		AR	D			EZC, EZD	DGJ		[3.5 MM]
	52107987AA	AR	D			EZH	DGJ		[3.8 MM]
		AR	D			EZC, EZD	DGJ		[4.1 MM]
		AR	D			EZC, EZD	DGJ		[3.8 MM]
		AR	D			ESF	DGJ		[3.8 MM]
	52107989AA	AR	D			EZH	DGJ		[4.4 MM]
		AR	D			EZC, EZD	DGJ		[4.9 MM]
		AR	D			EZC, EZD	DGJ		[4.4 MM]
		AR	D			ESF	DGJ		[4.4 MM]
2									DISC, Outer
	52108018AA	1	D			EZC, EZD	DGJ		
		1	D			ESF	DGJ		
		1	D			EZH	DGJ		
3									DISC, Inner
	52108573AA	5	D			ESF	DGJ		
		5	D			EZH	DGJ		
		5	D			EZC, EZD	DGJ		
4									DISC, Outer
	52108017AA	5	D			EZH	DGJ		
		5	D			EZC, EZD	DGJ		
		5	D			ESF	DGJ		
5									CLUTCH PACKAGE, B3 Brake Clutch Stack Up
	68028661AA	1	D			ESF	DGJ		

DODGE CHALLENGER (LC)

SERIES	LINE	BODY	ENGINE	TRANSMISSION
H = HIGHLINE P = PREMIUM X = SPECIAL	D = DODGE	22 = 2-DR SEDAN TYPE #2	EGG = 3.5L High Output V6 24V MPI Engine ESF = 6.1L SRT HEMI V8 Engine EZC = 5.7L HEMI VCT Engine EZD = 5.7L Hemi VCT MDS Engine	DEC = 6-Speed Manual TREMEC Transmission DGJ = 5-Speed Auto W5A580 Transmission DGV = 4-Spd. Automatic VLP 42RLE Trans

AR = use ase required - = Non illustrrated part

B3 Clutch Assembly
Figure 021DGJ-530

ITEM	PART NUMBER	QTY	LINE	SERIES	BODY	ENGINE	TRANS	TRIM	DESCRIPTION
		1	D			EZC, EZD	DGJ		
		1	D			EZH	DGJ		
6									DISC, Spring
	52108356AA	1	D			ESF	DGJ		
		1	D			EZH	DGJ		
		1	D			EZC, EZD	DGJ		

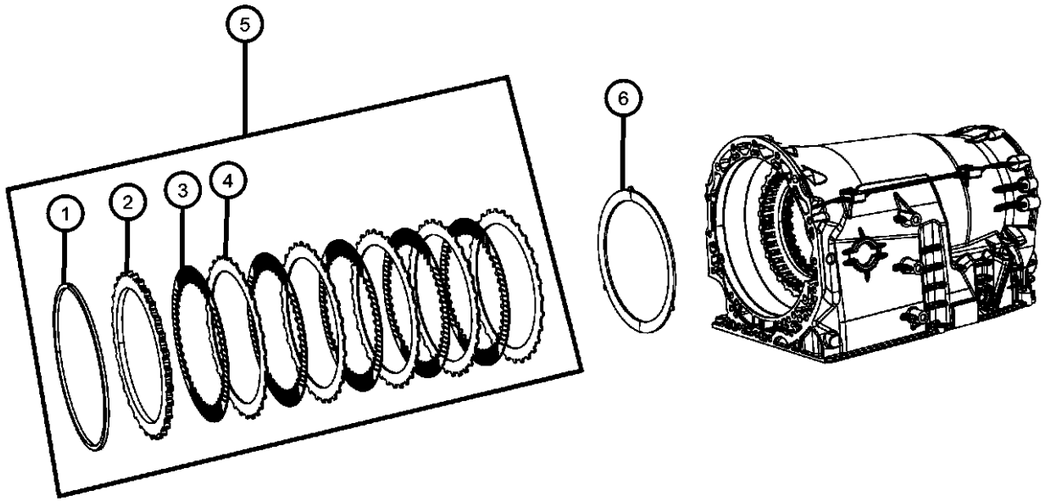

DODGE CHALLENGER (LC)

SERIES	LINE	BODY	ENGINE	TRANSMISSION
H = HIGHLINE	D = DODGE	22 = 2-DR SEDAN TYPE #2	EGG = 3.5L High Output V6 24V MPI Engine	DEC = 6-Speed Manual TREMEC Transmission
P = PREMIUM			ESF = 6.1L SRT HEMI V8 Engine	DGJ = 5-Speed Auto W5A580 Transmission
X = SPECIAL			EZC = 5.7L HEMI VCT Engine	DGV = 4-Spd. Automatic VLP 42RLE Trans
			EZD = 5.7L Hemi VCT MDS Engine	

B2 Clutch Assembly
Figure 021DGJ-531

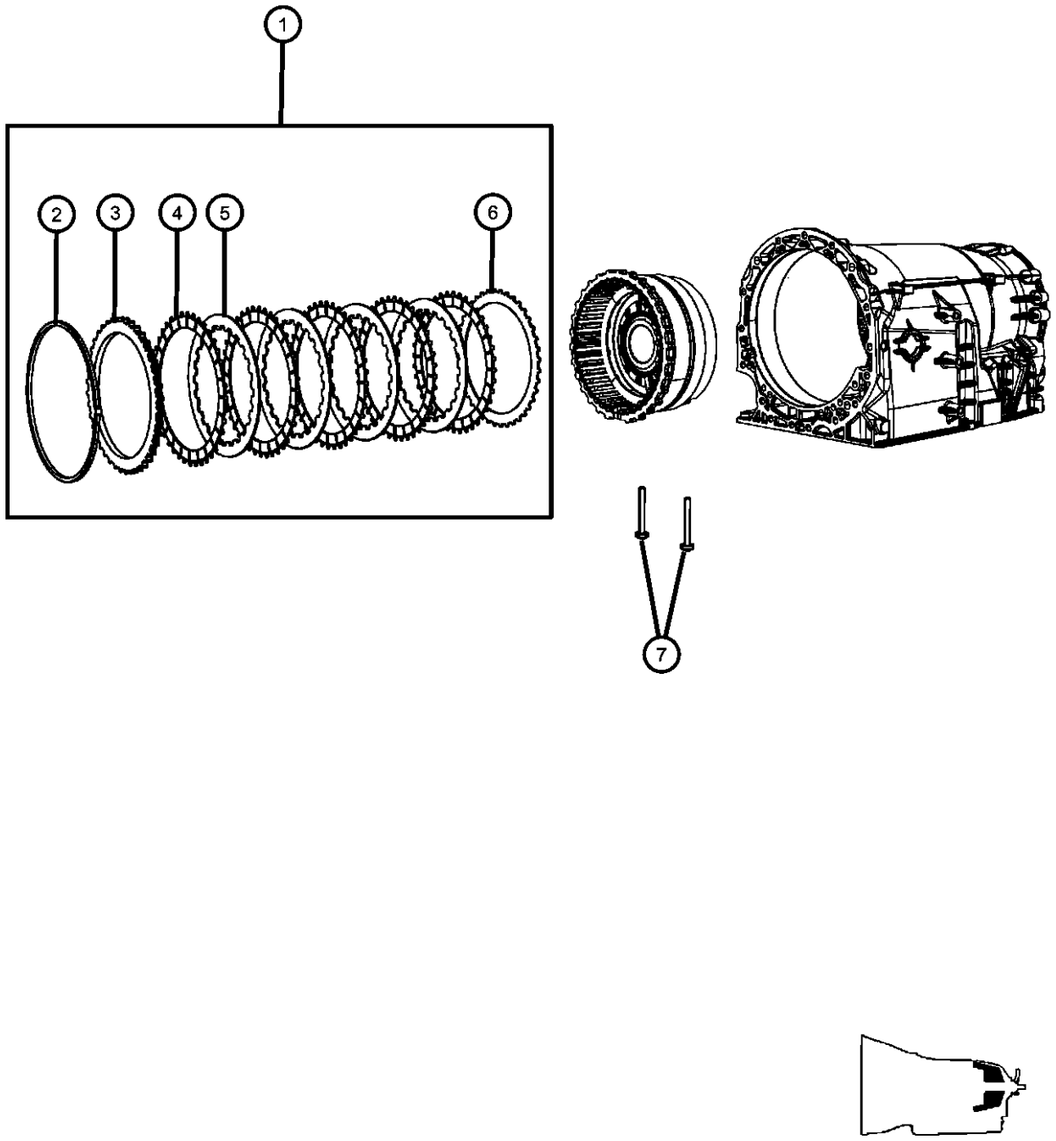

ITEM	PART NUMBER	QTY	LINE	SERIES	BODY	ENGINE	TRANS	TRIM	DESCRIPTION
1									CLUTCH PACKAGE, B2 Brake Clutch Stack Up
	68028660AA	1	D			ESF	DGJ		
		1	D			EZC, EZD	DGJ		
		1	D			EZH	DGJ		
2									SNAP RING
	52107979AA	AR	D			EZC, EZD	DGJ		[4.1 MM]
		AR	D			ESF	DGJ		[4.1 MM]
		1	D			EZH	DGJ		[4.1 MM]
	52107980AA	AR	D			EZC, EZD	DGJ		[3.8 MM]
	52107981AA	AR	D			ESF	DGJ		[3.5 MM]
		AR	D			EZH	DGJ		[3.5 MM]
	52107983AA	AR	D			ESF	DGJ		[2.9 MM]
		AR	D			EZH	DGJ		[2.9 MM]
		AR	D			ESF	DGJ		[3.8 MM]
		AR	D			EZH	DGJ		[3.8 MM]
		AR	D			EZC, EZD	DGJ		[3.5 MM]
	52107982AA	AR	D			EZH	DGJ		[3.2 MM]
		AR	D			EZC, EZD	DGJ		[2.9 MM]
		AR	D			EZC, EZD	DGJ		[3.2 MM]
		AR	D			ESF	DGJ		[3.2 MM]
3									DISC, Outer
	52108014AA	1	D			EZC, EZD	DGJ		
		1	D			ESF	DGJ		
		1	D			EZH	DGJ		
4									DISC, Outer
	52108572AA	5	D			ESF	DGJ		
		5	D			EZH	DGJ		
		5	D			EZC, EZD	DGJ		
5									DISC, Inner
	52108015AA	4	D			EZC, EZD	DGJ		
		4	D			ESF	DGJ		
		4	D			EZH	DGJ		
6									DISC, Outer

DODGE CHALLENGER (LC)

SERIES	LINE	BODY	ENGINE	TRANSMISSION
H = HIGHLINE P = PREMIUM X = SPECIAL	D = DODGE	22 = 2-DR SEDAN TYPE #2	EGG = 3.5L High Output V6 24V MPI Engine ESF = 6.1L SRT HEMI V8 Engine EZC = 5.7L HEMI VCT Engine EZD = 5.7L Hemi VCT MDS Engine	DEC = 6-Speed Manual TREMEC Transmission DGJ = 5-Speed Auto W5A580 Transmission DGV = 4-Spd. Automatic VLP 42RLE Trans

AR = use ase required - = Non illustrrated part

B2 Clutch Assembly
Figure 021DGJ-531

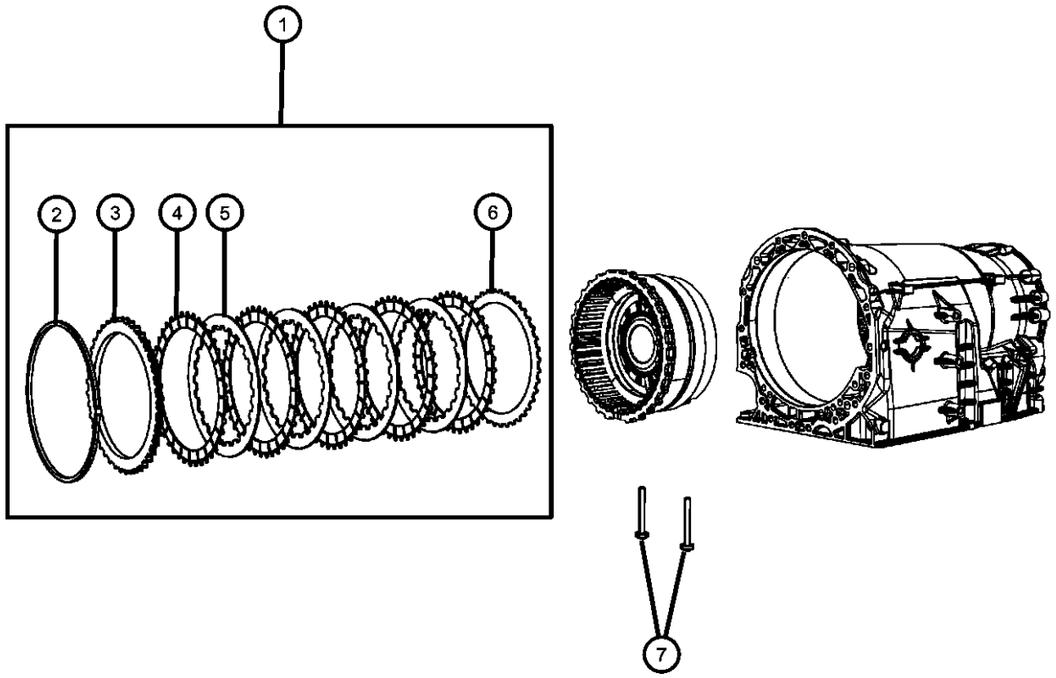

ITEM	PART NUMBER	QTY	LINE	SERIES	BODY	ENGINE	TRANS	TRIM	DESCRIPTION
	52108013AA	1	D			ESF	DGJ		
		1	D			EZH	DGJ		
		1	D			EZC, EZD	DGJ		
7									BOLT, Torx Head, M8x60
	52108205AA	2	D			EZC, EZD	DGJ		
		2	D			ESF	DGJ		
		2	D			EZH	DGJ		

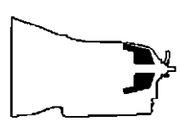

DODGE CHALLENGER (LC)

SERIES	LINE	BODY	ENGINE	TRANSMISSION
H = HIGHLINE	D = DODGE	22 = 2-DR SEDAN TYPE #2	EGG = 3.5L High Output V6 24V MPI Engine	DEC = 6-Speed Manual TREMEC Transmission
P = PREMIUM			ESF = 6.1L SRT HEMI V8 Engine	DGJ = 5-Speed Auto W5A580 Transmission
X = SPECIAL			EZC = 5.7L HEMI VCT Engine	DGV = 4-Spd. Automatic VLP 42RLE Trans
			EZD = 5.7L Hemi VCT MDS Engine	

B2 Clutch Assembly
Figure 021DGJ-532

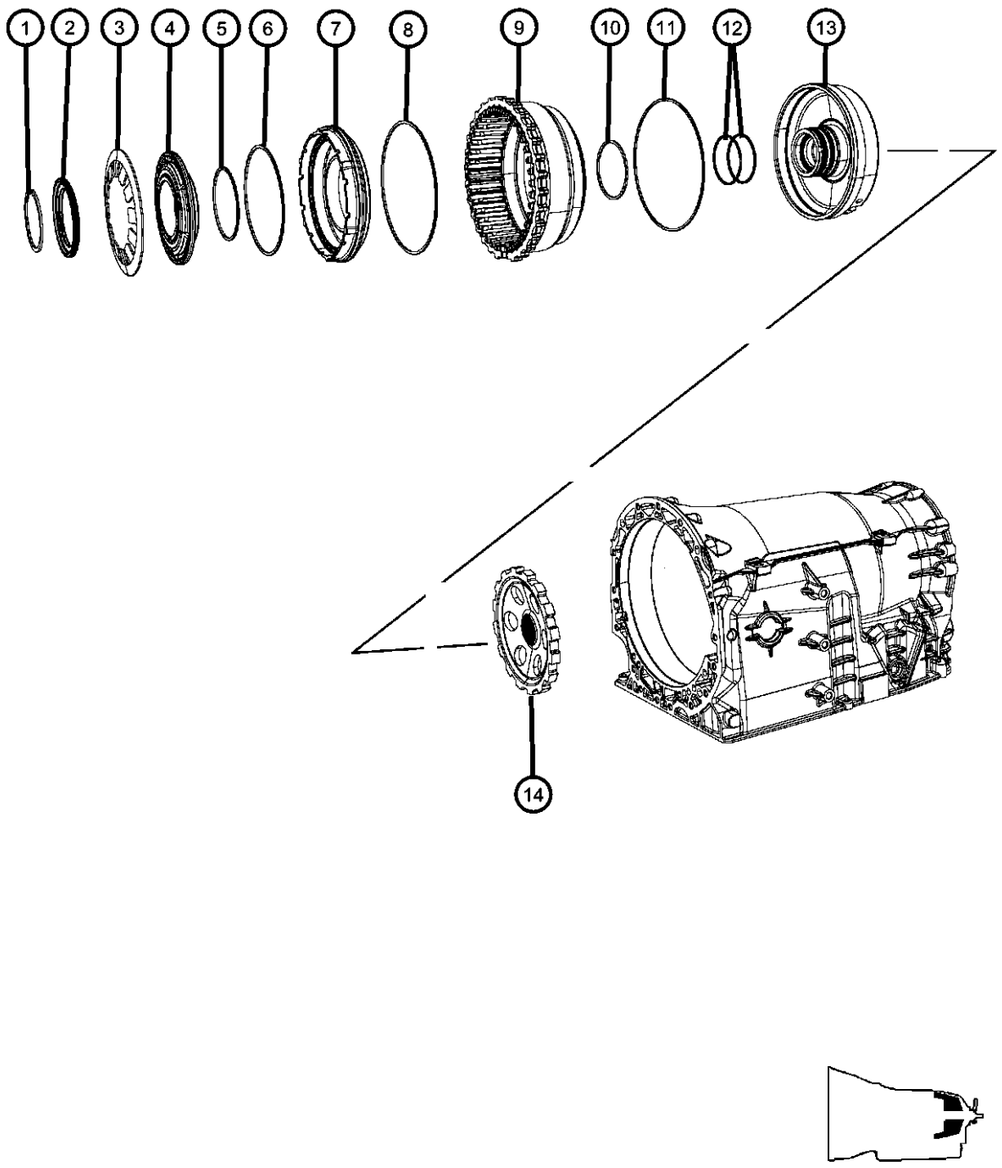

ITEM	PART NUMBER	QTY	LINE	SERIES	BODY	ENGINE	TRANS	TRIM	DESCRIPTION
1									SNAP RING
	52107977AA	1	D			EZC, EZD	DGJ		
		1	D			EZH	DGJ		
		1	D			ESF	DGJ		
2									RETAINER, Spring
	52108203AA	1	D			ESF	DGJ		
		1	D			EZH	DGJ		
		1	D			EZC, EZD	DGJ		
3									SPRING, Piston Return
	52108202AA	1	D			ESF	DGJ		
		1	D			EZC, EZD	DGJ		
		1	D			EZH	DGJ		
4									RING ASSEMBLY, Piston guide
	52108351AA	1	D			EZH	DGJ		
		1	D			ESF	DGJ		
		1	D			EZC, EZD	DGJ		
5									SEAL, Transmission
	52108201AA	1	D			EZH	DGJ		
		1	D			EZC, EZD	DGJ		
		1	D			ESF	DGJ		
6									SEAL, Transmission
	52108200AA	1	D			ESF	DGJ		
		1	D			EZH	DGJ		
		1	D			EZC, EZD	DGJ		
7									PISTON, B2 Clutch
	52108191AA	1	D			EZC, EZD	DGJ		
		1	D			ESF	DGJ		
		1	D			EZH	DGJ		
8									SEAL, Transmission
	52108199AA	1	D			ESF	DGJ		
		1	D			EZH	DGJ		
		1	D			EZC, EZD	DGJ		
9									RETAINER, Clutch

DODGE CHALLENGER (LC)

SERIES	LINE	BODY	ENGINE	TRANSMISSION
H = HIGHLINE P = PREMIUM X = SPECIAL	D = DODGE	22 = 2-DR SEDAN TYPE #2	EGG = 3.5L High Output V6 24V MPI Engine ESF = 6.1L SRT HEMI V8 Engine EZC = 5.7L HEMI VCT Engine EZD = 5.7L Hemi VCT MDS Engine	DEC = 6-Speed Manual TREMEC Transmission DGJ = 5-Speed Auto W5A580 Transmission DGV = 4-Spd. Automatic VLP 42RLE Trans

B2 Clutch Assembly
Figure 021DGJ-532

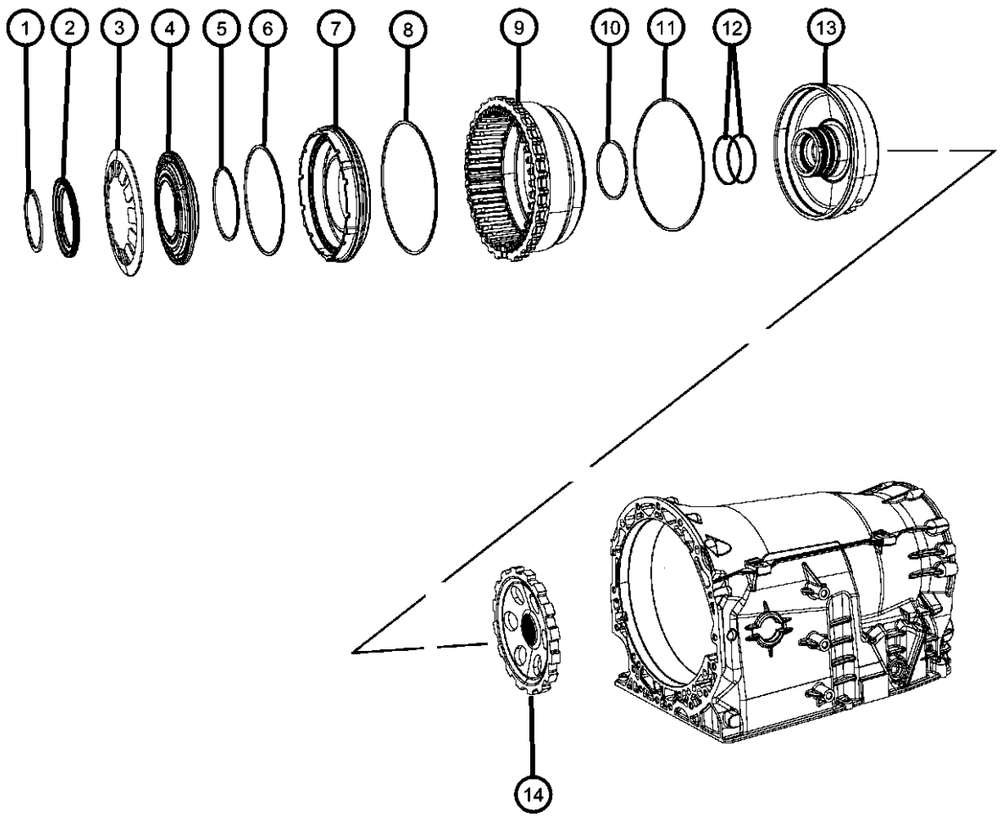

ITEM	PART NUMBER	QTY	LINE	SERIES	BODY	ENGINE	TRANS	TRIM	DESCRIPTION
	52108395AA	1	D			EZC, EZD	DGJ		
		1	D			ESF	DGJ		
		1	D			EZH	DGJ		
10									SEAL, Transmission
	52108189AA	1	D			ESF	DGJ		
		1	D			EZH	DGJ		
		1	D			EZC, EZD	DGJ		
11									SEAL, Transmission
	52108188AA	1	D			EZC, EZD	DGJ		
		1	D			ESF	DGJ		
		1	D			EZH	DGJ		
12									O RING
	52108185AA	2	D			ESF	DGJ		
		2	D			EZH	DGJ		
		2	D			EZC, EZD	DGJ		
13									PLUNGER
	52108182AA	1	D			EZC, EZD	DGJ		
		1	D			ESF	DGJ		
		1	D			EZH	DGJ		
14									SPRAG, Transmission Parking
	52108180AA	1	D			EZC, EZD	DGJ		
		1	D			ESF	DGJ		
		1	D			EZH	DGJ		

DODGE CHALLENGER (LC)

SERIES	LINE	BODY	ENGINE	TRANSMISSION
H = HIGHLINE P = PREMIUM X = SPECIAL	D = DODGE	22 = 2-DR SEDAN TYPE #2	EGG = 3.5L High Output V6 24V MPI Engine ESF = 6.1L SRT HEMI V8 Engine EZC = 5.7L HEMI VCT Engine EZD = 5.7L Hemi VCT MDS Engine	DEC = 6-Speed Manual TREMEC Transmission DGJ = 5-Speed Auto W5A580 Transmission DGV = 4-Spd. Automatic VLP 42RLE Trans

Front Planetary Carrier
Figure 021DGJ-611

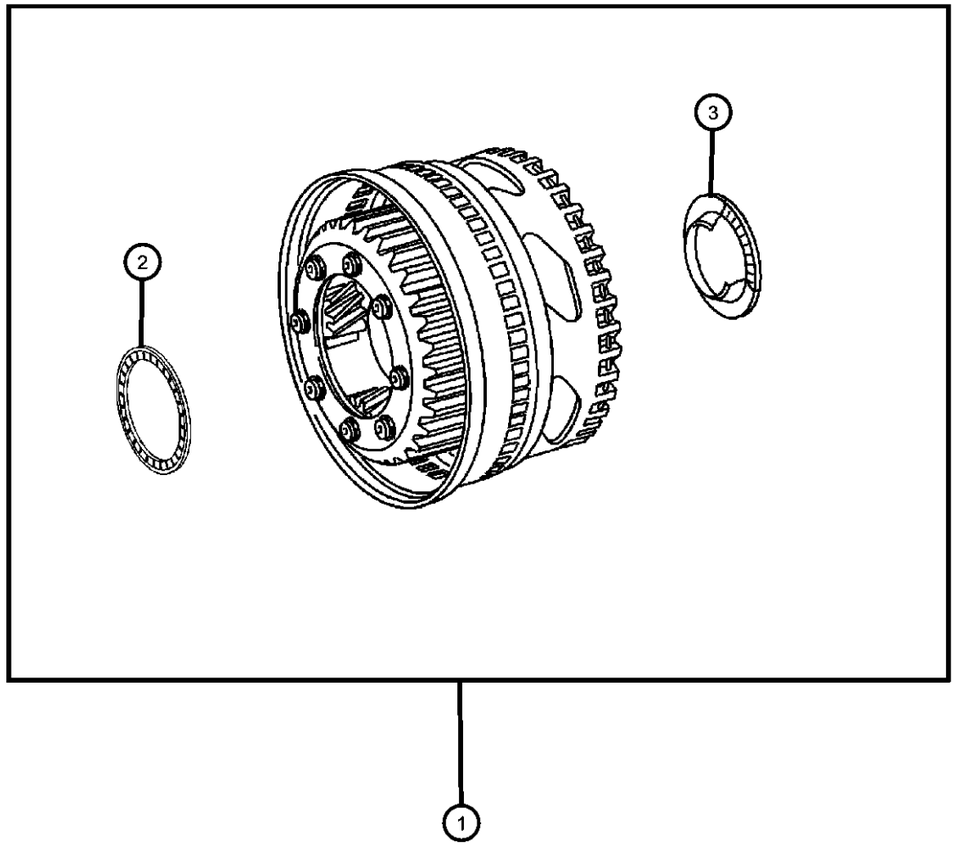

ITEM	PART NUMBER	QTY	LINE	SERIES	BODY	ENGINE	TRANS	TRIM	DESCRIPTION
1									CARRIER, Planetary
	52108513AA	1	D			EZC, EZD	DGJ		
		1	D			ESF	DGJ		
		1	D			EZH	DGJ		
2									NEEDLE BEARING
	52108122AA	1	D			EZC, EZD	DGJ		
		1	D			ESF	DGJ		
		1	D			EZH	DGJ		
3									NEEDLE BEARING
	52108123AA	1	D			EZC, EZD	DGJ		
		1	D			ESF	DGJ		
		1	D			EZH	DGJ		

DODGE CHALLENGER (LC)

SERIES	LINE	BODY	ENGINE	TRANSMISSION
H = HIGHLINE	D = DODGE	22 = 2-DR SEDAN TYPE #2	EGG = 3.5L High Output V6 24V MPI Engine	DEC = 6-Speed Manual TREMEC Transmission
P = PREMIUM			ESF = 6.1L SRT HEMI V8 Engine	DGJ = 5-Speed Auto W5A580 Transmission
X = SPECIAL			EZC = 5.7L HEMI VCT Engine	DGV = 4-Spd. Automatic VLP 42RLE Trans
			EZD = 5.7L Hemi VCT MDS Engine	

AR = use ase required - = Non illustrrated part

Output Shaft With Center And Rear Planetary Gear Sets
Figure 021DGJ-612

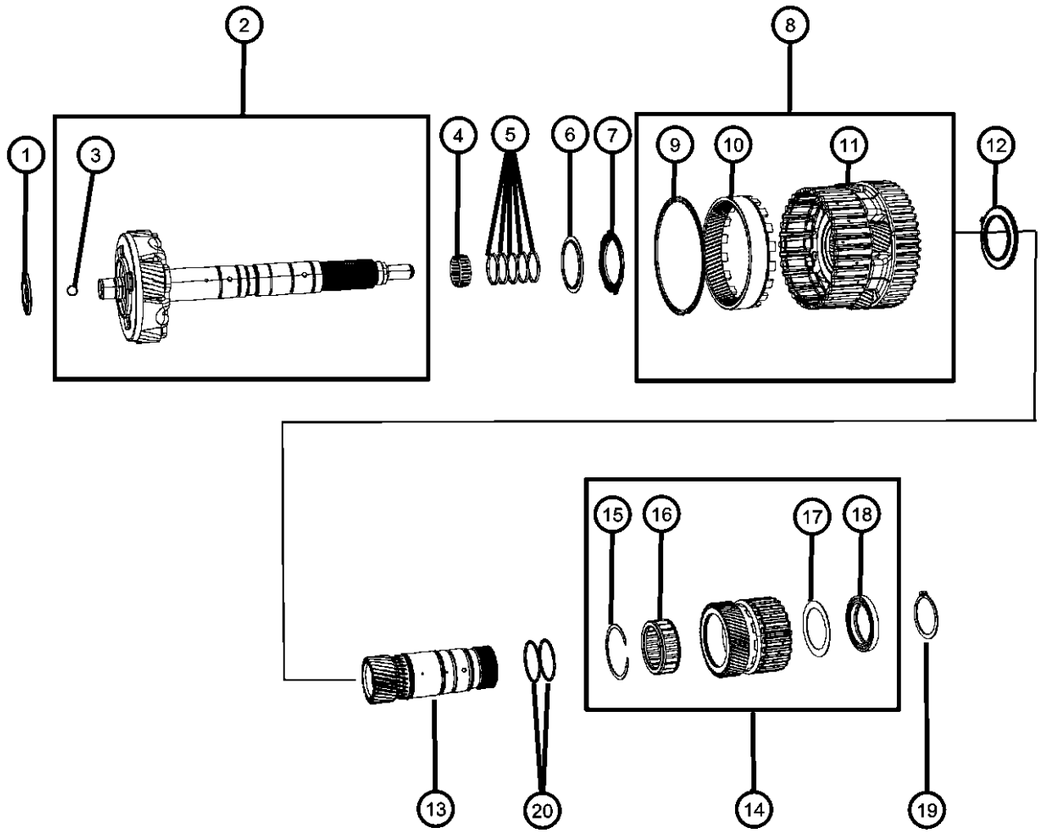

ITEM	PART NUMBER	QTY	LINE	SERIES	BODY	ENGINE	TRANS	TRIM	DESCRIPTION
1									NEEDLE BEARING
	52107927AA	1	D			EZC, EZD	DGJ		
		1	D			ESF	DGJ		
		1	D			EZH	DGJ		
2									SHAFT, Output
	52107929AB	1	D			EZC, EZD	DGJ		
		1	D			ESF	DGJ		
		1	D			EZH	DGJ		
3									BALL, Check
	52108390AA	1	D			EZH	DGJ		
		1	D			EZC, EZD	DGJ		
		1	D			ESF	DGJ		
4									NEEDLE BEARING
	52108069AA	1	D			EZC, EZD	DGJ		
		1	D			ESF	DGJ		
		1	D			EZH	DGJ		
5									SEAL, Transmission
	05179367AA	5	D			EZC, EZD	DGJ		
		5	D			ESF	DGJ		
		5	D			EZH	DGJ		
6									RETAINER, Bearing
	52108070AA	1	D			EZC, EZD	DGJ		
		1	D			ESF	DGJ		
		1	D			EZH	DGJ		
7									NEEDLE BEARING
	52107931AA	1	D			EZH	DGJ		
		1	D			EZC, EZD	DGJ		
		1	D			ESF	DGJ		
8									CARRIER ASSEMBLY, Planetary
	52108071AA	1	D			ESF	DGJ		
		1	D			EZC, EZD	DGJ		
		1	D			EZH	DGJ		
9									SNAP RING

DODGE CHALLENGER (LC)

SERIES	LINE	BODY	ENGINE	TRANSMISSION
H = HIGHLINE P = PREMIUM X = SPECIAL	D = DODGE	22 = 2-DR SEDAN TYPE #2	EGG = 3.5L High Output V6 24V MPI Engine ESF = 6.1L SRT HEMI V8 Engine EZC = 5.7L HEMI VCT Engine EZD = 5.7L Hemi VCT MDS Engine	DEC = 6-Speed Manual TREMEC Transmission DGJ = 5-Speed Auto W5A580 Transmission DGV = 4-Spd. Automatic VLP 42RLE Trans

AR = use ase required - = Non illustrrated part

Output Shaft With Center And Rear Planetary Gear Sets
Figure 021DGJ-612

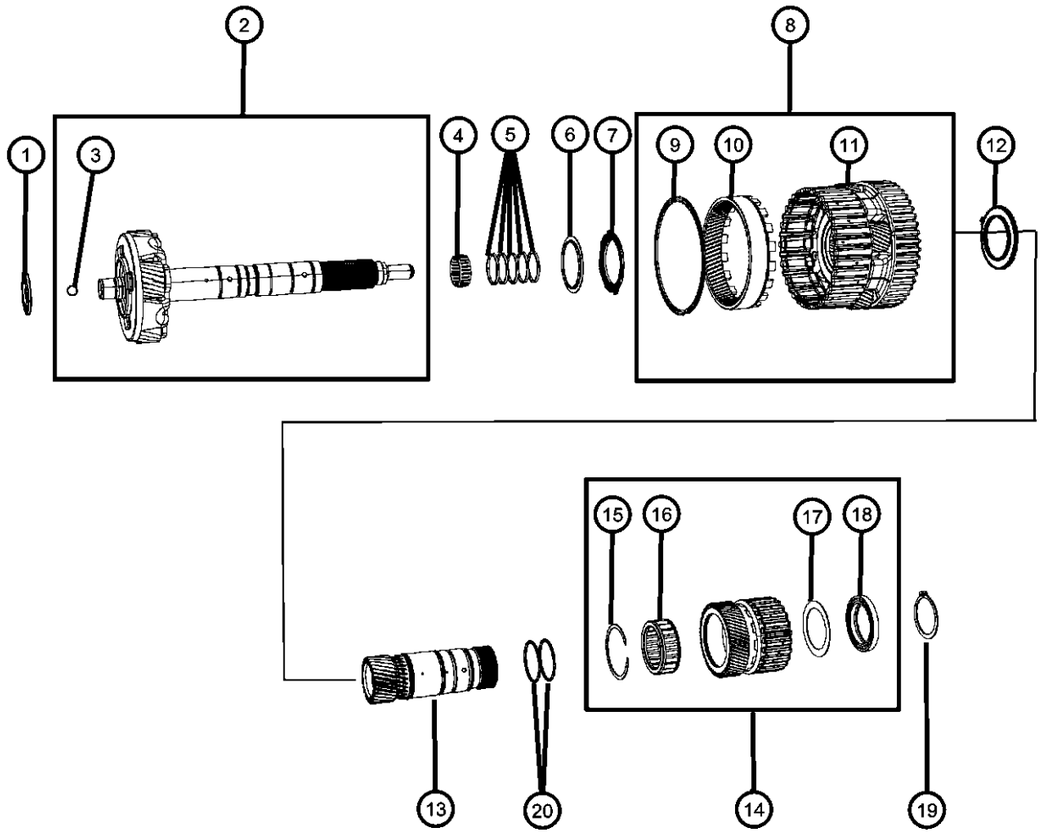

ITEM	PART NUMBER	QTY	LINE	SERIES	BODY	ENGINE	TRANS	TRIM	DESCRIPTION
	52108374AA	1	D			EZH	DGJ		
		1	D			ESF	DGJ		
		1	D			EZC, EZD	DGJ		
10									GEAR, Annulus
	52108376AA	1	D			ESF	DGJ		
		1	D			EZC, EZD	DGJ		
		1	D			EZH	DGJ		
11									CARRIER, Planetary
	52108072AA	1	D			EZH	DGJ		
		1	D			EZC, EZD	DGJ		
		1	D			ESF	DGJ		
12									NEEDLE BEARING
	52107932AA	1	D			EZC, EZD	DGJ		
		1	D			ESF	DGJ		
		1	D			EZH	DGJ		
13									GEAR, Sun
	52108078AA	1	D			EZH	DGJ		
		1	D			EZC, EZD	DGJ		
		1	D			ESF	DGJ		
14									SUN GEAR ASSEMBLY
	52108519AC	1	D			EZC, EZD	DGJ		
		1	D			ESF	DGJ		
		1	D			EZH	DGJ		
15									SNAP RING
	52107966AA	1	D			ESF	DGJ		
		1	D			EZH	DGJ		
		1	D			EZC, EZD	DGJ		
16									CLUTCH, One Way
	52108522AB	1	D			EZH	DGJ		
	52108522AA	1	D			ESF	DGJ		
		1	D			EZC, EZD	DGJ		
17									SPACER
	52108379AA	1	D			EZC, EZD	DGJ		

DODGE CHALLENGER (LC)

SERIES	LINE	BODY	ENGINE	TRANSMISSION
H = HIGHLINE P = PREMIUM X = SPECIAL	D = DODGE	22 = 2-DR SEDAN TYPE #2	EGG = 3.5L High Output V6 24V MPI Engine ESF = 6.1L SRT HEMI V8 Engine EZC = 5.7L HEMI VCT Engine EZD = 5.7L Hemi VCT MDS Engine	DEC = 6-Speed Manual TREMEC Transmission DGJ = 5-Speed Auto W5A580 Transmission DGV = 4-Spd. Automatic VLP 42RLE Trans

AR = use ase required - = Non illustrrated part

Output Shaft With Center And Rear Planetary Gear Sets
Figure 021DGJ-612

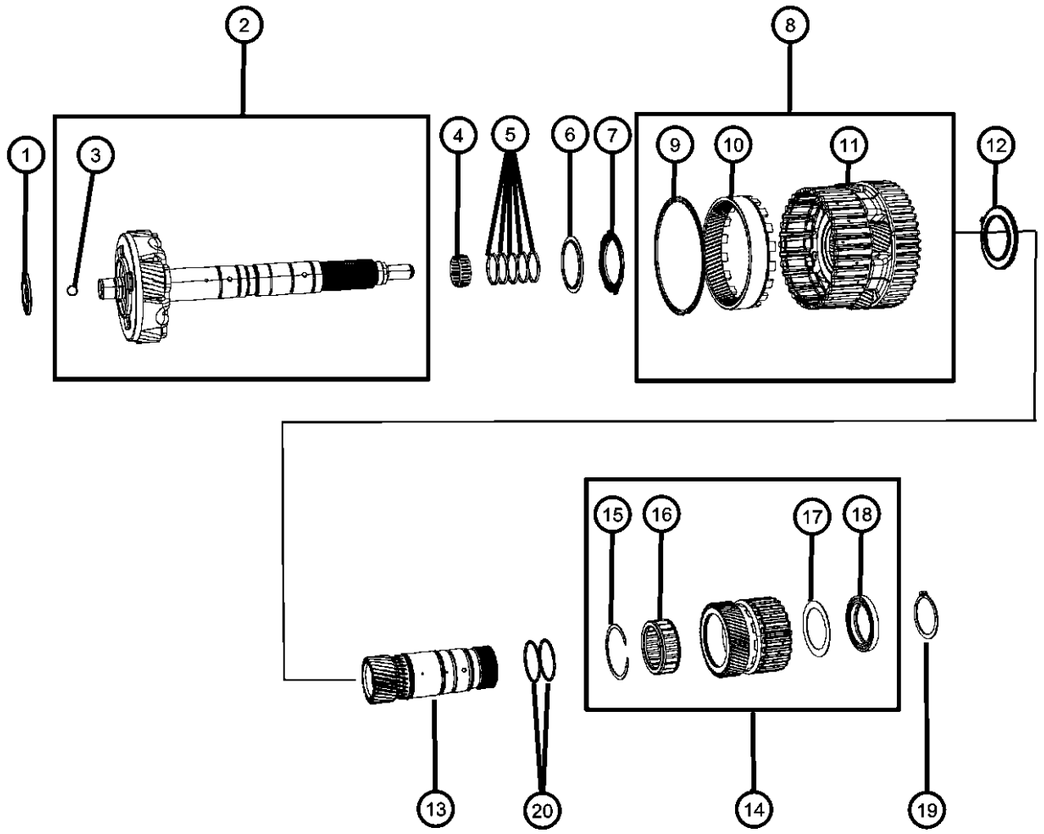

ITEM	PART NUMBER	QTY	LINE	SERIES	BODY	ENGINE	TRANS	TRIM	DESCRIPTION
		1	D			ESF	DGJ		
		1	D			EZH	DGJ		
18									BEARING, Ball
	52108084AA	1	D			ESF	DGJ		
		1	D			EZC, EZD	DGJ		
		1	D			EZH	DGJ		
19									SNAP RING
	52107967AA	1	D			ESF	DGJ		
	52107966AA	1	D			EZH	DGJ		
		1	D			EZC, EZD	DGJ		
20									O RING
	52108085AA	2	D			EZH	DGJ		
		2	D			EZC, EZD	DGJ		
		2	D			ESF	DGJ		

DODGE CHALLENGER (LC)

SERIES	LINE	BODY	ENGINE	TRANSMISSION
H = HIGHLINE	D = DODGE	22 = 2-DR SEDAN TYPE #2	EGG = 3.5L High Output V6 24V MPI Engine	DEC = 6-Speed Manual TREMEC Transmission
P = PREMIUM			ESF = 6.1L SRT HEMI V8 Engine	DGJ = 5-Speed Auto W5A580 Transmission
X = SPECIAL			EZC = 5.7L HEMI VCT Engine	DGV = 4-Spd. Automatic VLP 42RLE Trans
			EZD = 5.7L Hemi VCT MDS Engine	

Valve Body And Related Parts
Figure 021DGJ-825

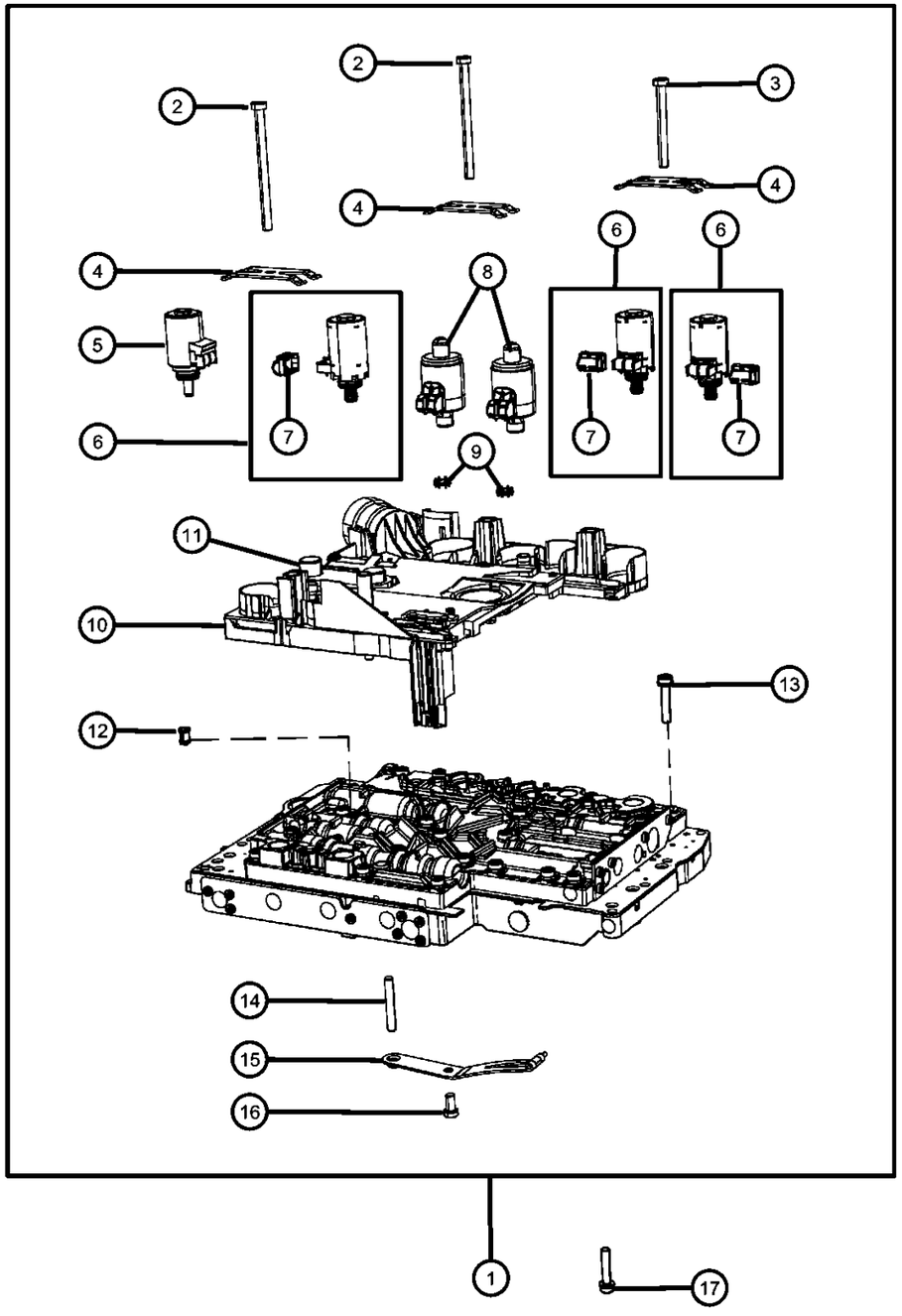

ITEM	PART NUMBER	QTY	LINE	SERIES	BODY	ENGINE	TRANS	TRIM	DESCRIPTION
1									VALVE BODY, Complete
	52108213AB	1	D			ESF	DGJ		
		1	D			EZH	DGJ		
		1	D			EZC, EZD	DGJ		
2									BOLT, Torx Head, M6x80
	52108268AA	2	D			EZC, EZD	DGJ		
		2	D			ESF	DGJ		
		2	D			EZH	DGJ		
3									BOLT, Torx Head, M6x55
	52108269AA	1	D			EZH	DGJ		
		1	D			EZC, EZD	DGJ		
		1	D			ESF	DGJ		
4									PLATE
	52108315AA	3	D			ESF	DGJ		
		3	D			EZH	DGJ		
		3	D			EZC, EZD	DGJ		
5									SOLENOID, Transmission, Torque Converter Clutch
	52108314AA	1	D			EZH	DGJ		
		1	D			ESF	DGJ		
		1	D			EZC, EZD	DGJ		
6									SOLENOID, Transmission, Shift ON/OFF
	05189057AA	3	D			EZH	DGJ		
		3	D			EZC, EZD	DGJ		
		3	D			ESF	DGJ		
7									CAP, Solenoid
	05134761AA	3	D			ESF	DGJ		
		3	D			EZH	DGJ		
		3	D			EZD, EZC	DGJ		
8									SOLENOID, Transmission, Shift Pressure
	05138838AA	2	D			ESF	DGJ		
		2	D			EZH	DGJ		
		2	D			EZC, EZD	DGJ		

DODGE CHALLENGER (LC)

SERIES	LINE	BODY	ENGINE	TRANSMISSION
H = HIGHLINE P = PREMIUM X = SPECIAL	D = DODGE	22 = 2-DR SEDAN TYPE #2	EGG = 3.5L High Output V6 24V MPI Engine ESF = 6.1L SRT HEMI V8 Engine EZC = 5.7L HEMI VCT Engine EZD = 5.7L Hemi VCT MDS Engine	DEC = 6-Speed Manual TREMEC Transmission DGJ = 5-Speed Auto W5A580 Transmission DGV = 4-Spd. Automatic VLP 42RLE Trans

Valve Body And Related Parts
Figure 021DGJ-825

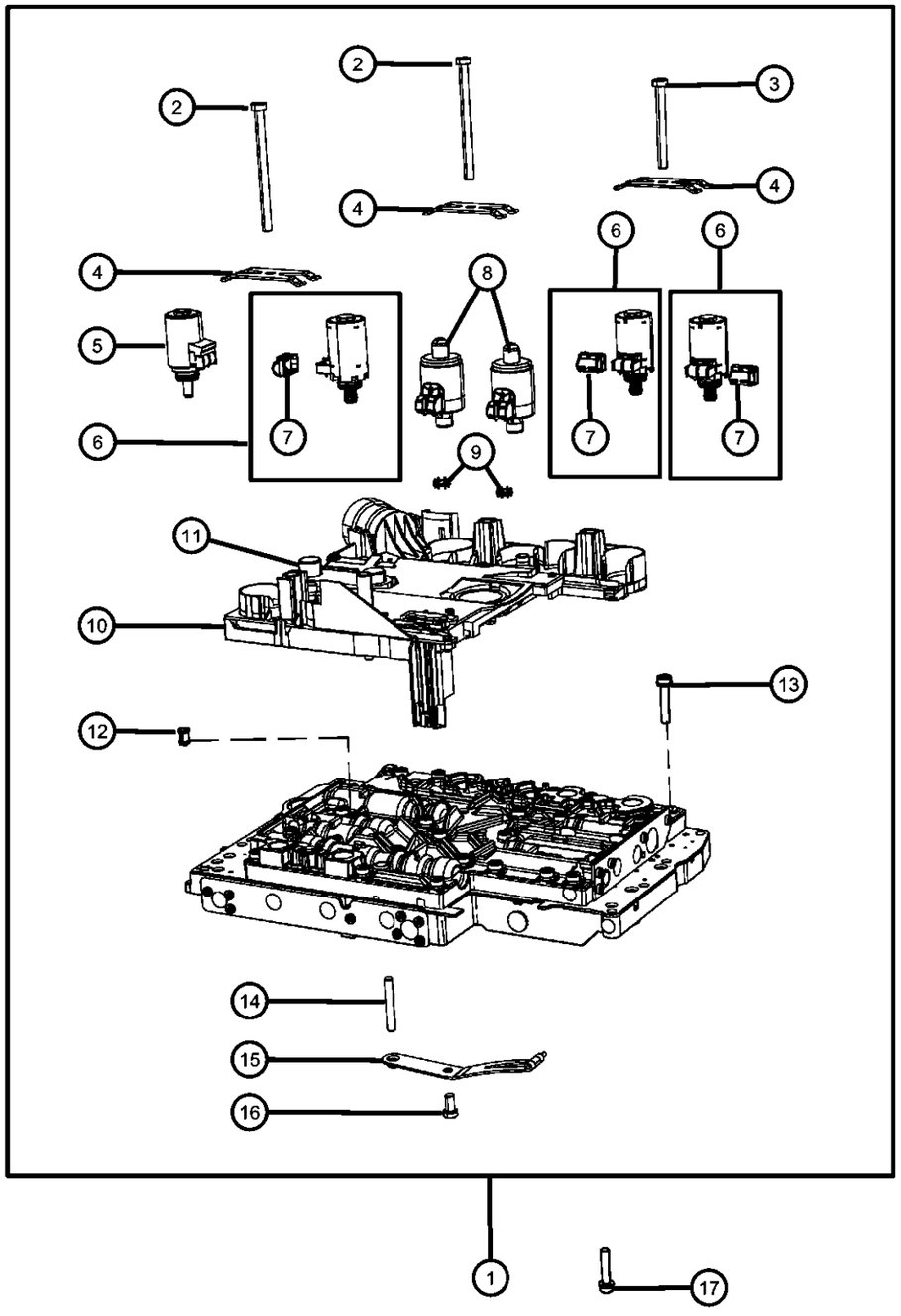

ITEM	PART NUMBER	QTY	LINE	SERIES	BODY	ENGINE	TRANS	TRIM	DESCRIPTION
9									FILTER, Transmission Oil
	52108316AA	2	D			EZC, EZD	DGJ		
		2	D			ESF	DGJ		
		2	D			EZH	DGJ		
10									CONNECTOR ASSEMBLY, Electrical
	52108308AC	1	D			ESF	DGJ		
		1	D			EZH	DGJ		
		1	D			EZC, EZD	DGJ		
11		1							SENSOR, Speed, (NOT SERVICED)
12									FILTER, Transmission Oil
	52108304AA	2	D			EZH	DGJ		
		2	D			ESF	DGJ		
		2	D			EZC, EZD	DGJ		
13									BOLT, Torx Head, M6x30
	52108267AA	29	D			ESF	DGJ		
		29	D			EZH	DGJ		
		29	D			EZC, EZD	DGJ		
14									DOWEL
	05098951AA	1	D			EZH	DGJ		
		1	D			EZC, EZD	DGJ		
		1	D			ESF	DGJ		
15									DETENT, Valve Body
	52108258AA	1	D			ESF	DGJ		
		1	D			EZH	DGJ		
		1	D			EZC, EZD	DGJ		
16									BOLT, Torx Head, M6x12
	52108266AB	1	D			EZC, EZD	DGJ		
		1	D			ESF	DGJ		
		1	D			EZH	DGJ		
17									BOLT, Torx Head, M6x30
	52108267AA	10	D			ESF	DGJ		

DODGE CHALLENGER (LC)

SERIES	LINE	BODY	ENGINE	TRANSMISSION
H = HIGHLINE P = PREMIUM X = SPECIAL	D = DODGE	22 = 2-DR SEDAN TYPE #2	EGG = 3.5L High Output V6 24V MPI Engine ESF = 6.1L SRT HEMI V8 Engine EZC = 5.7L HEMI VCT Engine EZD = 5.7L Hemi VCT MDS Engine	DEC = 6-Speed Manual TREMEC Transmission DGJ = 5-Speed Auto W5A580 Transmission DGV = 4-Spd. Automatic VLP 42RLE Trans

Valve Body And Related Parts
Figure 021DGJ-825

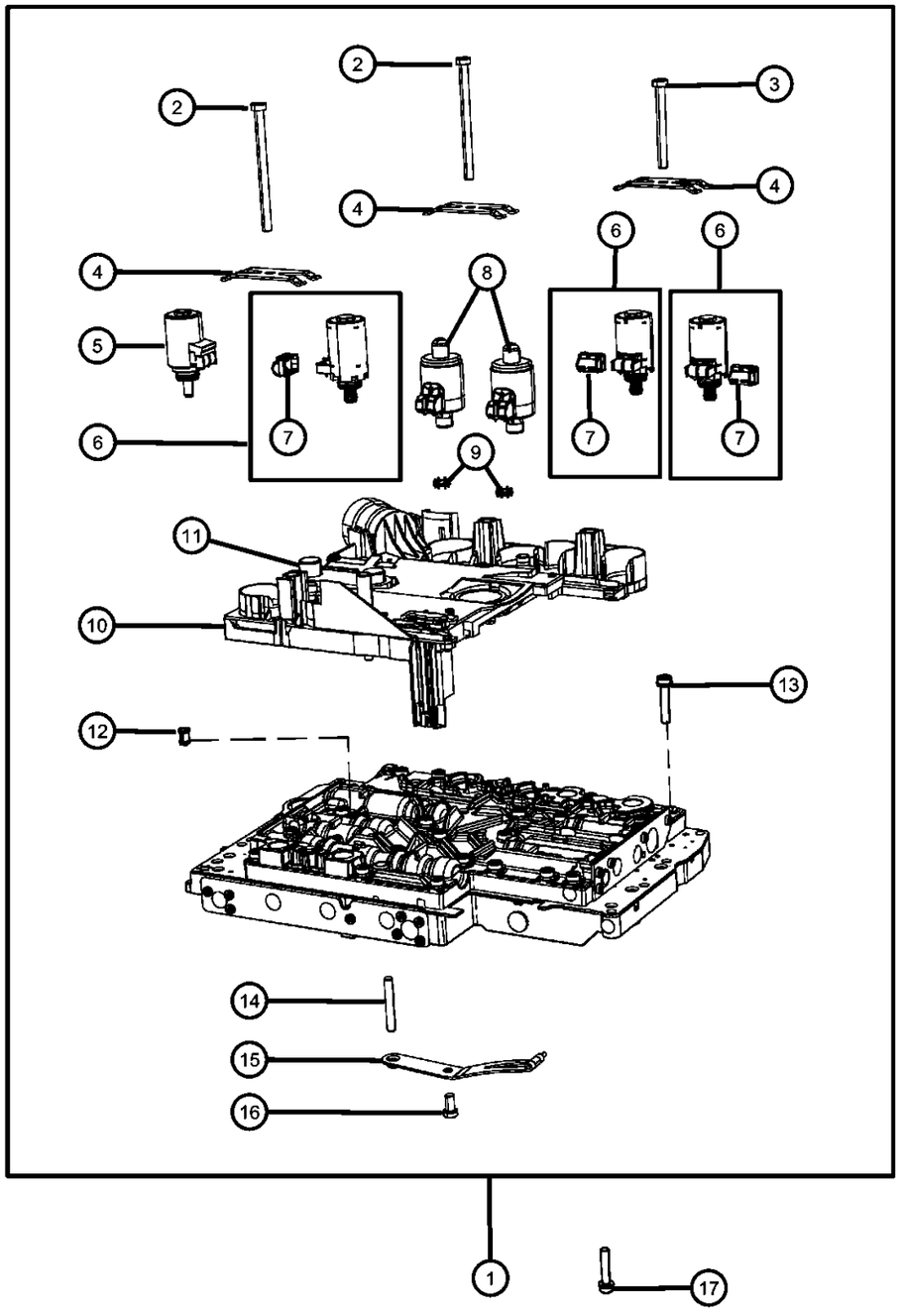

ITEM	PART NUMBER	QTY	LINE	SERIES	BODY	ENGINE	TRANS	TRIM	DESCRIPTION
		10	D			EZH	DGJ		
		10	D			EZC, EZD	DGJ		

DODGE CHALLENGER (LC)

SERIES	LINE	BODY	ENGINE	TRANSMISSION
H = HIGHLINE P = PREMIUM X = SPECIAL	D = DODGE	22 = 2-DR SEDAN TYPE #2	EGG = 3.5L High Output V6 24V MPI Engine ESF = 6.1L SRT HEMI V8 Engine EZC = 5.7L HEMI VCT Engine EZD = 5.7L Hemi VCT MDS Engine	DEC = 6-Speed Manual TREMEC Transmission DGJ = 5-Speed Auto W5A580 Transmission DGV = 4-Spd. Automatic VLP 42RLE Trans

Parking Sprag And Related Parts
Figure 021DGJ-860

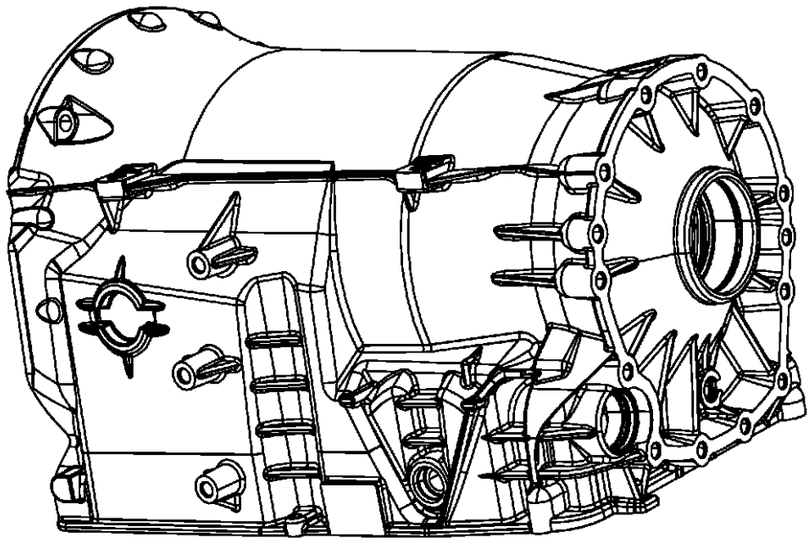

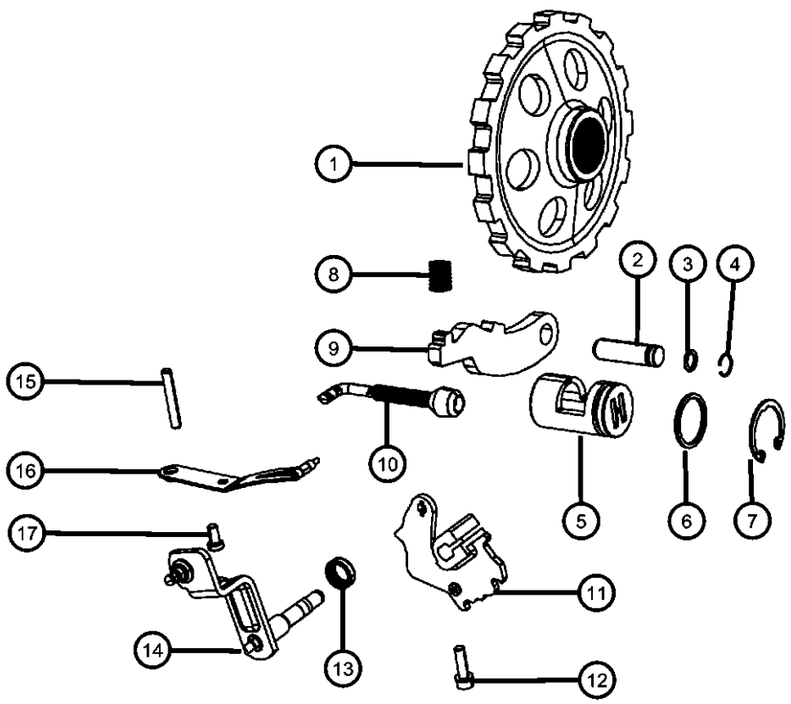

ITEM	PART NUMBER	QTY	LINE	SERIES	BODY	ENGINE	TRANS	TRIM	DESCRIPTION
1									SPRAG, Transmission Parking
	52108180AA	1	D			EZC, EZD	DGJ		
		1	D			ESF	DGJ		
		1	D			EZH	DGJ		
2									SHAFT, Parking Pawl
	52108155AA	1	D			EZC, EZD	DGJ		
		1	D			ESF	DGJ		
		1	D			EZH	DGJ		
3									O RING
	52108156AB	1	D			EZH	DGJ		
		1	D			EZC, EZD	DGJ		
		1	D			ESF	DGJ		
4									SNAP RING
	52107975AA	1	D			EZC, EZD	DGJ		
		1	D			ESF	DGJ		
		1	D			EZH	DGJ		
5									GUIDE
	52108176AA	1	D			EZH	DGJ		
		1	D			EZC, EZD	DGJ		
		1	D			ESF	DGJ		
6									O RING
	52108177AA	1	D			EZC, EZD	DGJ		
		1	D			ESF	DGJ		
		1	D			EZH	DGJ		
7									SNAP RING
	52107976AA	1	D			EZH	DGJ		
		1	D			EZD, EZC	DGJ		
		1	D			ESF	DGJ		
8									SPRING
	52108157AA	1	D			EZC, EZD	DGJ		
		1	D			ESF	DGJ		
		1	D			EZH	DGJ		
9									PAWL, Parking Sprag

DODGE CHALLENGER (LC)

SERIES	LINE	BODY	ENGINE	TRANSMISSION
H = HIGHLINE P = PREMIUM X = SPECIAL	D = DODGE	22 = 2-DR SEDAN TYPE #2	EGG = 3.5L High Output V6 24V MPI Engine ESF = 6.1L SRT HEMI V8 Engine EZC = 5.7L HEMI VCT Engine EZD = 5.7L Hemi VCT MDS Engine	DEC = 6-Speed Manual TREMEC Transmission DGJ = 5-Speed Auto W5A580 Transmission DGV = 4-Spd. Automatic VLP 42RLE Trans

AR = use ase required - = Non illustrrated part

Parking Sprag And Related Parts
Figure 021DGJ-860

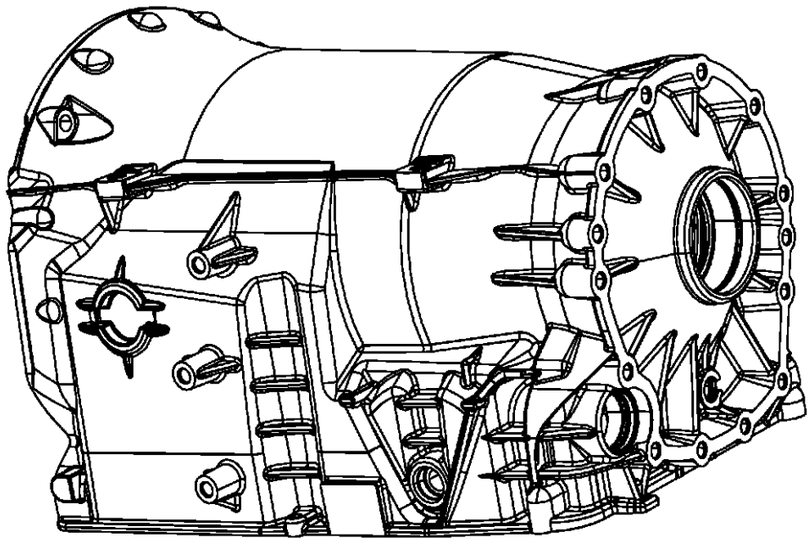

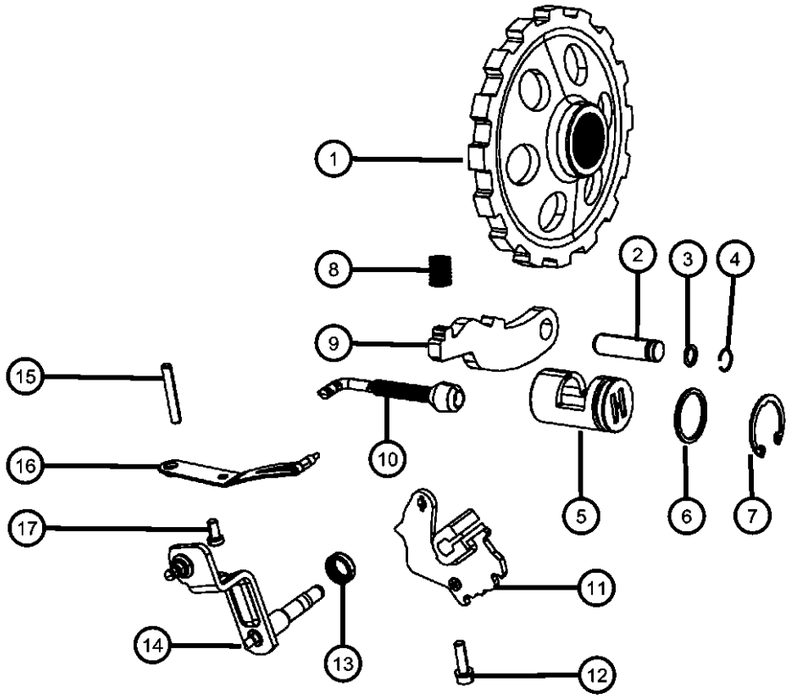

ITEM	PART NUMBER	QTY	LINE	SERIES	BODY	ENGINE	TRANS	TRIM	DESCRIPTION
	52108154AA	1	D			EZH	DGJ		
		1	D			EZC, EZD	DGJ		
		1	D			ESF	DGJ		
10									LINKAGE, Transmission
	52108166AA	1	D			EZC, EZD	DGJ		
		1	D			ESF	DGJ		
		1	D			EZH	DGJ		
11									DETENT, Gearshift
	52108349AB	1	D			EZH	DGJ		
		1	D			EZC, EZD	DGJ		
		1	D			ESF	DGJ		
12									BOLT, Torx Head, M6x20
	52108178AA	1	D			EZC, EZD	DGJ		
		1	D			ESF	DGJ		
		1	D			EZH	DGJ		
13									SEAL, Transmission
	05134933AA	1	D			EZH	DGJ		
		1	D			EZC, EZD	DGJ		
		1	D			ESF	DGJ		
14									SHAFT, Shift Lever
	52108172AA	1	D			EZC, EZD	DGJ		
		1	D			ESF	DGJ		
		1	D			EZH	DGJ		
15									DOWEL
	05098951AA	1	D			EZH	DGJ		
		1	D			ESF	DGJ		
		1	D			EZC, EZD	DGJ		
16									DETENT, Valve Body
	52108258AA	1	D			EZC, EZD	DGJ		
		1	D			ESF	DGJ		
		1	D			EZH	DGJ		
17									BOLT, Torx Head, M6x12
	52108266AB	1	D			EZC, EZD	DGJ		

DODGE CHALLENGER (LC)

SERIES	LINE	BODY	ENGINE	TRANSMISSION
H = HIGHLINE P = PREMIUM X = SPECIAL	D = DODGE	22 = 2-DR SEDAN TYPE #2	EGG = 3.5L High Output V6 24V MPI Engine ESF = 6.1L SRT HEMI V8 Engine EZC = 5.7L HEMI VCT Engine EZD = 5.7L Hemi VCT MDS Engine	DEC = 6-Speed Manual TREMEC Transmission DGJ = 5-Speed Auto W5A580 Transmission DGV = 4-Spd. Automatic VLP 42RLE Trans

AR = use ase required - = Non illustrrated part

Parking Sprag And Related Parts
Figure 021DGJ-860

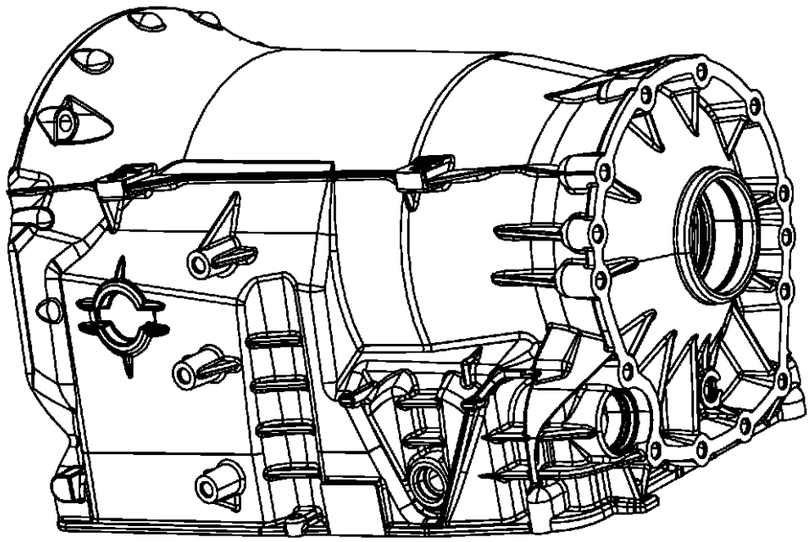

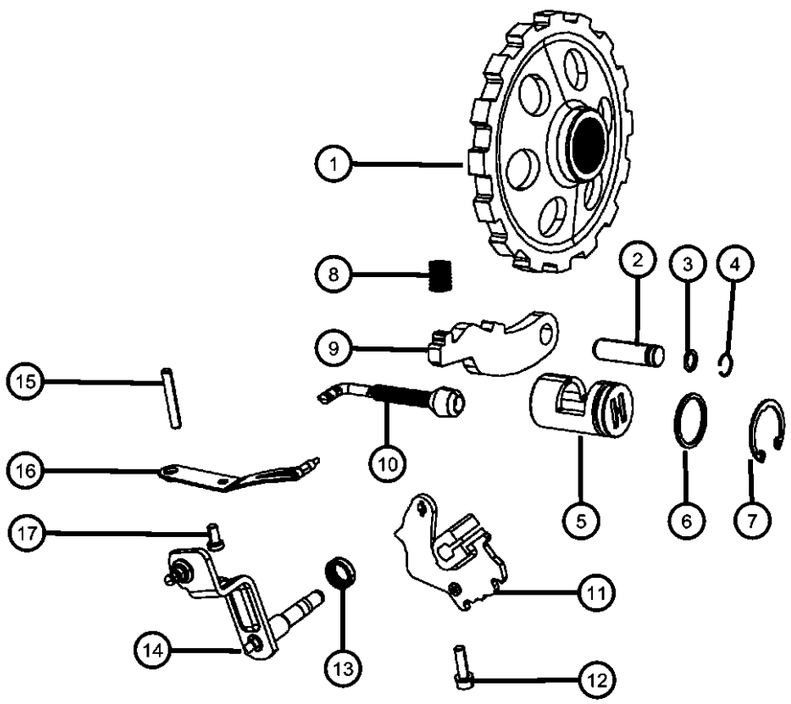

ITEM	PART NUMBER	QTY	LINE	SERIES	BODY	ENGINE	TRANS	TRIM	DESCRIPTION
		1	D			ESF	DGJ		
		1	D			EZH	DGJ		

DODGE CHALLENGER (LC)

SERIES	LINE	BODY	ENGINE	TRANSMISSION
H = HIGHLINE P = PREMIUM X = SPECIAL	D = DODGE	22 = 2-DR SEDAN TYPE #2	EGG = 3.5L High Output V6 24V MPI Engine ESF = 6.1L SRT HEMI V8 Engine EZC = 5.7L HEMI VCT Engine EZD = 5.7L Hemi VCT MDS Engine	DEC = 6-Speed Manual TREMEC Transmission DGJ = 5-Speed Auto W5A580 Transmission DGV = 4-Spd. Automatic VLP 42RLE Trans

AR = use ase required - = Non illustrrated part

Gearshift Controls
Figure 021DGJ-1105

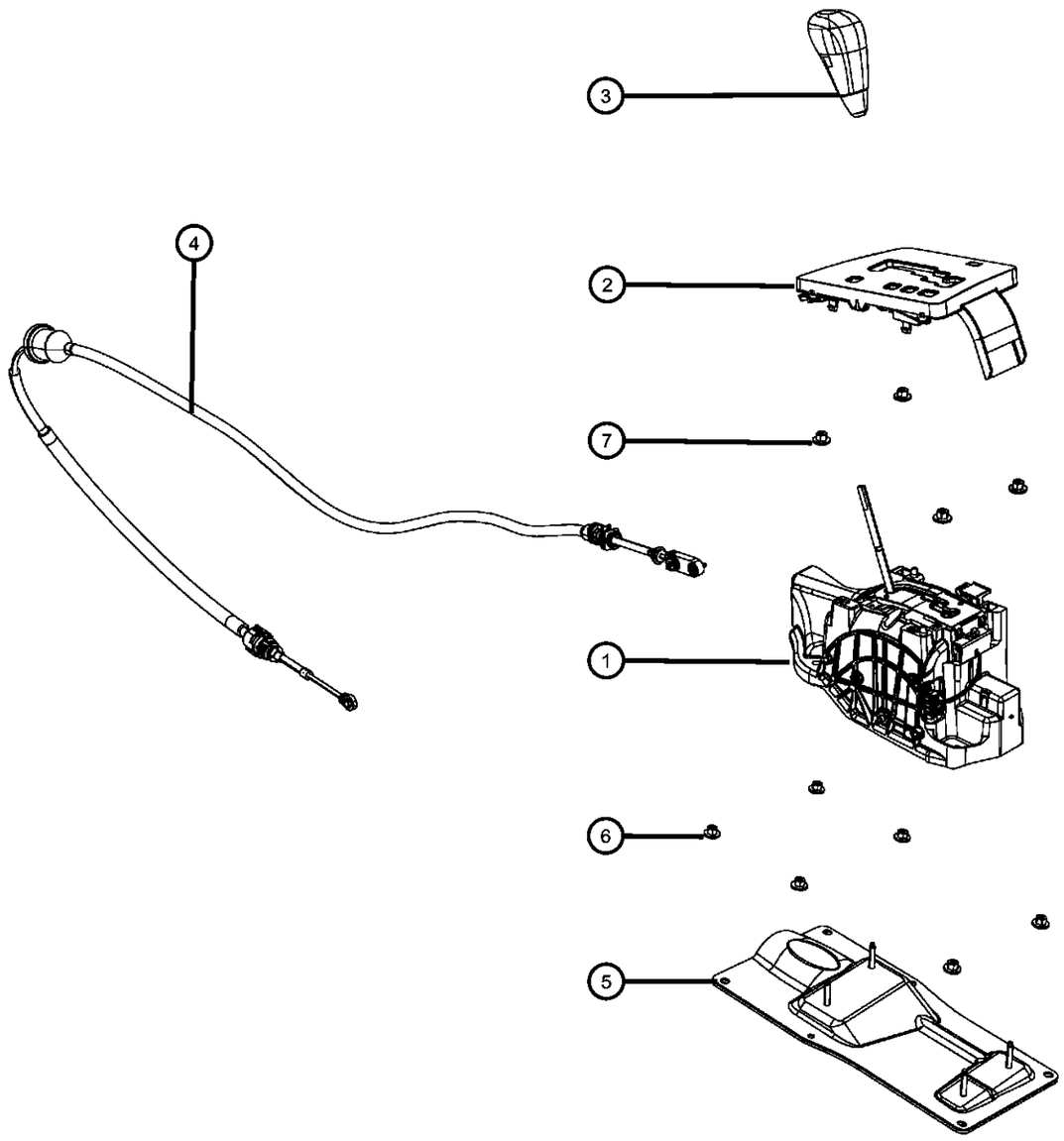

ITEM	PART NUMBER	QTY	LINE	SERIES	BODY	ENGINE	TRANS	TRIM	DESCRIPTION
1									SHIFTER, Transmission
	04578584AD	1	D			EZ0	DGJ		
		1	D			ESF	DGJ		
2									BEZEL, Console PRNDL
	04578633AA	1	D			EZ0	DGJ		
		1	D			ESF	DGJ		
3									KNOB, Gearshift
	04578692AA	1	D			EZ0	DGJ		
	05038459AA	1	D			ESF	DGJ		
4	04578758AA	1	D				DGJ		CABLE, Gear Selector
5	04779565AB	1	D				DGJ		BRACKET, Cable Mounting
6	06506456AA	6	D				DGJ, DGV		NUT AND WASHER, Hex, M6x1.0
7	06506456AA	4	D				DGJ, DGV		NUT AND WASHER, Hex, M6x1.0

DODGE CHALLENGER (LC)

SERIES	LINE	BODY	ENGINE	TRANSMISSION
H = HIGHLINE P = PREMIUM X = SPECIAL	D = DODGE	22 = 2-DR SEDAN TYPE #2	EGG = 3.5L High Output V6 24V MPI Engine ESF = 6.1L SRT HEMI V8 Engine EZC = 5.7L HEMI VCT Engine EZD = 5.7L Hemi VCT MDS Engine	DEC = 6-Speed Manual TREMEC Transmission DGJ = 5-Speed Auto W5A580 Transmission DGV = 4-Spd. Automatic VLP 42RLE Trans

AR = use ase required - = Non illustrrated part

Gearshift Lever, Cable and Bracket
Figure 021DGJ-1115

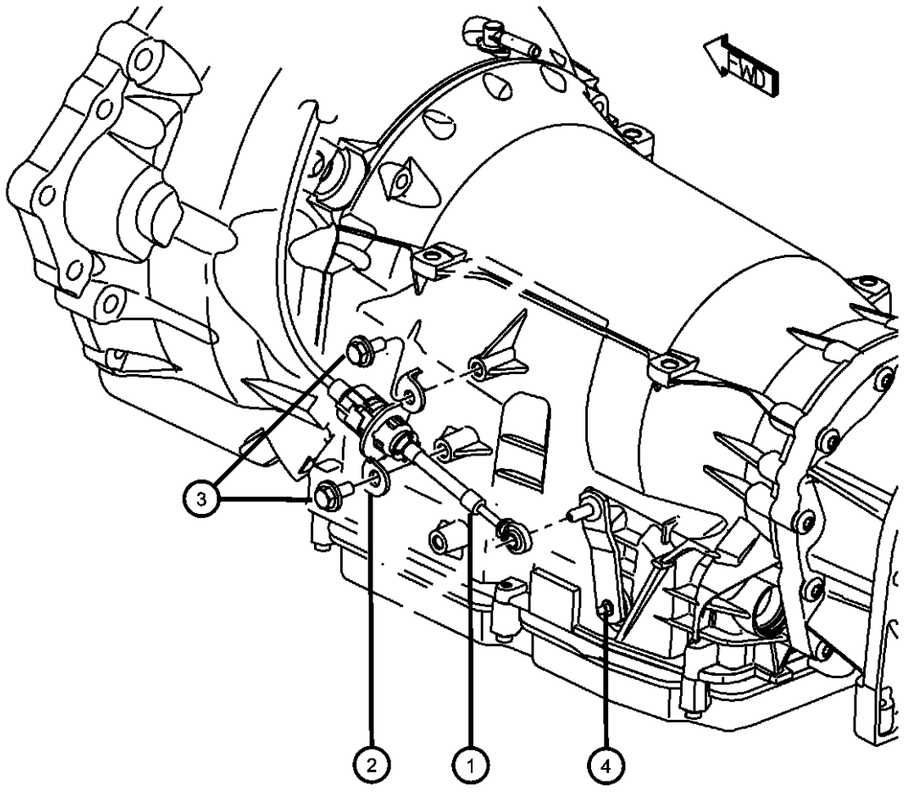

ITEM	PART NUMBER	QTY	LINE	SERIES	BODY	ENGINE	TRANS	TRIM	DESCRIPTION
1	04578758AA	1	D				DGJ		CABLE, Gear Selector
2	04578071AA	1	D				DGJ		BRACKET, Cable Mounting
3	06503692	2	D				DGJ, DGV		SCREW, M8-1.25
4									SHAFT, Shift Lever
	52108172AA	1	D			EZC, EZD	DGJ		
		1	D			ESF	DGJ		
		1	D			EZH	DGJ		

DODGE CHALLENGER (LC)

SERIES	LINE	BODY	ENGINE	TRANSMISSION
H = HIGHLINE P = PREMIUM X = SPECIAL	D = DODGE	22 = 2-DR SEDAN TYPE #2	EGG = 3.5L High Output V6 24V MPI Engine ESF = 6.1L SRT HEMI V8 Engine EZC = 5.7L HEMI VCT Engine EZD = 5.7L Hemi VCT MDS Engine	DEC = 6-Speed Manual TREMEC Transmission DGJ = 5-Speed Auto W5A580 Transmission DGV = 4-Spd. Automatic VLP 42RLE Trans

AR = use ase required - = Non illustrrated part

Mounting Covers And Shields
Figure 021DGJ-1205

ITEM	PART NUMBER	QTY	LINE	SERIES	BODY	ENGINE	TRANS	TRIM	DESCRIPTION
1	04792978AB	1	D				DEC, DGJ		COVER, Transmission Dust
2									BOLT AND CONED WASHER, Hex head, M6X1.00X20.00
	06504810AA	1	D			EZC, EZD, ESF			
		1	D			EZH			

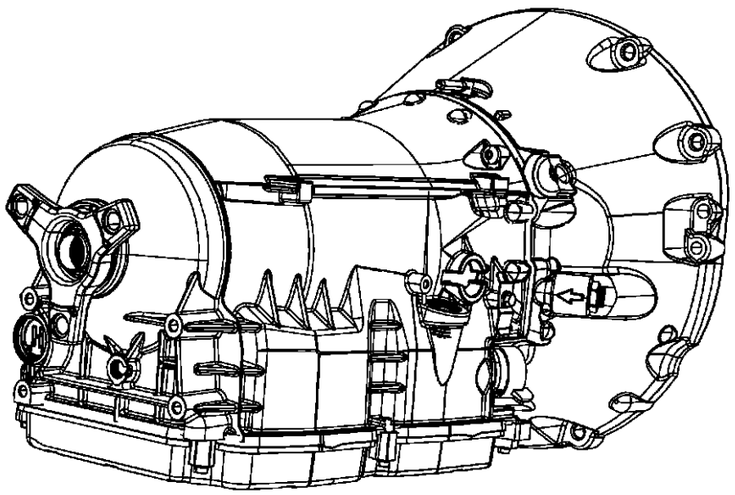

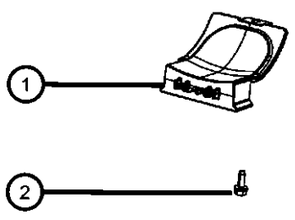

DODGE CHALLENGER (LC)

SERIES	LINE	BODY	ENGINE	TRANSMISSION
H = HIGHLINE P = PREMIUM X = SPECIAL	D = DODGE	22 = 2-DR SEDAN TYPE #2	EGG = 3.5L High Output V6 24V MPI Engine ESF = 6.1L SRT HEMI V8 Engine EZC = 5.7L HEMI VCT Engine EZD = 5.7L Hemi VCT MDS Engine	DEC = 6-Speed Manual TREMEC Transmission DGJ = 5-Speed Auto W5A580 Transmission DGV = 4-Spd. Automatic VLP 42RLE Trans

AR = use ase required - = Non illustrrated part

Structural Collar
Figure 021DGJ-1210

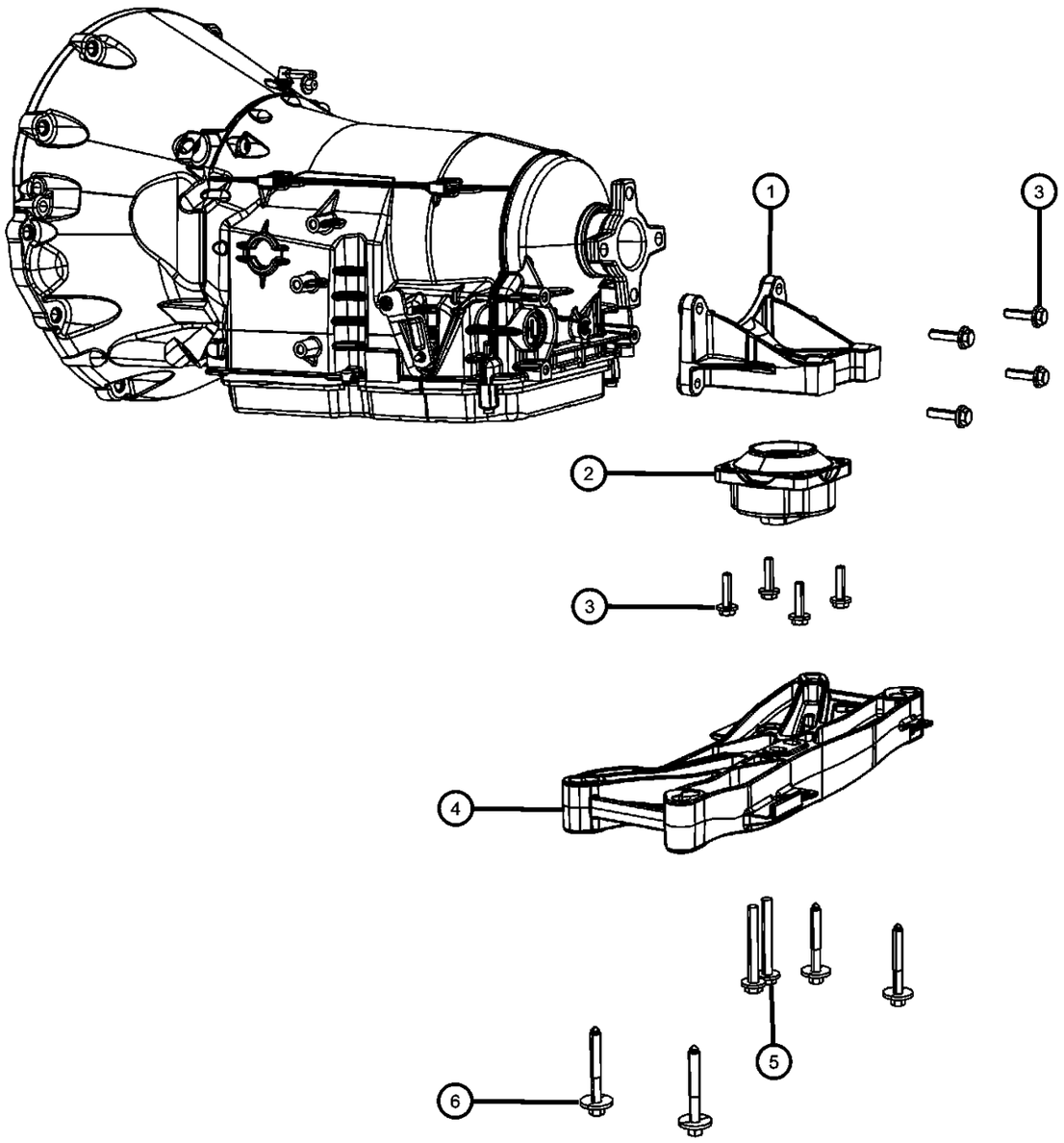

ITEM	PART NUMBER	QTY	LINE	SERIES	BODY	ENGINE	TRANS	TRIM	DESCRIPTION
1	04578062AC	1	D				DGJ		BRACKET, Transmission Mount
2									MOUNT, Transmission
	04578063AE	1	D			EG0			
	04578061AE	1	D			ES0, EZ0	DGJ		
3	06101759	4	D				DGJ, DGV		SCREW AND WASHER, Hex Head, M8x1.25x35
4									CROSSMEMBER, Transmission
	04578055AE	1	D			ES0, EZ0	DGJ		
	04578351AB	1	D			EG0	DGJ		
5	06101553	2	D				DGJ, DGV		BOLT AND WASHER, Hex Head, M10x1.50x80
6	06507788AA	4	D						SCREW, Transmission Crossmember To Body

DODGE CHALLENGER (LC)

SERIES	LINE	BODY	ENGINE	TRANSMISSION
H = HIGHLINE P = PREMIUM X = SPECIAL	D = DODGE	22 = 2-DR SEDAN TYPE #2	EGG = 3.5L High Output V6 24V MPI Engine ESF = 6.1L SRT HEMI V8 Engine EZC = 5.7L HEMI VCT Engine EZD = 5.7L Hemi VCT MDS Engine	DEC = 6-Speed Manual TREMEC Transmission DGJ = 5-Speed Auto W5A580 Transmission DGV = 4-Spd. Automatic VLP 42RLE Trans

AR = use ase required - = Non illustrrated part

Mounting Bolts
Figure 021DGJ-1215

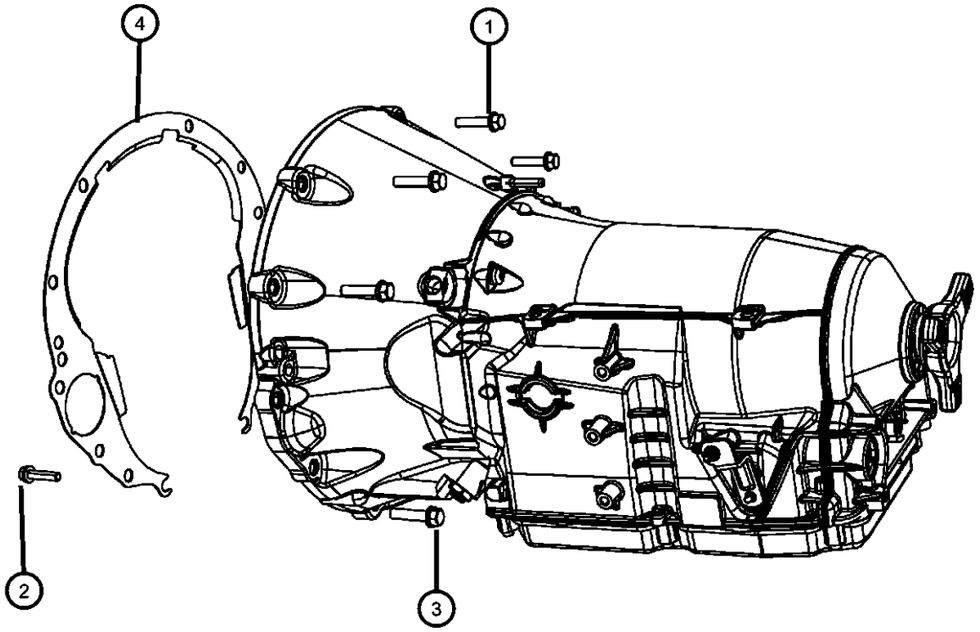

ITEM	PART NUMBER	QTY	LINE	SERIES	BODY	ENGINE	TRANS	TRIM	DESCRIPTION
1									STUD, Double Ended
	06507890AA	4	D			ESF, EZD	DGJ		
		4	D			EZH	DGJ		
2									BOLT AND WASHER, Hex Head Lock, 0.437-14x2.00
	06036385AA	2	D			ESF, EZD	DGJ		
		2	D			EZH	DGJ		
3									BOLT AND CONED WASHER, Hex head, M6X1.00X20.00
	06504810AA	1	D			EZH			
		1	D			ESF, EZC, EZD			
4	04591910AA	1	D				DEC, DGJ		COVER, Transmission Dust

DODGE CHALLENGER (LC)

SERIES	LINE	BODY	ENGINE	TRANSMISSION
H = HIGHLINE P = PREMIUM X = SPECIAL	D = DODGE	22 = 2-DR SEDAN TYPE #2	EGG = 3.5L High Output V6 24V MPI Engine ESF = 6.1L SRT HEMI V8 Engine EZC = 5.7L HEMI VCT Engine EZD = 5.7L Hemi VCT MDS Engine	DEC = 6-Speed Manual TREMEC Transmission DGJ = 5-Speed Auto W5A580 Transmission DGV = 4-Spd. Automatic VLP 42RLE Trans

AR = use ase required - = Non illustrrated part

Group - 021DGV

42RLE; 4-Speed; Automatic Transmission

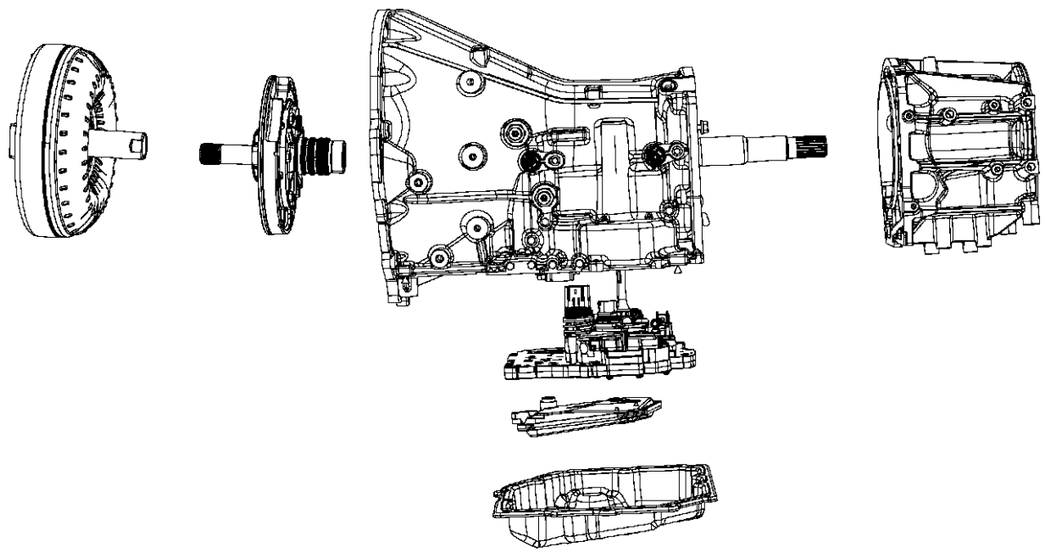

021DGV-100 Automatic Transmission / Transaxle and Torque Converter 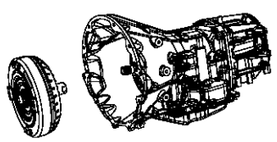	**021DGV-1100** Gearshift Controls and Related Parts 	**021DGV-1200** Mounting and Skid Plate 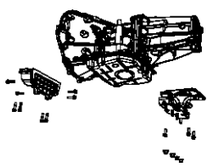	**021DGV-200** Case, Extension, Oil Pan, and Indicator (Dipstick) 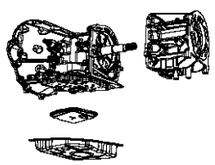
021DGV-400 Oil Pump 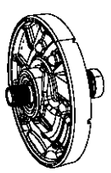	**021DGV-500** Clutches	**021DGV-600** Gear Train 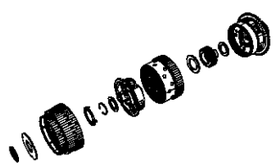	**021DGV-800** Valve Body, Accumulator, Solenoid and Parking Sprag

Group - 021DGV 42RLE; 4-Speed; Automatic Transmission

Illustration Title — Group-Fig. No.

Automatic Transmission / Transaxle and Torque Converter
Transmission / Transaxle Assembly ..... Fig. 021DGV - 105
Torque Converter ..... Fig. 021DGV - 110

Case, Extension, Oil Pan, and Indicator (Dipstick)
Case ..... Fig. 021DGV - 205
Extension ..... Fig. 021DGV - 222
Oil Fill Tube And Related Parts ..... Fig. 021DGV - 225
Oil Pan, Cover And Related Parts ..... Fig. 021DGV - 230
Filters ..... Fig. 021DGV - 235
Sensors, Vents And Quick Connectors ..... Fig. 021DGV - 240

Oil Pump
Oil Pump and Related Parts ..... Fig. 021DGV - 405

Clutches
Input Clutch Assembly ..... Fig. 021DGV - 514
Input Clutch Assembly ..... Fig. 021DGV - 515
Input Clutch Assembly ..... Fig. 021DGV - 516
Input Clutch Assembly ..... Fig. 021DGV - 517
Input Clutch Assembly ..... Fig. 021DGV - 518
2 / 4 Clutch ..... Fig. 021DGV - 519
Low / Reverse Clutch ..... Fig. 021DGV - 520

Gear Train
Front / Rear Planetary ..... Fig. 021DGV - 608

Valve Body, Accumulator, Solenoid and Parking Sprag
Valve Body And Related Parts ..... Fig. 021DGV - 805
Accumulator And Related Parts ..... Fig. 021DGV - 850
Parking Sprag And Related Parts ..... Fig. 021DGV - 860

Gearshift Controls and Related Parts
Gearshift Controls ..... Fig. 021DGV - 1105
Gearshift Lever, Cable and Bracket ..... Fig. 021DGV - 1115

Mounting and Skid Plate
Mounting Covers And Shields ..... Fig. 021DGV - 1205
Structural Collar ..... Fig. 021DGV - 1210
Mounting Bolts ..... Fig. 021DGV - 1215

Transmission / Transaxle Assembly
Figure 021DGV-105

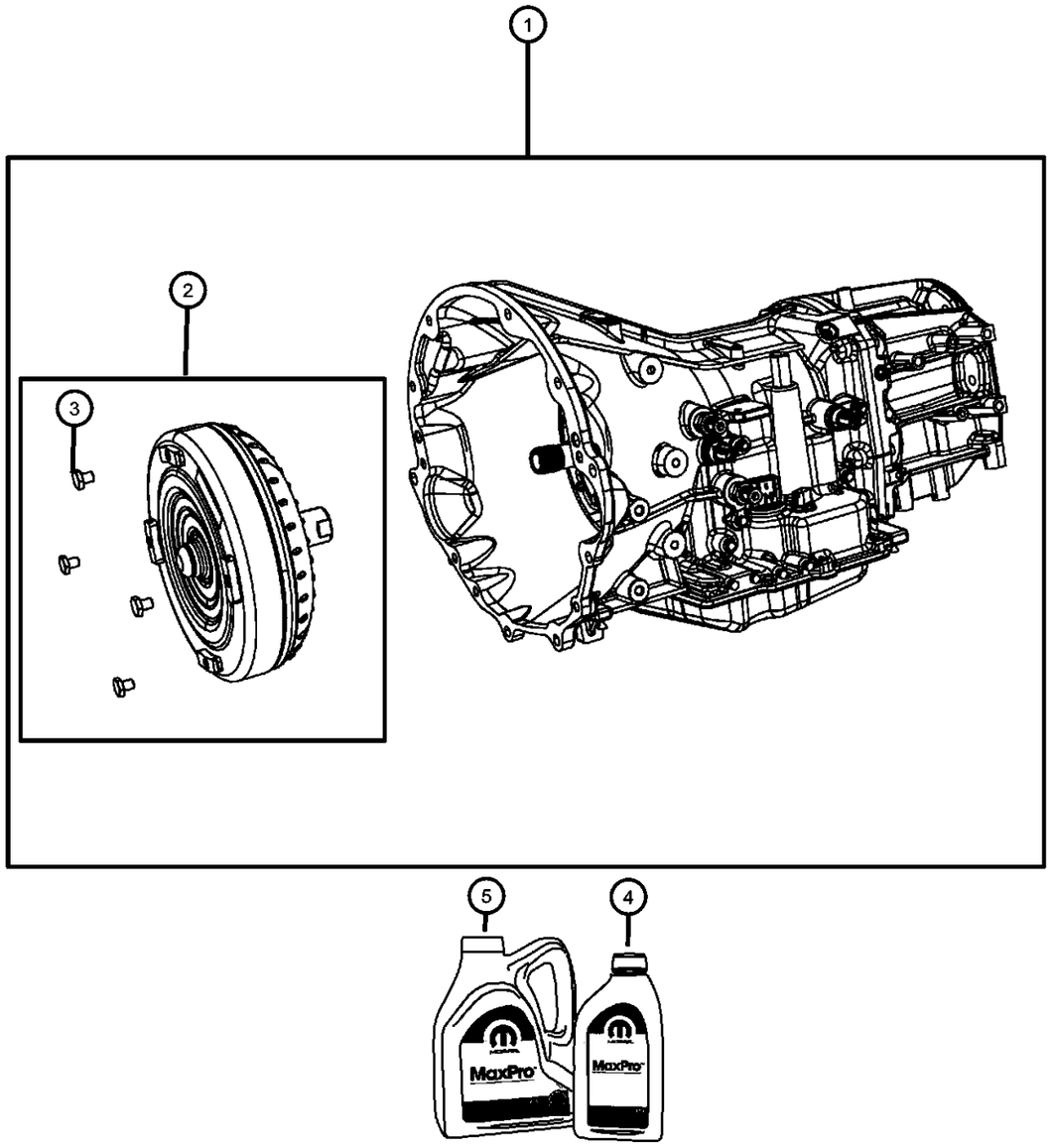

ITEM	PART NUMBER	QTY	LINE	SERIES	BODY	ENGINE	TRANS	TRIM	DESCRIPTION
1	68039218AB	1	D			EGG	DGV		TRANSMISSION KIT, With Torque Converter
2									CONVERTER KIT, Torque
	RX093944AC	1	D			EGG	DGV		Remanufactured Export Only
	05093944AD	1	D			EGG	DGV		
	R5093944AE	1	D			EGG	DGV		Remanufactured
3	06504383	4	D			EGG	DGV		BOLT, Hex Head Lock, M10X1.50X13.20
4	05013457AA	AR	D						FLUID, Automatic Transmission ATF+4, Quart, Standard MS-9602-F, [32 Fluid Ounces] Minimum Ship Quantity Of 12
5	05013458AA	AR	D						FLUID, Automatic Transmission ATF+4, Gallon, Standard MS-9602-F, [128 Fluid Ounces] Minimum Ship Quantity Of 4

DODGE CHALLENGER (LC)

SERIES	LINE	BODY	ENGINE	TRANSMISSION
H = HIGHLINE P = PREMIUM X = SPECIAL	D = DODGE	22 = 2-DR SEDAN TYPE #2	EGG = 3.5L High Output V6 24V MPI Engine ESF = 6.1L SRT HEMI V8 Engine EZC = 5.7L HEMI VCT Engine EZD = 5.7L Hemi VCT MDS Engine	DEC = 6-Speed Manual TREMEC Transmission DGJ = 5-Speed Auto W5A580 Transmission DGV = 4-Spd. Automatic VLP 42RLE Trans

AR = use ase required - = Non illustrrated part

Torque Converter
Figure 021DGV-110

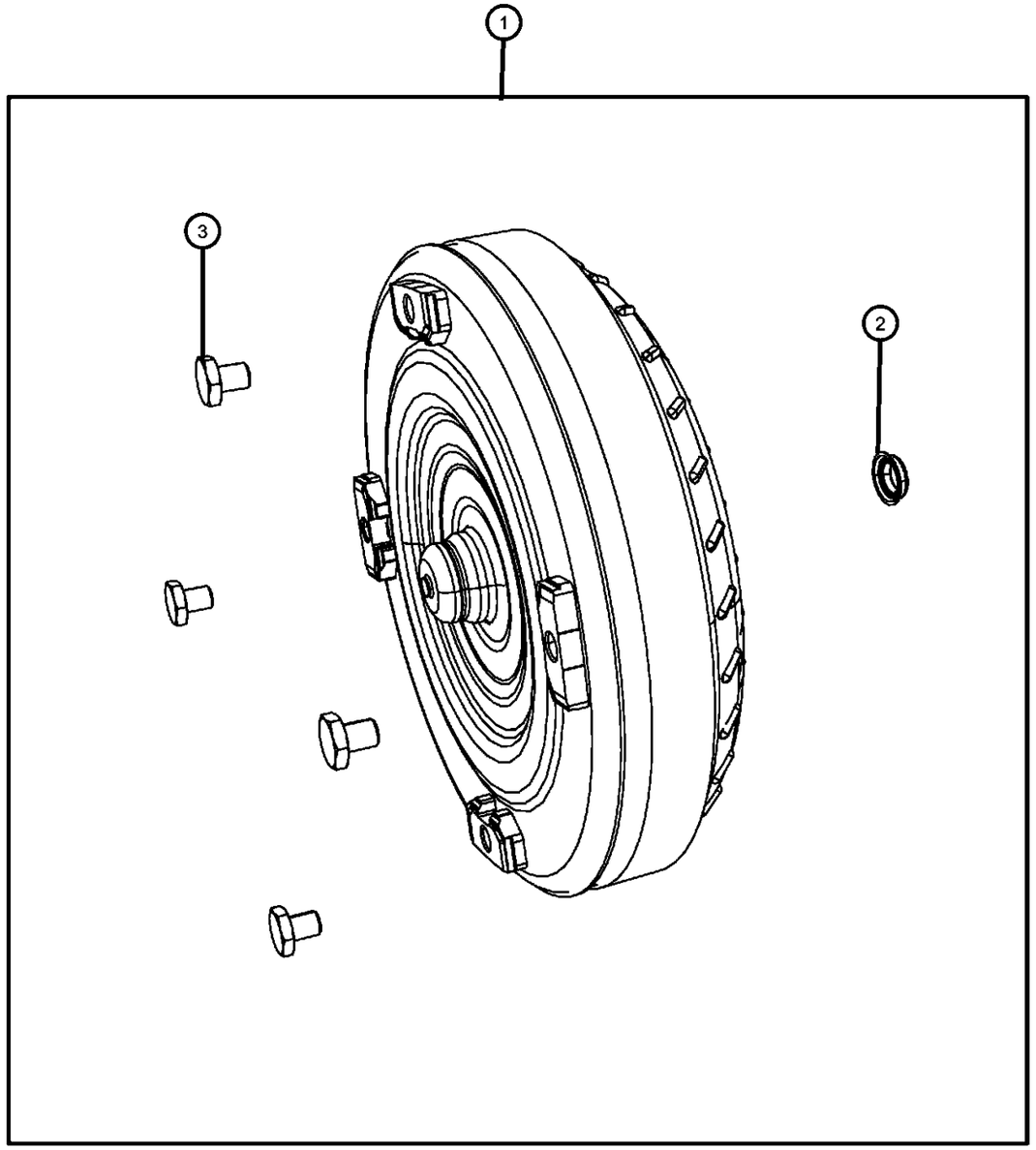

ITEM	PART NUMBER	QTY	LINE	SERIES	BODY	ENGINE	TRANS	TRIM	DESCRIPTION
1									CONVERTER KIT, Torque
	05093944AD	1	D			EGG	DGV		
	R5093944AE	1	D			EGG	DGV		Remanufactured
	RX093944AC	1	D			EGG	DGV		Remanufactured Export Only
2	05222629	1	D			EGG	DGV		SEAL, Torque Converter Hub
3	06504383	4	D			EGG	DGV		BOLT, Hex Head Lock, M10X1.50X13.20

DODGE CHALLENGER (LC)

SERIES	LINE	BODY	ENGINE	TRANSMISSION
H = HIGHLINE P = PREMIUM X = SPECIAL	D = DODGE	22 = 2-DR SEDAN TYPE #2	EGG = 3.5L High Output V6 24V MPI Engine ESF = 6.1L SRT HEMI V8 Engine EZC = 5.7L HEMI VCT Engine EZD = 5.7L Hemi VCT MDS Engine	DEC = 6-Speed Manual TREMEC Transmission DGJ = 5-Speed Auto W5A580 Transmission DGV = 4-Spd. Automatic VLP 42RLE Trans

Case
Figure 021DGV-205

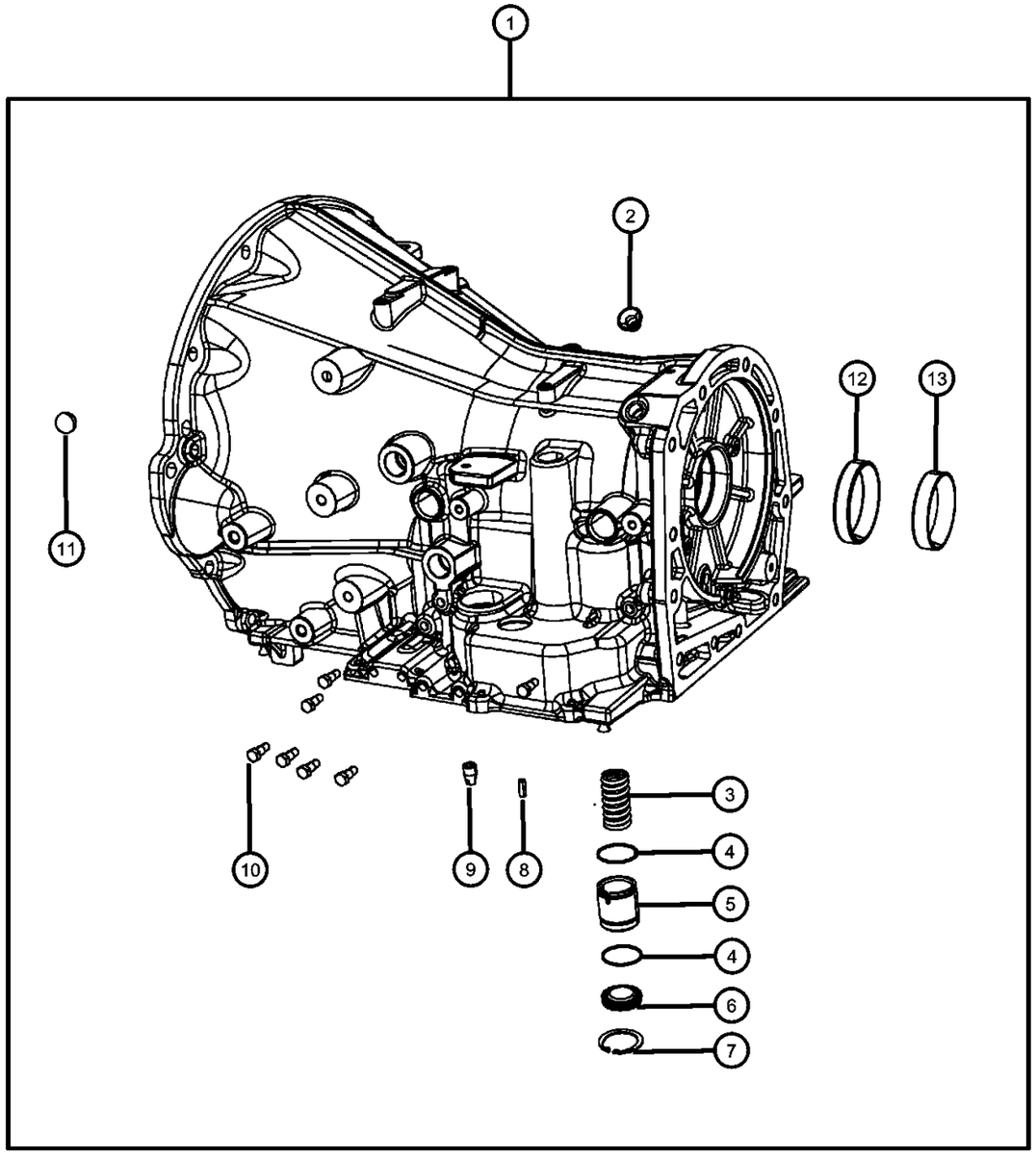

ITEM	PART NUMBER	QTY	LINE	SERIES	BODY	ENGINE	TRANS	TRIM	DESCRIPTION
1	68003762AA	1	D			EGG	DGV		CASE, Transmission
2	04567312	1	D			EGG	DGV		PLUG, Transmission Case
3	04800310AA	1	D			EGG	DGV		SPRING, Accumulator
4	04446544	2	D			EGG	DGV		SEAL, Accumulator
5	04446620	1	D			EGG	DGV		PISTON, Accumulator
6	04431617AB	1	D			EGG	DGV		COVER, Accumulator
7	06501695	1	D			EGG	DGV		SNAP RING
8	06100994	1	D			EGG	DGV		DOWEL, M6x16
9	04531412	1	D			EGG	DGV		BUSHING, Dowel
10	06036053AA	7	D			EGG	DGV		PLUG, Pressure Check
11	00152127	1	D			EGG	DGV		BALL, Transmission Oil Pump
12	04412234	1	D			EGG	DGV		BEARING CUP, Output Shaft
13	04567022	1	D			EGG	DGV		BEARING CUP, Differential

DODGE CHALLENGER (LC)

SERIES	LINE	BODY	ENGINE	TRANSMISSION
H = HIGHLINE P = PREMIUM X = SPECIAL	D = DODGE	22 = 2-DR SEDAN TYPE #2	EGG = 3.5L High Output V6 24V MPI Engine ESF = 6.1L SRT HEMI V8 Engine EZC = 5.7L HEMI VCT Engine EZD = 5.7L Hemi VCT MDS Engine	DEC = 6-Speed Manual TREMEC Transmission DGJ = 5-Speed Auto W5A580 Transmission DGV = 4-Spd. Automatic VLP 42RLE Trans

Extension
Figure 021DGV-222

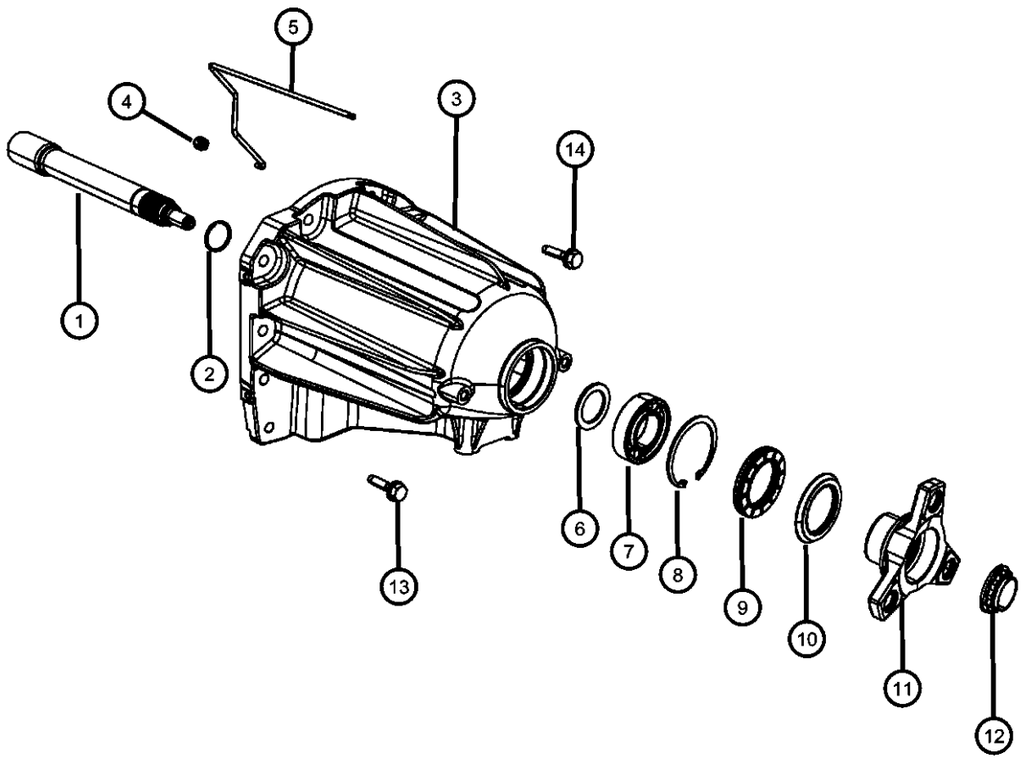

ITEM	PART NUMBER	QTY	LINE	SERIES	BODY	ENGINE	TRANS	TRIM	DESCRIPTION
1	52852997AB	1	D			EGG	DGV		OUTPUT SHAFT, Transmission Extension
2	04800270AA	1	D			EGG	DGV		SNAP RING, Output Shaft
3	52852994AA	1	D			EGG	DGV		EXTENSION, Transmission
4	52852998AA	1	D			EGG	DGV		SEAL, Transmission
5	52852999AA	1	D			EGG	DGV		TUBE, Oil Feed
6	04800271AA	1	D			EGG	DGV		WASHER
7	52108647AA	1	D			EGG	DGV		BEARING, Output Shaft
8	04800294AA	1	D			EGG	DGV		SNAP RING, Extension Housing
9	52108428AA	1	D			EGG	DGV		SEAL, Output Shaft
10	52108626AA	1	D			EGG	DGV		SLINGER, Output Shaft Seal
11	52852996AA	1	D			EGG	DGV		FLANGE, Drive Shaft
12	52108234AA	1	D			EGG	DGV		NUT, Flange to Output Shaft, M26x1.5
13	06504774	7	D			EGG	DGV		SCREW AND WASHER, Hex Head, M10x1.5x37
14	06508111AA	4	D			EGG	DGV		SCREW AND WASHER, Hex Head, M10x1.5x37

DODGE CHALLENGER (LC)

SERIES	LINE	BODY	ENGINE	TRANSMISSION
H = HIGHLINE P = PREMIUM X = SPECIAL	D = DODGE	22 = 2-DR SEDAN TYPE #2	EGG = 3.5L High Output V6 24V MPI Engine ESF = 6.1L SRT HEMI V8 Engine EZC = 5.7L HEMI VCT Engine EZD = 5.7L Hemi VCT MDS Engine	DEC = 6-Speed Manual TREMEC Transmission DGJ = 5-Speed Auto W5A580 Transmission DGV = 4-Spd. Automatic VLP 42RLE Trans

AR = use ase required - = Non illustrrated part

Oil Fill Tube And Related Parts
Figure 021DGV-225

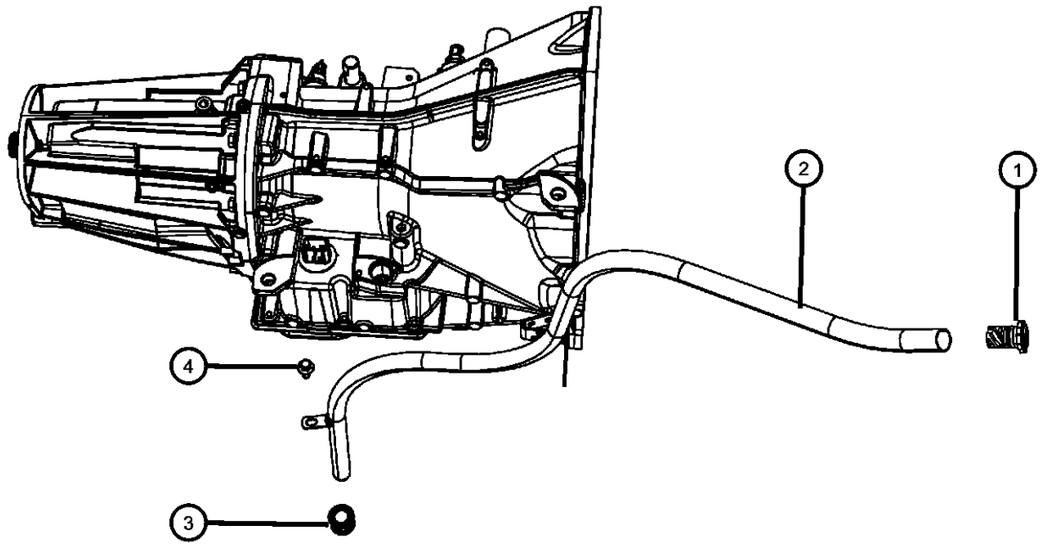

ITEM	PART NUMBER	QTY	LINE	SERIES	BODY	ENGINE	TRANS	TRIM	DESCRIPTION
1	04591959AA	1	D			EGG	DGV		CAP, Oil Filler
2	04593634AB	1	D			EGG	DGV		TUBE, Transmission Oil Filler, Includes Cap
3	04810021AB	1	D			EGG	DGV		GROMMET
4	06101221	1	D			EGG, ESF, EZC, EZD			SCREW AND WASHER, Hex Head, M6x1x12

DODGE CHALLENGER (LC)

SERIES	LINE	BODY	ENGINE	TRANSMISSION
H = HIGHLINE P = PREMIUM X = SPECIAL	D = DODGE	22 = 2-DR SEDAN TYPE #2	EGG = 3.5L High Output V6 24V MPI Engine ESF = 6.1L SRT HEMI V8 Engine EZC = 5.7L HEMI VCT Engine EZD = 5.7L Hemi VCT MDS Engine	DEC = 6-Speed Manual TREMEC Transmission DGJ = 5-Speed Auto W5A580 Transmission DGV = 4-Spd. Automatic VLP 42RLE Trans

Oil Pan, Cover And Related Parts
Figure 021DGV-230

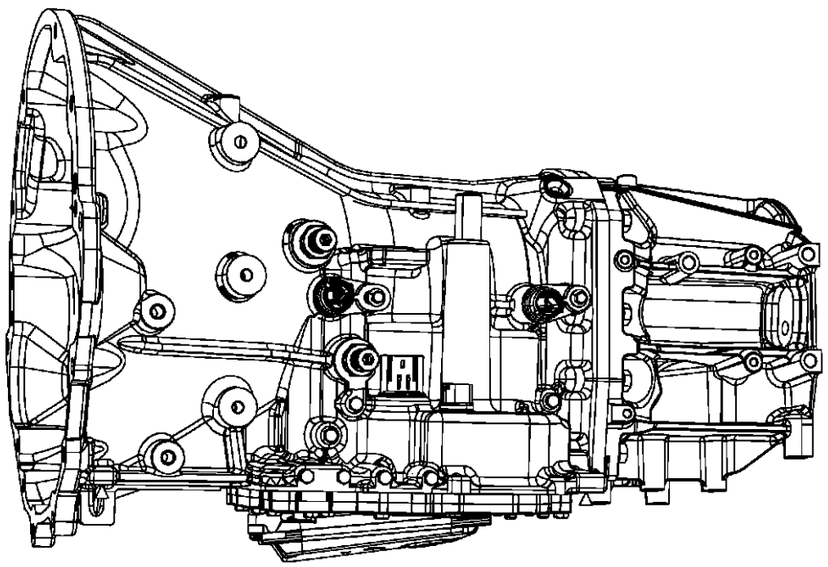

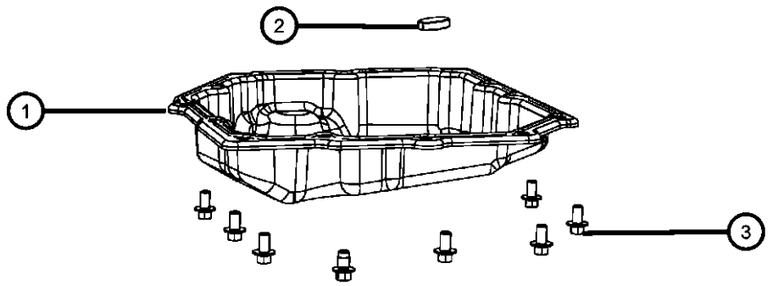

ITEM	PART NUMBER	QTY	LINE	SERIES	BODY	ENGINE	TRANS	TRIM	DESCRIPTION
1	52852912AC	1	D			EGG	DGV		PAN, Transmission Oil
2	04446728	1	D			EGG	DGV		MAGNET, Transmission
3	06501474	12	D			EGG	DGV		BOLT, Hex Flange Head, M8x1.25x16

DODGE CHALLENGER (LC)

SERIES	LINE	BODY	ENGINE	TRANSMISSION
H = HIGHLINE P = PREMIUM X = SPECIAL	D = DODGE	22 = 2-DR SEDAN TYPE #2	EGG = 3.5L High Output V6 24V MPI Engine ESF = 6.1L SRT HEMI V8 Engine EZC = 5.7L HEMI VCT Engine EZD = 5.7L Hemi VCT MDS Engine	DEC = 6-Speed Manual TREMEC Transmission DGJ = 5-Speed Auto W5A580 Transmission DGV = 4-Spd. Automatic VLP 42RLE Trans

AR = use ase required - = Non illustrrated part

Filters
Figure 021DGV-235

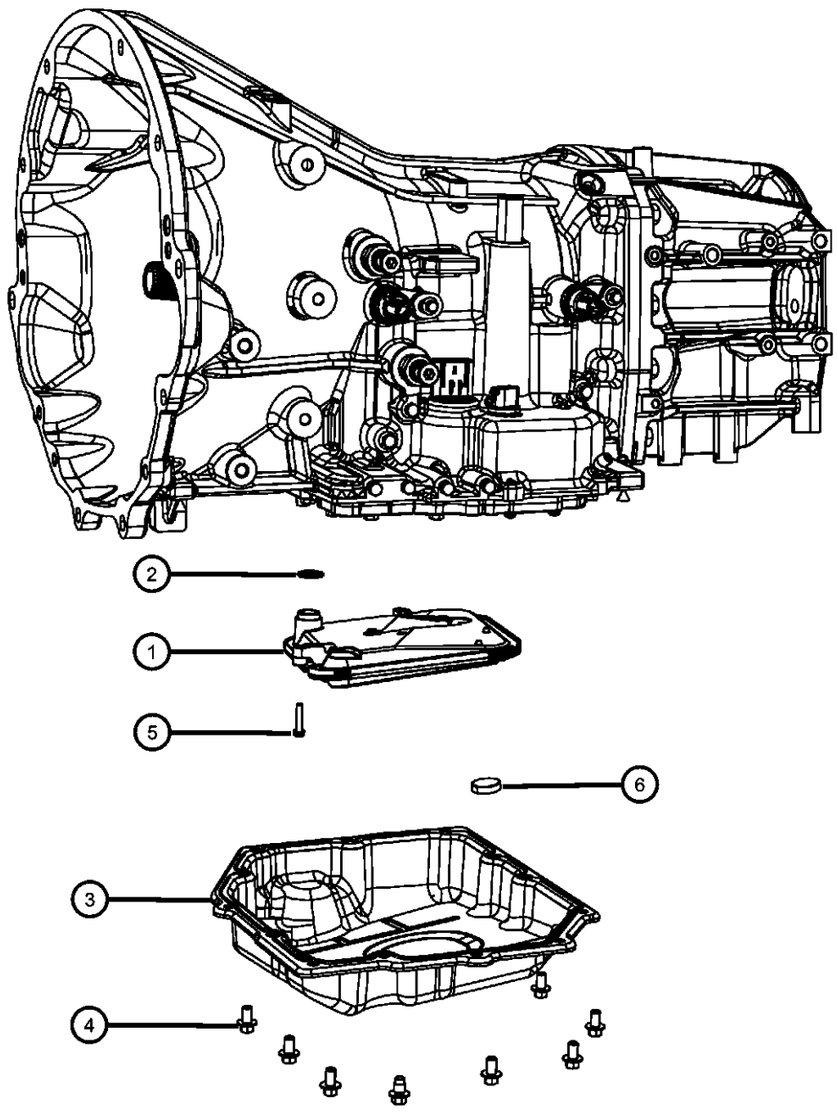

ITEM	PART NUMBER	QTY	LINE	SERIES	BODY	ENGINE	TRANS	TRIM	DESCRIPTION
1	52852913AB	1	D			EGG	DGV		FILTER, Transmission Oil
2	06032780	1	D			EGG	DGV		O RING, Trans Oil Filter
3	52852912AC	1	D			EGG	DGV		PAN, Transmission Oil
4	06501474	13	D			EGG	DGV		BOLT, Hex Flange Head, M8x1.25x16
5	06500215	2	D			EGG	DGV		SCREW AND WASHER, Pan Head, M5x.8x25
6	04446728	1	D			EGG	DGV		MAGNET, Transmission

DODGE CHALLENGER (LC)

SERIES	LINE	BODY	ENGINE	TRANSMISSION
H = HIGHLINE P = PREMIUM X = SPECIAL	D = DODGE	22 = 2-DR SEDAN TYPE #2	EGG = 3.5L High Output V6 24V MPI Engine ESF = 6.1L SRT HEMI V8 Engine EZC = 5.7L HEMI VCT Engine EZD = 5.7L Hemi VCT MDS Engine	DEC = 6-Speed Manual TREMEC Transmission DGJ = 5-Speed Auto W5A580 Transmission DGV = 4-Spd. Automatic VLP 42RLE Trans

AR = use ase required - = Non illustrrated part

Sensors, Vents And Quick Connectors
Figure 021DGV-240

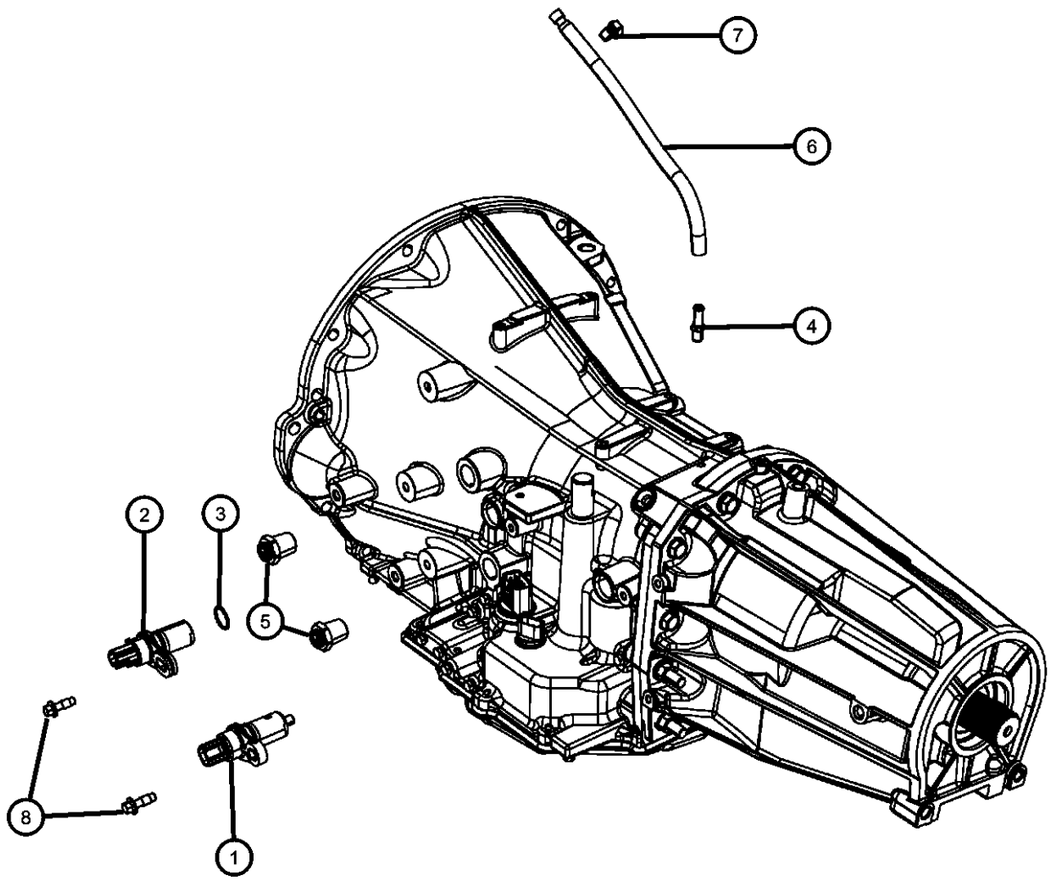

ITEM	PART NUMBER	QTY	LINE	SERIES	BODY	ENGINE	TRANS	TRIM	DESCRIPTION
1	52854001AA	1	D			EGG	DGV		SENSOR, Transmission Output Speed
2	04799061AB	1	D			EGG	DGV		SENSOR, Transmission Input Speed
3	04799062	1	D			EGG	DGV		O RING
4	04531202	1	D			EGG	DGV		CONNECTOR, Oil Cooler Hose
5	52119547AA	2	D			EGG	DGV		FITTING, Quick Connect
6	04591981AC	1	D			EGG	DGV		HOSE, Transmission Vent
7		1							CLIP, Transfer case vent hose, (NOT SERVICED)
8	06508112AA	2	D			EGG	DGV		BOLT, M6x1.00x20

DODGE CHALLENGER (LC)

SERIES	LINE	BODY	ENGINE	TRANSMISSION
H = HIGHLINE P = PREMIUM X = SPECIAL	D = DODGE	22 = 2-DR SEDAN TYPE #2	EGG = 3.5L High Output V6 24V MPI Engine ESF = 6.1L SRT HEMI V8 Engine EZC = 5.7L HEMI VCT Engine EZD = 5.7L Hemi VCT MDS Engine	DEC = 6-Speed Manual TREMEC Transmission DGJ = 5-Speed Auto W5A580 Transmission DGV = 4-Spd. Automatic VLP 42RLE Trans

Oil Pump and Related Parts
Figure 021DGV-405

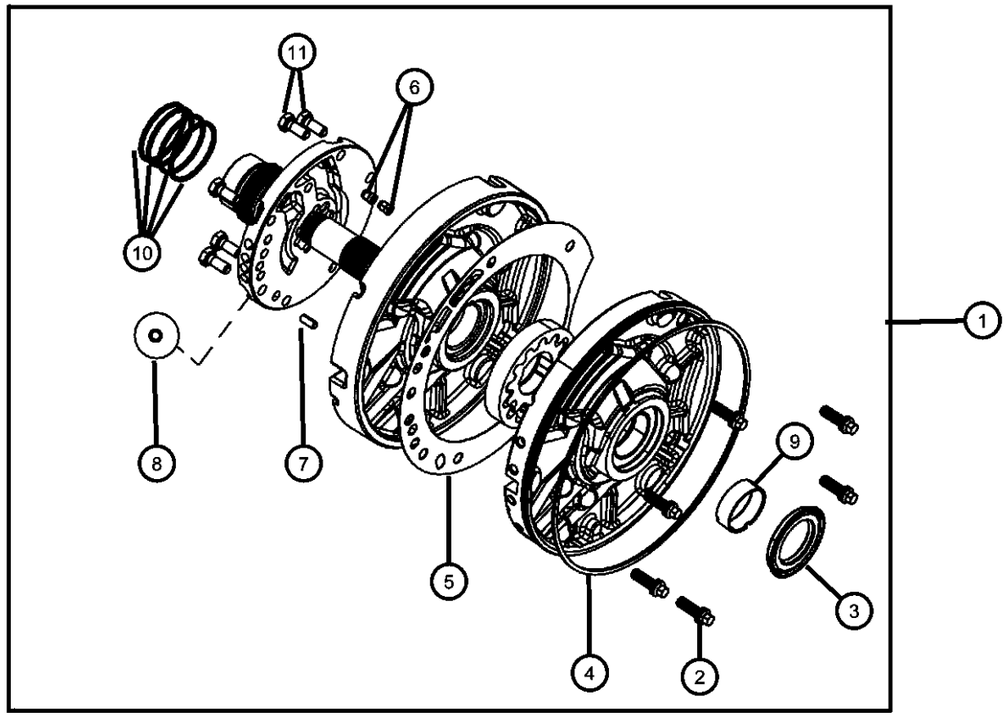

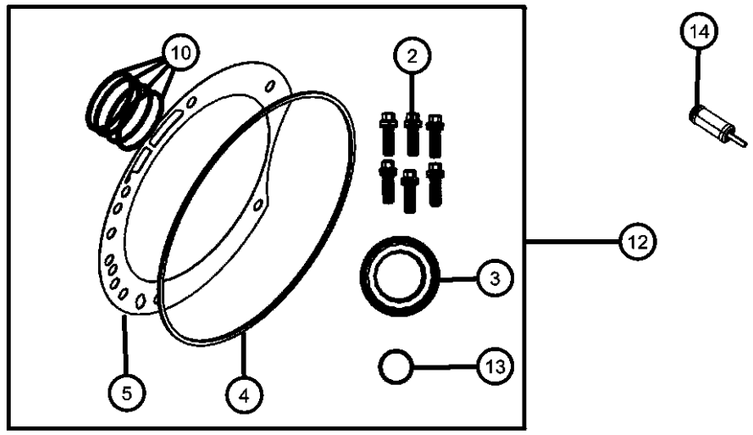

ITEM	PART NUMBER	QTY	LINE	SERIES	BODY	ENGINE	TRANS	TRIM	DESCRIPTION
1	68054588AA	1	D			EGG	DGV		PUMP KIT, Transmission oil
2	06506408AA	5	D			EGG	DGV		SCREW AND WASHER, Hex Flange Head, M8x1.25x25
3	04412475	1	D			EGG	DGV		SEAL, Impeller
4	04659945	1	D			EGG	DGV		SEAL, Oil Pump
5	04659126	1	D			EGG	DGV		GASKET, Transmission Oil Pump
6	00147482	2	D			EGG	DGV		BALL, Check
7	06100902	1	D			EGG	DGV		DOWEL PIN
8	00152127	6	D			EGG	DGV		BALL, Transmission Oil Pump, Inside Oil Pump Housing
9	04800379AA	1	D			EGG	DGV		BUSHING, Front Pump
10	04471874	4	D			EGG	DGV		SEAL, Ring, Reaction Support
11	06500211	6	D			EGG	DGV		BOLT, Hex Head, M8x1.25x19
12	04883260AC	1	D			EGG	DGV		SEAL AND GASKET PACKAGE, Transmission Oil Pump
13	04446543	3	D			EGG	DGV		SEAL, Input Shaft
14	04659946AB	1	D			EGG	DGV		VALVE, Cooler Bypass

DODGE CHALLENGER (LC)

SERIES	LINE	BODY	ENGINE	TRANSMISSION
H = HIGHLINE P = PREMIUM X = SPECIAL	D = DODGE	22 = 2-DR SEDAN TYPE #2	EGG = 3.5L High Output V6 24V MPI Engine ESF = 6.1L SRT HEMI V8 Engine EZC = 5.7L HEMI VCT Engine EZD = 5.7L Hemi VCT MDS Engine	DEC = 6-Speed Manual TREMEC Transmission DGJ = 5-Speed Auto W5A580 Transmission DGV = 4-Spd. Automatic VLP 42RLE Trans

AR = use ase required - = Non illustrrated part

Input Clutch Assembly
Figure 021DGV-514

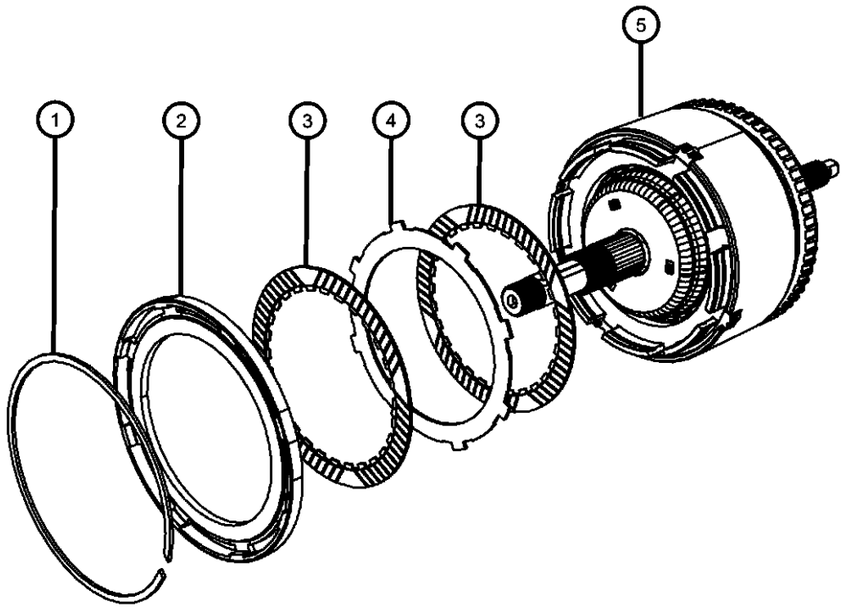

ITEM	PART NUMBER	QTY	LINE	SERIES	BODY	ENGINE	TRANS	TRIM	DESCRIPTION
1									SNAP RING, Reverse Clutch
	04377195	1	D			EGG	DGV		[1.53-1.58 mm]
	04412871	1	D			EGG	DGV		[1.77-1.83 mm]
	04412872	1	D			EGG	DGV		[2.02-2.07 mm]
	04412873	1	D			EGG	DGV		[2.27-2.32 mm]
2	04377194	1	D			EGG	DGV		PLATE, Transmission Clutch Reaction
3	04659635	2	D			EGG	DGV		FRICTION DISC, Trans input clutch, Reverse/underdrive
4	04659053	1	D			EGG	DGV		PLATE, Transmission O/Drive Clutch
5		1							CLUTCH ASSY, (NOT SERVICED)

DODGE CHALLENGER (LC)

SERIES	LINE	BODY	ENGINE	TRANSMISSION
H = HIGHLINE P = PREMIUM X = SPECIAL	D = DODGE	22 = 2-DR SEDAN TYPE #2	EGG = 3.5L High Output V6 24V MPI Engine ESF = 6.1L SRT HEMI V8 Engine EZC = 5.7L HEMI VCT Engine EZD = 5.7L Hemi VCT MDS Engine	DEC = 6-Speed Manual TREMEC Transmission DGJ = 5-Speed Auto W5A580 Transmission DGV = 4-Spd. Automatic VLP 42RLE Trans

Input Clutch Assembly
Figure 021DGV-515

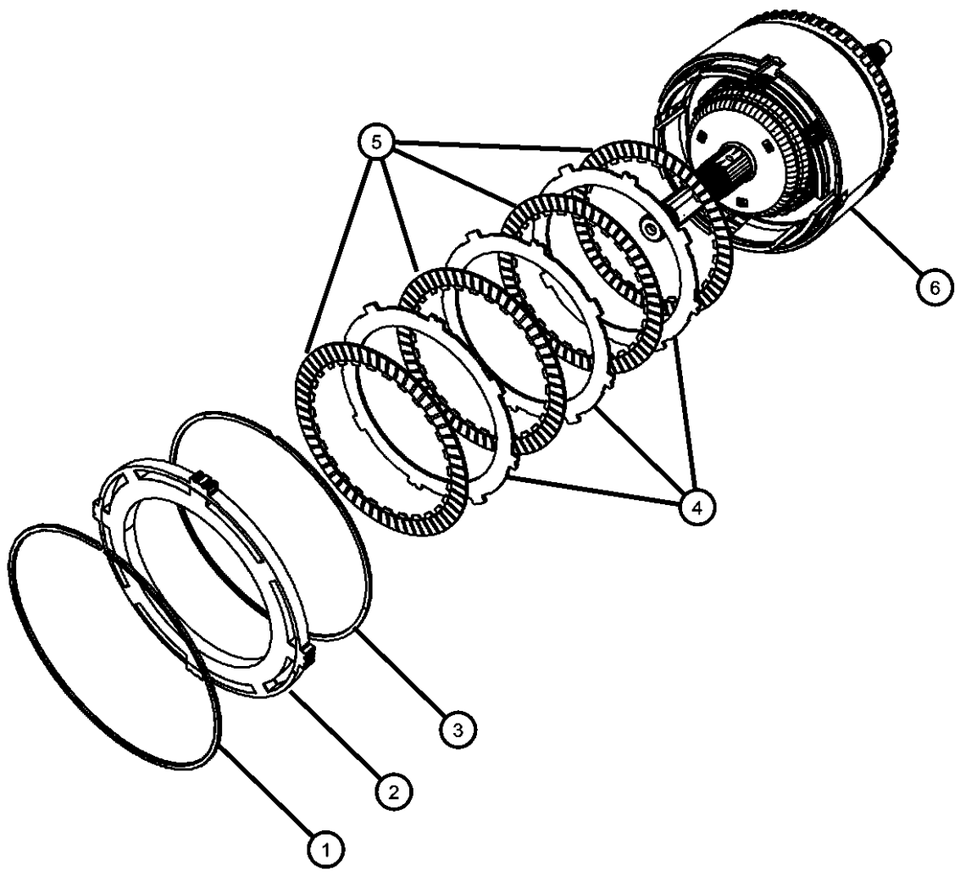

ITEM	PART NUMBER	QTY	LINE	SERIES	BODY	ENGINE	TRANS	TRIM	DESCRIPTION
1	04505622	1	D			EGG	DGV		SNAP RING
2	04531556AD	1	D			EGG	DGV		PLATE, Transmission O/Drive Clutch
3	04505621	1	D			EGG	DGV		SNAP RING
4	04659053	4	D			EGG	DGV		PLATE, Transmission O/Drive Clutch
5	04531678AB	4	D			EGG	DGV		DISC, Overdrive clutch
6		4							CLUTCH ASSY, (NOT SERVICED)

DODGE CHALLENGER (LC)

SERIES	LINE	BODY	ENGINE	TRANSMISSION
H = HIGHLINE P = PREMIUM X = SPECIAL	D = DODGE	22 = 2-DR SEDAN TYPE #2	EGG = 3.5L High Output V6 24V MPI Engine ESF = 6.1L SRT HEMI V8 Engine EZC = 5.7L HEMI VCT Engine EZD = 5.7L Hemi VCT MDS Engine	DEC = 6-Speed Manual TREMEC Transmission DGJ = 5-Speed Auto W5A580 Transmission DGV = 4-Spd. Automatic VLP 42RLE Trans

Input Clutch Assembly
Figure 021DGV-516

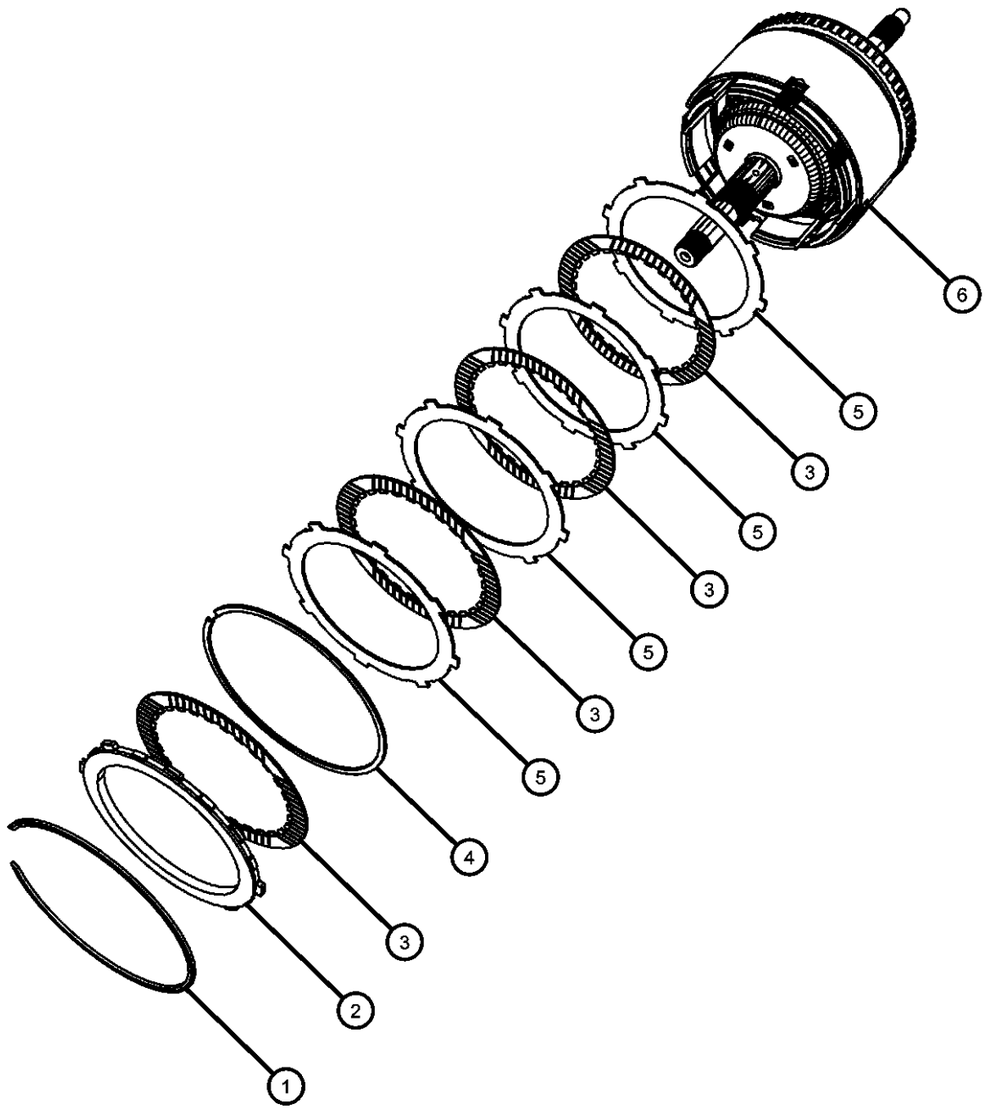

ITEM	PART NUMBER	QTY	LINE	SERIES	BODY	ENGINE	TRANS	TRIM	DESCRIPTION
1	04659934	1	D			EGG	DGV		SNAP RING, Underdrive Clutch, Tapered
2									PLATE PACKAGE, UNDERDRIVE REACTION
	04883013AB	1	D			EGG	DGV		[5.72/5.82]
	04883014AB	1	D			EGG	DGV		[6.21/6.31]
	04883015AB	1	D			EGG	DGV		[6.70/6.80]
3	04659635	4	D			EGG	DGV		FRICTION DISC, Trans input clutch, Reverse/underdrive
4	04659980	1	D			EGG	DGV		SNAP RING, Underdrive Clutch, Flat
5	04659053	4	D			EGG	DGV		PLATE, Transmission O/Drive Clutch
6		4							CLUTCH ASSY, (NOT SERVICED)

DODGE CHALLENGER (LC)

SERIES	LINE	BODY	ENGINE	TRANSMISSION
H = HIGHLINE P = PREMIUM X = SPECIAL	D = DODGE	22 = 2-DR SEDAN TYPE #2	EGG = 3.5L High Output V6 24V MPI Engine ESF = 6.1L SRT HEMI V8 Engine EZC = 5.7L HEMI VCT Engine EZD = 5.7L Hemi VCT MDS Engine	DEC = 6-Speed Manual TREMEC Transmission DGJ = 5-Speed Auto W5A580 Transmission DGV = 4-Spd. Automatic VLP 42RLE Trans

Input Clutch Assembly
Figure 021DGV-517

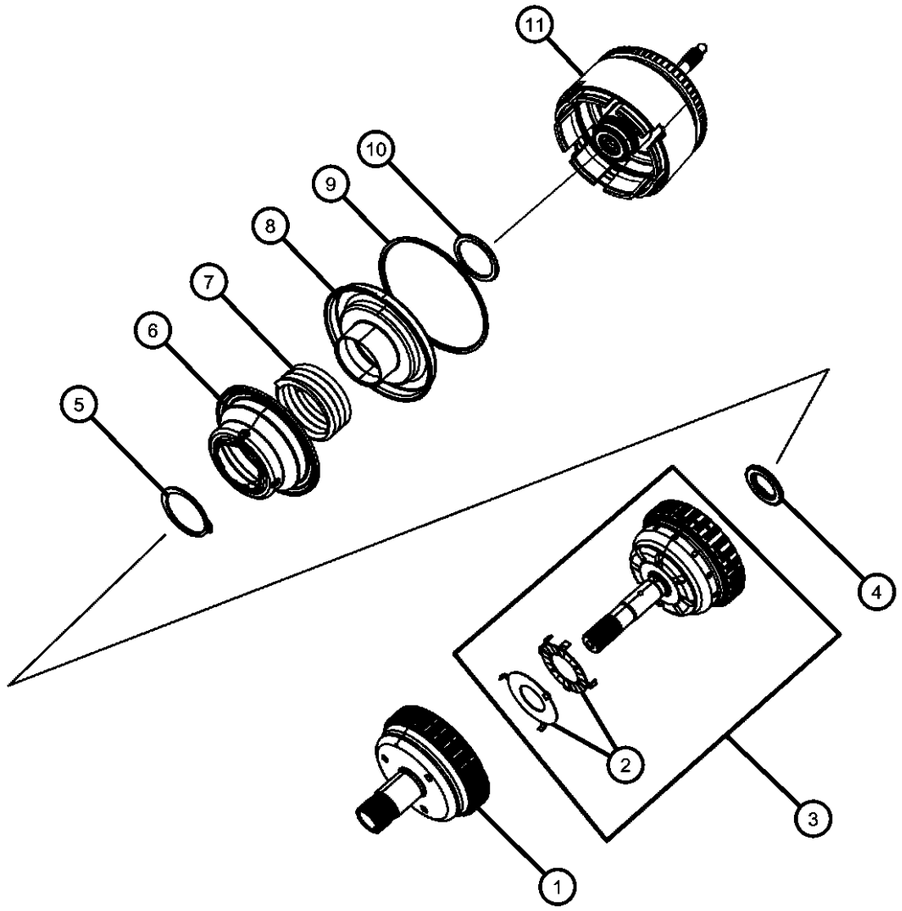

ITEM	PART NUMBER	QTY	LINE	SERIES	BODY	ENGINE	TRANS	TRIM	DESCRIPTION
1	04659993	1	D			EGG	DGV		HUB AND SHAFT, Overdrive Clutch
2	05018923AB	1	D			EGG	DGV		PLATE AND WASHER KIT, Thrust
3	04864936AD	1	D			EGG	DGV		HUB AND SHAFT KIT, Underdrive Clutch
4	04800082AA	1	D			EGG	DGV		THRUST BEARING
5	06501715	1	D			EGG	DGV		SNAP RING
6	04431612	1	D			EGG	DGV		RETAINER AND SEAL, Transmission U/Drive Spring
7	04377177	1	D			EGG	DGV		SPRING, Drive Lower Case
8	04431611	1	D			EGG	DGV		PISTON, Underdrive
9	04659871	1	D			EGG	DGV		SEAL, Piston Outer, 140mm OD
10	04659391AB	1	D			EGG	DGV		SEAL, Under Drive
11		1							CLUTCH ASSY, (NOT SERVICED)

DODGE CHALLENGER (LC)

SERIES	LINE	BODY	ENGINE	TRANSMISSION
H = HIGHLINE	D = DODGE	22 = 2-DR SEDAN TYPE #2	EGG = 3.5L High Output V6 24V MPI Engine	DEC = 6-Speed Manual TREMEC Transmission
P = PREMIUM			ESF = 6.1L SRT HEMI V8 Engine	DGJ = 5-Speed Auto W5A580 Transmission
X = SPECIAL			EZC = 5.7L HEMI VCT Engine	DGV = 4-Spd. Automatic VLP 42RLE Trans
			EZD = 5.7L Hemi VCT MDS Engine	

AR = use ase required - = Non illustrrated part

Input Clutch Assembly
Figure 021DGV-518

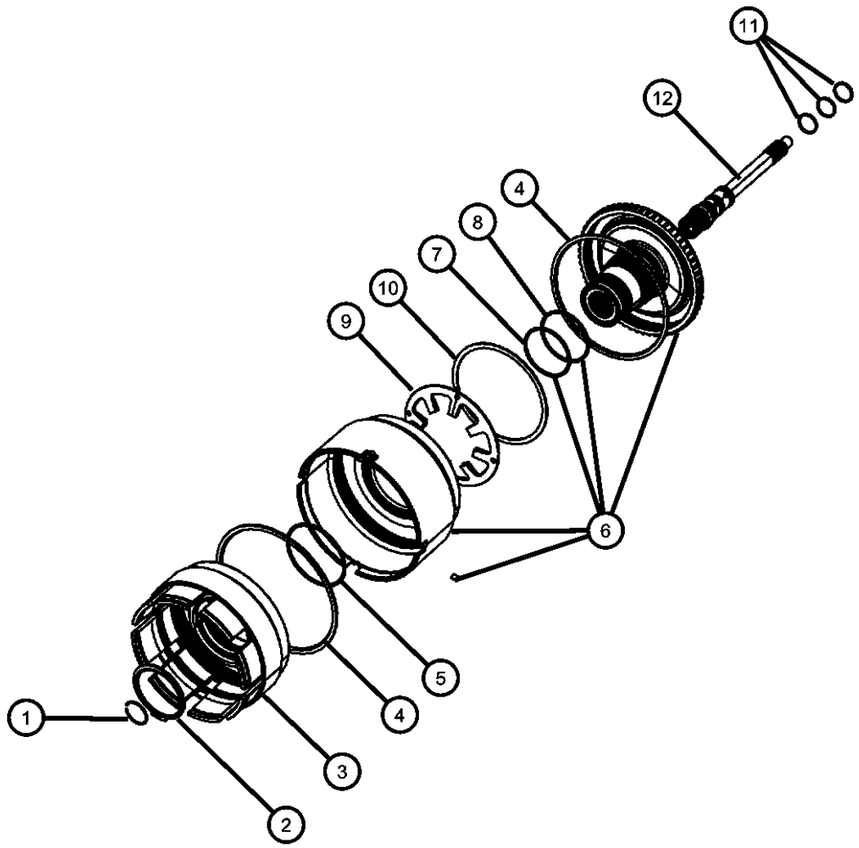

ITEM	PART NUMBER	QTY	LINE	SERIES	BODY	ENGINE	TRANS	TRIM	DESCRIPTION
1	06501702	1	D			EGG	DGV		SNAP RING
2	06507226AA	1	D			EGG	DGV		SNAP RING
3	04659935AB	1	D			EGG	DGV		RETAINER, Transmission Input Clutch
4	04659056	1	D			EGG	DGV		SEAL, Reverse Servo Piston
5	06033158	1	D			EGG	DGV		O RING, Reverse & O/Drive Clutch Piston, Transmission
6	05017518AB	1	D			EGG	DGV		HUB PACKAGE, Input Clutch
7	06502269	1	D			EGG	DGV		O RING, Transmission Clutch
8	06502271	1	D			EGG	DGV		O RING, Transmission Clutch
9	04412202	1	D			EGG	DGV		SPRING, Overdrive Piston
10	04412203	1	D			EGG	DGV		SNAP RING
11	04446543	3	D			EGG	DGV		SEAL, Input Shaft
12	04626452AB	1	D			EGG	DGV		INPUT SHAFT PACKAGE, Transaxle

DODGE CHALLENGER (LC)

SERIES	LINE	BODY	ENGINE	TRANSMISSION
H = HIGHLINE P = PREMIUM X = SPECIAL	D = DODGE	22 = 2-DR SEDAN TYPE #2	EGG = 3.5L High Output V6 24V MPI Engine ESF = 6.1L SRT HEMI V8 Engine EZC = 5.7L HEMI VCT Engine EZD = 5.7L Hemi VCT MDS Engine	DEC = 6-Speed Manual TREMEC Transmission DGJ = 5-Speed Auto W5A580 Transmission DGV = 4-Spd. Automatic VLP 42RLE Trans

2 / 4 Clutch
Figure 021DGV-519

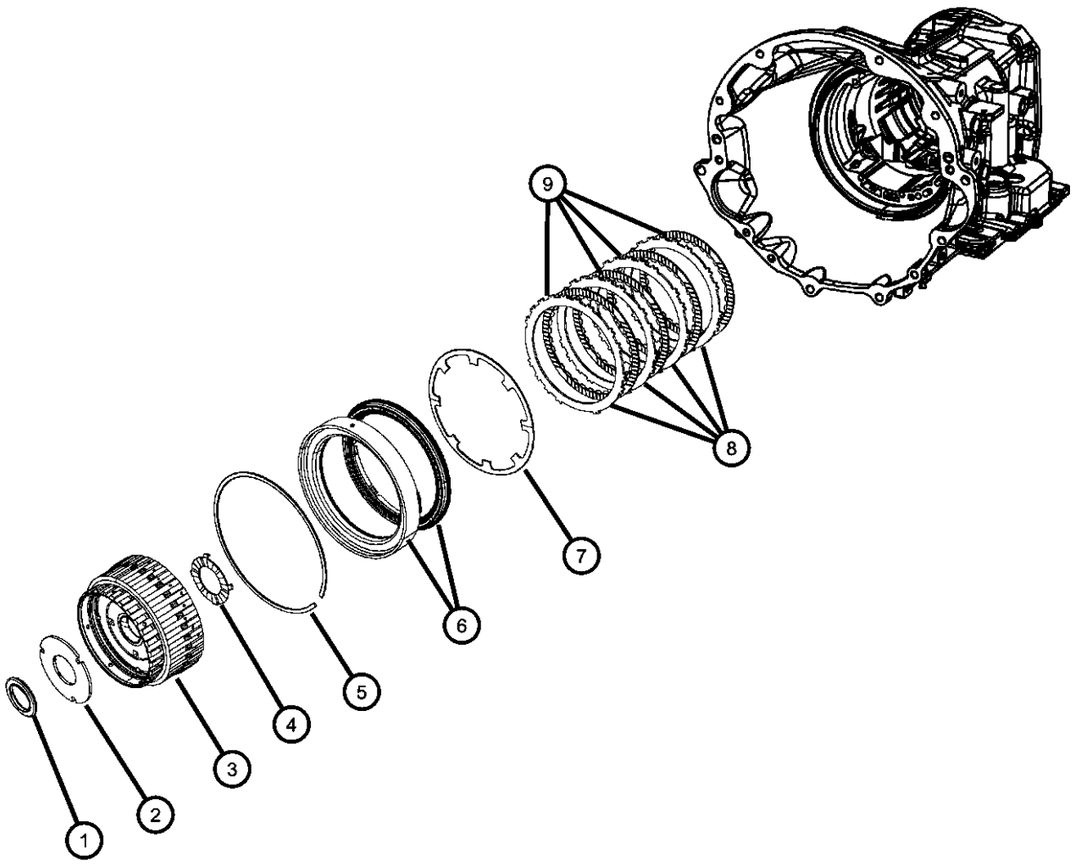

ITEM	PART NUMBER	QTY	LINE	SERIES	BODY	ENGINE	TRANS	TRIM	DESCRIPTION
1	04412209	1	D			EGG	DGV		THRUST BEARING
2									PLATE, Transmission O/Drive Clutch
	03836237AB	1	D			EGG	DGV		[1.70/1.77 mm]
	03836238AB	1	D			EGG	DGV		[1.92/1.99 mm]
	03836239AB	1	D			EGG	DGV		[2.14/2.21 mm]
	03836240AB	1	D			EGG	DGV		[2.36/2.43 mm]
	03836241AB	1	D			EGG	DGV		[2.58/2.65 mm]
	04431665AB	1	D			EGG	DGV		[1.59/1.66 mm]
	04431666AB	1	D			EGG	DGV		[1.81/1.88 mm]
	04431667AB	1	D			EGG	DGV		[2.03/2.10 mm]
	04431669AB	1	D			EGG	DGV		[2.47/2.54 mm]
	04446670AB	1	D			EGG	DGV		[2.69/2.76 mm]
	04446671AB	1	D			EGG	DGV		[2.91/2.98 mm]
	04431668AB	1	D			EGG	DGV		[2.25/2.32 mm]
3	04659618AB	1	D			EGG	DGV		HUB AND GEAR, Second And Fourth Clutch
4	04412216AC	1	D			EGG	DGV		THRUST WASHER, Second and Fourth Clutch
5	04505591	1	D			EGG	DGV		SNAP RING
6	05102880AA	1	D			EGG	DGV		RETAINER PACKAGE, 2nd & 4th Clutch Piston
7	04412248	1	D			EGG	DGV		SPRING, 2nd And 4th Clutch Piston
8	04659054	4	D			EGG	DGV		PLATE, Transmission Clutch Reaction
9	04799860AB	4	D			EGG	DGV		DISC, Clutch

DODGE CHALLENGER (LC)

SERIES	LINE	BODY	ENGINE	TRANSMISSION
H = HIGHLINE P = PREMIUM X = SPECIAL	D = DODGE	22 = 2-DR SEDAN TYPE #2	EGG = 3.5L High Output V6 24V MPI Engine ESF = 6.1L SRT HEMI V8 Engine EZC = 5.7L HEMI VCT Engine EZD = 5.7L Hemi VCT MDS Engine	DEC = 6-Speed Manual TREMEC Transmission DGJ = 5-Speed Auto W5A580 Transmission DGV = 4-Spd. Automatic VLP 42RLE Trans

Low / Reverse Clutch
Figure 021DGV-520

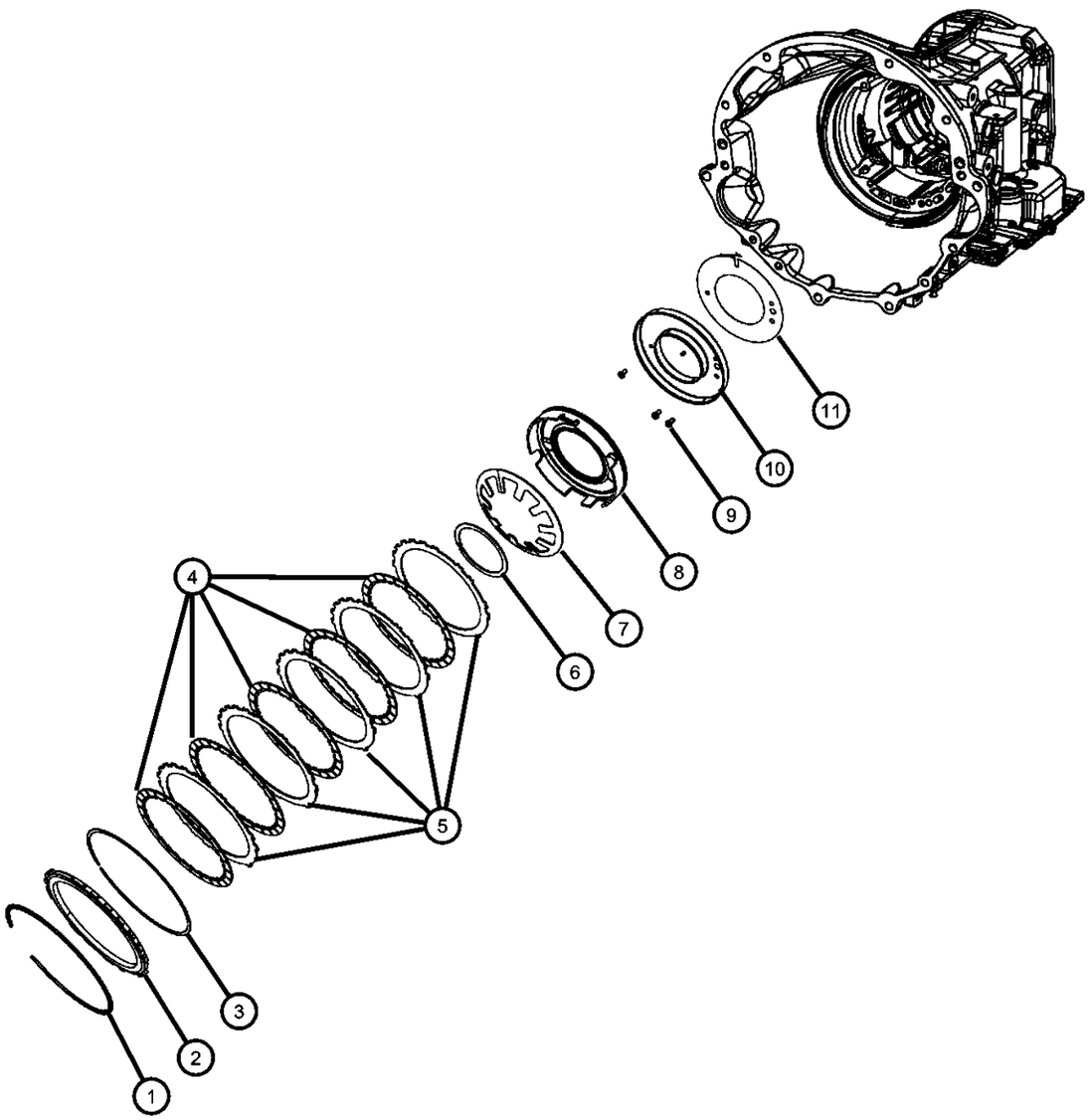

ITEM	PART NUMBER	QTY	LINE	SERIES	BODY	ENGINE	TRANS	TRIM	DESCRIPTION
1	04799858AA	1	D			EGG	DGV		SNAP RING
2									PLATE PACKAGE, Low/Reverse Clutch
	04897452AA	1	D			EGG	DGV		[5.753/6.012]
	04897453AA	1	D			EGG	DGV		[6.013/6.272]
	04897454AA	1	D			EGG	DGV		[6.273/6.532]
	04897455AA	1	D			EGG	DGV		[6.533/6.792]
	04897456AA	1	D			EGG	DGV		[6.793/7.052]
3	04412395	1	D			EGG	DGV		SNAP RING
4	04567573AB	5	D			EGG	DGV		DISC, Clutch
5	04659055	5	D			EGG	DGV		PLATE, Transmission Clutch Reaction
6	06501853	1	D			EGG	DGV		SNAP RING
7	04800236AA	1	D			EGG	DGV		SPRING, Low/Reverse Clutch Piston
8	04800261AA	1	D			EGG	DGV		PISTON, Low and Reverse Clutch
9	06501819	3	D			EGG	DGV		SCREW AND WASHER, Pan Head, M5x0.8x11.00
10	68800255AA	1	D			EGG	DGV		RETAINER PKG, TRANSMISSION L/R CLUTCH RETAINER W/GASKET
11	68003039AA	1	D			EGG	DGV		GASKET PKG, Clutch Retainer Gasket W ISheet, Larger Hole Gasket

DODGE CHALLENGER (LC)

SERIES	LINE	BODY	ENGINE	TRANSMISSION
H = HIGHLINE P = PREMIUM X = SPECIAL	D = DODGE	22 = 2-DR SEDAN TYPE #2	EGG = 3.5L High Output V6 24V MPI Engine ESF = 6.1L SRT HEMI V8 Engine EZC = 5.7L HEMI VCT Engine EZD = 5.7L Hemi VCT MDS Engine	DEC = 6-Speed Manual TREMEC Transmission DGJ = 5-Speed Auto W5A580 Transmission DGV = 4-Spd. Automatic VLP 42RLE Trans

AR = use ase required - = Non illustrrated part

Front / Rear Planetary
Figure 021DGV-608

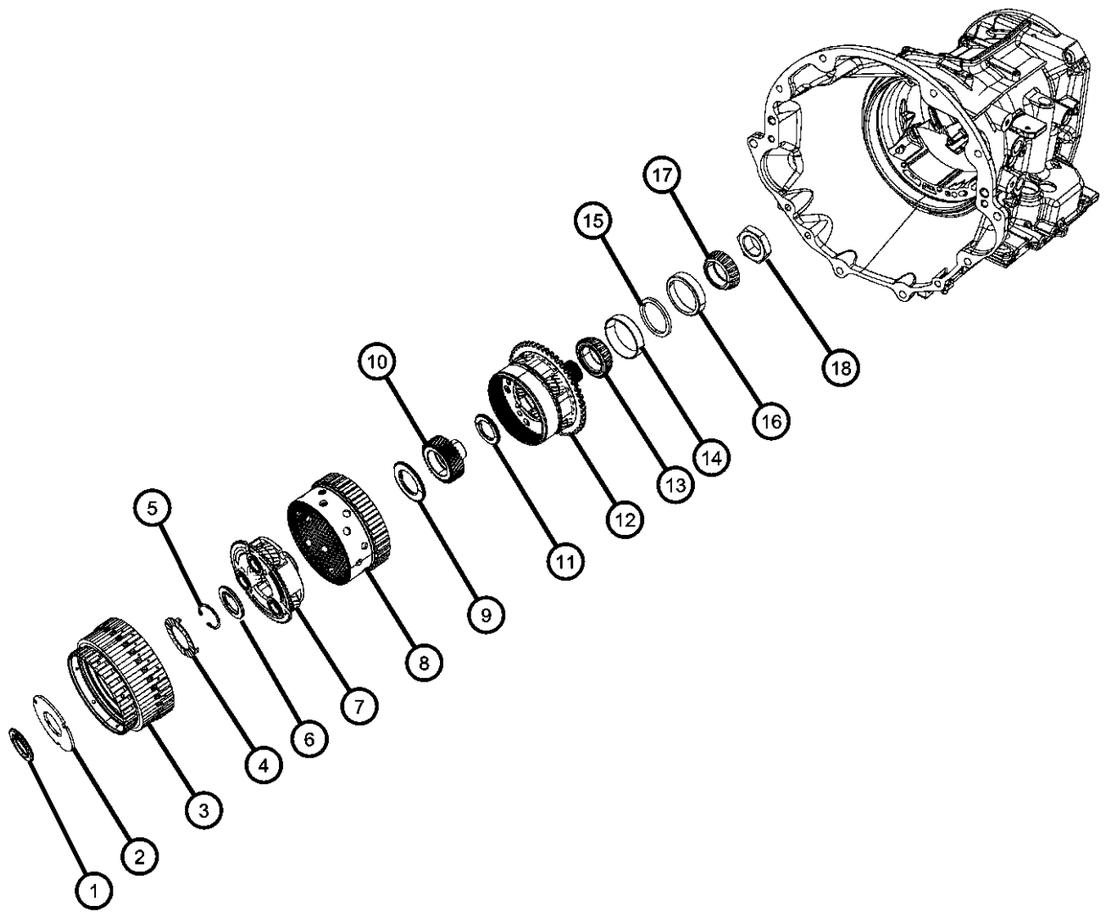

ITEM	PART NUMBER	QTY	LINE	SERIES	BODY	ENGINE	TRANS	TRIM	DESCRIPTION
1	04412209	1	D			EGG	DGV		THRUST BEARING
2									PLATE, Transmission O/Drive Clutch
	03836237AB	1	D			EGG	DGV		[1.70/1.77]
	03836238AB	1	D			EGG	DGV		[1.92/1.99]
	03836239AB	1	D			EGG	DGV		[2.14/2.21]
	03836240AB	1	D			EGG	DGV		[2.36/2.43]
	03836241AB	1	D			EGG	DGV		[2.58/2.65]
	04431665AB	1	D			EGG	DGV		[1.59/1.66]
	04431666AB	1	D			EGG	DGV		[1.81/1.88]
	04431667AB	1	D			EGG	DGV		[2.03/2.10]
	04431668AB	1	D			EGG	DGV		[2.25/2.32]
	04431669AB	1	D			EGG	DGV		[2.47/2.54]
	04446670AB	1	D			EGG	DGV		[2.69/2.76]
	04446671AB	1	D			EGG	DGV		[2.91/2.98]
3	04659618AB	1	D			EGG	DGV		HUB AND GEAR, Second And Fourth Clutch
4	04412216AC	1	D			EGG	DGV		THRUST WASHER, Second and Fourth Clutch
5	06035238	2	D			EGG	DGV		SNAP RING
6	04567262	1	D			EGG	DGV		THRUST BEARING
7	04567539AB	1	D			EGG	DGV		CARRIER, Planetary Pinion
8	04799794	1	D			EGG	DGV		GEAR, Annulus
9	04412229AB	1	D			EGG	DGV		THRUST BEARING, Rear Sun Gear, Front
10	04377080	1	D			EGG	DGV		GEAR, Sun
11	04567262	1	D			EGG	DGV		THRUST BEARING
12	05101874AA	1	D			EGG	DGV		CARRIER AND BEARING, Planet Pinion
13	04412235AB	1	D			EGG	DGV		BEARING CONE, Output Shaft
14	04412234	1	D			EGG	DGV		BEARING CUP, Output Shaft
15									SHIM, Carrier Bearing
	05280022	AR	D			EGG	DGV		[5.23 - 5.25MM]
	05280023	AR	D			EGG	DGV		[5.26 - 5.28MM]
	05280024	AR	D			EGG	DGV		[5.29 - 5.31MM]
	05280025	AR	D			EGG	DGV		[5.32 - 5.34MM]

DODGE CHALLENGER (LC)

SERIES	LINE	BODY	ENGINE	TRANSMISSION
H = HIGHLINE P = PREMIUM X = SPECIAL	D = DODGE	22 = 2-DR SEDAN TYPE #2	EGG = 3.5L High Output V6 24V MPI Engine ESF = 6.1L SRT HEMI V8 Engine EZC = 5.7L HEMI VCT Engine EZD = 5.7L Hemi VCT MDS Engine	DEC = 6-Speed Manual TREMEC Transmission DGJ = 5-Speed Auto W5A580 Transmission DGV = 4-Spd. Automatic VLP 42RLE Trans

AR = use ase required - = Non illustrrated part

Front / Rear Planetary
Figure 021DGV-608

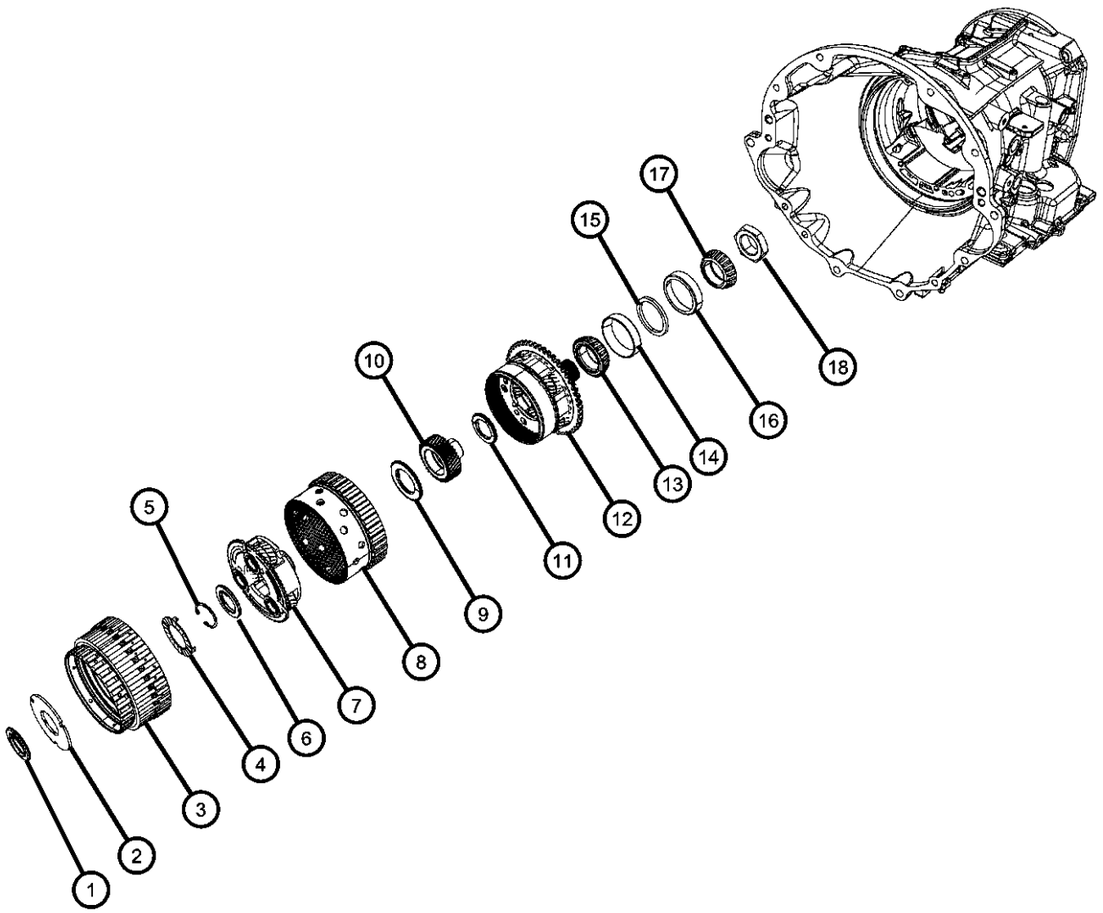

ITEM	PART NUMBER	QTY	LINE	SERIES	BODY	ENGINE	TRANS	TRIM	DESCRIPTION
	05280026	AR	D			EGG	DGV		[5.35 - 5.37MM]
	05280027	AR	D			EGG	DGV		[5.38 - 5.40MM]
	05280020	AR	D			EGG	DGV		[5.17 - 5.19MM]
	05280021	AR	D			EGG	DGV		[5.20 - 5.22MM]
	05280034	AR	D			EGG	DGV		[5.59 - 5.61MM]
	05280035	AR	D			EGG	DGV		[5.62 - 5.64MM]
	05280036	AR	D			EGG	DGV		[5.65 - 5.67MM]
	05280037	AR	D			EGG	DGV		[5.68 - 5.70MM]
	05280038	AR	D			EGG	DGV		[5.71 - 5.73MM]
	05280028	AR	D			EGG	DGV		[5.41 - 5.43MM]
	05280029	AR	D			EGG	DGV		[5.44 - 5.46MM]
	05280030	AR	D			EGG	DGV		[5.47 - 5.49MM]
	05280031	AR	D			EGG	DGV		[5.50 - 5.52MM]
	05280032	AR	D			EGG	DGV		[5.53 - 5.55MM]
	05280033	AR	D			EGG	DGV		[5.56 - 5.58MM]
	05280046	AR	D			EGG	DGV		[5.95 - 5.97MM]
	05280047	AR	D			EGG	DGV		[5.98 - 6.00MM]
	05280048	AR	D			EGG	DGV		[6.01 - 6.03MM]
	05280049	AR	D			EGG	DGV		[6.04 - 6.06MM]
	05280039	AR	D			EGG	DGV		[5.74 - 5.76MM]
	05280040	AR	D			EGG	DGV		[5.77 - 5.79MM]
	05280041	AR	D			EGG	DGV		[5.80 - 5.82MM]
	05280042	AR	D			EGG	DGV		[5.83 - 5.85MM]
	05280043	AR	D			EGG	DGV		[5.86 - 5.88MM]
	05280044	AR	D			EGG	DGV		[5.89 - 5.91MM]
	05280045	AR	D			EGG	DGV		[5.92 - 5.94MM]
16	04567022	1	D			EGG	DGV		BEARING CUP, Differential
17	04567025AB	1	D			EGG	DGV		BEARING CONE, Differential
18	06502476	1	D			EGG	DGV		NUT, Rear Carrier, M36 x 1.50

DODGE CHALLENGER (LC)

SERIES	LINE	BODY	ENGINE	TRANSMISSION
H = HIGHLINE P = PREMIUM X = SPECIAL	D = DODGE	22 = 2-DR SEDAN TYPE #2	EGG = 3.5L High Output V6 24V MPI Engine ESF = 6.1L SRT HEMI V8 Engine EZC = 5.7L HEMI VCT Engine EZD = 5.7L Hemi VCT MDS Engine	DEC = 6-Speed Manual TREMEC Transmission DGJ = 5-Speed Auto W5A580 Transmission DGV = 4-Spd. Automatic VLP 42RLE Trans

AR = use ase required - = Non illustrrated part

Valve Body And Related Parts
Figure 021DGV-805

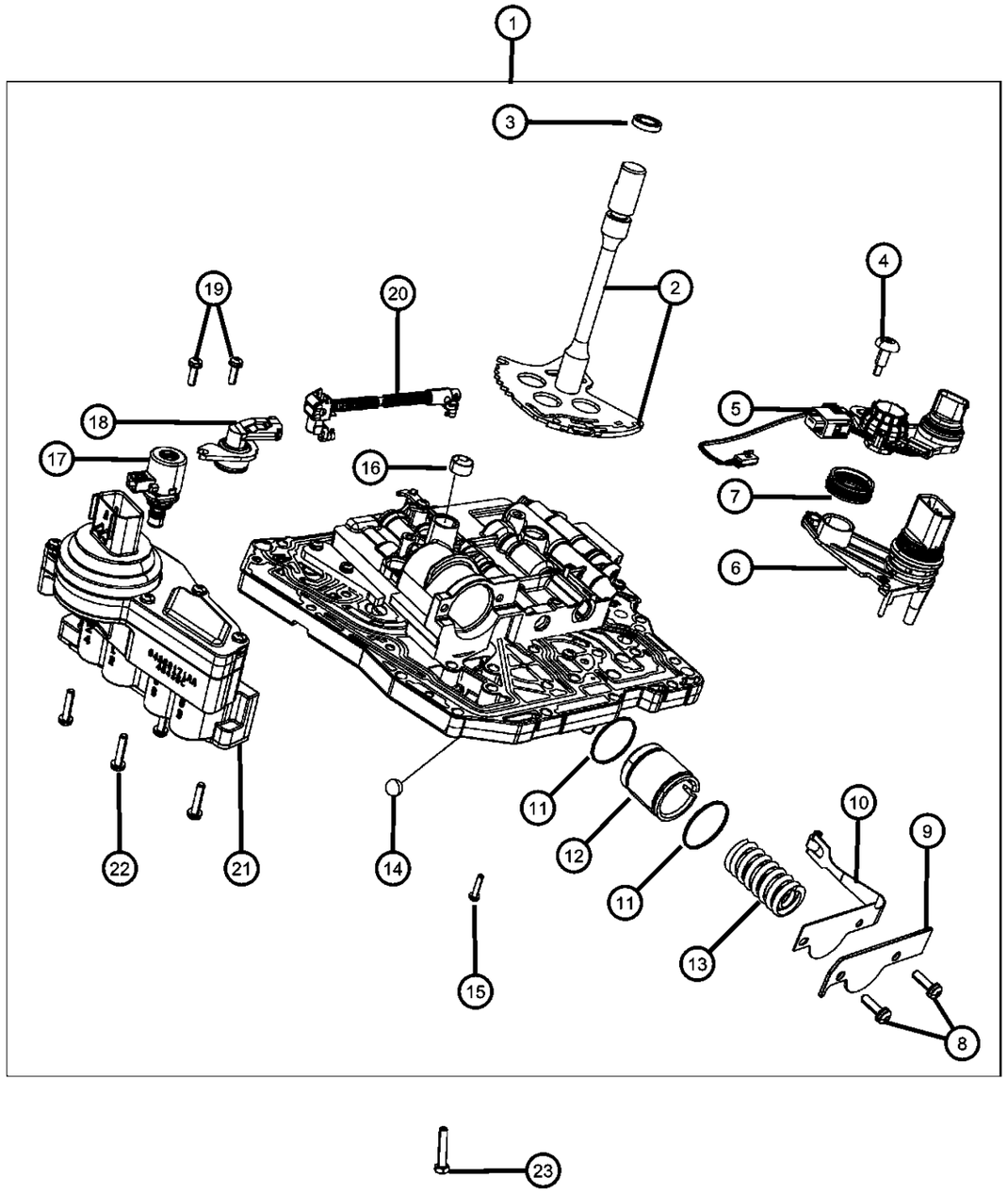

ITEM	PART NUMBER	QTY	LINE	SERIES	BODY	ENGINE	TRANS	TRIM	DESCRIPTION
1	68051180AA	1	D			EGG	DGV		VALVE BODY KIT, Transmission
2	04800280AA	1	D			EGG	DGV		LEVER, Manual Valve
3	04412836	1	D			EGG	DGV		SEAL, Manual Valve Lever
4	06508007AA	1	D			EGG	DGV		BOLT, Truss Head, M5X0.8X25.00
5	05078341AA	1	D			EGG	DGV		HARNESS, Variable Line Pressure
6	04659677AC	1	D			EGG	DGV		SENSOR, Manual Valve Lever
7	04659678	1	D			EGG	DGV		SEAL, Manual Valve Position Sensor
8	06508372AA	2	D			EGG	DGV		SCREW, Pan Head
9	04431711	1	D			EGG	DGV		RETAINER, Transmission 2nd and 4th Accumulator Piston
10	04431710	1	D			EGG	DGV		DETENT, Valve Body
11	04446544	2	D			EGG	DGV		SEAL, Accumulator
12	04446620	1	D			EGG	DGV		PISTON, Accumulator
13	04800310AA	1	D			EGG	DGV		SPRING, Accumulator
14	52118261	4	D			EGG	DGV		BALL, Check
15	06500215	24	D			EGG	DGV		SCREW AND WASHER, Pan Head, M5x.8x25
16	04412291	1	D			EGG	DGV		SEAL, Clutch Feed
17	05078335AA	1	D			EGG	DGV		SOLENOID, Transmission Variable Force
18	05078336AA	1	D			EGG	DGV		SENSOR, TRANS PRESSURE TRANSDUCER
19	06508372AA	2	D			EGG	DGV		SCREW, Pan Head
20	04800283AA	1	D			EGG	DGV		ROD, Parking Sprag
21	05143151AA	1	D			EGG	DGV		SOLENOID PACKAGE, Valve Body
22	06500215	4	D			EGG	DGV		SCREW AND WASHER, Pan Head, M5x.8x25
23	06100155	17	D			EGG	DGV		BOLT, Hex Head, M8x30, Valve Body To Case

DODGE CHALLENGER (LC)

SERIES	LINE	BODY	ENGINE	TRANSMISSION
H = HIGHLINE P = PREMIUM X = SPECIAL	D = DODGE	22 = 2-DR SEDAN TYPE #2	EGG = 3.5L High Output V6 24V MPI Engine ESF = 6.1L SRT HEMI V8 Engine EZC = 5.7L HEMI VCT Engine EZD = 5.7L Hemi VCT MDS Engine	DEC = 6-Speed Manual TREMEC Transmission DGJ = 5-Speed Auto W5A580 Transmission DGV = 4-Spd. Automatic VLP 42RLE Trans

Accumulator And Related Parts
Figure 021DGV-850

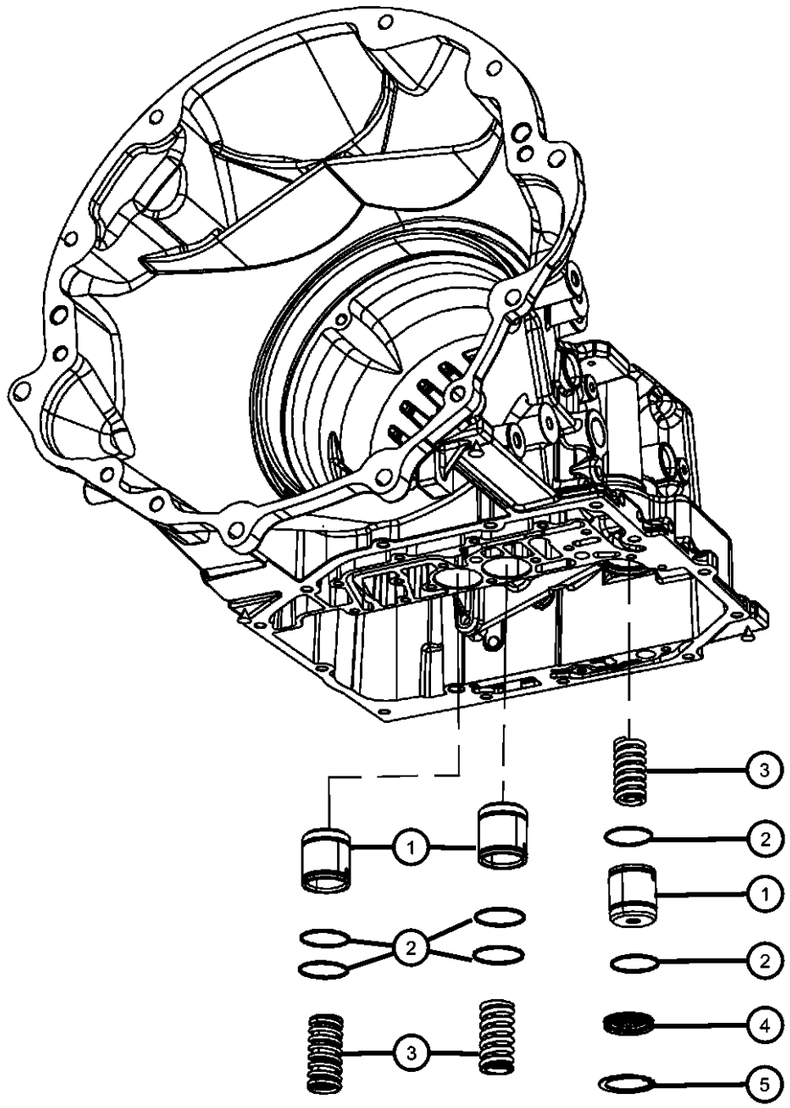

ITEM	PART NUMBER	QTY	LINE	SERIES	BODY	ENGINE	TRANS	TRIM	DESCRIPTION
For Transmissions With Accumulator Located In The Valve Body Refer to Valve Body Illustration									
1	04446620	1	D			EGG	DGV		PISTON, Accumulator
2	04446544	2	D			EGG	DGV		SEAL, Accumulator
3	04800310AA	2	D			EGG	DGV		SPRING, Accumulator
4	04431617AB	1	D			EGG	DGV		COVER, Accumulator
5	06501695	1	D			EGG	DGV		SNAP RING

DODGE CHALLENGER (LC)

SERIES	LINE	BODY	ENGINE	TRANSMISSION
H = HIGHLINE P = PREMIUM X = SPECIAL	D = DODGE	22 = 2-DR SEDAN TYPE #2	EGG = 3.5L High Output V6 24V MPI Engine ESF = 6.1L SRT HEMI V8 Engine EZC = 5.7L HEMI VCT Engine EZD = 5.7L Hemi VCT MDS Engine	DEC = 6-Speed Manual TREMEC Transmission DGJ = 5-Speed Auto W5A580 Transmission DGV = 4-Spd. Automatic VLP 42RLE Trans

Parking Sprag And Related Parts
Figure 021DGV-860

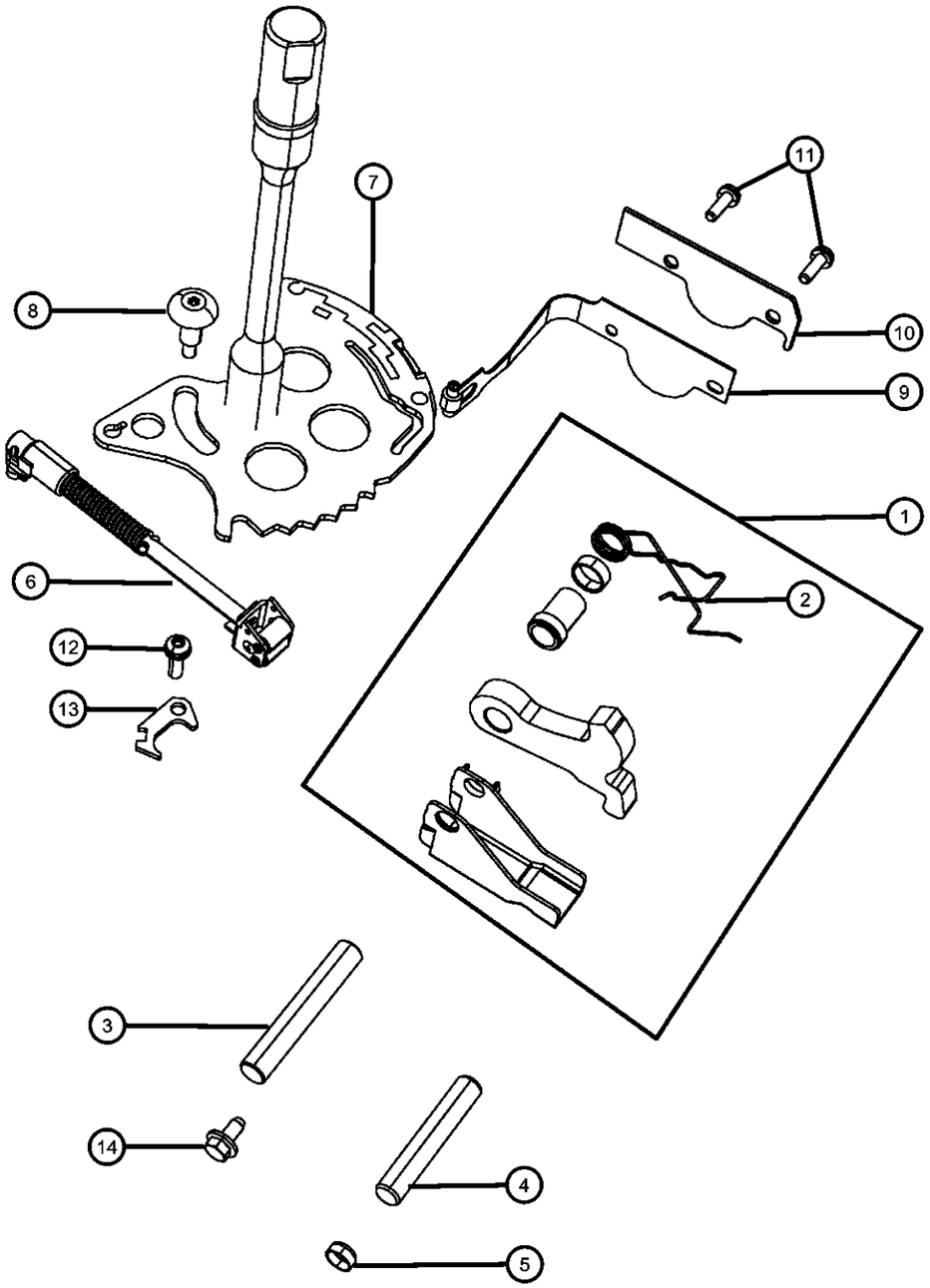

ITEM	PART NUMBER	QTY	LINE	SERIES	BODY	ENGINE	TRANS	TRIM	DESCRIPTION
1	52852948AA	1	D			EGG	DGV		BRACKET, Parking Sprag
2	52852949AA	1	D			EGG	DGV		SPRING, Parking Sprag Return
3		1							SHAFT, Parking Sprag, (NOT SERVICED)
4	04431999	1	D			EGG	DGV		SHAFT, Parking Sprag
5	04446612	1	D			EGG	DGV		CUP, Parking Brake Sprag
6	04800283AA	1	D			EGG	DGV		ROD, Parking Sprag
7	04800280AA	1	D			EGG	DGV		LEVER, Manual Valve
8	06508007AA	1	D			EGG	DGV		BOLT, Truss Head, M5X0.8X25.00
9	04431710	1	D			EGG	DGV		DETENT, Valve Body
10	04431711	1	D			EGG	DGV		RETAINER, Transmission 2nd and 4th Accumulator Piston
11	06508372AA	2	D			EGG	DGV		SCREW, Pan Head
12	06508372AA	1	D			EGG	DGV		SCREW, Pan Head
13		1							GUIDE, Parking Sprag Rod, Serviced With The Valve Body, (NOT SERVICED)
14	06503384	1	D			EGG	DGV		SCREW AND WASHER, Hex Head, M5x.8x12

DODGE CHALLENGER (LC)

SERIES	LINE	BODY	ENGINE	TRANSMISSION
H = HIGHLINE	D = DODGE	22 = 2-DR SEDAN TYPE #2	EGG = 3.5L High Output V6 24V MPI Engine	DEC = 6-Speed Manual TREMEC Transmission
P = PREMIUM			ESF = 6.1L SRT HEMI V8 Engine	DGJ = 5-Speed Auto W5A580 Transmission
X = SPECIAL			EZC = 5.7L HEMI VCT Engine	DGV = 4-Spd. Automatic VLP 42RLE Trans
			EZD = 5.7L Hemi VCT MDS Engine	

AR = use ase required - = Non illustrrated part

Gearshift Controls
Figure 021DGV-1105

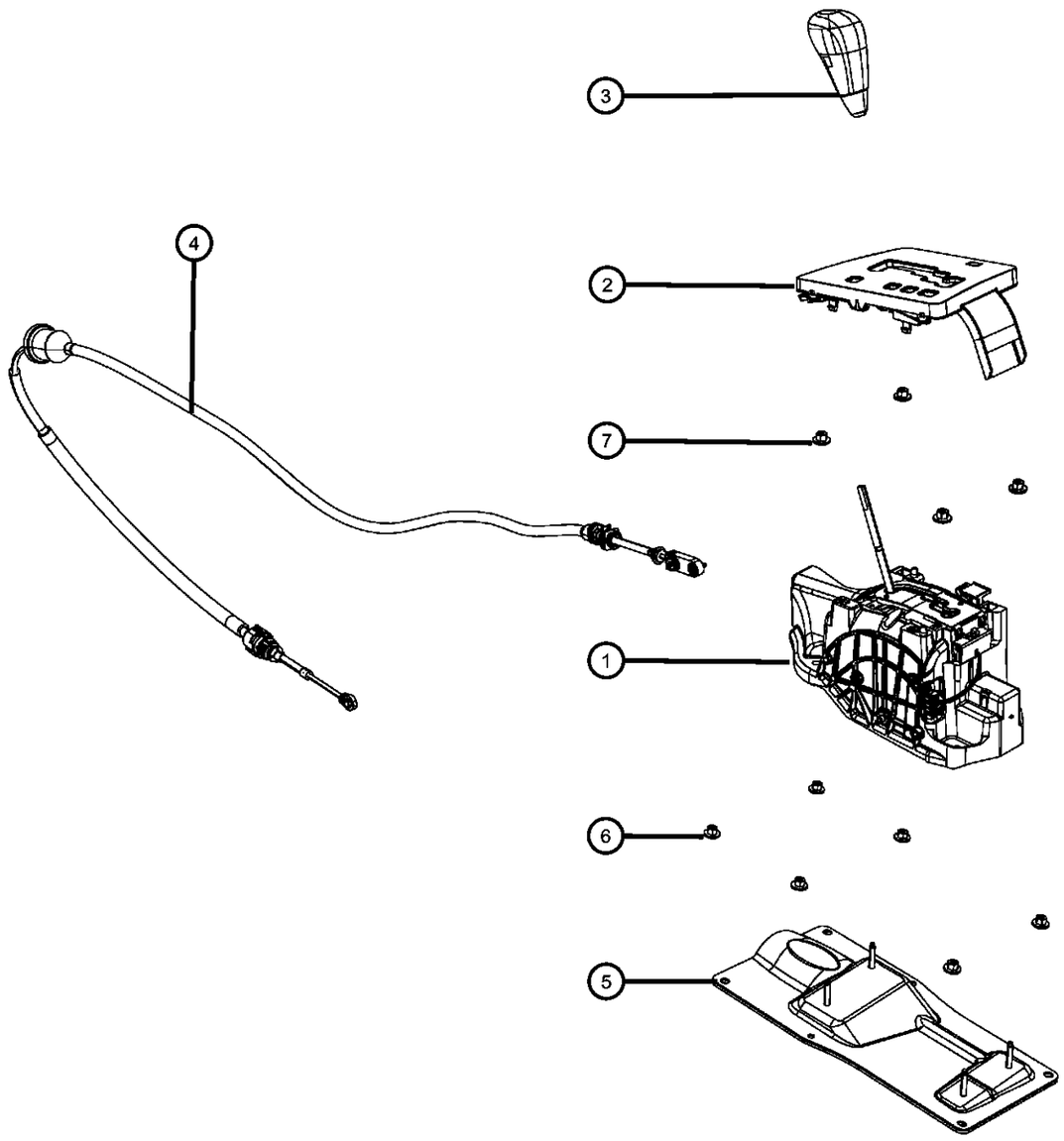

ITEM	PART NUMBER	QTY	LINE	SERIES	BODY	ENGINE	TRANS	TRIM	DESCRIPTION
[CV3] = Urethane Shift Knob									
[CVB] = Leather Wrapped Shift Knob									
1	04578583AC	1	D				DGV		SHIFTER, Transmission
2	04578705AA	1	D				DGV		BEZEL, Console PRNDL
3									KNOB, Gearshift
	04578692AA	1	D				DGV		With [CVB]
	04578699AA	1	D				DGV		With [CV3]
4	04578759AA	1	D				DGV		CABLE, Gear Selector
5	04779565AC	1	D				DGJ, DGV		BRACKET, Cable Mounting
6	06506456AA	4	D				DGJ, DGV		NUT AND WASHER, Hex, M6x1.0
7	06506456AA	4	D				DGJ, DGV		NUT AND WASHER, Hex, M6x1.0

DODGE CHALLENGER (LC)

SERIES	LINE	BODY	ENGINE	TRANSMISSION
H = HIGHLINE P = PREMIUM X = SPECIAL	D = DODGE	22 = 2-DR SEDAN TYPE #2	EGG = 3.5L High Output V6 24V MPI Engine ESF = 6.1L SRT HEMI V8 Engine EZC = 5.7L HEMI VCT Engine EZD = 5.7L Hemi VCT MDS Engine	DEC = 6-Speed Manual TREMEC Transmission DGJ = 5-Speed Auto W5A580 Transmission DGV = 4-Spd. Automatic VLP 42RLE Trans

Gearshift Lever, Cable and Bracket
Figure 021DGV-1115

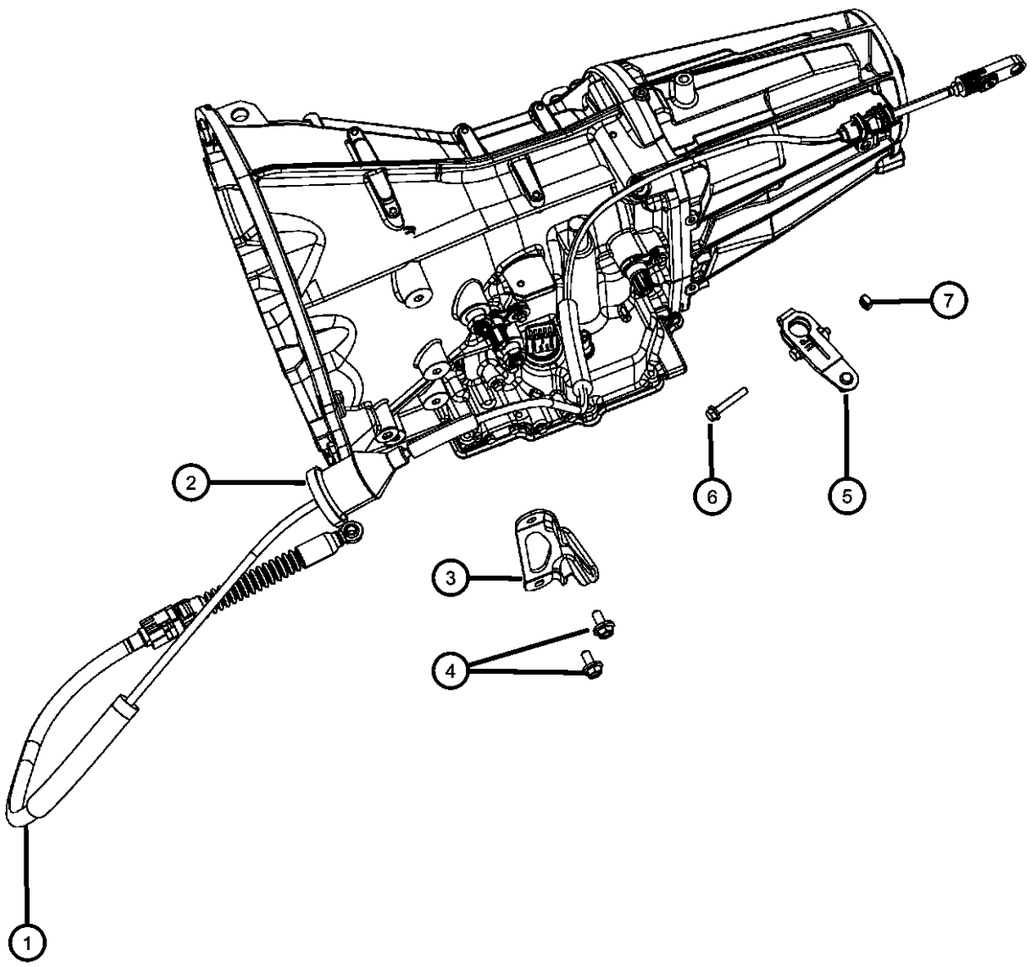

ITEM	PART NUMBER	QTY	LINE	SERIES	BODY	ENGINE	TRANS	TRIM	DESCRIPTION
1	04578759AA	1	D				DGV		CABLE, Gear Selector
2		1							GROMMET, Serviced With Cable, (NOT SERVICED)
3	04578070AA	1	D				DGV		BRACKET, Shift Cable
4	06503692	2	D				DGJ, DGV		SCREW, M8-1.25
5	04578066AA	1	D				DGV		LEVER, Manual Control
6	06101978	1	D				DGV		BOLT AND WASHER, Hex Head, M6X1.00X40.00
7	06502636	1	D				DGV		NUT

DODGE CHALLENGER (LC)

SERIES	LINE	BODY	ENGINE	TRANSMISSION
H = HIGHLINE P = PREMIUM X = SPECIAL	D = DODGE	22 = 2-DR SEDAN TYPE #2	EGG = 3.5L High Output V6 24V MPI Engine ESF = 6.1L SRT HEMI V8 Engine EZC = 5.7L HEMI VCT Engine EZD = 5.7L Hemi VCT MDS Engine	DEC = 6-Speed Manual TREMEC Transmission DGJ = 5-Speed Auto W5A580 Transmission DGV = 4-Spd. Automatic VLP 42RLE Trans

Mounting Covers And Shields
Figure 021DGV-1205

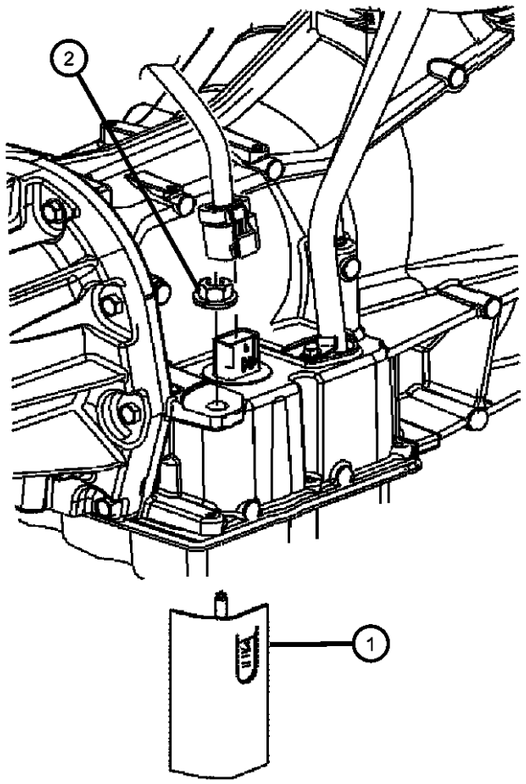

ITEM	PART NUMBER	QTY	LINE	SERIES	BODY	ENGINE	TRANS	TRIM	DESCRIPTION
1	04593575AA	1	D			EGG	DGV		SHIELD, Transmission
2	06104726AA	1	D			EGG	DGV		NUT AND WASHER, Hex, M8x1.25

DODGE CHALLENGER (LC)

SERIES	LINE	BODY	ENGINE	TRANSMISSION
H = HIGHLINE P = PREMIUM X = SPECIAL	D = DODGE	22 = 2-DR SEDAN TYPE #2	EGG = 3.5L High Output V6 24V MPI Engine ESF = 6.1L SRT HEMI V8 Engine EZC = 5.7L HEMI VCT Engine EZD = 5.7L Hemi VCT MDS Engine	DEC = 6-Speed Manual TREMEC Transmission DGJ = 5-Speed Auto W5A580 Transmission DGV = 4-Spd. Automatic VLP 42RLE Trans

AR = use ase required - = Non illustrrated part

Structural Collar
Figure 021DGV-1210

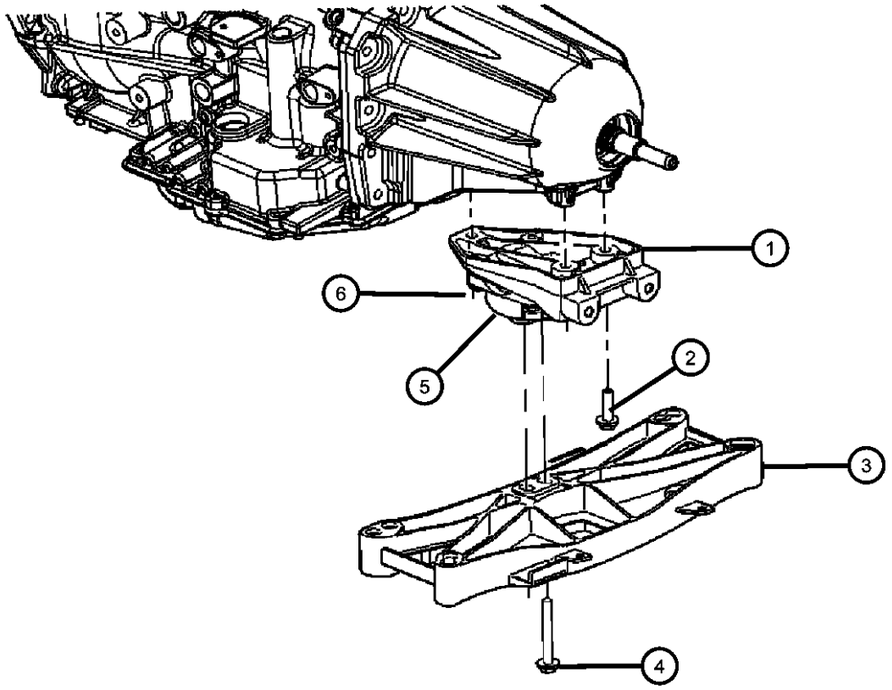

ITEM	PART NUMBER	QTY	LINE	SERIES	BODY	ENGINE	TRANS	TRIM	DESCRIPTION
1	04578064AD	1	D			EG0	DGV		BRACKET, Transmission Mount
2	06101759	4	D				DGJ, DGV		SCREW AND WASHER, Hex Head, M8x1.25x35
3									CROSSMEMBER, Transmission
	04578055AE	1	D			EG0	DGV		
	04578351AB	1	D			EG0	DGJ		
4	06101553	2	D				DGJ, DGV		BOLT AND WASHER, Hex Head, M10x1.50x80
5	04578063AE	1	D			EG0			MOUNT, Transmission
6	06101759	4	D				DGJ, DGV		SCREW AND WASHER, Hex Head, M8x1.25x35

DODGE CHALLENGER (LC)

SERIES	LINE	BODY	ENGINE	TRANSMISSION
H = HIGHLINE P = PREMIUM X = SPECIAL	D = DODGE	22 = 2-DR SEDAN TYPE #2	EGG = 3.5L High Output V6 24V MPI Engine ESF = 6.1L SRT HEMI V8 Engine EZC = 5.7L HEMI VCT Engine EZD = 5.7L Hemi VCT MDS Engine	DEC = 6-Speed Manual TREMEC Transmission DGJ = 5-Speed Auto W5A580 Transmission DGV = 4-Spd. Automatic VLP 42RLE Trans

Mounting Bolts
Figure 021DGV-1215

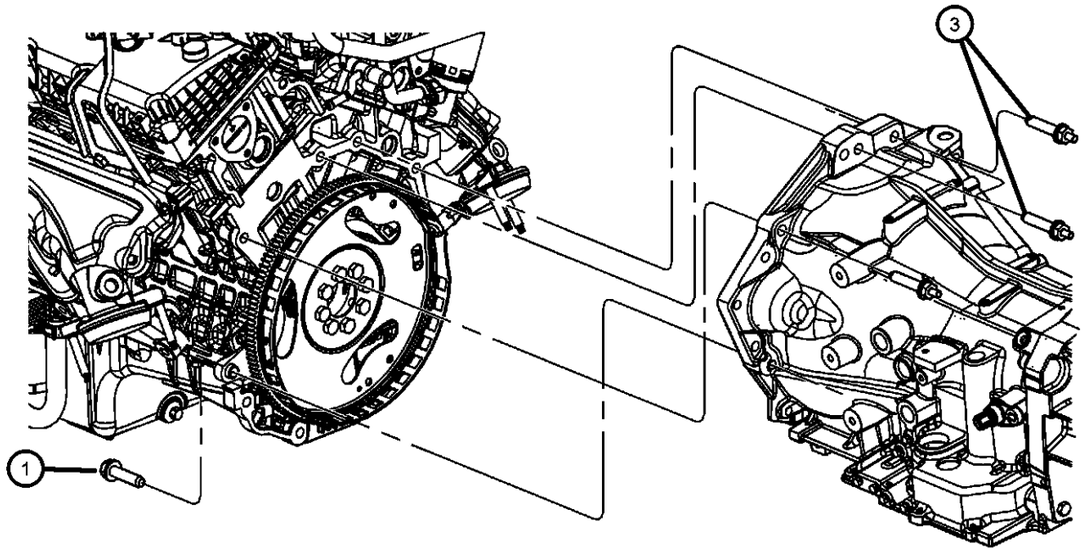

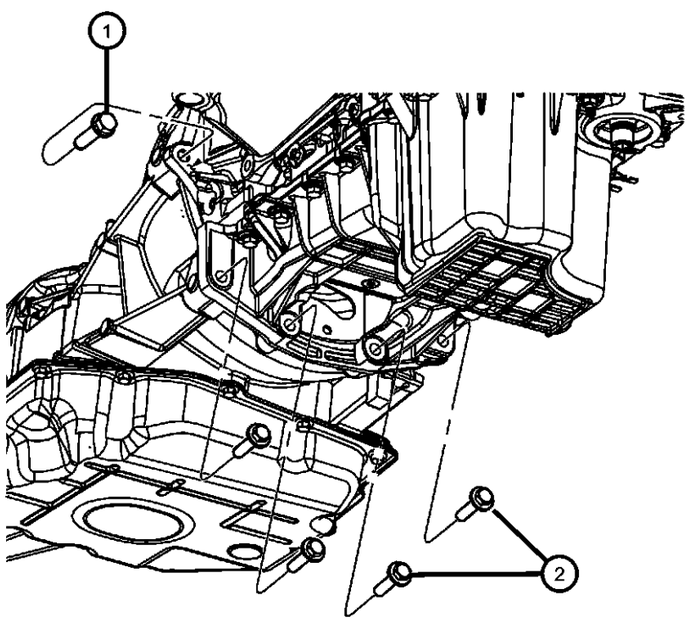

ITEM	PART NUMBER	QTY	LINE	SERIES	BODY	ENGINE	TRANS	TRIM	DESCRIPTION
1	06501742	2	D			EGG			BOLT AND WASHER, Hex Head, M12X1.75X50.00
2	06102123AA	4	D			EGG			BOLT AND CONED WASHER, Hex Head, M10X1.50X45.00
3	06507424AA	4	D			EGG			STUD, Double Ended

DODGE CHALLENGER (LC)

SERIES	LINE	BODY	ENGINE	TRANSMISSION
H = HIGHLINE P = PREMIUM X = SPECIAL	D = DODGE	22 = 2-DR SEDAN TYPE #2	EGG = 3.5L High Output V6 24V MPI Engine ESF = 6.1L SRT HEMI V8 Engine EZC = 5.7L HEMI VCT Engine EZD = 5.7L Hemi VCT MDS Engine	DEC = 6-Speed Manual TREMEC Transmission DGJ = 5-Speed Auto W5A580 Transmission DGV = 4-Spd. Automatic VLP 42RLE Trans

Group - 22

Wheels

Group - 22 Wheels

Illustration Title — Group-Fig. No.

Wheels, Tires and Hardware
Wheels and Hardware ..... Fig. 22 - 105

Wheel Covers and Center Caps
Wheel Covers and Center Caps ..... Fig. 22 - 205

Jack Stowage
Jack Assembly ..... Fig. 22 - 305

Wheel Spare
Spare Tire Stowage ..... Fig. 22 - 405

Tire Monitoring System
Tire Monitoring System ..... Fig. 22 - 605

022-100 Wheels, Tires and Hardware	**022-200** Wheel Covers and Center Caps	**022-300** Jack Stowage	**022-400** Wheel Spare
022-600 Tire Monitoring System			

Wheels and Hardware
Figure 22-105

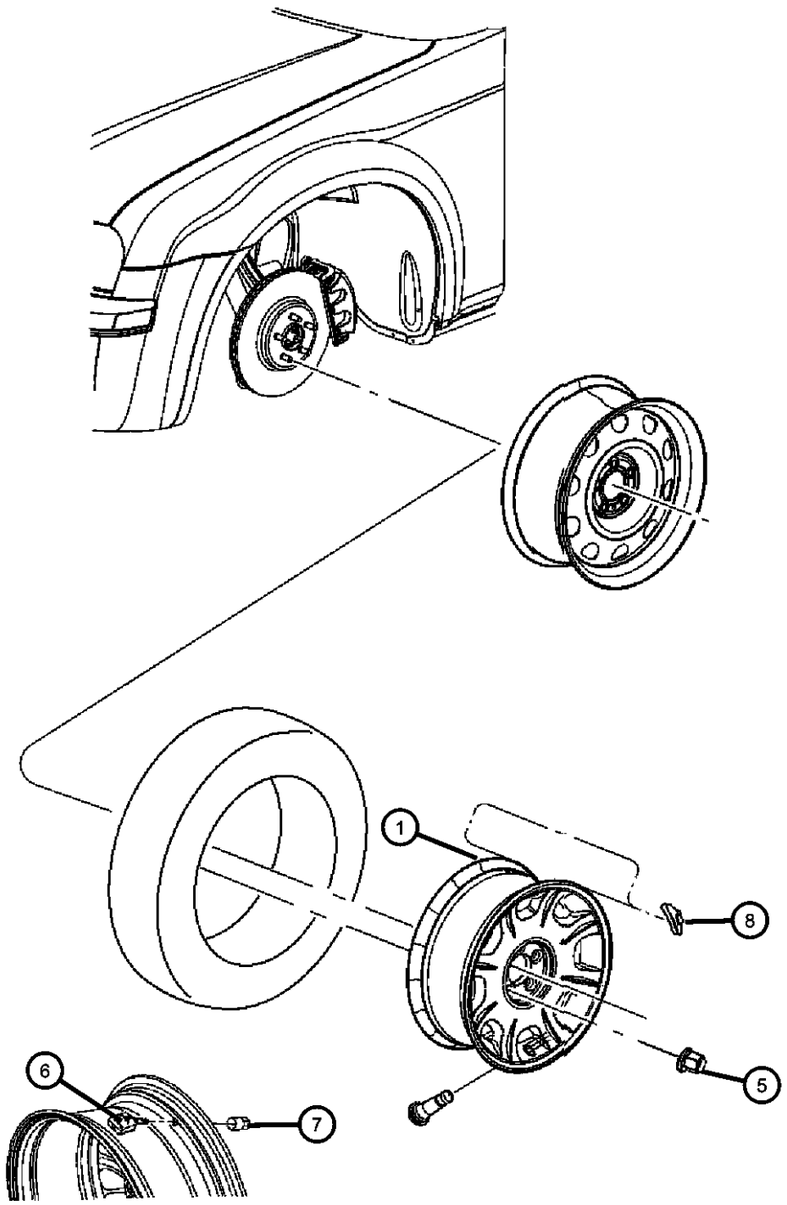

ITEM	PART NUMBER	QTY	LINE	SERIES	BODY	ENGINE	TRANS	TRIM	DESCRIPTION
NOTES: Sales Code [TBC] = Compact Spare Tire [TBS] = Full Size Restricted Use Spare Wheel [WEA] = 17x7.5 Steel Wheel [WF4] = 17x7.5 Aluminum Machined Cast Wheel [WPT] = 18x7.5 Aluminum Wheel [WPX] = 20x8 Aluminum Wheel [WP2] = 20x9 Aluminum Chrome Clad Wheel [WP3] = 20x9 Aluminum SRT Design Wheel									
1									WHEEL, Aluminum
	1QX23DX8AA	2	D		22				[WP6] 18x7.5 Aluminum Painted Wheel
	68051232AA	2	D		22				[WPX] 20x8 Aluminum Wheel
	1DV21PAKAC	4	D		22				[WF4] 17x7.5 Aluminum Machined Cast Wheel
	1GP23PAKAA	4	D		22				[WPT] 18x7.5 Aluminum Wheel
	05181849AB	2	D		22				[WP3] 20x9 Aluminum SRT Design Wheel
	1DP88SZ0AA	2	D		22				[WP2] 20x8 Aluminum Chrome Clad Wheel
-2	04782466AC	4	D		22				WHEEL, Steel, [WEA] 17x7 Steel Wheel
-3									WHEEL, Spare
	04782819AA	1	D		22				17x4 Steel Spare
	04782465AA	1	D		22				18x4 Steel Compact Spare
-4									CUP, Spare Tire Retention
	52059160AC	1	D		22				[TBC] Compact Spare Tire
		1	D		22				[TBS] Full Size Restricted Use Spare
5									NUT, Wheel
	06507826AA	20	D		22				[WPT or WF4]
	06507824AA	20	D		22				
		20	D		22				[WP2 or WP3 or WPX]
6	56029400AC	2	D		22				SENSOR, Tire Pressure, See Sensors Group 008
7	56053037AA	2	D		22				NUT, Tire Pressure Sensor, Serviced with Package
8		2							WEIGHT, Wheel Balance Tape, (NOT SERVICED)
-9	68023890AA	2	D		22				CAP KIT, Valve Stem, Grey, Contains: 10524005 Valve Stem Cap, Grey (Qty. 5)

DODGE CHALLENGER (LC)

SERIES	LINE	BODY	ENGINE	TRANSMISSION
H = HIGHLINE P = PREMIUM X = SPECIAL	D = DODGE	22 = 2-DR SEDAN TYPE #2	EGG = 3.5L High Output V6 24V MPI Engine ESF = 6.1L SRT HEMI V8 Engine EZC = 5.7L HEMI VCT Engine EZD = 5.7L Hemi VCT MDS Engine	DEC = 6-Speed Manual TREMEC Transmission DGJ = 5-Speed Auto W5A580 Transmission DGV = 4-Spd. Automatic VLP 42RLE Trans

Wheels and Hardware
Figure 22-105

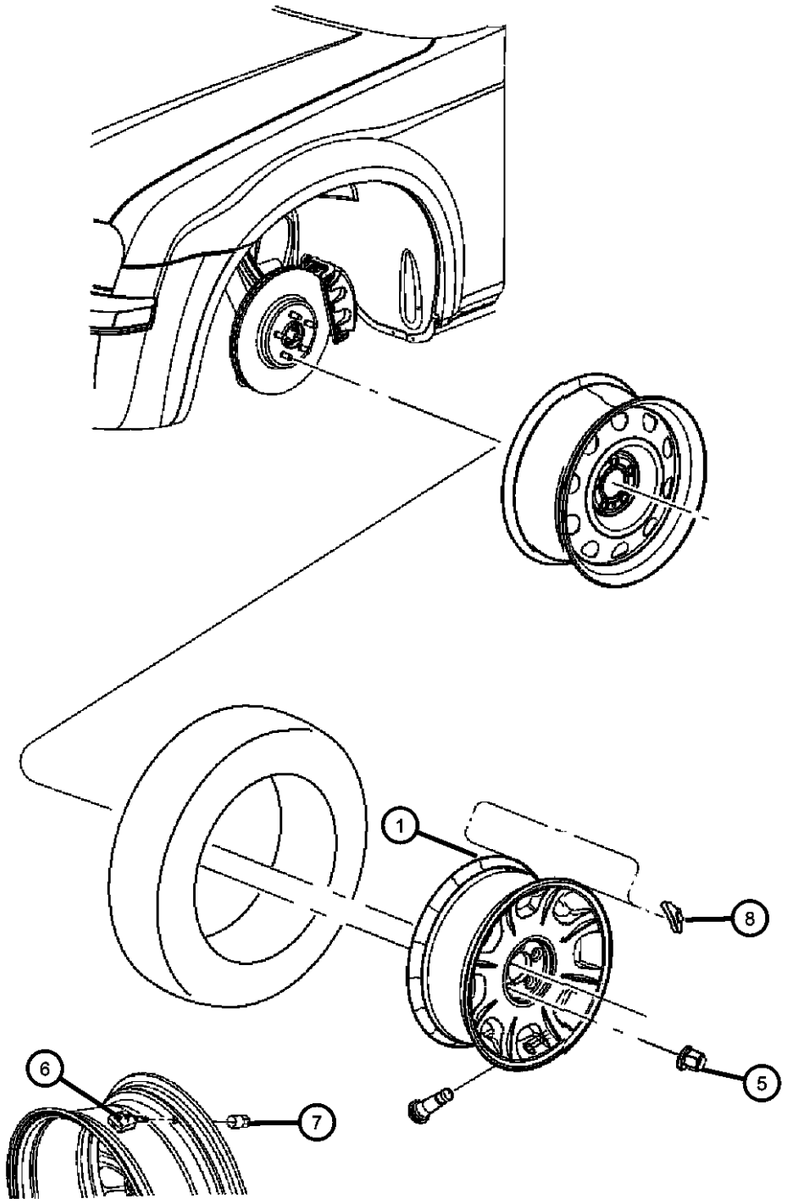

ITEM	PART NUMBER	QTY	LINE	SERIES	BODY	ENGINE	TRANS	TRIM	DESCRIPTION
-10									HARDWARE KIT, Mounting
	68020719AB	4	D		22				Contains: 1-56053037AB TPM Retaining Nut, 1-10513007 Valve Stem Cap, Black, 1-10524005 Valve Stem Cap, Grey, 1-10542008 TPM To Wheel Rim Seal, 1-40506002 TPM Valve Core & TPM Mounting Instruction Sheet
	68020724AA	2	D		22				Contains:; 1-20522237 Valve Stem, 1-10542008 TPM To Wheel Rim Seal, 1-40506002 TPM Valve Core & TPM Mounting Instruction Sheet
	68020722AA	2	D		22				Contains: 1-10524004 Valve Stem Cap, Black, 1-10524005 Valve Stem Cap, Grey, 1-40506002 TPM Valve Core & TPM Mounting Instruction Sheet

DODGE CHALLENGER (LC)

SERIES	LINE	BODY	ENGINE	TRANSMISSION
H = HIGHLINE	D = DODGE	22 = 2-DR SEDAN TYPE #2	EGG = 3.5L High Output V6 24V MPI Engine	DEC = 6-Speed Manual TREMEC Transmission
P = PREMIUM			ESF = 6.1L SRT HEMI V8 Engine	DGJ = 5-Speed Auto W5A580 Transmission
X = SPECIAL			EZC = 5.7L HEMI VCT Engine	DGV = 4-Spd. Automatic VLP 42RLE Trans
			EZD = 5.7L Hemi VCT MDS Engine	

Wheel Covers and Center Caps
Figure 22-205

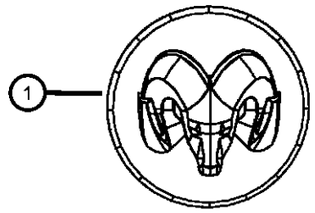

ITEM	PART NUMBER	QTY	LINE	SERIES	BODY	ENGINE	TRANS	TRIM	DESCRIPTION
NOTES: Sales Codes:									
[WP2] = 20x9 Akuminum Chrome Clad Wheel									
1									CAP, Wheel Center
	04895900AA	4	D		22				[WPT or WF4]
		4	D		22				[WP3 or WP6]
	52110398AA	4	D		22				[WP2 or WPX]
-2	1DV32PAKAB	4	D		22				COVER, Wheel, [W7A]

DODGE CHALLENGER (LC)

SERIES	LINE	BODY	ENGINE	TRANSMISSION
H = HIGHLINE	D = DODGE	22 = 2-DR SEDAN TYPE #2	EGG = 3.5L High Output V6 24V MPI Engine	DEC = 6-Speed Manual TREMEC Transmission
P = PREMIUM			ESF = 6.1L SRT HEMI V8 Engine	DGJ = 5-Speed Auto W5A580 Transmission
X = SPECIAL			EZC = 5.7L HEMI VCT Engine	DGV = 4-Spd. Automatic VLP 42RLE Trans
			EZD = 5.7L Hemi VCT MDS Engine	

Jack Assembly
Figure 22-305

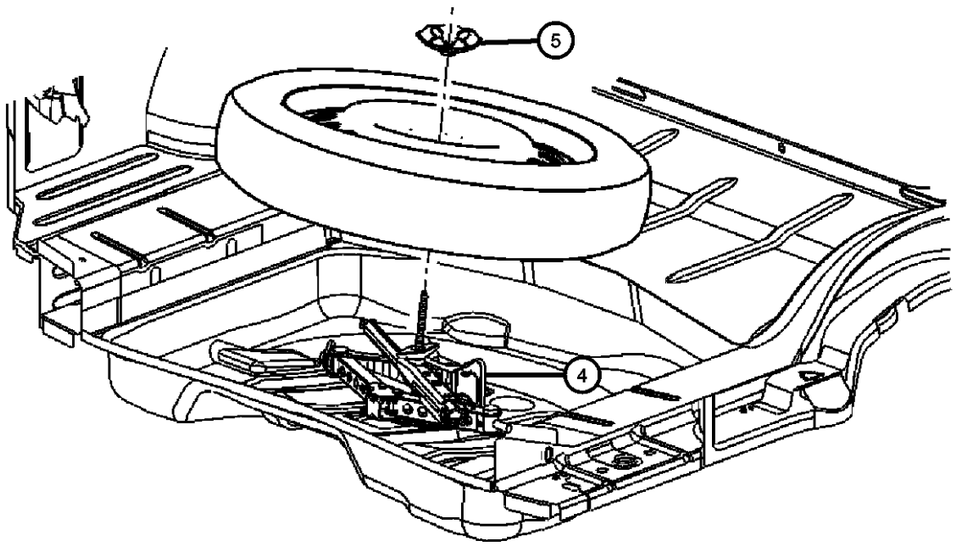

ITEM	PART NUMBER	QTY	LINE	SERIES	BODY	ENGINE	TRANS	TRIM	DESCRIPTION
-1	68042190AA	1	D		22				COMPRESSOR, Tire
-2	68042191AA	1	D		22				SEALANT, Tire
3	04895015AC	1	D		22				JACK, Scissors
4	06504599	1	D		22				NUT, M10x1.50

DODGE CHALLENGER (LC)

SERIES	LINE	BODY	ENGINE	TRANSMISSION
H = HIGHLINE P = PREMIUM X = SPECIAL	D = DODGE	22 = 2-DR SEDAN TYPE #2	EGG = 3.5L High Output V6 24V MPI Engine ESF = 6.1L SRT HEMI V8 Engine EZC = 5.7L HEMI VCT Engine EZD = 5.7L Hemi VCT MDS Engine	DEC = 6-Speed Manual TREMEC Transmission DGJ = 5-Speed Auto W5A580 Transmission DGV = 4-Spd. Automatic VLP 42RLE Trans

Spare Tire Stowage
Figure 22-405

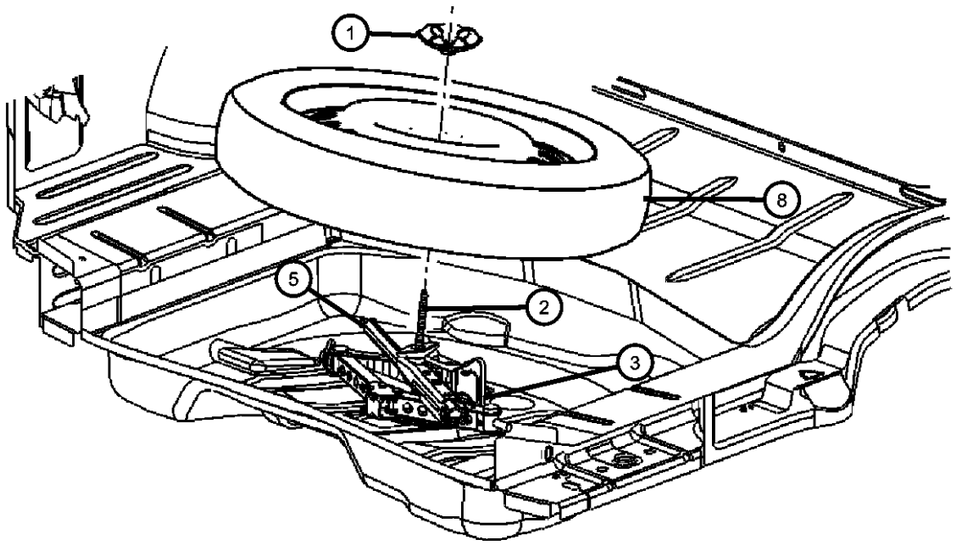

ITEM	PART NUMBER	QTY	LINE	SERIES	BODY	ENGINE	TRANS	TRIM	DESCRIPTION
NOTES: Sales Codes: [TBW] = Full Size Matching Wheel Spare									
1	52059160AC	1	D		22				CUP, Spare Tire Retention
2		1							BOLT, Hex Flange Head, M8x1.25x16.0, (NOT SERVICED)
3	04895015AC	1	D		22				JACK, Scissors
-4	06504599	1	D		22				NUT, M10x1.50, Jack Mounting
5	04782999AC	1	D		22				WRENCH, Wheel Lug Nut
-6	68042190AA	1	D		22				COMPRESSOR, Tire
-7	68042191AA	1	D		22				SEALANT, Tire
8	04782466AC	4	D		22				WHEEL, Steel, [WEA] 17x7 Steel Argent Wheel

DODGE CHALLENGER (LC)

SERIES	LINE	BODY	ENGINE	TRANSMISSION
H = HIGHLINE P = PREMIUM X = SPECIAL	D = DODGE	22 = 2-DR SEDAN TYPE #2	EGG = 3.5L High Output V6 24V MPI Engine ESF = 6.1L SRT HEMI V8 Engine EZC = 5.7L HEMI VCT Engine EZD = 5.7L Hemi VCT MDS Engine	DEC = 6-Speed Manual TREMEC Transmission DGJ = 5-Speed Auto W5A580 Transmission DGV = 4-Spd. Automatic VLP 42RLE Trans

Tire Monitoring System
Figure 22-605

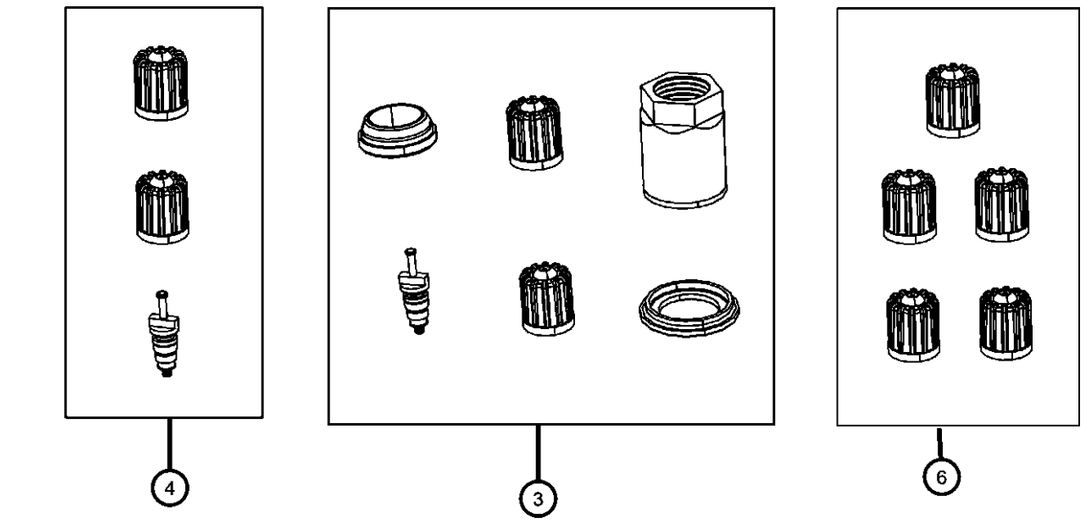

ITEM	PART NUMBER	QTY	LINE	SERIES	BODY	ENGINE	TRANS	TRIM	DESCRIPTION
1	56029400AC	2	D		22				SENSOR, Tire Pressure
2	56053037AB	2	D		22				NUT, Tire Pressure Sensor
3	68020719AC	4	D		22				HARDWARE KIT, Mounting, Includes: Nut, Washer, Black Cap (BUX), Grey Cap (Domestic), Seal, Valve Core And I-Sheet
4	68020722AA	2	D		22				HARDWARE KIT, Mounting, Includes: Valve Core, Black Cap (BUX), Grey Cap (Domestic)
5	68020724AA	2	D		22				HARDWARE KIT, Mounting, Includes: Valve Stem, Seal, Valve Core And I-Sheet
6	68023890AA	2	D		22				CAP KIT, Valve Stem, Grey, Includes: 5 Grey Caps (Domestic)

DODGE CHALLENGER (LC)

SERIES	LINE	BODY	ENGINE	TRANSMISSION
H = HIGHLINE	D = DODGE	22 = 2-DR SEDAN TYPE #2	EGG = 3.5L High Output V6 24V MPI Engine	DEC = 6-Speed Manual TREMEC Transmission
P = PREMIUM			ESF = 6.1L SRT HEMI V8 Engine	DGJ = 5-Speed Auto W5A580 Transmission
X = SPECIAL			EZC = 5.7L HEMI VCT Engine	DGV = 4-Spd. Automatic VLP 42RLE Trans
			EZD = 5.7L Hemi VCT MDS Engine	

AR = use ase required - = Non illustrrated part

Group - 24

Air Conditioners and Heaters

024-100 Air Conditioner and Heater Units	**024-200** Air Conditioner and Heater Plumbing	**024-300** Air Conditioner and Heater Controls	**024-400** Air Conditioner Compressor and Mounting
024-500 Air Ducts			

Group - 24 Air Conditioners and Heaters

Illustration Title — Group-Fig. No.

Air Conditioner and Heater Units
A/C and Heater Unit....Fig. 24 - 120

Air Conditioner and Heater Plumbing
Heater Plumbing....Fig. 24 - 205
Heater Plumbing....Fig. 24 - 210
A/C Plumbing....Fig. 24 - 220

Air Conditioner and Heater Controls
A/C and Heater Controls....Fig. 24 - 310

Air Conditioner Compressor and Mounting
A/C Compressor....Fig. 24 - 405
A/C Compressor Mounting....Fig. 24 - 440

Air Ducts
Ducts....Fig. 24 - 505

A/C and Heater Unit
Figure 24-120

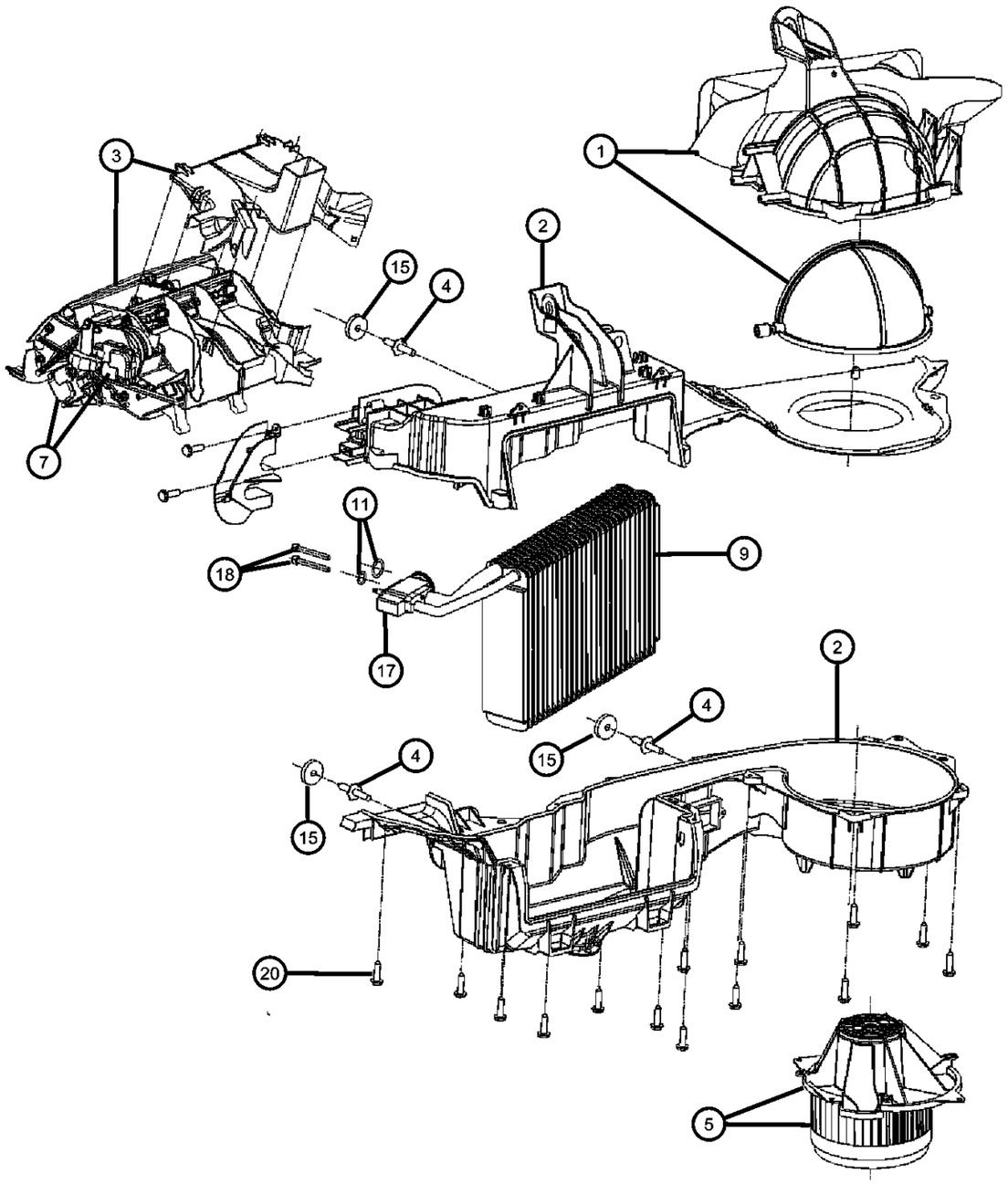

ITEM	PART NUMBER	QTY	LINE	SERIES	BODY	ENGINE	TRANS	TRIM	DESCRIPTION
1	68037360AA	1	D		22				HOUSING, Air Inlet, Includes: Door and Actuator
2	68037340AA	1	D		22				HOUSING, A/C And Heater, Includes: Heater Tube Clamp, and Studs.
3	68044273AA	1	D		22				HOUSING, Distribution, Includes Doors, Links and Levers
4		1							STUD, A/C and Heater Housing Mtg., Serviced with Blower Housing, (NOT SERVICED)
5	68037308AA	1	D		22				MOTOR, Blower with Wheel
-6	68037310AA	1	D		22				RESISTOR, Blower Motor
7	68033337AA	3	D		22				ACTUATOR, A/C and Heater
-8	68037320AA	1	D		22				CORE, Heater
9	05061585AA	1	D		22				EVAPORATOR, Air Conditioning, With Tubes and Seal
-10	68040532AA	1	D		22				PROBE, Air Conditioning
11		1							O RING, Expansion Valve, Serviced with Expansion Valve, (NOT SERVICED)
-12	04596511AA	1	D		22				DRAIN, A/C And Heater
-13	68037370AA	1	D		22				SEAL KIT, A/C And Heater Unit, Includes: Evaporator to Dash, Air Inlet, Defrost and Unit Mounting Washers
-14	68037309AA	1	D		22				WIRING, A/C and HEATER
15		1							WASHER, A/C Unit Mounting Stud, Serviced with Blower Housing, (NOT SERVICED)
-16		1							O RING, Heater Core, Serviced with Heater Core, (NOT SERVICED)
17	05139687AA	1	D		22				VALVE, Expansion
18		1							SCREW, Expansion Valve Mounting, Serviced with Expansion Valve, (NOT SERVICED)
-19	68031980AA	1	D		22				CLAMP KIT, Heater Core Tubes
20	04734227	51	D		22				SCREW, Hex Head, M4.8-1.59x19

DODGE CHALLENGER (LC)

SERIES	LINE	BODY	ENGINE	TRANSMISSION
H = HIGHLINE	D = DODGE	22 = 2-DR SEDAN TYPE #2	EGG = 3.5L High Output V6 24V MPI Engine	DEC = 6-Speed Manual TREMEC Transmission
P = PREMIUM			ESF = 6.1L SRT HEMI V8 Engine	DGJ = 5-Speed Auto W5A580 Transmission
X = SPECIAL			EZC = 5.7L HEMI VCT Engine	DGV = 4-Spd. Automatic VLP 42RLE Trans
			EZD = 5.7L Hemi VCT MDS Engine	

AR = use ase required - = Non illustrrated part

Heater Plumbing
Figure 24-205

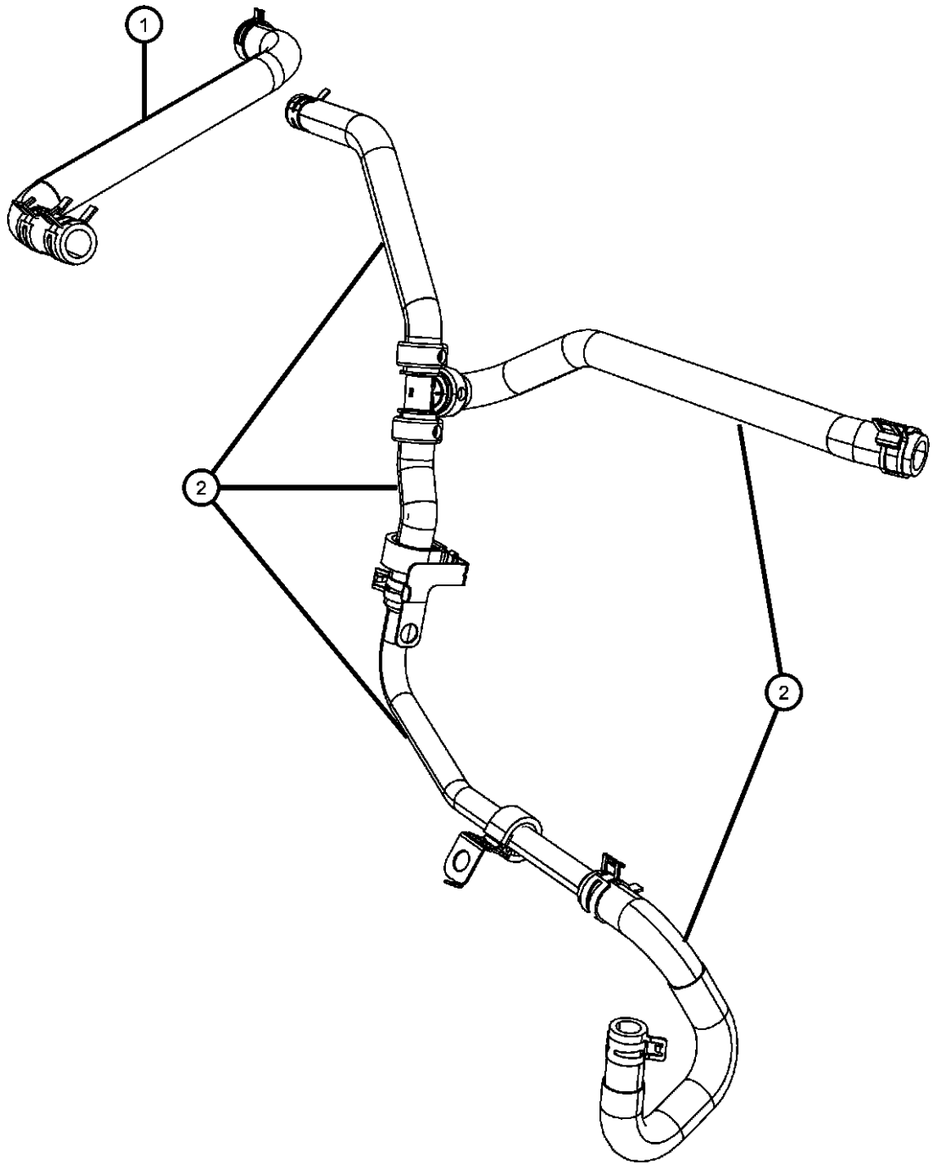

ITEM	PART NUMBER	QTY	LINE	SERIES	BODY	ENGINE	TRANS	TRIM	DESCRIPTION
Sales Code: [EG0] = All 3.5L Engines									
1	55038126AA	1	D		22	EG0			HOSE, Heater Supply, Includes: Clamps
2	55038132AA	1	D		22	EG0			TUBE & HOSE, HEATER RETURN, Includes: Return Hoses, Clamps, Tubes

DODGE CHALLENGER (LC)

SERIES	LINE	BODY	ENGINE	TRANSMISSION
H = HIGHLINE P = PREMIUM X = SPECIAL	D = DODGE	22 = 2-DR SEDAN TYPE #2	EGG = 3.5L High Output V6 24V MPI Engine ESF = 6.1L SRT HEMI V8 Engine EZC = 5.7L HEMI VCT Engine EZD = 5.7L Hemi VCT MDS Engine	DEC = 6-Speed Manual TREMEC Transmission DGJ = 5-Speed Auto W5A580 Transmission DGV = 4-Spd. Automatic VLP 42RLE Trans

Heater Plumbing
Figure 24-210

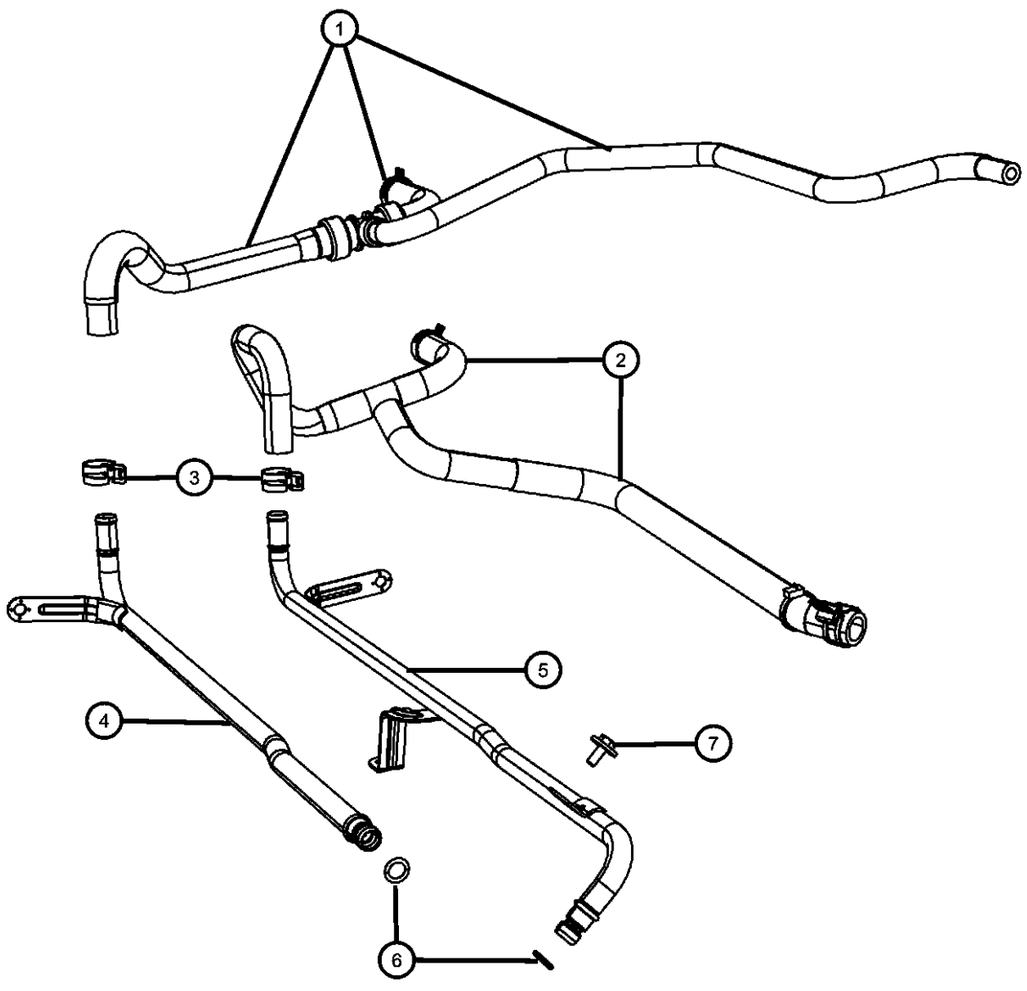

ITEM	PART NUMBER	QTY	LINE	SERIES	BODY	ENGINE	TRANS	TRIM	DESCRIPTION
Sales Codes: [EZ0] = All 5.7L Hemi Engines [ES0] = All 6.1L Hemi Engines									
1	55038134AA	1	D		22	ES0, EZ0			HOSE, Heater Supply
2	55038133AA	1	D		22	ES0, EZ0			HOSE, Heater Return
3	06502017	1	D		22	ES0, EZ0			CLAMP, Hose, 24X15
4	04892346AD	1	D		22	ESF, EZC, EZD			TUBE, Coolant outlet
5									TUBE, Coolant inlet
	04892345AF	1	D		22	EZC, EZD			
	05037891AA	1	D		22	ESF			
6	53013736AA	2	D		22	EZC, EZD			O RING, Heater Line
7									SCREW, Hex Head, M6x1x16, Tube to front Cover
	06101651	1	D		22	EZC, EZD			
		1	D		22	ESF			

DODGE CHALLENGER (LC)

SERIES	LINE	BODY	ENGINE	TRANSMISSION
H = HIGHLINE P = PREMIUM X = SPECIAL	D = DODGE	22 = 2-DR SEDAN TYPE #2	EGG = 3.5L High Output V6 24V MPI Engine ESF = 6.1L SRT HEMI V8 Engine EZC = 5.7L HEMI VCT Engine EZD = 5.7L Hemi VCT MDS Engine	DEC = 6-Speed Manual TREMEC Transmission DGJ = 5-Speed Auto W5A580 Transmission DGV = 4-Spd. Automatic VLP 42RLE Trans

A/C Plumbing
Figure 24-220

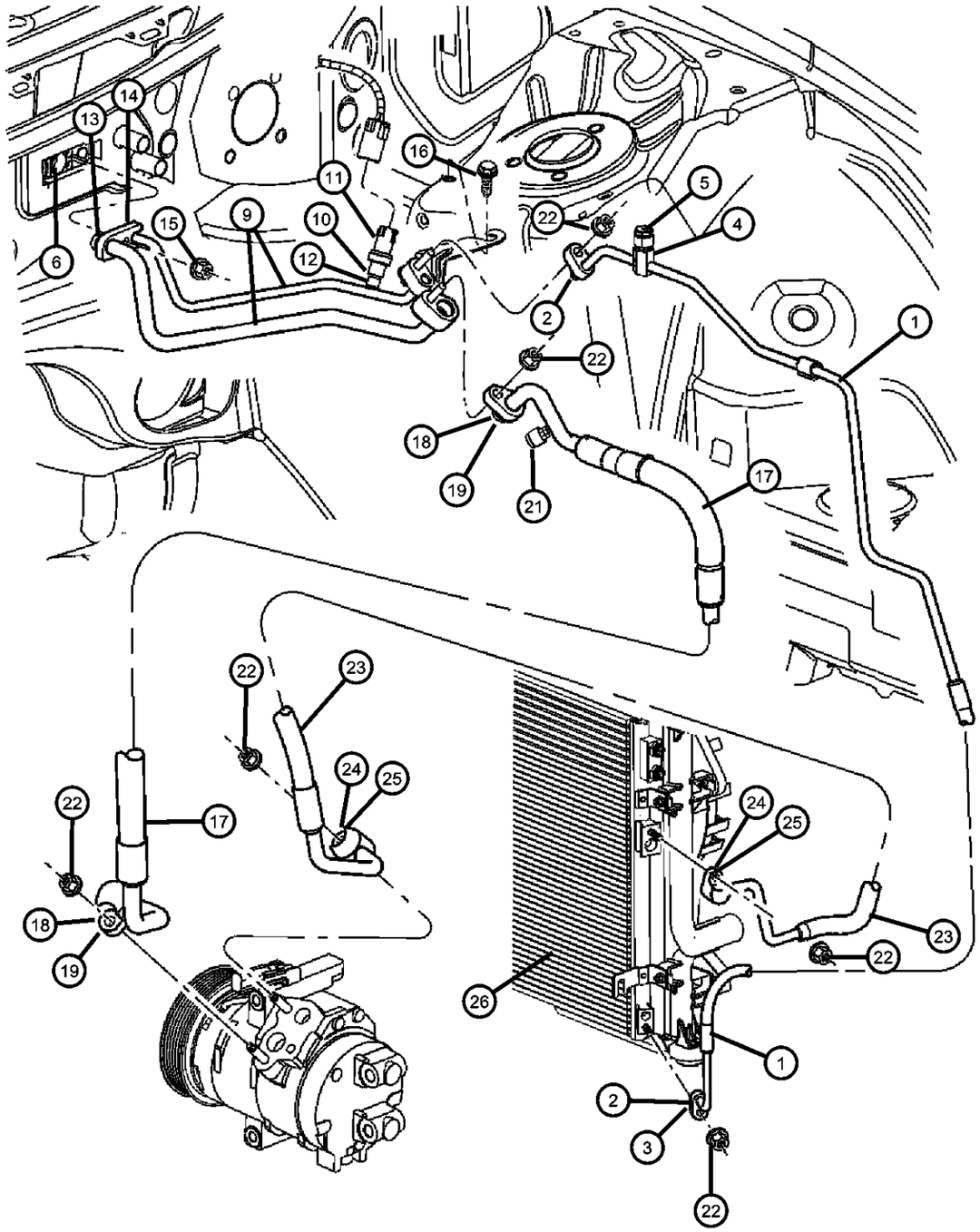

ITEM	PART NUMBER	QTY	LINE	SERIES	BODY	ENGINE	TRANS	TRIM	DESCRIPTION
Sales Codes:									
[EG0] = All 3.5L Engines									
[EZ0] = All 5.7L Hemi Engines									
[ES0] = All 6.1L Hemi Engines									
[NMC] = Heavy Duty Engine Cooling									
[XDL] = Severe Duty Engine Cooling									
1	04596889AB	1	D		22	EG0, ES0, EZ0			LINE, A/C Liquid
2	68035280AA	2	D		22	EG0, ES0, EZ0			GASKET, A/C Line
3	68035281AA	2	D		22	EG0, ES0, EZ0			O RING, A/C Line
4	05179284AA	1	D		22	EG0, ES0, EZ0			VALVE CORE, A/C Line
5	05179285AA	1	D		22	EG0, ES0, EZ0			CAP, A/C Check Valve
6	05139687AA	1	D		22				VALVE, Expansion
-7	04885802AA	1	D		22				O RING, Expansion Valve, 3/4 Expansion Valve to Evaporator
-8	04885803AA	1	D		22				O RING, Expansion Valve, 1/2 Expansion Valve to Evaporator
9	04596887AA	1	D		22				LINE, A/C Suction And Liquid
10	05003461AA	1	D		22				VALVE CORE, Service Port
11	05174039AB	1	D		22				VALVE, A/C pressure Transducer
12									O RING, A/C Line
	05183358AA	1	D		22				Suction line
	68035281AA	2	D		22	EG0, ES0, EZ0			Liquid line
	68055150AA	2	D		22	EG0, ES0, EZ0			Liquid line 3/8
13	04882136	1	D		22				O RING, A/C Line 5/8
14	05136091AA	1	D		22				O RING, A/C Line 3/8
15	06104715AA	2	D		22				NUT, Hex Flange Lock, M6X1.00
16		2							SCREW, Hex Head, M6x1x20, (NOT SERVICED)
17									LINE, A/C Suction
	04596610AB	1	D		22	EZ0			
	04596896AA	1	D		22	EG0			
	04596897AA	1	D		22	ES0			
18									GASKET, A/C Compressor

DODGE CHALLENGER (LC)

SERIES	LINE	BODY	ENGINE	TRANSMISSION
H = HIGHLINE P = PREMIUM X = SPECIAL	D = DODGE	22 = 2-DR SEDAN TYPE #2	EGG = 3.5L High Output V6 24V MPI Engine ESF = 6.1L SRT HEMI V8 Engine EZC = 5.7L HEMI VCT Engine EZD = 5.7L Hemi VCT MDS Engine	DEC = 6-Speed Manual TREMEC Transmission DGJ = 5-Speed Auto W5A580 Transmission DGV = 4-Spd. Automatic VLP 42RLE Trans

AR = use ase required - = Non illustrrated part

A/C Plumbing
Figure 24-220

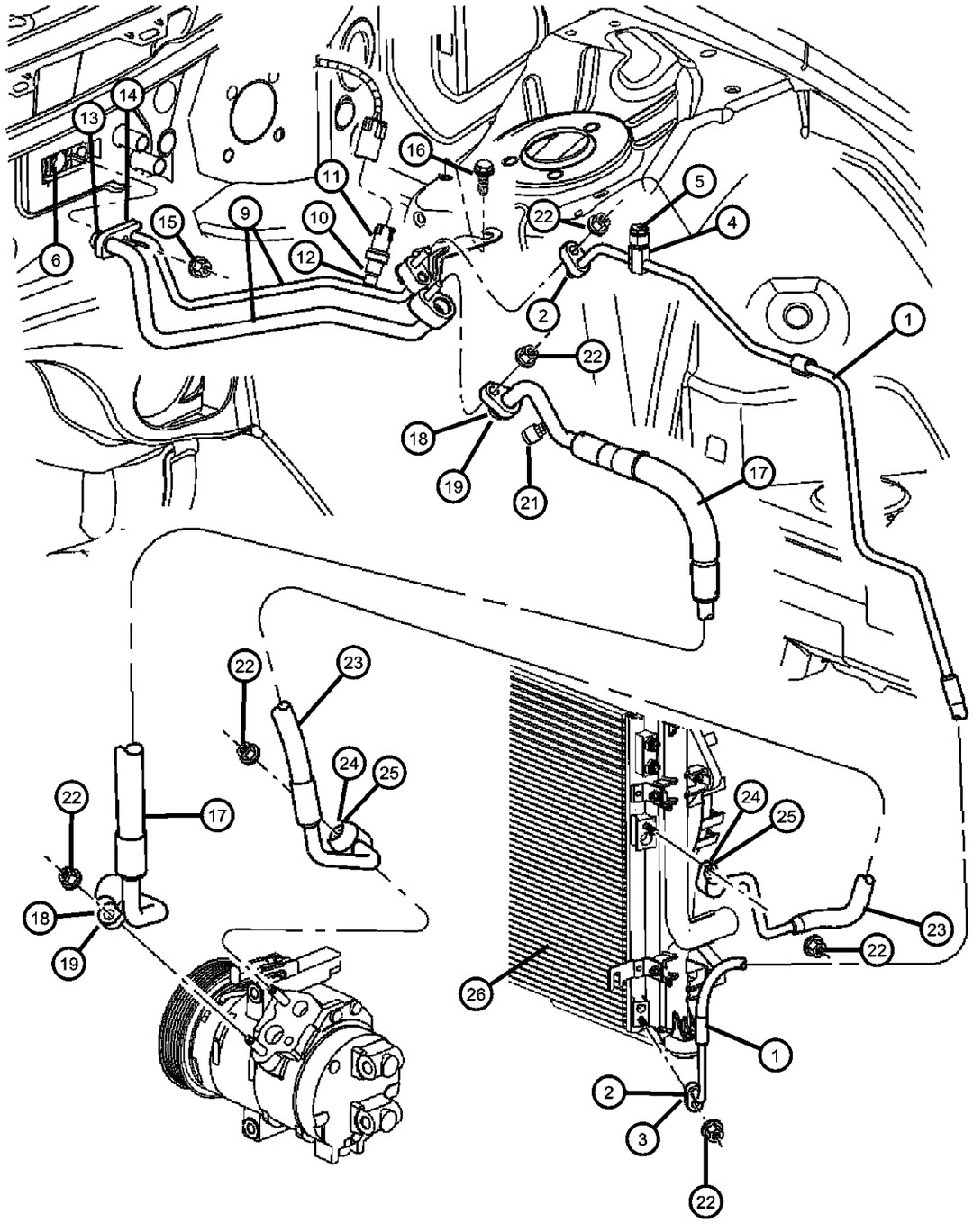

ITEM	PART NUMBER	QTY	LINE	SERIES	BODY	ENGINE	TRANS	TRIM	DESCRIPTION
	05127373AB	1	D		22	EG0			
		1	D		22	ES0			
		1	D		22	EZ0			
19									O RING
	05093526AB	1	D		22	ES0			
		1	D		22	EZ0			
		1	D		22	EG0			
-20									VALVE CORE, Service Port
	05003461AA	1	D		22	EG0			
		1	D		22	ES0			
		1	D		22	EZ0			
21									CAP
	05073260AA	1	D		22	EZ0			
		1	D		22	EG0			
		1	D		22	ES0			
22	06101445	1	D		22				NUT AND WASHER, Hex, M8x1.25
23									LINE, A/C Discharge
	04596893AA	1	D		22	ES0			
	04596611AB	1	D		22	EZ0			
	04596892AA	1	D		22	EG0			
24									SEAL
	05073612AB	2	D		22	EZ0			
		2	D		22	EG0			
		2	D		22	ES0			
25									O RING
	05093527AB	2	D		22	EZ0			
		2	D		22	EG0			
		2	D		22	ES0			
26									COOLER, Condenser and Trans Cooler, Includes: Mounting Bracket and Drier
	68050127AA	1	D		22				[NMC]

DODGE CHALLENGER (LC)

SERIES	LINE	BODY	ENGINE	TRANSMISSION
H = HIGHLINE P = PREMIUM X = SPECIAL	D = DODGE	22 = 2-DR SEDAN TYPE #2	EGG = 3.5L High Output V6 24V MPI Engine ESF = 6.1L SRT HEMI V8 Engine EZC = 5.7L HEMI VCT Engine EZD = 5.7L Hemi VCT MDS Engine	DEC = 6-Speed Manual TREMEC Transmission DGJ = 5-Speed Auto W5A580 Transmission DGV = 4-Spd. Automatic VLP 42RLE Trans

AR = use ase required - = Non illustrrated part

A/C Plumbing
Figure 24-220

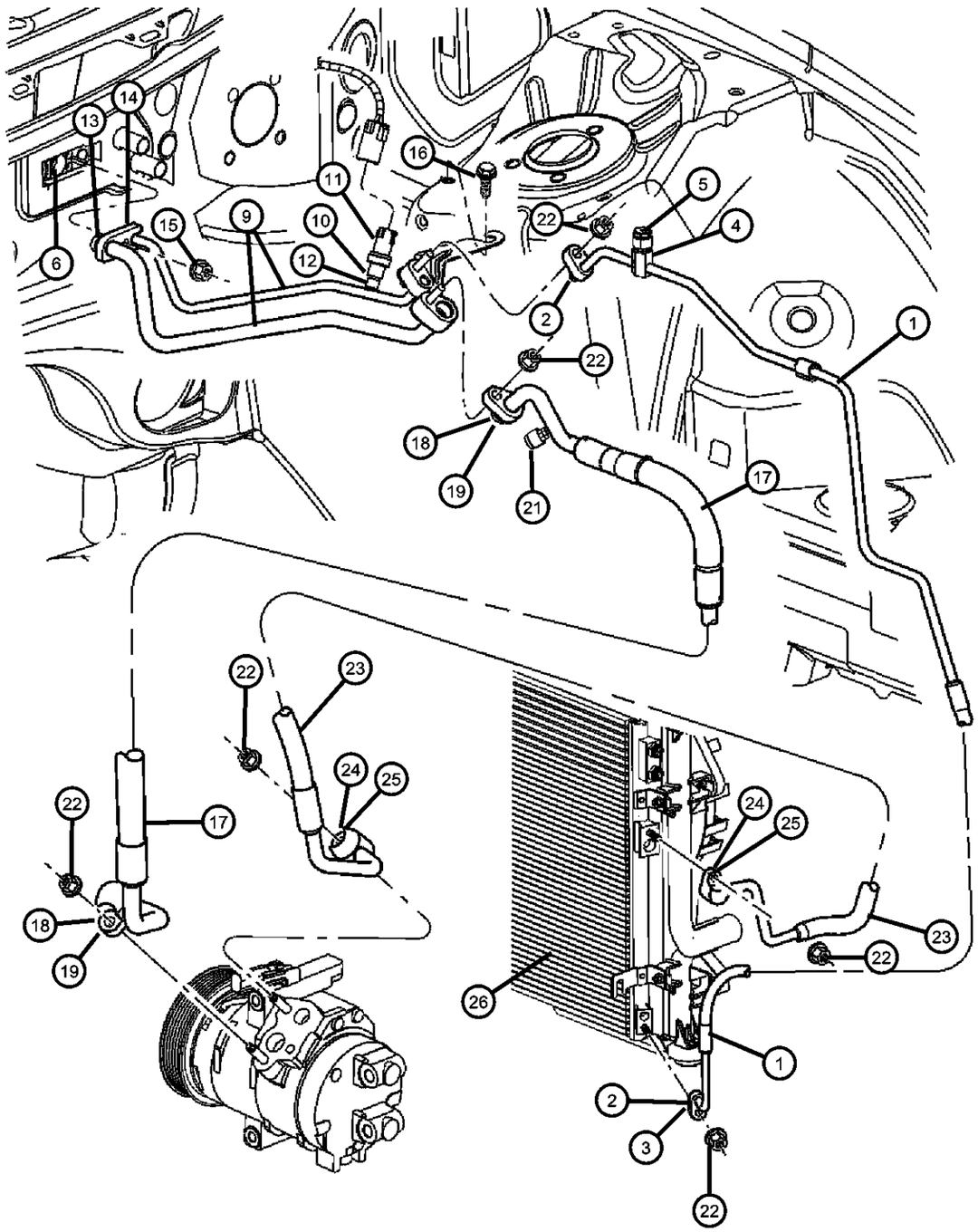

ITEM	PART NUMBER	QTY	LINE	SERIES	BODY	ENGINE	TRANS	TRIM	DESCRIPTION
	68050132AA	1	D		22				[XDL]
-27	68026799AA	4	D		22				O RING, Receiver Drier

DODGE CHALLENGER (LC)

SERIES	LINE	BODY	ENGINE	TRANSMISSION
H = HIGHLINE P = PREMIUM X = SPECIAL	D = DODGE	22 = 2-DR SEDAN TYPE #2	EGG = 3.5L High Output V6 24V MPI Engine ESF = 6.1L SRT HEMI V8 Engine EZC = 5.7L HEMI VCT Engine EZD = 5.7L Hemi VCT MDS Engine	DEC = 6-Speed Manual TREMEC Transmission DGJ = 5-Speed Auto W5A580 Transmission DGV = 4-Spd. Automatic VLP 42RLE Trans

AR = use ase required - = Non illustrrated part

A/C and Heater Controls
Figure 24-310

ITEM	PART NUMBER	QTY	LINE	SERIES	BODY	ENGINE	TRANS	TRIM	DESCRIPTION
1									CONTROL, A/C And Heater
	55111904AE	1	D		22				Up To 2/2/09
	55111952AA	1	D		22				After 2/2/09
2	55111903AB	1	D		22				SENSOR, Sun

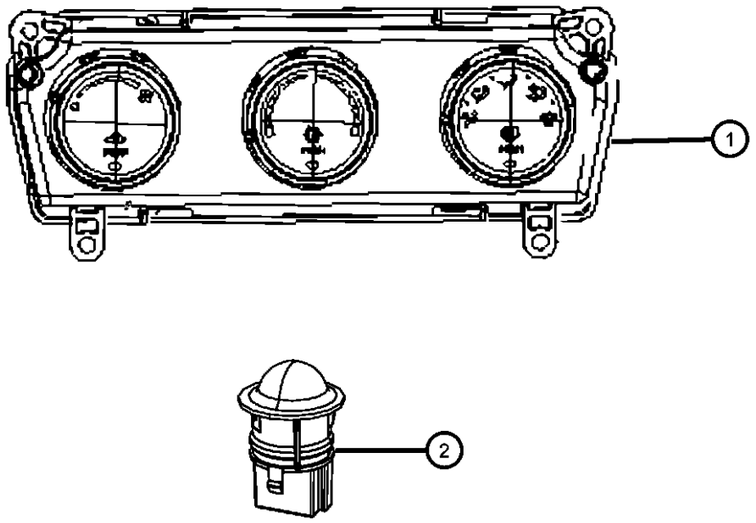

DODGE CHALLENGER (LC)

SERIES	LINE	BODY	ENGINE	TRANSMISSION
H = HIGHLINE P = PREMIUM X = SPECIAL	D = DODGE	22 = 2-DR SEDAN TYPE #2	EGG = 3.5L High Output V6 24V MPI Engine ESF = 6.1L SRT HEMI V8 Engine EZC = 5.7L HEMI VCT Engine EZD = 5.7L Hemi VCT MDS Engine	DEC = 6-Speed Manual TREMEC Transmission DGJ = 5-Speed Auto W5A580 Transmission DGV = 4-Spd. Automatic VLP 42RLE Trans

A/C Compressor
Figure 24-405

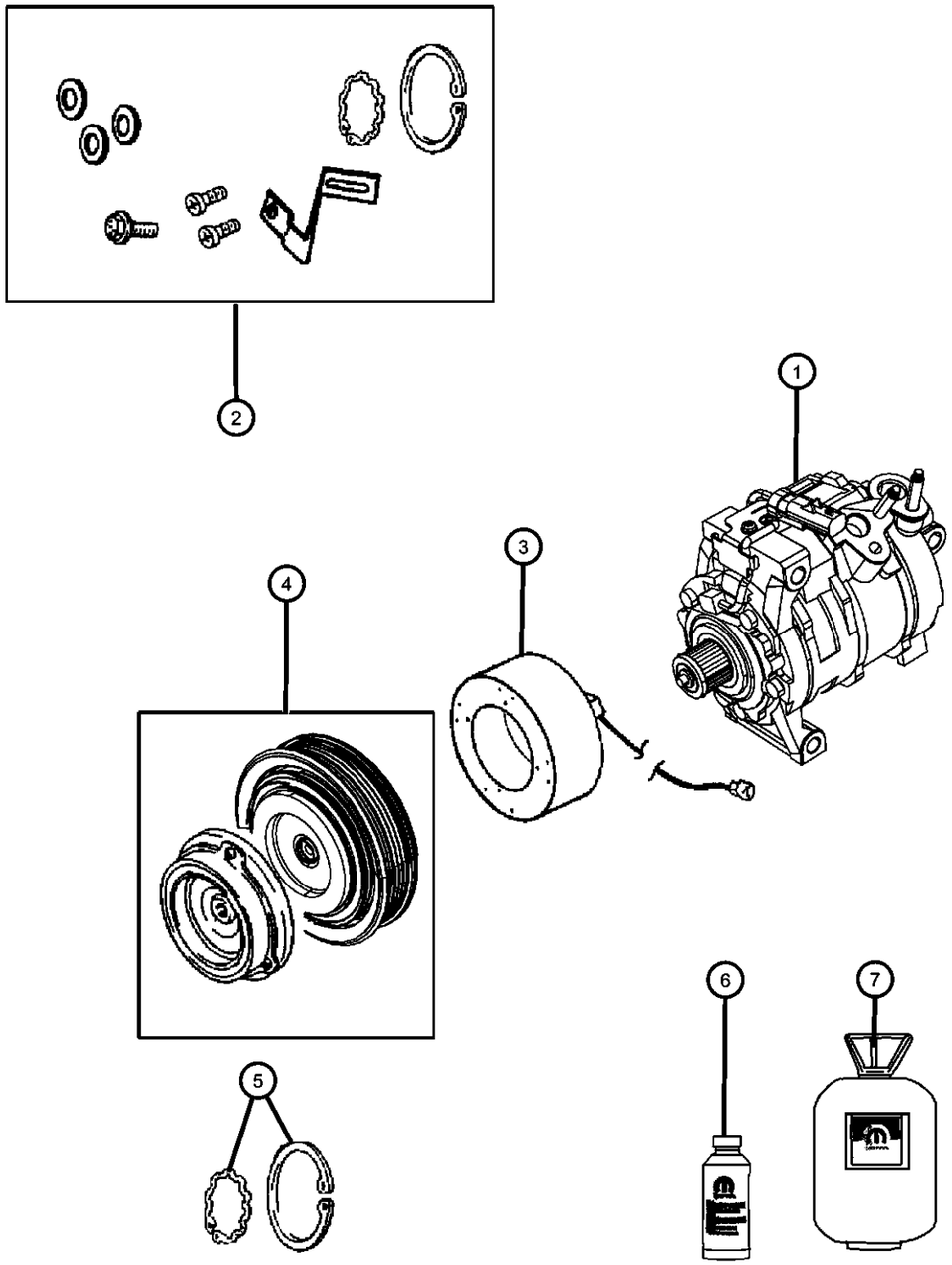

ITEM	PART NUMBER	QTY	LINE	SERIES	BODY	ENGINE	TRANS	TRIM	DESCRIPTION
Sales Codes:									
[ES0] = All 6.1L Engines									
1									COMPRESSOR, Air Conditioning, Complete
	55111096AB	1	D		22	EZ0			
	55111418AB	1	D		22	EG0			
	04596492AC	1	D		22	ES0			
2									CLUTCH OVERHAUL KIT, A/C Compressor
	05140428AA	1	D		22	ES0			
	68032119AA	1	D		22	EZ0			
3									COIL, Air Conditioning Clutch
	05003681AA	1	D		22	ES0			
		1	D		22	EZ0			
	68000489AB	1	D		22	EG0			
4									PULLEY HUB KIT, A/C Compressor
	68018353AA	1	D		22	EG0			
	68050640AA	1	D		22	EZ0			
	05140426AA	1	D		22	ES0			
5									SNAP RING KIT, A/C Clutch, Includes: Stator and Rotor Snap Rings
	05264454	1	D		22	ES0			
		1	D		22	EG0			
		1	D		22	EZ0			
6									LUBRICANT, A/C Compressor, 250ml, Standard MS-9176
	82300102	1	D		22	ES0			ND-8 PAG [250mL]
		1	D		22	EG0			ND-8 PAG [250mL]
		1	D		22	EZ0			ND-8 PAG [250mL]
7	82300101AB	AR	D		22				REFRIGERANT, R134A, 1 Pound, Standard MS-9175, [30lb Cylinder]

DODGE CHALLENGER (LC)

SERIES	LINE	BODY	ENGINE	TRANSMISSION
H = HIGHLINE	D = DODGE	22 = 2-DR SEDAN TYPE #2	EGG = 3.5L High Output V6 24V MPI Engine	DEC = 6-Speed Manual TREMEC Transmission
P = PREMIUM			ESF = 6.1L SRT HEMI V8 Engine	DGJ = 5-Speed Auto W5A580 Transmission
X = SPECIAL			EZC = 5.7L HEMI VCT Engine	DGV = 4-Spd. Automatic VLP 42RLE Trans
			EZD = 5.7L Hemi VCT MDS Engine	

AR = use ase required - = Non illustrrated part

A/C Compressor Mounting
Figure 24-440

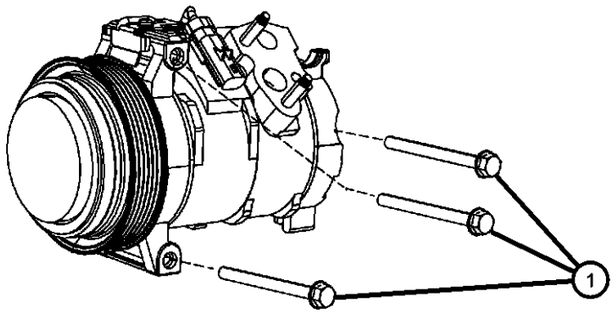

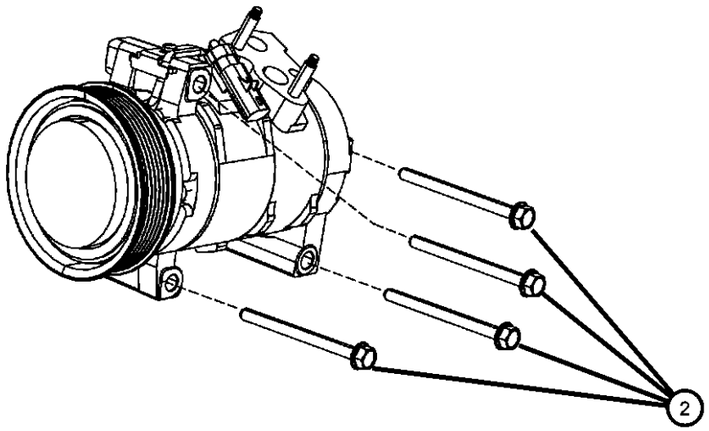

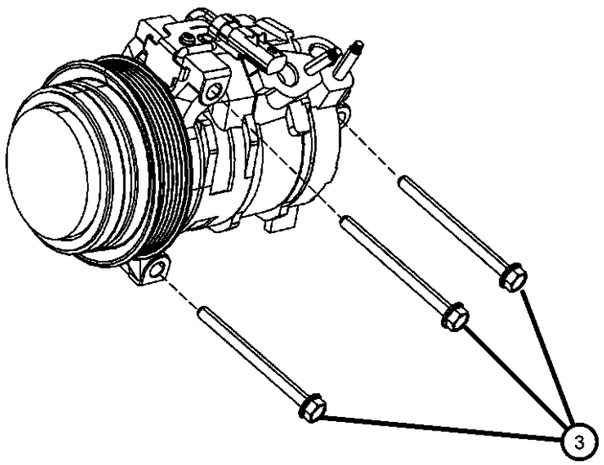

ITEM	PART NUMBER	QTY	LINE	SERIES	BODY	ENGINE	TRANS	TRIM	DESCRIPTION
Sales Codes: [EG0] = All 3.5L Engines [EZ0] = All 5.7L Hemi Engines [ES0] = All 6.1L Hemi Engines									
1	06104207AA	3	D		22	EG0			BOLT, Hex Head, M8X1.25X90
2	06503703	4	D		22	ES0			BOLT, Hex Head, M10x1.50x100
3	06509468AA	3	D		22	EZ0			BOLT, HEX Flange HEAD, M8-1.25X100

DODGE CHALLENGER (LC)

SERIES	LINE	BODY	ENGINE	TRANSMISSION
H = HIGHLINE P = PREMIUM X = SPECIAL	D = DODGE	22 = 2-DR SEDAN TYPE #2	EGG = 3.5L High Output V6 24V MPI Engine ESF = 6.1L SRT HEMI V8 Engine EZC = 5.7L HEMI VCT Engine EZD = 5.7L Hemi VCT MDS Engine	DEC = 6-Speed Manual TREMEC Transmission DGJ = 5-Speed Auto W5A580 Transmission DGV = 4-Spd. Automatic VLP 42RLE Trans

Ducts
Figure 24-505

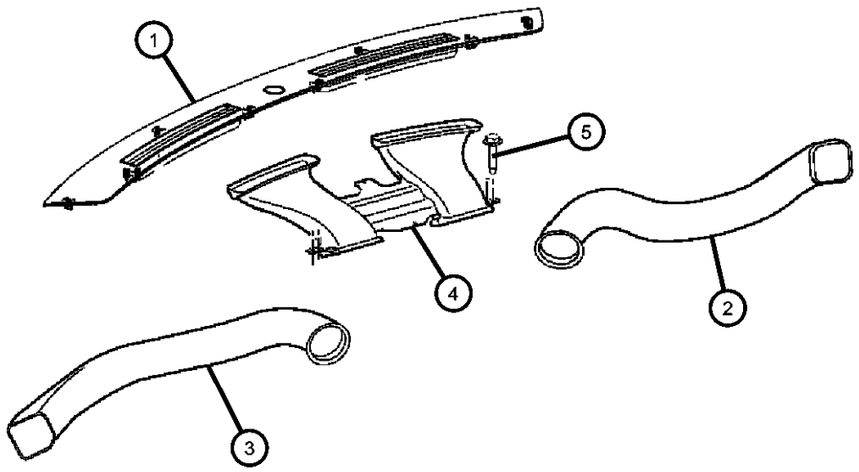

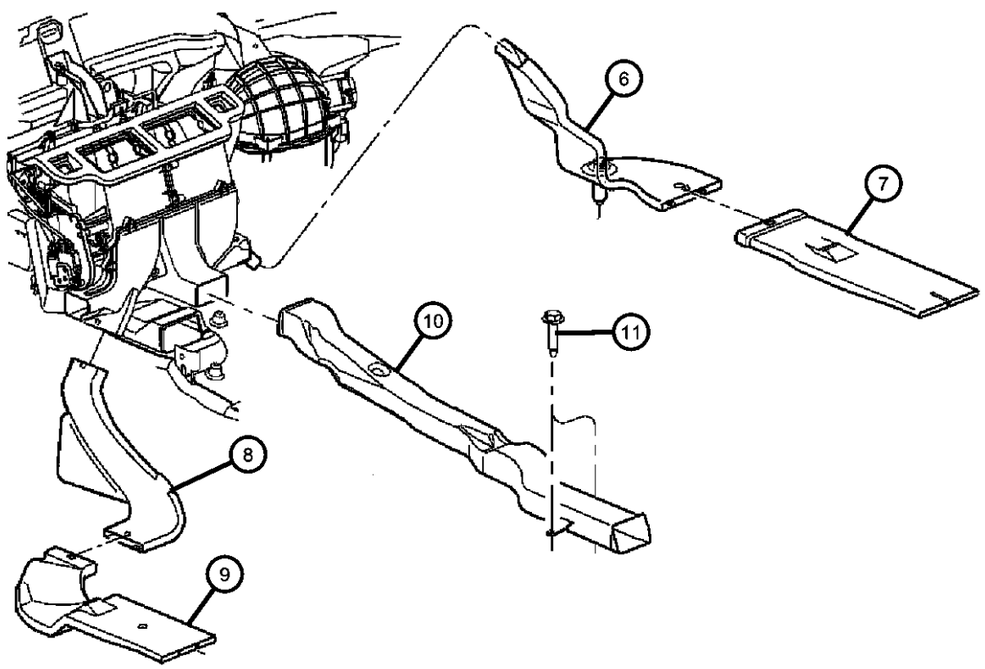

ITEM	PART NUMBER	QTY	LINE	SERIES	BODY	ENGINE	TRANS	TRIM	DESCRIPTION
Sales Codes:									
[LMG] = Automatic Headlamps									
1									GRILLE, Defroster
	1FT34XDVAD	1	D		22				Without [LMG]
	1FT36XDVAC	1	D		22				With [LMG]
2		1							DUCT, Air Distribution, Serviced in Instrument Panel, (NOT SERVICED),
3		1							DUCT, Air Distribution, Serviced in Instrument Panel, (NOT SERVICED)
4	04662049AA	1	D		22				DUCT, Defroster
5	06101946	4	D		22				SCREW, Tapping Hex Head, M4.2X1.70X20.00, Defroster Duct
6	04596504AB	1	D		22				DUCT, Heater And A/C, With Push Pin, Rear Floor Heater, Right
7	04596540AB	1	D		22				DUCT, Heater And A/C, Rear Floor Under SeatRight
8	04596505AB	1	D		22				DUCT, Heater And A/C, With Push Pin, Rear Floor Heater, Left
9	04596539AC	1	D		22				DUCT, Heater And A/C, Rear Floor Under SeatLeft
10	04662041AC	1	D		22				DUCT, Floor Console
11	06101946	4	D		22				SCREW, Tapping Hex Head, M4.2X1.70X20.00, Console Duct

DODGE CHALLENGER (LC)

SERIES	LINE	BODY	ENGINE	TRANSMISSION
H = HIGHLINE P = PREMIUM X = SPECIAL	D = DODGE	22 = 2-DR SEDAN TYPE #2	EGG = 3.5L High Output V6 24V MPI Engine ESF = 6.1L SRT HEMI V8 Engine EZC = 5.7L HEMI VCT Engine EZD = 5.7L Hemi VCT MDS Engine	DEC = 6-Speed Manual TREMEC Transmission DGJ = 5-Speed Auto W5A580 Transmission DGV = 4-Spd. Automatic VLP 42RLE Trans

Group - 25

Emission Controls

Group - 25 Emission Controls

Illustration Title — Group-Fig. No.

EGR System
EGR Valve and Related ..... Fig. 25 - 205

Vacuum Canister/Leak Detection Pump
Vapor Canister and Leak Detection Pump ..... Fig. 25 - 305

Emission Harness
Emission Control Vacuum Harness ..... Fig. 25 - 405

025-200 EGR System 	**025-300** Vacuum Canister/Leak Detection Pump 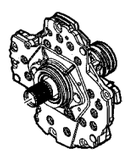	**025-400** Emission Harness 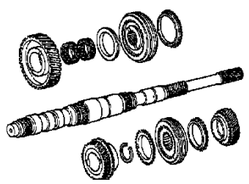	

EGR Valve and Related
Figure 25-205

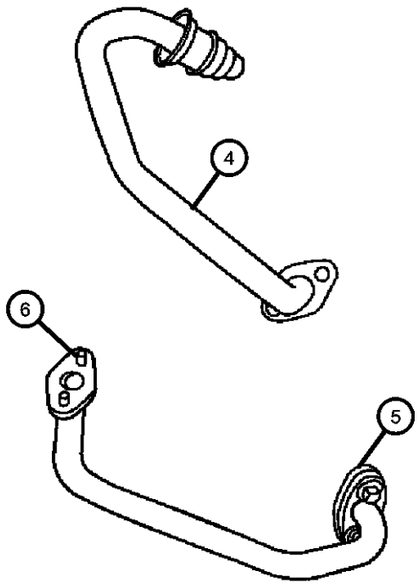

ITEM	PART NUMBER	QTY	LINE	SERIES	BODY	ENGINE	TRANS	TRIM	DESCRIPTION
Note; Sales Codes; [EG0] = All 3.5L 6 Cylinder Gas Engines [EZB] = 5.7L Hemi Multi-Displacement Engine									
1	04593834AC	1	D		22	EGG			VALVE, EGR
2	04891068AB	1	D		22	EGG			GASKET, EGR Valve
3	06504793AA	2	D		22	EGG			SCREW, Hex Flange Head, M8x1.25x28.00, EGR Valve to Cylinder Head, Mounting
4	04593582AB	1	D		22	EGG			TUBE, EGR Valve to Intake Plenum
5	05277928	1	D		22	EGG			GASKET, EGR Tube Flange
6		1							SCREW, (NOT SERVICED)

DODGE CHALLENGER (LC)

SERIES	LINE	BODY	ENGINE	TRANSMISSION
H = HIGHLINE P = PREMIUM X = SPECIAL	D = DODGE	22 = 2-DR SEDAN TYPE #2	EGG = 3.5L High Output V6 24V MPI Engine ESF = 6.1L SRT HEMI V8 Engine EZC = 5.7L HEMI VCT Engine EZD = 5.7L Hemi VCT MDS Engine	DEC = 6-Speed Manual TREMEC Transmission DGJ = 5-Speed Auto W5A580 Transmission DGV = 4-Spd. Automatic VLP 42RLE Trans

Vapor Canister and Leak Detection Pump
Figure 25-305

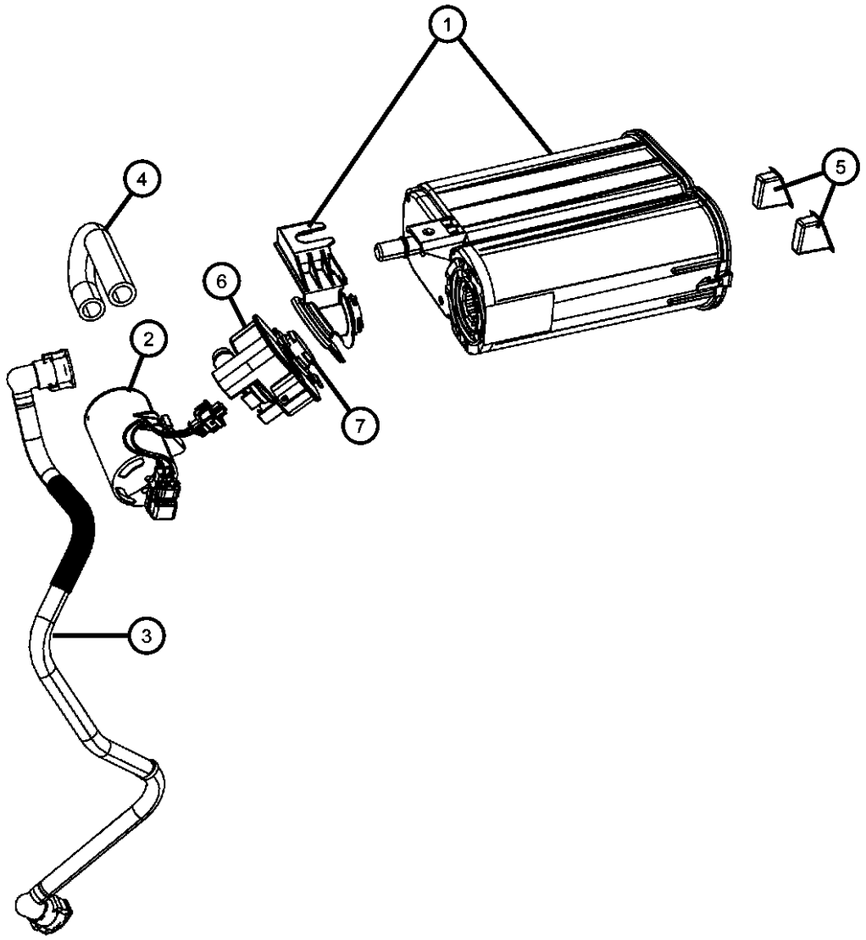

ITEM	PART NUMBER	QTY	LINE	SERIES	BODY	ENGINE	TRANS	TRIM	DESCRIPTION
1	04578587AC	1	D		22				CANISTER, Vapor
2	04891564AC	1	D		22				FILTER, Leak Detection Pump
3	68047023AA	1	D		22				TUBE, Fuel Vapor
4	04578654AA	1	D		22				HOSE, Canister to Filter
5	04578656AA	1	D		22				GROMMET, Vapor Canister Mounting
6	04891685AA	1	D		22				DETECTOR, Evaporative System Integrity Module
7	52129436AA	1	D		22				SEAL, Vapor canister, Seal

DODGE CHALLENGER (LC)

SERIES	LINE	BODY	ENGINE	TRANSMISSION
H = HIGHLINE P = PREMIUM X = SPECIAL	D = DODGE	22 = 2-DR SEDAN TYPE #2	EGG = 3.5L High Output V6 24V MPI Engine ESF = 6.1L SRT HEMI V8 Engine EZC = 5.7L HEMI VCT Engine EZD = 5.7L Hemi VCT MDS Engine	DEC = 6-Speed Manual TREMEC Transmission DGJ = 5-Speed Auto W5A580 Transmission DGV = 4-Spd. Automatic VLP 42RLE Trans

Emission Control Vacuum Harness
Figure 25-405

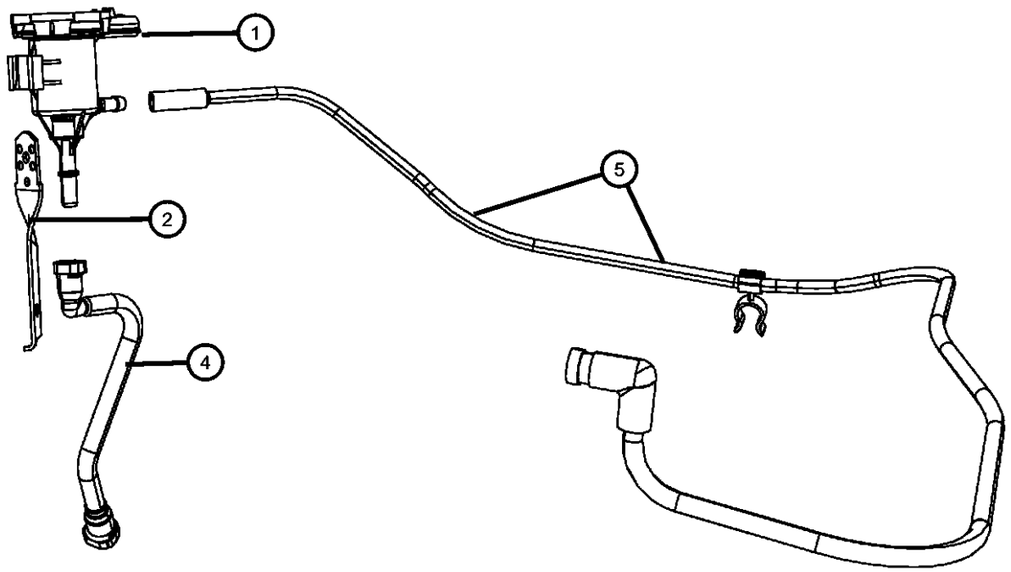

ITEM	PART NUMBER	QTY	LINE	SERIES	BODY	ENGINE	TRANS	TRIM	DESCRIPTION
Note; Sales Codes;									
[ESF] = 6.1L V-8 Gas Engines									
[EGG] = 3.5L HIGH OUTPUT V6 24V MPI									
[EZC] = 5.7L HEMI VCT ENGINE									
[EZD] = 5.7L HEMI VCT MDS ENGINE									
1									VALVE, Linear Purge
	04891738AA	1	D		22	EZC, EZD			
		1	D		22	EGG			
		1	D		22	ESF			
2	04578419AB	1	D		22				BRACKET, Proportional Purge Solenoid
-3									SCREW, Hex Head, M6x1x15
	06102142AA	1	D		22	EG0			
		1	D		22	EZ0			
		1	D		22				
4									HOSE
	04578630AD	1	D		22	ESF			
	04578630AC	1	D		22	EZC, EZD			
		1	D		22	EGG			
5	05038086AA	1	D		22	ESF			HARNESS, Vacuum Vapor

DODGE CHALLENGER (LC)

SERIES	LINE	BODY	ENGINE	TRANSMISSION
H = HIGHLINE P = PREMIUM X = SPECIAL	D = DODGE	22 = 2-DR SEDAN TYPE #2	EGG = 3.5L High Output V6 24V MPI Engine ESF = 6.1L SRT HEMI V8 Engine EZC = 5.7L HEMI VCT Engine EZD = 5.7L Hemi VCT MDS Engine	DEC = 6-Speed Manual TREMEC Transmission DGJ = 5-Speed Auto W5A580 Transmission DGV = 4-Spd. Automatic VLP 42RLE Trans

Group - 26

Labels

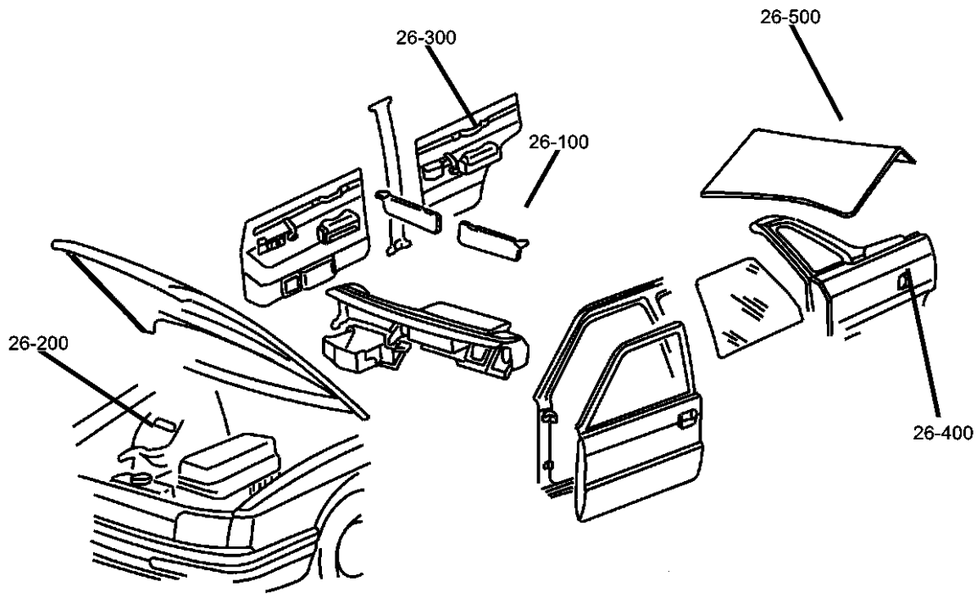

026-100 Interior	**026-200** Under Hood	**026-300** Doors	

Group - 26 Labels

Illustration Title — Group-Fig. No.

Interior

Instrument Panel ..... Fig. 26 - 105
Visor ..... Fig. 26 - 110

Under Hood

Engine Department ..... Fig. 26 - 205

Doors

Front and Rear Door Labels ..... Fig. 26 - 310
Fuel Door ..... Fig. 26 - 315

Instrument Panel
Figure 26-105

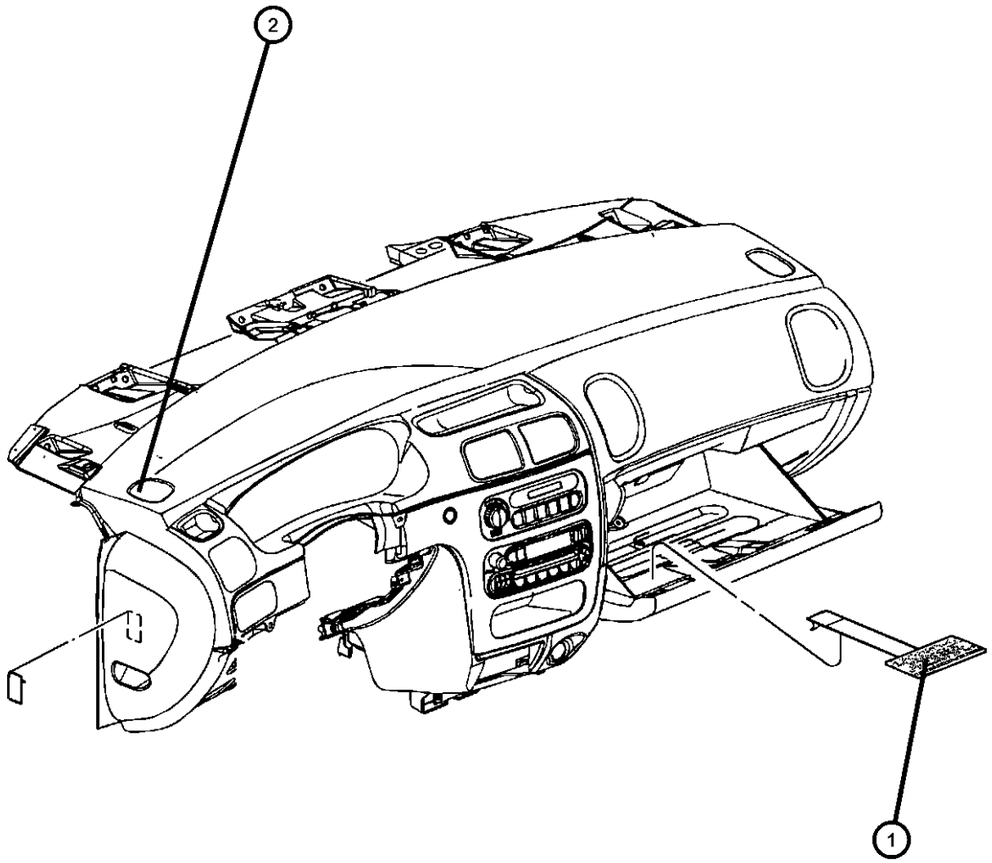

ITEM	PART NUMBER	QTY	LINE	SERIES	BODY	ENGINE	TRANS	TRIM	DESCRIPTION
1	05108002AB	1			22				LABEL, Air Bag Warning, Dangle Label (English/French)
2	05288120	1		P	22				LABEL, Anti-Theft

DODGE CHALLENGER (LC)

SERIES	LINE	BODY	ENGINE	TRANSMISSION
H = HIGHLINE P = PREMIUM X = SPECIAL	D = DODGE	22 = 2-DR SEDAN TYPE #2	EGG = 3.5L High Output V6 24V MPI Engine ESF = 6.1L SRT HEMI V8 Engine EZC = 5.7L HEMI VCT Engine EZD = 5.7L Hemi VCT MDS Engine	DEC = 6-Speed Manual TREMEC Transmission DGJ = 5-Speed Auto W5A580 Transmission DGV = 4-Spd. Automatic VLP 42RLE Trans

Visor
Figure 26-110

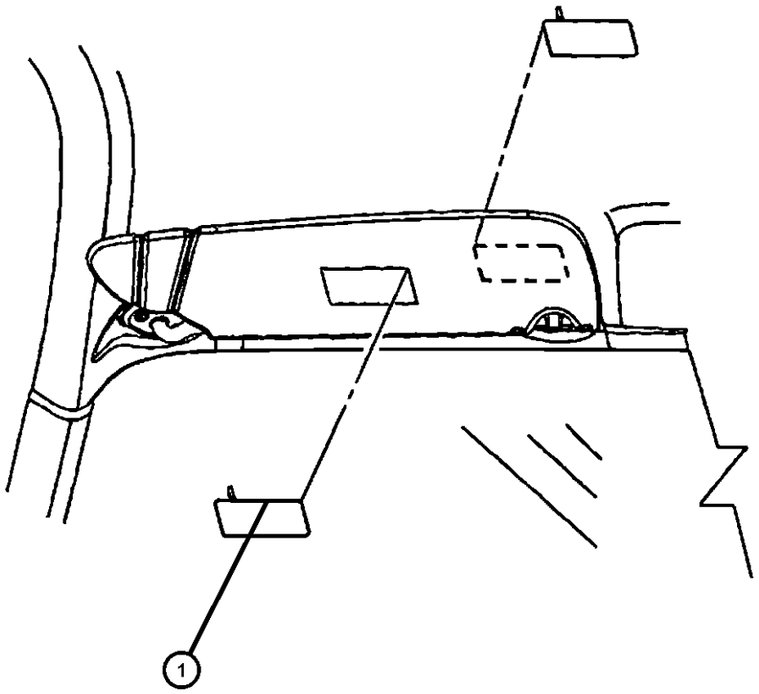

ITEM	PART NUMBER	QTY	LINE	SERIES	BODY	ENGINE	TRANS	TRIM	DESCRIPTION
1	05108000AA	2			22				LABEL, Air Bag Warning, Visor (English/French)

DODGE CHALLENGER (LC)

SERIES	LINE	BODY	ENGINE	TRANSMISSION
H = HIGHLINE P = PREMIUM X = SPECIAL	D = DODGE	22 = 2-DR SEDAN TYPE #2	EGG = 3.5L High Output V6 24V MPI Engine ESF = 6.1L SRT HEMI V8 Engine EZC = 5.7L HEMI VCT Engine EZD = 5.7L Hemi VCT MDS Engine	DEC = 6-Speed Manual TREMEC Transmission DGJ = 5-Speed Auto W5A580 Transmission DGV = 4-Spd. Automatic VLP 42RLE Trans

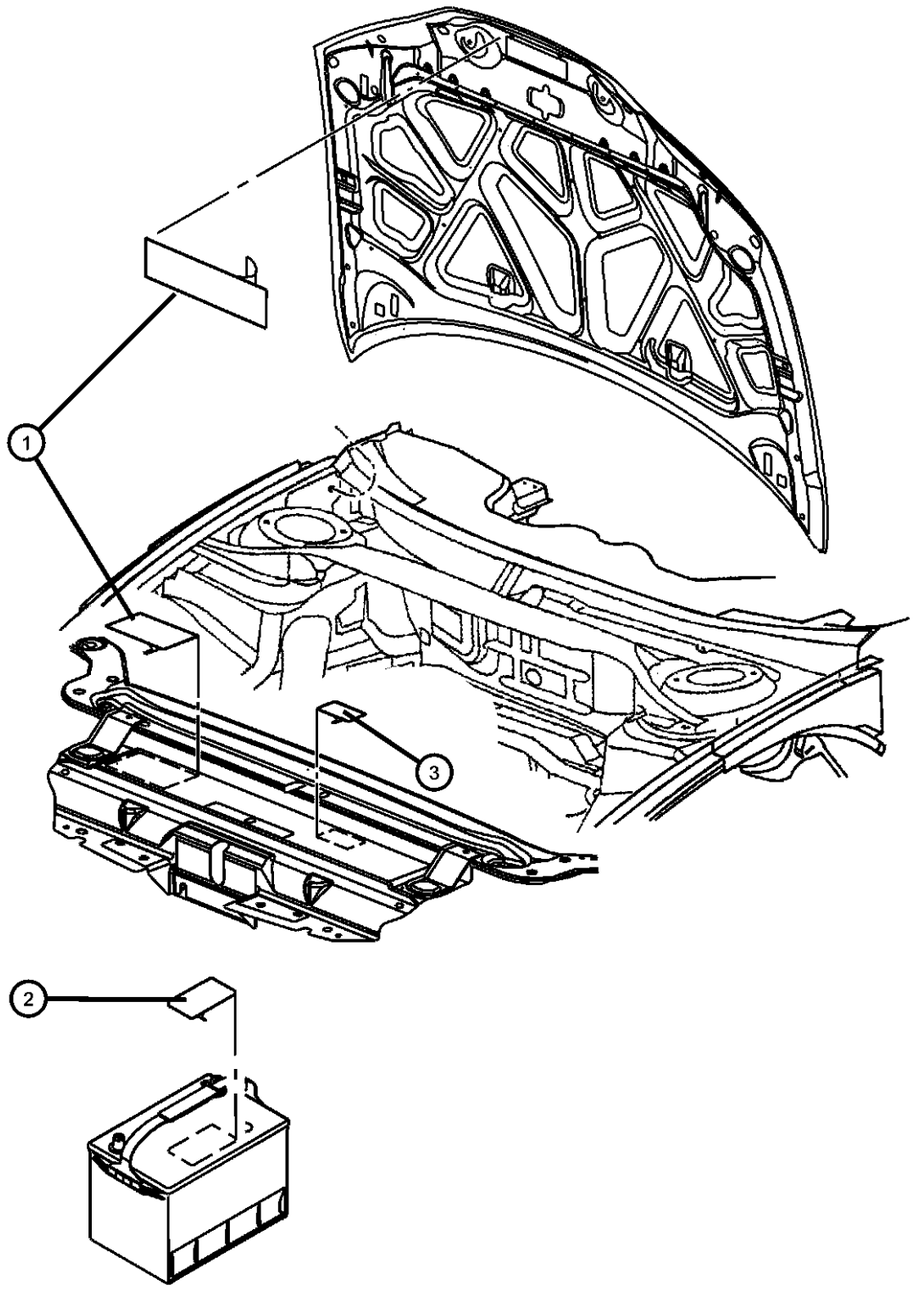

ITEM	PART NUMBER	QTY	LINE	SERIES	BODY	ENGINE	TRANS	TRIM	DESCRIPTION
NOTES: Sales Codes: [NAE] = California Emissions [NAS] = 50 State Emissions [6CS] = Canadian Specifications Label									
1									LABEL, Emission
	05038466AA	1			22	ESF			[NAS] 50 State Emissions
	05270571AA	1			22	EZD			[NAS] 50 State Emissions
	05270571AB	1			22	EZD, EZH			[NAS] 50 State Emissions, [EDZ] Or [EZH] Hemi Engines
	05270572AA	1			22	EZC			[NAS] 50 State Emissions
	68049351AB	1			22	EGG			[NAA] Federal Emissions, [EGG] Engine
	04726352AA	1			22	EGG			[NAE] California Emissions
2	04606799AA	1			22				LABEL, Battery, [6CS] Canadian Specifications Label
3	04596521AC	1			22				LABEL, Fan Caution, A/C Spec & Belt Rtg.

DODGE CHALLENGER (LC)

SERIES	LINE	BODY	ENGINE	TRANSMISSION
H = HIGHLINE P = PREMIUM X = SPECIAL	D = DODGE	22 = 2-DR SEDAN TYPE #2	EGG = 3.5L High Output V6 24V MPI Engine ESF = 6.1L SRT HEMI V8 Engine EZC = 5.7L HEMI VCT Engine EZD = 5.7L Hemi VCT MDS Engine	DEC = 6-Speed Manual TREMEC Transmission DGJ = 5-Speed Auto W5A580 Transmission DGV = 4-Spd. Automatic VLP 42RLE Trans

Front and Rear Door Labels
Figure 26-310

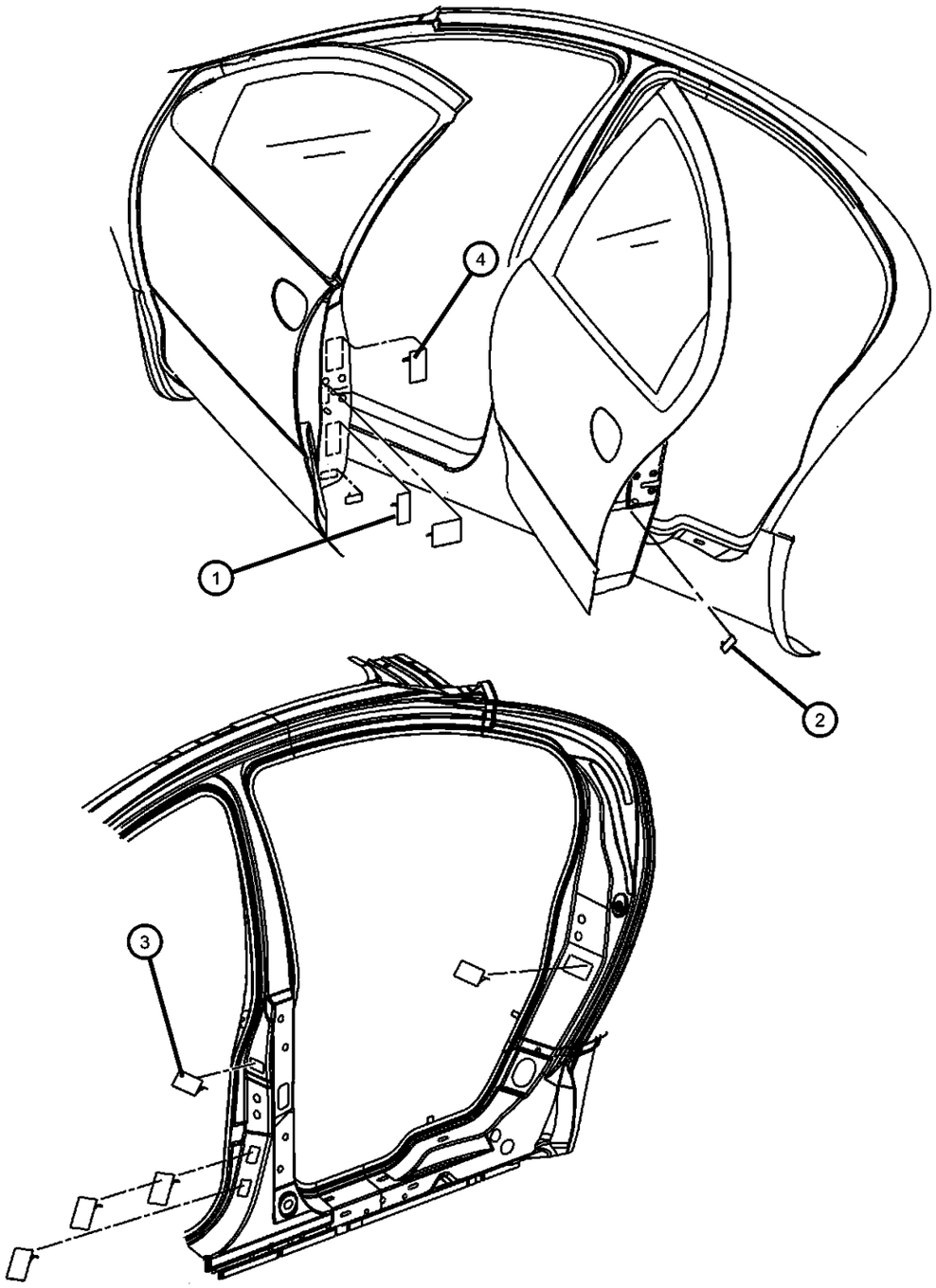

ITEM	PART NUMBER	QTY	LINE	SERIES	BODY	ENGINE	TRANS	TRIM	DESCRIPTION
-1	05056245AB	1			22				LABEL, Tire Pressure, Info Certification Vehicle & Tire Blank
2	05020533AB	1			22				LABEL, Mercury Warning, Without JAT and REN
3	04680556AB	1			22				DECAL, Seat Belt Safety, Child Seat

DODGE CHALLENGER (LC)

SERIES	LINE	BODY	ENGINE	TRANSMISSION
H = HIGHLINE	D = DODGE	22 = 2-DR SEDAN TYPE #2	EGG = 3.5L High Output V6 24V MPI Engine	DEC = 6-Speed Manual TREMEC Transmission
P = PREMIUM			ESF = 6.1L SRT HEMI V8 Engine	DGJ = 5-Speed Auto W5A580 Transmission
X = SPECIAL			EZC = 5.7L HEMI VCT Engine	DGV = 4-Spd. Automatic VLP 42RLE Trans
			EZD = 5.7L Hemi VCT MDS Engine	

AR = use ase required - = Non illustrrated part

Fuel Door
Figure 26-315

ITEM	PART NUMBER	QTY	LINE	SERIES	BODY	ENGINE	TRANS	TRIM	DESCRIPTION
1	05152042AA	1			22	EG0, EZ0			LABEL, Fuel Door

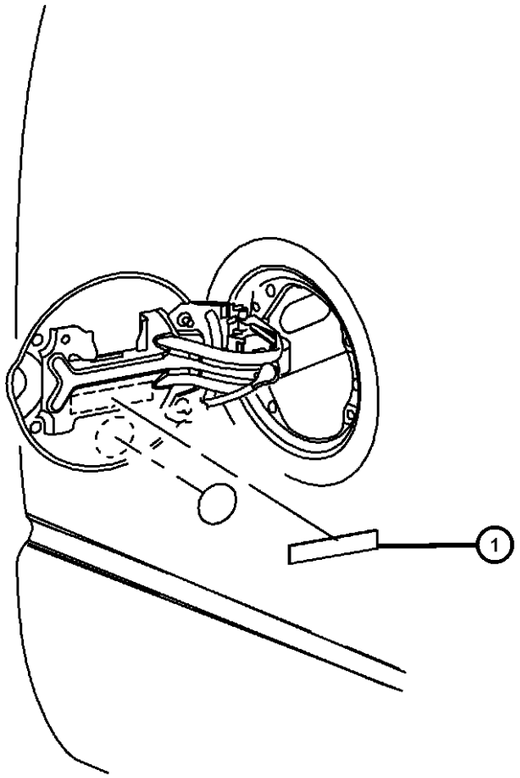

DODGE CHALLENGER (LC)

SERIES	LINE	BODY	ENGINE	TRANSMISSION
H = HIGHLINE P = PREMIUM X = SPECIAL	D = DODGE	22 = 2-DR SEDAN TYPE #2	EGG = 3.5L High Output V6 24V MPI Engine ESF = 6.1L SRT HEMI V8 Engine EZC = 5.7L HEMI VCT Engine EZD = 5.7L Hemi VCT MDS Engine	DEC = 6-Speed Manual TREMEC Transmission DGJ = 5-Speed Auto W5A580 Transmission DGV = 4-Spd. Automatic VLP 42RLE Trans

Group - 27

Glass

Illustration Title | Group-Fig. No.

Glass and Interior Rear View Mirror
Glass, Glass Hardware & Interior Mirrors ..... Fig. 27 - 105

027-100 Glass and Interior Rear View Mirror			

Glass, Glass Hardware & Interior Mirrors
Figure 27-105

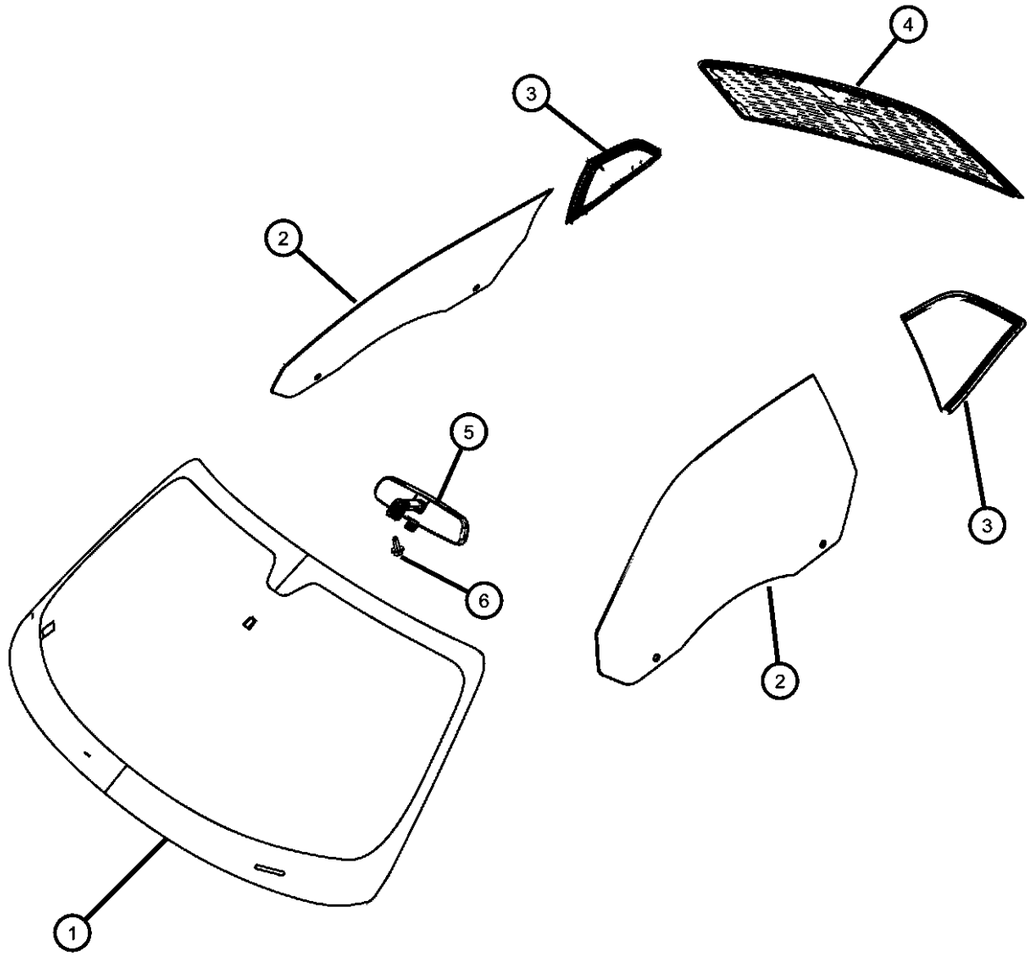

ITEM	PART NUMBER	QTY	LINE	SERIES	BODY	ENGINE	TRANS	TRIM	DESCRIPTION
1	05112807AB	1	D		22				WINDSHIELD
2									GLASS, Front Door
	04816142AB	1	D		22				
	04816143AB	1	D		22				Left
3									GLASS, Quarter Window
	04816144AC	1	D		22				
	04816145AB	1	D		22				Left
4	05112803AC	1	D		22				BACKLITE
5									MIRROR, Inside Rear View
	55156172AA	1	D		22				With Sales Code [GNA]
	68020439AB	1	D		22				With Sales Code [GN5]
6	06036548AA	1	D		22				SCREW, Tapping Pan Head, .190-24x.375

DODGE CHALLENGER (LC)

SERIES	LINE	BODY	ENGINE	TRANSMISSION
H = HIGHLINE	D = DODGE	22 = 2-DR SEDAN TYPE #2	EGG = 3.5L High Output V6 24V MPI Engine	DEC = 6-Speed Manual TREMEC Transmission
P = PREMIUM			ESF = 6.1L SRT HEMI V8 Engine	DGJ = 5-Speed Auto W5A580 Transmission
X = SPECIAL			EZC = 5.7L HEMI VCT Engine	DGV = 4-Spd. Automatic VLP 42RLE Trans
			EZD = 5.7L Hemi VCT MDS Engine	

Group - 30

Doors, Door Mirrors and Related Parts

030-100 Front Door	030-500 Exterior Mirror	030-600 Weatherstrips and Seals	
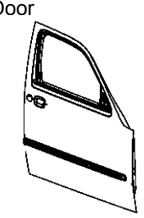	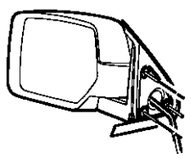	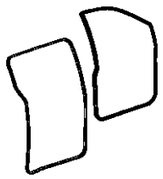	

Group - 30 Doors, Door Mirrors and Related Parts

Illustration Title — Group-Fig. No.

Front Door
Front Door, Shell and Hinges....Fig. 30 - 105
Front Door, Hardware Components....Fig. 30 - 125
Exterior Door Lock Cylinders....Fig. 30 - 150

Exterior Mirror
Exterior Mirror....Fig. 30 - 505

Weatherstrips and Seals
Weatherstrips, Front Door....Fig. 30 - 605

Front Door, Shell and Hinges
Figure 30-105

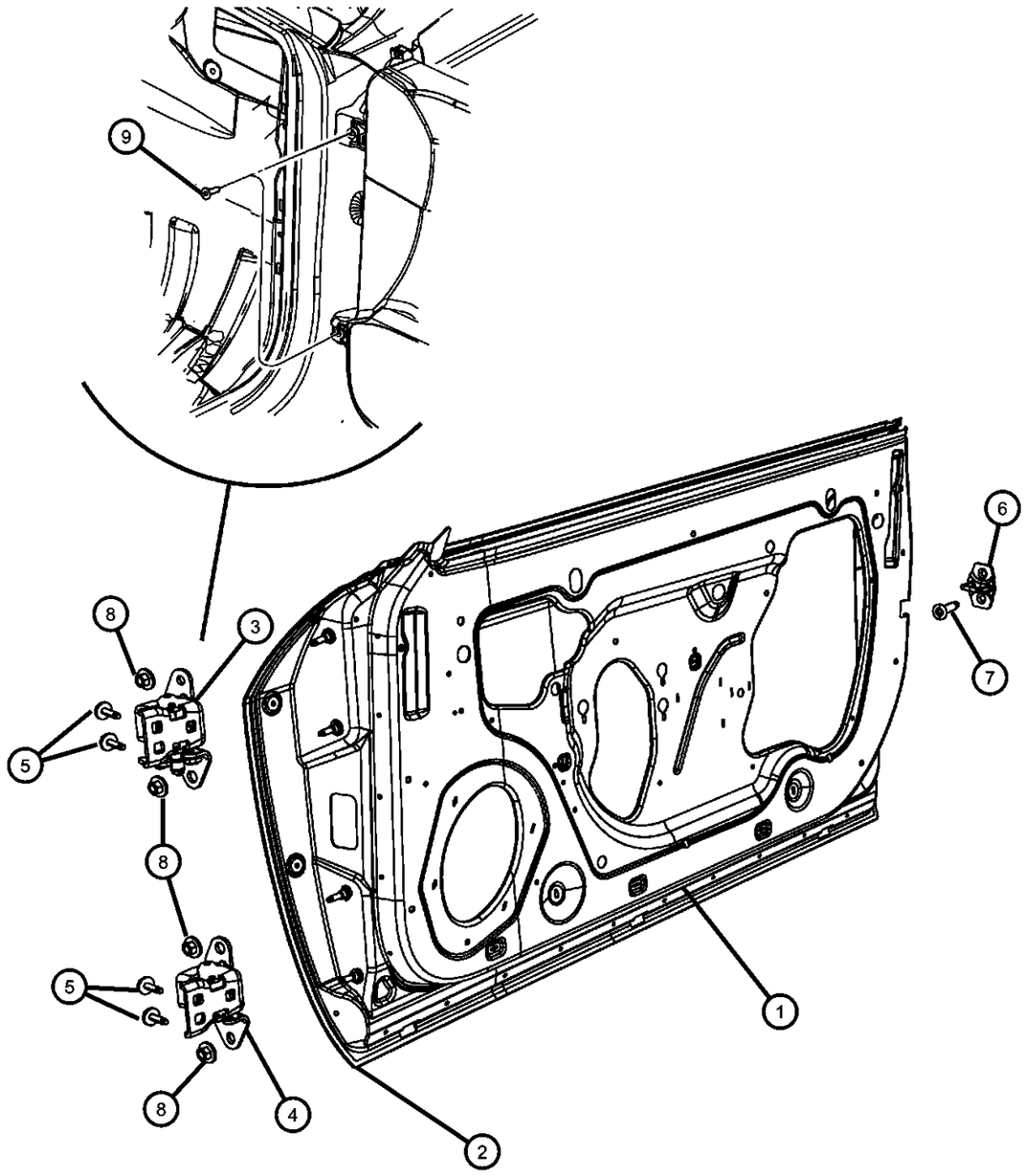

ITEM	PART NUMBER	QTY	LINE	SERIES	BODY	ENGINE	TRANS	TRIM	DESCRIPTION
1									DOOR, Front
	68044222AB	1	D		22				Right
	68044223AB	1	D		22				Left
2									PANEL, Door Outer
	04816156AA	1	D		22				Right
	04816157AA	1	D		22				Left
3									HINGE, Front Door Upper
	68024106AB	1	D		22				Right
	68024107AC	1	D		22				Left
4									HINGE, Front Door Lower
	68026642AB	1	D		22				Right
	68026643AB	1	D		22				Left
5	06507742AA	12	D		22				SCREW AND WASHER, Hex Head, M8x1.25x33, Hinge to Body
6	04780259AD	2	D		22				STRIKER, Door Latch
7	06508312AA	4	D		22				SCREW, Torx Head, M8X1.25X34
8	06101446	8	D		22				NUT AND WASHER, Door to Hinge
9	06504443	4	D		22				SCREW

DODGE CHALLENGER (LC)

SERIES	LINE	BODY	ENGINE	TRANSMISSION
H = HIGHLINE P = PREMIUM X = SPECIAL	D = DODGE	22 = 2-DR SEDAN TYPE #2	EGG = 3.5L High Output V6 24V MPI Engine ESF = 6.1L SRT HEMI V8 Engine EZC = 5.7L HEMI VCT Engine EZD = 5.7L Hemi VCT MDS Engine	DEC = 6-Speed Manual TREMEC Transmission DGJ = 5-Speed Auto W5A580 Transmission DGV = 4-Spd. Automatic VLP 42RLE Trans

Front Door, Hardware Components
Figure 30-125

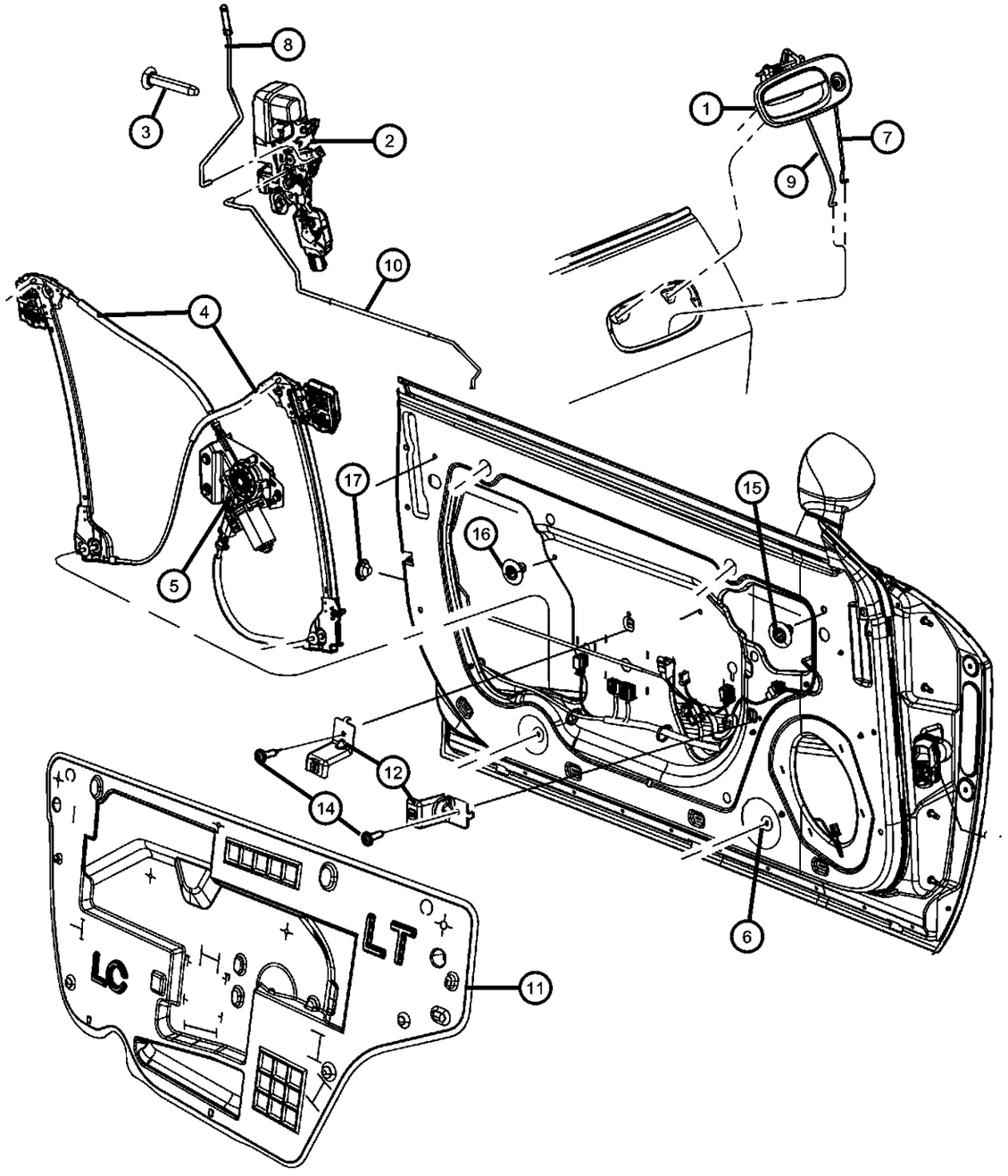

ITEM	PART NUMBER	QTY	LINE	SERIES	BODY	ENGINE	TRANS	TRIM	DESCRIPTION
1									HANDLE, Exterior Door
	1NJ56ARHAA	1	D		22				[RH], Right
	1NJ56AXRAA	1	D		22				[XR], Right
	1NJ56FDTAA	1	D		22				[DT], Right
	1NJ57AXRAA	1	D		22				[XR], Left
	1NJ57FDTAA	1	D		22				[DT], Left
	1NJ56ZR3AA	1	D		22				[R3], Right
	1NJ56GBSAA	1	D		22				[BS], Right
	1NJ56SW1AA	1	D		22				[W1], Right
	1NJ56WS2AA	1	D		22				[S2], Right
	1NJ56FLCAA	1	D		22				[LC], Right
	1NJ57ARHAA	1	D		22				[RH], Left
	1NJ57GBSAA	1	D		22				[BS], Left
	1NJ57SW1AA	1	D		22				[W1], Left
	1NJ57WS2AA	1	D		22				[S2], Left
	1NJ57FLCAA	1	D		22				[LC], Left
	1NJ57ZR3AA	1	D		22				[R3], Left
2									LATCH, Front Door
	04589602AB	1	D		22				Right
	04589603AB	1	D		22				Left
3	06036651AA	6	D		22				SCREW, Tapping
4									REGULATOR, Front Door Window
	68043885AA	1	D		22				Left
	68043884AA	1	D		22				Right
5									MOTOR, Window Regulator, Front Door
	68043883AA	1	D		22				Left
	68043882AA	1	D		22				Right
6	06104725AA	8	D		22				NUT AND WASHER, Hex, M6X1.00
7	04816133AB	1	D		22				LINK, Key Cylinder To Latch
8									KNOB AND LINK, Door Latch
	1GD95SZ6AB	1	D		22				Left
	1GD94SZ6AB	1	D		22				Right

DODGE CHALLENGER (LC)

SERIES	LINE	BODY	ENGINE	TRANSMISSION
H = HIGHLINE P = PREMIUM X = SPECIAL	D = DODGE	22 = 2-DR SEDAN TYPE #2	EGG = 3.5L High Output V6 24V MPI Engine ESF = 6.1L SRT HEMI V8 Engine EZC = 5.7L HEMI VCT Engine EZD = 5.7L Hemi VCT MDS Engine	DEC = 6-Speed Manual TREMEC Transmission DGJ = 5-Speed Auto W5A580 Transmission DGV = 4-Spd. Automatic VLP 42RLE Trans

AR = use ase required - = Non illustrrated part

Front Door, Hardware Components
Figure 30-125

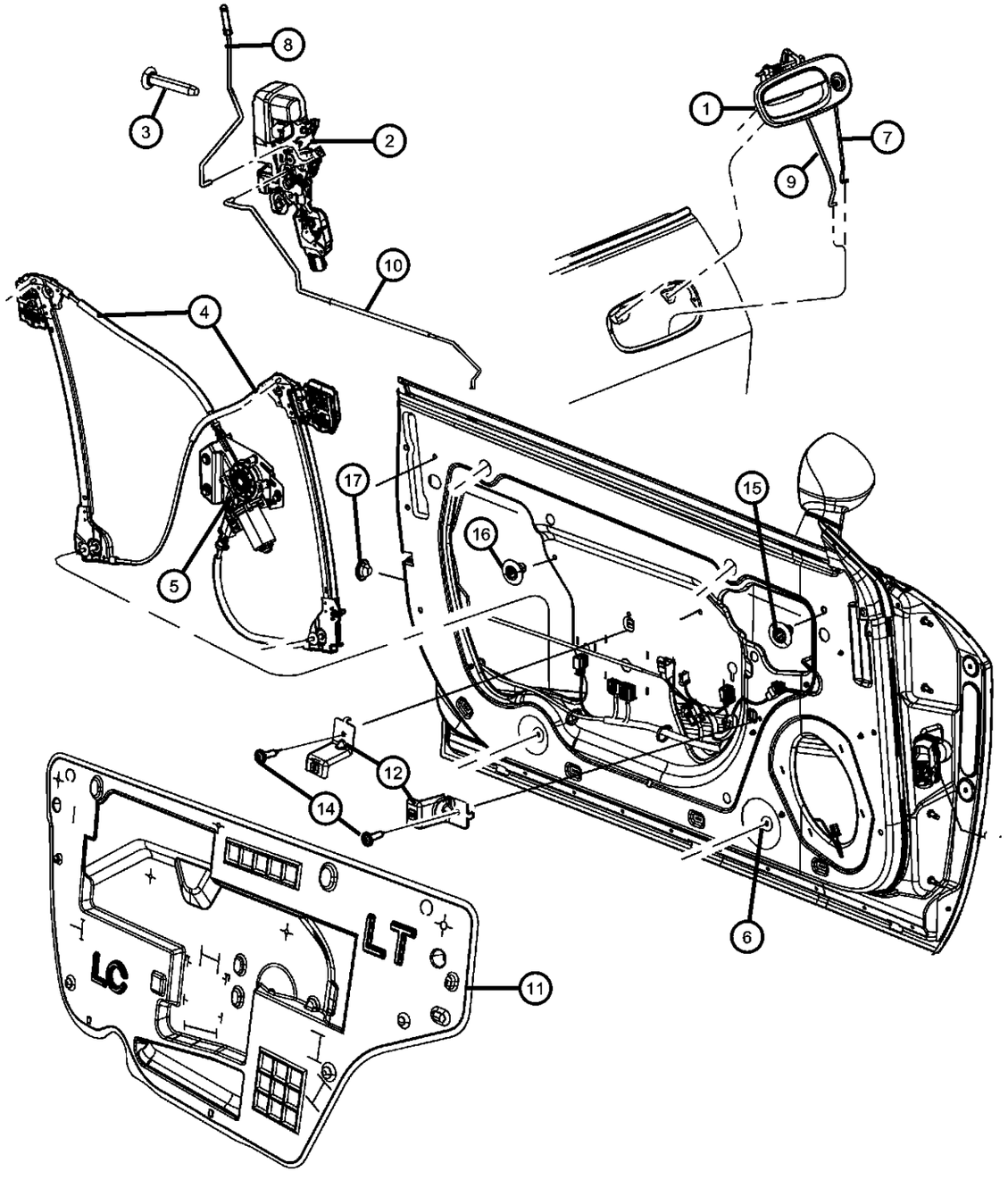

ITEM	PART NUMBER	QTY	LINE	SERIES	BODY	ENGINE	TRANS	TRIM	DESCRIPTION
9									LINK, Door Latch
	04816138AA	1	D		22				Outside Handle to Latch, Right
	04816139AA	1	D		22				Outside Handle to Latch, Left
10									LINK, Door Latch
	04816141AA	1	D		22				Inside Handle to Latch, Left
	04816140AA	1	D		22				Inside Handle to Latch, Right
11									WATERSHIELD, Front Door
	55399133AB	1	D		22				Left
	55399132AB	1	D		22				Right
12	04662037AC	1	D		22				BRACKET, Door Pull CupRight & Left
-13									HANDLE, Inside Release
	1MV561DVAA	1	D		22				Right
	1MV571DVAA	1	D		22				Left
14	06032723	4	D		22				SCREW, Self Tapping, M4.2x1.69x19.05
15	04784033AA	2	D		22				PLUG, Door Trim Panel
16	04784018AA	6	D		22				PLUG
17	04373728	2	D		22				PLUG

DODGE CHALLENGER (LC)

SERIES	LINE	BODY	ENGINE	TRANSMISSION
H = HIGHLINE P = PREMIUM X = SPECIAL	D = DODGE	22 = 2-DR SEDAN TYPE #2	EGG = 3.5L High Output V6 24V MPI Engine ESF = 6.1L SRT HEMI V8 Engine EZC = 5.7L HEMI VCT Engine EZD = 5.7L Hemi VCT MDS Engine	DEC = 6-Speed Manual TREMEC Transmission DGJ = 5-Speed Auto W5A580 Transmission DGV = 4-Spd. Automatic VLP 42RLE Trans

AR = use ase required - = Non illustrrated part

Exterior Door Lock Cylinders
Figure 30-150

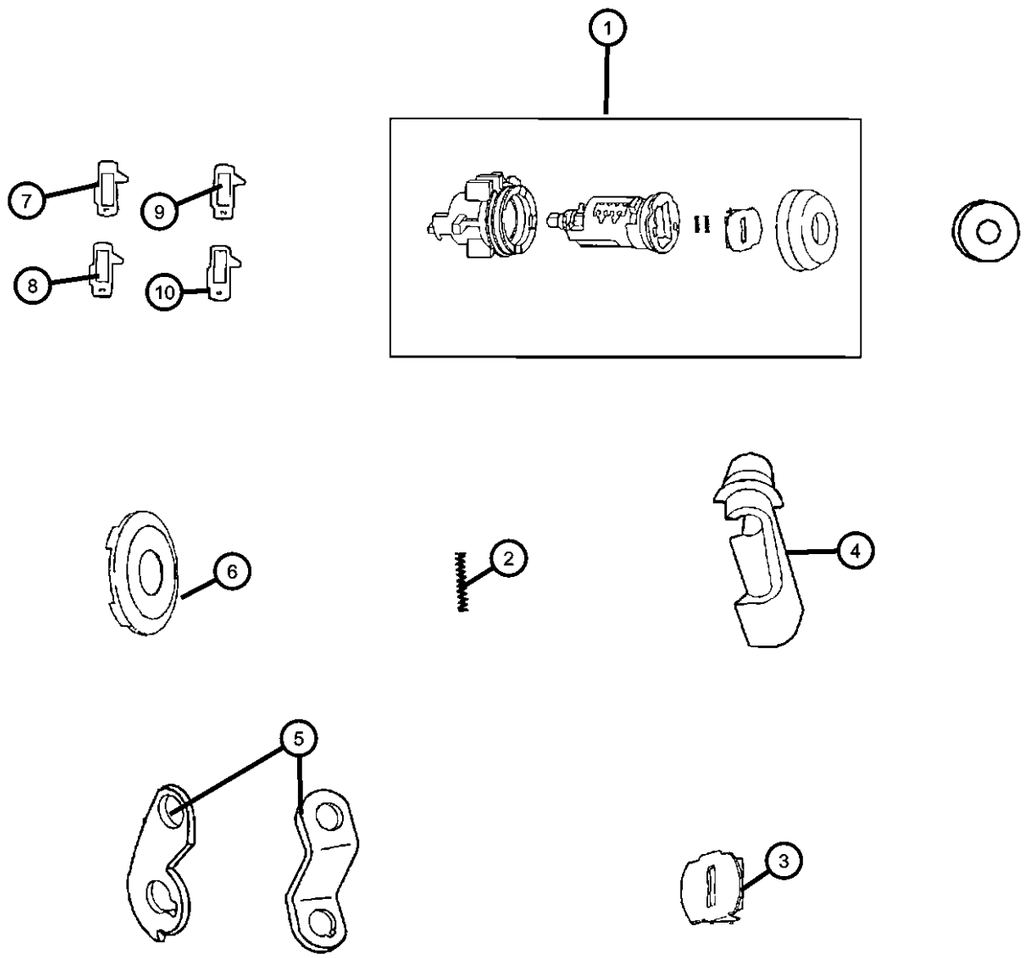

ITEM	PART NUMBER	QTY	LINE	SERIES	BODY	ENGINE	TRANS	TRIM	DESCRIPTION
NOTE: ALL LOCK CYLINDERS ARE UNCODED									
1	05139099AA	1	D		22				CYLINDER, Door Lock
2	04778121	1	D		22				SPRING, Tumbler
3	05019605AA	1	D		22				SHUTTER, Lock Cylinder
4	05191981AA	1	D		22				CLIP, Latch
5	05191978AA	1	D		22				LEVER, Door Lock Cylinder
6	05102456AA	1	D		22				CAP, Door Lock Cylinder
7	04778117AB	1	D		22				TUMBLER, Number 1
8	04778118AB	1	D		22				TUMBLER, Number 2
9	04778119AB	1	D		22				TUMBLER, Number 3
10	04778120AB	1	D		22				TUMBLER, Number 4

DODGE CHALLENGER (LC)

SERIES	LINE	BODY	ENGINE	TRANSMISSION
H = HIGHLINE	D = DODGE	22 = 2-DR SEDAN TYPE #2	EGG = 3.5L High Output V6 24V MPI Engine	DEC = 6-Speed Manual TREMEC Transmission
P = PREMIUM			ESF = 6.1L SRT HEMI V8 Engine	DGJ = 5-Speed Auto W5A580 Transmission
X = SPECIAL			EZC = 5.7L HEMI VCT Engine	DGV = 4-Spd. Automatic VLP 42RLE Trans
			EZD = 5.7L Hemi VCT MDS Engine	

AR = use ase required - = Non illustrrated part

Exterior Mirror
Figure 30-505

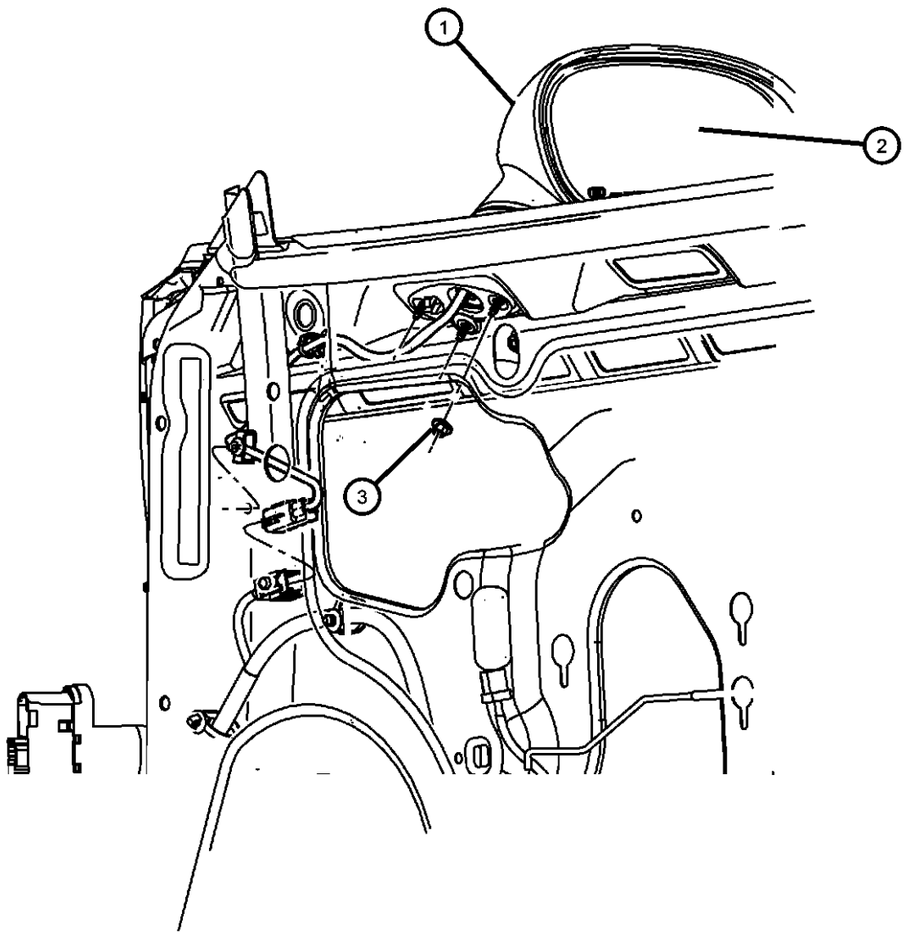

ITEM	PART NUMBER	QTY	LINE	SERIES	BODY	ENGINE	TRANS	TRIM	DESCRIPTION
1									MIRROR, Outside, Rearview, Electric, Heated
	1GE19FDTAD	1	D		22				[DT], With Sales Code [GUK], Left
	1GD72ARHAD	1	D		22				[RH], With Sales Code [GTN], Right
	1GD72AXRAD	1	D		22				[XR], With Sales Code [GTN], Right
	1GD72FDTAD	1	D		22				[DT], With Sales Code [GTN], Right
	1GD72FLCAD	1	D		22				[LC], With Sales Code [GTN], Right
	1GD72GB-SAD	1	D		22				[BS], With Sales Code [GTN], Right
	1GD72SW1AD	1	D		22				[W1], With Sales Code [GTN], Right
	1GD72WS2AD	1	D		22				[S2], With Sales Code [GTN], Right
	1GD72ZR3AD	1	D		22				[R3], With Sales Code [GTN], Right
	1GD73ARHAD	1	D		22				[RH], With Sales Code [GTN], Left
	1GD73AXRAD	1	D		22				[XR], With Sales Code [GTN], Left
	1GD73FDTAD	1	D		22				[DT], With Sales Code [GTN], Left
	1GD73FLCAD	1	D		22				[LC], With Sales Code [GTN], Left
	1GD73GB-SAD	1	D		22				[BS], With Sales Code [GTN], Left
	1GD73SW1AD	1	D		22				[W1], With Sales Code [GTN], Left
	1GD73WS2AD	1	D		22				[S2], With Sales Code [GTN], Left
	1GD73ZR3AD	1	D		22				[R3], With Sales Code [GTN], Left
	1GE18ARHAD	1	D		22				[RH], With Sales Code [GUK], Right
	1GE18AXRAD	1	D		22				[XR], With Sales Code [GUK], Right
	1GE18FDTAD	1	D		22				[DT], With Sales Code [GUK], Right
	1GE18ZR3AD	1	D		22				[R3], With Sales Code [GUK], Right
	1GE18SW1AD	1	D		22				[W1], With Sales Code [GUK], Right

DODGE CHALLENGER (LC)

SERIES	LINE	BODY	ENGINE	TRANSMISSION
H = HIGHLINE P = PREMIUM X = SPECIAL	D = DODGE	22 = 2-DR SEDAN TYPE #2	EGG = 3.5L High Output V6 24V MPI Engine ESF = 6.1L SRT HEMI V8 Engine EZC = 5.7L HEMI VCT Engine EZD = 5.7L Hemi VCT MDS Engine	DEC = 6-Speed Manual TREMEC Transmission DGJ = 5-Speed Auto W5A580 Transmission DGV = 4-Spd. Automatic VLP 42RLE Trans

Exterior Mirror
Figure 30-505

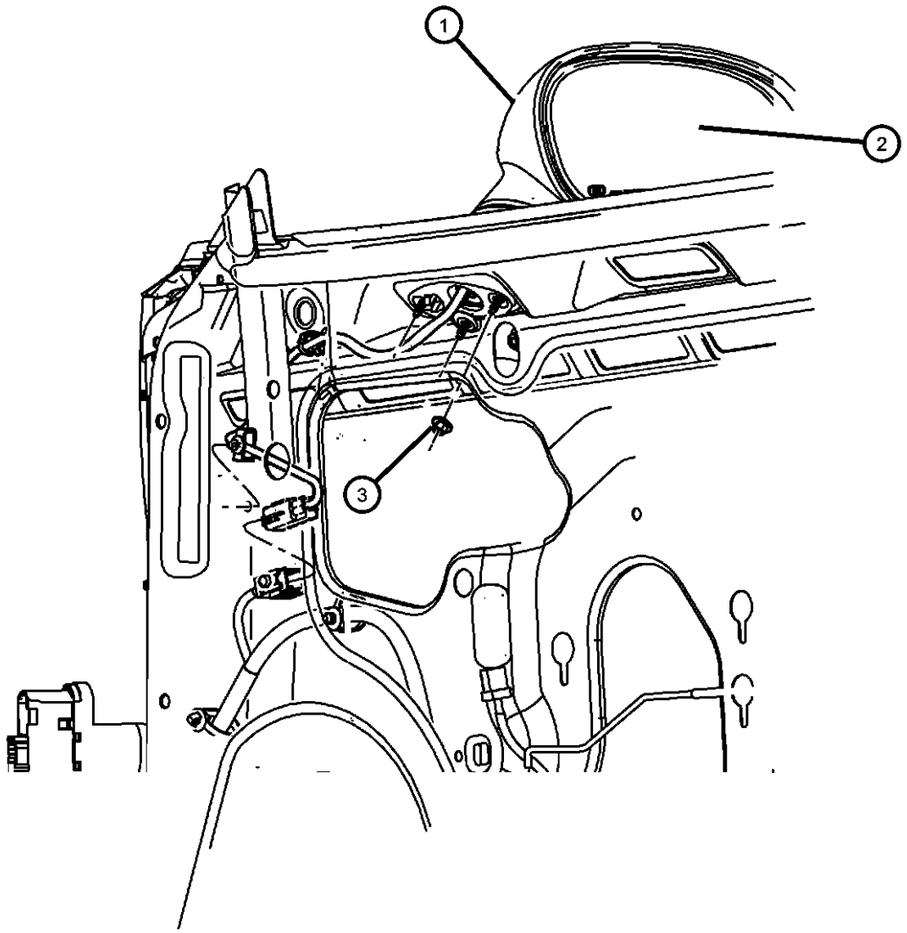

ITEM	PART NUMBER	QTY	LINE	SERIES	BODY	ENGINE	TRANS	TRIM	DESCRIPTION
	1GE18WS2AD	1	D		22				[S2], With Sales Code [GUK], Right
	1GE19ARHAD	1	D		22				[RH], With Sales Code [GUK], Left
	1GE19AXRAD	1	D		22				[XR], With Sales Code [GUK], Left
	1GE19GB-SAD	1	D		22				[BS], With Sales Code [GUK], Left
	1GE19FLCAD	1	D		22				[LC], With Sales Code [GUK], Left
	1GE19FQ-DAD	1	D		22				[QD], With Sales Code [GUK], Left
	1GE19ZR3AD	1	D		22				[R3], With Sales Code [GUK], Left
	1GE19SW1AD	1	D		22				[W1], With Sales Code [GUK], Left
	1GE19WS2AD	1	D		22				[S2], With Sales Code [GUK], Left
	1GE18FLCAD	1	D		22				[LC], With Sales Code [GUK], Right
	1GE18FQ-DAD	1	D		22				[QD], With Sales Code [GUK], Right
	1GE18GB-SAD	1	D		22				[BS], With Sales Code [GUK], Right
2									GLASS, Mirror Replacement
	68048443AA	1	D		22				With Sales Code [GTN], Left
	68048446AA	1	D		22				With Sales Code [GUK], Right
	68048442AA	1	D		22				With Sales Code [GTN], Right
	68064917AA	1	D		22				[GUL]
	68048447AA	1	D		22				With Sales Code [GUK], Left
3	06101443	6	D		22				NUT AND WASHER, Hex, M5x.80

DODGE CHALLENGER (LC)

SERIES	LINE	BODY	ENGINE	TRANSMISSION
H = HIGHLINE P = PREMIUM X = SPECIAL	D = DODGE	22 = 2-DR SEDAN TYPE #2	EGG = 3.5L High Output V6 24V MPI Engine ESF = 6.1L SRT HEMI V8 Engine EZC = 5.7L HEMI VCT Engine EZD = 5.7L Hemi VCT MDS Engine	DEC = 6-Speed Manual TREMEC Transmission DGJ = 5-Speed Auto W5A580 Transmission DGV = 4-Spd. Automatic VLP 42RLE Trans

Weatherstrips, Front Door
Figure 30-605

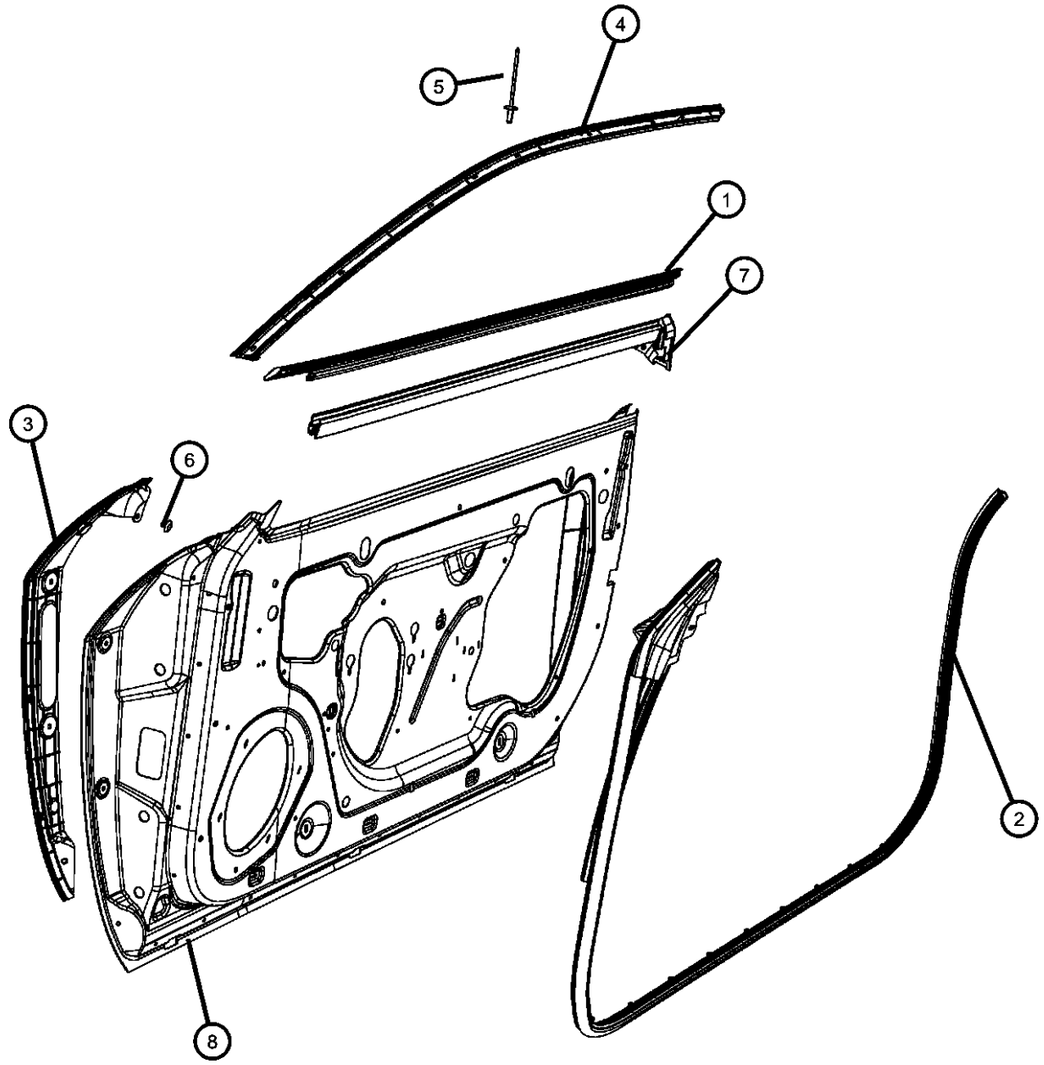

ITEM	PART NUMBER	QTY	LINE	SERIES	BODY	ENGINE	TRANS	TRIM	DESCRIPTION
1									WEATHERSTRIP, Front Door Belt
	55399122AC	1	D		22				Right
	55399123AC	1	D		22				Left
2									WEATHERSTRIP, Front Door Mounted
	04575888AB	1	D		22				Right
	04575889AB	1	D		22				Left
3									WEATHERSTRIP, Front Door Mounted
	55399152AB	1	D		22				Right
	55399153AB	1	D		22				Left
4									SEAL
	04575902AB	1	D		22				Right
	04575903AB	1	D		22				Left
5		1							RIVET, Blind, .125X.410, for retaining seal, (NOT SERVICED)
6	05061472AA	8	D		22				PIN, Push
7									WEATHERSTRIP, Front Door Belt
	04575884AB	1	D		22				Right
	04575885AB	1	D		22				Left
8	04575881AA	2	D		22				WEATHERSTRIP, Front Door Sill SecondaryRight And Left

DODGE CHALLENGER (LC)

SERIES	LINE	BODY	ENGINE	TRANSMISSION
H = HIGHLINE	D = DODGE	22 = 2-DR SEDAN TYPE #2	EGG = 3.5L High Output V6 24V MPI Engine	DEC = 6-Speed Manual TREMEC Transmission
P = PREMIUM			ESF = 6.1L SRT HEMI V8 Engine	DGJ = 5-Speed Auto W5A580 Transmission
X = SPECIAL			EZC = 5.7L HEMI VCT Engine	DGV = 4-Spd. Automatic VLP 42RLE Trans
			EZD = 5.7L Hemi VCT MDS Engine	

Group - 40

Exterior Ornamentation

Group - 40 Exterior Ornamentation

Illustration Title — Group-Fig. No.

Nameplates
Nameplates, Emblems & Medallions ..... Fig. 40 - 105

Moldings and Ornamentation
Exterior Ornamentation ..... Fig. 40 - 205
Spoilers ..... Fig. 40 - 245

Decals and Tape strips
Decals & Tape Stripes ..... Fig. 40 - 305

Grilles
Grilles ..... Fig. 40 - 405

040-100
Nameplates

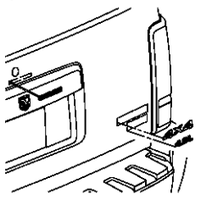

040-200
Moldings and Ornamentation

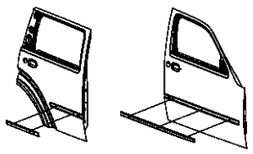

040-300
Decals and Tape strips

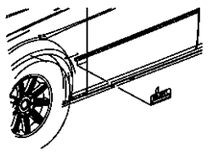

040-400
Grilles

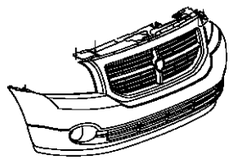

Nameplates, Emblems & Medallions
Figure 40-105

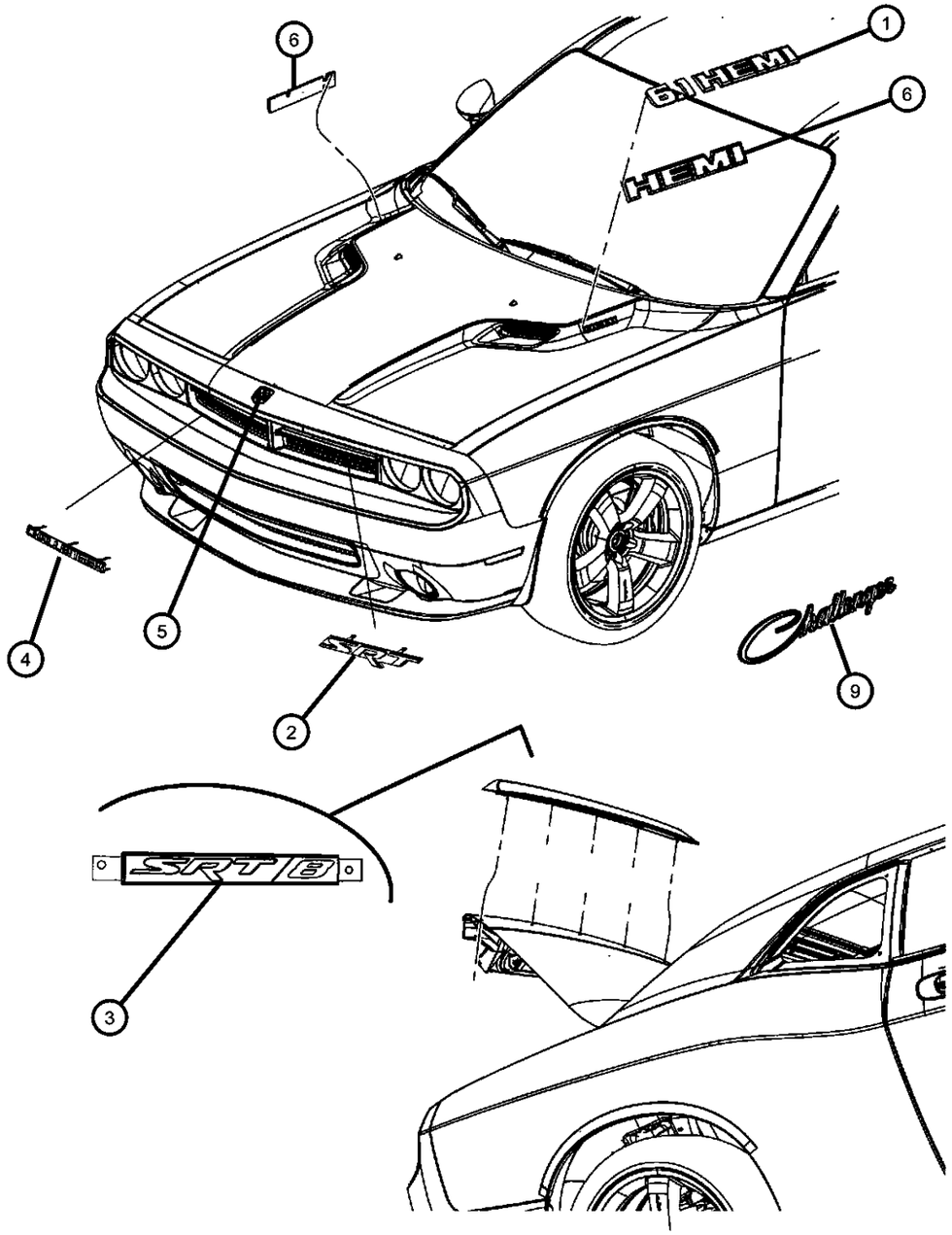

ITEM	PART NUMBER	QTY	LINE	SERIES	BODY	ENGINE	TRANS	TRIM	DESCRIPTION
1	68029274AA	2	D		22				NAMEPLATE, [6.1 HEMI]
2	68026175AA	1	D	X	22				NAMEPLATE, [SRT]Front
3	05029893AB	1	D		22				NAMEPLATE, [SRT8]Rear
4									NAMEPLATE, [Challenger]
	68047939AA	1	D	X	22				
		1	D	H	22				
		1	D	P	22				
5									MEDALLION, Ram Head
	05155674AA	1	D	X	22				
		1	D	P	22				
		1	D	H	22				
6	68028278AB	2	D		22				NAMEPLATE, HEMI
-7	68051383AA	1	D	P	22				NAMEPLATE, [R/T]
-8									DECAL, [Center Of Tail Lamp]
	68060401AA	1	D		22				[Letter E]
	68060396AA	2	D		22				[Letter D]
	68060397AA	1	D		22				[Letter O]
	68060398AA	1	D		22				[Letter G]
9	68044799AA	2	D		22				NAMEPLATE, [Challenger Script], [MGM] Front Fender

DODGE CHALLENGER (LC)

SERIES	LINE	BODY	ENGINE	TRANSMISSION
H = HIGHLINE	D = DODGE	22 = 2-DR SEDAN TYPE #2	EGG = 3.5L High Output V6 24V MPI Engine	DEC = 6-Speed Manual TREMEC Transmission
P = PREMIUM			ESF = 6.1L SRT HEMI V8 Engine	DGJ = 5-Speed Auto W5A580 Transmission
X = SPECIAL			EZC = 5.7L HEMI VCT Engine	DGV = 4-Spd. Automatic VLP 42RLE Trans
			EZD = 5.7L Hemi VCT MDS Engine	

AR = use ase required - = Non illustrrated part

Exterior Ornamentation
Figure 40-205

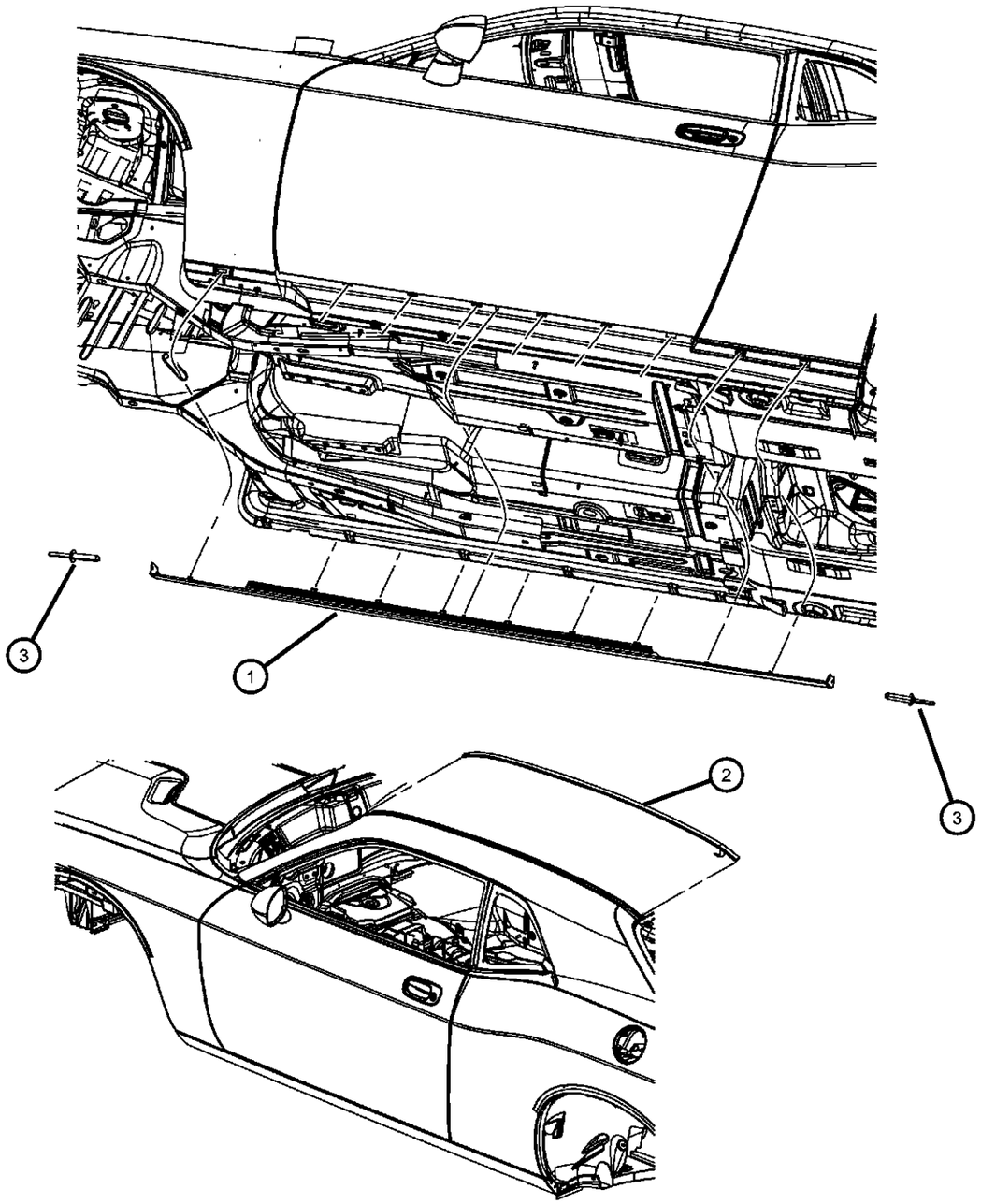

ITEM	PART NUMBER	QTY	LINE	SERIES	BODY	ENGINE	TRANS	TRIM	DESCRIPTION
1									CLADDING, Front Door
	05028798AB	1	D		22				Right
	05028799AB	1	D		22				Left
2									MOLDING, Roof
	1GD41FQ-DAD	1	D		22				[QD], Left
	1GD41GB-SAD	1	D		22				[BS], Left
	1GD40GB-SAD	1	D		22				[BS], Right
	1GD40SW1AD	1	D		22				[W1], Right
	1GD40ARHAD	1	D		22				[RH], Right
	1GD40AXRAD	1	D		22				[XR], Right
	1GD40FDTAD	1	D		22				[DT], Right
	1GD40FLCAD	1	D		22				[LC], Right
	1GD40FQ-DAD	1	D		22				[QD], Right
	1GD40WS2AD	1	D		22				[S2], Right
	1GD40ZR3AD	1	D		22				[R3], Right
	1GD41ARHAD	1	D		22				[RH], Left
	1GD41AXRAD	1	D		22				[XR], Left
	1GD41SW1AD	1	D		22				[W1], Left
	1GD41WS2AD	1	D		22				[S2], Left
	1GD41ZR3AD	1	D		22				[R3], Left
	1GD41FDTAD	1	D		22				[DT], Left
	1GD41FLCAD	1	D		22				[LC], Left
3									RIVET, Plastic
	06504737	4	D		22				Cladding to Rear Body Side
		4	D		22				Cladding to Front Fender

DODGE CHALLENGER (LC)

SERIES	LINE	BODY	ENGINE	TRANSMISSION
H = HIGHLINE	D = DODGE	22 = 2-DR SEDAN TYPE #2	EGG = 3.5L High Output V6 24V MPI Engine	DEC = 6-Speed Manual TREMEC Transmission
P = PREMIUM			ESF = 6.1L SRT HEMI V8 Engine	DGJ = 5-Speed Auto W5A580 Transmission
X = SPECIAL			EZC = 5.7L HEMI VCT Engine	DGV = 4-Spd. Automatic VLP 42RLE Trans
			EZD = 5.7L Hemi VCT MDS Engine	

AR = use ase required - = Non illustrrated part

Spoilers
Figure 40-245

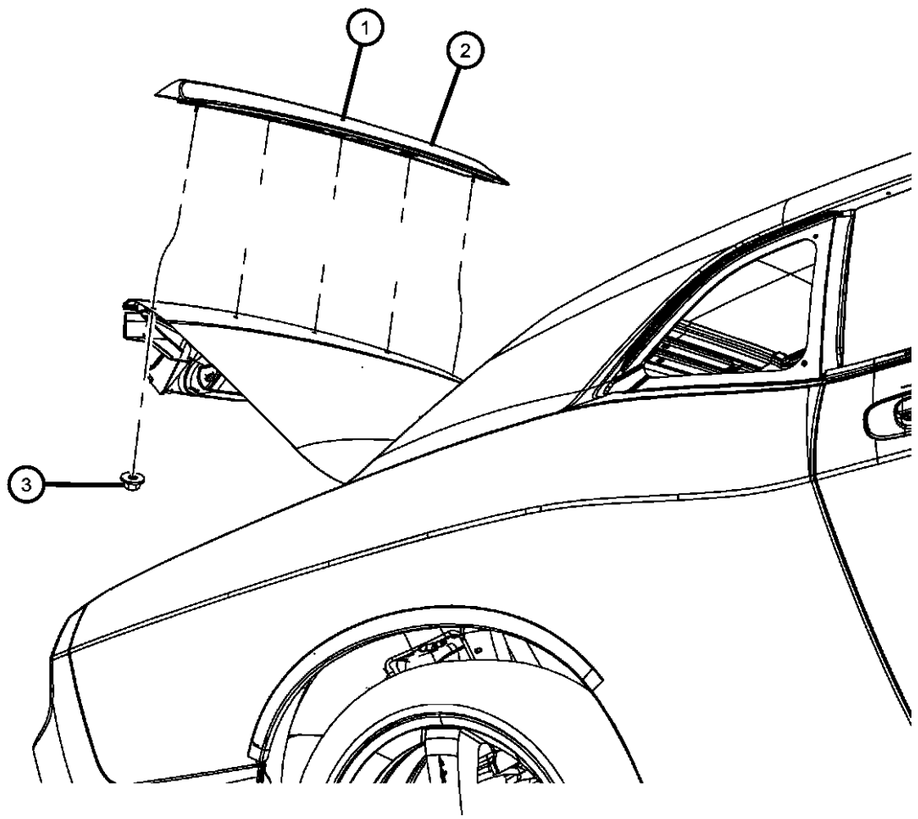

ITEM	PART NUMBER	QTY	LINE	SERIES	BODY	ENGINE	TRANS	TRIM	DESCRIPTION
1	1GL20RXFAB	1	D		22				SPOILER, Rear, With [SRT8] Nameplate, [MXR]
2									SPOILER, Rear Air Dam
	1FS64SW1AB	1	D		22				[MXX] [W1]
	1FS64WS2AB	1	D		22				[MXX] [S2]
	1FS64ZR3AB	1	D		22				[MXX] [R3]
	1FS64ARHAB	1	D		22				[MXX] [RH]
	1FS64AXRAB	1	D		22				[MXX] [XR]
	1FS64FDTAB	1	D		22				[MXX] [DT]
	1FS64FLCAB	1	D		22				[MXX] [LC]
	1FS64GBSAB	1	D		22				[MXX] [BS]
3	34201358	4	D		22				NUT AND WASHER, Hex Nut-Sealing Washer, M6 x 1.00
-4	68079332AA	3	D		22				CLIP, Spoiler Attachment
-5	68056407AA	2	D		22				CAP, Stud Cap

DODGE CHALLENGER (LC)

SERIES	LINE	BODY	ENGINE	TRANSMISSION
H = HIGHLINE	D = DODGE	22 = 2-DR SEDAN TYPE #2	EGG = 3.5L High Output V6 24V MPI Engine	DEC = 6-Speed Manual TREMEC Transmission
P = PREMIUM			ESF = 6.1L SRT HEMI V8 Engine	DGJ = 5-Speed Auto W5A580 Transmission
X = SPECIAL			EZC = 5.7L HEMI VCT Engine	DGV = 4-Spd. Automatic VLP 42RLE Trans
			EZD = 5.7L Hemi VCT MDS Engine	

Decals & Tape Stripes
Figure 40-305

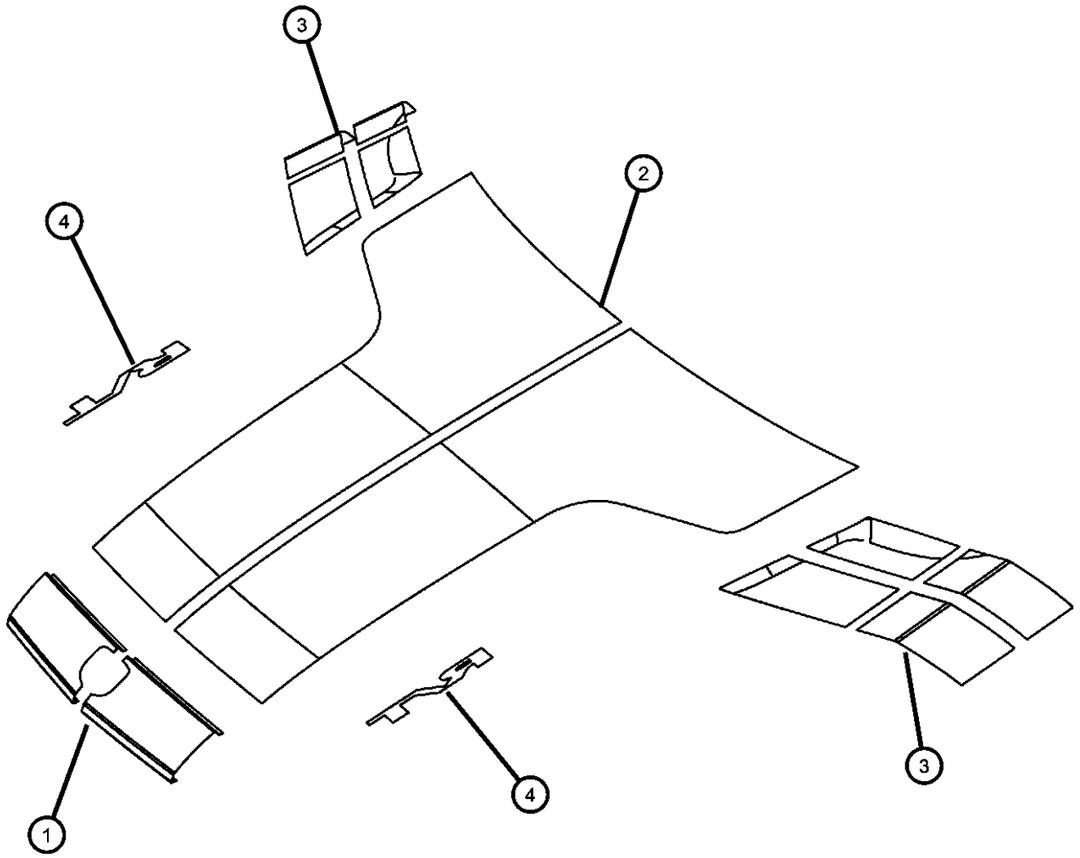

ITEM	PART NUMBER	QTY	LINE	SERIES	BODY	ENGINE	TRANS	TRIM	DESCRIPTION
1	68042868AA	1	D		22				DECAL
2	68042867AA	1	D		22				DECAL, Hood
3									DECAL
	1LW73GS4AA	1	D		22				[XR] Or [S2], Left
	1LW73RXFAA	1	D		22				[BS], [DT], [LC], [QD], [R3], [RH], [W1], Left
	1LW72GS4AA	1	D		22				[XR] Or [S2], Right
	1LW72RXFAA	1	D		22				[BS], [DT], [LC], [QD], [R3], [RH], [W1], Right
4									DECAL
	1LW76GS4AA	2	D		22				[XR] Or [S2]
	1LW76RXFAA	2	D		22				[BS], [DT], [LC], [QD], [R3], [RH], [W1]
-5									DECAL, Fender Rear, Quarter Panel
	1LW66RXFAA	1	D		22				[QD] [MGY], Right
		1	D		22				[YB] [MGY], Right
	1LW67RXFAA	1	D		22				[QD] [MGY], Left
		1	D		22				[YB] [MGY], Left
-6									DECAL, Front Door
	1LW68RXFAA	1	D		22				[QD] [MGY], Right
		1	D		22				[YB] [MGY], Right
	1LW69RXFAA	1	D		22				[QD] [MGY], Left
		1	D		22				[YB] [MGY], Left
-7									DECAL, Fender Front
	1LW70RXFAA	1	D		22				[YB] [MGY], Right
	1LW71RXFAA	1	D		22				[QD] [MGY], Left
		1	D		22				[YB] [MGY], Left
		1	D		22				[QD] [MGY], Right

DODGE CHALLENGER (LC)

SERIES	LINE	BODY	ENGINE	TRANSMISSION
H = HIGHLINE P = PREMIUM X = SPECIAL	D = DODGE	22 = 2-DR SEDAN TYPE #2	EGG = 3.5L High Output V6 24V MPI Engine ESF = 6.1L SRT HEMI V8 Engine EZC = 5.7L HEMI VCT Engine EZD = 5.7L Hemi VCT MDS Engine	DEC = 6-Speed Manual TREMEC Transmission DGJ = 5-Speed Auto W5A580 Transmission DGV = 4-Spd. Automatic VLP 42RLE Trans

AR = use ase required - = Non illustrrated part

Grilles
Figure 40-405

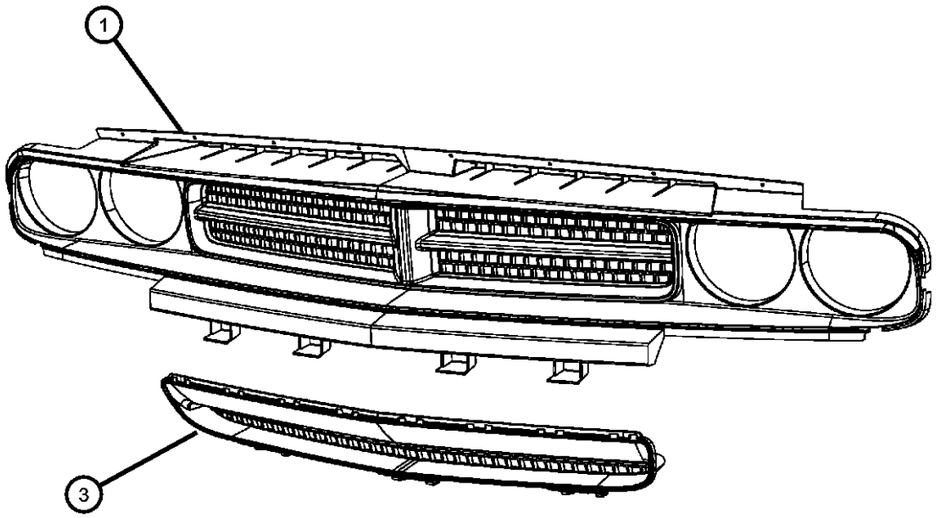

ITEM	PART NUMBER	QTY	LINE	SERIES	BODY	ENGINE	TRANS	TRIM	DESCRIPTION
1									GRILLE, Radiator
	68043388AA	1	D	X	22				
		1	D	P	22				
		1	D	H	22				
-2									CLIP, Grille
	68019469AA	6	D	P	22				Grille to Fascia
		6	D	X	22				Grille to Fascia
		6	D	H	22				Grille to Fascia
3									GRILLE, Lower
	68043389AA	1	D	X	22				
		1	D	P	22				
		1	D	H	22				
-4									PANEL, Close out
	68051396AA	1	D	P	22				[LNJ], Left
		1	D	X	22				[LNJ], Left
		1	D	H	22				[LNJ], Left
		1	D	H	22				[-LNJ], Left
	68051397AA	1	D	P	22				[LNJ], Right
		1	D	X	22				[LNJ], Right
		1	D	H	22				[LNJ], Right
		1	D	H	22				[-LNJ], Right
-5									RIVET, M4.95x25
	06500898	11	D	P	22				
		11	D	X	22				
		11	D	H	22				

DODGE CHALLENGER (LC)

SERIES	LINE	BODY	ENGINE	TRANSMISSION
H = HIGHLINE P = PREMIUM X = SPECIAL	D = DODGE	22 = 2-DR SEDAN TYPE #2	EGG = 3.5L High Output V6 24V MPI Engine ESF = 6.1L SRT HEMI V8 Engine EZC = 5.7L HEMI VCT Engine EZD = 5.7L Hemi VCT MDS Engine	DEC = 6-Speed Manual TREMEC Transmission DGJ = 5-Speed Auto W5A580 Transmission DGV = 4-Spd. Automatic VLP 42RLE Trans

Group - 50

Interior Trim

050-100 Headliners-Visors-Assist Straps	**050-1000** Rear Seats - Second Row - Adjusters, Recliners, Shields and Risers	**050-1600** Consoles	**050-1700** Instrument Panel 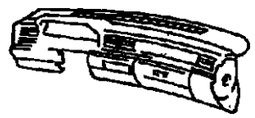
050-200 Panels-Moldings-Scuff Plates, Pillar, Cowl, 1/4 Panel Trim and Cargo Covers	**050-300** Carpets, Floor Mats, Load Floor, and Silencers	**050-400** Door Trim Panels-Front and Rear	**050-500** Front Seats - First Row
050-600 Rear Seats - Second Row	**050-900** Front Seats - Adjusters, Recliners, Shields and Risers		

Group - 50 Interior Trim

Illustration Title — Group-Fig. No.

Headliners-Visors-Assist Straps
Headliners and Visors ..... Fig. 50 - 105
Rear Shelf Panel ..... Fig. 50 - 165

Panels-Moldings-Scuff Plates, Pillar, Cowl, 1/4 Panel Trim and Cargo Covers
Interior Moldings and Pillars - A Pillar ..... Fig. 50 - 205
Interior Moldings and Pillars - C Pillar ..... Fig. 50 - 220
Cowl Side Panel and Scuff Plates ..... Fig. 50 - 225
Quarter Trim Panel ..... Fig. 50 - 235

Carpets, Floor Mats, Load Floor, and Silencers
Carpet, Front ..... Fig. 50 - 325
Carpet, Rear ..... Fig. 50 - 335
Footrest ..... Fig. 50 - 345
Carpet Luggage Compartment ..... Fig. 50 - 360
Silencers ..... Fig. 50 - 385

Door Trim Panels-Front and Rear
Front Door Trim Panels ..... Fig. 50 - 405

Front Seats - First Row
Front Seat - Bucket - Trim Code [L7] ..... Fig. 50 - 502
Front Seat - Bucket - Trim Code [RL] ..... Fig. 50 - 504
Front Seat - Bucket -Trim Code [UL] ..... Fig. 50 - 506

Rear Seats - Second Row
Rear Seat - 60/40 - Trim Code [L7] ..... Fig. 50 - 636
Rear Seat - 60/40 - Trim Code [RL] ..... Fig. 50 - 638
Rear Seat - 60/40 - Trim Code [UL] ..... Fig. 50 - 640

Front Seats - Adjusters, Recliners, Shields and Risers
Adjusters , Recliners and Shields - Driver Seat - Power ..... Fig. 50 - 905

Rear Seats - Second Row - Adjusters, Recliners, Shields and Risers
Second Row - 60/40 ..... Fig. 50 - 1030

Consoles
Floor Console Front ..... Fig. 50 - 1605
Overhead Console ..... Fig. 50 - 1620

Instrument Panel
Instrument Panel and Structure ..... Fig. 50 - 1705

Headliners and Visors
Figure 50-105

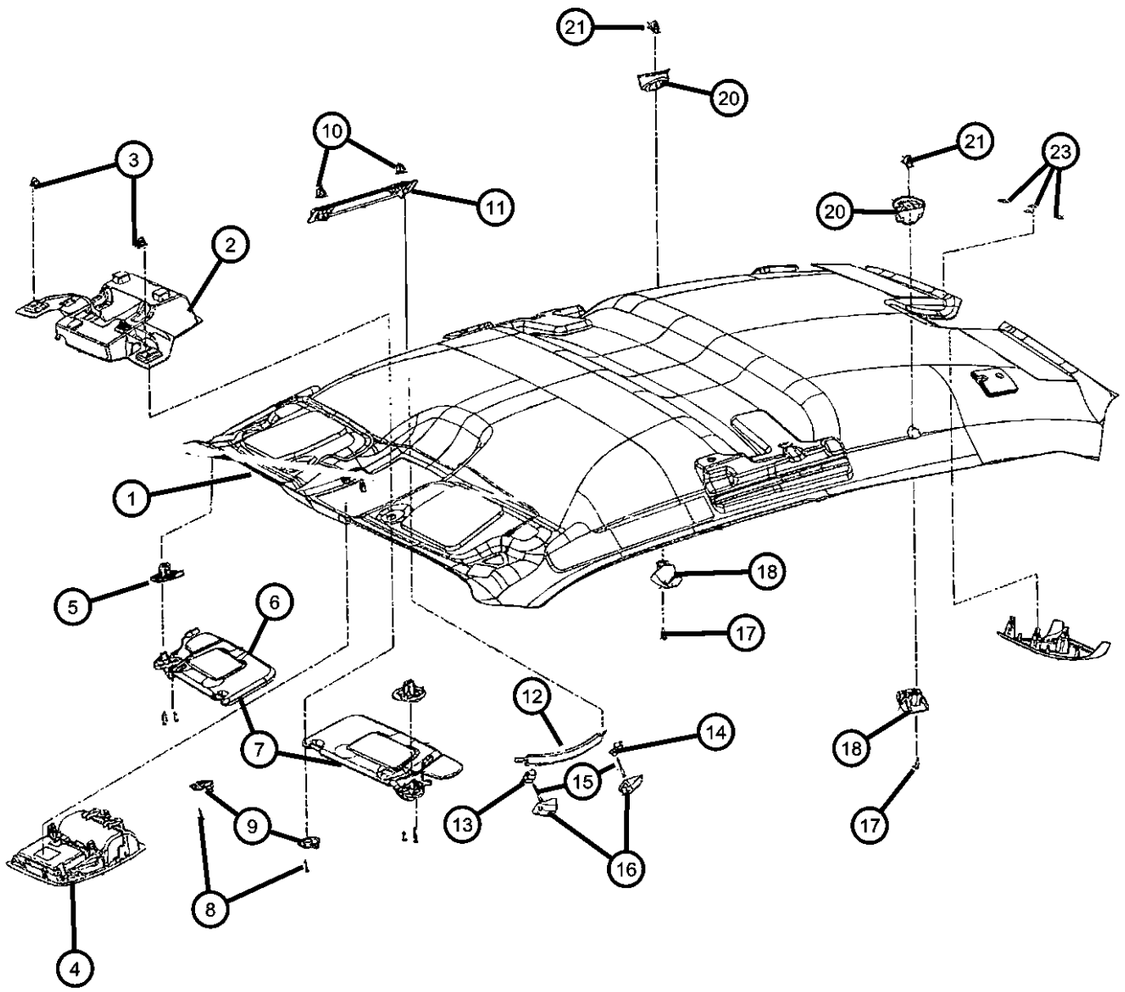

ITEM	PART NUMBER	QTY	LINE	SERIES	BODY	ENGINE	TRANS	TRIM	DESCRIPTION
NOTE : Sales Codes [GNC] = Illuminated Sunvisor [GWA] = Sunroof [JFJ] = Gauge - Temperature & Compass [XAA] = Park Assist - Park Sensors [XGD] = Garage Door Opener									
1									HEADLINER
	1NC861DVAA	1	D		22			*O0	With [CHK] [GWA] , without [AFC]
	1MQ88XD-VAA	1	D		22			*O0	With [CHK] [XGD] , without [GWA]
	1NC471DVAA	1	D		22			*O0	With [CHK] [XGD] [GWA]
	1NC82XDVAA	1	D		22			*O0	With [CHK] , without [GNC] or [GWA] or [AFC]
2	68048870AA	1	D		22			*O0	RETAINER, Overhead Console
3	68045964AA	4	D		22			*O0	CLIP, Z-Axis
4									CONSOLE, Overhead
	1AR301DVAB	1	D		22			*O0	With [CHK] [XGD] [GWA]
	1AR29XDVAB	1	D		22			*O0	With [CHK] [XGD] , without [GWA]
5	68044426AA	2	D		22			*O0	CLIP, Visor
6									VISOR, Illuminated
	1MA00XD-VAA	1	D		22			*O0	Right
	1MA01XD-VAA	1	D		22			*O0	Left
7									VISOR
	1MA02XD-VAA	1	D		22			*O0	Right
	1MA03XD-VAA	1	D		22			*O0	Left
8	68048880AA	10	D		22			*O0	SCREW, M4.2x1.41x22
9	1AL25XDVAA	2	D		22			*O0	SUPPORT, Visor
10	68045964AA	4	D		22			*O0	CLIP, Z-Axis
11	68048881AA	1	D		22			*O0	RETAINER, Assist Strap
12	1EG75XDVAA	1	D		22			*O0	STRAP, Assist
13	68048878AA	1	D		22			*O0	BLOCK, Assist Strap, Front
14	68048879AA	1	D		22			*O0	BLOCK, Assist Strap, Rear
15	05096275AA	2	D		22			*O0	SCREW, M4.2x1.4x40

DODGE CHALLENGER (LC)

SERIES	LINE	BODY	ENGINE	TRANSMISSION
H = HIGHLINE P = PREMIUM X = SPECIAL	D = DODGE	22 = 2-DR SEDAN TYPE #2	EGG = 3.5L High Output V6 24V MPI Engine ESF = 6.1L SRT HEMI V8 Engine EZC = 5.7L HEMI VCT Engine EZD = 5.7L Hemi VCT MDS Engine	DEC = 6-Speed Manual TREMEC Transmission DGJ = 5-Speed Auto W5A580 Transmission DGV = 4-Spd. Automatic VLP 42RLE Trans

Headliners and Visors
Figure 50-105

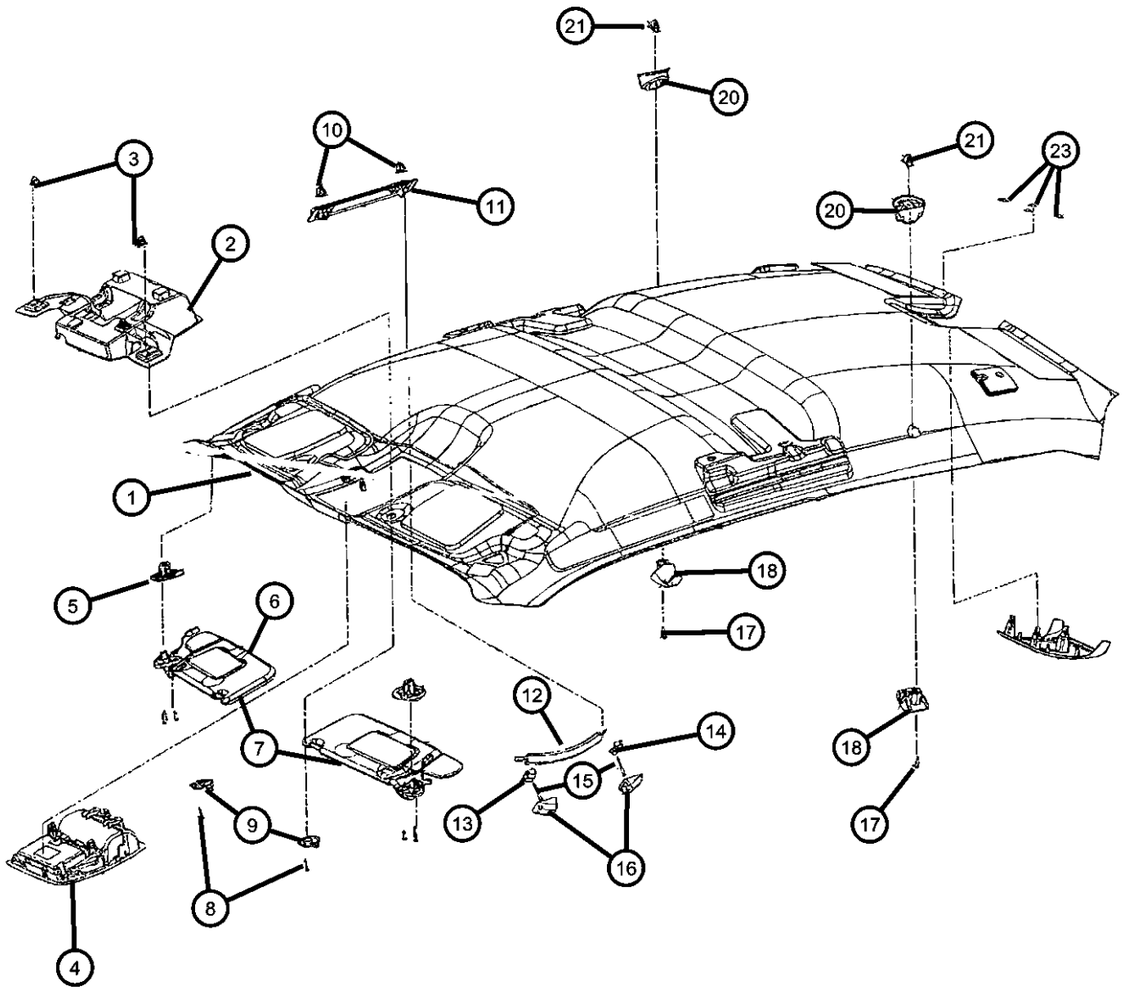

ITEM	PART NUMBER	QTY	LINE	SERIES	BODY	ENGINE	TRANS	TRIM	DESCRIPTION
16	1EG78XDVAA	2	D		22			*O0	END CAP
17	68048880AA	10	D		22			*O0	SCREW, M4.2x1.41x22
18	1MQ89XD-VAA	2	D		22			*O0	HOOK, Coat
-19	05000080AA	1	D		22				BRACKET, Coat Hook
20	68048868AA	1	D		22			*O0	RETAINER, Coat Hook
21									CLIP, Z-Axis
	04746232	2	D		22			*O0	With [GWA]
	68045964AA	4	D		22			*O0	
-22	68048883AA	1	D		22			*O0	COVER, High Mounted Stop Lamp
23	68048882AA	5	D		22			*O0	NUT, Rear Window
-24	06507559AA	4	D		22				U-NUT, M6 x 1.00, M6x1.00

DODGE CHALLENGER (LC)

SERIES	LINE	BODY	ENGINE	TRANSMISSION
H = HIGHLINE	D = DODGE	22 = 2-DR SEDAN TYPE #2	EGG = 3.5L High Output V6 24V MPI Engine	DEC = 6-Speed Manual TREMEC Transmission
P = PREMIUM			ESF = 6.1L SRT HEMI V8 Engine	DGJ = 5-Speed Auto W5A580 Transmission
X = SPECIAL			EZC = 5.7L HEMI VCT Engine	DGV = 4-Spd. Automatic VLP 42RLE Trans
			EZD = 5.7L Hemi VCT MDS Engine	

Rear Shelf Panel
Figure 50-165

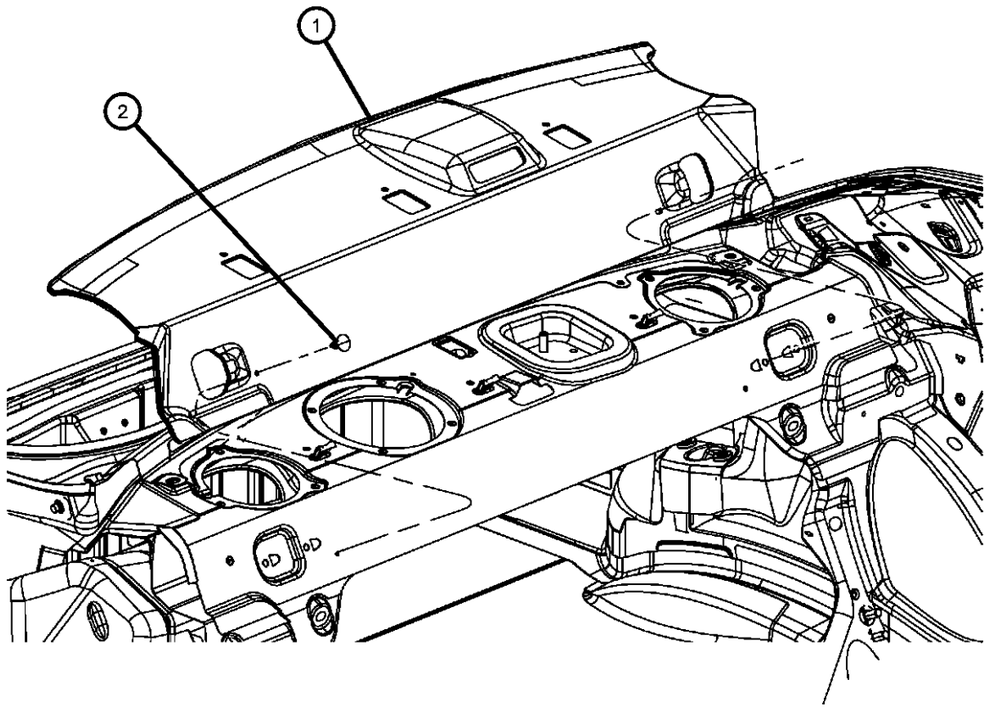

ITEM	PART NUMBER	QTY	LINE	SERIES	BODY	ENGINE	TRANS	TRIM	DESCRIPTION
NOTE : Sales Codes [GNC] = Illuminated Sunvisor [GWA] = Sunroof [JFJ] = Gauge - Temperature & Compass [XAA] = Park Assist - Park Sensors [XGD] = Garage Door Opener									
1	1FQ55XDVAB	1	D		22			*O0	PANEL, Rear Shelf, Includes Anchor Covers
2	06505411AA	1	D		22				PIN, Push

DODGE CHALLENGER (LC)

SERIES	LINE	BODY	ENGINE	TRANSMISSION
H = HIGHLINE P = PREMIUM X = SPECIAL	D = DODGE	22 = 2-DR SEDAN TYPE #2	EGG = 3.5L High Output V6 24V MPI Engine ESF = 6.1L SRT HEMI V8 Engine EZC = 5.7L HEMI VCT Engine EZD = 5.7L Hemi VCT MDS Engine	DEC = 6-Speed Manual TREMEC Transmission DGJ = 5-Speed Auto W5A580 Transmission DGV = 4-Spd. Automatic VLP 42RLE Trans

Interior Moldings and Pillars - A Pillar
Figure 50-205

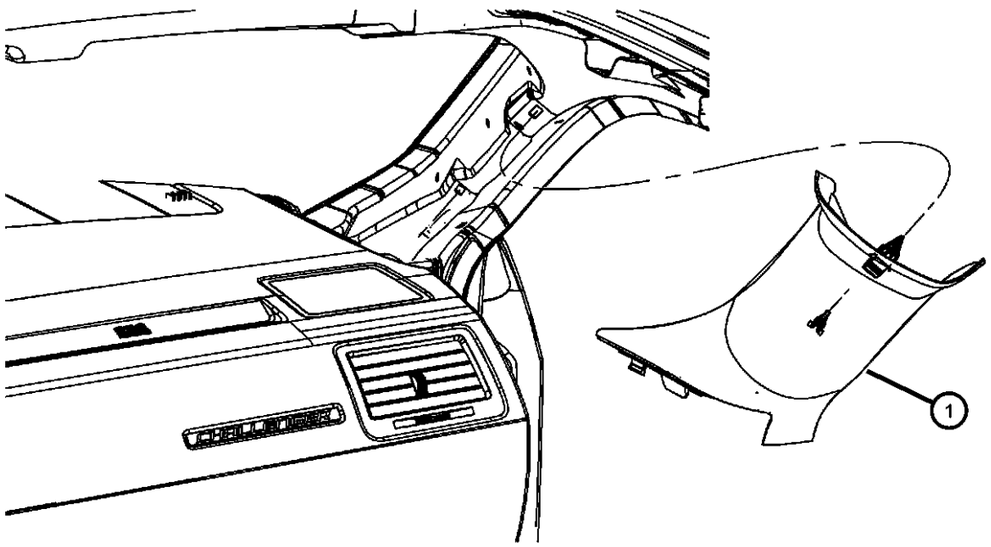

ITEM	PART NUMBER	QTY	LINE	SERIES	BODY	ENGINE	TRANS	TRIM	DESCRIPTION
Sales Codes [LNA] = Matching Right Spot Lamp [LNF] = Black Left Spot Lamp [LNH] = Chrome Left Spot Lamp									
1									MOLDING, Windshield
	1FW53XD-VAC	1	D		22			*O0	Left
	1FW58XD-VAC	1	D		22			*O0	Right
-2	55315143AA	1	D		22			*O0	CLIP

DODGE CHALLENGER (LC)

SERIES	LINE	BODY	ENGINE	TRANSMISSION
H = HIGHLINE P = PREMIUM X = SPECIAL	D = DODGE	22 = 2-DR SEDAN TYPE #2	EGG = 3.5L High Output V6 24V MPI Engine ESF = 6.1L SRT HEMI V8 Engine EZC = 5.7L HEMI VCT Engine EZD = 5.7L Hemi VCT MDS Engine	DEC = 6-Speed Manual TREMEC Transmission DGJ = 5-Speed Auto W5A580 Transmission DGV = 4-Spd. Automatic VLP 42RLE Trans

Interior Moldings and Pillars - C Pillar
Figure 50-220

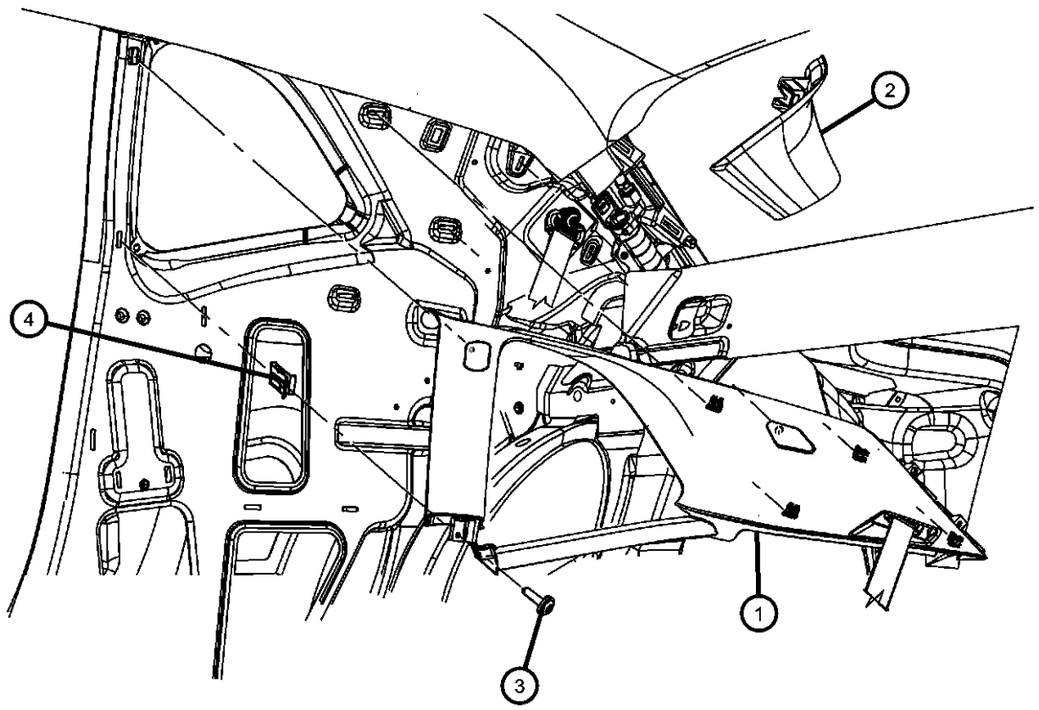

ITEM	PART NUMBER	QTY	LINE	SERIES	BODY	ENGINE	TRANS	TRIM	DESCRIPTION
1									PANEL, C Pillar
	1FQ58XDVAD	1	D		22			*O0	Right
	1FQ59XDVAD	1	D		22			*O0	Left
2									PANEL, C Pillar
	1HP72XDVAC	1	D		22			*O0	Right
	1HP73XDVAC	1	D		22			*O0	Left
3	06032723	4	D		22				SCREW, Self Tapping, M4.2x1.69x19.05
4	06036042AA	1	D		22				NUT/SPRING, Snap In, .164-18

DODGE CHALLENGER (LC)

SERIES	LINE	BODY	ENGINE	TRANSMISSION
H = HIGHLINE	D = DODGE	22 = 2-DR SEDAN TYPE #2	EGG = 3.5L High Output V6 24V MPI Engine	DEC = 6-Speed Manual TREMEC Transmission
P = PREMIUM			ESF = 6.1L SRT HEMI V8 Engine	DGJ = 5-Speed Auto W5A580 Transmission
X = SPECIAL			EZC = 5.7L HEMI VCT Engine	DGV = 4-Spd. Automatic VLP 42RLE Trans
			EZD = 5.7L Hemi VCT MDS Engine	

Cowl Side Panel and Scuff Plates
Figure 50-225

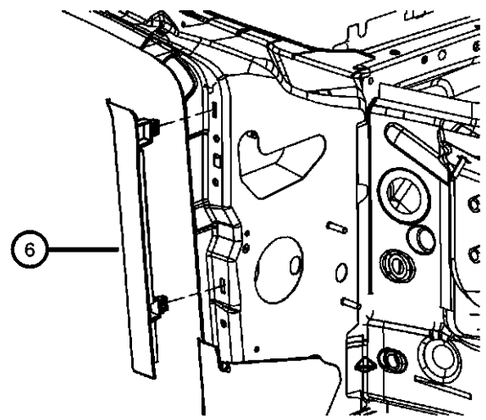

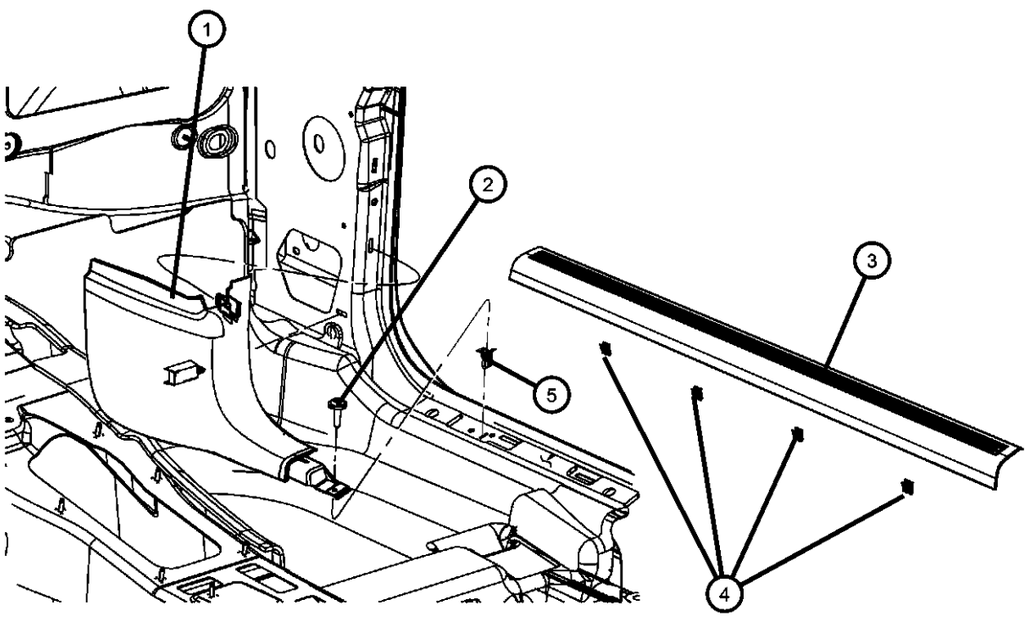

ITEM	PART NUMBER	QTY	LINE	SERIES	BODY	ENGINE	TRANS	TRIM	DESCRIPTION
1									PANEL, Cowl Side Trim
	1FT54XDVAC	1	D		22			*O0	Right
	1FT55XDVAC	1	D		22			*O0	Left
2	06032723	4	D		22				SCREW, Self Tapping, M4.2x1.69x19.05
3									PLATE, Scuff
	1FS98XDVAC	1	D		22			*O0	Right
	1FS99XDVAC	1	D		22			*O0	Left
4	06506540AA	8	D		22				RETAINER, Scuff Plate
5	06036042AA	1	D		22				NUT/SPRING, Snap In, .164-18
6									EXTENSION, Cowl
	1GN27XD-VAC	1	D		22			*O0	Left
	1GN28XD-VAC	1	D		22			*O0	Right

DODGE CHALLENGER (LC)

SERIES	LINE	BODY	ENGINE	TRANSMISSION
H = HIGHLINE	D = DODGE	22 = 2-DR SEDAN TYPE #2	EGG = 3.5L High Output V6 24V MPI Engine	DEC = 6-Speed Manual TREMEC Transmission
P = PREMIUM			ESF = 6.1L SRT HEMI V8 Engine	DGJ = 5-Speed Auto W5A580 Transmission
X = SPECIAL			EZC = 5.7L HEMI VCT Engine	DGV = 4-Spd. Automatic VLP 42RLE Trans
			EZD = 5.7L Hemi VCT MDS Engine	

AR = use ase required - = Non illustrrated part

Quarter Trim Panel
Figure 50-235

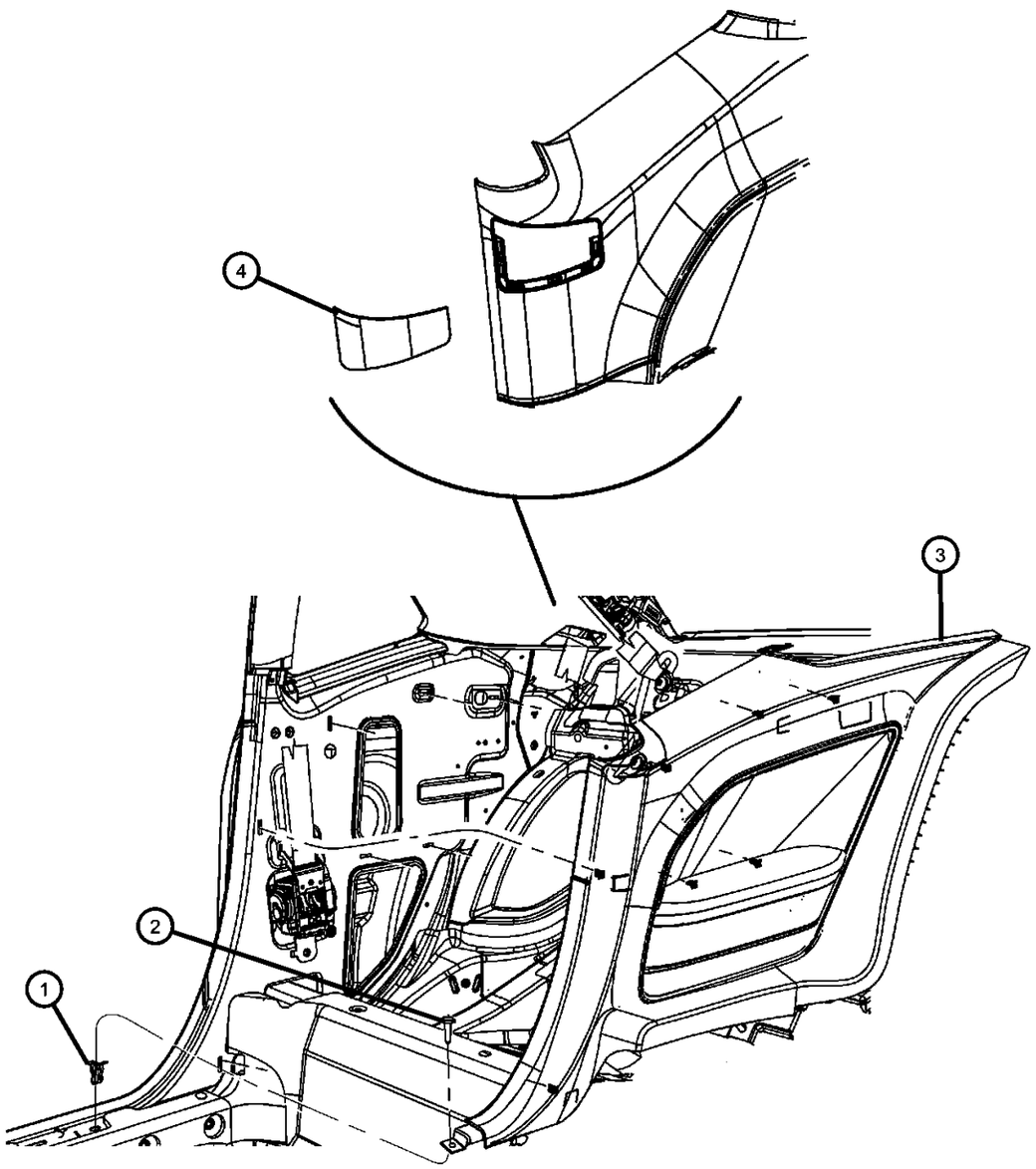

ITEM	PART NUMBER	QTY	LINE	SERIES	BODY	ENGINE	TRANS	TRIM	DESCRIPTION
1	06036042AA	1	D		22				NUT/SPRING, Snap In, .164-18
2	06032723	4	D		22				SCREW, Self Tapping, M4.2x1.69x19.05
3									PANEL, Quarter Trim
	1FT00XDVAD	1	D		22			*O0	Right
	1FT01XDVAD	1	D		22			*O0	Left
4									BEZEL, Seat Belt Quarter Trim
	1HP00XDVAC	1	D		22			*O0	Right
	1HP01XDVAC	1	D		22			*O0	Left

DODGE CHALLENGER (LC)

SERIES	LINE	BODY	ENGINE	TRANSMISSION
H = HIGHLINE	D = DODGE	22 = 2-DR SEDAN TYPE #2	EGG = 3.5L High Output V6 24V MPI Engine	DEC = 6-Speed Manual TREMEC Transmission
P = PREMIUM			ESF = 6.1L SRT HEMI V8 Engine	DGJ = 5-Speed Auto W5A580 Transmission
X = SPECIAL			EZC = 5.7L HEMI VCT Engine	DGV = 4-Spd. Automatic VLP 42RLE Trans
			EZD = 5.7L Hemi VCT MDS Engine	

AR = use ase required - = Non illustrrated part

Carpet, Front
Figure 50-325

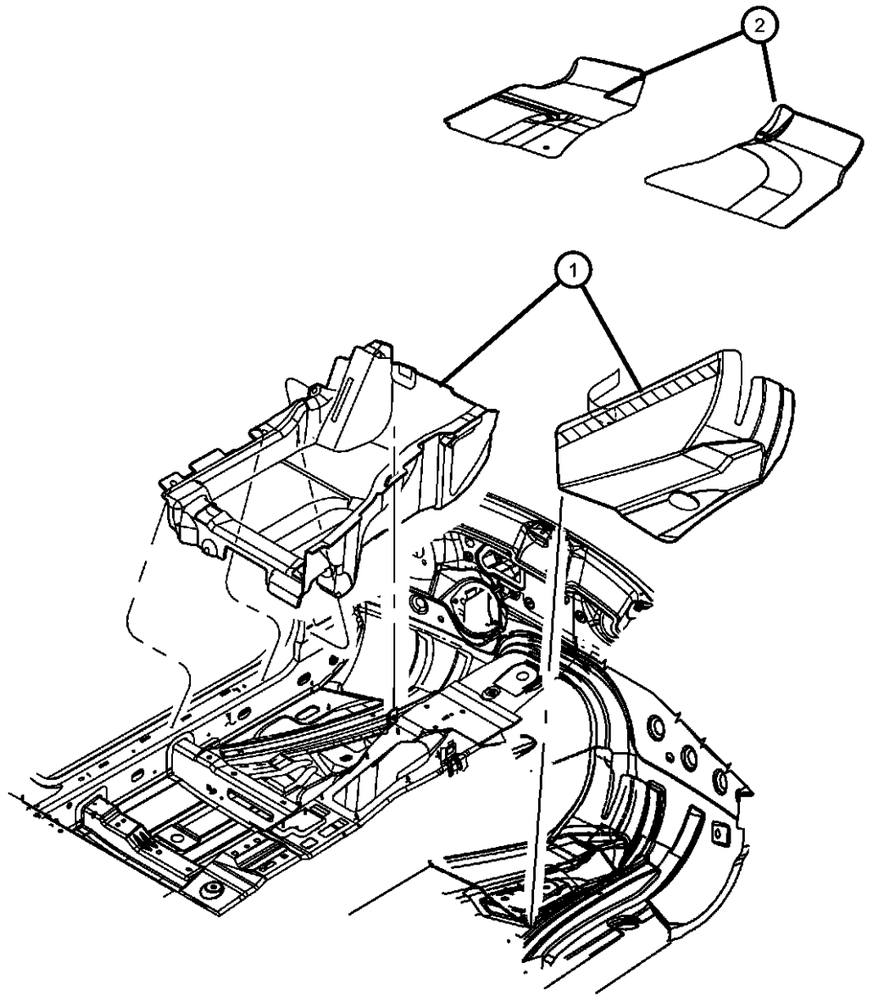

ITEM	PART NUMBER	QTY	LINE	SERIES	BODY	ENGINE	TRANS	TRIM	DESCRIPTION
1									CARPET, Floor Console
	1FV86XDVAC	1	D		22			*O0	Right
	1FV87XDVAC	1	D		22			*O0	Left
2	1FS531DVAB	1	D		22			*O0	MAT KIT, Floor
-3	68079236AA	1	D		22			*O0	HOOK, Mat To Carpet

DODGE CHALLENGER (LC)

SERIES	LINE	BODY	ENGINE	TRANSMISSION
H = HIGHLINE	D = DODGE	22 = 2-DR SEDAN TYPE #2	EGG = 3.5L High Output V6 24V MPI Engine	DEC = 6-Speed Manual TREMEC Transmission
P = PREMIUM			ESF = 6.1L SRT HEMI V8 Engine	DGJ = 5-Speed Auto W5A580 Transmission
X = SPECIAL			EZC = 5.7L HEMI VCT Engine	DGV = 4-Spd. Automatic VLP 42RLE Trans
			EZD = 5.7L Hemi VCT MDS Engine	

Carpet, Rear
Figure 50-335

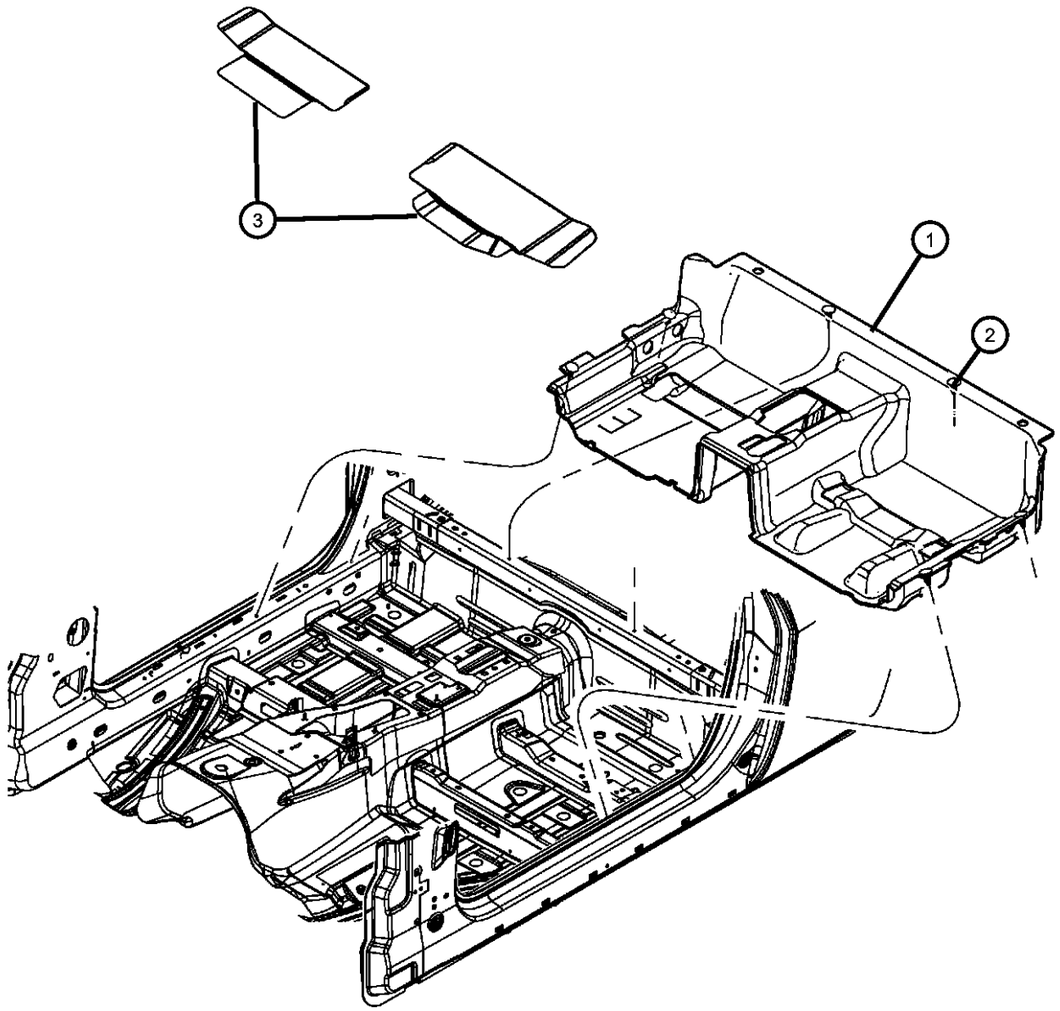

ITEM	PART NUMBER	QTY	LINE	SERIES	BODY	ENGINE	TRANS	TRIM	DESCRIPTION
1	1FQ52XDVAC	1	D		22			*O0	CARPET, Floor Console, Rear Floor
2	06505667AA	8	D		22				PIN
3	1FS531DVAB	1	D		22			*O0	MAT KIT, Floor

DODGE CHALLENGER (LC)

SERIES	LINE	BODY	ENGINE	TRANSMISSION
H = HIGHLINE P = PREMIUM X = SPECIAL	D = DODGE	22 = 2-DR SEDAN TYPE #2	EGG = 3.5L High Output V6 24V MPI Engine ESF = 6.1L SRT HEMI V8 Engine EZC = 5.7L HEMI VCT Engine EZD = 5.7L Hemi VCT MDS Engine	DEC = 6-Speed Manual TREMEC Transmission DGJ = 5-Speed Auto W5A580 Transmission DGV = 4-Spd. Automatic VLP 42RLE Trans

Footrest
Figure 50-345

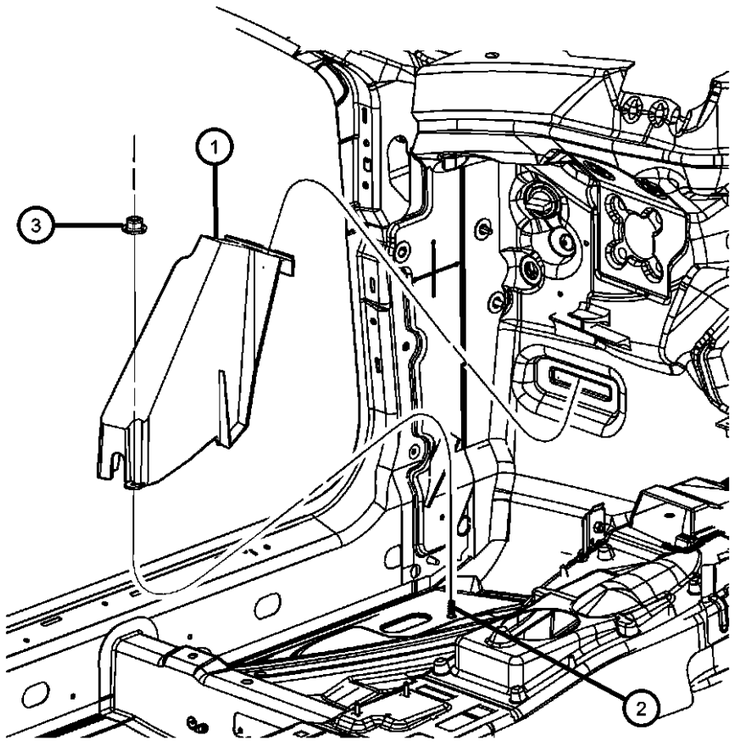

ITEM	PART NUMBER	QTY	LINE	SERIES	BODY	ENGINE	TRANS	TRIM	DESCRIPTION
1	04662051AB	1	D		22				SUPPORT, Footrest
2		1							STUD, Floor Pan, (NOT SERVICED)
3	06505297AA	1	D		22				NUT, Hex Flange, M5-1.6

DODGE CHALLENGER (LC)

SERIES	LINE	BODY	ENGINE	TRANSMISSION
H = HIGHLINE P = PREMIUM X = SPECIAL	D = DODGE	22 = 2-DR SEDAN TYPE #2	EGG = 3.5L High Output V6 24V MPI Engine ESF = 6.1L SRT HEMI V8 Engine EZC = 5.7L HEMI VCT Engine EZD = 5.7L Hemi VCT MDS Engine	DEC = 6-Speed Manual TREMEC Transmission DGJ = 5-Speed Auto W5A580 Transmission DGV = 4-Spd. Automatic VLP 42RLE Trans

Carpet Luggage Compartment
Figure 50-360

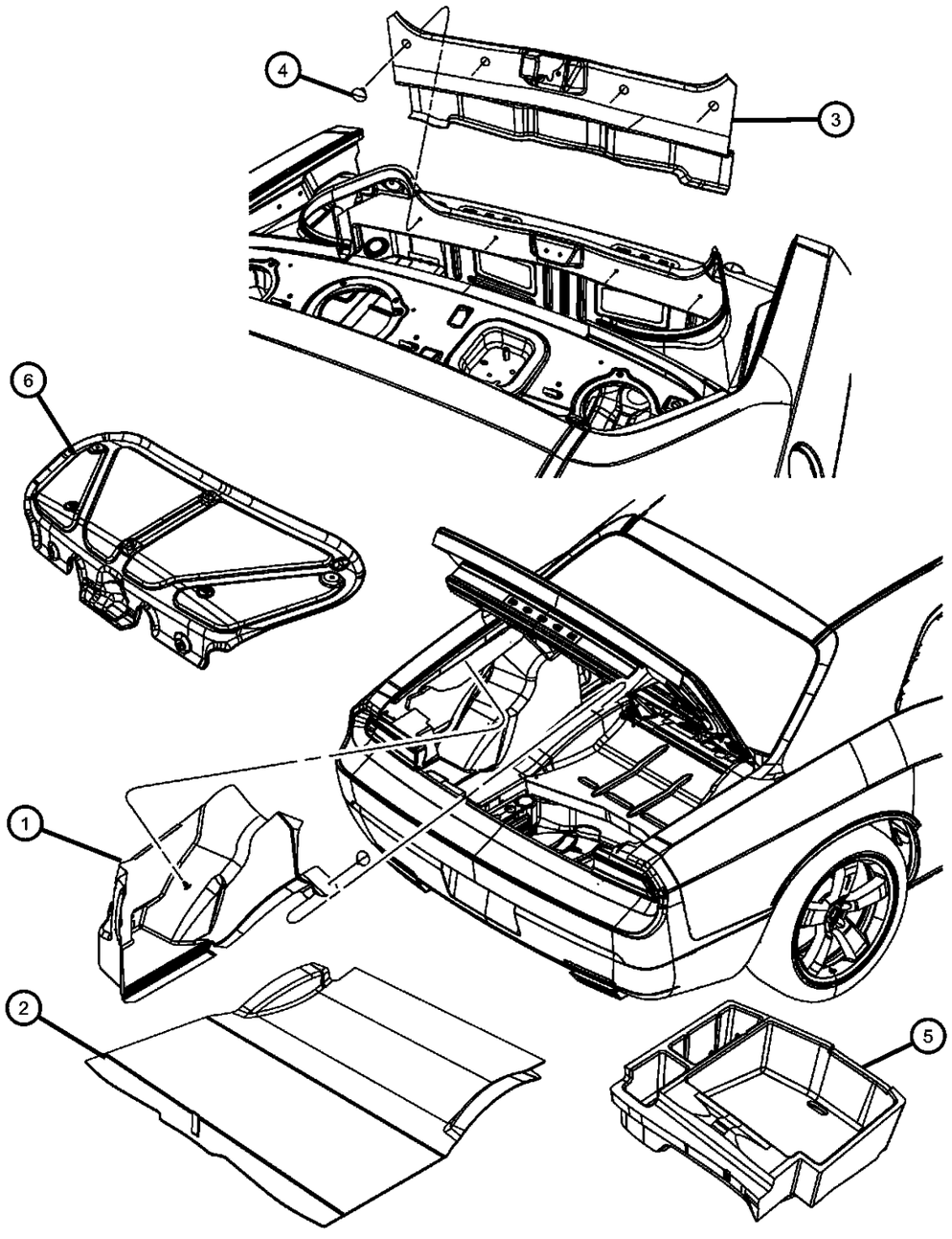

ITEM	PART NUMBER	QTY	LINE	SERIES	BODY	ENGINE	TRANS	TRIM	DESCRIPTION
1									CARPET, Luggage Compartment
	04662031AC	1	D		22				Left
	04662032AC	1	D		22				Right
2	04662033AB	1	D		22				CARPET, Luggage Compartment
3	04662030AB	1	D		22				CARPET, Trunk
4	06505667AA	8	D		22				PIN
5	05030175AD	1	D		22				SUPPORT, Load Floor, SRT
6	55315183AA	1	D		22				COVER, Decklid Interior Trim
-7	06505411AA	8	D		22				PIN, Push, Decklid Cover

DODGE CHALLENGER (LC)

SERIES	LINE	BODY	ENGINE	TRANSMISSION
H = HIGHLINE	D = DODGE	22 = 2-DR SEDAN TYPE #2	EGG = 3.5L High Output V6 24V MPI Engine	DEC = 6-Speed Manual TREMEC Transmission
P = PREMIUM			ESF = 6.1L SRT HEMI V8 Engine	DGJ = 5-Speed Auto W5A580 Transmission
X = SPECIAL			EZC = 5.7L HEMI VCT Engine	DGV = 4-Spd. Automatic VLP 42RLE Trans
			EZD = 5.7L Hemi VCT MDS Engine	

Silencers
Figure 50-385

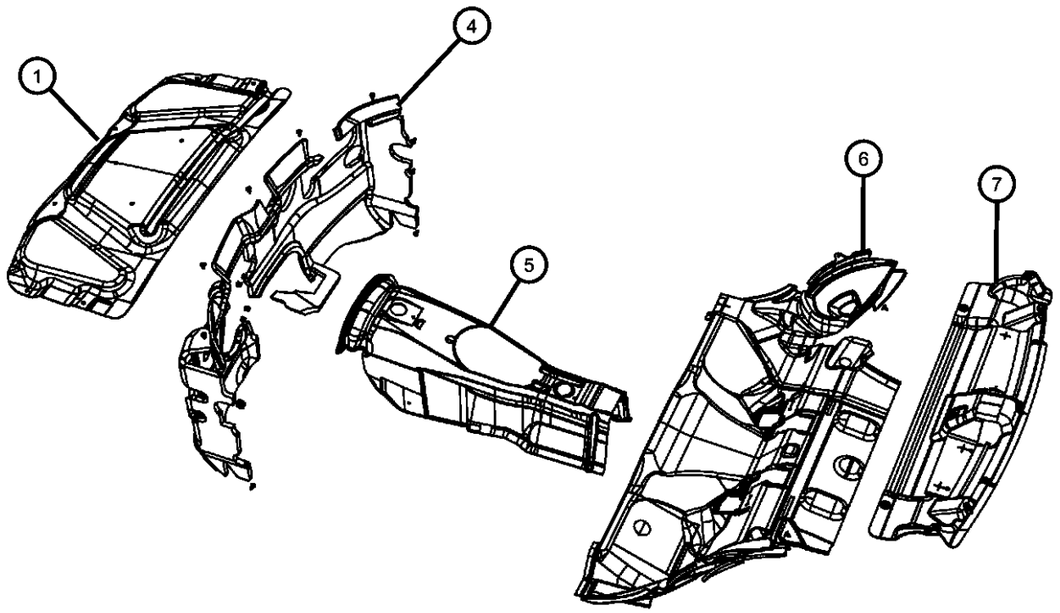

ITEM	PART NUMBER	QTY	LINE	SERIES	BODY	ENGINE	TRANS	TRIM	DESCRIPTION
1	05112970AB	1	D		22				SILENCER, Hood
-2	04878883AA	9	D		22				PIN, Push
-3	04780785AG	1	D		22				SILENCER, Dash Panel, Engine Side
4	04628926AK	1	D		22				SILENCER, Dash And Cowl Sides
5									SILENCER, Tunnel
	05000075AC	1	D		22				Manual
	05000077AB	1	D		22				Auto
6	05000004AH	1	D		22				SILENCER, Floor Pan
7	04662035AA	1	D		22				SILENCER, Rear Shelf
-8	06508563AA	6	D		22				PIN, Push
-9									SILENCER, Wheelhouse
	68043307AA	1	D		22				Left Rear
	68043304AA	1	D		22				Right Front
	68043305AA	1	D		22				Left Front
	68043306AA	1	D		22				Right Rear
-10	68053683AA	1	D		22				SILENCER, Trunk

DODGE CHALLENGER (LC)

SERIES	LINE	BODY	ENGINE	TRANSMISSION
H = HIGHLINE P = PREMIUM X = SPECIAL	D = DODGE	22 = 2-DR SEDAN TYPE #2	EGG = 3.5L High Output V6 24V MPI Engine ESF = 6.1L SRT HEMI V8 Engine EZC = 5.7L HEMI VCT Engine EZD = 5.7L Hemi VCT MDS Engine	DEC = 6-Speed Manual TREMEC Transmission DGJ = 5-Speed Auto W5A580 Transmission DGV = 4-Spd. Automatic VLP 42RLE Trans

Front Door Trim Panels
Figure 50-405

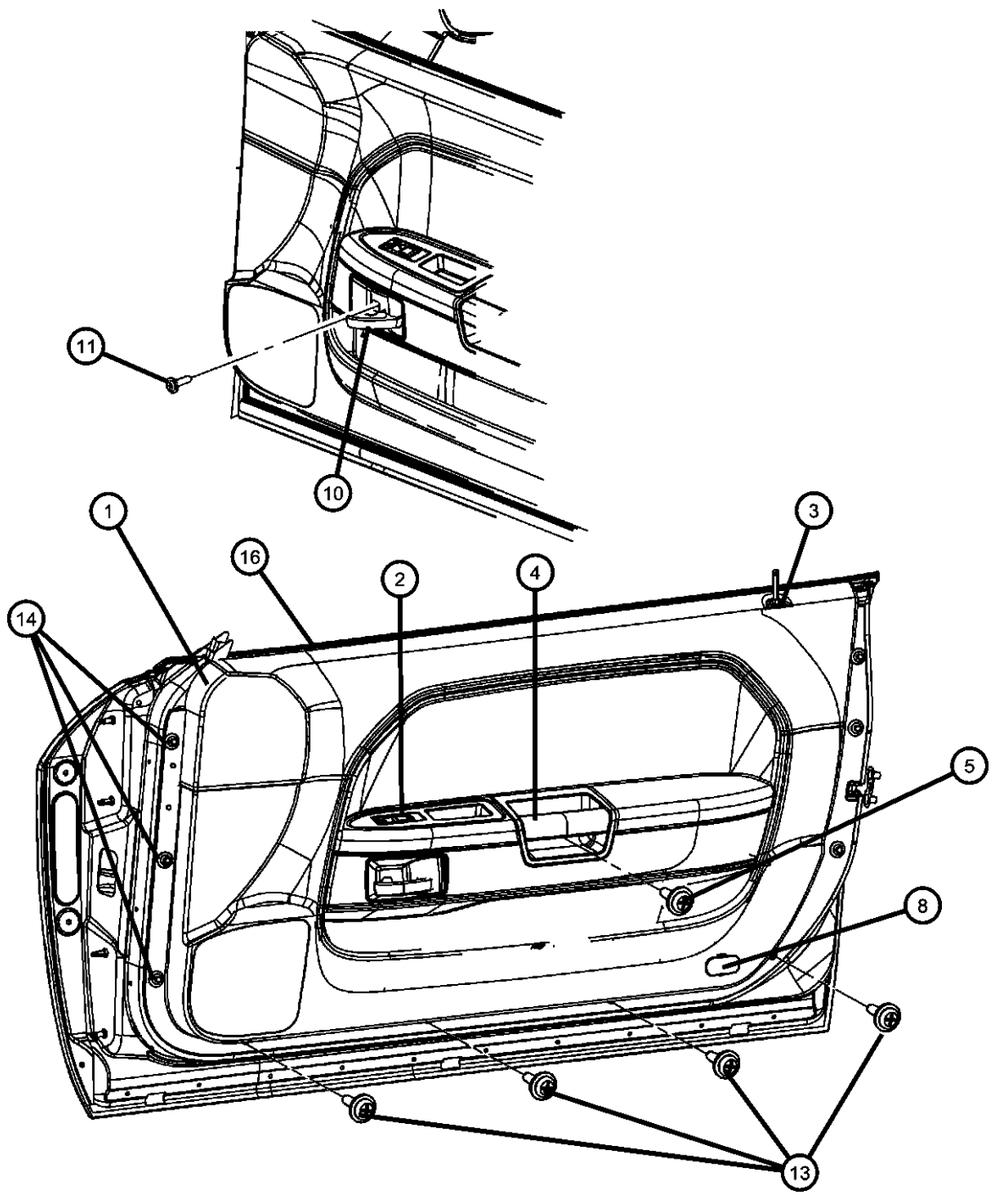

ITEM	PART NUMBER	QTY	LINE	SERIES	BODY	ENGINE	TRANS	TRIM	DESCRIPTION
Sales Codes									
[MVM] = Badge - Boston Acoustic									
1									PANEL, Door Trim
	1NU951DVAA	1	D	P	22			*RL	Without [LNK], Left
	1ML541DVAB	1	D	X	22			*UL	Without [LNK], Right
	1ML551DVAB	1	D	X	22			*UL	Without [LNK], Left
	1ML561DVAA	1	D	H	22			*L7	Without [LNK], Right
	1ML581DVAA	1	D	P	22			*RL	With [LNK], Right
	1ML571DVAA	1	D	H	22			*L7	Without [LNK], Left
	1NU921DVAA	1	D	P	22			*L7	Without [LNK], Right
	1NU931DVAA	1	D	P	22			*L7	Without [LNK], Left
	1NU941DVAA	1	D	P	22			*RL	Without [LNK], Right
	1ML611DVAA	1	D	H	22			*RL	Without [LNK], Left
	1ML531DVAB	1	D	X	22			*UL	With [LNK], Left
	1ML521DVAB	1	D	X	22			*UL	With [LNK], Right
	1ML591DVAA	1	D	P	22			*RL	With [LNK], Left
	1ML601DVAA	1	D	H	22			*RL	Without [LNK], Right
2									BEZEL, Switch
	1MV641DVAA	1	D		22			*RL	Right
		1	D	X	22			*UL	Right
		1	D		22			*L7	Right
	1MV651DVAA	1	D		22			*RL	Left
		1	D	X	22			*UL	Left
		1	D		22			*L7	Left
3									BEZEL, Lock Knob
	1MV671DVAA	1	D	X	22			*UL	
		1	D		22			*L7	
		1	D		22			*RL	
4									HANDLE, Door Pull
	1LF92XDVAA	1	D		22			*RL	
		1	D	H	22			*L7	
	68054649AA	1	D	P	22			*RL	Carbon Fiber
		1	D	P	22			*L7	Carbon Fiber
	68054650AA	1	D	X	22			*UL	Leather

DODGE CHALLENGER (LC)

SERIES	LINE	BODY	ENGINE	TRANSMISSION
H = HIGHLINE	D = DODGE	22 = 2-DR SEDAN TYPE #2	EGG = 3.5L High Output V6 24V MPI Engine	DEC = 6-Speed Manual TREMEC Transmission
P = PREMIUM			ESF = 6.1L SRT HEMI V8 Engine	DGJ = 5-Speed Auto W5A580 Transmission
X = SPECIAL			EZC = 5.7L HEMI VCT Engine	DGV = 4-Spd. Automatic VLP 42RLE Trans
			EZD = 5.7L Hemi VCT MDS Engine	

Front Door Trim Panels
Figure 50-405

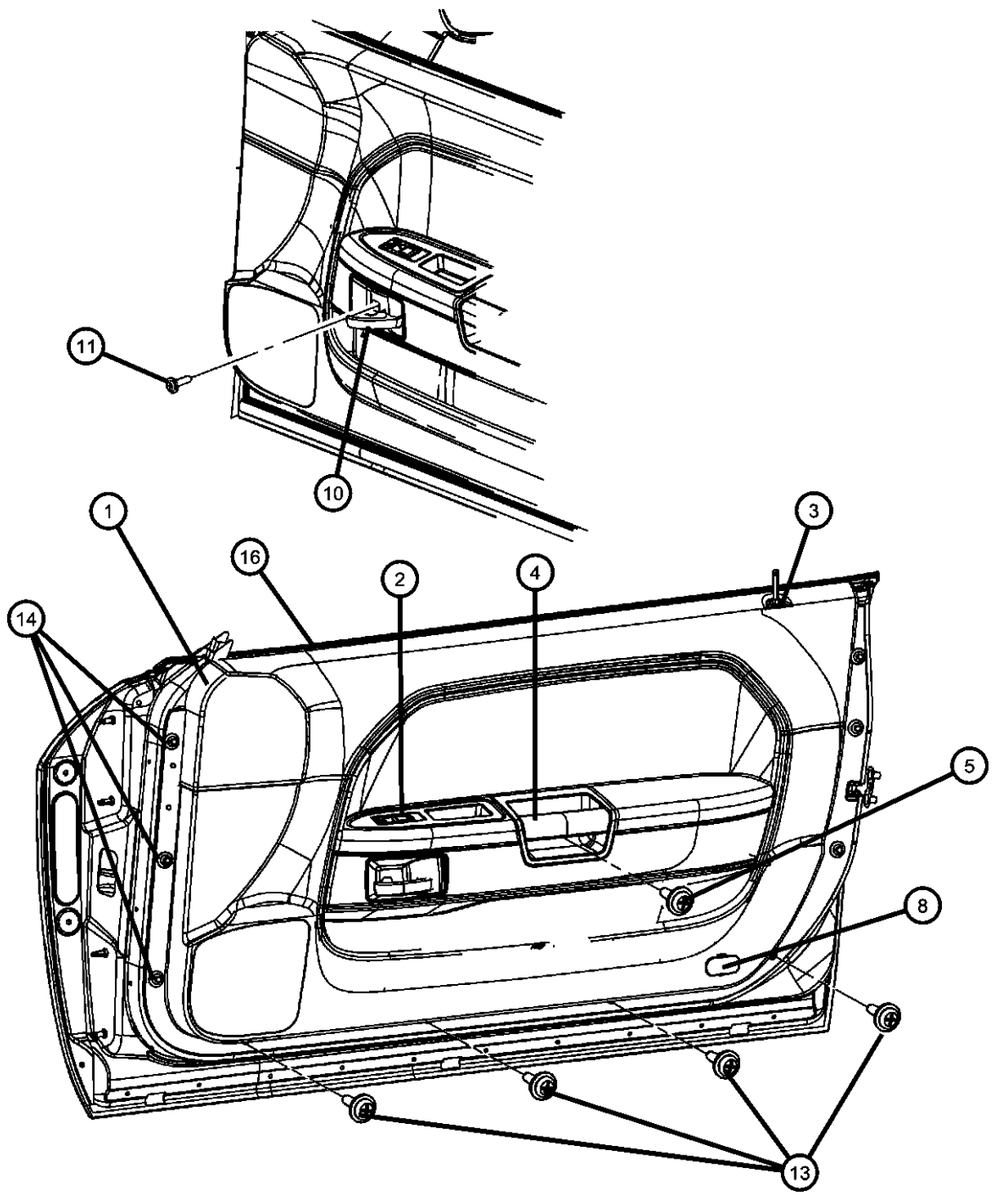

ITEM	PART NUMBER	QTY	LINE	SERIES	BODY	ENGINE	TRANS	TRIM	DESCRIPTION
5									SCREW, Door Pull Handle
	68042205AA	2	D		22			*L7	
		1	D		22			*RL	
		2	D	X	22			*UL	
-6									CAP, Pull Cup Screw Cover
	1MV591DVAA	1	D		22			*L7	
		1	D		22			*RL	
		1	D	X	22			*UL	
-7	04662037AC	1	D		22				BRACKET, Door Pull Cup
8									REFLECTOR, Door Trim Panel
	68046499AA	1	D		22			*RL	
		1	D		22			*L7	
		1	D	X	22			*UL	
-9	06035807	4	D		22				NUT, Door Trim, Pull Cup Support
10									HANDLE, Inside Release
	1MV561DVAA	1	D		22			*RL	Right
		1	D		22			*L7	Right
	1MV571DVAA	1	D		22			*L7	Left
		1	D	X	22			*UL	Right
		1	D		22			*RL	Left
		1	D	X	22			*UL	Left
11									SCREW, Inside Release Handle
	68042206AA	1	D		22			*L7	
		1	D		22			*RL	
		1	D	X	22			*UL	
-12									CAP, Screw Cover, Realese Handle
	1MV581DVAA	1	D		22			*RL	
		1	D		22			*L7	
		1	D	X	22			*UL	
13	06032723	4	D		22				SCREW, Self Tapping, M4.2x1.69x19.05
14	0WX68XD-VAA	14	D		22			*O0	RIVET

DODGE CHALLENGER (LC)

SERIES	LINE	BODY	ENGINE	TRANSMISSION
H = HIGHLINE P = PREMIUM X = SPECIAL	D = DODGE	22 = 2-DR SEDAN TYPE #2	EGG = 3.5L High Output V6 24V MPI Engine ESF = 6.1L SRT HEMI V8 Engine EZC = 5.7L HEMI VCT Engine EZD = 5.7L Hemi VCT MDS Engine	DEC = 6-Speed Manual TREMEC Transmission DGJ = 5-Speed Auto W5A580 Transmission DGV = 4-Spd. Automatic VLP 42RLE Trans

AR = use ase required - = Non illustrrated part

Front Door Trim Panels
Figure 50-405

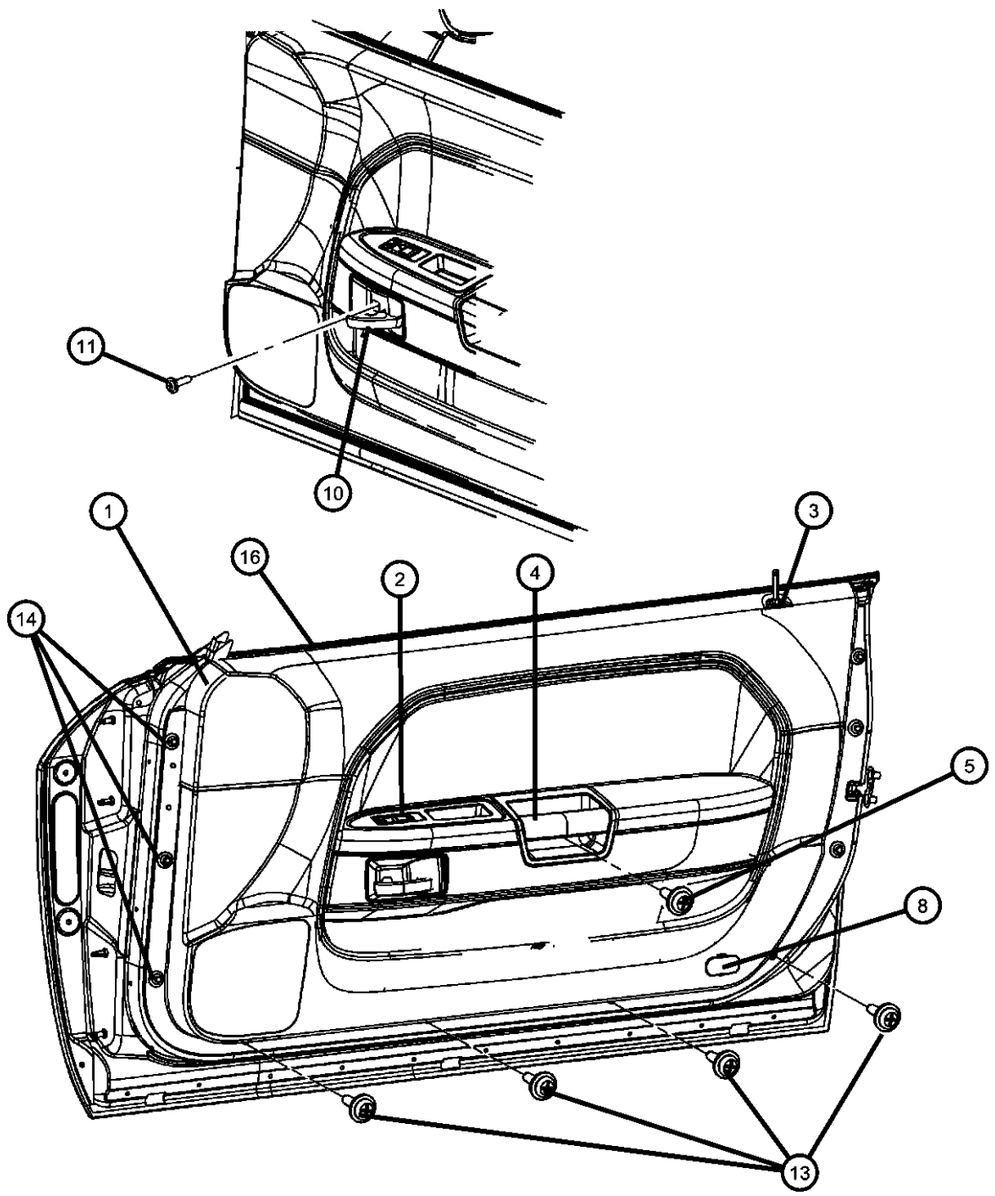

ITEM	PART NUMBER	QTY	LINE	SERIES	BODY	ENGINE	TRANS	TRIM	DESCRIPTION
-15	06506878AA	6	D		22				NUT, Snap In
16	68071960AA	1	D		22				MOLDING KIT, DOOR BELT, Inner

DODGE CHALLENGER (LC)

SERIES	LINE	BODY	ENGINE	TRANSMISSION
H = HIGHLINE P = PREMIUM X = SPECIAL	D = DODGE	22 = 2-DR SEDAN TYPE #2	EGG = 3.5L High Output V6 24V MPI Engine ESF = 6.1L SRT HEMI V8 Engine EZC = 5.7L HEMI VCT Engine EZD = 5.7L Hemi VCT MDS Engine	DEC = 6-Speed Manual TREMEC Transmission DGJ = 5-Speed Auto W5A580 Transmission DGV = 4-Spd. Automatic VLP 42RLE Trans

AR = use ase required - = Non illustrrated part

Front Seat - Bucket - Trim Code [L7]
Figure 50-502

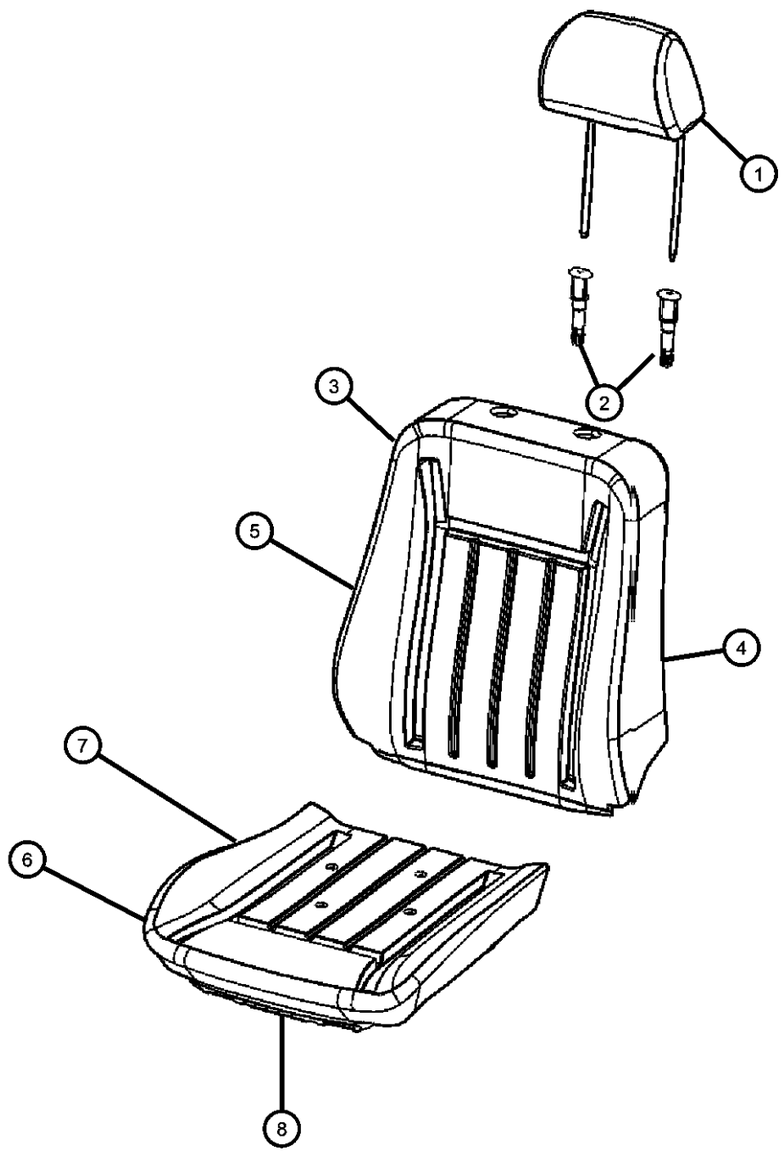

ITEM	PART NUMBER	QTY	LINE	SERIES	BODY	ENGINE	TRANS	TRIM	DESCRIPTION
[CJ1] =Front Seat Side Air Bags									
1	1ME351DVAA	2	D		22			*L7	HEADREST, Front
2									SLEEVE, Headrest
	1AN471D1AA	2	D		22			*L7	Locking
	1AN481DVAA	2	D		22			*L7	Slave Cylinder
3									COVER, Front Seat Back
	1ME331DVAA	1	D		22			*L7	Right
	1ME341DVAA	1	D		22			*L7	Left
	1NM82XD-VAA	1	D		22			*L7	With [JP8]
4									FOAM, Seat Back
	68044619AA	1	D		22			*L7	Left
	68044616AA	1	D		22			*L7	Right
5									FRAME, Front Seat Back
	68048285AA	1	D		22			*L7	Left
	68048286AA	1	D		22			*L7	Right
6	1ME321DVAA	2	D		22			*L7	COVER, Front Seat Cushion
7	68044615AA	2	D		22			*L7	FOAM, Seat CushionRight & Left
8	05139950AA	1	D		22			*L7	PAN, SEAT CUSHION

DODGE CHALLENGER (LC)

SERIES	LINE	BODY	ENGINE	TRANSMISSION
H = HIGHLINE P = PREMIUM X = SPECIAL	D = DODGE	22 = 2-DR SEDAN TYPE #2	EGG = 3.5L High Output V6 24V MPI Engine ESF = 6.1L SRT HEMI V8 Engine EZC = 5.7L HEMI VCT Engine EZD = 5.7L Hemi VCT MDS Engine	DEC = 6-Speed Manual TREMEC Transmission DGJ = 5-Speed Auto W5A580 Transmission DGV = 4-Spd. Automatic VLP 42RLE Trans

Front Seat - Bucket - Trim Code [RL]
Figure 50-504

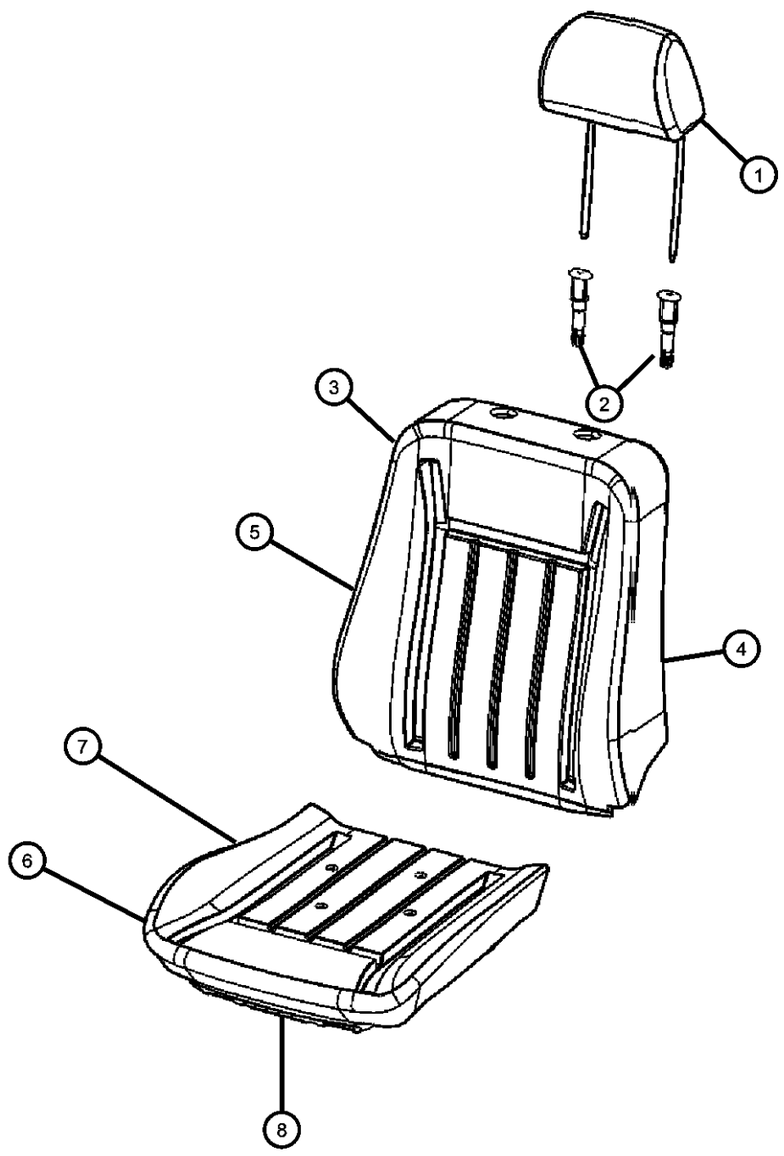

ITEM	PART NUMBER	QTY	LINE	SERIES	BODY	ENGINE	TRANS	TRIM	DESCRIPTION
[CJ1] =Front Seat Side Air Bags									
1									HEADREST, Front
	1MR681DBAA	2	D		22			*RL	With [CED]
	1MR681DVAA	2	D		22			*RL	Without [CED]
	1ME471DVAA	2	D		22			*RL	With [PQD] Blue Stitching
2									SLEEVE, Headrest
	1AN471DBAA	2	D		22			*RL	With [CED], Locking
	1AN471DVAA	2	D		22			*RL	Without [CED], Locking
	1AN481DVAA	2	D		22			*RL	Without [CED], Slave Cylinder
	1AN481DBAA	2	D		22			*RL	With [CED], Slave Cylinder
3									COVER, Front Seat Back
	1MR451DVAA	1	D		22			*RL	Without [CED], Left
	1MR44DB-NAA	1	D		22			*RL	With [PQD] Blue Stitching, Right
	1MR451DBAA	1	D		22			*RL	With [CED], Left
	1MR441DBAA	1	D		22			*RL	With [CED], Right
	1MR441DVAA	1	D		22			*RL	Without [CED], Right
	1MR45DB-NAA	1	D		22			*RL	With [PQD] Blue Stitching, Left
4									FOAM, Seat Back
	68044616AA	1	D		22			*RL	Right
	68044619AA	1	D		22			*RL	Left
5									FRAME, Front Seat Back
	04610234AB	1	D		22			*RL	Right
	05057625AA	1	D		22			*RL	Left
6									COVER, Front Seat Cushion
	1MR461DBAA	1	D		22			*RL	With [CED], Right
	1MR47DB-NAA	1	D		22			*RL	With [PQD] Blue Stitching, Left
	1MR471DBAA	1	D		22			*RL	With [CED], Left
	1MR471DVAA	1	D		22			*RL	Without [CED], Left
	1MR46DB-NAA	1	D		22			*RL	With [PQD] Blue Stitching, Right
	1MR461DVAA	1	D		22			*RL	Without [CED], Right
7	68044615AA	2	D		22			*RL	FOAM, Seat CushionRight & Left
8									FRAME, Front Seat Cushion

DODGE CHALLENGER (LC)

SERIES	LINE	BODY	ENGINE	TRANSMISSION
H = HIGHLINE P = PREMIUM X = SPECIAL	D = DODGE	22 = 2-DR SEDAN TYPE #2	EGG = 3.5L High Output V6 24V MPI Engine ESF = 6.1L SRT HEMI V8 Engine EZC = 5.7L HEMI VCT Engine EZD = 5.7L Hemi VCT MDS Engine	DEC = 6-Speed Manual TREMEC Transmission DGJ = 5-Speed Auto W5A580 Transmission DGV = 4-Spd. Automatic VLP 42RLE Trans

AR = use ase required - = Non illustrrated part

Front Seat - Bucket - Trim Code [RL]
Figure 50-504

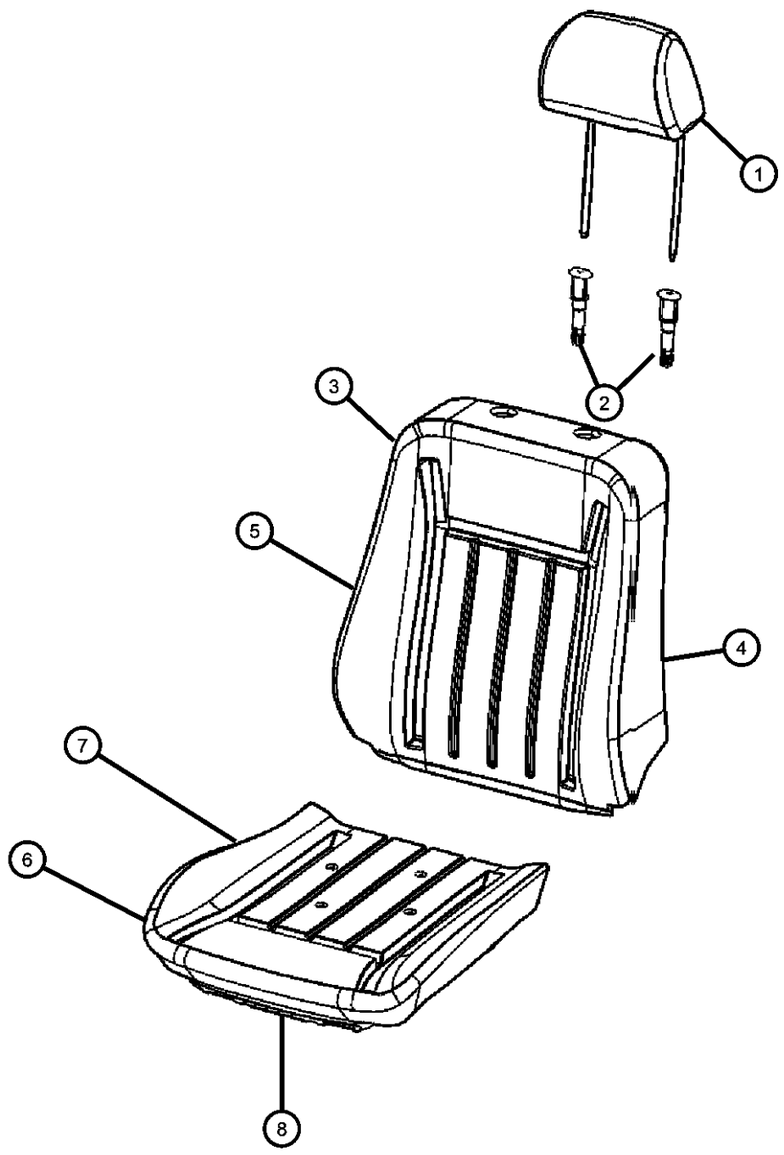

ITEM	PART NUMBER	QTY	LINE	SERIES	BODY	ENGINE	TRANS	TRIM	DESCRIPTION
	04610213AA	1	D		22			*RL	Left
	04610209AA	1	D		22			*RL	Right
-9	05000021AA	2	D		22			*RL	PAD, Heater, Cushion
-10	05000021AA	2	D		22			*RL	PAD, Heater, Seatback, PN 05000022AB

DODGE CHALLENGER (LC)

SERIES	LINE	BODY	ENGINE	TRANSMISSION
H = HIGHLINE P = PREMIUM X = SPECIAL	D = DODGE	22 = 2-DR SEDAN TYPE #2	EGG = 3.5L High Output V6 24V MPI Engine ESF = 6.1L SRT HEMI V8 Engine EZC = 5.7L HEMI VCT Engine EZD = 5.7L Hemi VCT MDS Engine	DEC = 6-Speed Manual TREMEC Transmission DGJ = 5-Speed Auto W5A580 Transmission DGV = 4-Spd. Automatic VLP 42RLE Trans

AR = use ase required - = Non illustrrated part

Front Seat - Bucket -Trim Code [UL]
Figure 50-506

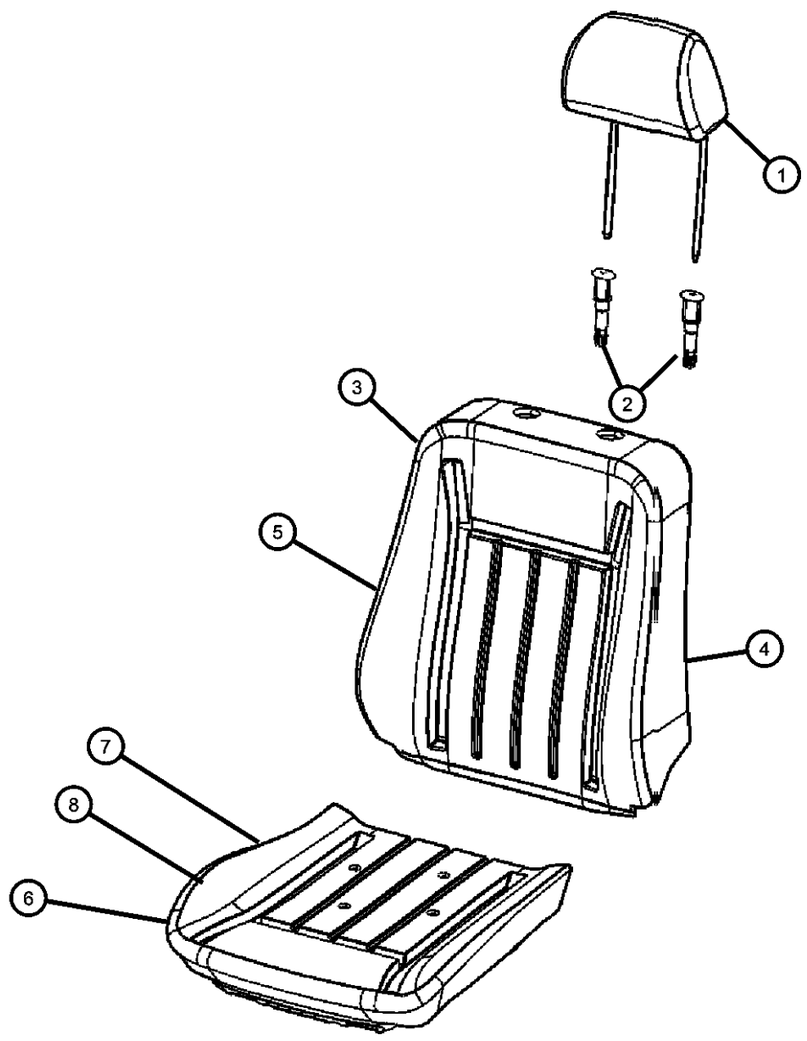

ITEM	PART NUMBER	QTY	LINE	SERIES	BODY	ENGINE	TRANS	TRIM	DESCRIPTION
[CJ1] =Front Seat Side Air Bags									
1	1ME471DVAA	2	D	X	22			*UL	HEADREST, Front
2									SLEEVE, Headrest
	1AN471BNAA	2	D	X	22			*UL	Locking
	1AN481DVAA	2	D	X	22			*UL	Slave Cylinder
3									COVER, Front Seat Back
	1ME431BNAA	1	D	X	22			*UL	With [AHG] Yelliow Insert, Right
	1ME441BNAA	1	D	X	22			*UL	With [AHG] Yellow Insert, Left
	1ME431R4AA	1	D	X	22			*UL	Without [AHG] Red Insert, Right
	1ME441R4AA	1	D	X	22			*UL	Without [AHG] Red Insert, Left
4									FOAM, Seat Back
	68044601AA	1	D	X	22			*UL	Right
	68044598AA	1	D	X	22			*UL	Left
5									FRAME, Front Seat Back
	68048285AA	1	D	X	22			*UL	Left
	68048286AA	1	D	X	22			*UL	Right
6									COVER, Front Seat Cushion
	1ME461R4AA	1	D	X	22			*UL	Without [AHG] Red Insert, Left
	1ME451BNAA	1	D	X	22			*UL	With [AHG] Yellow Insert, Right
	1ME451R4AA	1	D	X	22			*UL	Without [AHG] Red Insert, Right
	1ME461BNAA	1	D	X	22			*UL	With [AHG] Yellow Insert, Left
7	68044583AA	2	D	X	22			*UL	FOAM, Seat CushionRight & Left
8	05139950AA	1	D	X	22			*UL	PAN, SEAT CUSHION
-9	05000021AA	2	D	X	22			*UL	PAD, Heater, Cushion
-10		2							PAD, Heater, 05000022AB, (NOT SERVICED)
-11	05142302AA	2	D	X	22			*UL	STOP, Track

DODGE CHALLENGER (LC)

SERIES	LINE	BODY	ENGINE	TRANSMISSION
H = HIGHLINE P = PREMIUM X = SPECIAL	D = DODGE	22 = 2-DR SEDAN TYPE #2	EGG = 3.5L High Output V6 24V MPI Engine ESF = 6.1L SRT HEMI V8 Engine EZC = 5.7L HEMI VCT Engine EZD = 5.7L Hemi VCT MDS Engine	DEC = 6-Speed Manual TREMEC Transmission DGJ = 5-Speed Auto W5A580 Transmission DGV = 4-Spd. Automatic VLP 42RLE Trans

Rear Seat - 60/40 - Trim Code [L7]
Figure 50-636

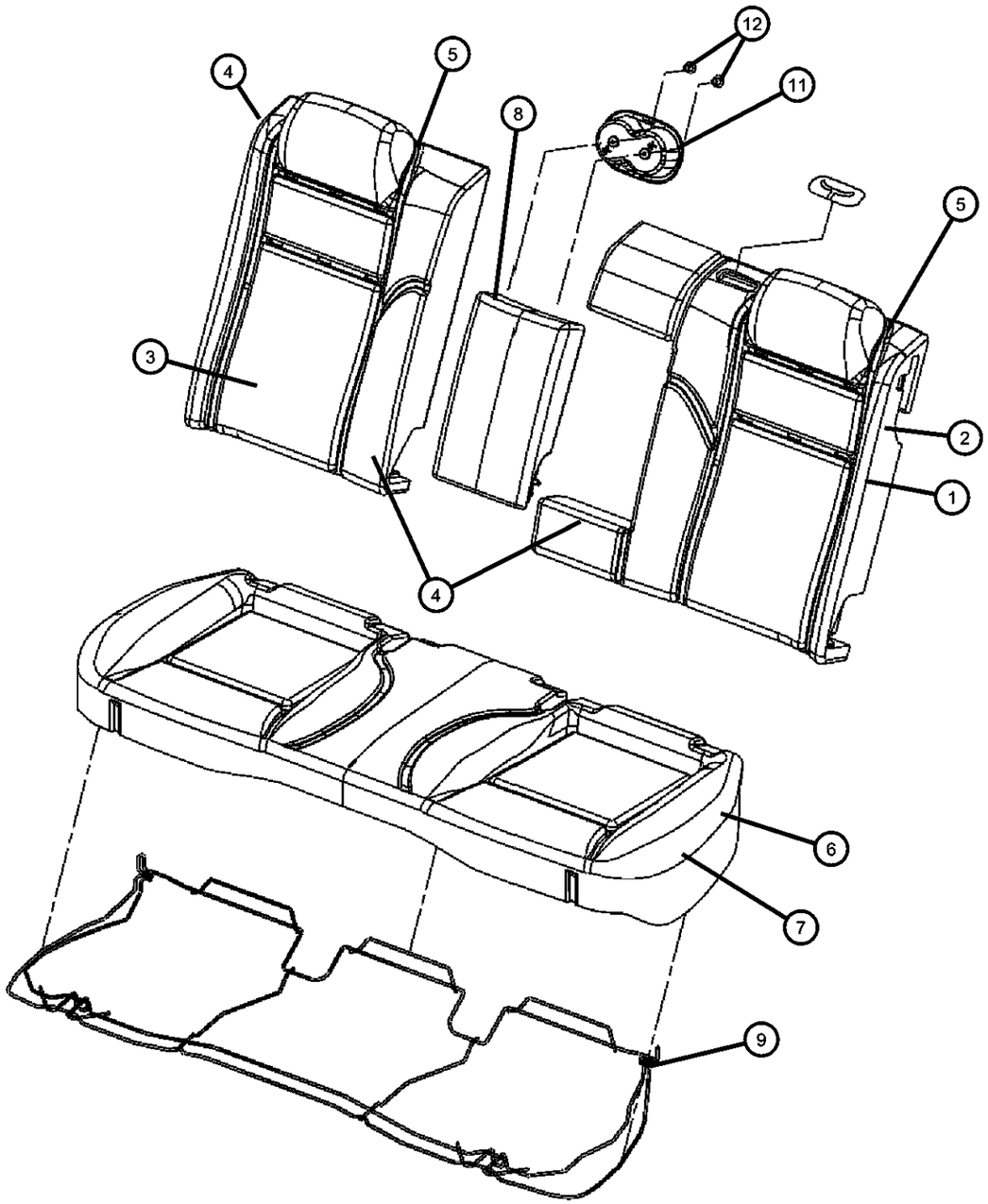

ITEM	PART NUMBER	QTY	LINE	SERIES	BODY	ENGINE	TRANS	TRIM	DESCRIPTION
1	1ME381DVAA	1	D		22			*L7	COVER, Rear Seat Back, 60 % Side
2	68044579AA	1	D		22			*L7	FOAM, Seat Back, 60 % Side
3	1ME361DVAA	1	D		22			*L7	COVER, Rear Seat Back, 40 % Side
4	68044580AA	1	D		22			*L7	FOAM, Seat Back, 40 % Side
5									PANEL, Rear Seat Back
	68044581AA	1	D		22			*L7	60% Side
	68044582AA	1	D		22			*L7	40% Side
6	68044420AA	1	D		22			*L7	FOAM, Seat Cushion
7	1ME391DVAA	1	D		22			*L7	COVER, Rear Seat Cushion
8	1ME401DVAA	1	D		22			*L7	ARMREST, Rear Seat Center
9	68044421AA	1	D		22			*L7	FRAME, Rear Seat Cushion
-10									RETAINER, Arm Rest
	05139655AB	1	D		22			*L7	Left
	05139654AB	1	D		22			*L7	Right
11	1AW791DVAA	1	D		22			*L7	CUP HOLDER, Rear Seat, Serviced with the arm rest
12	1AT221DVAA	2	D		22			*L7	CLIP

DODGE CHALLENGER (LC)

SERIES	LINE	BODY	ENGINE	TRANSMISSION
H = HIGHLINE	D = DODGE	22 = 2-DR SEDAN TYPE #2	EGG = 3.5L High Output V6 24V MPI Engine	DEC = 6-Speed Manual TREMEC Transmission
P = PREMIUM			ESF = 6.1L SRT HEMI V8 Engine	DGJ = 5-Speed Auto W5A580 Transmission
X = SPECIAL			EZC = 5.7L HEMI VCT Engine	DGV = 4-Spd. Automatic VLP 42RLE Trans
			EZD = 5.7L Hemi VCT MDS Engine	

Rear Seat - 60/40 - Trim Code [RL]
Figure 50-638

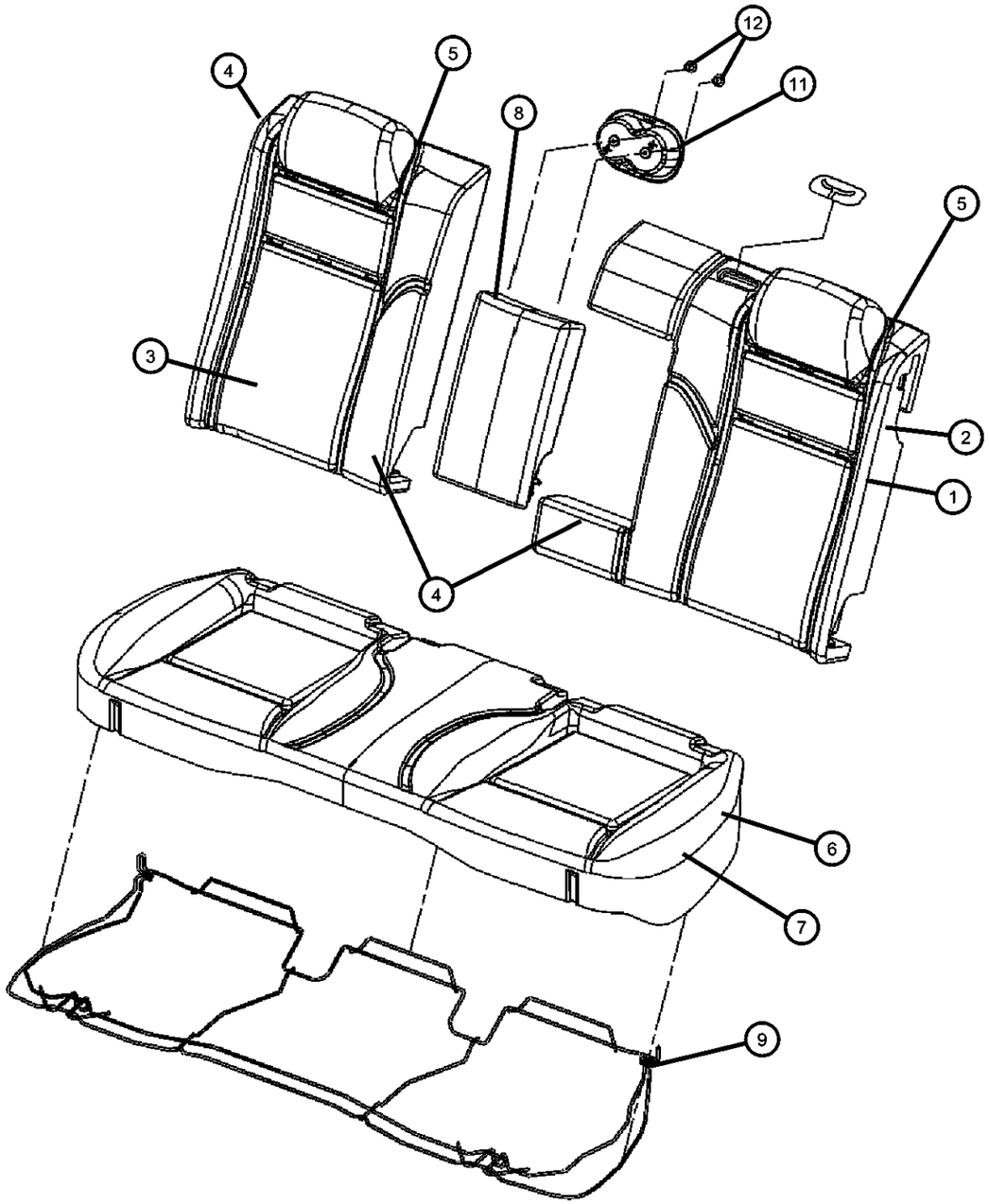

ITEM	PART NUMBER	QTY	LINE	SERIES	BODY	ENGINE	TRANS	TRIM	DESCRIPTION
1									COVER, Rear Seat Back, 60 % Side
	1MR661DVAA	1	D		22			*RL	Without [CED]
	1MR661DBAA	1	D		22			*RL	With [CED]
2	68044579AA	1	D		22			*RL	FOAM, Seat Back, 60 % Side
3									COVER, Rear Seat Back, 40 % Side
	1MR491DBAA	1	D		22			*RL	With [CED]
	1MR491DVAA	1	D		22			*RL	Without [CED]
4	68044580AA	1	D	X	22			*UL	FOAM, Seat Back, 40 % Side
5									PANEL, Rear Seat Back
	68044581AA	1	D		22			*RL	Left
	68044582AA	1	D		22			*RL	Right
6	68044420AA	1	D		22			*RL	FOAM, Seat Cushion
7									COVER, Rear Seat Cushion
	1MR481DVAA	1	D		22			*RL	Without [CED]
	1MR481DBAA	1	D		22			*RL	With [CED]
8									ARMREST, Rear Seat Center
	1MR671DVAA	1	D		22			*RL	Without [CED]
	1MR671DBAA	1	D		22			*RL	With [CED]
9	68044421AA	1	D		22			*RL	FRAME, Rear Seat Cushion
-10									RETAINER, Arm Rest
	05139655AB	1	D		22			*RL	Left
	05139654AB	1	D		22			*RL	Right
11									CUP HOLDER, Rear Seat, Serviced with the arm rest
	1AW791DBAA	1	D		22			*RL	With [CED]
	1AW791DVAA	1	D		22			*RL	Without [CED]
12									CLIP
	1AT221DVAA	2	D		22			*RL	Without [CED]
	1AT221DBAA	2	D		22			*RL	With [CED]

DODGE CHALLENGER (LC)

SERIES	LINE	BODY	ENGINE	TRANSMISSION
H = HIGHLINE P = PREMIUM X = SPECIAL	D = DODGE	22 = 2-DR SEDAN TYPE #2	EGG = 3.5L High Output V6 24V MPI Engine ESF = 6.1L SRT HEMI V8 Engine EZC = 5.7L HEMI VCT Engine EZD = 5.7L Hemi VCT MDS Engine	DEC = 6-Speed Manual TREMEC Transmission DGJ = 5-Speed Auto W5A580 Transmission DGV = 4-Spd. Automatic VLP 42RLE Trans

AR = use ase required - = Non illustrrated part

Rear Seat - 60/40 - Trim Code [UL]
Figure 50-640

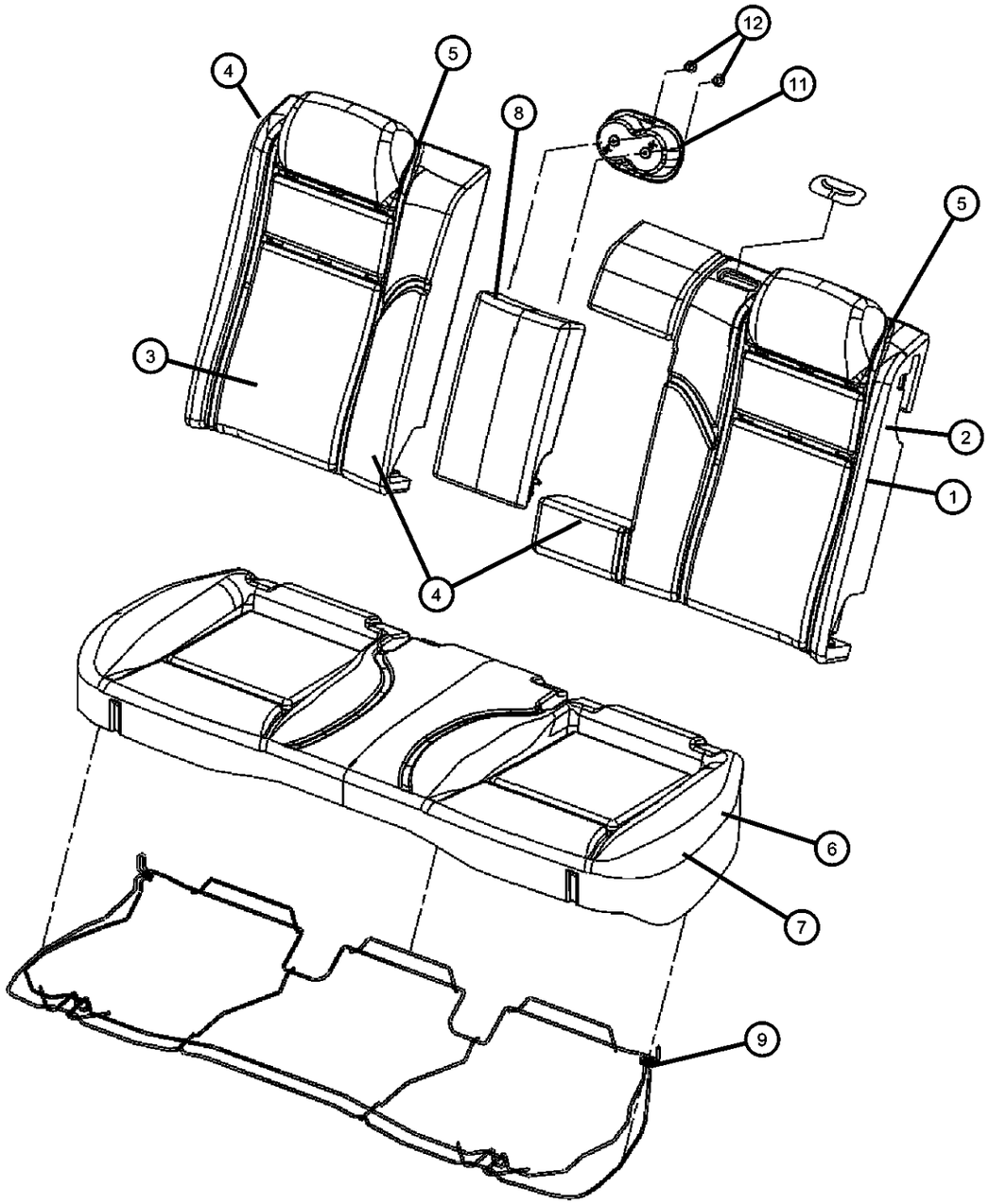

ITEM	PART NUMBER	QTY	LINE	SERIES	BODY	ENGINE	TRANS	TRIM	DESCRIPTION
1									COVER, Rear Seat Back, 60 % Side
	1ME521R4AA	1	D	X	22			*UL	Red Stripe
	1ME521VHAA	1	D	X	22			*UL	Orange Stripe
	1ME521BNAA	1	D	X	22			*UL	Blue Stripe
	1ME52EY1AA	1	D	X	22			*UL	Yellow Stripe
2	68044579AA	1	D	X	22			*UL	FOAM, Seat Back, 60 % Side
3									COVER, Rear Seat Back, 40 % Side
	1ME491R4AA	1	D	X	22			*UL	Red Stripe
	1ME491BNAA	1	D	X	22			*UL	Blue Stripe
	1ME49EY1AA	1	D	X	22			*UL	Yellow Stripe
	1ME491VHAA	1	D	X	22			*UL	Orange Stripe
4	68044580AA	1	D	X	22			*UL	FOAM, Seat Back, 40 % Side
5									PANEL, Rear Seat Back
	68044581AA	1	D	X	22			*UL	60%
	68044582AA	1	D	X	22			*UL	40%
6	68044420AA	1	D	X	22			*UL	FOAM, Seat Cushion
7	1ME481DVAA	1	D	X	22			*UL	COVER, Rear Seat Cushion
8	1ME531DVAA	1	D	X	22			*UL	ARMREST, Rear Seat Center
9	68044421AA	1	D	X	22			*UL	FRAME, Rear Seat Cushion
-10									RETAINER, Arm Rest
	05139654AB	1	D	X	22			*UL	Right
	05139655AB	1	D	X	22			*UL	Left
11	1AW791DVAA	1	D	X	22			*UL	CUP HOLDER, Rear Seat, Serviced with the arm rest
12	1AT221DVAA	1	D	X	22			*UL	CLIP
-13									BOLSTER, Seat
	05174654AA	2	D	X	22			*UL	Right
	05174655AA	2	D	X	22			*UL	Left

DODGE CHALLENGER (LC)

SERIES	LINE	BODY	ENGINE	TRANSMISSION
H = HIGHLINE P = PREMIUM X = SPECIAL	D = DODGE	22 = 2-DR SEDAN TYPE #2	EGG = 3.5L High Output V6 24V MPI Engine ESF = 6.1L SRT HEMI V8 Engine EZC = 5.7L HEMI VCT Engine EZD = 5.7L Hemi VCT MDS Engine	DEC = 6-Speed Manual TREMEC Transmission DGJ = 5-Speed Auto W5A580 Transmission DGV = 4-Spd. Automatic VLP 42RLE Trans

AR = use ase required - = Non illustrrated part

Adjusters , Recliners and Shields - Driver Seat - Power
Figure 50-905

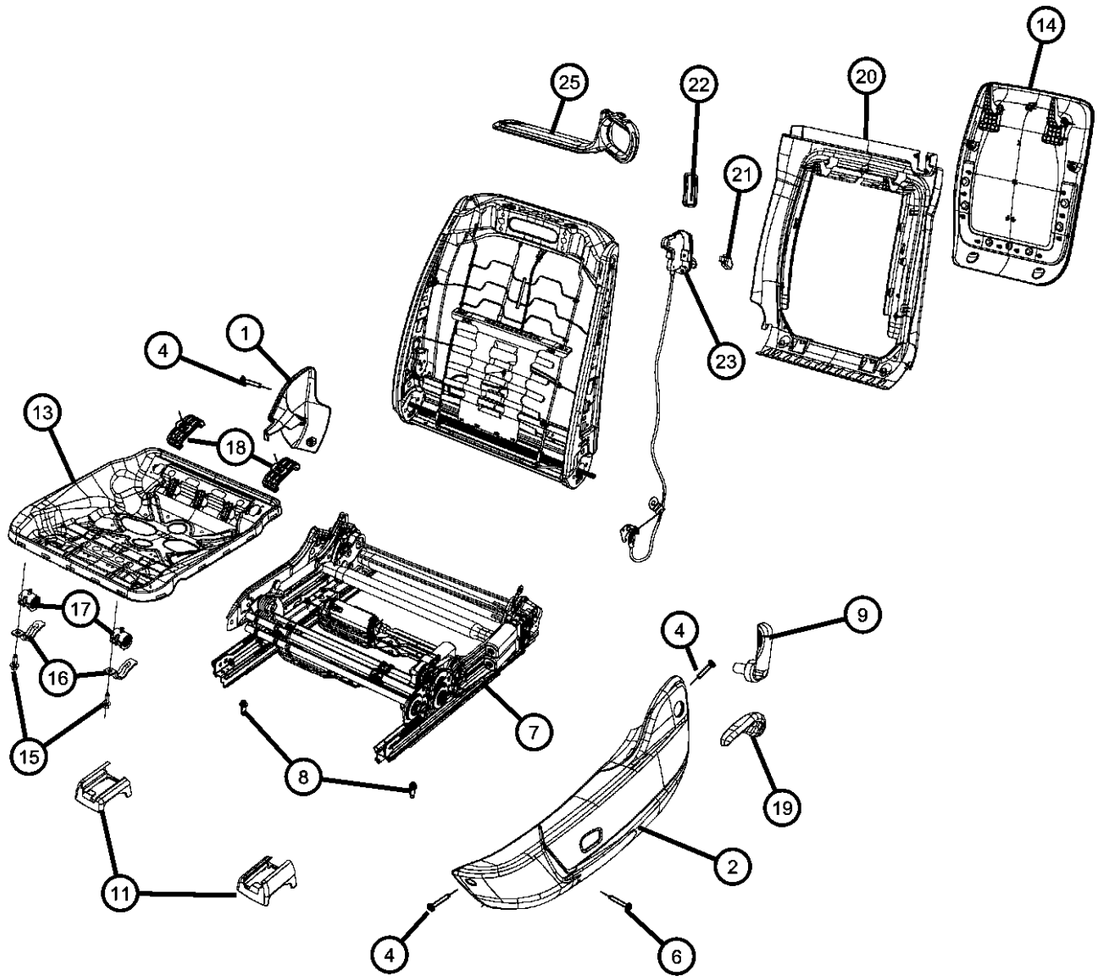

ITEM	PART NUMBER	QTY	LINE	SERIES	BODY	ENGINE	TRANS	TRIM	DESCRIPTION
NOTE									
Sales Codes : XAM = Pedal - Power Adjustable with Memory									
1									SHIELD, Driver Inboard
	1ME251DVAA	1	D	X	22			*UL	
		1	D		22			*RL	
		1	D		22			*L7	
2									SHIELD, Driver Outboard
	1ME411DVAA	1	D		22			*L7	
		1	D	X	22			*UL	
		1	D		22			*RL	
-3									BRACKET
	05139643AA	1	D		22			*RL	
		1	D		22			*L7	
		1	D	X	22			*UL	
4									SCREW, Seat
	05139631AA	32	D		22			*RL	
		48	D		22			*L7	
		48	D	X	22			*UL	
-5									BRACKET, Seat
	05139641AA	1	D		22			*L7	
		1	D	X	22			*UL	
		1	D		22			*RL	
6									SCREW
	05170948AA	5	D		22			*RL	
		5	D		22			*L7	
		3	D	X	22			*UL	
7									ADJUSTER, Power Seat
	68020712AA	1	D	X	22			*UL	
		1	D		22			*RL	
		1	D		22			*L7	
8		1							BOLT, (NOT SERVICED)
9									HANDLE, Lumbar
	1AR671DVAA	1	D		22			*RL	
		1	D	X	22			*UL	

DODGE CHALLENGER (LC)

SERIES	LINE	BODY	ENGINE	TRANSMISSION
H = HIGHLINE P = PREMIUM X = SPECIAL	D = DODGE	22 = 2-DR SEDAN TYPE #2	EGG = 3.5L High Output V6 24V MPI Engine ESF = 6.1L SRT HEMI V8 Engine EZC = 5.7L HEMI VCT Engine EZD = 5.7L Hemi VCT MDS Engine	DEC = 6-Speed Manual TREMEC Transmission DGJ = 5-Speed Auto W5A580 Transmission DGV = 4-Spd. Automatic VLP 42RLE Trans

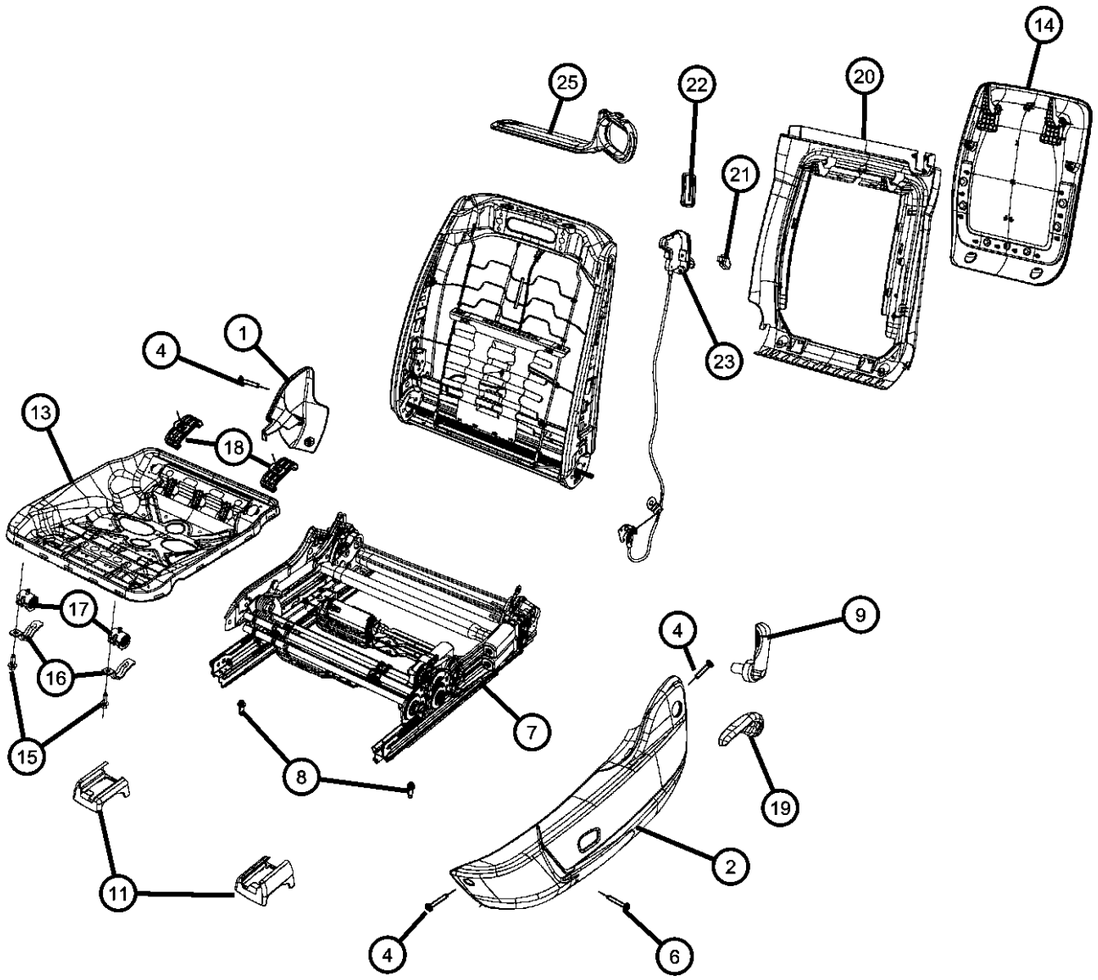

ITEM	PART NUMBER	QTY	LINE	SERIES	BODY	ENGINE	TRANS	TRIM	DESCRIPTION
		1	D		22			*L7	
-10									SCREW
	68033526AA	2	D	X	22			*UL	
		2	D		22			*RL	
		2	D		22			*L7	
11									COVER, Track, Front
	1AN491DVAA	1	D		22			*L7	Left
		1	D		22			*RL	Left
	1AN491BNAA	1	D	X	22			*UL	Left
	1AN501DVAA	1	D		22			*RL	Right
		1	D		22			*L7	Right
		1	D	X	22			*UL	Right
-12									COVER, Seat Track, Rear
	1MY421DVAA	1	D		22			*RL	Right
		1	D		22			*L7	Right
	1MY431DVAA	1	D		22			*RL	Left
		1	D		22			*L7	Left
	1MY421DBAA	1	D	X	22			*UL	Right
	1MY431DBAA	1	D	X	22			*UL	Left
13									FRAME, Front Seat Cushion
	04610213AA	1	D		22			*RL	
		1	D	X	22			*UL	
		1	D		22			*L7	
14									PANEL, Front Seat Back
	1ME241DVAA	2	D		22			*L7	
	1ME421DVAA	1	D	X	22			*UL	
15									BOLT
	05139628AA	4	D	X	22			*UL	
		4	D		22			*RL	
		4	D		22			*L7	
16									CLAMP, Seat
	05139657AA	2	D		22			*RL	
		2	D		22			*L7	

DODGE CHALLENGER (LC)

SERIES	LINE	BODY	ENGINE	TRANSMISSION
H = HIGHLINE P = PREMIUM X = SPECIAL	D = DODGE	22 = 2-DR SEDAN TYPE #2	EGG = 3.5L High Output V6 24V MPI Engine ESF = 6.1L SRT HEMI V8 Engine EZC = 5.7L HEMI VCT Engine EZD = 5.7L Hemi VCT MDS Engine	DEC = 6-Speed Manual TREMEC Transmission DGJ = 5-Speed Auto W5A580 Transmission DGV = 4-Spd. Automatic VLP 42RLE Trans

Adjusters , Recliners and Shields - Driver Seat - Power
Figure 50-905

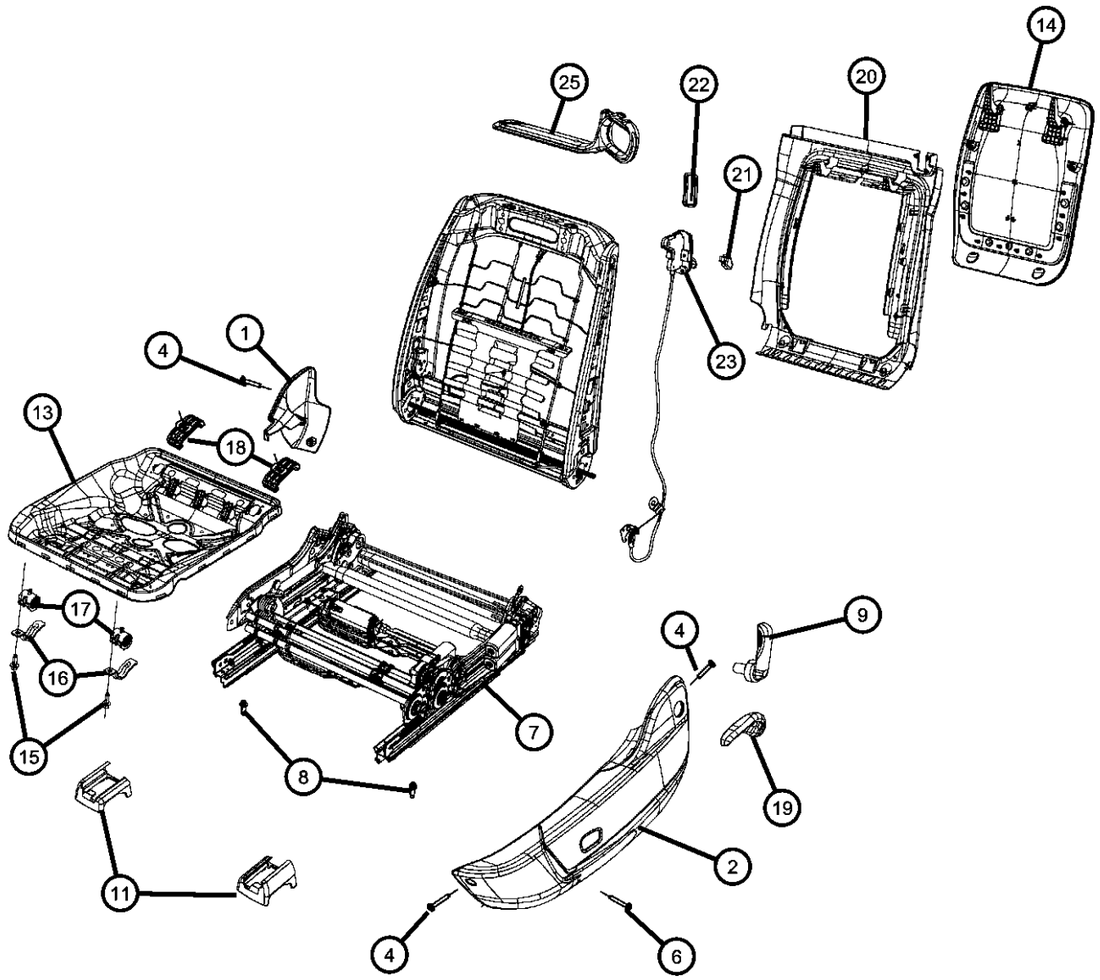

ITEM	PART NUMBER	QTY	LINE	SERIES	BODY	ENGINE	TRANS	TRIM	DESCRIPTION
		2	D	X	22			*UL	
17									SPACER, Hinge
	05139656AA	2	D		22			*RL	
		2	D	X	22			*UL	
		2	D		22			*L7	
18									BUMPER PAD, Seat Cushion
	05139663AA	4	D		22			*RL	
		4	D	X	22			*UL	
		4	D		22			*L7	
19									HANDLE, Recliner
	1AN721DVAA	1	D		22			*RL	
		1	D		22			*L7	
		1	D	X	22			*UL	
20									BRACKET, Seat
	68044591AA	1	D		22			*L7	
		1	D	X	22			*UL	
		1	D		22			*RL	
21									KNOB
	1ME041DVAA	2	D		22			*RL	
		2	D		22			*L7	
		2	D	X	22			*UL	
22									BEZEL, Seat Release
	1ME031DVAA	2	D		22			*RL	
		2	D		22			*L7	
		2	D	X	22			*UL	
23									LATCH, Seat
	68044589AA	1	D		22			*L7	Include Cable
		2	D	X	22			*UL	Include Cable
		1	D		22			*RL	Include Cable
-24									BRACKET, Seat
	68044593AA	1	D		22			*L7	
		1	D		22			*RL	
		1	D	X	22			*UL	Dump Cable Bracket

DODGE CHALLENGER (LC)

SERIES	LINE	BODY	ENGINE	TRANSMISSION
H = HIGHLINE P = PREMIUM X = SPECIAL	D = DODGE	22 = 2-DR SEDAN TYPE #2	EGG = 3.5L High Output V6 24V MPI Engine ESF = 6.1L SRT HEMI V8 Engine EZC = 5.7L HEMI VCT Engine EZD = 5.7L Hemi VCT MDS Engine	DEC = 6-Speed Manual TREMEC Transmission DGJ = 5-Speed Auto W5A580 Transmission DGV = 4-Spd. Automatic VLP 42RLE Trans

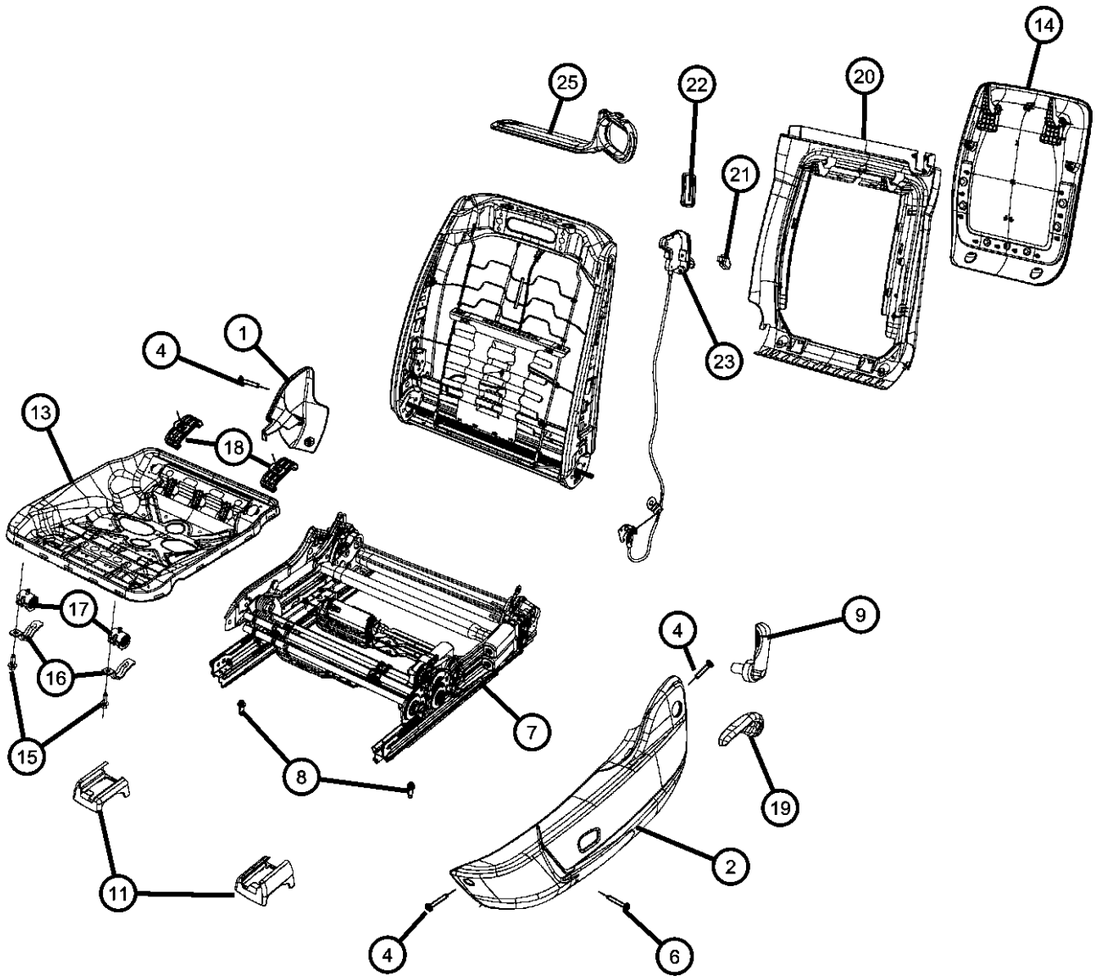

ITEM	PART NUMBER	QTY	LINE	SERIES	BODY	ENGINE	TRANS	TRIM	DESCRIPTION
25									GUIDE, Seat Belt
	1ME061DVAA	1	D		22			*RL	
		1	D		22			*L7	
		1	D	X	22			*UL	
-26									LIMITER, Seat Track Travel
	05139661AA	2	D		22			*RL	
		2	D		22			*L7	
		2	D	X	22			*UL	

DODGE CHALLENGER (LC)

SERIES	LINE	BODY	ENGINE	TRANSMISSION
H = HIGHLINE P = PREMIUM X = SPECIAL	D = DODGE	22 = 2-DR SEDAN TYPE #2	EGG = 3.5L High Output V6 24V MPI Engine ESF = 6.1L SRT HEMI V8 Engine EZC = 5.7L HEMI VCT Engine EZD = 5.7L Hemi VCT MDS Engine	DEC = 6-Speed Manual TREMEC Transmission DGJ = 5-Speed Auto W5A580 Transmission DGV = 4-Spd. Automatic VLP 42RLE Trans

Second Row - 60/40
Figure 50-1030

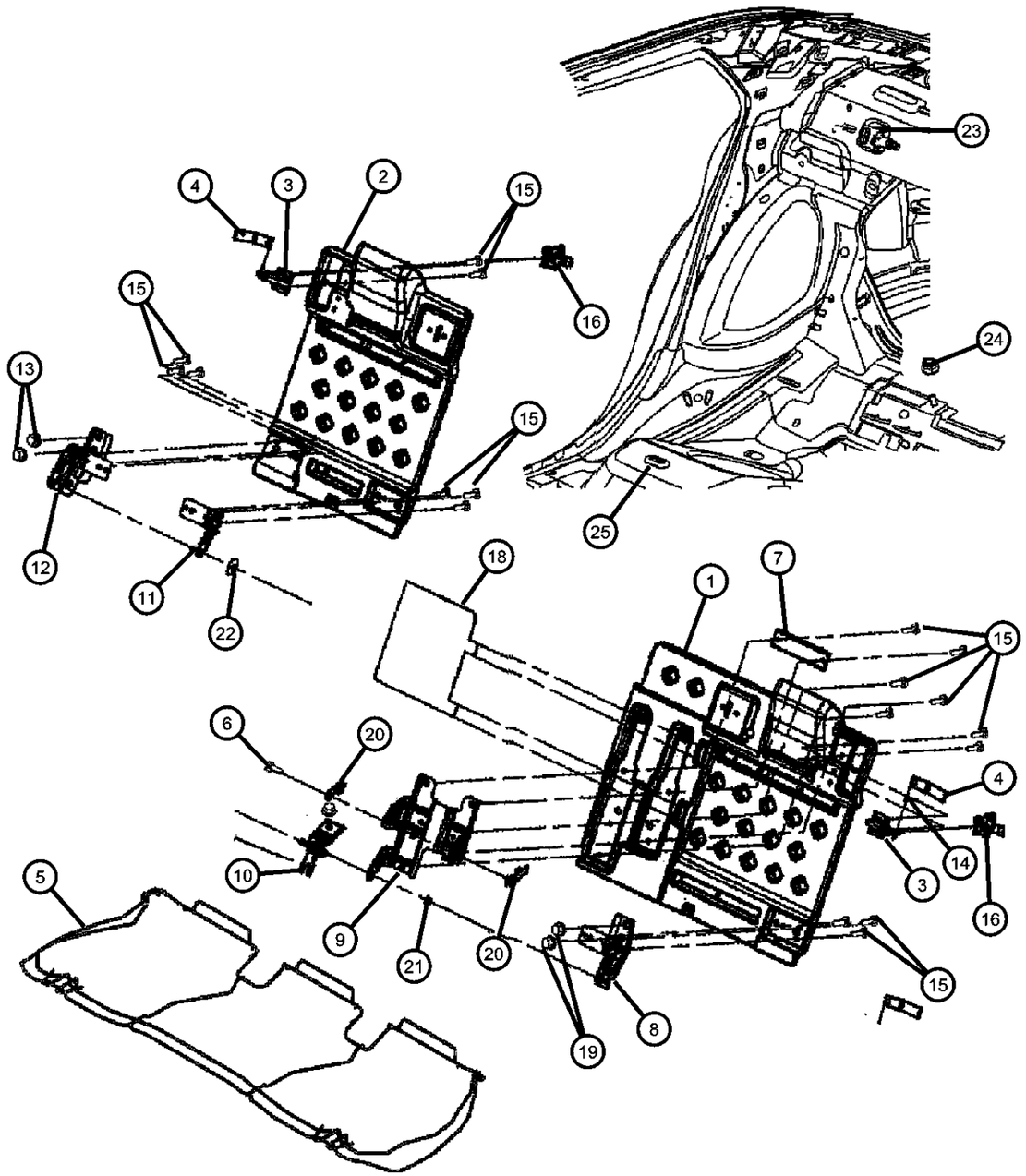

ITEM	PART NUMBER	QTY	LINE	SERIES	BODY	ENGINE	TRANS	TRIM	DESCRIPTION
1									PANEL, Rear Seat Back
	68044581AA	1	D		22			*L7	
		1	D	X	22			*UL	
		1	D		22			*RL	
2									PANEL, Rear Seat Back
	68044582AA	1	D		22			*RL	
		1	D		22			*L7	
		1	D	X	22			*UL	
3									LATCH, Seat
	05102172AA	2	D		22			*L7	
		2	D	X	22			*UL	
		2	D		22			*RL	
4									STRAP, Seat release
	1ME021DVAA	2	D		22			*RL	
		2	D		22			*L7	
		2	D	X	22			*UL	
5									FRAME, Rear Seat Cushion
	68044421AA	1	D	X	22			*UL	
		1	D		22			*RL	
		1	D		22			*L7	
6									BOLT
	05139635AA	1	D	X	22			*UL	
		1	D		22			*RL	
		1	D		22			*L7	
7									BRACKET
	05140652AA	1	D		22			*RL	
		1	D	X	22			*UL	
		1	D		22			*L7	
8									BRACKET
	05139682AA	1	D	X	22			*UL	
		1	D		22			*RL	
		1	D		22			*L7	
9									BRACKET

DODGE CHALLENGER (LC)

SERIES	LINE	BODY	ENGINE	TRANSMISSION
H = HIGHLINE P = PREMIUM X = SPECIAL	D = DODGE	22 = 2-DR SEDAN TYPE #2	EGG = 3.5L High Output V6 24V MPI Engine ESF = 6.1L SRT HEMI V8 Engine EZC = 5.7L HEMI VCT Engine EZD = 5.7L Hemi VCT MDS Engine	DEC = 6-Speed Manual TREMEC Transmission DGJ = 5-Speed Auto W5A580 Transmission DGV = 4-Spd. Automatic VLP 42RLE Trans

AR = use ase required - = Non illustrrated part

Second Row - 60/40
Figure 50-1030

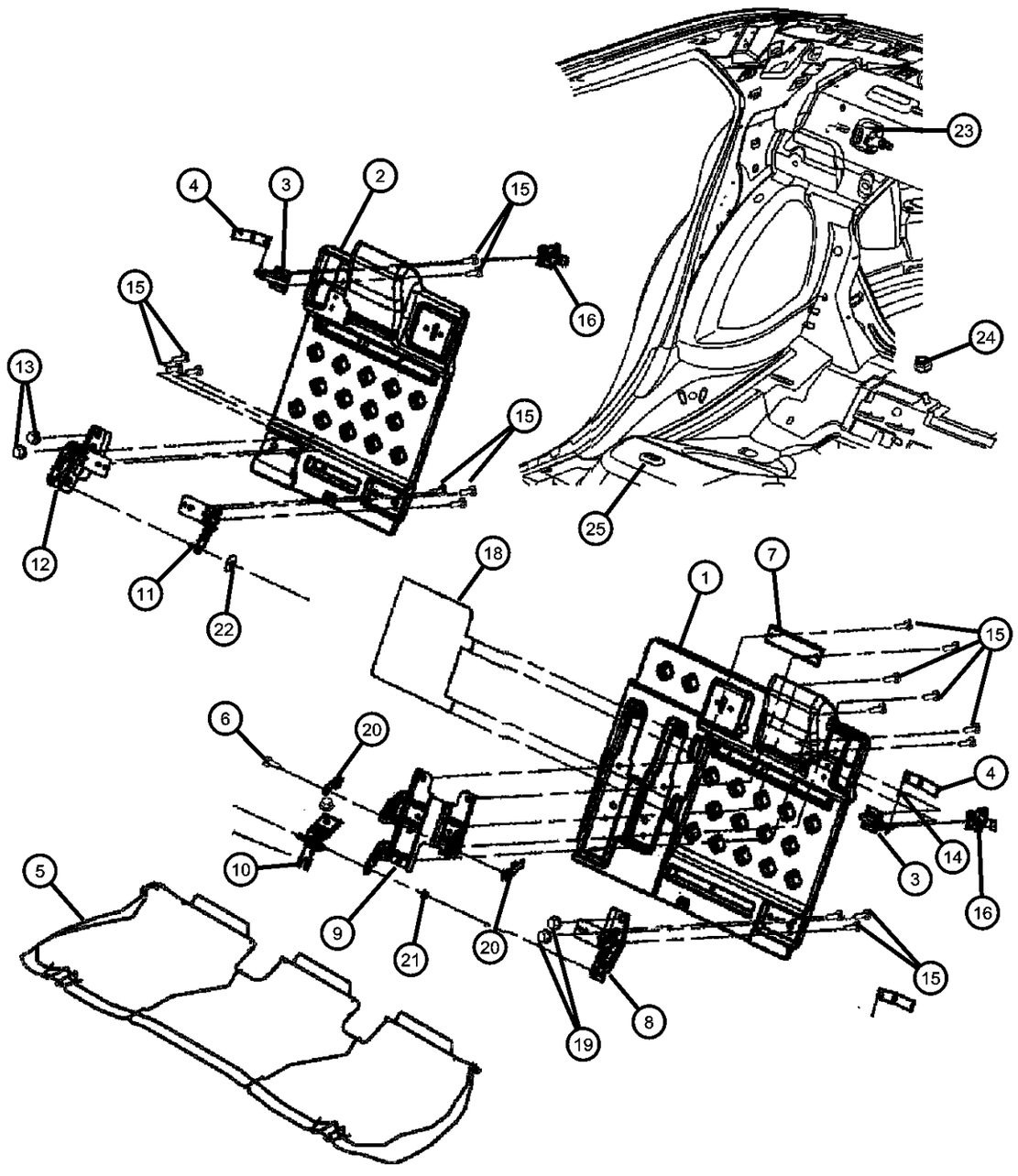

ITEM	PART NUMBER	QTY	LINE	SERIES	BODY	ENGINE	TRANS	TRIM	DESCRIPTION
	05140653AA	1	D		22			*RL	
		1	D		22			*L7	
		1	D	X	22			*UL	
10									BRACKET
	05139647AA	1	D		22			*RL	
		1	D	X	22			*UL	
		1	D		22			*L7	
11									BRACKET
	05174062AA	1	D	X	22			*UL	
		1	D		22			*RL	
		1	D		22			*L7	
12									BRACKET
	05139680AA	1	D		22			*RL	
		1	D		22			*L7	
		1	D	X	22			*UL	
13									BOLT, Seat
	68039245AA	8	D		22			*L7	
		8	D	X	22			*UL	
		8	D		22			*RL	
14									CABLE, Seat Back Release
	68044596AA	1	D	X	22			*UL	
		1	D		22			*RL	
		2	D		22			*L7	
15									SCREW, Trim
	05139496AB	18	D	X	22			*UL	
		18	D		22			*RL	
		18	D		22			*L7	
16	04628848AB	2	D		22				STRIKER, Seat Back Latch
-17	06101712	4	D		22				NUT, U, M6x1.00
18									PANEL
	05140656AA	1	D		22			*L7	
		1	D	X	22			*UL	
		1	D		22			*RL	

DODGE CHALLENGER (LC)

SERIES	LINE	BODY	ENGINE	TRANSMISSION
H = HIGHLINE	D = DODGE	22 = 2-DR SEDAN TYPE #2	EGG = 3.5L High Output V6 24V MPI Engine	DEC = 6-Speed Manual TREMEC Transmission
P = PREMIUM			ESF = 6.1L SRT HEMI V8 Engine	DGJ = 5-Speed Auto W5A580 Transmission
X = SPECIAL			EZC = 5.7L HEMI VCT Engine	DGV = 4-Spd. Automatic VLP 42RLE Trans
			EZD = 5.7L Hemi VCT MDS Engine	

AR = use ase required - = Non illustrrated part

Second Row - 60/40
Figure 50-1030

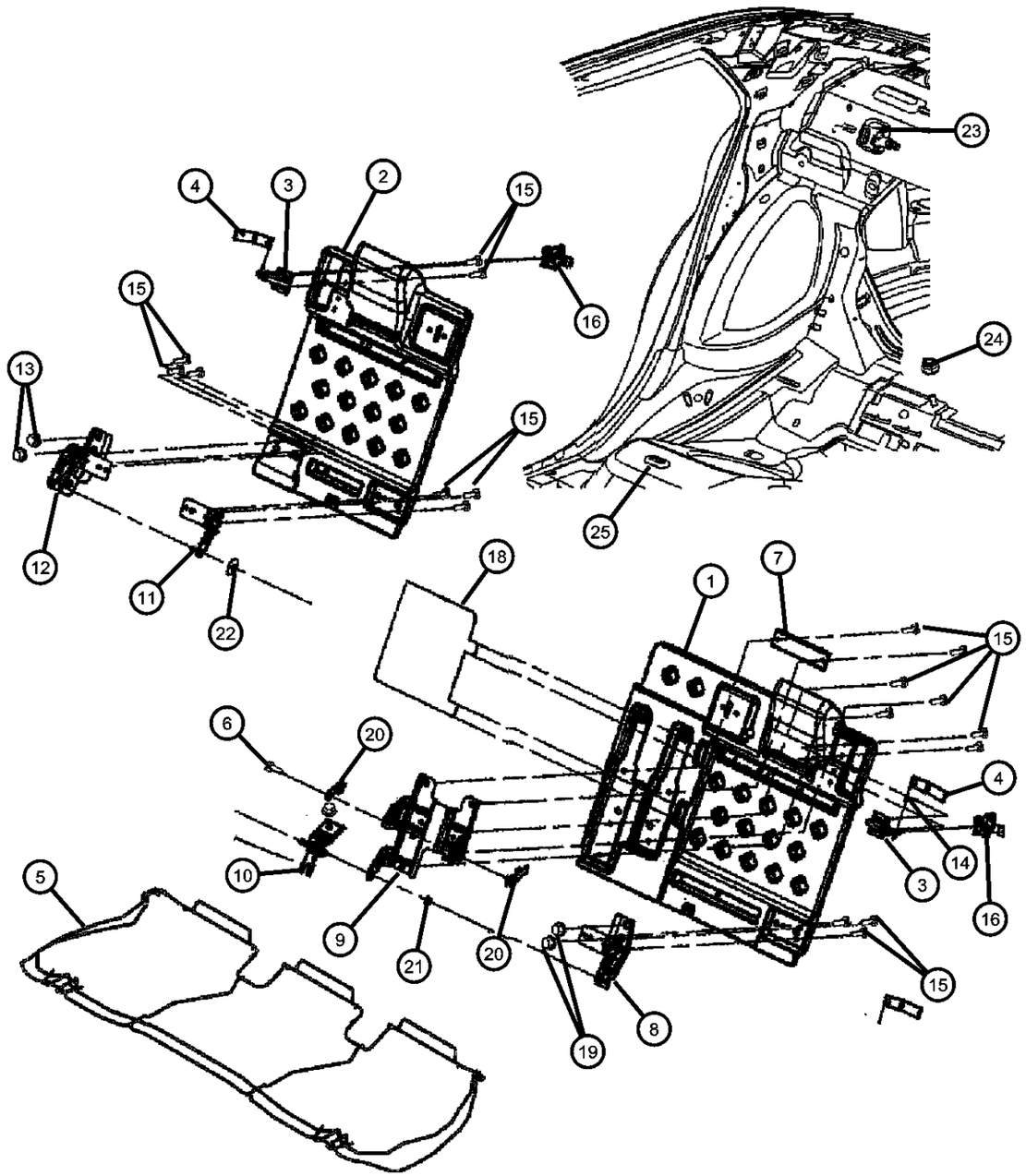

ITEM	PART NUMBER	QTY	LINE	SERIES	BODY	ENGINE	TRANS	TRIM	DESCRIPTION
19	06502724	2	D		22				NUT, Hex Flange, M12x1.75
20									RETAINER, Arm Rest
	05139654AB	1	D		22			*RL	Right
		1	D		22			*L7	Right
		1	D	X	22			*UL	Right
	05139655AB	1	D		22			*L7	Left
		1	D	X	22			*UL	Left
		1	D		22			*RL	Left
21									NUT
	05139638AB	1	D		22			*RL	
		1	D		22			*L7	
		1	D	X	22			*UL	
22									BUSHING
	05174063AA	1	D		22			*RL	
		1	D		22			*L7	
		1	D	X	22			*UL	
23	04628848AB	2	D		22				STRIKER, Seat Back Latch
24	06502724	2	D		22				NUT, Hex Flange, M12x1.75
25	04645939AB	2	D		22				RETAINER, Seat Cushion

DODGE CHALLENGER (LC)

SERIES	LINE	BODY	ENGINE	TRANSMISSION
H = HIGHLINE	D = DODGE	22 = 2-DR SEDAN TYPE #2	EGG = 3.5L High Output V6 24V MPI Engine	DEC = 6-Speed Manual TREMEC Transmission
P = PREMIUM			ESF = 6.1L SRT HEMI V8 Engine	DGJ = 5-Speed Auto W5A580 Transmission
X = SPECIAL			EZC = 5.7L HEMI VCT Engine	DGV = 4-Spd. Automatic VLP 42RLE Trans
			EZD = 5.7L Hemi VCT MDS Engine	

Floor Console Front
Figure 50-1605

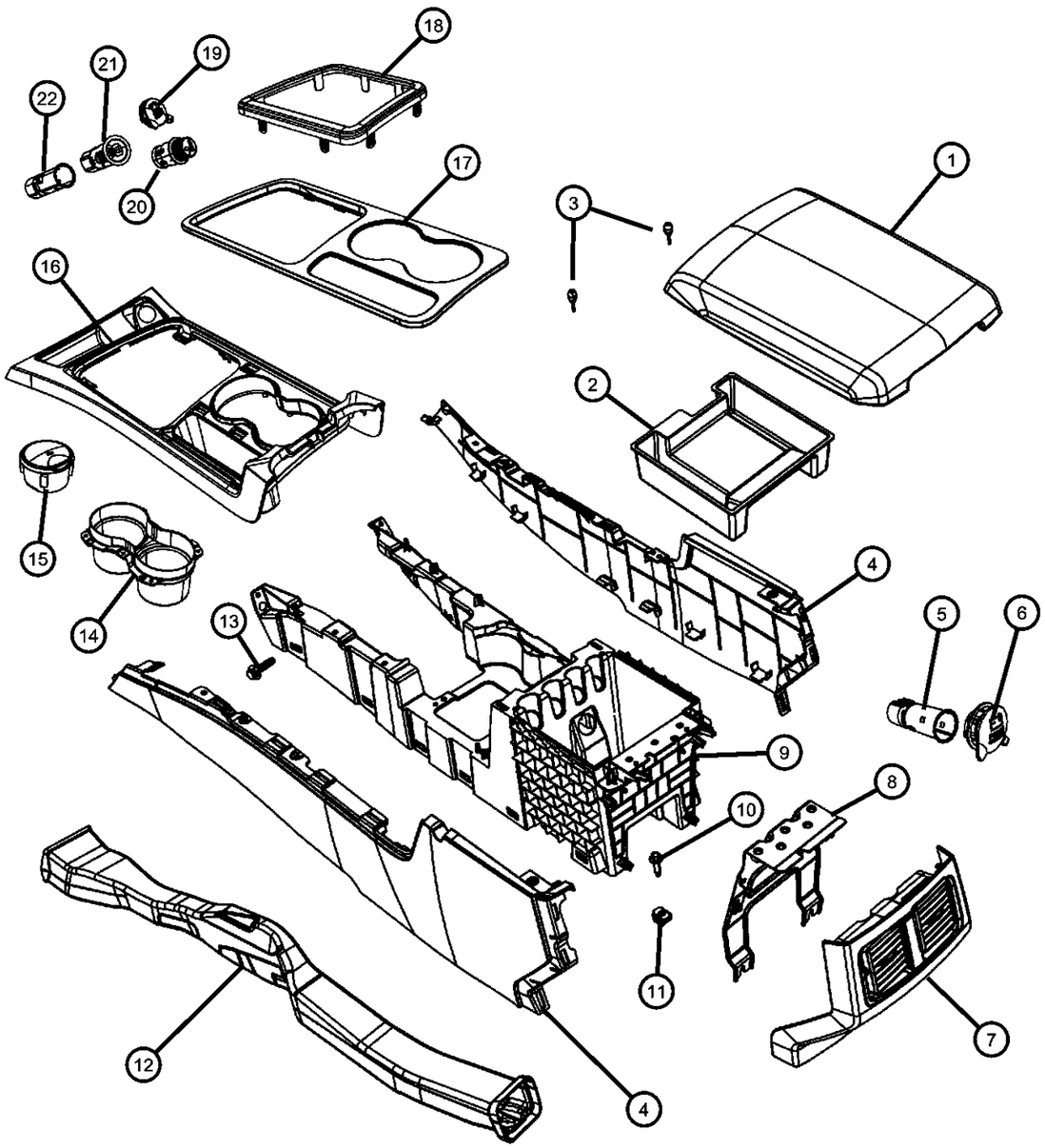

ITEM	PART NUMBER	QTY	LINE	SERIES	BODY	ENGINE	TRANS	TRIM	DESCRIPTION
1									ARMREST, Console
	1RQ591BNAA	1	D		22			*RL	[DV], Blue Stitching
	1RQ59XD-VAA	1	D		22			*L7	[DV], Black Stitching
	1QG421DBAA	1	D		22			*UL	[DV], Light Gray/White Stitching
2	04662055AB	1	D		22				MAT, Floor Console
3									BUMPER, Armrest Lid
	68048515AA	2	D	H, P	22			*O0	
		2	D	X	22			*O0	
4									PANEL, Console
	1MZ59XDVAA	1	D	X	22			*O0	Right
		1	D	H, P	22			*O0	Right
	1MZ60XDVAA	1	D	H, P	22			*O0	Left
		1	D	X	22			*O0	Left
5	04793554AC	1	D		22				POWER OUTLET
6	56010621AA	1	D		22				CAP, Power Outlet
7									CAP, Floor Console End
	68048361AA	1	D	H, P	22			*O0	
		1	D	X	22			*O0	
8									BRACKET, Console
	68048359AA	1	D	H, P	22			*O0	
		1	D	X	22			*O0	
9									CONSOLE, Base
	68048518AA	1	D	H, P	22			*O0	
		1	D	X	22			*O0	
10	06505601AA	4	D		22				SCREW, Tapping Hex Flange Head, M6.3X1.81X25.00
11		4							NUT, Spring Snap In, .250-14, (NOT SERVICED)
12									DUCT, AIR
	68048360AA	1	D	X	22			*O0	
		1	D	H, P	22			*O0	
13	06101946	4	D		22				SCREW, Tapping Hex Head, M4.2X1.70X20.00
14									CUPHOLDER, Console
	1QF82XDVAA	1	D	P, X	22			*O0	

DODGE CHALLENGER (LC)

SERIES	LINE	BODY	ENGINE	TRANSMISSION
H = HIGHLINE P = PREMIUM X = SPECIAL	D = DODGE	22 = 2-DR SEDAN TYPE #2	EGG = 3.5L High Output V6 24V MPI Engine ESF = 6.1L SRT HEMI V8 Engine EZC = 5.7L HEMI VCT Engine EZD = 5.7L Hemi VCT MDS Engine	DEC = 6-Speed Manual TREMEC Transmission DGJ = 5-Speed Auto W5A580 Transmission DGV = 4-Spd. Automatic VLP 42RLE Trans

AR = use ase required - = Non illustrrated part

Floor Console Front
Figure 50-1605

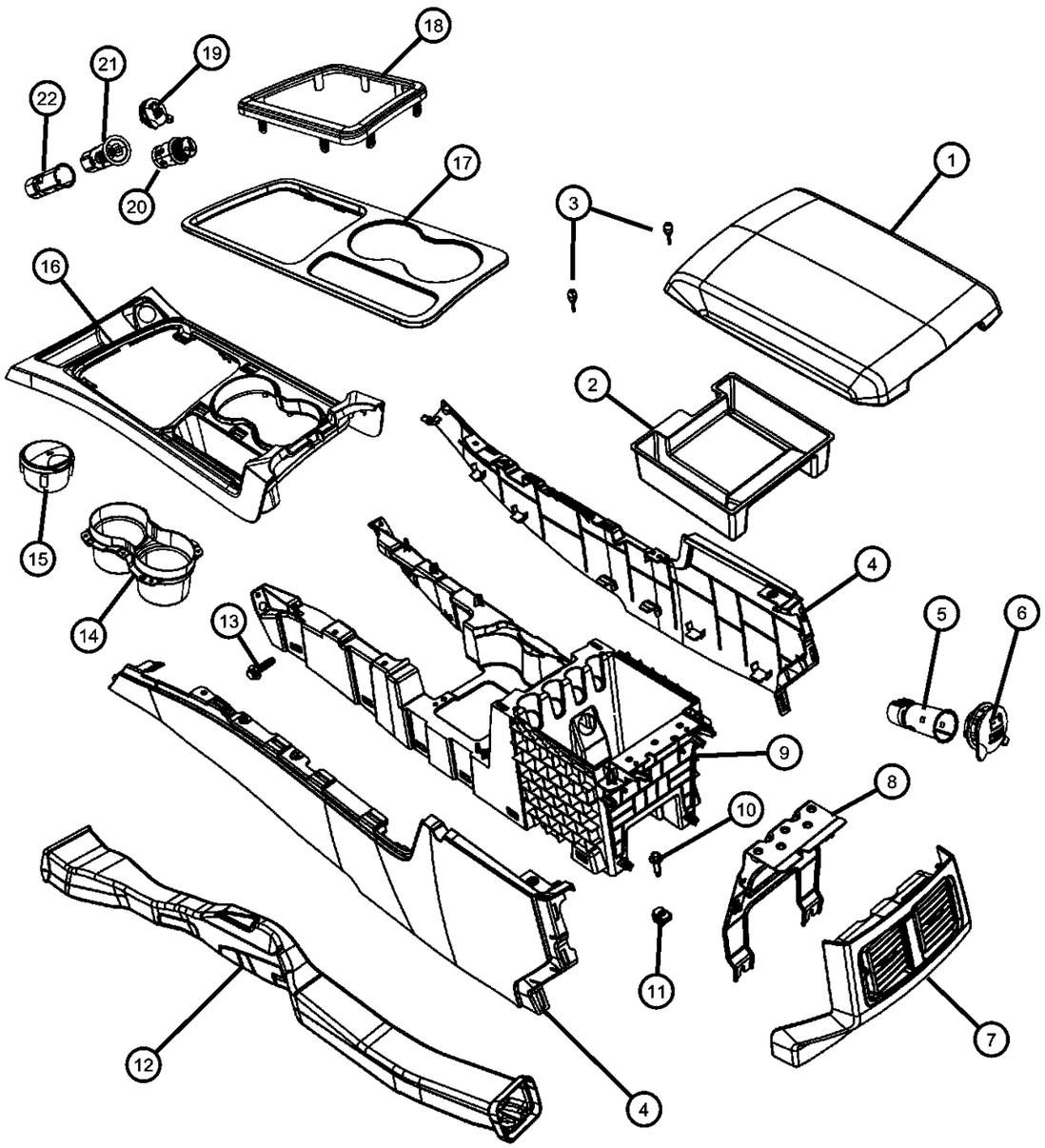

ITEM	PART NUMBER	QTY	LINE	SERIES	BODY	ENGINE	TRANS	TRIM	DESCRIPTION
		1	D	H	22			*O0	
15									ASH RECEIVER, Floor Console
	04595665AB	1	D	H	22			*O0	
		1	D	P, X	22			*O0	
16									BEZEL, Floor Console
	1GX261AAAD	1	D	P, X	22			*O0	With [CWP]
	1MK671Z2AA	1	D	H	22			*O0	
	1FS551AAAD	1	D	P, X	22			*O0	Without [CWP]
17	68059035AA	1	D	H	22			*O0	BEZEL, Console Shifter
18	1GA35SZ0AB	1	D		22			*O0	RING, Trim
19									CAP, Power Outlet
	04685666AB	1	D	H	22			*O0	
		1	D	P, X	22			*O0	
20									KNOB AND ELEMENT, Cigar Lighter
	05026363AA	1	D	H	22			*O0	
		1	D	P, X	22			*O0	
21	05026362AA	1	D		22				BASE, Cigar Lighter
22	05026362AA	1	D		22				BASE, Cigar Lighter
-23									MAT, Floor Console
	68066742AA	1	D	H	22			*O0	Cell Phone
		1	D	P, X	22			*O0	Cell Phone
	68066743AA	1	D	H	22			*O0	Tray
		1	D	P, X	22			*O0	Tray

DODGE CHALLENGER (LC)

SERIES	LINE	BODY	ENGINE	TRANSMISSION
H = HIGHLINE P = PREMIUM X = SPECIAL	D = DODGE	22 = 2-DR SEDAN TYPE #2	EGG = 3.5L High Output V6 24V MPI Engine ESF = 6.1L SRT HEMI V8 Engine EZC = 5.7L HEMI VCT Engine EZD = 5.7L Hemi VCT MDS Engine	DEC = 6-Speed Manual TREMEC Transmission DGJ = 5-Speed Auto W5A580 Transmission DGV = 4-Spd. Automatic VLP 42RLE Trans

AR = use ase required - = Non illustrrated part

Overhead Console
Figure 50-1620

ITEM	PART NUMBER	QTY	LINE	SERIES	BODY	ENGINE	TRANS	TRIM	DESCRIPTION
1									CONSOLE, Overhead
	1AR29XDVAB	1	D		22			*O0	Without [GWA]
	1AR301DVAB	1	D		22			*O0	With [GWA]
2	68048870AA	1	D		22			*O0	RETAINER, Overhead Console
-3	68043540AA	1	D		22			*O0	FOLLOWER, Sunglass Bin

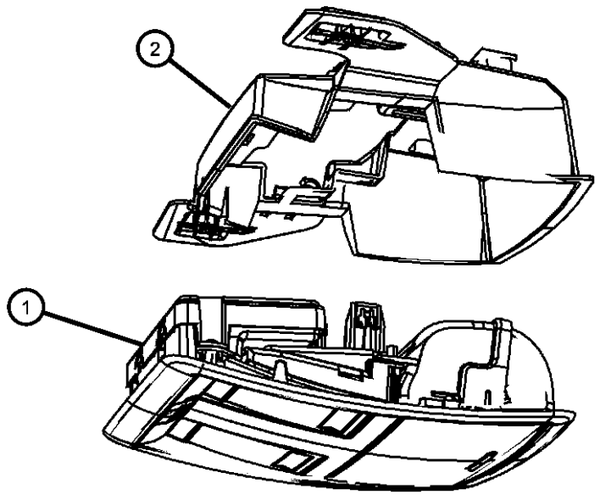

DODGE CHALLENGER (LC)

SERIES	LINE	BODY	ENGINE	TRANSMISSION
H = HIGHLINE	D = DODGE	22 = 2-DR SEDAN TYPE #2	EGG = 3.5L High Output V6 24V MPI Engine	DEC = 6-Speed Manual TREMEC Transmission
P = PREMIUM			ESF = 6.1L SRT HEMI V8 Engine	DGJ = 5-Speed Auto W5A580 Transmission
X = SPECIAL			EZC = 5.7L HEMI VCT Engine	DGV = 4-Spd. Automatic VLP 42RLE Trans
			EZD = 5.7L Hemi VCT MDS Engine	

Instrument Panel and Structure
Figure 50-1705

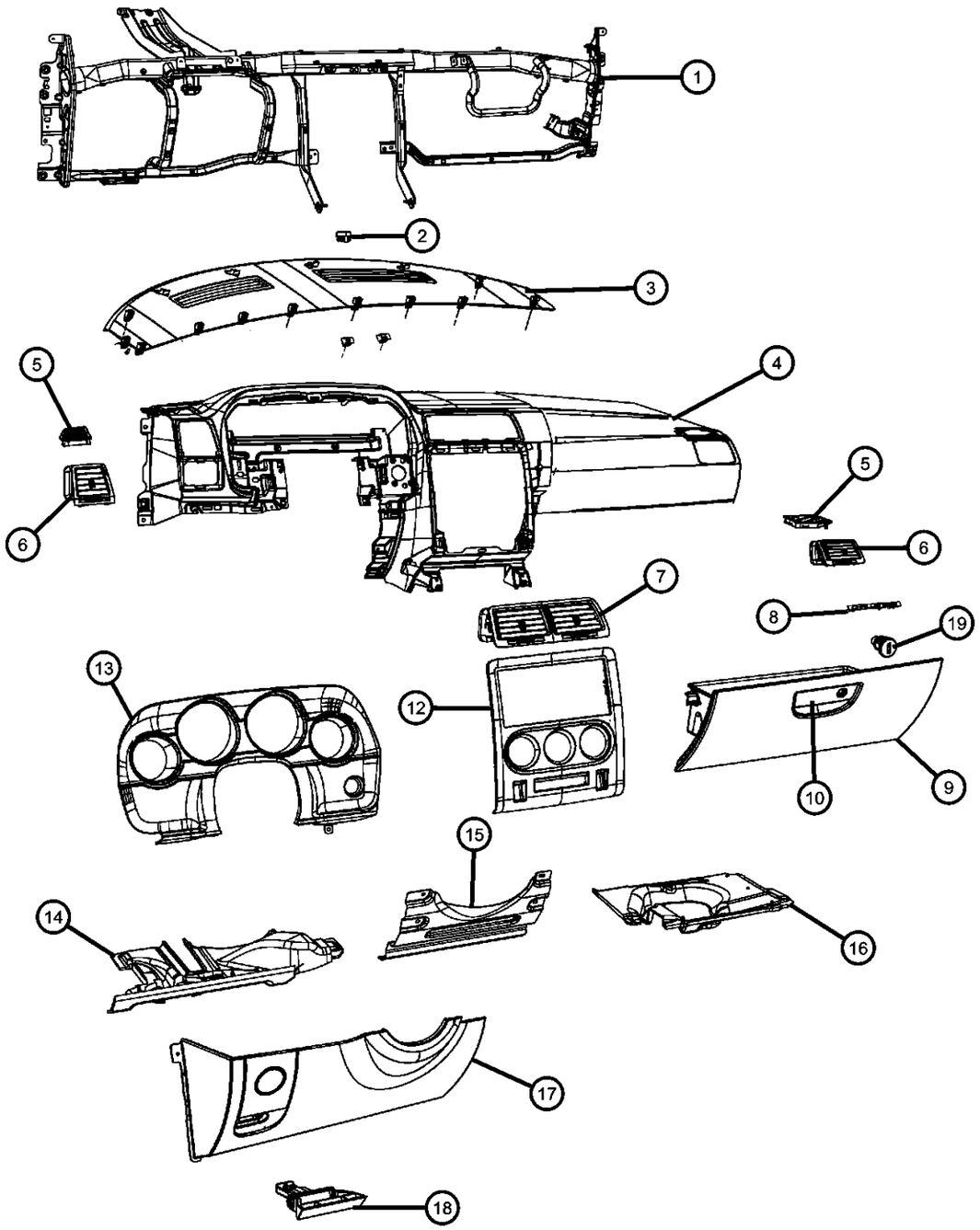

ITEM	PART NUMBER	QTY	LINE	SERIES	BODY	ENGINE	TRANS	TRIM	DESCRIPTION
1									REINFORCEMENT, Beam
	68049185AA	1	D	X	22			*O0	
		1	D	H	22			*O0	
		1	D	P	22			*O0	
2	1EJ31XDVAD	1	D		22			*O0	BEZEL, Sensor
3									GRILLE, Defroster
	1FT36XDVAC	1	D		22			*O0	With [LMG]
	1FT34XDVAC	1	D		22			*O0	
4									PANEL, Instrument Panel
	1NT30XDVAA	1	D	P	22			*O0	
		1	D	H	22			*O0	
		1	D	X	22			*O0	
5									GRILLE, Demister
	1NJ601DVAA	1	D	X	22			*O0	Right
	1NJ611DVAA	1	D	X	22			*O0	Left
6									OUTLET, Air
	1NF041DVAA	1	D	H	22			*O0	Right
		1	D	P	22			*O0	Right
		1	D	X	22			*O0	Right
	1NF051DVAA	1	D	H	22			*O0	Left
		1	D	P	22			*O0	Left
		1	D	X	22			*O0	Left
7									OUTLET, Center
	1NF031DVAA	1	D	P	22			*O0	
		1	D	X	22			*O0	
		1	D	H	22			*O0	
8									NAMEPLATE, Instrument Panel
	68054676AA	1	D	P	22			*O0	
		1	D	H	22			*O0	
	1NJ491DVAA	1	D	X	22			*O0	
9									DOOR, Glove Box
	0UZ801DVAD	1	D	P	22			*O0	
		1	D	X	22			*O0	

DODGE CHALLENGER (LC)

SERIES	LINE	BODY	ENGINE	TRANSMISSION
H = HIGHLINE	D = DODGE	22 = 2-DR SEDAN TYPE #2	EGG = 3.5L High Output V6 24V MPI Engine	DEC = 6-Speed Manual TREMEC Transmission
P = PREMIUM			ESF = 6.1L SRT HEMI V8 Engine	DGJ = 5-Speed Auto W5A580 Transmission
X = SPECIAL			EZC = 5.7L HEMI VCT Engine	DGV = 4-Spd. Automatic VLP 42RLE Trans
			EZD = 5.7L Hemi VCT MDS Engine	

AR = use ase required - = Non illustrrated part

Instrument Panel and Structure
Figure 50-1705

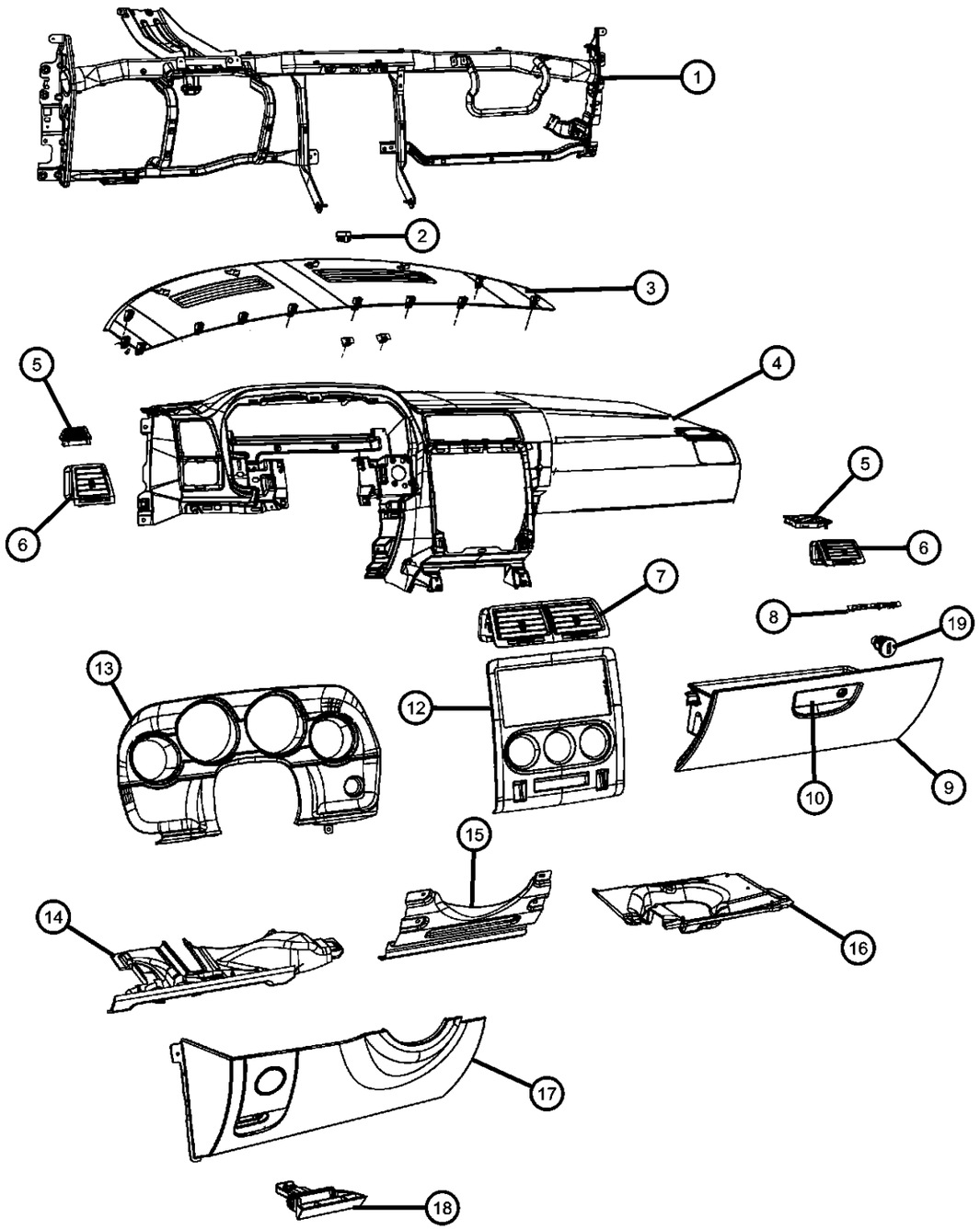

ITEM	PART NUMBER	QTY	LINE	SERIES	BODY	ENGINE	TRANS	TRIM	DESCRIPTION
		1	D	H	22			*O0	
10									LATCH, Glovebox Door
	1MD79XD-VAA	1	D	H	22			*O0	
		1	D	P	22			*O0	
-11									STRIKER, Glove Box Door Latch
	05189856AA	1	D	H	22			*O0	
		1	D	P	22			*O0	
		1	D	X	22			*O0	
12									BEZEL, Instrument Panel, Center
	68079962AA	1	D	P	22			*O0	
		1	D	H	22			*O0	[JBQ]
	68049191AA	1	D	P	22			*O0	[JPM]
		1	D	X	22			*O0	[JPM]
	1NF09XZAAA	1	D	H	22			*O0	[DV]
13									BEZEL, Instrument Cluster
	1NF071DVAA	1	D	H	22			*O0	
		1	D	P	22			*O0	
		1	D	X	22			*O0	
14									PANEL, Instrument Panel Closeout
	04595903AC	1	D	H	22			*O0	Auto Trans
		1	D	P	22			*O0	Auto Trans
	04662056AA	1	D	X	22			*O0	Manual Trans
		1	D	X	22			*O0	Auto Trans
		1	D	H	22			*O0	Manual Trans
15									REINFORCEMENT, Steering Column Cover
	04595892AA	1	D	H	22			*O0	
		1	D	P	22			*O0	
		1	D	X	22			*O0	
16									PANEL, Instrument Panel Closeout
	04595902AC	1	D	X	22			*O0	
		1	D	H	22			*O0	
		1	D	P	22			*O0	

DODGE CHALLENGER (LC)

SERIES	LINE	BODY	ENGINE	TRANSMISSION
H = HIGHLINE P = PREMIUM X = SPECIAL	D = DODGE	22 = 2-DR SEDAN TYPE #2	EGG = 3.5L High Output V6 24V MPI Engine ESF = 6.1L SRT HEMI V8 Engine EZC = 5.7L HEMI VCT Engine EZD = 5.7L Hemi VCT MDS Engine	DEC = 6-Speed Manual TREMEC Transmission DGJ = 5-Speed Auto W5A580 Transmission DGV = 4-Spd. Automatic VLP 42RLE Trans

AR = use ase required - = Non illustrrated part

Instrument Panel and Structure
Figure 50-1705

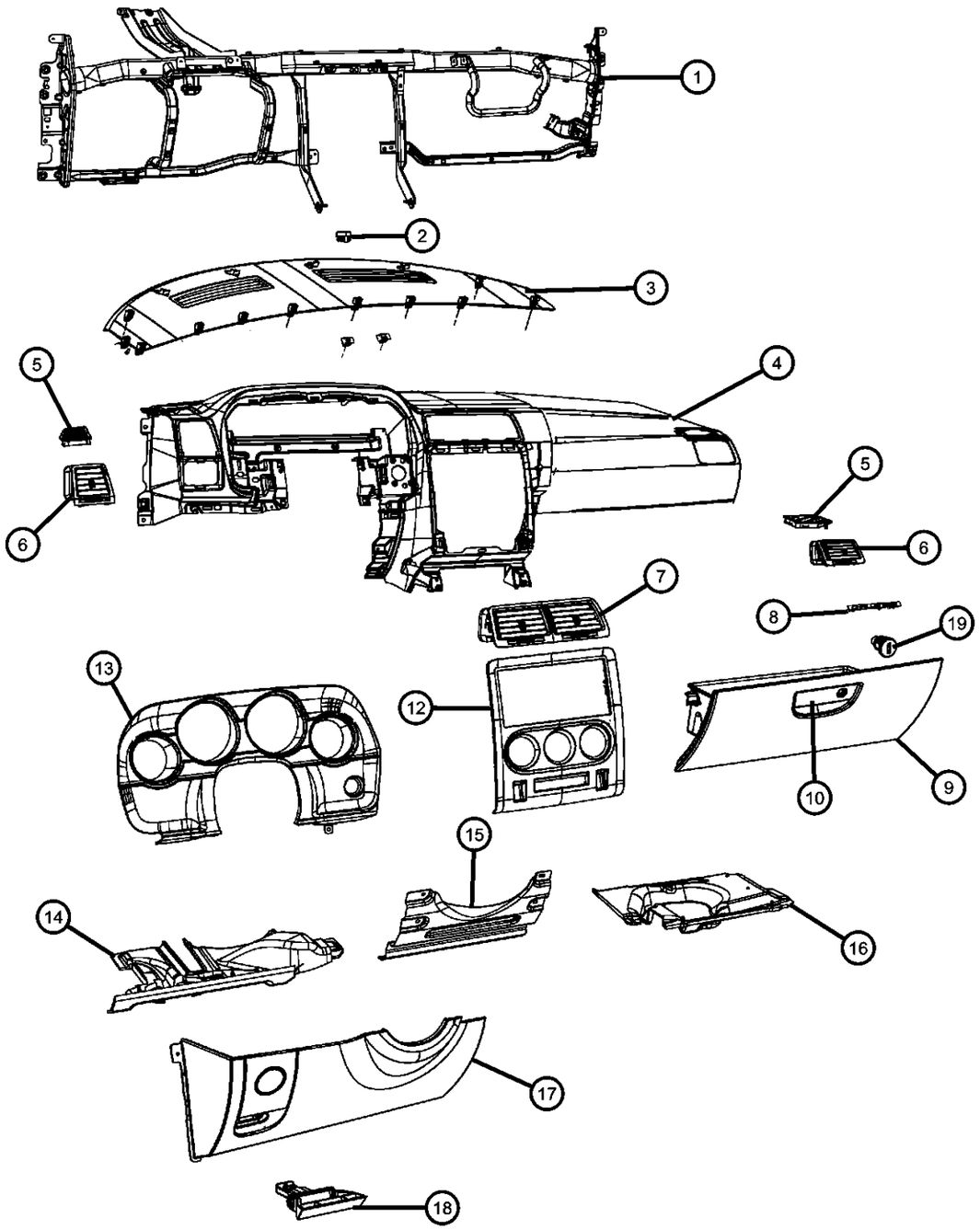

ITEM	PART NUMBER	QTY	LINE	SERIES	BODY	ENGINE	TRANS	TRIM	DESCRIPTION
17	1DE80XDVAC	1	D		22			*O0	COVER, Steering Column
18	68086630AA	1	D		22			*O0	HANDLE, Parking Brake
19	04746315	1	D		22				CYLINDER, Glove Box Lock
-20	04746873	1	D		22				SPRING, Lock Cylinder Tumbler
-21	05257132AB	1	D		22				TUMBLER, Number 1
-22	05257133AB	1	D		22				TUMBLER, Number 2
-23	05257134AB	1	D		22				TUMBLER, Number 3
-24	05257135AB	1	D		22				TUMBLER, Number 4

DODGE CHALLENGER (LC)

SERIES	LINE	BODY	ENGINE	TRANSMISSION
H = HIGHLINE	D = DODGE	22 = 2-DR SEDAN TYPE #2	EGG = 3.5L High Output V6 24V MPI Engine	DEC = 6-Speed Manual TREMEC Transmission
P = PREMIUM			ESF = 6.1L SRT HEMI V8 Engine	DGJ = 5-Speed Auto W5A580 Transmission
X = SPECIAL			EZC = 5.7L HEMI VCT Engine	DGV = 4-Spd. Automatic VLP 42RLE Trans
			EZD = 5.7L Hemi VCT MDS Engine	

AR = use ase required - = Non illustrrated part

Group - 60

Body Sheet Metal Except Doors

060-100 Floor Pans	**060-1000** Sunroof	**060-1100** Deck Lid	**060-1200** Shelf Panel
060-200 Plugs	**060-300** Fenders	**060-400** Hood and Hood Release	**060-500** Cowl and Dash Panel
060-600 Aperture Panel and Pillar Supports	**060-800** Body Structure Welds, Weatherstrips, Seals, Sealers and Adhesives	**060-900** Roof	

Group - 60 Body Sheet Metal Except Doors

Illustration Title — Group-Fig. No.

Floor Pans
Front, Center & Rear Floor Pan ..... Fig. 60 - 110
Pan, Torque Box ..... Fig. 60 - 176
Underbody Shields and Skidplates ..... Fig. 60 - 180

Plugs
Body Plugs and Exhauster ..... Fig. 60 - 205

Fenders
Front Fender ..... Fig. 60 - 305
Front Fender Shields ..... Fig. 60 - 350

Hood and Hood Release
Hood and Related Parts ..... Fig. 60 - 405
Hood Release and Latch ..... Fig. 60 - 410

Cowl and Dash Panel
Cowl, Dash Panel, & Related Parts ..... Fig. 60 - 505

Aperture Panel and Pillar Supports
Front Aperture Panel ..... Fig. 60 - 605
Fuel Filler Housing and Door ..... Fig. 60 - 611
Rear Aperture (Quarter) Panel ..... Fig. 60 - 650
Rear Wheelhouse Shields ..... Fig. 60 - 655

Body Structure Welds, Weatherstrips, Seals, Sealers and Adhesives
Body Weatherstrips and Seals ..... Fig. 60 - 805

Roof
Roof Panel ..... Fig. 60 - 905

Sunroof
Sunroof Glass and Component Parts ..... Fig. 60 - 1005

Deck Lid
Deck Lid and Related Parts ..... Fig. 60 - 1105

Shelf Panel
Rear Shelf Panel ..... Fig. 60 - 1205

Front, Center & Rear Floor Pan
Figure 60-110

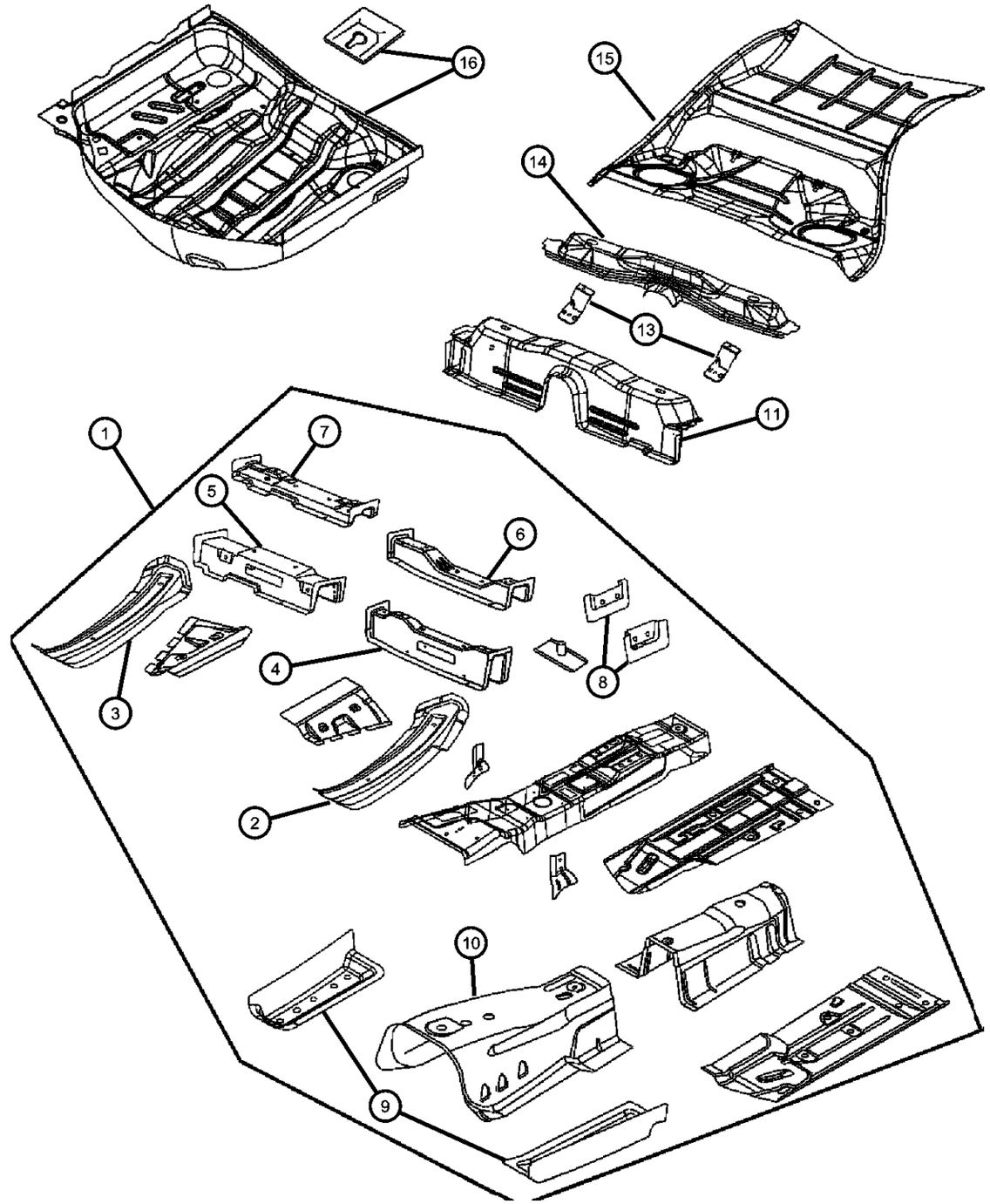

ITEM	PART NUMBER	QTY	LINE	SERIES	BODY	ENGINE	TRANS	TRIM	DESCRIPTION
1	05112731AD	1	D		22				PAN, Front Floor
2	04780833AA	1	D		22				EXTENSION, Front Side Rail
3	04780832AA	1	D		22				EXTENSION, Front Side Rail
4	05112697AA	1	D		22				CROSSMEMBER, Front Floor, Front Seat, FrontLeft
5	05112696AA	1	D		22				CROSSMEMBER, Front Floor, Front Seat FrontRight
6	05112703AA	1	D		22				CROSSMEMBER, Front Floor, Front Seat, RearLeft
7	05112702AA	1	D		22				CROSSMEMBER, Front Floor, Front Seat, RearRight
8									BRACKET, Drive Shaft Center Bearing
	05065210AA	1	D		22				Right
	05065211AA	1	D		22				Left
9									BRACKET, Transmission Mount
	05065208AB	1	D		22				Right
	05065209AB	1	D		22				Left
10	05112691AB	1	D		22				EXTENSION, Floor Pan
11	05112809AD	1	D		22				CROSSMEMBER, Floor Pan
-12	04780812AC	1	D		22				CROSSMEMBER, Rear Suspension
13	05065678AC	2	D		22				REINFORCEMENT, Seat Belt Anchor
14	04780792AD	1	D		22				REINFORCEMENT, Crossmember
15	05065311AB	1	D		22				PAN, Floor
16	04780793AJ	1	D		22				PAN, Rear Floor
-17	55235004	2	D		22				REINFORCEMENT, Battery Tray Attaching

DODGE CHALLENGER (LC)

SERIES	LINE	BODY	ENGINE	TRANSMISSION
H = HIGHLINE	D = DODGE	22 = 2-DR SEDAN TYPE #2	EGG = 3.5L High Output V6 24V MPI Engine	DEC = 6-Speed Manual TREMEC Transmission
P = PREMIUM			ESF = 6.1L SRT HEMI V8 Engine	DGJ = 5-Speed Auto W5A580 Transmission
X = SPECIAL			EZC = 5.7L HEMI VCT Engine	DGV = 4-Spd. Automatic VLP 42RLE Trans
			EZD = 5.7L Hemi VCT MDS Engine	

AR = use ase required - = Non illustrrated part

<< RETURN TO GROUP INDEX

Pan, Torque Box
Figure 60-176

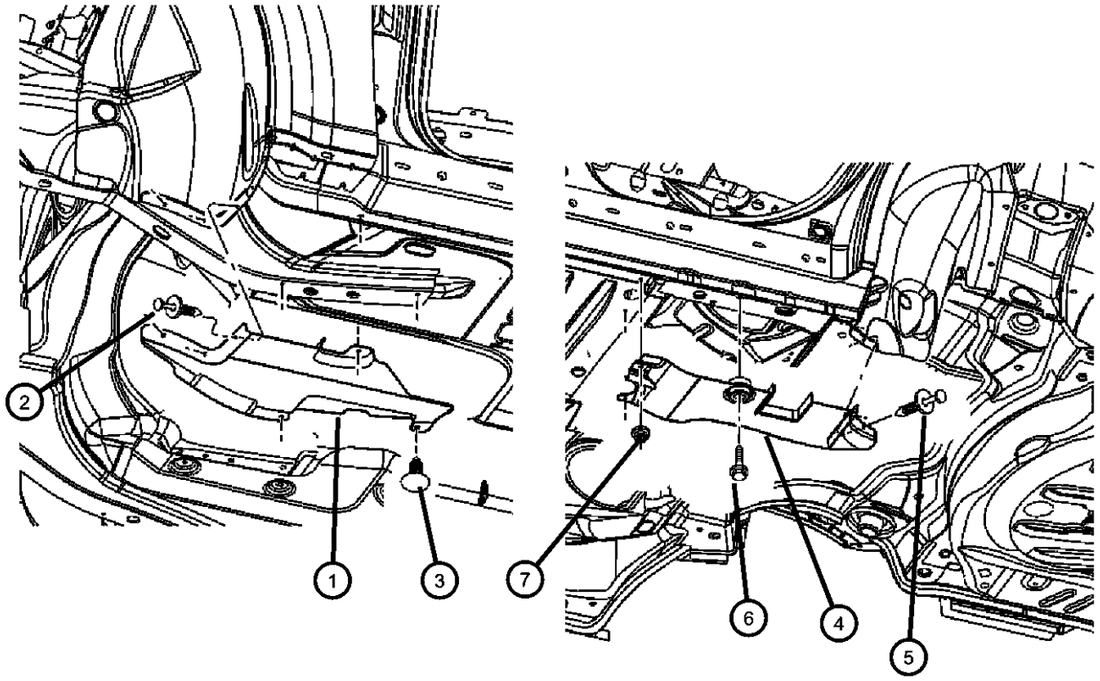

ITEM	PART NUMBER	QTY	LINE	SERIES	BODY	ENGINE	TRANS	TRIM	DESCRIPTION
1									COVER, Torque Box
	05065236AB	1	D		22				Right
	05065237AB	1	D		22				Left
2	06506132AA	6	D		22				PIN, Push In, M7.0x20.0
3	06506132AA	6	D		22				PIN, Push In, M7.0x20.0
4									SHIELD, Torque Box
	04780808AD	1	D		22				Right
	04780809AD	1	D		22				Left
5	06506132AA	4	D		22				PIN, Push In, M7.0x20.0
6	06504179	2	D		22				SCREW AND WASHER, Hex Head, M8-1.25x40
7	06503825	10	D		22				NUT AND WASHER, Hex, M6X1.00

DODGE CHALLENGER (LC)

SERIES	LINE	BODY	ENGINE	TRANSMISSION
H = HIGHLINE	D = DODGE	22 = 2-DR SEDAN TYPE #2	EGG = 3.5L High Output V6 24V MPI Engine	DEC = 6-Speed Manual TREMEC Transmission
P = PREMIUM			ESF = 6.1L SRT HEMI V8 Engine	DGJ = 5-Speed Auto W5A580 Transmission
X = SPECIAL			EZC = 5.7L HEMI VCT Engine	DGV = 4-Spd. Automatic VLP 42RLE Trans
			EZD = 5.7L Hemi VCT MDS Engine	

Underbody Shields and Skidplates
Figure 60-180

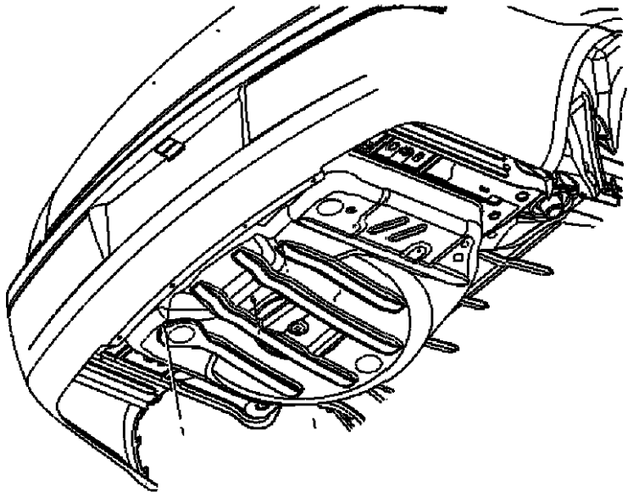

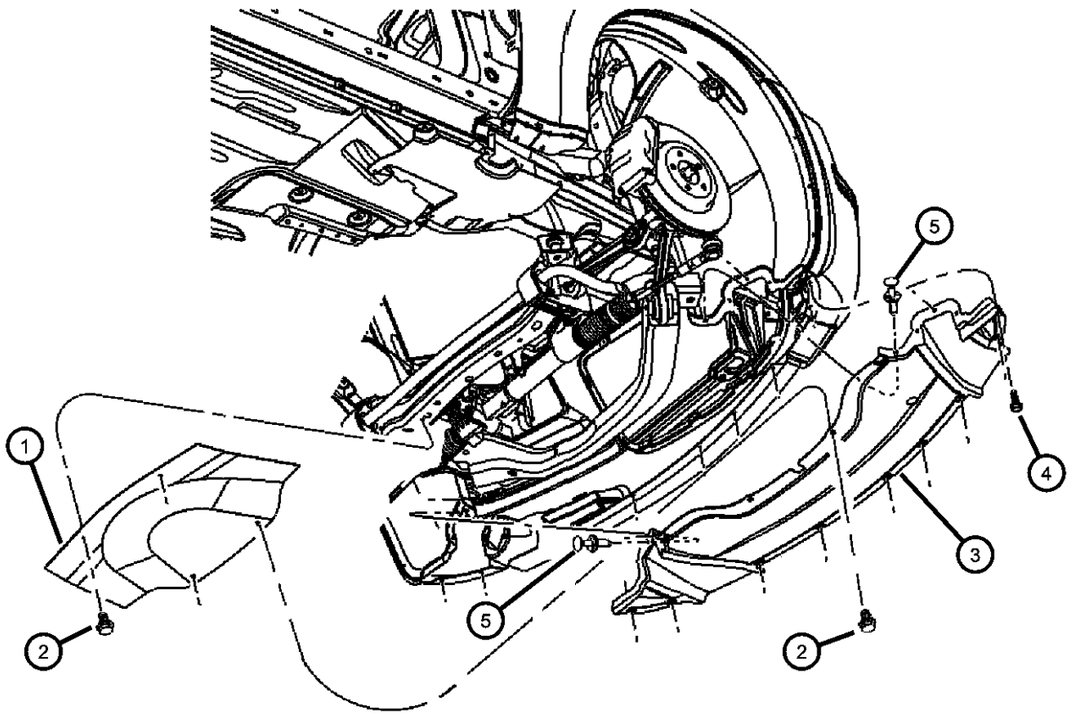

ITEM	PART NUMBER	QTY	LINE	SERIES	BODY	ENGINE	TRANS	TRIM	DESCRIPTION
1	04806074AH	1	D		22				BELLY PAN, Front
2	06508332AA	4	D		22				SCREW
3									BELLY PAN, Front
	05030943AA	1	D		22				Includes: Brake Air Ducts
	05028807AA	1	D		22				
4	06506161AA	8	D		22				SCREW AND WASHER, Tapping Hex Head, M4.2x1.41x20
5	06506132AA	4	D		22				PIN, Push In, M7.0x20.0
-6	04780894AG	1	D		22				SILENCER, Tunnel
-7	06101956	2	D		22				NUT, U, M6x1.00

DODGE CHALLENGER (LC)

SERIES	LINE	BODY	ENGINE	TRANSMISSION
H = HIGHLINE P = PREMIUM X = SPECIAL	D = DODGE	22 = 2-DR SEDAN TYPE #2	EGG = 3.5L High Output V6 24V MPI Engine ESF = 6.1L SRT HEMI V8 Engine EZC = 5.7L HEMI VCT Engine EZD = 5.7L Hemi VCT MDS Engine	DEC = 6-Speed Manual TREMEC Transmission DGJ = 5-Speed Auto W5A580 Transmission DGV = 4-Spd. Automatic VLP 42RLE Trans

Body Plugs and Exhauster
Figure 60-205

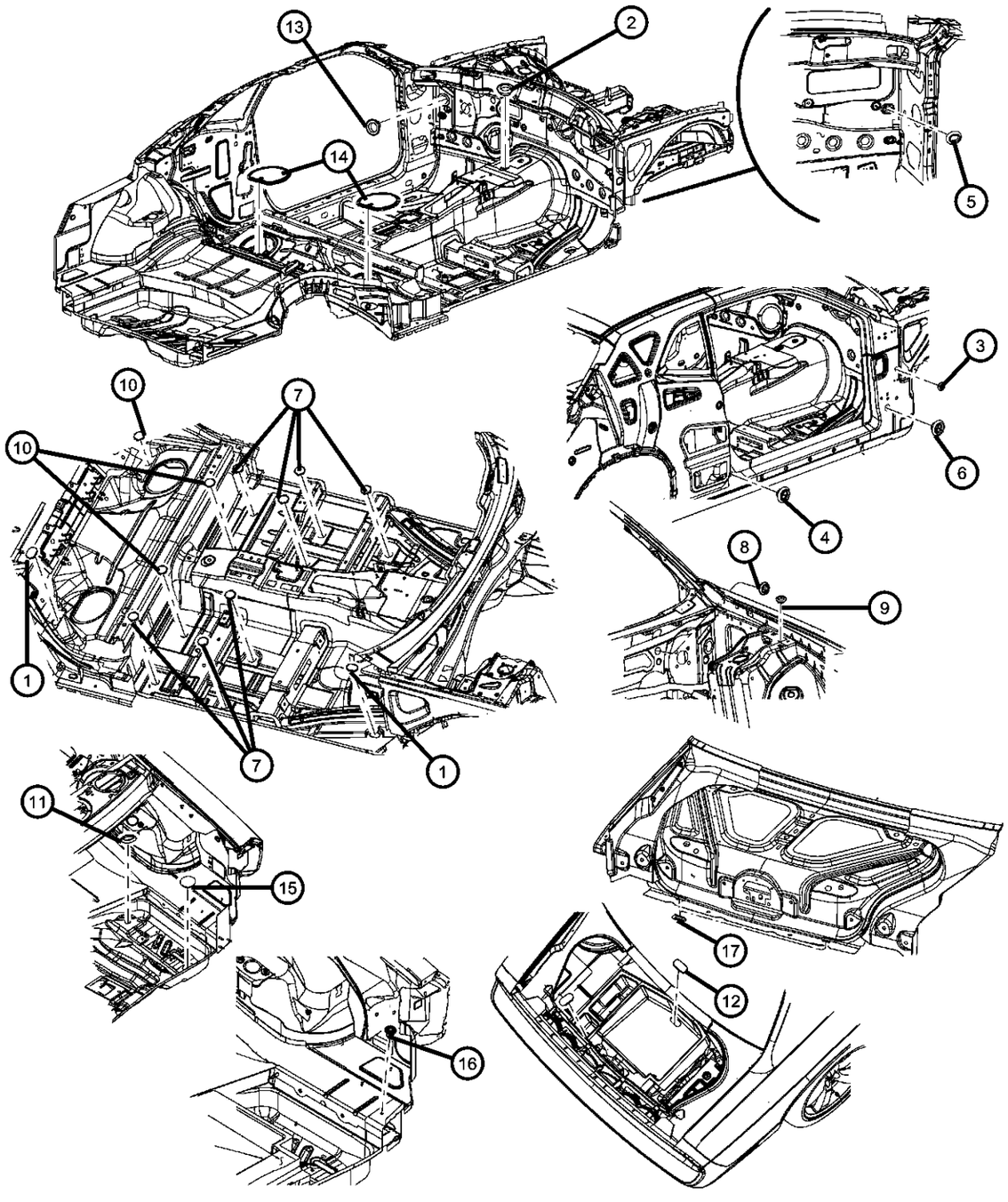

ITEM	PART NUMBER	QTY	LINE	SERIES	BODY	ENGINE	TRANS	TRIM	DESCRIPTION
1	04589408AA	1	D		22				PLUG, Floor Pan
2	04780615AB	1	D		22				PLUG, Body, .75 Diameter
3	04440294	2	D		22				PLUG, Body
4	04440294	2	D		22				PLUG, Body
5	05112208AA	1	D		22				PLUG
6	55257380AD	2	D		22				PLUG
7	04589535AA	7	D		22				PLUG
8	04670088	1	D		22				PLUG, Dash Panel, 35mm Diameter
9	04860223	2	D		22				PLUG, Body
10	04780521AB	5	D		22				PLUG, Top Seal
11	55176729AA	1	D		22				PLUG
12	05030289AA	2	D		22				PLUG
13		2							PLUG, Floor, 50mm, Not used for SRT, (NOT SERVICED)
14									COVER, Fuel Tank Access
	04780796AB	1	D		22				Right
	04780797AB	1	D		22				Left
15	04780520AA	3	D		22				PLUG, Top Seal
16	04608717AA	1	D		22				GROMMET
17	04814648	2	D		22				PLUG, Deck Lid
-18	55394330AB	2	D		22				EXHAUSTER, Bodyside Aperture

DODGE CHALLENGER (LC)

SERIES	LINE	BODY	ENGINE	TRANSMISSION
H = HIGHLINE P = PREMIUM X = SPECIAL	D = DODGE	22 = 2-DR SEDAN TYPE #2	EGG = 3.5L High Output V6 24V MPI Engine ESF = 6.1L SRT HEMI V8 Engine EZC = 5.7L HEMI VCT Engine EZD = 5.7L Hemi VCT MDS Engine	DEC = 6-Speed Manual TREMEC Transmission DGJ = 5-Speed Auto W5A580 Transmission DGV = 4-Spd. Automatic VLP 42RLE Trans

AR = use ase required - = Non illustrrated part

Front Fender
Figure 60-305

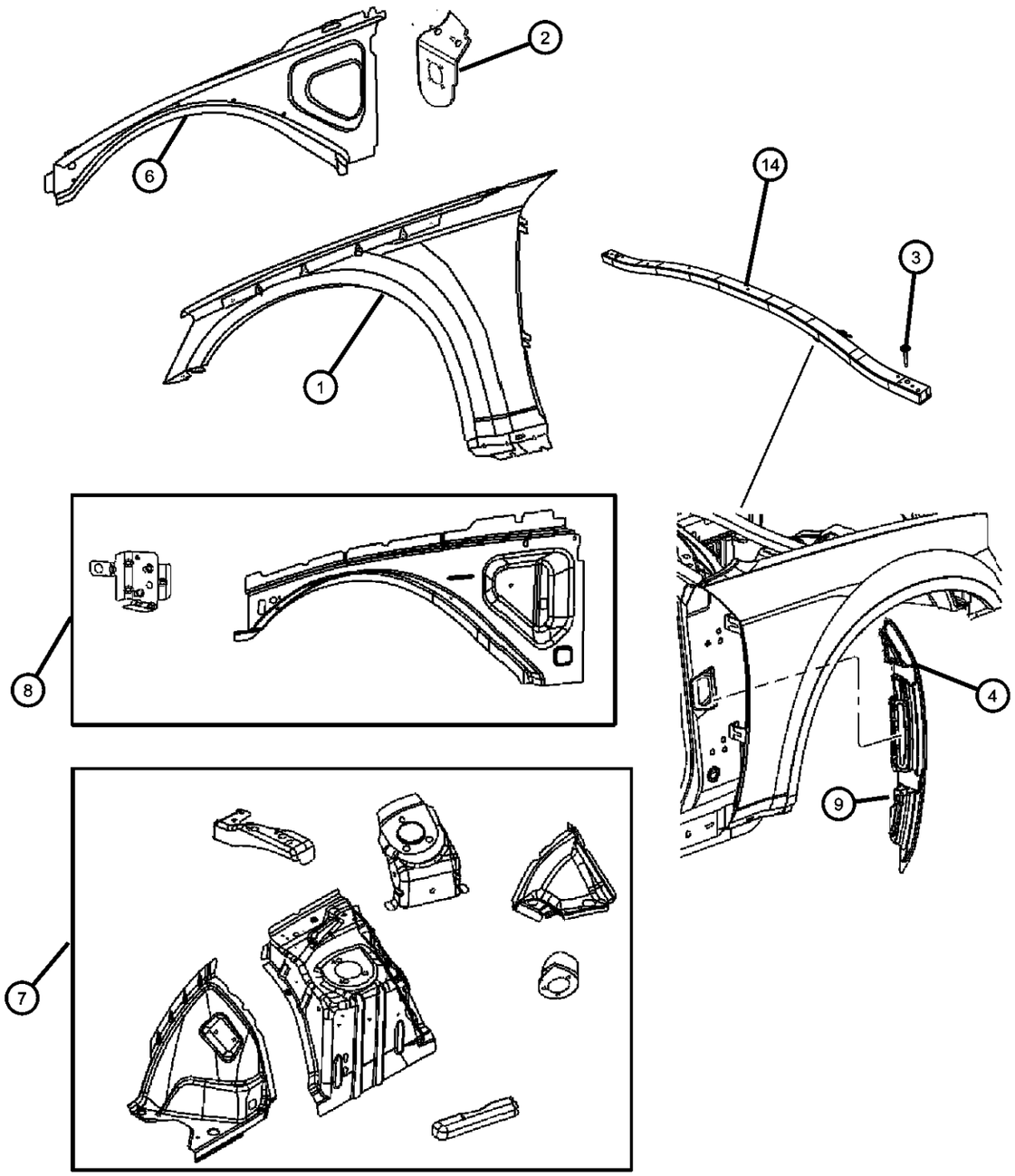

ITEM	PART NUMBER	QTY	LINE	SERIES	BODY	ENGINE	TRANS	TRIM	DESCRIPTION
1									FENDER, Front
	04816164AB	1	D		22				Right
	04816165AB	1	D		22				Left
2	05065320AC	4	D		22				BRACKET, Fender Dog Leg
3	06509393AA	4	D		22				SCREW
4									FOAM, Blocker
	68044113AA	1	D		22				Left
	68044112AA	1	D		22				Right
-5	06101712	4	D		22				NUT, U, M6x1.00
6									REINFORCEMENT, Body Side To Fender
	04780930AC	1	D		22				Right
	04780931AC	1	D		22				Left
7									PANEL, Front Wheelhouse
	05136779AK	1	D		22				Left
	05136778AK	1	D		22				Right
8									BEAM, Upper Load Path
	05065504AD	1	D		22				Right
	05065505AD	1	D		22				Left
9									WEATHERSTRIP, Front Door Mounted, Door to Fender
	55399153AB	1	D		22				Left
	55399152AB	1	D		22				Right
-10	05112056AA	1	D		22				BRACKET, Wiper Motor
-11	06505223AA	4	D		22				NUT, Spring, M6, Fender to Headlamp Mounting Bracket
-12	06505702AA	4	D		22				SCREW AND WASHER, Hex Head, M6x1x24.5, Fender to Fender Mounting Bracket
-13	06101308	2	D		22				NUT, U, M6x1.00
14	05065304AC	1	D		22				BRACE, Wheelhouse, Front Shock Tower Brace

DODGE CHALLENGER (LC)

SERIES	LINE	BODY	ENGINE	TRANSMISSION
H = HIGHLINE	D = DODGE	22 = 2-DR SEDAN TYPE #2	EGG = 3.5L High Output V6 24V MPI Engine	DEC = 6-Speed Manual TREMEC Transmission
P = PREMIUM			ESF = 6.1L SRT HEMI V8 Engine	DGJ = 5-Speed Auto W5A580 Transmission
X = SPECIAL			EZC = 5.7L HEMI VCT Engine	DGV = 4-Spd. Automatic VLP 42RLE Trans
			EZD = 5.7L Hemi VCT MDS Engine	

AR = use ase required - = Non illustrrated part

Front Fender Shields
Figure 60-350

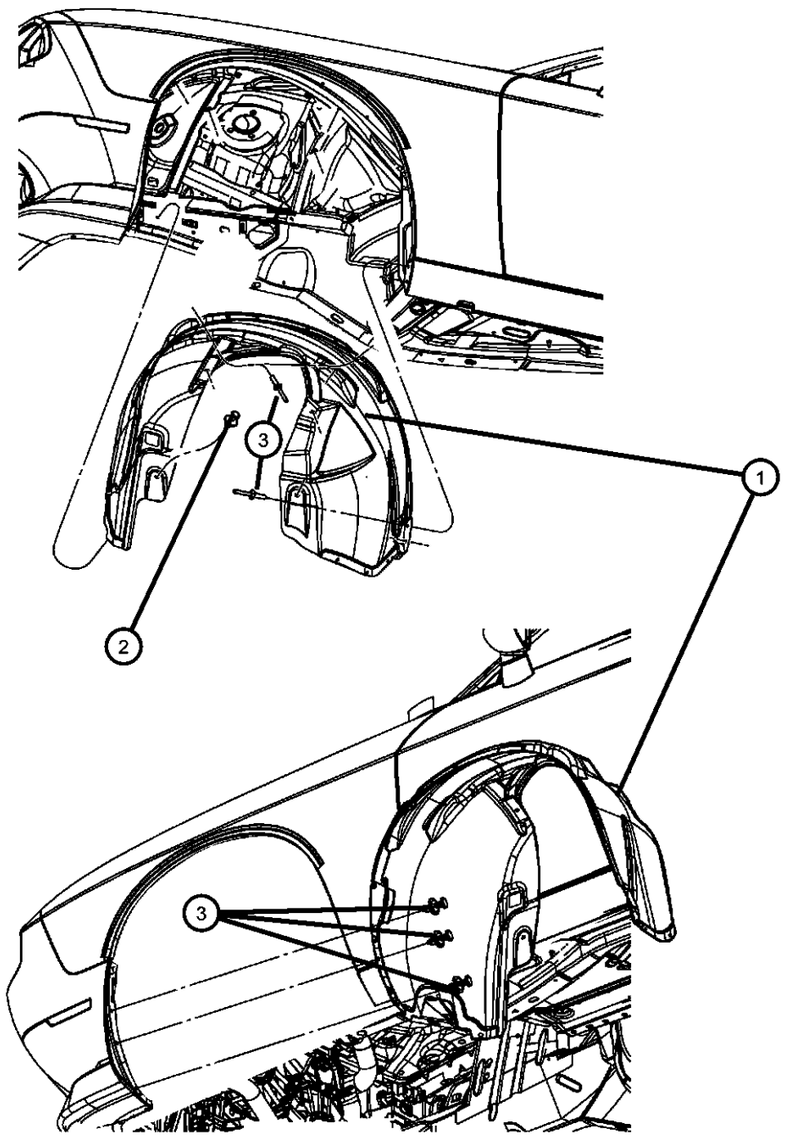

ITEM	PART NUMBER	QTY	LINE	SERIES	BODY	ENGINE	TRANS	TRIM	DESCRIPTION
1									SHIELD, Splash
	05028750AB	1	D		22				Right
	05028751AB	1	D		22				Left
2	06506132AA	12	D		22				PIN, Push In, M7.0x20.0
3	06504737	4	D		22				RIVET, Plastic

DODGE CHALLENGER (LC)

SERIES	LINE	BODY	ENGINE	TRANSMISSION
H = HIGHLINE	D = DODGE	22 = 2-DR SEDAN TYPE #2	EGG = 3.5L High Output V6 24V MPI Engine	DEC = 6-Speed Manual TREMEC Transmission
P = PREMIUM			ESF = 6.1L SRT HEMI V8 Engine	DGJ = 5-Speed Auto W5A580 Transmission
X = SPECIAL			EZC = 5.7L HEMI VCT Engine	DGV = 4-Spd. Automatic VLP 42RLE Trans
			EZD = 5.7L Hemi VCT MDS Engine	

Hood and Related Parts
Figure 60-405

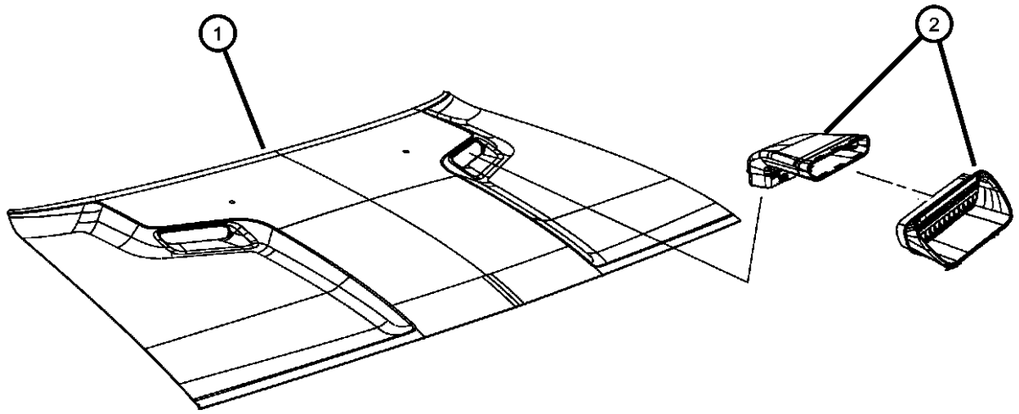

ITEM	PART NUMBER	QTY	LINE	SERIES	BODY	ENGINE	TRANS	TRIM	DESCRIPTION
1	68044225AA	1	D		22				HOOD
2									BEZEL, Hood
	05028794AA	1	D		22				[Non Air Functional], Right
	55399339AA	1	D		22				[Air Functional], Left
	05028795AA	1	D		22				[Non Air Functional], Left
	55399338AA	1	D		22				[Air Functional], Right

DODGE CHALLENGER (LC)

SERIES	LINE	BODY	ENGINE	TRANSMISSION
H = HIGHLINE P = PREMIUM X = SPECIAL	D = DODGE	22 = 2-DR SEDAN TYPE #2	EGG = 3.5L High Output V6 24V MPI Engine ESF = 6.1L SRT HEMI V8 Engine EZC = 5.7L HEMI VCT Engine EZD = 5.7L Hemi VCT MDS Engine	DEC = 6-Speed Manual TREMEC Transmission DGJ = 5-Speed Auto W5A580 Transmission DGV = 4-Spd. Automatic VLP 42RLE Trans

Hood Release and Latch
Figure 60-410

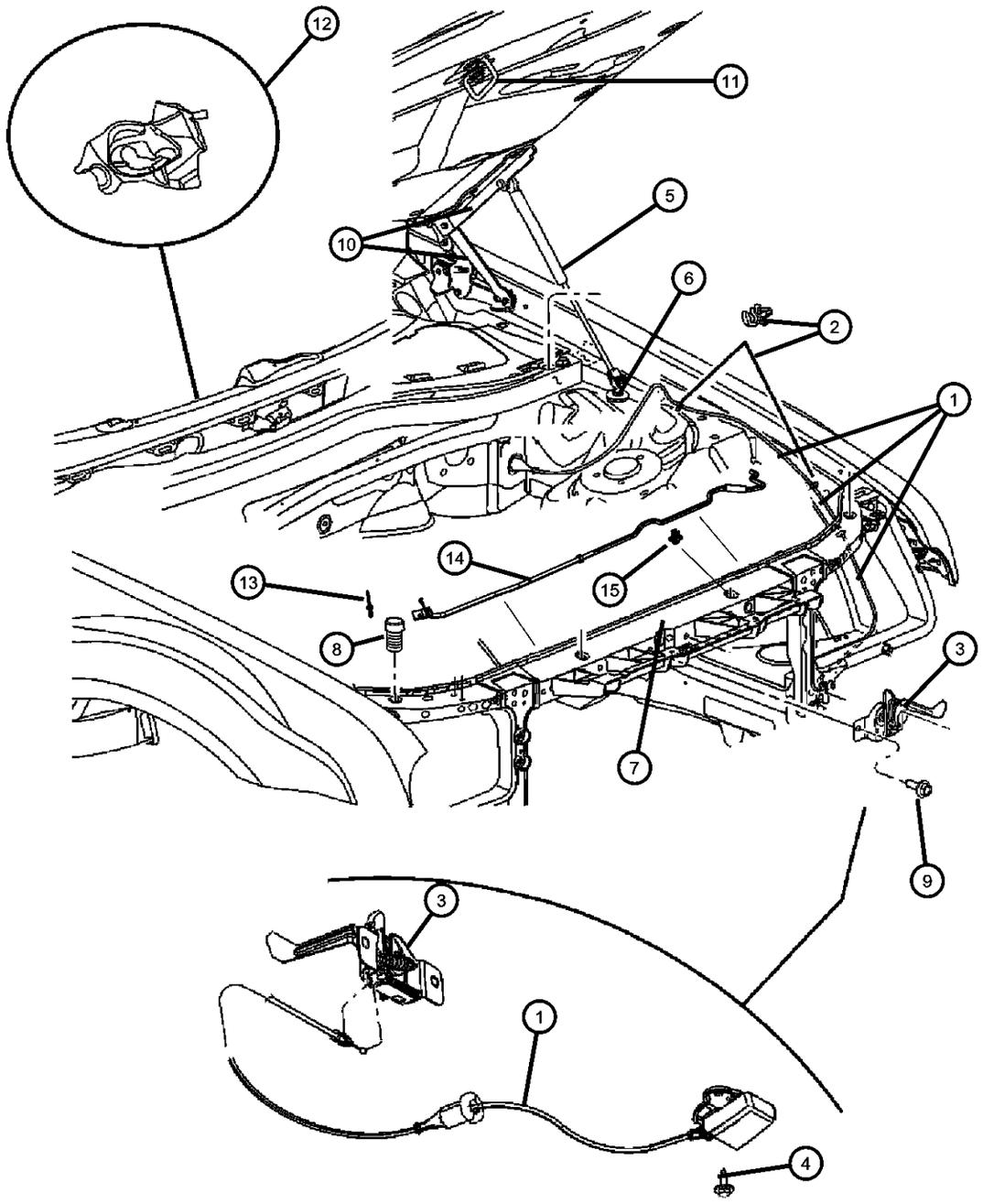

ITEM	PART NUMBER	QTY	LINE	SERIES	BODY	ENGINE	TRANS	TRIM	DESCRIPTION
1									RELEASE, Hood Latch
	05065522AE	1	D		22				[DGJ or DGV]
	05112931AA	1	D		22				[DEC]
2	04814094	3	D		22				CLIP, Hood Latch Release
3	04816182AA	1	D		22				LATCH, Hood
4	06104599AA	2	D		22				SCREW, Tapping
5									PROP, Gas
	68035556AA	1	D		22				Right
	68035557AA	1	D		22				Left
6	06507889AA	2	D		22				STUD, M8x
7	05028743AB	1	D		22				CROSSMEMBER, Front Support
8	04696592	2	D		22				BUMPER
9	06506077AA	2	D		22				SCREW AND WASHER, Hex Head
10									HINGE, Hood
	05065264AK	1	D		22				Right
	05065265AK	1	D		22				Left
11	05065256AA	1	D		22				STRIKER, Hood Latch
12	05065963AB	1	D		22				MUCKET, Cowl, Wiper Pivot, Cowl Seal
13	06035073	1	D		22				RIVET, Blind, .190x.670, For Prop Rod Mounting
14	04816176AA	1	D		22				PROP, Hood
15	06506223AA	1	D		22				CLIP, Wrap Around

DODGE CHALLENGER (LC)

SERIES	LINE	BODY	ENGINE	TRANSMISSION
H = HIGHLINE	D = DODGE	22 = 2-DR SEDAN TYPE #2	EGG = 3.5L High Output V6 24V MPI Engine	DEC = 6-Speed Manual TREMEC Transmission
P = PREMIUM			ESF = 6.1L SRT HEMI V8 Engine	DGJ = 5-Speed Auto W5A580 Transmission
X = SPECIAL			EZC = 5.7L HEMI VCT Engine	DGV = 4-Spd. Automatic VLP 42RLE Trans
			EZD = 5.7L Hemi VCT MDS Engine	

AR = use ase required - = Non illustrrated part

Cowl, Dash Panel, & Related Parts
Figure 60-505

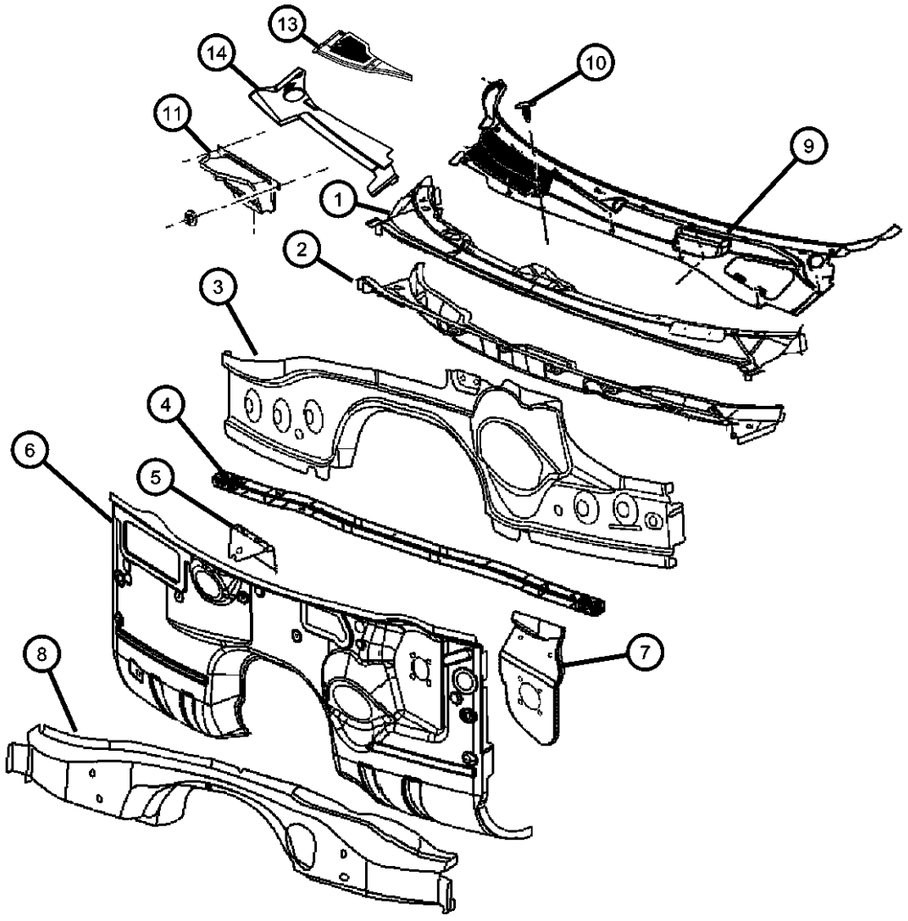

ITEM	PART NUMBER	QTY	LINE	SERIES	BODY	ENGINE	TRANS	TRIM	DESCRIPTION
1	05112871AB	1	D		22				PANEL, Cowl Plenum Upper
2	04780784AC	1	D		22				PANEL, Cowl Plenum Lower
3	04780921AC	1	D		22				REINFORCEMENT, Instrument Panel
4	05065304AC	1	D		22				BRACE, Wheelhouse
5	05065361AA	1	D		22				BRACKET, Wiper
6	05112745AA	1	D		22				PANEL, Dash
7	05112746AB	1	D		22				REINFORCEMENT, Brake Booster
8	04780841AE	1	D		22				CROSSMEMBER, Floor Pan
9	05028757AC	1	D		22				SCREEN, Cowl Top, Includes Access Doors And Seal To Hood
10	06506293AA	6	D		22				PIN, Push
11	04806293AB	1	D		22				PLENUM, Fresh Air Inlet
-12	55364097AB	2	D		22				TAPE, Upper Cowl Panel
13	04806222AB	1	D		22				PANEL, Under Hood Appearance
14									PANEL, Under Hood Appearance
	05028748AB	1	D		22				Right
	05028749AB	1	D		22				Left

DODGE CHALLENGER (LC)

SERIES	LINE	BODY	ENGINE	TRANSMISSION
H = HIGHLINE	D = DODGE	22 = 2-DR SEDAN TYPE #2	EGG = 3.5L High Output V6 24V MPI Engine	DEC = 6-Speed Manual TREMEC Transmission
P = PREMIUM			ESF = 6.1L SRT HEMI V8 Engine	DGJ = 5-Speed Auto W5A580 Transmission
X = SPECIAL			EZC = 5.7L HEMI VCT Engine	DGV = 4-Spd. Automatic VLP 42RLE Trans
			EZD = 5.7L Hemi VCT MDS Engine	

AR = use ase required - = Non illustrrated part

Front Aperture Panel
Figure 60-605

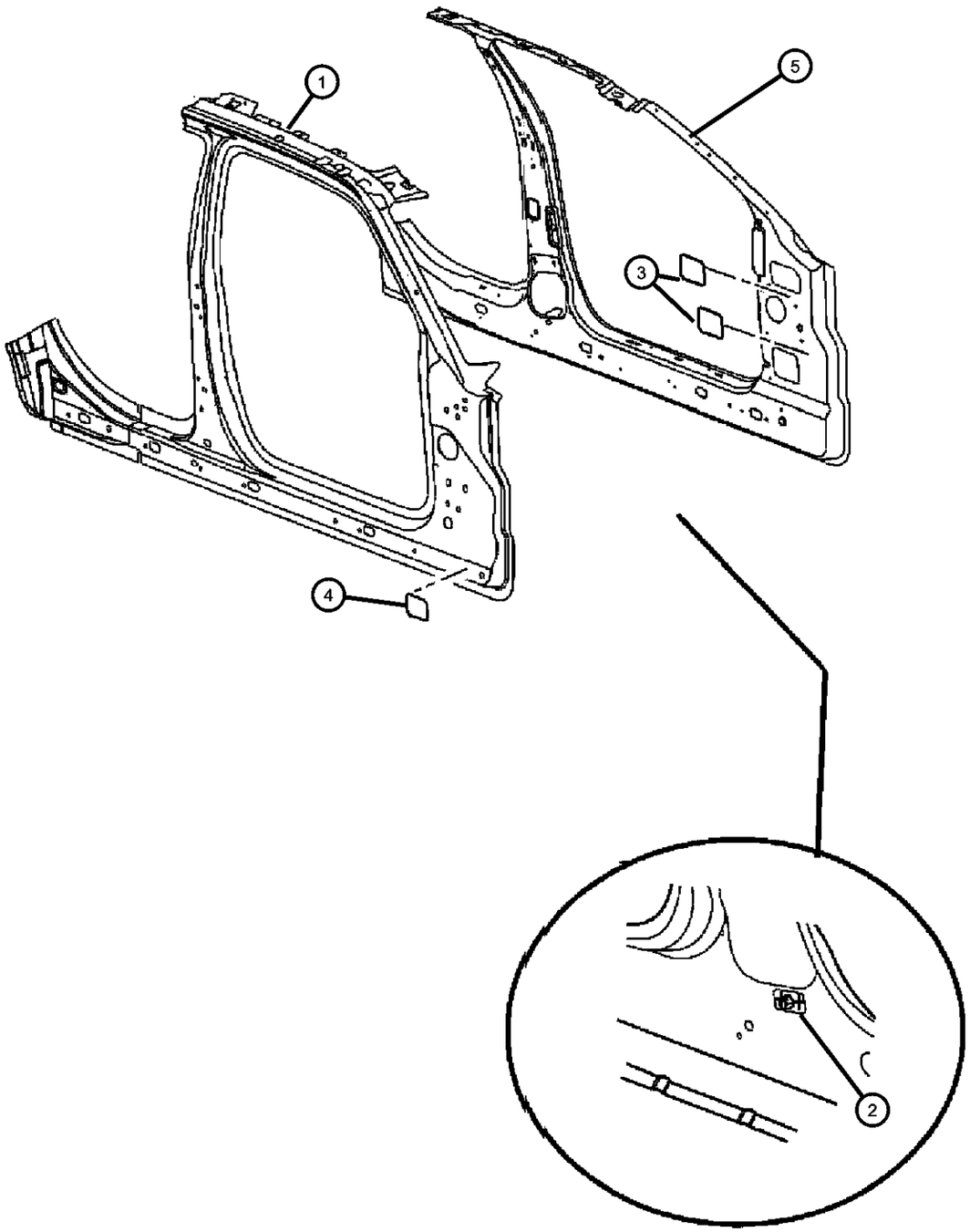

ITEM	PART NUMBER	QTY	LINE	SERIES	BODY	ENGINE	TRANS	TRIM	DESCRIPTION
1									PANEL, Body Side Aperture Front, Outer
	68043534AA	1	D		22				Right
	68043535AA	1	D		22				Left
2	06033150	3	D		22				NUT PLATE, .25-20
3	05065785AB	2	D		22				TAPE
4	55364097AB	2	D		22				TAPE
5									REINFORCEMENT, Body Side Aperture, Inner
	68044190AA	1	D		22				Right
	68044191AA	1	D		22				Left

DODGE CHALLENGER (LC)

SERIES	LINE	BODY	ENGINE	TRANSMISSION
H = HIGHLINE	D = DODGE	22 = 2-DR SEDAN TYPE #2	EGG = 3.5L High Output V6 24V MPI Engine	DEC = 6-Speed Manual TREMEC Transmission
P = PREMIUM			ESF = 6.1L SRT HEMI V8 Engine	DGJ = 5-Speed Auto W5A580 Transmission
X = SPECIAL			EZC = 5.7L HEMI VCT Engine	DGV = 4-Spd. Automatic VLP 42RLE Trans
			EZD = 5.7L Hemi VCT MDS Engine	

Fuel Filler Housing and Door
Figure 60-611

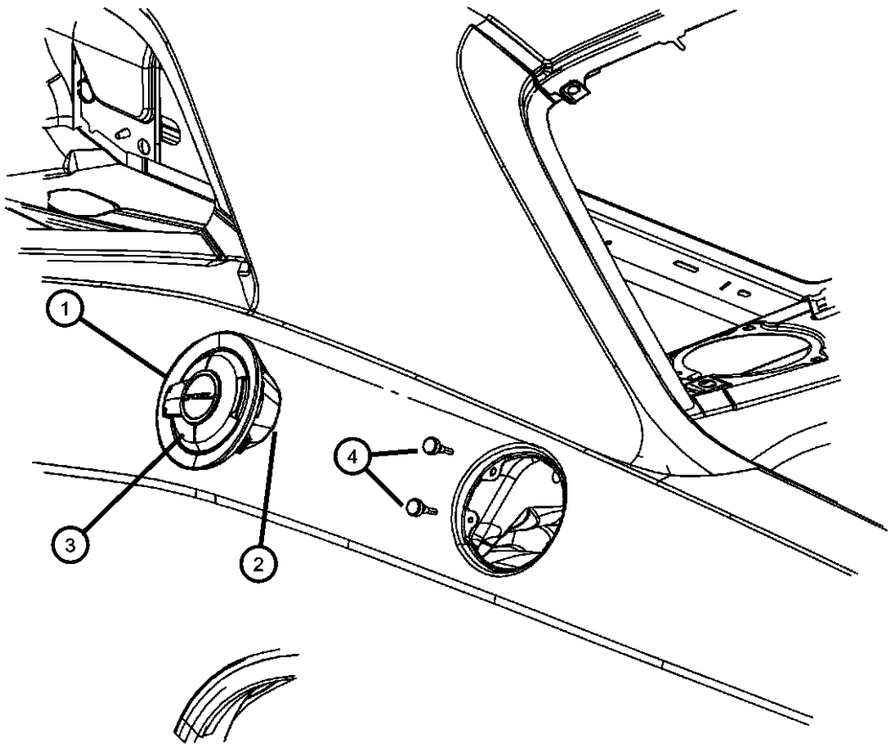

ITEM	PART NUMBER	QTY	LINE	SERIES	BODY	ENGINE	TRANS	TRIM	DESCRIPTION
1	05112873AA	1	D		22				DOOR, Fuel Fill, Aluminum, Includes Housing
2	68020934AA	1	D		22				HOUSING, Fuel Filler
3	68020951AC	1	D		22				DOOR, Fuel Fill
4	52102405AA	2	D		22				BUMPER, Fuel Door
-5	68054862AA	1	D		22				NAMEPLATE, Fuel

DODGE CHALLENGER (LC)

SERIES	LINE	BODY	ENGINE	TRANSMISSION
H = HIGHLINE P = PREMIUM X = SPECIAL	D = DODGE	22 = 2-DR SEDAN TYPE #2	EGG = 3.5L High Output V6 24V MPI Engine ESF = 6.1L SRT HEMI V8 Engine EZC = 5.7L HEMI VCT Engine EZD = 5.7L Hemi VCT MDS Engine	DEC = 6-Speed Manual TREMEC Transmission DGJ = 5-Speed Auto W5A580 Transmission DGV = 4-Spd. Automatic VLP 42RLE Trans

Rear Aperture (Quarter) Panel
Figure 60-650

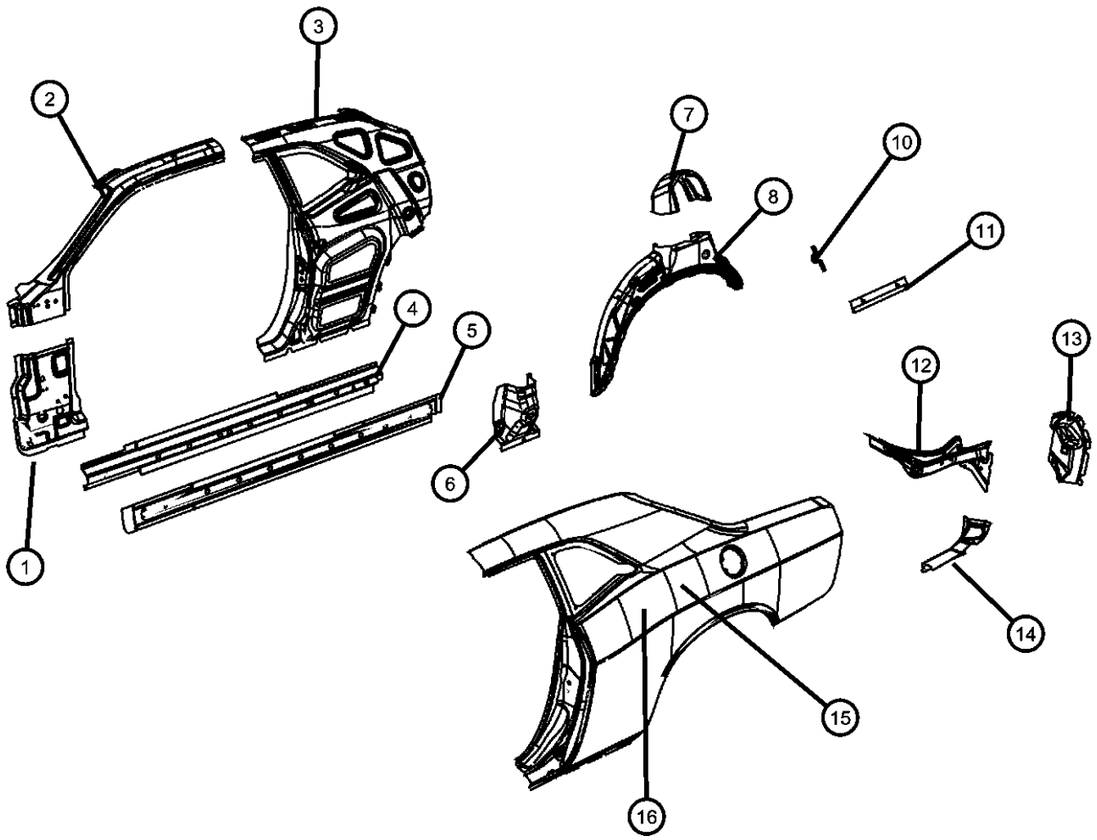

ITEM	PART NUMBER	QTY	LINE	SERIES	BODY	ENGINE	TRANS	TRIM	DESCRIPTION
1									REINFORCEMENT, A-Pillar, Lower
	05112900AB	1	D		22				Right
	05112901AB	1	D		22				Left
2									REINFORCEMENT, A-Pillar, Upper
	05112828AB	1	D		22				Right
	05112829AB	1	D		22				Left
3									REINFORCEMENT, C-Pillar
	05112890AC	1	D		22				Right
	05112891AC	1	D		22				Left
4									REINFORCEMENT, Sill
	05112874AA	1	D		22				Right
	05112875AA	1	D		22				Left
5									REINFORCEMENT, Sill
	05112896AA	1	D		22				Right
	05112897AA	1	D		22				Left
6									GUSSET, Body Side Sill
	05112898AB	1	D		22				Right
	05112899AB	1	D		22				Left
7									PANEL, Rear Wheelhouse, Inner
	05112992AB	1	D		22				Right
	05112993AB	1	D		22				Left
8									PANEL, Wheelhouse, Outer
	05112892AB	1	D		22				Right
	05112893AB	1	D		22				Left
-9									COVER, Wheelhouse, Floor Outer Extension
	04780902AD	1	D		22				Between Trunk Floor Pan and Quarter Panel, Right
	04780903AD	1	D		22				Between Trunk Floor Pan and Quarter Panel, Left
10	55399144AA	1	D		22				BAFFLE, B Pillar
11	55399140AA	1	D		22				BAFFLE, A Pillar
12									TROUGH, Deck Opening
	05112884AC	1	D		22				Right
	05112885AC	1	D		22				Left

DODGE CHALLENGER (LC)

SERIES	LINE	BODY	ENGINE	TRANSMISSION
H = HIGHLINE P = PREMIUM X = SPECIAL	D = DODGE	22 = 2-DR SEDAN TYPE #2	EGG = 3.5L High Output V6 24V MPI Engine ESF = 6.1L SRT HEMI V8 Engine EZC = 5.7L HEMI VCT Engine EZD = 5.7L Hemi VCT MDS Engine	DEC = 6-Speed Manual TREMEC Transmission DGJ = 5-Speed Auto W5A580 Transmission DGV = 4-Spd. Automatic VLP 42RLE Trans

AR = use ase required - = Non illustrrated part

Rear Aperture (Quarter) Panel
Figure 60-650

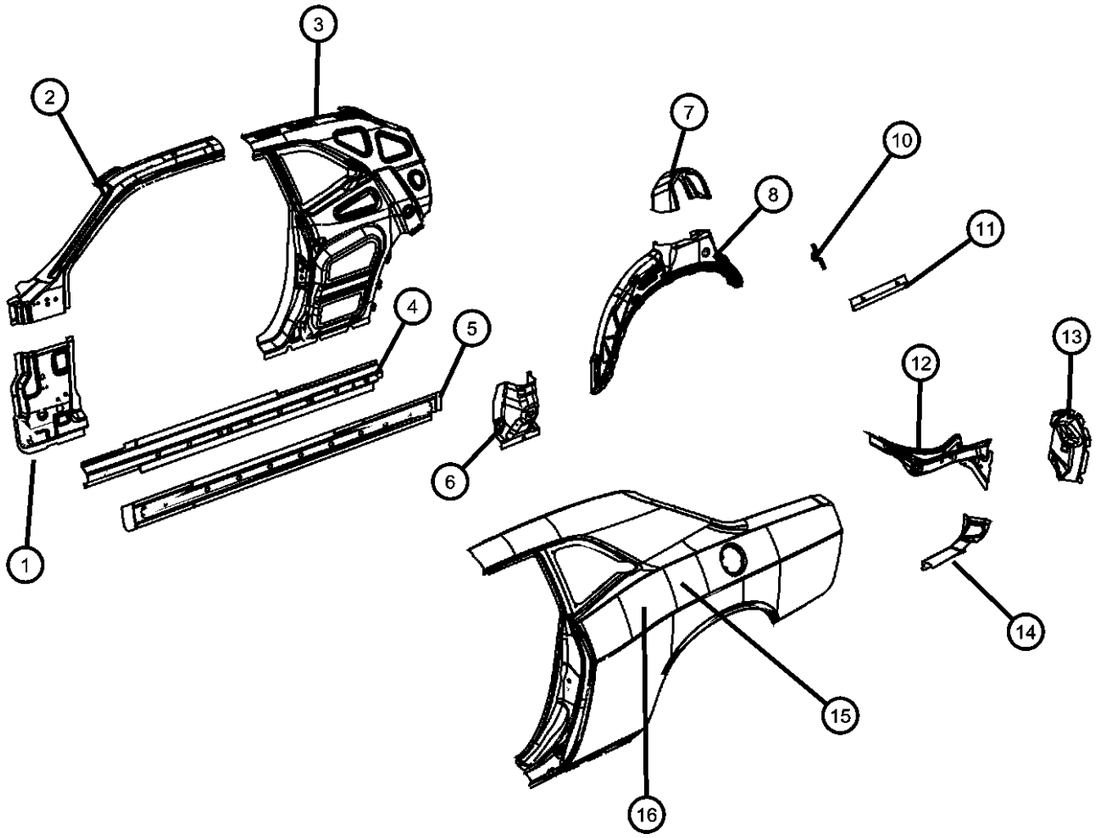

ITEM	PART NUMBER	QTY	LINE	SERIES	BODY	ENGINE	TRANS	TRIM	DESCRIPTION
13									PANEL, Taillamp Mounting
	05112886AB	1	D		22				Right
	05112887AB	1	D		22				Left
14									REINFORCEMENT, Quarter Inner
	05112888AA	1	D		22				Right
	05112889AA	1	D		22				Left
15									PANEL, Body Side Aperture Rear
	68043536AA	1	D		22				Right
	68043537AA	1	D		22				Left
16									REINFORCEMENT, Body Side Aperture Rear, Inner
	68044192AA	1	D		22				Right
	68044193AA	1	D		22				Left
-17									BAFFLE, B Pillar
	68043308AA	1	D		22				Right Inner
	68043309AA	1	D		22				Left Inner

DODGE CHALLENGER (LC)

SERIES	LINE	BODY	ENGINE	TRANSMISSION
H = HIGHLINE P = PREMIUM X = SPECIAL	D = DODGE	22 = 2-DR SEDAN TYPE #2	EGG = 3.5L High Output V6 24V MPI Engine ESF = 6.1L SRT HEMI V8 Engine EZC = 5.7L HEMI VCT Engine EZD = 5.7L Hemi VCT MDS Engine	DEC = 6-Speed Manual TREMEC Transmission DGJ = 5-Speed Auto W5A580 Transmission DGV = 4-Spd. Automatic VLP 42RLE Trans

Rear Wheelhouse Shields
Figure 60-655

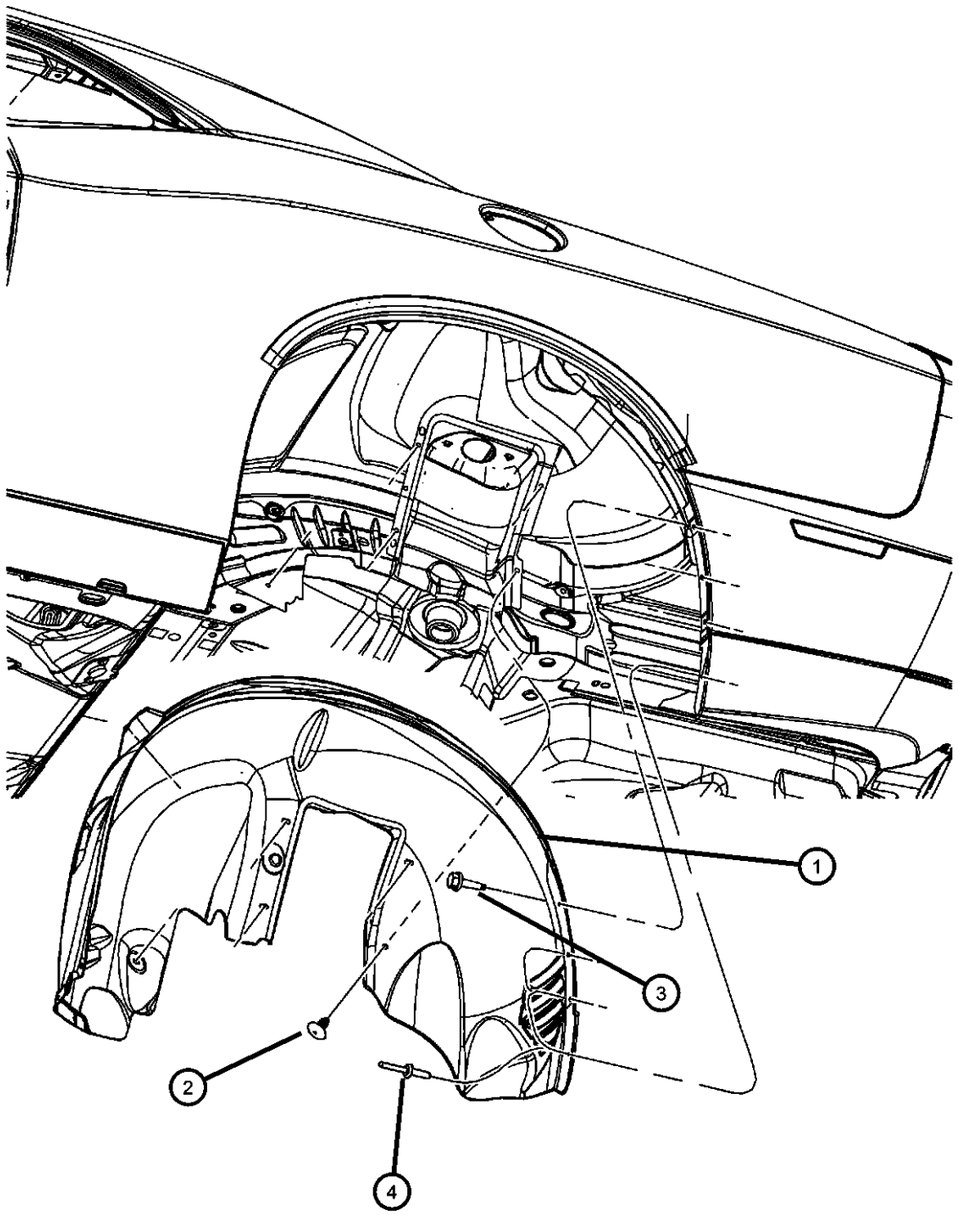

ITEM	PART NUMBER	QTY	LINE	SERIES	BODY	ENGINE	TRANS	TRIM	DESCRIPTION
1									SHIELD, Wheelhouse
	05028746AB	1	D		22				Right
	05028747AB	1	D		22				Left
2	04860379AA	12	D		22				PIN, Push In, M8 X 1.25 X 20
3	06503929	2	D		22				SCREW AND WASHER, Coned Pilot, M6x1x30
4	06504737	4	D		22				RIVET, Plastic

DODGE CHALLENGER (LC)

SERIES	LINE	BODY	ENGINE	TRANSMISSION
H = HIGHLINE	D = DODGE	22 = 2-DR SEDAN TYPE #2	EGG = 3.5L High Output V6 24V MPI Engine	DEC = 6-Speed Manual TREMEC Transmission
P = PREMIUM			ESF = 6.1L SRT HEMI V8 Engine	DGJ = 5-Speed Auto W5A580 Transmission
X = SPECIAL			EZC = 5.7L HEMI VCT Engine	DGV = 4-Spd. Automatic VLP 42RLE Trans
			EZD = 5.7L Hemi VCT MDS Engine	

AR = use ase required - = Non illustrrated part

Body Weatherstrips and Seals
Figure 60-805

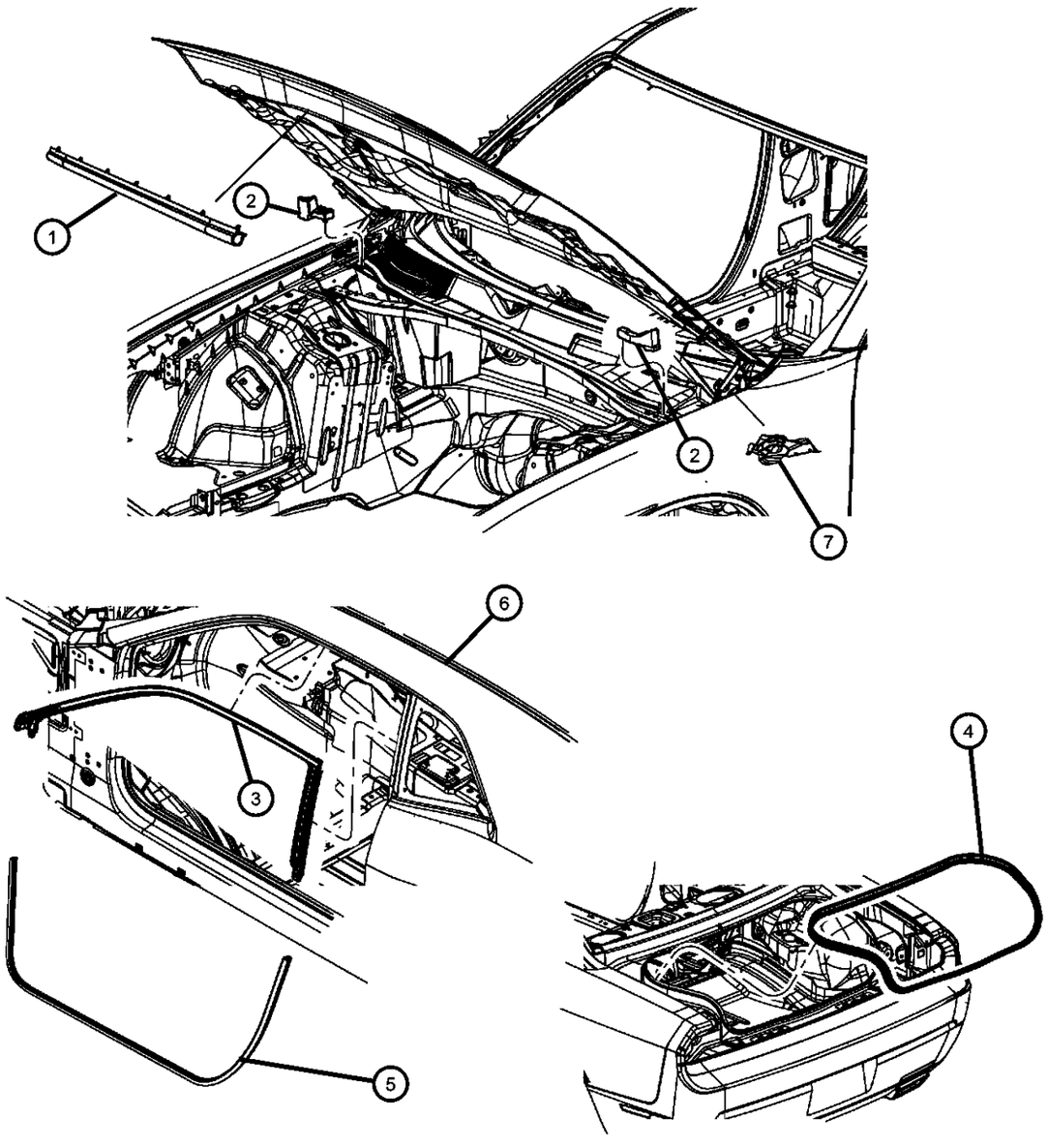

ITEM	PART NUMBER	QTY	LINE	SERIES	BODY	ENGINE	TRANS	TRIM	DESCRIPTION
1	05065322AC	1	D		22				WEATHERSTRIP, Hood to Radiator
2									SEAL, Fender To Cowl
	55399148AA	1	D		22				Right
	55399149AA	1	D		22				Left
3									RUN, Front Door Glass
	04575890AC	1	D		22				Right
	04575891AC	1	D		22				Left
4	04575880AB	1	D		22				WEATHERSTRIP, Decklid
5	05160346AA	2	D		22				WEATHERSTRIP, Body Side
6	68051392AA	1	D		22				SEAL, Hood
7	05065963AB	1	D		22				MUCKET, Cowl, Wiper Pivot

DODGE CHALLENGER (LC)

SERIES	LINE	BODY	ENGINE	TRANSMISSION
H = HIGHLINE	D = DODGE	22 = 2-DR SEDAN TYPE #2	EGG = 3.5L High Output V6 24V MPI Engine	DEC = 6-Speed Manual TREMEC Transmission
P = PREMIUM			ESF = 6.1L SRT HEMI V8 Engine	DGJ = 5-Speed Auto W5A580 Transmission
X = SPECIAL			EZC = 5.7L HEMI VCT Engine	DGV = 4-Spd. Automatic VLP 42RLE Trans
			EZD = 5.7L Hemi VCT MDS Engine	

AR = use ase required - = Non illustrrated part

Roof Panel
Figure 60-905

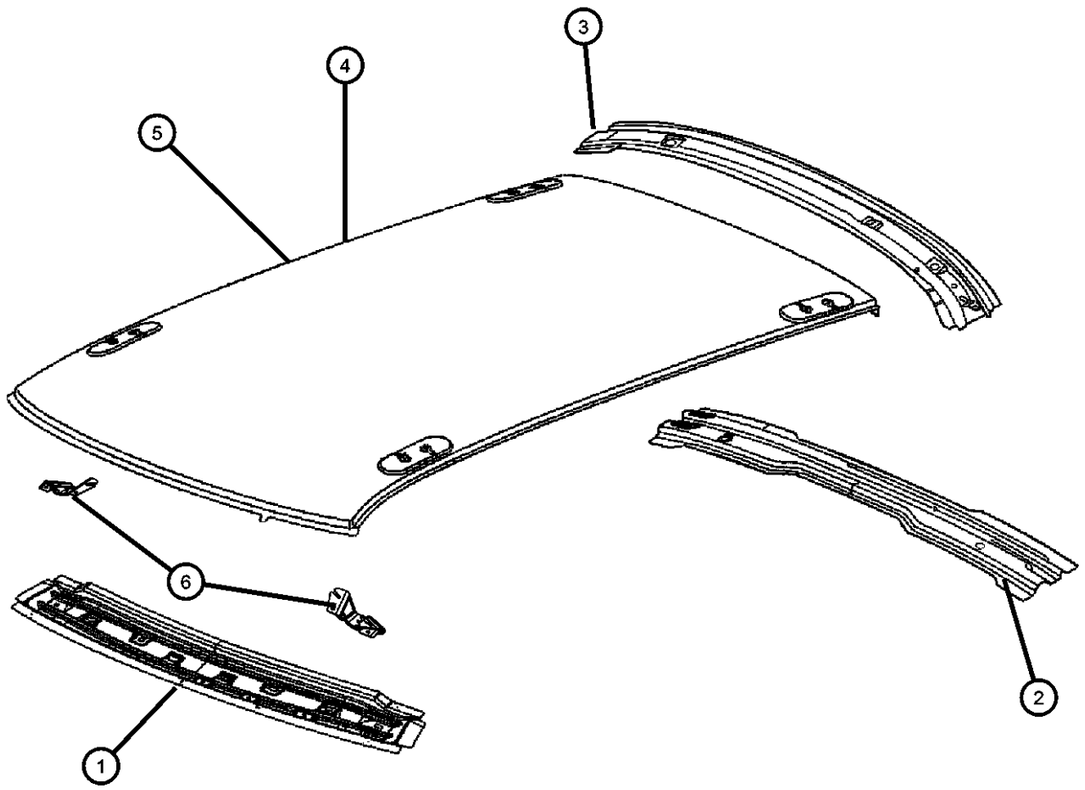

ITEM	PART NUMBER	QTY	LINE	SERIES	BODY	ENGINE	TRANS	TRIM	DESCRIPTION
1	68019564AA	1	D		22				HEADER, Roof Front
2	05112801AA	1	D		22				BOW, Roof, Center, Without [GWA]
3	05112800AC	1	D		22				HEADER, Roof Rear
4	05112795AA	1	D		22				PANEL, Roof, Without Sunroof Opening
5	05112796AA	1	D		22				PANEL, Roof, With Sunroof Opening
6									REINFORCEMENT, Sun Visor
	05112918AA	1	D		22				Right
	05112919AA	1	D		22				Left

DODGE CHALLENGER (LC)

SERIES	LINE	BODY	ENGINE	TRANSMISSION
H = HIGHLINE P = PREMIUM X = SPECIAL	D = DODGE	22 = 2-DR SEDAN TYPE #2	EGG = 3.5L High Output V6 24V MPI Engine ESF = 6.1L SRT HEMI V8 Engine EZC = 5.7L HEMI VCT Engine EZD = 5.7L Hemi VCT MDS Engine	DEC = 6-Speed Manual TREMEC Transmission DGJ = 5-Speed Auto W5A580 Transmission DGV = 4-Spd. Automatic VLP 42RLE Trans

Sunroof Glass and Component Parts
Figure 60-1005

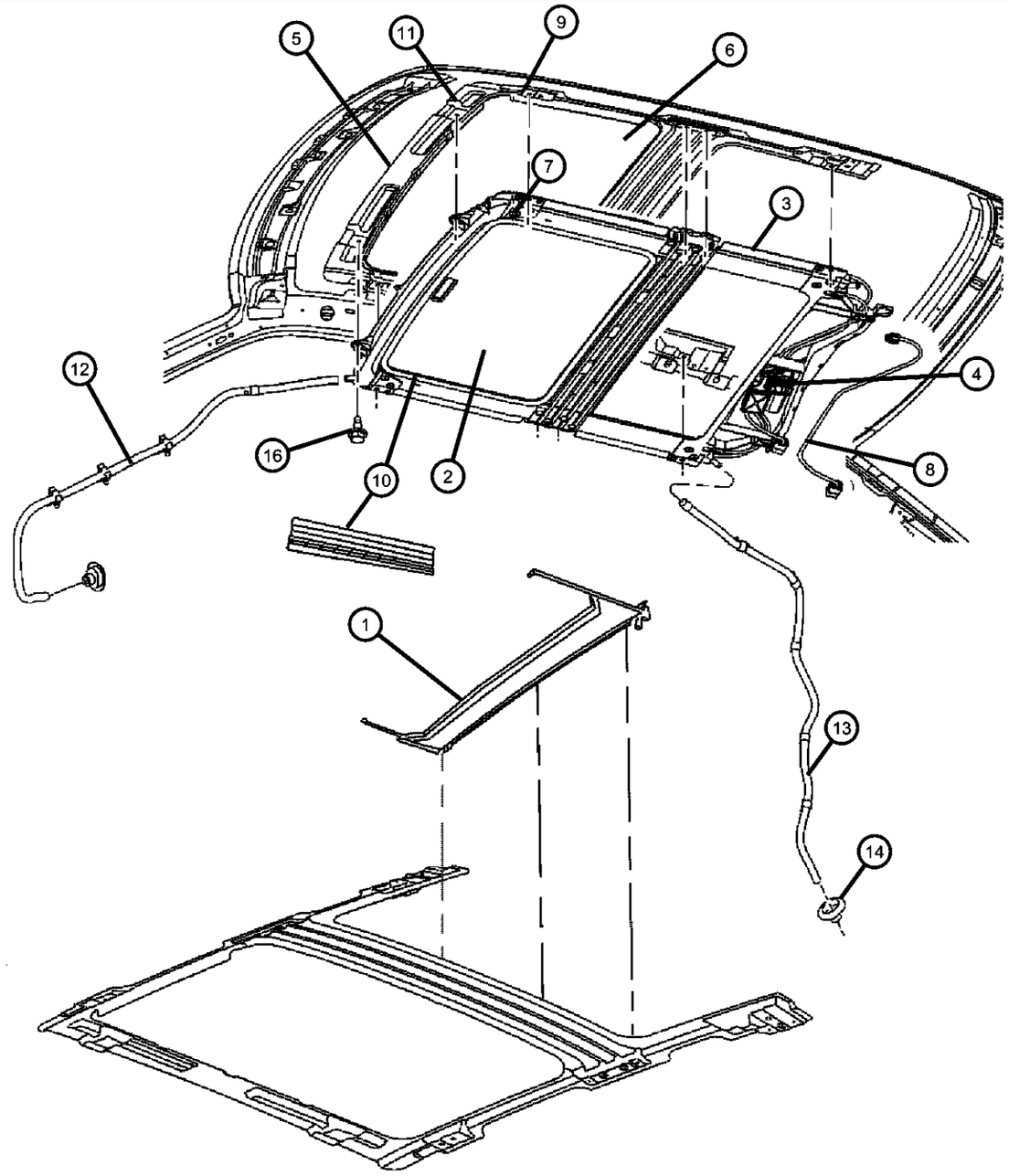

ITEM	PART NUMBER	QTY	LINE	SERIES	BODY	ENGINE	TRANS	TRIM	DESCRIPTION
1	05137559AD	1	D		22				CHANNEL, Sunroof Drain, Includes Foam Weatherstrip
2	1JY39XDVAA	1	D		22				SUNSHADE, Sunroof
3	68036050AA	1	D		22				FRAME, Sunroof
4	68056964AA	1	D		22				MOTOR/MODULE, Sunroof
5	05137554AC	1	D		22				DEFLECTOR, Sunroof Wind
6	68036052AA	1	D		22				GLASS, Sunroof
7	06508405AA	4	D		22				SCREW
8	68036051AA	1	D		22				WIRING, Sunroof
9	1JY42XDVAA	1	D		22				TRIM LACE, Sunroof
10	05137558AB	2	D		22				COVER, Sunroof Mechanism
11									GUIDE, Sunroof Glass
	05139814AA	1	D		22				Right
	05139815AA	1	D		22				Left
12									TUBE, Sunroof Drain
	05112805AA	1	D		22				Left Front
	05112804AA	1	D		22				Right Front
13	05112806AB	2	D		22				TUBE, Sunroof Drain
14	04814215	2	D		22				GROMMET, Tube
-15	06101694	4	D		22				NUT, M6x1.00
16		4							SCREW AND WASHER, Hex Head, M6x1x20, Sunroof to Roof Reinforcement, (NOT SERVICED)
-17	68003812AA	2	D		22				CONDUIT, Sunroof Actuator Cable, Rear

DODGE CHALLENGER (LC)

SERIES	LINE	BODY	ENGINE	TRANSMISSION
H = HIGHLINE P = PREMIUM X = SPECIAL	D = DODGE	22 = 2-DR SEDAN TYPE #2	EGG = 3.5L High Output V6 24V MPI Engine ESF = 6.1L SRT HEMI V8 Engine EZC = 5.7L HEMI VCT Engine EZD = 5.7L Hemi VCT MDS Engine	DEC = 6-Speed Manual TREMEC Transmission DGJ = 5-Speed Auto W5A580 Transmission DGV = 4-Spd. Automatic VLP 42RLE Trans

AR = use ase required - = Non illustrrated part

Deck Lid and Related Parts
Figure 60-1105

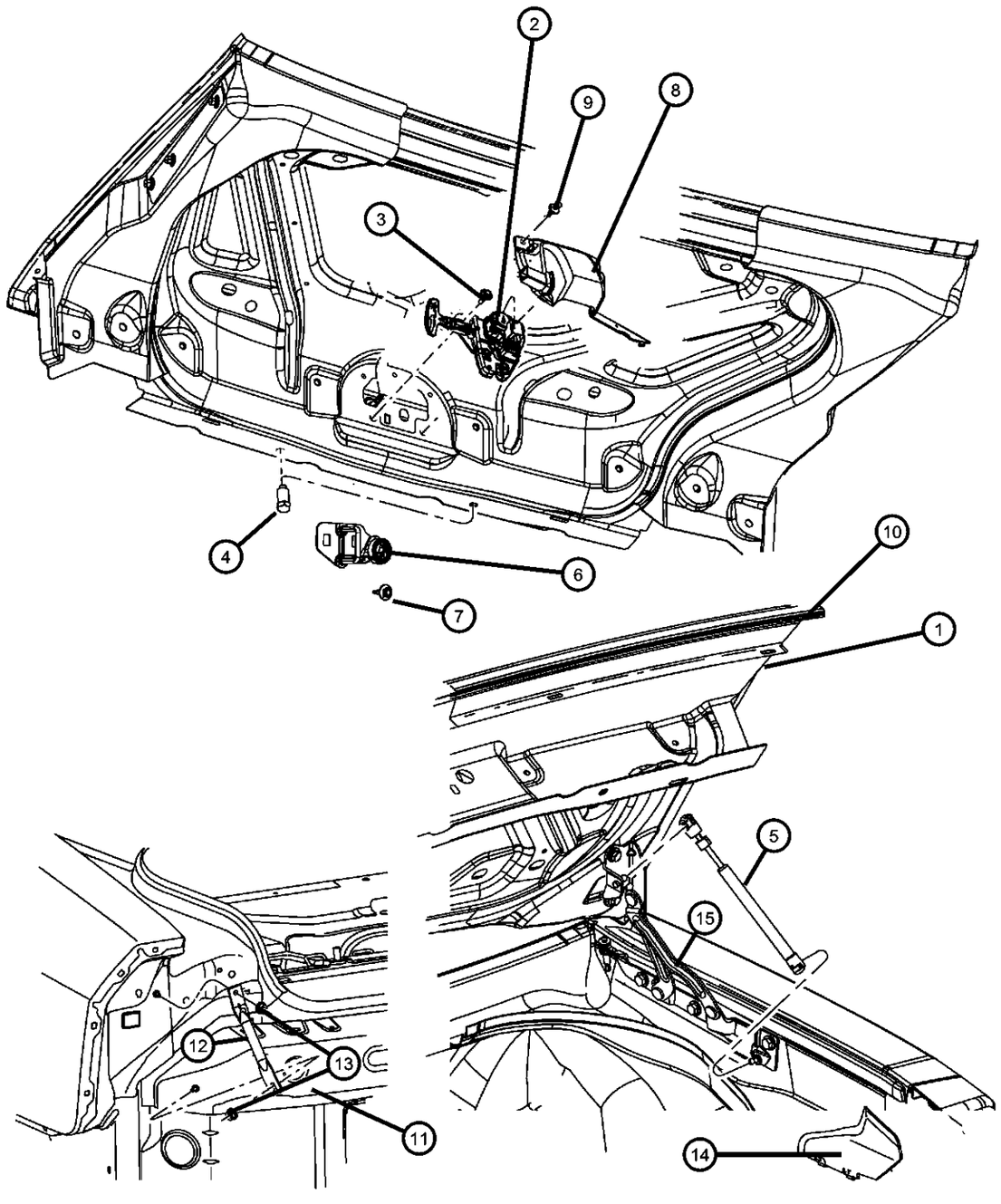

ITEM	PART NUMBER	QTY	LINE	SERIES	BODY	ENGINE	TRANS	TRIM	DESCRIPTION
1	68044234AA	1	D		22				DECKLID
2	04589217AA	1	D		22				LATCH, Decklid
3	06104368AA	2	D		22				BOLT AND WASHER, Hex Head, M6X1.00X25.00
4	04103165	2	D		22				BUMPER, Hood And Decklid
5	04589645AA	2	D		22				PROP, Gas
6	04589653AA	1	D		22				STRIKER, Decklid Latch
7	06507648AA	2	D		22				SCREW AND WASHER, Hex Head, M6x1.00x24.50
8	05065661AF	1	D		22				COVER, Deck Lid Latch
9	06506132AA	2	D		22				PIN, Push In, M7.0x20.0
10	04575880AB	1	D		22				WEATHERSTRIP, Decklid
11	05112799AD	1	D		22				PANEL, Deck Opening Lower
12									BRACE, Deck Opening Lower Panel
	68038112AA	1	D		22				Right
	68038113AA	1	D		22				Left
13	06104725AA	3	D		22				NUT AND WASHER, Hex, M6X1.00
14									PANEL, CLOSEOUT
	68027061AC	1	D		22				Left
	68027060AC	1	D		22				Right
15									HINGE, Deck Lid
	04589667AB	1	D		22				Left
	04589666AB	1	D		22				Right

DODGE CHALLENGER (LC)

SERIES	LINE	BODY	ENGINE	TRANSMISSION
H = HIGHLINE	D = DODGE	22 = 2-DR SEDAN TYPE #2	EGG = 3.5L High Output V6 24V MPI Engine	DEC = 6-Speed Manual TREMEC Transmission
P = PREMIUM			ESF = 6.1L SRT HEMI V8 Engine	DGJ = 5-Speed Auto W5A580 Transmission
X = SPECIAL			EZC = 5.7L HEMI VCT Engine	DGV = 4-Spd. Automatic VLP 42RLE Trans
			EZD = 5.7L Hemi VCT MDS Engine	

AR = use ase required - = Non illustrrated part

Rear Shelf Panel
Figure 60-1205

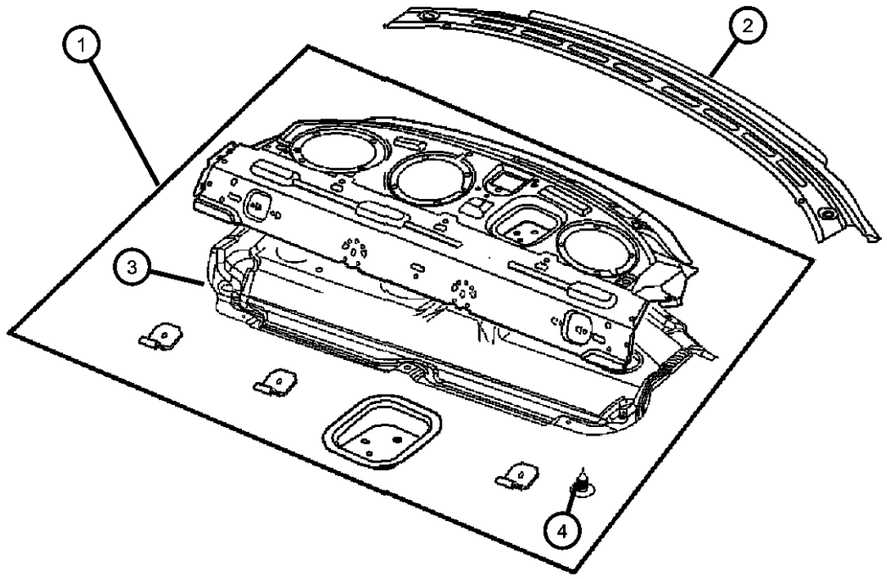

ITEM	PART NUMBER	QTY	LINE	SERIES	BODY	ENGINE	TRANS	TRIM	DESCRIPTION
1	05112778AD	1	D		22				PANEL, Shelf
2	05112777AA	1	D		22				REINFORCEMENT, Shelf Panel
3	04662035AA	1	D		22				SILENCER, Rear Shelf
4	06506293AA	1	D		22				PIN, Push

DODGE CHALLENGER (LC)

SERIES	LINE	BODY	ENGINE	TRANSMISSION
H = HIGHLINE	D = DODGE	22 = 2-DR SEDAN TYPE #2	EGG = 3.5L High Output V6 24V MPI Engine	DEC = 6-Speed Manual TREMEC Transmission
P = PREMIUM			ESF = 6.1L SRT HEMI V8 Engine	DGJ = 5-Speed Auto W5A580 Transmission
X = SPECIAL			EZC = 5.7L HEMI VCT Engine	DGV = 4-Spd. Automatic VLP 42RLE Trans
			EZD = 5.7L Hemi VCT MDS Engine	

AR = use ase required - = Non illustrrated part