2011-2014 DODGE CHALLENGER



ENGINE

3.5L - Service Information - Challenger

DESCRIPTION

3.5L

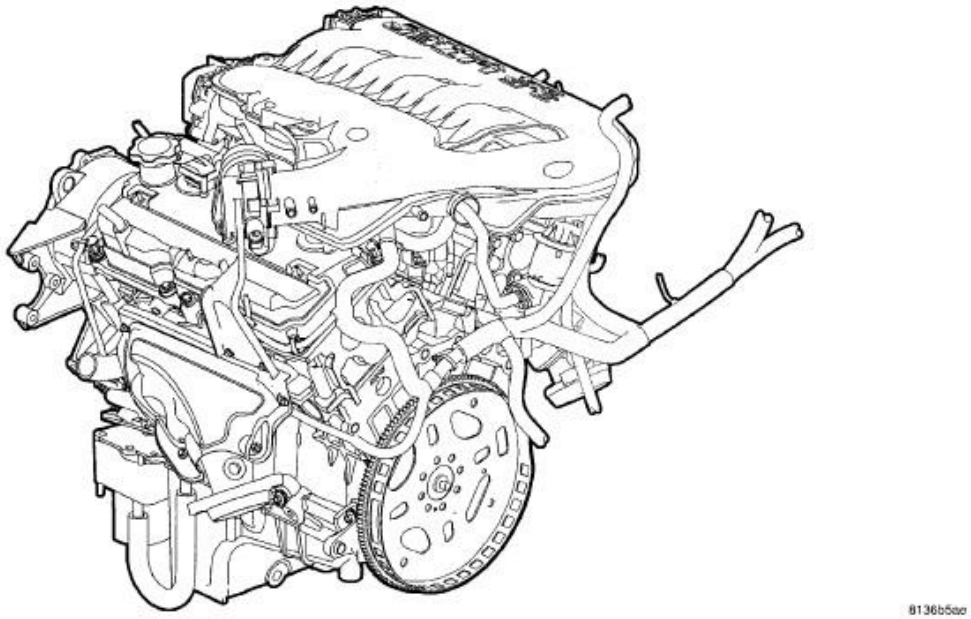

Fig. 1: 3.5L ENGINE
Courtesy of CHRYSLER LLC

The 3.5 Liter (214 Cubic Inches) 60°V-6 engine is a single overhead camshaft design with hydraulic lifters and four valves per cylinder. The engine does not have provisions for a free wheeling valve train.

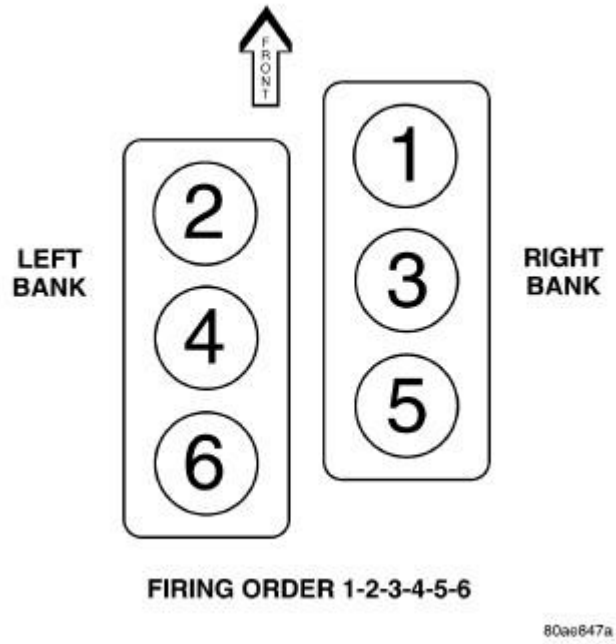

Fig. 2: Cylinder Numbering and Firing Order
Courtesy of CHRYSLER LLC

The cylinders are numbered from front to rear, with the right bank odd numbered, and the left bank even numbered. The firing order is 1-2-3-4-5-6.

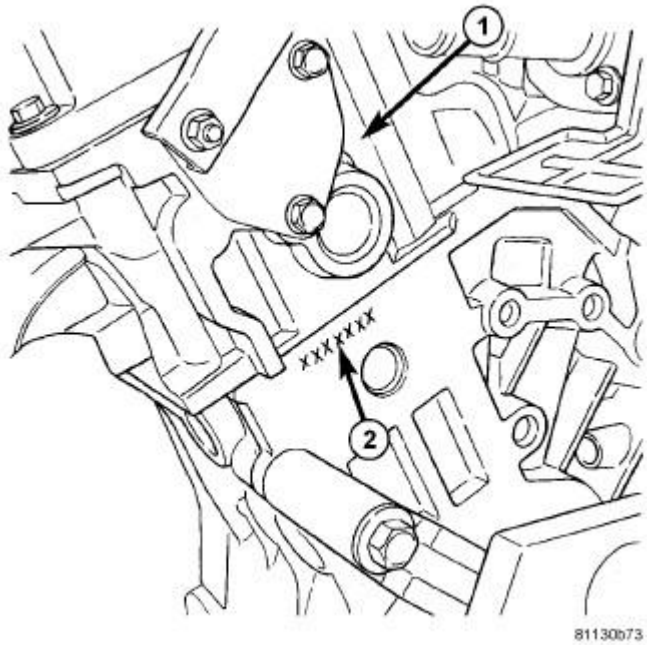

Fig. 3: ENGINE IDENTIFICATION
Courtesy of CHRYSLER LLC

1 - REAR OF LEFT CYLINDER HEAD 2 - ENGINE IDENTIFICATION NUMBER

The engine identification number (2) is located on the rear of engine block just below the left cylinder head (1).

DIAGNOSIS AND TESTING

INTRODUCTION

Engine diagnosis is helpful in determining the causes of malfunctions not detected and remedied by routine maintenance.

These malfunctions may be classified as either mechanical (e.g., a strange noise), or performance (e.g., engine idles rough and stalls).

See **ENGINE PERFORMANCE** and **ENGINE MECHANICAL** for possible causes and corrections of malfunctions. Refer to **FUEL SYSTEM** for the fuel system diagnosis.

Additional tests and diagnostic procedures may be necessary for specific engine malfunctions that cannot be isolated with the Service Diagnosis charts. Information concerning additional tests and diagnosis is provided within the following:

- Cylinder Compression Pressure Test: Refer to **CYLINDER COMPRESSION PRESSURE TEST**.
- Cylinder Combustion Pressure Leakage Test: Refer to **CYLINDER COMBUSTION PRESSURE LEAKAGE TEST**.
- Cylinder Head Gasket Failure Diagnosis: Refer to **CYLINDER HEAD GASKET**.
- Intake Manifold Leakage Diagnosis: Refer to **MANIFOLD, Intake**.
- Lash Adjuster (Tappet) Noise Diagnosis: Refer to **LASH ADJUSTER (TAPPET) NOISE DIAGNOSIS**.
- Engine Oil Leak Inspection: Refer to **ENGINE OIL LEAK INSPECTION**.

ENGINE PERFORMANCE

CONDITION	POSSIBLE CAUSE	CORRECTION
ENGINE WILL NOT START	1. Weak battery.	1. Test battery. Charge or replace as necessary. Refer to **Electrical/Battery System/BATTERY - Description** .
	2. Corroded or loose battery connections.	2. Clean and tighten battery connections. Apply a coat of light mineral grease to terminals.
	3. Faulty starter.	3. Test starting system. Refer to

		Electrical/Starting - Diagnosis and Testing .
	4. Faulty coil(s) or control unit.	4. Test and replace as needed. (Refer to Appropriate Diagnostic Information)
	5. Incorrect spark plug gap.	5. Check and adjust gap as needed.
	6. Contamination in fuel system.	6. Clean system and replace fuel filter.
	7. Faulty fuel pump.	7. Test fuel pump and replace as needed. (Refer to Appropriate Diagnostic Information)
	8. Incorrect engine timing.	8. Check for a skipped timing belt or a loose camshaft sprocket.
ENGINE STALLS OR IDLES ROUGH	1. Idle speed too low.	1. Test minimum air flow. (Refer to Appropriate Diagnostic Information)
	2. Incorrect fuel mixture.	2. (Refer to Appropriate Diagnostic Information)
	3. Intake manifold leakage.	3. Inspect intake manifold gasket, manifold, and vacuum hoses.
	4. Faulty coil(s).	4. Test and replace as necessary. (Refer to Appropriate Diagnostic Information)
ENGINE LOSS OF POWER	1. Dirty or incorrectly gapped plugs.	1. Set gap as needed or replace plug(s).
	2. Contamination in fuel system.	2. Clean system and replace fuel filter.
	3. Faulty fuel pump.	3. Test and replace as necessary. (Refer to Appropriate Diagnostic Information)
	4. Incorrect valve timing.	4. Correct valve timing as needed.
	5. Leaking cylinder head gasket.	5. Replace cylinder head gasket.
	6. Low compression.	6. Test compression of each cylinder.
	7. Burned, warped, or pitted valves.	7. Replace valves.
	8. Plugged or restricted exhaust system.	8. Check exhaust system restriction. Replace parts, as

		necessary.
	9. Faulty coil(s).	9. Test and replace as necessary. (Refer to Appropriate Diagnostic Information)
ENGINE MISSES ON ACCELERATION	1. Dirty or incorrectly gapped spark plugs.	1. Set gap as needed or replace plug(s).
	2. Contamination in Fuel System.	2. Clean fuel system and replace fuel filter.
	3. Burned, warped, or pitted valves.	3. Replace valves.
	4. Faulty coil(s).	4. Test and replace as necessary. (Refer to Appropriate Diagnostic Information)
ENGINE MISSES AT HIGH SPEED	1. Dirty or incorrect spark plug gap.	1. Set gap as needed or replace plug(s).
	2. Faulty coil(s).	2. Test and replace as necessary. (Refer to Appropriate Diagnostic Information)
	3. Dirty fuel injector(s).	3. Test and replace as necessary. (Refer to Appropriate Diagnostic Information)
	4. Contamination in fuel system.	4. Clean system and replace fuel filter.

ENGINE MECHANICAL

CONDITION	POSSIBLE CAUSES	CORRECTION
NOISY VALVES	1. High or low oil level in crankcase.	1. Check and correct engine oil level.
	2. Thin or diluted oil.	2. Change oil to correct viscosity.
	3. Thick oil	3. (a.) Change oil and filter. (b.) Run engine to operating temperature. (c.) Change oil and filter again.
	4. Low oil pressure.	4. Check and correct engine oil level.
	5. Dirt in tappets/lash adjusters.	5. Replace rocker arm/hydraulic lash adjuster assembly.
	6. Worn rocker arms.	6. Inspect oil supply to rocker

		arms.
	7. Worn tappets/lash adjusters.	7. Install new rocker arm/hydraulic lash adjuster assembly.
	8. Worn valve guides.	8. Replace cylinder head(s).
	9. Excessive runout of valve seats on valve faces.	9. Grind valve seats and valves.
	10. Missing adjuster pivot.	10. Replace rocker arm/hydraulic lash adjuster assembly.
CONNECTING ROD NOISE	1. Insufficient oil supply.	1. Check engine oil level.
	2. Low oil pressure.	2. Check engine oil level. Inspect oil pump relief valve and spring.
	3. Thick/Thin or diluted oil.	3. Change oil to correct viscosity.
	-	3. (a.) Change oil and filter.
	(b.) Run engine to operating temperature.	
	(c.) Change oil and filter again.	
	4. Excessive bearing clearance.	4. Measure bearings for correct clearance. Repair as necessary.
	5. Connecting rod journal out-of-round.	5. Replace crankshaft or grind surface.
	6. Misaligned connecting rods.	6. Replace bent connecting rods.
MAIN BEARING NOISE	1. Insufficient oil supply.	1. Check engine oil level.
	2. Low oil pressure.	2. Check engine oil level. Inspect oil pump relief valve and spring.
	3. Thick/Thin or diluted oil.	3. Change oil to correct viscosity.
	-	3. (a.) Change oil and filter.
	(b.) Run engine to operating temperature.	
	(c.) Change oil and filter again.	
	4. Excessive bearing clearance.	4. Measure bearings for correct clearance. Repair as necessary.
	5. Excessive end play.	5. Check thrust bearing for wear on flanges.
	6. Crankshaft journal out-of-round or worn.	6. Replace crankshaft or grind journals.
	7. Loose flywheel or torque	7. Tighten to correct torque.

	converter.	
OIL PRESSURE DROP	1. Low oil level. 2. Faulty oil pressure sending unit. 3. Low oil pressure. 4. Clogged oil filter. 5. Worn parts in oil pump. 6. Thin or diluted oil. 7. Oil pump relief valve stuck. 8. Oil pump suction tube loose. 9. Oil pump cover warped or cracked. 10. Excessive bearing clearance.	1. Check engine oil level. 2. Install new sending unit. 3. Check sending unit and main bearing oil clearance. 4. Install new oil filter. 5. Replace worn parts or pump. 6. Change oil to correct viscosity. 7. Remove valve and inspect, clean, or replace. 8. Remove oil pan and install new tube or clean, if necessary. 9. Install new oil pump. 10. Measure bearings for correct clearance.
OIL LEAKS	1. Misaligned or deteriorated gaskets. 2. Loose fastener, broken or porous metal part. 3. Misaligned or deteriorated cup or threaded plug.	1. Replace gasket(s). 2. Tighten, repair or replace the part. 3. Replace as necessary.
OIL CONSUMPTION OR SPARK PLUGS FOULED	1. PCV system malfunction. 2. Worn, scuffed or broken rings. 3. Carbon in oil ring slots. 4. Rings fitted too tightly in grooves. 5. Worn valve guide(s). 6. Valve stem seal(s) worn or damaged.	1. Check system and repair as necessary. (Refer to Appropriate Diagnostic Information) 2. Hone cylinder bores. Install new rings. 3. Clean pistons and install new rings. 4. Remove rings and check grooves. If groove is not proper width, replace piston. 5. Replace cylinder head(s). 6. Replace seal(s).

CYLINDER COMPRESSION PRESSURE TEST

The results of a cylinder compression pressure test can be utilized to diagnose several engine malfunctions.

Ensure the battery is completely charged and the engine starter motor is in good operating condition. Otherwise the indicated compression pressures may not be valid for diagnosis purposes.

1. Check engine oil level and add oil if necessary.
2. Drive the vehicle until engine reaches normal operating temperature. Select a route free from traffic and other forms of congestion, observe all traffic laws, and accelerate through the gears several times briskly.
3. Remove all spark plugs from engine. As spark plugs are being removed, check electrodes for abnormal firing indicators such as fouled, hot, oily, etc. Record cylinder number of spark plug for future reference.
4. Remove the Auto Shutdown (ASD) relay from the TIPM.
5. Insert compression gauge adaptor Special Tool 8116 or the equivalent, into the #1 spark plug hole in cylinder head. Connect the 0-500 psi (Blue) pressure transducer (Special Tool CH7059) with cable adaptors to the scan tool. For Special Tool identification, see **Engine - Special Tools**.
6. Crank engine until maximum pressure is reached on gauge. Record this pressure as #1 cylinder pressure.
7. Repeat the previous step for all remaining cylinders.
8. Compression should not be less than 689 kPa (100 psi) and not vary more than 25 percent from cylinder to cylinder.
9. If one or more cylinders have abnormally low compression pressures, repeat the compression test.
10. If the same cylinder or cylinders repeat an abnormally low reading on the second compression test, it could indicate the existence of a problem in the cylinder in question. **The recommended compression pressures are to be used only as a guide to diagnosing engine problems. An engine should not be disassembled to determine the cause of low compression unless some malfunction is present.**

CYLINDER COMBUSTION PRESSURE LEAKAGE TEST

The combustion pressure leakage test provides an accurate means for determining engine condition.

Combustion pressure leakage testing will detect:

- Exhaust and intake valve leaks (improper seating).
- Leaks between adjacent cylinders or into water jacket.
- Any causes for combustion/compression pressure loss.

WARNING: DO NOT REMOVE THE PRESSURE CAP WITH THE SYSTEM HOT AND UNDER PRESSURE BECAUSE SERIOUS BURNS FROM COOLANT CAN OCCUR.

1. Check the coolant level and fill as required. DO NOT install the pressure cap.
2. Start and operate the engine until it attains normal operating temperature, then turn the engine

OFF.

3. Clean spark plug recesses with compressed air.
4. Remove the spark plugs.
5. Remove the oil filler cap.
6. Remove the air cleaner.
7. Calibrate the tester according to the manufacturer's instructions. The shop air source for testing should maintain 483 kPa (70 psi) minimum, 1,379 kPa (200 psi) maximum, with 552 kPa (80 psi) recommended.
8. Perform the test procedures on each cylinder according to the tester manufacturer's instructions. While testing, listen for pressurized air escaping through the throttle body, tailpipe and oil filler cap opening. Check for bubbles in the coolant.
9. All gauge pressure indications should be equal, with no more than 25% leakage per cylinder.
10. **FOR EXAMPLE:** At 552 kPa (80 psi) input pressure, a minimum of 414 kPa (60 psi) should be maintained in the cylinder.

ENGINE OIL LEAK INSPECTION

Begin with a thorough visual inspection of the engine, particularly at the area of the suspected leak. If an oil leak source is not readily identifiable, the following steps should be followed:

1. Do not clean or degrease the engine at this time because some solvents may cause rubber to swell, temporarily stopping the leak.
2. Add an oil soluble dye (use as recommended by manufacturer). Start the engine and let idle for approximately 15 minutes. Check the oil level indicator to make sure the dye is thoroughly mixed as indicated with a bright yellow color under a black light.
3. Using a black light, inspect the entire engine for fluorescent dye, particularly at the suspected area of oil leak. If the oil leak is found and identified, repair as necessary.
4. If dye is not observed, drive the vehicle at various speeds for approximately 24 km (15 miles), and repeat inspection.
5. **If the oil leak source is not positively identified at this time** , proceed with the AIR LEAK DETECTION TEST METHOD as follows:
   - Disconnect the fresh air hose (make-up air) at the cylinder head cover and plug or cap the nipple on the cover.
   - Remove the PCV valve hose from the cylinder head cover. Cap or plug the PCV valve nipple on the cover.
   - Attach an air hose with pressure gauge and regulator to the oil level indicator tube.

     CAUTION: Do not subject the engine assembly to more than 20.6 kPa (3 PSI) of test pressure.

   - Gradually apply air pressure from 1 psi to 2.5 psi maximum while applying soapy water at the suspected source. Adjust the regulator to the suitable test pressure that provides the best bubbles which will pinpoint the leak source. If the oil leak is detected and identified,

repair per service information procedures.

- If the leakage occurs at the crankshaft rear oil seal area, refer to **INSPECTION FOR REAR SEAL AREA LEAKS**.

6. If no leaks are detected, turn off the air supply. Remove the air hose, all plugs, and caps. Install the PCV valve and fresh air hose (make-up air). Proceed to next step.
7. Clean the oil off the suspect oil leak area using a suitable solvent. Drive the vehicle at various speeds approximately 24 km (15 miles). Inspect the engine for signs of an oil leak by using a black light.

NOTE: If oil leakage is observed at the oil level indicator tube to block location; remove the tube, clean and reseal using Mopar® Stud AND Bearing Mount (press fit tube applications only), and for O-ring style tubes, remove tube and replace the O-ring seal.

CAUTION: Do not exceed 20.6 kPa (3 psi).

CAUTION: Use extreme caution when crankshaft polishing is necessary to remove minor nicks and scratches. The crankshaft seal flange is specially machined to complement the function of the rear oil seal.

INSPECTION FOR REAR SEAL AREA LEAKS

Since it is sometimes difficult to determine the source of an oil leak in the rear seal area of the engine, a more involved inspection is necessary. The following steps should be followed to help pinpoint the source of the leak.

If the leakage occurs at the crankshaft rear oil seal area:

1. Disconnect the battery.
2. Raise the vehicle.
3. Remove torque converter or clutch housing cover and inspect rear of block for evidence of oil. Use a black light to check for the oil leak. If a leak is present in this area, remove transmission for further inspection.
   a. Circular spray pattern generally indicates seal leakage or crankshaft damage.
   b. Where leakage tends to run straight down, possible causes are a porous block, oil gallery cup plug, bedplate to cylinder block mating surfaces and seal bore. See appropriate component repair procedures for these items.
4. If no leaks are detected, pressurize the crankcase as previously described in step 5 under ENGINE OIL LEAK INSPECTION.

CAUTION: Do not exceed 20.6 kPa (3 psi).

5. If the leak is not detected, very slowly turn the crankshaft and watch for leakage. If a leak is detected between the crankshaft and seal while slowly turning the crankshaft, it is possible the crankshaft seal surface is damaged. The seal area on the crankshaft could have minor nicks or scratches that can be polished out with emery cloth.

   CAUTION: Use extreme caution when crankshaft polishing is necessary to remove minor nicks and scratches. The crankshaft seal flange is specially machined to complement the function of the rear oil seal.

6. For bubbles that remain steady with shaft rotation, no further inspection can be done until disassembled.
7. After the oil leak root cause and appropriate corrective action have been identified, replace component(s) as necessary.

STANDARD PROCEDURE

FORM-IN-PLACE GASKETS AND SEALERS

There are numerous places where form-in-place gaskets are used on the engine. Care must be taken when applying form-in-place gaskets to assure obtaining the desired results.**Do not use form-in-place gasket material unless specified.** Bead size, continuity, and location are of great importance. Too thin a bead can result in leakage while too much can result in spill-over which can break off and obstruct fluid feed lines. A continuous bead of the proper width is essential to obtain a leak-free gasket.

There are numerous types of form-in-place gasket materials that are used in the engine area. Mopar® Engine RTV GEN II, Mopar® ATF-RTV, and Mopar® Gasket Maker gasket materials, each have different properties and can not be used in place of the other.

MOPAR® ENGINE RTV GEN II is used to seal components exposed to engine oil. This material is a specially designed black silicone rubber RTV that retains adhesion and sealing properties when exposed to engine oil. Moisture in the air causes the material to cure. This material is available in three ounce tubes and has a shelf life of one year. After one year this material will not properly cure. Always inspect the package for the expiration date before use.

MOPAR® ATF RTV is a specifically designed black silicone rubber RTV that retains adhesion and sealing properties to seal components exposed to automatic transmission fluid, engine coolants, and moisture. This material is available in three ounce tubes and has a shelf life of one year. After one year this material will not properly cure. Always inspect the package for the expiration date before use.

MOPAR® GASKET MAKER is an anaerobic type gasket material. The material cures in the absence of air when squeezed between two metallic surfaces. It will not cure if left in the uncovered tube. The anaerobic material is for use between two machined surfaces. Do not use on flexible metal flanges.

MOPAR® BED PLATE SEALANT is a unique (green-in-color) anaerobic type gasket material that is

specially made to seal the area between the bedplate and cylinder block without disturbing the bearing clearance or alignment of these components. The material cures slowly in the absence of air when torqued between two metallic surfaces, and will rapidly cure when heat is applied.

MOPAR® GASKET SEALANT is a slow drying, permanently soft sealer. This material is recommended for sealing threaded fittings and gaskets against leakage of oil and coolant. Can be used on threaded and machined parts under all temperatures. This material is used on engines with multi-layer steel (MLS) cylinder head gaskets. This material also will prevent corrosion. Mopar® Gasket Sealant is available in a 13 oz. aerosol can or 4oz./16 oz. can w/applicator.

SEALER APPLICATION

Mopar® Gasket Maker material should be applied sparingly 1 mm (0.040 in.) diameter or less of sealant to one gasket surface. Be certain the material surrounds each mounting hole. Excess material can easily be wiped off. Components should be torqued in place within 15 minutes. The use of a locating dowel is recommended during assembly to prevent smearing material off the location.

Mopar® Engine RTV GEN II or ATF RTV gasket material should be applied in a continuous bead approximately 3 mm (0.120 in.) in diameter. All mounting holes must be circled. For corner sealing, a 3.17 or 6.35 mm (1/8 or 1/4 in.) drop is placed in the center of the gasket contact area. Uncured sealant may be removed with a shop towel. Components should be torqued in place while the sealant is still wet to the touch (within 10 minutes). The usage of a locating dowel is recommended during assembly to prevent smearing material off the location.

Mopar® Gasket Sealant in an aerosol can should be applied using a thin, even coat sprayed completely over both surfaces to be joined, and both sides of a gasket. Then proceed with assembly. Material in a can w/applicator can be brushed on evenly over the sealing surfaces. Material in an aerosol can should be used on engines with multi-layer steel gaskets.

ENGINE GASKET SURFACE PREPARATION

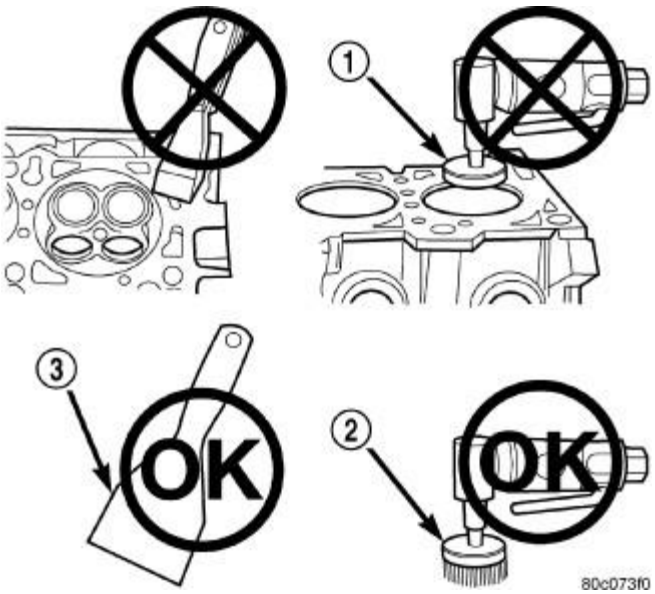

Fig. 4: Proper Tool Usage For Surface Preparation
Courtesy of CHRYSLER LLC

1 - ABRASIVE PAD 2 - 3M ROLOC™ BRISTLE DISC 3 - PLASTIC/WOOD SCRAPER

To ensure engine gasket sealing, proper surface preparation must be performed, especially with the use of aluminum engine components and multi-layer steel cylinder head gaskets.

Never use the following to clean gasket surfaces:

- Metal scraper
- Abrasive pad or paper to clean cylinder block and head
- High speed power tool with an abrasive pad or a wire brush.

NOTE: Multi-Layer Steel (MLS) head gaskets require a scratch free sealing surface.

Only use the following for cleaning gasket surfaces:

- Solvent or a commercially available gasket remover
- Plastic or wood scraper.
- Drill motor with 3M Roloc™ Bristle Disc (white or yellow).

CAUTION: Excessive pressure or high RPM (beyond the recommended speed), can damage the sealing surfaces. The mild (white, 120 grit) bristle disc is recommended. If necessary, the medium (yellow, 80 grit) bristle disc may be used on cast iron surfaces with care.

REPAIR OF DAMAGED OR WORN THREADS

Damaged or worn threads (excluding spark plug and camshaft bearing cap attaching threads) can be repaired. Essentially, this repair consists of drilling out worn or damaged threads, tapping the hole with a special Heli-Coil Tap, (or equivalent) and installing an insert into the tapped hole. This brings the hole back to its original thread size.

CAUTION: Be sure that the tapped holes maintain the original center line.

Heli-Coil tools and inserts are readily available from automotive parts jobbers.

HYDROSTATIC LOCKED ENGINE

When an engine is suspected to be hydrostatically locked, regardless of what caused the problem,

the following steps should be used.

CAUTION: DO NOT use starter motor to rotate the engine, severe damage may occur.

1. Inspect air cleaner, induction system and intake manifold to insure system is dry and clear of foreign material.
2. Remove negative battery cable.
3. Place a shop towel around the spark plugs when removing them from the engine. This will catch any fluid that may possibly be in the cylinder under pressure.
4. With all spark plugs removed, rotate engine crankshaft using a breaker bar and socket.
5. Identify the fluid in the cylinder(s) (i.e., coolant, fuel, oil or other).
6. Make sure all fluid has been removed from the cylinders. Inspect engine for damage (i.e., connecting rods, pistons, valves, etc.)
7. Repair engine or components as necessary to prevent this problem from reoccurring.

CAUTION: Squirt approximately one teaspoon of oil into the cylinders, rotate engine to lubricate the cylinder walls to prevent damage on restart.

8. Install new spark plugs.
9. Drain engine oil and remove oil filter.
10. Install a new oil filter.
11. Fill engine with specified amount of approved oil.
12. Connect negative battery cable.
13. Start engine and check for any leaks.

ENGINE CORE AND OIL GALLERY PLUGS

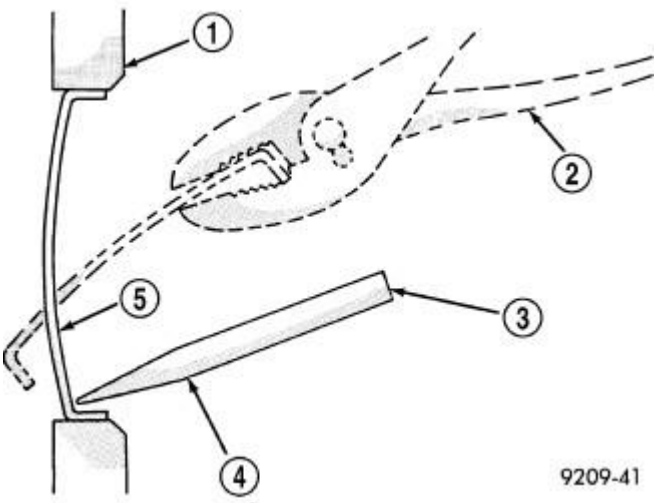

Fig. 5: Core Hole Plug Removal
Courtesy of CHRYSLER LLC

1 - CYLINDER BLOCK 2 - REMOVE PLUG WITH PLIERS 3 - STRIKE HERE WITH HAMMER 4 - DRIFT PUNCH 5 - CUP PLUG

Using a blunt tool such as a drift (3) and a hammer, strike the bottom edge of the cup plug (5). With the cup plug rotated, grasp firmly with pliers (2) or other suitable tool and remove plug (5).

CAUTION: Do not drive cup plug into the casting as restricted cooling can result and cause serious engine problems.

Thoroughly clean inside of cup plug hole in cylinder block or head. Be sure to remove old sealer. Lightly coat inside of cup plug hole with Mopar® Stud and Bearing Mount. Make certain the new plug is cleaned of all oil or grease. Using proper drive plug, drive plug into hole so that the sharp edge of the plug is at least 0.5 mm (0.020 in.) inside the lead-in chamfer.

It is not necessary to wait for curing of the sealant. The cooling system can be refilled and the vehicle placed in service immediately.

REMOVAL

REMOVAL

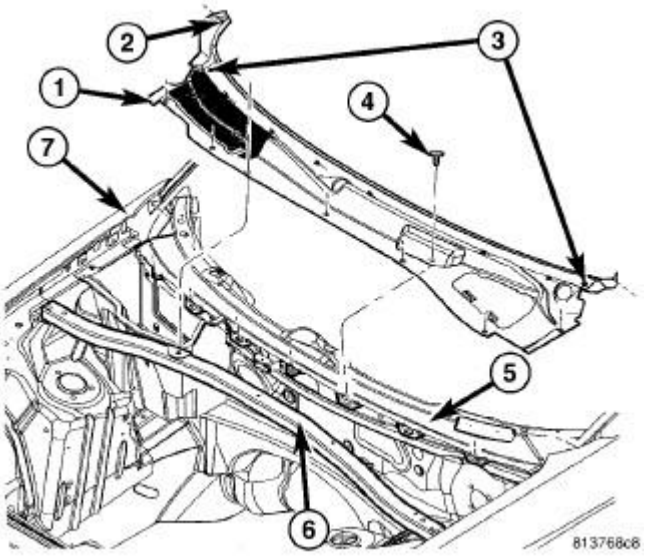

Fig. 6: Removing/Installing Cowl Panel
Courtesy of CHRYSLER LLC

1. Perform the fuel pressure release procedure. Refer to **Fuel System/Fuel Delivery - Standard Procedure** .
2. Center and secure the steering wheel.
3. Disconnect and isolate the negative battery cable.
4. Evacuate and recover the refrigerant system. Refer to **Heating and Air Conditioning/Plumbing - Standard Procedure** .
5. Remove the hood. Refer to **Body/Hood/HOOD - Removal** .
6. Remove the windshield cowl panel assembly (1). Refer to **Body/Exterior/COVER, Cowl Panel - Removal** .
7. Remove and reposition the strut tower support (6).

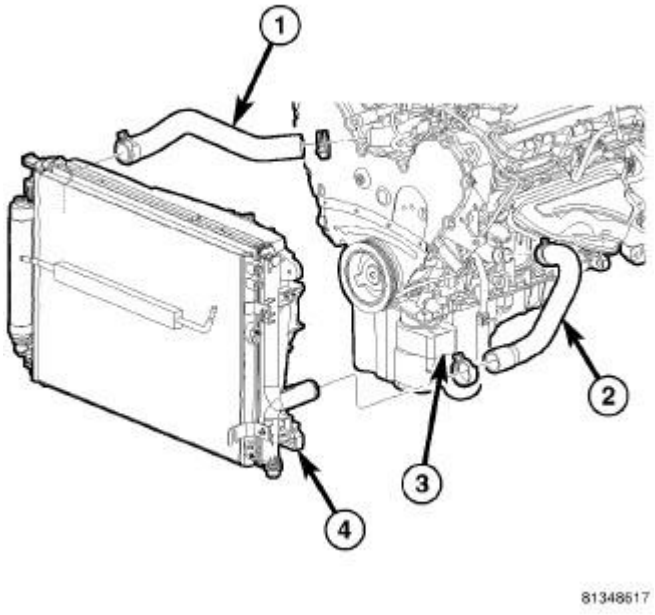

Fig. 7: RADIATOR HOSES
Courtesy of CHRYSLER LLC

1 - UPPER RADIATOR HOSE
2 - LOWER RADIATOR HOSE
3 - ENGINE OIL COOLER
4 - COOLANT MODULE

8. Raise and support the vehicle. Refer to **Vehicle Quick Reference/Hoisting - Standard Procedure** .
9. Remove the belly pan. Refer to **Body/Exterior/BELLY PAN - Removal** .
10. Drain the cooling system. Refer to **Cooling - Standard Procedure** .
11. Drain the engine oil. See **Engine/Lubrication/OIL - Standard Procedure**.

12. Disconnect the lower radiator hose (2).

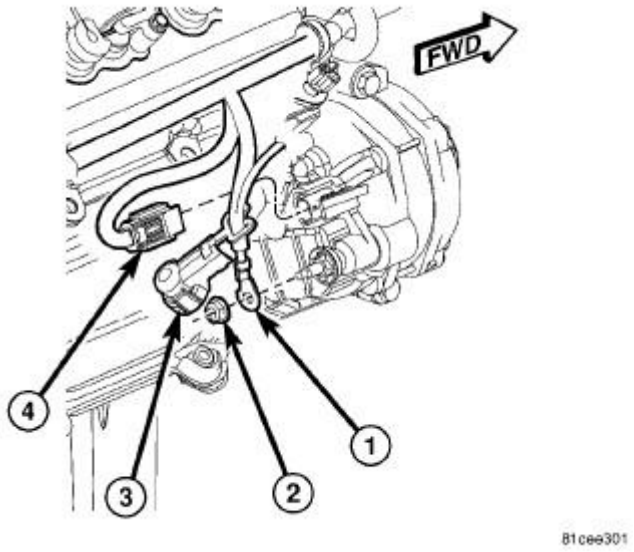

Fig. 8: Alternator Electrical Connection
Courtesy of CHRYSLER LLC

13. Disconnect the generator electrical connections. Refer to **Electrical/Charging/GENERATOR - Removal** .

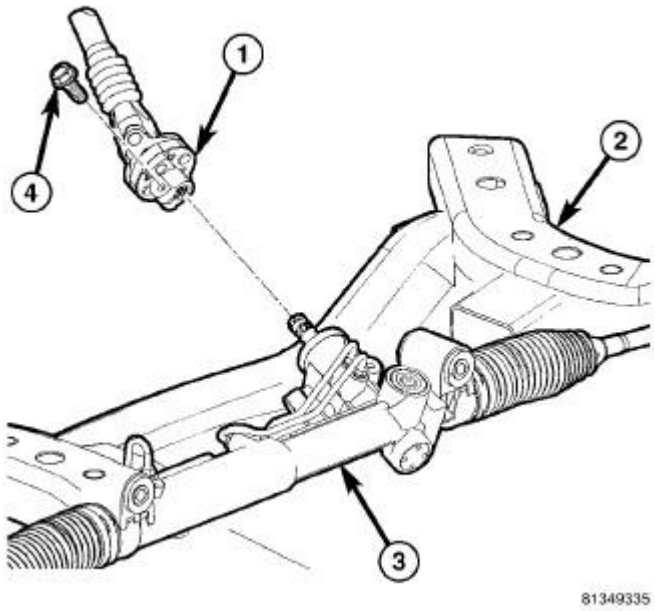

Fig. 9: Steering Coupler
Courtesy of CHRYSLER LLC

1 - STEERING COUPLER
2 - CRADLE
3 - STEERING GEAR
4 - BOLT

14. Remove the pinch bolt (4) and separate the steering column coupling (1) from the steering gear (3).

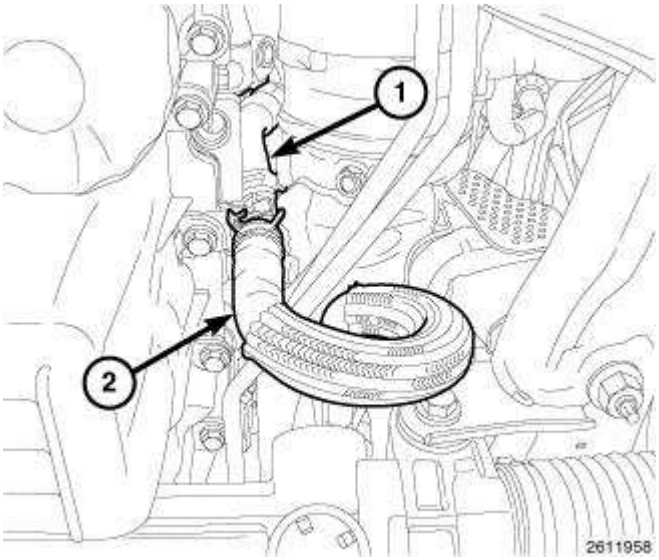

Fig. 10: Engine Coolant Tube & Heater Hose
Courtesy of CHRYSLER LLC

15. Disconnect the heater hose (2) from the oil cooler (if equipped) or from the engine coolant tube (1).

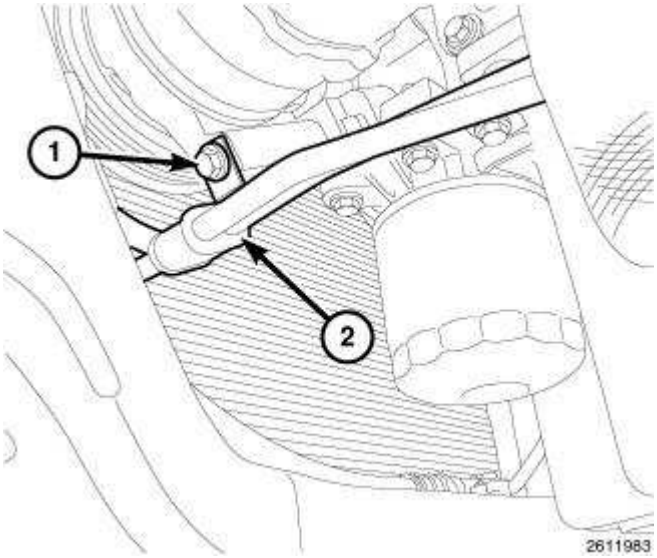

Fig. 11: A/C Compressor Mounting Bolt & Transmission Cooling Lines
Courtesy of CHRYSLER LLC

16. Loosen the A/C compressor mounting bolt (1) securing the transmission cooling lines (2) to the A/C compressor and allow the bolt to rest on the cradle.

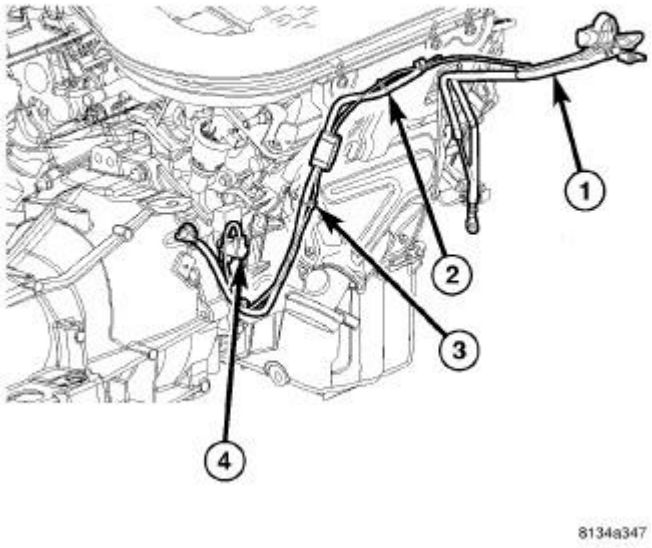

Fig. 12: ENGINE BLOCK HEATER
Courtesy of CHRYSLER LLC

1 - NEGATIVE BATTERY CABLE
2 - NEGATIVE BATTERY CABLE
3 - BLOCK HEATER HARNESS
4 - ENGINE BLOCK HEATER

17. Disconnect and reposition the power cord from the engine block heater (4) (if equipped).
18. Remove the nut and the ground strap (3) from the transmission mounting bolt.

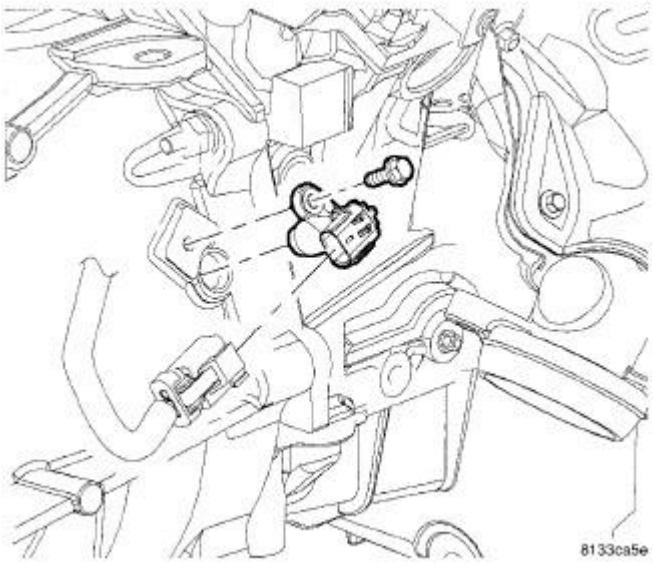

Fig. 13: Removing/Installing Crankshaft Position Sensor
Courtesy of CHRYSLER LLC

19. Remove the crankshaft position sensor. Refer to **Fuel System/Fuel Injection/SENSOR, Crankshaft Position - Removal** .

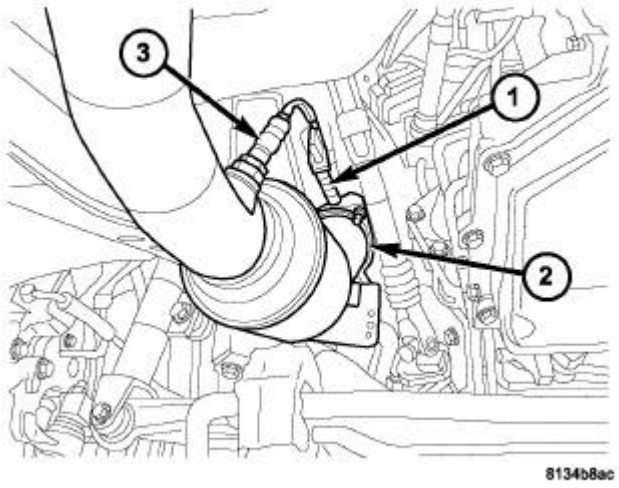

Fig. 14: Left Exhaust Pipe To Manifold Union
Courtesy of CHRYSLER LLC

1 - HO2S #1 2 - EXHAUST UNION

3 - HO2S-#2

20. Disconnect the electrical connector from the left downstream oxygen senor (3) and separate the left exhaust pipe (2) from the exhaust manifold.

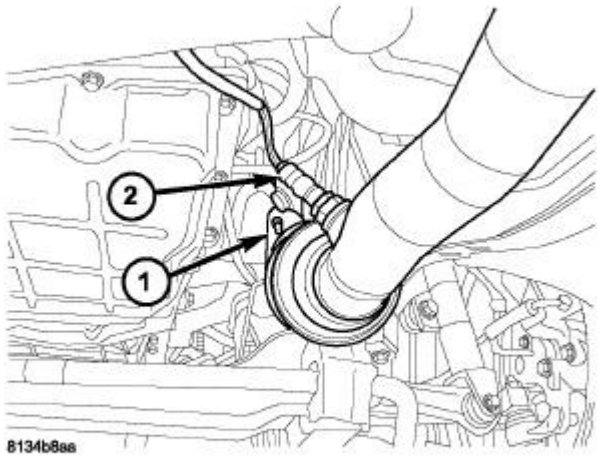

Fig. 15: RIGHT EXHAUST PIPE TO MANIFOLD UNION
Courtesy of CHRYSLER LLC

21. Disconnect the electrical connector from the right downstream oxygen senor (2) and separate the right exhaust pipe (1) from the exhaust manifold.

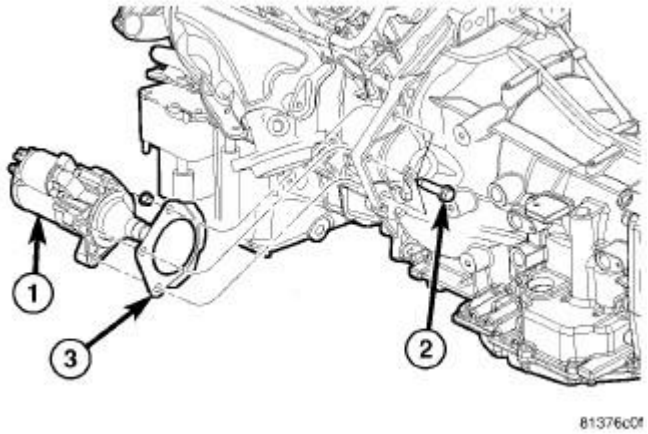

Fig. 16: Starter And Fasteners
Courtesy of CHRYSLER LLC

1 - STARTER 2 - BOLTS 3 - CLOSEOUT PLATE

22. Remove the starter (1) and closeout plate (3). Refer to **Electrical/Starting/STARTER - Removal** .

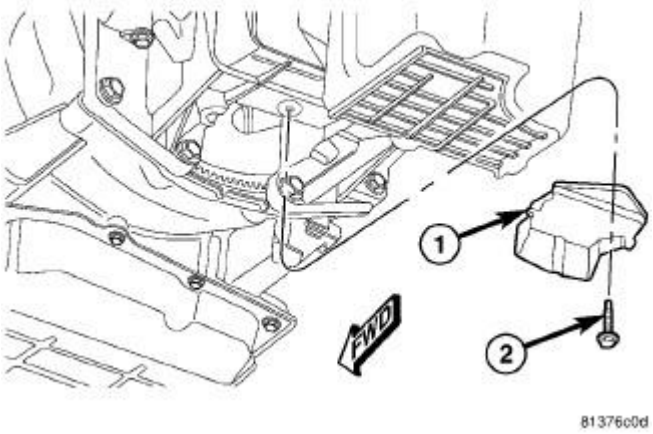

Fig. 17: Removing/Installing Torque Converter Access Cover - 3.5L
Courtesy of CHRYSLER LLC

23. Remove the bolt (2) holding the torque converter access cover (1) to the transmission and remove the cover.

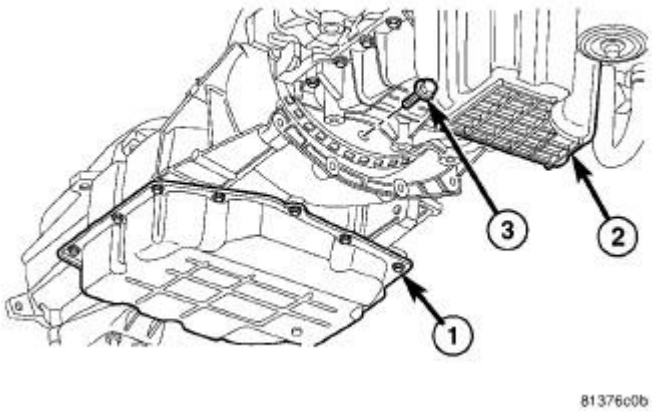

Fig. 18: Removing/Installing Torque Converter Bolts
Courtesy of CHRYSLER LLC

24. Rotate the crankshaft in a clockwise direction until the torque converter bolts (3) are accessible. Remove the torque converter bolts (3).

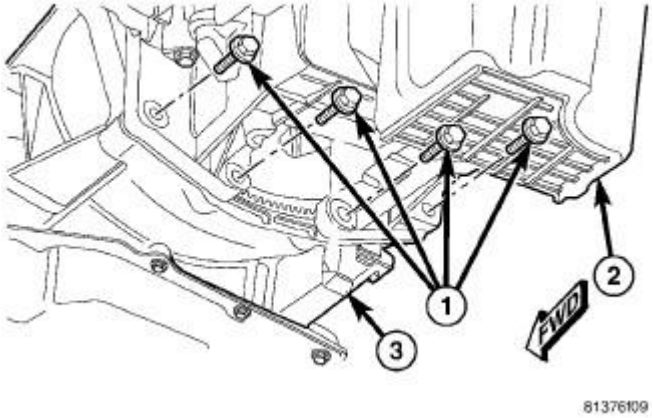

Fig. 19: Removing/Installing Transmission To Oil Pan Bolts - 3.5L
Courtesy of CHRYSLER LLC

1 - BOLTS 2 - ENGINE OIL PAN 3 - TRANSMISSION

25. Remove the four bolts (1) securing the engine oil pan (2) to the transmission (3).

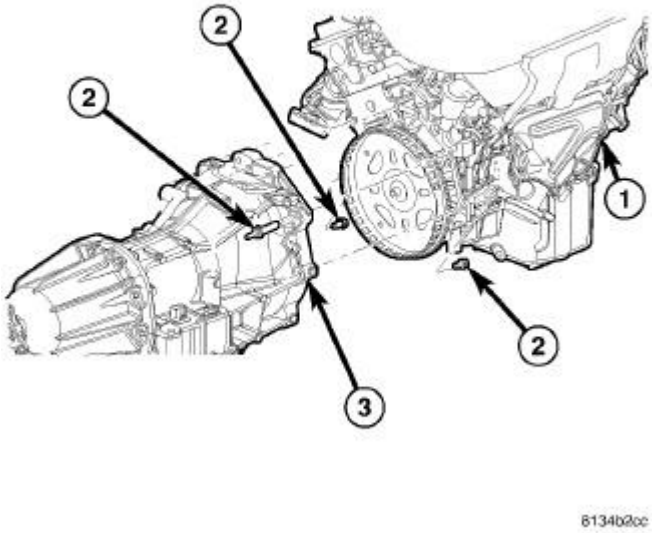

Fig. 20: Remove/Install Transmission
Courtesy of CHRYSLER LLC

26. Remove the two remaining engine to transmission housing mounting bolts (2) accessible from

below the vehicle.

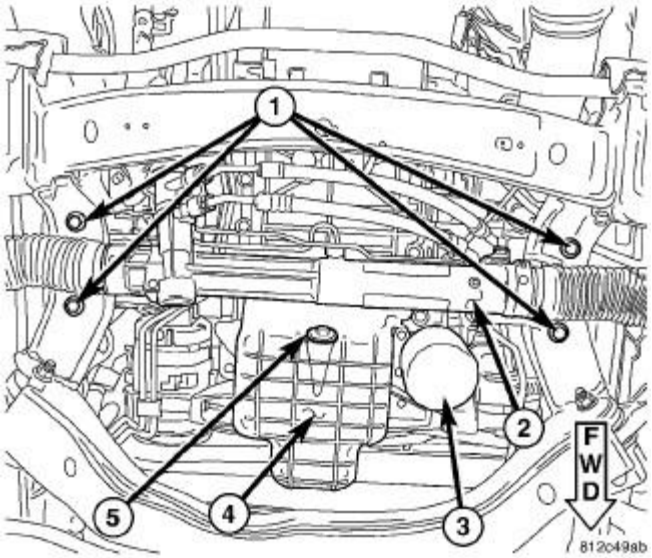

Fig. 21: Identifying Engine Mounts, Oil Pan, Drain Plug & Oil Filter
Courtesy of CHRYSLER LLC

27. Remove the engine mounting to cradle fasteners (1).

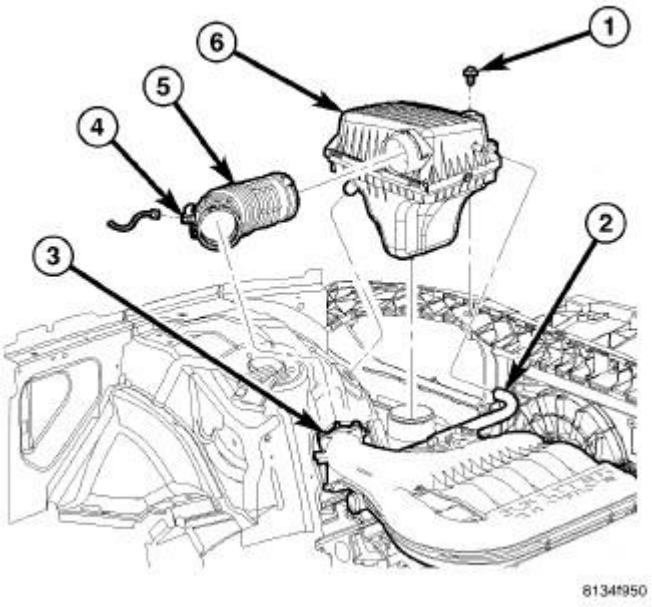

Fig. 22: Air Cleaner Housing
Courtesy of CHRYSLER LLC

1 - BOLT

2 - CCV HOSE
3 - THROTTLE
4 - IAT SENSOR
5 - INLET AIR DUCT
6 - AIR CLEANER ELEMENT HOUSING

28. Lower the vehicle.
29. Remove the air cleaner body (6). See **Engine/Air Intake System/BODY, Air Cleaner - Removal**.

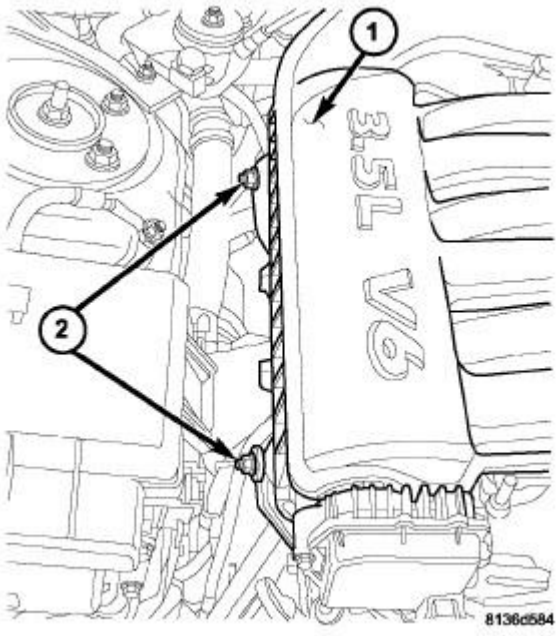

Fig. 23: Intake Manifold Braces
Courtesy of CHRYSLER LLC

30. Remove the upper intake manifold (1). See **Engine/Manifolds/MANIFOLD, Intake - Removal**.
31. Remove the upper intake manifold support brackets (2).

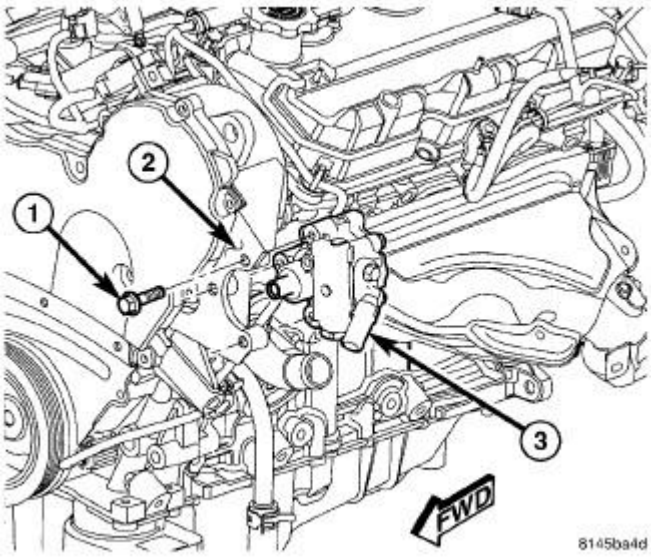

Fig. 24: POWER STEERING PUMP - 2.7L/3.5L
Courtesy of CHRYSLER LLC

32. Remove the accessory drive belt. Refer to **Cooling/Accessory Drive/BELT, Serpentine - Removal** .
33. Remove three power steering pump mounting bolts (1) through access holes in the pulley.
34. Reposition the power steering pump (3) away from the mounting bracket (2).

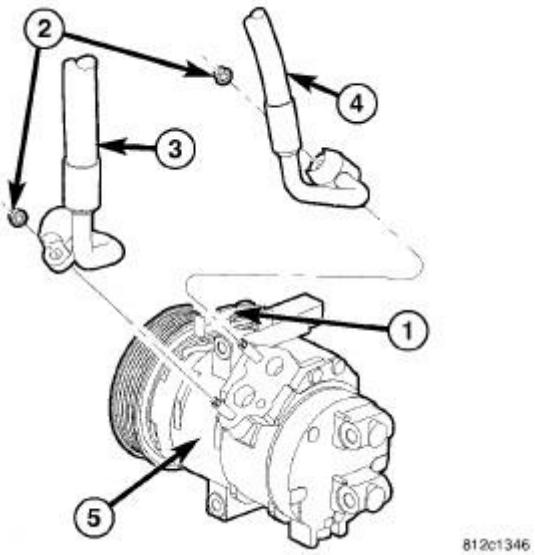

Fig. 25: COMPRESSOR-A/C LINES REMOVAL & INSTALLATION
Courtesy of CHRYSLER LLC

35. Disconnect the engine wire harness from the compressor clutch field coil connector (1).
36. Remove the nut (2) and disconnect the A/C discharge line (4) from the A/C compressor (5), plug

the ports and reposition the discharge line.

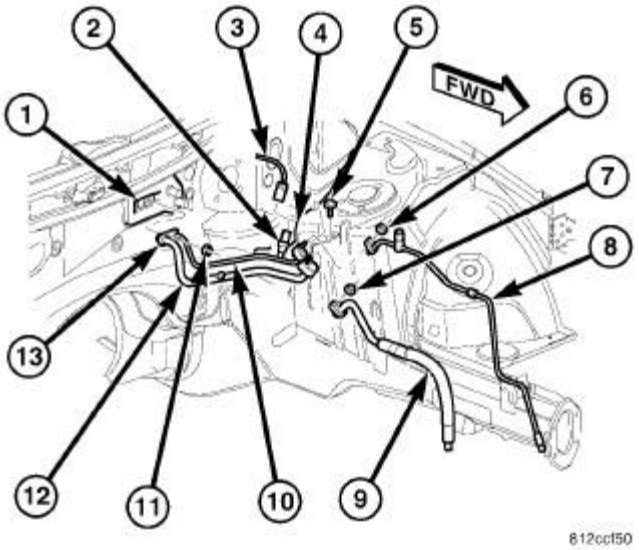

Fig. 26: Line-A/C Liquid/Suction-Rear Removal & Installation
Courtesy of CHRYSLER LLC

37. Remove the nut (7) and disconnect the front section of the A/C suction line (9) from the rear section of the suction line (12), cap the ports and reposition the front section of the A/C suction line.
38. Remove the nut (6) and disconnect the front section of the A/C liquid line (8) from the rear section of the liquid line (10), cap the ports and reposition the liquid lines.

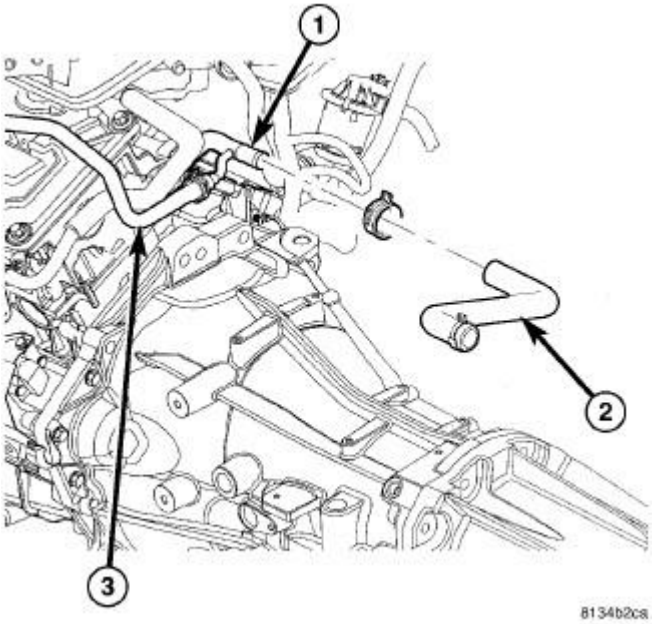

Fig. 27: COOLANT PIPE
Courtesy of CHRYSLER LLC

1 - COOLANT PIPE 2 - HEATER HOSE 3 - COOLANT RESERVOIR HOSE

39. Disconnect the heater hose (2) and coolant reservoir hose (3) from the rear coolant pipe (1).

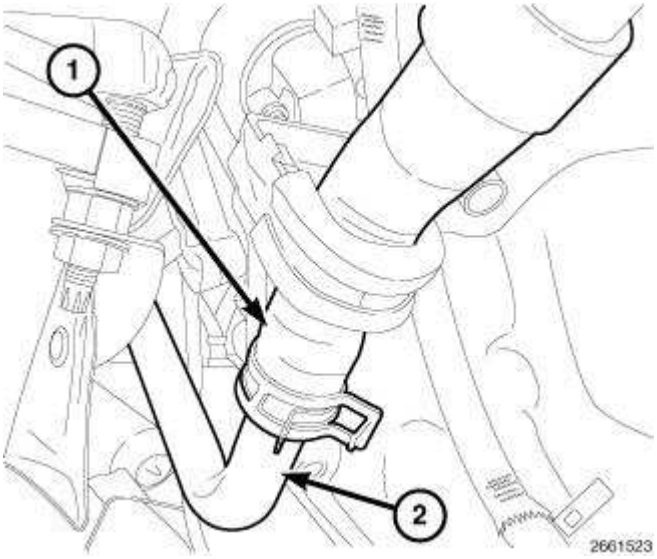

Fig. 28: Heater Hose & Extension Pipe
Courtesy of CHRYSLER LLC

40. Disconnect the heater hose (1) from the extension pipe (2).

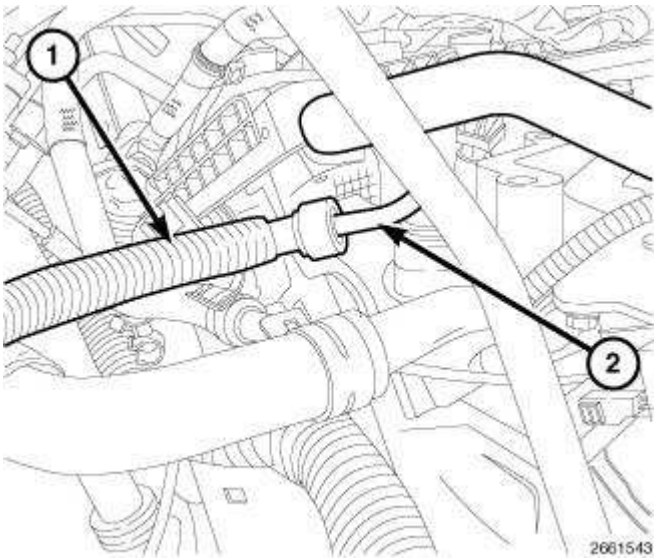

Fig. 29: Fuel Supply Hose & Fuel Rail
Courtesy of CHRYSLER LLC

41. Disconnect the fuel supply hose (1) from the fuel rail (2). Refer to **Fuel System/Fuel Delivery/FITTING, Quick Connect - Standard Procedure** .

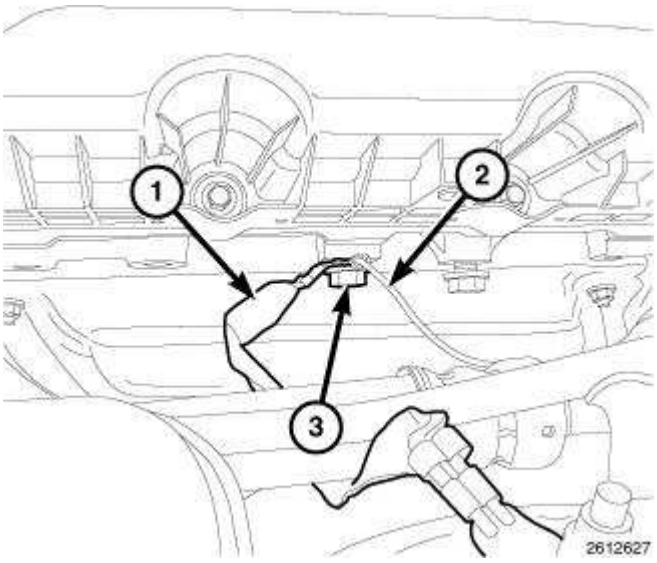

Fig. 30: Ground Wires & Bolt
Courtesy of CHRYSLER LLC

42. Disconnect the electrical connector from the left upstream oxygen sensor.
43. Remove the bolt (3) and ground wires (1) and (2) from the left cylinder head.

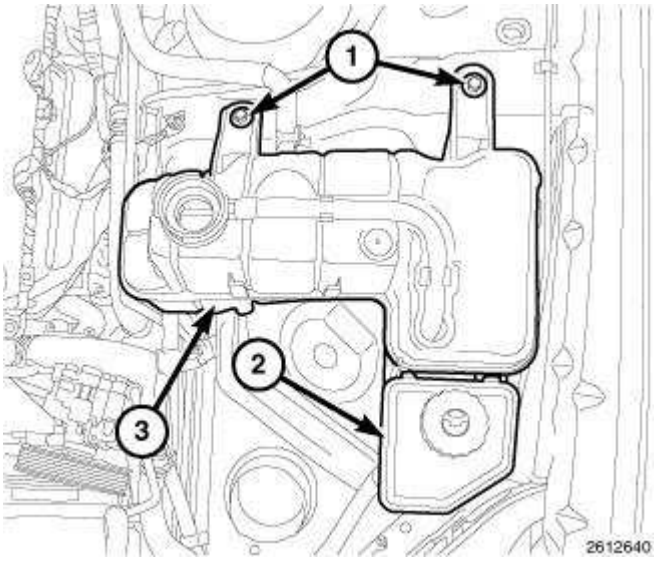

Fig. 31: Bolts, Power Steering Reservoir & Coolant Reservoir
Courtesy of CHRYSLER LLC

44. Disengage the lock tab and remove the power steering reservoir (2) from the coolant reservoir (3).
45. Remove the bolts (1) and reposition the coolant reservoir (3).

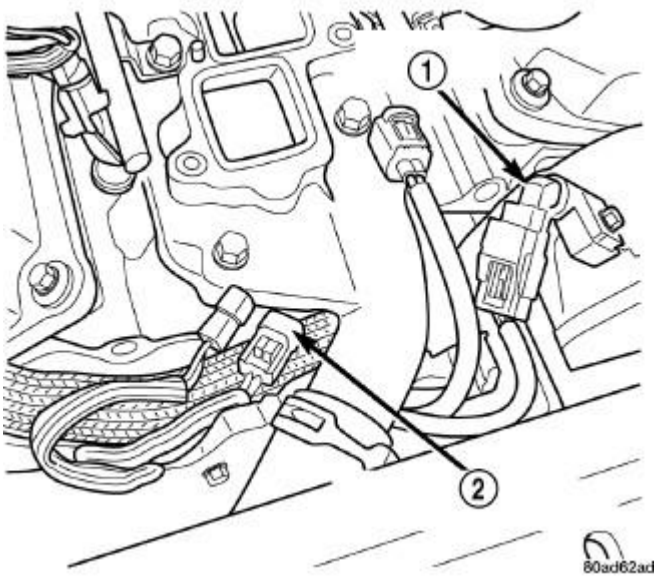

Fig. 32: Engine Coolant Temperature Sensor - 3.5L
Courtesy of CHRYSLER LLC

46. Disconnect the electrical connector from the coolant temperature sensor (2).
47. Disconnect the electrical connector from the camshaft position sensor (1).

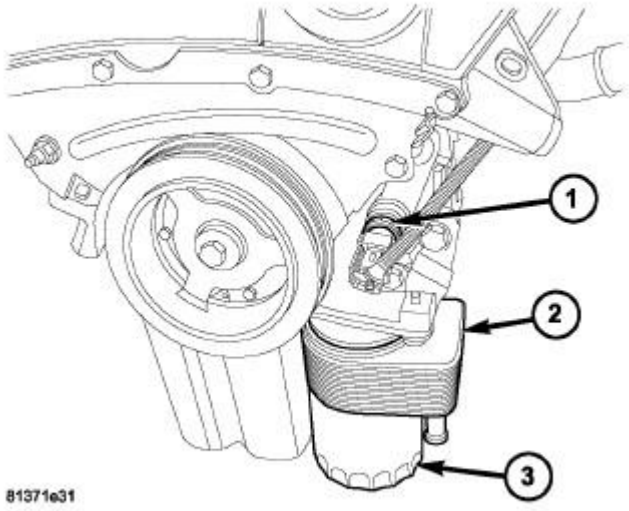

Fig. 33: OIL PRESSURE SWITCH
Courtesy of CHRYSLER LLC

48. Disconnect the electrical connector from the oil pressure switch (1).

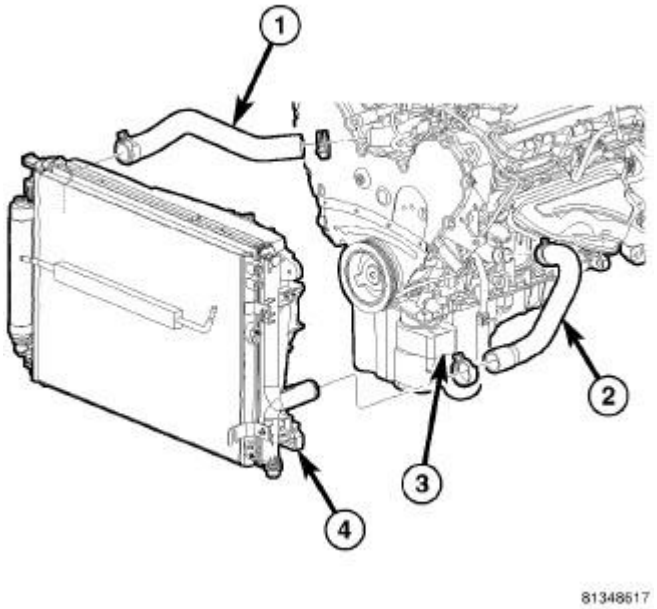

Fig. 34: RADIATOR HOSES
Courtesy of CHRYSLER LLC

49. Remove the upper radiator hose (1).

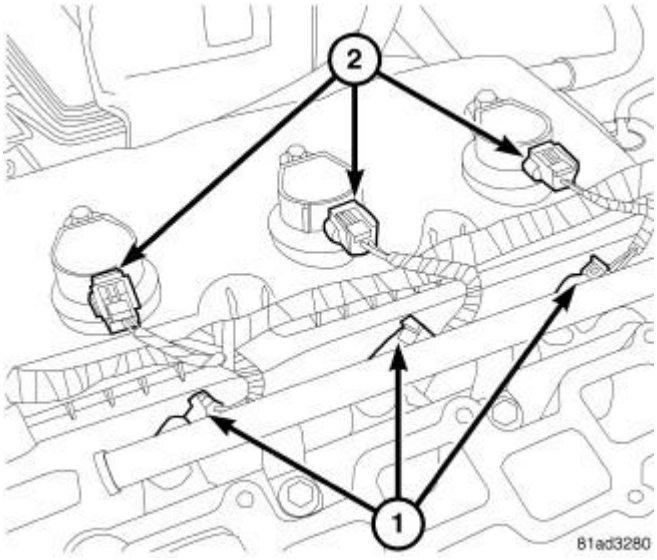

Fig. 35: Identifying Coil & Fuel Injector Connectors
Courtesy of CHRYSLER LLC

50. Unlock and disconnect six electrical connectors (2) from the ignition coils.
51. Disconnect six electrical connectors (1) from the fuel injectors.

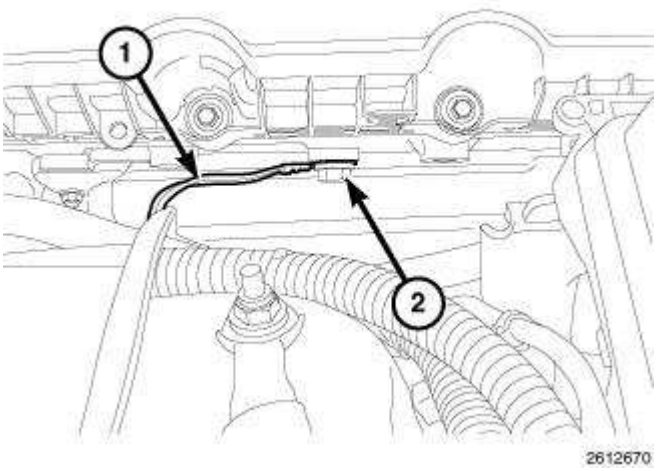

Fig. 36: Ground Wire & Bolt
Courtesy of CHRYSLER LLC

52. Disconnect the electrical connector from the right upstream oxygen sensor.
53. Remove the bolt (2) and ground wire (1) from the left cylinder head.

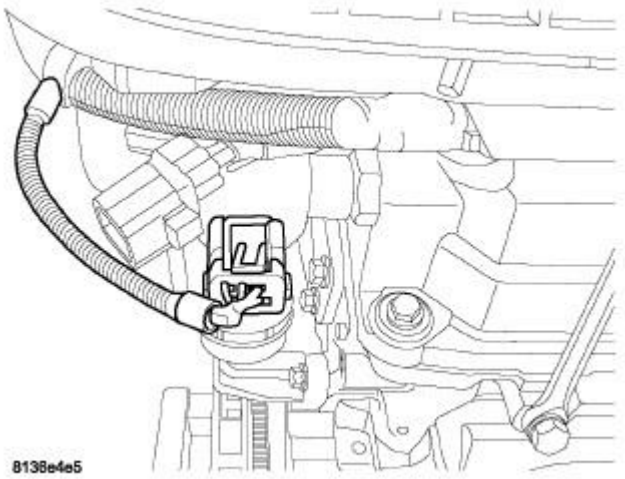

Fig. 37: Electrical Connector - 3.5L
Courtesy of CHRYSLER LLC

54. Unlock and disconnect the electrical connector from the EGR valve.

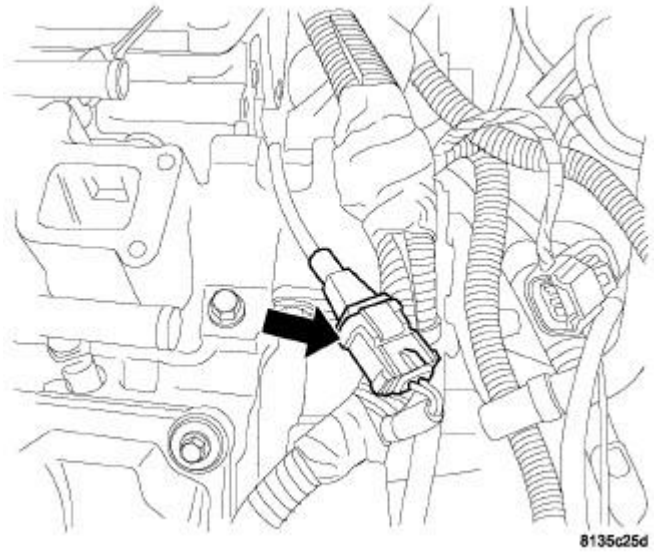

Fig. 38: KNOCK SENSOR CONNECTOR
Courtesy of CHRYSLER LLC

55. Disconnect the electrical connector from the knock sensor.

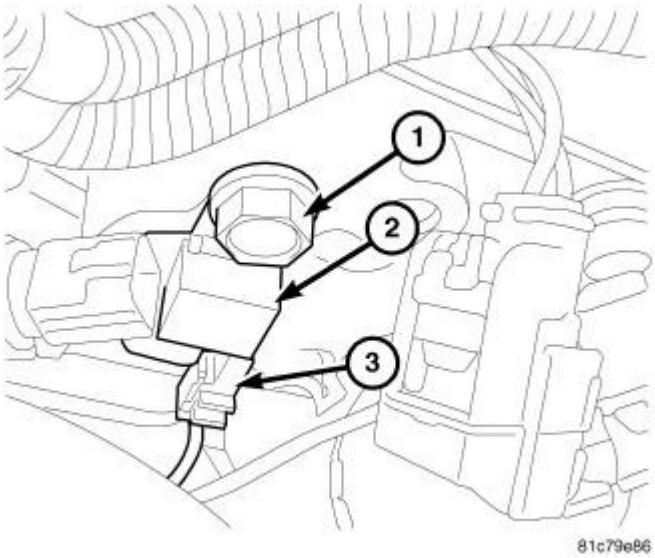

Fig. 39: Ignition Capacitor - 3.5L
Courtesy of CHRYSLER LLC

56. Disconnect the ignition capacitor electrical connector (3).
57. Remove the mounting bolt (1) and the ignition capacitor (2).

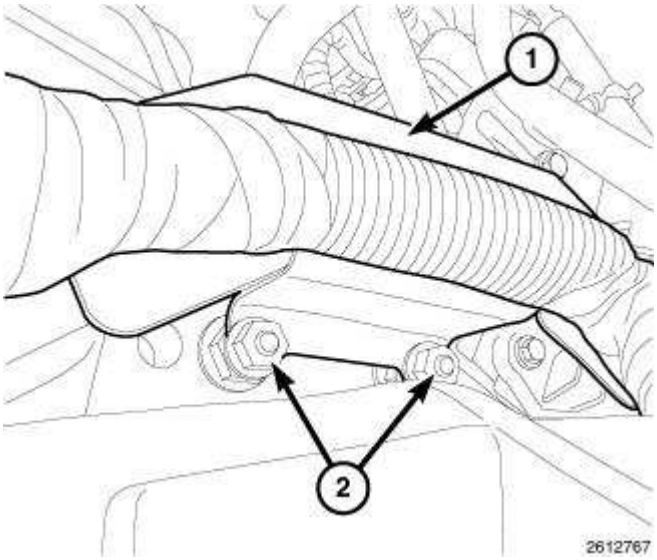

Fig. 40: Wire Harness Support Bracket & Nuts
Courtesy of CHRYSLER LLC

58. Remove two nuts (2) from the wire harness support bracket (1) and reposition the wiring harness to the rear of the engine compartment.

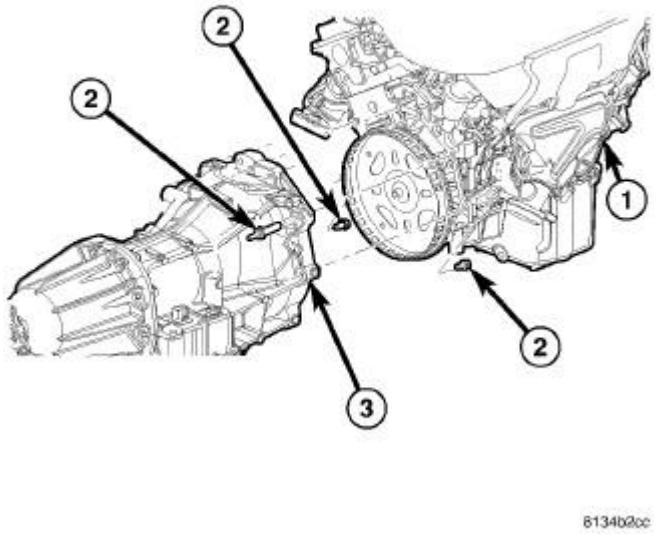

Fig. 41: Remove/Install Transmission
Courtesy of CHRYSLER LLC

1 - ENGINE
2 - BOLTS
3 - TRANSMISSION

59. Remove the four remaining transmission housing to engine mounting bolts (2).

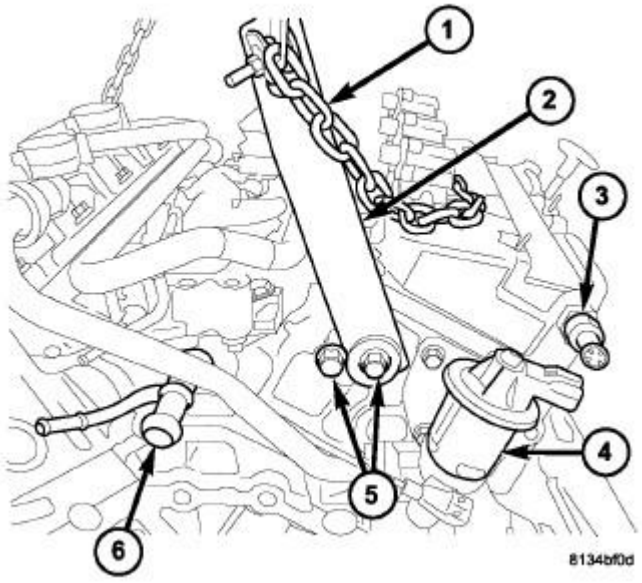

Fig. 42: ENGINE LIFTING BRACKET #8534
Courtesy of CHRYSLER LLC

1 - LIFTING CHAIN
2 - ENGINE LIFTING BRACKET #8534
3 - CAM POSITION SENSOR
4 - EGR VALVE
5 - BOLTS
6 - COOLANT PIPE

60. Connect the engine lifting bracket (2) from the Engine Support Fixture 8534B to the right rear of the cylinder head outer most bolt access hole. Tighten the bolt (5) to 21 N.m (15 ft. lbs.).
61. Install a bolt into the inner most bolt access hole next to the engine lifting bracket to assure lifting bracket positioning. Tighten the bolt (5) to 21 N.m (15 ft. lbs.).

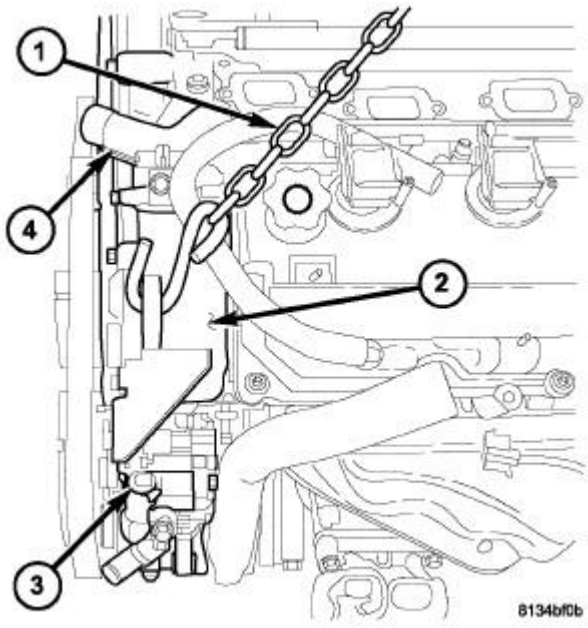

Fig. 43: ENGINE LIFTING POINT
Courtesy of CHRYSLER LLC

1 - LIFTING CHAIN
2 - UPPER TIMING CHAIN COVER
3 - POWER STEERING PUMP
4 - THERMOSTAT HOUSING

62. Support the transmission with a jack stand.
63. Connect an engine hoisting chain (1) to the engine lifting point on the left side of the rear timing cover (2) and the previously installed 8534B engine lifting bracket.

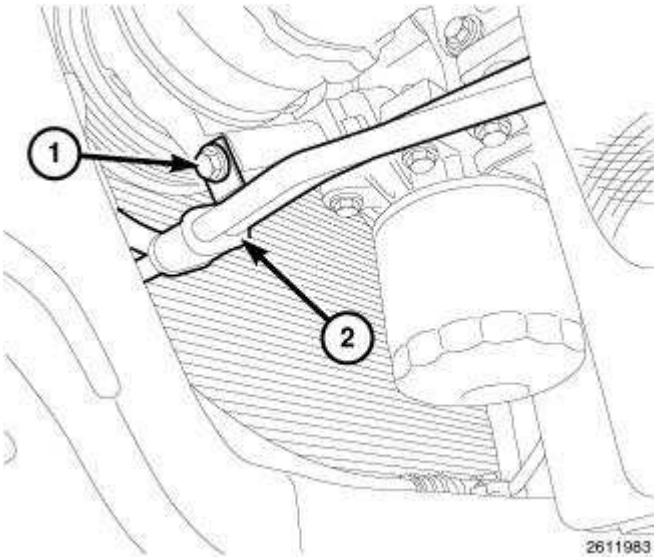

Fig. 44: A/C Compressor Mounting Bolt & Transmission Cooling Lines
Courtesy of CHRYSLER LLC

CAUTION: While slowly separating the engine from the vehicle, constant checks must be made to assure proper positioning and that no damage to other components or wiring harnesses occur during separation.

NOTE: As the engine is hoisted from the engine bay area, remove the loosened A/C compressor bolt (1) retaining the transmission cooler lines (2) and direct the lines aside.

64. Carefully remove the engine from the engine bay area.

INSTALLATION

INSTALLATION

CAUTION: Care must be taken when installing the engine to prevent pinching the power steering rack sensor with the left engine mount.

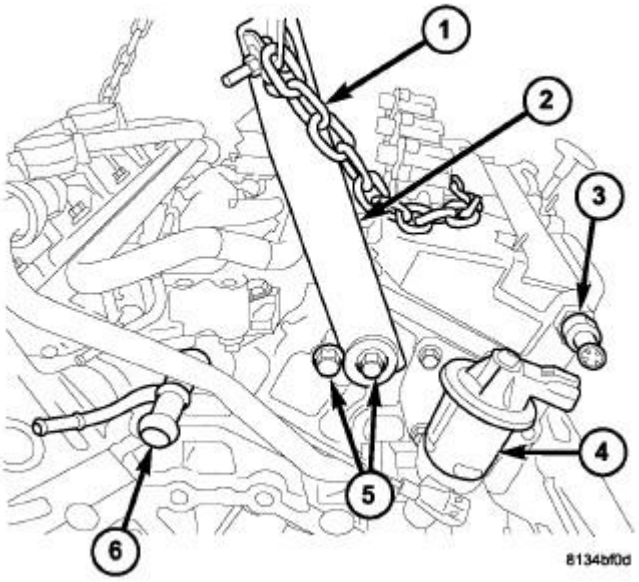

Fig. 45: ENGINE LIFTING BRACKET 8534B
Courtesy of CHRYSLER LLC

1 - LIFTING CHAIN
2 - ENGINE LIFTING BRACKET from 8534B
3 - CAM POSITION SENSOR

4 - EGR VALVE
5 - BOLTS
6 - COOLANT PIPE

1. Connect the engine lifting bracket (2) from the Engine Support Fixture 8534B to the right rear of the cylinder head outer most bolt access hole. Tighten the bolt (5) to 21 N.m (15 ft. lbs.).
2. Install a bolt into the inner most bolt access hole next to the engine lifting bracket to assure lifting bracket positioning. Tighten the bolt (5) to 21 N.m (15 ft. lbs.).

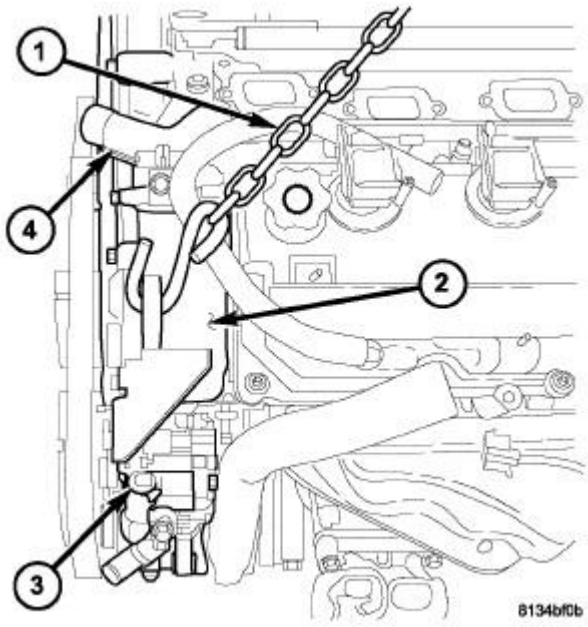

Fig. 46: ENGINE LIFTING POINT
Courtesy of CHRYSLER LLC

1 - LIFTING CHAIN
2 - UPPER TIMING CHAIN COVER
3 - POWER STEERING PUMP
4 - THERMOSTAT HOUSING

3. Connect an engine hoisting chain (1) to the engine lifting point on the left side of the rear timing cover (2) and the previously installed 8534B engine lifting bracket.

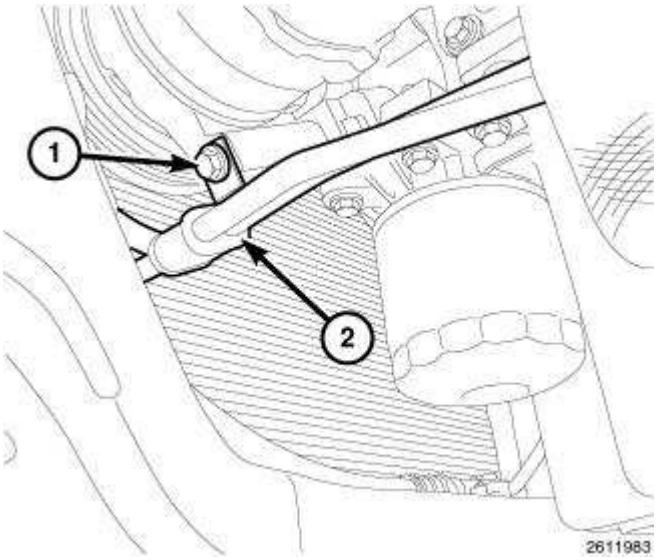

Fig. 47: A/C Compressor Mounting Bolt & Transmission Cooling Lines
Courtesy of CHRYSLER LLC

NOTE: **As the engine is lowered into the engine bay area, install and hand tighten the A/C compressor bolt (1) retaining the transmission cooler lines (2).**

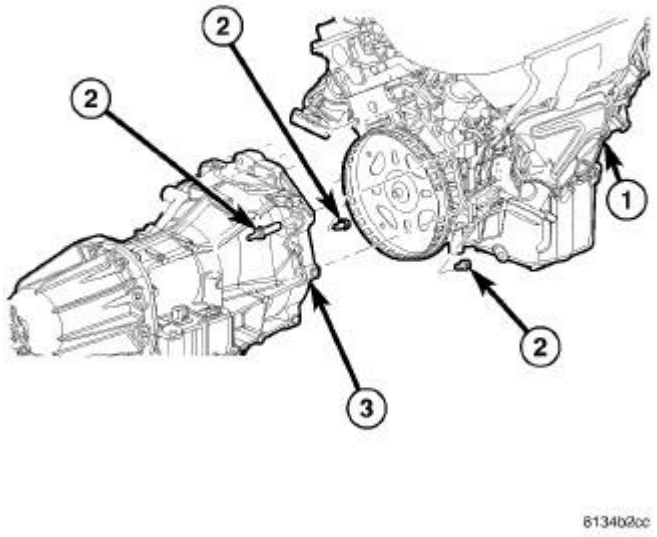

Fig. 48: Remove/Install Transmission
Courtesy of CHRYSLER LLC

CAUTION: Care must be taken when installing the engine to prevent pinching the power steering rack sensor with the left engine mount. Constantly check to assure proper positioning and no damage

occurs to other components or harnesses until union is made.

4. Carefully install the engine into the engine bay area and complete the union with the transmission.
5. Route the engine wiring harness behind the engine and tighten the four accessible transmission housing to engine mounting bolts (2) to 68 N.m (50 ft. lbs.).

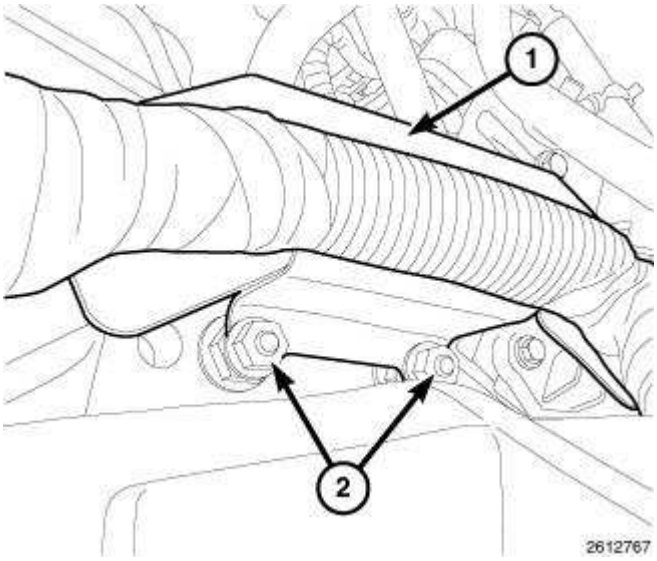

Fig. 49: Wire Harness Support Bracket & Nuts
Courtesy of CHRYSLER LLC

6. Install the wire harness support bracket (1) onto the upper most transmission bolts with two nuts (2). Tighten the nuts (2) to 21 N.m (15 ft. lbs.).

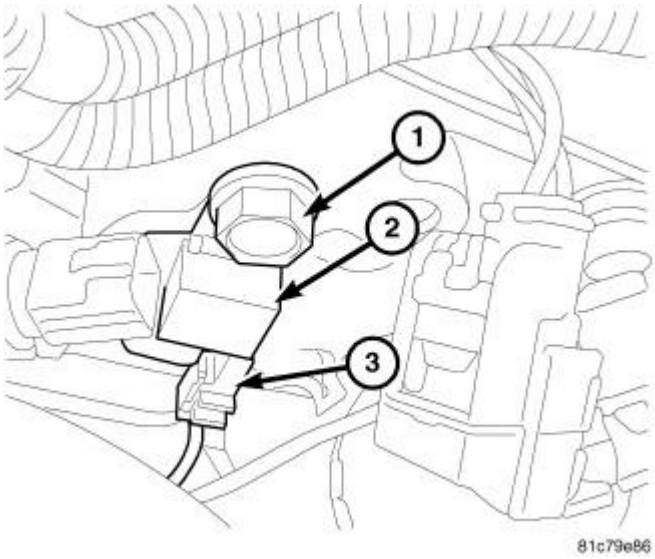

Fig. 50: Ignition Capacitor - 3.5L
Courtesy of CHRYSLER LLC

7. Install the ignition capacitor (2) and tighten the mounting bolt (1) to 21 N.m (15 ft. lbs.).
8. Connect the ignition capacitor electrical connector (3).

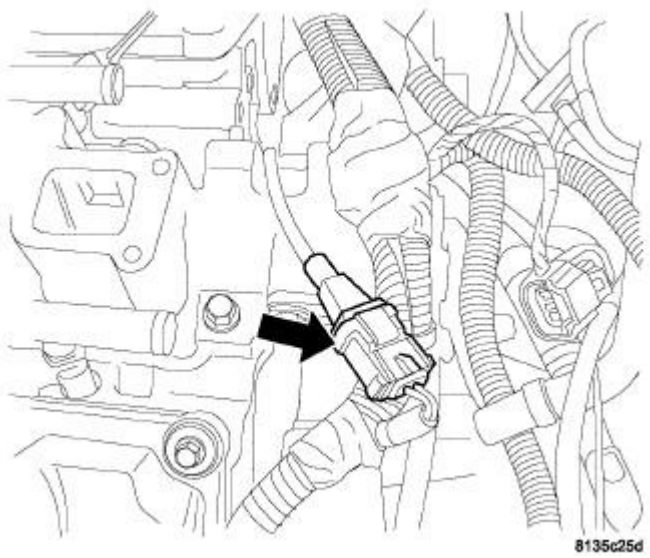

Fig. 51: KNOCK SENSOR CONNECTOR
Courtesy of CHRYSLER LLC

9. Connect the electrical connector to the knock sensor.

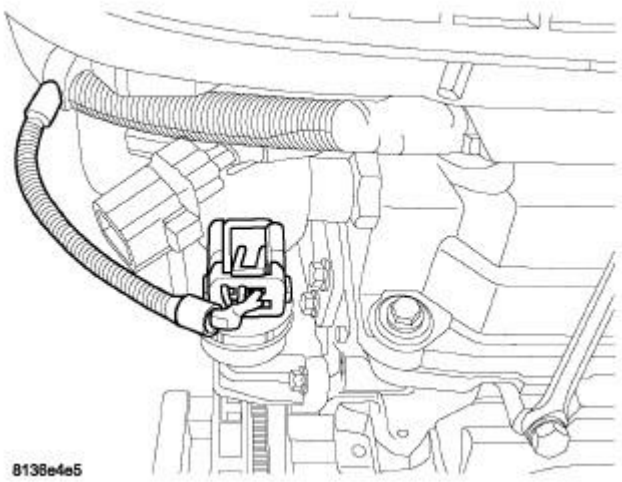

Fig. 52: Electrical Connector - 3.5L
Courtesy of CHRYSLER LLC

10. Connect and lock the electrical connector to the EGR valve.

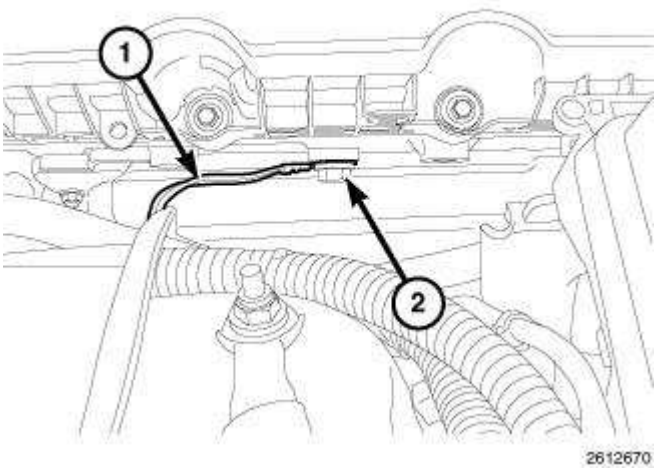

Fig. 53: Ground Wire & Bolt
Courtesy of CHRYSLER LLC

11. Connect the electrical connector to the right upstream oxygen sensor.
12. Install the ground wire (1) to the left cylinder head. Tighten the bolt (2) to 21 N.m (15 ft. lbs.).

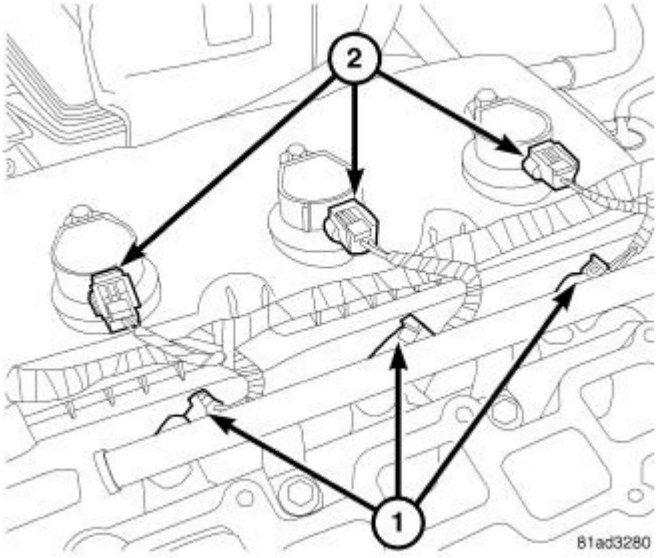

Fig. 54: Identifying Coil & Fuel Injector Connectors
Courtesy of CHRYSLER LLC

13. Connect six electrical connectors (1) to the fuel injectors.
14. Connect and lock six electrical connectors (2) to the ignition coils.

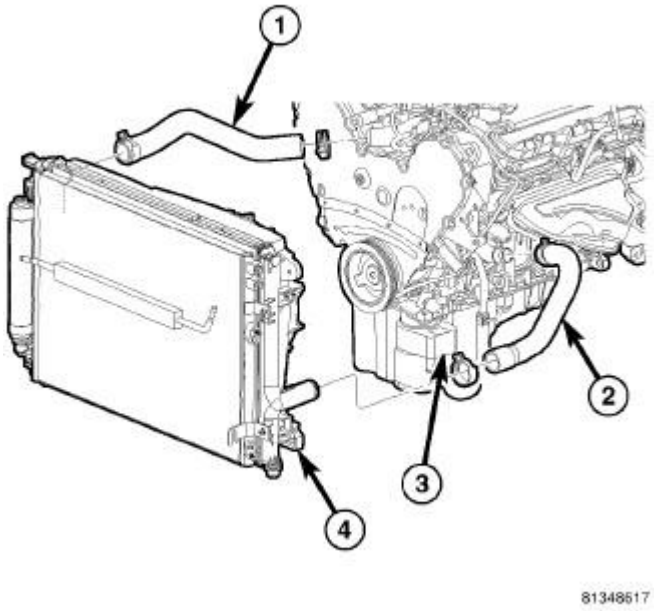

Fig. 55: RADIATOR HOSES
Courtesy of CHRYSLER LLC

15. Install the upper radiator hose (1).

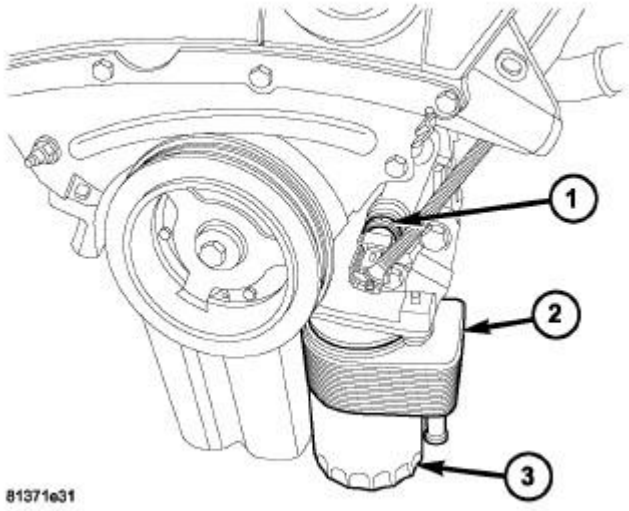

Fig. 56: OIL PRESSURE SWITCH
Courtesy of CHRYSLER LLC

16. Connect the electrical connector to the oil pressure switch (1).

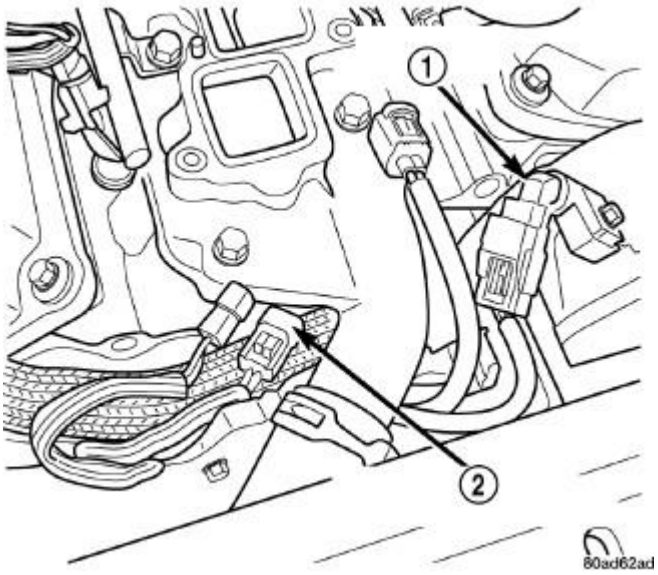

Fig. 57: Engine Coolant Temperature Sensor - 3.5L
Courtesy of CHRYSLER LLC

1 - CAMSHAFT POSITION SENSOR 2 - ENGINE COOLANT TEMPERATURE SENSOR

17. Connect the electrical connector to the camshaft position sensor (1).
18. Connect the electrical connector to the coolant temperature sensor (2).

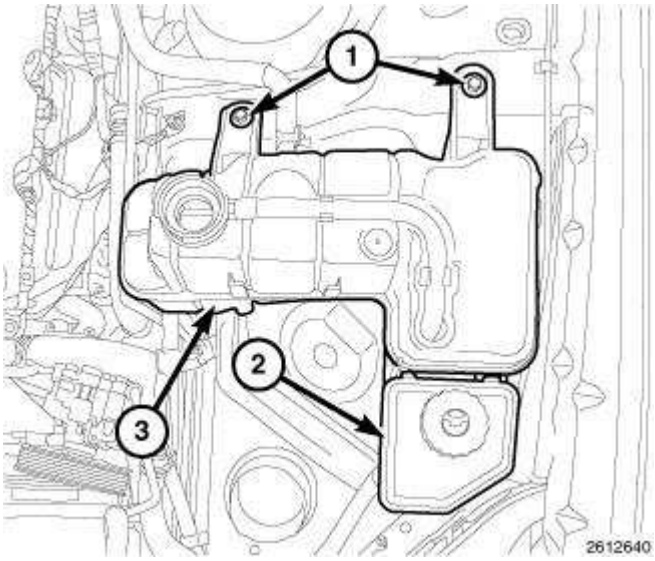

Fig. 58: Bolts, Power Steering Reservoir & Coolant Reservoir
Courtesy of CHRYSLER LLC

19. Install the coolant reservoir (3) and tighten the bolts (1) to 10 N.m (89 in. lbs.).
20. Install the power steering reservoir (2) to the coolant reservoir (3) and engage the lock tab.

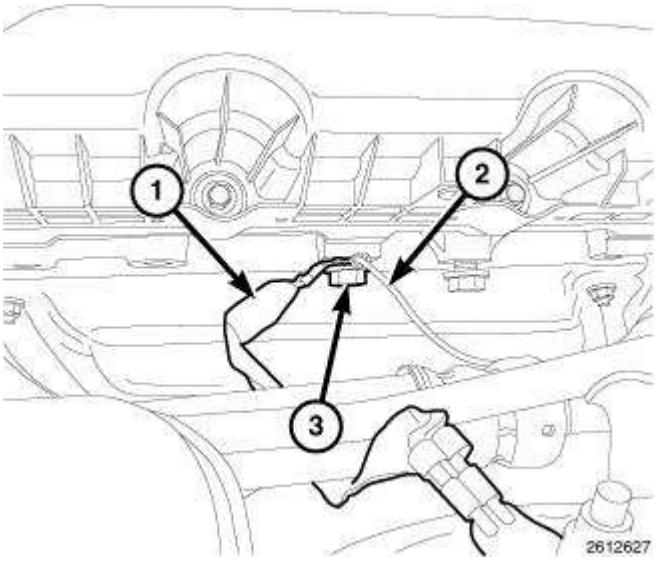

Fig. 59: Ground Wires & Bolt
Courtesy of CHRYSLER LLC

21. Connect the electrical connector to the left upstream oxygen sensor.
22. Install the ground wires (1) and (2) to the right cylinder head. Tighten the bolt (3) to 21 N.m (15 ft. lbs.).

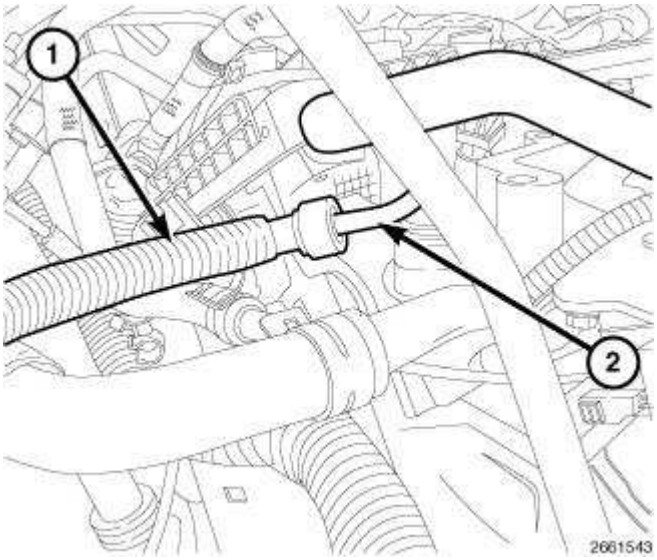

Fig. 60: Fuel Supply Hose & Fuel Rail
Courtesy of CHRYSLER LLC

23. Connect the fuel supply tube (1) to the fuel rail (2). Refer to **Fuel System/Fuel Delivery/FITTING, Quick Connect - Standard Procedure** .

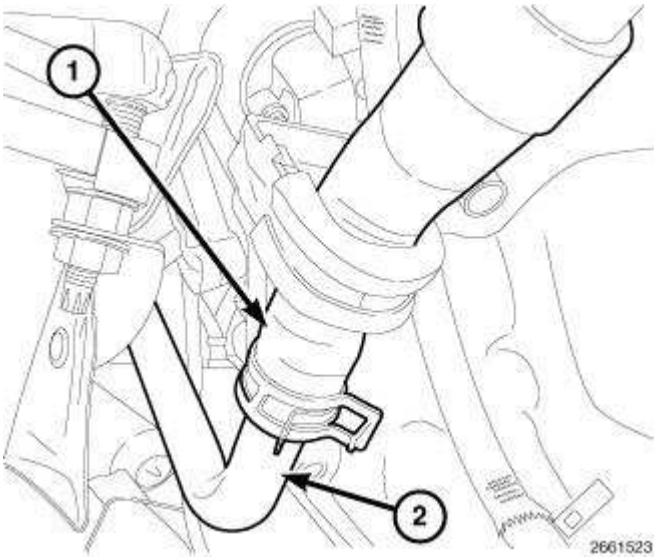

Fig. 61: Heater Hose & Extension Pipe
Courtesy of CHRYSLER LLC

24. Connect the heater hose (1) to the extension pipe (2).

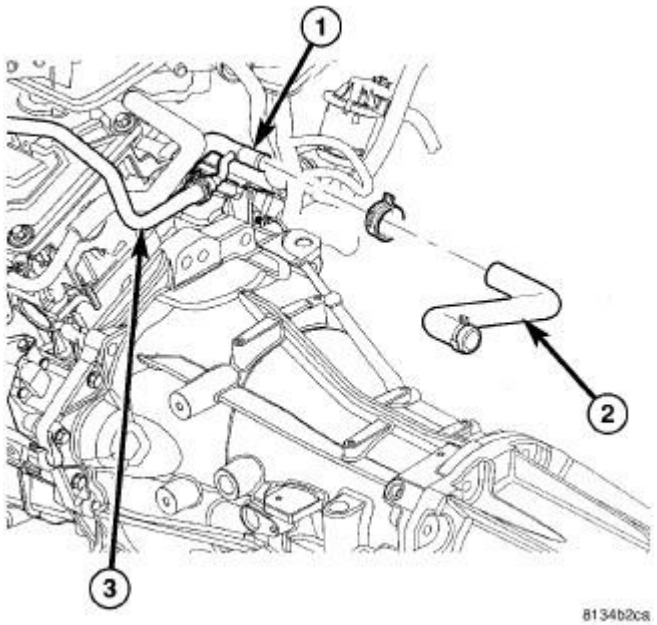

Fig. 62: COOLANT PIPE
Courtesy of CHRYSLER LLC

1 - COOLANT PIPE
2 - HEATER HOSE
3 - COOLANT RESERVOIR HOSE

25. Connect the heater hose (2) and coolant reservoir hose (3) to the rear coolant pipe (1).

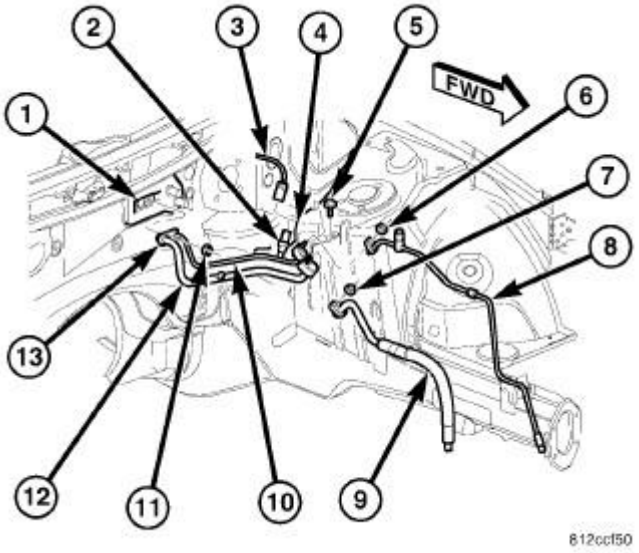

Fig. 63: Line-A/C Liquid/Suction-Rear Removal & Installation
Courtesy of CHRYSLER LLC

26. Connect the front section of the A/C liquid line (8) to the rear section of the A/C liquid line (10) with a new dual plane seal. Install the nut (6) and tighten to 22 N.m (16 ft. lbs.).
27. Connect the front section of the A/C suction line (9) to the rear section of the A/C suction line (12) with a new dual plane seal. Install the nut (7) and tighten to 22 N.m (16 ft. lbs.).

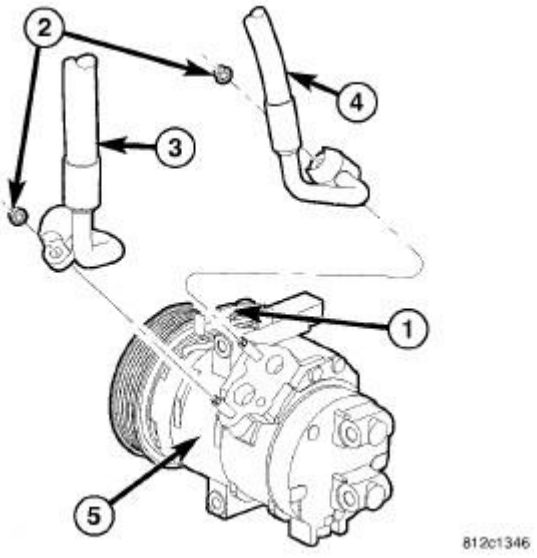

Fig. 64: COMPRESSOR-A/C LINES REMOVAL & INSTALLATION
Courtesy of CHRYSLER LLC

28. Connect the discharge line (4) to the A/C compressor (5) with a new dual plane seal. Install the nut (2) and tighten to 23 N.m (17 ft. lbs.).
29. Connect the engine wire harness to the compressor clutch field coil connector (1).

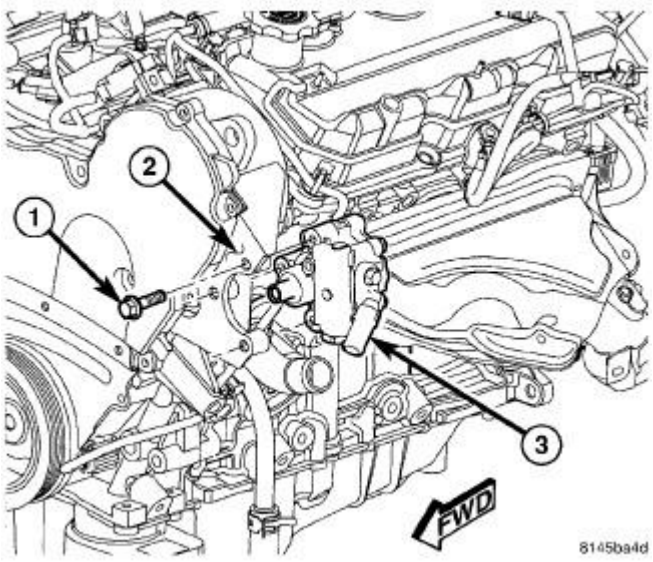

Fig. 65: POWER STEERING PUMP - 2.7L/3.5L
Courtesy of CHRYSLER LLC

30. Install the power steering pump (3) to the engine bracket (2) with three mounting bolts (1) through access holes in the pulley. Tighten the bolts to 28 N.m (21 ft. lbs.).
31. Install the accessory drive belt. Refer to **Cooling/Accessory Drive/BELT, Serpentine - Installation** .

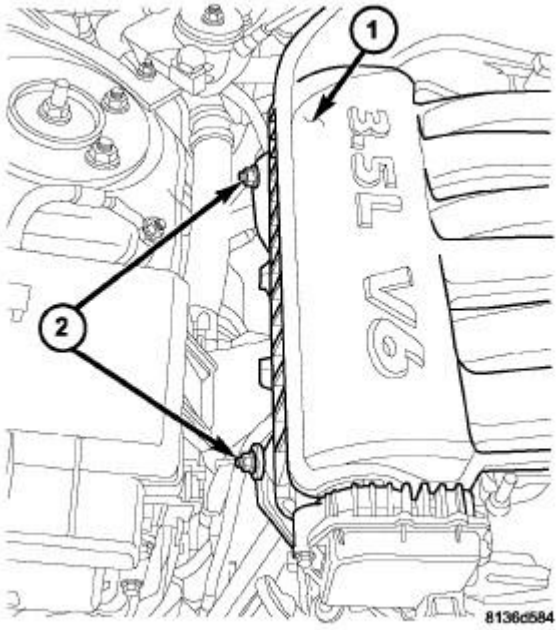

Fig. 66: Intake Manifold Braces
Courtesy of CHRYSLER LLC

32. Install the upper intake manifold (1) and upper intake manifold support brackets (2). See **Engine/Manifolds/MANIFOLD, Intake - Installation**.

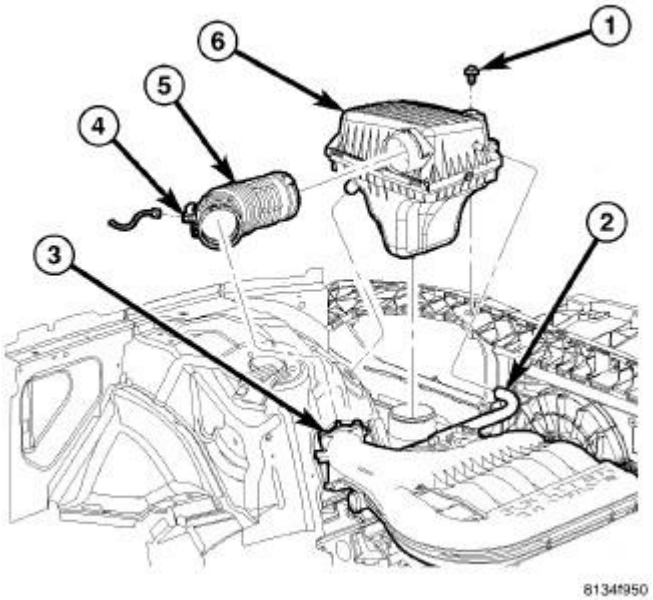

Fig. 67: Air Cleaner Housing
Courtesy of CHRYSLER LLC

1 - BOLT 2 - CCV HOSE 3 - THROTTLE 4 - IAT SENSOR 5 - INLET AIR DUCT 6 - AIR CLEANER ELEMENT HOUSING

33. Install the air cleaner body (6). See **Engine/Air Intake System/BODY, Air Cleaner - Installation**.

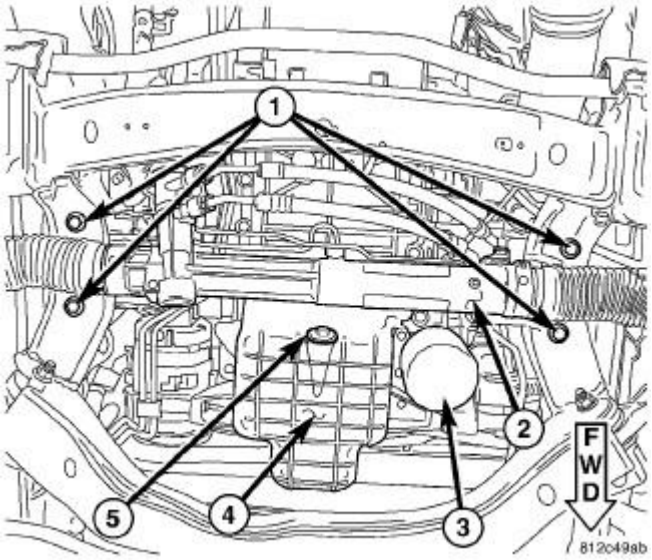

Fig. 68: Identifying Engine Mounts, Oil Pan, Drain Plug & Oil Filter
Courtesy of CHRYSLER LLC

34. Raise and support the vehicle. Refer to **Vehicle Quick Reference/Hoisting - Standard Procedure** .
35. Install the engine mount to cradle nuts (1) and tighten to 75 N.m (55 ft. lbs.).

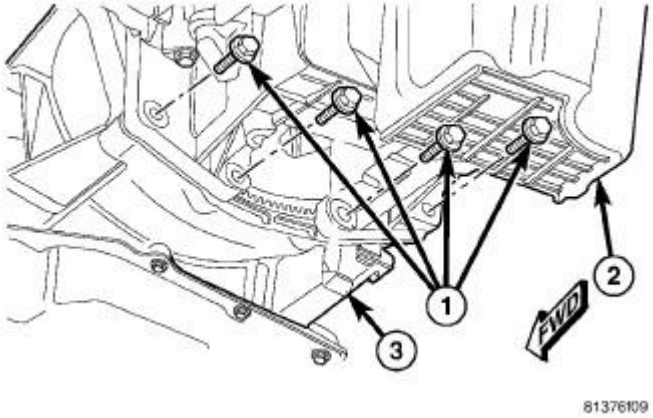

Fig. 69: Removing/Installing Transmission To Oil Pan Bolts - 3.5L
Courtesy of CHRYSLER LLC

36. Install the four bolts (1) securing the engine oil pan (2) to the transmission (3) and tighten to 55 N.m (40 ft. lbs.).

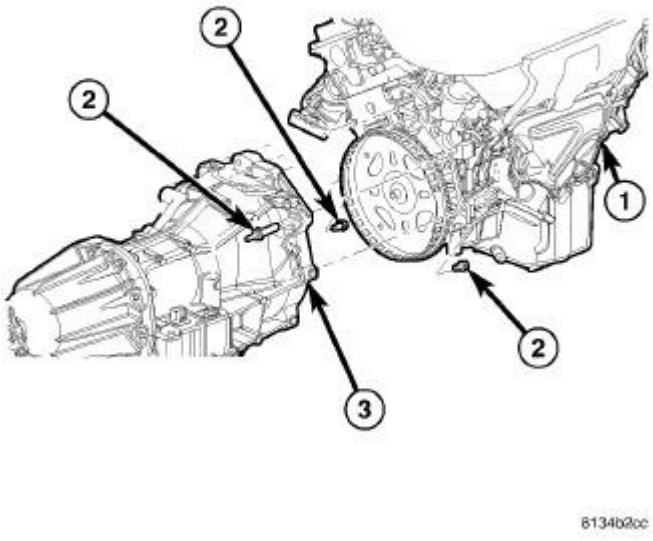

Fig. 70: Remove/Install Transmission
Courtesy of CHRYSLER LLC

37. Install the two remaining engine to transmission housing mounting bolts (2) accessible from below the vehicle and tighten to 68 N.m (50 ft. lbs.).

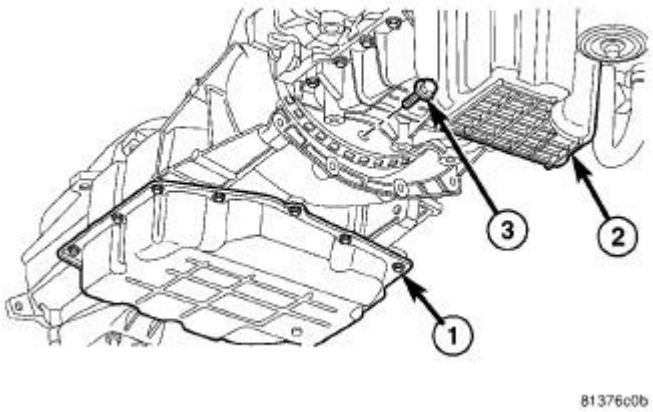

Fig. 71: Removing/Installing Torque Converter Bolts
Courtesy of CHRYSLER LLC

38. Install the torque converter bolts (3):

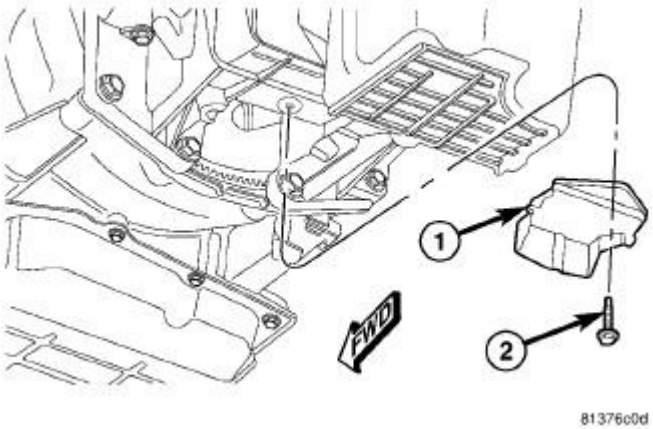

Fig. 72: Removing/Installing Torque Converter Access Cover - 3.5L
Courtesy of CHRYSLER LLC

- If equipped with the 42RLE transmission, tighten the four bolts to 75 N.m (55 ft. lbs.).
- If equipped with the NAG1 transmission, tighten the six bolts to 42 N.m (31 ft. lbs.).

39. Install the torque converter access cover (1). Tighten the bolt (2) to 12 N.m (105 in. lbs.).

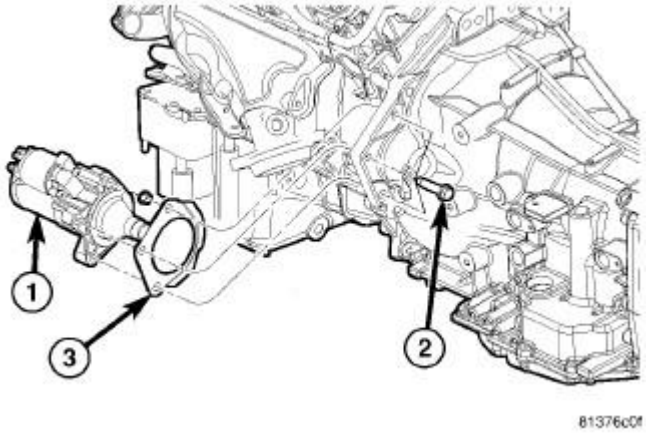

Fig. 73: Starter And Fasteners
Courtesy of CHRYSLER LLC

1 - STARTER 2 - BOLTS 3 - CLOSEOUT PLATE

40. Install the starter (1) and closeout plate (3). Refer to **Electrical/Starting/STARTER - Installation** .

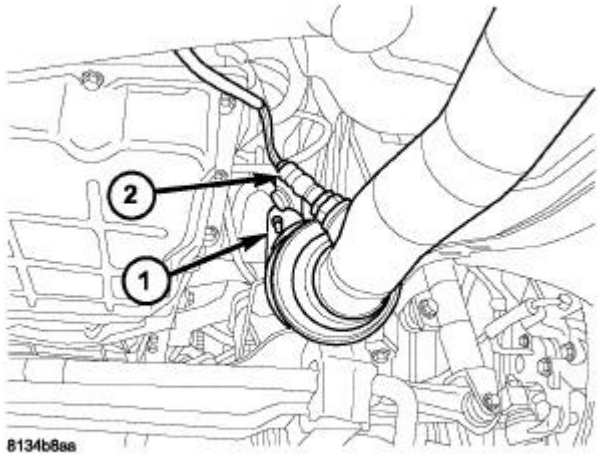

Fig. 74: RIGHT EXHAUST PIPE TO MANIFOLD UNION
Courtesy of CHRYSLER LLC

41. Connect the right exhaust pipe to the exhaust manifold (1) and tighten the ball flange nuts to 34 N.m (25 ft. lbs.).
42. Connect the electrical connector to the right downstream oxygen senor (2).

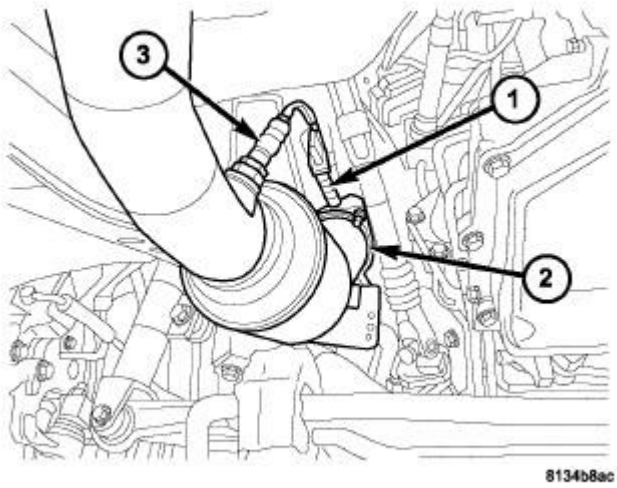

Fig. 75: Left Exhaust Pipe To Manifold Union
Courtesy of CHRYSLER LLC

1 - HO2S #1
2 - EXHAUST UNION
3 - HO2S-#2

43. Connect the left exhaust pipe to the exhaust manifold (2) and tighten the ball flange nuts to 34 N.m (25 ft. lbs.).
44. Connect the electrical connector (1) to the left downstream oxygen senor (3).

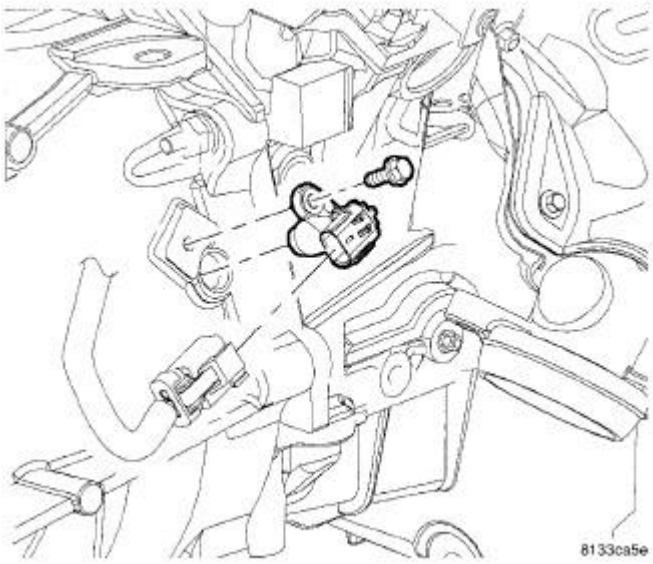

Fig. 76: Removing/Installing Crankshaft Position Sensor
Courtesy of CHRYSLER LLC

45. Install the crankshaft position sensor. Refer to **Fuel System/Fuel Injection/SENSOR, Crankshaft Position - Installation** .

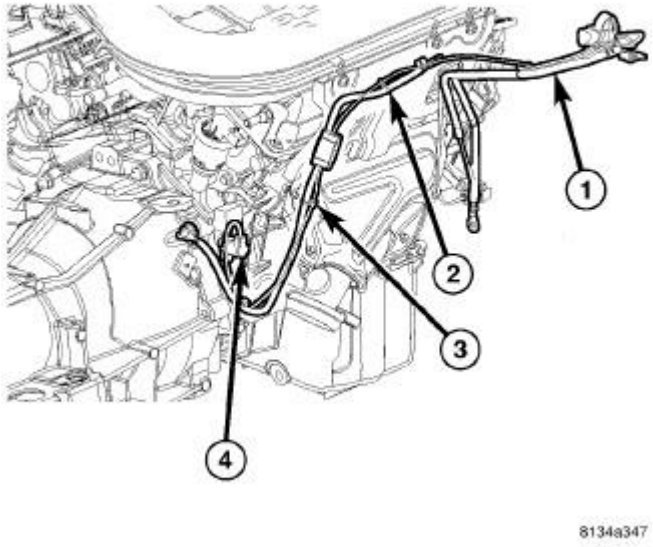

Fig. 77: ENGINE BLOCK HEATER
Courtesy of CHRYSLER LLC

1 - NEGATIVE BATTERY CABLE
2 - NEGATIVE BATTERY CABLE

3 - BLOCK HEATER HARNESS 4 - ENGINE BLOCK HEATER

46. Install the ground strap (3) to the transmission mounting bolt. Tighten the nut to 21 N.m (15 ft. lbs.).
47. Attach the power cord to the engine block heater (4) (if equipped).

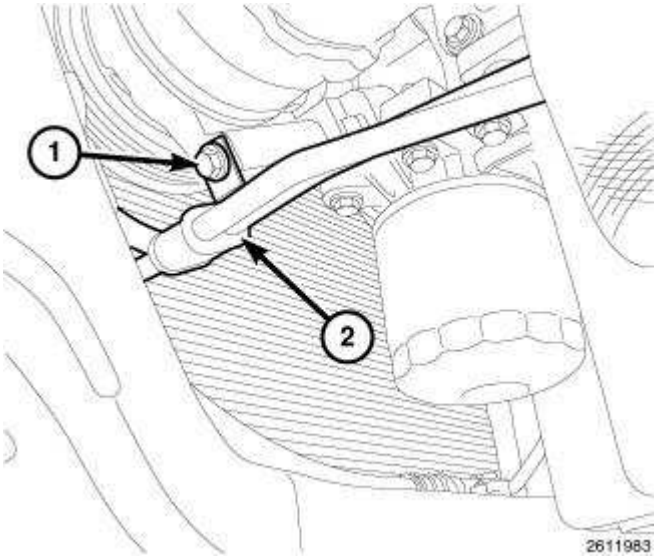

Fig. 78: A/C Compressor Mounting Bolt & Transmission Cooling Lines
Courtesy of CHRYSLER LLC

48. Tighten the previously installed A/C compressor mounting bolt (1) securing the transmission cooling lines (2) to 26 N.m (19 ft. lbs.).

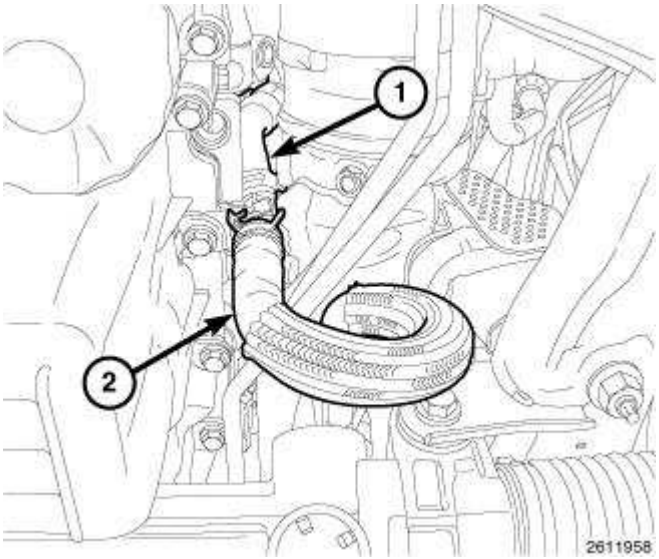

Fig. 79: Engine Coolant Tube & Heater Hose
Courtesy of CHRYSLER LLC

49. Connect the heater hose (2) to the oil cooler (if equipped) or to the engine coolant tube (1).

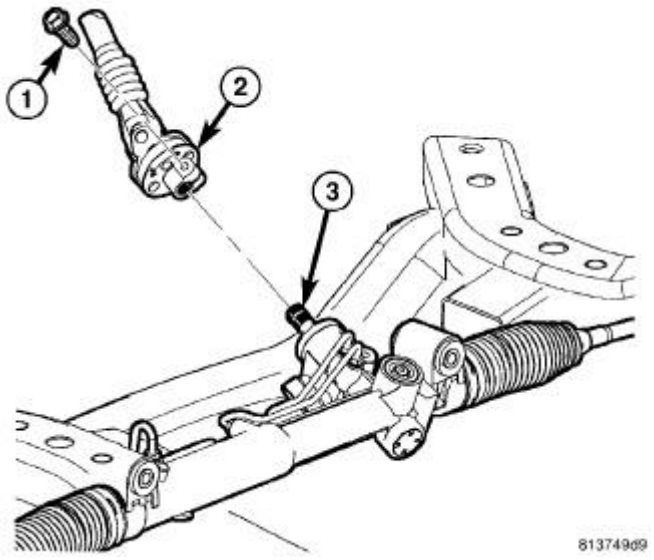

Fig. 80: Steering Coupling
Courtesy of CHRYSLER LLC

CAUTION: Prior to coupling installation, make sure gear is centered in its travel to match clockspring centering in steering column.

50. Align the coupling (2) with the input shaft (3) and install the steering coupling. Install a new pinch bolt (1). Tighten the bolt to 54 N.m (40 ft. lbs.).

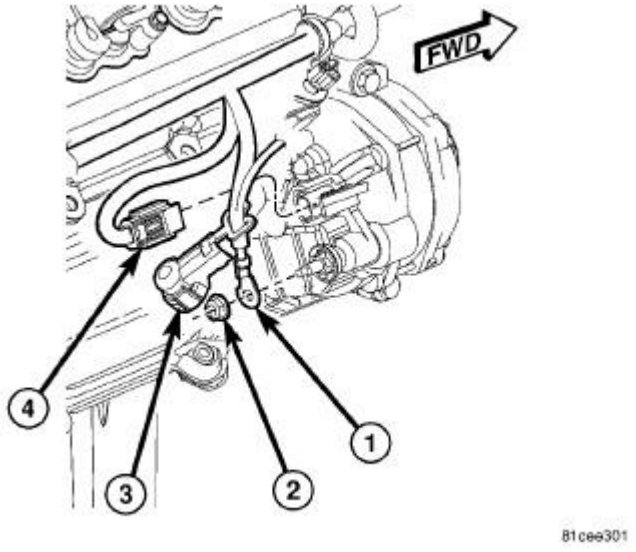

Fig. 81: Alternator Electrical Connection
Courtesy of CHRYSLER LLC

51. Connect the generator electrical connections. Refer to **Electrical/Charging/GENERATOR - Installation** .

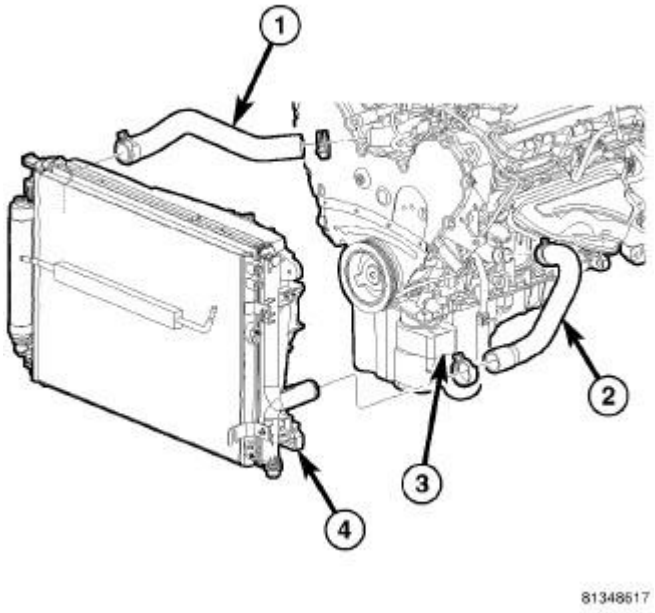

Fig. 82: RADIATOR HOSES
Courtesy of CHRYSLER LLC

52. Connect the lower radiator hose (2).
53. Install a new oil filter. See **Engine/Lubrication/FILTER, Engine Oil - Installation**.
54. Install the belly pan. Refer to **Body/Exterior/BELLY PAN - Installation** .

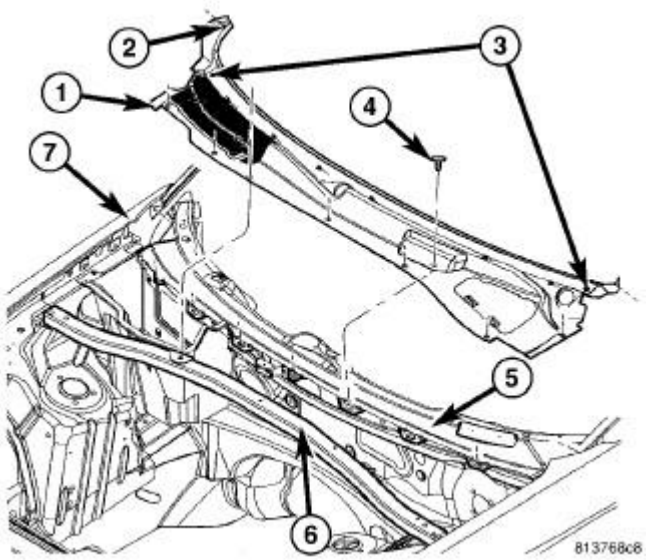

Fig. 83: Removing/Installing Cowl Panel
Courtesy of CHRYSLER LLC

55. Lower the vehicle.
56. Fill the cooling system to the proper level using the appropriate coolant. Refer to **Cooling - Standard Procedure** .
57. Fill engine crankcase with proper oil to correct level. Refer to **Vehicle Quick Reference/Capacities and Recommended Fluids - Specifications** .
58. Evacuate and recharge the air conditioning system. Refer to **Heating and Air Conditioning/Plumbing - Standard Procedure** .
59. Install the strut tower support (6) with four bolts. Tighten the bolts to 20 N.m (15 ft. lbs.).
60. Install the windshield cowl panel assembly (1). Refer to **Body/Exterior/COVER, Cowl Panel - Installation** .
61. Install the hood. Refer to **Body/Hood/HOOD - Installation** .
62. Connect the negative battery cable and tighten nut to 5 N.m (45 in. lbs.).
63. Start and operate the engine until operating temperature is reached and the radiator fans cycle.

NOTE: **The Cam/Crank Variation Relearn procedure must be performed anytime there has been a repair/replacement made to a powertrain system, for example: flywheel, valvetrain, camshaft and/or crankshaft sensors or components. Refer to DTC-Based Diagnostics/MODULE, Powertrain Control (PCM) - Standard Procedure .**

SPECIFICATIONS

3.5L ENGINE

DESCRIPTION	SPECIFICATION	
Type	60° SOHC V-6 24-Valve	
Displacement	3.5L	
Firing Order	1-2-3-4-5-6	
Compression Ratio	10:1	
Lead Cylinder	#1 Right Bank	
-	**Metric**	**Standard**
Displacement	3.5L Liters	214 cu. in.
Bore	96.0 mm	3.780 in.
Stroke	81.0 mm	3.189 in.

CYLINDER BLOCK

DESCRIPTION	SPECIFICATIONS	
-	**Metric**	**Standard**
Cylinder Bore Diameter	96.0 mm ± 0.0076	3.780 in. ± 0.0003 in.

Out-of-Round (Max.)	0.076 mm	0.003 in.
Taper (Max.)	0.051 mm	0.002 in.

PISTONS

DESCRIPTION	SPECIFICATIONS	
-	**Metric**	**Standard**
Material Type	Aluminum (Full Floating Pins)	
Piston Diameter	95.98 mm ± 0.019 mm	3.7788 in. ± 0.0008 in.
Clearance at Size Location	-0.007 to +0.047 mm	-0.003 to +0.0018 in.
Piston Pin Bore Diameter	22.005-22.012 mm	0.8663-0.8666 in.
Piston Weight - A	404.5-409.5 grams	14.27-14.44 oz.
Piston Weight - B	399.5-404.5 grams	14.09-14.27 oz.
Piston Ring Groove Diameter #1	87.4-87.6 mm	3.441-3.449 in.
Piston Ring Groove Diameter #2	86.3-86.5 mm	3.397-3.4055 in.
Piston Ring Groove Diameter #3	85.8-86.0 mm	3.378-3.385 in.

PISTON PINS

DESCRIPTION	SPECIFICATIONS	
-	**Metric**	**Standard**
Type	Full Floating	
Clearance in Piston	0.005-0.015 mm	0.002-0.0006 in.
Clearance in Rod	0.010-0.023 mm	0.0004-0.0009 in.
Diameter	21.997-22.000 mm	0.8660-0.86614 in.

PISTON RINGS

DESCRIPTION	SPECIFICATIONS	
-	**Metric**	**Standard**
Ring Gap-Top Compression Ring	0.20-0.36 mm	0.008-0.014 in.
Ring Gap-2nd Compression Ring (Micro-Napier	0.20-0.40 mm	0.0078-0.0157 in.
Ring Gap-Oil Control (Steel Rails)	0.25-0.76 mm	0.010-0.030 in.

PISTON RING SIDE CLEARANCE

DESCRIPTION	SPECIFICATIONS	
-	**Metric**	**Standard**
Top and Second Compression Ring	0.04-0.08 mm	0.0016-0.0031 in.

Oil Ring (Steel Rails	0.038-0.184 mm	0.0015-0.0073 in.

PISTON RING WIDTH

DESCRIPTION	SPECIFICATIONS	
-	**Metric**	**Standard**
Top Compression Ring	1.17-1.19 mm	0.0461-0.0469 in.
2nd Compression Ring (Micro-Napier	1.47-1.49 mm	0.058-0.059 in.
Oil Control (Steel Rails)	0.445-0.470 mm	0.0176-0.0186 in.

CONNECTING RODS

DESCRIPTION	SPECIFICATIONS	
-	**Metric**	**Standard**
Rod Pin Bore Diameter	22.010-22.020 mm	0.8665-0.8669 in.
Side Clearance (MAX)	0.39 mm	0.0153 in.
Total Weight (Less Bearing)	693 grams	24.445 oz.

CRANKSHAFT MAIN BEARING JOURNALS

DESCRIPTION	SPECIFICATIONS	
-	**Metric**	**Standard**
Diameter	63.987-64.013 mm	2.519-2.520 in.
Main Bearing Diametrical Clearance	0.032-0.062 mm	0.0013-0.0024 in.
Bearing Clearance (Wear Limit)	0.072 mm	0.0028 in.
Out-of-Round (MAX)	0.008 mm	0.0003 in.
Diametrical Taper (MAX)	0.010 mm	0.0004 in.
End Play	0.048-0.260 mm	0.002-0.010 in.
End Play (MAX)	0.37 mm	0.015 in.

CONNECTING ROD JOURNALS

DESCRIPTION	SPECIFICATIONS	
-	**Metric**	**Standard**
Diameter	57.982-58.002 mm	2.282-2.283 in.
Bearing Diametrical Clearance	0.035-0.073 mm	0.0014-0.0029 in.
Bearing Clearance (Wear Limit)	0.080 mm	0.003 in.
Out-of-Round (MAX)	0.008 mm	0.0003 in.
Diametrical Taper (MAX)	0.010 mm	0.0004 in.

CAMSHAFT

DESCRIPTION	SPECIFICATIONS	
-	**Metric**	**Standard**
Bore Diameter	43.038-43.059 mm	1.6944-1.6953 in.

Diametrical Clearance	0.078-0.12 mm	0.003-0.0047 in.
Diametrical Clearance (MAX)	0.15 mm	0.0059 in.
Bearing Journal Diameter	42.939-42.960 mm	1.6905-1.6913 in.
End Play	0.03-0.035 mm	0.001-0.014 in.

VALVE TIMING-INTAKE VALVE

DESCRIPTION	SPECIFICATIONS (CRANKSHAFT DEGREES)
Opens (ATDC)	3°
Closes (ABDC)	61°
Duration	238°
Centerline	122°

VALVE TIMING-EXHAUST VALVE

DESCRIPTION	SPECIFICATIONS (CRANKSHAFT DEGREES)
Opens (BBDC)	56°
Closes (ATDC)	16°
Duration	252°
Centerline	110°

CYLINDER HEAD

DESCRIPTION	SPECIFICATIONS	
-	**Metric**	**Standard**
Gasket Thickness (Compressed)	1.78 mm	0.059 in.
Valve Seat Angle (From Horizontal)	45-45.5°	
Valve Seat Runout (MAX)	0.051 mm	0.002 in.
Valve Seat Width-Intake	0.8-1.2 mm	0.031-0.067 in.
Valve Seat Width-Exhaust	1.3-1.7 mm	0.05-0.067 in.
Guide Bore Diameter (Std.)	6.975-7.00 mm	0.2746-0.2756 in.
Valve Guide Height *	9.5-10.5 mm	0.3740-0.4134 in.
* Measured from cylinder head surface		

VALVES

DESCRIPTION	SPECIFICATIONS	
-	**Metric**	**Standard**
Face Angle (From Horizontal)	44.5°-45°	
Head Diameter-Intake	36.37-36.63 mm	1.4319-14421 in.
Head Diameter-Exhaust	28.87-29.13 mm	1.1366-1.1469 in.
Length-Intake (Overall)	114.41-114.99 mm	4.5043-4.5272 in.

Length-Exhaust (Overall)	126.17-126.75 mm	4.9673-4.9902 in.
Stem Diameter-Intake	6.935-6.953 mm	0.2730-0.2737 in.
Stem Diameter-Exhaust	6.906-6.924 mm	0.2719-0.2726 in.
Stem-to-Guide Clearance-Intake	0.022-0.065 mm	0.0009-0.0026 in.
Stem-to-Guide Clearance-Intake (MAX.) Rocking Method	0.29 mm	0.0114 in.
Stem-to-Guide Clearance-Exhaust	0.051-0.094 mm	0.002-0.0037 in.
Stem-to-Guide Clearance-Intake (MAX.) Rocking Method	0.370 mm	0.0146 in.
Valve Lift-Intake (Zero Lash)	8.55 mm	0.3367 in.
Valve Lift-Exhaust (Zero Lash)	6.53 mm	0.2571 in.
Valve Margin-Intake	0.835-1.165 mm	0.0329-0.0459 in.
Valve Margin-Exhaust	1.44-1.77 mm	0.0567-0.0697 in.
Valve Stem Tip Height-Intake	42.366-43.665 mm	1.6680-1.7187 in.
Valve Stem Tip Height-Exhaust	45.205-46.486 mm	1.780-1.8305 in.

VALVE SPRINGS

DESCRIPTION	SPECIFICATIONS	
-	**Metric**	**Standard**
Free Length-Intake (Approx.)	43.675 mm	1.7195 in.
Free Length-Exhaust- Yellow (Approx.)	47.1 mm	1.8543 in.
Free Length-Exhaust- White (Approx.)	48.3 mm	1.9015 in.
Spring Force-Intake (Valve Closed)	309-358 N @ 38.0 mm	69.5-80.5 lbs. @ 1.4961 in.
Spring Force-Exhaust- Yellow-(Valve Closed)	314-354 N @ 38.0 mm	70.5-79.5 lbs. @ 1.496 in.
Spring Force-Exhaust- White-(Valve Closed)	355-401 N @ 38.0 mm	80-90 lbs. @ 1.496 in.
Spring Force-Exhaust- Yellow-(Valve Open)	579-640 N @ 31.47 mm	130-144 lbs. @ 1.239 in.
Spring Force-Exhaust- White-(Valve Open)	621-687 N @ 31.47 mm	139.5-154.5 lbs. @ 1.239 in.
Spring Force-Intake (Valve Open)	836-907 N @ 29.45 mm	188-204 lbs. @ 1.1594 in.
Number of Coils-Intake	6.86	
Number of Coils-Exhaust	7.66	
Color of Spring (Top of Coils)-Intake-Right Hand Coil Direction	Orange	

Color of Spring (Top of Coils)-Exhaust-Left Hand Coil Direction	Yellow or White	
Wire Diameter-Intake	4.29-4.35 mm	0.1547-0.1570 in.
Wire Diameter-Exhaust	3.93-3.99 mm	0.1547-0.1570 in.
Spring Installed Height *	38.0 mm	1.4961 in.
* Spring Seat to Bottom Retainer-Intake and Exhaust		

OIL PUMP

DESCRIPTION	SPECIFICATIONS	
-	**Metric**	**Standard**
Clearance Over Rotors	0.077 mm	0.003 in.
Cover-Out-of-Flat (MAX.)	0.025 mm	0.001 in.
Inner and Outer Rotor Thickness (MIN.)	14.229 mm	0.563 in.
Outer Rotor Thickness (MAX.)	0.39 mm	0.015 in.
Outer Rotor Diameter (MIN.)	79.997 mm	3.149 in.
Tip Clearance Between Rotors (MAX.)	0.20 mm	0.008 in.

OIL PRESSURE

DESCRIPTION	SPECIFICATIONS
NOTE: At Normal Operating Temperatures	
Pressure @ Curb Idle Speed *	34.47 kPa Min. (5 PSI MIN.)
Pressure @ 3000 RPM	300-724 kPa (45-105 PSI.)
*CAUTION: If pressure is zero at curb idle, DO NOT run engine at 3000 RPM.	

TORQUE - 3.5L

DESCRIPTION	N.m	Ft. Lbs.	In. Lbs.
Camshaft Sprocket Bolt - Right Side	102 +1/4 Turn	75 +1/4 Turn	-
Camshaft Sprocket Bolt - Left Side	102 +1/4 Turn	75 +1/4 Turn	-
Camshaft Thrust Plate - Bolts	28	-	250
Connecting Rod Cap - Bolts	27 +1/4 Turn	20 +1/4 Turn	-
Crankshaft Main Bearing Cap Inner Main Cap Bolts	20 +1/4 Turn	15 +1/4 Turn	-
Crankshaft Main Bearing Cap Outer Main Cap Bolts	27 +1/4 Turn	20 +1/4 Turn	-
Tie Bolts (Horizontal)	28	-	250
Crankshaft Damper - Bolt	95	70	-

Cylinder Head Bolts* -Step 1	61	45	-
Cylinder Head Bolts* -Step 2	88	65	-
Cylinder Head Bolts* -Step 3	88	65	-
Cylinder Head Bolts* -Step 4	+1/4 Turn	+1/4 Turn	-
*Refer to procedure for tightening sequence. See **Engine/Cylinder Head - Installation**.			
Cylinder Head Cover - Bolts	12	-	105
Exhaust Manifold to Cylinder Head - Bolts	23	-	200
Exhaust Manifold Heat Shield - Bolts	12	-	105
Flex plate to Crankshaft	95	70	-
Flex plate to Torque Converter	75	55	-
Intake Manifold - Lower	28	-	250
Intake Manifold - Upper	12	-	105
Oil Pan -M6 Bolts	12	-	105
Oil Pan -M8 Bolts	28	-	250
Oil Pan to Transmission Bell Housing	55	40	-
Flex Plate Inspection Cover	11	-	97
Oil Pan Drain Plug	27	20	-
Oil Cooler Connector Bolt	61	45	-
Oil Filter	12	-	102
Oil Pump to Block - Bolts	28	-	250
Oil Pump Cover - Bolts	12	-	105
Oil Pump Pick Up Tube - Bolt	28	-	250
Crankshaft Rear Seal Retainer	12	-	105
Engine Mount to Mounting Bracket	75	55	-
Engine Mount to Cradle - Nuts	75	55	-
Engine Mount Heat Shield	11	-	97
Engine Mount Through Studs	12	-	106
Rocker Shaft Pedestal Retaining - Bolts	31	-	275
Spark Plugs	28	20	-
Timing Belt Tensioner-Bolts	28	-	250
Timing Belt Tensioner Pulley Assembly - Bolt	61	45	-
Timing Belt Cover -M6 Bolts	12	-	105
Timing Belt Cover -M8 Bolts	28	-	250
Timing Belt Cover	54	40	-

-M10 Bolts			

SPECIAL TOOLS

SPECIAL TOOLS

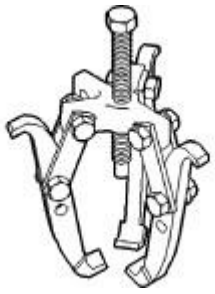

Fig. 84: Puller 1023
Courtesy of CHRYSLER LLC

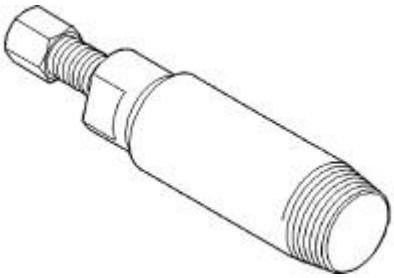

Fig. 85: Remover, Seal 6341-A
Courtesy of CHRYSLER LLC

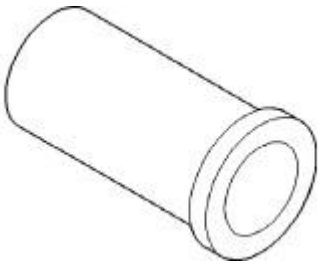

Fig. 86: Tool, Camshaft Alignment 6342
Courtesy of CHRYSLER LLC

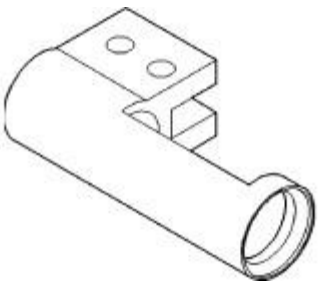

Fig. 87: Adapter, Valve Spring 6526-A

Courtesy of CHRYSLER LLC

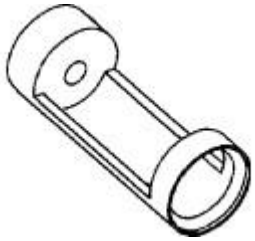

Fig. 88: Adapter 6527
Courtesy of CHRYSLER LLC

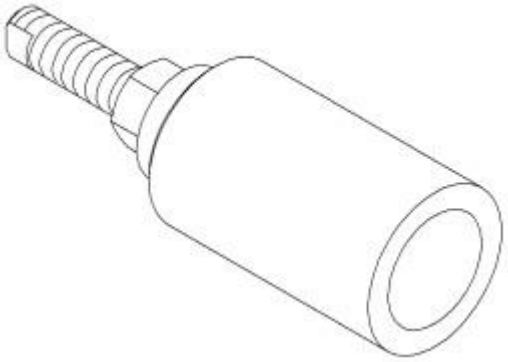

Fig. 89: Installer, Crankshaft Seal 6780
Courtesy of CHRYSLER LLC

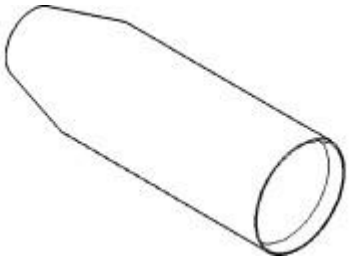

Fig. 90: Protector, Cam Seal 6788
Courtesy of CHRYSLER LLC

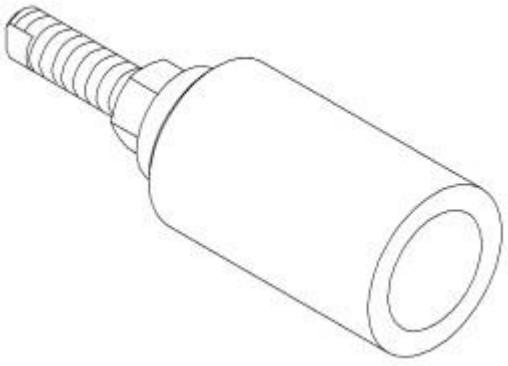

Fig. 91: Installer, Crank Sprocket 6792
Courtesy of CHRYSLER LLC

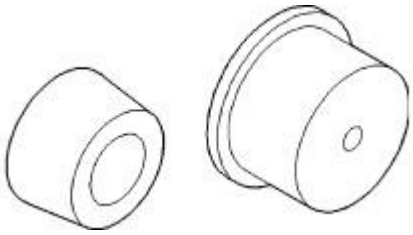

Fig. 92: Installer, Seal 6926
Courtesy of CHRYSLER LLC

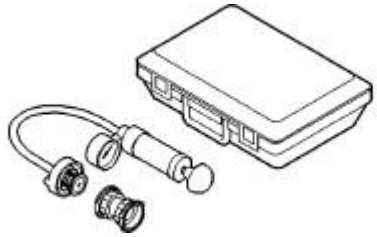

Fig. 93: Tester, Cooling System 7700
Courtesy of CHRYSLER LLC

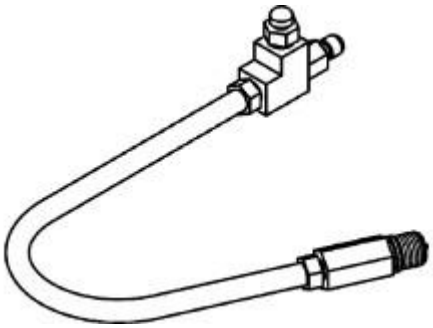

Fig. 94: Adaptor, Pressure PEP 8116
Courtesy of CHRYSLER LLC

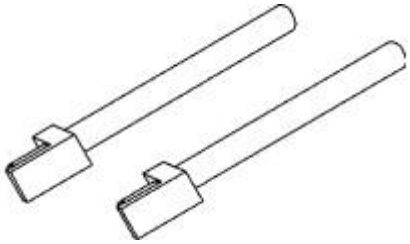

Fig. 95: Guide Pins 8189
Courtesy of CHRYSLER LLC

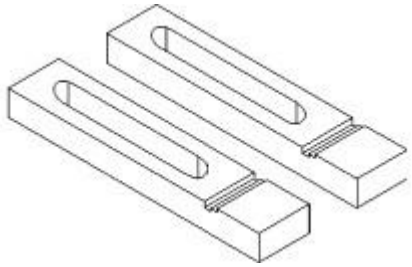

Fig. 96: Alignment Fixture 8225
Courtesy of CHRYSLER LLC

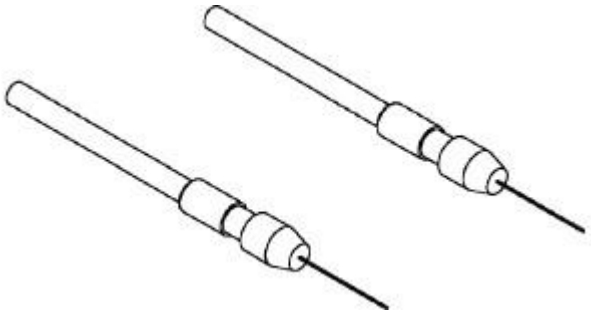

Fig. 97: Release Probe 8351
Courtesy of CHRYSLER LLC

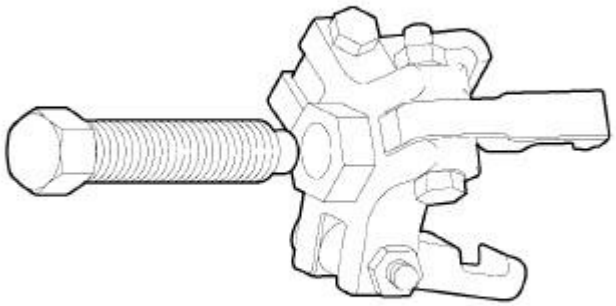

Fig. 98: 3 Jaw Puller 8454
Courtesy of CHRYSLER LLC

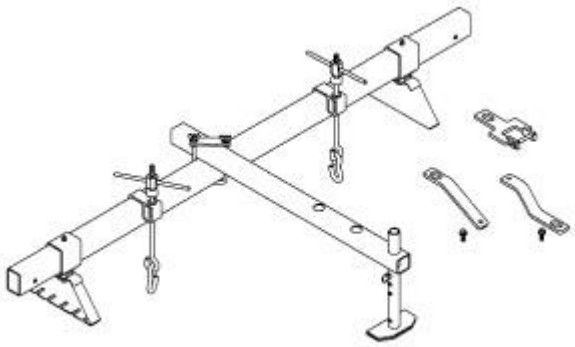

Fig. 99: Support Fixture, Engine 8534-B
Courtesy of CHRYSLER LLC

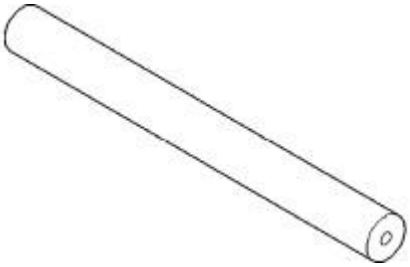

Fig. 100: Insert, Crankshaft 9020
Courtesy of CHRYSLER LLC

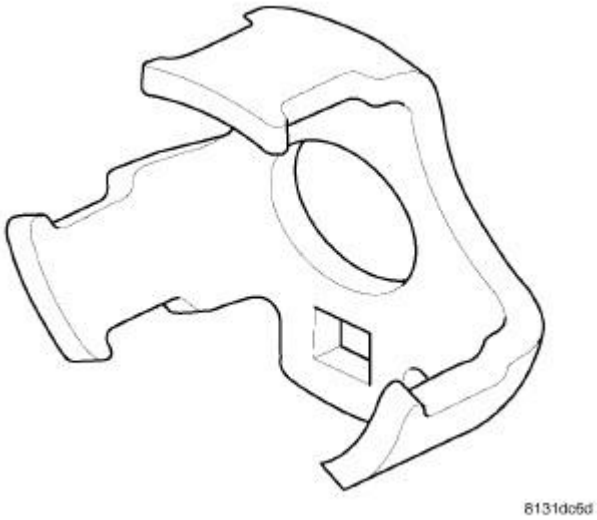

Fig. 101: Holding Fixture, Damper 9365
Courtesy of CHRYSLER LLC

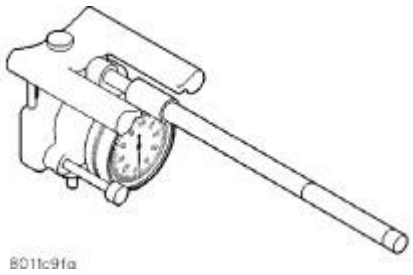

Fig. 102: Cylinder Indicator C-119
Courtesy of CHRYSLER LLC

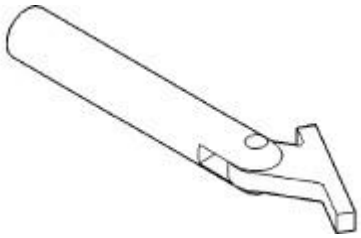

Fig. 103: Remover/Installer C-3059-A
Courtesy of CHRYSLER LLC

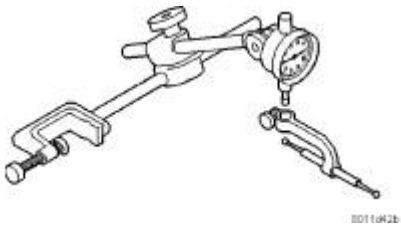

Fig. 104: Set, Dial Indicator C-3339-A
Courtesy of CHRYSLER LLC



Fig. 105: Compressor, Valve Spring C-3422-D
Courtesy of CHRYSLER LLC



Fig. 106: Bloc-Chek-Kit C-3685-A
Courtesy of CHRYSLER LLC

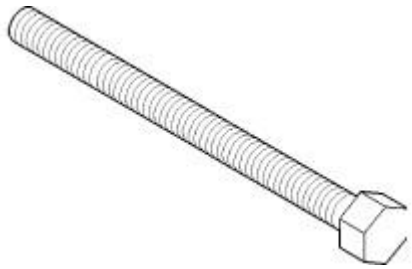

Fig. 107: Screw, Forcing C-4685-C1
Courtesy of CHRYSLER LLC

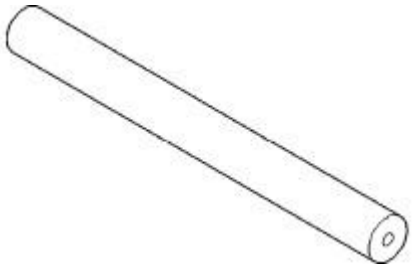

Fig. 108: Insert C4685-C2
Courtesy of CHRYSLER LLC

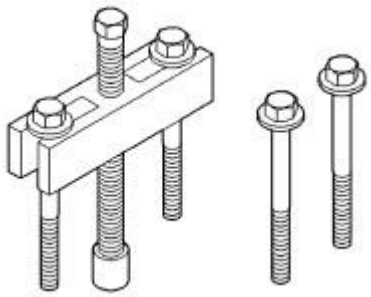

Fig. 109: Puller, Gear L-4407-A
Courtesy of CHRYSLER LLC

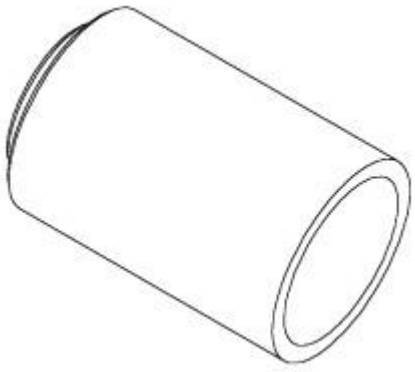

Fig. 110: Installer, Camshaft MD-998306
Courtesy of CHRYSLER LLC

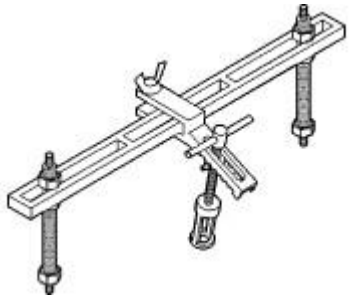

Fig. 111: Compressor, Valve Spring MD998772-A
Courtesy of CHRYSLER LLC

AIR INTAKE SYSTEM

AIR CLEANER

Removal

REMOVAL

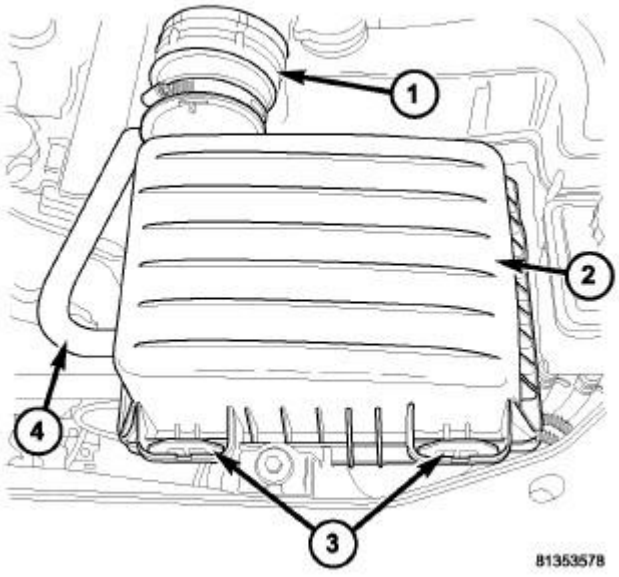

Fig. 112: AIR CLEANER HOUSING
Courtesy of CHRYSLER LLC

1 - AIR INLET DUCT TO THROTTLE BODY
2 - AIR CLEANER HOUSING COVER
3 - LOCKING TABS
4 - CCV HOSE

1. Disconnect the CCV hose (4) at the housing cover (2) .
2. Release the housing cover tabs (3).

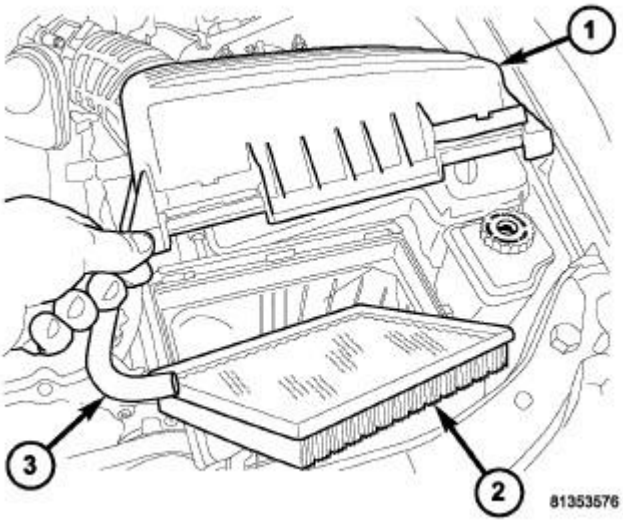

Fig. 113: AIR CLEANER ELEMENT
Courtesy of CHRYSLER LLC

1 - AIR CLEANER COVER
2 - ELEMENT
3 - CCV HOSE

3. Lift the cover (1) and pull toward the front of the vehicle to release the rear cover to housing alignment tabs .
4. Remove the element (2).

Installation

INSTALLATION

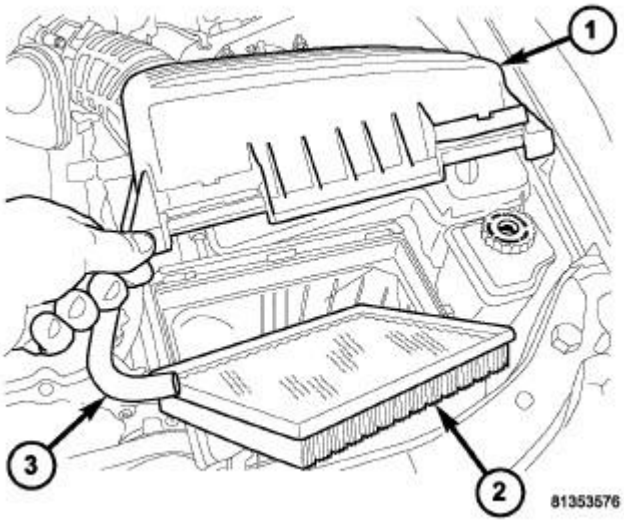

Fig. 114: AIR CLEANER ELEMENT
Courtesy of CHRYSLER LLC

1 - AIR CLEANER COVER 2 - ELEMENT 3 - CCV HOSE

1. Install the air filter element (2) into air box .
2. Position the cover (1) so that the rear locking tabs insert into the lower housing.
3. Seat cover (1) onto element housing and assure that the front locking tabs engage.
4. Reconnect the CCV hose (3).

BODY, AIR CLEANER

Removal

REMOVAL

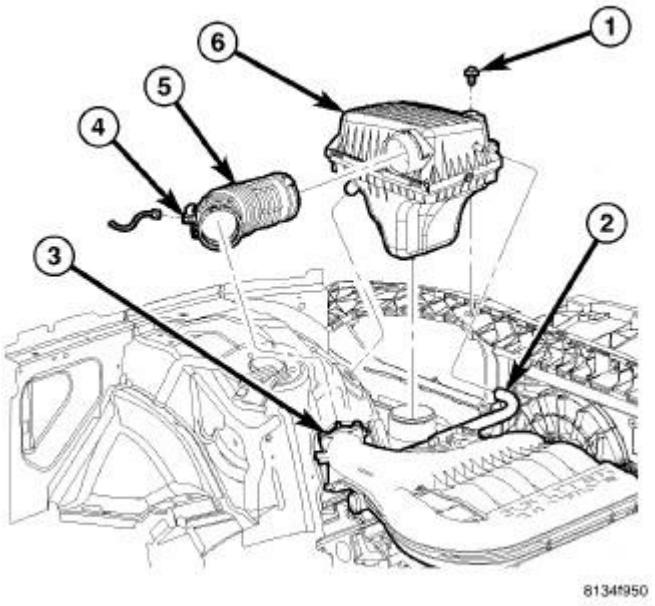

Fig. 115: Air Cleaner Housing
Courtesy of CHRYSLER LLC

1 - BOLT
2 - CCV HOSE
3 - THROTTLE
4 - IAT SENSOR
5 - INLET AIR DUCT
6 - AIR CLEANER ELEMENT HOUSING

1. Separate the air inlet duct (5) at the element housing (6).
2. Disconnect the CCV hose (2) at the element housing (6).
3. Remove the housing retaining bolt (1).
4. Pull housing up and off of the locating pin.
5. Remove element housing (6) from vehicle.

Installation

INSTALLATION

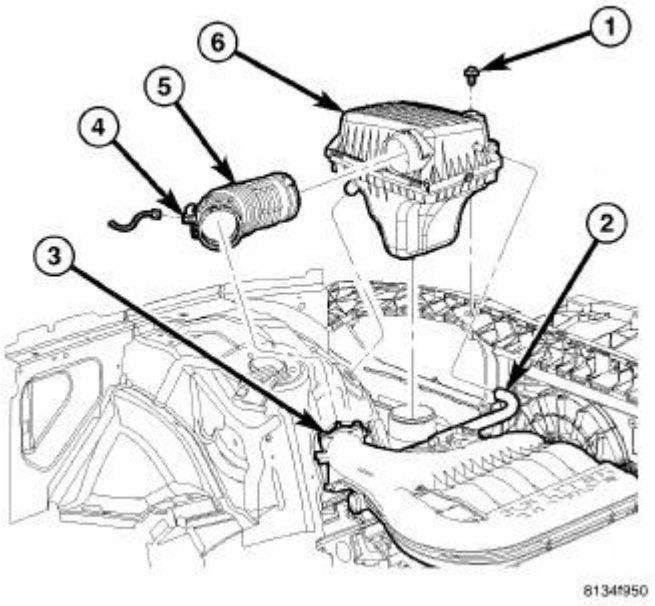

Fig. 116: Air Cleaner Housing
Courtesy of CHRYSLER LLC

1 - BOLT
2 - CCV HOSE
3 - THROTTLE
4 - IAT SENSOR
5 - INLET AIR DUCT
6 - AIR CLEANER ELEMENT HOUSING

1. Align the housing (6) with the lower air inlet duct and alignment grommet in the wheel housing.
2. Properly fit the housing (6) and install housing retaining bolt (1) .
3. Connect the inlet air duct (5) to the housing (6) and tighten clamp.
4. Connect the CCV hose (2) to housing.

CYLINDER HEAD

DESCRIPTION

DESCRIPTION

The aluminum alloy cylinder heads feature cross- flow type intake and exhaust ports. Valve guides and seat inserts are powdered metal. Valves are arranged in a "V", with each camshaft on center. To improve combustion speed the chambers are a compact spherical design with a squish area of approximately 30 percent of the piston top area. The cylinder heads are common to either cylinder bank by reversing the direction of installation.

DIAGNOSIS AND TESTING

CYLINDER HEAD GASKET

A cylinder head gasket leak can be located between adjacent cylinders or between a cylinder and the adjacent water jacket.

Possible indications of the cylinder head gasket leaking between adjacent cylinders are:

- Loss of engine power
- Engine misfiring
- Poor fuel economy

Possible indications of the cylinder head gasket leaking between a cylinder and an adjacent water jacket are:

- Engine overheating
- Loss of coolant
- Excessive steam (white smoke) emitting from exhaust
- Coolant foaming

CYLINDER-TO-CYLINDER LEAKAGE TEST

To determine if an engine cylinder head gasket is leaking between adjacent cylinders, follow the procedures in Cylinder Compression Pressure Test. See **CYLINDER COMPRESSION PRESSURE TEST**. An engine cylinder head gasket leaking between adjacent cylinders will result in approximately a 50-70% reduction in compression pressure.

CYLINDER-TO-WATER JACKET LEAKAGE TEST

WARNING: USE EXTREME CAUTION WHEN THE ENGINE IS OPERATING WITH COOLANT PRESSURE CAP REMOVED.

VISUAL TEST METHOD

With the engine cool, remove the coolant pressure cap. Start the engine and allow it to warm up until thermostat opens.

If a large combustion/compression pressure leak exists, bubbles will be visible in the coolant.

COOLING SYSTEM TESTER METHOD

WARNING: WITH COOLING SYSTEM TESTER IN PLACE, PRESSURE WILL BUILD UP FAST. EXCESSIVE PRESSURE BUILT UP, BY CONTINUOUS ENGINE OPERATION, MUST BE RELEASED TO A SAFE PRESSURE POINT. NEVER PERMIT PRESSURE TO EXCEED 138 kPa (20 psi).

Install Cooling System Tester 7700 or equivalent to pressure cap neck. Start the engine and observe the tester's pressure gauge. If gauge pulsates with every power stroke of a cylinder a combustion pressure leak is evident.

CHEMICAL TEST METHOD

Combustion leaks into the cooling system can also be checked by using Bloc-Chek Kit C-3685-A or equivalent. Perform test following the procedures supplied with the tool kit.

REMOVAL

REMOVAL

RIGHT CYLINDER HEAD

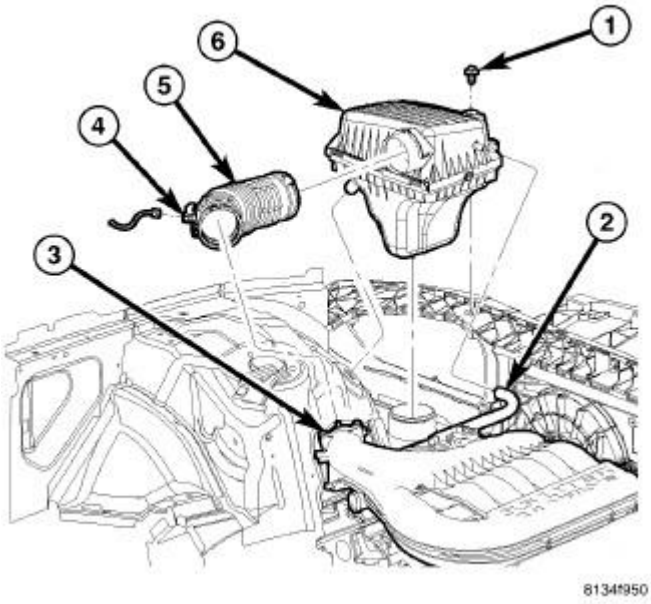

Fig. 117: Air Cleaner Housing
Courtesy of CHRYSLER LLC

1. Perform the fuel system pressure relief procedure. Refer to **Fuel System/Fuel Delivery - Standard Procedure** .
2. Disconnect and isolate the negative battery cable.
3. Drain the cooling system. Refer to **Cooling - Standard Procedure** .
4. Remove the air cleaner element housing. See **Engine/Air Intake System/BODY, Air Cleaner - Removal**.

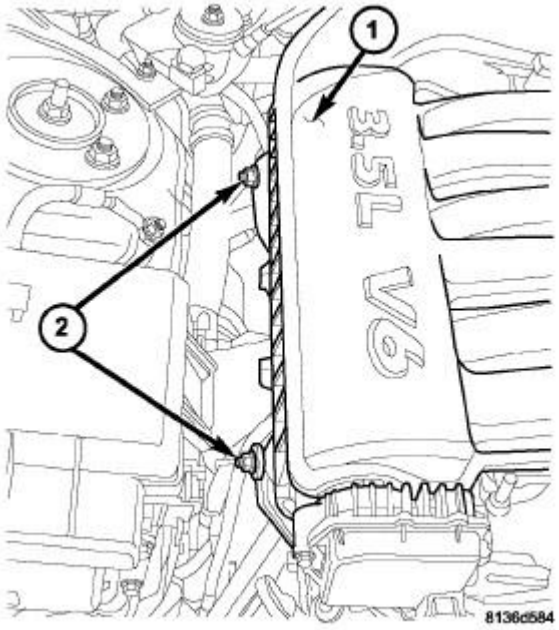

Fig. 118: Intake Manifold Braces
Courtesy of CHRYSLER LLC

5. Remove the upper intake manifold (1) including the wiper module, strut tower support and EGR tube. See **Engine/Manifolds/MANIFOLD, Intake - Removal**.

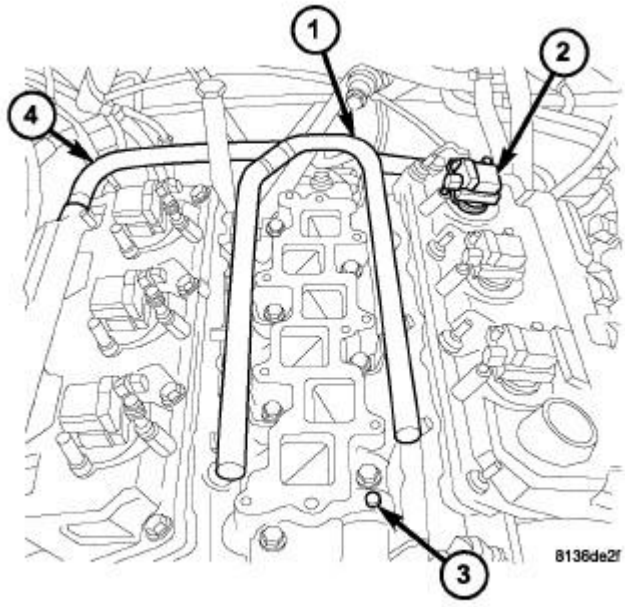

Fig. 119: FUEL RAIL AND LOWER INTAKE MANIFOLD
Courtesy of CHRYSLER LLC

6. Remove the fuel rail (1) and lower intake manifold. See **Engine/Manifolds/MANIFOLD, Intake - Removal**.

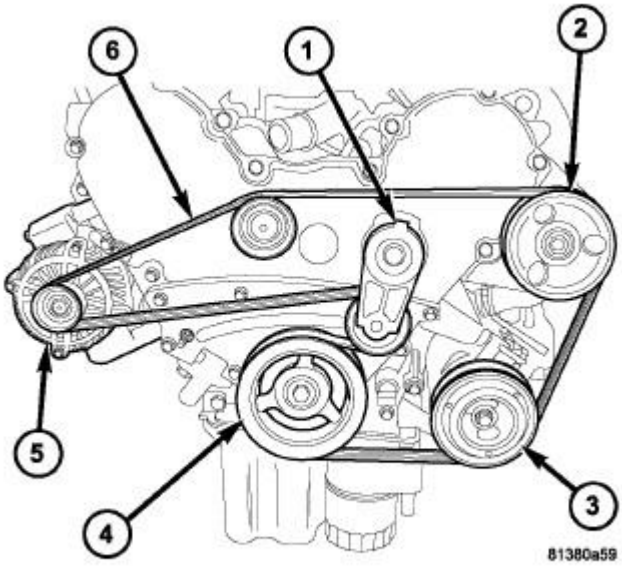

Fig. 120: ACCESSORY DRIVE BELT ROUTING
Courtesy of CHRYSLER LLC

1 - DRIVE BELT TENSIONER
2 - POWER STEERING PULLEY
3 - AIR CONDITIONING COMPRESSOR
4 - CRANKSHAFT DAMPER
5 - GENERATOR
6 - DRIVE BELT

7. Remove the accessory drive belt (6). Refer to **Cooling/Accessory Drive/BELT, Serpentine - Removal** .
8. Remove the accessory drive belt idler pulley. Refer to **Cooling/Accessory Drive/PULLEY, Idler - Removal** .
9. Remove the accessory drive belt tensioner (1). Refer to **Cooling/Accessory Drive/TENSIONER, Belt - Removal** .

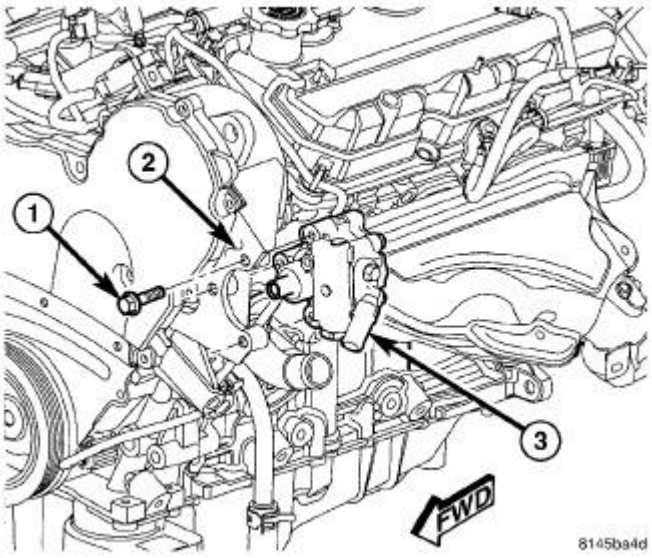

Fig. 121: POWER STEERING PUMP - 2.7L/3.5L
Courtesy of CHRYSLER LLC

10. Remove three power steering pump mounting bolts (1) through the access holes in the pulley and reposition the power steering pump (3).

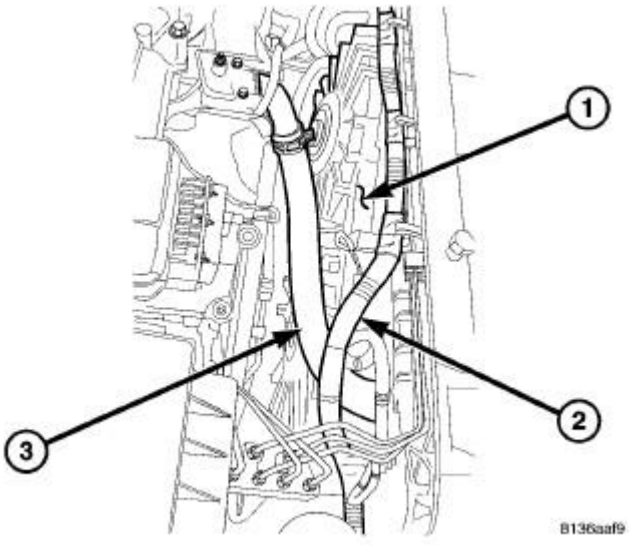

Fig. 122: Radiator Fan Assembly
Courtesy of CHRYSLER LLC

1 - RADIATOR FAN ASSEMBLY
2 - ELECTRICAL CONNECTOR
3 - UPPER RADIATOR HOSE

11. Remove the upper radiator hose (3).
12. Disconnect the cooling fan electrical connector (2).
13. Remove the cooling fan mounting bolts.
14. Remove the radiator cooling fan assembly (1) from the vehicle.

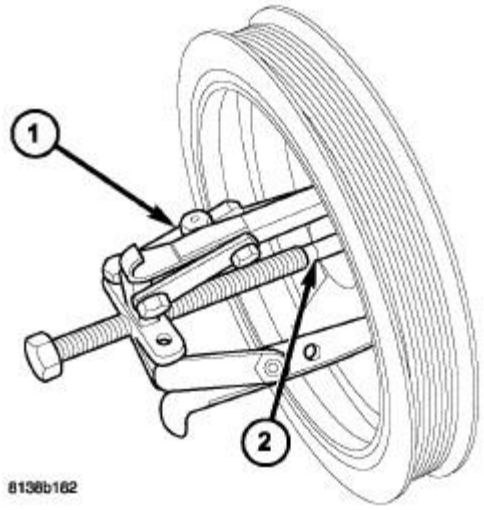

Fig. 123: Puller 1023 & Crankshaft Insert 9020
Courtesy of CHRYSLER LLC

1 - SPECIAL TOOL 1023 PULLER
2 - SPECIAL TOOL 9020-R INSERT

15. Remove the crankshaft damper bolt.
16. Remove the crankshaft damper using Puller 1023 (1) and Crankshaft Insert 9020 (2).

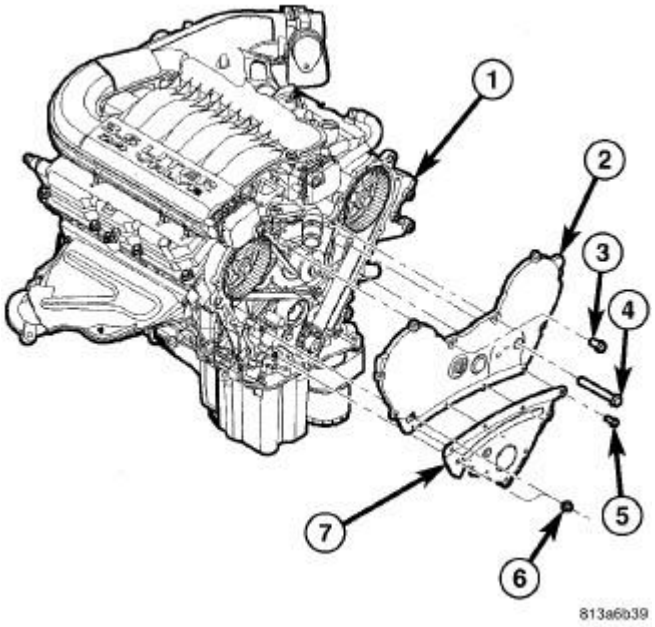

Fig. 124: UPPER AND LOWER TIMING COVERS
Courtesy of CHRYSLER LLC

1 - INNER TIMING COVER
2 - UPPER TIMING COVER
3 - 8 mm BOLT(S)
4 - 10 mm BOLT(S)
5 - 6 mm BOLT(S)
6 - NUT(S)
7 - LOWER TIMING COVER

17. Remove the upper timing belt cover fasteners and remove the front upper timing belt cover (2).
18. Remove the lower timing belt cover fasteners and remove the front lower timing belt cover (7).

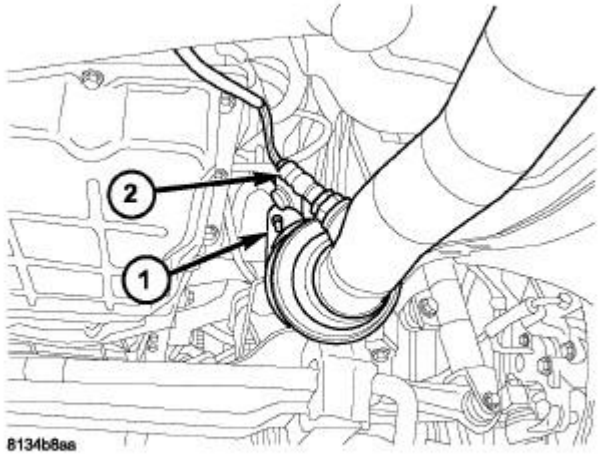

Fig. 125: RIGHT EXHAUST PIPE TO MANIFOLD UNION
Courtesy of CHRYSLER LLC

19. Raise and support the vehicle on a hoist. Refer to **Vehicle Quick Reference/Hoisting - Standard Procedure** .
20. Disconnect both upstream and downstream (2) oxygen sensor harness connectors.
21. Remove the front exhaust pipe to exhaust manifold mounting nuts (1).

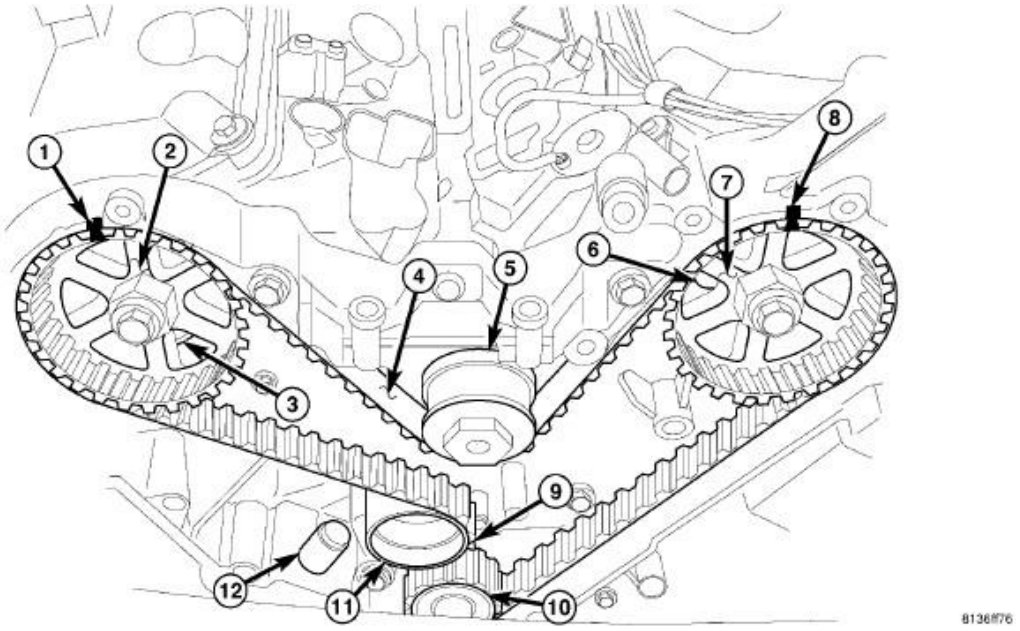

Fig. 126: Identifying Timing Gear Components
Courtesy of CHRYSLER LLC

1 - RIGHT CAMSHAFT GEAR ALIGNMENT MARK	7 - LEFT CAMSHAFT GEAR
2 - RIGHT CAMSHAFT GEAR	8 - LEFT CAMSHAFT GEAR ALIGNMENT MARK
3 - CYLINDER HEAD TO INNER TIMING BELT COVER BOLTS - RIGHT	9 - CRANKSHAFT GEAR ALIGNMENT MARK
4 - TIMING BELT	10 - CRANKSHAFT GEAR
5 - WATER PUMP PULLEY	11 - TIMING BELT TENSIONER PULLEY
6 - CYLINDER HEAD TO INNER TIMING BELT COVER BOLTS - LEFT	12 - TIMING BELT TENSIONER

22. Lower the vehicle.
23. Rotate the engine to TDC and align timing belt marks (1,8,9).
24. Remove the timing belt tensioner (12) and reset the tensioner. See **Engine/Valve Timing/TENSIONER, Engine Timing - Removal**.
25. Remove the timing belt (4). See **Engine/Valve Timing/BELT and SPROCKETS, Timing - Removal**.

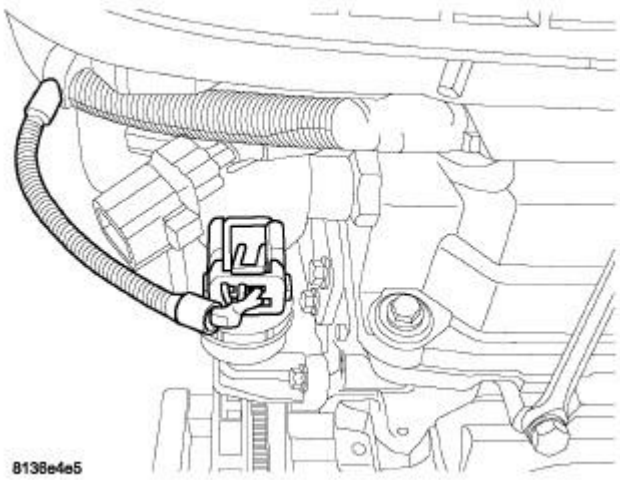

Fig. 127: Electrical Connector - 3.5L
Courtesy of CHRYSLER LLC

26. Unlock and disconnect the electrical connector from the EGR valve.

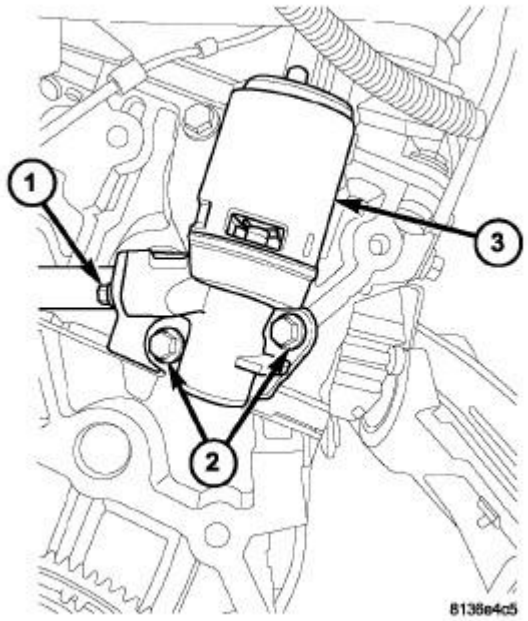

Fig. 128: EGR Valve Mounting Bolts - 3.5L
Courtesy of CHRYSLER LLC

27. Remove the EGR valve mounting bolts (2) and remove the EGR valve (3).

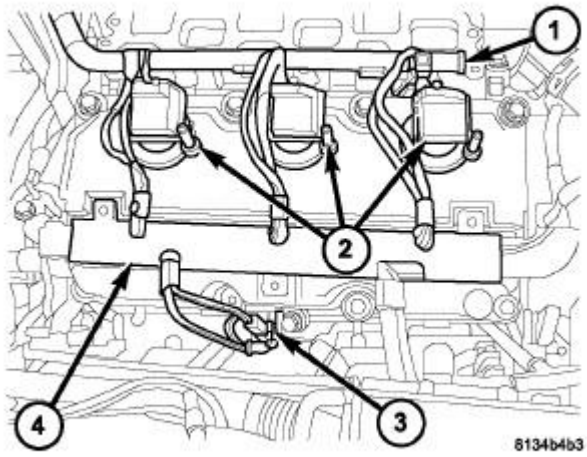

Fig. 129: Ignition Coils - Right Cylinder Head
Courtesy of CHRYSLER LLC

28. Disconnect and remove the three ignition coils (2). Refer to **Electrical/Ignition Control/COIL, Ignition - Removal** .
29. Lift up on the wire harness track retaining tabs (4).
30. Remove the right cylinder head cover to cylinder head ground strap and the electrical connector from the capacitor (3).
31. Completely loosen the cylinder head cover retaining bolts and remove the cylinder head cover.

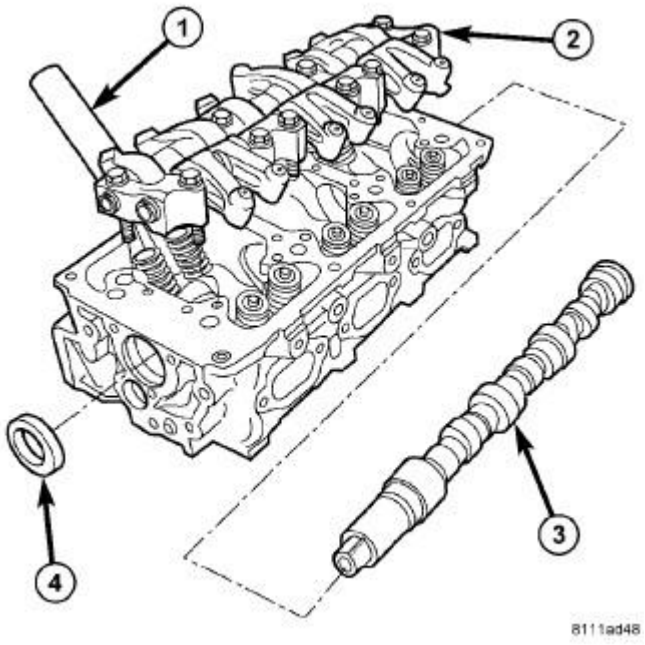

Fig. 130: Camshaft, Rocker Arm Assembly & Cylinder Head
Courtesy of CHRYSLER LLC

1 - SPARK PLUG TUBE
2 - ROCKER ARM ASSEMBLY
3 - CAMSHAFT
4 - CAMSHAFT SEAL

32. Remove the rocker arm assembly bolts and remove the right rocker arm assembly (2). See **Engine/Cylinder Head/ROCKER ARM, Valve - Removal**.

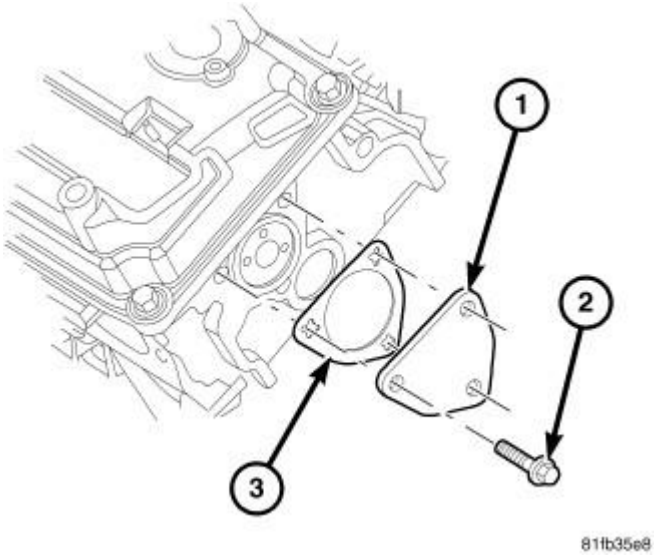

Fig. 131: Cam Thrust Plate Gasket
Courtesy of CHRYSLER LLC

33. Remove three bolts (2) and the right rear camshaft thrust plate (1).

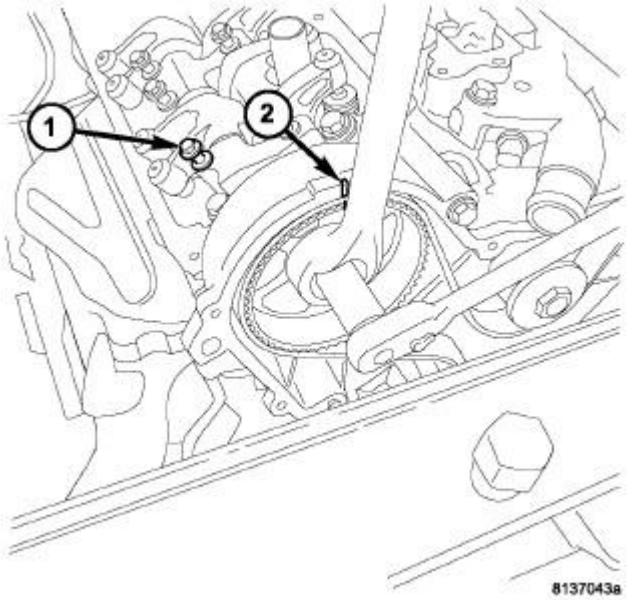

Fig. 132: RIGHT CAMSHAFT SPROCKET
Courtesy of CHRYSLER LLC

34. Counterhold the cam gear and remove the right cam gear retaining bolt.
35. Push the camshaft out of the back of the cylinder head approximately 3.5 inches and remove the cam gear.

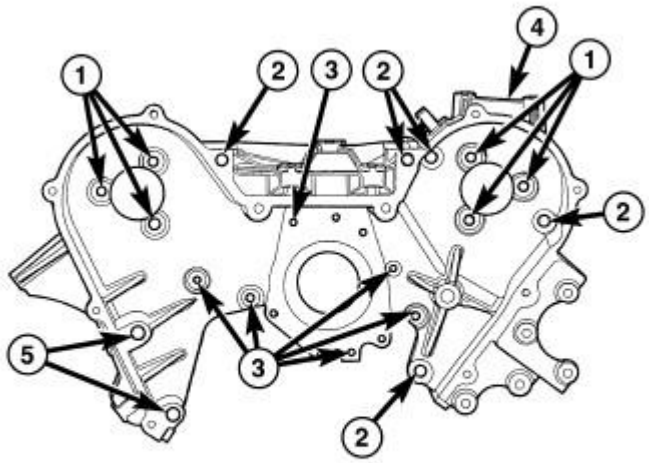

Fig. 133: Rear Timing Belt Cover Fasteners
Courtesy of CHRYSLER LLC

36. Remove the three inner timing cover to right cylinder head retaining bolts (1).

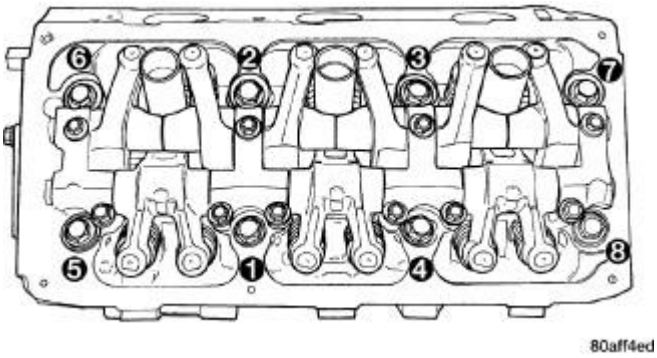

Fig. 134: Cylinder Head Bolt Tightening Sequence
Courtesy of CHRYSLER LLC

37. Remove the cylinder head bolts in REVERSE of the tightening sequence shown in illustration.

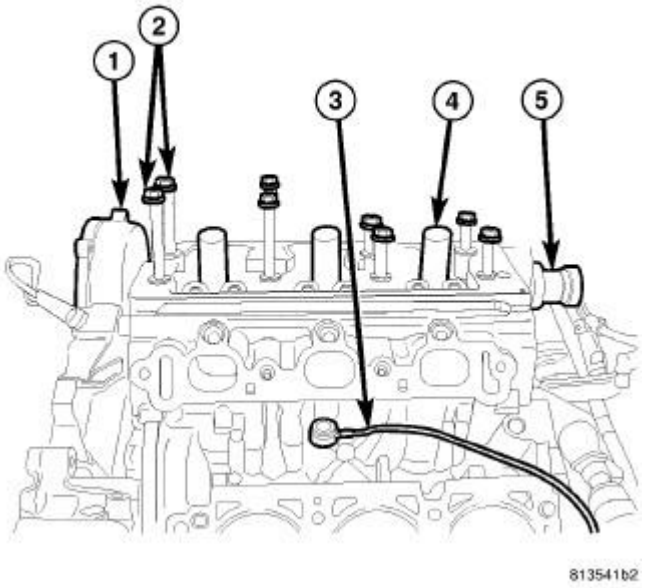

Fig. 135: Right Cylinder Head
Courtesy of CHRYSLER LLC

38. Push the camshaft (5) out of the back of the cylinder head approximately 3.5 inches and remove the cylinder head.
39. Clean and inspect all mating surfaces. If replacing the cylinder head assembly, transfer the capacitor and the exhaust manifold.

LEFT CYLINDER HEAD

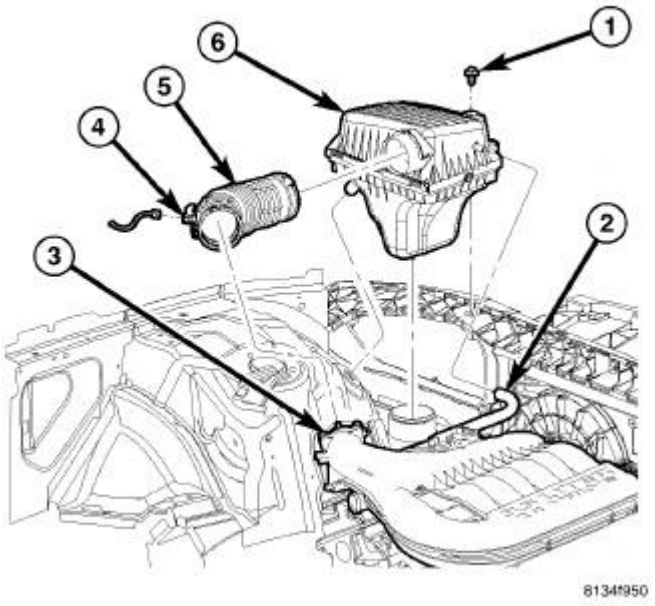

Fig. 136: Air Cleaner Housing
Courtesy of CHRYSLER LLC

1. Perform the fuel system pressure relief procedure. Refer to **Fuel System/Fuel Delivery - Standard Procedure** .
2. Disconnect and isolate the negative battery cable.
3. Drain the cooling system. Refer to **Cooling - Standard Procedure** .
4. Remove the air cleaner element housing. See **Engine/Air Intake System/BODY, Air Cleaner - Removal**.

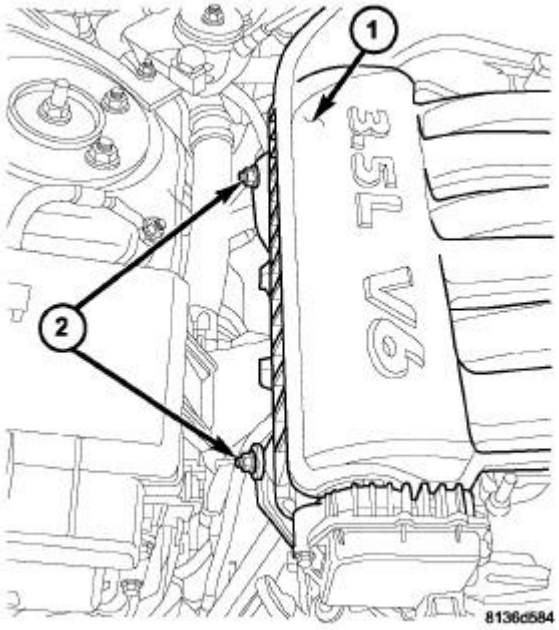

Fig. 137: Intake Manifold Braces
Courtesy of CHRYSLER LLC

5. Remove the upper intake manifold (1) including the wiper module, strut tower support and EGR tube. See **Engine/Manifolds/MANIFOLD, Intake - Removal**.

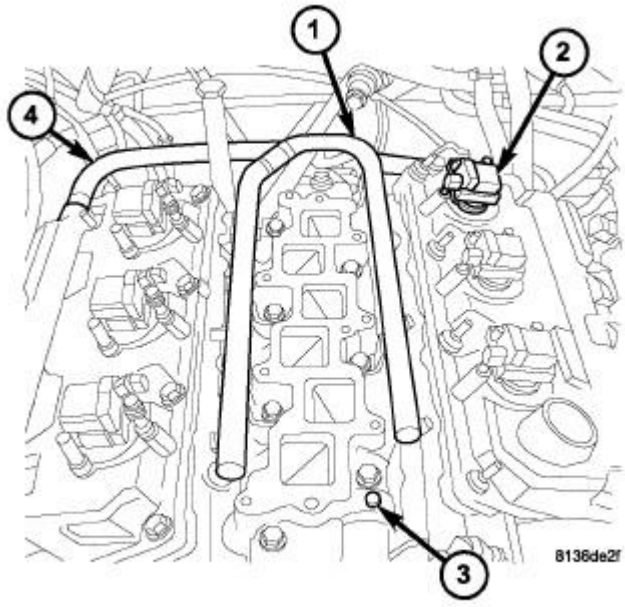

Fig. 138: FUEL RAIL AND LOWER INTAKE MANIFOLD
Courtesy of CHRYSLER LLC

6. Remove the fuel rail (1) and lower intake manifold. See **Engine/Manifolds/MANIFOLD, Intake - Removal**.

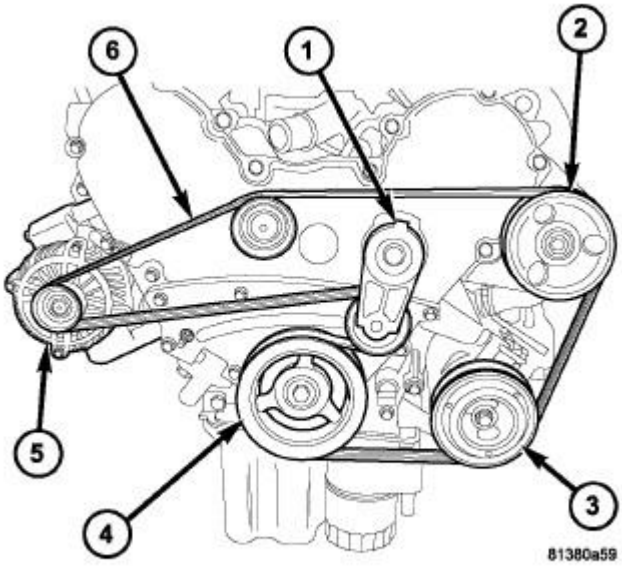

Fig. 139: ACCESSORY DRIVE BELT ROUTING
Courtesy of CHRYSLER LLC

1 - DRIVE BELT TENSIONER
2 - POWER STEERING PULLEY
3 - AIR CONDITIONING COMPRESSOR
4 - CRANKSHAFT DAMPER
5 - GENERATOR
6 - DRIVE BELT

7. Remove the accessory drive belt (6). Refer to **Cooling/Accessory Drive/BELT, Serpentine - Removal** .
8. Remove the accessory drive belt idler pulley. Refer to **Cooling/Accessory Drive/PULLEY, Idler - Removal** .
9. Remove the accessory drive belt tensioner (1). Refer to **Cooling/Accessory Drive/TENSIONER, Belt - Removal** .

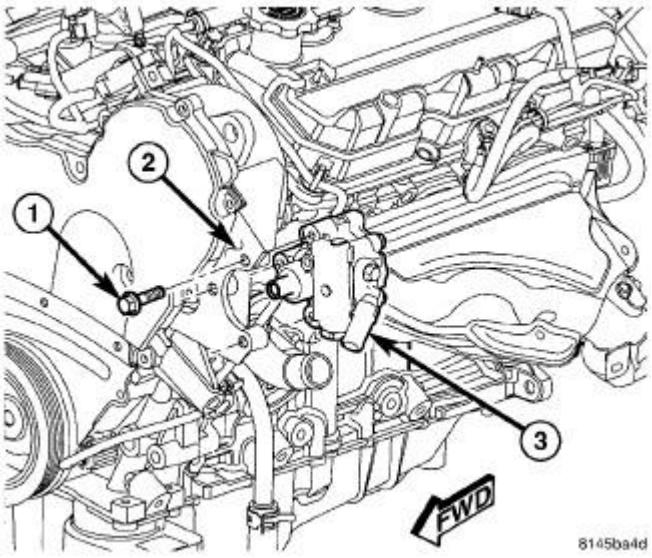

Fig. 140: POWER STEERING PUMP - 2.7L/3.5L
Courtesy of CHRYSLER LLC

10. Remove three power steering pump mounting bolts (1) through the access holes in the pulley and reposition the power steering pump (3).

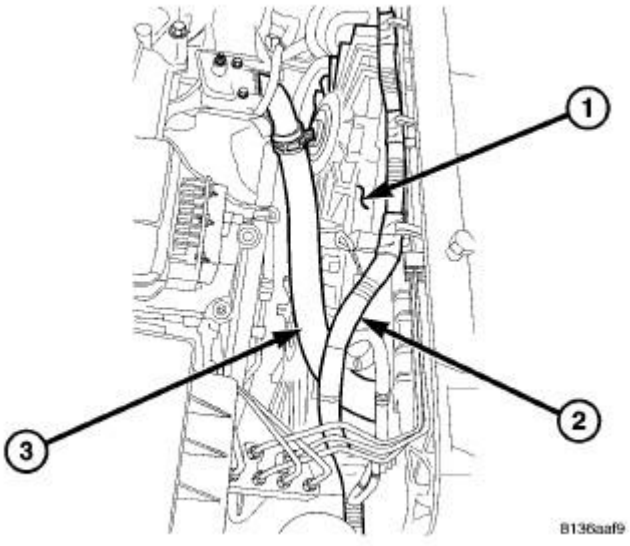

Fig. 141: Radiator Fan Assembly
Courtesy of CHRYSLER LLC

1 - RADIATOR FAN ASSEMBLY
2 - ELECTRICAL CONNECTOR
3 - UPPER RADIATOR HOSE

11. Remove the upper radiator hose (3).
12. Disconnect the cooling fan electrical connector (2).
13. Remove the cooling fan mounting bolts.
14. Remove the radiator cooling fan assembly (1) from the vehicle.

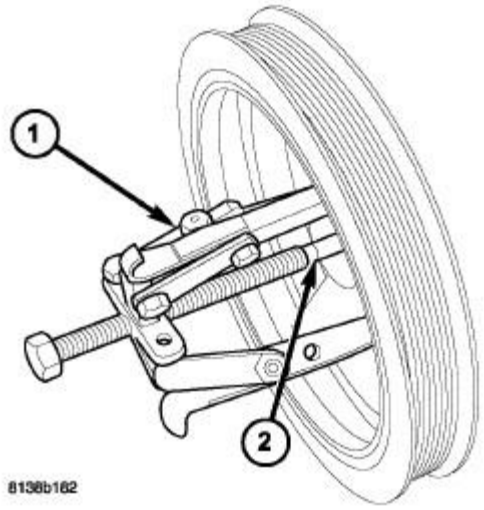

Fig. 142: Puller 1023 & Crankshaft Insert 9020
Courtesy of CHRYSLER LLC

1 - SPECIAL TOOL 1023 PULLER
2 - SPECIAL TOOL 9020-R INSERT

15. Remove the crankshaft damper bolt.
16. Remove the crankshaft damper using Puller 1023 (1) and Crankshaft Insert 9020 (2).

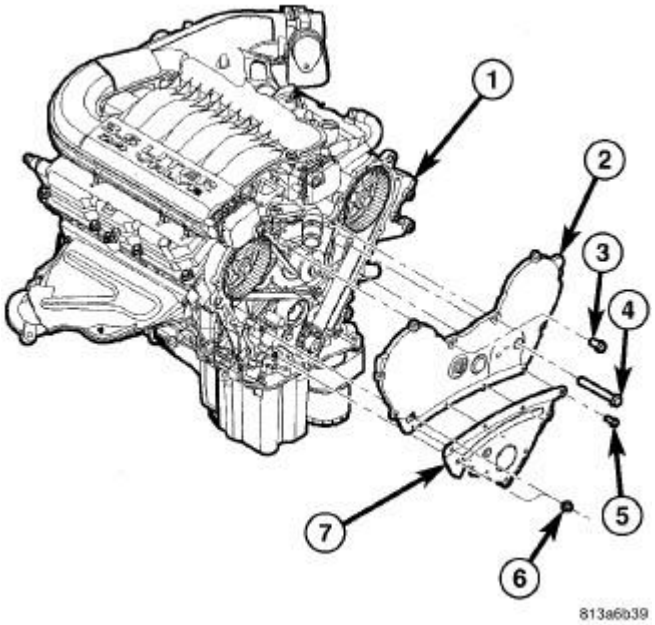

Fig. 143: UPPER AND LOWER TIMING COVERS
Courtesy of CHRYSLER LLC

1 - INNER TIMING COVER
2 - UPPER TIMING COVER
3 - 8 mm BOLT(S)
4 - 10 mm BOLT(S)
5 - 6 mm BOLT(S)
6 - NUT(S)
7 - LOWER TIMING COVER

17. Remove the upper timing belt cover fasteners and remove the front upper timing belt cover (2).
18. Remove the lower timing belt cover fasteners and remove the front lower timing belt cover (7).

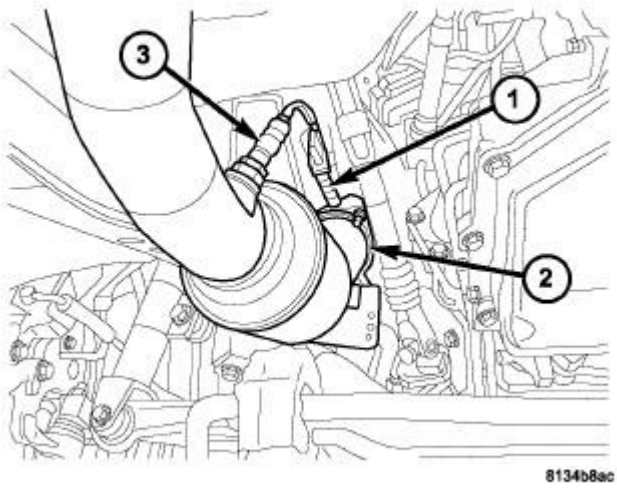

Fig. 144: Left Exhaust Pipe To Manifold Union
Courtesy of CHRYSLER LLC

19. Raise and support the vehicle on a hoist. Refer to **Vehicle Quick Reference/Hoisting - Standard Procedure** .
20. Disconnect both upstream and downstream (3) oxygen sensor harness connectors (1).
21. Remove the front exhaust pipe to exhaust manifold mounting nuts (2).

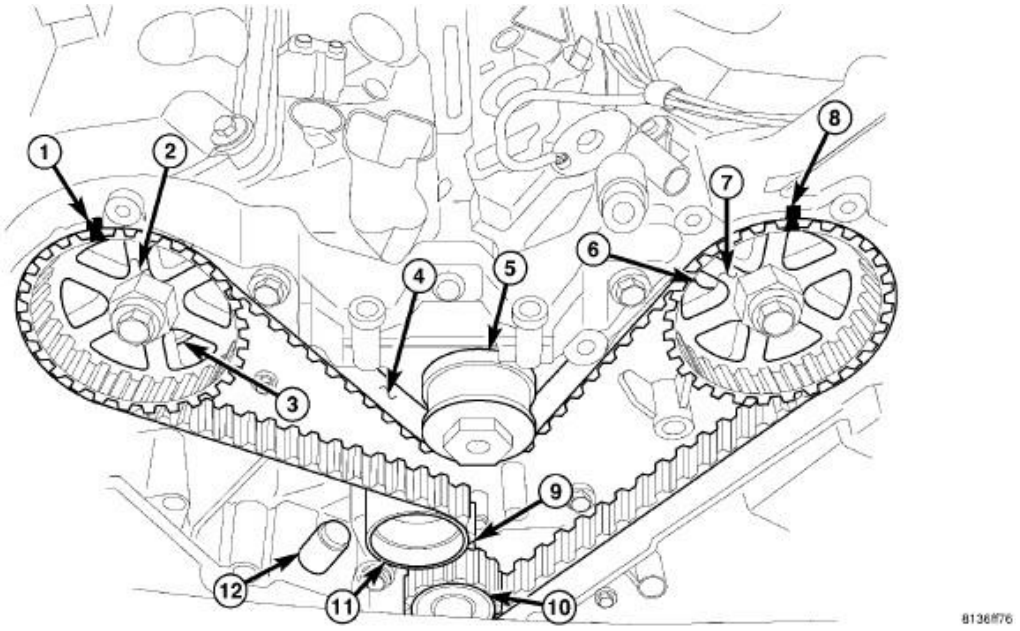

Fig. 145: Identifying Timing Gear Components
Courtesy of CHRYSLER LLC

1 - RIGHT CAMSHAFT GEAR ALIGNMENT MARK	7 - LEFT CAMSHAFT GEAR
2 - RIGHT CAMSHAFT GEAR	8 - LEFT CAMSHAFT GEAR ALIGNMENT MARK
3 - CYLINDER HEAD TO INNER TIMING BELT COVER BOLTS - RIGHT	9 - CRANKSHAFT GEAR ALIGNMENT MARK
4 - TIMING BELT	10 - CRANKSHAFT GEAR
5 - WATER PUMP PULLEY	11 - TIMING BELT TENSIONER PULLEY
6 - CYLINDER HEAD TO INNER TIMING BELT COVER BOLTS - LEFT	12 - TIMING BELT TENSIONER

22. Lower the vehicle.
23. Rotate the engine to TDC and align timing belt marks (1,8,9).
24. Remove the timing belt tensioner (12) and reset the tensioner. See **Engine/Valve Timing/TENSIONER, Engine Timing - Removal**.
25. Remove the timing belt (4). See **Engine/Valve Timing/BELT and SPROCKETS, Timing - Removal**.

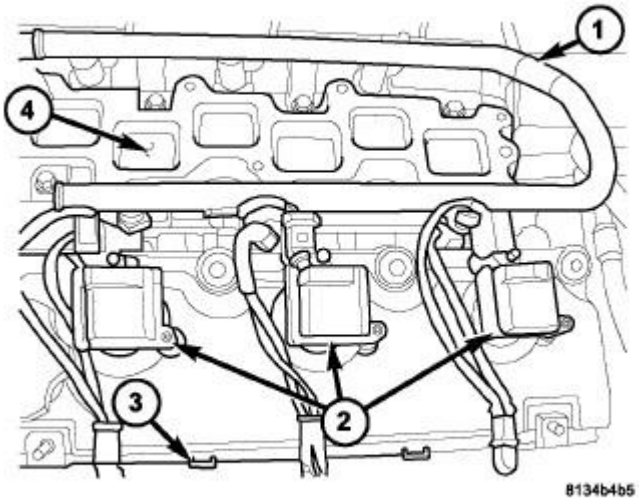

Fig. 146: Ignition Coils - Left Cylinder Head
Courtesy of CHRYSLER LLC

26. Remove the left cylinder head cover to cylinder head ground strap (3).
27. Disconnect the wire harness connectors from the ignition coils (1). Release the wire harness

track retainer tabs from the cylinder head cover.

28. Remove the left ignition coils (2). Refer to **Electrical/Ignition Control/COIL, Ignition - Removal** .

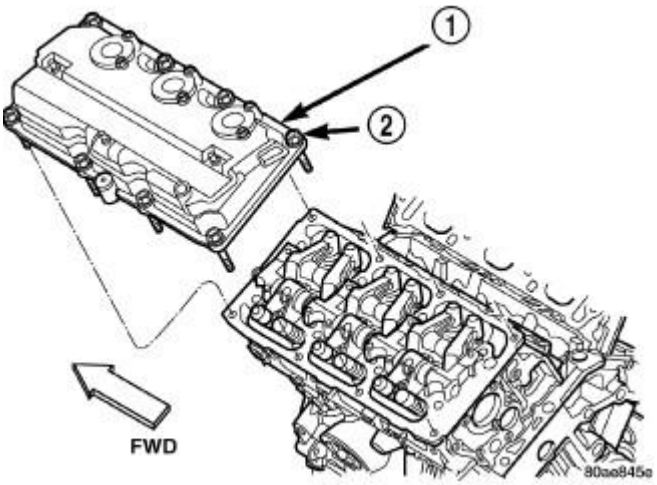

Fig. 147: Cylinder Head Covers
Courtesy of CHRYSLER LLC

29. Remove eight bolts (2) and remove the left cylinder head cover (1).

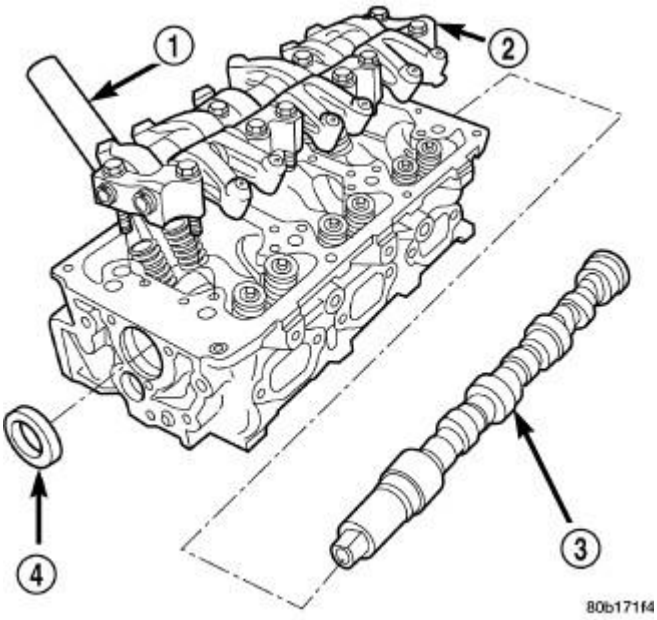

Fig. 148: Cylinder Head, Camshaft, and Rocker Arms
Courtesy of CHRYSLER LLC

1 - SPARK PLUG TUBE
2 - ROCKER ARM ASSEMBLY
3 - CAMSHAFT

4 - SEAL

30. Remove the rocker arm assembly bolts and remove the left rocker arm assembly (2). See **Engine/Cylinder Head/ROCKER ARM, Valve - Removal**.

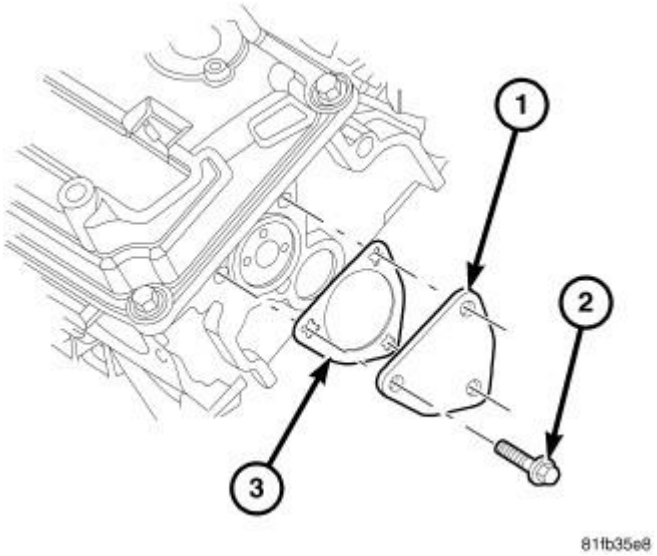

Fig. 149: Cam Thrust Plate Gasket
Courtesy of CHRYSLER LLC

31. Remove three bolts (2) and the left camshaft thrust plate (1).

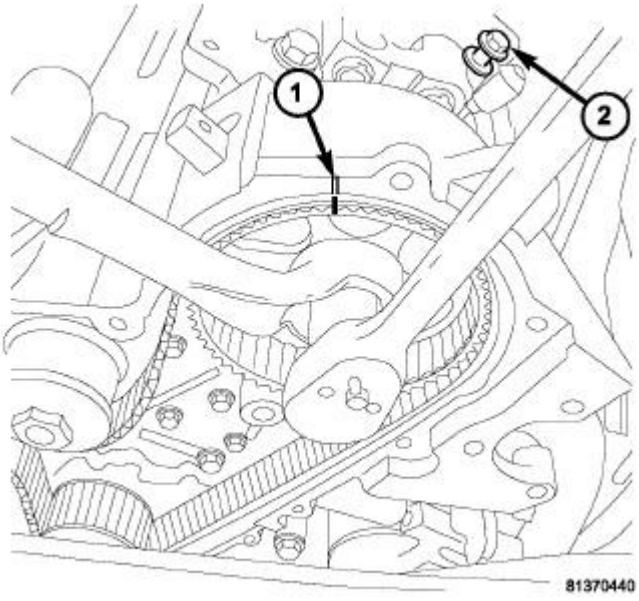

Fig. 150: Left Camshaft Sprocket
Courtesy of CHRYSLER LLC

1 - LEFT CAMSHAFT TDC 2 - LOOSENED ROCKER ASSEMBLY

32. Counterhold the left cam gear and remove the cam gear retaining bolt.
33. Push the camshaft out of the back of the cylinder head approximately 3.5 inches and remove the cam gear.

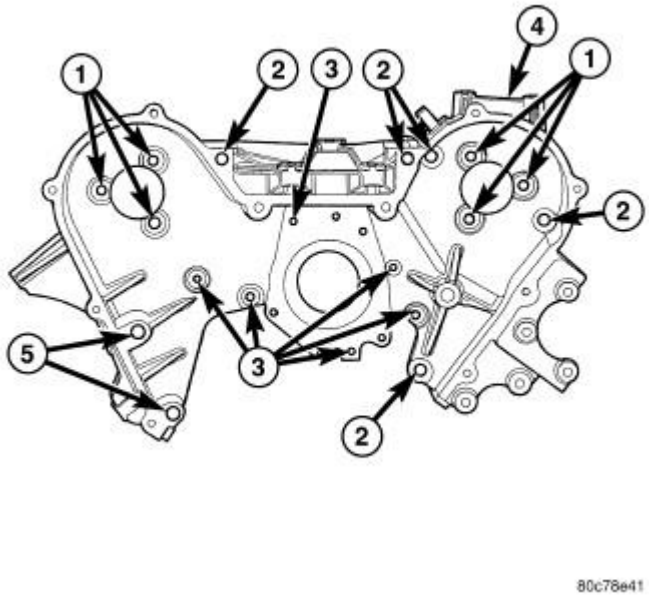

Fig. 151: Rear Timing Belt Cover Fasteners
Courtesy of CHRYSLER LLC

34. Remove the four inner timing cover to left cylinder head retaining bolts (1) and (2).

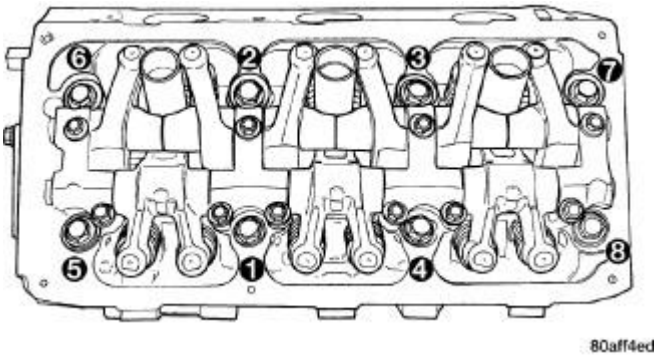

Fig. 152: Cylinder Head Bolt Tightening Sequence
Courtesy of CHRYSLER LLC

35. Remove the cylinder head bolts in REVERSE of the tightening sequence shown in illustration.
36. Push the camshaft out of the back of the cylinder head approximately 3.5 inches and remove

the cylinder head.

37. Clean and inspect all mating surfaces. If replacing the cylinder head, transfer the exhaust manifold.

CLEANING

CLEANING

To ensure engine gasket sealing, proper surface preparation must be performed, especially with the use of aluminum engine components and multi-layer steel cylinder head gaskets.

NOTE: Multi-Layer Steel (MLS) head gaskets require a scratch free sealing surface.

Remove all gasket material from cylinder head and block. See **Engine - Standard Procedure**. Be careful not to gouge or scratch the aluminum head sealing surface.

Clean all engine oil passages.

INSPECTION

INSPECTION

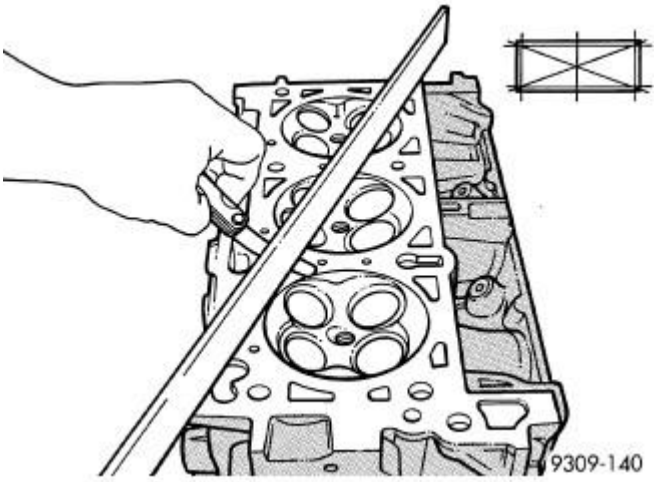

Fig. 153: Checking Cylinder Head Flatness
Courtesy of CHRYSLER LLC

1. Before cleaning, check for leaks, damage and cracks.
2. Clean cylinder head and oil passages.
3. Check cylinder head for flatness .
4. Cylinder head must be flat within:

CAUTION: 0.20 mm (0.008 in.) MAX is a combined total dimension of the stock removal limit from cylinder head and block top surface (Deck)

together.

- Standard dimension = less than 0.05 mm (0.002 inch.)
- Service Limit = 0.2 mm (0.008 inch.)
- Grinding Limit = Maximum of 0.2 mm (0.008 inch.) is permitted.

INSTALLATION

INSTALLATION

RIGHT CYLINDER HEAD

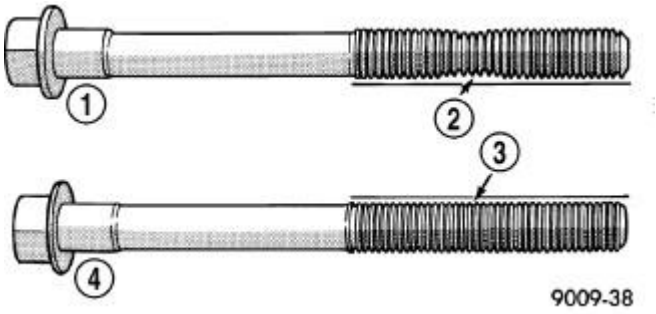

Fig. 154: Check for Stretched Bolts
Courtesy of CHRYSLER LLC

1 - STRETCHED BOLT
2 - THREADS ARE NOT STRAIGHT ON LINE
3 - THREADS ARE STRAIGHT ON LINE
4 - UNSTRETCHED BOLT

CAUTION: The cylinder head bolts are tightened using a torque plus angle procedure. The bolts must be examined BEFORE reuse. If the threads are necked down the bolts must be replaced.

1. Check the cylinder head bolts for necking by holding a scale or straight edge against the threads. If all the threads do not contact the scale (2) the bolt must be replaced.

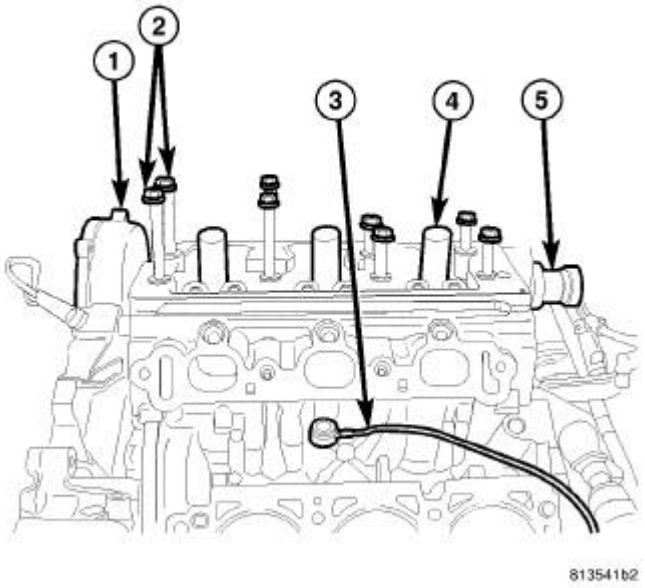

Fig. 155: Right Cylinder Head
Courtesy of CHRYSLER LLC

CAUTION: When cleaning cylinder head and cylinder block surfaces, DO NOT use a metal scraper because the surfaces could be cut or ground. Use ONLY a wooden or plastic scraper.

2. Clean the sealing surfaces of the cylinder head and block. See **Engine - Standard Procedure**.
3. Install the camshaft (5) in the cylinder head.

CAUTION: THE CYLINDER HEAD GASKETS ARE NOT INTERCHANGEABLE BETWEEN CYLINDER HEADS AND ARE CLEARLY MARKED RIGHT OR LEFT.

CAUTION: Ensure that the correct head gaskets are used and are oriented correctly on cylinder block.

4. Push the camshaft (5) out of the back of the cylinder head approximately 3.5 inches. Install the head gasket and cylinder head over the locating dowels.

NOTE: Before installing the cylinder head bolts, lubricate the threads with clean engine oil.

5. Install and finger tighten eight head bolts (2).

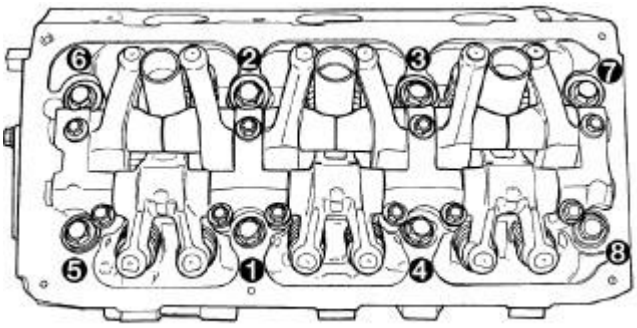

80aff4ed

Fig. 156: Cylinder Head Bolt Tightening Sequence
Courtesy of CHRYSLER LLC

6. Tighten the cylinder head bolts in the sequence shown in illustration, using the 4 step torque-turn method to the following torque values:
   - Step 1: All to 61 N.m (45 ft. lbs.)
   - Step 2: All to 88 N.m (65 ft. lbs.)
   - Step 3: All (again) to 88 N.m (65 ft. lbs.)
   - Step 4: + 90° Turn **Do not use a torque wrench for this step.**
7. Bolt torque after the 90° turn (Step 4) should be over 122 N.m (90 ft. lbs.) in the tightening direction. If not, replace the bolt.

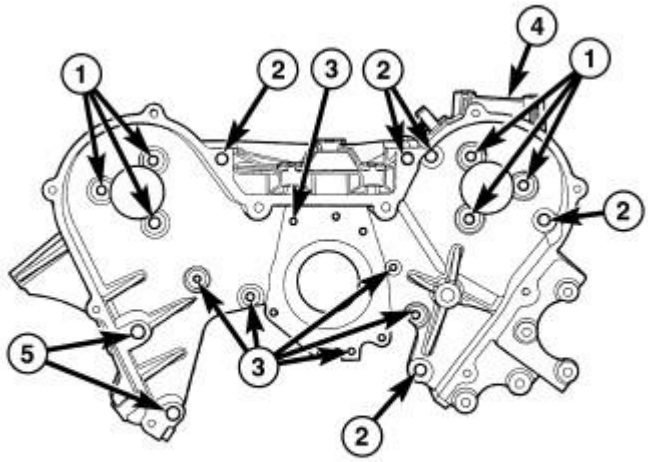

80c78e41

Fig. 157: Rear Timing Belt Cover Fasteners
Courtesy of CHRYSLER LLC

8. Install three inner timing cover to cylinder head bolts (1). Tighten the bolts to 54 N.m (40 ft. lbs.).

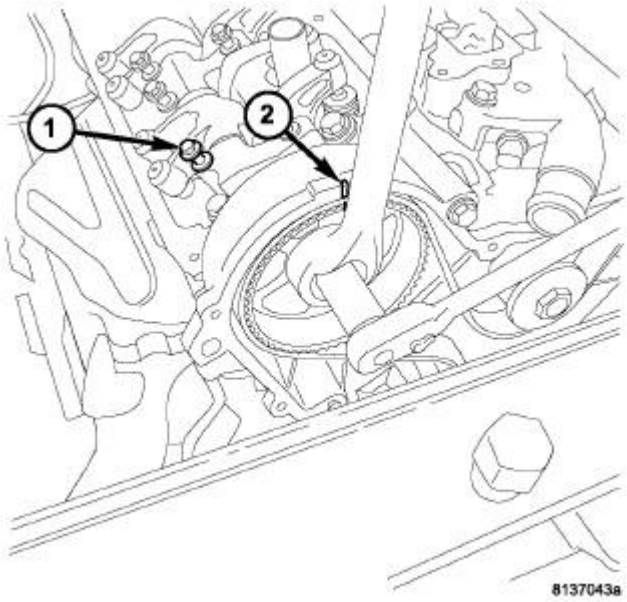

Fig. 158: RIGHT CAMSHAFT SPROCKET
Courtesy of CHRYSLER LLC

1 - LOOSENED ROCKER ASSEMBLY 2 - RIGHT CAMSHAFT TDC

CAUTION: The camshaft sprockets are keyed and not interchangeable from side to side because of the camshaft position sensor pick-up.

9. Push the camshaft back into the cylinder head and install the camshaft sprocket (2).
10. Install a **NEW** sprocket attaching bolt into place. The 255 mm (10 in.) bolt is to be installed in the left camshaft and the 213 mm (8 3/8 in.) bolt is to be installed into the right camshaft. Counterhold the camshaft sprocket (2) and tighten the camshaft sprocket bolt to 102 N.m (75 ft. lbs.) plus a 90° turn.

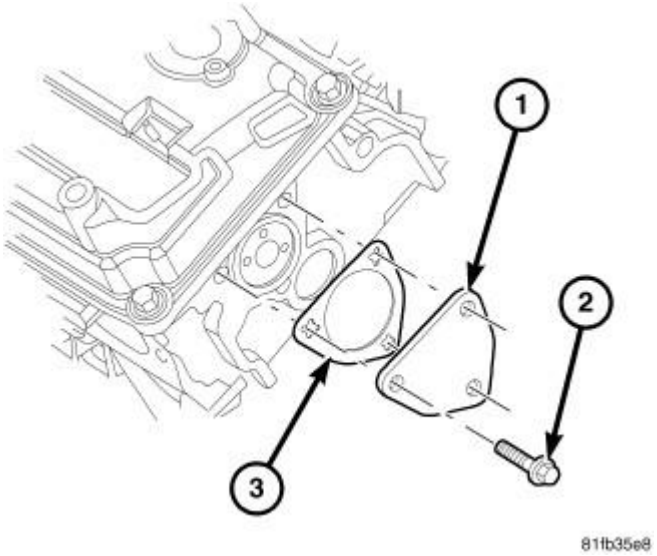

Fig. 159: Cam Thrust Plate Gasket
Courtesy of CHRYSLER LLC

11. Install the camshaft thrust plate (1) and gasket (3). Tighten three bolts (2) to 28 N.m (250 in. lbs.).

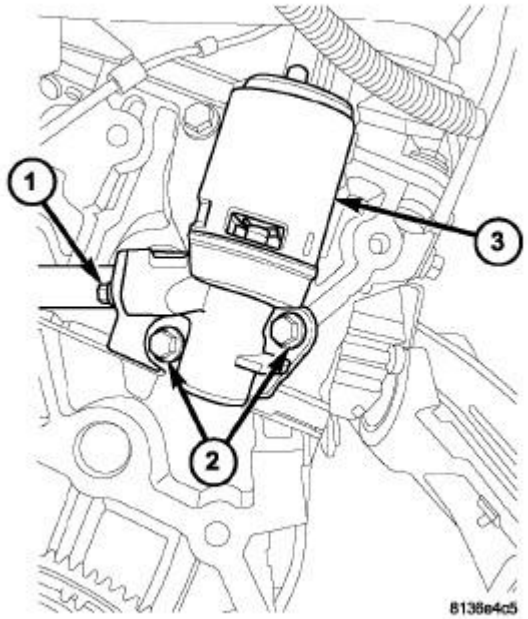

Fig. 160: EGR Valve Mounting Bolts - 3.5L
Courtesy of CHRYSLER LLC

12. Install a new gasket between the EGR solenoid/valve (3) and the rear of the cylinder head.
13. Position the EGR solenoid/valve assembly to the rear of the cylinder head. Install and tighten two mounting bolts (2) to 8 N.m (80 in. lbs.).

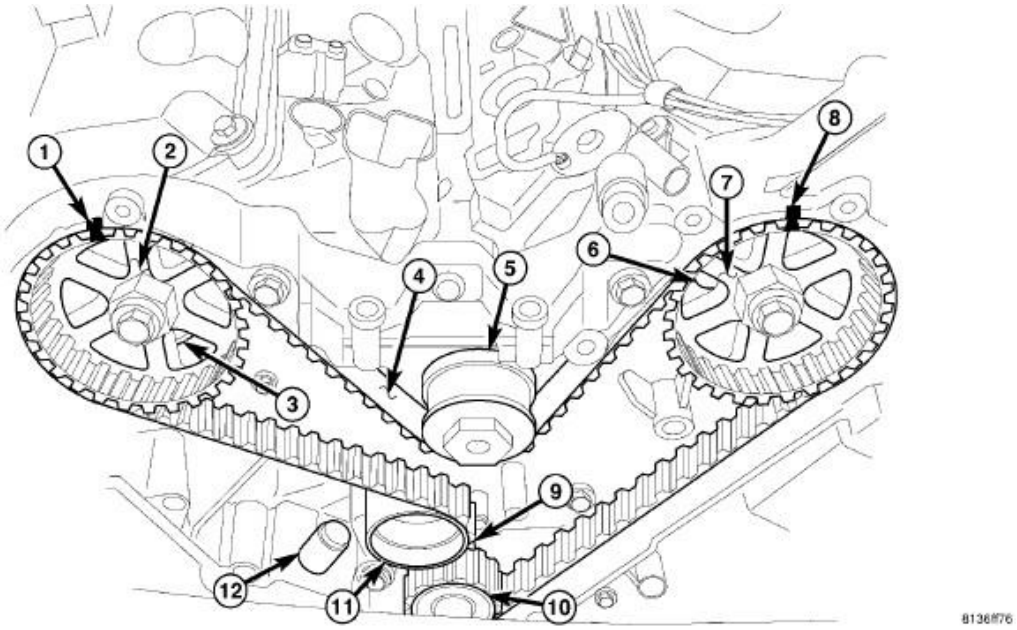

Fig. 161: Identifying Timing Gear Components
Courtesy of CHRYSLER LLC

1 - RIGHT CAMSHAFT GEAR ALIGNMENT MARK	7 - LEFT CAMSHAFT GEAR
2 - RIGHT CAMSHAFT GEAR	8 - LEFT CAMSHAFT GEAR ALIGNMENT MARK
3 - CYLINDER HEAD TO INNER TIMING BELT COVER BOLTS - RIGHT	9 - CRANKSHAFT GEAR ALIGNMENT MARK
4 - TIMING BELT	10 - CRANKSHAFT GEAR
5 - WATER PUMP PULLEY	11 - TIMING BELT TENSIONER PULLEY
6 - CYLINDER HEAD TO INNER TIMING BELT COVER BOLTS - LEFT	12 - TIMING BELT TENSIONER

14. Rotate the right camshaft gear (2) to align its timing mark (1). Verify that the left camshaft gear (7) timing mark (8) and crankshaft gear (10) timing mark (9) are still aligned.
15. Install the timing belt (4) starting at the crankshaft sprocket (10) going in a counterclockwise direction. Install the belt around the last sprocket. Maintain tension on the belt as it is positioned around the tensioner pulley (11).
16. Holding the tensioner pulley (11) against the belt, install the tensioner (12) into the housing and tighten two bolts to 28 N.m (250 in. lbs.). Each camshaft sprocket mark should remain aligned with the cover marks.
17. When the tensioner is in place, pull the retaining pin to allow the tensioner to extend to the tensioner pulley bracket.
18. Rotate the crankshaft sprocket two revolutions and check the timing marks on the camshafts

and crankshaft. The marks should line up within their respective locations. If the marks do not line up, repeat the procedure.

NOTE: With the camshaft gears in these positions the lobes are in a neutral position (no load to the valve). This will allow the rocker arm shaft assembly to be tightened into position with little or no valve spring load on it.

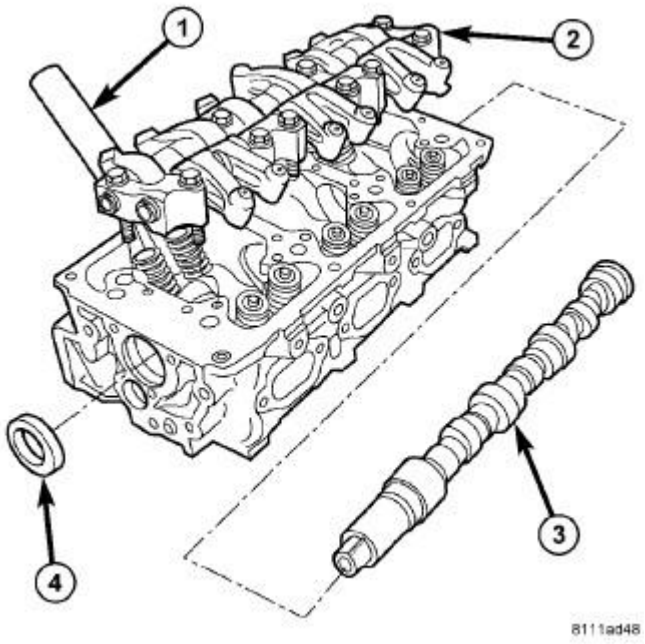

Fig. 162: Camshaft, Rocker Arm Assembly & Cylinder Head
Courtesy of CHRYSLER LLC

19. Install the rocker arm and shaft assembly (2) and ten bolts making sure that the identification marks face toward the front of engine for the left head and toward the rear of the engine for the right head.

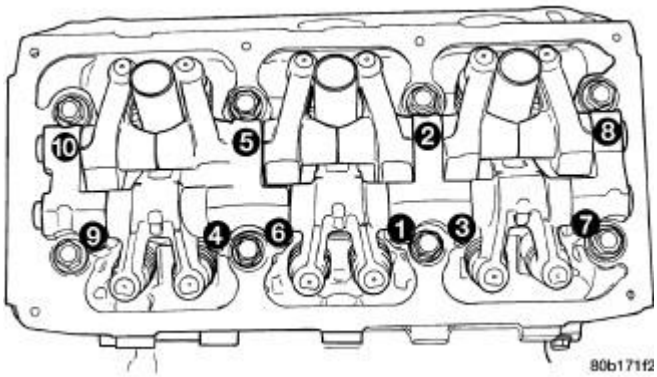

Fig. 163: Rocker Arm/Shaft Assembly Bolt Tightening Sequence

Courtesy of CHRYSLER LLC

20. Tighten the ten rocker arm/shaft assembly bolts in the sequence shown in illustration to 31 N.m (275 in. lbs.).

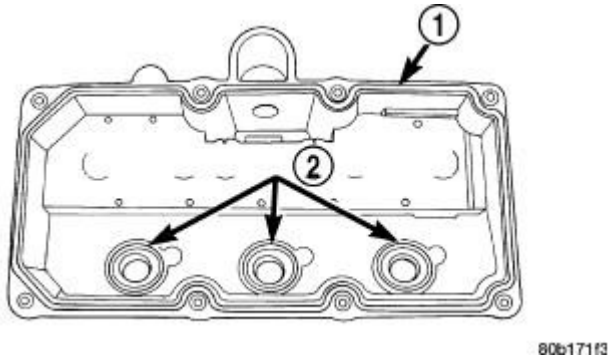

Fig. 164: Cylinder Head Cover Gasket and Spark Plug Tube Seals
Courtesy of CHRYSLER LLC

21. Clean the cylinder head and cover mating surfaces. Inspect and replace the gasket (1) and seals (2) as necessary. See **Engine/Cylinder Head/COVER(S), Cylinder Head - Installation**.
22. Install the cylinder head cover and eight bolts. Tighten bolts to 12 N.m (105 in. lbs.).

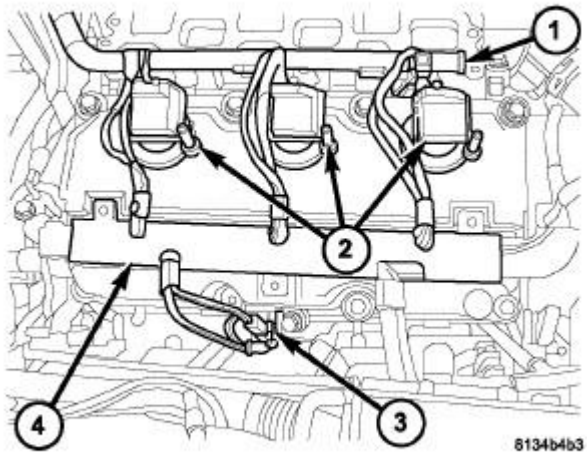

Fig. 165: Ignition Coils - Right Cylinder Head
Courtesy of CHRYSLER LLC

23. Install the spark plugs. Tighten to 28 N.m (20 ft. lbs.). Refer to **Electrical/Ignition Control/SPARK PLUG - Installation** .

24. Install the ignition coils (2) into the cylinder head.
25. Install and tighten the coil mounting bolts to 8 N.m (71 in. lbs.).
26. Reposition the engine wire harness and install the wire harness track retaining tabs (4). Connect and lock electrical connectors to the ignition coils (2), capacitor (3) and EGR valve.

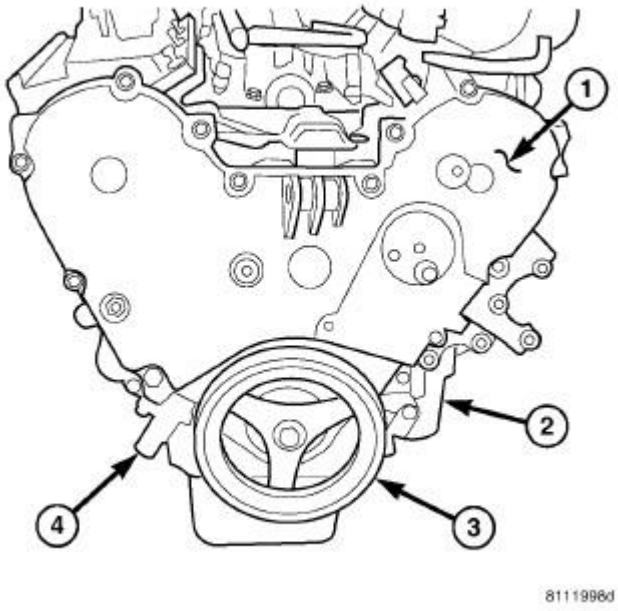

Fig. 166: Front Timing Belt Cover
Courtesy of CHRYSLER LLC

1 - FRONT TIMING BELT COVER
2 - ENGINE OIL FILTER
3 - VIBRATION DAMPER
4 - TIMING BELT TENSIONER

27. Install the front timing belt outer covers (1) with 14 bolts.
28. Tighten the timing cover bolts as follows:

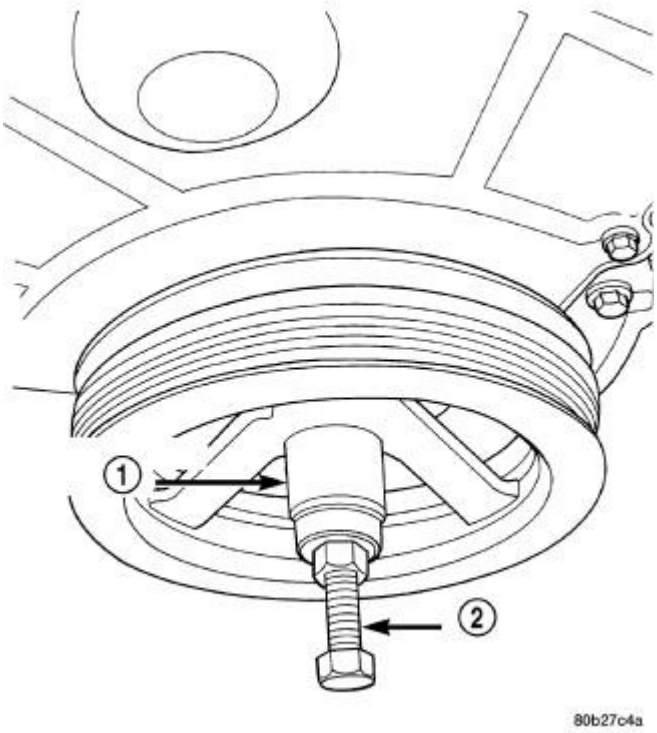

Fig. 167: Crankshaft Damper-Installation
Courtesy of CHRYSLER LLC

- M6 bolts - 12 N.m (105 in. lbs.)
- M8 bolts - 28 N.m (250 in. lbs.)
- M10 bolts - 54 N.m (40 ft. lbs.)

29. Install the crankshaft damper using Forcing Screw C-4685-C1 (2), with Nut and Thrust Bearing from 6792, and 6792-1 Installer (1).

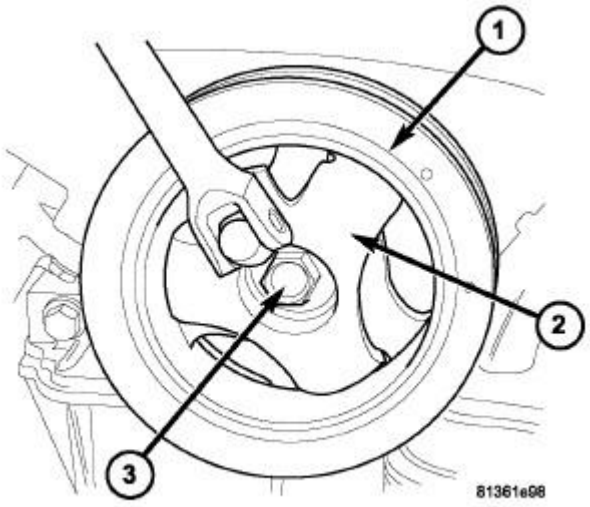

Fig. 168: Damper Holder
Courtesy of CHRYSLER LLC

30. Install the crankshaft damper bolt (3). Tighten the bolt to 95 N.m (70 ft. lbs.) while holding the damper (1) with Damper Holding Fixture 9365 (2).

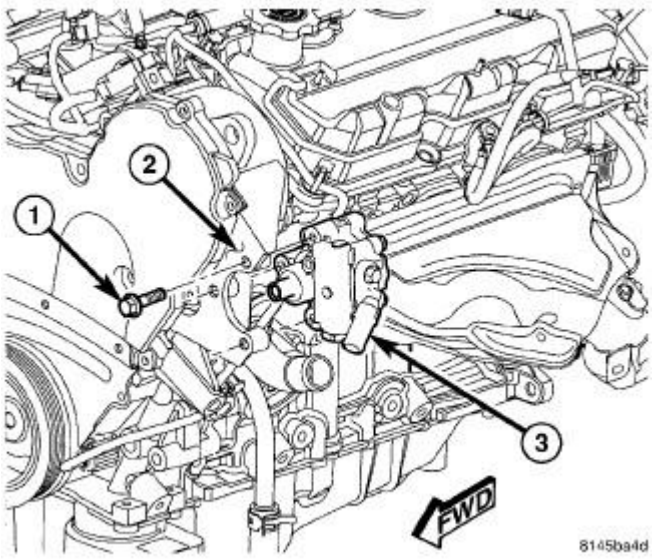

Fig. 169: POWER STEERING PUMP - 2.7L/3.5L
Courtesy of CHRYSLER LLC

31. Align the power steering pump (3) to the mounting holes on the engine bracket (2) and install three pump mounting bolts (1) through the access holes in the pulley. Tighten the bolts to 28 N.m (21 ft. lbs.).

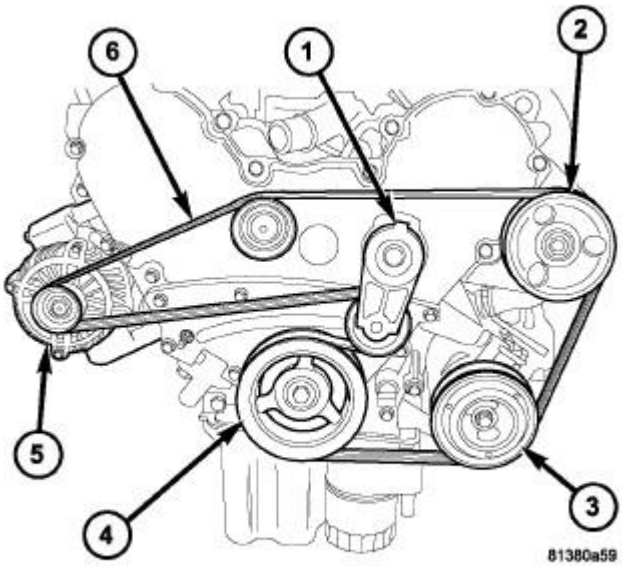

Fig. 170: ACCESSORY DRIVE BELT ROUTING
Courtesy of CHRYSLER LLC

1 - DRIVE BELT TENSIONER
2 - POWER STEERING PULLEY
3 - AIR CONDITIONING COMPRESSOR
4 - CRANKSHAFT DAMPER
5 - GENERATOR
6 - DRIVE BELT

32. Install the accessory drive belt tensioner (1). Tighten the bolt to 34 N.m (40 ft. lbs.).
33. Install the accessory drive belt idler pulley. Tighten the bolt to 28 N.m (250 in. lbs.).
34. Install the accessory drive belt (6). Refer to **Cooling/Accessory Drive/BELT, Serpentine - Installation** .

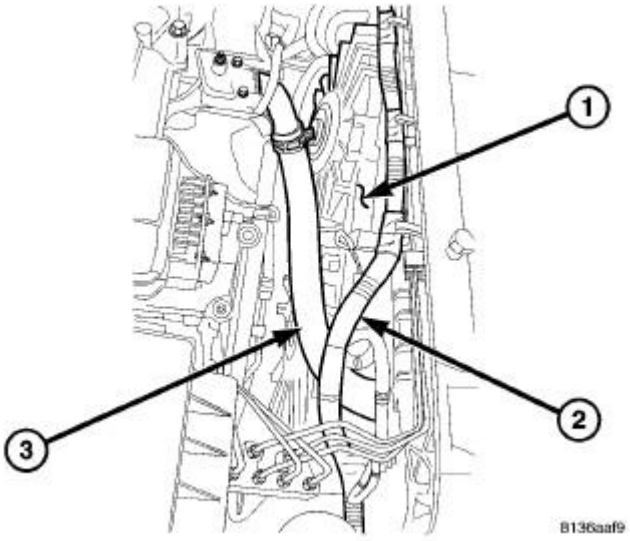

Fig. 171: Radiator Fan Assembly
Courtesy of CHRYSLER LLC

1 - RADIATOR FAN ASSEMBLY
2 - ELECTRICAL CONNECTOR
3 - UPPER RADIATOR HOSE

35. Install the radiator cooling fan assembly (1) into the vehicle.
36. Install the cooling fan mounting bolts and tighten to 6 N.m (50 in. lbs.).
37. Connect the cooling fan electrical connector (2).
38. Install the upper radiator hose (3).

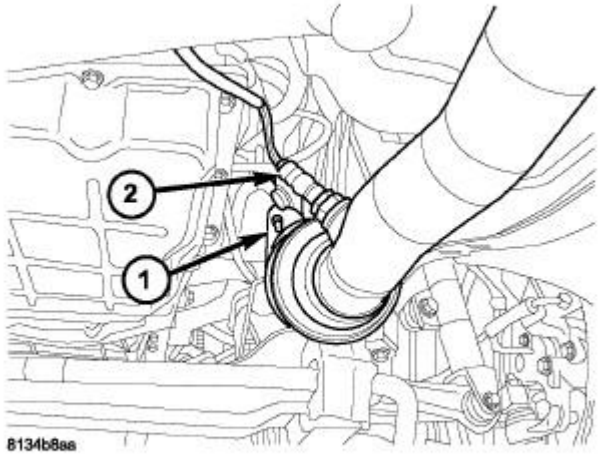

Fig. 172: RIGHT EXHAUST PIPE TO MANIFOLD UNION
Courtesy of CHRYSLER LLC

39. Raise and support the vehicle. Refer to **Vehicle Quick Reference/Hoisting - Standard Procedure** .
40. Install the front exhaust pipe (1). Tighten the ball flange nuts to 34 N.m (25 ft. lbs.).
41. Connect both upstream and downstream (2) oxygen sensor harness connectors.

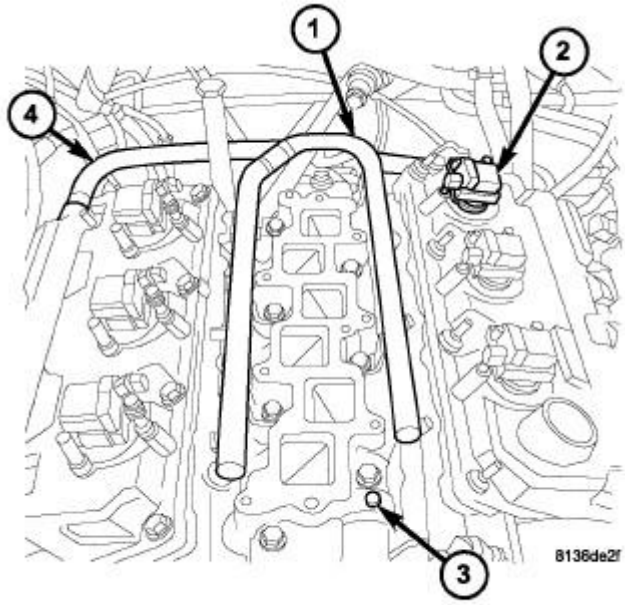

Fig. 173: FUEL RAIL AND LOWER INTAKE MANIFOLD
Courtesy of CHRYSLER LLC

42. Lower the vehicle.
43. Install the fuel rail (1) and lower intake manifold. See **Engine/Manifolds/MANIFOLD, Intake - Installation**.

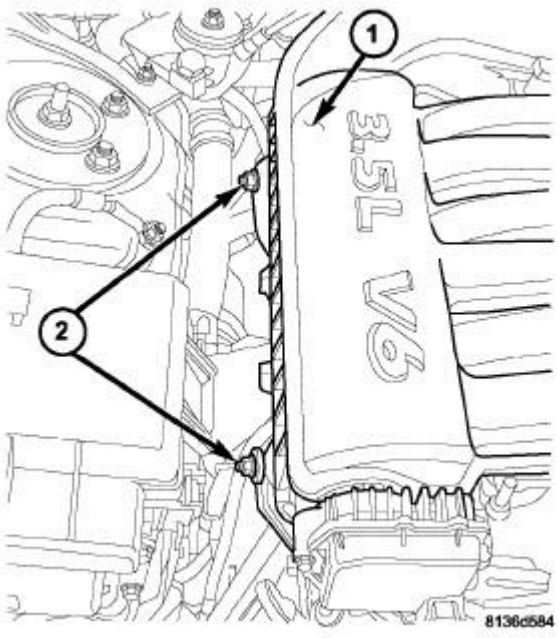

Fig. 174: Intake Manifold Braces
Courtesy of CHRYSLER LLC

44. Install the upper intake manifold (1) including the wiper module, strut tower support and EGR tube. See **Engine/Manifolds/MANIFOLD, Intake - Installation**.

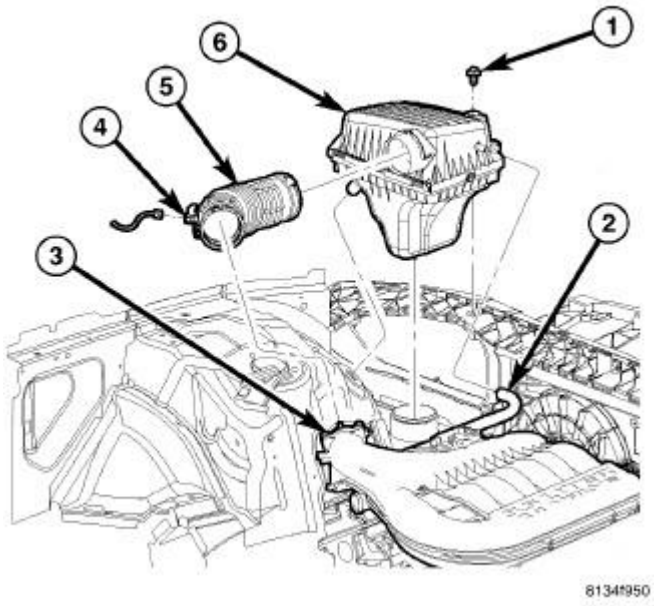

Fig. 175: Air Cleaner Housing
Courtesy of CHRYSLER LLC

45. Install the air cleaner element housing. See **Engine/Air Intake System/BODY, Air Cleaner - Installation**.
46. Connect the negative battery cable. Tighten nut to 5 N.m (45 in. lbs.).
47. Fill and level check the coolant system. Refer to **Cooling - Standard Procedure** .

LEFT CYLINDER HEAD

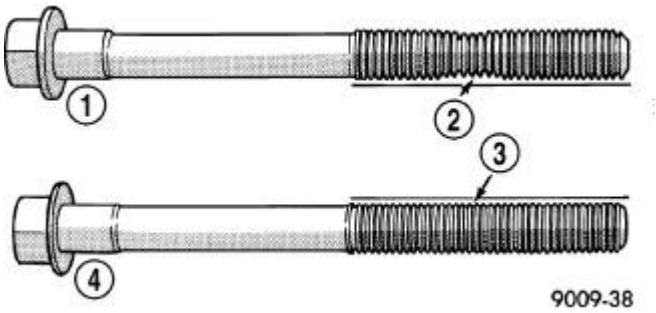

Fig. 176: Check for Stretched Bolts
Courtesy of CHRYSLER LLC

1 - STRETCHED BOLT
2 - THREADS ARE NOT STRAIGHT ON LINE
3 - THREADS ARE STRAIGHT ON LINE
4 - UNSTRETCHED BOLT

CAUTION: The cylinder head bolts are tightened using a torque plus angle procedure. The bolts must be examined BEFORE reuse. If the threads are necked down the bolts must be replaced.

1. Check the cylinder head bolts for necking by holding a scale or straight edge against the threads. If all the threads do not contact the scale (2) the bolt must be replaced.

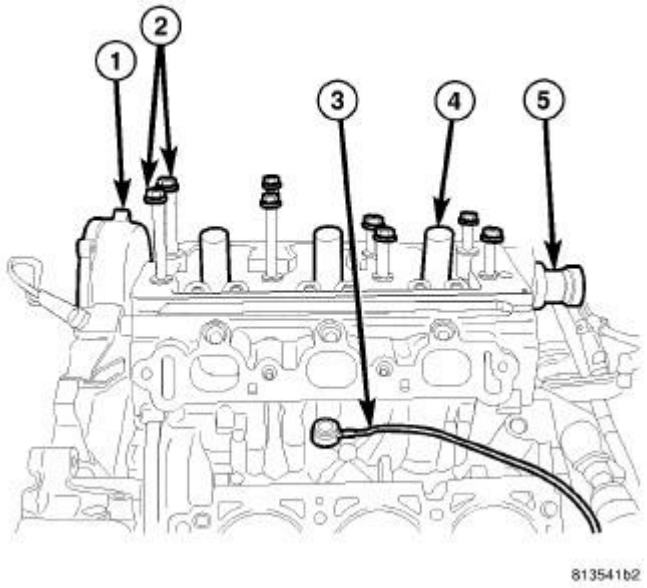

Fig. 177: Right Cylinder Head
Courtesy of CHRYSLER LLC

CAUTION: When cleaning cylinder head and cylinder block surfaces, DO NOT use a metal scraper because the surfaces could be cut or ground. Use ONLY a wooden or plastic scraper.

2. Clean the sealing surfaces of the cylinder head and block. See **Engine - Standard Procedure**.
3. Install the camshaft (5) in the cylinder head.

CAUTION: THE CYLINDER HEAD GASKETS ARE NOT INTERCHANGEABLE BETWEEN CYLINDER HEADS AND ARE CLEARLY MARKED RIGHT OR LEFT.

CAUTION: Ensure that the correct head gaskets are used and are oriented correctly on cylinder block.

4. Push the camshaft (5) out of the back of the cylinder head approximately 3.5 inches. Install the head gasket and cylinder head over the locating dowels.

NOTE: **Before installing the cylinder head bolts, lubricate the threads with clean engine oil.**

5. Install and finger tighten eight head bolts (2).

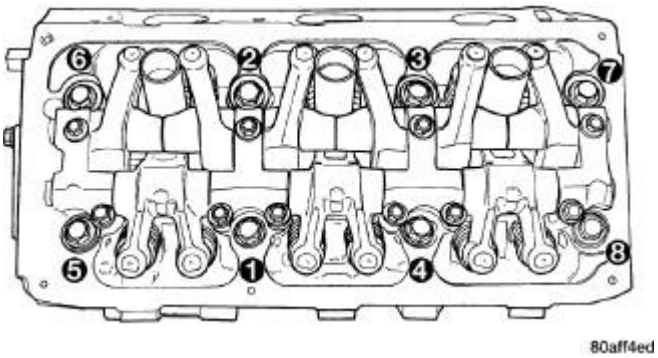

Fig. 178: Cylinder Head Bolt Tightening Sequence
Courtesy of CHRYSLER LLC

6. Tighten the cylinder head bolts in the sequence shown in illustration, using the 4 step torque-turn method to the following torque values:
   - Step 1: All to 61 N.m (45 ft. lbs.)
   - Step 2: All to 88 N.m (65 ft. lbs.)
   - Step 3: All (again) to 88 N.m (65 ft. lbs.)
   - Step 4: + 90° Turn **Do not use a torque wrench for this step.**
7. Bolt torque after the 90° turn (Step 4) should be over 122 N.m (90 ft. lbs.) in the tightening direction. If not, replace the bolt.

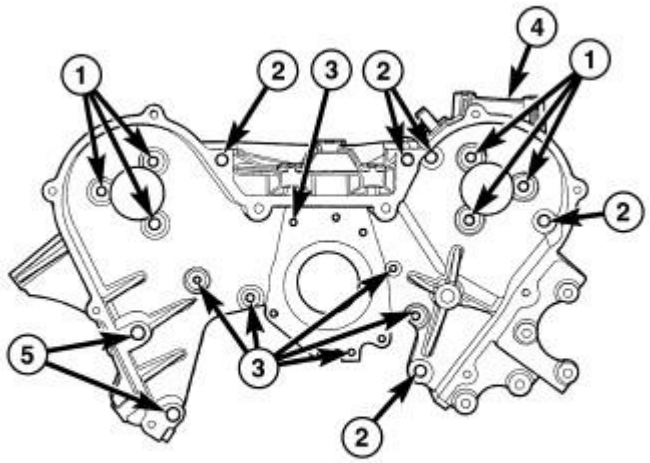

Fig. 179: Rear Timing Belt Cover Fasteners
Courtesy of CHRYSLER LLC

8. Install four inner timing cover to cylinder head bolts (1) and (2). Tighten the bolts to 54 N.m (40 ft. lbs.).

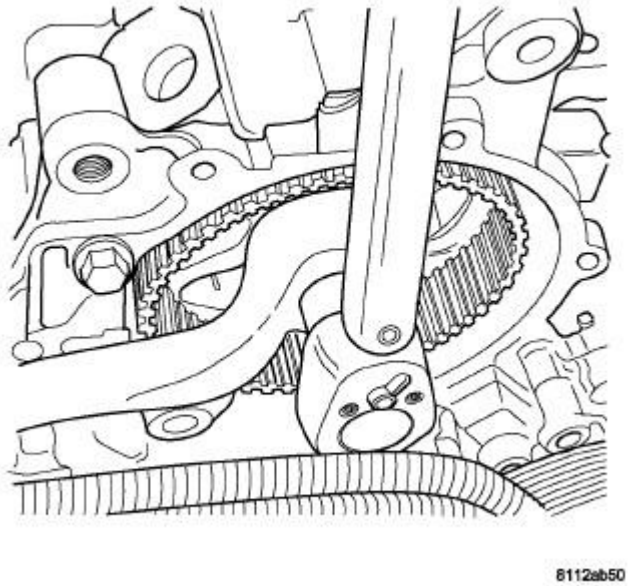

Fig. 180: LEFT CAMSHAFT SPROCKET
Courtesy of CHRYSLER LLC

CAUTION: The camshaft sprockets are keyed and not interchangeable from side to side because of the camshaft position sensor pick-up.

9. Push the camshaft back into the cylinder head and install the camshaft sprocket (2).
10. Install a **NEW** sprocket attaching bolt into place. The 255 mm (10 in.) bolt is to be installed in the left camshaft and the 213 mm (8 3/8 in.) bolt is to be installed into the right camshaft. Counterhold the camshaft sprocket (2) and tighten the camshaft sprocket bolt to 102 N.m (75 ft. lbs.) plus a 90° turn.

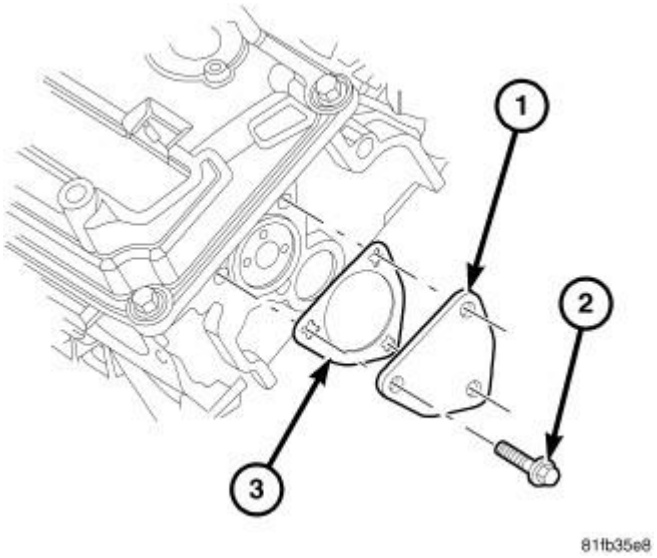

Fig. 181: Cam Thrust Plate Gasket
Courtesy of CHRYSLER LLC

11. Install the camshaft thrust plate (1) and gasket (3). Tighten three bolts (2) to 28 N.m (250 in. lbs.).

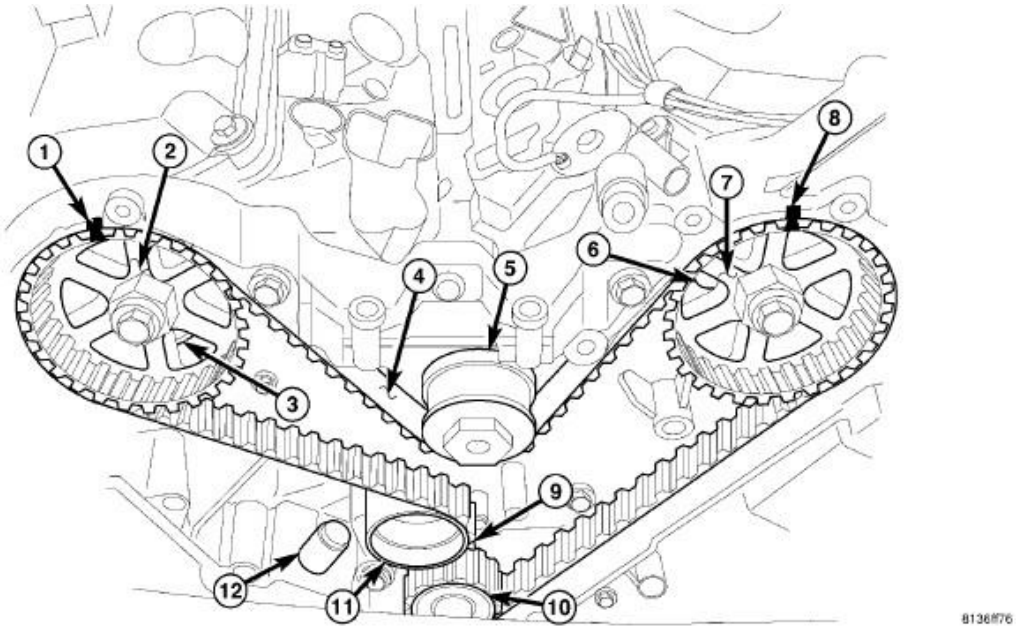

Fig. 182: Identifying Timing Gear Components
Courtesy of CHRYSLER LLC

1 - RIGHT CAMSHAFT GEAR ALIGNMENT MARK	7 - LEFT CAMSHAFT GEAR
2 - RIGHT CAMSHAFT GEAR	8 - LEFT CAMSHAFT GEAR ALIGNMENT MARK
3 - CYLINDER HEAD TO INNER TIMING BELT COVER BOLTS - RIGHT	9 - CRANKSHAFT GEAR ALIGNMENT MARK
4 - TIMING BELT	10 - CRANKSHAFT GEAR
5 - WATER PUMP PULLEY	11 - TIMING BELT TENSIONER PULLEY
6 - CYLINDER HEAD TO INNER TIMING BELT COVER BOLTS - LEFT	12 - TIMING BELT TENSIONER

12. Rotate the left camshaft gear (7) to align its timing mark (8). Verify that the right camshaft gear (2) timing mark (1) and crankshaft gear (10) timing mark (9) are still aligned.
13. Install the timing belt (4) starting at the crankshaft sprocket (10) going in a counterclockwise direction. Install the belt around the last sprocket. Maintain tension on the belt as it is positioned around the tensioner pulley (11).
14. Holding the tensioner pulley (11) against the belt, install the tensioner into the housing and tighten two bolts to 28 N.m (250 in. lbs.). Each camshaft sprocket mark should remain aligned with the cover marks.
15. When the tensioner is in place, pull the retaining pin to allow the tensioner to extend to the tensioner pulley bracket.
16. Rotate the crankshaft sprocket two revolutions and check the timing marks on the camshafts

and crankshaft. The marks should line up within their respective locations. If the marks do not line up, repeat the procedure.

NOTE: With the camshaft gears in these positions the lobes are in a neutral position (no load to the valve). This will allow the rocker arm shaft assembly to be tightened into position with little or no valve spring load on it.

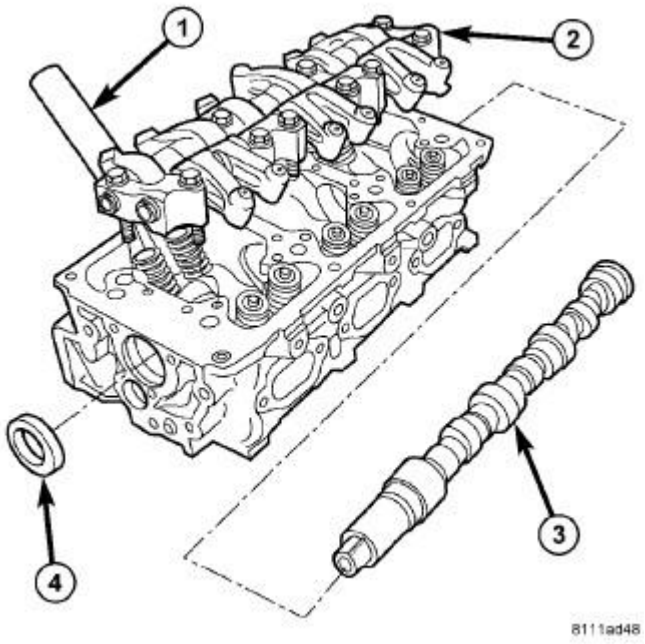

Fig. 183: Camshaft, Rocker Arm Assembly & Cylinder Head
Courtesy of CHRYSLER LLC

17. Install the rocker arm and shaft assembly (2) and ten bolts making sure that the identification marks face toward the front of engine for the left head and toward the rear of the engine for the right head.

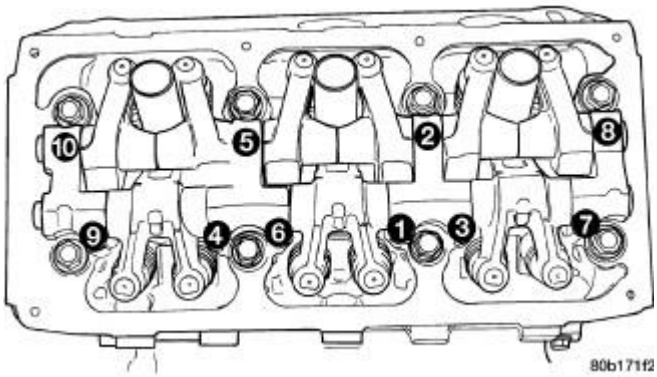

Fig. 184: Rocker Arm/Shaft Assembly Bolt Tightening Sequence

Courtesy of CHRYSLER LLC

18. Tighten the ten rocker arm/shaft assembly bolts in the sequence shown in illustration to 31 N.m (275 in. lbs.).

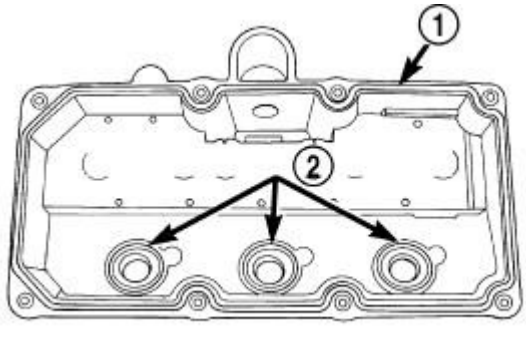

Fig. 185: Cylinder Head Cover Gasket and Spark Plug Tube Seals
Courtesy of CHRYSLER LLC

19. Clean the cylinder head and cover mating surfaces. Inspect and replace the gasket (1) and seals (2) as necessary. See **Engine/Cylinder Head/COVER(S), Cylinder Head - Installation**.
20. Install the cylinder head cover and eight bolts. Tighten the bolts to 12 N.m (105 in. lbs.).

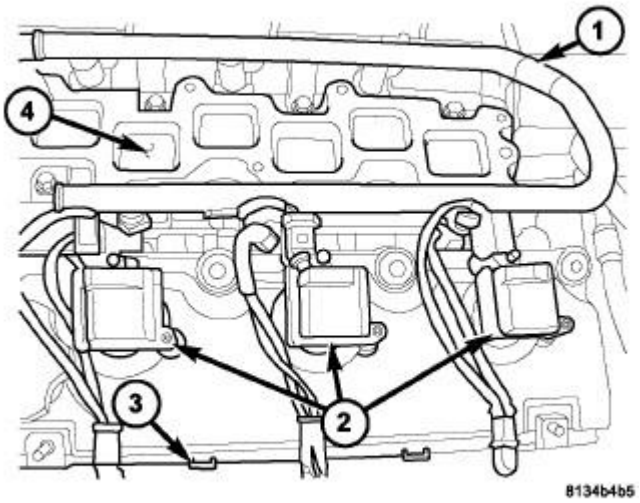

Fig. 186: Ignition Coils - Left Cylinder Head
Courtesy of CHRYSLER LLC

21. Install the spark plugs. Tighten to 28 N.m (20 ft. lbs.). Refer to **Electrical/Ignition Control/SPARK PLUG - Installation** .

22. Install the ignition coils (2) into the cylinder head.
23. Install and tighten the coil mounting bolts to 8 N.m (71 in. lbs.).
24. Connect and lock electrical connectors to the ignition coils (2) and install the left cylinder head cover to cylinder head ground strap (3).

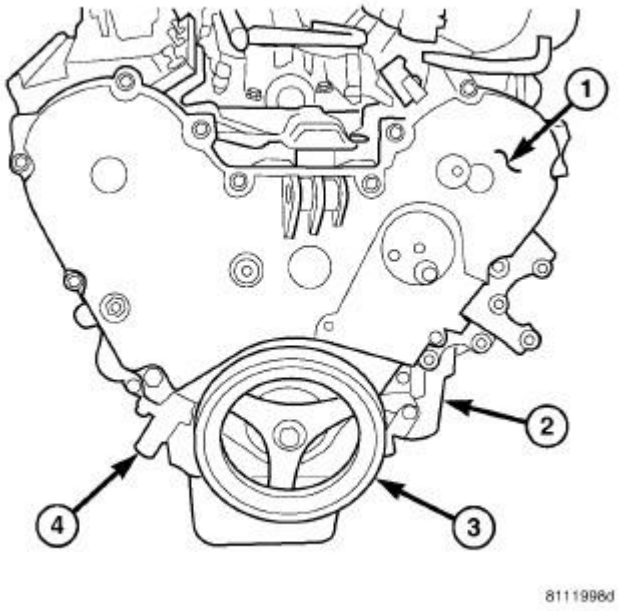

Fig. 187: Front Timing Belt Cover
Courtesy of CHRYSLER LLC

1 - FRONT TIMING BELT COVER
2 - ENGINE OIL FILTER
3 - VIBRATION DAMPER
4 - TIMING BELT TENSIONER

25. Install the front timing belt outer covers (1) with 14 bolts.
26. Tighten the timing cover bolts as follows:

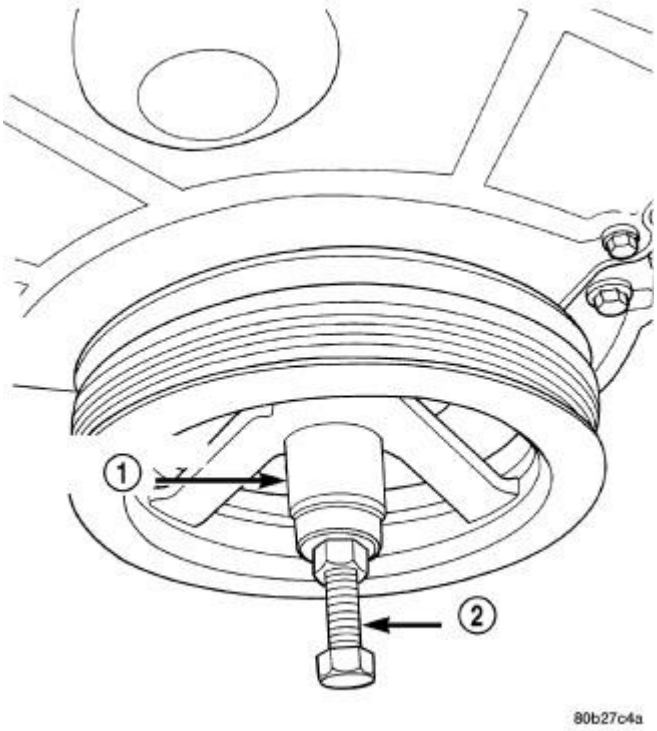

Fig. 188: Crankshaft Damper-Installation
Courtesy of CHRYSLER LLC

- M6 bolts - 12 N.m (105 in. lbs.)
- M8 bolts - 28 N.m (250 in. lbs.)
- M10 bolts - 54 N.m (40 ft. lbs.)

27. Install the crankshaft damper using Forcing Screw C-4685-C1 (2), with Nut and Thrust Bearing from 6792, and 6792-1 Installer (1).

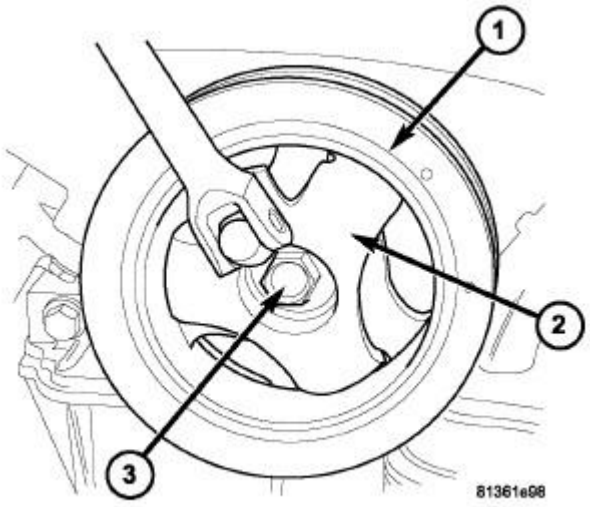

Fig. 189: Damper Holder
Courtesy of CHRYSLER LLC

28. Install the crankshaft damper bolt (3). Tighten the bolt to 95 N.m (70 ft. lbs.) while holding the damper (1) with Damper Holding Fixture 9365 (2).

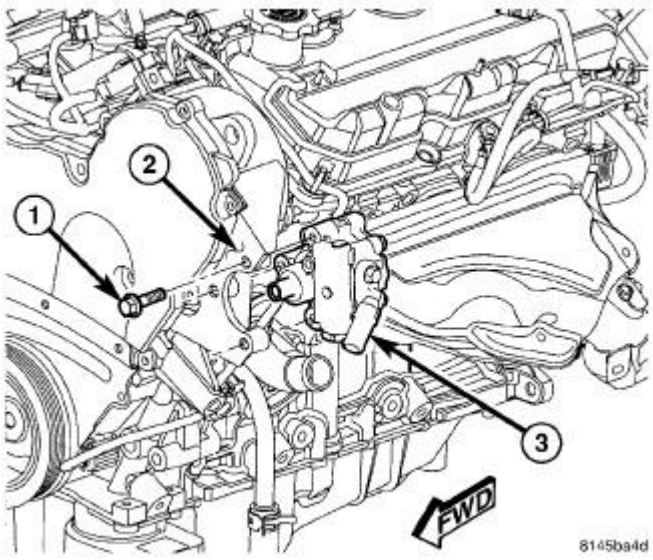

Fig. 190: POWER STEERING PUMP - 2.7L/3.5L
Courtesy of CHRYSLER LLC

29. Align the power steering pump (3) to the mounting holes on the engine bracket (2) and install three pump mounting bolts (1) through the access holes in the pulley. Tighten the bolts to 28 N.m (21 ft. lbs.).

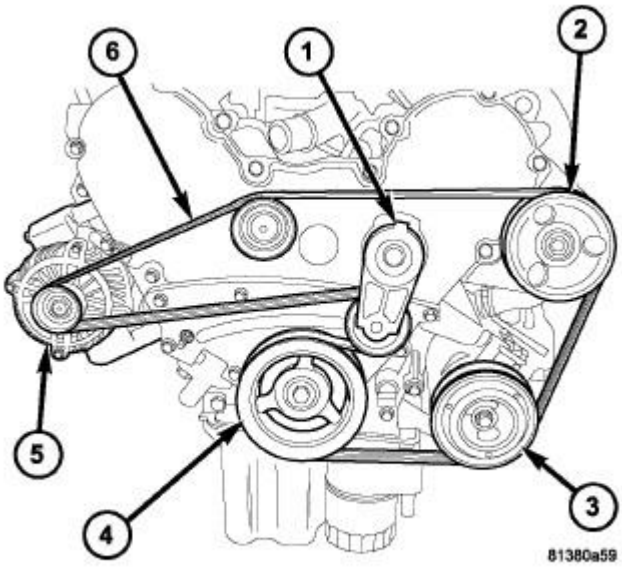

Fig. 191: ACCESSORY DRIVE BELT ROUTING
Courtesy of CHRYSLER LLC

1 - DRIVE BELT TENSIONER
2 - POWER STEERING PULLEY
3 - AIR CONDITIONING COMPRESSOR
4 - CRANKSHAFT DAMPER
5 - GENERATOR
6 - DRIVE BELT

30. Install the accessory drive belt tensioner (1). Tighten the bolt to 34 N.m (40 ft. lbs.).
31. Install the accessory drive belt idler pulley. Tighten the bolt to 28 N.m (250 in. lbs.).
32. Install the accessory drive belt (6). Refer to **Cooling/Accessory Drive/BELT, Serpentine - Installation** .

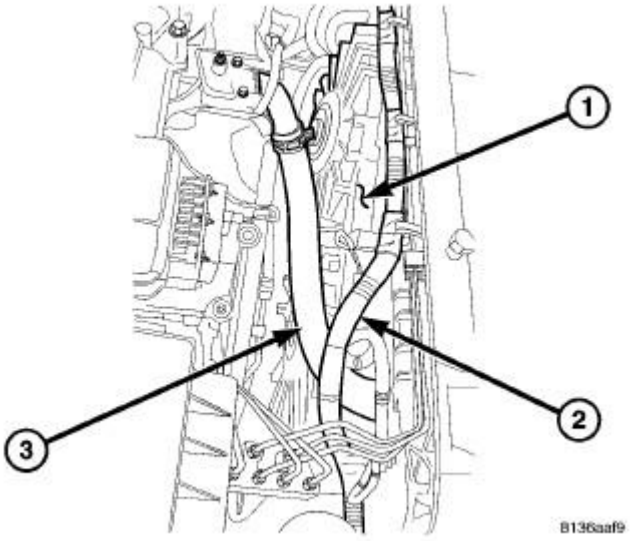

Fig. 192: Radiator Fan Assembly
Courtesy of CHRYSLER LLC

1 - RADIATOR FAN ASSEMBLY
2 - ELECTRICAL CONNECTOR
3 - UPPER RADIATOR HOSE

33. Install the radiator cooling fan assembly (1) into the vehicle.
34. Install the cooling fan mounting bolts and tighten to 6 N.m (50 in. lbs.).
35. Connect the cooling fan electrical connector (2).
36. Install the upper radiator hose (3).

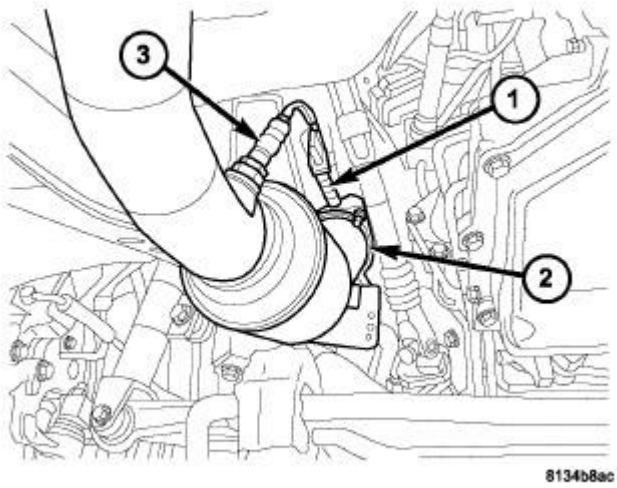

Fig. 193: Left Exhaust Pipe To Manifold Union
Courtesy of CHRYSLER LLC

37. Raise and support the vehicle. Refer to **Vehicle Quick Reference/Hoisting - Standard Procedure** .
38. Install the front exhaust pipe (2). Tighten the ball flange nuts to 34 N.m (25 ft. lbs.).
39. Connect both upstream and downstream (3) oxygen sensor harness connectors (1).

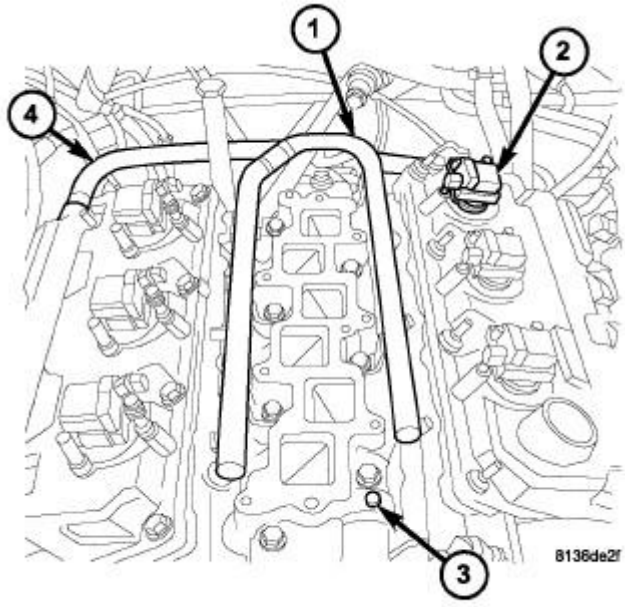

Fig. 194: FUEL RAIL AND LOWER INTAKE MANIFOLD
Courtesy of CHRYSLER LLC

40. Lower the vehicle.
41. Install the fuel rail (1) and lower intake manifold. See **Engine/Manifolds/MANIFOLD, Intake - Installation**.

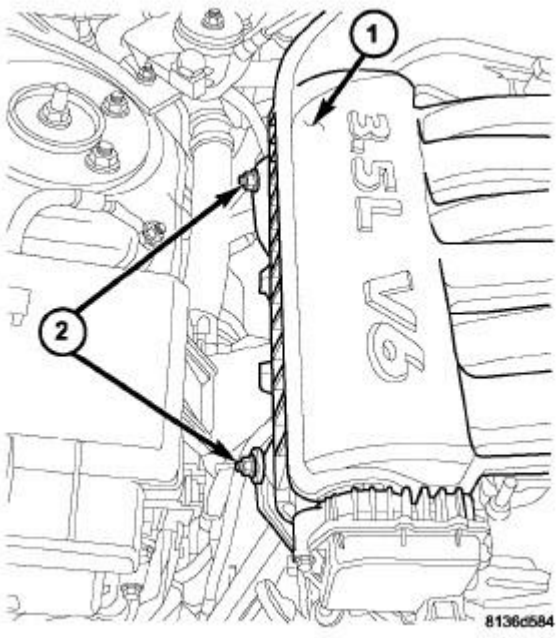

Fig. 195: Intake Manifold Braces
Courtesy of CHRYSLER LLC

42. Install the upper intake manifold (1) including the wiper module, strut tower support and EGR tube. See **Engine/Manifolds/MANIFOLD, Intake - Installation**.

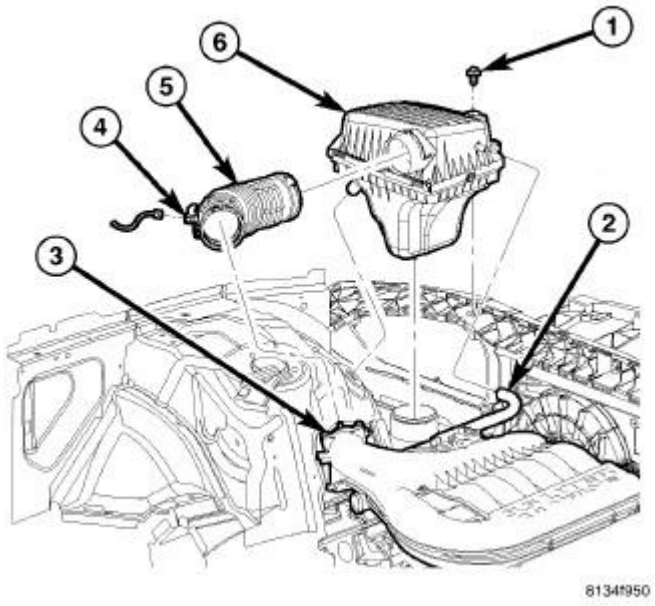

Fig. 196: Air Cleaner Housing
Courtesy of CHRYSLER LLC

43. Install the air cleaner element housing. See **Engine/Air Intake System/BODY, Air Cleaner - Installation**.
44. Connect the negative battery cable. Tighten nut to 5 N.m (45 in. lbs.).
45. Fill and level check the coolant system. Refer to **Cooling - Standard Procedure** .

CAMSHAFT, ENGINE

Description

DESCRIPTION

A single overhead camshaft per cylinder head provides valve actuation. The left camshaft accommodates a cam sensor pick-up wheel and is therefore longer. Each camshaft is supported by four bearing journals. A thrust plate attached to the rear of each cylinder head controls camshaft end play. Right and left camshaft driving sprockets support a timing mark, are keyed, and not interchangeable because of the cam sensor pick-up wheel on the left sprocket. Camshaft bearing lubrication is provided via a oil supply passage through each rocker shaft pedestal dowel.

Operation

OPERATION

The camshaft is driven by the crankshaft via drive sprockets and belt. The camshaft has precisely machined lobes to provide accurate valve timing and duration.

Removal

REMOVAL

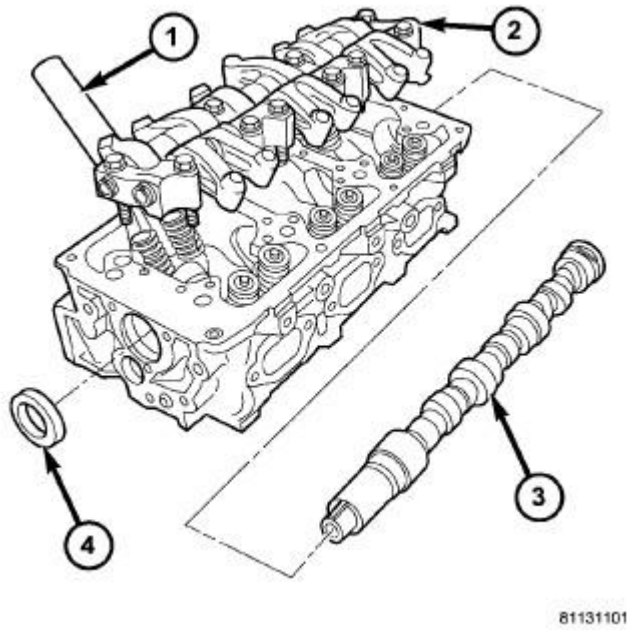

Fig. 197: Spark Plug Tube, Rocker Arm Assembly, Camshaft & Seal
Courtesy of CHRYSLER LLC

1 - SPARK PLUG TUBE
2 - ROCKER ARM ASSEMBLY
3 - CAMSHAFT
4 - SEAL

NOTE: Camshafts are removed from the rear of each cylinder head.

1. Remove the cylinder head. See **Engine/Cylinder Head - Removal**.

CAUTION: Care must be taken not to nick or scratch the journals when removing the camshaft.

2. Carefully remove the camshaft (3) from the rear of the cylinder head.

Inspection

INSPECTION

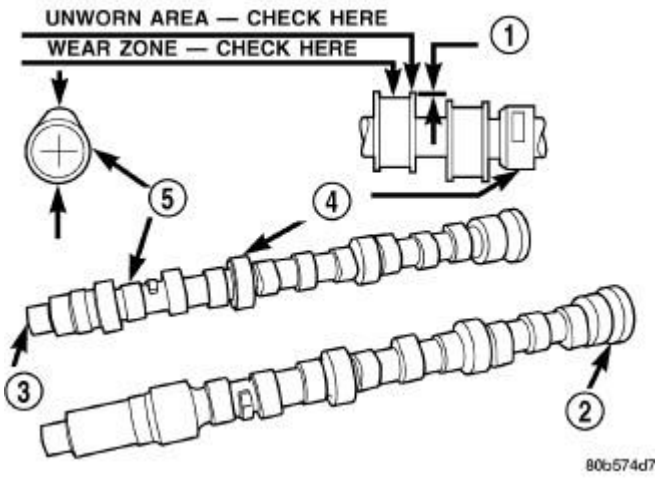

Fig. 198: Camshaft Inspection
Courtesy of CHRYSLER LLC

1 - ACTUAL WEAR
2 - LEFT CAMSHAFT
3 - RIGHT CAMSHAFT
4 - BEARING JOURNAL
5 - LOBE

1. Inspect camshaft bearing journals (4) for damage and binding. If journals are binding, check the cylinder head for damage. Also check cylinder head oil holes for clogging.
2. Check the cam lobe (5) and bearing surfaces for abnormal wear and damage. Replace camshaft if defective.

NOTE: If camshaft is replaced due to lobe wear or damage, always replace the rocker arms.

3. Measure the lobe (5) actual wear and replace camshaft if out of limit. Standard value is 0.0254 mm (0.001 in.), wear **limit** is 0.254 mm (0.010 in.).

Installation

INSTALLATION

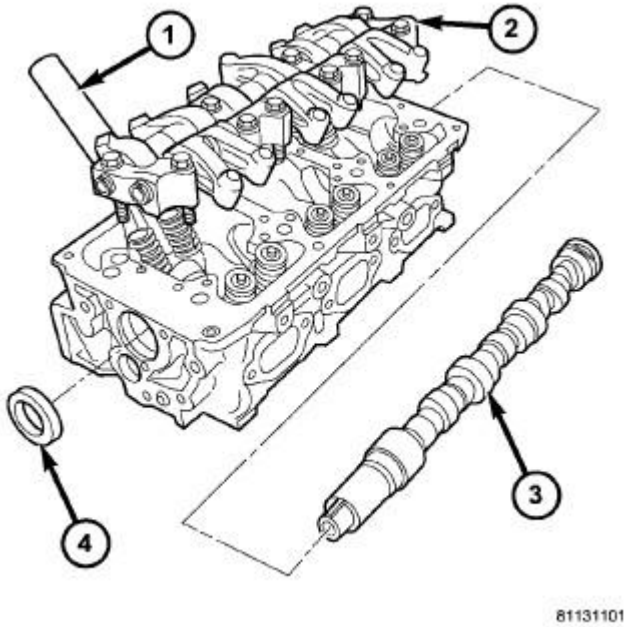

Fig. 199: Spark Plug Tube, Rocker Arm Assembly, Camshaft & Seal
Courtesy of CHRYSLER LLC

1 - SPARK PLUG TUBE
2 - ROCKER ARM ASSEMBLY
3 - CAMSHAFT
4 - SEAL

NOTE: Care must be taken not to scrape or nick the camshaft journals when installing the camshaft into position.

1. Lubricate camshaft (3) bearing journals, camshaft lobes and camshaft seal (4) with clean engine oil and install camshaft (3) into cylinder head .
2. Install the cylinder head. See **Engine/Cylinder Head - Installation**.

COVER(S), CYLINDER HEAD, LEFT

Removal

REMOVAL

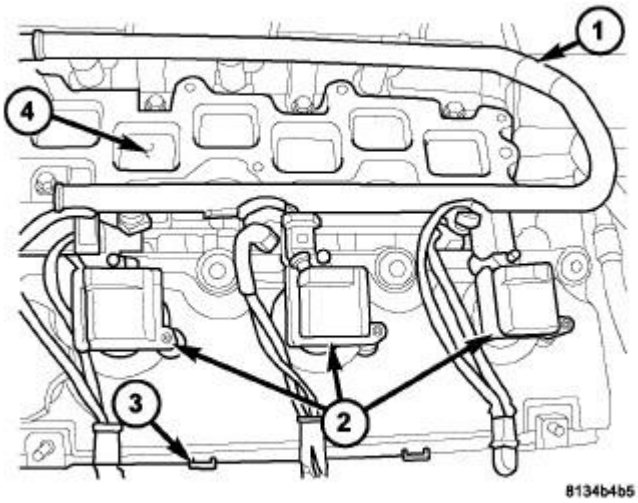

Fig. 200: Ignition Coils - Left Cylinder Head
Courtesy of CHRYSLER LLC

WARNING: DO NOT START OR RUN ENGINE WITH CYLINDER HEAD COVER REMOVED FROM THE ENGINE. DAMAGE OR PERSONAL INJURY MAY OCCUR.

1. Disconnect and isolate the negative battery cable.
2. Remove the upper intake manifold from the engine. See **Engine/Manifolds/MANIFOLD, Intake - Removal**.
3. Cover lower intake manifold (4) with a suitable cover during service.
4. Disconnect and remove the three ignition coils (2). Refer to **Electrical/Ignition Control/COIL, Ignition - Removal** .
5. Remove the ground strap/resistor retaining bolt from the cylinder head cover.
6. Lift up on the wire harness track (3) retaining tabs.

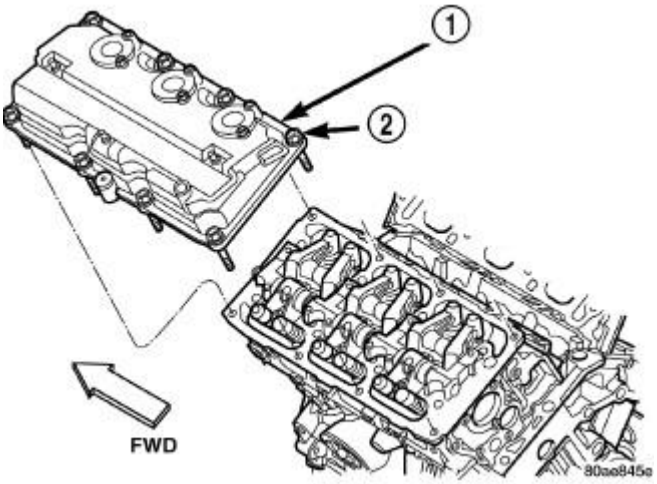

Fig. 201: Cylinder Head Covers
Courtesy of CHRYSLER LLC

1 - CYLINDER HEAD COVER-LEFT SIDE 2 - BOLTS (8)

7. Completely loosen the cylinder head cover retaining bolts and remove the cylinder head cover.

Installation

INSTALLATION

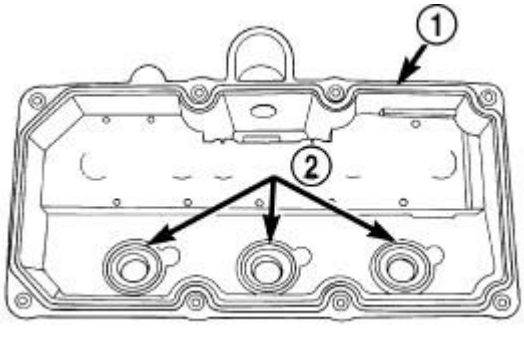

Fig. 202: Cylinder Head Cover Gasket and Spark Plug Tube Seals
Courtesy of CHRYSLER LLC

1 - CYLINDER HEAD COVER GASKET 2 - SPARK PLUG TUBE SEALS

1. Clean cylinder head and cover mating surfaces. Inspect and replace gasket (1) and seals (2) as necessary.

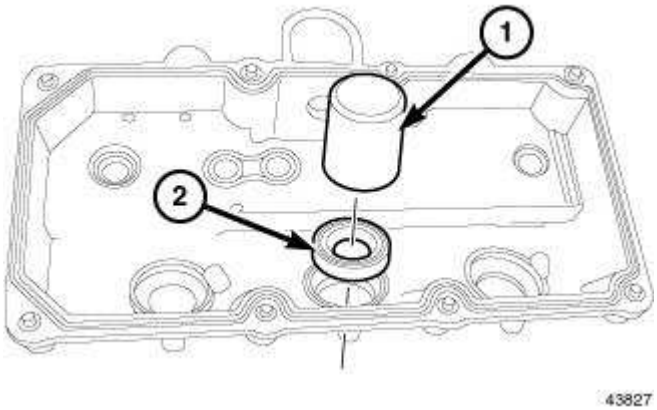

Fig. 203: Spark Plug Tube Seal Installation
Courtesy of CHRYSLER LLC

1 - SPECIAL TOOL MD-998306 2 - SPARK PLUG TUBE SEAL

2. To replace spark plug tube seals (2):
   a. Using a suitable pry tool, carefully remove tube seals (2).
   b. Position new seal (2) with the part number on seal facing cylinder head cover.
   c. Install seals using Camshaft Installer MD-998306 (1).

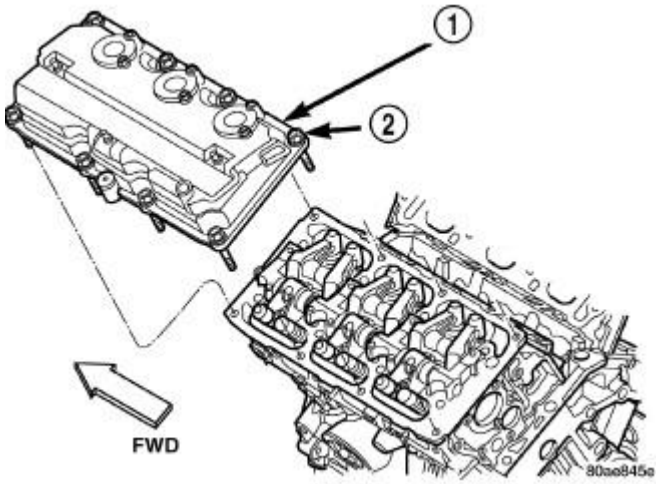

Fig. 204: Cylinder Head Covers
Courtesy of CHRYSLER LLC

1 - CYLINDER HEAD COVER-LEFT SIDE 2 - BOLTS (8)

3. Install cylinder head cover (1) and bolts (2). Tighten bolts to 12 N.m (105 in. lbs.).

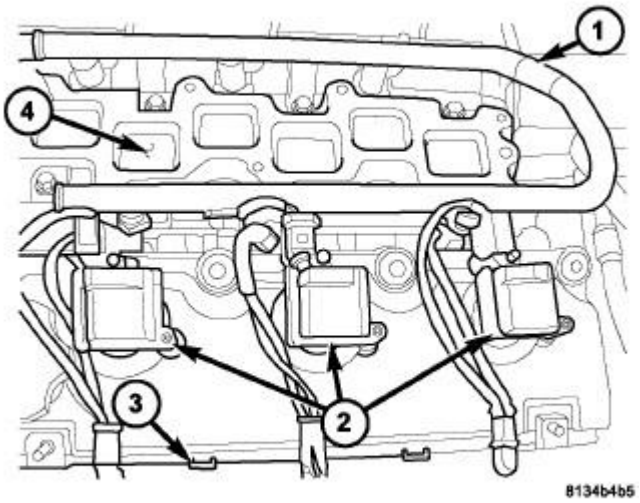

Fig. 205: Ignition Coils - Left Cylinder Head
Courtesy of CHRYSLER LLC

4. Position the wiring harness on the cylinder head cover.
5. Reclip the wire harness track retaining tabs (3) into the cover.
6. Install the ground strap/resistor retaining bolt onto the cylinder head cover.
7. Install the ignition coils (2). Tighten mounting screws to 6.7 N.m (60 in. lbs.). Refer to **Electrical/Ignition Control/COIL, Ignition - Installation** .
8. Connect the ignition coil electrical connectors (2).
9. Install upper intake manifold. See **Engine/Manifolds/MANIFOLD, Intake - Installation**.
10. Connect negative battery cable and tighten nut to 5 N.m (45 in. lbs.).

COVER(S), CYLINDER HEAD, RIGHT

Removal

REMOVAL

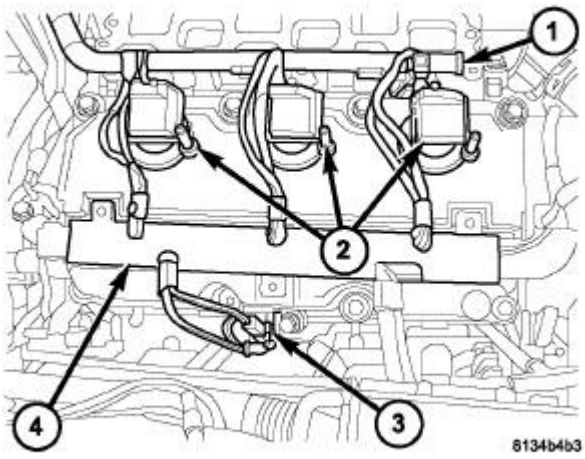

Fig. 206: Ignition Coils - Right Cylinder Head
Courtesy of CHRYSLER LLC

WARNING: DO NOT START OR RUN ENGINE WITH CYLINDER HEAD COVER REMOVED FROM THE ENGINE. DAMAGE OR PERSONAL INJURY MAY OCCUR.

1. Disconnect and isolate the negative battery cable.
2. Remove the upper intake manifold. See **Engine/Manifolds/MANIFOLD, Intake - Removal**.
3. Cover lower intake manifold openings during service.
4. Disconnect and remove the three ignition coils (2). Refer to **Electrical/Ignition Control/COIL, Ignition - Removal** .
5. Lift up on the wire harness track retaining tabs (4).
6. Remove the ground strap retaining bolt (3) from the cylinder head cover.
7. Completely loosen the cylinder head cover retaining bolts and remove the cylinder head cover.

Installation

INSTALLATION

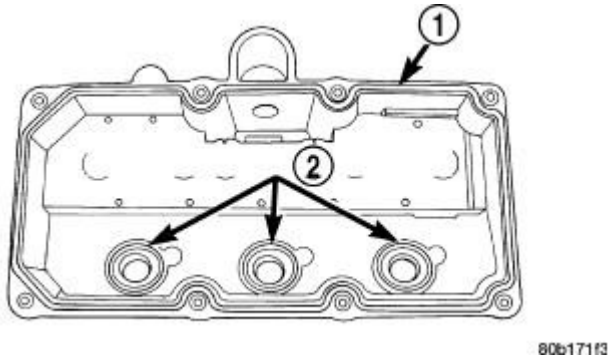

Fig. 207: Cylinder Head Cover Gasket and Spark Plug Tube Seals
Courtesy of CHRYSLER LLC

1 - CYLINDER HEAD COVER GASKET 2 - SPARK PLUG TUBE SEALS

1. Clean cylinder head and cover mating surfaces. Inspect and replace gasket (1) and seals (2) as necessary.

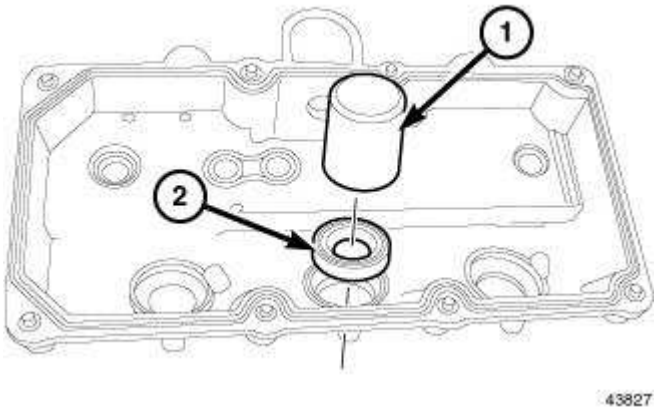

Fig. 208: Spark Plug Tube Seal Installation
Courtesy of CHRYSLER LLC

1 - SPECIAL TOOL MD-998306 2 - SPARK PLUG TUBE SEAL

2. To replace spark plug tube seals (2):
   a. Using a suitable pry tool, carefully remove tube seals (2).
   b. Position new seal (2) with the part number on seal facing cylinder head cover.
   c. Install seals using Camshaft Installer MD-998306 (1).

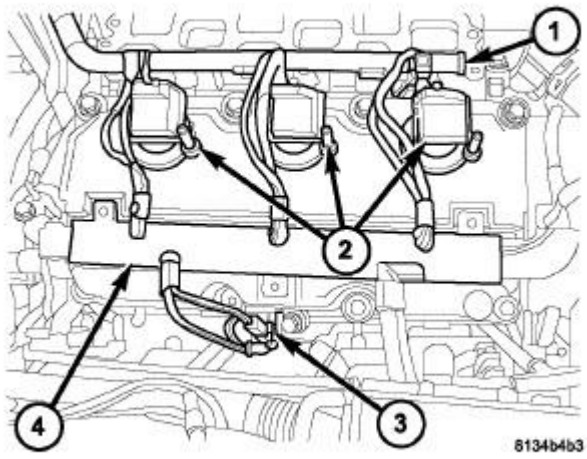

Fig. 209: Ignition Coils - Right Cylinder Head
Courtesy of CHRYSLER LLC

3. Install cylinder head cover and bolts. Tighten bolts to 12 N.m (105 in. lbs.).
4. Install the ground strap retaining bolt (3) to the cylinder head cover.
5. Install the wire harness track (4).
6. Install the ignition coils (2). Tighten mounting screws to 6.7 N.m (60 in. lbs.). Refer to **Electrical/Ignition Control/COIL, Ignition - Installation** .
7. Connect the ignition coil electrical connectors (2).
8. Install upper intake manifold. See **Engine/Manifolds/MANIFOLD, Intake - Installation**.
9. Connect negative battery cable and tighten nut to 5 N.m (45 in. lbs.).

ROCKER ARM, VALVE

Description

ROCKER ARM

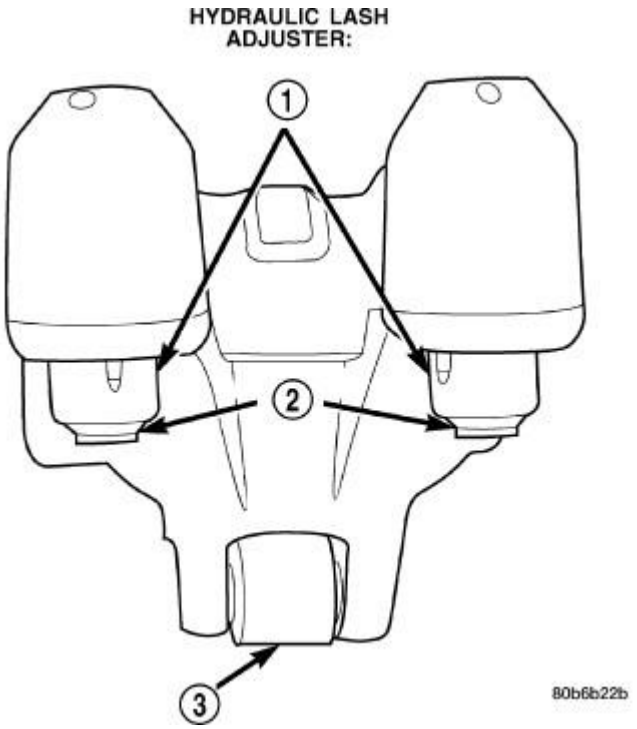

Fig. 210: Rocker Arm Assembly
Courtesy of CHRYSLER LLC

1 - RETAINER 2 - SWIVEL PAD 3 - ROLLER

Rocker arms are made of light weight permanent mold aluminum alloy with a roller (3) type follower operating against the camshaft . The valve actuating end of the rocker arms are machined to retain hydraulic lash adjusters, eliminating the need for manual valve lash adjustment.

ROCKER ARM SHAFTS

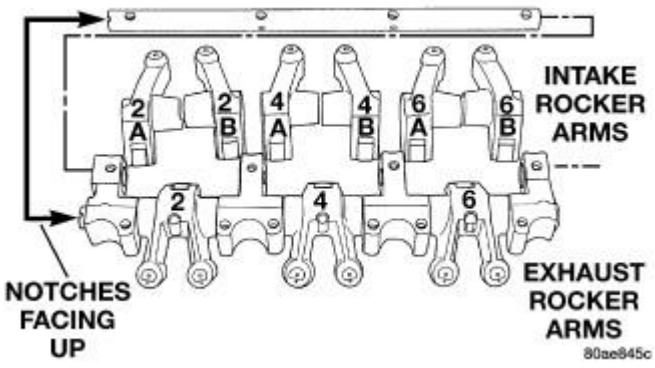

Fig. 211: Rocker Arms and Shafts
Courtesy of CHRYSLER LLC

The rocker arm shafts are tubular steel and are supported by several forged aluminum alloy pedestals, which are fastened to the cylinder head. Four shafts are used, one for each intake and exhaust rocker arm bank on each cylinder head. The shafts are hollow to provide a duct for lubricating oil flow from the cylinder head to the valve mechanisms. One hollow dowel per pedestal is used to locate the pedestal to the cylinder head, orient the exhaust rocker shaft, and serve as a cam bearing oil feed passage.

Operation

OPERATION

The rocker arm is the pivot point between the camshaft lobe and the valve.

Diagnosis and Testing

LASH ADJUSTER (TAPPET) NOISE DIAGNOSIS

Proper noise diagnosis is essential in locating the source of a NVH complaint. Locating a lash adjuster (tappet) type noise can sometimes be difficult. As a result, an initial misdiagnosis may occur.

Refer to the following chart indicating possible lash adjuster (tappet) noise sources and possible sources that could lead to a misdiagnosis.

Refer to Lash Adjuster (Tappet) Noise Chart for Possible Causes and Correction of a lash adjuster (tappet) type noise.

POSSIBLE NOISE SOURCES	POSSIBLE NOISE MISDIAGNOSIS SOURCES
Spongy/soft/aerated lash adjusters.	Exhaust leak.
Missing lash adjuster swivel contact pads.	Exhaust rocker arm-to-cylinder head cover contact.
Intake rocker-to-camshaft bearing journal contact.	Piston pin bore fit.
Rocker arm bind-up.	Timing drive hydraulic tensioner tick.
Intake rocker arm-to-spark plug tube contact.	Accessory drive belt deterioration.
Excessive cam end play.	Piston-to-bore clearance knock.
Broken valve spring.	Crankshaft bearing noise.
Broken/loose camshaft sprocket bolt.	
Incomplete cam lobe machining.	
Cracked lash adjuster cartridge body.	

LASH ADJUSTER (TAPPET) NOISE CHART

POSSIBLE CAUSES	CORRECTION
1. Engine oil level-too high or too low. This may cause aerated oil to enter the adjusters and cause them to be spongy.	1. Check and correct engine oil level.

2. Insufficient running time after rebuilding cylinder head.	2. Low speed running of up to 1 hour may be required to fully evacuate trapped air from the valve train system. During this time, turn engine off and let set for a few minutes before restarting. Repeat this several times after engine has reached normal operating temperature.
3. Air trapped in lash adjuster (after 1 hour run time).	3. See below: (a) Check lash adjusters for sponginess while installed in cylinder head. Depress part of rocker arm over adjuster. Normal adjusters should feel very firm. Very spongy adjusters can be bottomed out easily. (b) Before proceeding, perform Lash Adjuster Bleeding procedure. (c) If lash adjuster(s) are still spongy, replace with new adjuster/rocker arm assembly*.
4. Low oil pressure	4. See below: (a) Check and correct engine oil level. (b) Check engine oil pressure. (c) Check for excessive bearing clearance and correct. (d) Check for worn oil pump.
5. Oil passage to cylinder head(s) plugged with debris.	5. Check cylinder head oil passages and cylinder head gasket restrictor for blockage. Clean or replace as necessary.
6. Worn valve guide(s).	6. Ream guide(s) and replace valve(s) with oversize valves and seal(s).
7. Air injested into oil due to broken or cracked oil pump pickup tube.	7. Inspect pickup tube and replace as necessary.
8. Collapsed lash adjuster due to debris injestion.	8. Clean debris from engine and replace lash adjuster/rocker assembly*.
9. Intake rocker arm roller clevis ear(s) contacting camshaft bearing journal(s) on side.	9. Inspect camshaft end play and all valve train components for wear. Replace as necessary.
***Lash adjusters are serviced with the rocker arms-do not disassemble.**	

Standard Procedure

HYDRAULIC LASH ADJUSTER BLEEDING

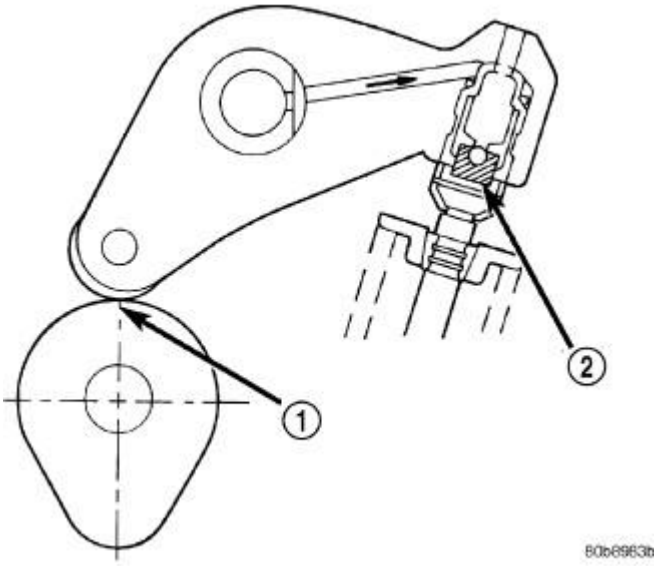

Fig. 212: Rocker Arm Positioned On Base Circle Of Camshaft
Courtesy of CHRYSLER LLC

1 - CAMSHAFT BASE CIRCLE 2 - HIGH-PRESSURE CHAMBER

Use this procedure to manually bleed aerated oil from the lash adjuster and remove sponginess.

1. Run the engine, bringing it to operating temperature in order to freshly pressurize and warm the valvetrain system oil supply.
2. Remove cylinder head cover(s).
3. Ensure the rocker arm is positioned on the base circle (1) of the cam . Rotate engine as necessary.

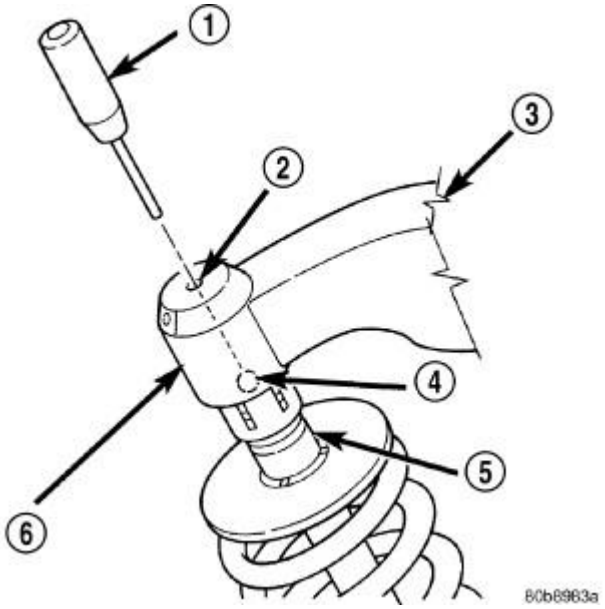

Fig. 213: Purging Air From Lash Adjuster
Courtesy of CHRYSLER LLC

1 - SPECIAL TOOL 8351
2 - OIL AIR RELIEF SERVICE ACCESS HOLE
3 - ROCKER ARM ASSEMBLY
4 - INTERNAL CHECK BALL
5 - VALVE TIP
6 - HYDRAULIC LASH ADJUSTER WITHIN ROCKER ARM

4. For intake rocker arm positions:
   a. Adjust Special Tool 8351 (1) Release Probe's gauge pin to extend approximately 20 mm (0.787 in.). Then, carefully insert the release probe gauge pin into the lash adjuster (6) service access hole (2) .
   b. Gently unseat lash adjuster's internal check ball (4).
   c. While the internal check ball (4) is held unseated, press the rocker arm (3) into the valve tip (5), allowing the lash adjuster (6) to fully collapse. Hold this fully collapsed position for about one second, or longer.
   d. Slowly release the rocker arm (3), thereby allowing the lash adjuster (6) to extend, which in turn refills the high pressure chamber with non-aerated oil.
   e. Remove probe to allow check ball (4) to seat.
   f. Recheck for sponginess. If the lash adjuster (6) sponginess is not completely or nearly eliminated, then repeat procedure.
   g. If the spongy condition cannot be removed, replace effected rocker arm(s) (3).
5. For exhaust rocker arm (3) positions:
   a. Adjust Special Tool 8351 (1) Release Probe gauge pin to extend approximately 20 mm

(0.787 in.). Then, using two release probes, carefully insert gauge pins into the lash adjuster service access holes .

b. Gently unseat BOTH lash adjuster's internal check ball (4) at the same time.
c. While the internal check ball (4) is held unseated, press the rocker arm (6) into the valve tip, allowing the lash adjuster to fully collapse. Hold this fully collapsed position for about one second, or longer.
d. Slowly release the rocker arm (3), thereby allowing the lash adjuster (6) to extend, which in turn refills the high pressure chamber with non-aerated oil.
e. Remove probes (1) to allow check balls (4) to seat.
f. Recheck for sponginess. If the lash adjuster (6) sponginess is not completely or nearly eliminated, then repeat procedure.
g. If the spongy condition cannot be removed, replace effected rocker arm(s) (3).

6. Install cylinder head cover(s).

Removal

REMOVAL

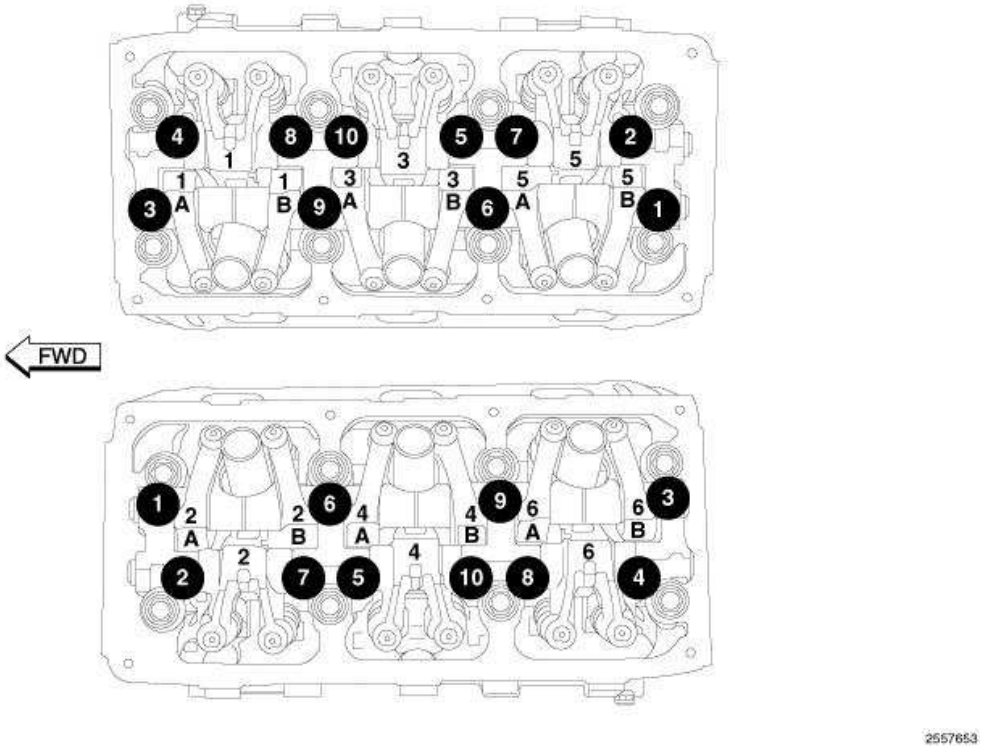

Fig. 214: Rocker Arm Assembly Bolts Torque Sequence
Courtesy of CHRYSLER LLC

1. Remove the cylinder head covers. See **Engine/Cylinder Head/COVER(S), Cylinder Head - Removal**.

CAUTION: DO NOT use a number stamp or a punch to mark the rocker arms. Damage to the rocker arms could occur.

2. Using a permanent ink or paint marker, identify the location and position on each rocker arm.
3. Remove the rocker arm assembly bolts in the sequence shown in illustration.

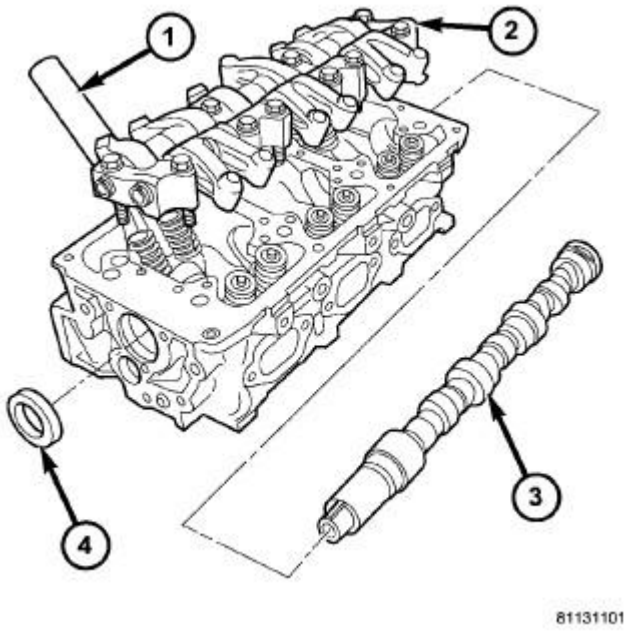

Fig. 215: Spark Plug Tube, Rocker Arm Assembly, Camshaft & Seal
Courtesy of CHRYSLER LLC

1 - SPARK PLUG TUBE
2 - ROCKER ARM ASSEMBLY
3 - CAMSHAFT
4 - SEAL

4. Remove the rocker arm assembly (2).

NOTE: To prevent air ingestion into the lash adjusters, avoid turning the rocker arm assembly upside down.

CAUTION: Do not allow rocker arm assembly to rest on lash adjusters, as damage may occur to lash adjusters and/or plastic retainers.

Disassembly

DISASSEMBLY

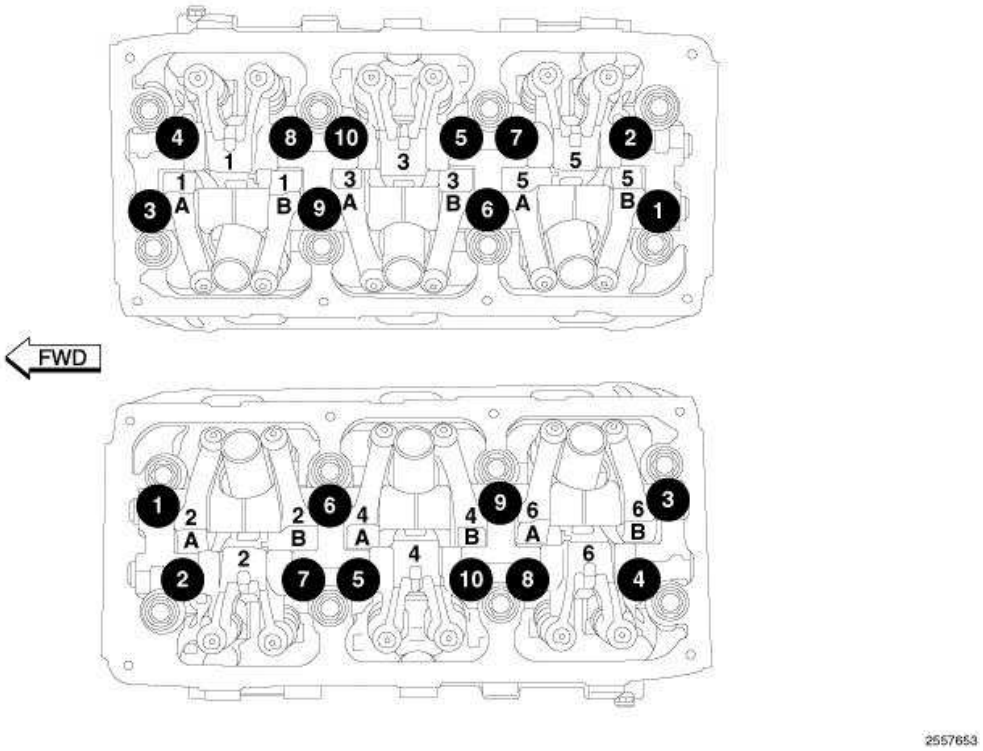

Fig. 216: Rocker Arm Assembly Bolts Torque Sequence
Courtesy of CHRYSLER LLC

CAUTION: DO NOT use a number stamp or a punch to mark the rocker arms. Damage to the rocker arms could occur.

1. Using a permanent ink or paint marker, identify the location and position on each rocker arm and remove the rocker arm and shaft assembly. See **Engine/Cylinder Head/ROCKER ARM, Valve - Removal**.

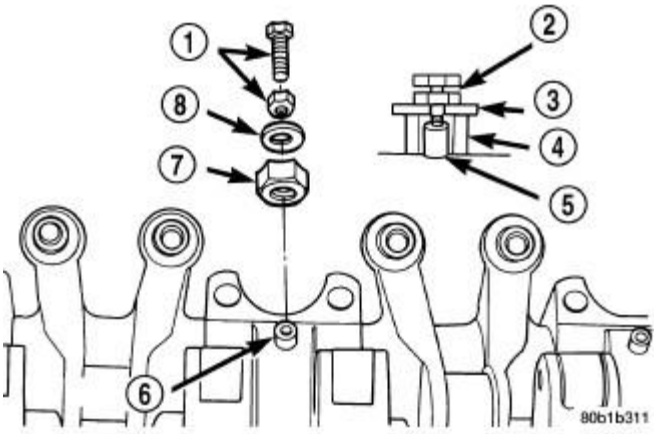

Fig. 217: Rocker Arms and Shaft - Disassembly
Courtesy of CHRYSLER LLC

1 - 4 mm SCREW AND NUT
2 - 4 mm SCREW AND NUT
3 - WASHER
4 - SPACER
5 - DOWEL
6 - DOWEL
7 - SPACER
8 - WASHER

2. Remove the dowel pins using a 4 mm screw, nut, spacer, and washer installed into the pin. Thread the screw into the pin, then loosen the nut on the screw. This will pull the dowel out of the shaft support. Do not reuse the dowel pins.

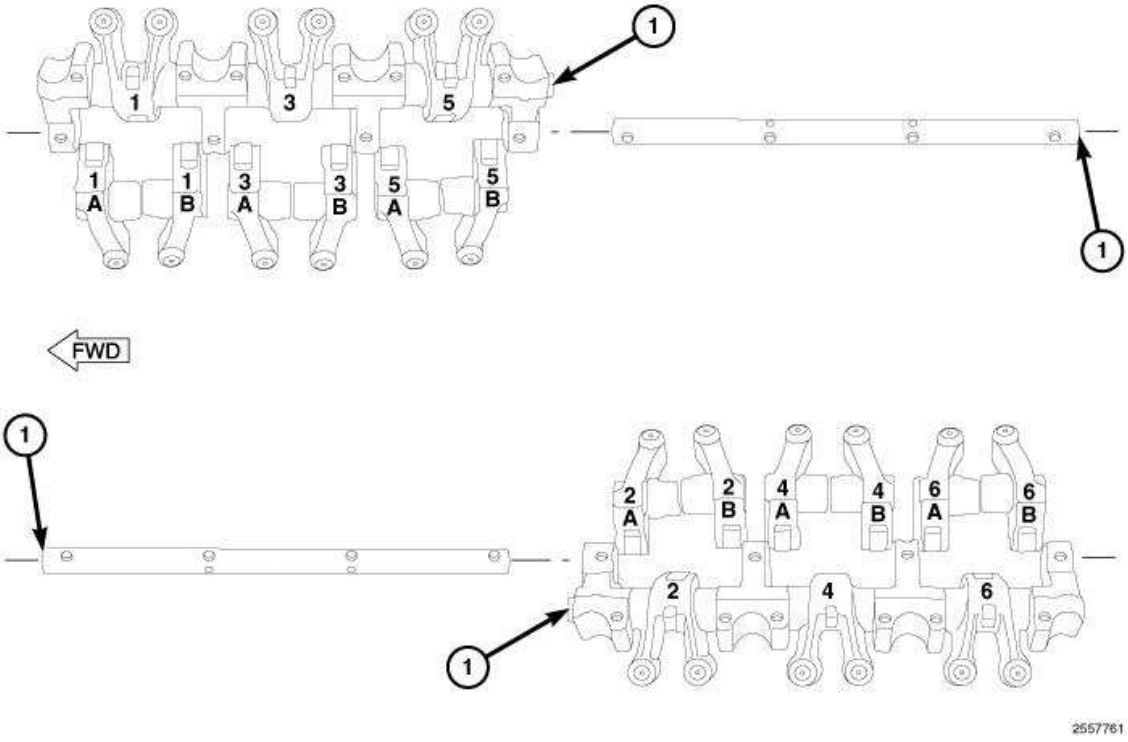

Fig. 218: Identification Marks
Courtesy of CHRYSLER LLC

NOTE: The identification marks (notches) (1) face toward the front of the engine for the left head and toward the rear of the engine for the right head.

3. Remove the rocker arms and pedestals in order.
4. Check the rocker arm mounting portion of the shafts for wear or damage. Replace if damaged or heavily worn.
5. Check the shaft oil holes for clogging with a small wire, clean as required.

Inspection

INSPECTION

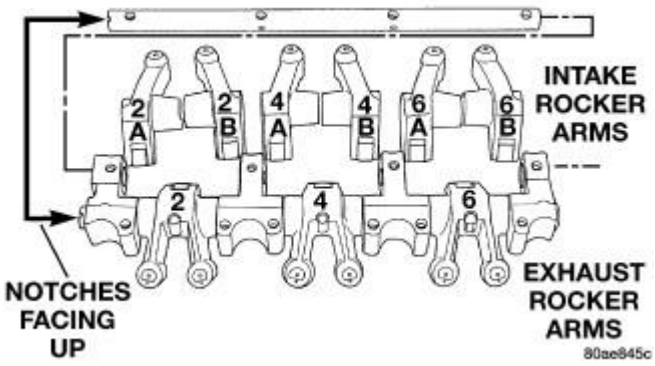

Fig. 219: Rocker Arms and Shafts
Courtesy of CHRYSLER LLC

The rocker arm shafts are hollow and are used as lubrication oil ducts. The rocker arm and shaft assembly on the **right** side of the engine has an oil passage hole from the cylinder head located at the third rocker shaft support pedestal. The rocker arm and shaft assembly on the **left** side of the engine has an oil passage hole from the cylinder head located at the second rocker shaft support pedestal.

NOTE: To prevent air ingestion into lash adjusters, avoid turning rocker arm assembly upside down.

CAUTION: Do not allow rocker arm assembly to rest on lash adjusters, as damage may occur to lash adjuster and plastic retainer.

The intake and exhaust rocker arms are different. They should be identified before disassembling the assembly .

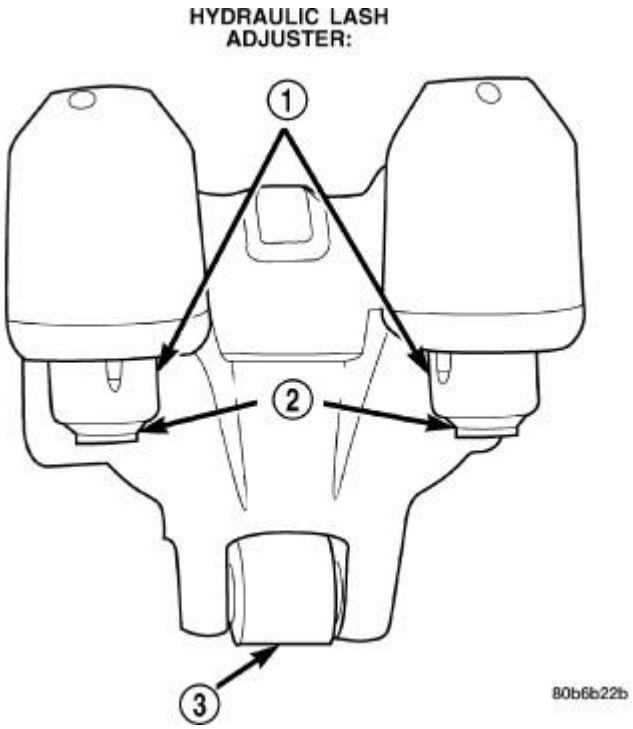

Fig. 220: Rocker Arm Assembly
Courtesy of CHRYSLER LLC

1 - RETAINER 2 - SWIVEL PAD 3 - ROLLER

Check rocker arms for wear or damage :

- Roller scuffing or wear
- Shaft bore scuffing or wear
- Swivel pad on lash adjuster missing or broken
- Rocker arm showing signs of fatigue or cracking
- Roller axle protruding from arm

Replace assembly as necessary if any rocker arms shows signs of wear.

CAUTION: Do Not remove lash adjuster from rocker arm assembly. Damage to the adjuster and rocker arm will result.

Assembly

ASSEMBLY

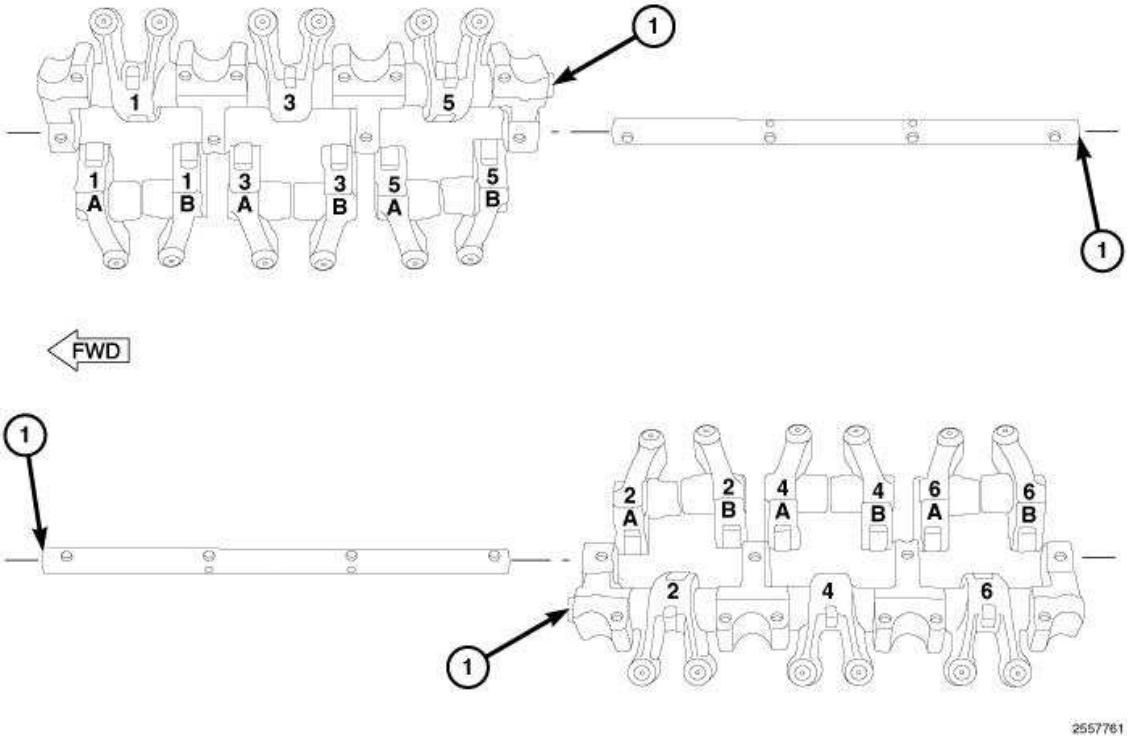

Fig. 221: Identification Marks
Courtesy of CHRYSLER LLC

CAUTION: The rocker arm shafts are hollow and are used as lubrication oil passages. The rocker arm and shaft assembly on the RIGHT side of the engine has an oil passage hole from the cylinder head to the third rocker shaft support. The rocker arm shaft assembly on the LEFT side of the engine has an oil passage hole from the cylinder head to the second rocker shaft support.

NOTE: A new fully assembled rocker arm and shaft assembly can be installed on either the right or left side of the engine. The identification marks (notches) (1) face toward the front of the engine for the left head and toward the rear of the engine for the right head.

1. Position the shafts with the notches (1) facing up. Install the rocker arms and pedestals onto the shafts.

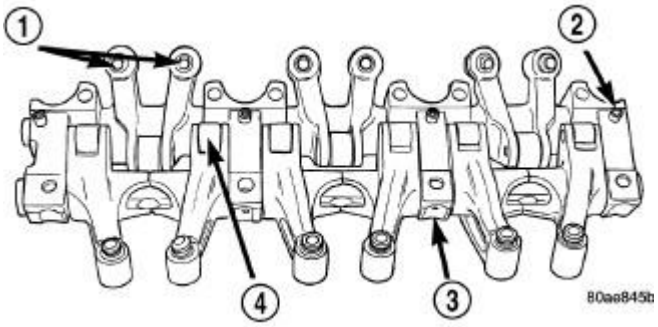

Fig. 222: Assemble Rocker Arms and Shaft
Courtesy of CHRYSLER LLC

1 - HYDRAULIC LASH ADJUSTERS
2 - DOWEL PIN
3 - PEDESTAL
4 - ROLLER

CAUTION: New dowel pins must be installed when reassembling.

2. Install the dowel pins (2). The dowel pins (2) pass through the pedestal (3) into the exhaust rocker shafts. Dowel pins (2) should be pressed in until they bottom-out against the rocker shaft in the pedestal (3).
3. Install the rocker arm and shafts assembly. See **Engine/Cylinder Head/ROCKER ARM, Valve - Installation**.

Installation

INSTALLATION

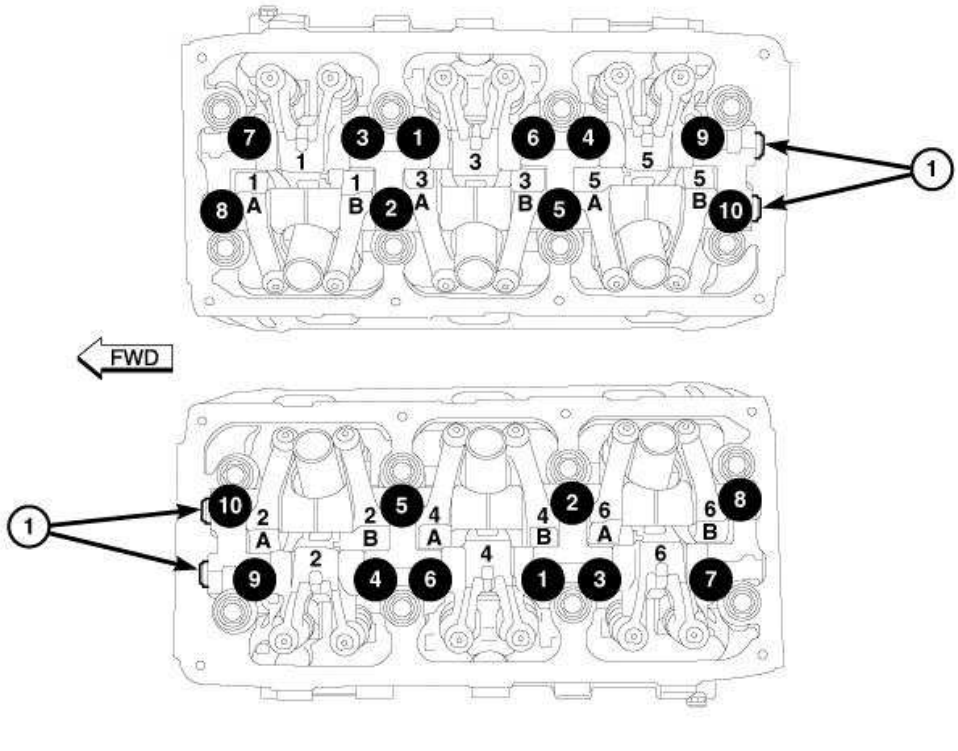

Fig. 223: Identification Marks (Notches) and Rocker Arm And Shaft Assembly Bolts
Courtesy of CHRYSLER LLC

NOTE: The rocker arm and shaft assembly can be installed either prior to or after (preferred) cylinder head installation.

1. Rotate camshaft gears clockwise to where the number one cylinder intake valves would just start to open. The camshaft lobes are now in a neutral position (no load to the valve). This will allow the rocker arm shaft assembly to be tightened into position with little or no valve spring load on it.

   NOTE: A new fully assembled rocker arm and shaft assembly can be installed on either the right or left side of the engine. The identification marks (notches) (1) face toward the front of the engine for the left head and toward the rear of the engine for the right head.

2. Install the rocker arm and shaft assembly making sure that the identification marks (1) face toward the front of engine for left head and toward the rear of the engine for right head.
3. Tighten the rocker arm/shaft assembly bolts in the sequence shown in illustration to 31 N.m (275 in. lbs.).
4. Install the cylinder head covers. See **Engine/Cylinder Head/COVER(S), Cylinder Head - Installation**.

SEAL(S), CAMSHAFT

Removal

REMOVAL

RIGHT CYLINDER HEAD

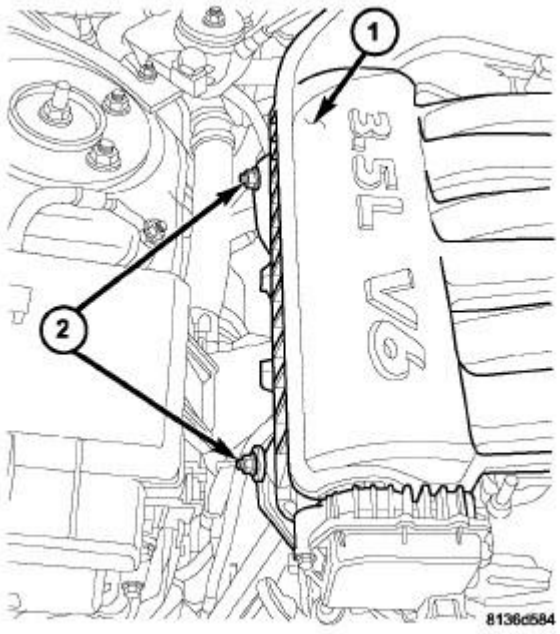

Fig. 224: Intake Manifold Braces
Courtesy of CHRYSLER LLC

1. Disconnect and isolate the negative battery cable.
2. Partially drain the cooling system. Refer to **Cooling - Standard Procedure** .
3. Remove the upper intake manifold (1). See **Engine/Manifolds/MANIFOLD, Intake - Removal**.
4. Cover lower intake manifold openings during service.

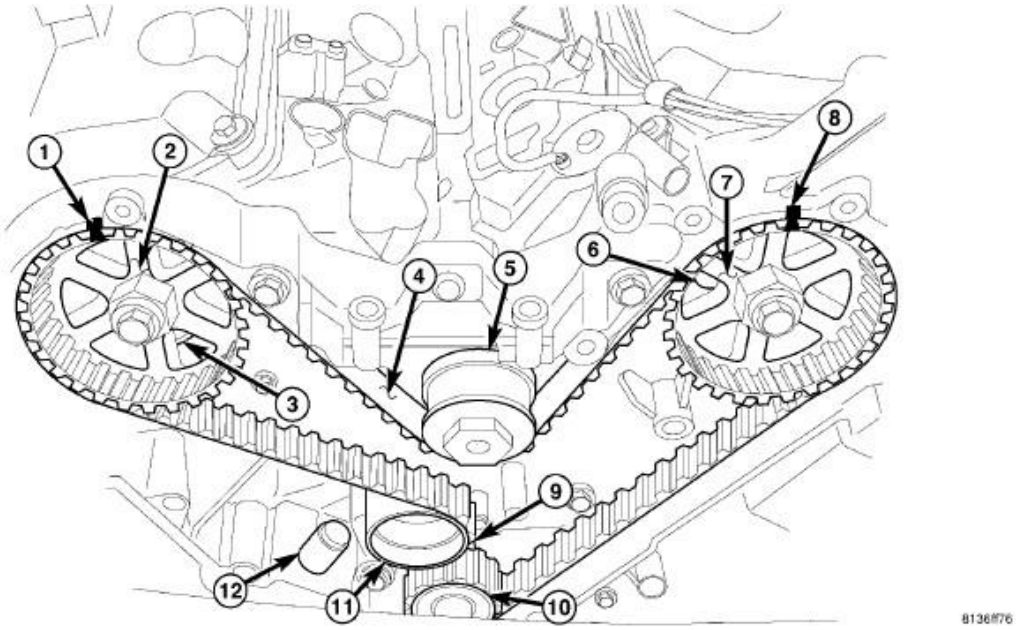

Fig. 225: Identifying Timing Gear Components
Courtesy of CHRYSLER LLC

1 - RIGHT CAMSHAFT GEAR ALIGNMENT MARK	7 - LEFT CAMSHAFT GEAR
2 - RIGHT CAMSHAFT GEAR	8 - LEFT CAMSHAFT GEAR ALIGNMENT MARK
3 - CYLINDER HEAD TO INNER TIMING BELT COVER BOLTS - RIGHT	9 - CRANKSHAFT GEAR ALIGNMENT MARK
4 - TIMING BELT	10 - CRANKSHAFT GEAR
5 - WATER PUMP PULLEY	11 - TIMING BELT TENSIONER PULLEY
6 - CYLINDER HEAD TO INNER TIMING BELT COVER BOLTS - LEFT	12 - TIMING BELT TENSIONER

5. Remove timing belt (4). See **Engine/Valve Timing/BELT and SPROCKETS, Timing - Removal**.

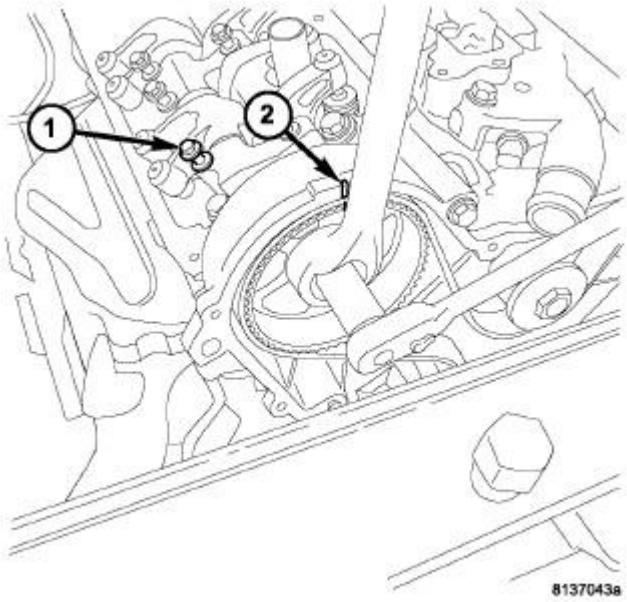

Fig. 226: RIGHT CAMSHAFT SPROCKET
Courtesy of CHRYSLER LLC

1 - LOOSENED ROCKER ASSEMBLY 2 - RIGHT CAMSHAFT TDC

6. Hold the right camshaft sprocket with a 36 mm (1 7/16 in.) box end wrench so that the timing mark (2) does not move while removing the retaining bolt.
7. Loosen and remove the camshaft gear retaining bolt and washer. The right bolt is 213 mm (8 3/8 in.) long.

NOTE: The camshaft timing gears are keyed to the camshaft.

8. Remove the right camshaft sprocket. See **Engine/Valve Timing/BELT and SPROCKETS, Timing - Removal**.

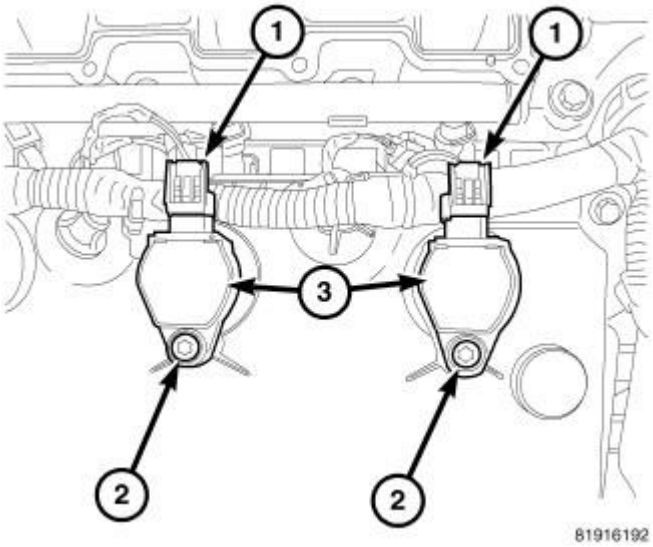

Fig. 227: Removing/Installing Ignition Coil Assembly
Courtesy of CHRYSLER LLC

9. Disconnect wire harness connectors from EGR valve and ignition coils (1). Release wire harness track retainer tabs from cylinder head cover.
10. Remove right ignition coils (3). Refer to **Electrical/Ignition Control/COIL, Ignition - Removal** .

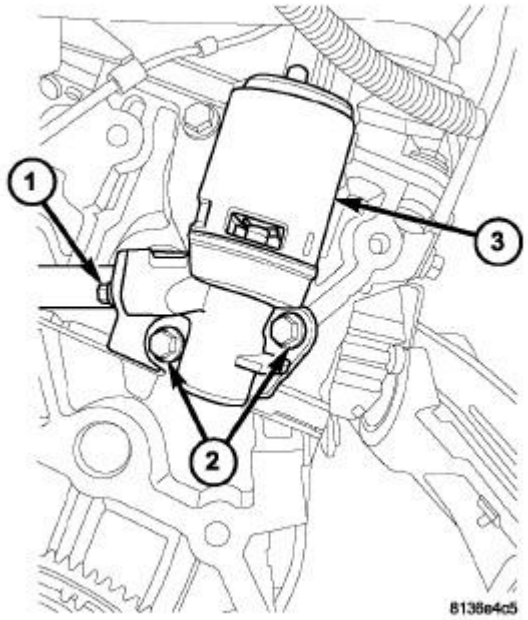

Fig. 228: EGR Valve Mounting Bolts - 3.5L
Courtesy of CHRYSLER LLC

11. Remove the EGR valve (3) with two bolts (2) and gasket.

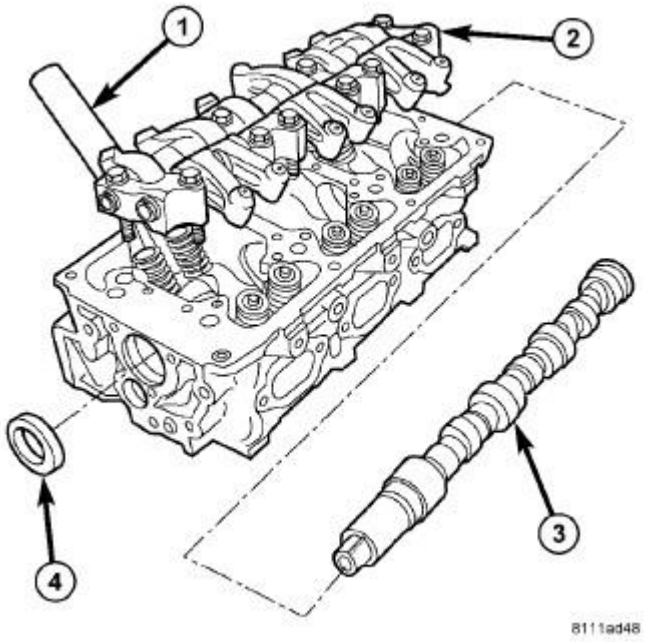

Fig. 229: Camshaft, Rocker Arm Assembly & Cylinder Head
Courtesy of CHRYSLER LLC

12. Remove eight bolts and right cylinder head cover.
13. Remove ten bolts and right rocker arm assembly (2).

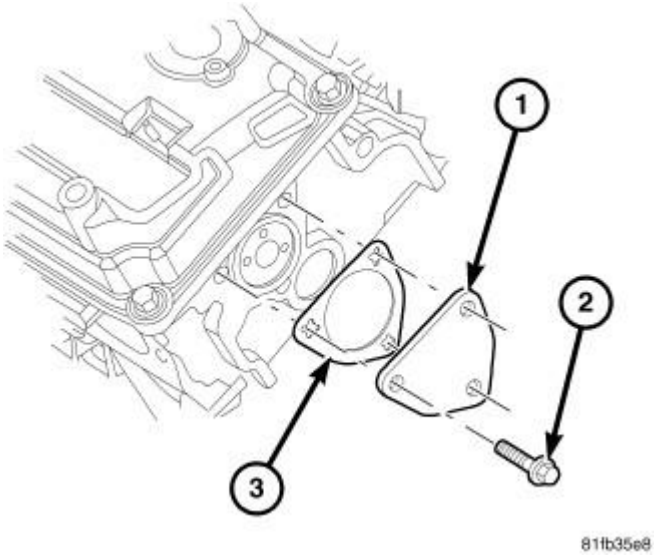

Fig. 230: Cam Thrust Plate Gasket
Courtesy of CHRYSLER LLC

14. Remove three bolts (2) and the right rear camshaft thrust plate (1).

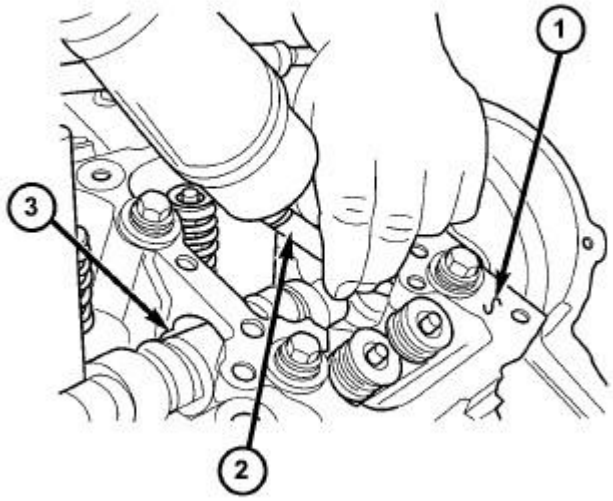

81121f82

Fig. 231: CAMSHAFT SEAL REMOVAL - RIGHT CYLINDER HEAD
Courtesy of CHRYSLER LLC

1 - CYLINDER HEAD
2 - DRIFT
3 - CAMSHAFT

15. Maneuver the camshaft (3) rearward and out of the cylinder head (1) approximately 3.5 inches .

NOTE: Care must be taken not to damage the cylinder head to seal or camshaft journal surfaces when removing the camshaft seal.

16. Using an appropriate driver (2) carefully remove camshaft oil seal.

LEFT CYLINDER HEAD

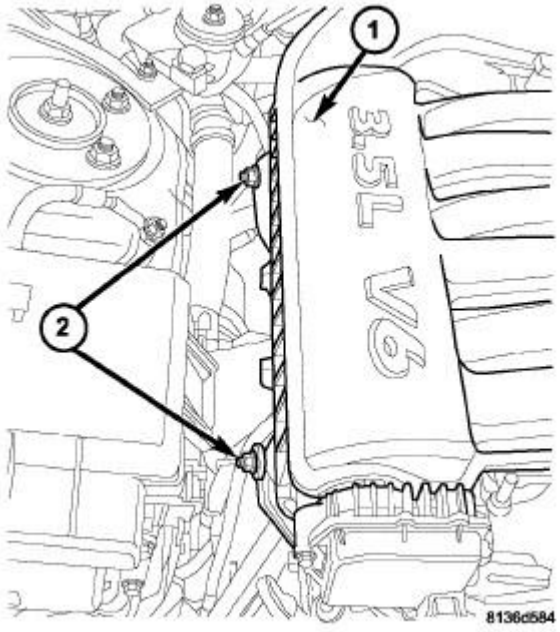

Fig. 232: Intake Manifold Braces
Courtesy of CHRYSLER LLC

1. Disconnect and isolate the negative battery cable.
2. Drain the cooling system. Refer to **Cooling - Standard Procedure** .
3. Remove the upper intake manifold (1). See **Engine/Manifolds/MANIFOLD, Intake - Removal**.
4. Cover lower intake manifold openings during service.

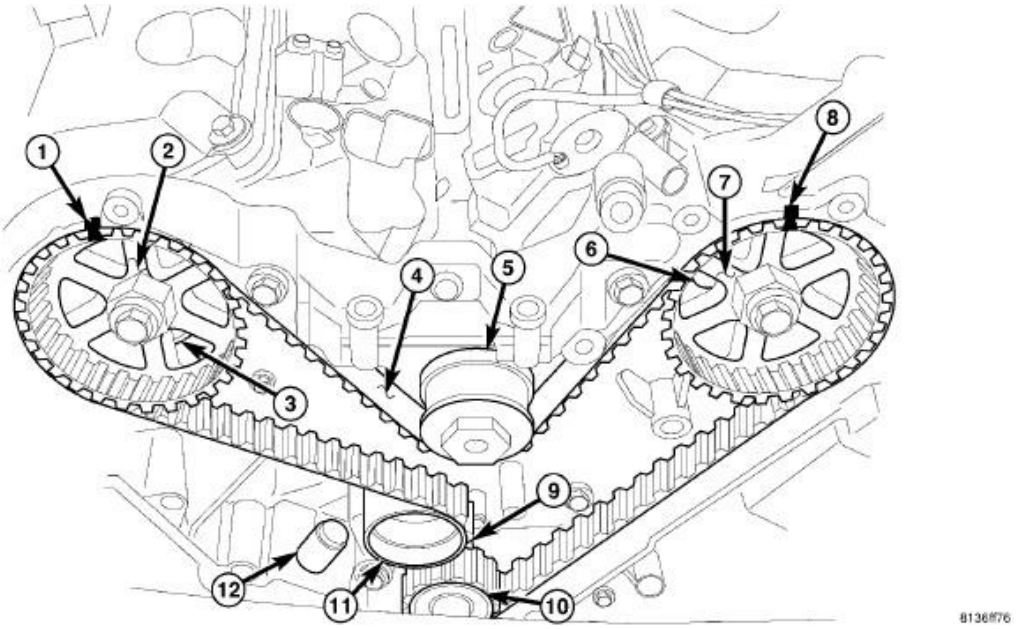

Fig. 233: Identifying Timing Gear Components

Courtesy of CHRYSLER LLC

1 - RIGHT CAMSHAFT GEAR ALIGNMENT MARK	7 - LEFT CAMSHAFT GEAR
2 - RIGHT CAMSHAFT GEAR	8 - LEFT CAMSHAFT GEAR ALIGNMENT MARK
3 - CYLINDER HEAD TO INNER TIMING BELT COVER BOLTS - RIGHT	9 - CRANKSHAFT GEAR ALIGNMENT MARK
4 - TIMING BELT	10 - CRANKSHAFT GEAR
5 - WATER PUMP PULLEY	11 - TIMING BELT TENSIONER PULLEY
6 - CYLINDER HEAD TO INNER TIMING BELT COVER BOLTS - LEFT	12 - TIMING BELT TENSIONER

5. Remove timing belt (4). See **Engine/Valve Timing/BELT and SPROCKETS, Timing - Removal**.

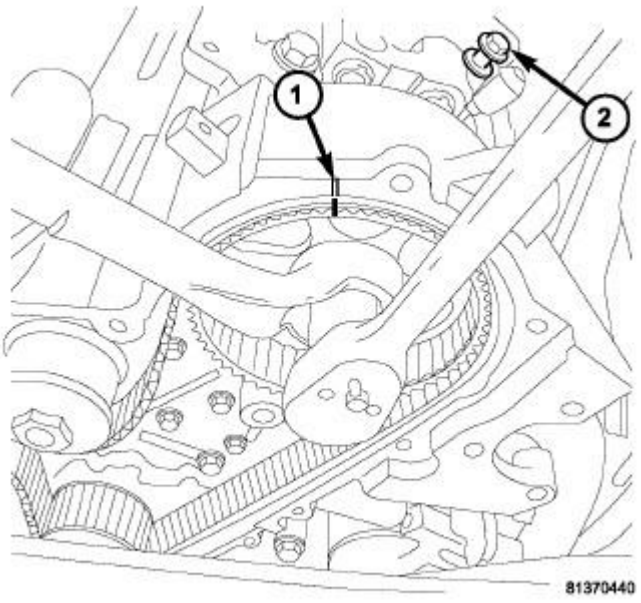

Fig. 234: Left Camshaft Sprocket
Courtesy of CHRYSLER LLC

6. Remove the camshaft sprockets. See **Engine/Valve Timing/BELT and SPROCKETS, Timing - Removal**.

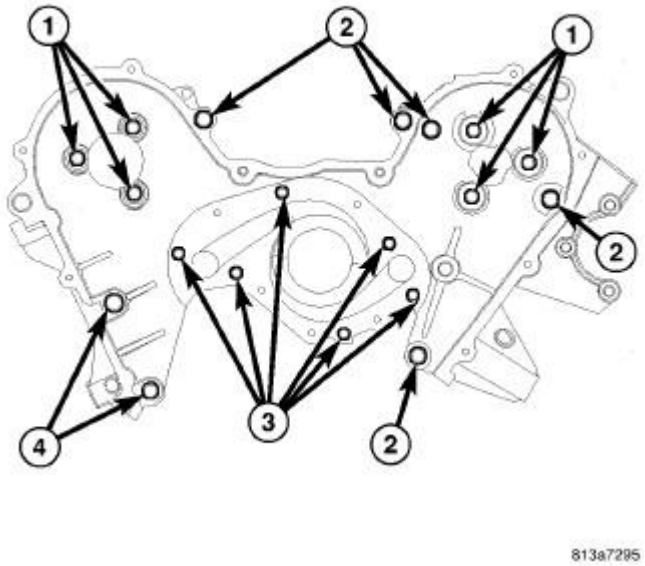

Fig. 235: Timing Belt Rear Cover
Courtesy of CHRYSLER LLC

7. Remove the rear timing belt cover. See **Engine/Valve Timing/COVER(S), Engine Timing - Removal**.

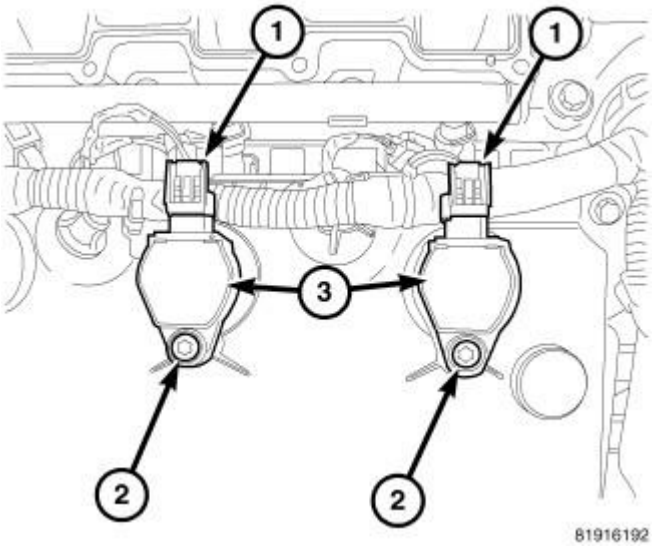

Fig. 236: Removing/Installing Ignition Coil Assembly
Courtesy of CHRYSLER LLC

8. Disconnect wire harness connectors (2) from ignition coils (3). Release wire harness track retainer tabs from cylinder head cover.
9. Remove left ignition coils (3). Refer to **Electrical/Ignition Control/COIL, Ignition - Removal** .

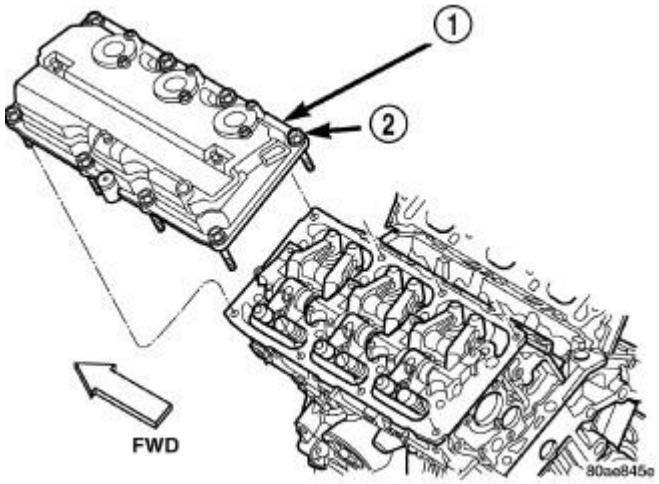

Fig. 237: Cylinder Head Covers
Courtesy of CHRYSLER LLC

10. Remove eight bolts (2) and left cylinder head cover (1).

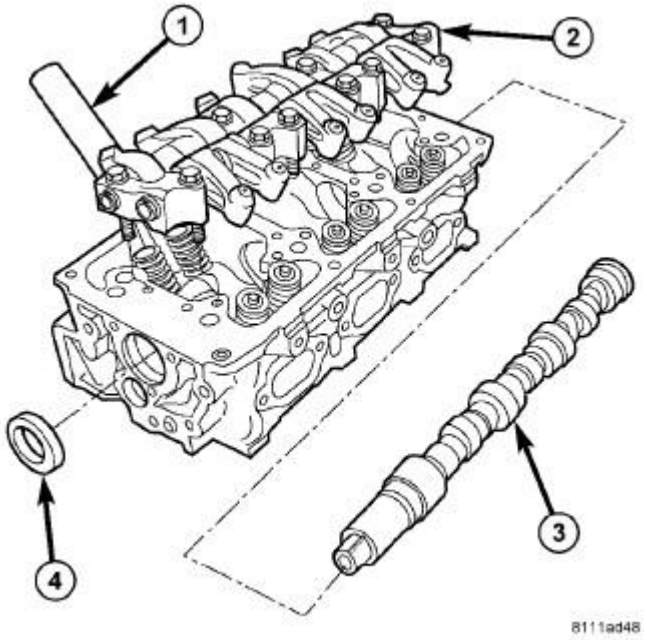

Fig. 238: Camshaft, Rocker Arm Assembly & Cylinder Head
Courtesy of CHRYSLER LLC

11. Remove ten bolts and left rocker arm assembly (2).

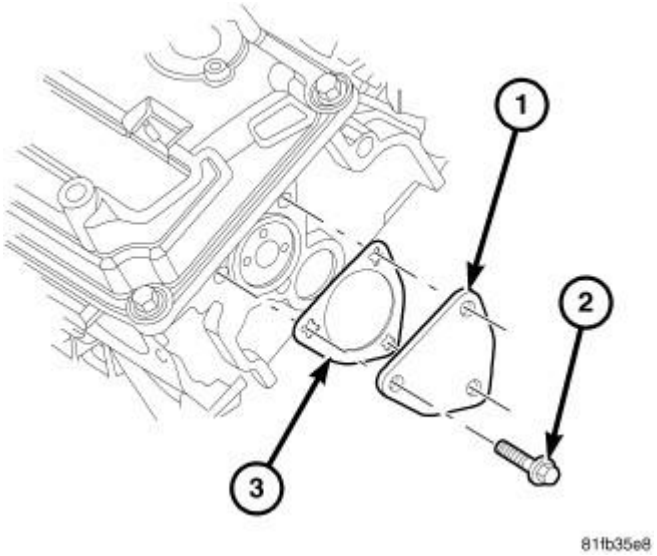

Fig. 239: Cam Thrust Plate Gasket
Courtesy of CHRYSLER LLC

12. Remove three bolts (2) and the left rear camshaft thrust plate (1).

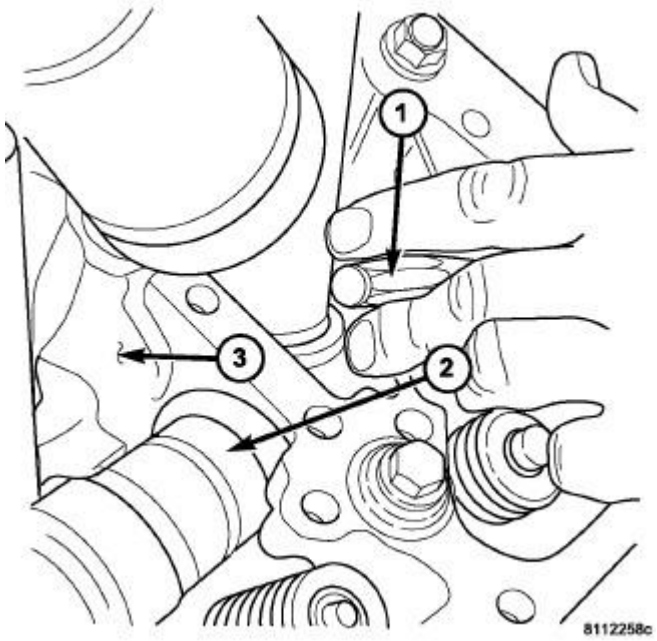

Fig. 240: CAMSHAFT SEAL REMOVAL - LEFT CYLINDER HEAD
Courtesy of CHRYSLER LLC

1 - DRIFT
2 - CAMSHAFT
3 - CYLINDER HEAD

13. Maneuver the camshaft (2) rearward and out of the cylinder head (3) approximately 3.5 inches.

NOTE: Care must be taken not to damage the cylinder head to seal or camshaft journal surfaces when removing the camshaft seal.

14. Using an appropriate driver (1) carefully remove camshaft oil seal.

Installation

INSTALLATION

RIGHT CYLINDER HEAD

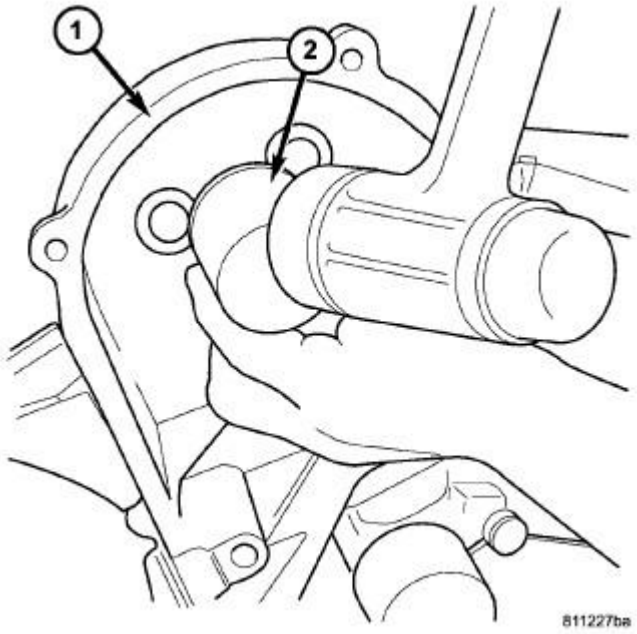

Fig. 241: CAMSHAFT SEAL INSTALLATION
Courtesy of CHRYSLER LLC

1 - REAR TIMING COVER 2 - SPECIAL TOOL MD-998306

1. Position the camshaft seal into the cylinder head.
2. Using Camshaft Installer MD-998306 (2) tap the seal into place.

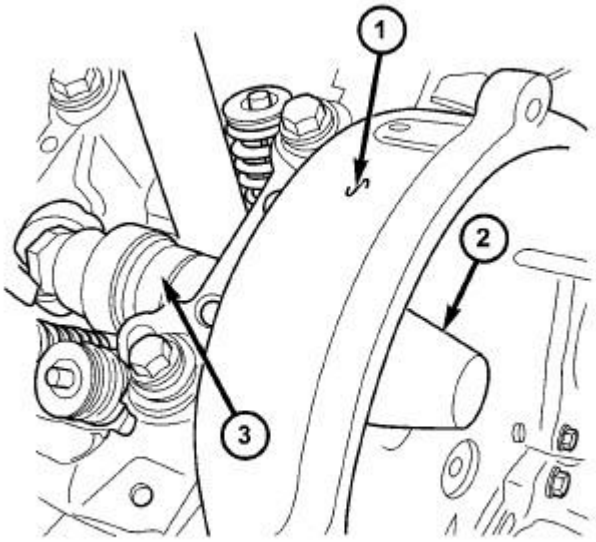

Fig. 242: CAMSHAFT INSTALLATION
Courtesy of CHRYSLER LLC

1 - REAR TIMING COVER 2 - SPECIAL TOOL 6788 3 - CAMSHAFT

3. Apply light coat of clean engine oil to the camshaft oil seal lip and Cam Seal Protector 6788 (2).
4. Install Cam Seal Protector 6788 (2) onto the camshaft (3).
5. Slide the camshaft (3) forward, inserting the seal protector (2) through the camshaft seal until the camshaft (3) seats.
6. Remove Seal Protector (2) from the camshaft.

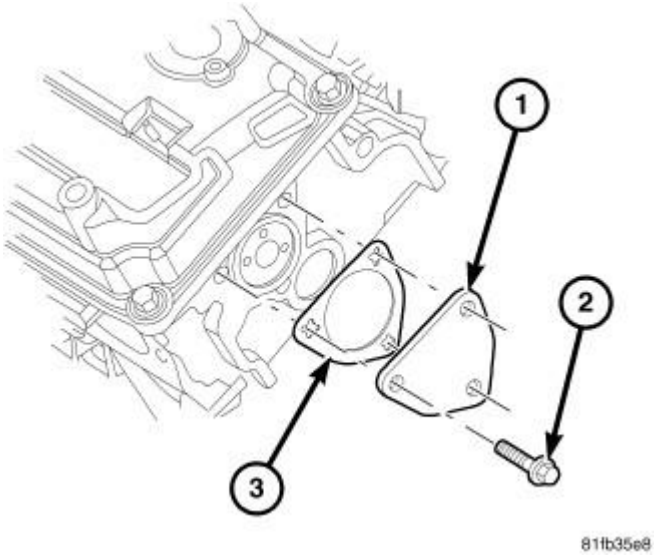

Fig. 243: Cam Thrust Plate Gasket
Courtesy of CHRYSLER LLC

7. Install the camshaft thrust plate (1) and gasket (3). Tighten three bolts (2) to 28 N.m (250 in. lbs.).

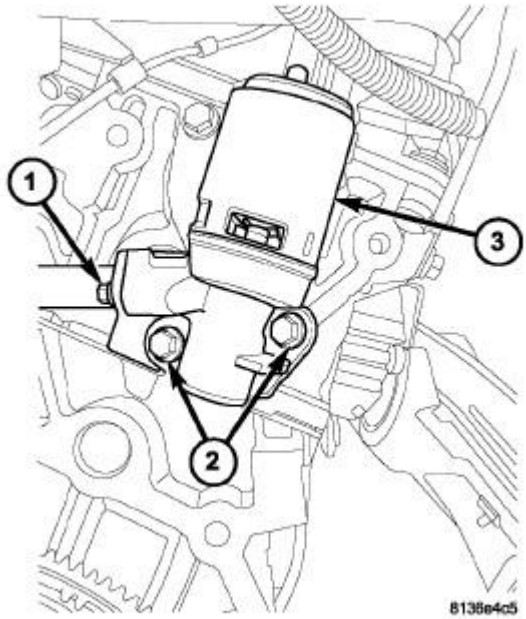

Fig. 244: EGR Valve Mounting Bolts - 3.5L
Courtesy of CHRYSLER LLC

8. Install new gasket between EGR solenoid/valve (3) and rear of cylinder head.
9. Position EGR solenoid/valve assembly to rear of cylinder head. Install and tighten two mounting bolts (2) to 30 N.m (22 ft. lbs.).

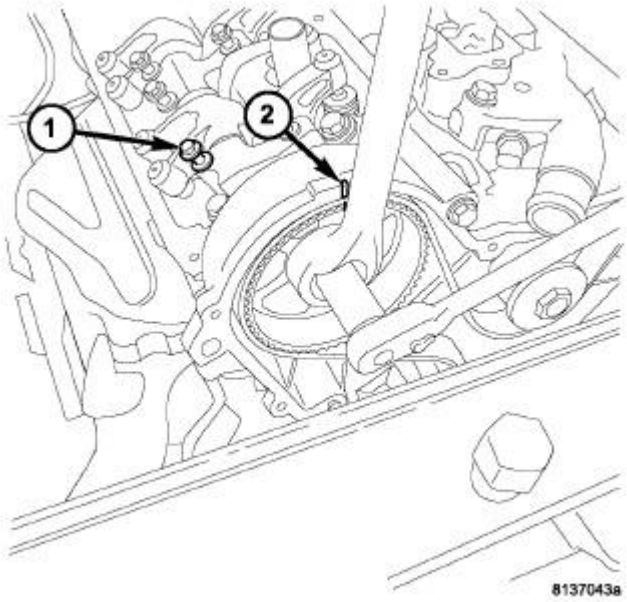

Fig. 245: RIGHT CAMSHAFT SPROCKET
Courtesy of CHRYSLER LLC

1 - LOOSENED ROCKER ASSEMBLY 2 - RIGHT CAMSHAFT TDC

10. Install the right camshaft sprocket onto the camshaft.
11. Install **NEW** sprocket attaching bolt into place. The 213 mm (8 3/8 in.) bolt is to be installed into the right camshaft and the 255 mm (10 in.) bolt is to be installed into the left camshaft.
12. Counterhold the right camshaft sprocket with a 36 mm (1 7/16 in.) box end wrench while tightening the retaining bolt. Tighten the bolt to 102 N.m (75 ft. lbs.) +90° turn.

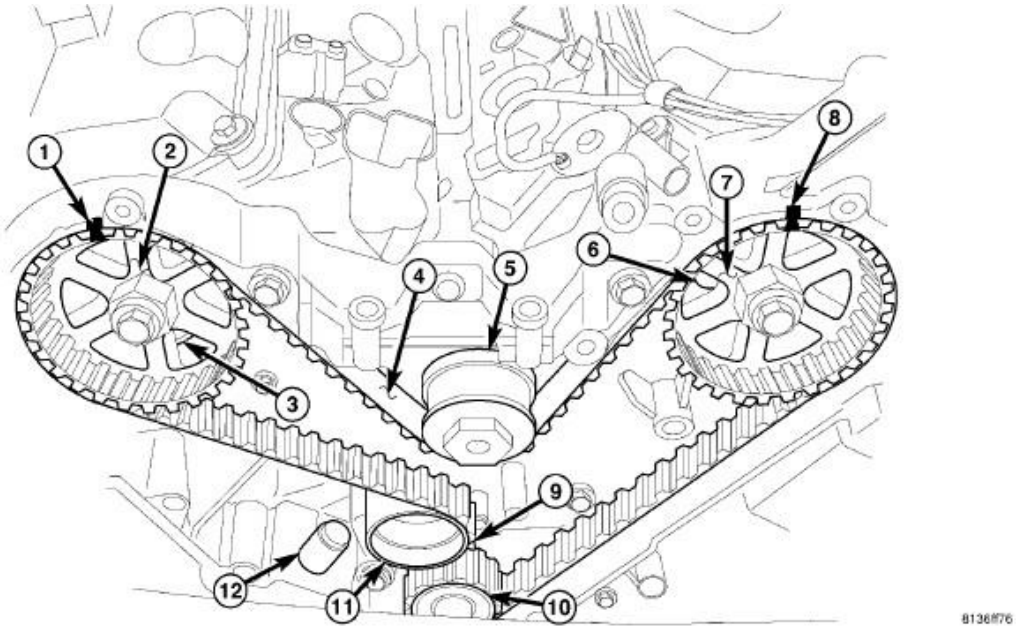

Fig. 246: Identifying Timing Gear Components
Courtesy of CHRYSLER LLC

1 - RIGHT CAMSHAFT GEAR ALIGNMENT MARK	7 - LEFT CAMSHAFT GEAR
2 - RIGHT CAMSHAFT GEAR	8 - LEFT CAMSHAFT GEAR ALIGNMENT MARK
3 - CYLINDER HEAD TO INNER TIMING BELT COVER BOLTS - RIGHT	9 - CRANKSHAFT GEAR ALIGNMENT MARK
4 - TIMING BELT	10 - CRANKSHAFT GEAR
5 - WATER PUMP PULLEY	11 - TIMING BELT TENSIONER PULLEY
6 - CYLINDER HEAD TO INNER TIMING BELT COVER BOLTS - LEFT	12 - TIMING BELT TENSIONER

13. Rotate the right camshaft gear (2) to align its timing mark (1). Verify that the left camshaft gear (7) timing mark (8) and crankshaft gear (10) timing mark (9) are still aligned.
14. Install the timing belt (4) starting at the crankshaft sprocket (10) going in a counterclockwise direction. Install the belt around the last sprocket. Maintain tension on the belt as it is positioned around the tensioner pulley (11).
15. Holding the tensioner pulley (11) against the belt, install the tensioner (12) into the housing and tighten two bolts to 28 N.m (250 in. lbs.). Each camshaft sprocket mark should remain aligned with the cover marks.
16. When tensioner is in place pull retaining pin to allow the tensioner to extend to the tensioner pulley bracket.
17. Rotate crankshaft sprocket two revolutions and check the timing marks on the camshafts and

crankshaft. The marks should line up within their respective locations. If marks do not line up, repeat procedure.

NOTE: With the camshaft gears in these positions the lobes are in a neutral position (no load to the valve). This will allow the rocker arm shaft assembly to be tightened into position with little or no valve spring load on it.

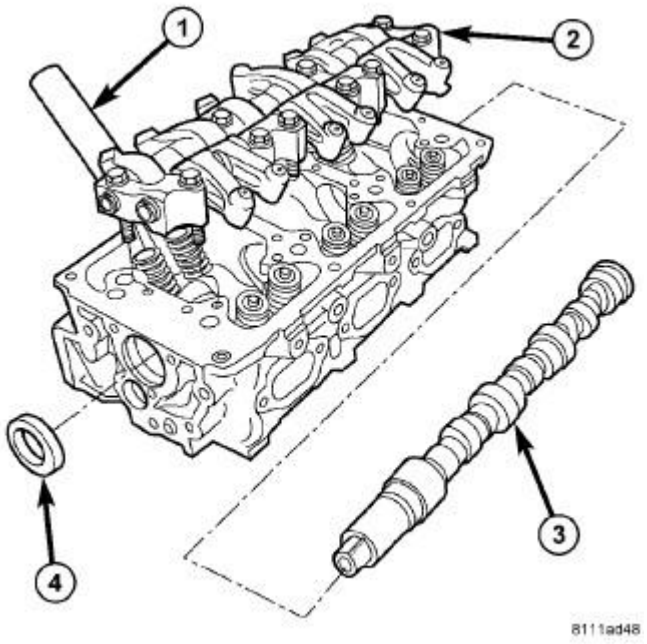

Fig. 247: Camshaft, Rocker Arm Assembly & Cylinder Head
Courtesy of CHRYSLER LLC

18. Install the rocker arm and shaft assembly (2) and ten bolts making sure that the identification marks face toward the front of engine for left head and toward the rear of the engine for right head.

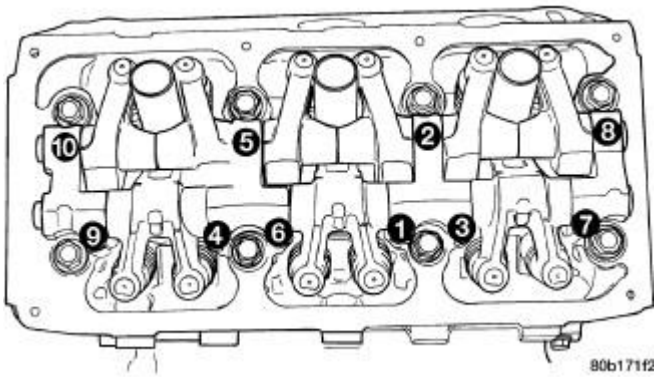

Fig. 248: Rocker Arm/Shaft Assembly Bolt Tightening Sequence

Courtesy of CHRYSLER LLC

19. Tighten the ten rocker arm/shaft assembly bolts in the sequence shown in illustration to 31 N.m (275 in. lbs.).

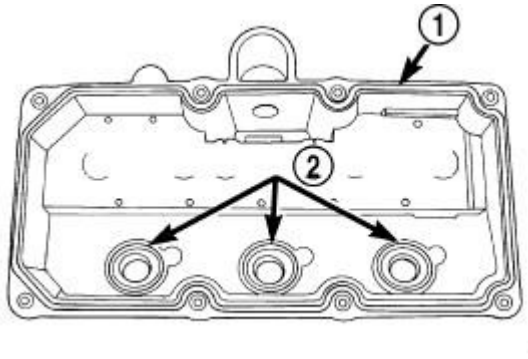

Fig. 249: Cylinder Head Cover Gasket and Spark Plug Tube Seals
Courtesy of CHRYSLER LLC

20. Clean cylinder head and cover mating surfaces. Inspect and replace gasket (1) and seals (2) as necessary. See **Engine/Cylinder Head/COVER(S), Cylinder Head - Installation**.
21. Install cylinder head cover and eight bolts. Tighten bolts to 12 N.m (105 in. lbs.).

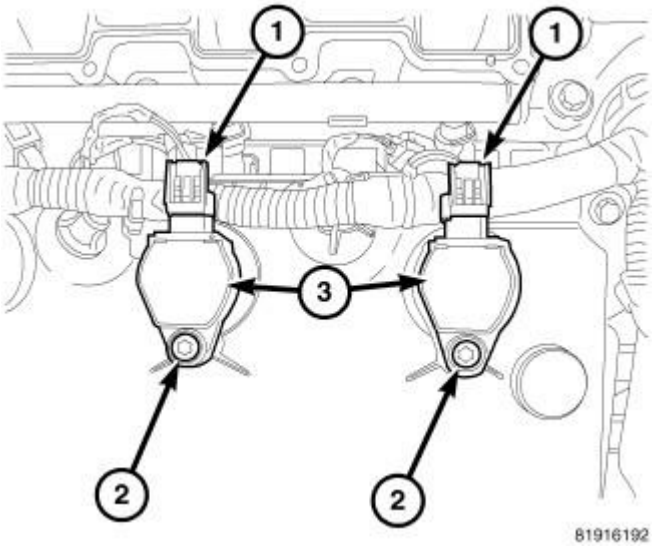

Fig. 250: Removing/Installing Ignition Coil Assembly
Courtesy of CHRYSLER LLC

22. Install the spark plugs. Tighten to 28 N.m (20 ft. lbs.). Refer to **Electrical/Ignition Control/SPARK PLUG - Installation** .
23. Install ignition coils (3) into cylinder head.
24. Install and tighten coil mounting bolts (2) to 6.7 N.m (60 in. lbs.).
25. Reposition engine wire harness and install retainers to cylinder head cover. Connect and lock electrical connectors to ignition coils (1) and EGR valve.

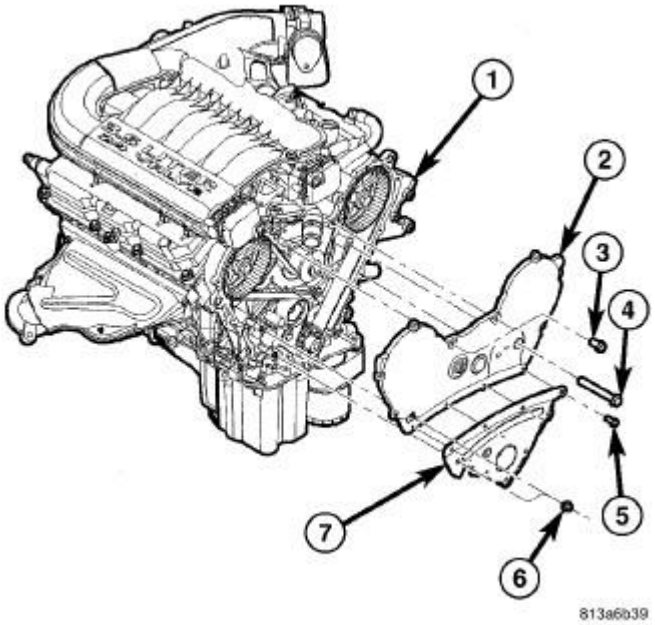

Fig. 251: UPPER AND LOWER TIMING COVERS
Courtesy of CHRYSLER LLC

1 - INNER TIMING COVER
2 - UPPER TIMING COVER
3 - 8 mm BOLT(S)
4 - 10 mm BOLT(S)
5 - 6 mm BOLT(S)
6 - NUT(S)
7 - LOWER TIMING COVER

26. Install the upper (2) and lower (7) timing belt front covers.
27. Tighten the timing cover bolts as follows:

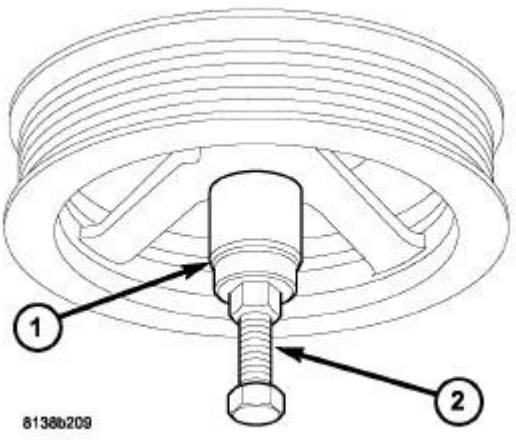

Fig. 252: CRANKSHAFT DAMPER - INSTALLATION
Courtesy of CHRYSLER LLC

1 - SPECIAL TOOL 6792-1 2 - SPECIAL TOOL C-4685-C1

- M6 bolts - 12 N.m (105 in. lbs.)
- M8 bolts - 28 N.m (250 in. lbs.)
- M10 bolts - 54 N.m (40 ft. lbs.)

28. Install crankshaft damper using 5.9 inch long Forcing Screw C-4685-C1 (2) with Nut and Thrust Bearing from Crank Sprocket Installer 6792 (1).

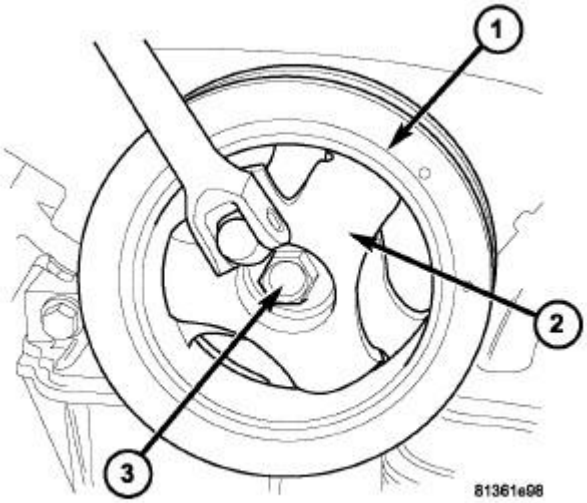

Fig. 253: Damper Holder

Courtesy of CHRYSLER LLC

29. Install crankshaft damper bolt (3). Tighten bolt to 95 N.m (70 ft. lbs.) while holding damper (1) with Damper Holding Fixture 9365 (2).

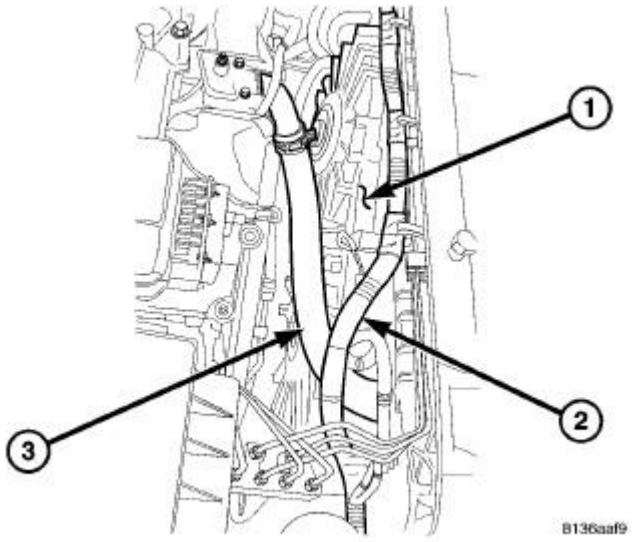

Fig. 254: Radiator Fan Assembly
Courtesy of CHRYSLER LLC

1 - RADIATOR FAN ASSEMBLY
2 - ELECTRICAL CONNECTOR
3 - UPPER RADIATOR HOSE

30. Position radiator cooling fan assembly (1) in vehicle.
31. Install cooling fan mounting bolts. Tighten to 6 N.m (50 in. lbs.).
32. Connect cooling fan electrical connector (2).
33. Install upper radiator hose (3).

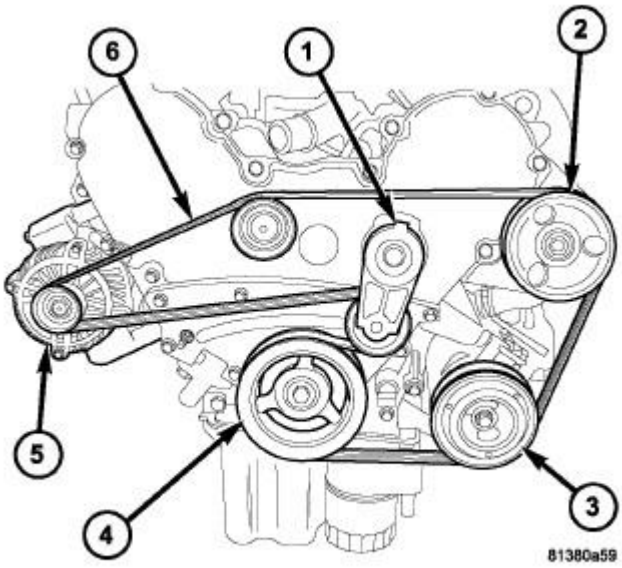

Fig. 255: ACCESSORY DRIVE BELT ROUTING
Courtesy of CHRYSLER LLC

1 - DRIVE BELT TENSIONER
2 - POWER STEERING PULLEY
3 - AIR CONDITIONING COMPRESSOR
4 - CRANKSHAFT DAMPER
5 - GENERATOR
6 - DRIVE BELT

34. Install accessory drive belt tensioner (1). Tighten mounting bolt to 34 N.m (40 ft. lbs.). Refer to **Cooling/Accessory Drive/TENSIONER, Belt - Installation** .
35. Install accessory drive belt (6). Refer to **Cooling/Accessory Drive/BELT, Serpentine - Installation** .

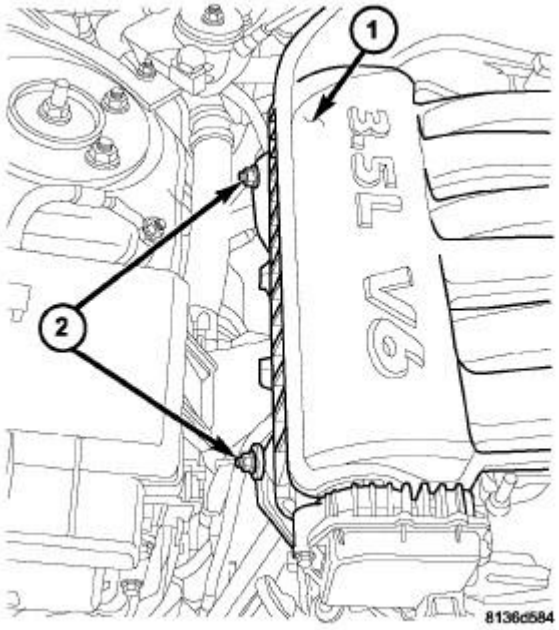

Fig. 256: Intake Manifold Braces
Courtesy of CHRYSLER LLC

36. Install the upper intake manifold (1). See **Engine/Manifolds/MANIFOLD, Intake - Installation**.

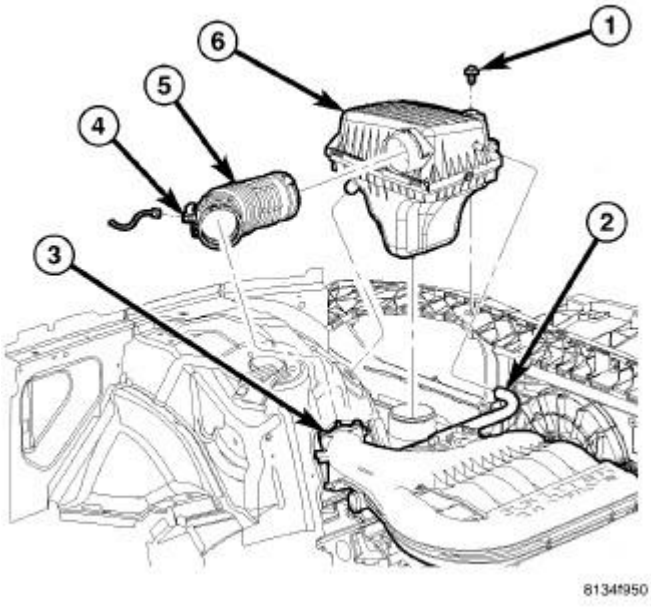

Fig. 257: Air Cleaner Housing
Courtesy of CHRYSLER LLC

1 - BOLT 2 - CCV HOSE 3 - THROTTLE 4 - IAT SENSOR 5 - INLET AIR DUCT 6 - AIR CLEANER ELEMENT HOUSING

37. Install the air cleaner body (6). See **Engine/Air Intake System/BODY, Air Cleaner - Installation**.
38. Connect negative battery cable. Tighten nut to 5 N.m (45 in. lbs.).
39. Fill cooling system. Refer to **Cooling - Standard Procedure** .
40. Operate engine until it reaches normal operating temperature. Check cooling system for correct fluid level. Refer to **Cooling - Standard Procedure** .

LEFT CYLINDER HEAD

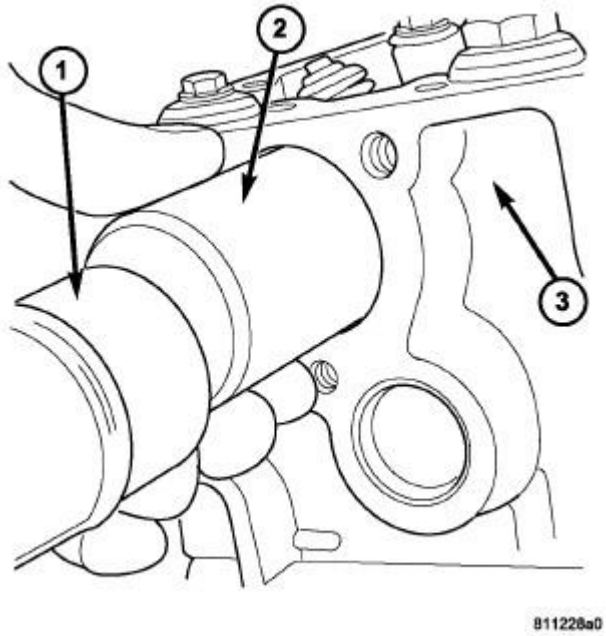

Fig. 258: CAMSHAFT SEAL
Courtesy of CHRYSLER LLC

1 - MALLET 2 - SPECIAL TOOL MD-998306 3 - CYLINDER HEAD

1. Position the camshaft seal into the cylinder head (3)
2. Using Camshaft Installer MD-998306 (2) tap the seal into place.

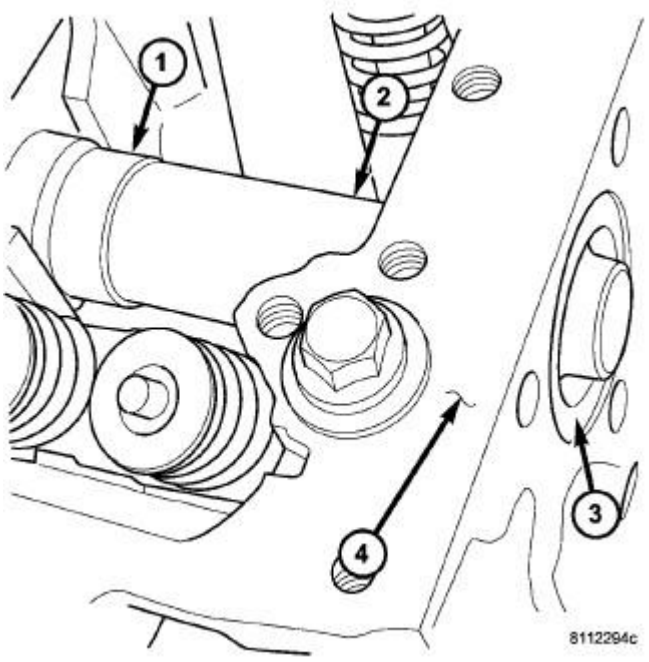

Fig. 259: CAMSHAFT INSTALLATION - LEFT
Courtesy of CHRYSLER LLC

1 - CAMSHAFT
2 - SPECIAL TOOL 6788
3 - CAMSHAFT SEAL
4 - CYLINDER HEAD

3. Apply light coat of clean engine oil to the camshaft oil seal lip (3) and Cam Seal Protector 6788 (2).
4. Install Cam Seal Protector 6788 (2) onto the camshaft (1).
5. Slide the camshaft (1) forward, inserting the seal protector (2) through the camshaft seal (3) until the camshaft seats.
6. Remove Seal Protector (2) from the camshaft.

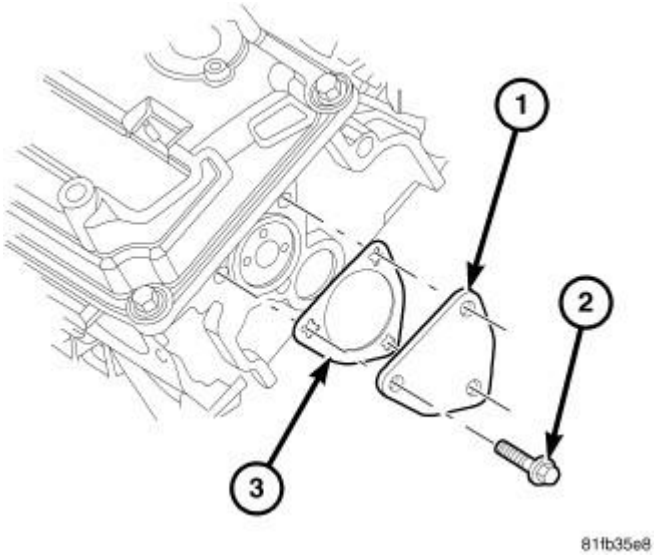

Fig. 260: Cam Thrust Plate Gasket
Courtesy of CHRYSLER LLC

7. Install the camshaft thrust plate (1) and gasket (3). Tighten three bolts (2) to 28 N.m (250 in. lbs.).

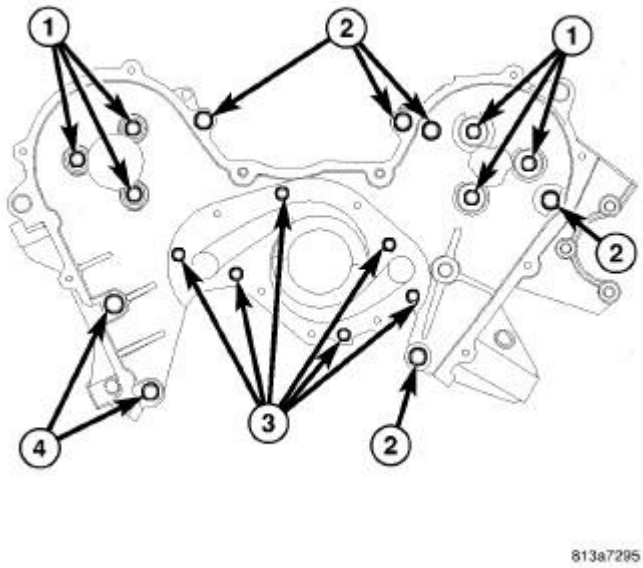

Fig. 261: Timing Belt Rear Cover
Courtesy of CHRYSLER LLC

1 - M8 FASTENERS (APPLY THREAD SEALANT)
2 - M10 FASTENERS
3 - M6 FASTENERS

4 - M10 FASTENERS (STUD/NUT)

8. Install rear timing belt cover. See **Engine/Valve Timing/COVER(S), Engine Timing - Installation**.

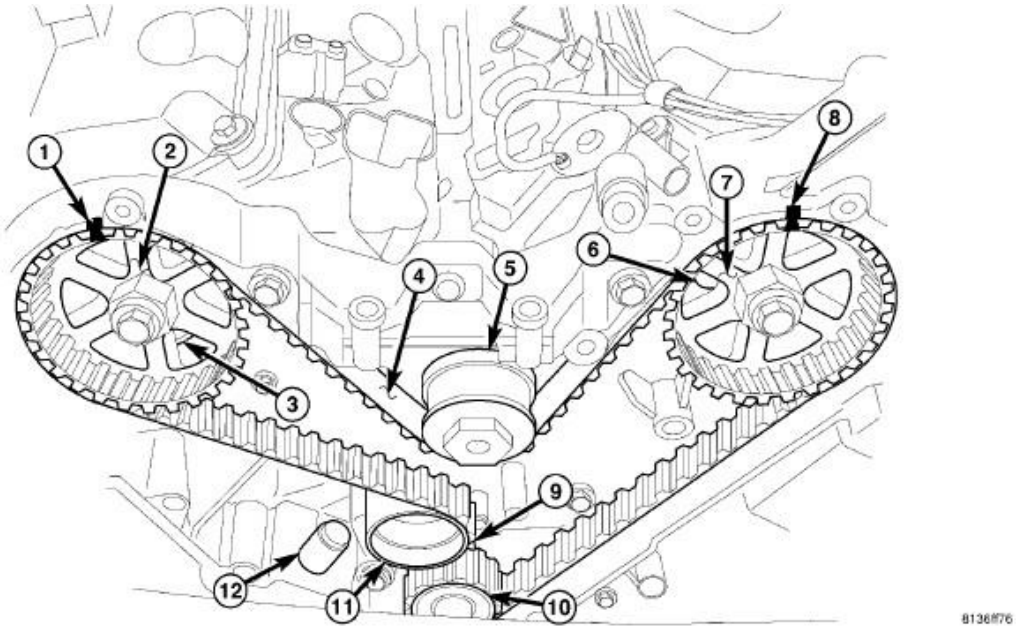

Fig. 262: Identifying Timing Gear Components
Courtesy of CHRYSLER LLC

1 - RIGHT CAMSHAFT GEAR ALIGNMENT MARK	7 - LEFT CAMSHAFT GEAR
2 - RIGHT CAMSHAFT GEAR	8 - LEFT CAMSHAFT GEAR ALIGNMENT MARK
3 - CYLINDER HEAD TO INNER TIMING BELT COVER BOLTS - RIGHT	9 - CRANKSHAFT GEAR ALIGNMENT MARK
4 - TIMING BELT	10 - CRANKSHAFT GEAR
5 - WATER PUMP PULLEY	11 - TIMING BELT TENSIONER PULLEY
6 - CYLINDER HEAD TO INNER TIMING BELT COVER BOLTS - LEFT	12 - TIMING BELT TENSIONER

9. Install water pump. Refer to **Cooling/Engine/PUMP, Water - Installation** .
10. Install the camshaft sprockets. See **Engine/Valve Timing/BELT and SPROCKETS, Timing - Installation**.
11. Rotate the left camshaft gear (7) to align its timing mark (8). Verify that the right camshaft gear (2) timing mark (1) and crankshaft gear (10) timing mark (9) are still aligned.
12. Install the timing belt (4) starting at the crankshaft sprocket (10) going in a counterclockwise

direction. Install the belt around the last sprocket. Maintain tension on the belt as it is positioned around the tensioner pulley (11).

13. Holding the tensioner pulley (11) against the belt, install the tensioner into the housing and tighten two bolts to 28 N.m (250 in. lbs.). Each camshaft sprocket mark should remain aligned with the cover marks.
14. When tensioner is in place pull retaining pin to allow the tensioner to extend to the tensioner pulley bracket.
15. Rotate crankshaft sprocket two revolutions and check the timing marks on the camshafts and crankshaft. The marks should line up within their respective locations. If marks do not line up, repeat procedure.

NOTE: **With the camshaft gears in these positions the lobes are in a neutral position (no load to the valve). This will allow the rocker arm shaft assembly to be tightened into position with little or no valve spring load on it.**

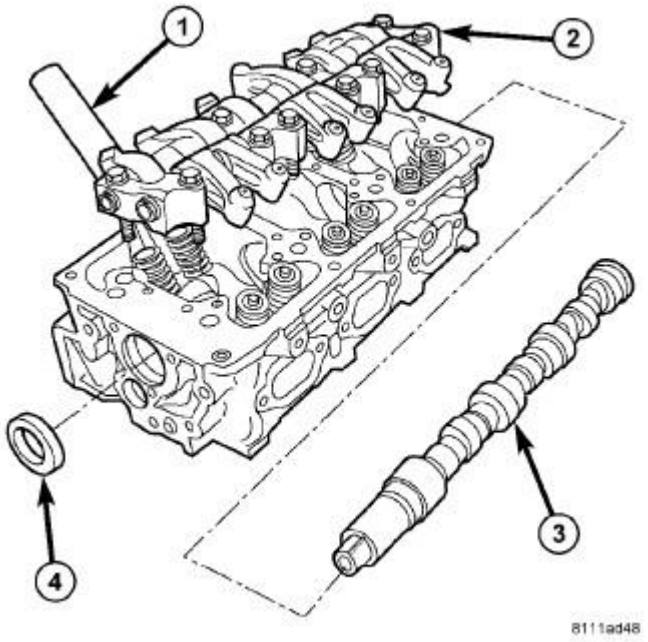

Fig. 263: Camshaft, Rocker Arm Assembly & Cylinder Head
Courtesy of CHRYSLER LLC

16. Install the rocker arm and shaft assembly (2) and ten bolts making sure that the identification marks face toward the front of engine for left head and toward the rear of the engine for right head.

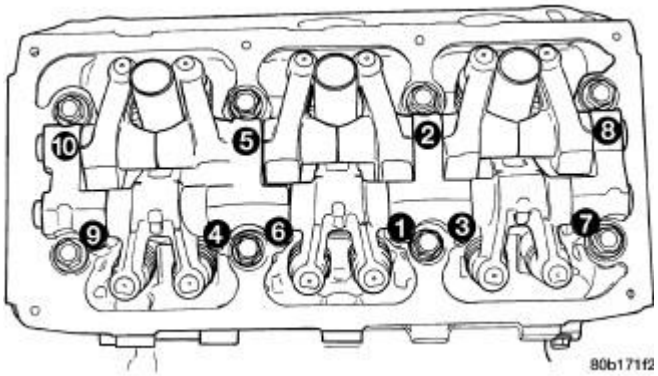

Fig. 264: Rocker Arm/Shaft Assembly Bolt Tightening Sequence
Courtesy of CHRYSLER LLC

17. Tighten the ten rocker arm/shaft assembly bolts in the sequence shown in illustration to 31 N.m (275 in. lbs.).

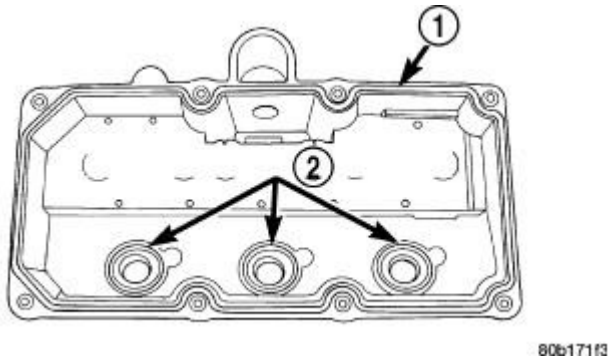

Fig. 265: Cylinder Head Cover Gasket and Spark Plug Tube Seals
Courtesy of CHRYSLER LLC

18. Clean cylinder head and cover mating surfaces. Inspect and replace gasket (1) and seals (2) as necessary. See **Engine/Cylinder Head/COVER(S), Cylinder Head - Installation**.
19. Install cylinder head cover and eight bolts. Tighten bolts to 12 N.m (105 in. lbs.).

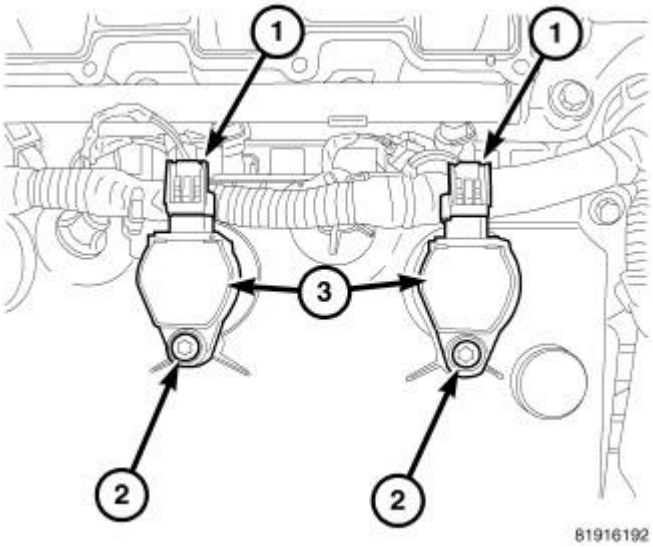

Fig. 266: Removing/Installing Ignition Coil Assembly
Courtesy of CHRYSLER LLC

20. Install the spark plugs. Tighten to 28 N.m (20 ft. lbs.). Refer to **Electrical/Ignition Control/SPARK PLUG - Installation** .
21. Install ignition coil (3) into cylinder head.
22. Install and tighten coil mounting bolt (2) to 6.7 N.m (60 in. lbs.).
23. Reposition engine wire harness and install retainers to cylinder head cover. Connect and lock electrical connectors to ignition coils (1).

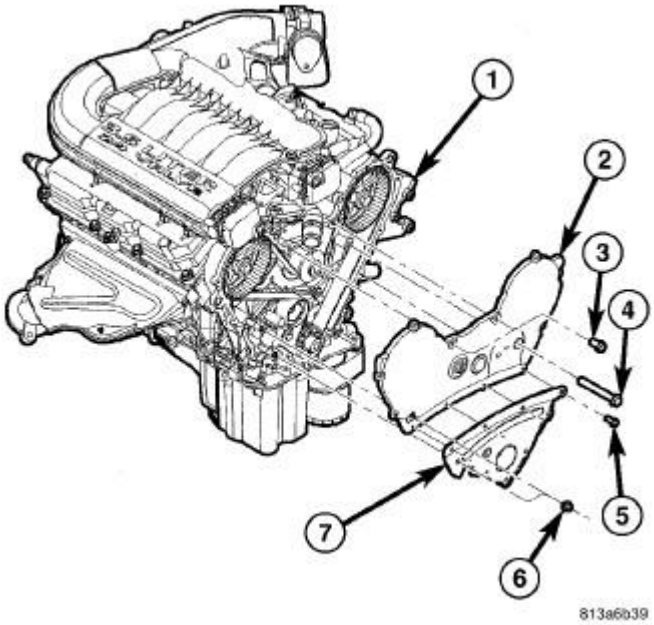

Fig. 267: UPPER AND LOWER TIMING COVERS
Courtesy of CHRYSLER LLC

1 - INNER TIMING COVER 2 - UPPER TIMING COVER 3 - 8 mm BOLT(S) 4 - 10 mm BOLT(S) 5 - 6 mm BOLT(S) 6 - NUT(S) 7 - LOWER TIMING COVER

24. Install the upper (2) and lower (7) timing belt front covers.
25. Tighten the timing cover bolts as follows:

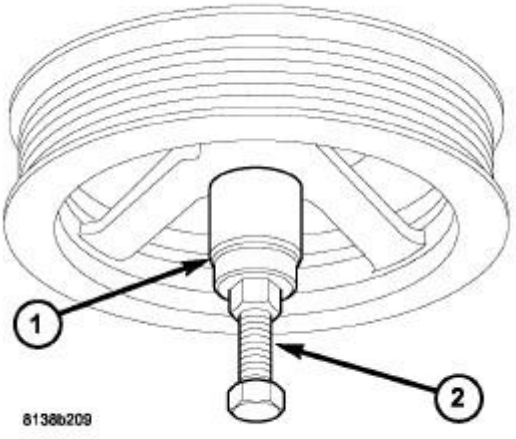

Fig. 268: CRANKSHAFT DAMPER - INSTALLATION
Courtesy of CHRYSLER LLC

1 - SPECIAL TOOL 6792-1 2 - SPECIAL TOOL C-4685-C1

- M6 bolts - 12 N.m (105 in. lbs.)
- M8 bolts - 28 N.m (250 in. lbs.)
- M10 bolts - 54 N.m (40 ft. lbs.)

26. Install crankshaft damper using 5.9 inch long Forcing Screw C-4685-C1 (2) with Nut and Thrust Bearing from Crank Sprocket Installer 6792 (1).

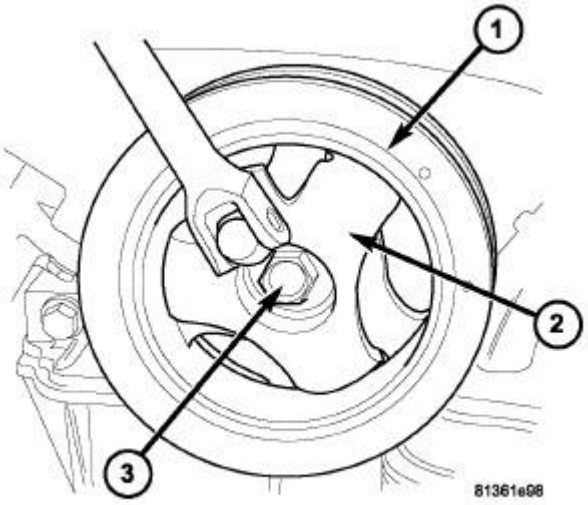

Fig. 269: Damper Holder
Courtesy of CHRYSLER LLC

27. Install crankshaft damper bolt (3). Tighten bolt to 95 N.m (70 ft. lbs.) while holding damper (1) with Damper Holding Fixture 9365 (2).

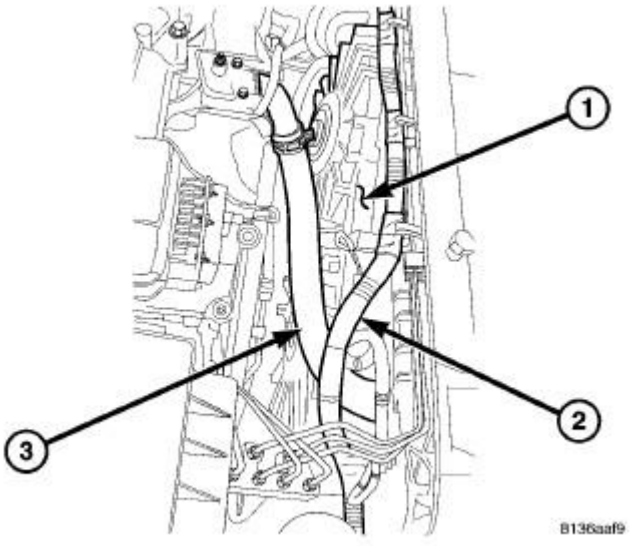

Fig. 270: Radiator Fan Assembly
Courtesy of CHRYSLER LLC

1 - RADIATOR FAN ASSEMBLY
2 - ELECTRICAL CONNECTOR
3 - UPPER RADIATOR HOSE

28. Position radiator cooling fan assembly (1) in vehicle.
29. Install cooling fan mounting bolts. Tighten to 6 N.m (50 in. lbs.).
30. Connect cooling fan electrical connector (2).
31. Install upper radiator hose (3).

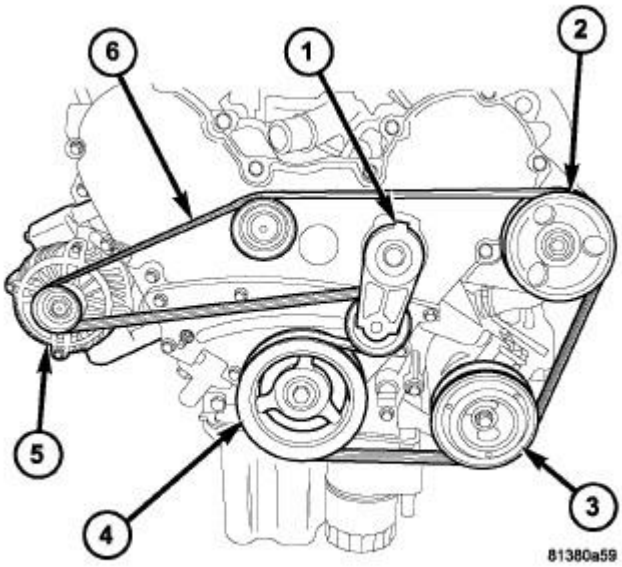

Fig. 271: ACCESSORY DRIVE BELT ROUTING
Courtesy of CHRYSLER LLC

1 - DRIVE BELT TENSIONER
2 - POWER STEERING PULLEY
3 - AIR CONDITIONING COMPRESSOR
4 - CRANKSHAFT DAMPER
5 - GENERATOR
6 - DRIVE BELT

32. Install accessory drive belt tensioner (1). Tighten mounting bolt to 34 N.m (40 ft. lbs.). Refer to **Cooling/Accessory Drive/TENSIONER, Belt - Installation** .
33. Install accessory drive belt (6). Refer to **Cooling/Accessory Drive/BELT, Serpentine - Installation** .

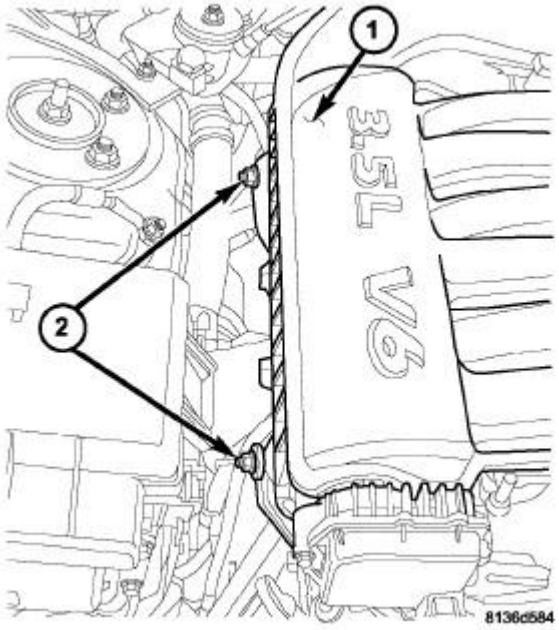

Fig. 272: Intake Manifold Braces
Courtesy of CHRYSLER LLC

34. Install the upper intake manifold (1). See **Engine/Manifolds/MANIFOLD, Intake - Installation**.

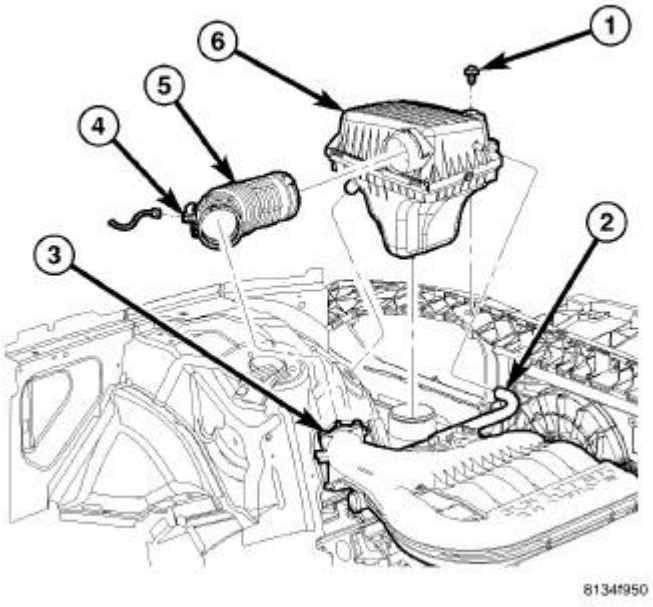

Fig. 273: Air Cleaner Housing
Courtesy of CHRYSLER LLC

1 - BOLT 2 - CCV HOSE 3 - THROTTLE 4 - IAT SENSOR 5 - INLET AIR DUCT 6 - AIR CLEANER ELEMENT HOUSING

35. Install the air cleaner body (6). See **Engine/Air Intake System/BODY, Air Cleaner - Installation**.
36. Connect negative battery cable. Tighten nut to 5 N.m (45 in. lbs.).
37. Fill cooling system. Refer to **Cooling - Standard Procedure** .
38. Operate engine until it reaches normal operating temperature. Check cooling system for correct fluid level. Refer to **Cooling - Standard Procedure** .

SEAL(S), VALVE GUIDE

Removal

REMOVAL

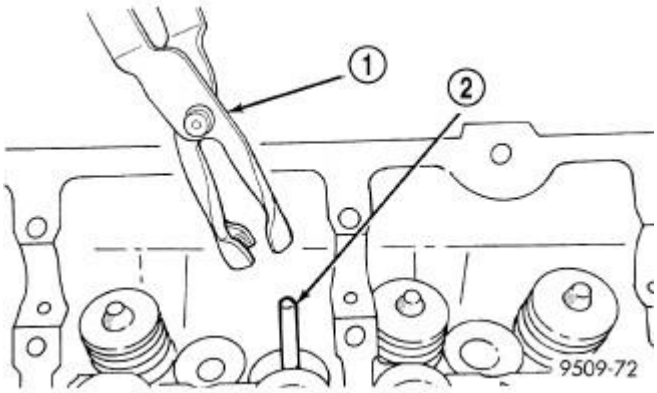

Fig. 274: Valve Stem Seal - Removal
Courtesy of CHRYSLER LLC

1 - VALVE SEAL TOOL 2 - VALVE STEM

1. Remove valve spring. See **Engine/Cylinder Head/SPRING(S), Valve - Removal**.
2. Remove valve stem seals by using a valve stem seal tool .

Installation

INSTALLATION

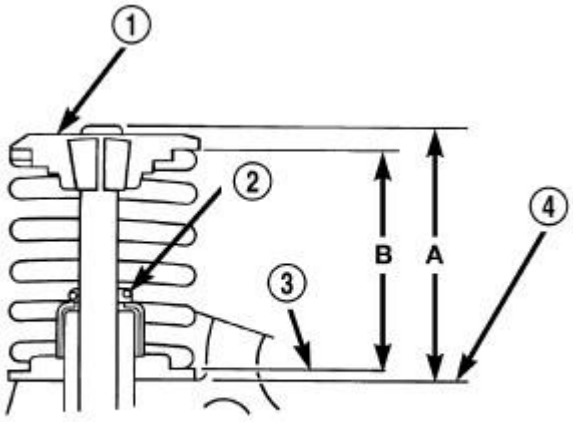

80570e02

Fig. 275: Checking Valve Tip Height and Valve Spring Installed Height
Courtesy of CHRYSLER LLC

1 - SPRING RETAINER
2 - GARTER SPRING
3 - VALVE SPRING SEAT TOP
4 - CYLINDER HEAD SURFACE

1. The valve stem seal/valve spring seat should be pushed firmly and squarely over the valve guide using the valve stem as guide. **Do Not Force** seal against top of guide. When installing the valve retainer locks, compress the spring **only enough** to install the locks.

CAUTION: Do not remove garter spring (2) around the seal at the top of the valve stem seal .

2. Install valve spring. See **Engine/Cylinder Head/SPRING(S), Valve - Installation**.

SPRING(S), VALVE

Description

DESCRIPTION

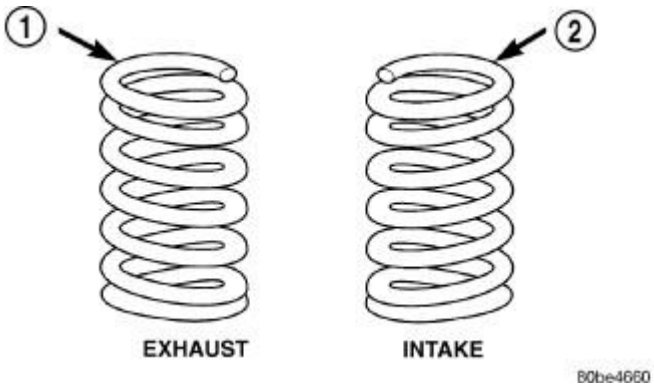

Fig. 276: Valve Spring Identification
Courtesy of CHRYSLER LLC

1 - YELLOW OR WHITE DYE 2 - ORANGE DYE

The valve springs are made from chrome silicon alloy wire and incorporate a "bee-hive" design. Valve spring retainers and locks are common from valve-to-valve. The valve spring seat is integral with the valve stem oil seal, which incorporates a garter spring to maintain consistent lubrication control to the valve stem.

The valve springs are unique for intake compared to exhaust. Both have different lengths and are wound in opposite directions. The valve springs are color coded, intake spring is right hand coil direction with orange dye on the top coils, and the exhaust spring is left hand coil direction with a yellow or white dye on the top coils .

The exhaust spring with the white dye on the top of the coils has an increased open and closed load when compared to the exhaust spring with the yellow dye. A yellow and a white exhaust valve spring **should never** be used on a single forked rocker arm. Color coated exhaust springs should always be used in pairs for a forked exhaust rocker springs.

Operation

OPERATION

The valve spring returns the valve against its seat for a positive seal of the combustion chamber.

Removal

CYLINDER HEAD OFF

1. Compress valve spring with valve spring compressor C-3422-D and adapter 6526A. See **Engine - Special Tools**.
2. Remove valve retaining locks. Release valve spring compressor. Remove valve spring retainer and valve spring.
3. Remove valve stem seal assembly. See **Engine/Cylinder Head/SEAL(S), Valve Guide -**

Removal.

CYLINDER HEAD ON

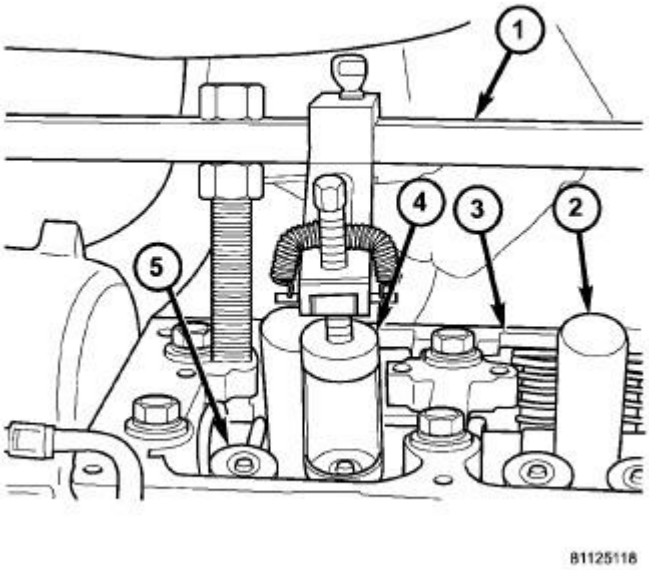

Fig. 277: VALVE SPRING SERVICING
Courtesy of CHRYSLER LLC

1 - MD 998772A
2 - SPARK PLUG TUBES
3 - CYLINDER HEAD
4 - 6527 - ADAPTOR
5 - VALVE SPRING RETAINER

1. Disconnect negative battery cable.
2. Remove upper intake manifold. See **Engine/Manifolds/MANIFOLD, Intake - Removal**.
3. Remove cylinder head cover(s). See **Engine/Cylinder Head/COVER(S), Cylinder Head - Removal**.
4. Remove rocker arm and shaft assembly. See **Engine/Cylinder Head/ROCKER ARM, Valve - Removal**.
5. Remove spark plugs.
6. Rotate the crankshaft clockwise, until the number 1 piston is at Top Dead Center (TDC) on the compression stroke.
7. With air hose attached to spark plug adapter installed in number 1 spark plug hole, apply 620.5 to 689 kPa (90 to 100 psi) air pressure. This is to hold valves into place while servicing components.

8. Using Tool MD 998772A (1) with adapter 6527 (4) or equivalent, compress valve spring and remove valve locks (5). Release tension on valve spring, remove retainer (5) and valve spring. See **Engine - Special Tools** .
9. Remove valve stem seal, if required. See **Engine/Cylinder Head/SEAL(S), Valve Guide - Removal**.
10. Follow the same procedure on the remaining 5 cylinders using the firing sequence 1-2-3-4-5-6. **Make sure piston is at TDC in each cylinder of the valve spring that is being removed.**
11. Remove spark plug adapter tool.

Inspection

INSPECTION

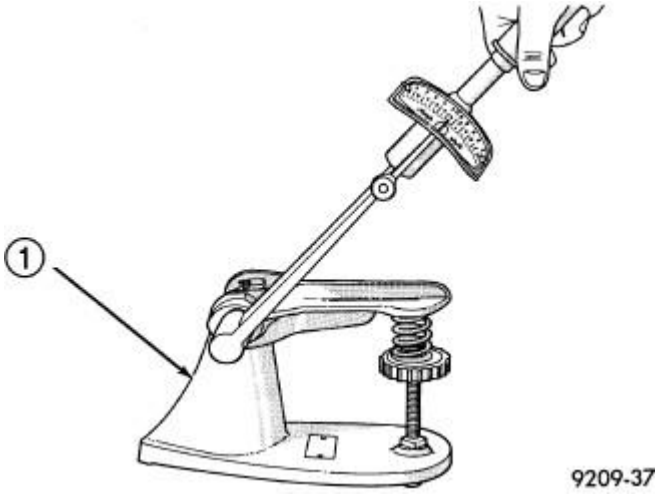

Fig. 278: Testing Valve Spring
Courtesy of CHRYSLER LLC

1 - SPECIAL TOOL C-647

When valves have been removed for inspection, reconditioning or replacement, valve springs should be tested . **As an example;** the compression length of the spring to be tested is 38.00 mm (1.496 in.). Turn table of Tool C-647 until surface is in line with the 38.00 mm (1.496 inches.) mark on the threaded stud and the zero mark on the front. Place spring over stud on the table and lift compressing lever to set tone device. Pull on torque wrench until ping is heard. Take reading on torque wrench at this instant. Multiply this reading by two. This will give the spring load at test length. Fractional measurements are indicated on the table for finer adjustments. Refer to Engine Specifications to obtain specified height and allowable tensions. See **Engine - Specifications**. Replace springs that do not meet specifications.

Installation

CYLINDER HEAD OFF

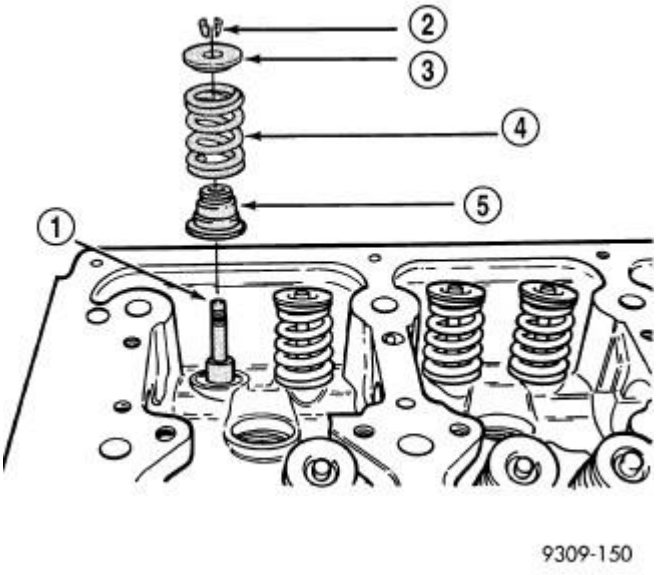

Fig. 279: Valve Seal and Spring-Installation
Courtesy of CHRYSLER LLC

1 - VALVE
2 - VALVE RETAINING LOCKS
3 - VALVE SPRING RETAINER
4 - VALVE SPRING
5 - VALVE SEAL AND VALVE SPRING SEAT ASSEMBLY

1. Install valves if removed.
2. Install valve stem seal/spring seat assembly (5) over valve guides on all valve stems . Ensure that the garter spring is intact around the top of the rubber seal.
3. Place valve spring (color-coded end facing up) (4) and valve retainer into position.

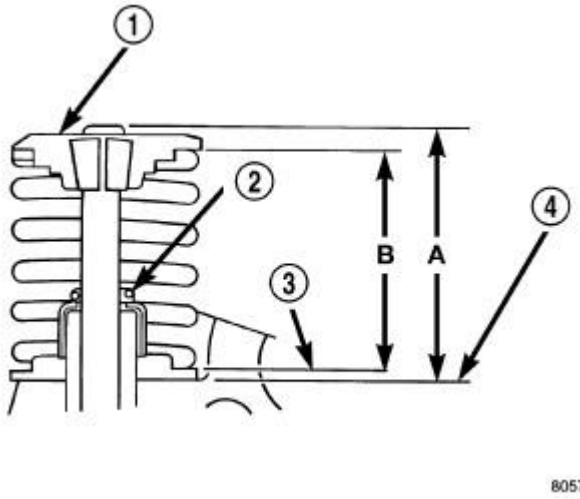

Fig. 280: Checking Valve Tip Height and Valve Spring Installed Height

Courtesy of CHRYSLER LLC

1 - SPRING RETAINER 2 - GARTER SPRING 3 - VALVE SPRING SEAT TOP 4 - CYLINDER HEAD SURFACE

4. Compress valve spring with valve spring compressor. Install locks and release tool. **If valve and/or seat are reground, measure the installed height of springs (B), make sure measurements are taken from top of spring seat to the bottom surface of spring retainer** . If height is greater than 38.75 mm (1.5256 in.), install a 0.762 mm (0.030 in.) spacer in head counterbore under the valve spring seat to bring spring height back within specification .

CYLINDER HEAD ON

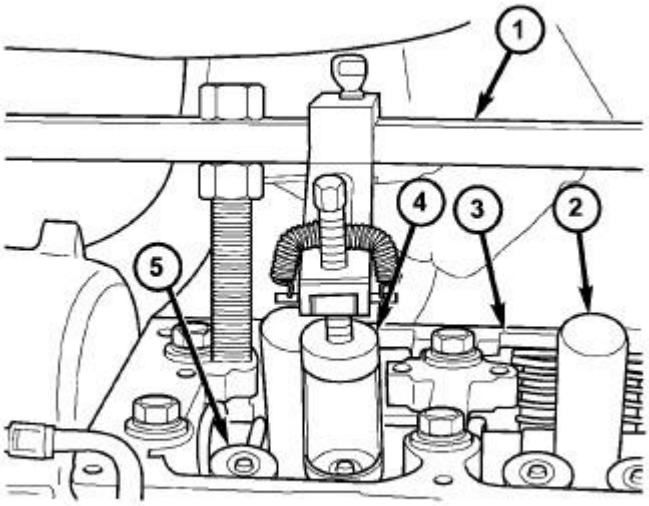

Fig. 281: VALVE SPRING SERVICING
Courtesy of CHRYSLER LLC

1 - MD 998772A 2 - SPARK PLUG TUBES 3 - CYLINDER HEAD 4 - 6527 - ADAPTOR 5 - VALVE SPRING RETAINER

1. Install new valve seal(s) if required. See **Engine/Cylinder Head/SEAL(S), Valve Guide - Installation**.

2. Place valve spring (color-coded end facing up) and valve retainer into position.
3. Compress valve spring using Special Tool MD 998772A (1) with Adaptor 6527 (4) only enough to install locks (5) .
4. After installing locks, release tension on valve spring and verify proper installation.
5. Remove Special Tool MD 998772A (1) and spark plug adapter tool.
6. Install rocker arm and shaft assembly. See **Engine/Cylinder Head/ROCKER ARM, Valve - Installation**.
7. Install cylinder head cover(s). See **Engine/Cylinder Head/COVER(S), Cylinder Head - Installation**.
8. Install spark plugs.
9. Install upper intake manifold. See **Engine/Manifolds/MANIFOLD, Intake - Installation**.
10. Connect negative battery cable.

TUBE, SPARK PLUG

Removal

REMOVAL

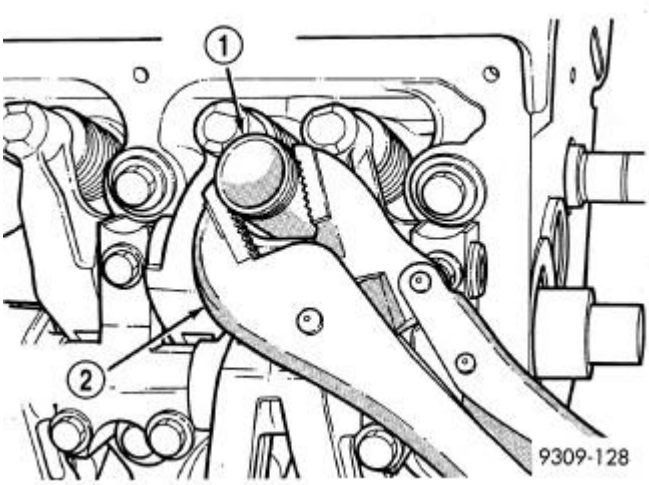

Fig. 282: Servicing Spark Plug Tubes
Courtesy of CHRYSLER LLC

1 - SPARK PLUG TUBE 2 - LOCKING PLIERS

1. Remove cylinder head cover(s). See **Engine/Cylinder Head/COVER(S), Cylinder Head - Removal**.
2. Using suitable locking pliers, remove the tube from the cylinder head and discard tube.
3. Clean area around spark plug with Mopar® Parts Cleaner or equivalent.

Installation

INSTALLATION

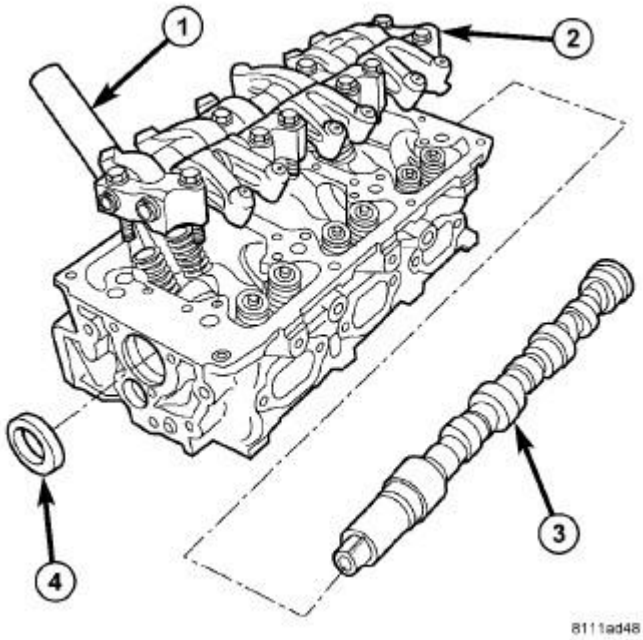

Fig. 283: Camshaft, Rocker Arm Assembly & Cylinder Head
Courtesy of CHRYSLER LLC

1 - SPARK PLUG TUBE
2 - ROCKER ARM ASSEMBLY
3 - CAMSHAFT
4 - CAMSHAFT SEAL

1. Apply Mopar® Stud and Bearing Mount to a new tube (1) approximately 1 mm (0.039 in.) from the end of tube, in a 3 mm (0.118 in.) wide area .
2. Install sealer end of tube (1) into the cylinder head. Then carefully install the tube (1) using a hardwood block and mallet. Install the tube (1) until it is seated into the bottom of the bore.
3. For spark plug tube (1) seal replacement, see **Engine/Cylinder Head/COVER(S), Cylinder Head - Removal**.
4. Install cylinder head cover(s). See **Engine/Cylinder Head/COVER(S), Cylinder Head - Installation**.

VALVES, INTAKE AND EXHAUST

Description

DESCRIPTION

Valves are made of highly heat-resistant steel and are chrome plated to prevent stem scuffing. The intake valve is a one-piece forging, while the exhaust valve has a forged head with a welded stem for lock groove hardness. The four valves (two intake and two exhaust) employ a three-groove lock design to help facilitate valve rotation.

Operation

OPERATION

The intake valve allows the air/fuel mixture to enter the combustion chamber. The exhaust valve allows the burned air/fuel mixture to exit the combustion chamber. Also, the intake and exhaust valves seal the combustion chamber during the compression and power strokes.

Standard Procedure

VALVE AND VALVE SEAT REFACING

VALVES

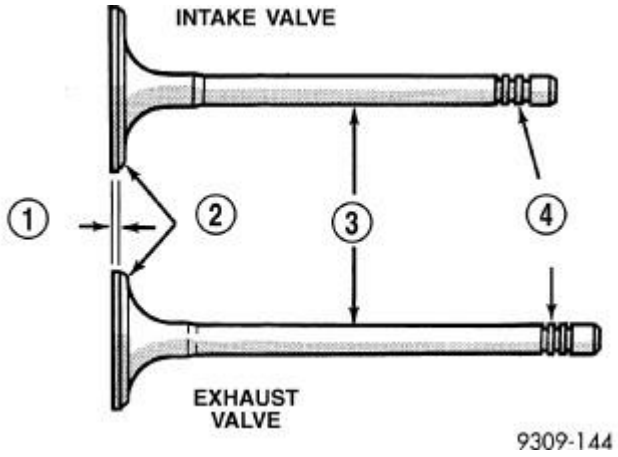

Fig. 284: Intake and Exhaust Valves
Courtesy of CHRYSLER LLC

1 - MARGIN
2 - FACE
3 - STEM
4 - VALVE SPRING RETAINER LOCK GROOVES

1. Inspect the remaining margin (1) after the valves are refaced. See **Engine - Specifications**.

VALVE SEATS

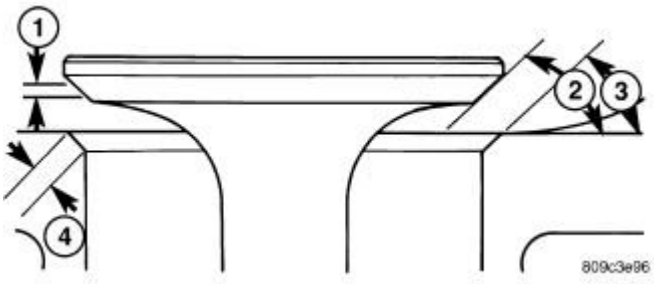

Fig. 285: Valve Face and Seat
Courtesy of CHRYSLER LLC

1 - SEAT WIDTH
2 - FACE ANGLE
3 - SEAT ANGLE
4 - SEAT CONTACT AREA

1. When refacing valve seats, it is important that the correct size valve guide pilot be used for reseating stones. A true and complete surface must be obtained.
2. Measure the concentricity of valve seat using dial indicator. Total runout should not exceed 0.051 mm (0.002 inch.) total indicator reading.
3. Inspect the valve seat (3) with Prussian blue to determine where the valve (1) contacts the seat. To do this, coat valve seat (1) **LIGHTLY** with Prussian blue then set valve in place. Rotate the valve with light pressure. If the blue is transferred to the center of valve face (2), contact is satisfactory. If the blue is transferred to top edge of valve face (2), then lower valve seat (3) with a 15° stone. If the blue is transferred to the bottom edge of valve face (2), then raise valve seat (3) with a 65° stone.

   NOTE: Valve seats (1) which are worn or burned can be reworked, provided that correct angle and seat width (1) are maintained. Otherwise cylinder head must be replaced.

4. When seat is properly positioned the width of the intake seats should be 0.75 to 1.25 mm (0.0296 to 0.0493 in.) and exhaust seats should be 1.25 to 1.75 mm (0.049 to 0.069 in.) .

VALVE AND SPRING INSTALLED HEIGHT

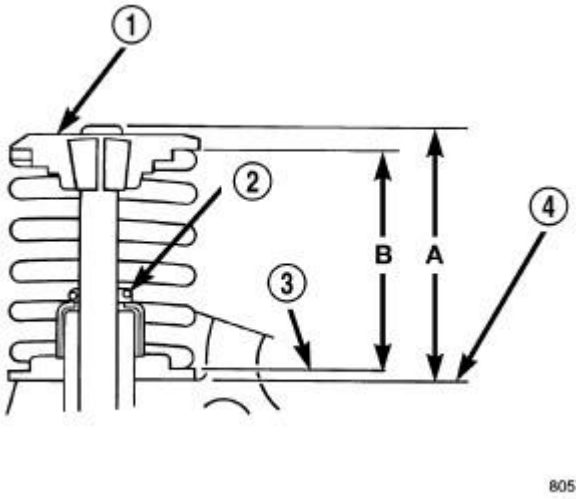

Fig. 286: Checking Valve Tip Height and Valve Spring Installed Height
Courtesy of CHRYSLER LLC

1 - SPRING RETAINER
2 - GARTER SPRING
3 - VALVE SPRING SEAT TOP
4 - CYLINDER HEAD SURFACE

1. Coat valve stems with clean engine oil and insert them in cylinder head.
2. If valves or seats have been refaced, check valve tip height (A) . If valve tip height is greater than 43.65 mm (1.7185 in.) intake or 46.48 mm (1.8299 in.) exhaust, grind valve tip until within specifications. Make sure measurement is taken from cylinder head surface to the top of valve stem.
3. Install valve seal/spring seat assembly over valve guides on all valve stem . Ensure that the garter spring is intact around the top of the rubber seal.

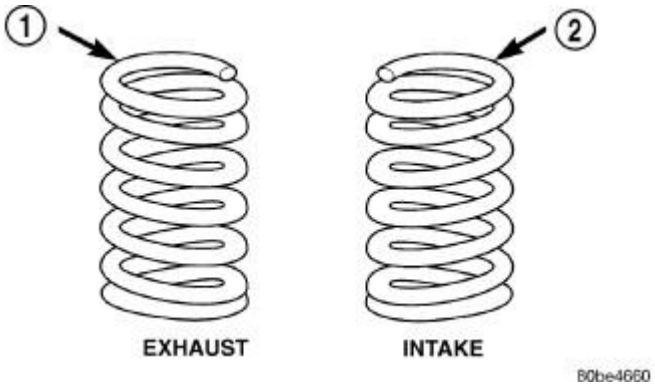

Fig. 287: Valve Spring Identification
Courtesy of CHRYSLER LLC

1 - YELLOW OR WHITE DYE
2 - ORANGE DYE

4. Place valve spring (color-coded end facing up) and valve retainer into position on spring seat .

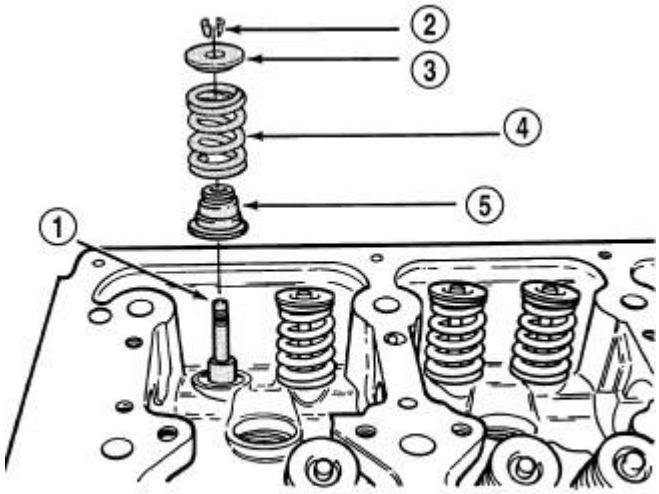

Fig. 288: Valve Seal and Spring-Installation
Courtesy of CHRYSLER LLC

1 - VALVE
2 - VALVE RETAINING LOCKS
3 - VALVE SPRING RETAINER
4 - VALVE SPRING
5 - VALVE SEAL AND VALVE SPRING SEAT ASSEMBLY

5. Compress valve springs (4) with valve spring compressor C-3422-D and adapter 6526A, install locks (2) and release tool. See **Engine - Special Tools**.
6. If valves (1) and/or seats are refaced, measure the installed height of springs . Measurements are taken from top of spring (4) seat to the bottom surface of spring retainer. If height is greater than 38.75 mm (1.5256 in.), install a 0.762 mm (0.030 in.) spacer in head counterbore under the valve spring seat to bring spring height back within specification.

Removal

REMOVAL

1. Remove cylinder head(s). See **Engine/Cylinder Head - Removal**.
2. Remove rocker arm assembly. See **Engine/Cylinder Head/ROCKER ARM, Valve - Removal**.
3. Remove valve spring(s). See **Engine/Cylinder Head/SPRING(S), Valve - Removal**.
4. Before removing valve, **remove any burrs from valve stem lock grooves to prevent damage to the valve guides.** Identify valves to insure installation in original location.

5. Remove valve(s) from cylinder head.

Cleaning

CLEANING

1. Clean all valves thoroughly and discard burned, warped and cracked valves.

Inspection

VALVES

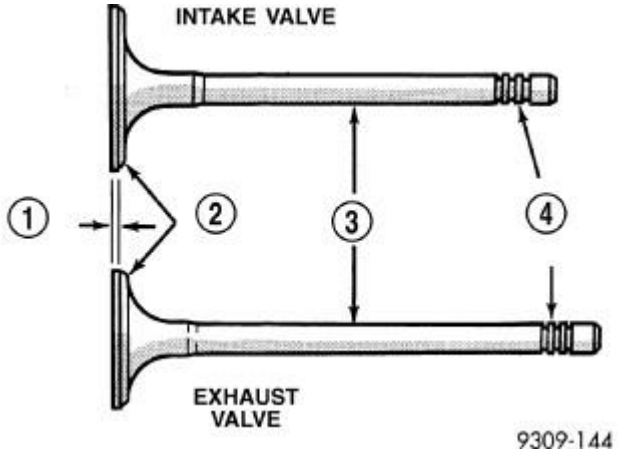

Fig. 289: Intake and Exhaust Valves
Courtesy of CHRYSLER LLC

1 - MARGIN
2 - FACE
3 - STEM
4 - VALVE SPRING RETAINER LOCK GROOVES

1. Measure valve stems for wear approximately 60 mm (2.36 in.) below the valve lock grooves.
2. Compare measurement to specifications. See **Engine - Specifications**.

NOTE: Valve stems are chrome plated and should not be polished .

VALVE GUIDES

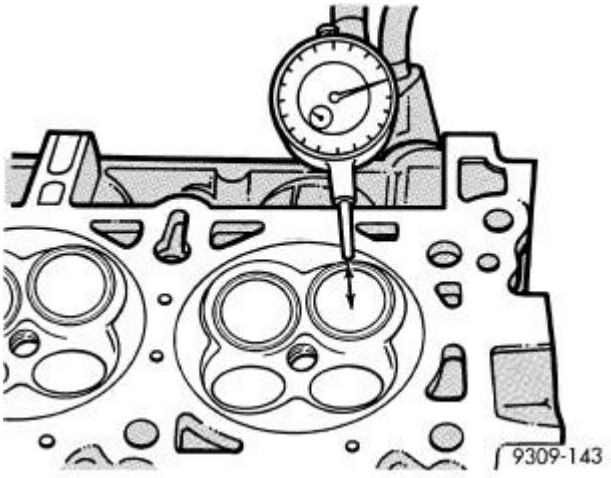

Fig. 290: Measuring Valve Guide Wear
Courtesy of CHRYSLER LLC

1. Measure valve stem-to-guide clearance as follows:
2. Install valve into cylinder head so it is 15 mm (0.590 inch.) off the valve seat. A small piece of hose may be used to hold valve in place.
3. Attach dial indicator Tool C-3339A to cylinder head and set it at right angle of valve stem being measured .
4. Move valve to and from the indicator.
5. Note dial indicator reading and compare to engine specifications. See **Engine - Specifications**.

NOTE: Replace cylinder head if stem-to-guide clearance exceeds specifications, or if guide is loose in cylinder head.

Installation

INSTALLATION

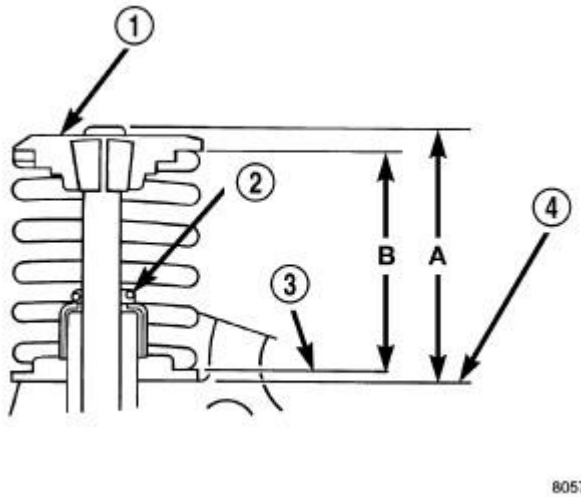

Fig. 291: Checking Valve Tip Height and Valve Spring Installed Height
Courtesy of CHRYSLER LLC

1 - SPRING RETAINER
2 - GARTER SPRING
3 - VALVE SPRING SEAT TOP
4 - CYLINDER HEAD SURFACE

1. Coat valve stems with clean engine oil and insert them in cylinder head.
2. If valves or seats have been reground, check valve tip height (A) . If valve tip height is greater than 43.65 mm (1.7185 in.) intake or 46.48 mm (1.8299 in.) exhaust, grind valve tip until within specifications. Make sure measurement is taken from cylinder head surface to the top of valve stem.
3. Install new valve stem seals.
4. Install valve springs. See **Engine/Cylinder Head/SPRING(S), Valve - Installation**.
5. Install cylinder head(s). See **Engine/Cylinder Head - Installation**.

ENGINE BLOCK

DESCRIPTION

DESCRIPTION

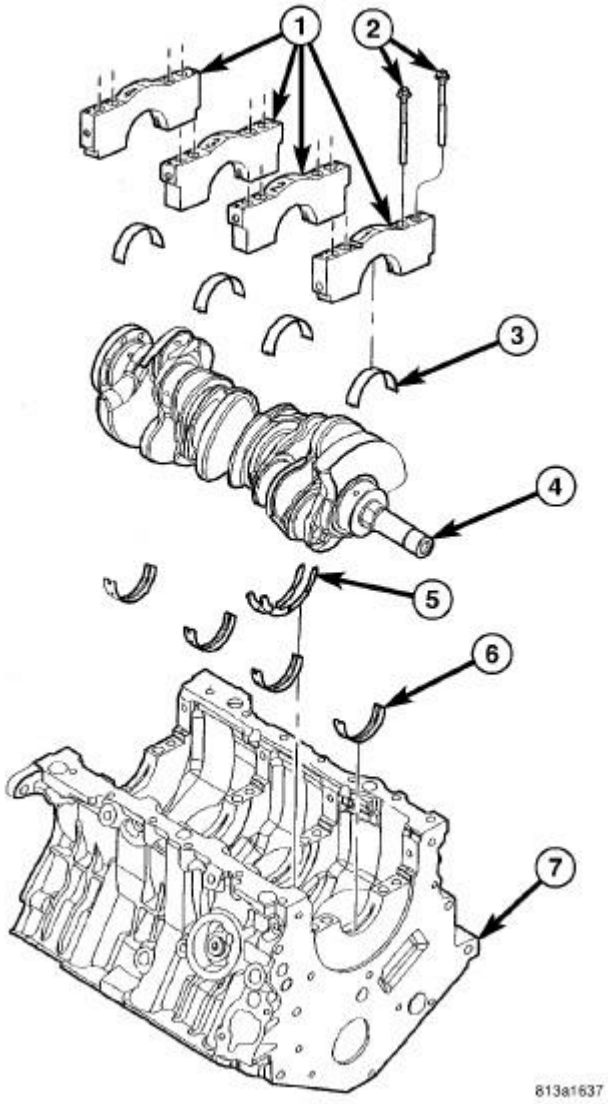

Fig. 292: Cylinder Block & Crankshaft
Courtesy of CHRYSLER LLC

1 - MAIN CAPS
2 - BOLTS
3 - MAIN BEARING-LOWER
4 - CRANKSHAFT
5 - THRUST WASHERS
6 - MAIN BEARING-UPPER
7 - ENGINE BLOCK

The cylinder block is made of heat treated aluminum with cast-in-place iron liners. The block is a closed deck design with the right bank forward. To provide high rigidity and improved noise, vibration

and harshness (NVH), the block has cast-in contours and ribs, along with powdered metal 6 bolt main caps (4 vertical, 2 horizontal), with a die cast aluminum structural beam windage tray mounted to the main caps.

CLEANING

CLEANING

Clean cylinder block thoroughly using a suitable cleaning solvent.

INSPECTION

INSPECTION

ENGINE BLOCK

1. Clean cylinder block thoroughly and check all core hole plugs for evidence of leaking.
2. If new core plugs are to be installed, see **Engine - Standard Procedure**.
3. Examine block and cylinder bores for cracks or fractures.
4. Check block deck surfaces for flatness. Deck surface must be within service limit of 0.1 mm (0.004 in.).

CYLINDER BORE

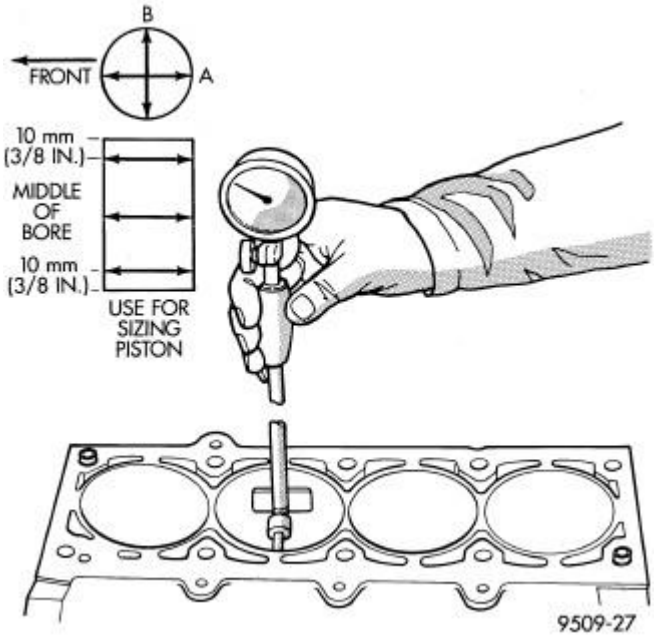

Fig. 293: Cylinder Bore Measurement
Courtesy of CHRYSLER LLC

NOTE: **The cylinder bores should be measured at normal room temperature, 21°C (70° F).**

The cylinder walls should be checked for out-of-round and taper with Tool C119 cylinder bore gauge, or equivalent . See **Engine - Specifications**. If the cylinder walls are badly scuffed or scored, the cylinder block should be replaced, and new pistons and rings fitted.

Measure the cylinder bore at three levels in directions A and B . Top measurement should be 10 mm (3/8 in.) down and bottom measurement should be 10 mm (3/8 in.) up from bottom of bore. See **Engine - Specifications**.

BEARING(S), CONNECTING ROD

Standard Procedure

CONNECTING RODS AND BEARINGS

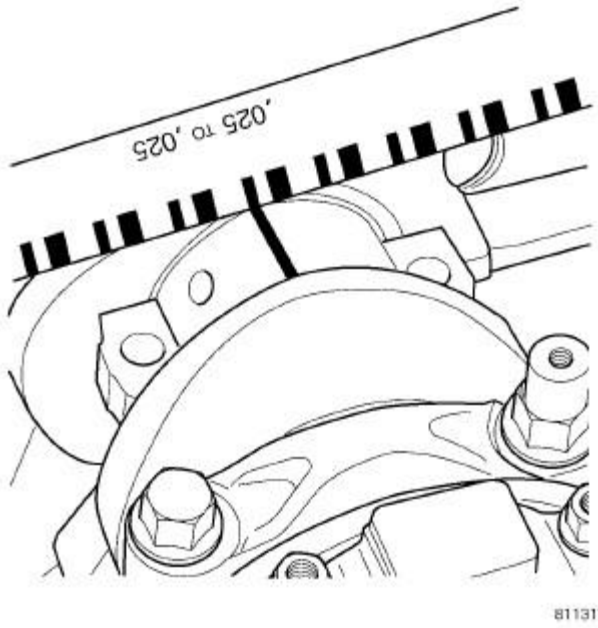

Fig. 294: CONNECTING ROD BEARING CLEARANCE
Courtesy of CHRYSLER LLC

CAUTION: The bearing caps are not interchangeable and should be paint marked or scribed at removal to insure correct assembly. DO NOT use a metal stamp.

The bearing shells must be installed with the tangs inserted into the machined grooves in the rods and caps. Install cap with the tangs on the same side as the rod.

Fit all rods on one bank until complete.

Limits of out-of-round on any crankshaft journals should be held to 0.008 mm (0.0003 in.). Bearings are available in standard, 0.025 mm (0.001 in.), and 0.254 mm (0.010 in.) undersizes. **Install the bearings in pairs. Do not use a new bearing half with an old bearing half. Do not file the rods or bearing caps.**

1. For measuring main bearing clearance and connecting rod bearing clearance use plastigage . For more information on using plastigage. See **Engine - Standard Procedure**. Refer to Engine Specifications for bearing clearance specifications. See **Engine - Specifications**.

NOTE: **The rod bearing bolts should be examined before reuse. If the threads are necked down the bolts must be replaced .**

CONNECTING ROD BOLTS

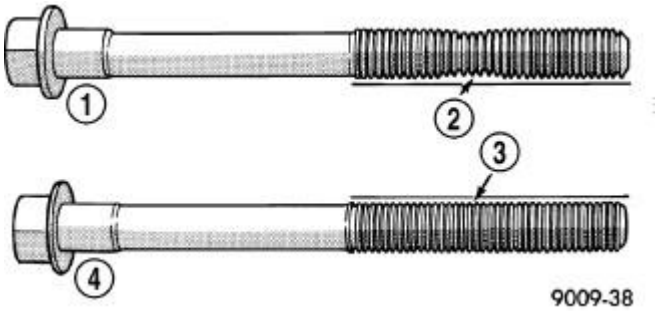

Fig. 295: Check for Stretched Bolts
Courtesy of CHRYSLER LLC

1 - STRETCHED BOLT
2 - THREADS ARE NOT STRAIGHT ON LINE
3 - THREADS ARE STRAIGHT ON LINE
4 - UNSTRETCHED BOLT

1. Examine connecting rod bolts for stretching (1). Stretching (1) can be checked by holding a scale or straight edge against the threads. If all the threads do not contact the scale the bolt must be replaced.
2. Before installing the bolts the threads should be cleaned and inspected.
3. Install clean bolts finger tight. Then alternately torque each bolt to assemble the cap properly.
4. Tighten the connecting rod cap bolts to specification. See **Engine - Specifications**.

CONNECTING ROD SIDE CLEARANCE

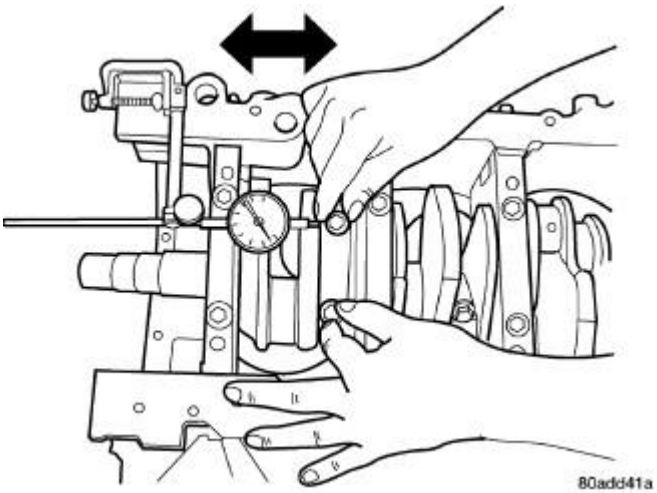

Fig. 296: Connecting Rod Side Clearance Measuring
Courtesy of CHRYSLER LLC

1. Mount a dial indicator to a stationary point on engine. Locate probe perpendicular to and resting against the connecting rod cap being checked. Move connecting rod all the way to rear of its travel. Zero the dial indicator. Move connecting rod forward to limit of travel and read the dial indicator . Compare measurement to specification listed in engine specifications. See **Engine - Specifications**. Repeat procedure for each connecting rod. Turn crankshaft for connecting rod accessibility.

BEARING(S), CRANKSHAFT, MAIN

Standard Procedure

CRANKSHAFT MAIN BEARING FITTING

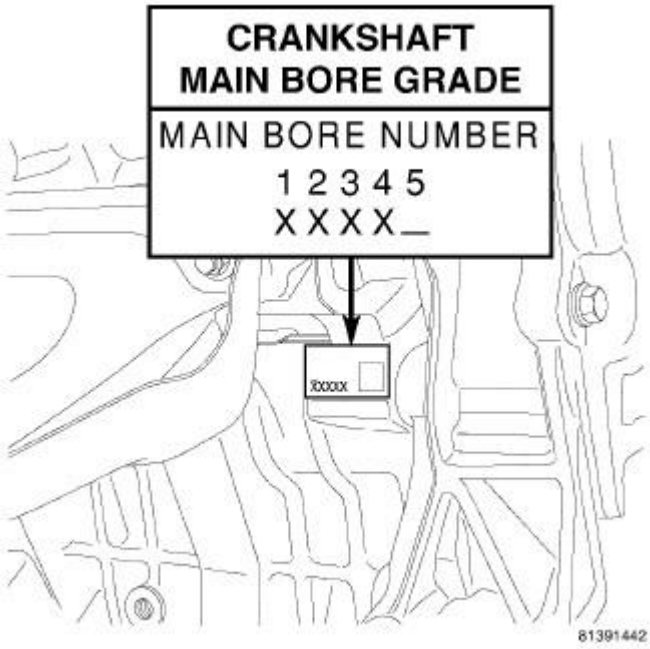

Fig. 297: ENGINE BLOCK MAIN BORE GRADE
Courtesy of CHRYSLER LLC

The main bearings are a "select fit" to achieve proper oil clearances. For main bearing selection, the block and crankshaft have grade identification marks.

The marks for the cylinder block main bore grade are located on the right front side of the engine block . These grade marks (1, 2, or 3) are read left to right, corresponding to main bore 1, 2, 3, 4. The 5th digit is a check some digit for plant validation during manufacturing.

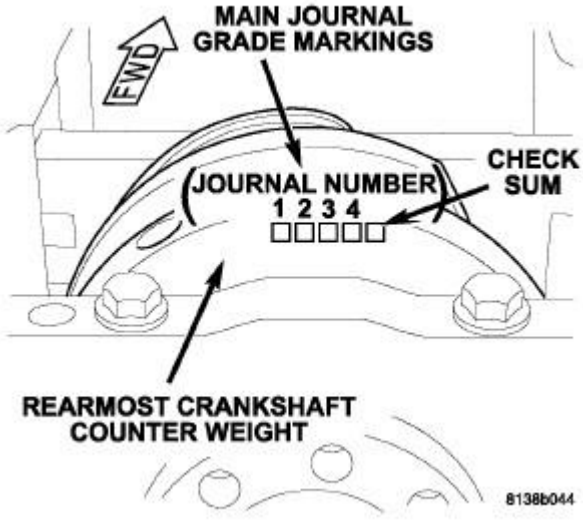

Fig. 298: CRANKSHAFT MAIN JOURNAL GRADE MARKING LOCATION - REAR OF BLOCK

Courtesy of CHRYSLER LLC

The grade marks for the crankshaft are located on the rearmost crankshaft counter weight as shown in illustration. The crankshaft journal grade marks (A, B, or C) are read left to right, corresponding with journal number 1, 2, 3, 4.

Refer to the **MAIN BEARING SELECTION CHART** to properly select the main bearings. For an example, if the main bore grade is 3 and the journal grade is B, the proper select fit bearing would be a (2) +0.003 mm (+0.0002 in.).

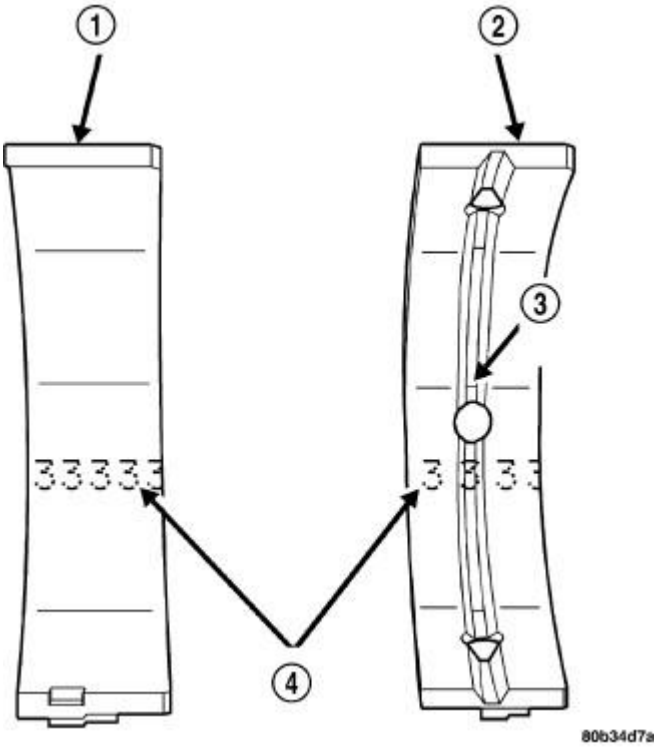

Fig. 299: Main Bearing Grade Marks
Courtesy of CHRYSLER LLC

1 - LOWER MAIN BEARING
2 - UPPER MAIN BEARING
3 - OIL FEED HOLE AND GROOVE
4 - GRADE SELECTION INK MARKS

NOTE: Service main bearings have a number from (1-5) marked in ink on the bearing surface . For verification, refer to the MAIN BEARING SELECTION CHART for number to size identification.

The upper main bearing (2) has a oil feed hole and a center groove to allow lubrication of the main journal and must be properly positioned in the block.

MAIN BEARING SELECTION CHART

-	-	Main Bearing Bore Grade Marks		
-	-	1	2	3
Crankshaft Main Journal Grade Marks Each bearing grade increment of 0.003 mm is for wall thickness so diametrical clearances are adjusted 0.006 mm per select fit class	**A**	(3) Standard	(2) +003 mm (+0.0001 in.)	(1) +0.006 mm (+0.0002 in.)
	B	(4) -0.003 mm (-0.0001 in.)	(3) Standard	(2) +003 mm (+0.0001 in.)
	C	(5) -0.006 mm (-0.0002 in.)	(4) -0.003 mm (-0.0001 in.)	(3) Standard

CHART 1

-	Crankshaft Diameter (mm)	-
Min	Max	Grade
63.9870 mm	63.9956 mm	A
63.9957 mm	64.0042 mm	B
64.0043 mm	64.0130 mm	C

CHART 2

-	Block Main Bore Diameter (mm)	-
Min	Max	Grade
68.9895 mm	68.9964 mm	1
68.9965 mm	69.0034 mm	2
69.0035 mm	69.0105 mm	3

-	-	Block Main Bore Grade		
-	-	1	2	3
Crankshaft Journal Grade	**A**	Class 3	Class 2	Class 1
	B	Class 4	Class 3	Class 2
	C	Class 5	Class 4	Class 3

Removal

REMOVAL

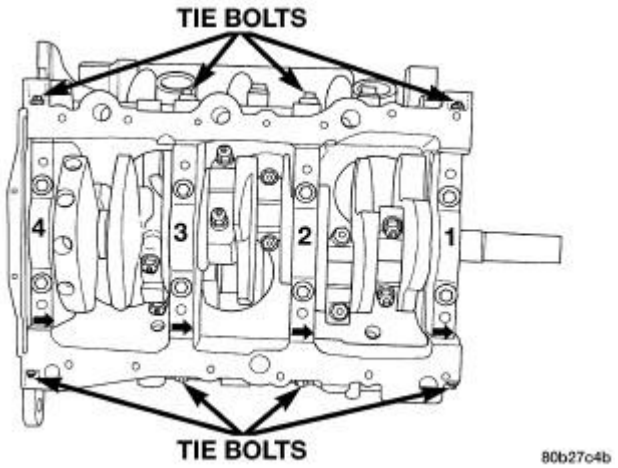

Fig. 300: Main Bearing Cap Identification
Courtesy of CHRYSLER LLC

Bearing caps are not interchangeable and are marked to insure correct assembly . Upper and lower bearing halves are NOT interchangeable.

1. Remove oil pan. See **Engine/Lubrication/PAN, Oil - Removal**
2. Remove oil pick-up tube and windage tray.
3. Identify bearing caps before removal .

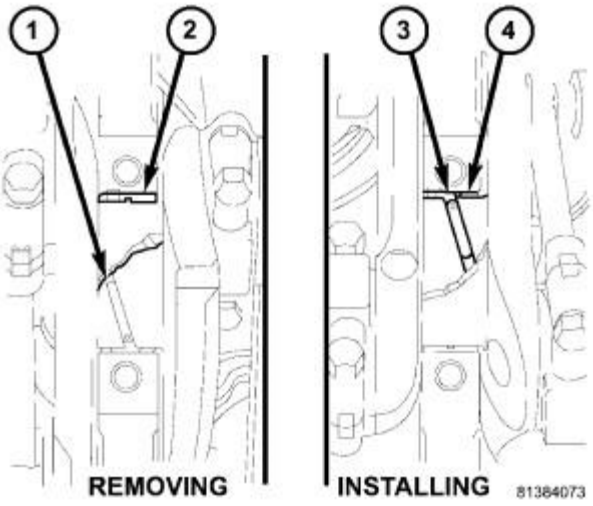

Fig. 301: Removing and Installing Upper Main Bearing With Special Tool C- 3059A
Courtesy of CHRYSLER LLC

1 - SPECIAL TOOL C-3059A
2 - BEARING
3 - SPECIAL TOOL C-3059A
4 - BEARING

4. Remove bearing caps one at a time. Remove upper half of bearing by inserting Main Bearing Tool C-3059A into the oil hole of crankshaft.
5. Slowly rotate crankshaft clockwise, forcing out upper half of bearing shell.

Installation

INSTALLATION

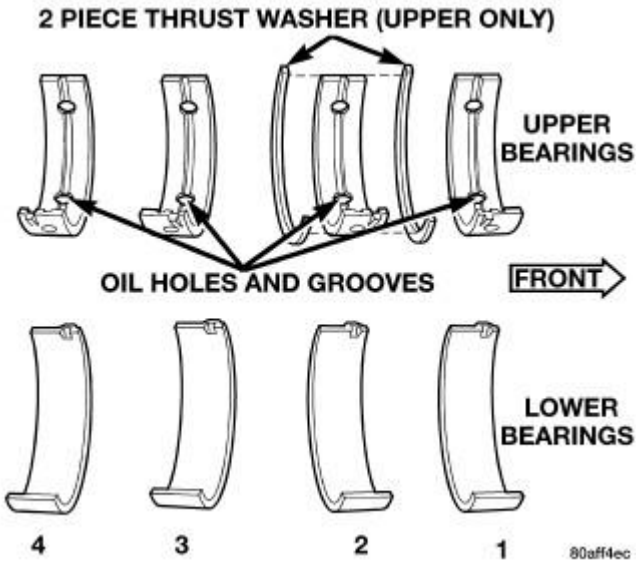

Fig. 302: Main Bearing Identification
Courtesy of CHRYSLER LLC

Bearing caps are not interchangeable and are marked to insure correct assembly. Upper and lower bearing halves are NOT interchangeable .

CAUTION: Main bearings are select fit. See Engine/Engine Block/BEARING(S), Crankshaft - Standard Procedure.

NOTE: Only one main bearing should be selectively fitted while all other main bearing caps are properly tightened.

When installing a new upper bearing shell, slightly chamber the sharp edges from the plain side.

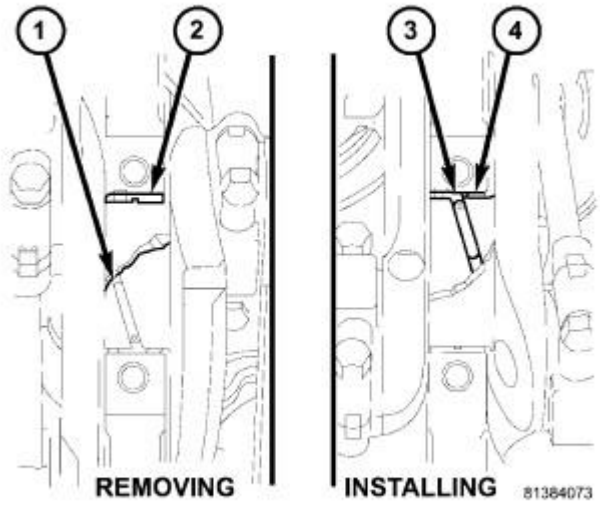

Fig. 303: Removing and Installing Upper Main Bearing With Special Tool C-3059A
Courtesy of CHRYSLER LLC

1 - SPECIAL TOOL C-3059A 2 - BEARING 3 - SPECIAL TOOL C-3059A 4 - BEARING

1. Lubricate main bearing (4) with clean engine oil.
2. Start bearing (4) in place, and insert Main Bearing Tool C-3059A (3) into oil hole of crankshaft .
3. Slowly rotate crankshaft counterclockwise sliding the bearing into position. Remove Main Bearing Tool C-3059A.

NOTE: Lubricate main bearing cap bolts with engine oil before installation.

4. Lubricate and install lower bearing half and main cap Tighten bolts finger tight.

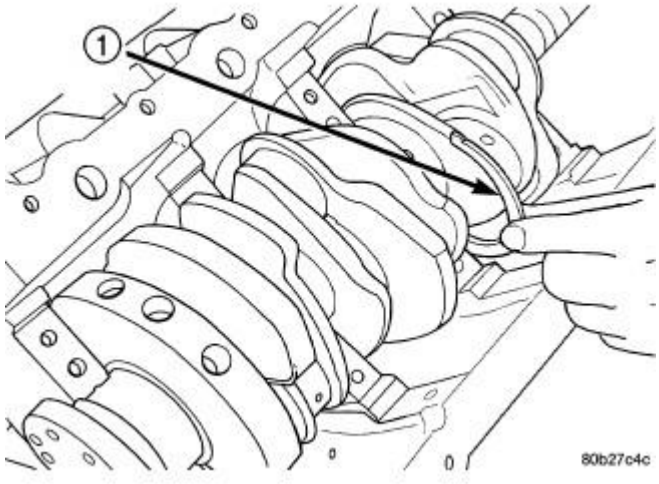

Fig. 304: Thrust Washer Installation
Courtesy of CHRYSLER LLC

1 - FRONT THRUST WASHER

5. For installing thrust washers (1) at the No. 2 main bearing location, use the following procedure:
   a. Move crankshaft forward to limit of travel. Lubricate and install the front thrust washer (1) by rolling the washer onto the machined shelf between the No. 2 upper main bulk head and crankshaft thrust surface .
   b. Move crankshaft rearward to limit of travel. Lubricate and install the rear thrust washer by rolling the washer onto the machined shelf between the No. 2 upper main bulk head and crankshaft thrust surface.

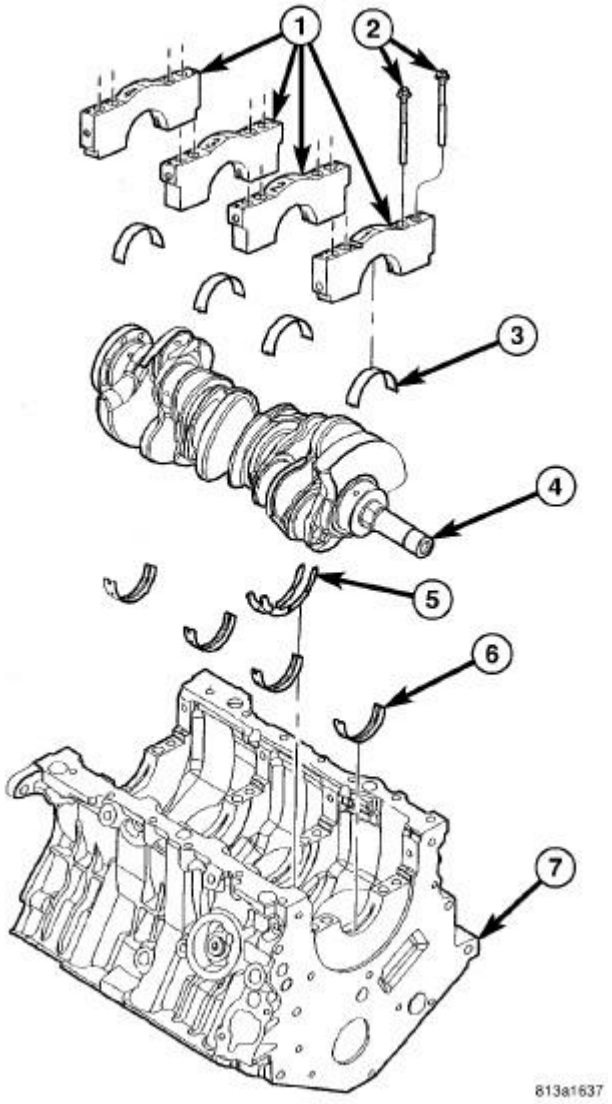

Fig. 305: Cylinder Block & Crankshaft
Courtesy of CHRYSLER LLC

1 - MAIN CAPS
2 - BOLTS
3 - MAIN BEARING-LOWER
4 - CRANKSHAFT
5 - THRUST WASHERS
6 - MAIN BEARING-UPPER
7 - ENGINE BLOCK

The main bearing cap bolts (2) must be tightened in the proper sequence. First the inner main cap bolts, secondly the windage tray bolts, lastly the main cap tie (horizontal) bolts.

6. Install each main bearing cap (1) and tighten inner bolts finger tight.
7. Tighten inner main bearing cap bolts (2) to 20 N.m + 1/4 turn (15 ft. lbs. + 1/4 turn).
8. Measure crankshaft end play. See **Engine/Engine Block/CRANKSHAFT - Standard Procedure**.
9. Install windage tray. Lubricate bolts with engine oil and tighten to 27 N.m + 1/4 turn (20 ft. lbs. + 1/4 turn).

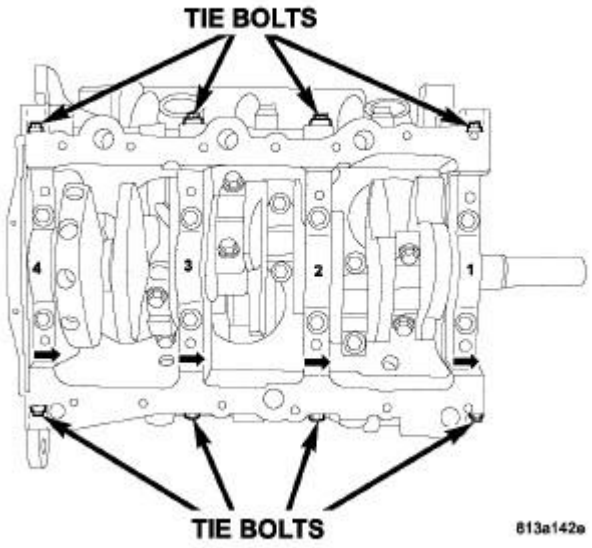

Fig. 306: Main Bearing Cap Identification
Courtesy of CHRYSLER LLC

10. Install the main cap tie (horizontal) bolts and tighten to 28 N.m (250 in. lbs.)
11. Install oil pick-up tube.
12. Install oil pan. See **Engine/Lubrication/PAN, Oil - Installation**.
13. Fill engine crankcase with proper oil to correct level.

CRANKSHAFT

Description

DESCRIPTION

The crankshaft is constructed of a forged micro alloy steel. A six throw, nine counterweight crankshaft is supported by four select fit main bearings with number two serving as the thrust washer location. The six separate connecting rod throws are an even-firing design which reduces torque fluctuations while a torsional vibration damper is used to control torsion caused vibration of the crankshaft. Rubber lipped seals are used at front and rear. The front seal is retained in the oil pump case and the

rear seal is retained in a block-mounted housing.

Operation

OPERATION

The crankshaft transfers force generated by combustion within the cylinder to the flywheel or flexplate.

Standard Procedure

MEASURING CRANKSHAFT END PLAY

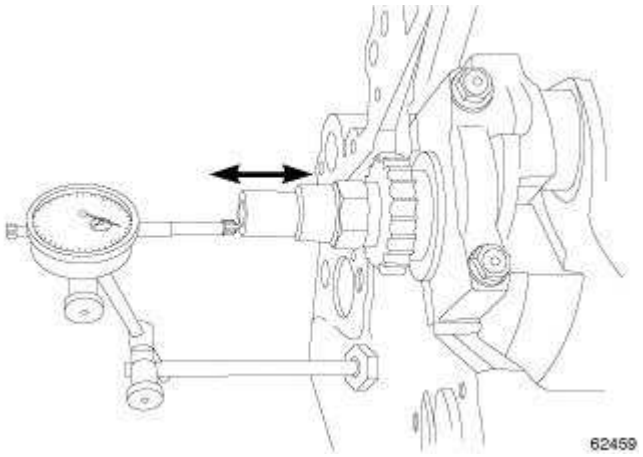

Fig. 307: Measuring Crankshaft End Play
Courtesy of CHRYSLER LLC

1. Mount a dial indicator to front of engine with the locating probe on nose of crankshaft.
2. Move crankshaft all the way to the rear of its travel.
3. Zero the dial indicator.
4. Move crankshaft all the way to the front and read the dial indicator. Crankshaft end play must be within specification. See **Engine - Specifications**.

Removal

REMOVAL

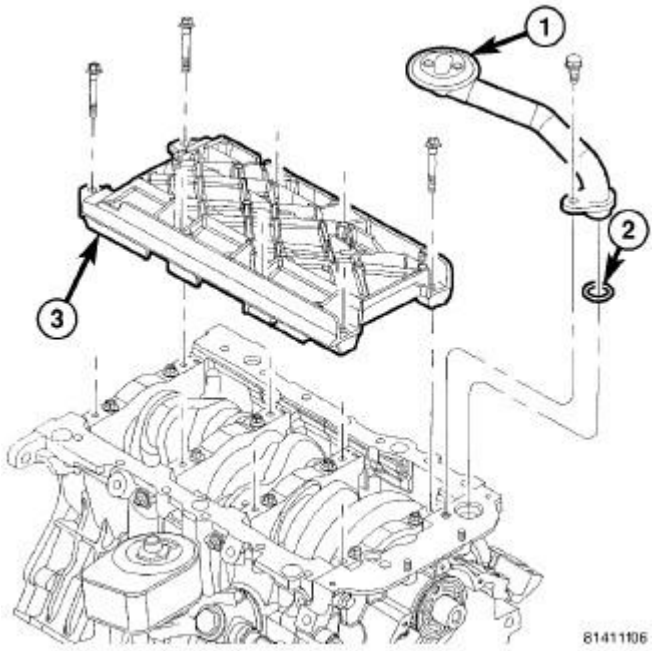

Fig. 308: Oil Pick Up Tube & Windage Tray
Courtesy of CHRYSLER LLC

1 - OIL PICK UP TUBE 2 - SEAL 3 - WINDAGE TRAY

1. Remove engine from vehicle. See **Engine - Removal**.
2. Remove oil pan. See **Engine/Lubrication/PAN, Oil - Removal**.
3. Remove oil pickup tube (1) and windage tray (3).
4. Remove front timing belt cover. See **Engine/Valve Timing/COVER(S), Engine Timing - Removal**.
5. Remove timing belt and tensioner. See **Engine/Valve Timing/BELT and SPROCKETS, Timing - Removal**.
6. Remove crankshaft sprocket. See **Engine/Valve Timing/BELT and SPROCKETS, Timing - Removal**.
7. Tap dowel pin out of crankshaft.
8. Remove oil pump assembly. See **Engine/Lubrication/PUMP, Engine Oil - Removal**.

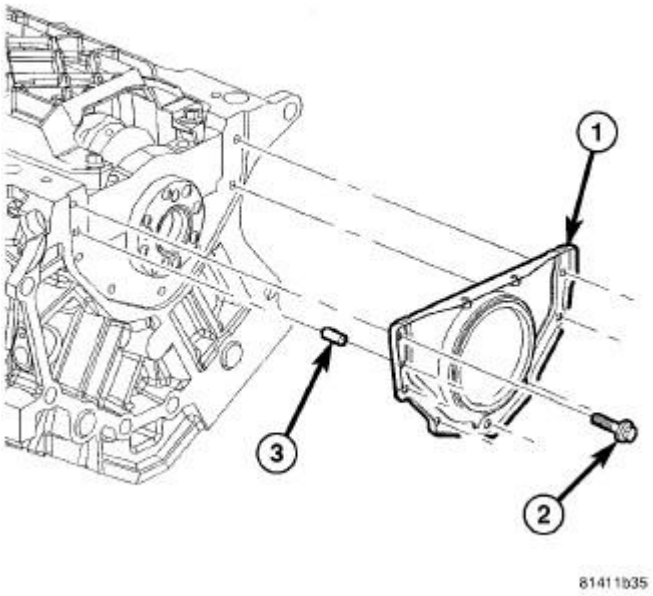

Fig. 309: Rear Crankshaft Oil Seal & Retainer
Courtesy of CHRYSLER LLC

1 - REAR OIL SEAL AND RETAINER ASSEMBLY
2 - BOLT
3 - ALIGNMENT DOWEL

9. Remove crankshaft rear oil seal retainer (1).

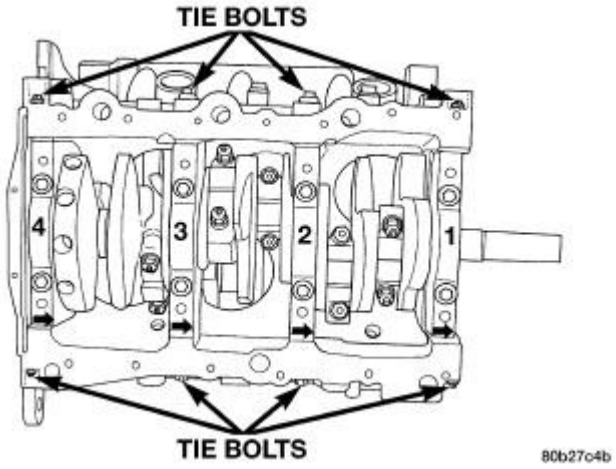

Fig. 310: Main Bearing Cap Identification
Courtesy of CHRYSLER LLC

NOTE: Do not use a metal stamp to mark the bearing caps. Do use a scribe or

paint mark.

10. Identify rod bearing caps before removal. Also scribe a location reference mark from the #2 main bearing cap to the engine block to use as a guide during reassembly.
11. Remove connecting rod bearing caps. Connecting rod bearing caps are not interchangeable and should be paint marked or scribed before removal to insure correct assembly.

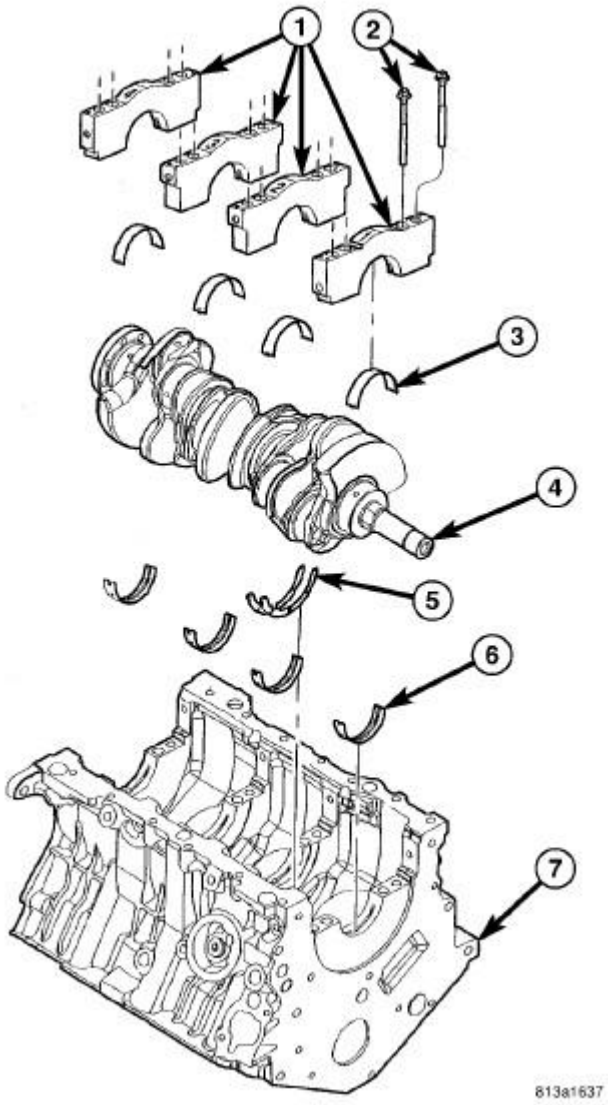

Fig. 311: Cylinder Block & Crankshaft
Courtesy of CHRYSLER LLC

12. Remove main bearing caps (1). Main bearing caps are not interchangeable and are marked to insure correct assembly and location.
13. Remove crankshaft (4) from cylinder block (7).

NOTE: **Before installing crankshaft, refer to fitting of main bearings and installation of connecting rod bearings. See Engine/Engine Block/BEARING(S), Crankshaft - Standard Procedure. See Engine/Engine Block/BEARING(S), Connecting Rod - Standard Procedure.**

Inspection

INSPECTION

The crankshaft journals should be checked for excessive wear, taper and scoring. Limits of taper on any crankshaft journals should be held to 0.010 mm (0.0004 in.). Limits for journal roundness should be 0.008 mm (0.0003 in.). Journal grinding should not exceed 0.254 mm (0.010 in.) under the standard journal diameter. DO NOT grind thrust faces of Number 2 main bearing. DO NOT nick crank pin or bearing fillets. After grinding, remove rough edges from crankshaft oil holes and clean out all passages. Crank journals must be polished smooth 0.10 micron ra.

CAUTION: **With a forged steel crankshaft it is important that the final paper or cloth polish after any journal regrind be in the same direction as normal rotation in the engine.**

Installation

INSTALLATION

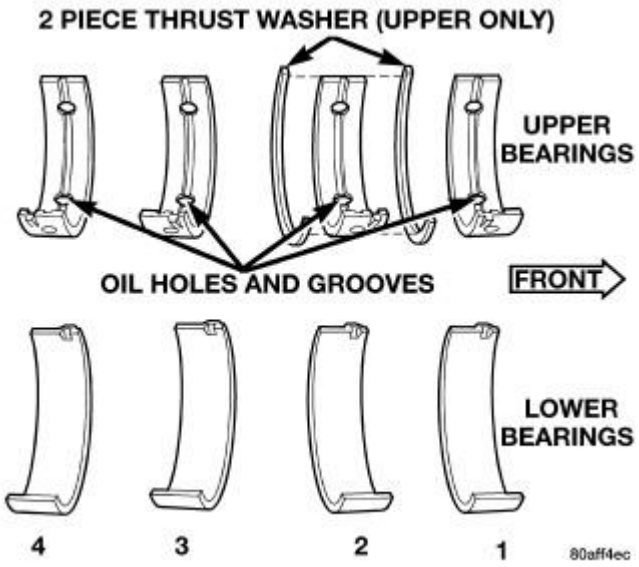

Fig. 312: Main Bearing Identification
Courtesy of CHRYSLER LLC

CAUTION: **Main bearings are select fit. See Engine/Engine Block/BEARING(S), Crankshaft - Standard Procedure for proper bearing size selection.**

1. Install crankshaft upper main bearings in cylinder block. Ensure oil holes in bearings line up with oil holes in cylinder block. See **Engine/Engine Block/BEARING(S), Crankshaft - Standard Procedure**.
2. Install the crankshaft to cylinder block.

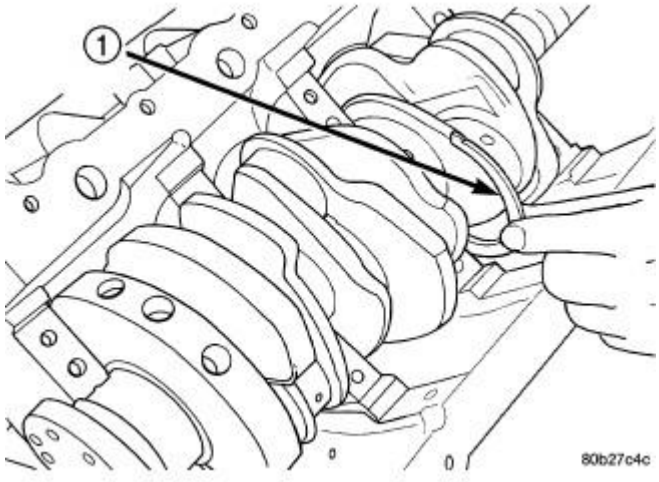

Fig. 313: Thrust Washer Installation
Courtesy of CHRYSLER LLC

1 - FRONT THRUST WASHER

3. Move crankshaft forward to limit of travel. Lubricate and install the front thrust washer by rolling the washer onto the machined shelf between the No. 2 upper main bulk head and crankshaft thrust surface.
4. Move crankshaft rearward to limit of travel. Lubricate and install the rear thrust washer by rolling the washer onto the machined shelf between the No. 2 upper main bulk head and crankshaft thrust surface.

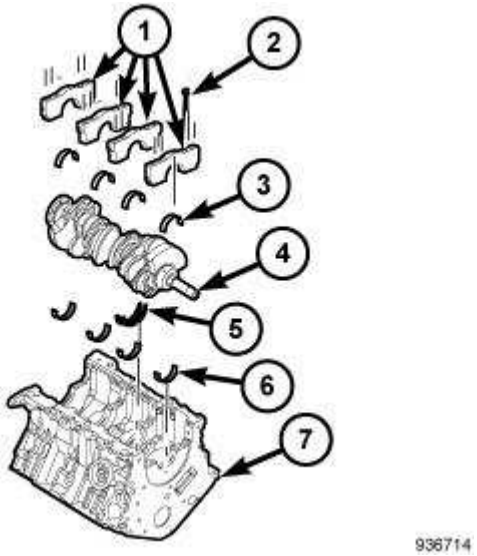

Fig. 314: Main Bearings Assembly
Courtesy of CHRYSLER LLC

5. Install lower main bearings (3) into main bearing caps (1).
6. Lubricate lower main bearings (3) with clean engine oil.

NOTE: Lubricate main bearing cap inner bolts (2) with engine oil before installation.

7. Install each main cap (1) and tighten inner bolts (2) finger tight. Align the location reference mark scribed on the #2 main bearing cap during disassembly.

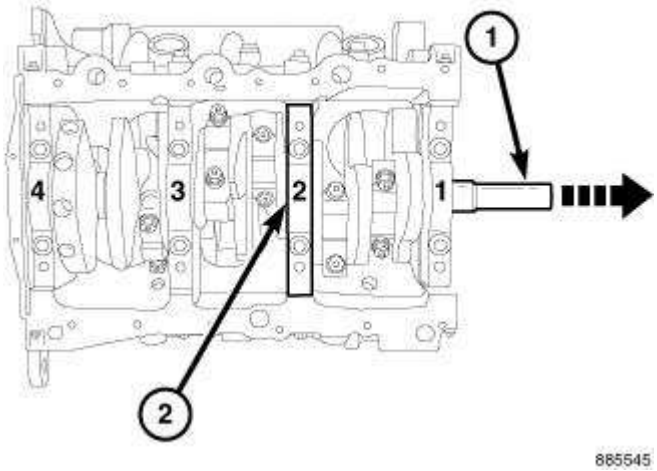

Fig. 315: Moving Crankshaft Forward
Courtesy of CHRYSLER LLC

CAUTION: The #2 main bearing cap must be centered over the inner bolt holes located on the block. Failure to center the bearing cap can result in contact with the crankshaft counterweights and thrust bearing failure.

8. Verify that the #2 main bearing cap is properly centered over the inner bolt holes located in the block. Tighten main bearing cap inner bolts to 20 N.m (15 ft. lbs.).
9. Move crankshaft (1) forward to limit of travel so that crankshaft thrust face (2) is tight against thrust bearing.
10. Verify that a 0.25 mm (0.010 inch) shim or feeler gage will fit between the #2 main cap (rear face) and the crankshaft thrust face. Slide the gage side-to-side all of the way across the cap making sure that the clearance at all areas exceeds 0.25 mm (0.010 inch). The feeler gage should slide all the way down to the #2 main journal.

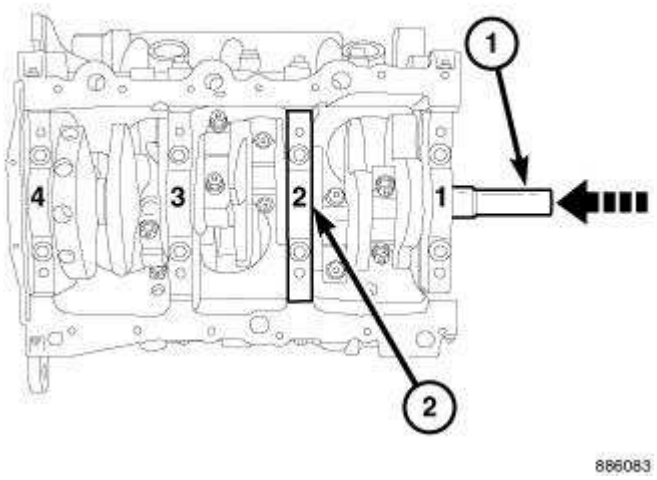

Fig. 316: Moving Crankshaft Rearward
Courtesy of CHRYSLER LLC

11. Move crankshaft (1) rearward to limit of travel so that crankshaft thrust face (2) is tight against thrust bearing.
12. Verify that a 0.25 mm (0.010 inch) shim or feeler gage will fit between the #2 main cap (front face) and the crankshaft thrust face. Slide the gage side-to-side all of the way across the cap making sure that the clearance at all areas exceeds 0.25 mm (0.010 inch). The feeler gage should slide all the way down to the #2 main journal.
13. A properly centered #2 main bearing cap has a minimum of 0.25 mm (0.010 inch) clearance in both the forward and rearward crankshaft positions. If measured clearance is less than 0.25 mm (0.010 inch), loosen and reposition #2 main bearing cap until this minimum clearance can be verified by repeating this procedure.
14. Following verification of proper #2 bearing cap centering, finish tightening the main bearing cap inner bolts an additional 90° turn.

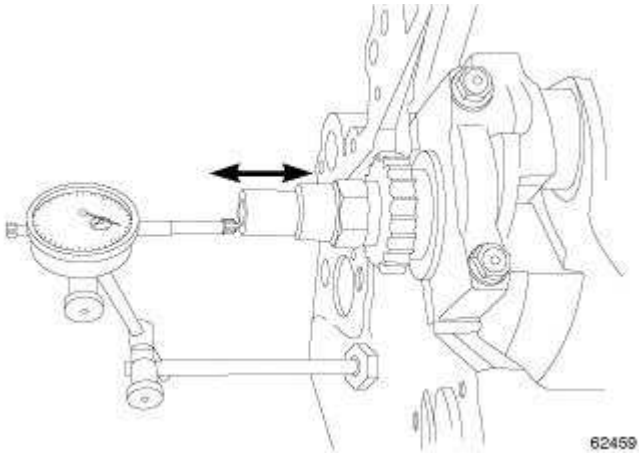

Fig. 317: Measuring Crankshaft End Play
Courtesy of CHRYSLER LLC

15. Measure crankshaft end play. See **Engine/Engine Block/CRANKSHAFT - Standard Procedure**.

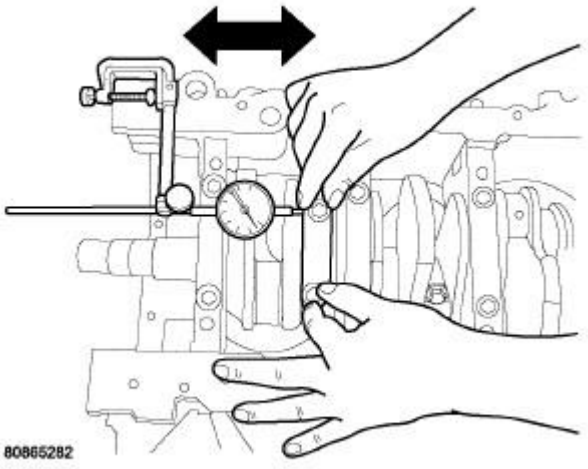

Fig. 318: Measuring Connecting Rod Side Clearance
Courtesy of CHRYSLER LLC

16. Install connecting rods and measure side clearance. See **Engine/Engine Block/BEARING(S), Connecting Rod - Standard Procedure**.

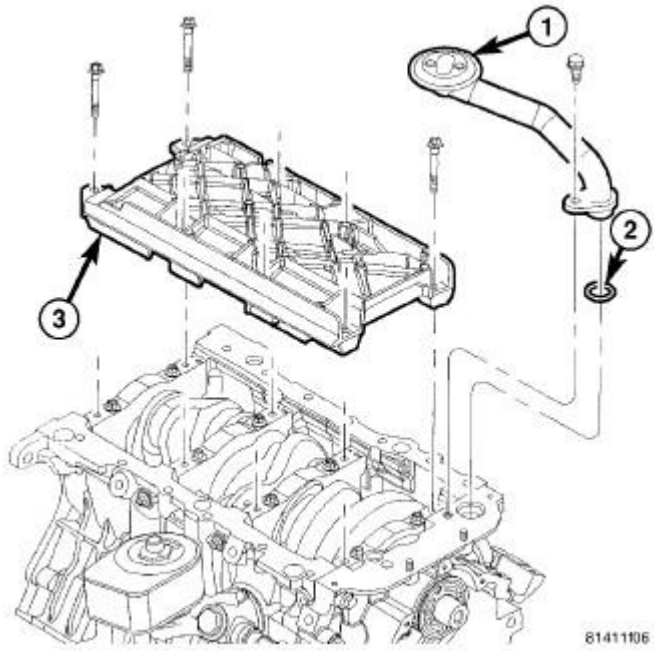

Fig. 319: Oil Pick Up Tube & Windage Tray
Courtesy of CHRYSLER LLC

1 - OIL PICK UP TUBE
2 - SEAL
3 - WINDAGE TRAY

NOTE: The main bearing cap bolts must be tightened in the proper sequence. First the inner main cap bolts, secondly the windage tray bolts, lastly the main cap tie (horizontal) bolts.

17. Install windage tray (3). Lubricate bolts with engine oil. Finger tighten all bolts first, then tighten to 28 N.m + 90° turn (20 ft. lbs. + 90° turn) beginning with the inside bolts tightening outward.
18. Install oil pickup tube (1) and tighten bolt to 28 N.m (20 ft. lbs.).

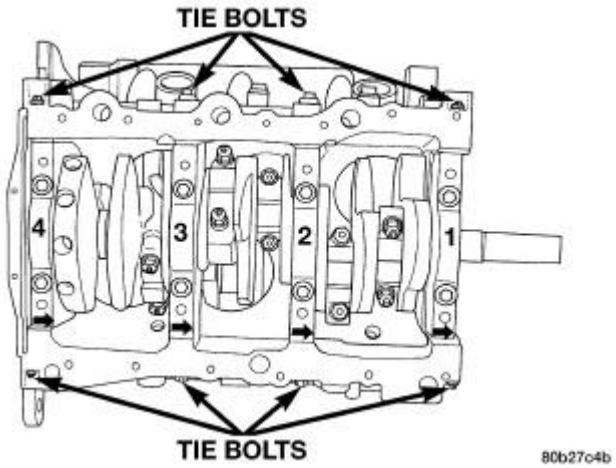

Fig. 320: Main Bearing Cap Identification
Courtesy of CHRYSLER LLC

19. Install the main cap tie (horizontal) bolts and tighten to 28 N.m (20 ft. lbs.).

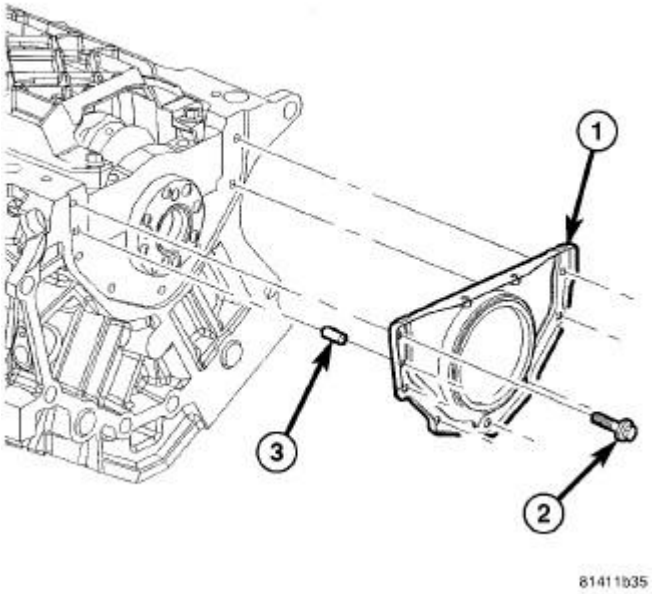

Fig. 321: Rear Crankshaft Oil Seal & Retainer
Courtesy of CHRYSLER LLC

1 - REAR OIL SEAL AND RETAINER ASSEMBLY
2 - BOLT
3 - ALIGNMENT DOWEL

20. Install rear crankshaft oil seal retainer and oil seal. Refer to **Engine/Engine Block/RETAINER,**

Crankshaft Rear Oil Seal - Installation . See **Engine/Engine Block/SEAL, Crankshaft Oil - Installation**.

21. Install oil pump assembly. See **Engine/Lubrication/PUMP, Engine Oil - Installation**.
22. Install dowel pin in crankshaft. See **Engine/Engine Block/SEAL, Crankshaft Oil - Installation**.
23. Install crankshaft sprocket. See **Engine/Valve Timing/BELT and SPROCKETS, Timing - Installation**.
24. Install timing belt and tensioner. See **Engine/Valve Timing/BELT and SPROCKETS, Timing - Installation**.
25. Install front timing belt cover. See **Engine/Valve Timing/COVER(S), Engine Timing - Installation**.
26. Install oil pan. See **Engine/Lubrication/PAN, Oil - Installation**.
27. Install engine assembly. See **Engine - Installation**.
28. Fill engine crankcase with proper amount of oil.

DAMPER, VIBRATION

Removal

REMOVAL

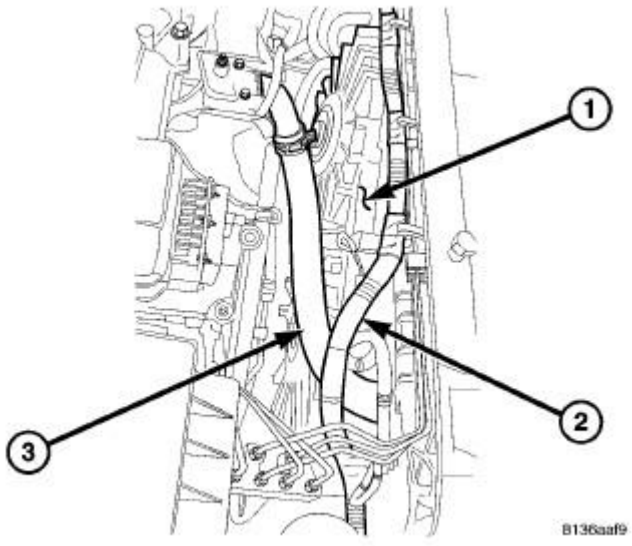

Fig. 322: Radiator Fan Assembly
Courtesy of CHRYSLER LLC

1 - RADIATOR FAN ASSEMBLY
2 - ELECTRICAL CONNECTOR
3 - UPPER RADIATOR HOSE

1. Disconnect and isolate the negative battery cable.

2. Partially drain the cooling system. Refer to **Cooling - Standard Procedure** .
3. Remove the upper radiator hose (3).
4. Disconnect the cooling fan electrical connector (2).
5. Remove the cooling fan mounting bolts.
6. Remove the radiator cooling fan assembly (1) from the vehicle.

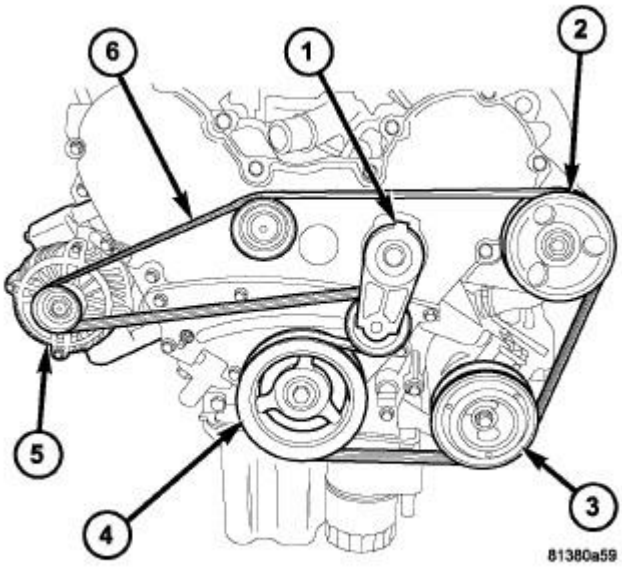

Fig. 323: ACCESSORY DRIVE BELT ROUTING
Courtesy of CHRYSLER LLC

1 - DRIVE BELT TENSIONER
2 - POWER STEERING PULLEY
3 - AIR CONDITIONING COMPRESSOR
4 - CRANKSHAFT DAMPER
5 - GENERATOR
6 - DRIVE BELT

7. Remove the accessory drive belt (6). Refer to **Cooling/Accessory Drive/BELT, Serpentine - Removal** .

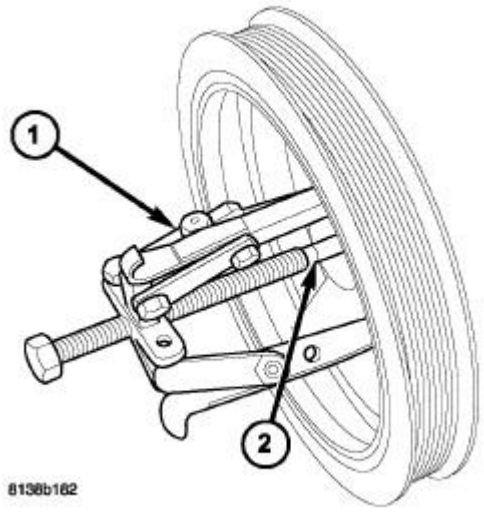

Fig. 324: Puller 1023 & Crankshaft Insert 9020
Courtesy of CHRYSLER LLC

1 - SPECIAL TOOL 1023 PULLER 2 - SPECIAL TOOL 9020-R INSERT

8. Remove the crankshaft damper bolt.
9. Remove the crankshaft damper using Puller 1023 (1) and Crankshaft Insert 9020 (2).

Installation

INSTALLATION

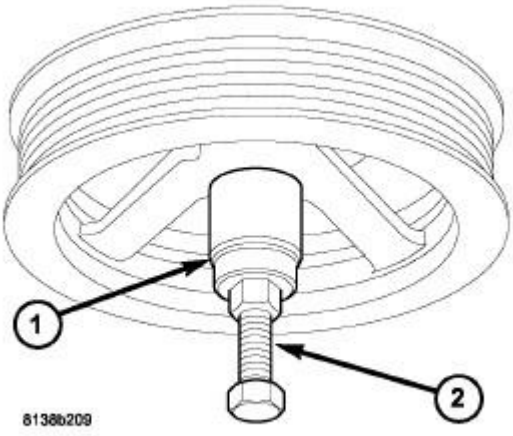

Fig. 325: CRANKSHAFT DAMPER - INSTALLATION
Courtesy of CHRYSLER LLC

1 - SPECIAL TOOL 6792-1 2 - SPECIAL TOOL C-4685-C1

1. Install the crankshaft damper using the 5.9 inch long Forcing Screw C-4685-C1 (2) with Nut and Thrust Bearing from Crank Sprocket Installer 6792 (1).

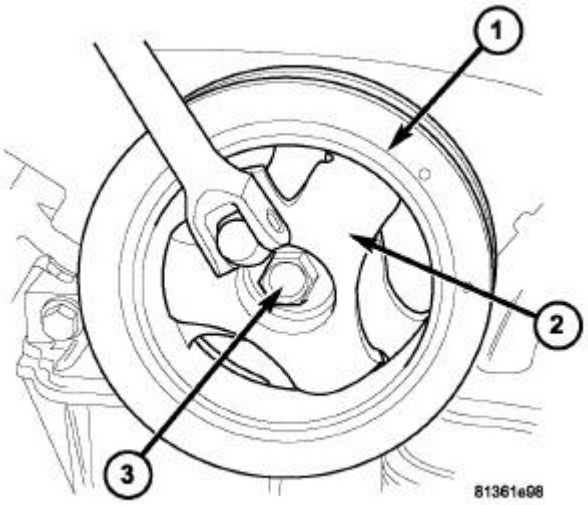

Fig. 326: Damper Holder
Courtesy of CHRYSLER LLC

2. Install the crankshaft damper bolt (3). Tighten the bolt to 95 N.m (70 ft. lbs.) while holding the damper (1) with Damper Holding Fixture 9365 (2).

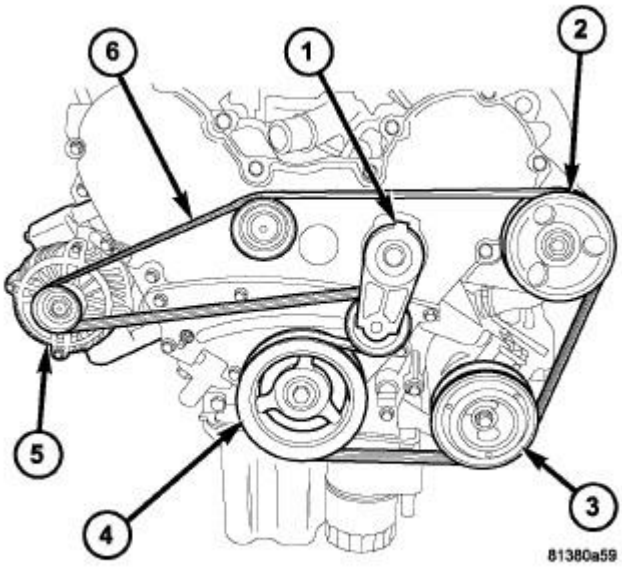

Fig. 327: ACCESSORY DRIVE BELT ROUTING
Courtesy of CHRYSLER LLC

1 - DRIVE BELT TENSIONER
2 - POWER STEERING PULLEY
3 - AIR CONDITIONING COMPRESSOR
4 - CRANKSHAFT DAMPER
5 - GENERATOR
6 - DRIVE BELT

3. Install the accessory drive belt (6). Refer to **Cooling/Accessory Drive/BELT, Serpentine - Installation** .

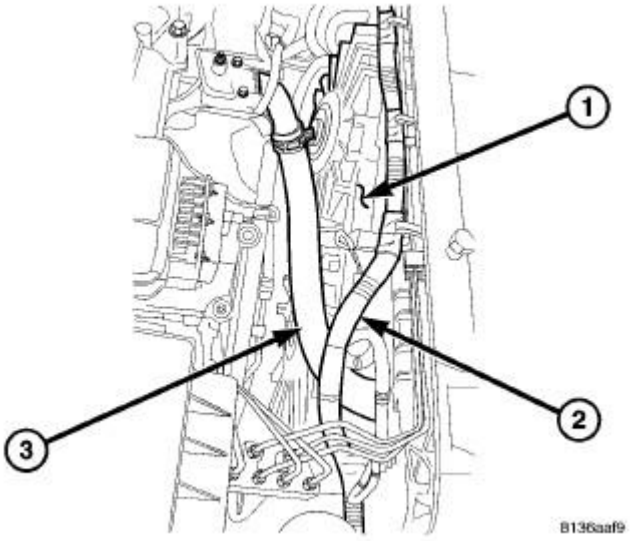

Fig. 328: Radiator Fan Assembly
Courtesy of CHRYSLER LLC

1 - RADIATOR FAN ASSEMBLY
2 - ELECTRICAL CONNECTOR
3 - UPPER RADIATOR HOSE

4. Position the radiator cooling fan assembly (1) in the vehicle.
5. Install the cooling fan mounting bolts. Tighten the bolts to 6 N.m (50 in. lbs.).
6. Connect the cooling fan electrical connector (2).
7. Install the upper radiator hose (3).
8. Connect the negative battery cable and tighten nut to 5 N.m (45 in. lbs.).
9. Fill the cooling system. Refer to **Cooling - Standard Procedure** .
10. Operate the engine until it reaches normal operating temperature. Check the cooling system for correct fluid level. Refer to **Cooling - Standard Procedure** .

FLEXPLATE

Removal

REMOVAL

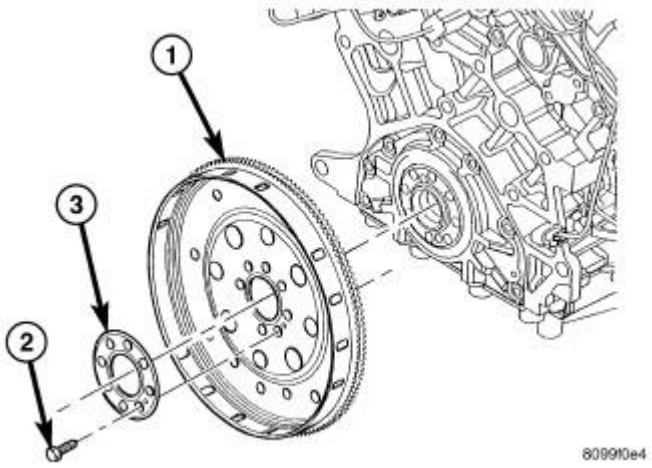

Fig. 329: Flex Plate With Bolts & Backing Plate
Courtesy of CHRYSLER LLC

1 - FLEX PLATE 2 - BOLT (QTY. 8) 3 - BACKING PLATE

1. Remove the transmission. Refer to **Transmission and Transfer Case/Automatic - 42RLE - Removal** . Refer to **Transmission and Transfer Case/Automatic - NAG1 - Removal** .
2. Remove the flex plate attaching bolts (2).
3. Remove the flex plate (1) and backing plate (3).

Installation

INSTALLATION

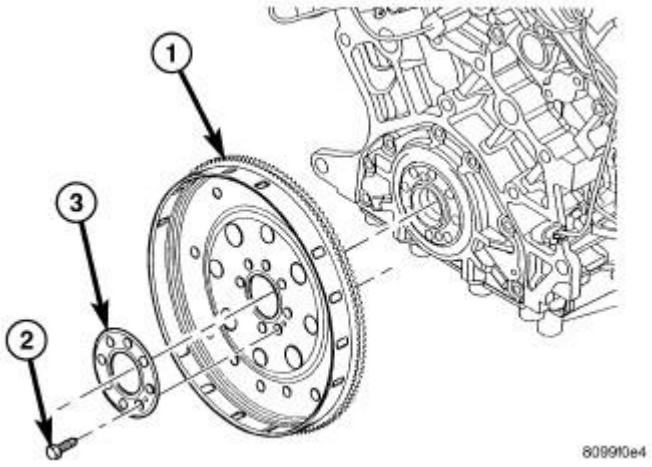

Fig. 330: Flex Plate With Bolts & Backing Plate
Courtesy of CHRYSLER LLC

1 - FLEX PLATE 2 - BOLT (QTY. 8) 3 - BACKING PLATE

1. Position the flex plate (1) with backing plate (3) on the crankshaft.
2. Apply Mopar® Lock AND Seal Adhesive to the eight flex plate bolts (2).
3. Install the flex plate bolts (2). Tighten the bolts to 95 N.m (70 ft. lbs.).
4. Install the transmission. Refer to **Transmission and Transfer Case/Automatic - 42RLE - Installation** . Refer to **Transmission and Transfer Case/Automatic - NAG1 - Installation** .

NOTE: **The Cam/Crank Variation Relearn procedure must be performed anytime there has been a repair/replacement made to a powertrain system, for example: flywheel, valvetrain, camshaft and/or crankshaft sensors or components. Refer to DTC-Based Diagnostics/MODULE, Powertrain Control (PCM) - Standard Procedure .**

RING(S), PISTON

Description

DESCRIPTION

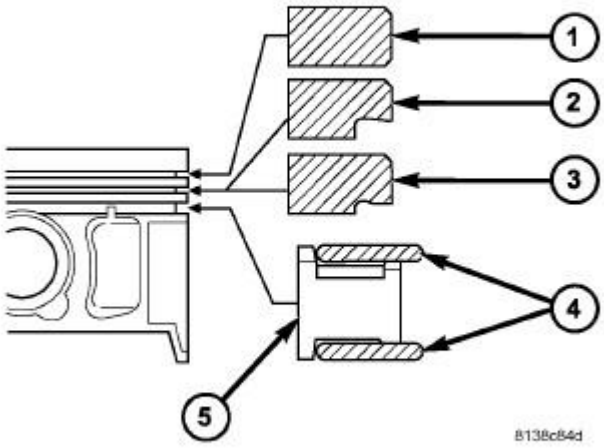

Fig. 331: PISTON RINGS
Courtesy of CHRYSLER LLC

1 - TOP PISTON RING

2 - CHROME INTERMEDIATE PISTON RING
3 - MICRO-NAPIER INTERMEDIATE PISTON RING
4 - OIL CONTROL RINGS
5 - SPACER

The piston rings include a moly-filled top ring with a symmetric barrel face. The intermediate piston ring is of the standard chrome design OR Micro-Napier design. The Micro-Napier design has a reduced "hook" on the running face, removes the need for chroming and improves oil economy. The oil control package consists of two steel rails and an expander spacer .

Standard Procedure

PISTON RING FITTING

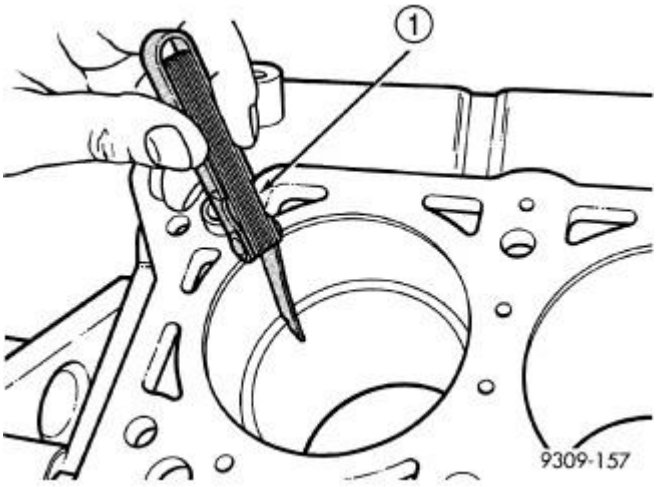

Fig. 332: CHECK GAP ON PISTON RINGS
Courtesy of CHRYSLER LLC

1 - FEELER GAUGE

1. Wipe cylinder bore clean. Insert ring and push down with piston to ensure it is square in bore. The ring gap measurement must be made with the ring positioning at least 12 mm (0.50 in.) from bottom of cylinder bore. Check gap with feeler gauge . For clearance specifications. See **Engine - Specifications**.

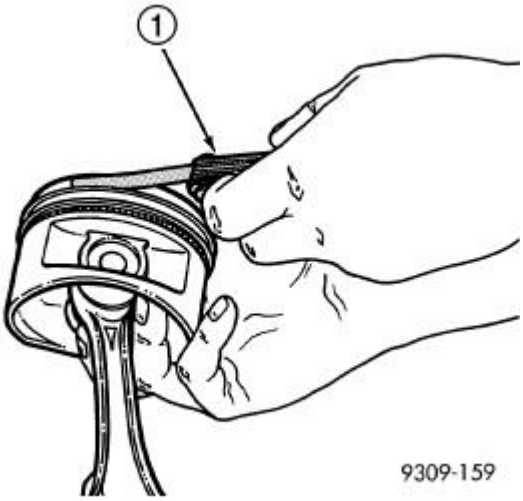

Fig. 333: MEASURING PISTON RING SIDE CLEARANCE
Courtesy of CHRYSLER LLC

1 - FEELER GAUGE

2. Check piston ring to groove clearance: . For clearance specifications, see **Engine - Specifications**.

Removal

REMOVAL

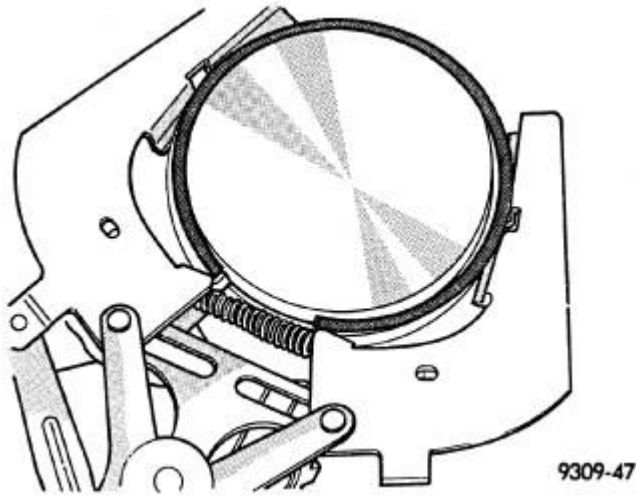

Fig. 334: Removing/Installing Upper And Intermediate Rings
Courtesy of CHRYSLER LLC

1. Remove piston and connecting rod. See **Engine/Engine Block/ROD, Piston and Connecting - Removal**.
2. Remove No. 1 and No. 2 piston rings from piston using a ring expander tool .

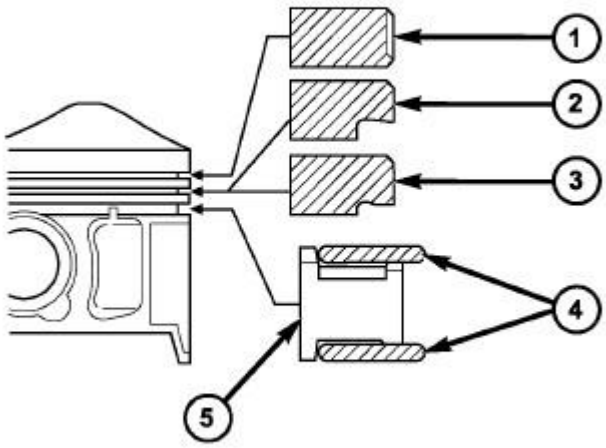

Fig. 335: PISTON RINGS
Courtesy of CHRYSLER LLC

1 - TOP PISTON RING
2 - CHROME INTERMEDIATE PISTON RING
3 - MICRO-NAPIER INTERMEDIATE PISTON RING
4 - OIL CONTROL RINGS
5 - SPACER

3. Remove upper oil control ring side rail .
4. Remove lower oil control ring side rail .
5. Remove oil control ring expander

Installation

INSTALLATION

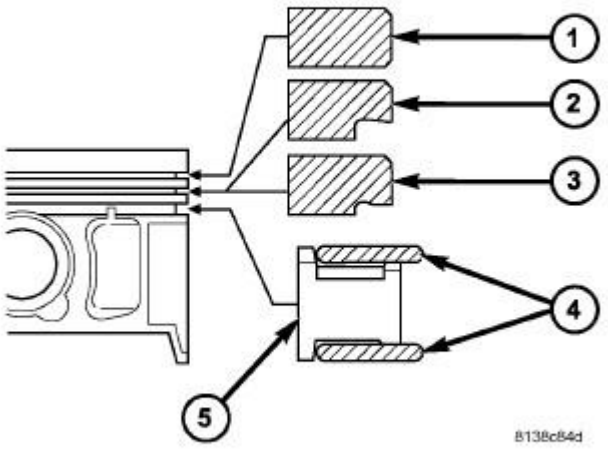

Fig. 336: PISTON RINGS
Courtesy of CHRYSLER LLC

1 - TOP PISTON RING
2 - CHROME INTERMEDIATE PISTON RING
3 - MICRO-NAPIER INTERMEDIATE PISTON RING
4 - OIL CONTROL RINGS
5 - SPACER

1. Measure clearance of piston rings to the cylinder bore and piston. See **Engine/Engine Block/RING(S), Piston - Standard Procedure**.

   The No. 1 and No. 2 piston rings have a different cross section . Insure that which ever design No. 2 ring is installed, it is installed with manufacturers I.D. mark (dot) facing up, towards top of the piston. See **Engine/Engine Block/RING(S), Piston - Description** .

   - Oil ring expander.
   - Lower oil control ring side rail.
   - Upper oil control ring side rail.
   - No. 2 Intermediate piston ring.
   - No. 1 Upper piston ring.
2. Install the side rail by placing one end between the piston ring groove and the spacer. Hold end firmly and press down the portion to be installed until side rail is in position. **Do not use a piston ring expander tool during this step .**

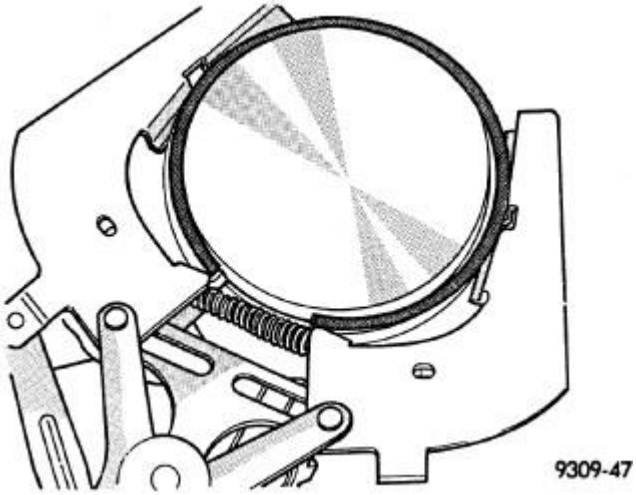

Fig. 337: Removing/Installing Upper And Intermediate Rings
Courtesy of CHRYSLER LLC

3. Install lower side rail first and then the upper side rail.

   The No. 1 and No. 2 piston rings have a different cross section . Insure that which ever design No. 2 ring is installed, it is installed with manufacturers I.D. mark (dot) facing up, towards top of the piston. See **Engine/Engine Block/RING(S), Piston - Description**.

4. Install No. 2 piston ring and then No. 1 piston ring .

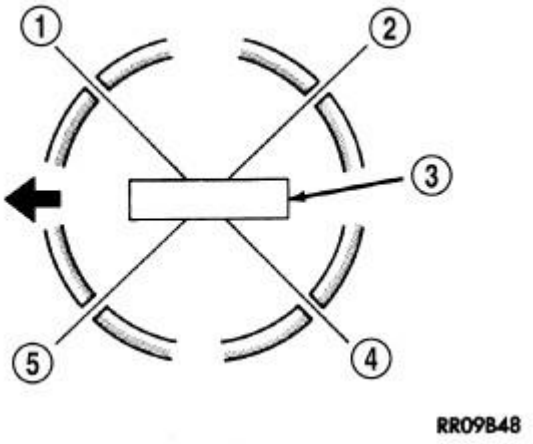

Fig. 338: PISTON RING END GAP POSITION
Courtesy of CHRYSLER LLC

1 - SIDE RAIL UPPER
2 - NO. 1 RING GAP
3 - PISTON PIN
4 - SIDE RAIL LOWER
5 - NO. 2 RING GAP AND SPACER EXPANDER GAP

5. Position piston ring end gaps as shown in illustration.
6. Position oil control ring expander gap at least 45° from the side rail gaps but **not** on the piston pin center or on the thrust direction. Staggering ring gap is important for oil control.

ROD, PISTON AND CONNECTING

Description

DESCRIPTION

The pistons are made of a high strength aluminum alloy. Top land height has been decreased to reduce emissions. Piston skirts are coated with a solid lubricant for scuff resistance. Connecting rod is forged steel with a fractured connecting rod cap design. The connecting rod is also equipped with a squirt hole and attaches to the piston with a full floating pin retained by lock rings.

Operation

OPERATION

The piston and connecting rod assembly is the link between the combustion force and the crankshaft.

Standard Procedure

FITTING PISTONS

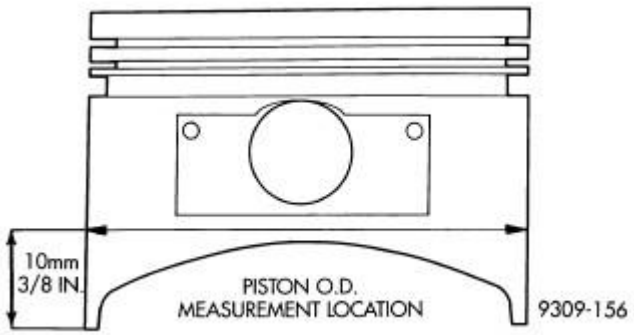

Fig. 339: Piston Measurements
Courtesy of CHRYSLER LLC

The pistons are machined to two different weight specifications and matched to rods based on weight. All piston and rod assemblies weigh the same to maintain engine balance.

Piston and cylinder wall must be clean and dry. Piston diameter should be measured 90° to piston pin at size location shown in illustration. Cylinder bores should be measured halfway down the cylinder bore and transverse to the engine crankshaft center line. See **Engine - Specifications**. **Pistons and cylinder bores should be measured at normal room temperature, 70°F (21°C).**

Removal

REMOVAL

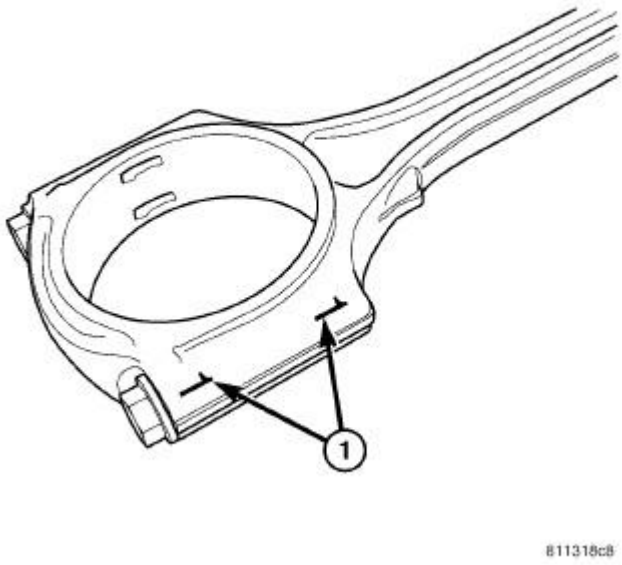

Fig. 340: CONNECTING ROD TO CYLINDER IDENTIFICATION
Courtesy of CHRYSLER LLC

1 - PAINT MARK OR SCRIBE

1. Remove the cylinder heads. See **Engine/Cylinder Head - Removal**.
2. Remove the oil pan. See **Engine/Lubrication/PAN, Oil - Removal**.
3. Remove top ridge of cylinder bores with a reliable ridge reamer before removing pistons from cylinder block. **Be sure to keep tops of pistons covered during this operation. Pistons and connecting rods must be removed from top of cylinder block. When removing piston and connecting rod assemblies from the engine, rotate crankshaft so that each connecting rod is centered in cylinder bore.**

CAUTION: DO NOT stamp the connecting rods for cylinder identification

4. Inspect connecting rods and connecting rod caps for cylinder identification. Identify them with a paint mark or scribe, if necessary .

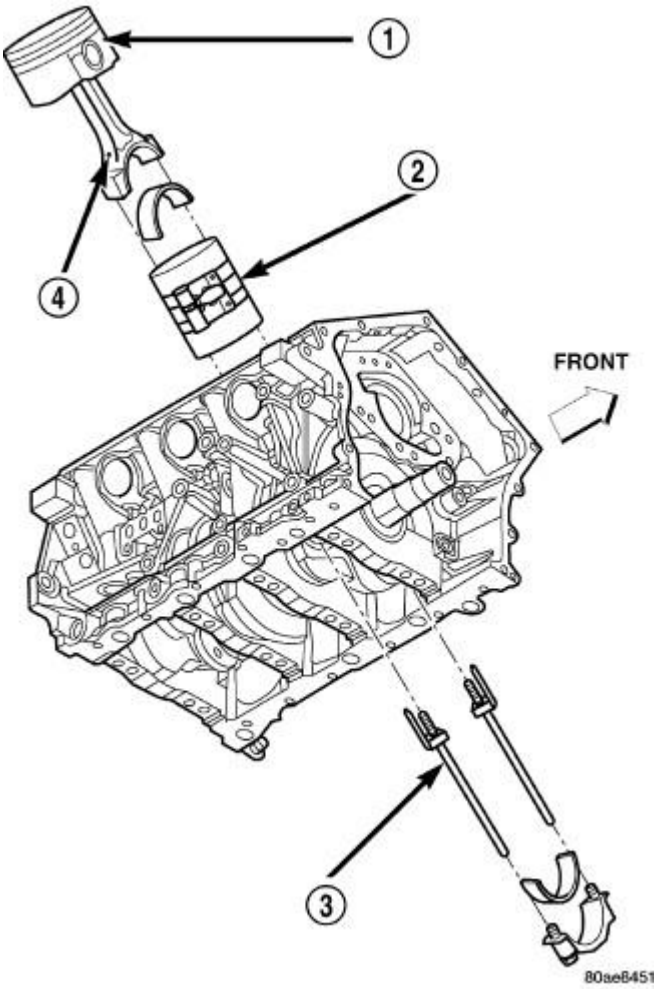

Fig. 341: Piston and Connecting Rod
Courtesy of CHRYSLER LLC

5. Remove connecting rod cap. Install protectors, tool 8189, on connecting rod . Guide each piston and rod assembly out of cylinder bore.

NOTE: Be careful not to nick crankshaft journals.

6. After removal, install bearing cap on the mating rod.

Installation

INSTALLATION

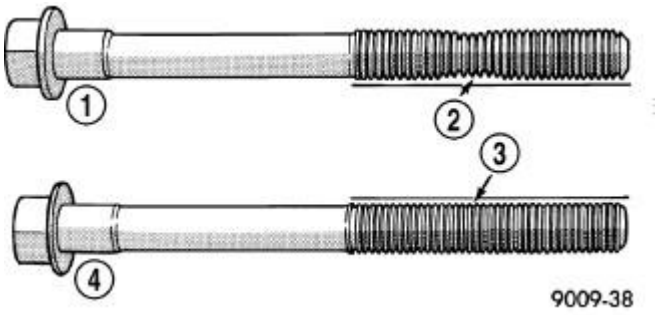

Fig. 342: Check for Stretched Bolts
Courtesy of CHRYSLER LLC

1 - STRETCHED BOLT 2 - THREADS ARE NOT STRAIGHT ON LINE 3 - THREADS ARE STRAIGHT ON LINE 4 - UNSTRETCHED BOLT

1. Install the piston rings. See **Engine/Engine Block/RING(S), Piston - Installation**.

NOTE: **The connecting rod bearing cap bolts must be examined before reuse. If the threads are necked down, the bolts must be replaced.**

2. Check connecting rod bolts for necking by holding a scale or straight edge against the threads. If all threads do not contact the scale, the bolt must be replaced .

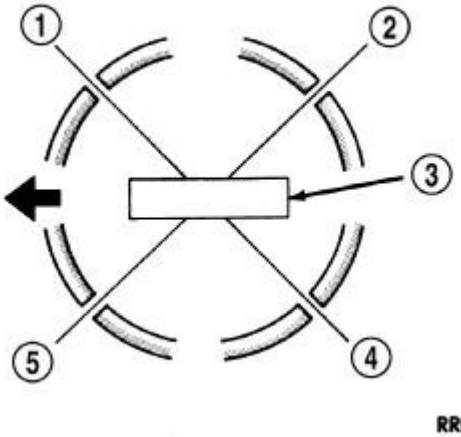

Fig. 343: PISTON RING END GAP POSITION
Courtesy of CHRYSLER LLC

1 - SIDE RAIL UPPER 2 - NO. 1 RING GAP 3 - PISTON PIN 4 - SIDE RAIL LOWER

5 - NO. 2 RING GAP AND SPACER EXPANDER GAP

3. Before installing pistons and connecting rod assemblies into the bore, ensure that compression ring gaps are staggered so that neither is in line with oil ring rail gap .

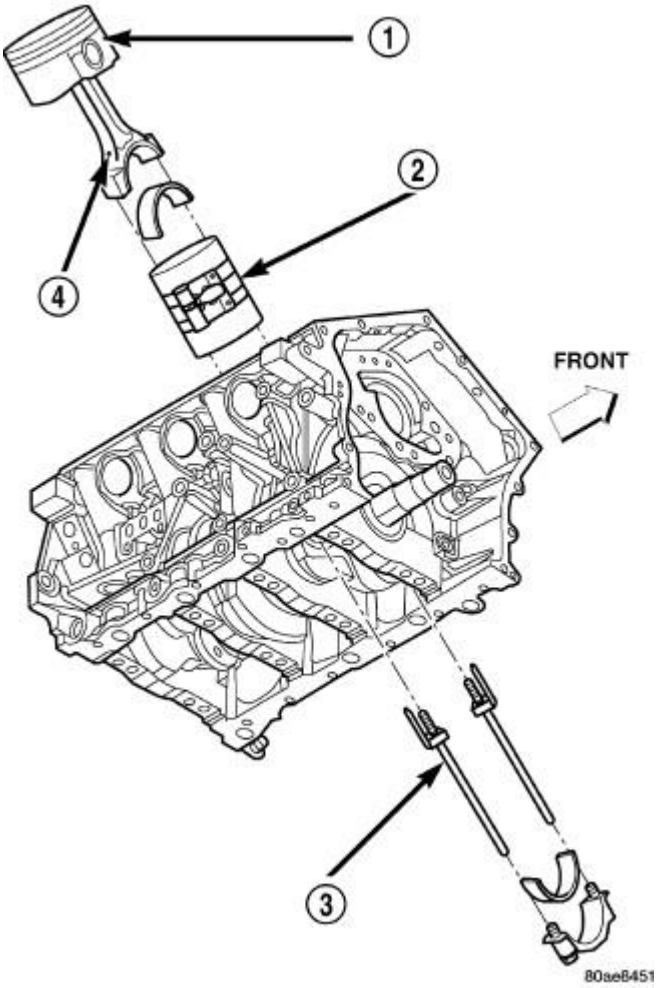

Fig. 344: Piston and Connecting Rod
Courtesy of CHRYSLER LLC

4. Immerse the piston head and rings in clean engine oil, slide the ring compressor over the piston and tighten with the special wrench . **Ensure position of rings does not change during this operation.**
5. Install connecting rod bolt protectors, special tool # 8189 .
6. Rotate crankshaft so that the connecting rod journal is on the center of the cylinder bore. Insert the rod and piston into cylinder bore and guide the rod over the crankshaft journal.

CAUTION: Do Not interchange piston assemblies cylinder-to-cylinder or bank-to-bank.

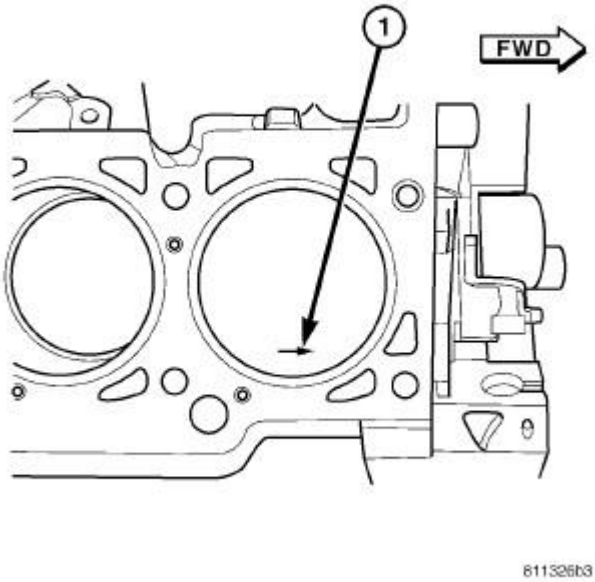

Fig. 345: PISTON ORIENTATION
Courtesy of CHRYSLER LLC

1 - ARROW FACES FRONT OF ENGINE

7. The arrow on top of piston must be pointing toward front of engine.

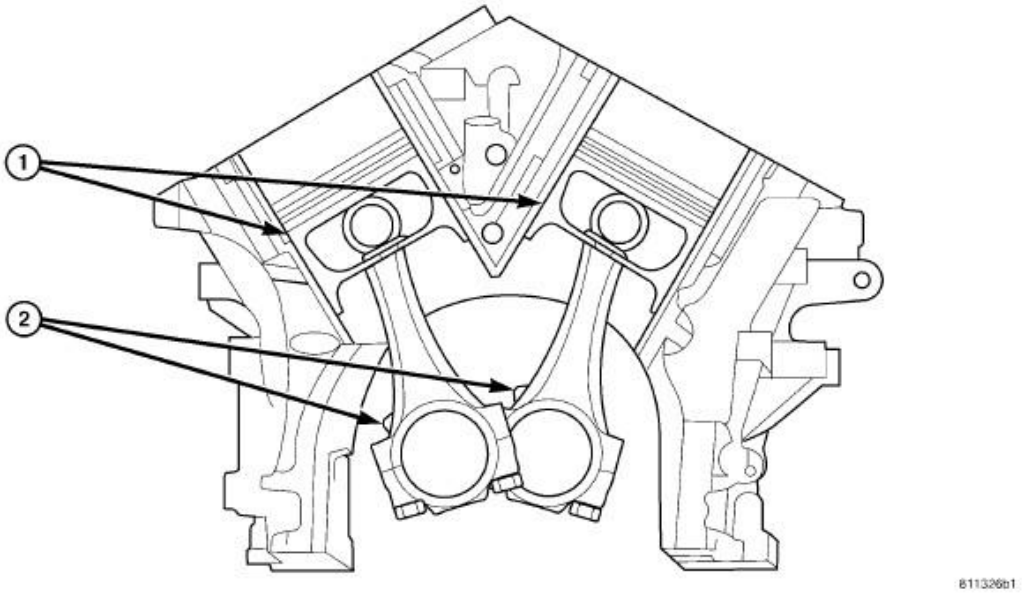

Fig. 346: PISTON AND CONNECTING ROD POSITIONING
Courtesy of CHRYSLER LLC

1 - MAJOR THRUST SIDE OF PISTON 2 - OIL SQUIRT HOLE

CAUTION: View of connecting rod oil squirt hole is from the front of the engine.

8. The oil squirt hole on connecting rod faces the major thrust side of the cylinder bore .

NOTE: Make sure the rod bearings are seated with the oil squirt hole aligned.

9. Tap the piston down in cylinder bore, using a hammer handle. At the same time, guide connecting rod into position on connecting rod journal.

NOTE: Connecting rod bolts must be lubricated with clean engine oil.

10. Install the rod caps. Install cleaned and inspected connecting rod bolts and tighten to 27 N.m (20 ft. lbs.) Plus 1/4 turn.
11. Install the cylinder head(s). See **Engine/Cylinder Head - Installation**.
12. Install the oil pan. See **Engine/Lubrication/PAN, Oil - Installation**.

SEAL, CRANKSHAFT OIL, FRONT

Removal

REMOVAL

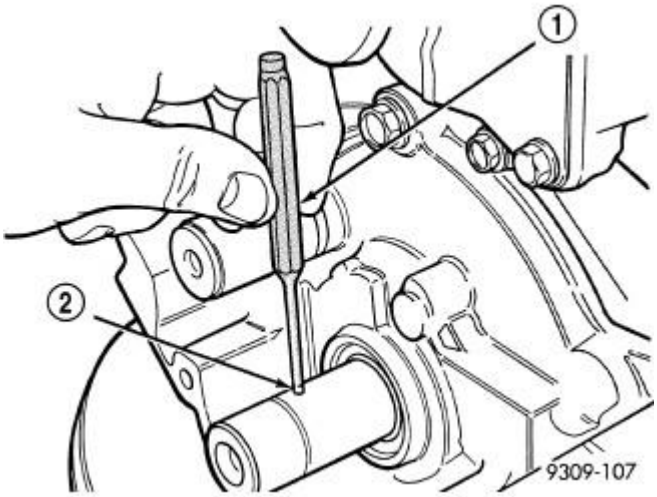

Fig. 347: Crankshaft Sprocket Dowel Pin-Removal/Installation
Courtesy of CHRYSLER LLC

1 - PIN PUNCH

2 - DOWEL

1. Remove the crankshaft sprocket. See **Engine/Valve Timing/BELT and SPROCKETS, Timing - Removal**.
2. Tap the dowel pin (2) out of the crankshaft .

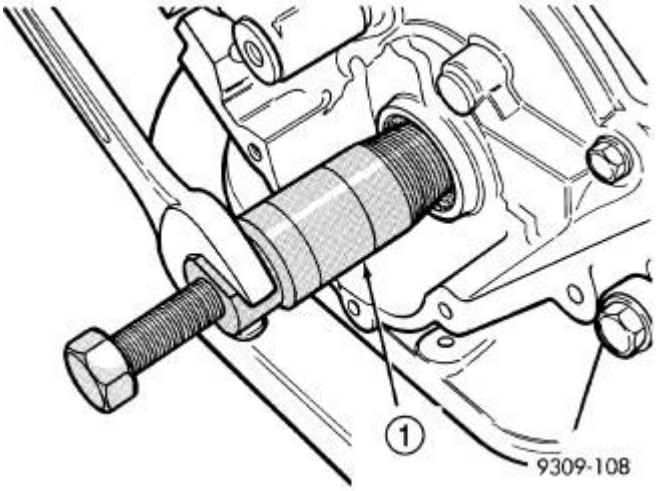

Fig. 348: Crankshaft Oil Seal with Special Tool 6341A - Removal
Courtesy of CHRYSLER LLC

1 - SPECIAL TOOL 6341A

3. Remove crankshaft seal using Tool 6341A (1) .

CAUTION: Do not nick shaft seal surface or seal bore.

4. Shaft seal lip surface must be free of varnish, dirt or nicks. Polish with 400 grit paper if necessary.

Installation

INSTALLATION

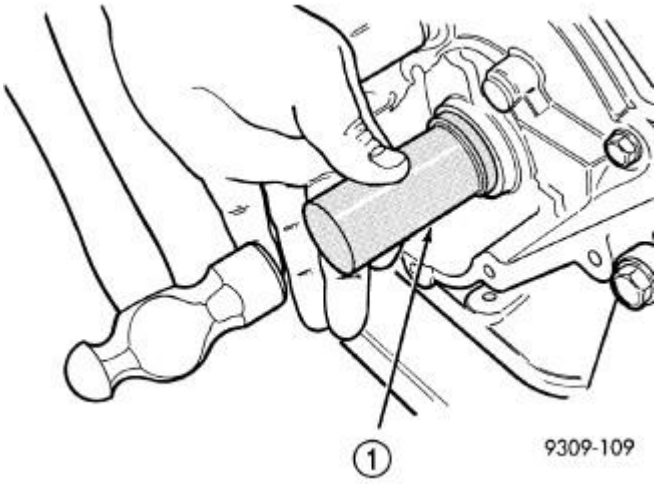

Fig. 349: Crankshaft Oil Seal with Special Tool 6342 - Installation
Courtesy of CHRYSLER LLC

1 - SPECIAL TOOL 6342

1. Install crankshaft seal using Special Tool 6342 (1) .
2. Install the dowel pin into the crankshaft to 1.2 mm (0.047 in.) protrusion.
3. Install the crankshaft sprocket. See **Engine/Valve Timing/BELT and SPROCKETS, Timing - Installation**.

SEAL, CRANKSHAFT OIL, REAR

Description

DESCRIPTION

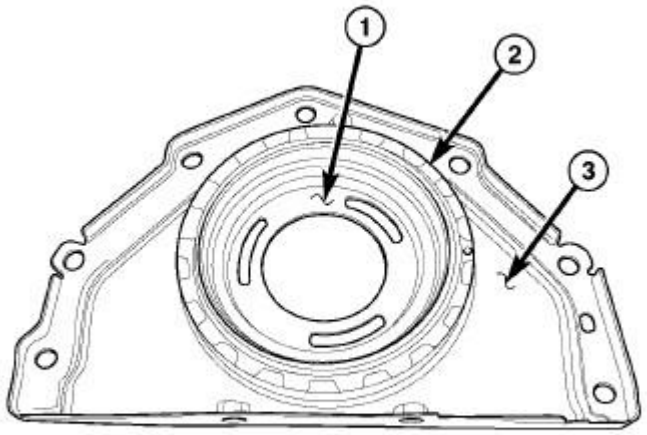

Fig. 350: CRANKSHAFT OIL SEAL - REAR
Courtesy of CHRYSLER LLC

1 - SEAL PROTECTOR 2 - SEAL 3 - RETAINER

The rear crankshaft oil seal (2) and retainer (3) are molded and serviced as an assembly. This assembly also includes a separate rear crankshaft seal protector (1) that should not be removed before the seal is installed on the engine block. Once the seal protector (1) is separated from the assembly it can not be reinstalled on the assembly or reused.

Removal

REMOVAL

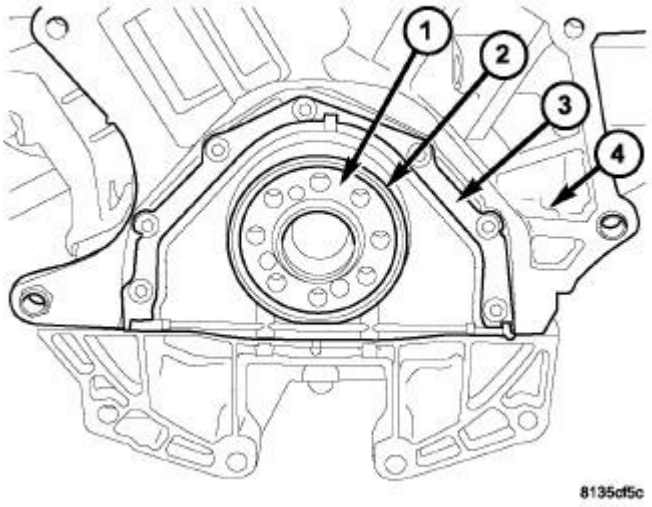

Fig. 351: REAR MAIN SEAL AND RETAINER
Courtesy of CHRYSLER LLC

1 - CRANKSHAFT
2 - REAR CRANKSHAFT OIL SEAL
3 - REAR CRANKSHAFT OIL SEAL RETAINER
4 - ENGINE BLOCK

1. Remove the engine oil pan. See **Engine/Lubrication/PAN, Oil - Removal**.
2. Lower the weight of the engine back onto the engine mounts.
3. Remove transmission from vehicle.
4. Remove the flex plate.
5. Remove the rear crankshaft oil seal retainer bolts.
6. Remove the crankshaft oil seal and clean all mating surfaces.

Installation

INSTALLATION

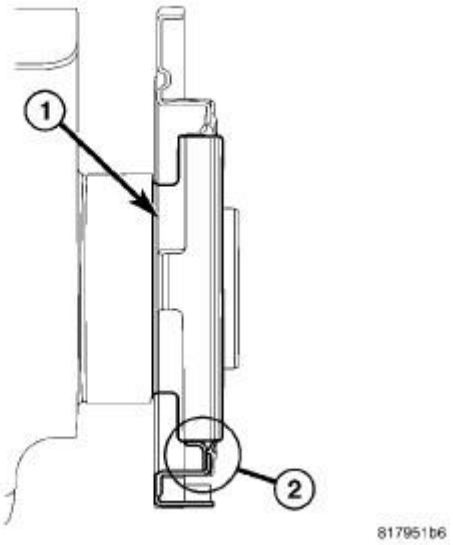

Fig. 352: REAR SEAL INSTALLED
Courtesy of CHRYSLER LLC

NOTE: **The seal lip (2) must always uniformly curl inward toward the engine on the crankshaft (1).**

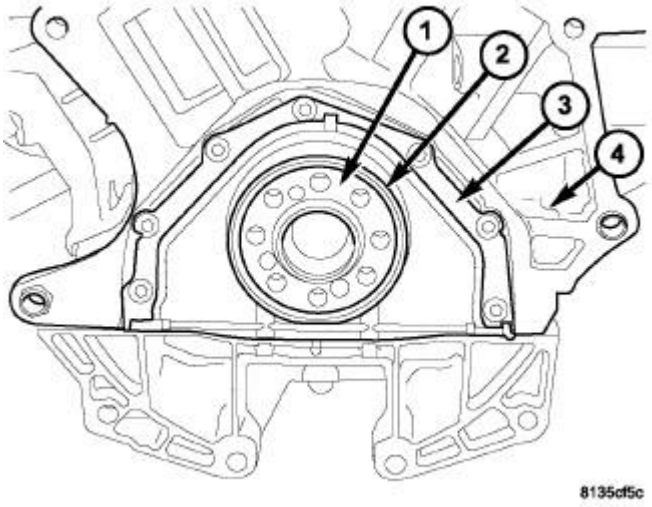

Fig. 353: REAR MAIN SEAL AND RETAINER
Courtesy of CHRYSLER LLC

1 - CRANKSHAFT
2 - REAR CRANKSHAFT OIL SEAL
3 - REAR CRANKSHAFT OIL SEAL RETAINER
4 - ENGINE BLOCK

CAUTION: If a burr or scratch is present on the crankshaft edge (chamfer), clean surface using 400 grit sand paper to prevent seal damage during installation.

NOTE: The rear crankshaft oil seal and retainer are an assembly. DO NOT separate the seal protector from the rear crankshaft oil seal before installation on engine. Damage to the seal lip will occur if the seal protector is removed and installed prior to installation on engine.

1. Apply engine oil to crankshaft seal surface.
2. Carefully position the oil seal, retainer and seal protector on crankshaft and push firmly into place on engine block (the seal protector will be removed from the rear oil seal assembly as a result of installing the rear oil seal). Hand tighten the rear oil seal fasteners.

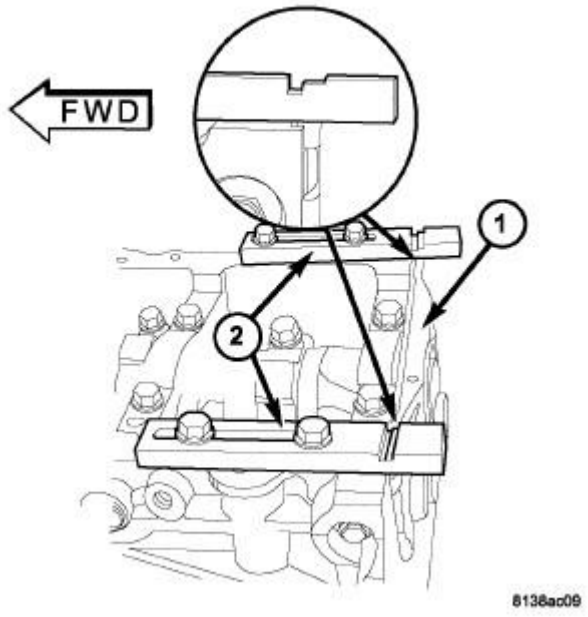

Fig. 354: REAR CRANKSHAFT SEAL RETAINER ALIGNMENT
Courtesy of CHRYSLER LLC

1 - SEAL RETAINER
2 - SPECIAL TOOLS 8225

NOTE: The following steps must be performed to prevent oil leaks at sealing joints.

3. Attach Special Tools 8225 (1) to pan rail using the oil pan fasteners.

NOTE: Special Tools 8225 (1), are use to assist with the fit of the flush mount rear

main seal retainer. The notch on tool should be located away the seal retainer.

4. While applying firm pressure to the seal retainer against Special Tools 8225 (1), tighten seal retainer screws to 12 N.m (105 in. lbs.).
5. Remove special tool #8225 (1).

NOTE: Make sure that the seal flange is flush with the block oil pan sealing surface.

6. Install oil pan. Tighten the 6 mm fasteners to 12 N.m (105 in. lbs.) and the 8 mm fasteners to 28 N.m (250 in. lbs.).
7. Install the flex plate and transmission.

ENGINE MOUNTING

DESCRIPTION

DESCRIPTION

The engine mounting system are of molded rubber material and consist of two mounts; right and a left side support the powertrain, and control powertrain torque.

INSULATOR, ENGINE MOUNT, LEFT

Removal

REMOVAL

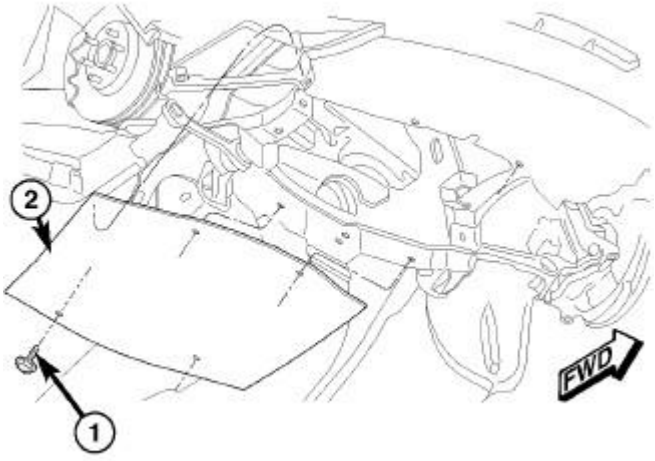

813530c9

Fig. 355: REAR BELLY PAN
Courtesy of CHRYSLER LLC

1. Disconnect and isolate the negative battery cable.
2. Raise and support the vehicle. Refer to **Vehicle Quick Reference/Hoisting - Standard Procedure** .
3. Remove the fasteners (1) that secure the rear belly pan (2) to the underside of the vehicle.
4. Remove the rear belly pan from the underside of the vehicle.

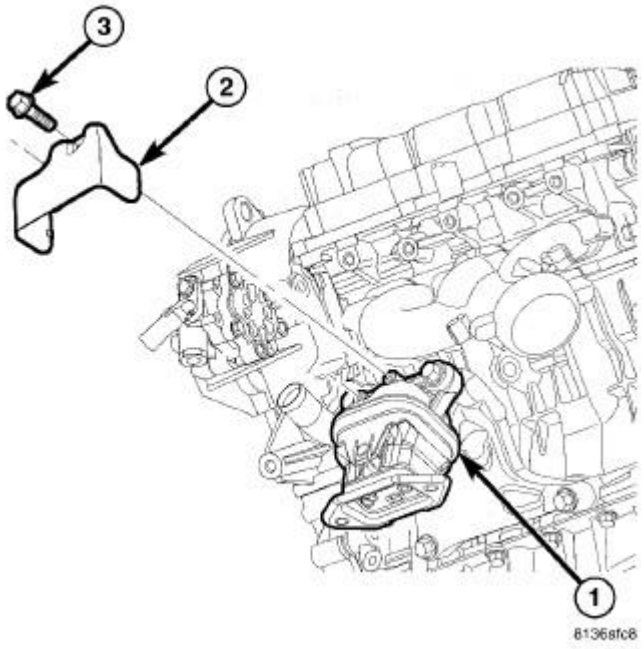

Fig. 356: LEFT ENGINE MOUNT HEAT SHIELD
Courtesy of CHRYSLER LLC

1 - LEFT ENGINE MOUNT
2 - HEAT SHIELD
3 - BOLT

5. Remove both of the engine mount to cradle nuts.
6. Remove both of the engine mount through studs.
7. Using a suitable jack stand and a block of wood positioned under the oil pan, raise the engine until the weight is off of the mounts (approximately 5 mm).
8. Remove the bolts (3) and the left mount heat shield (2).

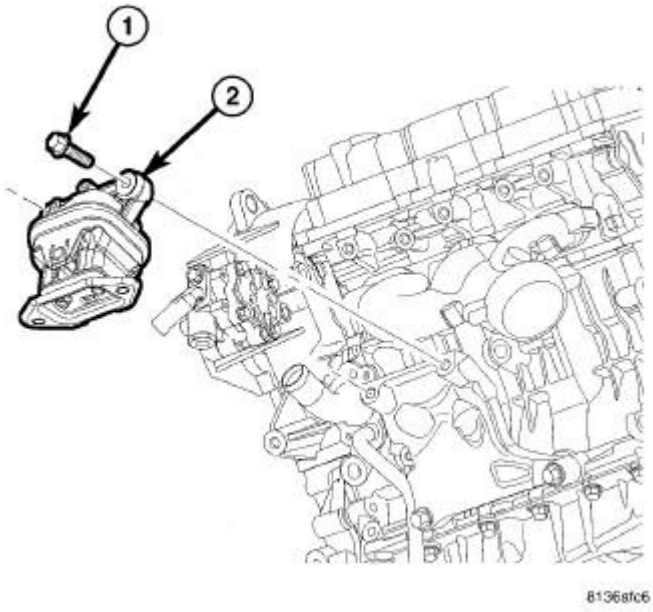

Fig. 357: LEFT ENGINE MOUNT
Courtesy of CHRYSLER LLC

9. Remove the bolts (1) and the left engine mount (2).

Installation

INSTALLATION

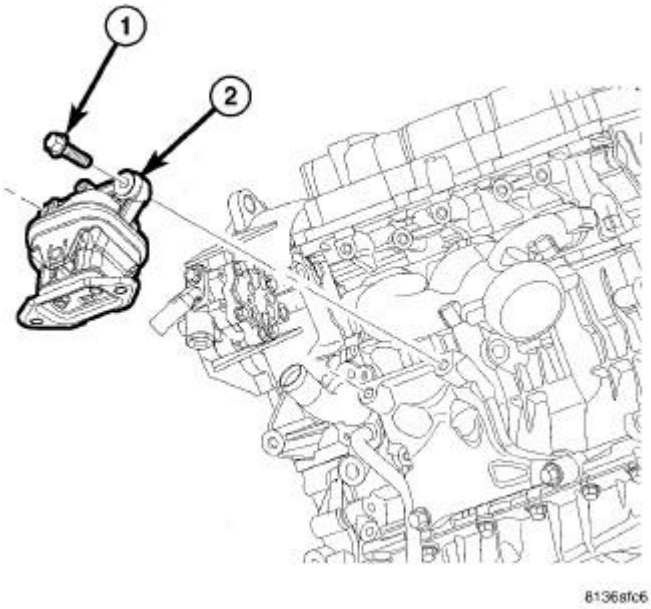

Fig. 358: LEFT ENGINE MOUNT
Courtesy of CHRYSLER LLC

1. Install the left engine mount (2) to the engine mounting bracket and hand tighten the bolts (1).
2. Install and hand tighten the engine mount through studs.
3. Tighten the engine mount to mounting bracket bolts to 75 N.m (55 ft. lbs.).
4. Lower the engine and remove the lifting device.
5. Tighten the engine mount through studs to 12 N.m (106 in. lbs.).

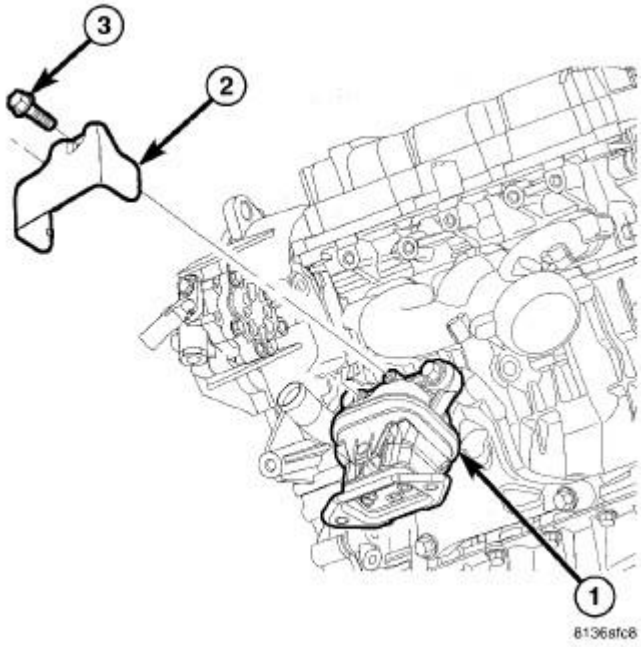

Fig. 359: LEFT ENGINE MOUNT HEAT SHIELD
Courtesy of CHRYSLER LLC

6. Install the engine mount heat shield (2) and bolts (3). Tighten bolts to 11 N.m (97 in. lbs.).
7. Install the left engine mount to cradle nuts and tighten to 75 N.m (55 ft. lbs.).

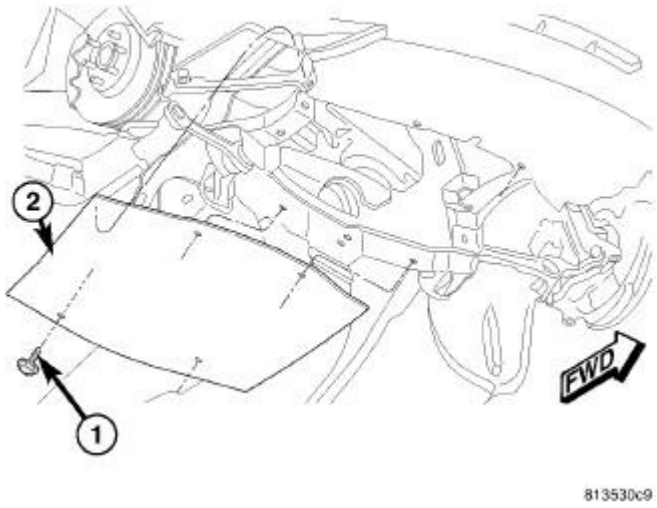

Fig. 360: REAR BELLY PAN
Courtesy of CHRYSLER LLC

8. Position the rear belly pan (2) to the underside of the vehicle.
9. Install the fasteners (1) that secure the rear belly pan to the underside of the vehicle.
10. Lower the vehicle.
11. Connect the negative battery cable.

INSULATOR, ENGINE MOUNT, RIGHT

Removal

REMOVAL

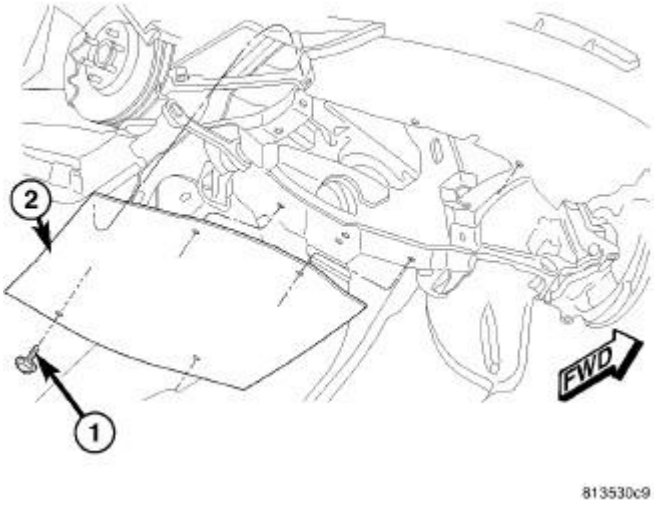

Fig. 361: REAR BELLY PAN
Courtesy of CHRYSLER LLC

1. Disconnect and isolate the negative battery cable.
2. Raise and support the vehicle. Refer to **Vehicle Quick Reference/Hoisting - Standard Procedure** .
3. Remove the fasteners (1) that secure the rear belly pan (2) to the underside of the vehicle.
4. Remove the rear belly pan from the underside of the vehicle.

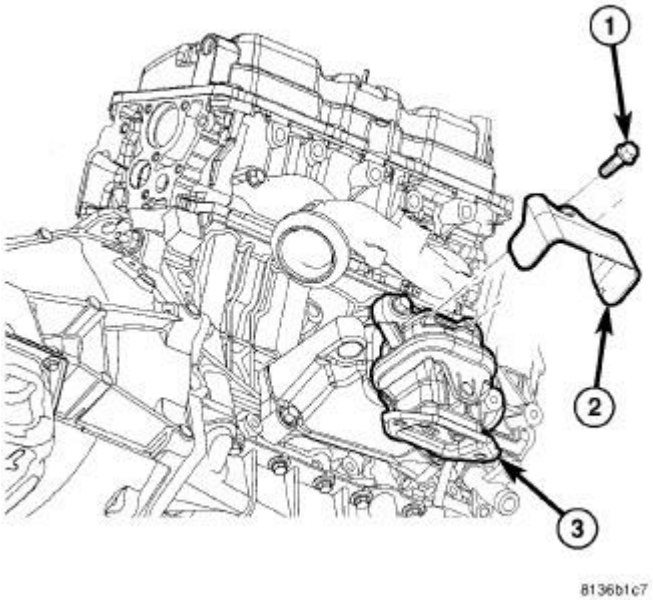

Fig. 362: RIGHT ENGINE MOUNT HEAT SHIELD

Courtesy of CHRYSLER LLC

1 - BOLT 2 - SHIELD 3 - RIGHT ENGINE MOUNT

5. Remove both of the engine mount to cradle nuts.
6. Remove both of the engine mount through studs.
7. Using a suitable jack stand and a block of wood positioned under the oil pan, raise the engine until the weight is off of the mounts (approximately 5 mm).
8. Remove the bolts (1) and the right mount heat shield (2).

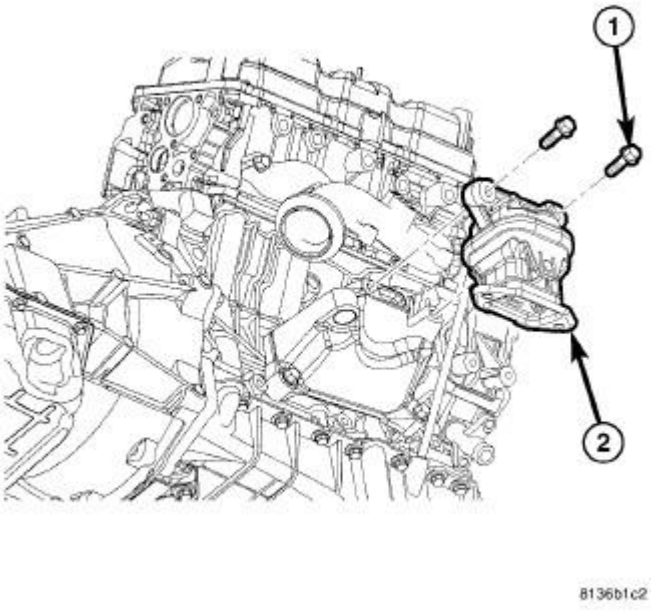

Fig. 363: RIGHT ENGINE MOUNT
Courtesy of CHRYSLER LLC

9. Remove the bolts (1) and the right engine mount (2).

Installation

INSTALLATION

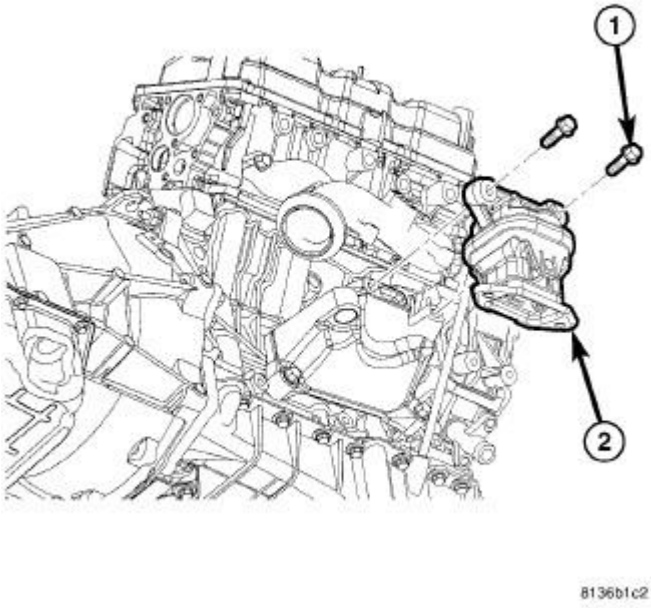

Fig. 364: RIGHT ENGINE MOUNT
Courtesy of CHRYSLER LLC

1. Install the right engine mount (2) to the engine mounting bracket and hand tighten the bolts (1).
2. Install and hand tighten the engine mount through studs.
3. Tighten the engine mount to mounting bracket bolts to 75 N.m (55 ft. lbs.).
4. Lower the engine and remove the lifting device.
5. Tighten the engine mount through studs to 12 N.m (106 in. lbs.).

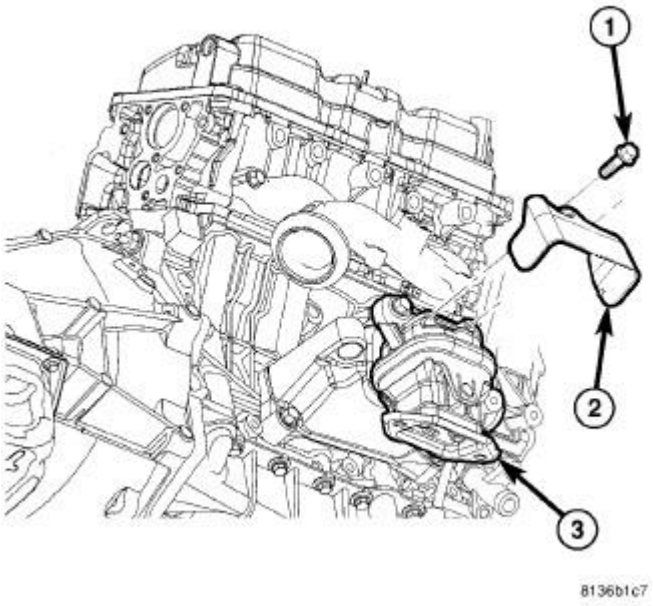

Fig. 365: RIGHT ENGINE MOUNT HEAT SHIELD
Courtesy of CHRYSLER LLC

6. Install the engine mount heat shield (2) and bolts (1). Tighten bolts to 11 N.m (97 in. lbs.).
7. Install the right engine mount to cradle nuts and tighten to 75 N.m (55 ft. lbs.).

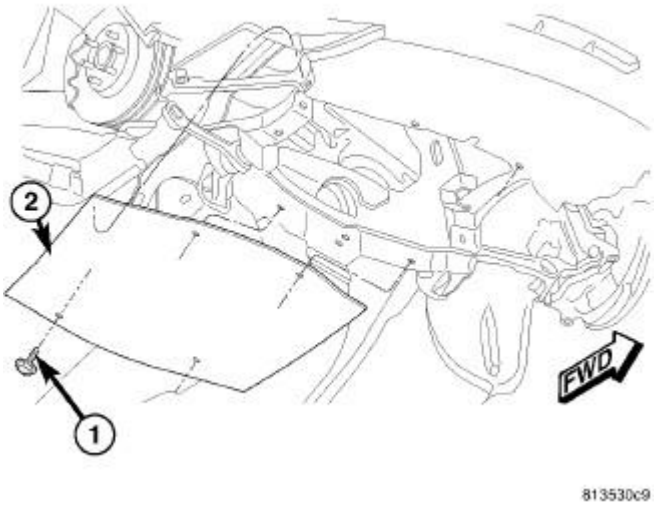

Fig. 366: REAR BELLY PAN
Courtesy of CHRYSLER LLC

8. Position the rear belly pan (2) to the underside of the vehicle.

9. Install the fasteners (1) that secure the rear belly pan to the underside of the vehicle.
10. Lower the vehicle.
11. Connect the negative battery cable.

INSULATOR, ENGINE MOUNT, REAR

Removal

REMOVAL

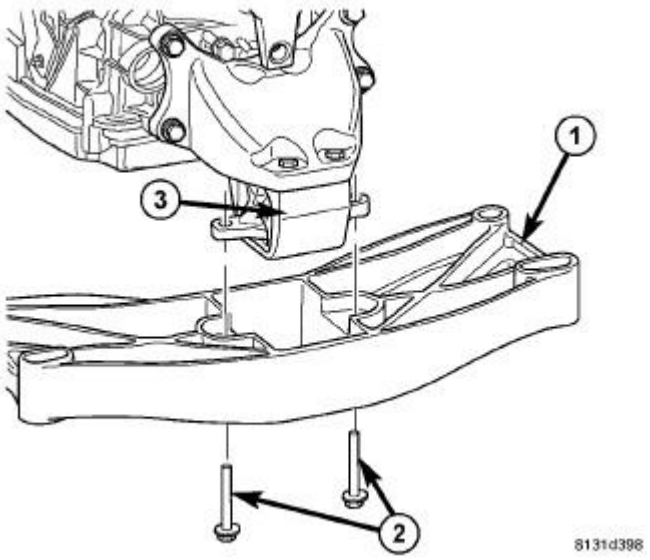

Fig. 367: REMOVE/INSTALL TRANSMISSION CROSS MEMBER BOLTS
Courtesy of CHRYSLER LLC

1. Raise vehicle on hoist.
2. Remove cross member to mount bolts (2).
3. Place transmission jack under transmission pan and raise transmission.
4. Remove cross member attaching bolts and remove cross member (1).

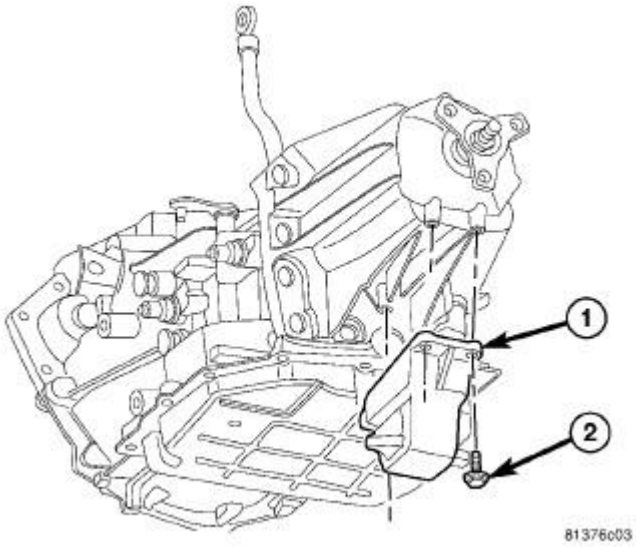

Fig. 368: Remove/Install Transmission Mount Bolts
Courtesy of CHRYSLER LLC

5. Remove mount to transmission bolts (2), remove mount (1).

Installation

INSTALLATION

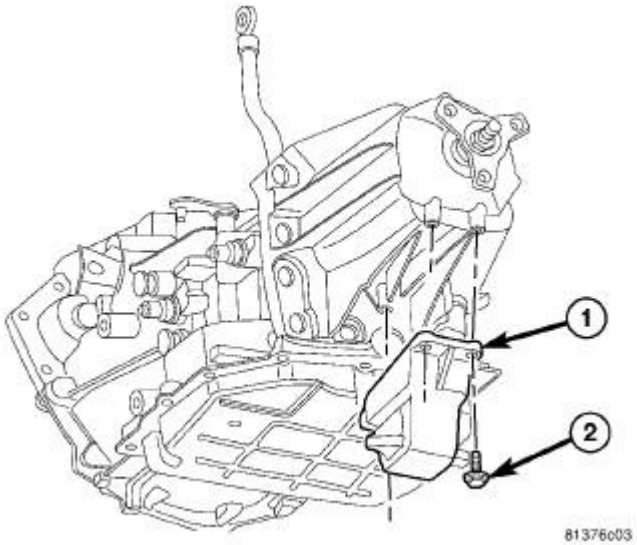

Fig. 369: Remove/Install Transmission Mount Bolts
Courtesy of CHRYSLER LLC

1. Install mount to transmission bolts (2) and tighten to 47 N.m (35 ft. lbs.).

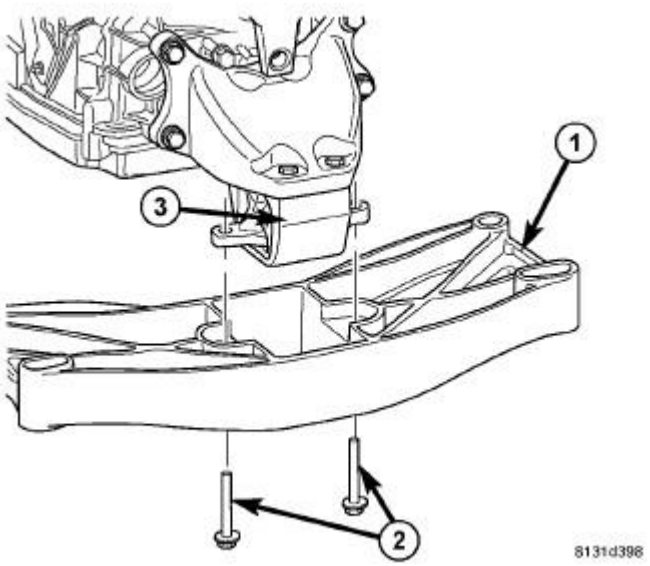

Fig. 370: REMOVE/INSTALL TRANSMISSION CROSS MEMBER BOLTS
Courtesy of CHRYSLER LLC

2. Install cross member (1) and attaching bolts. Tighten bolts to 68 N.m (50 ft. lbs.).
3. Lower transmission so cross member to mount bolts (2) can be started tightened by hand.
4. Lower transmission and remove jack.
5. Tighten mount bolts (2) to 47 N.m (39 ft. lbs.).

LUBRICATION

DESCRIPTION

DESCRIPTION

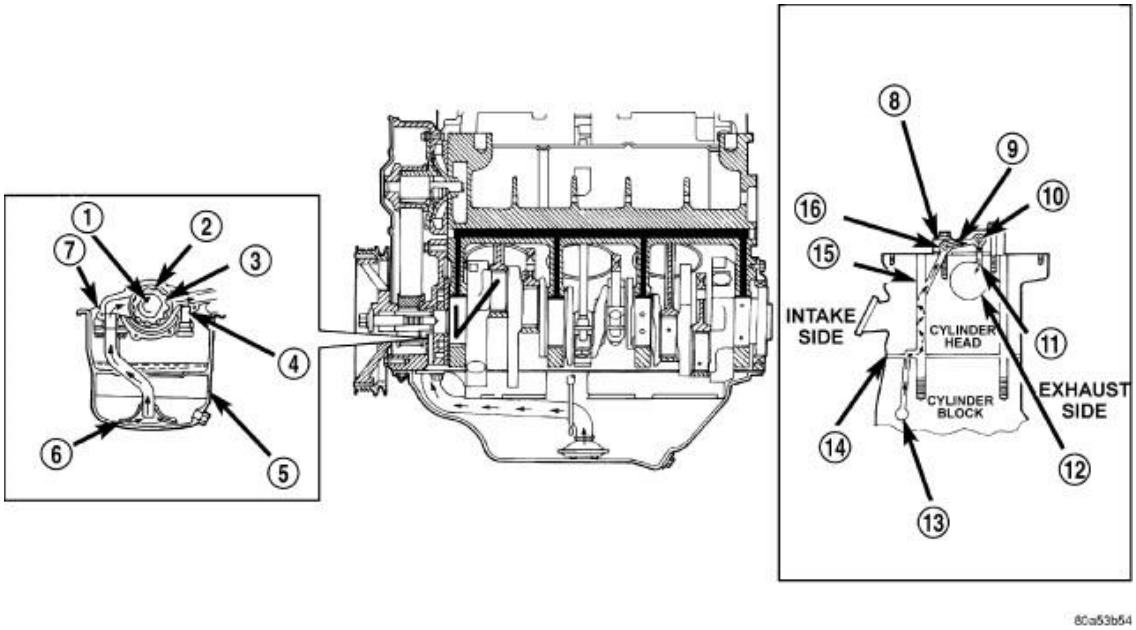

Fig. 371: Oil Lubrication System
Courtesy of CHRYSLER LLC

1 - CRANKSHAFT	9 - PEDESTAL DRILLED PASSAGE
2 - OUTER ROTOR	10 - EXHAUST ROCKER SHAFT
3 - INNER ROTOR	11 - SHAFT/PEDESTAL DOWEL PASSAGE
4 - RELIEF VALVE	12 - CAMSHAFT BEARING BORE
5 - OIL PAN	13 - CYLINDER BLOCK OIL GALLERY
6 - OIL SCREEN	14 - CYLINDER HEAD GASKET
7 - OIL PUMP CASE	15 - HEAD BOLT HOLE
8 - OIL FLOWS TO ONLY ONE PEDESTAL ON EACH HEAD - SECOND FROM REAR ON RIGHT HEAD - SECOND FROM FRONT ON LEFT HEAD	16 - INTAKE ROCKER SHAFT

The oil lubrication system is a full-flow filtration, pressure feed type. The oil pump body is mounted to the engine block. The pump inner rotor is driven by the crankshaft. A windage tray, increases power by minimizing oil windage at high engine RPM. For increased oil cooling, an oil pan mounted, oil-to-coolant oil cooler is used.

OPERATION

OPERATION

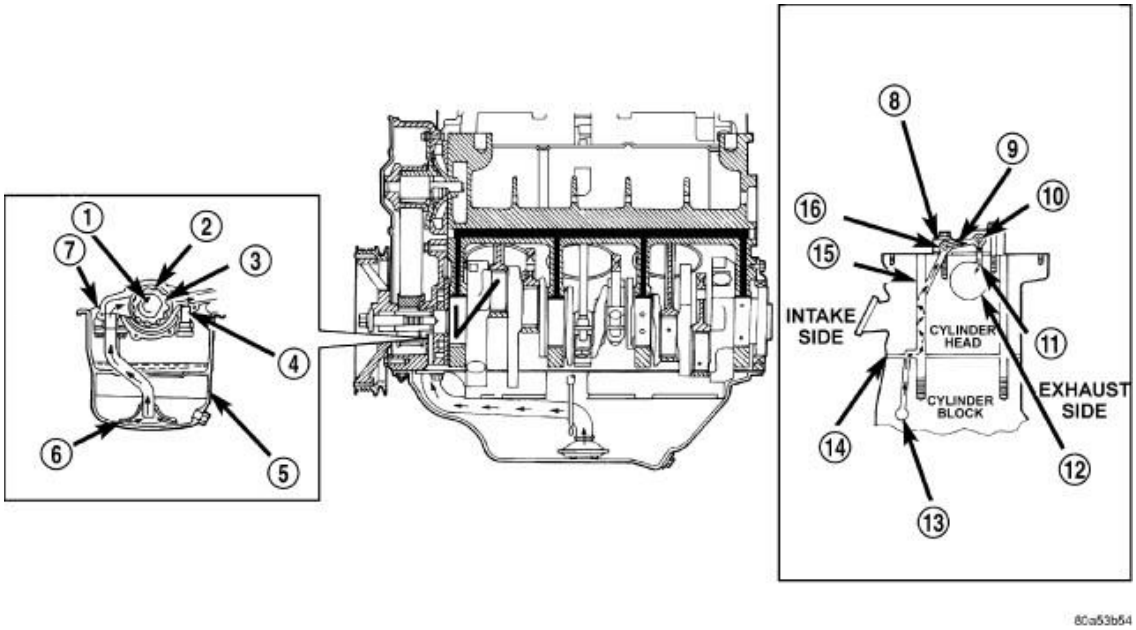

Fig. 372: Oil Lubrication System
Courtesy of CHRYSLER LLC

1 - CRANKSHAFT	9 - PEDESTAL DRILLED PASSAGE
2 - OUTER ROTOR	10 - EXHAUST ROCKER SHAFT
3 - INNER ROTOR	11 - SHAFT/PEDESTAL DOWEL PASSAGE
4 - RELIEF VALVE	12 - CAMSHAFT BEARING BORE
5 - OIL PAN	13 - CYLINDER BLOCK OIL GALLERY
6 - OIL SCREEN	14 - CYLINDER HEAD GASKET
7 - OIL PUMP CASE	15 - HEAD BOLT HOLE
8 - OIL FLOWS TO ONLY ONE PEDESTAL ON EACH HEAD - SECOND FROM REAR ON RIGHT HEAD - SECOND FROM FRONT ON LEFT HEAD	16 - INTAKE ROCKER SHAFT

Engine oil stored in the oil pan (5) is drawn in and discharged by a gear rotor type oil pump (2, 3). The oil pump is directly coupled to the crankshaft (1). Oil pressure is regulated by a relief valve (4). The oil is fed through an oil filter and to the crankshaft journals from the oil gallery (8) in the cylinder block. This gallery also feeds oil under pressure to the cylinder heads. Oil flows through each cylinder heads oil passage to the rocker shafts (10, 16). Oil then feeds the camshaft journals (12), rocker arms, and hydraulic lash adjusters.

DIAGNOSIS AND TESTING

CHECKING ENGINE OIL PRESSURE

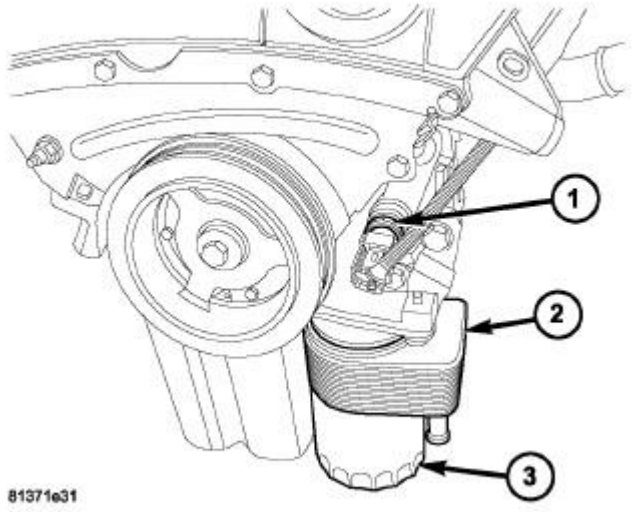

Fig. 373: OIL PRESSURE SWITCH
Courtesy of CHRYSLER LLC

1 - OIL PRESSURE SWITCH 2 - ENGINE OIL COOLER 3 - ENGINE OIL FILTER

Check oil pressure using a gauge at oil pressure switch (1) location.

1. Remove the oil pressure switch (1). See **Engine/Lubrication/SWITCH, Oil Pressure - Removal**.
2. Install oil pressure test gauge, C-3292A with Adapter 8406. For Special Tool identification, see **Engine - Special Tools**.

CAUTION: If oil pressure is 0 at idle, Do Not Run engine at 3000 RPM.

3. Warm engine to normal operating temperature.
4. Monitor gauge readings at idle and 3000 RPM. For specifications, see **Engine - Specifications**.

COOLER, OIL

Description

DESCRIPTION

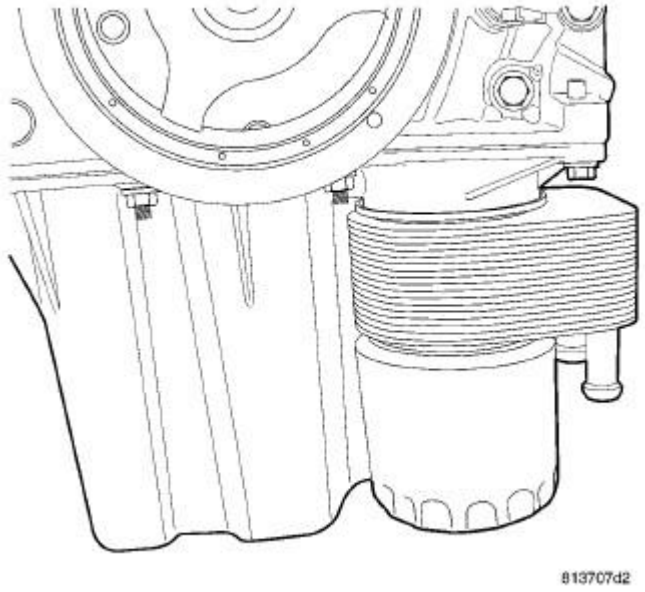

Fig. 374: ENGINE OIL COOLER
Courtesy of CHRYSLER LLC

The engine oil cooler is a oil-to-coolant type and is mounted between the oil filter and the oil pan.

Operation

OPERATION

Engine oil travels from the oil cooler and into the oil filter. Engine oil then exits the filter into the main gallery. Engine coolant flows into the cooler from the heater return tube and exits into the water inlet tube.

Removal

REMOVAL

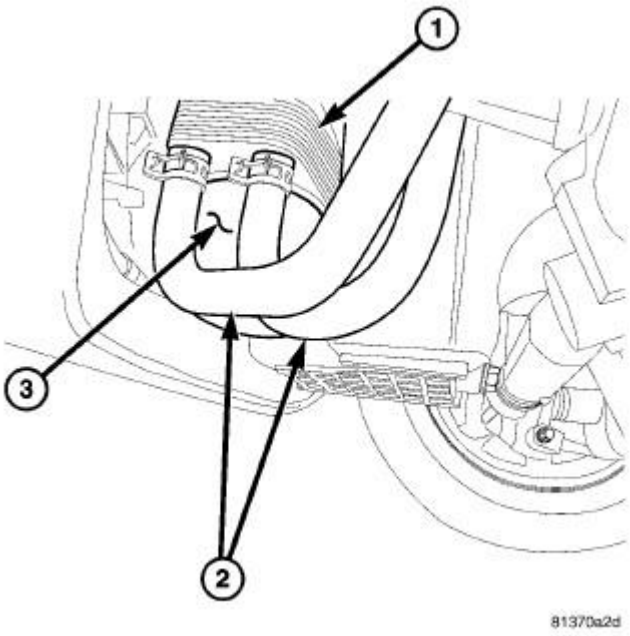

Fig. 375: Oil Cooler & Hoses
Courtesy of CHRYSLER LLC

1 - OIL COOLER 2 - COOLANT HOSES 3 - OIL FILTER

1. Drain cooling system.
2. Raise vehicle on hoist.
3. Disconnect coolant hoses (2) from oil cooler (1) .
4. Remove oil filter (3).
5. Remove oil cooler attaching fastener from center of oil cooler (1).
6. Remove oil cooler (1) .

Installation

INSTALLATION

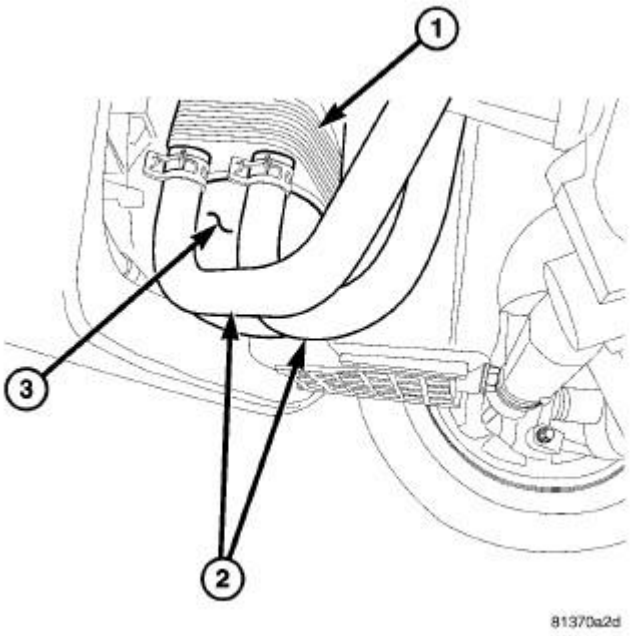

Fig. 376: Oil Cooler & Hoses
Courtesy of CHRYSLER LLC

1 - OIL COOLER 2 - COOLANT HOSES 3 - OIL FILTER

1. Position oil cooler to fitting on oil pan.

NOTE: Remove all oil and debris from the seal retainer surface. The cut out section of the oil cooler seal retainer flange (top), must be aligned with the tab on the oil pan. The oil cooler must be prevented from turning during the tightening sequence.

2. Install oil cooler (1) attaching fastener and tighten to 61 N.m (45 ft. lbs.).
3. Install oil filter (3) and tighten to 12 N.m (106 in. lbs.).
4. Connect coolant hoses to oil cooler (2).
5. Fill cooling system.

FILTER, ENGINE OIL

Removal

REMOVAL

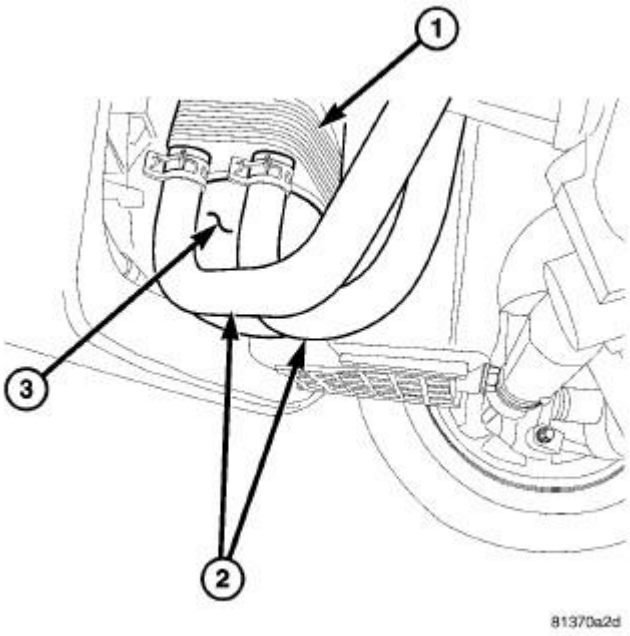

Fig. 377: Oil Cooler & Hoses
Courtesy of CHRYSLER LLC

NOTE: When servicing the oil filter, avoid deforming the filter can. Install the remove/install tool band strap against the base lock seam. The lock seam joining the can to the base is reinforced by the base plate.

1. Using a suitable oil filter wrench, unscrew filter (3) from base and discard.

Installation

INSTALLATION

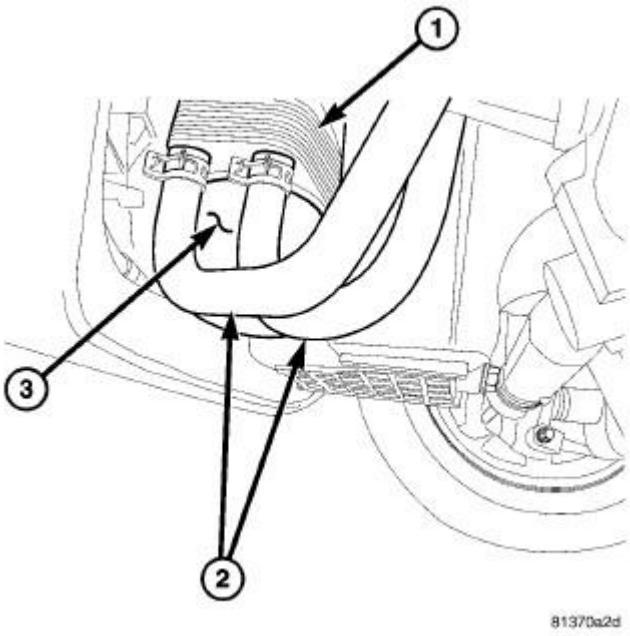

Fig. 378: Oil Cooler & Hoses
Courtesy of CHRYSLER LLC

1. Wipe base clean, then inspect gasket contact surface.
2. Lubricate gasket of new filter (2) with clean engine oil.
3. Install and tighten filter to 12 N.m (106 in. lbs.) of torque after gasket contacts base. Use filter wrench if necessary.
4. Start engine and check for leaks.

OIL

Description

DESCRIPTION

For engine oil type and capacity, refer to **Vehicle Quick Reference/Capacities and Recommended Fluids - Description** .

Standard Procedure

ENGINE OIL LEVEL CHECK

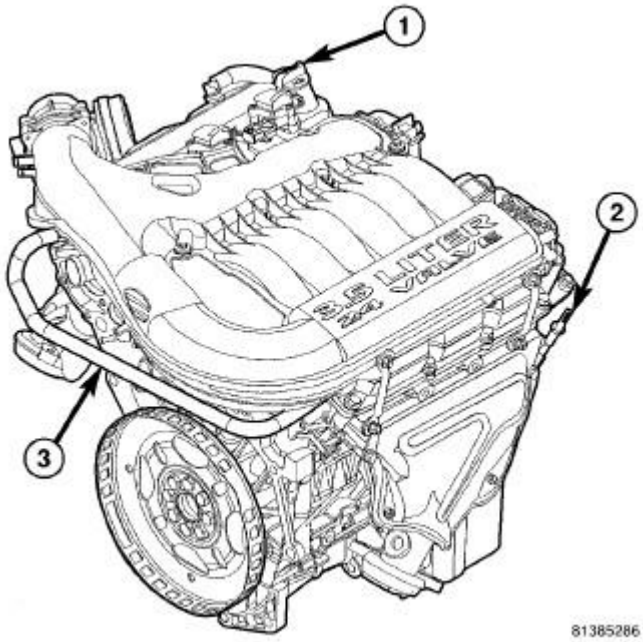

Fig. 379: OIL FILL AND INDICATOR
Courtesy of CHRYSLER LLC

1 - OIL FILL CAP 2 - OIL FILL INDICATOR 3 - PCV HOSE

The best time to check engine oil level (2) is after the engine has sat overnight, or if the engine has been running, allow the engine to be shut off for at least 5 minutes before checking oil level.

Checking the oil (2) while the vehicle is on level ground will improve the accuracy of the oil level reading. Add oil (1) only when the level is at, or below, the ADD mark on the indicator (2).

ENGINE OIL AND FILTER CHANGE

Change engine oil at mileage and time intervals described in the Maintenance Schedule. Refer to **Vehicle Quick Reference/Maintenance Schedules - Description** .

WARNING: NEW OR USED ENGINE OIL CAN BE IRRITATING TO THE SKIN. AVOID PROLONGED OR REPEATED SKIN CONTACT WITH ENGINE OIL. CONTAMINANTS IN USED ENGINE OIL, CAUSED BY INTERNAL COMBUSTION, CAN BE HAZARDOUS TO YOUR HEALTH. THOROUGHLY WASH EXPOSED SKIN WITH SOAP AND WATER. DO NOT WASH SKIN WITH GASOLINE, DIESEL FUEL, THINNER, OR SOLVENTS, HEALTH PROBLEMS CAN RESULT. DO NOT POLLUTE, DISPOSE OF USED ENGINE OIL PROPERLY. CONTACT YOUR DEALER OR GOVERNMENT AGENCY FOR LOCATION OF COLLECTION CENTER IN YOUR AREA.

TO CHANGE ENGINE OIL

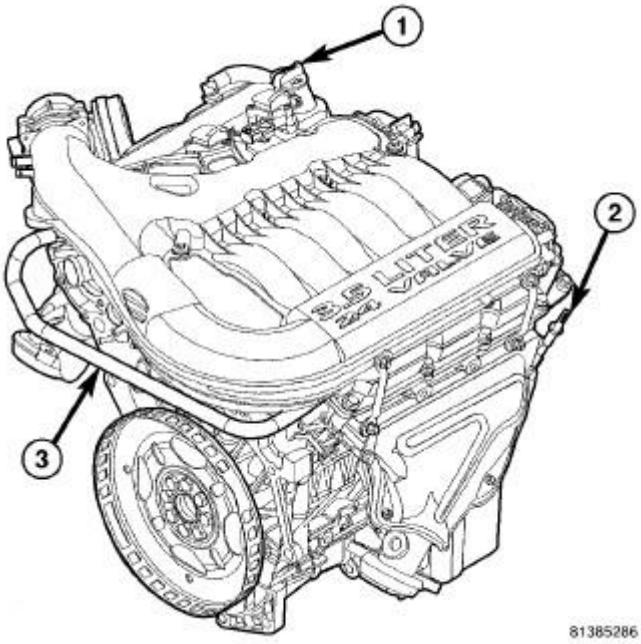

Fig. 380: OIL FILL AND INDICATOR
Courtesy of CHRYSLER LLC

1 - OIL FILL CAP 2 - OIL FILL INDICATOR 3 - PCV HOSE

1. Run engine until achieving normal operating temperature.
2. Position the vehicle on a level surface and turn engine off.
3. Open hood, remove engine oil fill cap (1) .

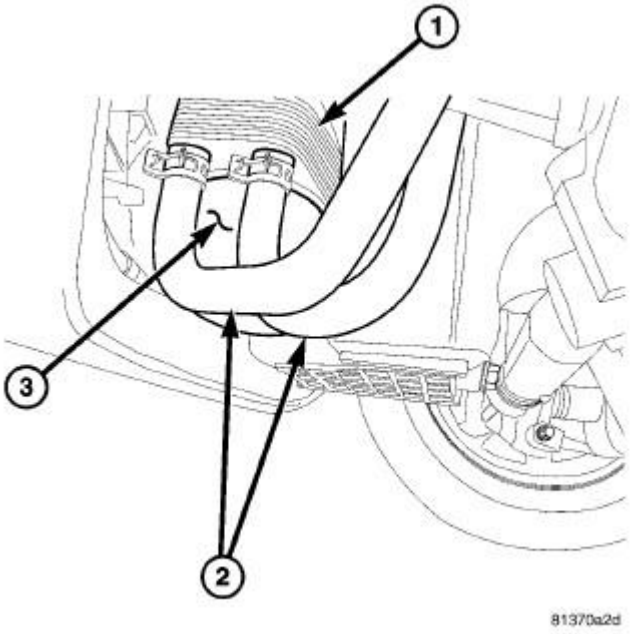

Fig. 381: Oil Cooler & Hoses
Courtesy of CHRYSLER LLC

4. Raise vehicle on hoist.
5. Place a suitable drain pan under crankcase drain.
6. Remove oil pan drain plug from crankcase and allow oil to drain into pan. Inspect drain plug threads for stretching or other damage. Replace drain plug and gasket if damaged.
7. Remove oil filter (3) .
8. Install drain plug in crankcase. Torque oil pan drain plug to 27 N.m (20 ft. lbs.).
9. Install new oil filter (3) .

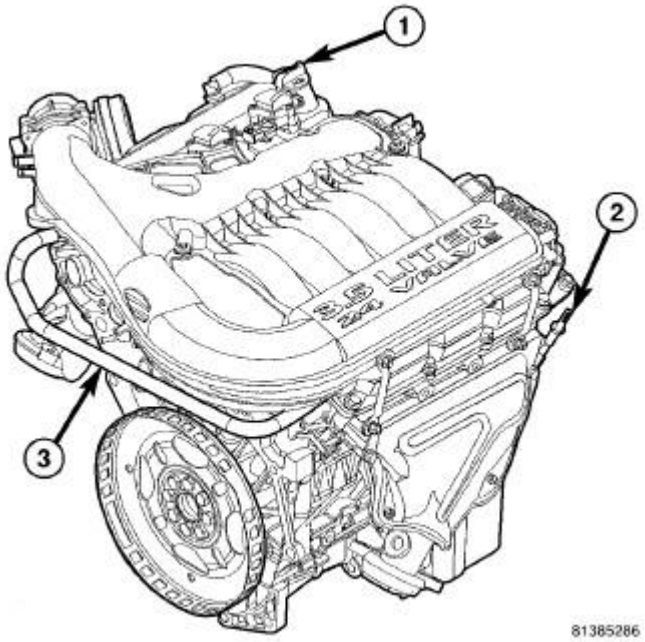

Fig. 382: OIL FILL AND INDICATOR
Courtesy of CHRYSLER LLC

1 - OIL FILL CAP
2 - OIL FILL INDICATOR
3 - PCV HOSE

10. Lower vehicle.
11. Fill crankcase (1) with specified amount and type of engine oil. Refer to **Vehicle Quick Reference/Capacities and Recommended Fluids - Description** . Refer to **Vehicle Quick Reference/Capacities and Recommended Fluids - Specifications** .
12. Install oil fill cap (1) .
13. Start engine and inspect for leaks.
14. Stop engine and inspect oil level (2).

OIL FILTER SPECIFICATION

All engines are equipped with a high quality full-flow, disposable type oil filter. When replacing oil filter, use a Mopar® filter or equivalent.

USED ENGINE OIL DISPOSAL

Care should be exercised when disposing used engine oil after it has been drained from a vehicle engine. Refer to the WARNING above.

PAN, OIL

Removal

RWD

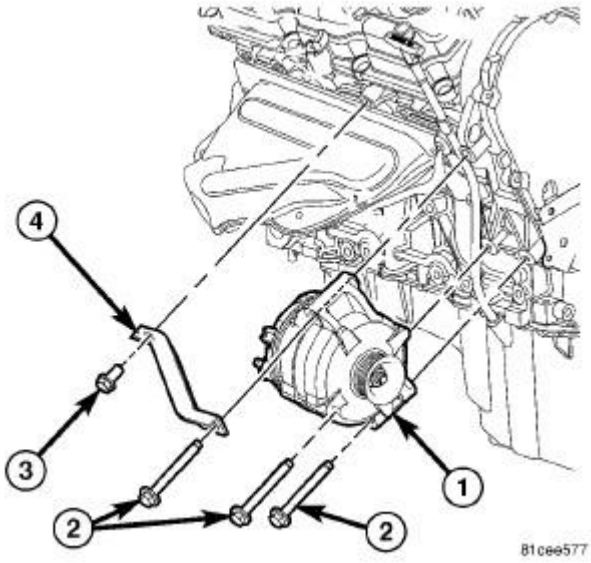

Fig. 383: GENERATOR 3.5L
Courtesy of CHRYSLER LLC

1. Disconnect and isolate the negative battery cable.
2. Lock the steering wheel in the center position.
3. Remove the generator bracket bolt (3).
4. Loosen the upper most generator mounting bolt (2) and reposition the generator bracket (4).

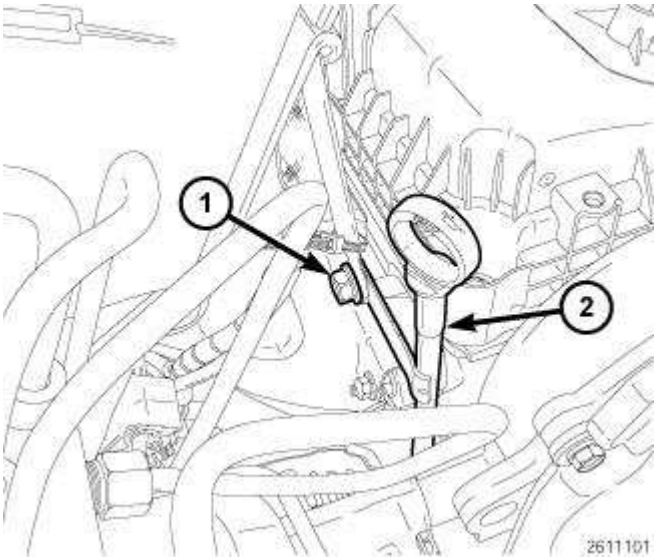

Fig. 384: Engine Oil Level Indicator Tube Retaining Bolt And Indicator Tube
Courtesy of CHRYSLER LLC

5. Remove the engine oil level indicator tube retaining bolt (1) and remove the indicator tube (2).

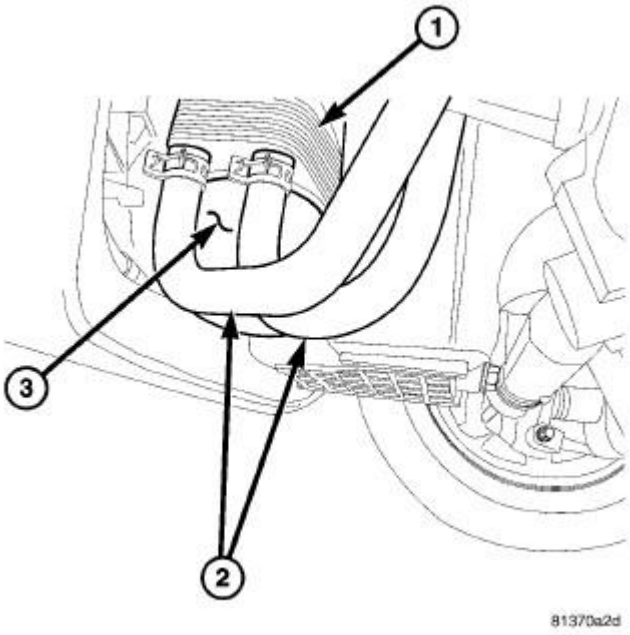

Fig. 385: Oil Cooler & Hoses
Courtesy of CHRYSLER LLC

6. Raise and support the vehicle. Refer to **Vehicle Quick Reference/Hoisting - Standard Procedure** .
7. Remove the belly pan. Refer to **Body/Exterior/BELLY PAN - Removal** .
8. Drain the engine oil and remove the oil filter (3). See **Engine/Lubrication/OIL - Standard Procedure**.
9. Remove the oil cooler mounting stud and relocate the oil cooler (1) (if equipped). See **Engine/Lubrication/COOLER, Oil - Removal**.

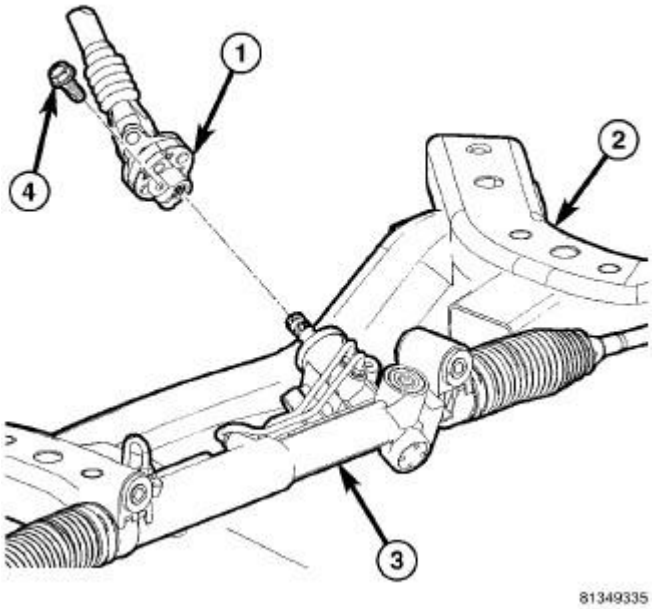

Fig. 386: Steering Coupler
Courtesy of CHRYSLER LLC

10. Remove the pinch bolt (4) and separate the steering column coupler (1) from the steering gear (3).
11. Remove the steering gear to cradle mounting bolts and relocate the steering gear (3).

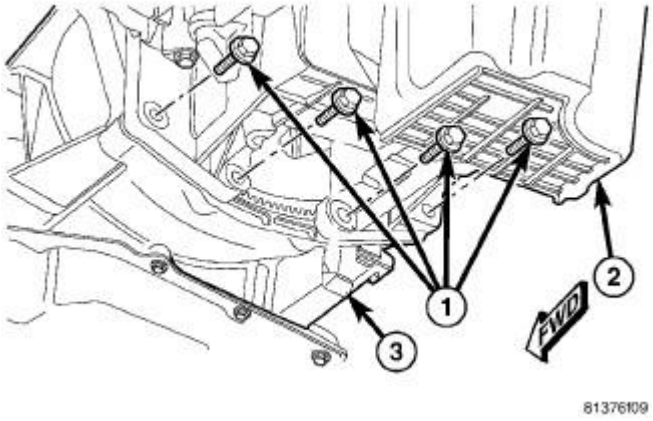

Fig. 387: Removing/Installing Transmission To Oil Pan Bolts - 3.5L
Courtesy of CHRYSLER LLC

12. Remove the four bolts (1) that secure the oil pan (2) to the transmission (3).

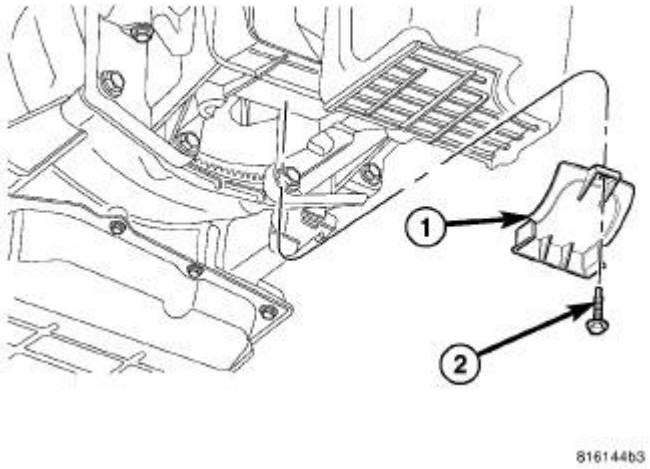

Fig. 388: FLEX PLATE COVER
Courtesy of CHRYSLER LLC

13. Remove the flex plate access cover (1).

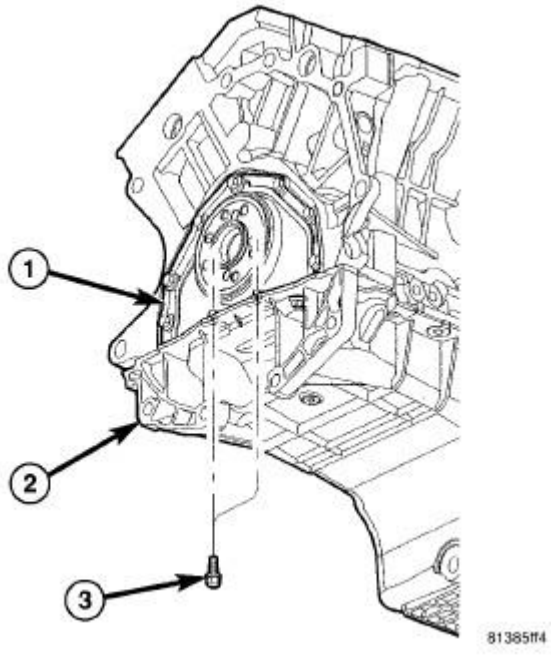

Fig. 389: OIL PAN TO REAR MAIN SEAL RETAINER
Courtesy of CHRYSLER LLC

14. Remove the two rear oil pan bolts (3).

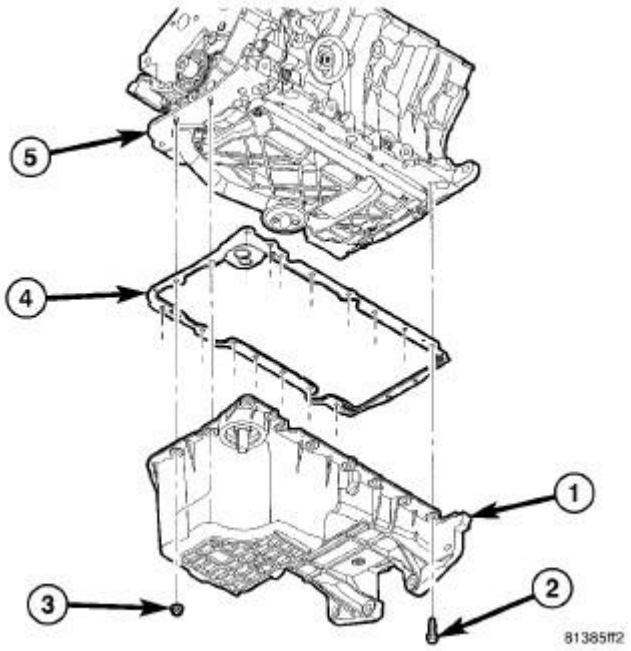

Fig. 390: OIL PAN AND GASKET
Courtesy of CHRYSLER LLC

1 - OIL PAN
2 - BOLT
3 - FASTENER
4 - GASKET
5 - ENGINE BLOCK

15. Remove the remaining oil pan bolts (2) and nuts (3).

NOTE: A small amount of oil will remain in the oil pan. Use care when removing the oil pan from the engine.

16. Remove the oil pan (1).
17. Clean all mating surfaces.

Installation

RWD

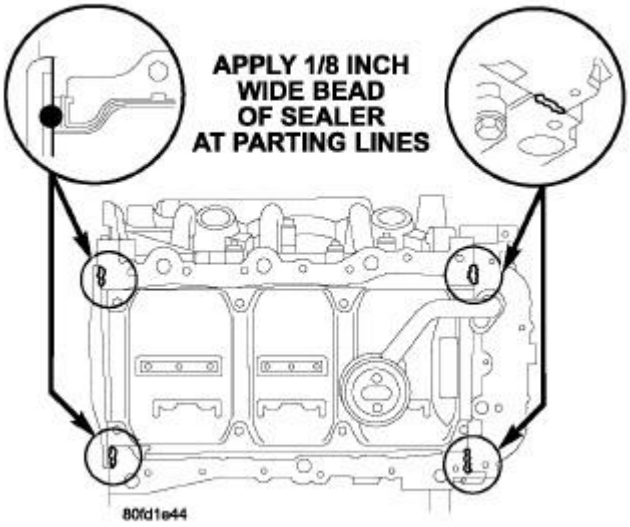

Fig. 391: OIL PAN SEALING - TYPICAL
Courtesy of CHRYSLER LLC

1. Clean the oil pan and all gasket surfaces.
2. Apply a 1/8 inch bead of Mopar® Engine RTV GEN II at the parting line of the oil pump housing and the rear seal retainer.

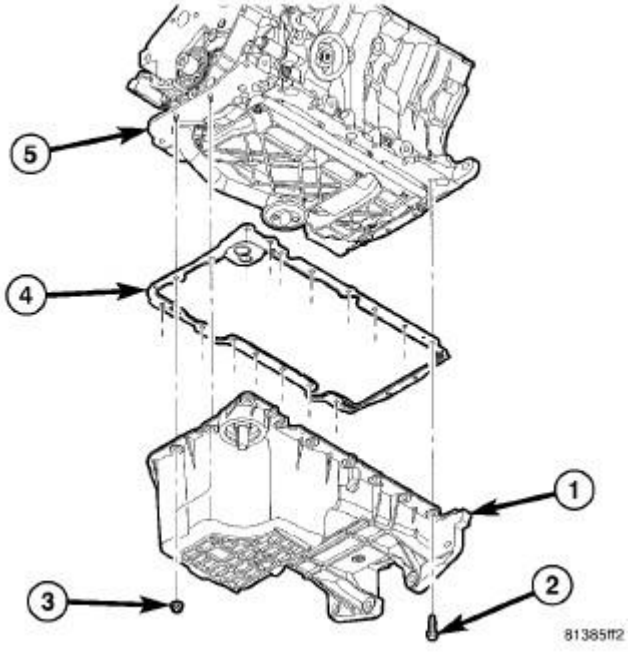

Fig. 392: OIL PAN AND GASKET
Courtesy of CHRYSLER LLC

1 - OIL PAN

2 - BOLT
3 - FASTENER
4 - GASKET
5 - ENGINE BLOCK

3. Install the oil pan gasket (4) to the engine block (5).
4. Install the oil pan (1) and attaching fasteners (2) and (3) finger tight.

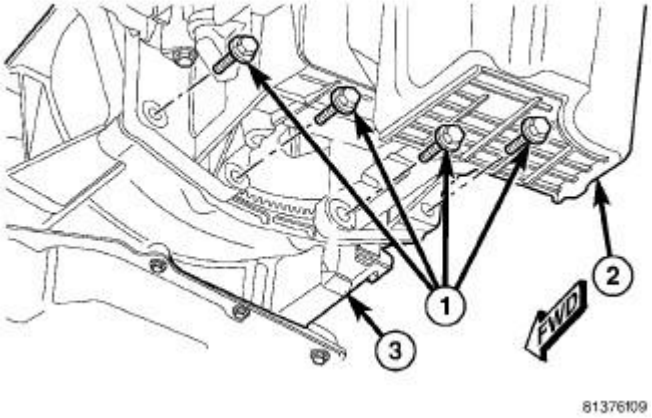

Fig. 393: Removing/Installing Transmission To Oil Pan Bolts - 3.5L
Courtesy of CHRYSLER LLC

NOTE: Assure that the rear face of the oil pan is flush to the transmission bell housing when installing the oil pan.

5. Install and pre-tighten four M10 horizontal rear oil pan to transmission bolts (1) to 1.4 N.m (12 in. lbs.).

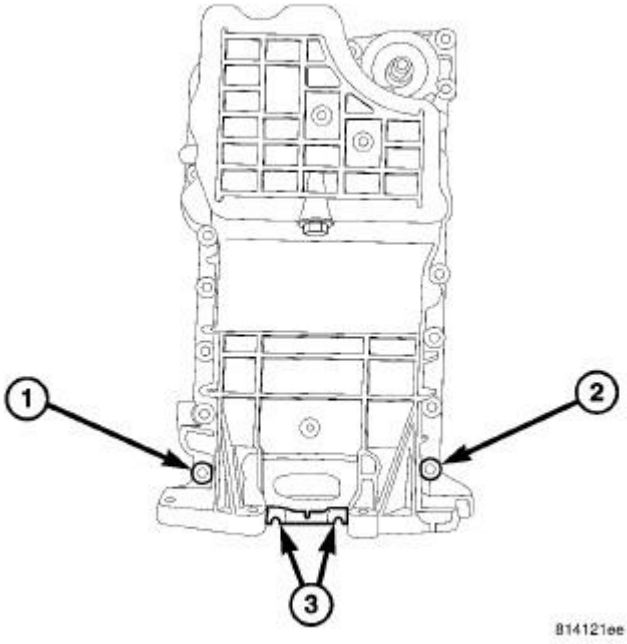

Fig. 394: OIL PAN ALIGNMENT
Courtesy of CHRYSLER LLC

1 - TIGHTEN FIRST 2 - TIGHTEN SECOND 3 - TIGHTEN LAST

6. First tighten the M8 (1) oil pan alignment bolt to 28 N.m (250 in. lbs.), then tighten bolt (2) to 28 N.m (250 in. lbs.).
7. Tighten the remaining M8 bolts and M8 nuts to 28 N.m (250 in. lbs.) and the M6 bolts (3) to 12 N.m (105 in. lbs.).
8. Tighten the four previously installed horizontal M10 oil pan to transmission bolts to 55 N.m (40 ft. lbs.).

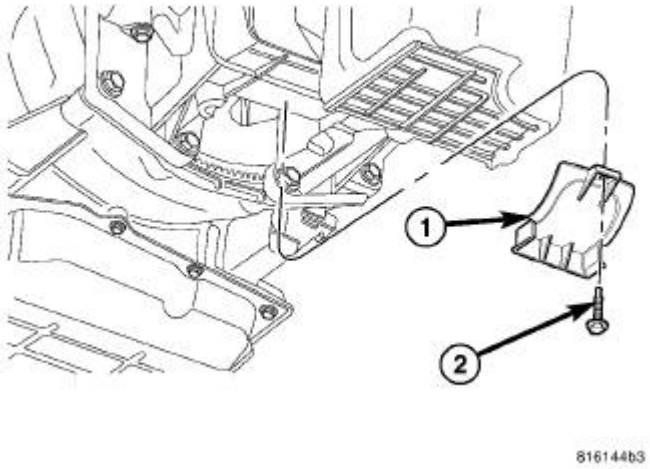

Fig. 395: FLEX PLATE COVER
Courtesy of CHRYSLER LLC

9. Install the flex plate inspection cover (1) and tighten the fastener (2) to 11 N.m (97 in. lbs.).

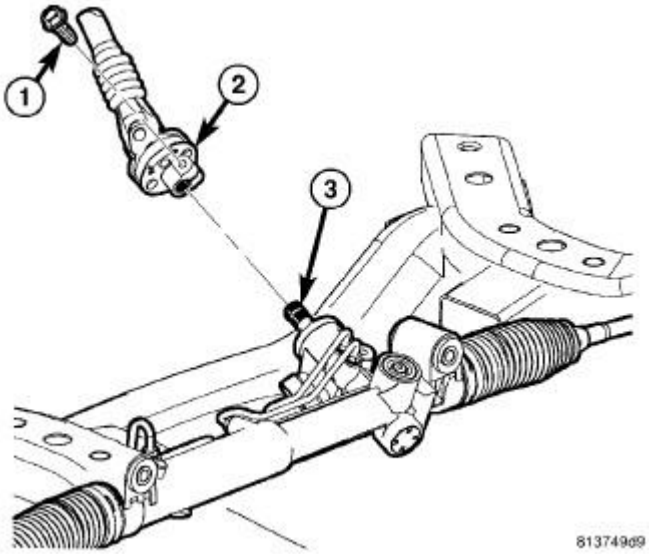

Fig. 396: Steering Coupling
Courtesy of CHRYSLER LLC

10. Install the steering gear to cradle bolts and tighten the fasteners to 95 N.m (70 ft. lbs.).

CAUTION: Prior to coupling installation, make sure gear is centered in its travel to match clockspring centering in steering column.

11. Align the coupling (2) with the input shaft (3) and install the steering coupling. Install a new pinch bolt (1). Tighten the bolt to 54 N.m (40 ft. lbs.).

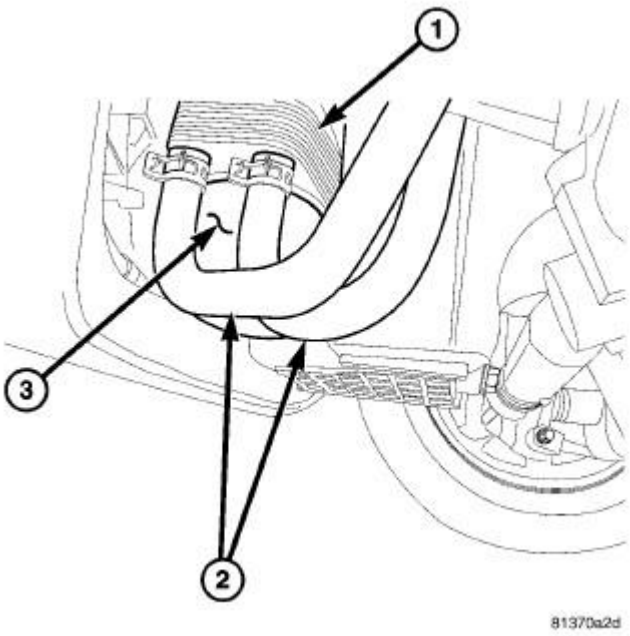

Fig. 397: Oil Cooler & Hoses
Courtesy of CHRYSLER LLC

12. Install the oil cooler and attaching fastener (if equipped) and tighten to 61 N.m (45 ft. lbs.). See **Engine/Lubrication/COOLER, Oil - Installation**.
13. Install the engine oil filter (3). Tighten filter to 12 N.m (106 in. lbs.).
14. Install the belly pan. Refer to **Body/Exterior/BELLY PAN - Installation** .

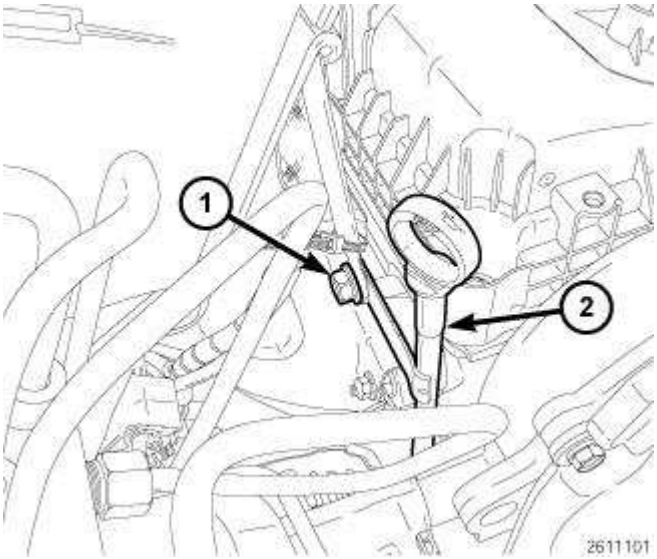

Fig. 398: Engine Oil Level Indicator Tube Retaining Bolt And Indicator Tube
Courtesy of CHRYSLER LLC

15. Lower the vehicle.
16. Install the engine oil level indicator tube (2) and tighten the retaining bolt (1) to 12 N.m (105 in. lbs.).

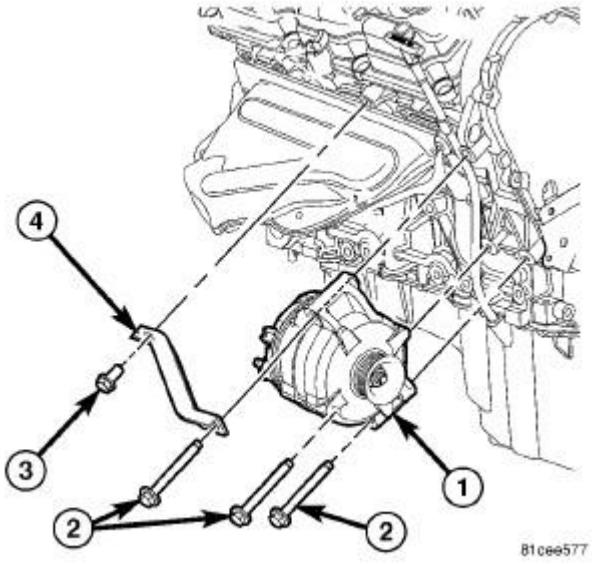

Fig. 399: GENERATOR 3.5L
Courtesy of CHRYSLER LLC

17. Position the generator bracket (4) and install the bracket bolt (3). Tighten the generator mounting bolt (2) to 65 N.m (48 ft. lbs.) and tighten the generator bracket bolt (3) to 54 N.m (40 ft. lbs.).
18. Fill the engine crankcase with the proper oil to the correct level. Refer to **Vehicle Quick Reference/Capacities and Recommended Fluids - Specifications** .
19. Connect the negative battery cable and tighten nut to 5 N.m (45 in. lbs.).

PUMP, ENGINE OIL

Removal

REMOVAL

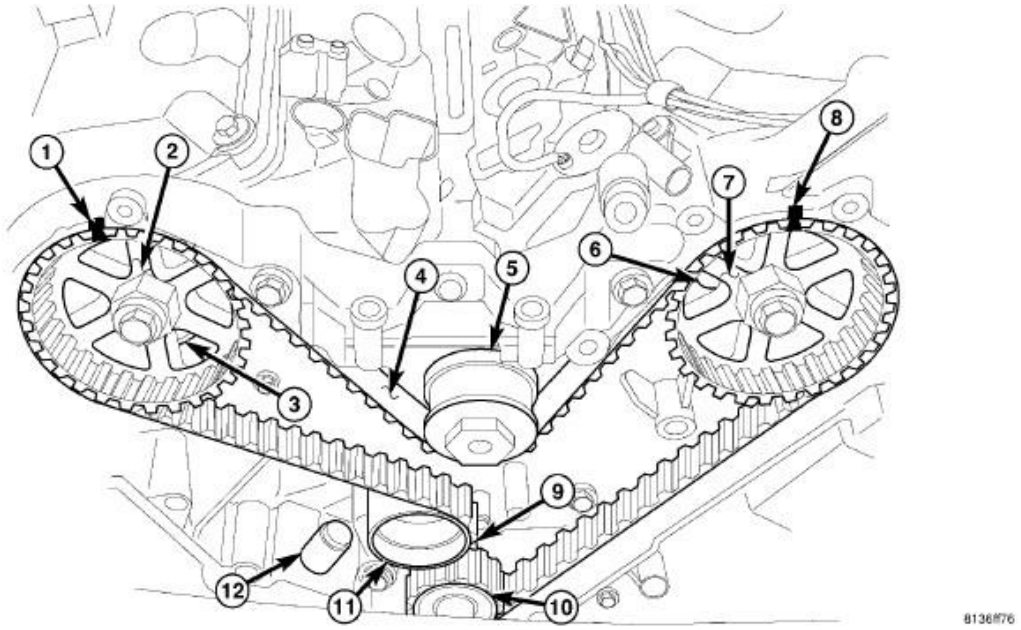

Fig. 400: Identifying Timing Gear Components
Courtesy of CHRYSLER LLC

1. Center and secure the steering wheel.
2. Disconnect and isolate the negative battery cable.
3. Drain the cooling system. Refer to **Cooling - Standard Procedure** .
4. Remove the timing belt (4). See **Engine/Valve Timing/BELT and SPROCKETS, Timing - Removal**.

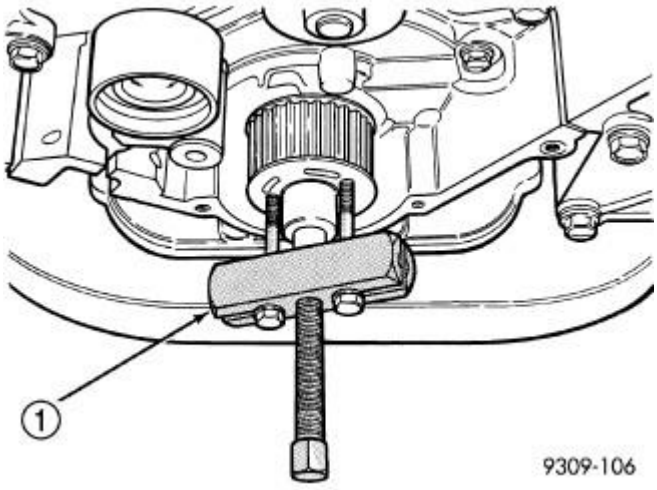

Fig. 401: Crankshaft Sprocket - Removal
Courtesy of CHRYSLER LLC

1 - SPECIAL TOOL L-4407A

5. Remove the crankshaft sprocket. See **Engine/Valve Timing/BELT and SPROCKETS, Timing**

- Removal.

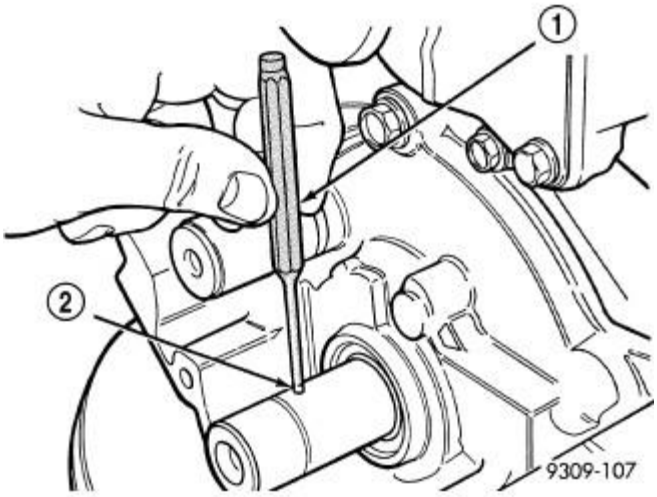

Fig. 402: Crankshaft Sprocket Dowel Pin-Removal/Installation
Courtesy of CHRYSLER LLC

1 - PIN PUNCH 2 - DOWEL

6. Drive the dowel pin (2) into the center of the crankshaft nose and retrieve the pin with a magnet.

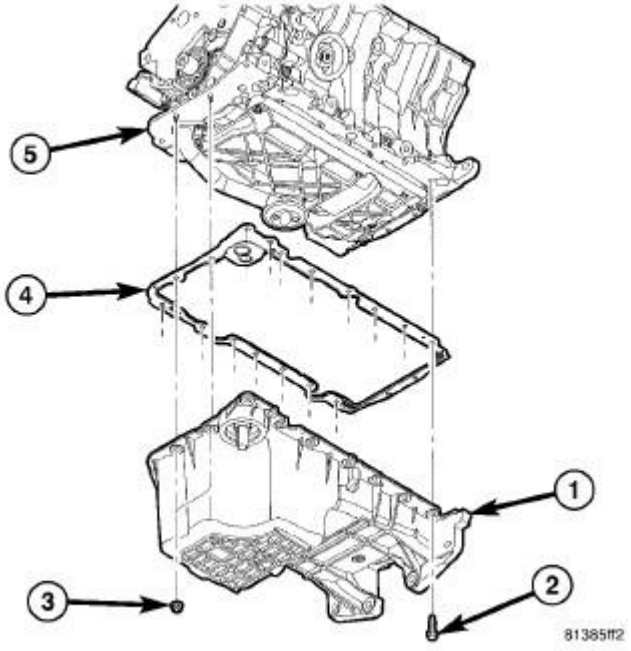

Fig. 403: OIL PAN AND GASKET
Courtesy of CHRYSLER LLC

1 - OIL PAN 2 - BOLT 3 - FASTENER 4 - GASKET 5 - ENGINE BLOCK

7. Remove the engine oil pan. See **Engine/Lubrication/PAN, Oil - Removal**.

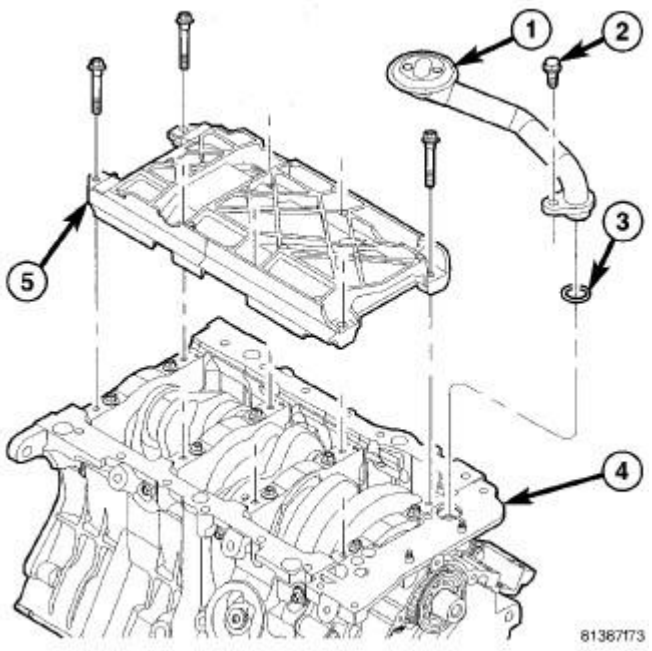

Fig. 404: WINDAGE TRAY AND OIL PICK UP TUBE
Courtesy of CHRYSLER LLC

1 - OIL PICK UP TUBE WITH STRAINER 2 - BOLT 3 - O-RING 4 - OIL PUMP 5 - WINDAGE TRAY

8. Remove the bolt (2) and the oil pickup tube (1).

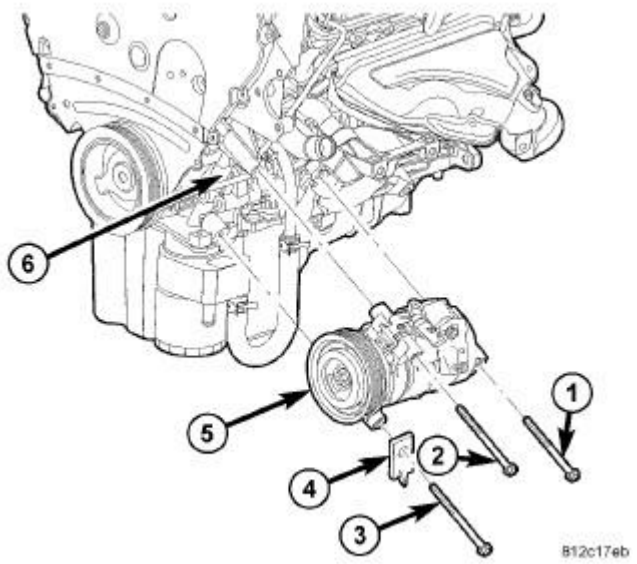

Fig. 405: COMPRESSOR REMOVAL & INSTALLATION
Courtesy of CHRYSLER LLC

NOTE: The bolt (3) securing the A/C compressor to the engine cannot be fully removed until the compressor is positioned away from the cylinder block.

9. Fully loosen the bolt (3) that secures the A/C compressor (5) and automatic transmission cooler line bracket (4) (if equipped) to the cylinder block (6).

CAUTION: Use care not to deform or damage the automatic transmission cooler lines and retaining bracket when repositioning the A/C compressor.

10. Support the A/C compressor and remove the bolts (1) and (2) that secure the compressor to the cylinder block and reposition the A/C compressor.

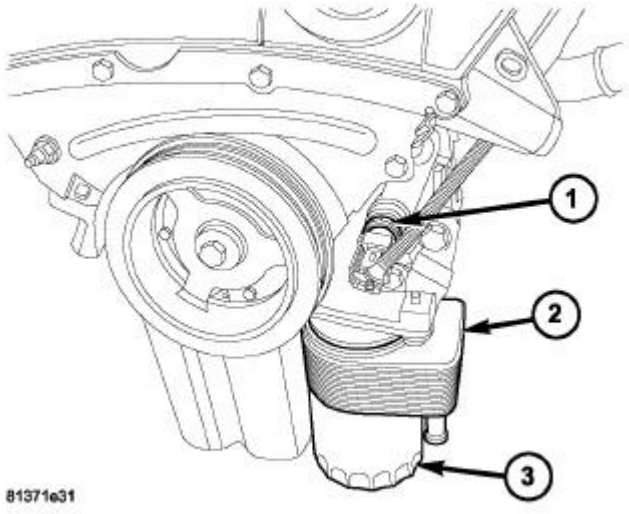

Fig. 406: OIL PRESSURE SWITCH
Courtesy of CHRYSLER LLC

1 - OIL PRESSURE SWITCH 2 - ENGINE OIL COOLER 3 - ENGINE OIL FILTER

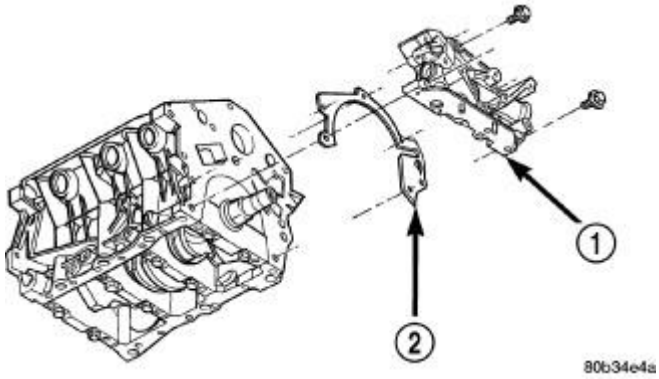

Fig. 407: OIL PUMP
Courtesy of CHRYSLER LLC

1 - OIL PUMP 2 - GASKET

Remove the oil pressure switch (1). See **Engine/Lubrication/SWITCH, Oil Pressure - Removal**.

11. Remove the oil pump fasteners. Remove the oil pump (1) and gasket (2) from the engine.

Disassembly

DISASSEMBLY

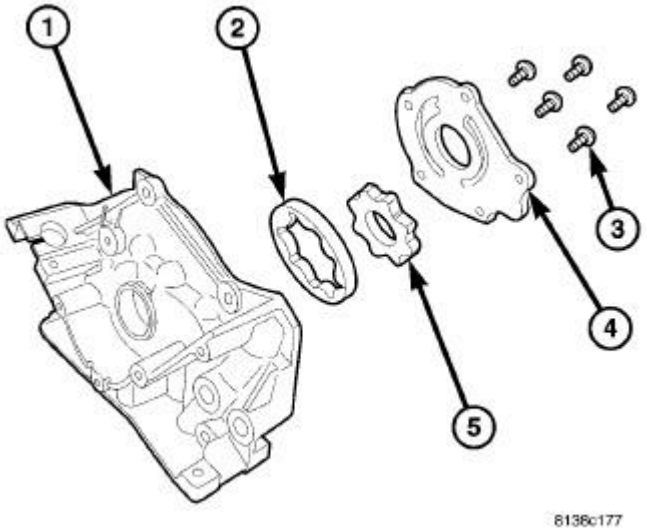

Fig. 408: OIL PUMP
Courtesy of CHRYSLER LLC

1 - OIL PUMP BODY
2 - OIL PUMP OUTER ROTOR
3 - SCREWS
4 - OIL PUMP COVER
5 - OIL PUMP INNER ROTOR

1. Remove oil pump cover screws (3) and lift off cover (4).
2. Remove pump rotors (2, 5).
3. Wash all parts in a suitable solvent and inspect carefully for damage or wear.

Cleaning

CLEANING

1. Clean all parts thoroughly in a suitable solvent.

Inspection

INSPECTION

NOTE: **DO NOT inspect the oil relief valve assembly. If the oil relief valve is suspect, replace the oil pump.**

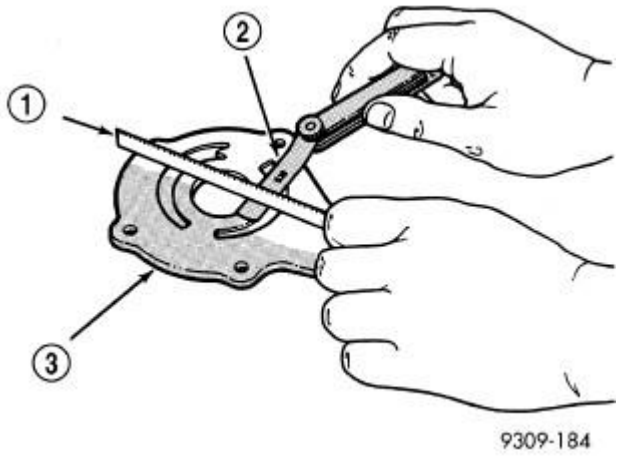

Fig. 409: Checking Oil Pump Cover Flatness
Courtesy of CHRYSLER LLC

1 - STRAIGHT EDGE 2 - FEELER GAUGE 3 - OIL PUMP COVER

1. Disassemble oil pump. See **Engine/Lubrication/PUMP, Engine Oil - Disassembly**.
2. Clean all parts thoroughly. Mating surface of the oil pump housing should be smooth. Replace pump cover if scratched or grooved.
3. Lay a straightedge (1) across the pump cover (3) surface. If a 0.025 mm (0.001 in.) feeler gauge can be inserted between cover and straight edge, cover should be replaced.

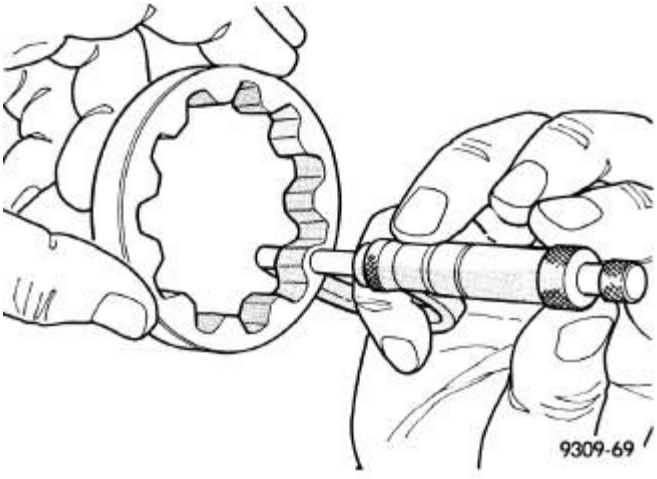

Fig. 410: Measuring Outer Rotor Thickness
Courtesy of CHRYSLER LLC

4. Measure thickness and diameter of outer rotor. If outer rotor thickness measures 14.299 mm (0.563 in.) or less , or if the diameter is 79.78 mm (3.141 inches.) or less, replace outer rotor.

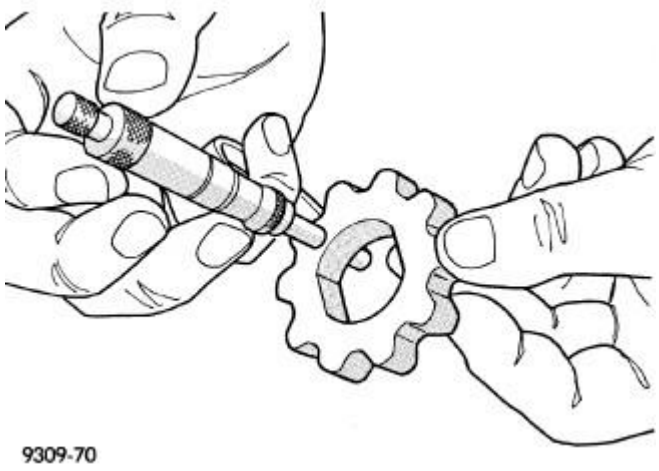

Fig. 411: Measuring Inner Rotor Thickness
Courtesy of CHRYSLER LLC

5. If inner rotor measures 14.299 mm (0.563 in.) or less replace inner rotor.

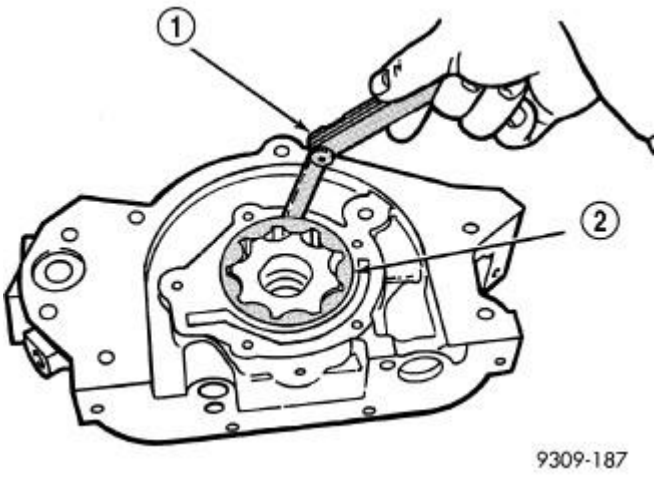

Fig. 412: Measuring Outer Rotor Clearance in Housing
Courtesy of CHRYSLER LLC

1 - FEELER GAUGE 2 - OUTER ROTOR

6. Slide outer rotor (2) into body, press to one side with fingers and measure clearance between rotor and body. If measurement is 0.39 mm (0.015 inch.) or more, replace body only if outer rotor is in specifications.

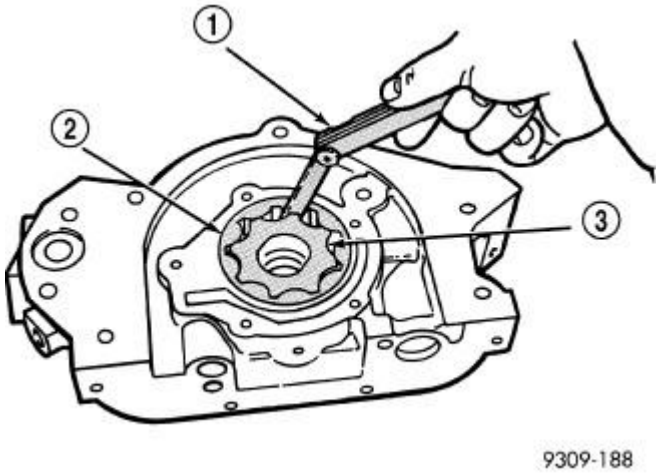

Fig. 413: Measuring Clearance Between Rotors
Courtesy of CHRYSLER LLC

1 - FEELER GAUGE 2 - OUTER ROTOR 3 - INNER ROTOR

7. Install inner rotor into body. If clearance between inner (3) and outer rotors (2) is 0.20 mm (0.008 inch.) or more, replace both rotors.

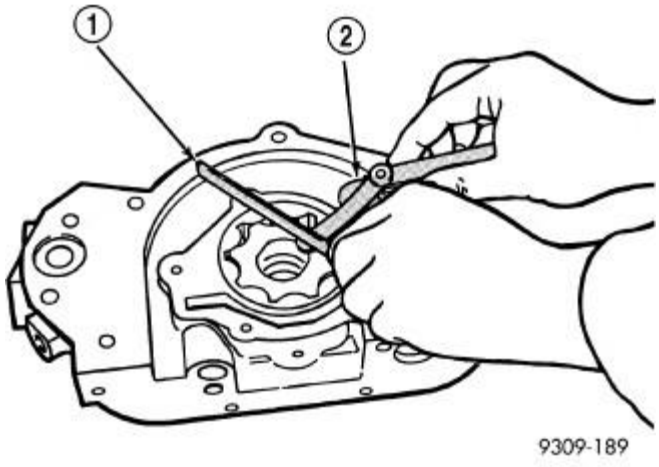

Fig. 414: Measuring Clearance Over Rotors
Courtesy of CHRYSLER LLC

1 - STRAIGHT EDGE 2 - FEELER GAUGES

8. Place a straightedge (1) across the face of the body, between bolt holes. If a feeler gauge of 0.077 mm (0.003 in.) or more can be inserted between rotors and the straightedge, replace pump assembly **ONLY** if rotors are in specs.

9. Assemble oil pump. See **Engine/Lubrication/PUMP, Engine Oil - Assembly**.

Assembly

ASSEMBLY

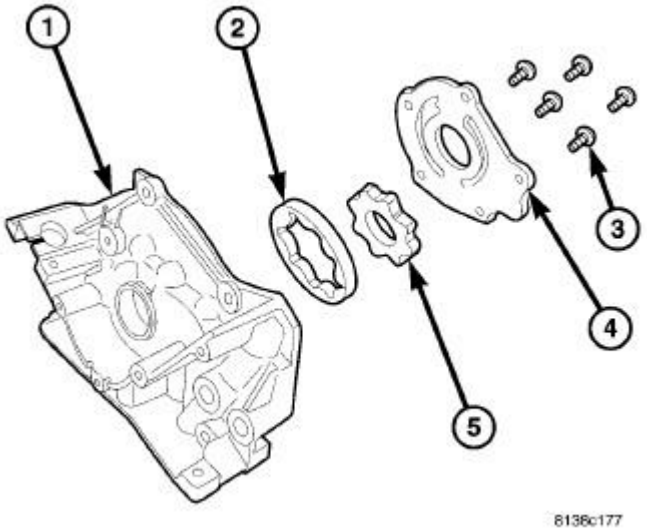

Fig. 415: OIL PUMP
Courtesy of CHRYSLER LLC

1 - OIL PUMP BODY
2 - OIL PUMP OUTER ROTOR
3 - SCREWS
4 - OIL PUMP COVER
5 - OIL PUMP INNER ROTOR

1. Assemble oil pump using new parts as required.
2. Tighten cover screws (3) to 12 N.m (105 in. lbs.).
3. Prime oil pump before installation by filling rotor cavity with engine oil.
4. If oil pressure is low and pump is within specifications, inspect for worn engine bearings or other reasons for oil pressure loss.

Installation

INSTALLATION

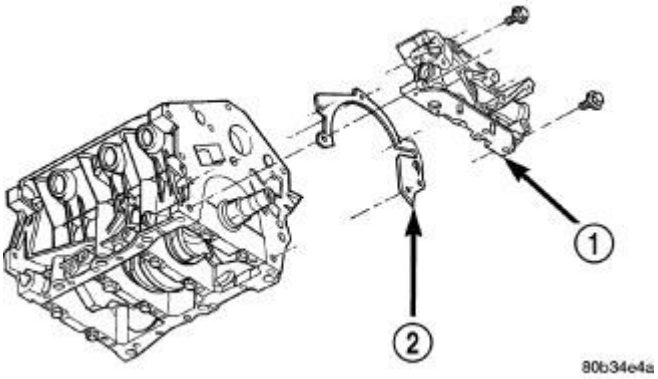

Fig. 416: OIL PUMP
Courtesy of CHRYSLER LLC

1 - OIL PUMP 2 - GASKET

1. Prime the oil pump (1) before installation by filling the rotor cavity with clean engine oil.
2. Install the oil pump (1) and gasket (2) carefully over the crankshaft. Position the pump onto the block and tighten the bolts to 28 N.m (250 in. lbs.).

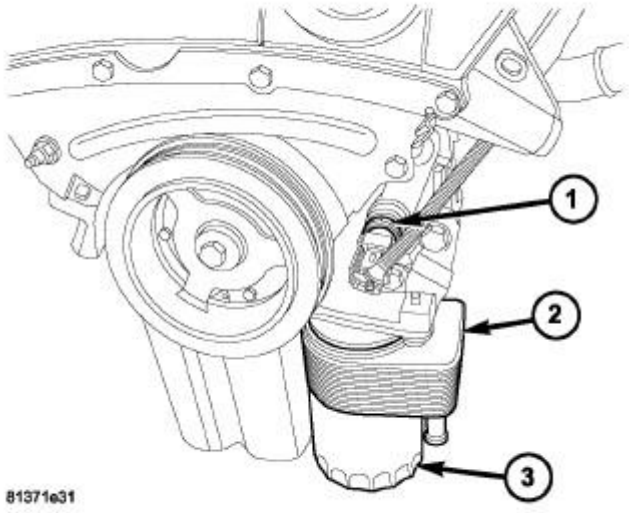

Fig. 417: OIL PRESSURE SWITCH
Courtesy of CHRYSLER LLC

1 - OIL PRESSURE SWITCH 2 - ENGINE OIL COOLER 3 - ENGINE OIL FILTER

3. Install the oil pressure switch (1). See **Engine/Lubrication/SWITCH, Oil Pressure - Installation**.

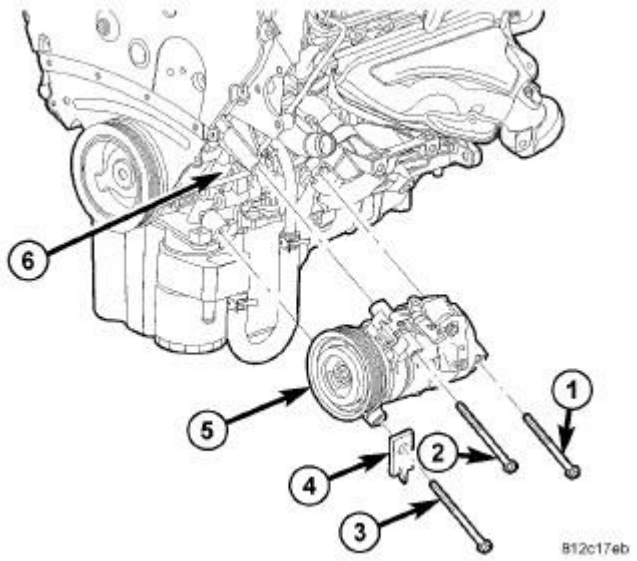

Fig. 418: COMPRESSOR REMOVAL & INSTALLATION
Courtesy of CHRYSLER LLC

CAUTION: When equipped, use care not to deform or damage the automatic transmission cooler lines and retaining bracket when repositioning the A/C compressor.

NOTE: The bolt (3) that secures the A/C compressor and transmission cooler line bracket (4) (when equipped) must be installed through the bracket and the lower front mounting hole of the compressor prior to final positioning of the compressor to the cylinder block.

4. Loosely install the bolt (3) that secures the A/C compressor and automatic transmission cooler line bracket (4) (when equipped) to the compressor and position the compressor, bracket and bolt to the cylinder block (6).
5. Loosely install the bolts (1) and (2) that secure the A/C compressor to the cylinder block.
6. Tighten all three bolts that secure the A/C compressor to the engine in the following order to 26 N.m (19 ft. lbs.):
   - Upper front bolt (2).
   - Lower front bolt (3).
   - Rear bolt (1).

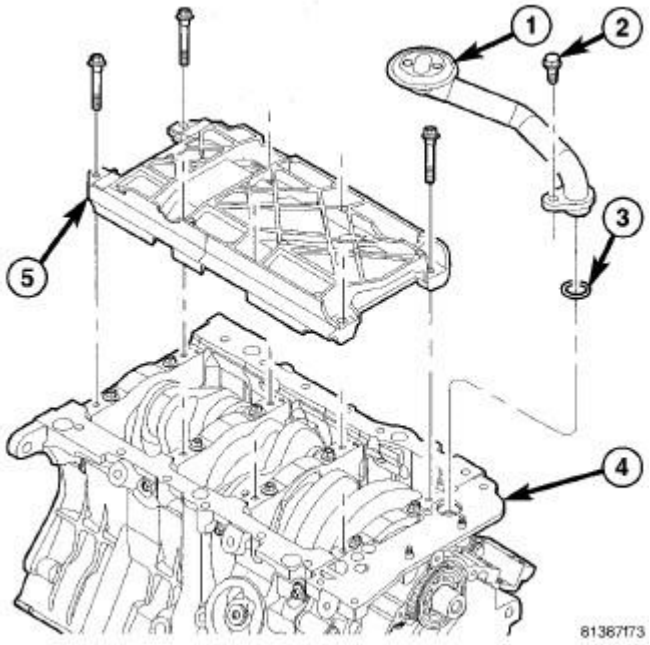

Fig. 419: WINDAGE TRAY AND OIL PICK UP TUBE
Courtesy of CHRYSLER LLC

1 - OIL PICK UP TUBE WITH STRAINER
2 - BOLT
3 - O-RING
4 - OIL PUMP
5 - WINDAGE TRAY

7. Install a new O-ring (3) on the oil pickup tube (1).
8. Install the oil pickup tube (1). Tighten the bolt (2) to 12 N.m (106 in. lbs.).

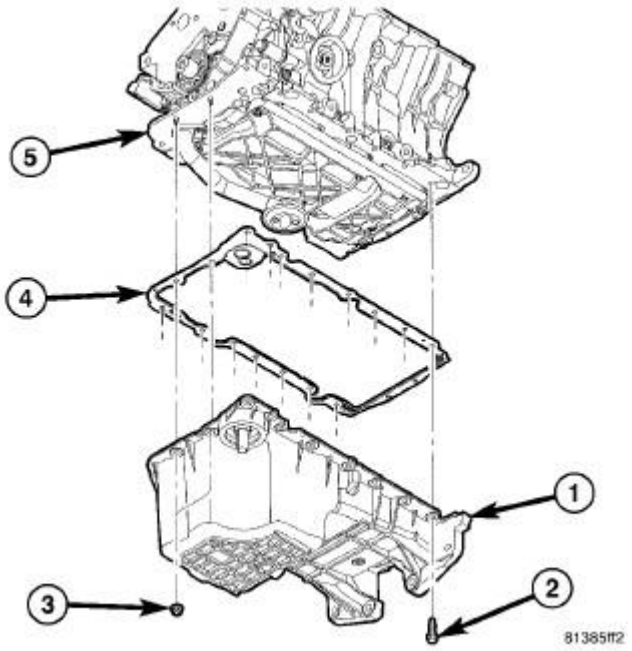

Fig. 420: OIL PAN AND GASKET
Courtesy of CHRYSLER LLC

1 - OIL PAN
2 - BOLT
3 - FASTENER
4 - GASKET
5 - ENGINE BLOCK

9. Install the engine oil pan. See **Engine/Lubrication/PAN, Oil - Installation**.

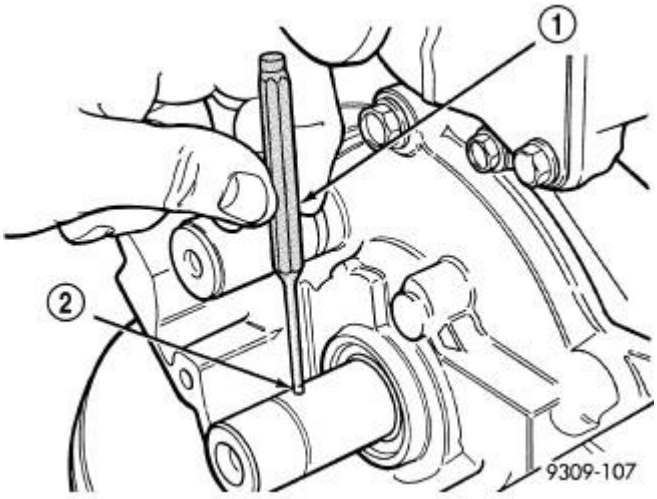

Fig. 421: Crankshaft Sprocket Dowel Pin-Removal/Installation

Courtesy of CHRYSLER LLC

1 - PIN PUNCH 2 - DOWEL

10. Install the dowel pin (2) into the crankshaft until 1.2 mm (0.047 in.) of the dowel pin remains protruding above the crankshaft surface.

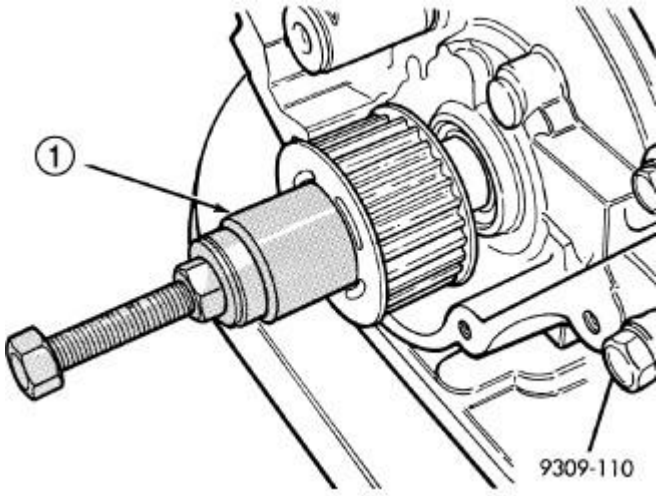

Fig. 422: Crankshaft Sprocket - Installation
Courtesy of CHRYSLER LLC

1 - INSTALL WITH SPECIAL TOOL 6641 WITH 12 mm SCREW C-4685-C1 AND THRUST BEARING AND WASHER

11. Install the crankshaft sprocket. See **Engine/Valve Timing/BELT and SPROCKETS, Timing - Installation**.

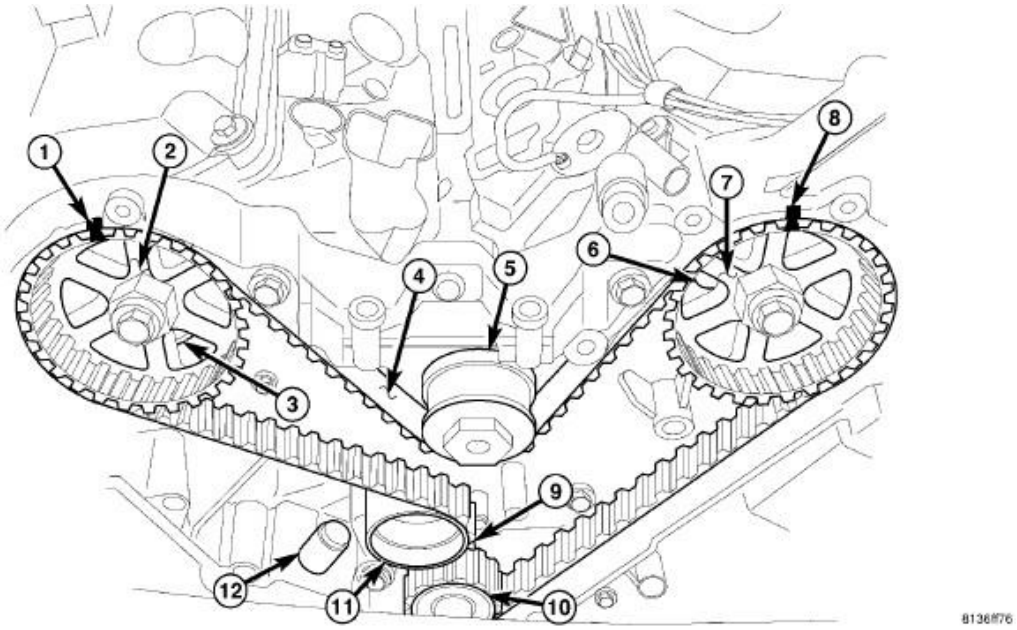

Fig. 423: Identifying Timing Gear Components
Courtesy of CHRYSLER LLC

12. Install the timing belt (4). See **Engine/Valve Timing/BELT and SPROCKETS, Timing - Installation**.
13. Install the timing belt covers. See **Engine/Valve Timing/COVER(S), Engine Timing - Installation**.

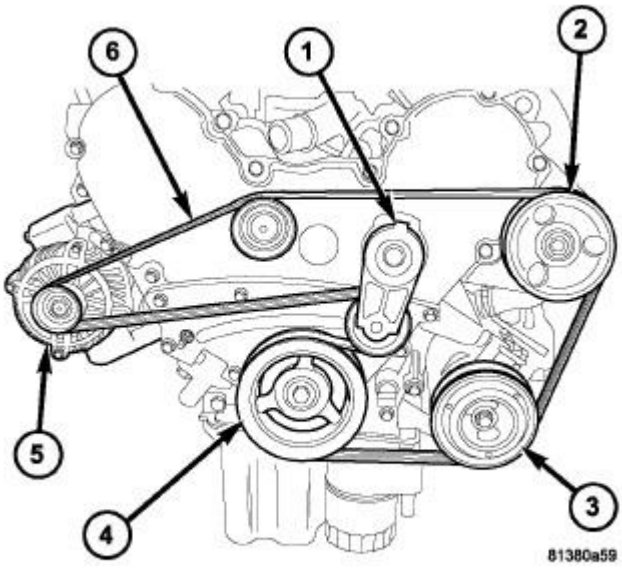

Fig. 424: ACCESSORY DRIVE BELT ROUTING
Courtesy of CHRYSLER LLC

1 - DRIVE BELT TENSIONER 2 - POWER STEERING PULLEY 3 - AIR CONDITIONING COMPRESSOR 4 - CRANKSHAFT DAMPER 5 - GENERATOR 6 - DRIVE BELT

14. Install the crankshaft vibration damper (4). See **Engine/Engine Block/DAMPER, Vibration - Installation**.
15. Install the accessory drive belt (6). Refer to **Cooling/Accessory Drive/BELT, Serpentine - Installation** .
16. Fill the cooling system to the proper level using the appropriate coolant. Refer to **Cooling - Standard Procedure** .
17. Fill the engine crankcase with the proper oil to the correct level. Refer to **Vehicle Quick Reference/Capacities and Recommended Fluids - Specifications** .
18. Connect the negative battery cable and tighten nut to 5 N.m (45 in. lbs.).

SWITCH, OIL PRESSURE

Removal

REMOVAL

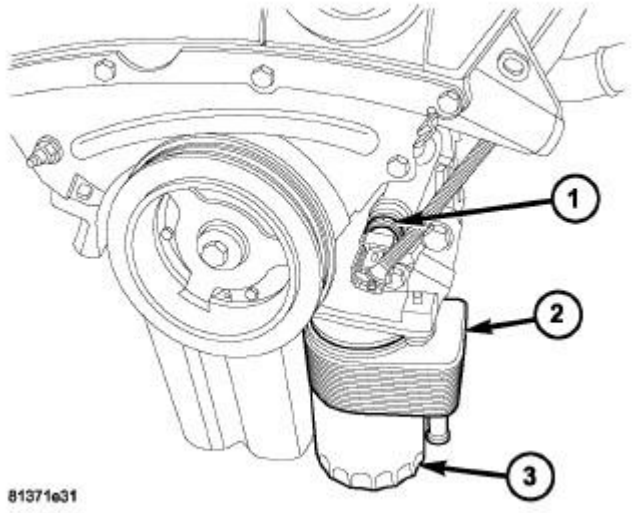

Fig. 425: OIL PRESSURE SWITCH
Courtesy of CHRYSLER LLC

1 - OIL PRESSURE SWITCH
2 - ENGINE OIL COOLER
3 - ENGINE OIL FILTER

1. Raise vehicle on hoist.
2. Position an oil collecting container under switch location.
3. Disconnect electrical connector.
4. Unscrew oil pressure switch (1) .

Installation

INSTALLATION

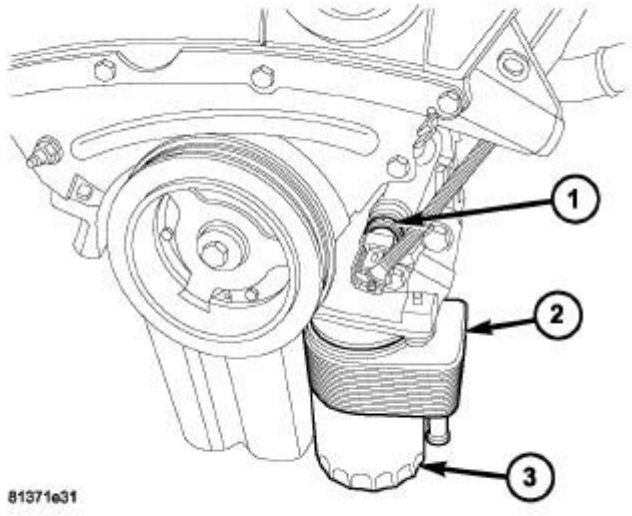

Fig. 426: OIL PRESSURE SWITCH
Courtesy of CHRYSLER LLC

1 - OIL PRESSURE SWITCH
2 - ENGINE OIL COOLER
3 - ENGINE OIL FILTER

1. Apply Mopar® Thread Sealant to the switch (1) threads.
2. Install oil pressure switch (1) to fitting.
3. Connect electrical connector.
4. Lower vehicle.
5. Start engine and check for leaks.

6. Check engine oil level and adjust as necessary.

MANIFOLDS

MANIFOLD, EXHAUST, LEFT

Removal

LEFT EXHAUST MANIFOLD

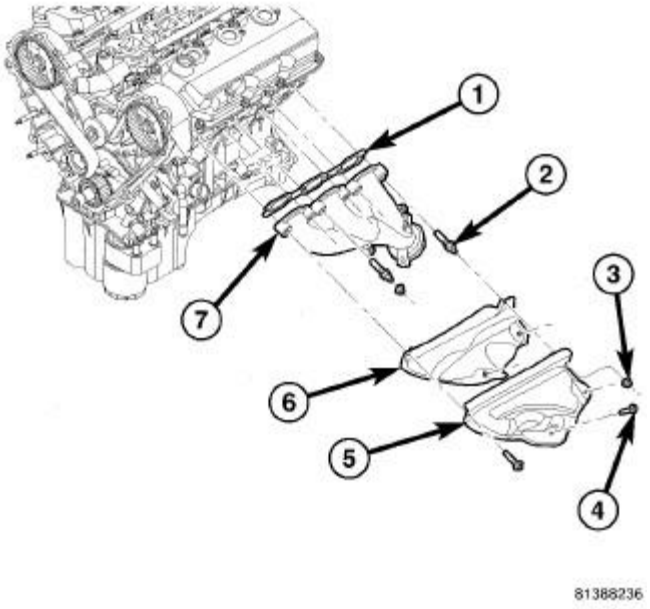

Fig. 427: LEFT EXHAUST MANIFOLD
Courtesy of CHRYSLER LLC

1. Disconnect and isolate the negative battery cable.
2. Disconnect the upstream oxygen sensor electrical connector.
3. Remove the upper two nuts (3) from the exhaust manifold heat shields.
4. Raise and secure the vehicle on a hoist. Refer to **Vehicle Quick Reference/Hoisting - Standard Procedure** .
5. Use a socket such as Snap-On YA8875 or a crow foot wrench to remove the upstream oxygen sensor from the exhaust manifold.
6. Support the engine and remove the engine mount. See **Engine/Engine Mounting/INSULATOR, Engine Mount - Removal**.

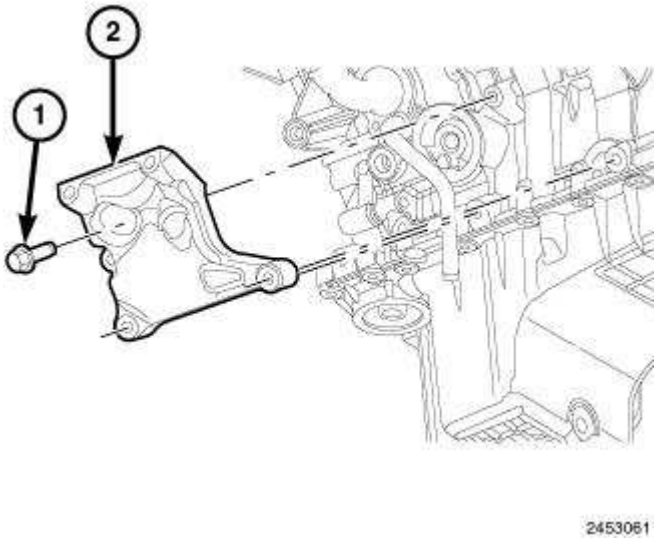

Fig. 428: Engine Mount Bracket
Courtesy of CHRYSLER LLC

7. Remove three bolts (1) and the engine mount bracket (2).

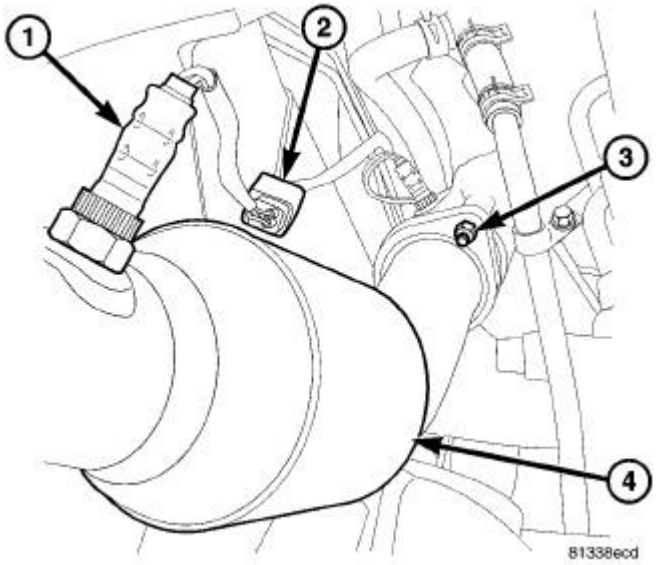

Fig. 429: Oxygen Sensor & Catalytic Converter
Courtesy of CHRYSLER LLC

8. Remove the catalytic converter ball flange nuts (3).

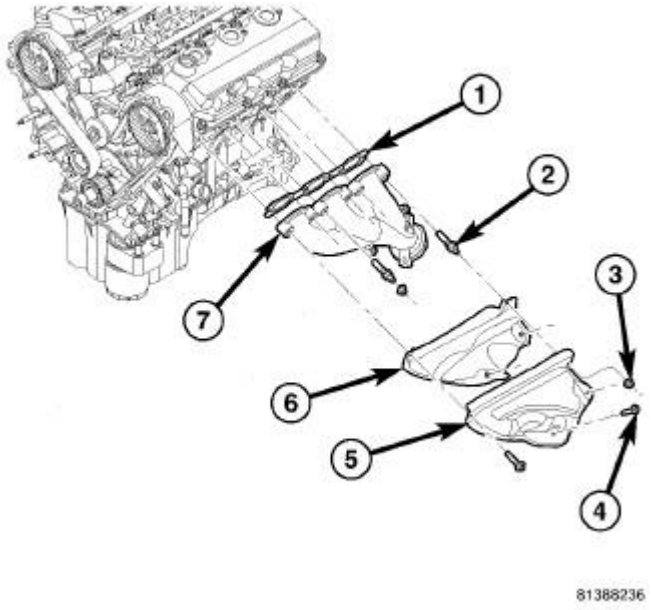

Fig. 430: LEFT EXHAUST MANIFOLD
Courtesy of CHRYSLER LLC

9. Remove two bolts (4) and the upper (5) and lower (6) exhaust manifold heatshields.
10. Remove the exhaust manifold (7) and gasket (1).

Inspection

INSPECTION

1. Inspect exhaust manifolds for damage or cracks.
2. Check manifold flatness.
3. Inspect the exhaust manifold gasket for obvious discoloration or distortion.
4. Check distortion of the cylinder head mounting surface with a straightedge and thickness gauge.

Installation

LEFT EXHAUST MANIFOLD

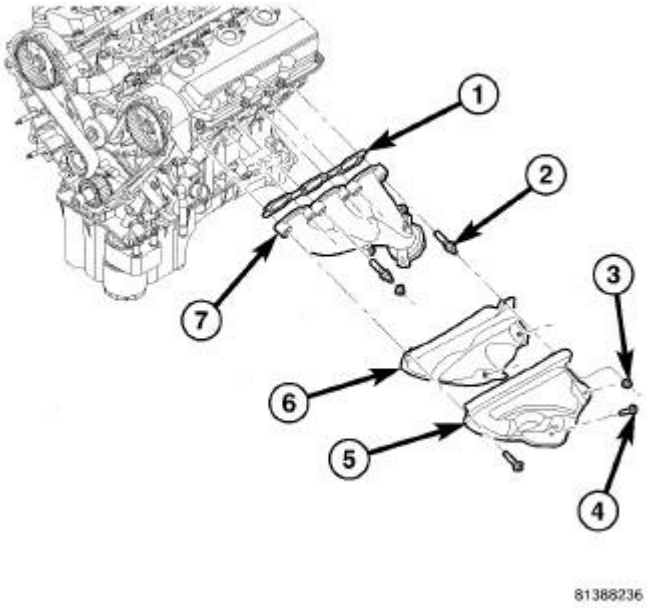

Fig. 431: LEFT EXHAUST MANIFOLD
Courtesy of CHRYSLER LLC

1. Clean the gasket surfaces.

   NOTE: If replacing the exhaust manifold, tighten the exhaust outlet studs to 39 N.m (29 ft. lbs.).

2. Position the exhaust manifold (7) and gasket (1). Install the retaining bolts (2). Tighten the bolts starting at the center working outward to 23 N.m (17 ft. lbs.).

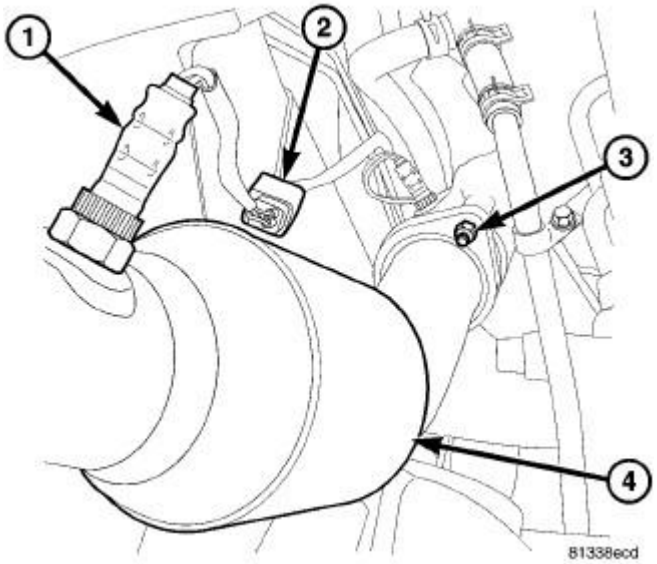

Fig. 432: Oxygen Sensor & Catalytic Converter
Courtesy of CHRYSLER LLC

3. Connect the catalytic converter to the exhaust manifold. Tighten the ball flange nuts (1) to 34 N.m (25 ft. lbs.).

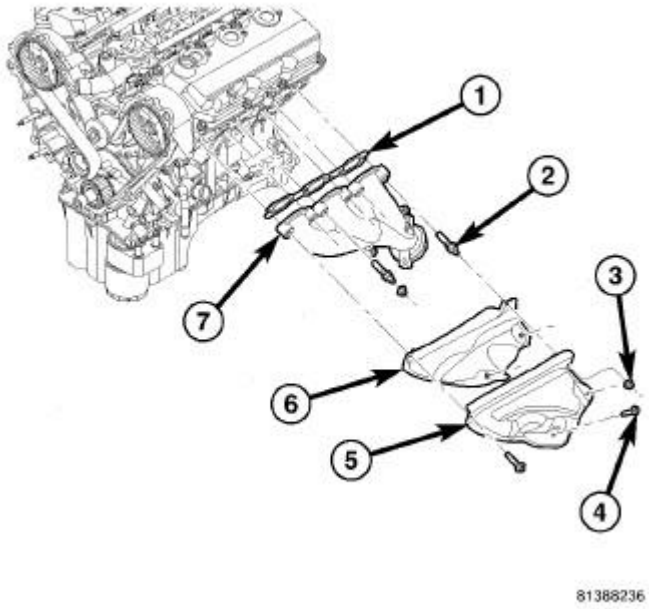

Fig. 433: LEFT EXHAUST MANIFOLD
Courtesy of CHRYSLER LLC

4. Install the upper (5) and lower (6) exhaust manifold heat shields with two bolts. Tighten the bolts to 12 N.m (105 in. lbs.).

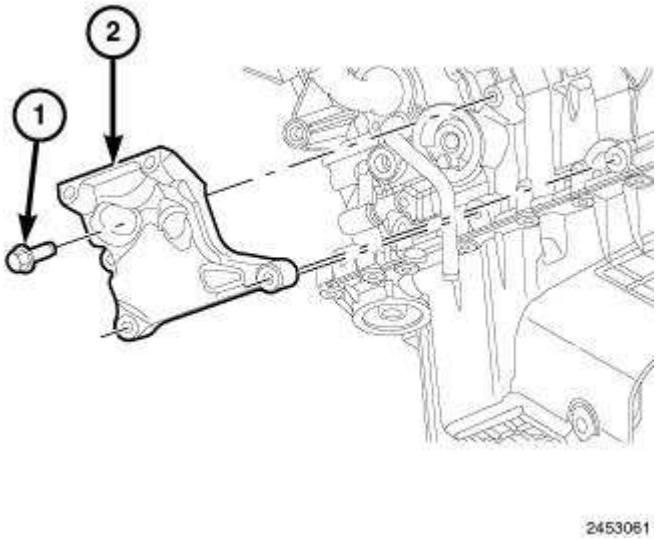

Fig. 434: Engine Mount Bracket
Courtesy of CHRYSLER LLC

5. Install the engine mount bracket (2) with three bolts (1). Tighten the bolts to 70 N.m (52 ft. lbs.).
6. Install the engine mount. See **Engine/Engine Mounting/INSULATOR, Engine Mount - Installation**.
7. Install the upstream oxygen sensor. Refer to **Fuel System/Fuel Injection/SENSOR, Oxygen - Installation** .
8. Install the upper two exhaust manifold heat shield nuts. Tighten nuts to 8 N.m (73 in. lbs.).
9. Connect the negative battery cable.

MANIFOLD, EXHAUST, RIGHT

Removal

RIGHT EXHAUST MANIFOLD

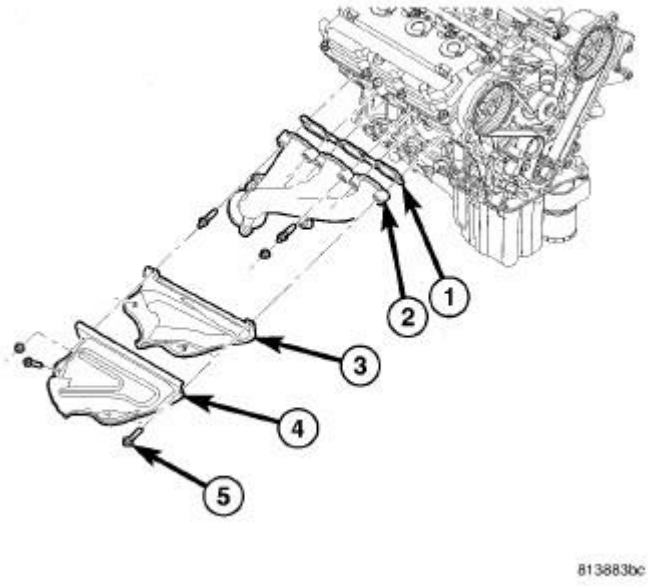

Fig. 435: RIGHT EXHAUST MANIFOLD
Courtesy of CHRYSLER LLC

1. Disconnect and isolate the negative battery cable.
2. Disconnect the upstream oxygen sensor electrical connector.
3. Remove the upper two nuts from the exhaust manifold heat shields.
4. Raise and secure the vehicle on a hoist. Refer to **Vehicle Quick Reference/Hoisting - Standard Procedure** .
5. Use a socket such as Snap-On YA8875 or a crow foot wrench to remove the upstream oxygen

sensor from the exhaust manifold.

6. Support the engine and remove the engine mount. See **Engine/Engine Mounting/INSULATOR, Engine Mount - Removal**.

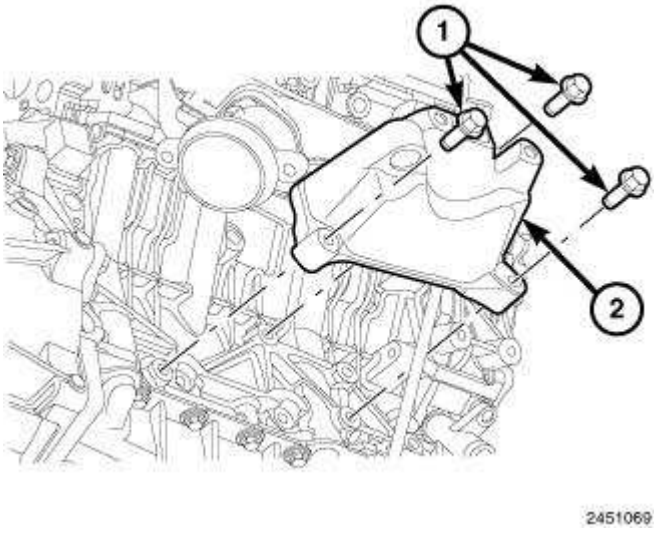

Fig. 436: Engine Mount Bracket
Courtesy of CHRYSLER LLC

7. Remove three bolts (1) and the engine mount bracket (2).

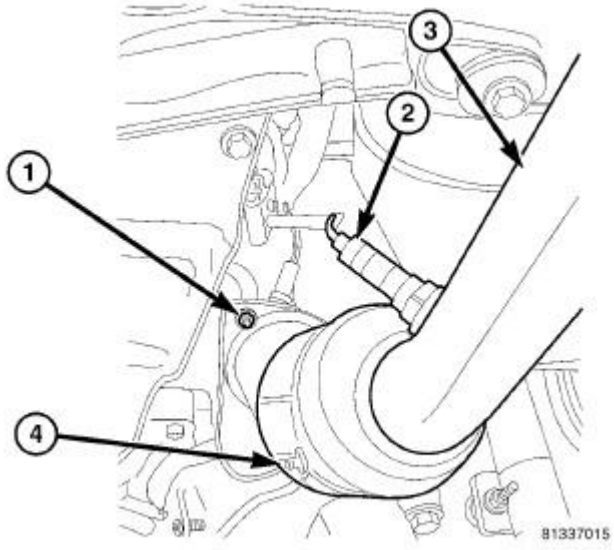

Fig. 437: RIGHT HAND CATALYTIC CONVERTER
Courtesy of CHRYSLER LLC

8. Remove the catalytic converter ball flange nuts (1).

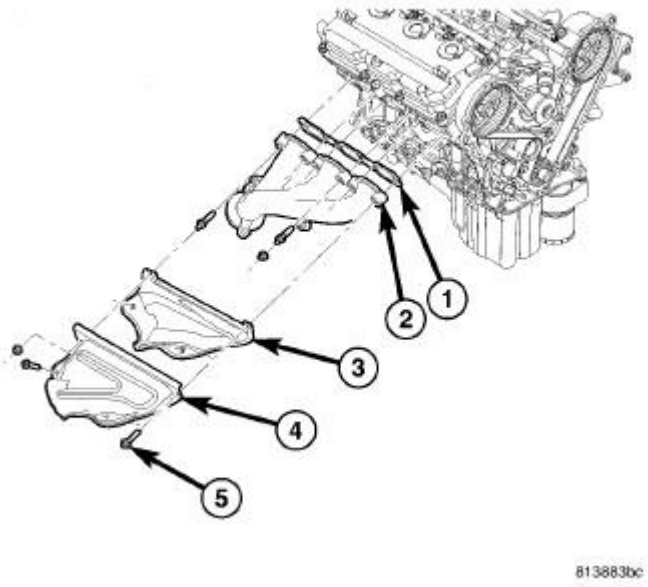

Fig. 438: RIGHT EXHAUST MANIFOLD
Courtesy of CHRYSLER LLC

9. Remove two bolts and the upper (4) and lower (3) exhaust manifold heat shields.
10. Remove the exhaust manifold (2) and gasket (1).

Installation

RIGHT EXHAUST MANIFOLD

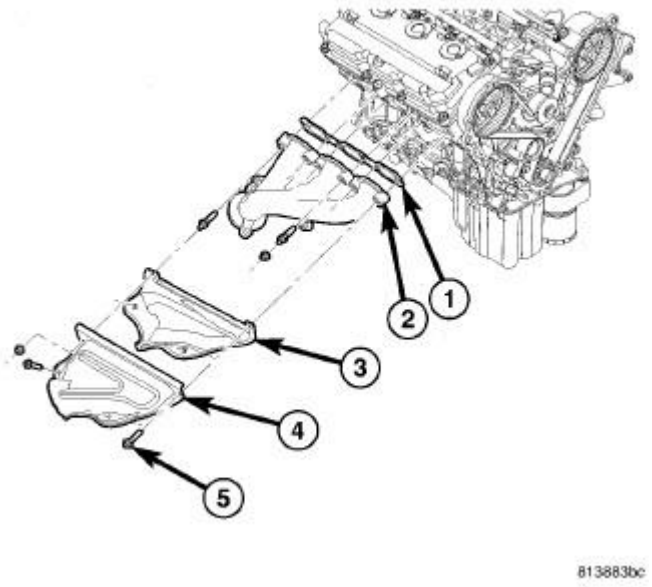

Fig. 439: RIGHT EXHAUST MANIFOLD
Courtesy of CHRYSLER LLC

1. Clean the gasket surfaces.

   NOTE: If replacing the exhaust manifold, tighten the exhaust outlet studs to 39 N.m (29 ft. lbs.).

2. Position the exhaust manifold (2) and gasket (1). Install the retaining bolts (5). Tighten the bolts starting at the center working outward to 23 N.m (17 ft. lbs.).

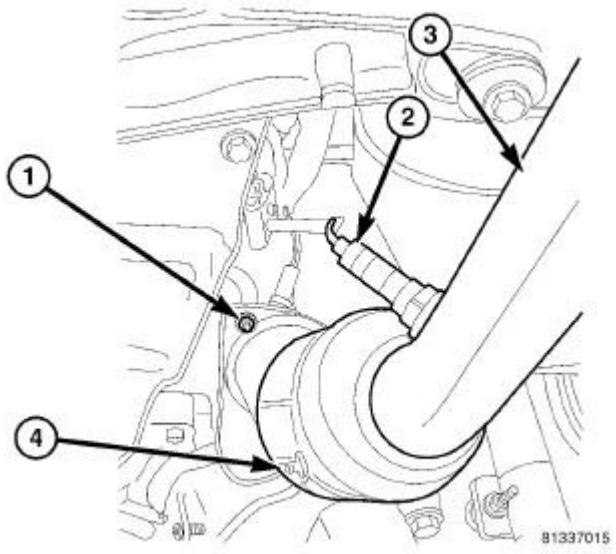

Fig. 440: RIGHT HAND CATALYTIC CONVERTER
Courtesy of CHRYSLER LLC

3. Connect the catalytic converter to the exhaust manifold. Tighten the ball flange nuts (1) to 34 N.m (25 ft. lbs.).

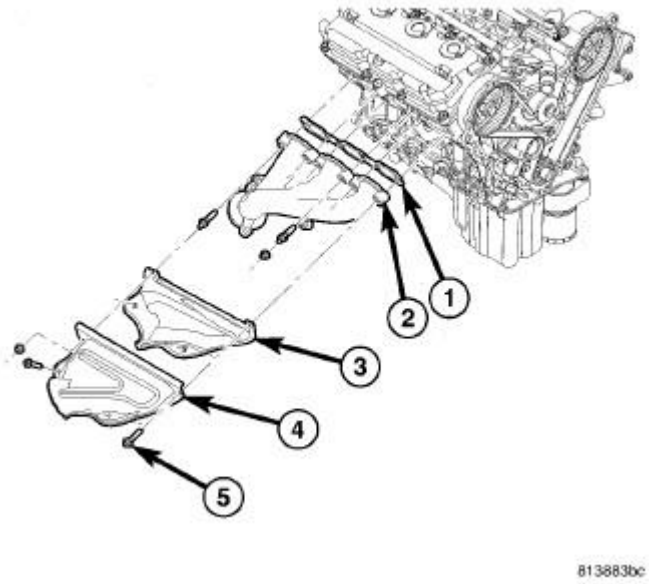

Fig. 441: RIGHT EXHAUST MANIFOLD
Courtesy of CHRYSLER LLC

4. Install the upper (4) and lower (3) exhaust manifold heat shields with two bolts. Tighten the bolts to 12 N.m (105 in. lbs.).

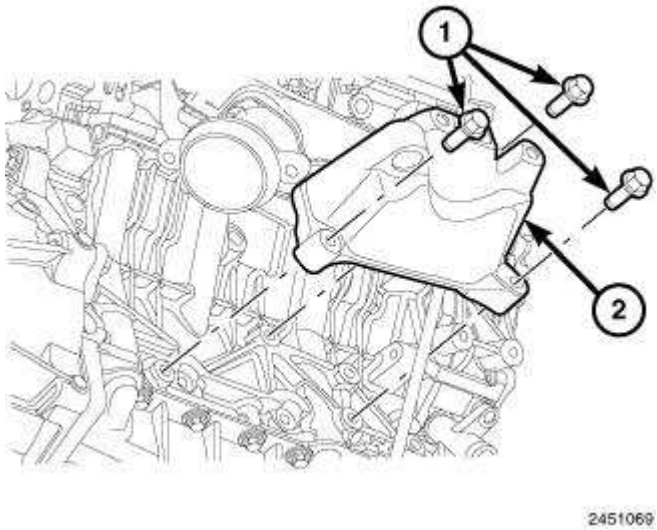

Fig. 442: Engine Mount Bracket
Courtesy of CHRYSLER LLC

5. Install the engine mount bracket (2) with three bolts (1). Tighten the bolts to 70 N.m (52 ft. lbs.).
6. Install the engine mount. See **Engine/Engine Mounting/INSULATOR, Engine Mount - Installation**.
7. Install the upstream oxygen sensor. Refer to **Fuel System/Fuel Injection/SENSOR, Oxygen - Installation** .
8. Install the upper two exhaust manifold heat shield nuts. Tighten nuts to 8 N.m (73 in. lbs.).
9. Connect the negative battery cable.

MANIFOLD, INTAKE

Removal

UPPER INTAKE MANIFOLD

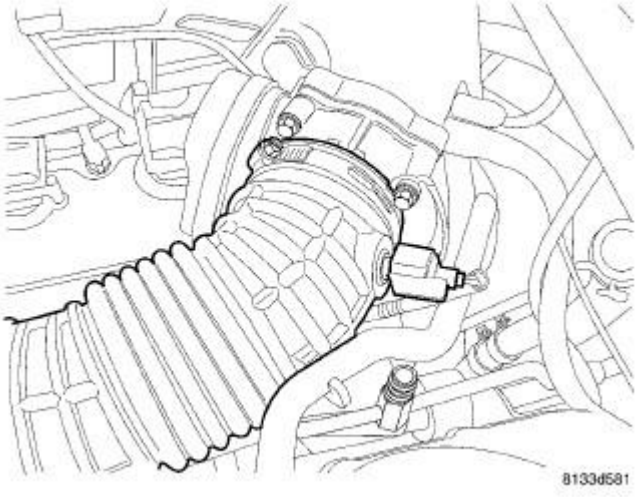

Fig. 443: Air Inlet Hose
Courtesy of CHRYSLER LLC

1. Disconnect and isolate the negative battery cable.
2. Disconnect the Inlet Air Temperature (IAT) sensor electrical connector.
3. Remove the air inlet hose from the throttle body.

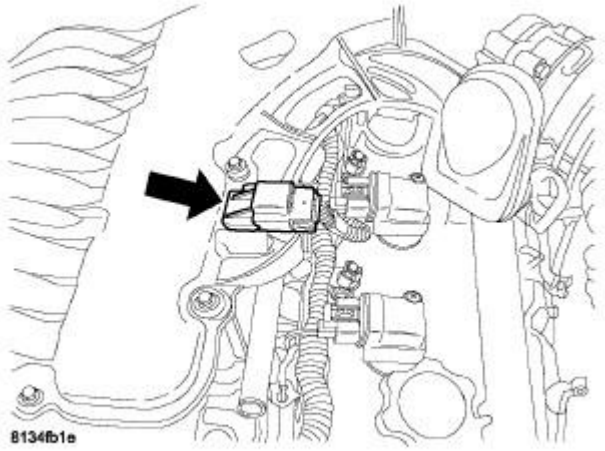

Fig. 444: Locating Manifold Air Pressure (MAP) Sensor
Courtesy of CHRYSLER LLC

4. Disconnect the Manifold Absolute Pressure (MAP) sensor electrical connector.

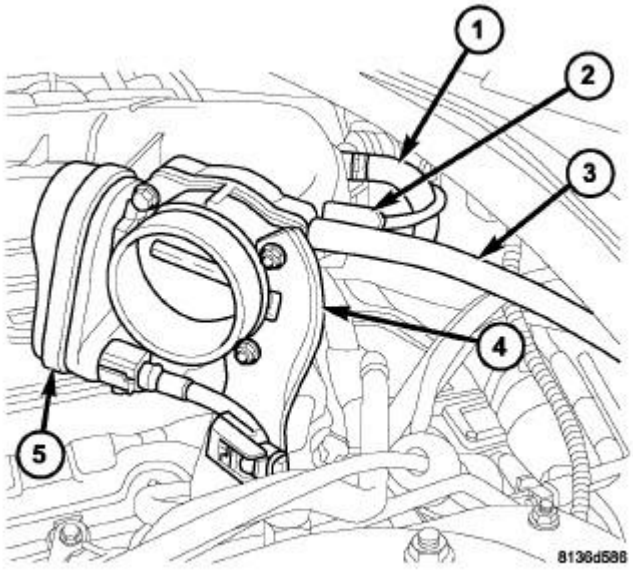

Fig. 445: THROTTLE CONTROL
Courtesy of CHRYSLER LLC

1 - PCV HOSE
2 - PURGE HOSE
3 - BRAKE BOOSTER HOSE

4 - THROTTLE BRACKET
5 - ELECTRONIC THROTTLE CONTROL

5. Disconnect the PCV hose (1), purge hose (2) and power brake booster hose (3) from the upper intake manifold.
6. Disconnect the electrical connector from the electronic throttle control (5).
7. Remove the fasteners from the throttle body and cylinder head and remove the throttle bracket (4).

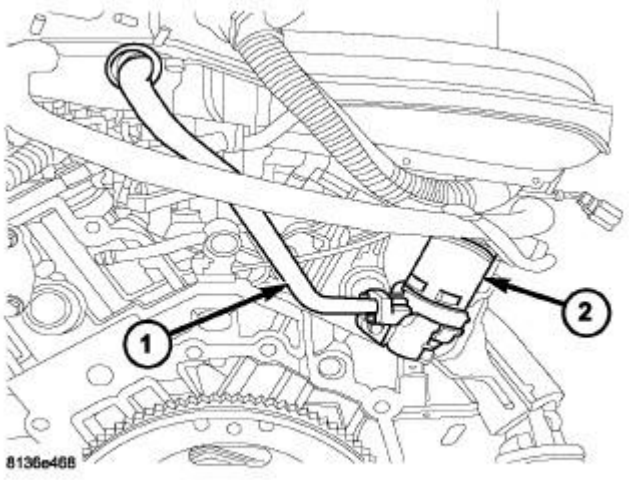

Fig. 446: EGR VALVE AND TUBE 3.5L
Courtesy of CHRYSLER LLC

8. Remove the wiper module, strut tower support and EGR tube (1). Refer to **Emissions Control/Exhaust Gas Recirculation/TUBE, Exhaust Gas Recirculation (EGR) - Removal** .

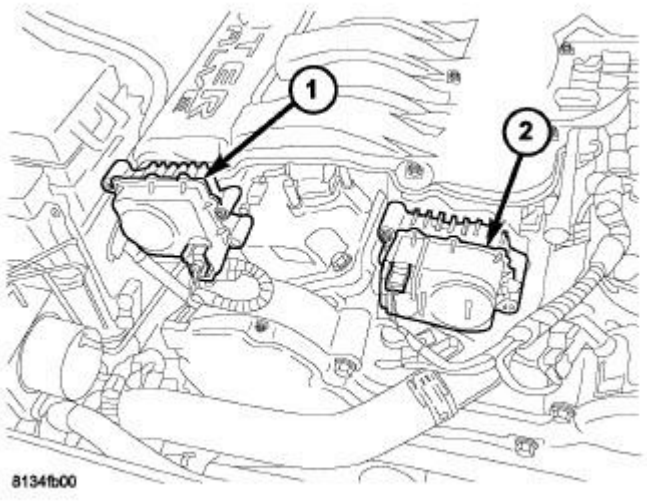

Fig. 447: Manifold Tuning Valve And Short Runner Valve
Courtesy of CHRYSLER LLC

1 - Manifold Tuning Valve 2 - Short Runner Valve

9. Disconnect the electrical connectors from the manifold tuning valve (1) and short runner valve (2).

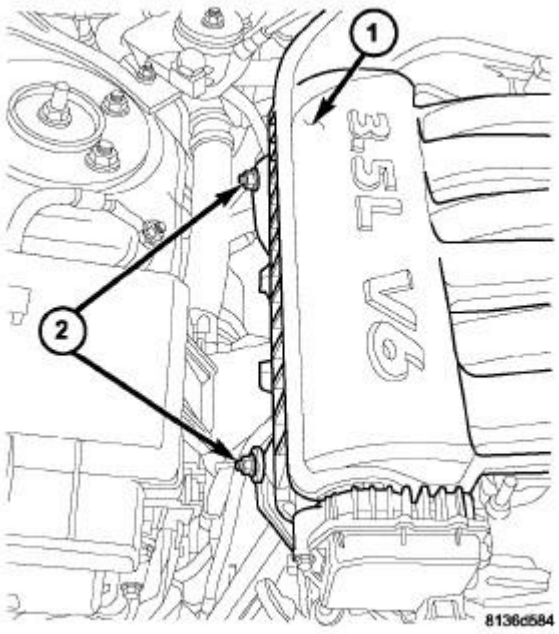

Fig. 448: Intake Manifold Braces
Courtesy of CHRYSLER LLC

10. Remove the fasteners (2) from the intake manifold support brackets.
11. Remove the upper intake manifold retaining bolts, insulation foam pad and manifold. Clean all gasket sealing surfaces.

LOWER INTAKE MANIFOLD

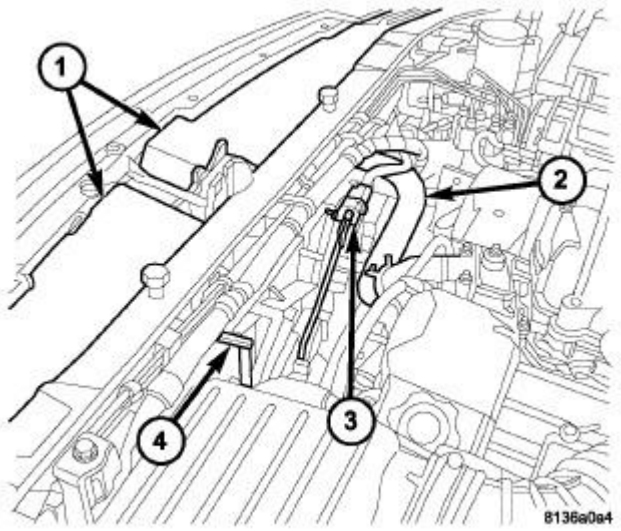

Fig. 449: Radiator Fan Assembly
Courtesy of CHRYSLER LLC

1 - UPPER RADIATOR CLOSURE PANELS
2 - UPPER RADIATOR HOSE
3 - RADIATOR FAN ELECTRICAL CONNECTOR
4 - RADIATOR FAN ASSEMBLY

1. Disconnect and isolate the negative battery cable.
2. Perform the fuel pressure release procedure. Refer to **Fuel System/Fuel Delivery - Standard Procedure** .
3. Drain the cooling system. Refer to **Cooling - Standard Procedure** .
4. Disconnect the upper radiator hose (2) from the thermostat housing.

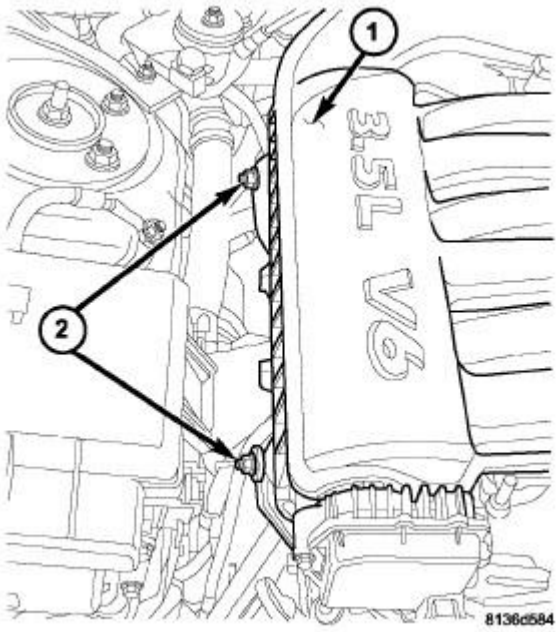

Fig. 450: Intake Manifold Braces
Courtesy of CHRYSLER LLC

1 - INTAKE MANIFOLD 2 - PENCIL BRACKETS

5. Remove the upper intake manifold (1). See **Engine/Manifolds/MANIFOLD, Intake - Removal**.

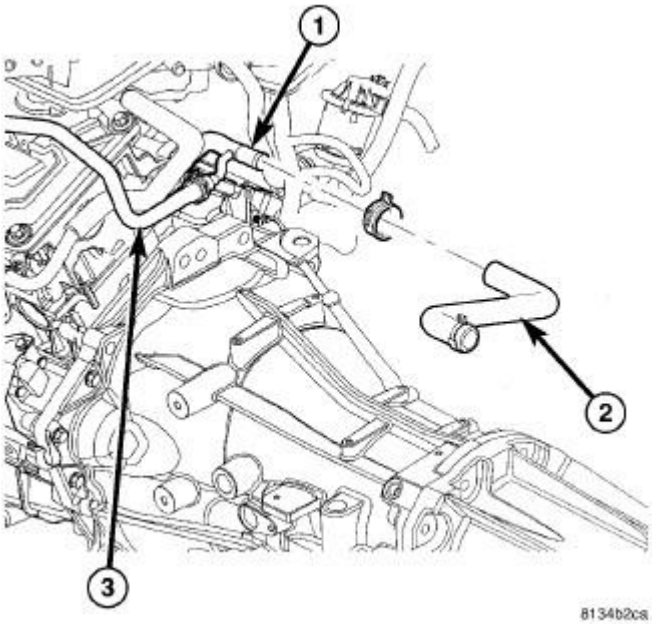

Fig. 451: COOLANT PIPE
Courtesy of CHRYSLER LLC

1 - COOLANT PIPE 2 - HEATER HOSE 3 - COOLANT RESERVOIR HOSE

6. Disconnect the heater hose (2) from the coolant pipe (1).
7. Disconnect the coolant container hose (3) from the coolant pipe (1).

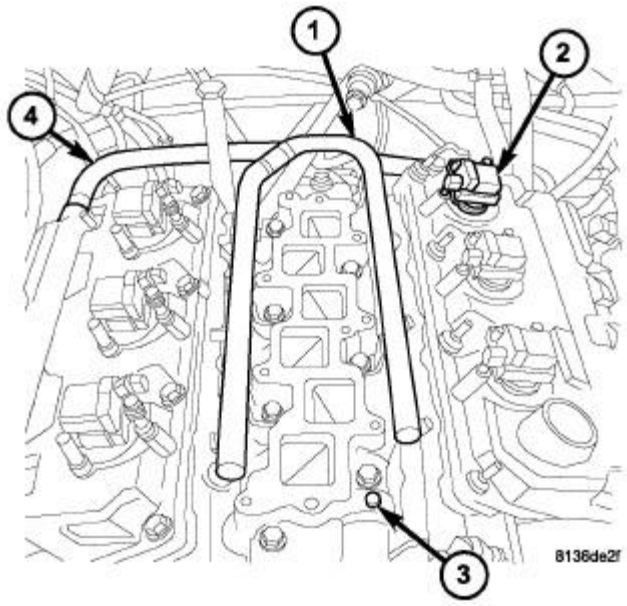

Fig. 452: FUEL RAIL AND LOWER INTAKE MANIFOLD
Courtesy of CHRYSLER LLC

1 - FUEL RAIL 2 - IGNITION COIL 3 - LOWER INTAKE MANIFOLD 4 - PCV VALVE

8. Disconnect the electrical connectors from the fuel injectors and the coolant temperature sensor.
9. Disconnect the fuel supply hose from the fuel rail (1). Refer to **Fuel System/Fuel Delivery/FITTING, Quick Connect - Standard Procedure** .
10. Remove the bolts attaching the fuel rail (1).
11. Remove the fuel rail and injectors as an assembly.

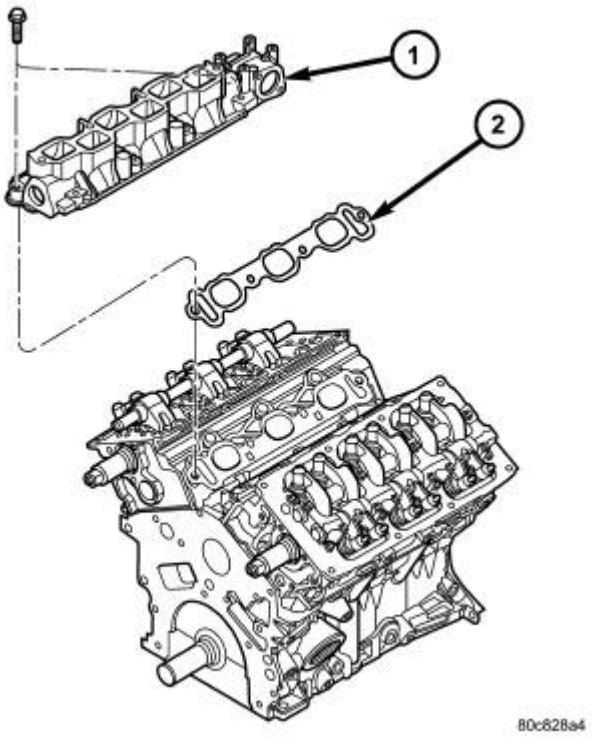

Fig. 453: Lower Intake Manifold
Courtesy of CHRYSLER LLC

1 - LOWER INTAKE MANIFOLD 2 - GASKET

12. Remove the bolts attaching the lower intake manifold and remove the intake manifold (1).

Installation

UPPER INTAKE MANIFOLD

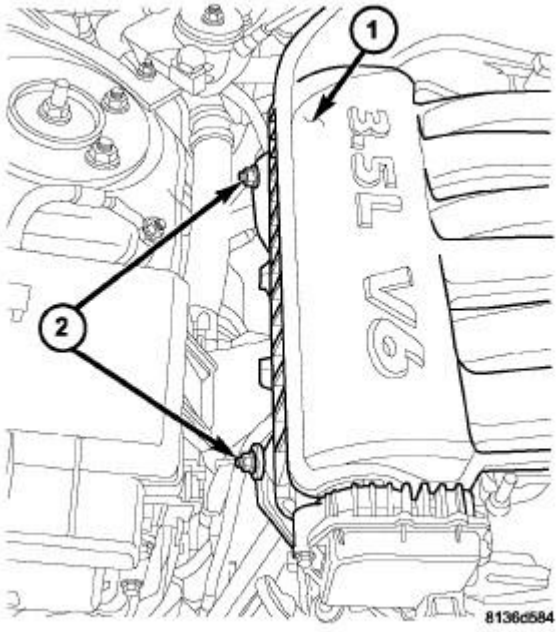

Fig. 454: Intake Manifold Braces
Courtesy of CHRYSLER LLC

1. Clean and inspect the gasket sealing surfaces.
2. Position the new gasket.
3. Install the upper intake manifold insulator foam.
4. Install the upper intake manifold. Tighten the bolts to 12 N.m (105 in. lbs.) starting in the center working outward in a cross sequence pattern.
5. Install the intake manifold support brackets. Tighten fasteners (2) to 12 N.m (105 in. lbs.).

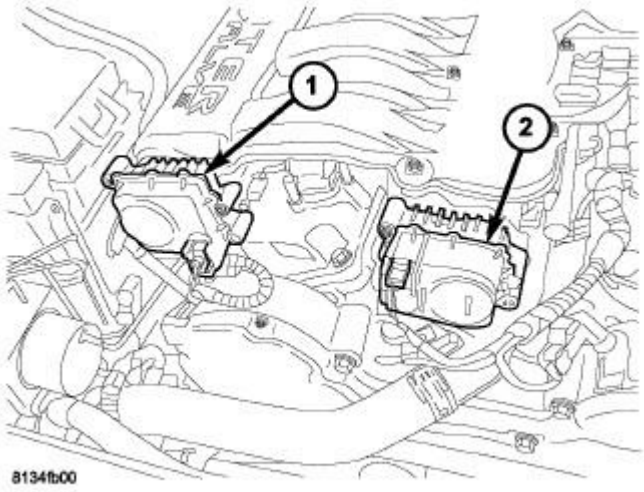

Fig. 455: Manifold Tuning Valve And Short Runner Valve
Courtesy of CHRYSLER LLC

1 - Manifold Tuning Valve 2 - Short Runner Valve

6. Connect the electrical connectors to the manifold tuning valve (1) and short runner valve (2).

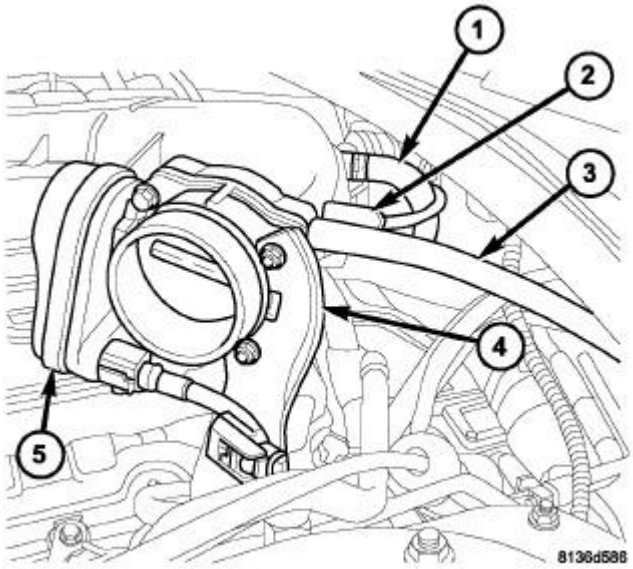

Fig. 456: THROTTLE CONTROL
Courtesy of CHRYSLER LLC

1 - PCV HOSE 2 - PURGE HOSE 3 - BRAKE BOOSTER HOSE 4 - THROTTLE BRACKET 5 - ELECTRONIC THROTTLE CONTROL

7. Install the throttle bracket (4). Tighten fasteners to 12 N.m (105 in. lbs.) at the throttle body and 28 N.m (259 in. lbs.) at the cylinder head.
8. Connect the harness connector to the electronic throttle control (5).
9. Connect the PCV hose (1), purge hose (2) and power brake booster vacuum hose (3) to the intake manifold.

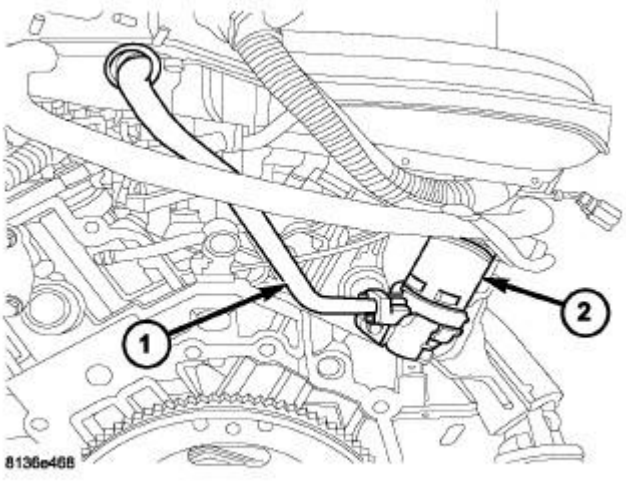

Fig. 457: EGR VALVE AND TUBE 3.5L
Courtesy of CHRYSLER LLC

10. Install the EGR tube (1), strut tower support, wiper module and cowl panel. Refer to **Emissions Control/Exhaust Gas Recirculation/TUBE, Exhaust Gas Recirculation (EGR) - Installation** .

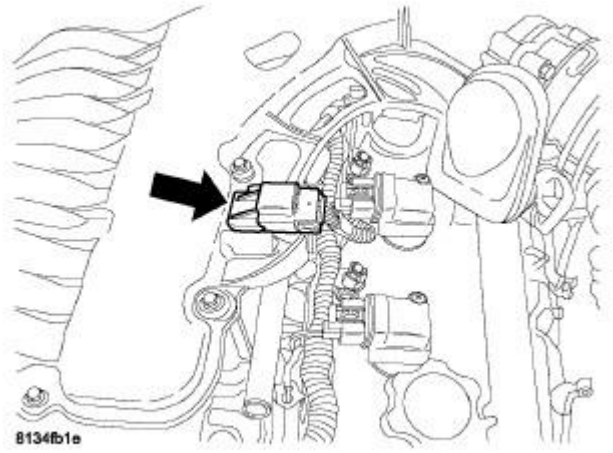

Fig. 458: Locating Manifold Air Pressure (MAP) Sensor
Courtesy of CHRYSLER LLC

11. Connect the Manifold Absolute Pressure (MAP) sensor harness connector.

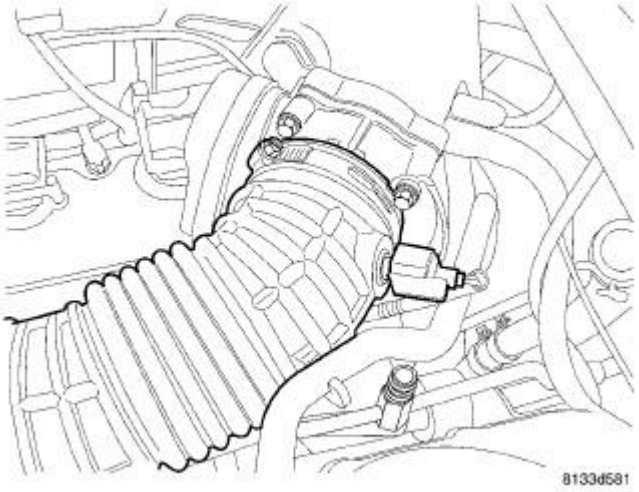

Fig. 459: Air Inlet Hose
Courtesy of CHRYSLER LLC

12. Install the inlet hose and connect the IAT sensor harness connector.
13. Connect the negative battery cable and tighten nut to 5 N.m (45 in. lbs.).

LOWER INTAKE MANIFOLD

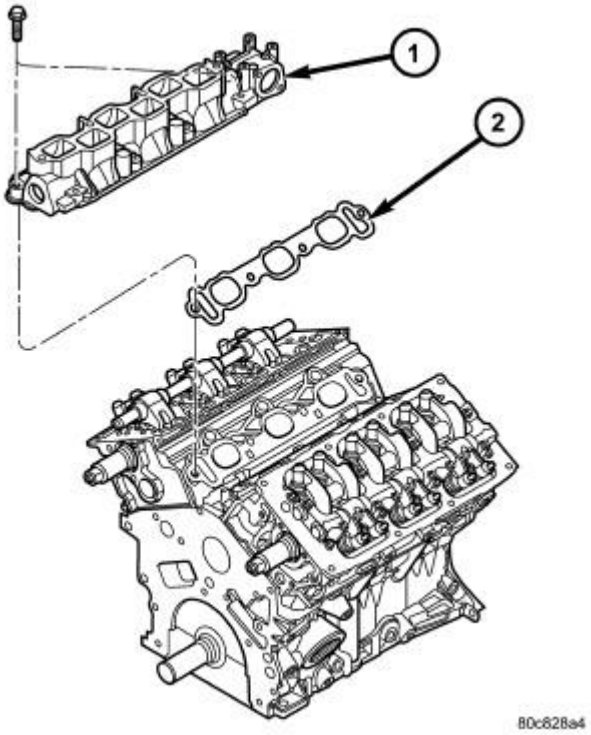

Fig. 460: Lower Intake Manifold
Courtesy of CHRYSLER LLC

1 - LOWER INTAKE MANIFOLD 2 - GASKET

1. Clean all sealing surfaces.
2. Position new gaskets (2) and the intake manifold (1) on the cylinder heads.

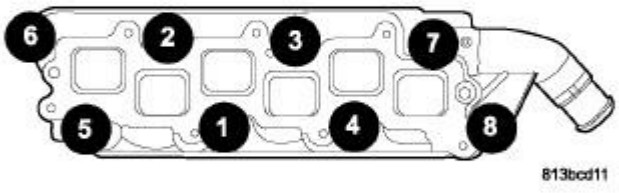

Fig. 461: LOWER INTAKE MANIFOLD TIGHTENING SEQUENCE
Courtesy of CHRYSLER LLC

3. Install the intake manifold bolts and gradually tighten in the sequence shown in illustration to 28 N.m (250 in. lbs.).

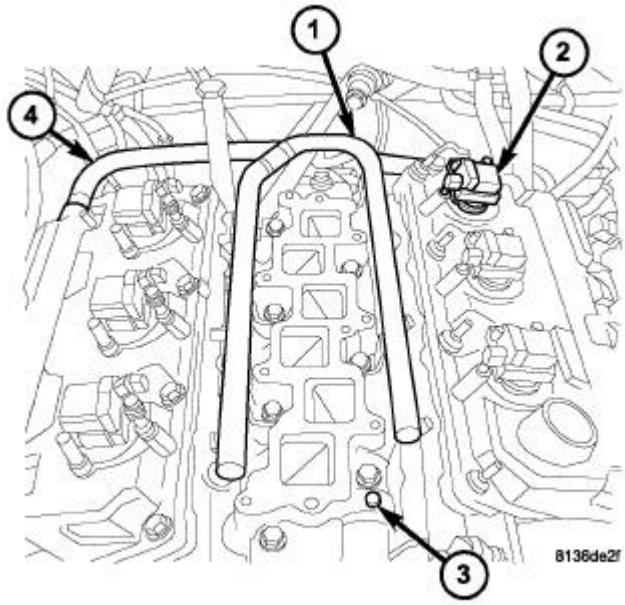

Fig. 462: FUEL RAIL AND LOWER INTAKE MANIFOLD
Courtesy of CHRYSLER LLC

1 - FUEL RAIL
2 - IGNITION COIL
3 - LOWER INTAKE MANIFOLD
4 - PCV VALVE

4. Install the fuel rail and injectors as an assembly. Refer to **Fuel System/Fuel Injection/INJECTOR(S), Fuel - Installation** .
5. Connect the fuel supply hose to the fuel rail. Refer to **Fuel System/Fuel Delivery/FITTING, Quick Connect - Standard Procedure** .
6. Connect the electrical connectors to the fuel injectors and the coolant temperature sensor.

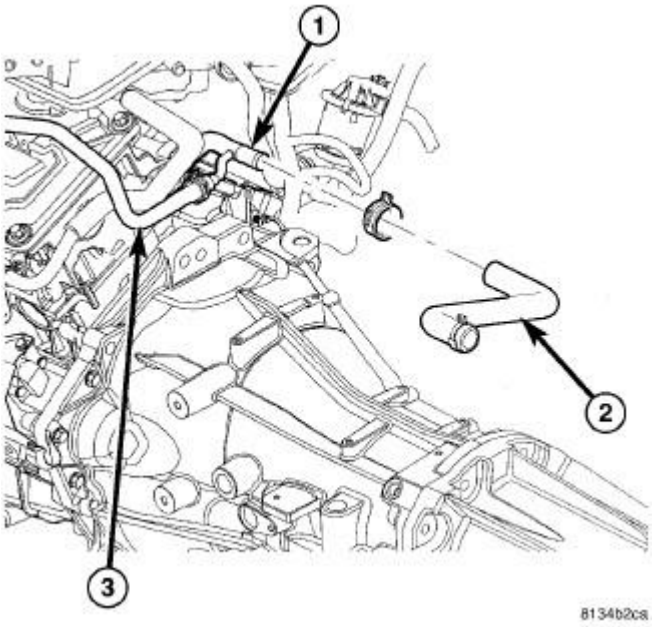

Fig. 463: COOLANT PIPE
Courtesy of CHRYSLER LLC

1 - COOLANT PIPE
2 - HEATER HOSE
3 - COOLANT RESERVOIR HOSE

7. Connect the heater hose (2) to the coolant pipe (1).
8. Connect the coolant container hose (3) to the coolant pipe (1).

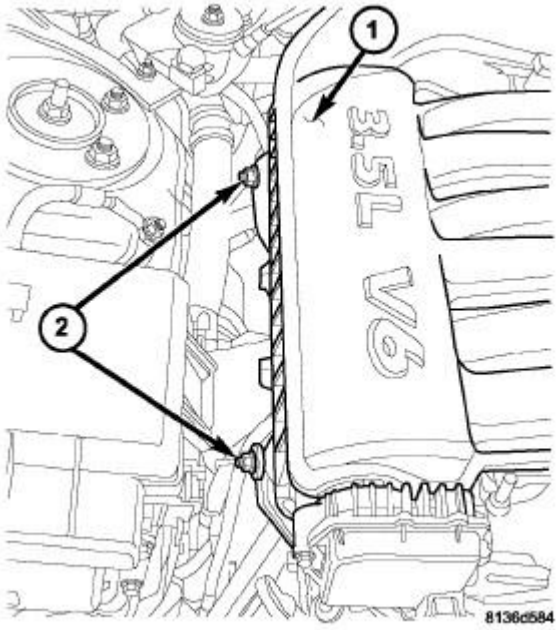

Fig. 464: Intake Manifold Braces
Courtesy of CHRYSLER LLC

1 - INTAKE MANIFOLD 2 - PENCIL BRACKETS

9. Install the upper intake manifold (1). See **Engine/Manifolds/MANIFOLD, Intake - Installation**.

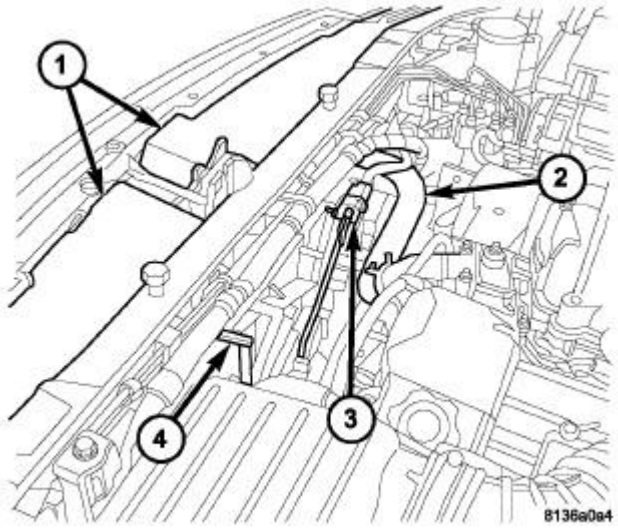

Fig. 465: Radiator Fan Assembly
Courtesy of CHRYSLER LLC

1 - UPPER RADIATOR CLOSURE PANELS 2 - UPPER RADIATOR HOSE 3 - RADIATOR FAN ELECTRICAL CONNECTOR 4 - RADIATOR FAN ASSEMBLY

10. Connect the upper radiator hose (2) to the thermostat housing.
11. Fill the cooling system. Refer to **Cooling - Standard Procedure** .
12. Connect the negative battery cable and tighten nut to 5 N.m (45 in. lbs.).

VALVE TIMING

DESCRIPTION

DESCRIPTION

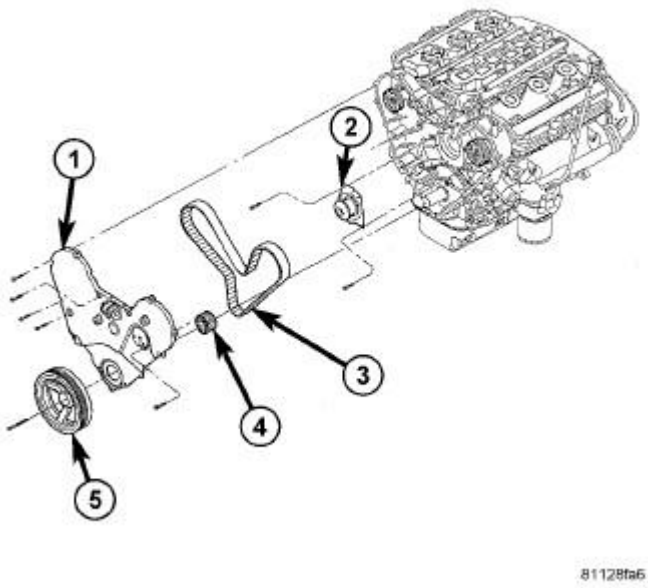

Fig. 466: TIMING DRIVE SYSTEM
Courtesy of CHRYSLER LLC

1 - FRONT TIMING COVER 2 - WATER PUMP 3 - TIMING BELT 4 - CRANKSHAFT SPROCKET 5 - CRANKSHAFT DAMPER

The timing drive system has been designed to provide quiet performance and reliability to support a **NON** free-wheeling engine.

The timing drive components include a crankshaft sprocket (4) , camshaft sprockets, tensioner pulley, hydraulic tensioner and a timing belt (3). The water pump (2) is driven by the back side of the timing belt (3). The right and left camshaft sprockets are keyed and not interchangeable because of the cam sensor pick-up wheel on the left sprocket.

BELT AND SPROCKETS, TIMING

Removal

TIMING BELT

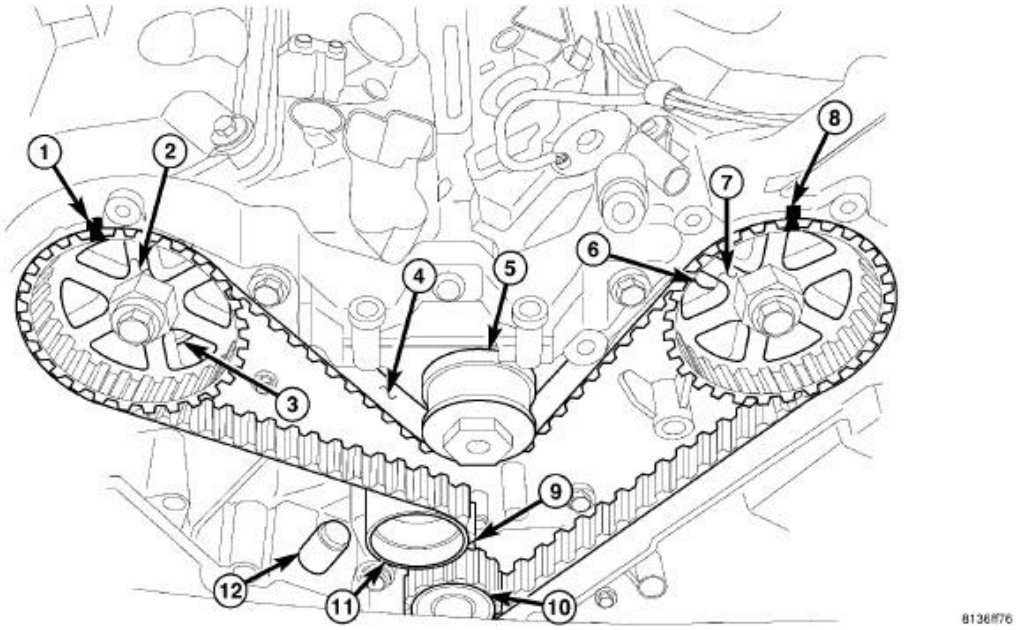

Fig. 467: Identifying Timing Gear Components
Courtesy of CHRYSLER LLC

1 - RIGHT CAMSHAFT GEAR ALIGNMENT MARK	7 - LEFT CAMSHAFT GEAR
2 - RIGHT CAMSHAFT GEAR	8 - LEFT CAMSHAFT GEAR ALIGNMENT MARK
3 - CYLINDER HEAD TO INNER TIMING BELT COVER BOLTS - RIGHT	9 - CRANKSHAFT GEAR ALIGNMENT MARK
4 - TIMING BELT	10 - CRANKSHAFT GEAR
5 - WATER PUMP PULLEY	11 - TIMING BELT TENSIONER PULLEY
6 - CYLINDER HEAD TO INNER TIMING BELT COVER BOLTS - LEFT	12 - TIMING BELT TENSIONER

CAUTION: The 3.5L is NOT a freewheeling engine. Therefore, the valve train rocker assemblies must be removed before attempting to rotate either crankshaft or camshafts independently of each other.

1. Disconnect and isolate the negative battery cable.
2. Remove the front timing belt cover. See **Engine/Valve Timing/COVER(S), Engine Timing - Removal**.
3. Mark belt running direction, if timing belt is to be reused.

CAUTION: When aligning timing marks, always rotate engine by turning the crankshaft. Failure to do so will result in valve and/or piston damage.

4. Rotate engine clockwise until crankshaft (10) mark aligns with the TDC mark on oil pump housing (9) and the camshaft sprocket (2, 7) timing marks (1, 8) are aligned with the marks on the rear cover.
5. Remove the timing belt tensioner (12).
6. Remove the timing belt (4).
7. Inspect the tensioner for fluid leakage.
8. Inspect the pivot and bolt for free movement, bearing grease leakage, and smooth rotation. If not rotating freely, replace the arm and pulley assembly.

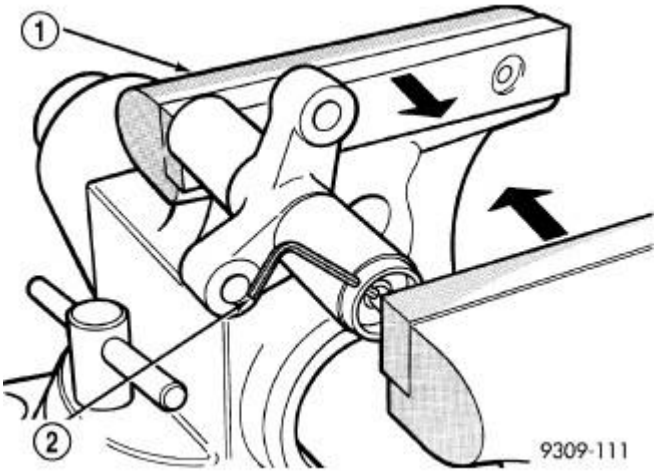

Fig. 468: Compressing Timing Belt Tensioner
Courtesy of CHRYSLER LLC

1 - VISE 2 - LOCKING PIN

9. When tensioner is removed from the engine it is necessary to compress the plunger into the tensioner body.

CAUTION: Index the tensioner in the vise the same way it is installed on the engine. This ensures proper pin orientation when tensioner is installed on the engine.

a. Place the tensioner into a vise (1) and SLOWLY compress the plunger. Total bleed down of tensioner should take approximately two minutes.
b. When plunger is compressed into the tensioner body install a pin (2) through the body and plunger to retain plunger in place until tensioner is installed.

CAMSHAFT SPROCKETS

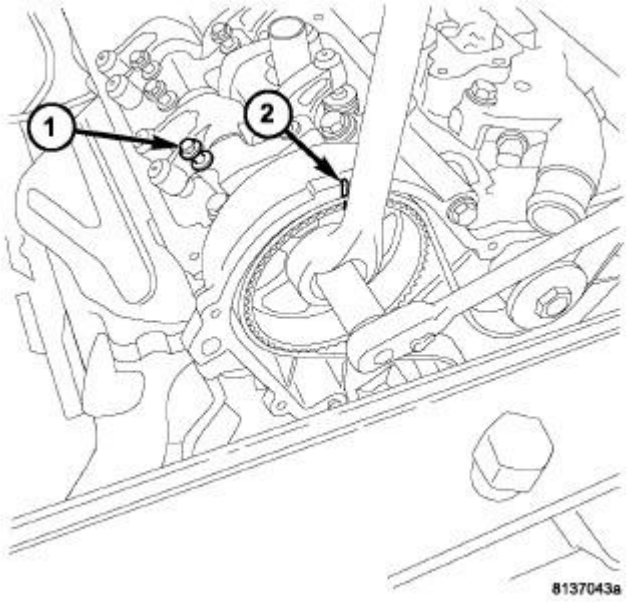

Fig. 469: RIGHT CAMSHAFT SPROCKET
Courtesy of CHRYSLER LLC

1 - LOOSENED ROCKER ASSEMBLY 2 - RIGHT CAMSHAFT TDC

CAUTION: The 3.5L engine is NOT a free-wheeling design. Therefore, care should be taken not to rotate the camshafts or crankshaft with the timing belt removed.

NOTE: The camshaft timing gears are keyed to the camshaft.

1. Remove timing belt. See **Engine/Valve Timing/BELT and SPROCKETS, Timing - Removal**.
2. Hold the right camshaft sprocket with a 36 mm (1 7/16 in.) box end wrench so that the timing mark (2) does not move while removing the retaining bolt.
3. Loosen and remove the camshaft gear retaining bolt and washer. The right bolt is 213 mm (8 3/8 in.) long.

NOTE: The camshaft timing gears are keyed to the camshaft.

4. Remove the right camshaft sprocket.

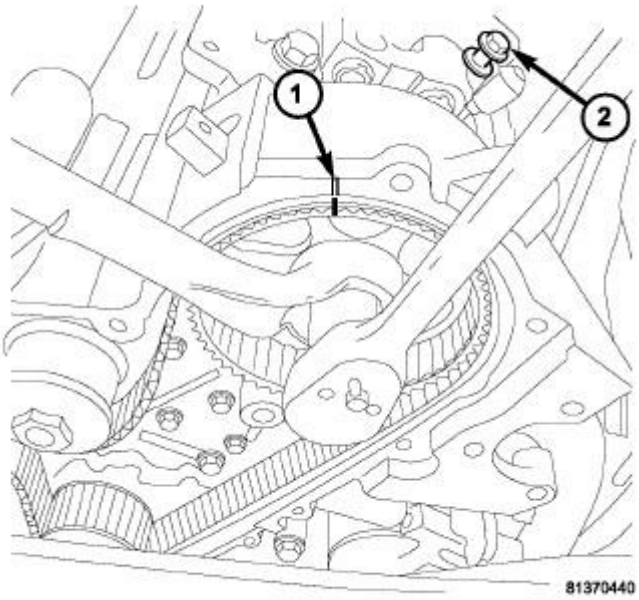

Fig. 470: Left Camshaft Sprocket
Courtesy of CHRYSLER LLC

1 - LEFT CAMSHAFT TDC 2 - LOOSENED ROCKER ASSEMBLY

5. Hold the left camshaft sprocket with a 36 mm (1 7/16 in.) box end wrench so that the timing mark (1) does not move while removing the retaining bolt.
6. Loosen the left camshaft gear retaining bolt.

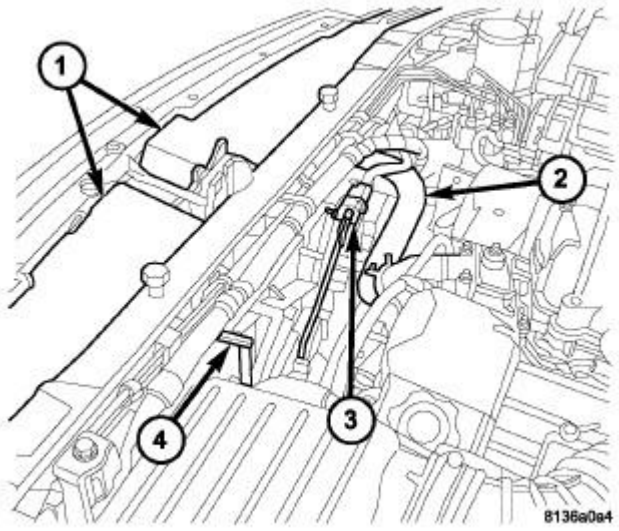

Fig. 471: Radiator Fan Assembly
Courtesy of CHRYSLER LLC

7. Remove the grill closure panels (1).

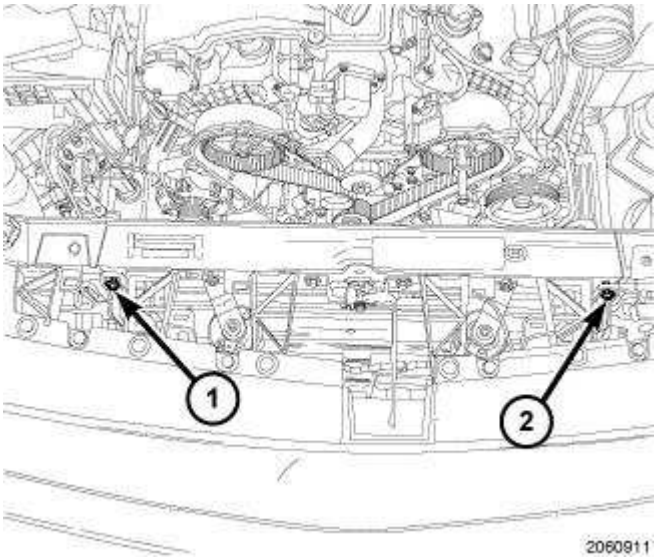

Fig. 472: Upper Radiator Mounting Bolts
Courtesy of CHRYSLER LLC

8. Loosen the upper radiator mounting bolts (1) and (2).
9. Reposition the radiator/condenser forward and remove the left camshaft gear retaining bolt and washer. The left bolt is 255 mm (10.0 in.) long.

NOTE: The camshaft timing gears are keyed to the camshaft.

10. Remove the left camshaft sprocket.

CRANKSHAFT SPROCKET

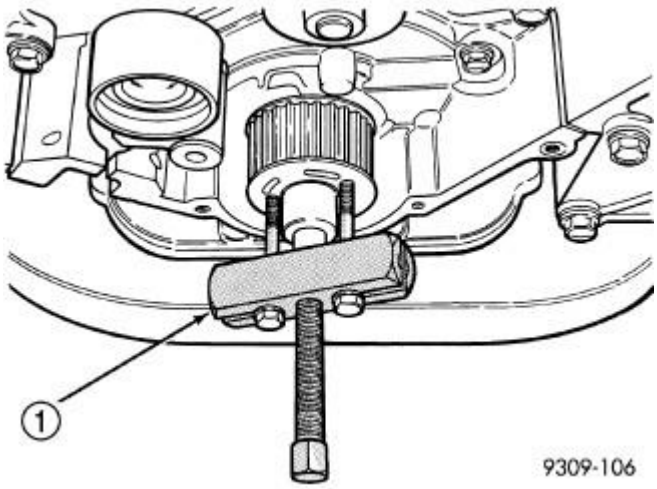

Fig. 473: Crankshaft Sprocket - Removal
Courtesy of CHRYSLER LLC

1 - SPECIAL TOOL L-4407A

1. Remove the timing belt. See **Engine/Valve Timing/BELT and SPROCKETS, Timing - Removal**.
2. Remove crankshaft sprocket using Special Tool L-4407A (1) .

Inspection

TIMING BELT

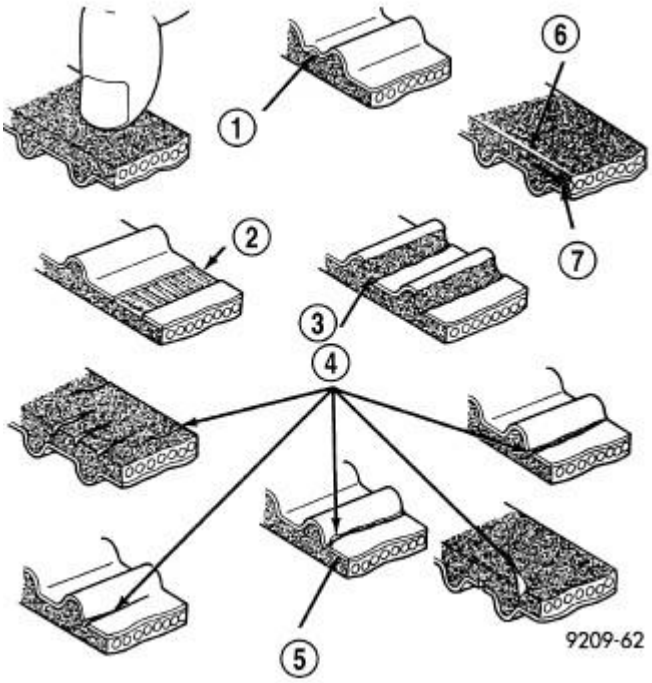

Fig. 474: Timing Belt Inspection
Courtesy of CHRYSLER LLC

1 - PEELING
2 - TOOTH MISSING AND CANVAS FIBER EXPOSED
3 - RUBBER EXPOSED
4 - CRACKS
5 - PEELING
6 - ROUNDED EDGE
7 - ABNORMAL WEAR (FLUFFY STRAND)

1. Remove front timing belt cover. See **Engine/Valve Timing/COVER(S), Engine Timing - Removal**.
2. Inspect both sides of the timing belt. Replace belt if any of the following conditions exist :
    a. Hardening of back rubber back side is glossy without resilience and leaves no indent when pressed with fingernail.
    b. Cracks (4) on rubber back.
    c. Cracks or peeling (1) of canvas.
    d. Cracks on rib root.
    e. Cracks on belt sides.
    f. Missing teeth (2).
    g. Abnormal wear (7) of belt sides. The sides are normal if they are sharp as if cut by a knife.
    h. Vehicle mileage or time at component maintenance requirement. Refer to **Vehicle Quick Reference/Maintenance Schedules - Description** .

3. If none of the above conditions are seen on the belt, the front timing belt cover can be installed. See **Engine/Valve Timing/COVER(S), Engine Timing - Installation**.

TIMING VERIFICATION

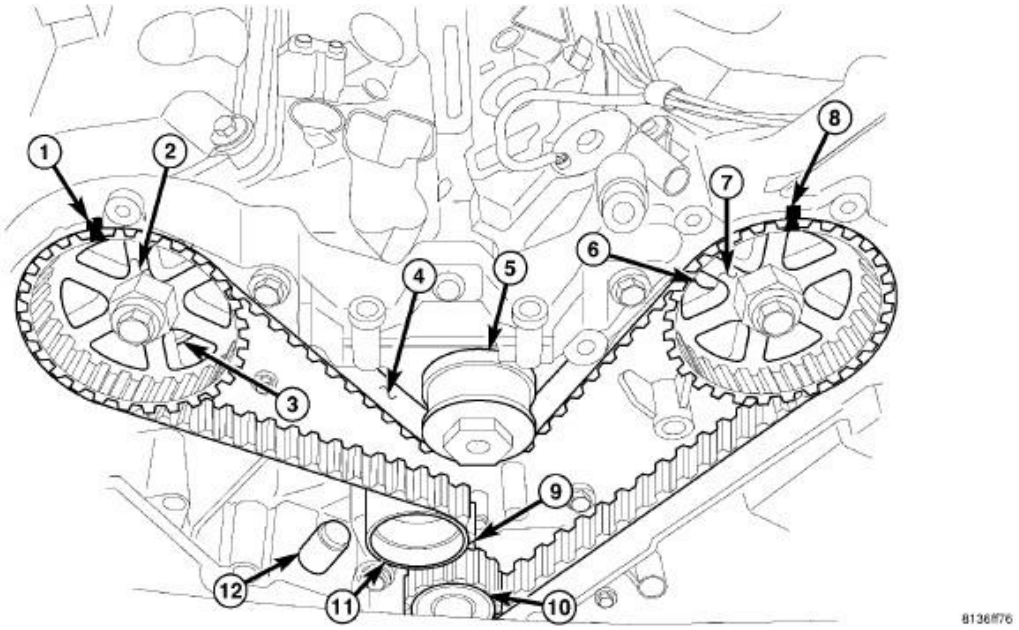

Fig. 475: Identifying Timing Gear Components
Courtesy of CHRYSLER LLC

1 - RIGHT CAMSHAFT GEAR ALIGNMENT MARK	7 - LEFT CAMSHAFT GEAR
2 - RIGHT CAMSHAFT GEAR	8 - LEFT CAMSHAFT GEAR ALIGNMENT MARK
3 - CYLINDER HEAD TO INNER TIMING BELT COVER BOLTS - RIGHT	9 - CRANKSHAFT GEAR ALIGNMENT MARK
4 - TIMING BELT	10 - CRANKSHAFT GEAR
5 - WATER PUMP PULLEY	11 - TIMING BELT TENSIONER PULLEY
6 - CYLINDER HEAD TO INNER TIMING BELT COVER BOLTS - LEFT	12 - TIMING BELT TENSIONER

Remove the outer timing covers. Rotate the crankshaft until the pointer on the crankshaft sprocket (10) aligns the TDC mark on the oil pump (9). Check to determine if the camshaft sprocket (2, 7) timing marks (1, 8) are aligned with the marks on the inner timing cover. It may take an additional full revolution of the crankshaft before the camshaft sprocket marks are aligned.

Installation

TIMING BELT

CAUTION: The 3.5L is NOT a freewheeling engine. Therefore, the valve train rocker

assemblies must be removed before attempting to rotate either crankshaft or camshafts independently of each other.

CAUTION: If camshafts have moved from the timing marks, always rotate camshaft towards the direction nearest to the timing marks (DO NOT TURN CAMSHAFTS A FULL REVOLUTION OR DAMAGE to valves and/or pistons could result).

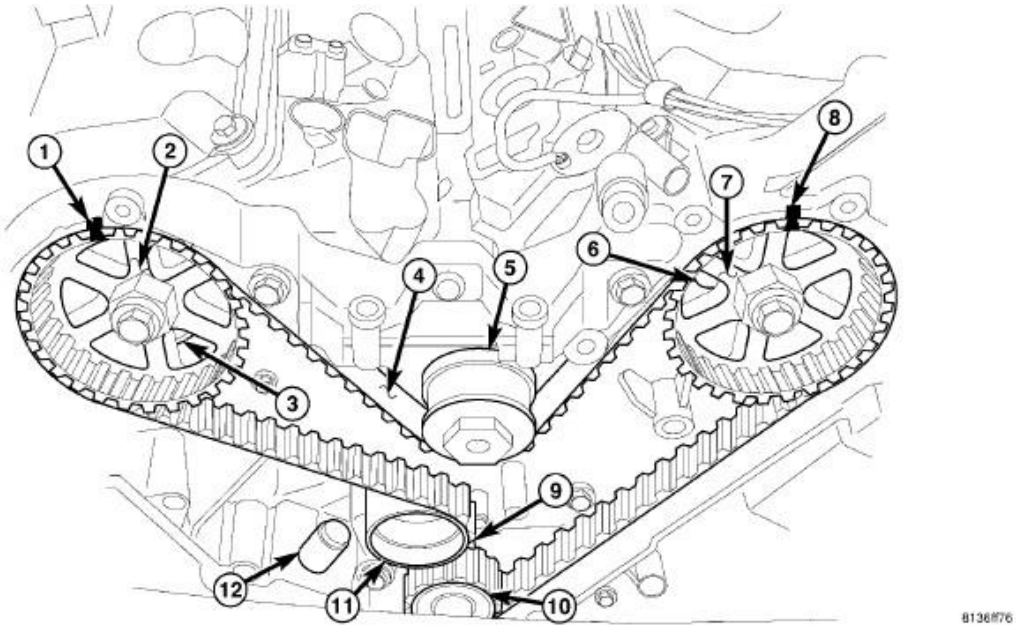

Fig. 476: Identifying Timing Gear Components
Courtesy of CHRYSLER LLC

1. Align the crankshaft sprocket (10) with the TDC mark (9) on the oil pump cover.
2. Align the camshaft sprockets (2, 7) timing reference marks (1, 8) with the marks on the rear cover.
3. Install the timing belt (4) starting at the crankshaft sprocket (10) going in a counterclockwise direction. Install the belt around the last sprocket and maintain tension on the belt as it is positioned around the tensioner pulley (11).

NOTE: It is necessary to compress the plunger into the tensioner body and install a locking pin prior to reinstalling the tensioner. See Timing Belt Removal for tensioner compression procedure. See Engine/Valve Timing/BELT and SPROCKETS, Timing - Removal.

4. Hold the tensioner pulley (11) against the belt and install the reset (pinned) timing belt tensioner (2) into the housing. Tighten attaching bolts to 28 N.m (250 in. lbs.).
5. When tensioner (12) is in place, pull the retaining pin to allow the tensioner to extend to the pulley bracket.
6. Rotate the crankshaft sprocket (10) two revolutions and check the timing marks on the

camshafts and crankshaft. The marks should line up within their respective locations. If the marks do not line up, repeat the procedure.

7. Install the front timing belt cover. See **Engine/Valve Timing/COVER(S), Engine Timing - Installation**.
8. Connect the negative battery cable and tighten nut to 5 N.m (45 in. lbs.).
9. Fill the cooling system. Refer to **Cooling - Standard Procedure** .
10. Operate the engine until it reaches normal operating temperature. Check cooling system for correct fluid level. Refer to **Cooling - Standard Procedure** .

NOTE: The Cam/Crank Variation Relearn procedure must be performed anytime there has been a repair/replacement made to a powertrain system, for example: flywheel, valvetrain, camshaft and/or crankshaft sensors or components. Refer to DTC-Based Diagnostics/MODULE, Powertrain Control (PCM) - Standard Procedure .

CAMSHAFT SPROCKETS

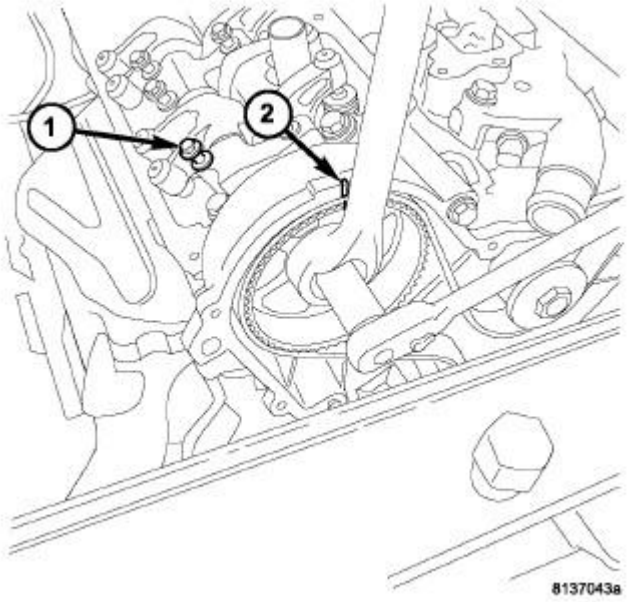

Fig. 477: RIGHT CAMSHAFT SPROCKET
Courtesy of CHRYSLER LLC

CAUTION: The 3.5L engine is NOT a free-wheeling design. Therefore, care should be taken not to rotate the camshafts or crankshaft with the timing belt removed.

CAUTION: The camshaft sprockets are keyed and not interchangeable from side to side because of the camshaft position sensor pick-up.

1. Install the right camshaft sprocket onto the camshaft.
2. Install a **NEW** sprocket attaching bolt into place. The 213 mm (8 3/8 in.) bolt is to be installed into the right camshaft and the 255 mm (10 in.) bolt is to be installed into the left camshaft.
3. Hold the right camshaft sprocket with a 36 mm (1 7/16 in.) box end wrench so that the timing mark (2) does not move while tightening the retaining bolt. Tighten the bolt to 102 N.m (75 ft. lbs.) +90° turn.

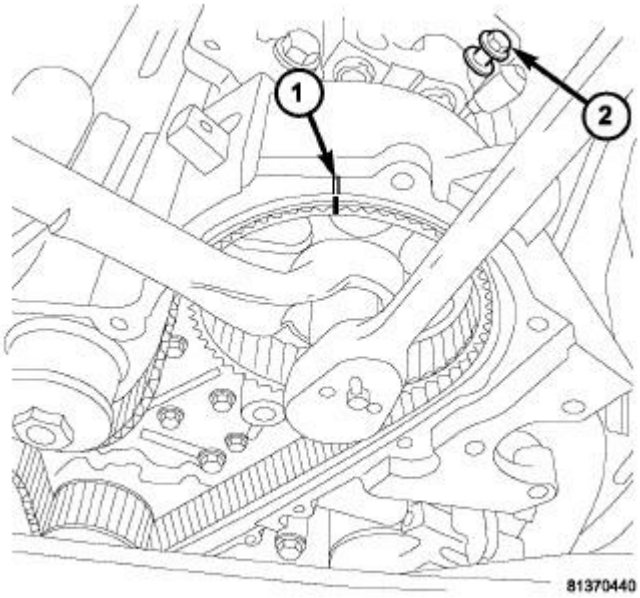

Fig. 478: Left Camshaft Sprocket
Courtesy of CHRYSLER LLC

4. Install the left camshaft sprocket onto the camshaft.
5. Install a **NEW** sprocket attaching bolt into place. The 255 mm (10 in.) bolt is to be installed into the left camshaft and the 213 mm (8 3/8 in.) bolt is to be installed into the right camshaft.
6. Hold the left camshaft sprocket with a 36 mm (1 7/16 in.) box end wrench so that the timing mark (1) does not move while tightening the retaining bolt. Tighten the bolt to 102 N.m (75 ft. lbs.) +90° turn.

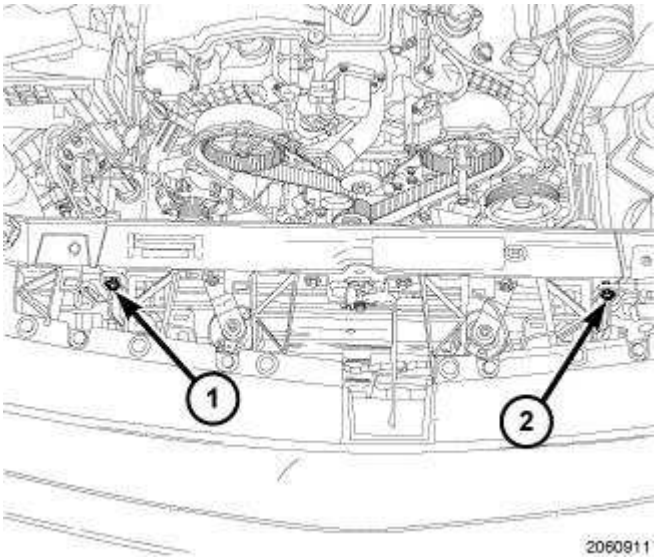

Fig. 479: Upper Radiator Mounting Bolts
Courtesy of CHRYSLER LLC

7. Tighten the upper radiator mounting bolts (1) and (2) to 12 N.m (106 in. lbs.).

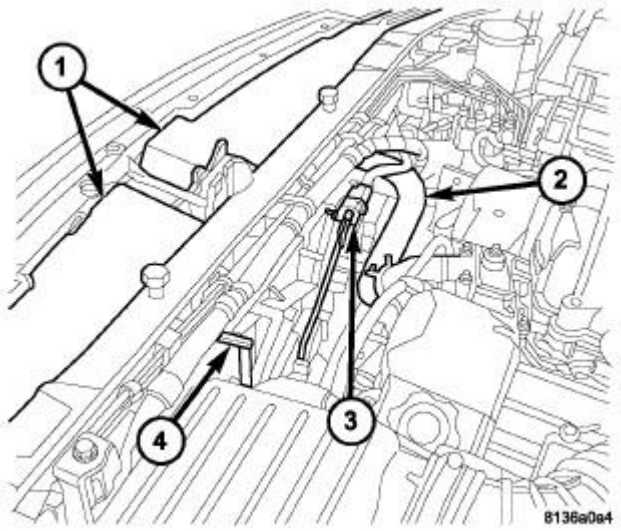

Fig. 480: Radiator Fan Assembly
Courtesy of CHRYSLER LLC

8. Install the grill closure panels (1).
9. Install the timing belt and tensioner. See **Engine/Valve Timing/BELT and SPROCKETS, Timing - Installation**.
10. Install the front timing belt cover. See **Engine/Valve Timing/COVER(S), Engine Timing - Installation**.
11. Connect the negative battery cable and tighten nut to 5 N.m (45 in. lbs.).

12. Fill cooling system. Refer to **Cooling - Standard Procedure** .
13. Operate engine until it reaches normal operating temperature. Check cooling system for correct fluid level. Refer to **Cooling - Standard Procedure** .

NOTE: The Cam/Crank Variation Relearn procedure must be performed anytime there has been a repair/replacement made to a powertrain system, for example: flywheel, valvetrain, camshaft and/or crankshaft sensors or components. Refer to DTC-Based Diagnostics/MODULE, Powertrain Control (PCM) - Standard Procedure .

CRANKSHAFT SPROCKET

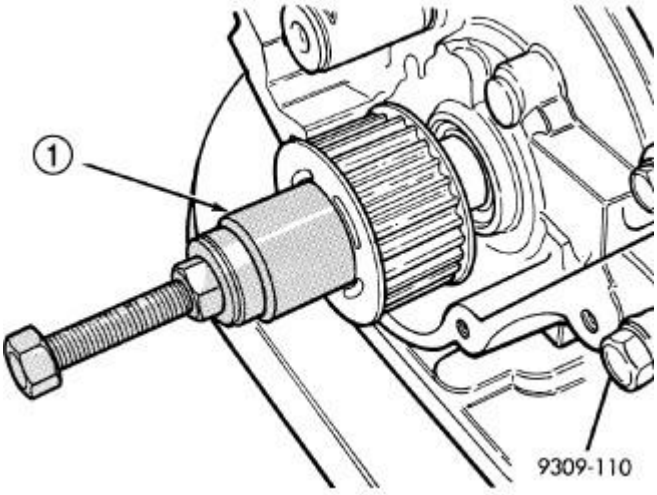

Fig. 481: Crankshaft Sprocket - Installation
Courtesy of CHRYSLER LLC

1 - INSTALL WITH SPECIAL TOOL 6641 WITH 12 mm SCREW C-4685-C1 AND THRUST BEARING AND WASHER

CAUTION: To ensure proper installation depth of crankshaft sprocket, Sprocket Installer 6641 must be used.

1. Install crankshaft sprocket using Special Tools 6641 (1) and C-4685-C1.
2. Install timing belt. See **Engine/Valve Timing/BELT and SPROCKETS, Timing - Installation**.

COVER(S), ENGINE TIMING, FRONT

Removal

REMOVAL

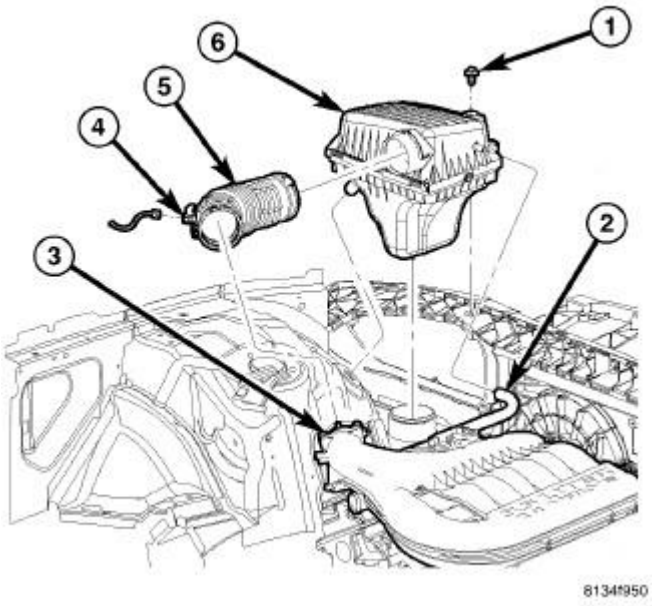

Fig. 482: Air Cleaner Housing
Courtesy of CHRYSLER LLC

1. Disconnect and isolate the negative battery cable.
2. Remove the air cleaner element housing. See **Engine/Air Intake System/BODY, Air Cleaner - Removal**.

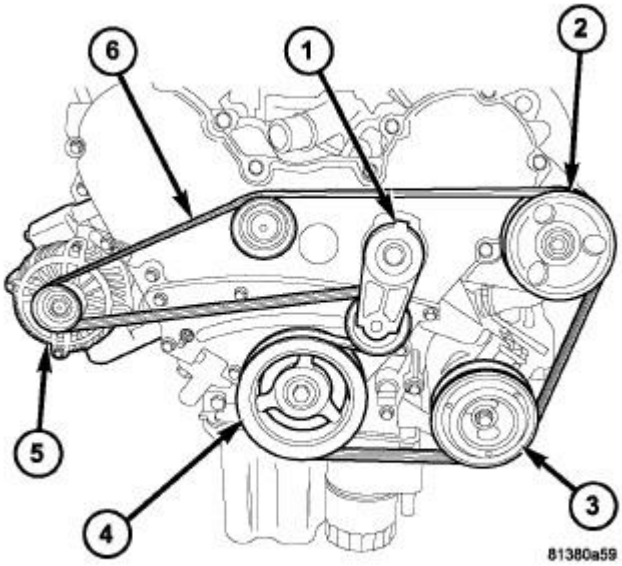

Fig. 483: ACCESSORY DRIVE BELT ROUTING

Courtesy of CHRYSLER LLC

3. Partially drain the cooling system. Refer to **Cooling - Standard Procedure** .
4. Remove the accessory drive belt (6). Refer to **Cooling/Accessory Drive/BELT, Serpentine - Removal** .
5. Remove the accessory drive belt idler pulley. Refer to **Cooling/Accessory Drive/PULLEY, Idler - Removal** .
6. Remove the accessory drive belt tensioner (1). Refer to **Cooling/Accessory Drive/TENSIONER, Belt - Removal** .

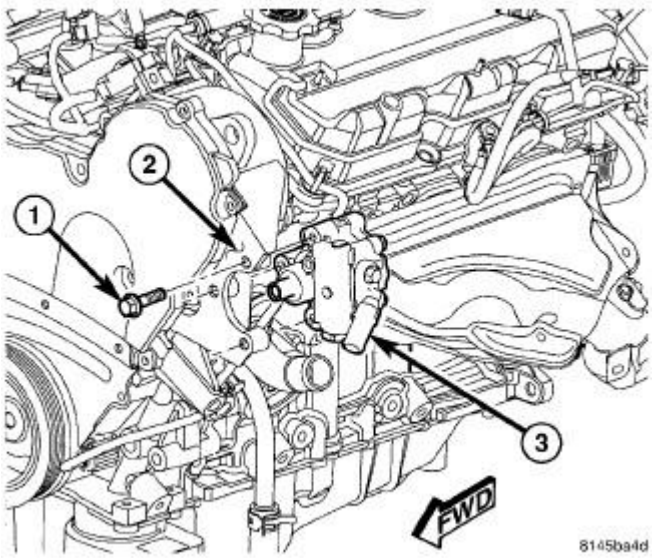

Fig. 484: POWER STEERING PUMP - 2.7L/3.5L
Courtesy of CHRYSLER LLC

7. Remove three power steering pump mounting bolts (1) through the access holes in the pulley and reposition the power steering pump (3).

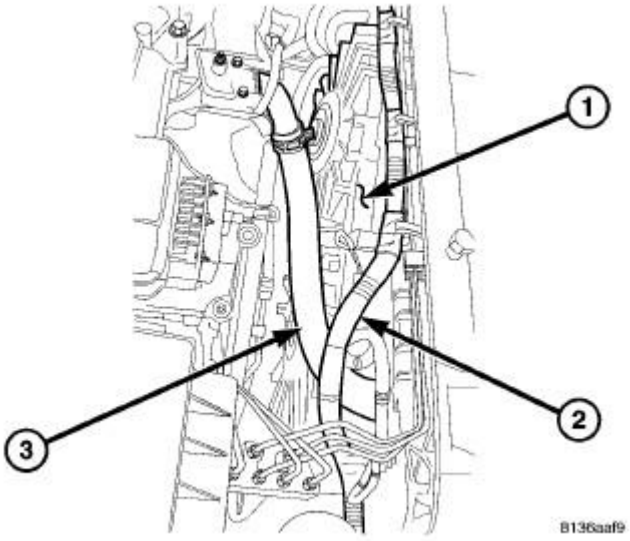

Fig. 485: Radiator Fan Assembly
Courtesy of CHRYSLER LLC

1 - RADIATOR FAN ASSEMBLY
2 - ELECTRICAL CONNECTOR
3 - UPPER RADIATOR HOSE

8. Remove the upper radiator hose (3).
9. Disconnect the cooling fan electrical connector (2).
10. Remove the cooling fan mounting bolts.
11. Remove the radiator cooling fan assembly (1) from the vehicle.

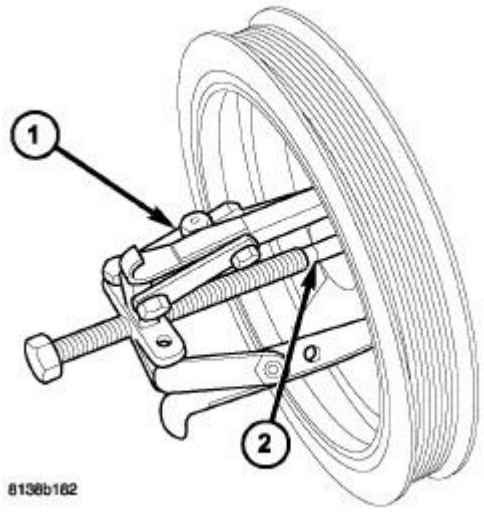

Fig. 486: Puller 1023 & Crankshaft Insert 9020
Courtesy of CHRYSLER LLC

1 - SPECIAL TOOL 1023 PULLER
2 - SPECIAL TOOL 9020-R INSERT

12. Remove the crankshaft damper bolt.
13. Remove the crankshaft damper using Puller 1023 (1) and Crankshaft Insert 9020 (2).

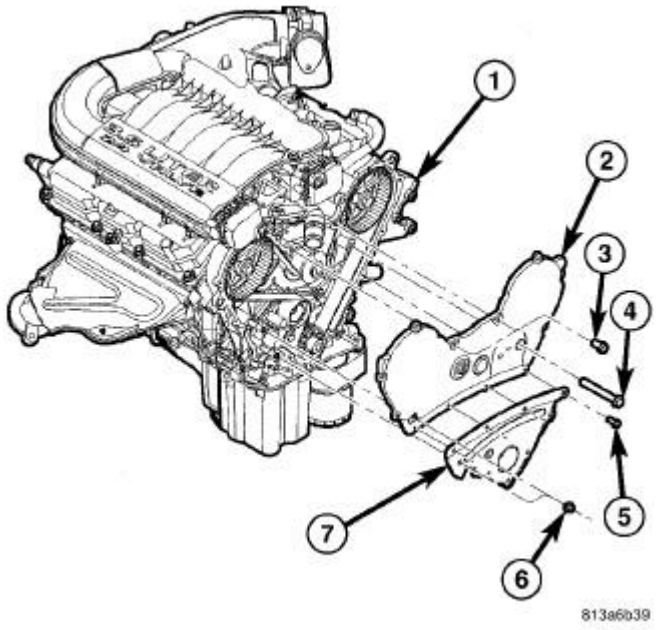

Fig. 487: UPPER AND LOWER TIMING COVERS
Courtesy of CHRYSLER LLC

1 - INNER TIMING COVER
2 - UPPER TIMING COVER
3 - 8 mm BOLT(S)
4 - 10 mm BOLT(S)
5 - 6 mm BOLT(S)
6 - NUT(S)
7 - LOWER TIMING COVER

14. Remove the upper timing belt cover fasteners and remove the front upper timing belt cover (2).
15. Remove the lower timing belt cover fasteners and remove the front lower timing belt cover (7).

Installation

INSTALLATION

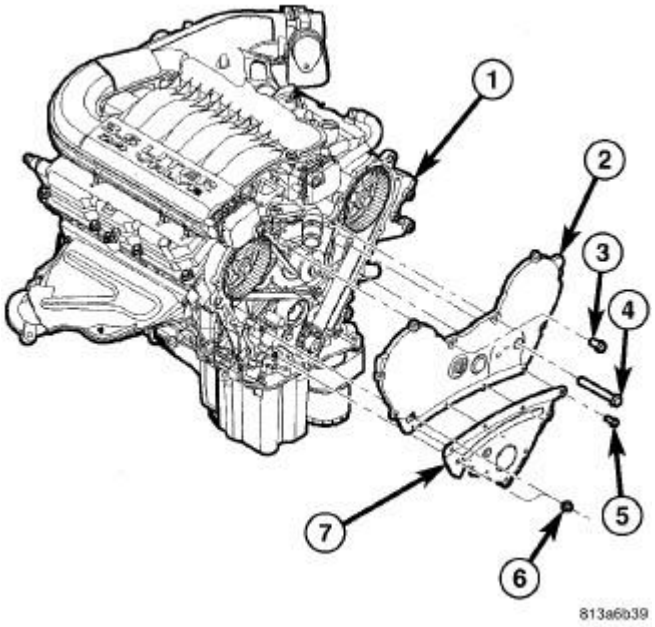

Fig. 488: UPPER AND LOWER TIMING COVERS
Courtesy of CHRYSLER LLC

1 - INNER TIMING COVER
2 - UPPER TIMING COVER
3 - 8 mm BOLT(S)
4 - 10 mm BOLT(S)
5 - 6 mm BOLT(S)
6 - NUT(S)
7 - LOWER TIMING COVER

1. Install the lower timing belt front cover.
2. Install the upper front timing belt cover.
3. Tighten the timing cover bolts as follows:

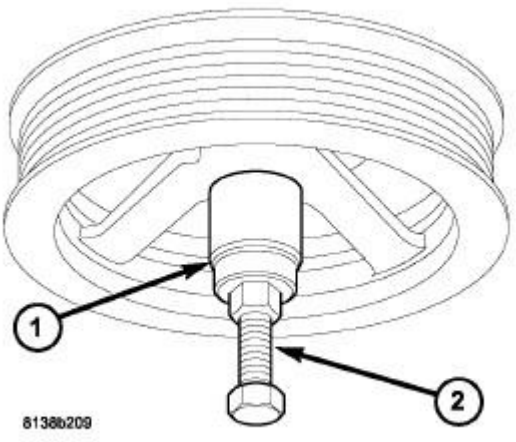

Fig. 489: CRANKSHAFT DAMPER - INSTALLATION
Courtesy of CHRYSLER LLC

- M6 bolts - 12 N.m (105 in. lbs.)
- M8 bolts - 28 N.m (250 in. lbs.)
- M10 bolts - 54 N.m (40 lbs. ft.)

4. Install the crankshaft damper using the 5.9 inch long Forcing Screw C-4685-C1 (2) with Nut and Thrust Bearing from Crank Sprocket Installer 6792-1 (1).

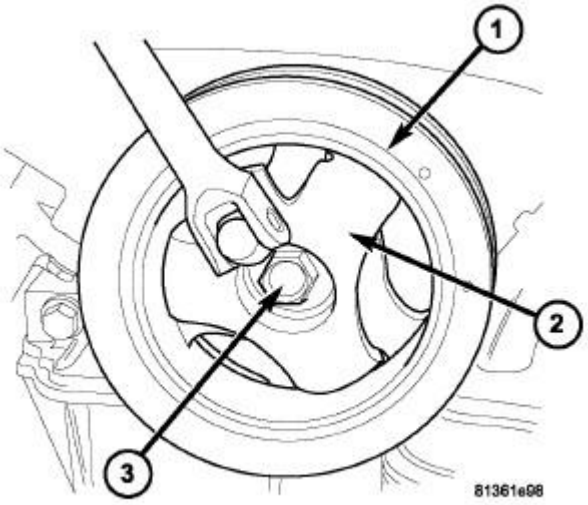

Fig. 490: Damper Holder
Courtesy of CHRYSLER LLC

5. Install the crankshaft damper bolt (3). Tighten the bolt to 95 N.m (70 ft. lbs.) while holding the

damper (1) with Damper Holding Fixture 9365 (2).

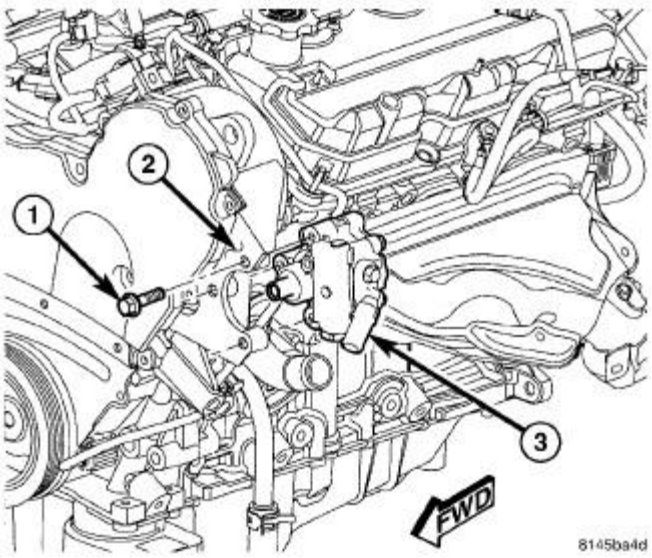

Fig. 491: POWER STEERING PUMP - 2.7L/3.5L
Courtesy of CHRYSLER LLC

6. Align the power steering pump (3) to the mounting holes on the engine bracket (2) and install three pump mounting bolts (1) through the access holes in the pulley. Tighten the bolts to 28 N.m (21 ft. lbs.).

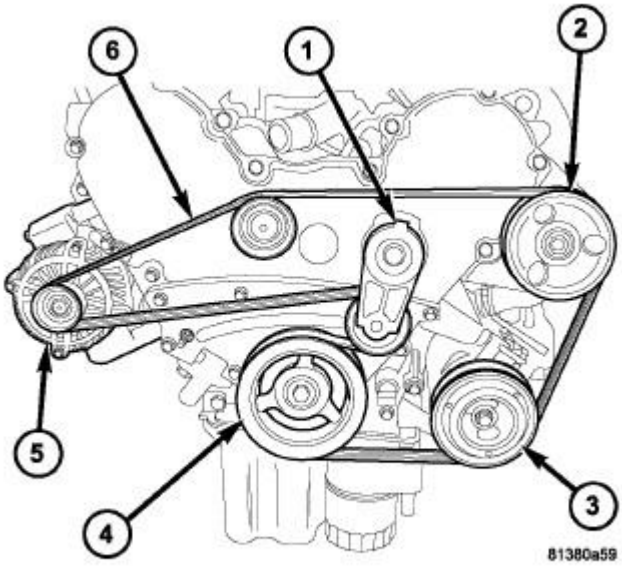

Fig. 492: ACCESSORY DRIVE BELT ROUTING
Courtesy of CHRYSLER LLC

1 - DRIVE BELT TENSIONER 2 - POWER STEERING PULLEY 3 - AIR CONDITIONING COMPRESSOR 4 - CRANKSHAFT DAMPER 5 - GENERATOR 6 - DRIVE BELT

7. Install the accessory drive belt tensioner (1). Tighten the bolt to 34 N.m (40 ft. lbs.).
8. Install the accessory drive belt idler pulley. Tighten the bolt to 28 N.m (250 in. lbs.).
9. Install the accessory drive belt (6). Refer to **Cooling/Accessory Drive/BELT, Serpentine - Installation** .

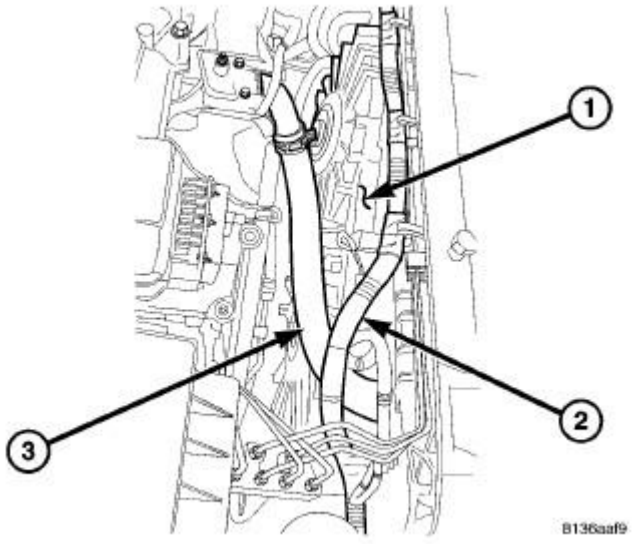

Fig. 493: Radiator Fan Assembly
Courtesy of CHRYSLER LLC

1 - RADIATOR FAN ASSEMBLY 2 - ELECTRICAL CONNECTOR 3 - UPPER RADIATOR HOSE

10. Install the radiator cooling fan assembly (1) into the vehicle.
11. Install the cooling fan mounting bolts and tighten to 6 N.m (50 in. lbs.).
12. Connect the cooling fan electrical connector (2).
13. Install the upper radiator hose (3).

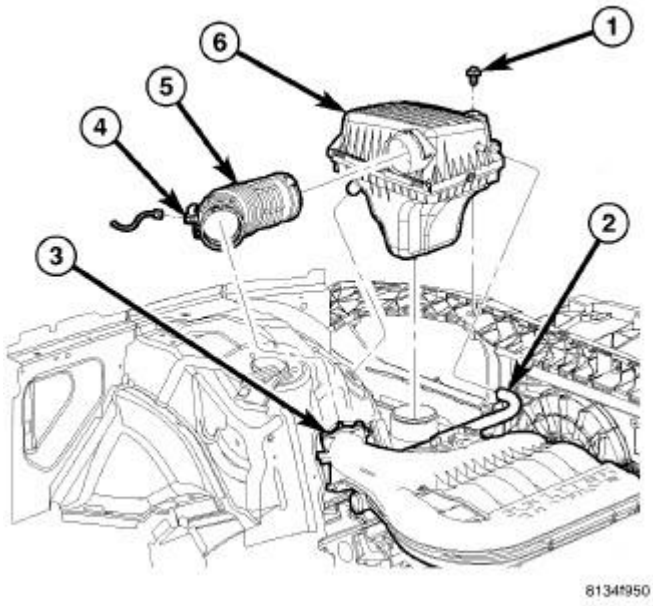

Fig. 494: Air Cleaner Housing
Courtesy of CHRYSLER LLC

1 - BOLT
2 - CCV HOSE
3 - THROTTLE
4 - IAT SENSOR
5 - INLET AIR DUCT
6 - AIR CLEANER ELEMENT HOUSING

14. Install the air cleaner body (6). See **Engine/Air Intake System/BODY, Air Cleaner - Installation**.
15. Connect the negative battery cable and tighten nut to 5 N.m (45 in. lbs.).
16. Fill the cooling system. Refer to **Cooling - Standard Procedure** .
17. Operate the engine until it reaches normal operating temperature. Check the cooling system for correct fluid level. Refer to **Cooling - Standard Procedure** .

COVER(S), ENGINE TIMING, REAR

Removal

REMOVAL

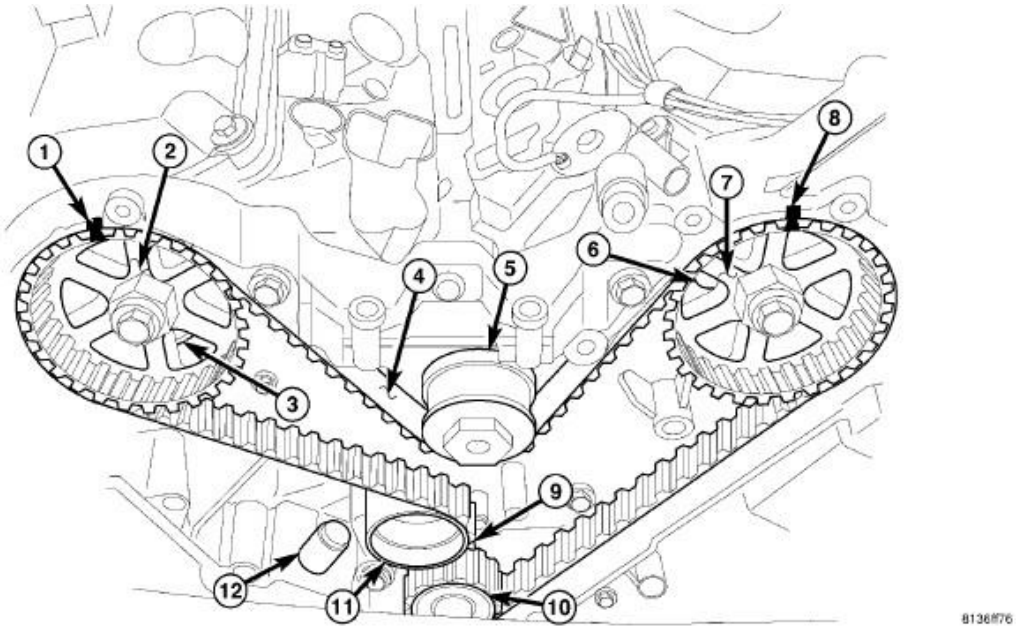

Fig. 495: Identifying Timing Gear Components
Courtesy of CHRYSLER LLC

NOTE: The rear timing belt cover has O-rings to seal the water pump passages to cylinder block. Do not reuse the O-rings.

1. Disconnect and isolate the negative battery cable.
2. Drain the cooling system. Refer to **Cooling - Standard Procedure** .
3. Remove timing belt (4). See **Engine/Valve Timing/BELT and SPROCKETS, Timing - Removal**.
4. Remove the right (2) and left (7) camshaft sprockets. See **Engine/Valve Timing/BELT and SPROCKETS, Timing - Removal**.

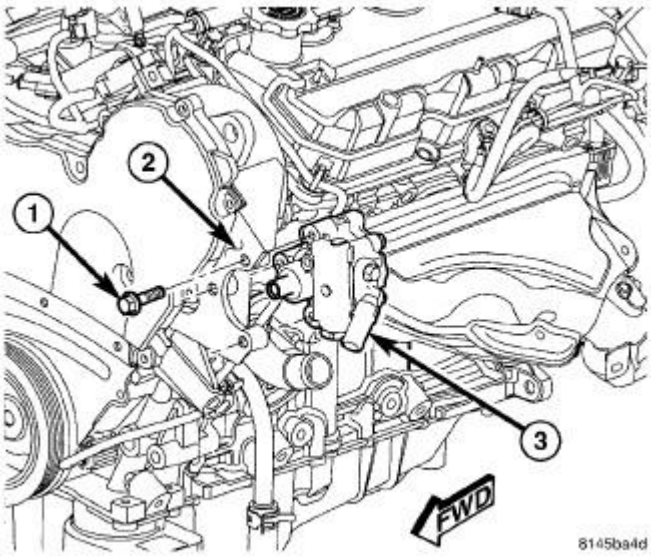

Fig. 496: POWER STEERING PUMP - 2.7L/3.5L
Courtesy of CHRYSLER LLC

5. Remove three power steering pump mounting bolts (1) through access holes in pulley and reposition the power steering pump (3).

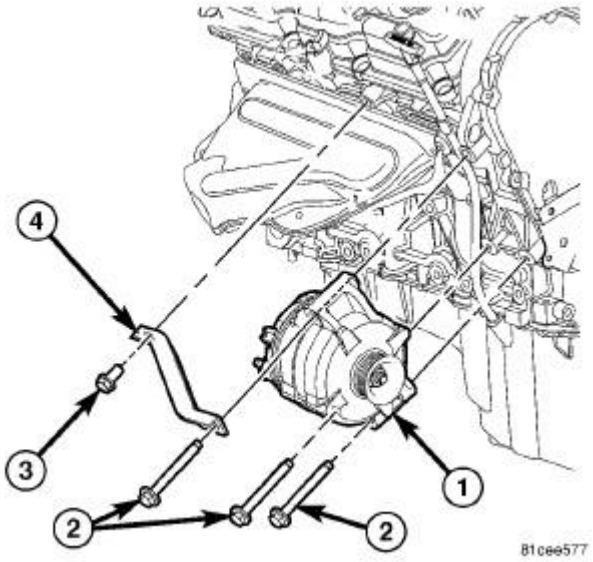

Fig. 497: GENERATOR 3.5L
Courtesy of CHRYSLER LLC

6. Raise and support the vehicle.
7. Remove the front belly pan. Refer to **Body/Exterior/BELLY PAN - Removal** .
8. Remove upper most mounting bolt (2) from generator (1).
9. Remove generator bracket bolt (3) and remove bracket (4).

10. Remove lower mounting bolts (2) and reposition the generator (1).

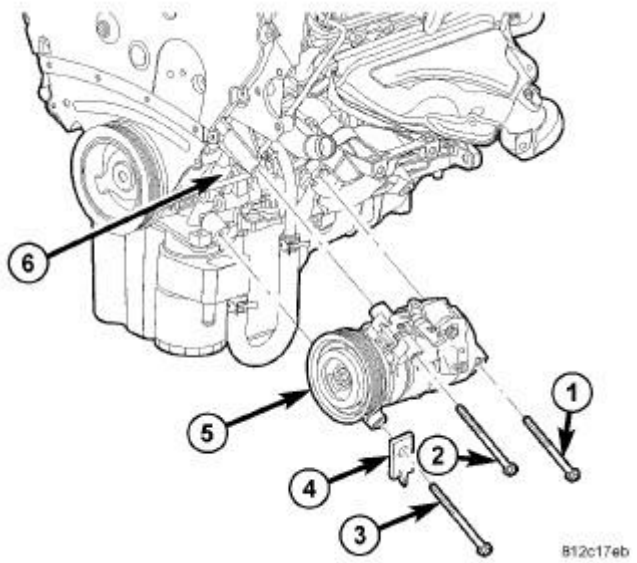

Fig. 498: COMPRESSOR REMOVAL & INSTALLATION
Courtesy of CHRYSLER LLC

NOTE: Bolt 3 securing the A/C compressor to the engine cannot be fully removed until the compressor is positioned away from the cylinder block.

11. Fully loosen the bolt (3) that secures the A/C compressor (5) and automatic transmission cooler line bracket (4) to the cylinder block (6).

CAUTION: Use care not to deform or damage the automatic transmission cooler lines and retaining bracket when repositioning the A/C compressor.

12. Remove bolts (1 and 2) and reposition the A/C compressor.

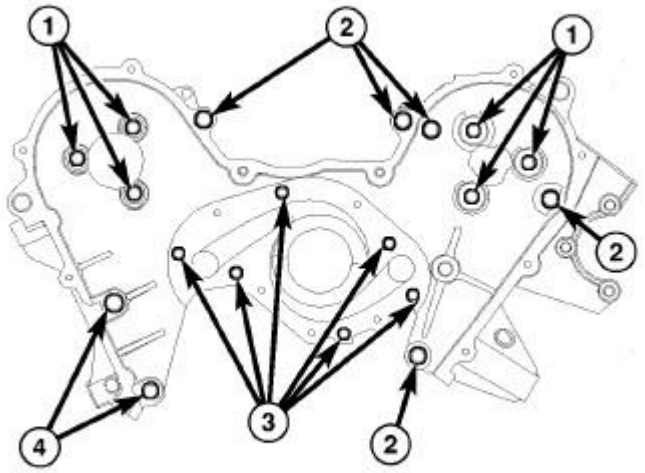

Fig. 499: Timing Belt Rear Cover
Courtesy of CHRYSLER LLC

1 - M8 FASTENERS (APPLY THREAD SEALANT)
2 - M10 FASTENERS
3 - M6 FASTENERS
4 - M10 FASTENERS (STUD/NUT)

13. Remove water pump mounting bolts (3).
14. Remove water pump.
15. Remove rear timing belt cover bolts (1, 2) and nuts (4).
16. Remove the rear cover.

Installation

INSTALLATION

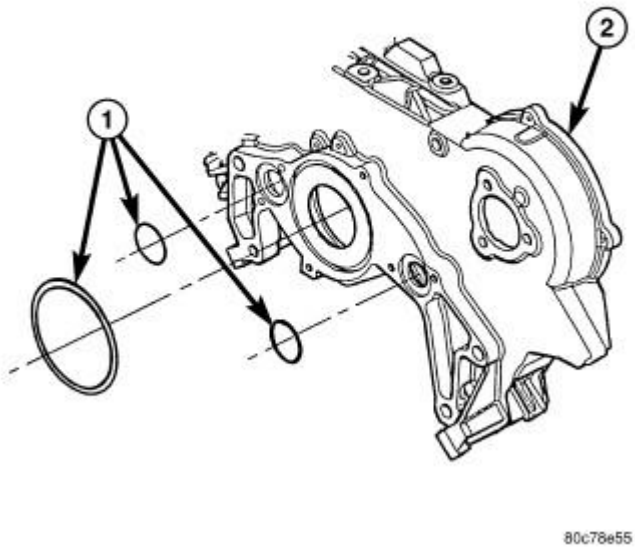

Fig. 500: Rear Timing Belt Cover Seals
Courtesy of CHRYSLER LLC

1 - REAR TIMING BELT COVER SEALS 2 - REAR TIMING BELT COVER

1. Clean rear timing belt cover O-ring (1) sealing surfaces and grooves. Lubricate new O-rings with Mopar® Dielectric Grease or equivalent to facilitate assembly.
2. Position **NEW** O-rings (1) on cover (2).

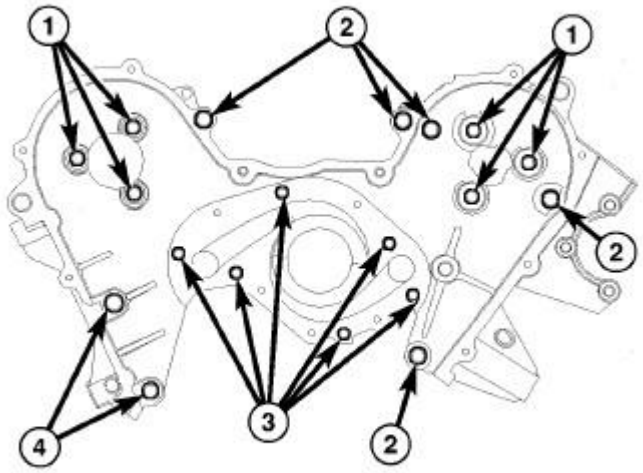

Fig. 501: Timing Belt Rear Cover
Courtesy of CHRYSLER LLC

1 - M8 FASTENERS (APPLY THREAD SEALANT)
2 - M10 FASTENERS
3 - M6 FASTENERS
4 - M10 FASTENERS (STUD/NUT)

3. Install rear timing belt cover. Tighten nuts (4) and bolts (1, 2) to the following specified torque:
   - M10 (2, 4) - 54 N.m (40 ft. lbs.)
   - M8 (1) - 28 N.m (20 ft. lbs.)
4. Position water pump and new gasket.
5. Install water pump mounting bolts (3). Tighten to 12 N.m (105 in. lbs.).

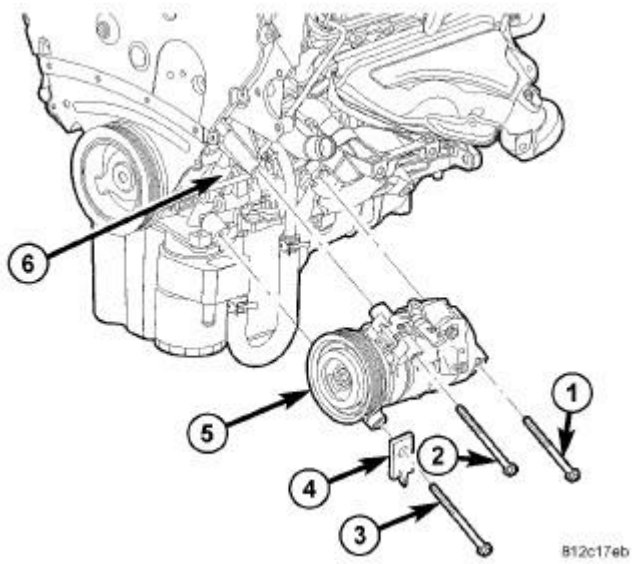

Fig. 502: COMPRESSOR REMOVAL & INSTALLATION
Courtesy of CHRYSLER LLC

CAUTION: When equipped, use care not to deform or damage the automatic transmission cooler lines and retaining bracket when repositioning the A/C compressor.

NOTE: Bolt 3 that secures the A/C compressor and transmission cooler line bracket (when equipped) must be installed through the bracket and the lower front mounting hole of the compressor prior to final positioning of the compressor to the cylinder block.

6. Loosely install the bolt (3) that secures the A/C compressor and automatic transmission cooler line bracket (4) (when equipped) to the compressor and position the compressor, bracket and bolt to the cylinder block (6).
7. Loosely install the bolts (1 and 2) that secure the A/C compressor to the cylinder block.
8. Tighten all three bolts that secure the A/C compressor to the engine in the following order to 26 N.m (19 ft. lbs.):
    1. Upper front bolt (2).
    2. Lower front bolt (3).
    3. Rear bolt (1).

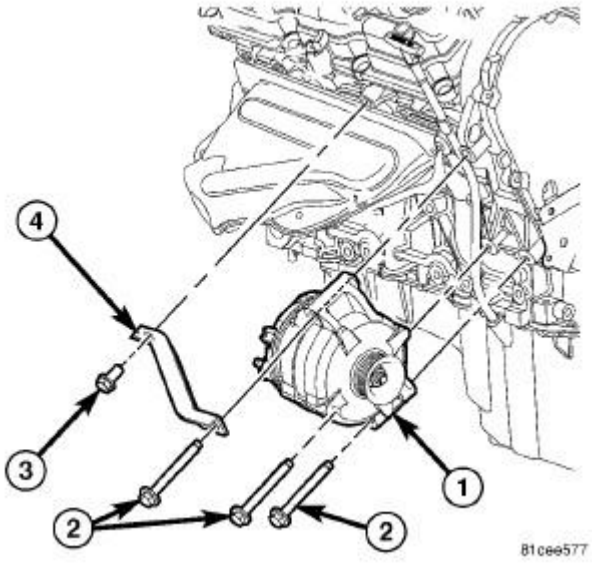

Fig. 503: GENERATOR 3.5L
Courtesy of CHRYSLER LLC

NOTE: Position generator, bracket and all bolts to engine compartment. Hand tightening all fasteners. Then torque all fasteners to specifications.

9. Position generator (1) to engine and loosely install lower mounting bolts (2).
10. Position generator bracket (4) and loosely install bracket bolt (3) and upper generator mounting bolt (2).
11. Tighten generator mounting bolts (2) to 65 N.m (48 ft. lbs.). Tighten generator bracket bolt (3) to 54 N.m (40 ft. lbs.).

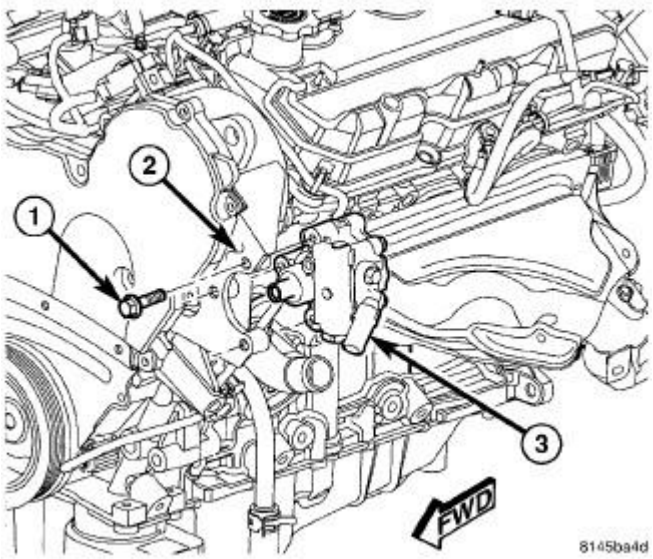

Fig. 504: POWER STEERING PUMP - 2.7L/3.5L

Courtesy of CHRYSLER LLC

12. Align pump (3) with mounting holes on engine bracket (2).
13. Install three pump mounting bolts (1) through access holes in pulley and engine bracket. Tighten bolts to 28 N.m (21 ft. lbs.) torque.

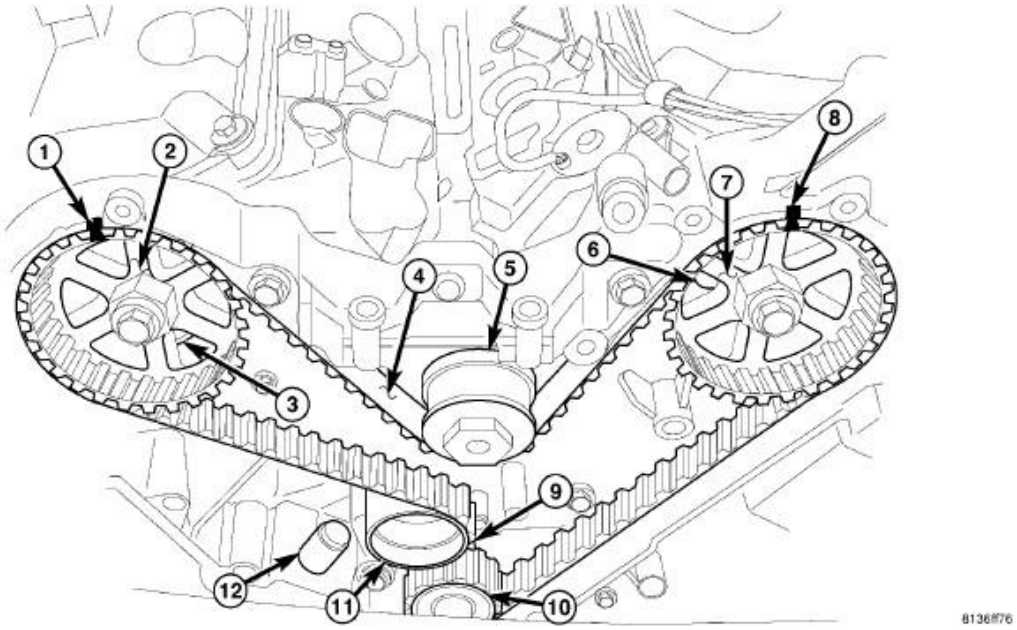

Fig. 505: Identifying Timing Gear Components
Courtesy of CHRYSLER LLC

14. Install camshaft sprockets (2 and 7). See **Engine/Valve Timing/BELT and SPROCKETS, Timing - Installation**.
15. Install timing belt (4). See **Engine/Valve Timing/BELT and SPROCKETS, Timing - Installation**.
16. Install the front timing belt cover. See **Engine/Valve Timing/COVER(S), Engine Timing - Installation**.
17. Install the front belly pan. Refer to **Body/Exterior/BELLY PAN - Installation** .
18. Connect negative battery cable. Tighten nut to 5 N.m (45 in. lbs.).
19. Fill cooling system. Refer to **Cooling - Standard Procedure** .
20. Operate engine until it reaches normal operating temperature. Check cooling system for correct fluid level. Refer to **Cooling - Standard Procedure** .

TENSIONER, ENGINE TIMING

Removal

TENSIONER

1. The timing belt tensioner removal is part of the timing belt removal procedure. See

Engine/Valve Timing/BELT and SPROCKETS, Timing - Removal.

TENSIONER PULLEY ASSEMBLY

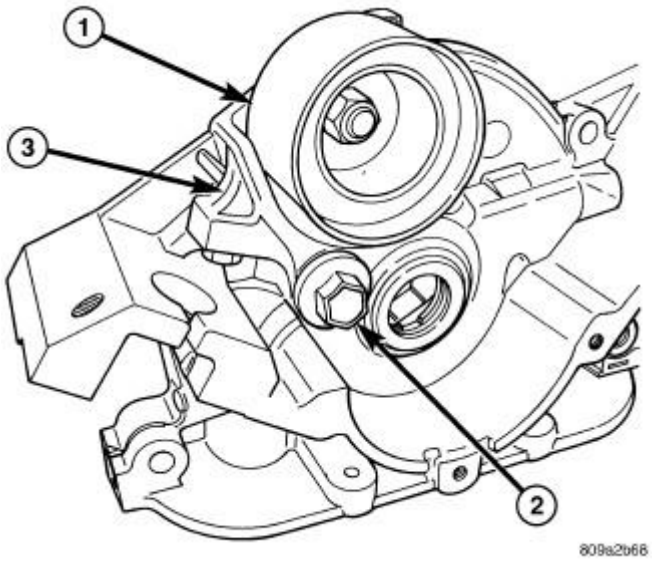

Fig. 506: TENSIONER PULLEY
Courtesy of CHRYSLER LLC

1 - TENSIONER PULLEY 2 - PIVOT BOLT 3 - TENSIONER BRACKET

1. Remove the timing belt. See **Engine/Valve Timing/BELT and SPROCKETS, Timing - Removal**.
2. Remove the timing belt tensioner pulley (1) and bracket (3) assembly by unscrewing the pivot bolt (2) from the oil pump housing.

Inspection

TENSIONER

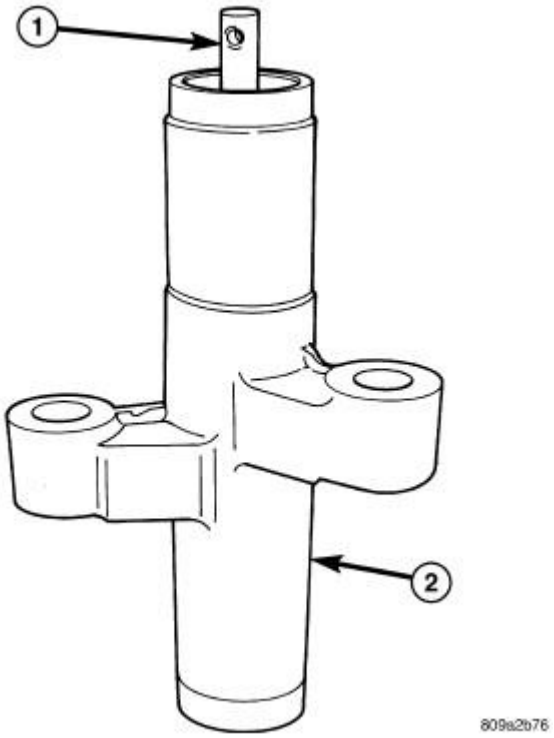

Fig. 507: TIMING BELT TENSIONER
Courtesy of CHRYSLER LLC

1 - PLUNGER (EXTENDED POSITION) 2 - TENSIONER HOUSING

1. Inspect hydraulic tensioner (2) for fluid loss around the plunger (1) seal. Replace tensioner if leaking.

TENSIONER PULLEY ASSEMBLY

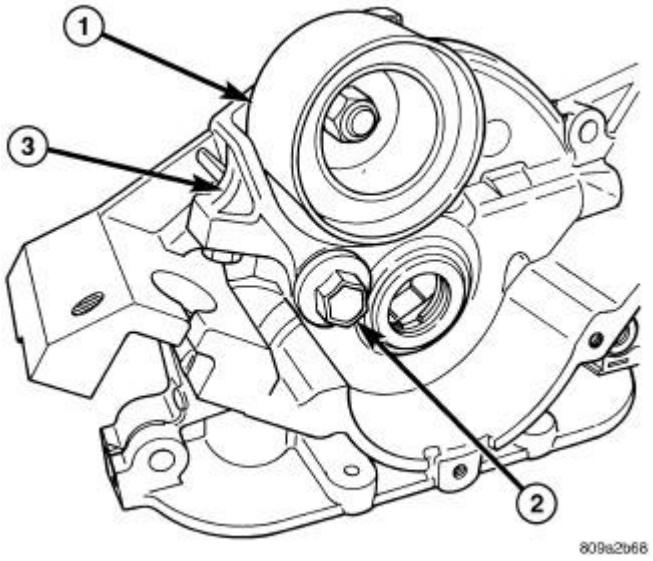

Fig. 508: TENSIONER PULLEY
Courtesy of CHRYSLER LLC

1 - TENSIONER PULLEY 2 - PIVOT BOLT 3 - TENSIONER BRACKET

NOTE: The tensioner pulley (1), bracket (3), and pivot bolt (2) is serviced as an assembly.

1. Inspect pulley (1) for free movement. Replace if pulley is loose, seized, or rough turning.
2. Inspect pulley bearing and seal. Replace if damaged.
3. Inspect pivot bolt (2) for free movement in assembly housing. Replace assembly if seized or excessive looseness.

Installation

TENSIONER PULLEY ASSEMBLY

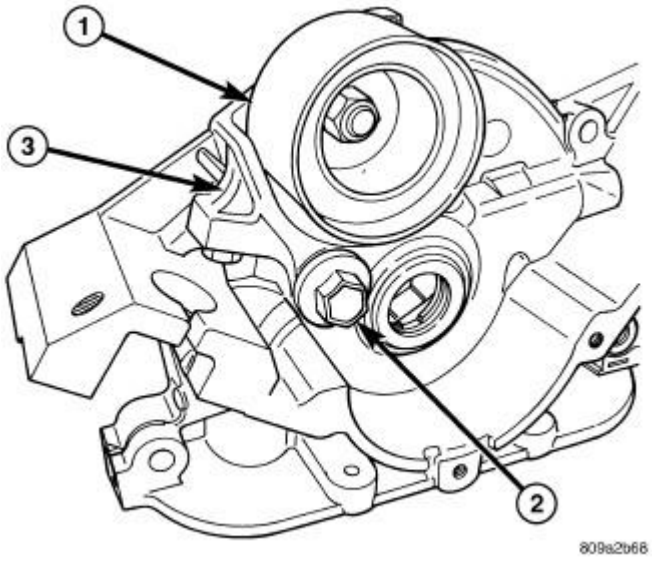

Fig. 509: TENSIONER PULLEY
Courtesy of CHRYSLER LLC

1 - TENSIONER PULLEY 2 - PIVOT BOLT 3 - TENSIONER BRACKET

1. Install the timing belt tensioner pulley (1) assembly. Tighten the pivot bolt (2) to 61 N.m (45 ft. lbs.).
2. Install the timing belt. See **Engine/Valve Timing/BELT and SPROCKETS, Timing - Installation**.

TENSIONER

1. The timing belt tensioner installation is part of the timing belt installation procedure. See **Engine/Valve Timing/BELT and SPROCKETS, Timing - Installation**.

ENGINE

3.6L - Service Information - Challenger

DESCRIPTION

DESCRIPTION

CAUTION: If the engine has experienced a catastrophic failure, THE INTAKE MANIFOLD MUST BE REPLACED!

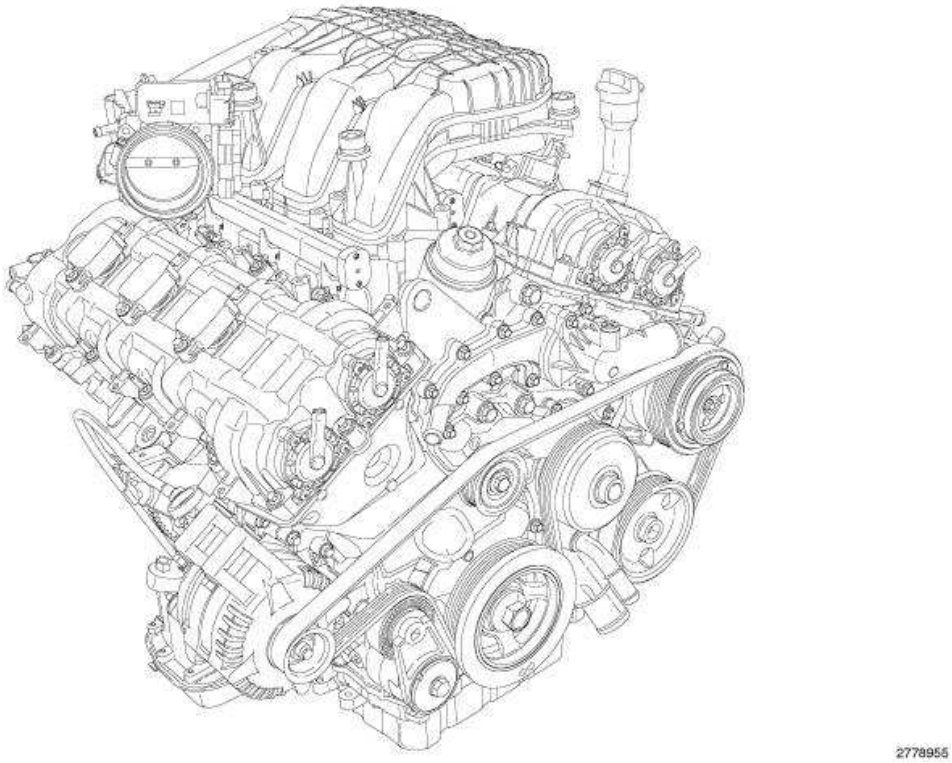

Fig. 1: 3.6L (219.7 CID) Flexible Fuel V-6 Engine
Courtesy of CHRYSLER GROUP, LLC

The 3.6 liter (219.7 CID) flexible fuel V-6 engine features Variable Valve Timing (VVT), Dual Overhead Camshafts (DOHC) and a high-pressure die-cast aluminum cylinder block with steel liners in a 60° configuration. The 3.6 liter engine has a chain driven variable discharge oil pump with a two-stage pressure regulator for improved fuel economy. The exhaust manifolds are integrated into the cylinder heads for reduced weight. The cylinders are numbered from front to rear. The right bank is numbered 1, 3, 5 and the left bank is numbered 2, 4, 6. The firing order is 1-2-3-4-5-6. The engine serial number is located on the left side of the cylinder block at the transmission flange.

DIAGNOSIS AND TESTING

ENGINE DIAGNOSIS - INTRODUCTION

Engine diagnosis is helpful in determining the causes of malfunctions not detected and remedied by routine maintenance.

These malfunctions may be classified as either performance (e.g., engine idles rough and stalls) or mechanical (e.g., a strange noise).

Refer to **ENGINE PERFORMANCE DIAGNOSTIC TABLE** and **ENGINE MECHANICAL DIAGNOSTIC TABLE** for possible causes and corrections of malfunctions. Refer to **FUEL SYSTEM** for the fuel system diagnosis.

Additional tests and diagnostic procedures may be necessary for specific engine malfunctions that can not be isolated with the Service Diagnosis charts. Information concerning additional tests and diagnosis is provided within the following diagnosis:

- Cylinder Compression Pressure Test. Refer to **CYLINDER COMPRESSION PRESSURE LEAKAGE**.
- Cylinder Combustion Pressure Leakage Test. Refer to **CYLINDER COMBUSTION PRESSURE LEAKAGE**.
- Engine Cylinder Head Gasket Failure Diagnosis. Refer to **DIAGNOSIS AND TESTING**.
- Intake Manifold Leakage Diagnosis. Refer to **DIAGNOSIS AND TESTING**.

ENGINE PERFORMANCE DIAGNOSTIC TABLE

CONDITION	POSSIBLE CAUSE	CORRECTION
ENGINE WILL NOT START	1. Weak battery	1. Charge or replace as necessary. Refer to **BATTERY, DIAGNOSIS AND TESTING** .
	2. Corroded or loose battery connections.	2. Clean and tighten battery connections. Refer to **CLEANING** .
	3. Faulty engine starting system.	3. Diagnose engine starting system. Refer to **DIAGNOSIS AND TESTING** .
	4. Faulty coil or control unit.	4. Replace ignition coil. Refer to **COIL, IGNITION, REMOVAL** .
	5. Incorrect spark plug gap.	5. Correct as necessary.
	6. Incorrect cam timing.	6. Verify cam timing. Refer to **VALVE TIMING, STANDARD PROCEDURE**.
	7. Dirt or water in fuel system.	7. Clean fuel system.
	8. Faulty fuel pump or wiring.	8. Repair or replace as necessary.

	9. Faulty Camshaft Position (CMP) sensor. 10. Faulty Crankshaft Position (CKP) sensor.	9. Replace sensor. Refer to **SENSOR, CAMSHAFT POSITION, REMOVAL** . 10. Replace sensor. Refer to **SENSOR, CRANKSHAFT POSITION, REMOVAL** .
ENGINE STALLS OR ROUGH IDLE	1. Vacuum leak.	1. Inspect intake manifold and vacuum hoses, repair or replace as necessary.
	2. Faulty Crankshaft Position (CKP) sensor.	2. Replace sensor. Refer to **SENSOR, CRANKSHAFT POSITION, REMOVAL** .
	3. Faulty ignition coil.	3. Replace ignition coil. Refer to **COIL, IGNITION, REMOVAL** .
	4. Incorrect cam timing.	4. Verify cam timing. Refer to **VALVE TIMING, STANDARD PROCEDURE**.
ENGINE LOSS OF POWER	1. Dirty or incorrectly gapped spark plugs.	1. Correct as necessary. Refer to **SPARK PLUG, REMOVAL** .
	2. Dirt or water in fuel system.	2. Clean fuel system.
	3. Faulty fuel pump.	3. Replace fuel pump. Refer to **MODULE, FUEL PUMP, REMOVAL** .
	4. Leaking cylinder head gasket.	4. Replace cylinder head gasket. Refer to **CYLINDER HEAD , REMOVAL**.
	5. Low compression.	5. Determine the cause and repair as necessary. Refer to **CYLINDER COMBUSTION PRESSURE LEAKAGE**.
	6. Burned, warped or pitted valves.	6. Replace as necessary. Refer to **VALVES, INTAKE AND EXHAUST, REMOVAL**.
	7. Plugged or restricted exhaust system.	7. Inspect and replace as necessary.
	8. Faulty ignition coil.	8. Replace ignition coil. Refer to **COIL, IGNITION, REMOVAL** .
	9. Incorrect cam timing.	9. Verify cam timing. Refer to **VALVE TIMING, STANDARD PROCEDURE**.
ENGINE MISSES ON ACCELERATION	1. Dirty or incorrectly gapped spark plugs.	1. Correct as necessary. Refer to **SPARK PLUG, REMOVAL** .

	2. Dirt in fuel system.	2. Clean fuel system.
	3. Burned, warped or pitted valves.	3. Replace as necessary. Refer to **VALVES, INTAKE AND EXHAUST, REMOVAL**.
	4. Faulty ignition coil.	4. Replace ignition coil. Refer to **COIL, IGNITION, REMOVAL** .
ENGINE MISSES AT HIGH SPEED	1. Dirty or incorrectly gapped spark plugs.	1. Correct as necessary. Refer to **SPARK PLUG, REMOVAL** .
	4. Faulty ignition coil.	2. Replace ignition coil. Refer to **COIL, IGNITION, REMOVAL** .
	3. Dirt or water in fuel system.	3. Clean fuel system.

ENGINE MECHANICAL DIAGNOSTIC TABLE

CONDITION	POSSIBLE CAUSES	CORRECTIONS
NOISY VALVES	1. High or low oil level in crankcase.	1. Refer to **STANDARD PROCEDURE**.
	2. Thin or diluted oil.	2. Change oil and filter.
	3. Low oil pressure.	3. Check oil pump, if Ok, check rod and main bearings for excessive wear.
	4. Dirt in lash adjusters.	4. Replace as necessary.
	5. Worn rocker arms.	5. Replace as necessary.
	6. Worn lash adjusters	6. Replace as necessary.
	7. Worn valve guides.	7. Inspect the valve guides for wear, cracks or looseness. If either condition exists, replace the cylinder head. Refer to **CYLINDER HEAD , REMOVAL**.
	8. Excessive runout of valve seats on valve faces.	8. Refer to **STANDARD PROCEDURE**.
CONNECTING ROD NOISE	1. Insufficient oil supply.	1. Refer to **STANDARD PROCEDURE**.
	2. Low oil pressure.	2. Check oil pump, if OK, check rod and main bearings for excessive wear.
	3. Thin or diluted oil.	3. Change oil and filter.
	4. Excessive bearing clearance.	4. Replace as necessary.
	5. Connecting rod journal out-of-round.	5. Service or replace crankshaft.

	6. Misaligned connecting rods.	6. Replace bent connecting rods.
MAIN BEARING NOISE	1. Insufficient oil supply.	1. Refer to **STANDARD PROCEDURE**.
	2. Low oil pressure.	2. Check oil pump, if OK, check rod and main bearings for excessive wear.
	3. Thin or diluted oil.	3. Change oil and filter.
	4. Excessive bearing clearance.	4. Replace as necessary.
	5. Excessive end play.	5. Check thrust washers for wear.
	6. Crankshaft journal out-of round.	6. Service or replace crankshaft.
	7. Loose flywheel or torque converter.	7. Tighten to correct torque

CYLINDER COMPRESSION PRESSURE LEAKAGE

NOTE: The results of a cylinder compression pressure test can be utilized to diagnose several engine malfunctions.

NOTE: Ensure the battery is completely charged and the engine starter motor is in good operating condition. Otherwise the indicated compression pressures may not be valid for diagnosis purposes.

1. Clean the spark plug recesses with compressed air.
2. Remove the spark plugs and record the cylinder number of each spark plug for future reference.
3. Inspect the spark plug electrodes for abnormal firing indicators such as fouled, hot, oily, etc.
4. Disable the fuel system and perform the fuel system pressure release procedure. Refer to **FUEL DELIVERY, GAS, STANDARD PROCEDURE** .
5. Insert a compression pressure gauge and rotate the engine with the engine starter motor for three revolutions.
6. Record the compression pressure on the 3rd revolution. Continue the test for the remaining cylinders.

NOTE: The recommended compression pressures are to be used only as a guide to diagnosing engine problems. An engine should not be disassembled to determine the cause of low compression unless some malfunction is present.

7. Compression should not be less than 689 kPa (100 psi) and not vary more than 25 percent from cylinder to cylinder.
8. If one or more cylinders have abnormally low compression pressures, repeat the compression

test.

NOTE: **If the same cylinder or cylinders repeat an abnormally low reading on the second compression test, it could indicate the existence of a problem in the cylinder in question.**

9. If one or more cylinders continue to have abnormally low compression pressures, perform the cylinder combustion pressure leakage test. Refer to **CYLINDER COMBUSTION PRESSURE LEAKAGE**.

CYLINDER COMBUSTION PRESSURE LEAKAGE

The combustion pressure leakage test provides an accurate means for determining engine condition.

Combustion pressure leakage testing will detect:

- Exhaust and intake valve leaks (improper seating).
- Leaks between adjacent cylinders or into water jacket.
- Any causes for combustion/compression pressure loss.

1. Check the coolant level and fill as required. DO NOT install the radiator cap.
2. Start and operate the engine until it attains normal operating temperature.
3. Turn the engine OFF.
4. Remove the spark plugs.
5. Remove the oil filler cap.
6. Remove the air cleaner hose.
7. **Calibrate the tester according to the manufacturer's instructions.** The shop air source for testing should maintain a regulated air pressure at 552 kPa (80 psi).
8. Perform the test procedures on each cylinder according to the tester manufacturer's instructions. Set the piston of the cylinder to be tested at TDC compression.
9. During the testing, listen for pressurized air escaping through the throttle body, tailpipe and oil filler cap opening. Check for bubbles in the radiator coolant.

All gauge pressure indications should be equal, with **no more** than 25% leakage.

FOR EXAMPLE: Input air at 552 kPa (80 psi), the primary gauge factory set at 207 kPa (30 psi) input pressure. The secondary gauge should have no more than 176 kPa (25.5 psi) loss, when connected to the cylinder.

Refer to **CYLINDER COMBUSTION PRESSURE LEAKAGE DIAGNOSIS CHART**.

CYLINDER COMBUSTION PRESSURE LEAKAGE DIAGNOSIS CHART

CONDITION	POSSIBLE CAUSE	CORRECTION
AIR ESCAPES THROUGH	Intake valve bent, burnt, or not	Inspect valve and valve seat.

THROTTLE BODY	seated properly	Reface or replace, as necessary. Inspect valve springs. Replace as necessary.
AIR ESCAPES THROUGH TAILPIPE	Exhaust valve bent, burnt, or not seated properly	Inspect valve and valve seat. Reface or replace, as necessary. Inspect valve springs. Replace as necessary.
AIR ESCAPES THROUGH RADIATOR	Head gasket leaking or cracked cylinder head or block	Remove cylinder head and inspect. Replace defective part
MORE THAN 50% LEAKAGE FROM ADJACENT CYLINDERS	Head gasket leaking or crack in cylinder head or block between adjacent cylinders	Remove cylinder head and inspect. Replace gasket, head, or block as necessary
MORE THAN 25% LEAKAGE AND AIR ESCAPES THROUGH OIL FILLER CAP OPENING ONLY	Stuck or broken piston rings; cracked piston; worn rings and/or cylinder wall	Inspect for broken rings or piston. Measure ring gap and cylinder diameter, taper and out-of-round. Replace defective part as necessary

OIL CONSUMPTION TEST AND DIAGNOSIS

The following diagnostic procedures are used to determine the source of excessive internal oil Consumption, these procedures and tests apply to vehicles with 50, 000 miles or less.

NOTE: Engine oil consumption may be greater than normal during engine break-in. Repairs should be delayed until vehicle has been driven at least 7, 500 miles.

Severe service (high ambient temperature, short trips, heavy loading, trailer towing, taxi, off-road, or law enforcement use) may result in greater oil consumption than normal.

Sustained high speed driving and high engine RPM operation may result in increased oil consumption.

Failure to comply with the recommended oil type and viscosity rating, as outlined in the Owner's Manual, may impact oil economy as well as fuel economy.

Oil consumption may increase with vehicle age and mileage due to normal engine wear.

NOTE: Because a few drops of external oil leakage per mile can quickly account for the loss of one quart of oil in a few hundred miles, ensure no external engine oil leaks are present.

- **Oil leakage is not the same as oil consumption and all external leakage must be eliminated before any action can be taken to verify and/or correct oil consumption complaints.**
- **Verify that the engine has the correct oil level dipstick and dipstick tube installed.**

- **Verify that the engine is not being run in an overfilled condition. Check the oil level 15 minutes after a hot shutdown with the vehicle parked on a level surface. In no case should the level be above MAX or the FULL mark on the dipstick.**

OIL CONSUMPTION TEST

1. Check the oil level at least 15 minutes after a hot shutdown.
2. If the oil level is low, top off with the proper viscosity and API service level engine oil. Add one bottle of MOPAR® 4-In-1 Leak Detection Dye into the engine oil.
3. Tamper proof the oil pan drain plug, oil filter, dipstick and oil fill cap.
4. Record the vehicle mileage.
5. Instruct the customer to drive the vehicle as usual.
6. Ask the customer to return to the servicing dealer after accumulating 500 miles, Check the oil level at least 15 minutes after a hot shutdown. If the oil level is half way between the "FULL" and "ADD" mark continue with the next step.
7. Using a black light, re-check for any external engine oil leaks, repair as necessary, if no external engine oil leaks are present, continue with **OIL CONSUMPTION DIAGNOSIS**.

OIL CONSUMPTION DIAGNOSIS

1. Check the positive crankcase ventilation (PCV) system. Make sure the system is not restricted and the PCV valve has the correct part number and correct vacuum source (18-20 in. Hg at idle below 3000 ft. above sea level is considered normal).
2. Perform a cylinder compression test and cylinder leak down test using the standard leak down gauge following manufacturers suggested best practices.

   NOTE: Verify the spark plugs are not oil saturated. If the spark plugs are oil saturated and compression is good it can be assumed the valve seals or valve guides are at fault.

3. If one or more cylinders have more than 15% leak down further engine tear down and inspection will be required.

TOP 19 REASONS THAT MAY LEAD TO ENGINE OIL CONSUMPTION

1. **Tapered and Out-of-Round Cylinders**

   The increased piston clearances permit the pistons to rock in the worn cylinders. While tilted momentarily, an abnormally large volume of oil is permitted to enter on one side of the piston. The rings, also tilted in the cylinder, permit oil to enter on one side. Upon reversal of the piston on each stroke, some of this oil is passed into the combustion chamber.

2. **Distorted Cylinders**

   This may be caused by unequal heat distribution or unequal tightening of cylinder head bolts.

This condition presents a surface which the rings may not be able to follow completely. In this case, there may be areas where the rings will not remove all of the excess oil. When combustion takes place, this oil will be burned and cause high oil consumption.

3. **Improper operation of "PCV "system**

   The main purpose of the Positive Crankcase Ventilation (PCV) valve is to recirculate blow-by gases back from the crankcase area through the engine to consume unburned hydrocarbons. The PCV system usually has a one way check valve and a make up air source. The system uses rubber hoses that route crankcase blow by gases to the intake manifold. Vacuum within the engine intake manifold pulls the blow by gases out of the crankcase into the combustion chamber along with the regular intake air and fuel mixture.

   The PCV system can become clogged with sludge and varnish deposits and trap blow by gases in the crankcase. This degrades the oil, promoting additional formation of deposit material. If left uncorrected, the result is plugged oil rings, oil consumption, rapid ring wear due to sludge buildup, ruptured gaskets and seals due to crankcase pressurization.

4. **Worn Piston Ring Grooves**

   For piston rings to form a good seal, the sides of the ring grooves must be true and flat - not flared or shouldered. Piston rings in tapered or irregular grooves will not seal properly and, consequently, oil will pass around behind the rings into the combustion chamber.

5. **Worn, Broken or Stuck Piston Rings**

   When piston rings are broken, worn or stuck to such an extent that the correct tension and clearances are not maintained, this will allow oil to be drawn into the combustion chamber on the intake stroke and hot gases of combustion to be blown down the cylinder past the piston on the power stroke. All of these conditions will result in burning and carbon build up of the oil on the cylinders, pistons and rings.

6. **Cracked or Broken Ring Lands**

   Cracked or broken ring lands prevent the rings from seating completely on their sides and cause oil pumping. This condition will lead to serious damage to the cylinders as well as complete destruction of the pistons and rings. Cracked or broken ring lands cannot be corrected by any means other than piston replacement.

7. **Worn Valve Stems and Guides**

   When wear has taken place on valve stems and valve guides, the vacuum in the intake manifold will draw oil and oil vapor between the intake valve stems and guides into the intake manifold and then into the cylinder where it will be burned.

8. **Bent or Misaligned Connecting Rods**

Bent or misaligned connecting rods will not allow the pistons to ride straight in the cylinders. This will prevent the pistons and rings from forming a proper seal with the cylinder walls and promote oil consumption. In addition, it is possible that a bearing in a bent connect rod will not have uniform clearance on the connecting rod wrist pin. Under these conditions, the bearing will wear rapidly and throw off an excessive amount of oil into the cylinder.

9. **Fuel Dilution**

   If raw fuel is allowed to enter the lubrication system, the oil will become thinner and more volatile and will result in higher oil consumption. The following conditions will lead to higher oil consumption;

   - Excess fuel can enter and mix with the oil via a leaking fuel injector
   - Gasoline contaminated with diesel fuel
   - Restricted air intake
   - Excessive idling

10. **Contaminated Cooling Systems**

    Corrosion, rust, scale, sediment or other formations in the water jacket and radiator will prevent a cooling system from extracting heat efficiently. This is likely to cause cylinder distortion thus leading to higher oil consumption.

11. **Oil Viscosity**

    The use of oil with a viscosity that is too light may result in high oil consumption. Refer to the vehicle Owner's Manual for the proper oil viscosity to be used under specific driving conditions and/or ambient temperatures.

12. **Dirty Engine Oil**

    Failure to change the oil and filter at proper intervals may cause the oil to be so dirty that it will promote accumulation of sludge and varnish and restrict oil passages in the piston rings and pistons. This will increase oil consumption; dirty oil by nature is also consumed at a higher rate than clean oil.

13. **Crankcase Overfull**

    Due to an error in inserting the oil dip stick so that it does not come to a seat on its shoulder, a low reading may be obtained. Additional oil may be added to make the reading appear normal with the stick in this incorrect position which will actually make the oil level too high. If the oil level is so high that the lower ends of the connecting rods touch the oil in the oil pan excessive quantities of oil will be thrown on the cylinder walls and some of it will work its way up into the combustion chamber.

14. **Excessively High Oil Pressure**

A faulty oil pressure relief valve may cause the oil pressure to be too high. The result will be that the engine will be flooded with an abnormally large amount of oil in a manner similar to that which occurs with worn bearings. This condition may also cause the oil filter to burst.

15. **Aftermarket Performance Chips and Modification**

    Increasing performance through the use of performance/power enhancement products to a stock or factory engine will increase the chance of excessive oil consumption.

16. **Lugging Engine**

    Lugging is running the engine at a lower RPM in a condition where a higher RPM (more power/torque) should be implemented. Especially susceptible on vehicles equipped with a manual transmission. This driving habit causes more stress loading on the piston and can lead to increases in engine oil consumption.

17. **Turbocharged Engines**

    There is a possibility for PCV "push-over" due to higher crankcase pressure (as compared to naturally aspirated engines) which is normal for turbocharged engines. This condition causes varying amounts of engine oil to enter the intake manifold, charge air cooler and associated plumbing to and from the charge air cooler, also a leaking turbocharger seal will draw oil into the combustion chamber where it will burn (blue smoke from tail pipe may be present) and form carbon deposits which contribute to further oil consumption as they interfere with proper engine function.

18. **Restricted Air Intake**

    Excessive restriction in the air intake system will increase engine vacuum and can increase oil consumption, an extremely dirty air filter would be one example of this situation.

19. **Intake Manifold port seals**

    Engines that have a "V" configuration and a "wet valley" (3.3/3.8L) could draw oil into the intake ports due to improper sealing between the intake manifold ports and cylinder head. Causes may include improper torque of intake manifold bolts, corrosion (aluminum intake manifold) and or warped sealing surface.

ENGINE LUBRICATION DIAGNOSTIC TABLE

CONDITION	POSSIBLE CAUSES	CORRECTION
OIL LEAKS	1. Gaskets and O-rings. Misaligned or damaged.	1. Replace as necessary.
	(a) Loose fasteners, broken or porous metal parts.	(a) Tighten fasteners, Repair or replace metal parts.
	2. Crankshaft rear oil seal.	2. Replace rear crankshaft oil

		seal. Refer to **SEAL, CRANKSHAFT OIL, REAR, REMOVAL**.
	3. Crankshaft seal flange. Scratched, nicked or grooved.	3. Polish or replace crankshaft.
	4. Oil pan flange cracked.	4. Replace oil pan. Refer to **PAN, OIL, REMOVAL**.
	5. Engine timing cover seal, damaged or misaligned.	5. Replace seal. Refer to **SEAL, CRANKSHAFT OIL, FRONT, REMOVAL**.
	6. Scratched or damaged vibration damper hub.	6. Polish or replace damper.
OIL PRESSURE DROP	1. Low oil level.	1. Check and correct oil level.
	2. Faulty oil pressure sensor.	2. Replace sensor. Refer to **SENSOR, OIL PRESSURE, REMOVAL**.
	3. Low oil pressure.	3. Check main bearing clearance. Refer to **STANDARD PROCEDURE**. 3. Check rod bearing clearance. Refer to **BEARING(S), CONNECTING ROD, STANDARD PROCEDURE**.
	4. Clogged oil filter.	4. Replace oil filter. Refer to **FILTER, ENGINE OIL, REMOVAL**.
	5. Worn oil pump.	5. Replace oil pump. Refer to **PUMP, ENGINE OIL, REMOVAL**.
	6. Thin or diluted oil.	6. Change oil and filter. Refer to **STANDARD PROCEDURE**.
	7. Excessive bearing clearance.	7. Replace crankshaft bearings. Refer to . 7. Replace rod bearings. Refer to **BEARING(S), CONNECTING ROD, STANDARD PROCEDURE**.
	8. Oil pump relief valve stuck.	8. Replace oil pump. Refer to **PUMP, ENGINE OIL, REMOVAL**.
	9. Oil pump pick-up tube loose, damaged or clogged.	9. Replace oil pump pick-up. Refer to **PICK-UP, OIL PUMP, REMOVAL**.
OIL PUMPING AT RINGS; SPARK PLUGS FOULING	1. Worn or damaged rings.	1. Hone cylinder bores and replace rings. Refer to **STANDARD PROCEDURE**.
	2. Carbon in oil ring slots.	2. Replace rings. Refer to **ROD,**

		PISTON AND CONNECTING, REMOVAL.
	3. Worn valve guides.	3. Replace cylinder heads. Refer to **CYLINDER HEAD , REMOVAL**.
	4. Leaking valve guide seals.	4. Replace valve guide seals. Refer to **SEAL(S), VALVE GUIDE, REMOVAL**.

STANDARD PROCEDURE

DUST COVERS AND CAPS

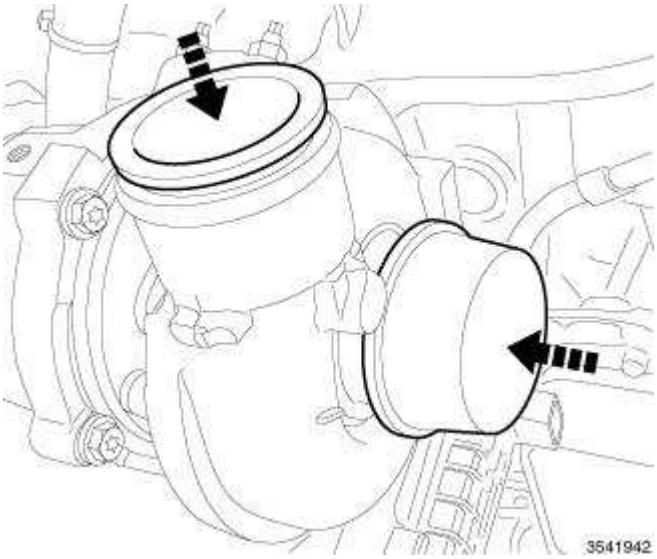

Fig. 2: Covers/Caps
Courtesy of CHRYSLER GROUP, LLC

Due to the high amounts of failures caused by dust, dirt, moisture and other foreign debris being introduced to the engine during service. Covers or caps are needed to reduce the possible damage that can be caused or created.

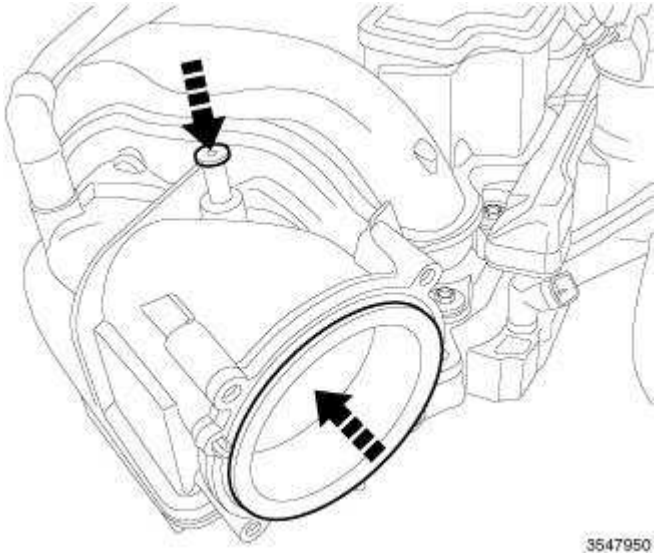

Fig. 3: Opening Cover
Courtesy of CHRYSLER GROUP, LLC

Covers over openings will reduce any possibilities for foreign materials to enter the engine systems. Using miller tool (special tool #10368, Set, Universal Protective Cap), Select the appropriated cover needed to the procedure.

ENGINE GASKET SURFACE PREPARATION

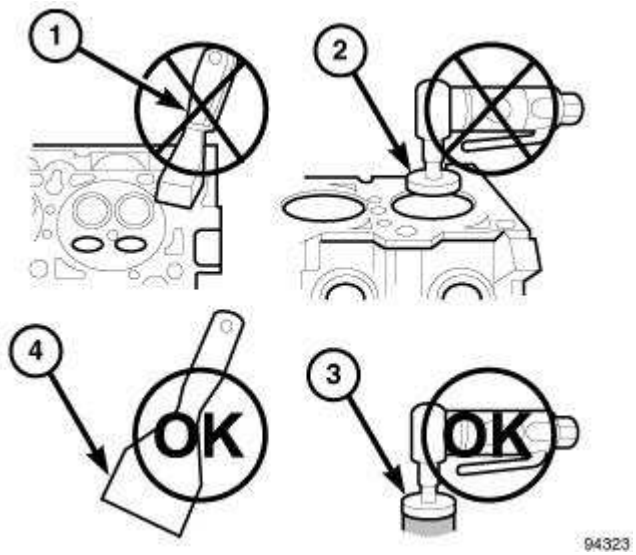

Fig. 4: Proper Tool Usage For Surface Preparation
Courtesy of CHRYSLER GROUP, LLC

To ensure engine gasket sealing, proper surface preparation must be performed, especially with the use of aluminum engine components and multi-layer steel cylinder head gaskets.

Never use the following to clean gasket surfaces:

- Metal scraper (1).
- Abrasive pad or paper to clean cylinder block and head.
- High speed power tool with an abrasive pad or a wire brush (2).



Fig. 5: Proper Tool Usage For Surface Preparation
Courtesy of CHRYSLER GROUP, LLC

NOTE: Multi-Layer Steel (MLS) head gaskets require a scratch free sealing surface.

Only use the following for cleaning gasket surfaces:

- Solvent or a commercially available gasket remover
- Plastic or wood scraper (4).
- High speed power tool with a plastic bristle brush style disc (3).

Sealing surfaces must be free of grease or oil residue. Clean surfaces with Mopar® brake parts cleaner (or equivalent).

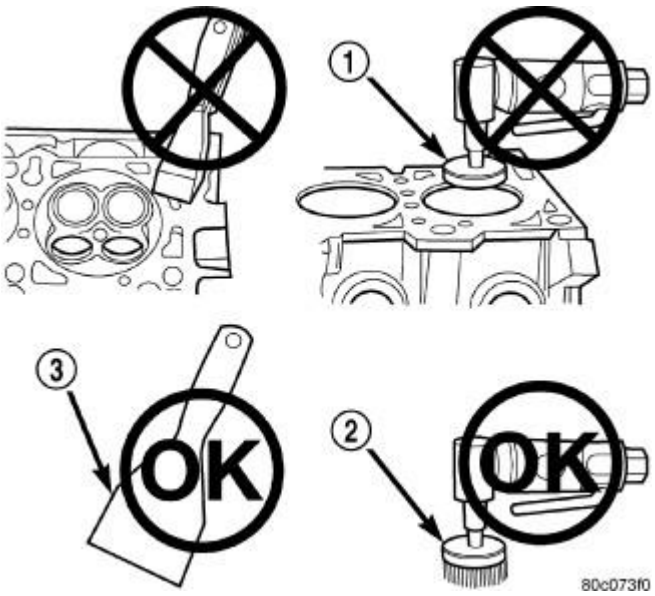

Fig. 6: Proper Tool Usage For Surface Preparation
Courtesy of CHRYSLER GROUP, LLC

1 - ABRASIVE PAD 2 - 3M ROLOC™ BRISTLE DISC 3 - PLASTIC/WOOD SCRAPER

To ensure engine gasket sealing, proper surface preparation must be performed, especially with the use of aluminum engine components and multi-layer steel cylinder head gaskets.

Never use the following to clean gasket surfaces:

- Metal scraper.
- Abrasive pad or paper to clean cylinder block and head.
- High speed power tool with an abrasive pad or a wire brush (1).

NOTE: Multi-Layer Steel (MLS) head gaskets require a scratch free sealing surface.

Only use the following for cleaning gasket surfaces:

- Solvent or a commercially available gasket remover
- Plastic or wood scraper (3).
- Drill motor with 3M Roloc™ Bristle Disc (white or yellow) (2).

CAUTION: Excessive pressure or high RPM (beyond the recommended speed), can damage the sealing surfaces. The mild (white, 120 grit) bristle disc is recommended. If necessary, the medium (yellow, 80 grit) bristle disc may be used on cast iron surfaces with care.

REPAIR DAMAGED OR WORN THREADS

CAUTION: Be sure that the tapped holes maintain the original center line.

Damaged or worn threads can be repaired. Essentially, this repair consists of:

- Drilling out worn or damaged threads.
- Tapping the hole with a special Heli-Coil Tap, or equivalent.
- Installing an insert into the tapped hole to bring the hole back to its original thread size.

FORM-IN-PLACE GASKETS AND SEALERS

NOTE: All of the sealants mentioned below are not used on every engine, they are listed as a general reference guide. See appropriate Service Information for specific sealer usage.

There are numerous places where form-in-place gaskets are used on the engine. Care must be taken when applying form-in-place gaskets to assure obtaining the desired results.**Do not use form-in-place gasket material unless specified.** Bead size, continuity, and location are of great importance. Too thin a bead can result in leakage while too much can result in spill-over which can break off and obstruct fluid feed lines. A continuous bead of the proper width is essential to obtain a leak-free gasket. All sealing surfaces that use form-in-place gaskets and sealers **must** be free of grease or oil. Surfaces should be cleaned with Mopar® brake parts cleaner prior to sealer application. After the sealer is applied, the parts should be assembled within 10 minutes.

There are numerous types of form-in-place gasket materials that are used in the engine area. Mopar® Engine RTV GEN II, Mopar® ATF-RTV, and Mopar® Gasket Maker gasket materials, each have different properties and can not be used in place of the other.

MOPAR® ENGINE RTV GEN II is used to seal components exposed to engine oil. This material is a specially designed black silicone rubber RTV that retains adhesion and sealing properties when exposed to engine oil. Moisture in the air causes the material to cure. This material is available in three ounce tubes and has a shelf life of one year. After one year this material will not properly cure. Always inspect the package for the expiration date before use.

MOPAR® ATF RTV is a specifically designed black silicone rubber RTV that retains adhesion and sealing properties to seal components exposed to automatic transmission fluid, engine coolants, and moisture. This material is available in three ounce tubes and has a shelf life of one year. After one year this material will not properly cure. Always inspect the package for the expiration date before use.

MOPAR® GASKET MAKER is an anaerobic type gasket material. The material cures in the absence of air when squeezed between two metallic surfaces. It will not cure if left in the uncovered tube. The anaerobic material is for use between two machined surfaces. Do not use on flexible metal flanges.

MOPAR® BED PLATE SEALANT is a unique (green-in-color) anaerobic type gasket material that is specially made to seal the area between the bed plate and cylinder block without disturbing the bearing clearance or alignment of these components. The material cures slowly in the absence of air when torqued between two metallic surfaces, and will rapidly cure when heat is applied.

MOPAR® THREEBOND ENGINE RTV SEALANT is a unique gasket material that is specially made to retain adhesion and sealing properties when used to seal components exposed to engine oil.

SEALER APPLICATION

Mopar® Gasket Maker material should be applied sparingly 1 mm (0.040 in.) diameter or less of sealant to one gasket surface. Be certain the material surrounds each mounting hole. Excess material can easily be wiped off. Components should be torqued in place within 15 minutes. The use of a locating dowel is recommended during assembly to prevent smearing material off the location.

Mopar® Engine RTV GEN II or ATF RTV gasket material should be applied in a continuous bead approximately 3 mm (0.120 in.) in diameter. All mounting holes must be circled. For corner sealing and "T" joint locations, a 3.17 or 6.35 mm (1/8 or 1/4 in.) drop is placed in the center of the gasket contact area. Uncured sealant may be removed with a shop towel. Components should be torqued in place while the sealant is still wet to the touch (within 10 minutes). The usage of a locating dowel is recommended during assembly to prevent smearing material off the location.

Mopar® Threebond Engine RTV Sealant gasket material should be applied in a continuous bead approximately 3 mm (0.120 in.) in diameter. The gasket surfaces should be cleaned with isopropyl alcohol wipes in preparation for sealant application. All mounting holes must be circled. For corner sealing and "T" joint locations, a 3.17 or 6.35 mm (1/8 or 1/4 in.) drop is placed in the center of the gasket contact area. Uncured sealant may be removed with a shop towel. Components should be assembled within 20 minutes and torqued in place within 45 minutes. The usage of a locating dowel is recommended during assembly to prevent smearing material off the location.

SPECIFICATIONS

SPECIFICATIONS

GENERAL SPECIFICATIONS

Description	Specification
Type	60° DOHC V-6 24-Valve
Compression Ratio	10.2:1
Lead Cylinder	#1 Right Bank
Firing Order	1-2-3-4-5-6

Description	Metric	Standard
Displacement	3.6 Liters	220 Cubic Inches
Bore and Stroke	96.0 x 83.0 mm	3.779 in. x 3.268 in.

CYLINDER BLOCK

Description	Specification	
	Metric	Standard
Cylinder Bore Diameter - Grade 1	95.995 mm ± 0.005 mm	3.7793 in. ± 0.0002 in.
Cylinder Bore Diameter - Grade 2	96.005 mm ± 0.005 mm	3.7797 in. ± 0.0002 in.
Cylinder Bore Out-of-Round (Max.)	0.009 mm	0.00035 in.
Cylinder Bore Cylindricity	0.014 mm	0.0006 in.
Crankshaft Bore Taper* (Max.)	0.006 mm	0.0002 in.
*Measured over length of bulkhead		
Engine Oil Galley Plug**	0.0 mm - 2.0 mm	0.0 in - 0.0787 in
**Measured proud of machined surface		

PISTONS

Description	Specification	
	Metric	Standard
Material	Cast Aluminum Alloy	
Piston Diameter (Metal to Metal) - Grade 1	95.955 mm ± 0.005 mm	3.7778 in. ± 0.0002 in.
Piston Diameter (Metal to Metal) - Grade 2	95.965 mm ± 0.005 mm	3.7781 in. ± 0.0002 in.
Piston Diameter (Metal to Coating) - Grade 1	95.970 - 96.000 mm	3.7783 - 3.7795 in.
Piston Diameter (Metal to Coating) - Grade 2	95.980 - 96.010 mm	3.7787 - 3.7835 in.
Clearance at Size Location (Metal to Metal)	0.030 - 0.050 mm	0.0012 - 0.0020 in.
Clearance at Size Location (Metal to Coating)	0.010 - 0.030 mm	0.0004 - 0.0012 in.
Piston Weight	354 - 364 grams	12.487 - 12.840 oz.
Piston Pin Offset	0.8 mm	0.031 in.
Piston Ring Groove Diameter - No. 1	88.24 - 88.44 mm	3.474 - 3.482 in.
Piston Ring Groove Diameter - No. 2	86.54 - 86.74 mm	3.407 - 3.415 in.
Piston Ring Groove Diameter - No. 3	89.16 - 89.36 mm	3.510 - 3.518 in.

PISTON PINS

Description	Specification	
	Metric	Standard
Type	Full Floating	

Pin Diameter	21.9985 ± 0.0015 mm	0.86608 ± 0.00006 in.
Clearance in Piston	0.002 - 0.011 mm	0.0001 - 0.0004 in.
Clearance in Rod	0.011 - 0.024 mm	0.0004 - 0.0009 in.

PISTON RINGS

Description	Specification	
	Metric	Standard
Ring Gap - Number 1 Ring (Top)	0.25 - 0.40 mm	0.010 - 0.016 in.
Ring Gap - Number 2 Ring (Center)	0.30 - 0.45 mm	0.012 - 0.018 in.
Ring Gap - Oil Control Ring (Steel Rails)	0.15 - 0.66 mm	0.006 - 0.026 in.

PISTON RING SIDE CLEARANCE

Description	Specification	
	Metric	Standard
Number 1 Ring (Top)	0.025 - 0.083 mm	0.0010 - 0.0033 in.
Number 2 Ring (Center)	0.030 - 0.078 mm	0.0012 - 0.0031 in.
Oil Control Ring (Steel Rails)	0.007 - 0.173 mm	0.0003 - 0.0068 in.

PISTON RING WIDTH

Description	Specification	
	Metric	Standard
Number 1 Ring (Top)	3.00 - 3.20 mm	0.118 - 0.126 in.
Number 2 Ring (Center)	3.59 - 3.85 mm	0.141 - 0.152 in.
Oil Control Ring (Steel Rails)	1.930 - 2.083 mm	0.076 - 0.082 in.

CONNECTING RODS

Description	Specification	
	Metric	Standard
Bearing Clearance (With Crush)	0.023 - 0.064 mm	0.0009 - 0.0025 in.
Side Clearance	0.070 - 0.370 mm	0.0028 - 0.0146 in.
Side Clearance (Max.)	0.370 mm	0.0146 in.
Piston Pin Bore Diameter	22.016 ± 0.005 mm	0.8668 ± 0.0002 in.
Bearing Bore Out of Round (Max.)	0.008 mm	0.0003 in.
Total Weight (Less Bearing)	546.7 ± 8 grams	19.28 ± 0.28 oz.

CRANKSHAFT MAIN BEARING JOURNALS

Description	Specification	

	Metric	Standard
Diameter	71.996 ± 0.009 mm	2.8345 ± 0.0035 in.
Bearing Clearance	0.024 - 0.050 mm	0.0009 - 0.0020 in.
Bearing Clearance (Max.)	0.050 mm	0.0020 in.
Out of Round (Max.)	0.005 mm	0.0002 in.
Taper (Max.)	0.005 mm	0.0002 in.
End Play	0.050 - 0.290 mm	0.0020 - 0.0114 in.
End Play (Max.)	0.290 mm	0.0114 in.

CONNECTING ROD JOURNALS

Description	Specification	
	Metric	Standard
Diameter	59.0 ± 0.009 mm	2.3228 ± 0.0035 in.
Bearing Clearance	0.023 - 0.064 mm	0.0009 - 0.0025 in.
Out of Round (Max.)	0.005 mm	0.0002 in.
Taper (Max.)	0.005 mm	0.0002 in.

CAMSHAFT

Description	Specification	
	Metric	Standard
Bore Diameter - No. 1 Cam Towers	32.020 - 32.041 mm	1.2606 - 1.2615 in.
Bore Diameter - No. 2, 3, 4 Cam Towers	24.020 - 24.041 mm	0.9457 - 0.9465 in.
Bearing Journal Diameter - No. 1	31.976 - 31.995 mm	1.2589 - 1.2596 in.
Bearing Journal Diameter - No. 2, 3, 4	23.977 - 23.996	0.9440 - 0.9447 in.
Bearing Clearance - No. 1	0.025 - 0.065 mm	0.00010 - 0.0026 in.
Bearing Clearance - No. 2, 3, 4	0.024 - 0.064 mm	0.0009 - 0.0025 in.
End Play	0.075 - 0.251 mm	0.003 - 0.010 in.

VALVE TIMING-INTAKE VALVES

Description	Specification
Opens	2° (ATDC)
Closes	82° (ABDC) or 262° (ATDC)
Duration	260°
Centerline	128°
Note: Units are in crank degrees, using 0.1524 mm (0.006 in.) valve lift as the threshold.	

VALVE TIMING-EXHAUST VALVES

Description	Specification

Opens	59° (BBDC) or 239° (BTDC)
Closes	12° (ATDC)
Duration	251°
Valve Overlap	10°
Note: Units are in crank degrees, using 0.1524 mm (0.006 in.) valve lift as the threshold.	

CYLINDER HEAD

Description	Specification	
	Metric	**Standard**
Gasket Thickness* (Compressed)	0.48 - 0.60 mm	0.019 - 0.024 in.
Flatness (Head Gasket Surface)	0.09 mm	0.0035 in.
Valve Seat Angle	44.75° ± 0.25° from the valve guide axis	
Valve Seat Runout (relative to the valve guide axis) - Intake and Exhaust	0.050 mm	0.002 in.
Intake Valve Seat Width	1.0 - 1.2 mm	0.04 - 0.05 in.
Exhaust Valve Seat Width	1.41 - 1.61 mm	0.055 - 0.063 in.
Guide Bore Diameter (Std.)	6.00 - 6.02 mm	0.236 - 0.237 in.
Valve Guide Height** - Intake and Exhaust	16.05 - 16.55 mm	0.632 - 0.652 in.
*Measured at the fire ring, not at the outer edge **Measured from cylinder head valve spring seat surface to top of guide		

VALVES

Description	Specification	
	Metric	**Standard**
Face Angle	45.25° ± 0.25°	
Head Diameter - Intake	39.0 ± 0.100 mm	1.535 ± 0.004 in.
Head Diameter - Exhaust	30.0 ± 0.100 mm	1.181 ± 0.004 in.
Length-Intake (Overall)	116.54 ± 0.23 mm	4.588 ± 0.009 in.
Length-Exhaust (Overall)	115.6 ± 0.23 mm	4.551 ± 0.009 in.
Stem Diameter - Intake	5.968 ± 0.009 mm	0.2350 ± 0.0004 in.
Stem Diameter - Exhaust	5.961± 0.009 mm	0.2347 ± 0.0004 in.
Stem-to-Guide Clearance - Intake (New)	0.023 - 0.061 mm	0.0009 - 0.0024 in.
Stem-to-Guide Clearance - Exhaust (New)	0.030 - 0.068 mm	0.0012 - 0.0027 in.
Stem-to-Guide Clearance- Intake (Max., Rocking Method)	0.29 mm	0.011 in.
Stem-to-Guide Clearance -		

Exhaust (Max., Rocking Method)	0.37 mm	0.015 in.
Valve Lift-Intake (Zero Lash)	10.3 mm	0.406 in.
Valve Lift-Exhaust (Zero Lash)	10.0 mm	0.394 in.
Valve Stem Tip Height* - Intake	52.4 - 53.5 mm	2.063 - 2.106 in.
Valve Stem Tip Height* - Exhaust	51.8 - 52.9 mm	2.039 - 2.083 in.
*Valve tip to aluminum spring seat boss		

VALVE SPRING

Description	Specification	
	Metric	Standard
Free Length - Intake AND Exhaust (Approx.)	52.5 mm	2.067 in.
Spring Force - Intake AND Exhaust (Valve Closed)	295 ± 13 N @ 40.0 mm	66 ± 3 lbs. @ 1.57 in.
Spring Force - Intake (Valve Open)	688 ± 31 N @ 10.3 mm	155 ± 7 lbs. @ 0.4055 in.
Spring Force - Exhaust (Valve Open)	676 ± 30 N @ 10.0 mm	152 ± 6 lbs. @ 0.3937 in.
Number of Coils - Intake AND Exhaust	9.35	
Wire Diameter - Intake AND Exhaust	3.18 x 3.99 mm (ovate)	0.125 x 0.157 in. (ovate)
Installed Height - Intake AND Exhaust (Spring seat top to bottom of retainer)	40.0 mm	1.575 in.

OIL PRESSURE

Description	Specification	
	Metric	Standard
(Note: At Normal Operating Temperatures)		
Pressure @ Curb Idle Speed*	34.7 kPa Min.	5 psi Min.
Pressure @ 600 - 1200 RPM	34.7 (warm) - 958.0 (cold) kPa	5 (warm) - 139 (cold) psi
Pressure @ 1201 - 3500 RPM	206.8 (warm) - 958.0 (cold) kPa	30 (warm) - 139 (cold) psi
Pressure @ 3501 - 6400 RPM	427.0 (warm) - 958.0 (cold) kPa	62 (warm) - 139 (cold) psi
*CAUTION: If oil pressure is zero at idle, DO NOT run engine at 3000 RPM.		

TORQUE

DESCRIPTION	N.m	Ft. Lbs.	In. Lbs.

Air Inlet Hose - Band Clamps	4	-	35
A/C Compressor to Engine - M8 Bolts	25	18	-
Camshaft Chain Tensioner (Primary) - M6 T30	12	-	106
Camshaft Chain Guide (Primary) - M6 T30	12	-	106
Camshaft Chain Idler Sprocket - M8 T45	25	18	-
Camshaft Chain LH Tensioner (Secondary) - M6 T30	12	-	106
Camshaft Chain LH Guide (Secondary) - M6 T30	12	-	106
Camshaft Chain RH Tensioner (Secondary) - M6 T30	12	-	106
Camshaft Chain RH Guide (Secondary) - M6 T30	12	-	106
Camshaft Position (CMP) Sensor to Cylinder Head - 6M T30	9	-	80
Camshaft Bearing Cap - M6 T30	9.5	-	84
Connecting Rod Cap - M9 Bolts	20 + 90° Turn	15 + 90° Turn	-
Coolant Pump to Engine Timing Cover - M6 Bolts	12	-	106
Coolant Crossover Housing to Engine Timing Cover - M6 Bolts	12	-	106
Coolant Pump to Engine Timing Cover - M10 Bolt	55	40	-
Crankshaft Target Wheel to Counterweight - M6 T30	10	-	89
Crankshaft Outer Main Bearing Cap and Windage Tray - M8 Bolts	21 + 90° Turn	16 + 90° Turn	-
Crankshaft Inner Main Bearing Cap - M11 Bolts	20 + 90° Turn	15 + 90° Turn	-
Crankshaft Side Main Bearing Cap (Tie Bolt) - M8 Bolts	28	-	250
Crankshaft Vibration Damper - M16 Bolt	40 + 105° Turn	30 + 105° Turn	-
Crankshaft Position (CKP) Sensor to Engine Block - M6 Bolt	12	-	106
Crankshaft Rear Oil Seal Retainer - M6 T30	12	-	106
Cylinder Head Oil Restrictor - M8 Plug	15	-	133
Cylinder Head to Engine Block - M12 Bolts in Sequence	See **INSTALLATION**		
Cylinder Head Cover - M6 Bolts	12	-	106
Catalytic Converter to Cylinder Head - M8 Bolts	23	17	-
Engine Coolant Temperature (ECT) Sensor	11	-	97

Engine Block Heater - M6 Bolt	12	-	106
Left/Right Engine Mount Bracket to Engine Block - M10 Bolts	61	45	-
Left/Right Engine Mount Isolator to Engine Mount Bracket - M10 Nuts	61	45	-
Left/Right Engine Mount Heatshield to Engine Mount Bracket - M6 Bolts	12	-	106
Left/Right Engine Mount Isolator to Frame - M10 Bolts	61	45	-
Flexplate to Crankshaft - M10 Bolts	95	70	-
Fuel Rail to Lower Intake Manifold - M6 Bolts	7	-	62
Generator - M8 Bolts	25	18	-
Heater Core Supply Tube to Cylinder Head - M8 Bolt	12	-	106
Idler Pulley to Engine Timing Cover - Accessory Drive M8 Bolt	25	18	-
Ignition Capacitor to Cylinder Head - M6 Bolts	10	-	89
Ignition Coil to Cylinder Head Cover - M6 Bolts	8	-	71
Intake Manifold (Upper) - M6 Bolts	8	-	71
Intake Manifold (Lower) - M6 Bolts	8	-	71
Knock Sensor to Engine Block - M8 T40	22	16	-
Negative Battery Cable to Battery	5	-	45
Oil Control Valve - Cam Phaser M18	150	111	-
Upper Oil Pan to Engine Block - M8 Bolts	25	18	-
Transmission to Upper Oil Pan - M10 Bolts	55	41	-
Transmission to Starter - M10 Bolts	55	41	-
Torque Converter Dust Shield - M8 Bolt	12	-	106
Oil Cooler to Oil Filter Housing Screws	4	-	35
Upper Oil Pan to Rear Seal Retainer - M6 Bolts	10	-	89
Oil Pan Drain - Plug M14	27	20	-
Oil Pressure Sensor to Oil Filter Housing	20	-	177
Oil Temperature Sensor to Oil Filter Housing	20	-	177
Lower Oil Pan to Upper Oil Pan - M6 Bolts	10.5	-	93
Piston Oil Cooler Jet to Engine Block - M5	6	-	53
Oil Filter Housing/Oil Cooler to Engine Block - M6 Bolts	12	-	106
Oil Filter Housing Cap	25	18	-
Oil Pump to Block - M6 Bolts	12	-	106
Oil Level Indicator to Engine Block - M10 Bolt	35	26	-
Oil Level Indicator to Cylinder Head - M6 Bolt	12	-	106

Oil Pump Sprocket - M8 T45	25	18	-
Oil Pump Pick Up Tube Bracket to Windage Tray - M6 Bolt	12	-	106
Oil Pump Pick Up Tube to Oil Pump - M6 Bolt	12	-	106
Oxygen Sensor to Exhaust Pipe - M18	50	37	-
PCV Valve - M5 T25	4	-	35
Power Steering Pump to Bracket - M8 Bolts	25	18	-
Power Steering Pump Bracket to Engine - M8 Bolts	25	18	-
Spark Plug to Cylinder Head - M12	17.5	13	-
Starter Mounting - M10 Bolts	55	41	-
Tensioner to Engine Timing Cover - Accessory Drive M10 Bolt	55	41	-
Thermostat Housing to Coolant Crossover - M6 Bolts	12	-	106
Throttle Body - M6 Bolts	7	-	62
Engine Timing Cover - M6 Bolts	12	-	106
Engine Timing Cover - M8 Bolt	25	18	-
Engine Timing Cover - M10 Bolts	55	41	-
Transmission to Engine Block - M10 Bolts	55	41	-
Transmission Fluid Indicator to Transmission - M6 Bolt	12	-	106
Torque Converter - M8 Bolts	42	31	-
Upper Intake Manifold Support Bracket to Cylinder Head - M8 Bolt	20	-	177
Upper Intake Manifold Support Bracket to Upper Intake Manifold - M6 Nuts	10	-	89
Variable Valve Timing Solenoid to Cylinder Head Cover - M5 T25	4	-	35
Wire Harness Retainer Bracket to LH Cylinder Head - M6 T30	12	-	106
Rear Engine Mount Bracket to Transmission - M8 Bolts	33	24	-
Rear Engine Mount Isolator to Rear Engine Mount Bracket - M10 Bolts	61	45	-
Rear Engine Mount Crossmember to Frame - M10 Bolts	55	41	-
Rear Engine Mount Isolator to Crossmember - M10 Bolts	61	45	-
Left/Right Crossmember Brace to Crossmember - M8 Bolts	55	41	-
Left/Right Crossmember Brace to Frame - M8 Bolts	55	41	-

REMOVAL

REMOVAL

CAUTION: If the original engine has experienced a catastrophic failure or an individual failure with the piston, cylinder bore, engine block, valve or valve seat, the intake manifold MUST be replaced with a new manifold.

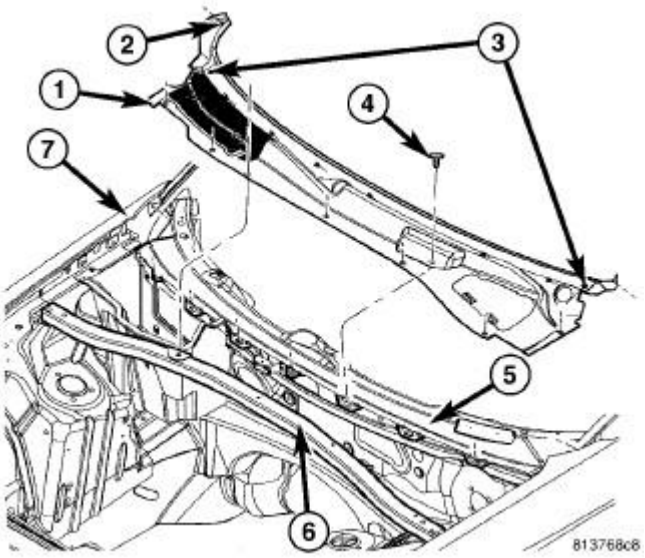

Fig. 7: Removing/Installing Cowl Panel
Courtesy of CHRYSLER GROUP, LLC

1. Remove the hood. Refer to **HOOD, REMOVAL** .
2. Remove the cowl panel cover (2). Refer to **COVER, COWL PANEL, REMOVAL** .
3. Remove the strut tower support (6).

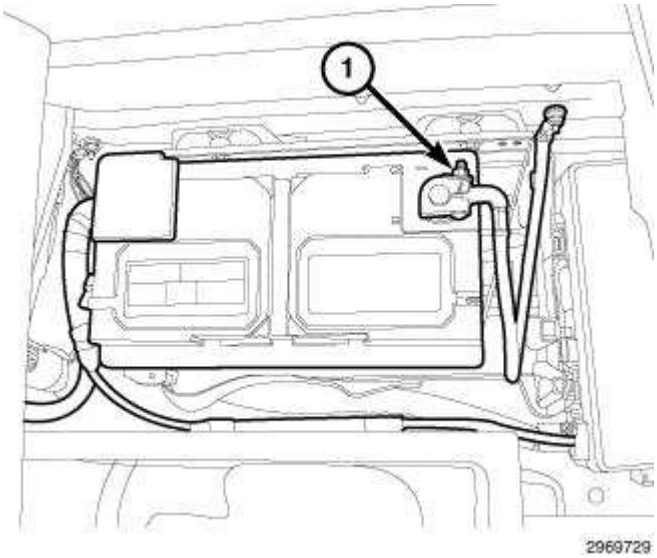

Fig. 8: Negative Battery Cable
Courtesy of CHRYSLER GROUP, LLC

4. Perform the fuel pressure release procedure. Refer to **FUEL DELIVERY, GAS, STANDARD PROCEDURE** .
5. Disconnect and isolate the negative battery cable (1).
6. Perform the Refrigerant System Recovery procedure. Refer to **PLUMBING, STANDARD PROCEDURE** .

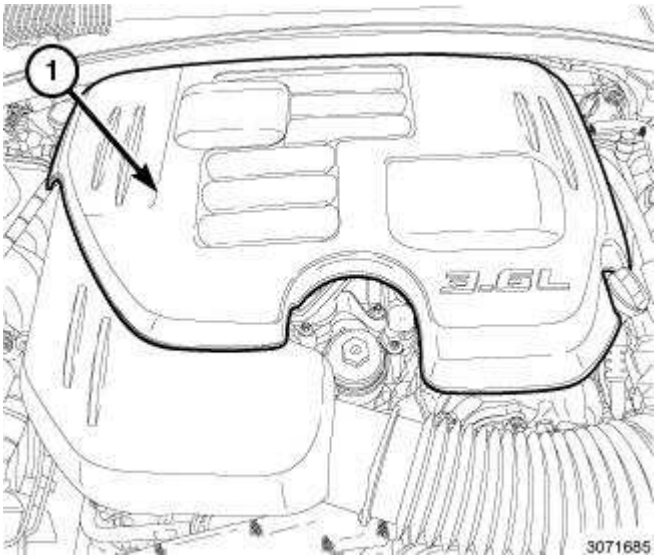

Fig. 9: Engine Cover
Courtesy of CHRYSLER GROUP, LLC

7. Lift the engine cover retaining grommets off the ball studs and remove the engine cover (1).

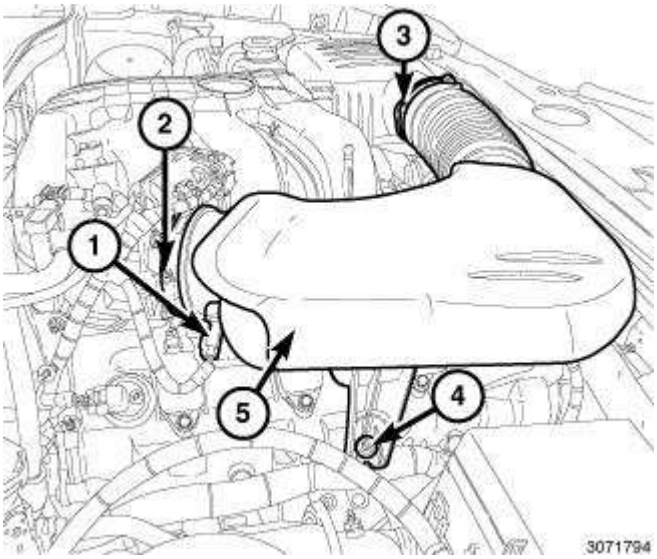

Fig. 10: Inlet Air Temperature (IAT) Sensor Electrical Connector, Air Inlet Hose Assembly & Fasteners
Courtesy of CHRYSLER GROUP, LLC

8. Disconnect the electrical connector (1) from the Inlet Air Temperature (IAT) sensor.
9. Loosen the clamp (2) at the throttle body.
10. Loosen the clamp (3) at the air cleaner housing.
11. Lift the air inlet hose assembly retaining grommet off the ball stud (4).
12. Remove the air inlet hose assembly (5).

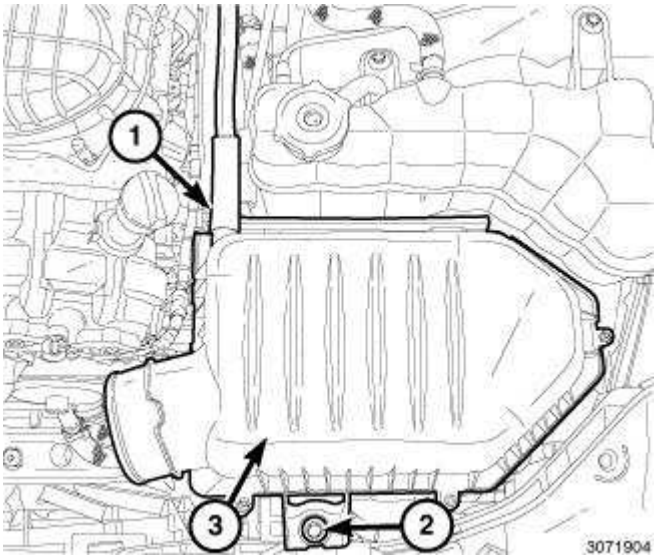

Fig. 11: Fresh Air Makeup Hose, Air Cleaner Housing & Bolt
Courtesy of CHRYSLER GROUP, LLC

13. Disconnect the fresh air makeup hose (1) from the air cleaner housing.
14. Remove the air cleaner housing retaining bolt (2).

15. Remove the air cleaner housing (3).

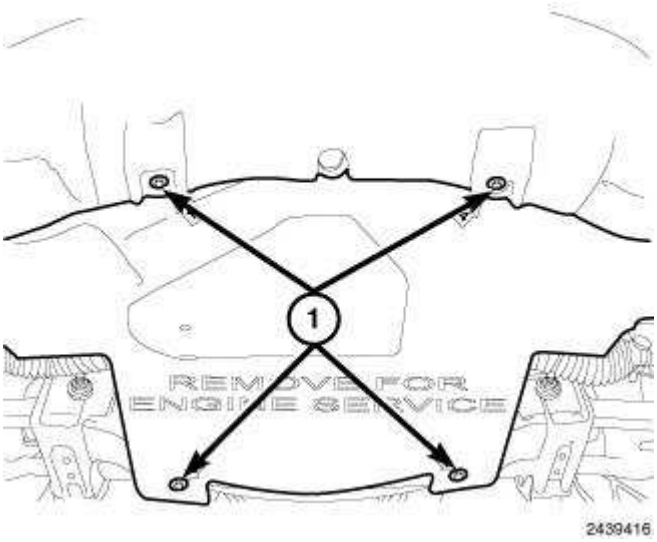

Fig. 12: Lower Splash Shield & Fasteners
Courtesy of CHRYSLER GROUP, LLC

16. Raise and support the vehicle. Refer to **HOISTING, STANDARD PROCEDURE** .
17. Remove the belly pan retainers (1) and remove the belly pan.
18. Drain the cooling system. Refer to **STANDARD PROCEDURE** .
19. Drain the engine oil. Refer to **STANDARD PROCEDURE**.
20. Remove the starter motor. Refer to **STARTER, REMOVAL** .

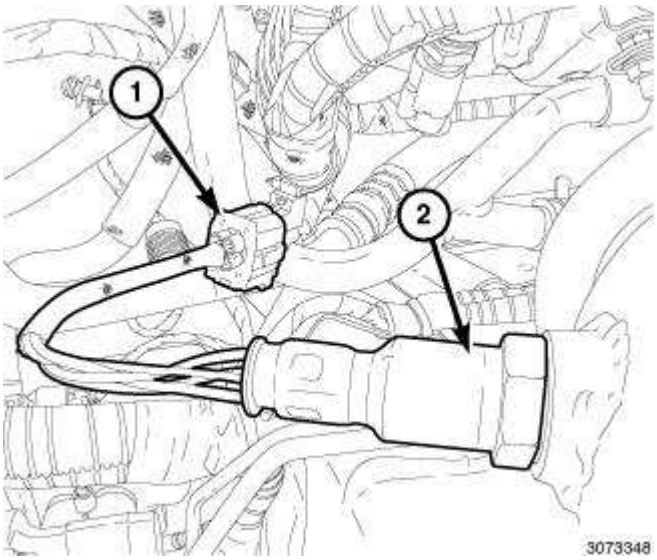

Fig. 13: Upstream Oxygen Sensor & Electrical Connector
Courtesy of CHRYSLER GROUP, LLC

NOTE: Left side shown in illustration, right side similar.

21. Disconnect both left and right upstream oxygen sensor (2) electrical connectors (1).

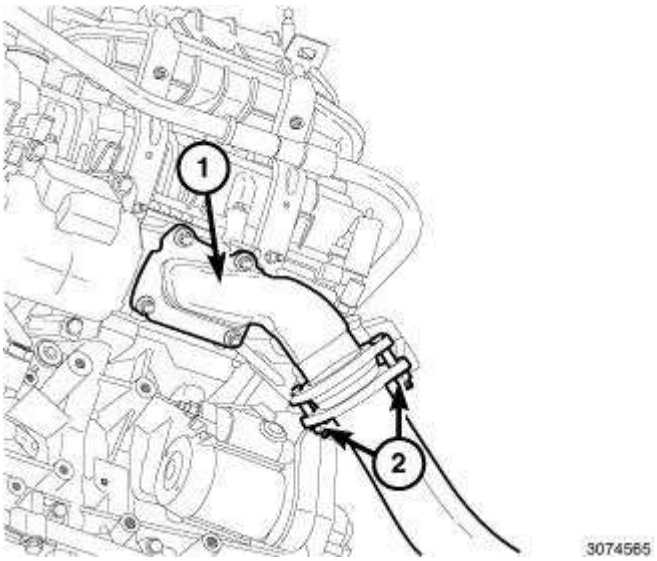

Fig. 14: Exhaust Down Pipe & Retaining Nuts
Courtesy of CHRYSLER GROUP, LLC

NOTE: Left side shown in illustration, right side similar.

22. Remove the exhaust down pipe (1) to catalytic converter retaining nuts (2) from both left and right down pipes.

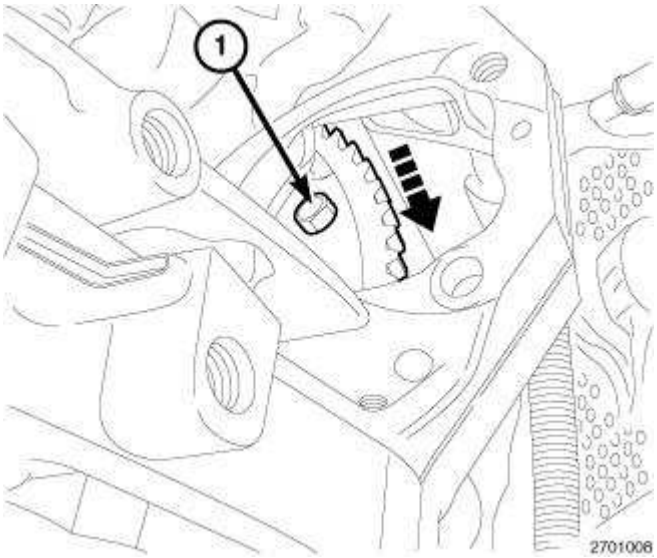

Fig. 15: Torque Converter Bolt
Courtesy of CHRYSLER GROUP, LLC

23. Rotate the crankshaft in a clockwise direction until the torque converter bolts (1) are accessible through the starter mounting hole and remove the six torque converter bolts (1).

24. Lower the vehicle.

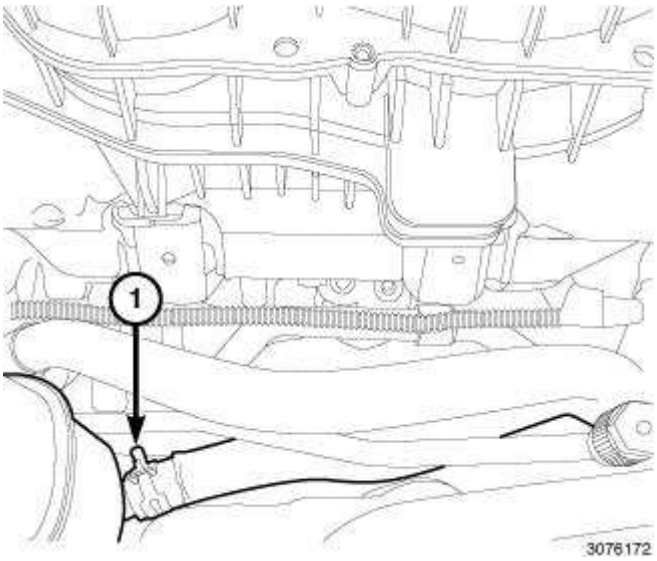

Fig. 16: Coolant Bottle Return Hose
Courtesy of CHRYSLER GROUP, LLC

25. Remove the coolant bottle return hose (1).

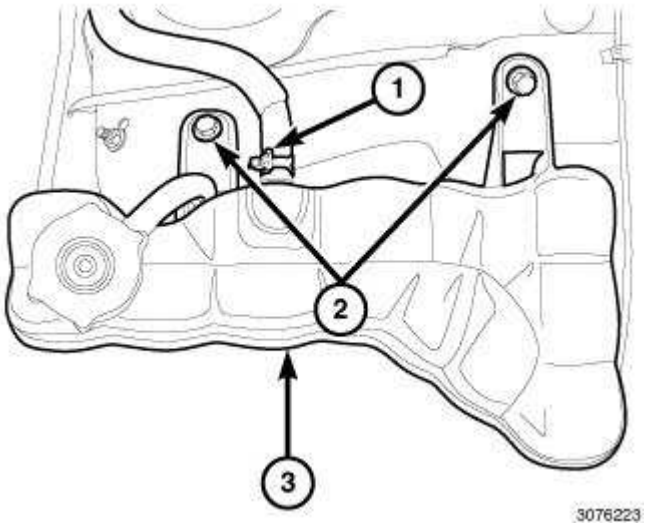

Fig. 17: Heater Core Purge Hose, Coolant Bottle Retaining Bolts & Coolant Bottle
Courtesy of CHRYSLER GROUP, LLC

26. Remove the heater core purge hose (1) from the coolant bottle.
27. Remove the coolant bottle retaining bolts (2).
28. Remove the coolant bottle (3).

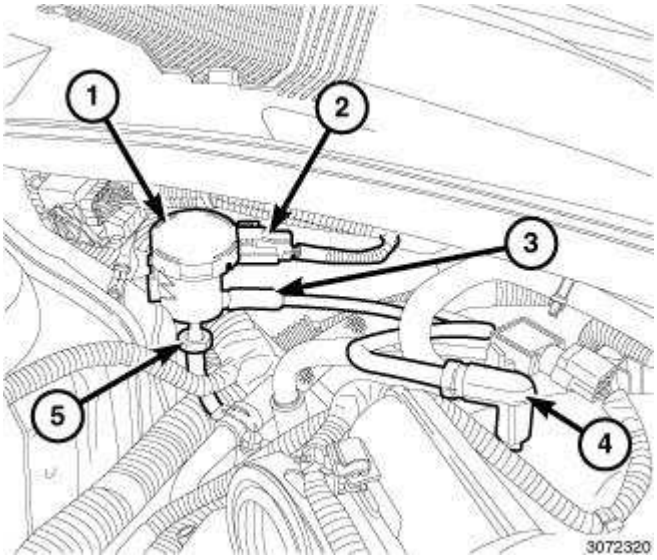

Fig. 18: EVAP Purge Solenoid, Electrical Connector & Vacuum Lines
Courtesy of CHRYSLER GROUP, LLC

29. Disconnect the vacuum line (3) at the EVAP purge solenoid (1).
30. Disconnect the EVAP purge solenoid vacuum line (4) at the intake manifold and remove the vacuum line.

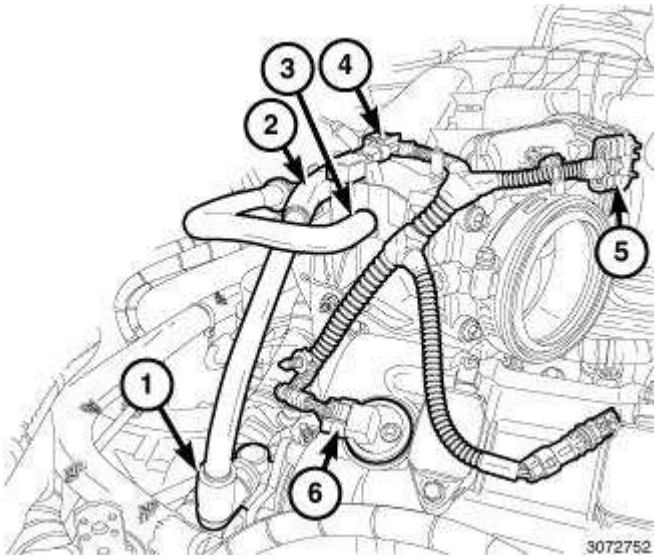

Fig. 19: PCV Valve, Intake Manifold, Brake Booster Vacuum Hose, MAP Sensor, ETC & CMP Sensor Electrical Connectors
Courtesy of CHRYSLER GROUP, LLC

31. Disconnect the PCV hose from the PCV valve (1) and the intake manifold (2) and remove hose.
32. Disconnect the brake booster vacuum hose (3) and position aside.
33. Disconnect the electrical connector at the Manifold Absolute Pressure (MAP) Sensor (4).
34. Disconnect the electrical connector at the Electronic Throttle Control (ETC) (5).

35. Disconnect the electrical connector at the Camshaft Position Sensor (CMP) (6) and position harness aside.

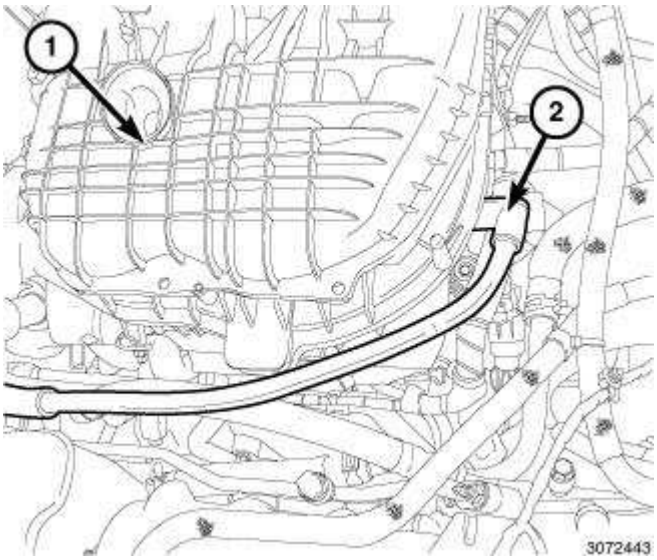

Fig. 20: Fresh Air Makeup Hose At Rear Of Intake Manifold
Courtesy of CHRYSLER GROUP, LLC

36. Remove the fresh air makeup hose (2) from the rear of the intake manifold (1).

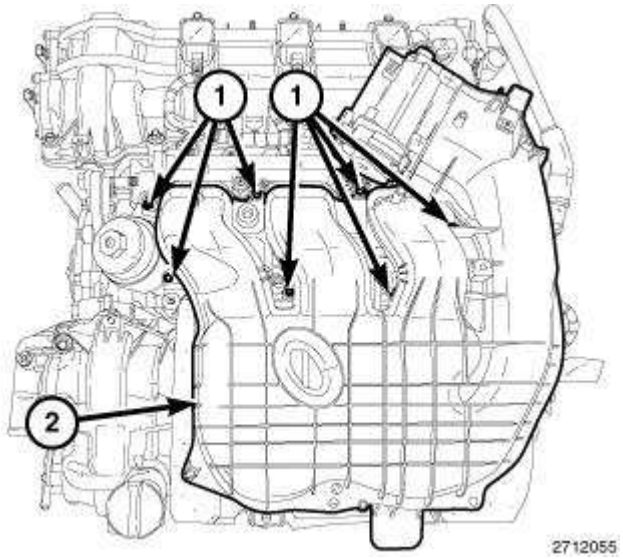

Fig. 21: Upper Intake Manifold & Bolts
Courtesy of CHRYSLER GROUP, LLC

37. Remove the upper intake manifold (2) and insulator. Refer to **MANIFOLD, INTAKE, REMOVAL**.

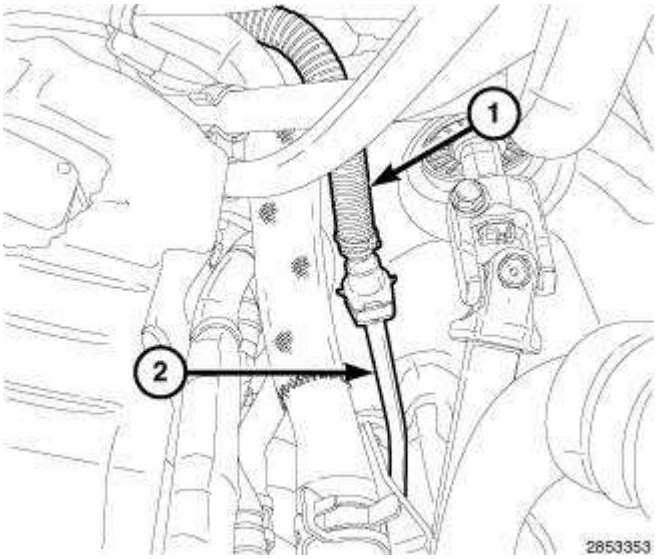

Fig. 22: Fuel Supply Hose At Underbody Fuel Supply Tube
Courtesy of CHRYSLER GROUP, LLC

38. Disconnect the fuel supply hose (1) from the underbody fuel supply tube (2). Refer to **FITTING, QUICK CONNECT, STANDARD PROCEDURE** .

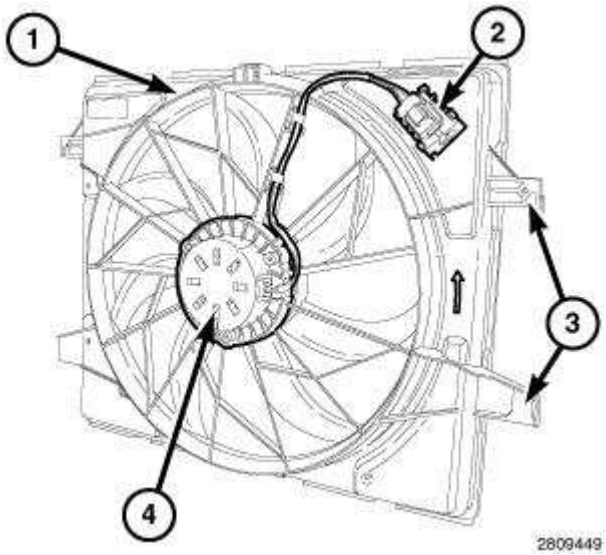

Fig. 23: Cooling Fan Module Components
Courtesy of CHRYSLER GROUP, LLC

39. Remove the cooling fan module. Refer to **FAN, COOLING, REMOVAL** .

CAUTION: Do not let the tensioner arm snap back to the freearm position, sever damage may occur to the tensioner.

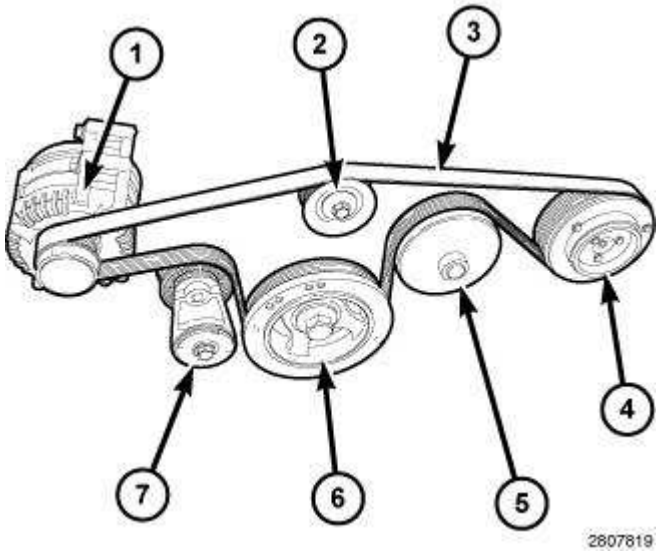

Fig. 24: Idler Pulley, Tensioner Arm, Belt, Idler, Tensioner & Belt Routing
Courtesy of CHRYSLER GROUP, LLC

40. Rotate the accessory drive belt tensioner (7) counterclockwise until it contacts the stop and remove the accessory drive belt (3), then slowly rotate the tensioner into the freearm position.
41. Remove the generator (1). Refer to **GENERATOR, REMOVAL** .

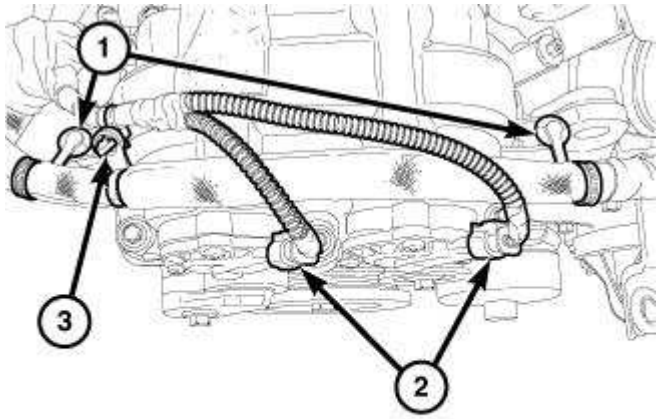

Fig. 25: Variable Valve Timing Solenoid Connectors & Harness Retainers
Courtesy of CHRYSLER GROUP, LLC

NOTE: Mark the variable valve timing solenoid connectors (2) with a paint pen or equivalent so that they may be reinstalled in their original locations.

42. Disconnect the electrical connectors (2) from the variable valve timing solenoids on the right cylinder head.

43. Unfasten the starter harness to main harness retainer (3).
44. Unfasten the two starter wire harness retainers (1) from the right cylinder head cover.

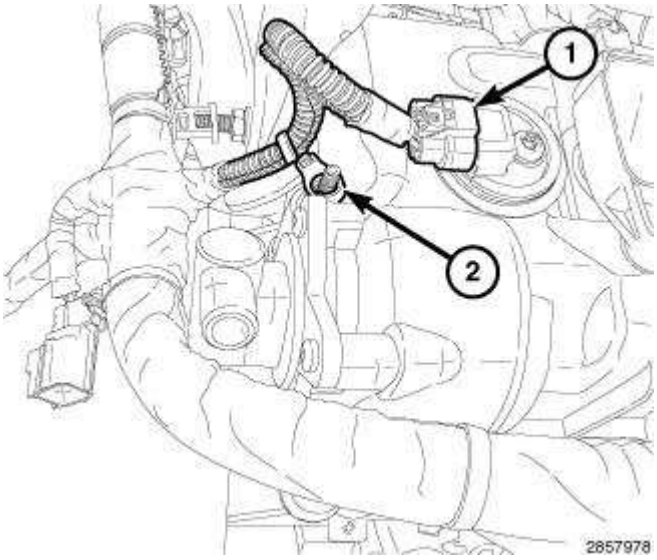

Fig. 26: Main Wire Harness Retainer & Connector
Courtesy of CHRYSLER GROUP, LLC

45. Unfasten the main wire harness retainer (2) from the right cylinder head cover mounting stud.

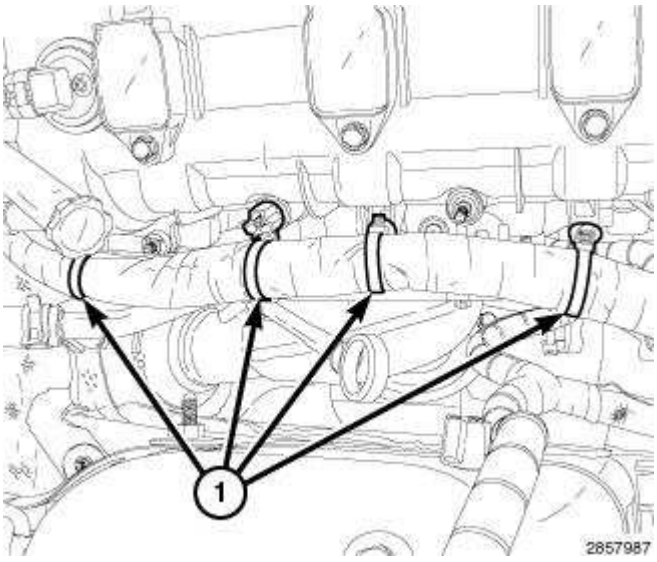

Fig. 27: Main Wire Harness Retainers At Right Cylinder Head Cover
Courtesy of CHRYSLER GROUP, LLC

46. Unfasten the four main wire harness retainers (1) from the right cylinder head cover.

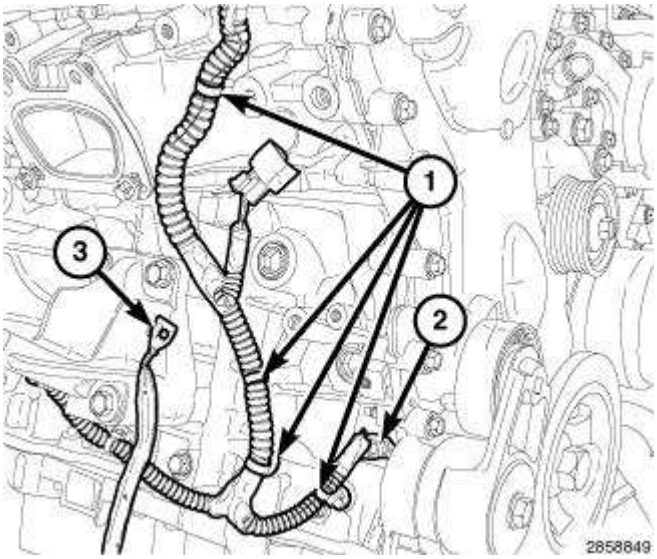

Fig. 28: Wire Harness Retainers, Oil Pump Solenoid Electrical Connector & Ground Strap
Courtesy of CHRYSLER GROUP, LLC

47. Disconnect the oil pump solenoid electrical connector (2).
48. Unfasten the four wire harness retainers (1).
49. Remove the ground strap (3) from the right engine mount bracket.

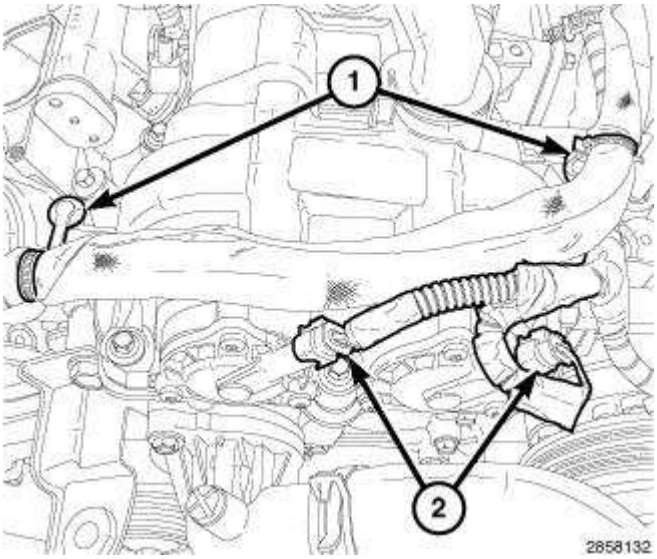

Fig. 29: Variable Valve Timing Solenoid Connectors & Wire Harness Retainers
Courtesy of CHRYSLER GROUP, LLC

NOTE: Mark the variable valve timing solenoid connectors (2) with a paint pen or equivalent so that they may be reinstalled in their original locations.

50. Disconnect the electrical connectors (2) from the left variable valve timing solenoids.
51. Unfasten the two starter wire harness retainers (1) from the left cylinder head cover.

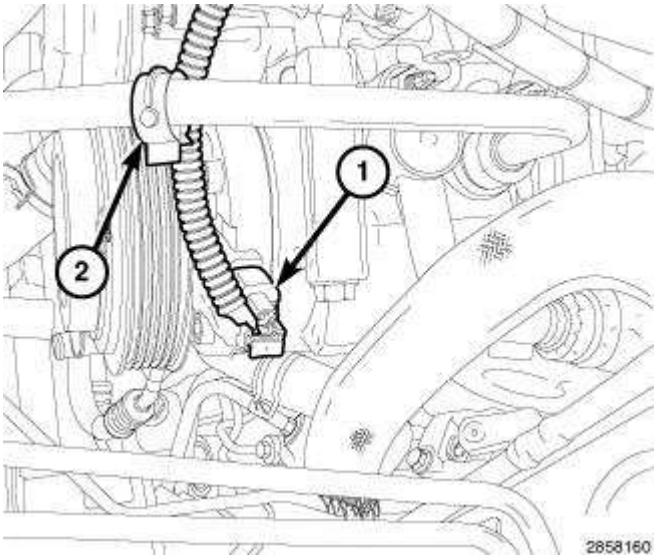

Fig. 30: A/C Compressor Electrical Connector & Wire Harness Retainer
Courtesy of CHRYSLER GROUP, LLC

52. Disconnect the A/C compressor electrical connector (1) and unfasten the wire harness retainer (2) from the A/C compressor discharge line.

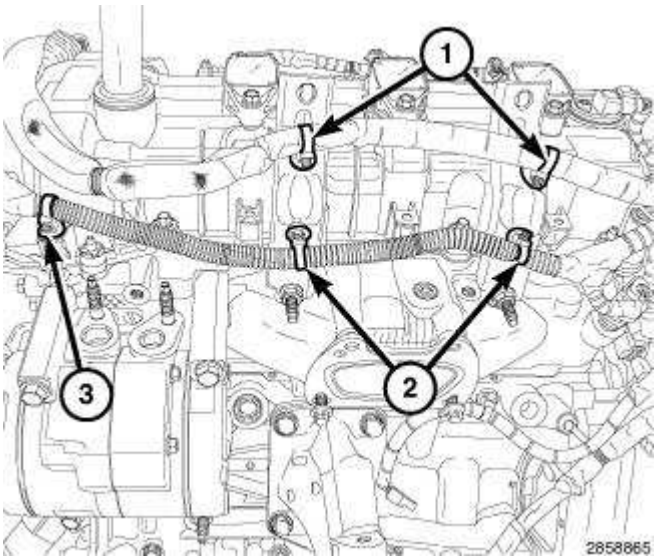

Fig. 31: Starter Wire Harness Retainers, Main Wire Harness Retainer & Manifold Support Bracket Retainers
Courtesy of CHRYSLER GROUP, LLC

53. Unfasten the two starter wire harness retainers (1) from the upper intake manifold support brackets.
54. Unfasten the main wire harness retainer (3) from the left cylinder head cover and two retainers (2) from the upper intake manifold support brackets.

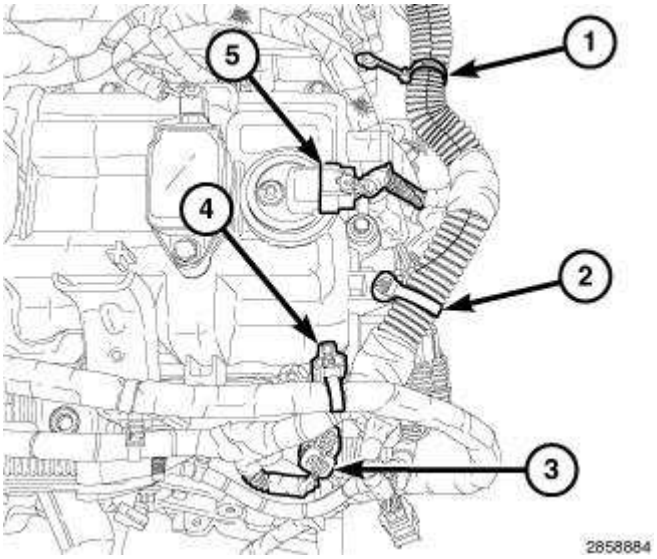

Fig. 32: ECT Sensor Connector, CMP Sensor & Main Wire Harness Retainers
Courtesy of CHRYSLER GROUP, LLC

55. Disconnect the Engine Coolant Temperature (ECT) sensor connector (3).
56. Disconnect the left Camshaft Position (CMP) sensor (5).
57. Unfasten the main wire harness retainer (2) from the cylinder head cover and one main wire harness retainer (4) from the cylinder head cover mounting stud.
58. Unfasten the main wire harness retainer (1) form the rear of the lower intake manifold.

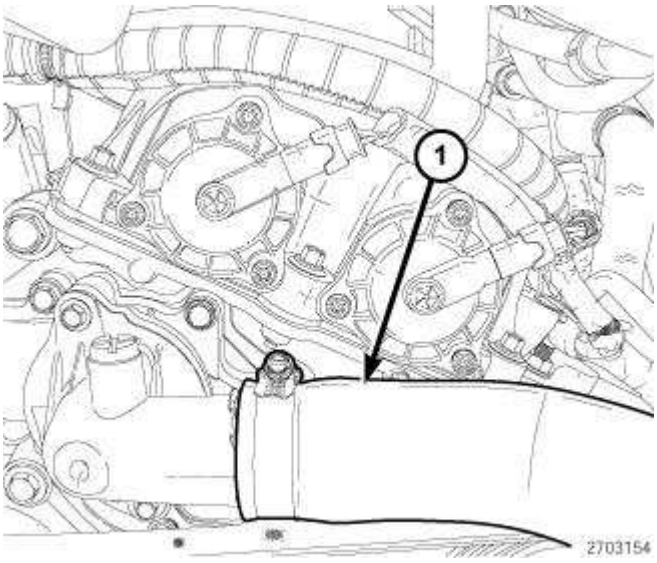

Fig. 33: Upper Radiator Hose
Courtesy of CHRYSLER GROUP, LLC

59. Remove the upper radiator hose (1) from the engine thermostat housing.

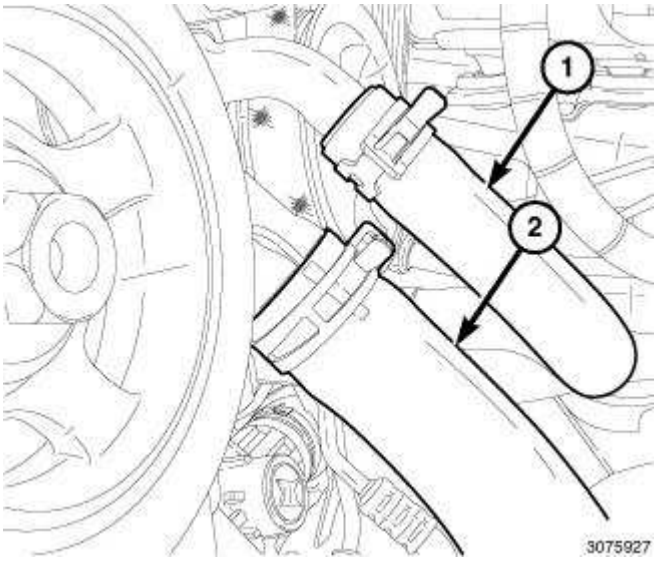

Fig. 34: Lower Heater Core Return Hose & Lower Radiator Hose
Courtesy of CHRYSLER GROUP, LLC

60. Remove the lower heater core return hose (1) from the engine coolant pump housing.
61. Remove the lower radiator hose (2) from the engine coolant pump housing.

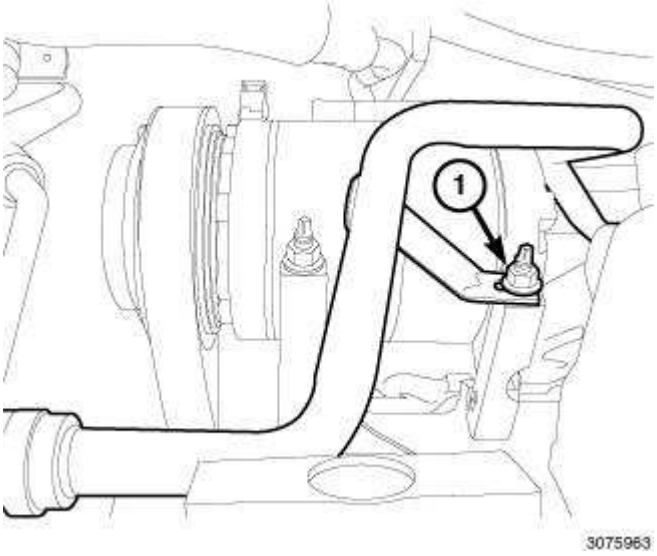

Fig. 35: Heater Core Return Tube Lower Support Bracket Retaining Nut
Courtesy of CHRYSLER GROUP, LLC

62. Remove the heater core return tube lower support bracket retaining nut (1).

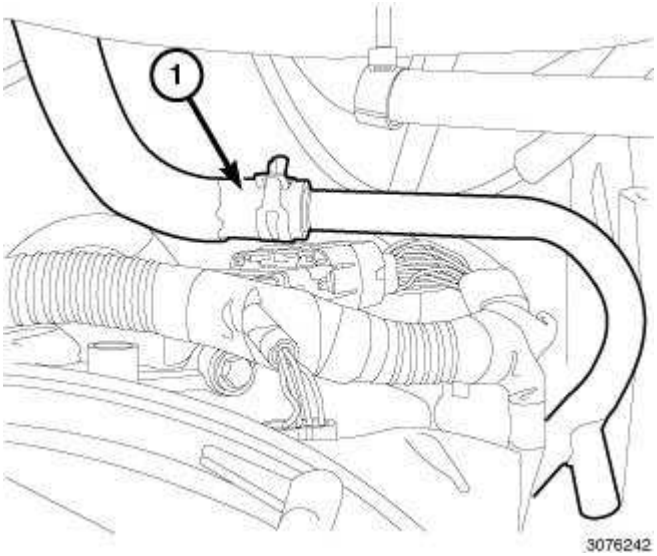

Fig. 36: Heater Core Return Hose
Courtesy of CHRYSLER GROUP, LLC

63. Disconnect the heater core return hose (1).

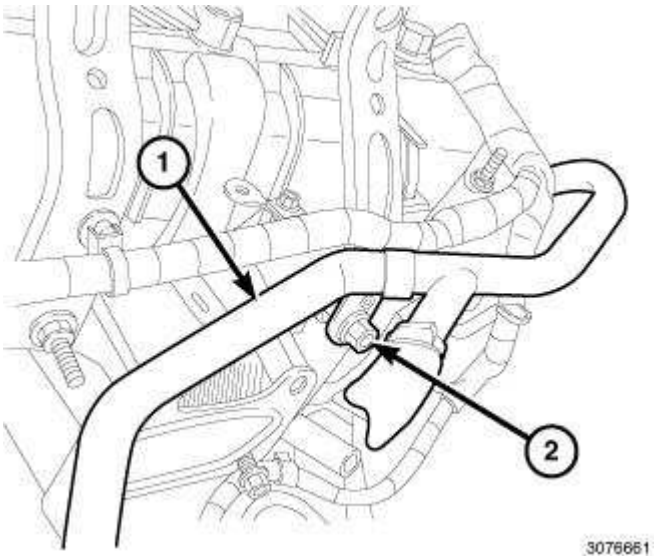

Fig. 37: Heater Core Return Tube Upper Support Bracket Retaining Nut & Tube
Courtesy of CHRYSLER GROUP, LLC

64. Remove the heater core return tube upper support bracket retaining nut (2) and remove tube (1).

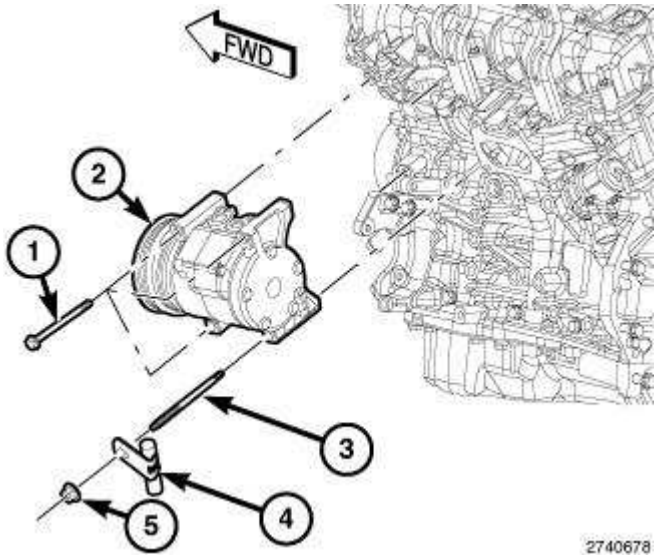

Fig. 38: A/C Compressor, Nut, Stud & Three Bolts
Courtesy of CHRYSLER GROUP, LLC

65. Remove the A/C compressor (2). Refer to **COMPRESSOR, A/C, REMOVAL** .
66. Raise and support the vehicle. Refer to **HOISTING, STANDARD PROCEDURE** .

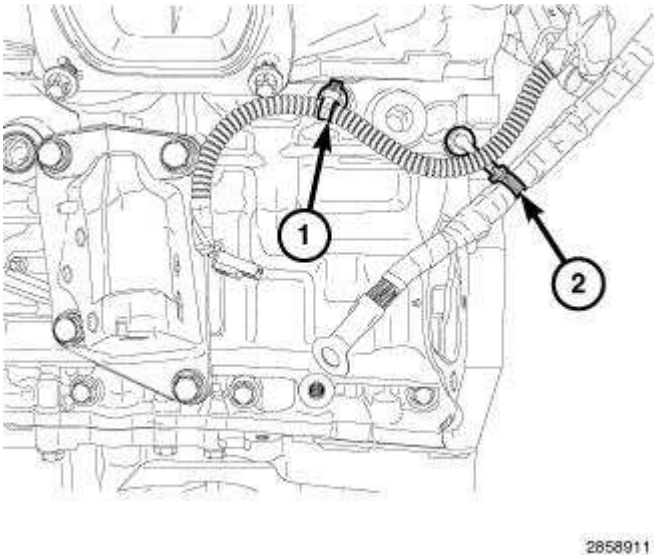

Fig. 39: Wire Harness Retainers
Courtesy of CHRYSLER GROUP, LLC

67. Remove the starter. Refer to **STARTER, REMOVAL** .
68. Unfasten the starter wire harness retainer (2) and the main wire harness retainer (1) from the engine block.

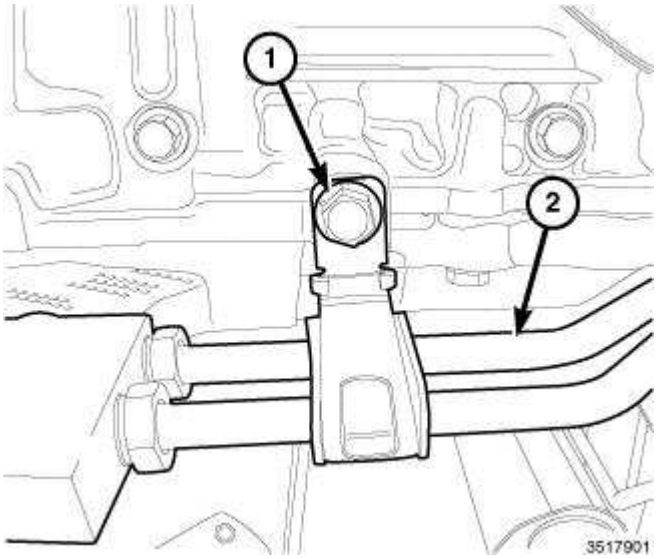

Fig. 40: Bolt & Transmission Cooling Lines
Courtesy of CHRYSLER GROUP, LLC

69. Remove the bolt (1) and reposition the transmission cooling lines (2).

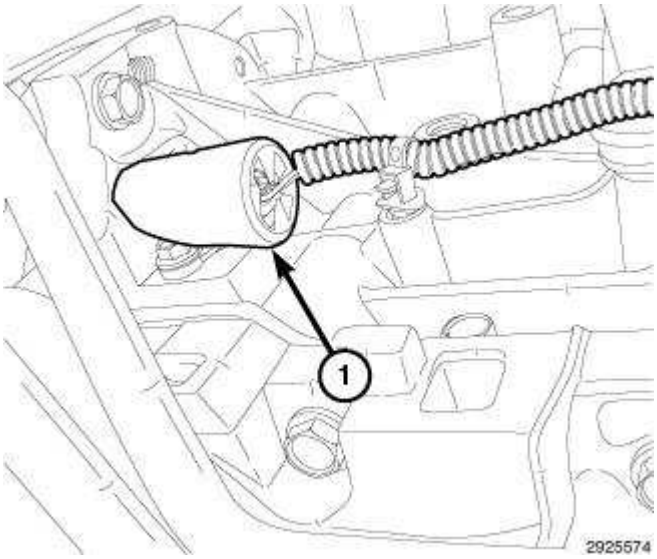

Fig. 41: Heat Shield
Courtesy of CHRYSLER GROUP, LLC

70. Push back the heat shield (1) from the crankshaft position (CKP) sensor.

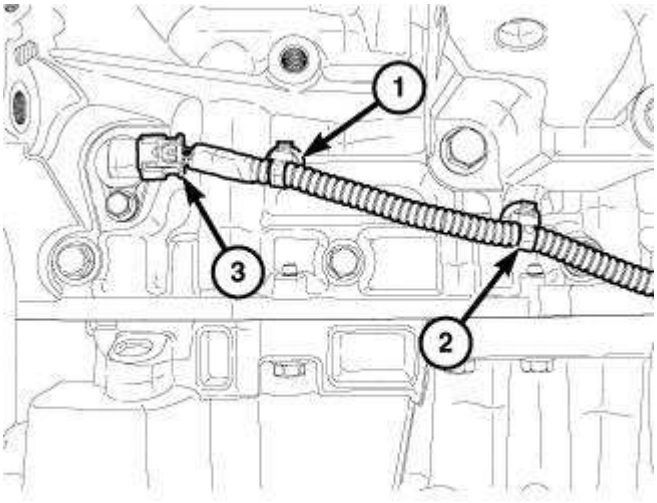

Fig. 42: Main Wire Harness Retainers & CKP Sensor
Courtesy of CHRYSLER GROUP, LLC

71. Disconnect the main wire harness from the Crankshaft Position (CKP) sensor (3).
72. Unfasten the main wire harness retainer (1) from the engine block and one main wire harness retainer (2) from the right engine mount bracket.
73. Disconnect and reposition the power cord from the engine block heater (if equipped).

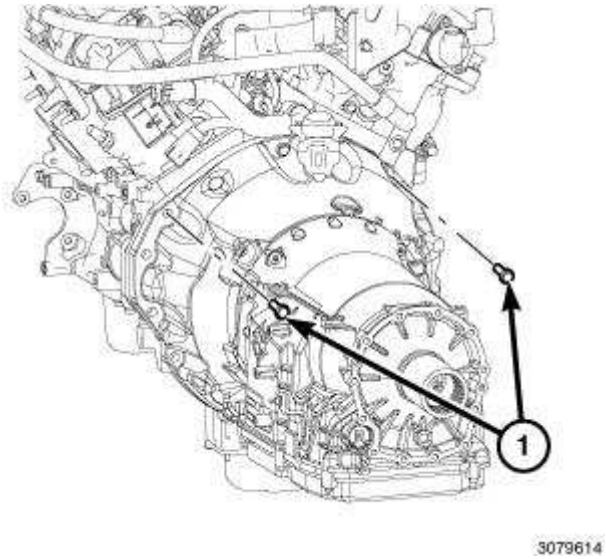

Fig. 43: Upper Side Transmission-To-Engine Retaining Bolts
Courtesy of CHRYSLER GROUP, LLC

74. Remove the two upper side transmission to engine retaining bolts (1).

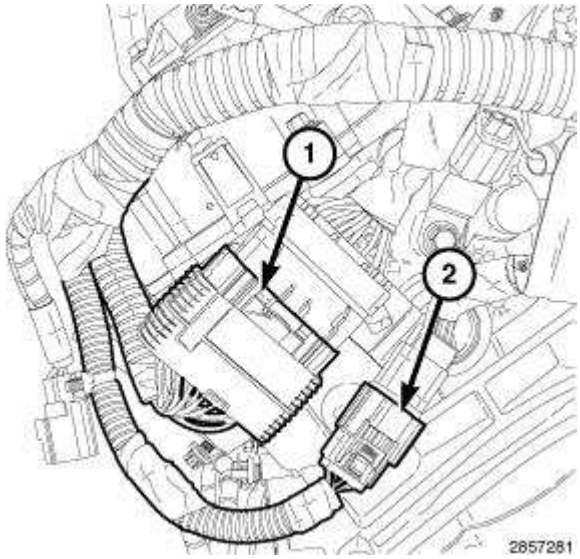

Fig. 44: Engine Injection/Ignition Harness & Engine Oil Pressure/Temperature Harness
Courtesy of CHRYSLER GROUP, LLC

75. Disconnect the main harness from the engine injection/ignition harness (1) at the rear of the left cylinder head.
76. Disconnect the main harness from the engine oil pressure/temperature harness (2) at the rear of the left cylinder head.

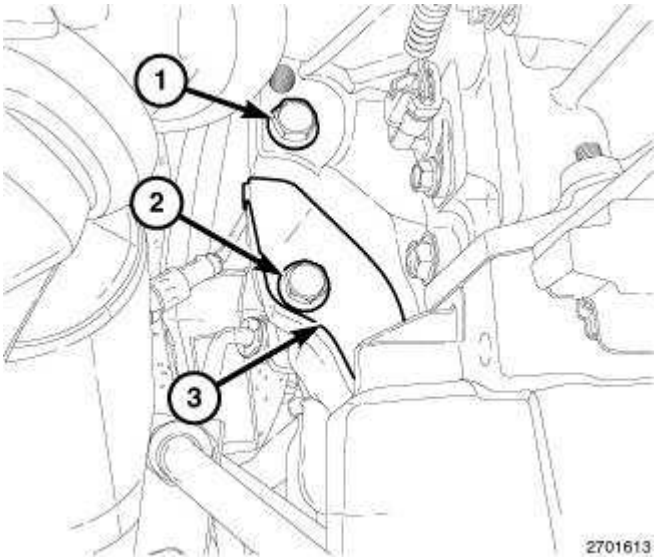

Fig. 45: Side Engine-To-Transmission Bolt, Transmission Dust Shield Retaining Bolt & Dust Shield
Courtesy of CHRYSLER GROUP, LLC

77. Remove the side engine to transmission bolt (1).

    Remove the transmission dust shield retaining bolt (2) and remove the dust shield (3)

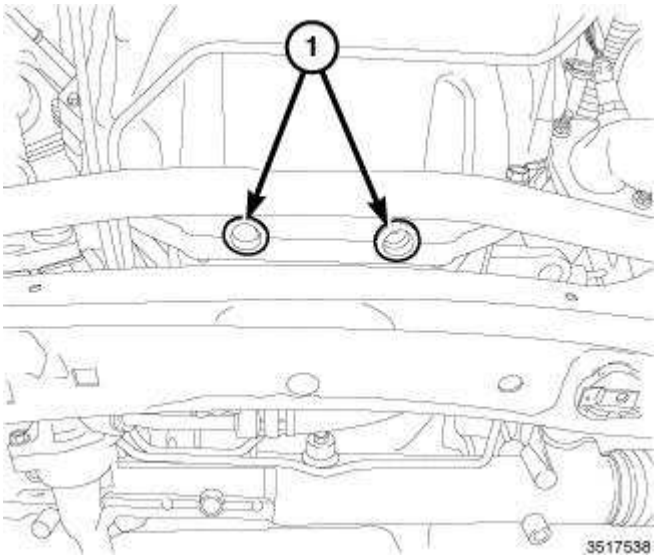

Fig. 46: Rubber Plugs
Courtesy of CHRYSLER GROUP, LLC

78. Remove the two rubber plugs (1) covering the rear oil seal retainer flange bolts.

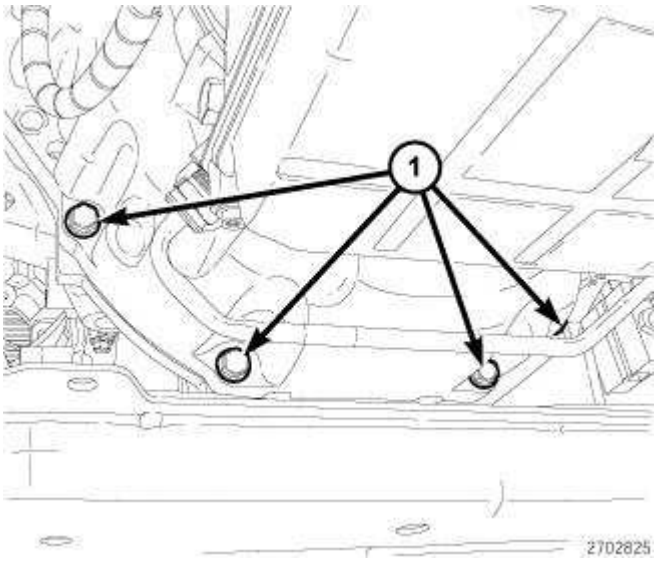

Fig. 47: Transmission-To-Engine Oil Pan Bolts
Courtesy of CHRYSLER GROUP, LLC

79. Remove four transmission to the engine oil pan bolts (1).

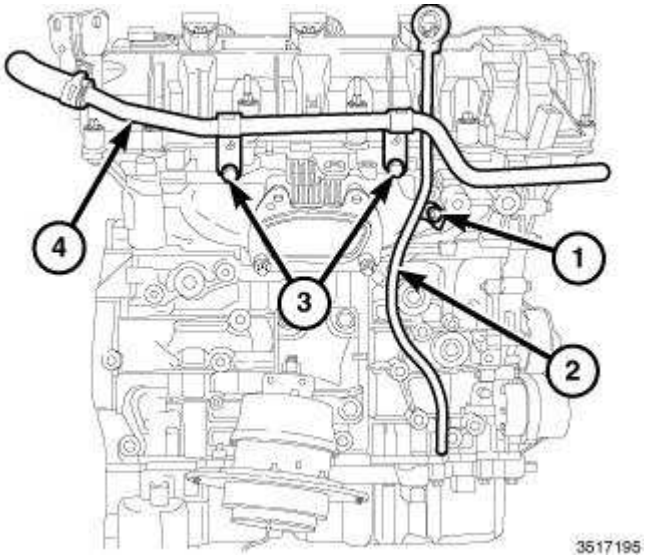

Fig. 48: Heater Core Inlet Tube, Oil Level Indicator & Bolts
Courtesy of CHRYSLER GROUP, LLC

80. Lower the vehicle.
81. Remove two bolts (3) and remove the heater core inlet tube (4).
82. Remove the bolt (1) and remove the oil level indicator (2).

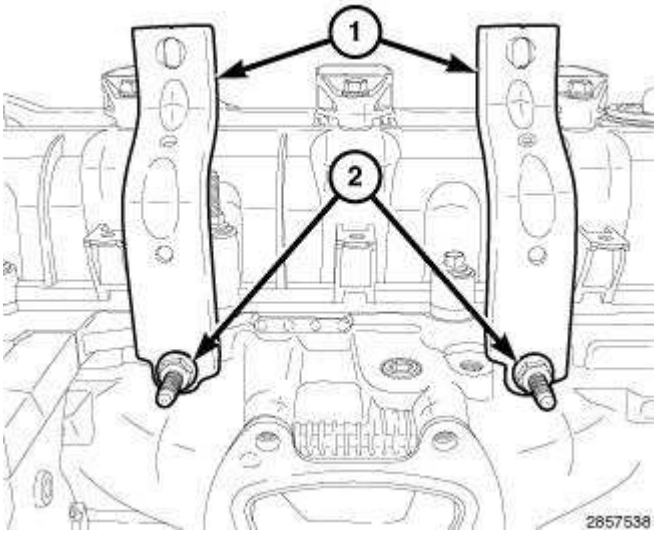

Fig. 49: Left Intake Manifold Support Brackets & Retaining Bolts
Courtesy of CHRYSLER GROUP, LLC

83. Remove the left intake manifold support bracket retaining bolts (2) and remove the support brackets (1).

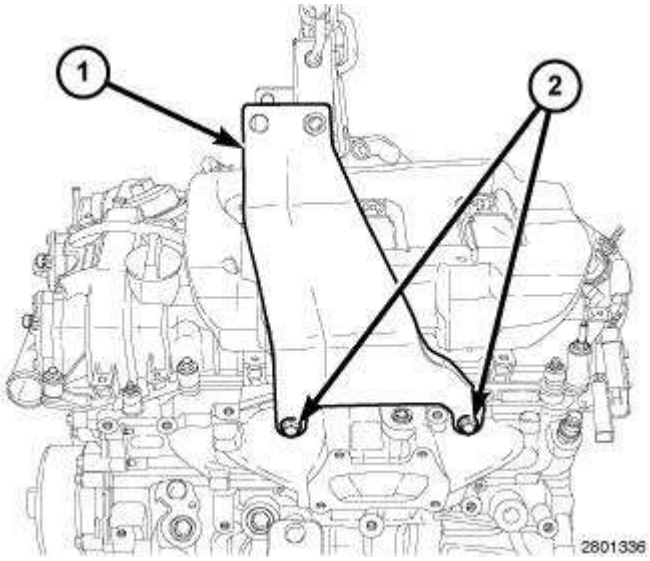

Fig. 50: Driver Side Engine Lifting Bracket & Bolts
Courtesy of CHRYSLER GROUP, LLC

84. Install the Driver Side Engine Lifting Bracket (special tool #10242-1, Brackets, Engine Lifting, Left Side) (1) on the left cylinder head with bolts (2) provided with the Engine Lifting Bracket and tighten bolts to 21 N.m (15 ft. lbs.).

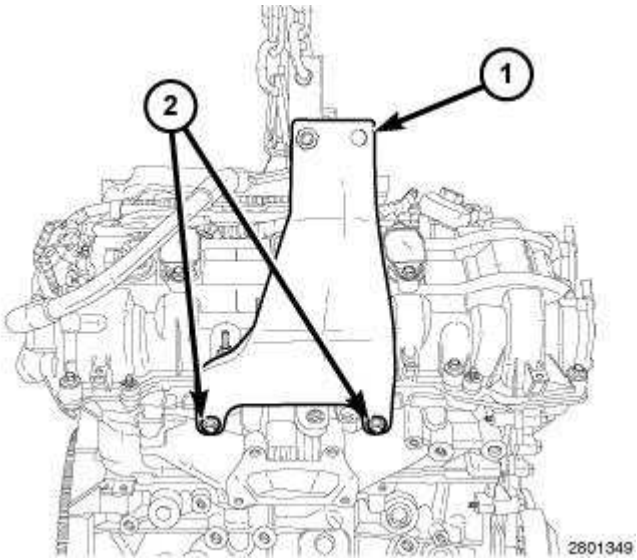

Fig. 51: Passenger Side Engine Lifting Bracket & Bolts
Courtesy of CHRYSLER GROUP, LLC

85. Install the Passenger Side Engine Lifting Bracket (special tool #10242-2, Brackets, Engine Lifting, Right Side) (1) on the right cylinder head with bolts (2) provided with the Engine Lifting Bracket and tighten bolts to 21 N.m (15 ft. lbs.).

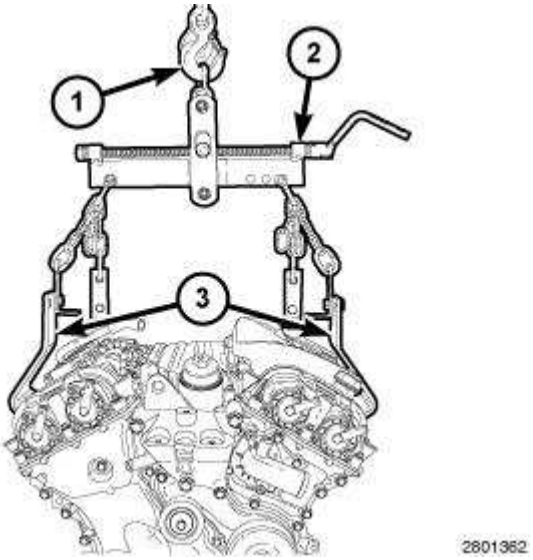

Fig. 52: Lifting Sling, Engine Lifting Brackets & Engine Hoist
Courtesy of CHRYSLER GROUP, LLC

86. Reposition the starter wire harness and the main wire harness to the rear of the engine compartment.
87. Position a load-leveling lifting sling (2), such as OTC® 4305 Engine Load Leveler or equivalent, between the engine lifting brackets (3) and an engine hoist (1).
88. Support the transmission with a suitable jack.

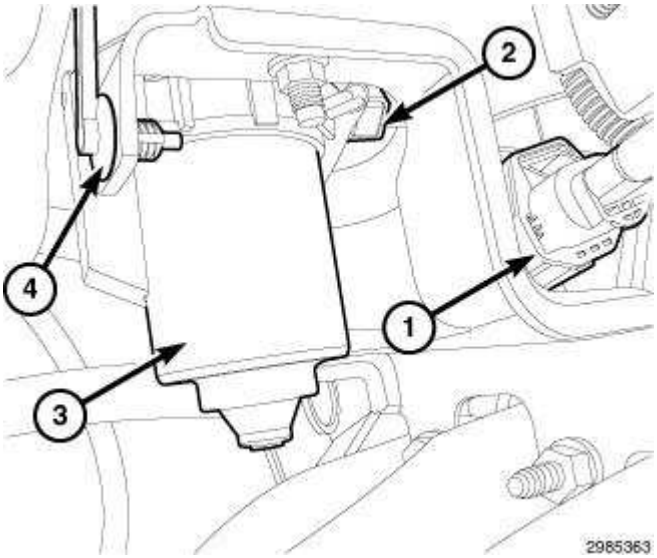

Fig. 53: Electrical Connector, Harness Connector, Hose & Vacuum Pump
Courtesy of CHRYSLER GROUP, LLC

89. Unfasten the harness retainer (4) from the electric vacuum pump mounting bracket.
90. Disconnect the electrical connector (1) from the electric vacuum pump (3).
91. Remove the quick connect vacuum hose (2) from the electric vacuum pump (3).

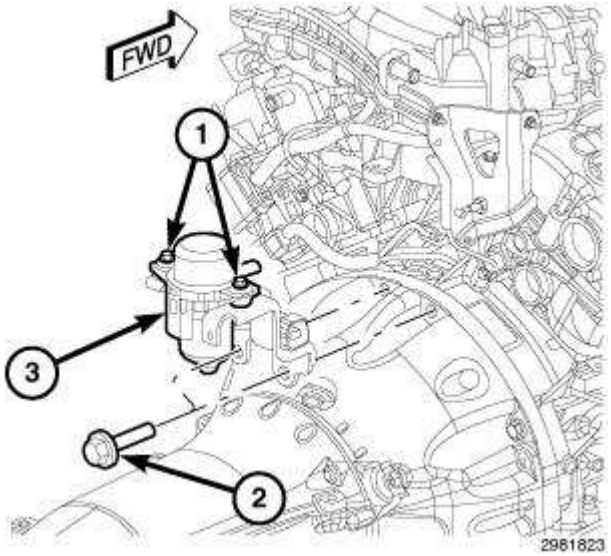

Fig. 54: Electric Vacuum Pump, Bolts & Studs
Courtesy of CHRYSLER GROUP, LLC

92. Remove the two upper transmission to engine retaining bolts (2) and remove the electric vacuum pump (3).

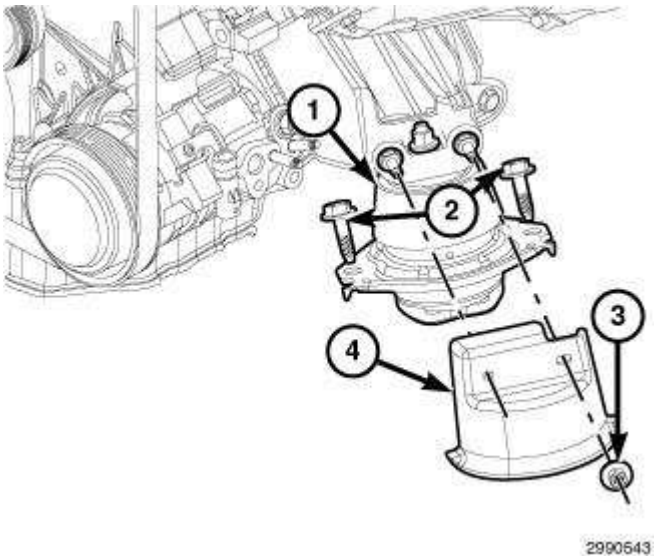

Fig. 55: Engine Mount Heat Shield Retaining Nuts, Lower Mount Retaining Bolts & Heat Shields
Courtesy of CHRYSLER GROUP, LLC

NOTE: Left engine mount shown in illustration, right engine mount similar.

93. Remove both left and right engine mount heat shield retaining nuts (3) and remove the heat shields (4).
94. Remove both left and right engine mount lower retaining bolts (2).

CAUTION: While slowly separating the engine from the vehicle, constant checks must be made to assure proper positioning and that no damage to other components or wiring harnesses occur during separation.

95. Carefully remove the engine from the engine compartment.
96. If required, remove the following components for installation on the replacement engine:

- Left exhaust down pipe
- Right exhaust down pipe
- Left engine mount bracket
- Left engine mount
- Right engine mount bracket
- Right engine mount
- Accessory drive belt tensioner
- Upper intake manifold support bracket
- Block heater (if equipped)

INSTALLATION

INSTALLATION

CAUTION: If the original engine has experienced a catastrophic failure or an individual failure with the piston, cylinder bore, engine block, valve or valve seat, the intake manifold MUST be replaced with a new manifold.

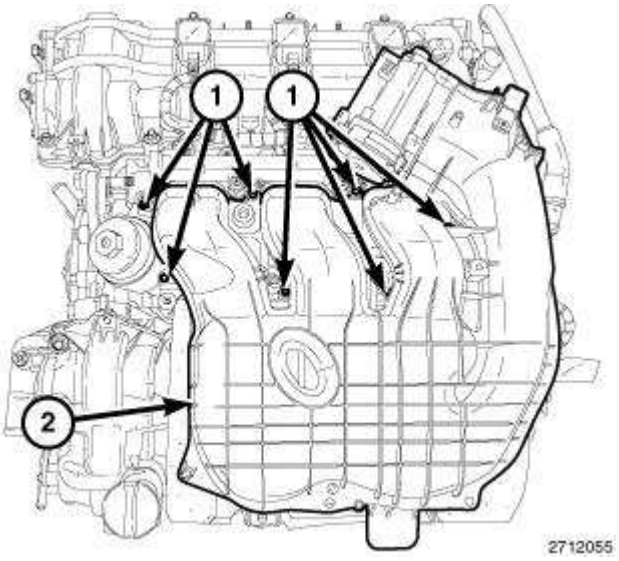

Fig. 56: Upper Intake Manifold & Bolts
Courtesy of CHRYSLER GROUP, LLC

NOTE: **If installing a replacement engine, transfer components such as engine mount brackets, block heater, accessories, heater hoses and tubes to the replacement engine.**

1. If required, transfer the following components onto the replacement engine:
   - Left exhaust down pipe
   - Right exhaust down pipe
   - Left engine mount bracket
   - Left engine mount
   - Right engine mount bracket
   - Right engine mount
   - Accessory drive belt tensioner
   - Upper intake manifold support bracket
   - Block heater (if equipped)
2. If required, remove the upper intake manifold. Refer to **MANIFOLD, INTAKE, REMOVAL**.

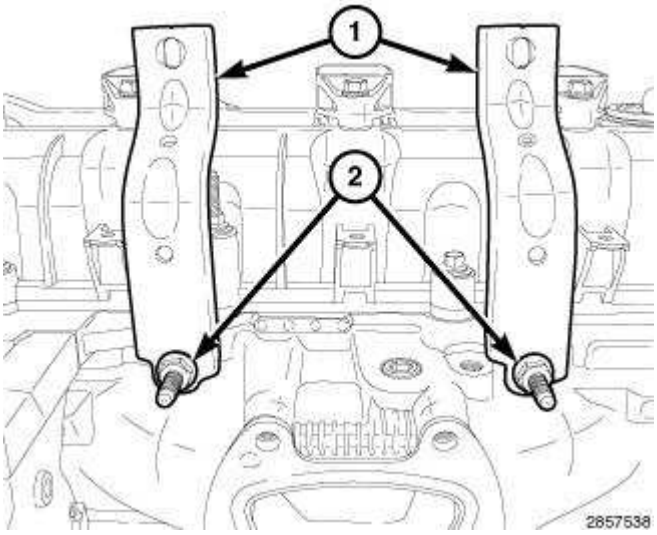

Fig. 57: Left Intake Manifold Support Brackets & Retaining Bolts
Courtesy of CHRYSLER GROUP, LLC

3. Remove the left intake manifold support bracket retaining bolts (2) and remove the support brackets (1).

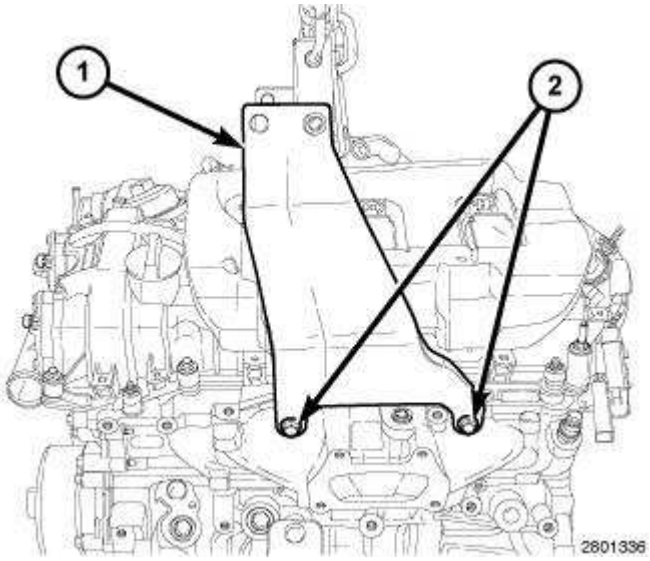

Fig. 58: Driver Side Engine Lifting Bracket & Bolts
Courtesy of CHRYSLER GROUP, LLC

4. Install the Driver Side Engine Lifting Bracket (special tool #10242-1, Brackets, Engine Lifting, Left Side) (1) on the left cylinder head with bolts (2) provided with the Engine Lifting Bracket and tighten bolts to 21 N.m (15 ft. lbs.).

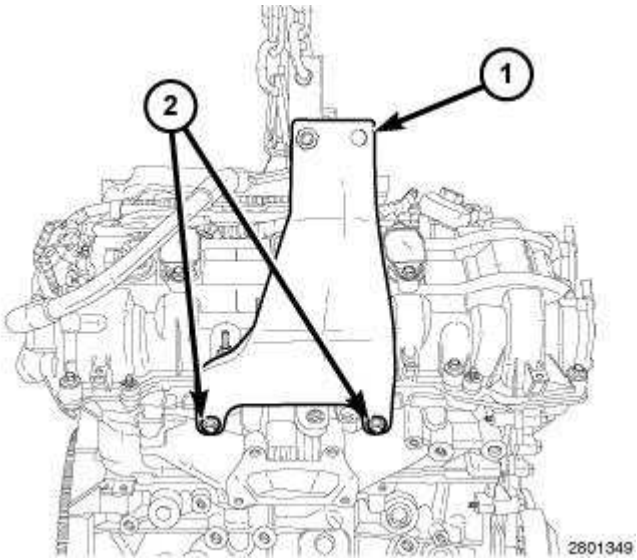

Fig. 59: Passenger Side Engine Lifting Bracket & Bolts
Courtesy of CHRYSLER GROUP, LLC

5. Install the Passenger Side Engine Lifting Bracket (special tool #10242-2, Brackets, Engine Lifting, Right Side) (1) on the right cylinder head with bolts (2) provided with the Engine Lifting Bracket and tighten bolts to 21 N.m (15 ft. lbs.).

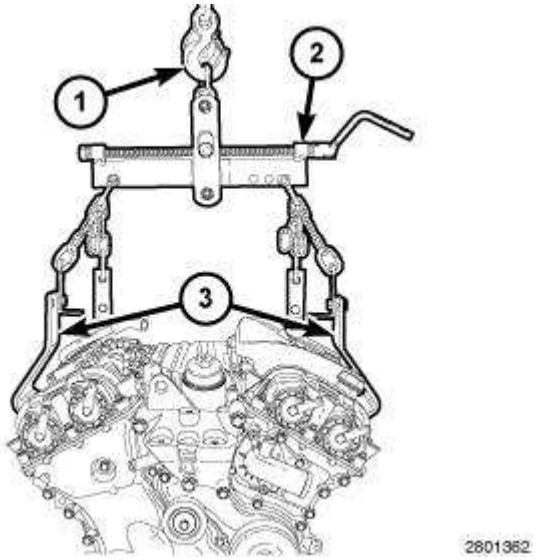

Fig. 60: Lifting Sling, Engine Lifting Brackets & Engine Hoist
Courtesy of CHRYSLER GROUP, LLC

6. Position a load-leveling lifting sling (2), such as OTC® 4305 Engine Load Leveler or equivalent, between the engine lifting brackets (3) and an engine hoist (1).
7. Reposition the starter wire harness and the main wire harness to the rear of the engine compartment.

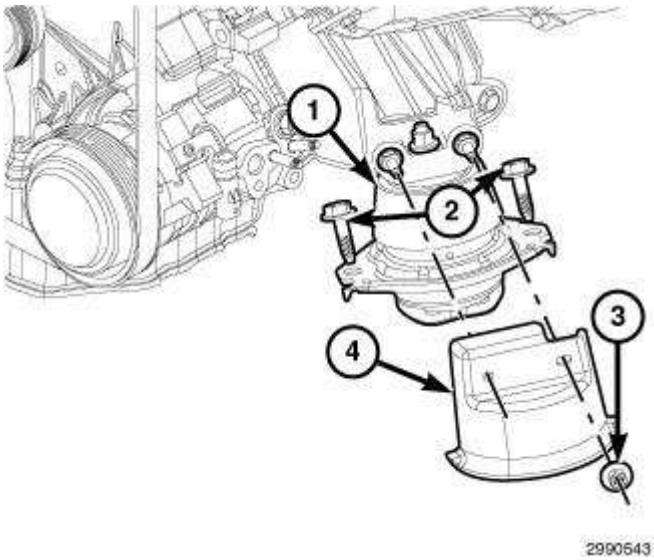

Fig. 61: Engine Mount Heat Shield Retaining Nuts, Lower Mount Retaining Bolts & Heat Shields
Courtesy of CHRYSLER GROUP, LLC

NOTE: Left engine mount shown in illustration, right engine mount similar.

8. Carefully lower the engine into the engine compartment while aligning the two locator dowels into the transmission housing.

9. Align the engine mounts, install both left and right engine mount lower retaining bolts (2) and tighten to 68 N.m (50 ft. lbs.).
10. Position both left and right engine mount heat shields (4), install the retaining nuts (3) and tighten to 12 N.m (9 ft. lbs.).

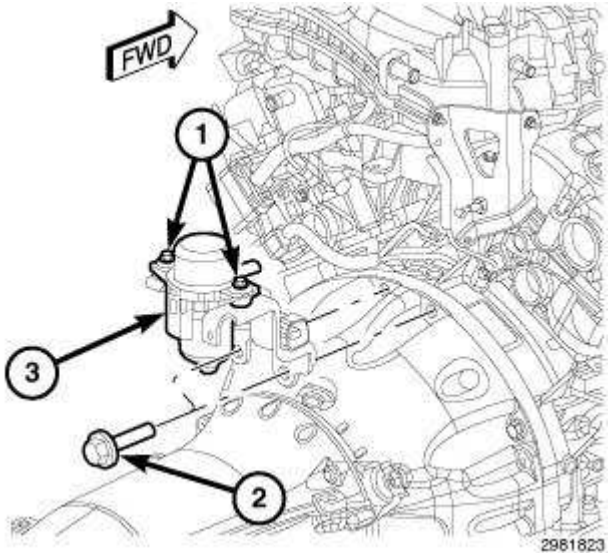

Fig. 62: Electric Vacuum Pump, Bolts & Studs
Courtesy of CHRYSLER GROUP, LLC

11. Position the electric vacuum pump (3), install the two transmission to engine retaining bolts (2) and tighten to 55 N.m (41 ft. lbs.).

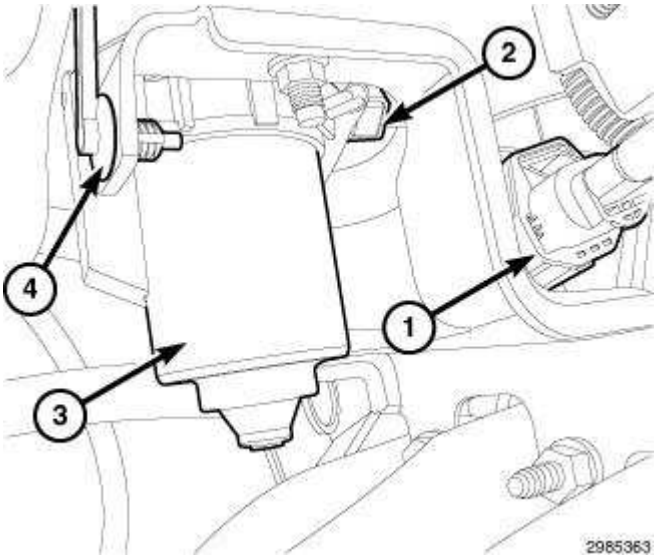

Fig. 63: Electrical Connector, Harness Connector, Hose & Vacuum Pump
Courtesy of CHRYSLER GROUP, LLC

12. Install the quick connect vacuum hose (2) to the electric vacuum pump (3).
13. Connect the electrical connector (1) to the electric vacuum pump (3).

14. Secure the harness retainer (4) to the mounting bracket.

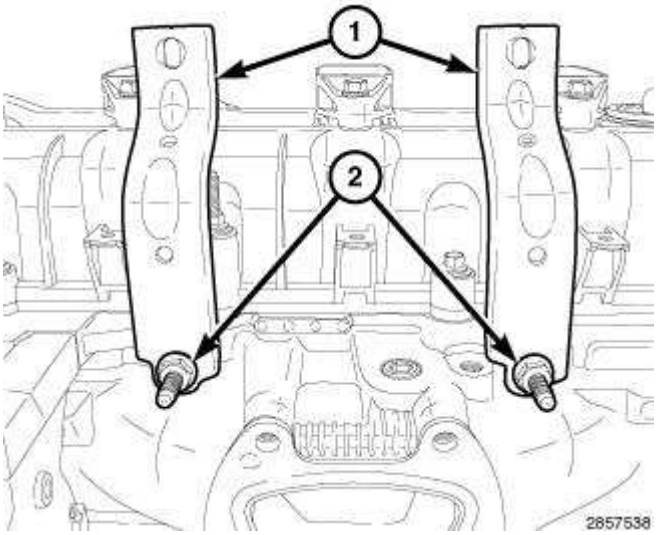

Fig. 64: Left Intake Manifold Support Brackets & Retaining Bolts
Courtesy of CHRYSLER GROUP, LLC

15. Remove the engine lifting brackets and position the left upper intake manifold support brackets (1) and install the retaining studs (2) finger tight.

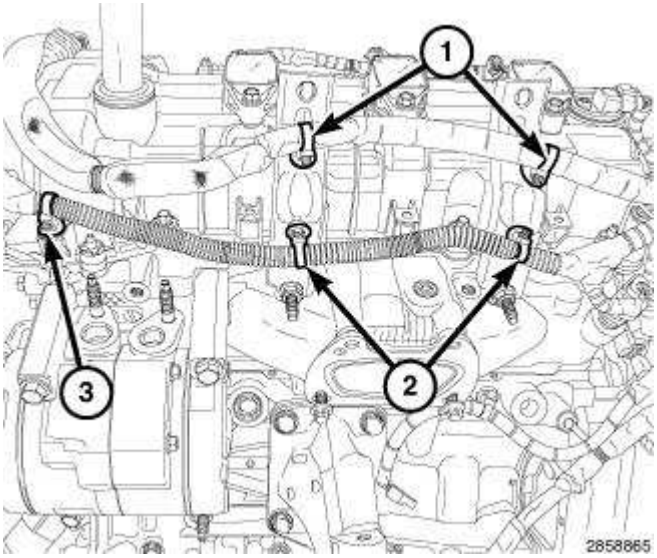

Fig. 65: Starter Wire Harness Retainers, Main Wire Harness Retainer & Manifold Support Bracket Retainers
Courtesy of CHRYSLER GROUP, LLC

16. Route the main wire harness and starter wire harness on the engine.
17. Secure the two starter wire harness retainers (1) to the upper intake manifold support brackets.
18. Secure the main wire harness retainer (3) to the left cylinder head cover and two retainers (2) to the upper intake manifold support brackets.

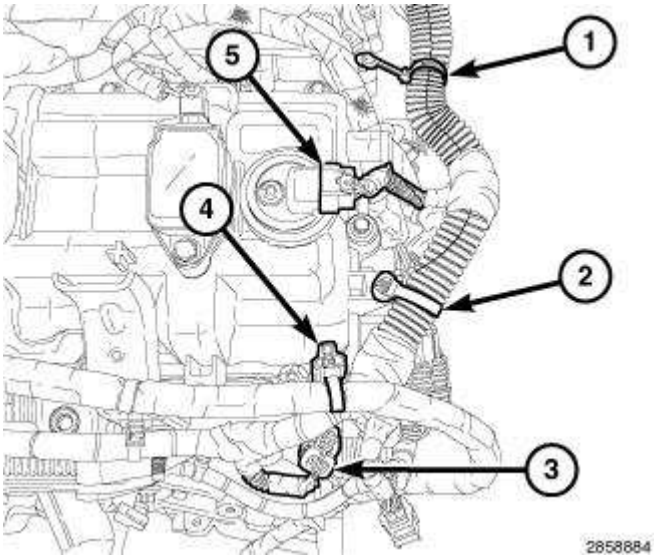

Fig. 66: ECT Sensor Connector, CMP Sensor & Main Wire Harness Retainers
Courtesy of CHRYSLER GROUP, LLC

19. Connect the Engine Coolant Temperature (ECT) sensor connector (3).
20. Connect the left Camshaft Position (CMP) sensor (5).
21. Secure the main wire harness retainer (2) to the cylinder head cover and one main wire harness retainer (4) to the cylinder head cover mounting stud.
22. Secure the main wire harness retainer (1) to the rear of the lower intake manifold.

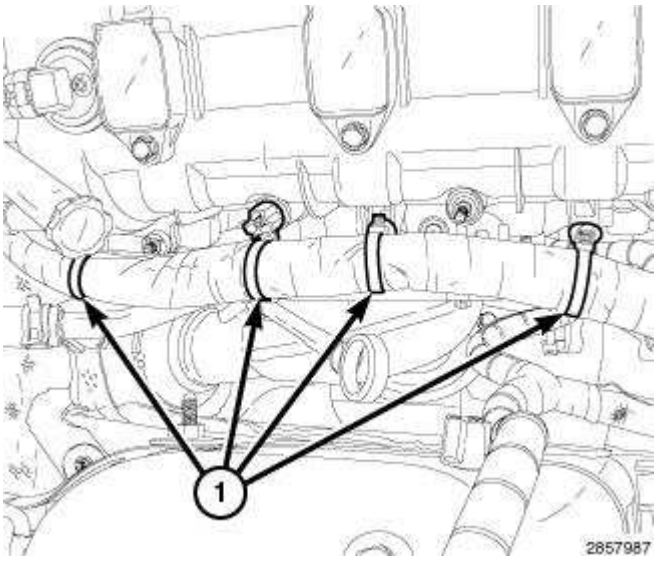

Fig. 67: Main Wire Harness Retainers At Right Cylinder Head Cover
Courtesy of CHRYSLER GROUP, LLC

23. Secure the four main wire harness retainers (1) to the right cylinder head cover.

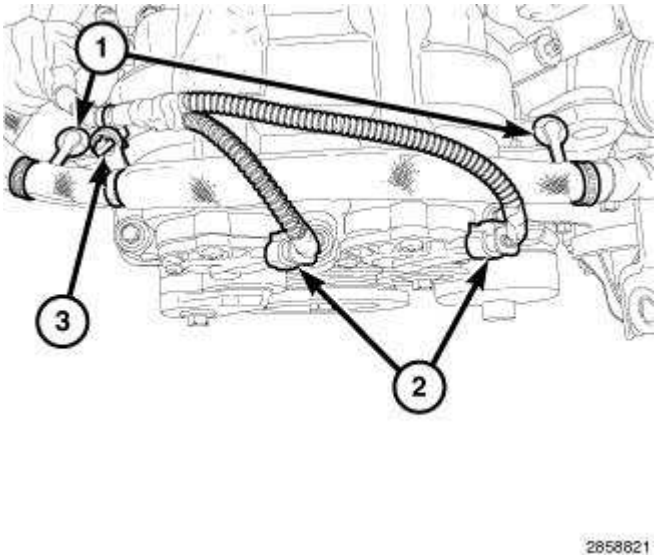

Fig. 68: Variable Valve Timing Solenoid Connectors & Harness Retainers
Courtesy of CHRYSLER GROUP, LLC

24. Connect the electrical connectors (2) to the variable valve timing solenoids on the right cylinder head.
25. Secure the two starter wire harness retainers (1) to the right cylinder head cover.
26. Secure the starter harness to main harness retainer (3).

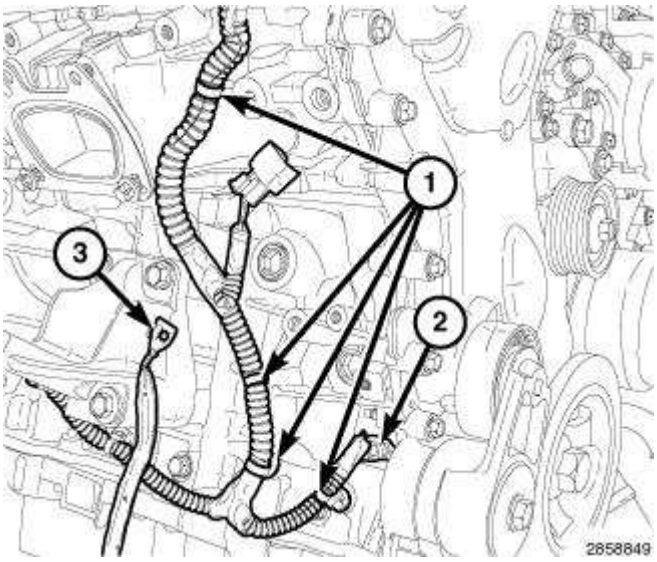

Fig. 69: Wire Harness Retainers, Oil Pump Solenoid Electrical Connector & Ground Strap
Courtesy of CHRYSLER GROUP, LLC

27. Connect the oil pump solenoid electrical connector (2).
28. Secure the four wire harness retainers (1).
29. Install the ground strap (3) to the right engine mount bracket.

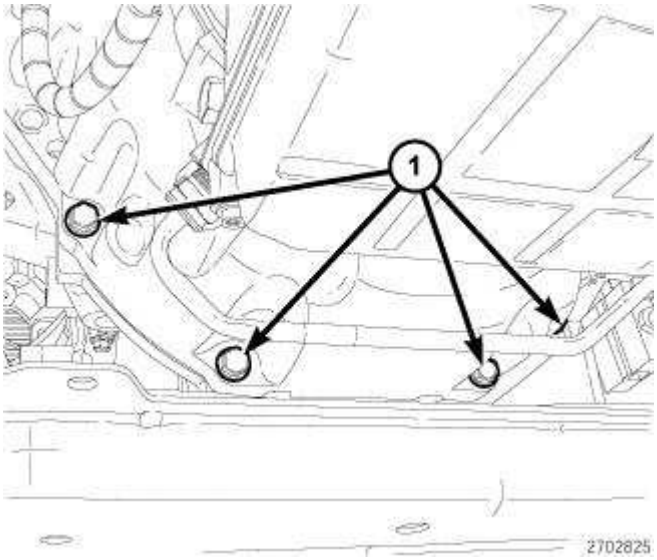

Fig. 70: Transmission-To-Engine Oil Pan Bolts
Courtesy of CHRYSLER GROUP, LLC

30. Remove the jack supporting the transmission.
31. Raise and support the vehicle. Refer to **HOISTING, STANDARD PROCEDURE** .
32. Install the four transmission to the engine oil pan retaining bolts (1) and tighten to 55 N.m (41 ft. lbs.).

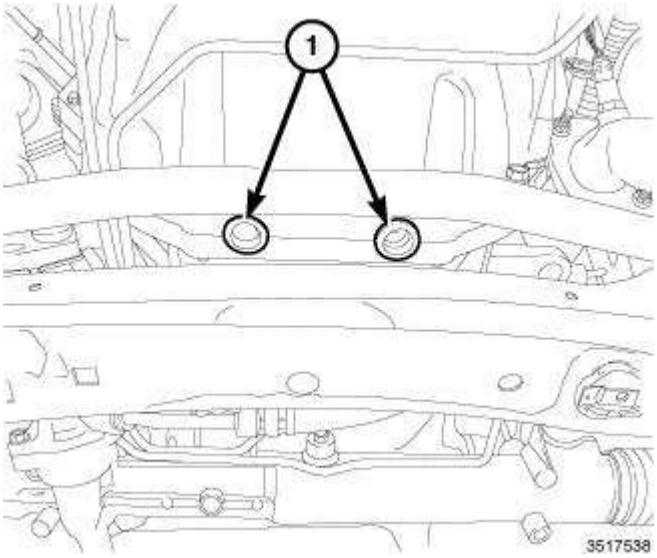

Fig. 71: Rubber Plugs
Courtesy of CHRYSLER GROUP, LLC

33. Install the two rubber plugs (1) covering the rear oil seal retainer flange bolts.

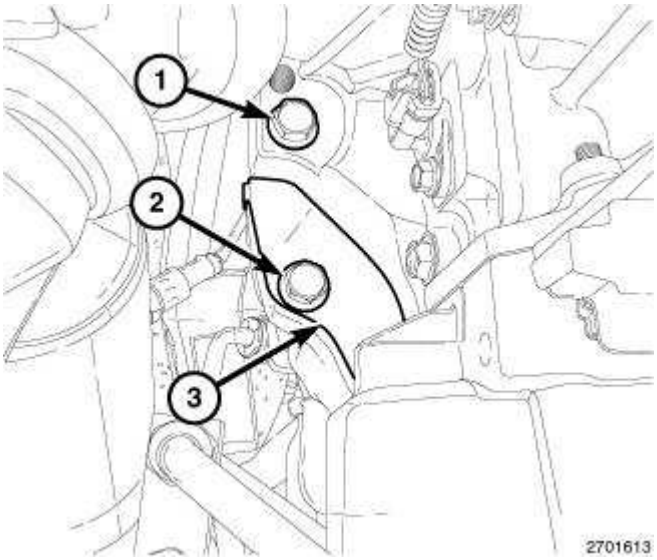

Fig. 72: Side Engine-To-Transmission Bolt, Transmission Dust Shield Retaining Bolt & Dust Shield
Courtesy of CHRYSLER GROUP, LLC

34. Install the side engine to transmission retaining bolt (1) and tighten to 55 N.m (41 ft. lbs.).
35. Position the torque converter dust shield (3), install the retaining bolt (2) and tighten to 12 N.m (9 ft. lbs.).

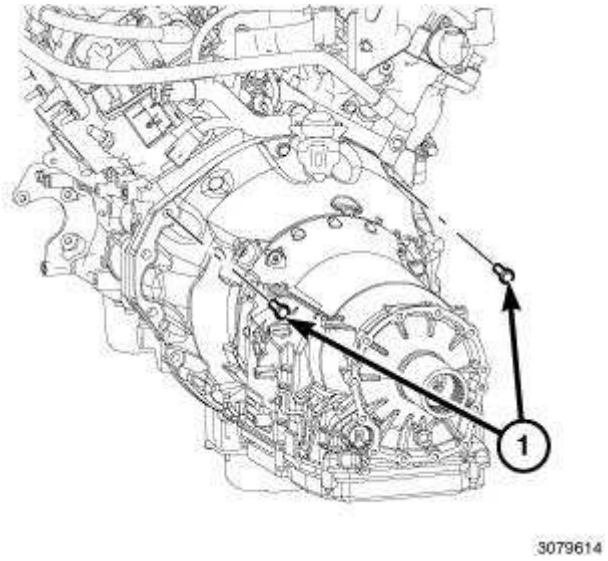

Fig. 73: Upper Side Transmission-To-Engine Retaining Bolts
Courtesy of CHRYSLER GROUP, LLC

36. Install the two upper side transmission to engine retaining bolts (1) and tighten to 55 N.m (41 ft. lbs.).

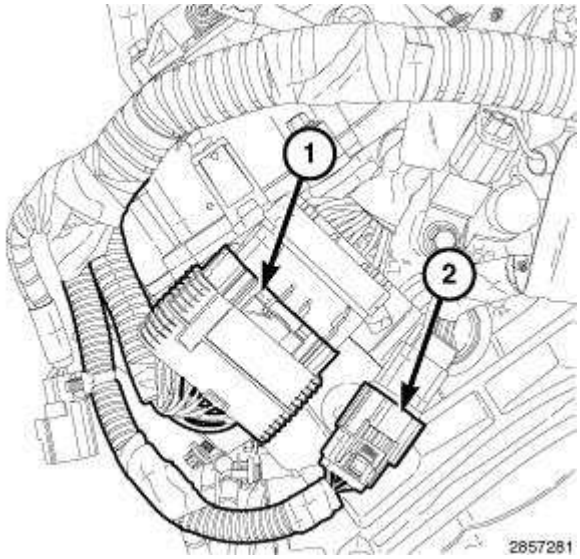

Fig. 74: Engine Injection/Ignition Harness & Engine Oil Pressure/Temperature Harness
Courtesy of CHRYSLER GROUP, LLC

37. Connect the main harness to the engine injection/ignition harness (1) at the rear of the left cylinder head.
38. Connect the main harness to the engine oil pressure/temperature harness (2) at the rear of the left cylinder head.

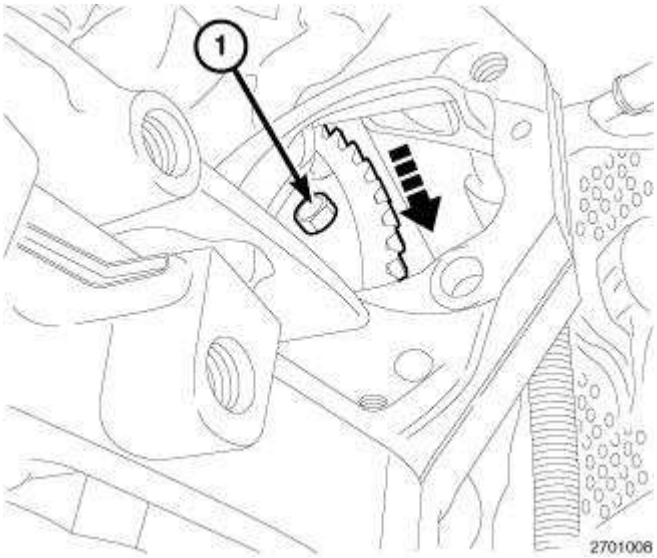

Fig. 75: Torque Converter Bolt
Courtesy of CHRYSLER GROUP, LLC

39. Rotate the crankshaft in a clockwise direction and install the six torque converter bolts (1) through the starter mounting hole and tighten to 42 N.m (31 ft. lbs.).

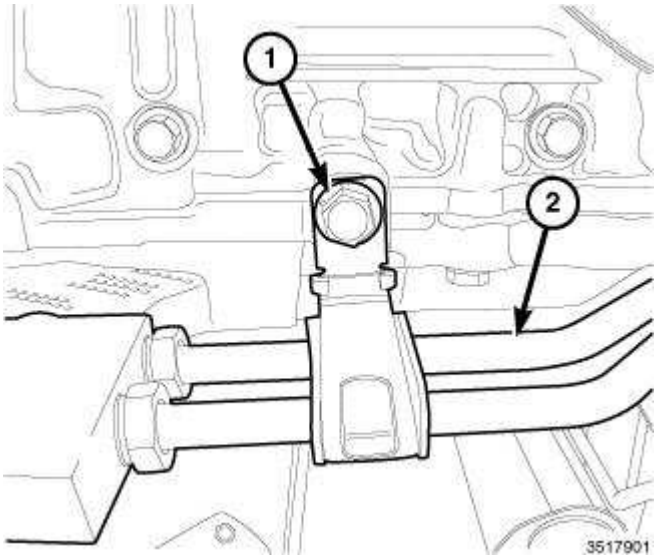

Fig. 76: Bolt & Transmission Cooling Lines
Courtesy of CHRYSLER GROUP, LLC

40. Install the transmission cooling lines (2) and tighten the bolt (1) to 12 N.m (106 in. lbs.).

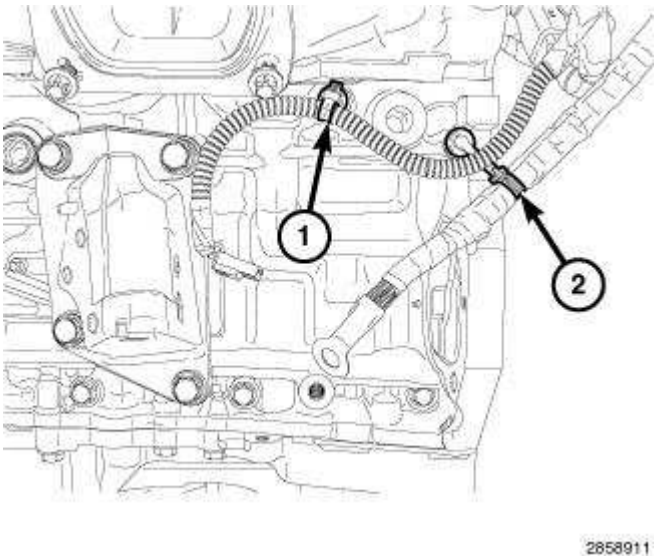

Fig. 77: Wire Harness Retainers
Courtesy of CHRYSLER GROUP, LLC

41. Secure the starter wire harness retainer (2) and the main wire harness retainer (1) to the engine block.
42. Install the starter. Refer to **STARTER, INSTALLATION** .

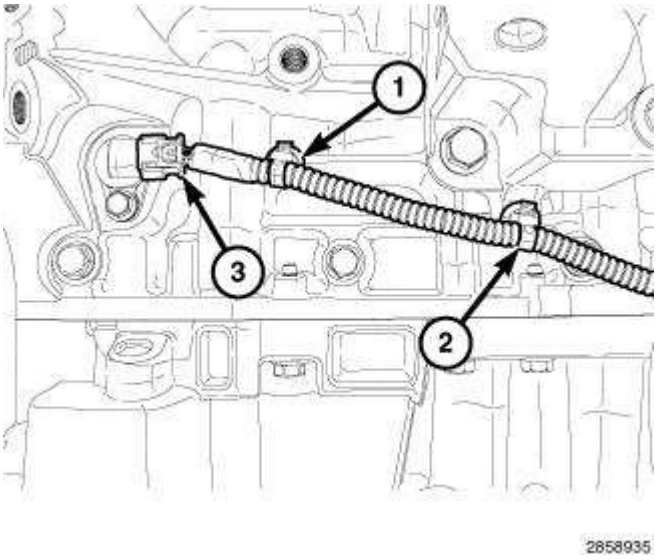

Fig. 78: Main Wire Harness Retainers & CKP Sensor
Courtesy of CHRYSLER GROUP, LLC

43. Connect the power cord to the engine block heater (if equipped).
44. Connect the main wire harness to the Crankshaft Position (CKP) sensor (3).
45. Secure the main wire harness retainer (1) to the engine block and one main wire harness retainer (2) to the right engine mounting bracket.

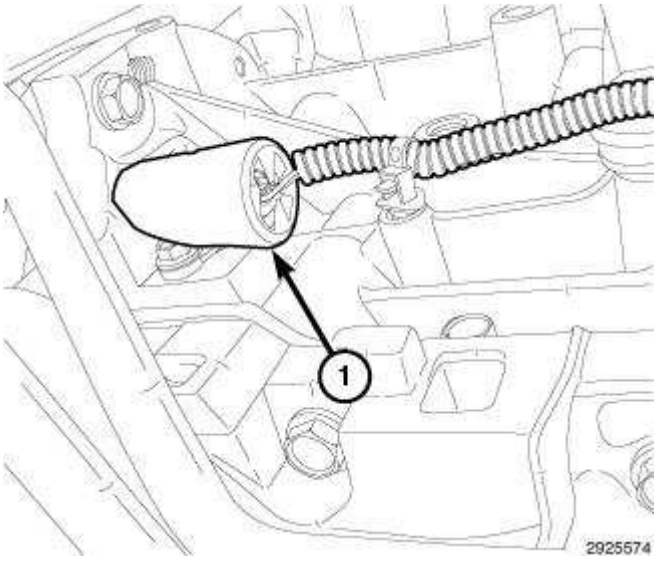

Fig. 79: Heat Shield
Courtesy of CHRYSLER GROUP, LLC

46. Position the heat shield (1) over the crankshaft position (CKP) sensor.

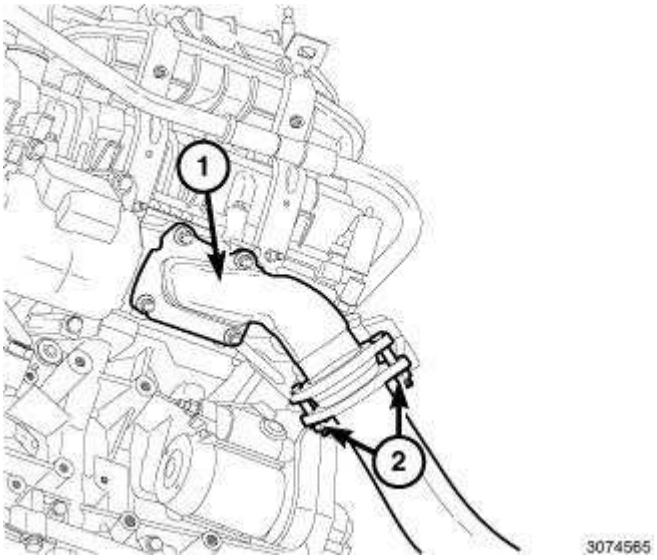

Fig. 80: Exhaust Down Pipe & Retaining Nuts
Courtesy of CHRYSLER GROUP, LLC

NOTE: Left side shown in illustration, right side similar.

47. Position both left and right exhaust down pipes (1) to the catalytic converters, install the retaining nuts (2) and tighten to 30 N.m (22 ft. lbs.)

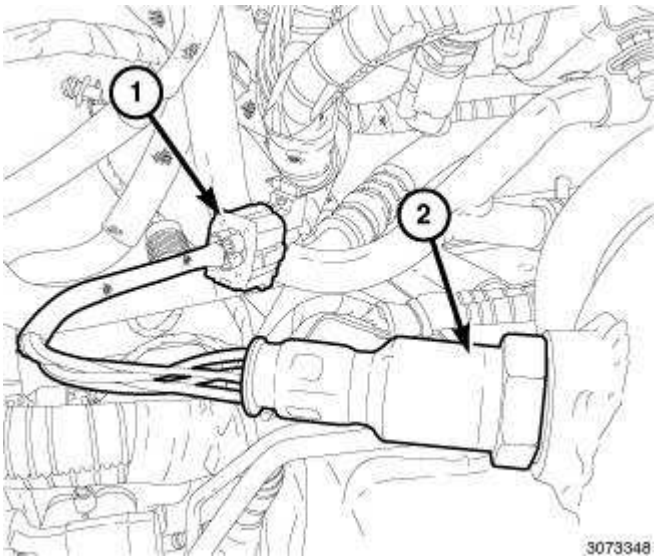

Fig. 81: Upstream Oxygen Sensor & Electrical Connector
Courtesy of CHRYSLER GROUP, LLC

NOTE: Left side shown in illustration, right side similar.

48. Connect both left and right upstream oxygen sensor (2) electrical connectors (1) to the main wire harness.

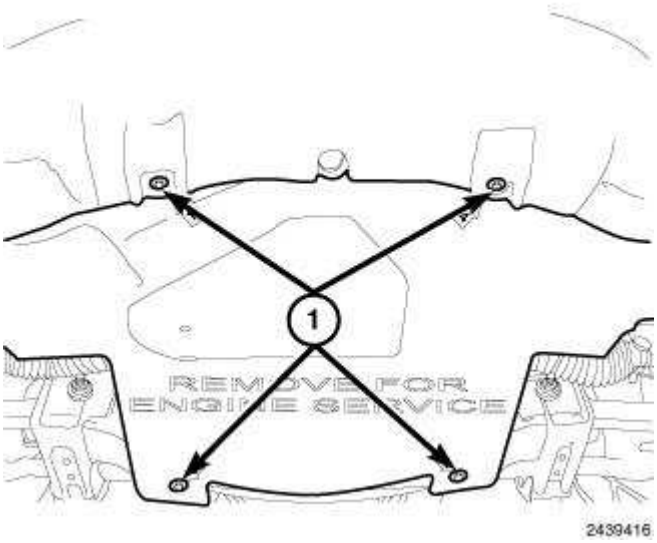

Fig. 82: Lower Splash Shield & Fasteners
Courtesy of CHRYSLER GROUP, LLC

49. Position the belly pan and install the retainers (1).
50. Lower the vehicle.

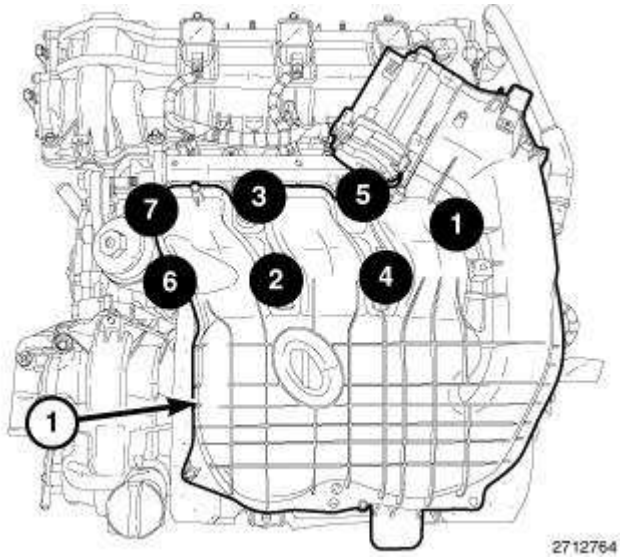

Fig. 83: Upper Intake Manifold Bolt Tightening Sequence
Courtesy of CHRYSLER GROUP, LLC

51. Install the upper intake manifold and insulator. Refer to **MANIFOLD, INTAKE, INSTALLATION** .

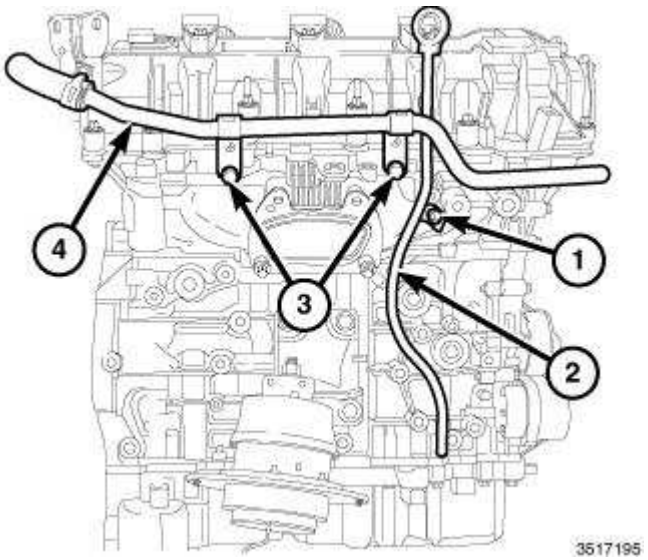

Fig. 84: Heater Core Inlet Tube, Oil Level Indicator & Bolts
Courtesy of CHRYSLER GROUP, LLC

52. Install the oil level indicator (2) with bolt (1) tightened to 12 N.m (106 in. lbs.).
53. Position the heater core inlet tube (4) and install two bolts (3) tightened to 12 N.m (106 in. lbs.).

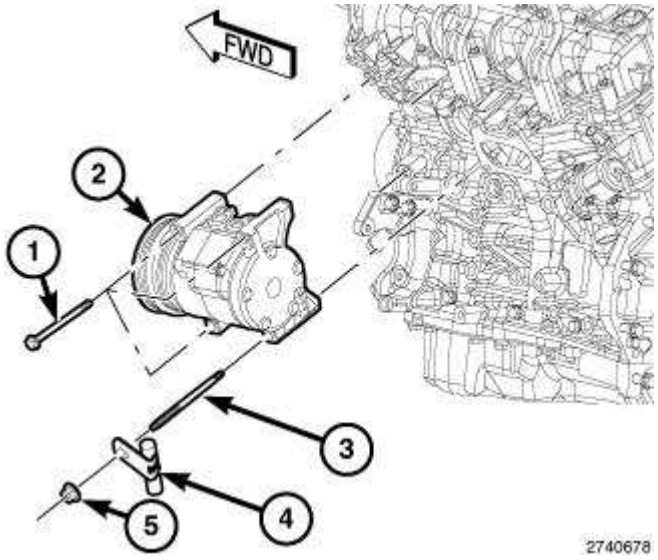

Fig. 85: A/C Compressor, Nut, Stud & Three Bolts
Courtesy of CHRYSLER GROUP, LLC

54. Install the A/C compressor (2). Refer to **COMPRESSOR, A/C, INSTALLATION** .

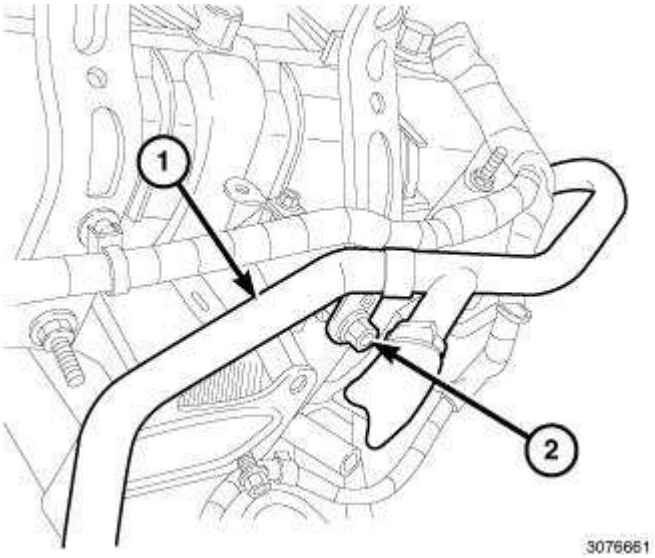

Fig. 86: Heater Core Return Tube Upper Support Bracket Retaining Nut & Tube
Courtesy of CHRYSLER GROUP, LLC

55. Position the heater core return tube (1), install the upper support bracket retaining nut (2) and tighten to 12 N.m (9 ft. lbs.).

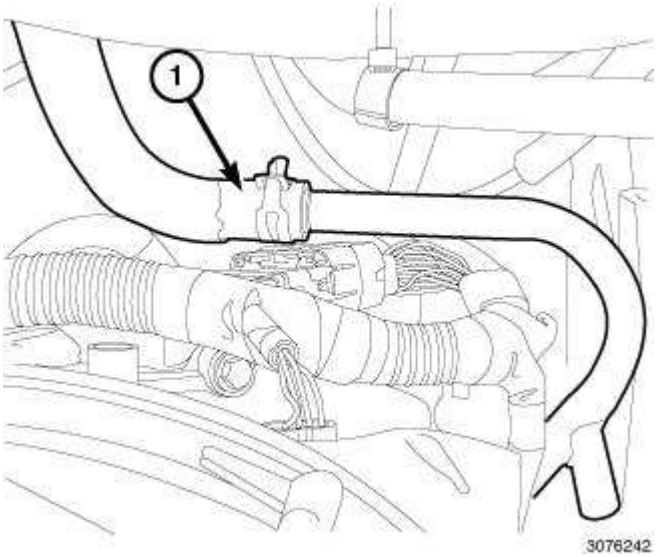

Fig. 87: Heater Core Return Hose
Courtesy of CHRYSLER GROUP, LLC

56. Connect the heater core return hose (1).

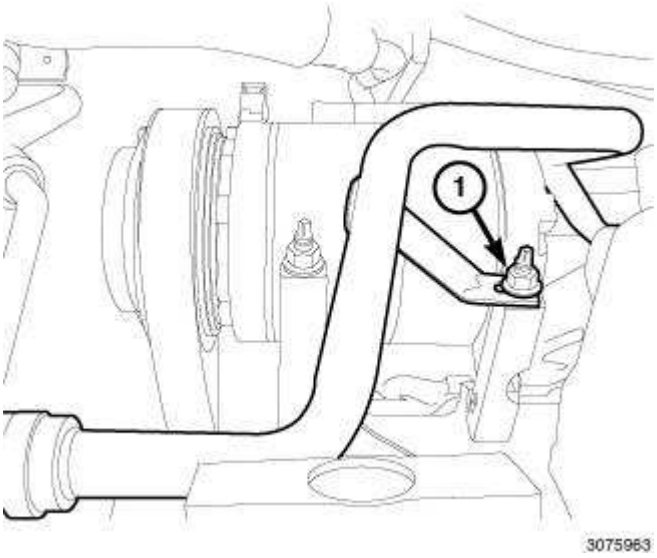

Fig. 88: Heater Core Return Tube Lower Support Bracket Retaining Nut
Courtesy of CHRYSLER GROUP, LLC

57. Position the heater core return tube lower support bracket onto the A/C lower retaining stud, install the retaining nut (1) and tighten to 12 N.m (9 ft. lbs.).

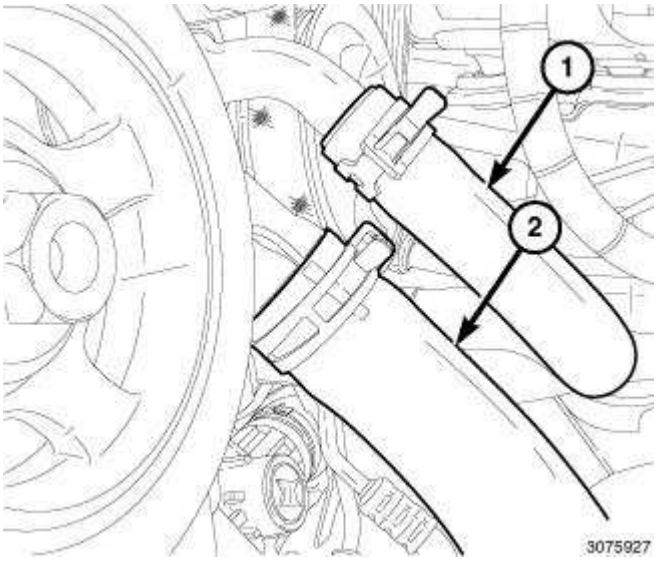

Fig. 89: Lower Heater Core Return Hose & Lower Radiator Hose
Courtesy of CHRYSLER GROUP, LLC

58. Install the lower heater core return hose (1) to the engine coolant pump housing.
59. Install the lower radiator hose (2) to the engine coolant pump housing.

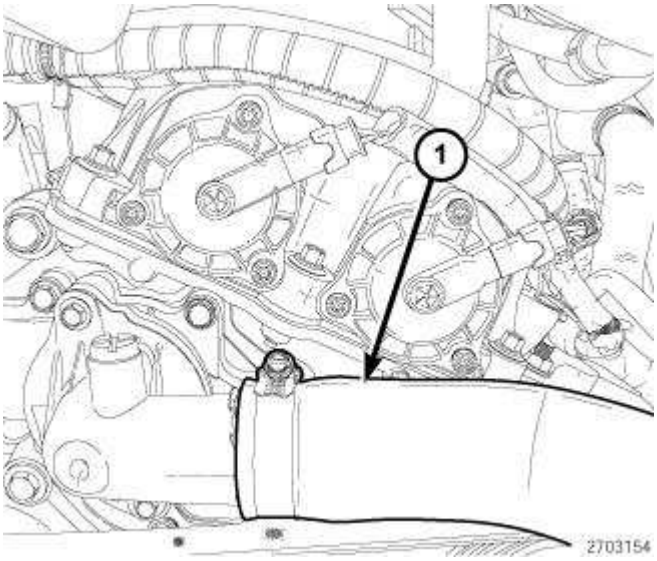

Fig. 90: Upper Radiator Hose
Courtesy of CHRYSLER GROUP, LLC

60. Install the upper radiator hose (1) to the engine thermostat housing.

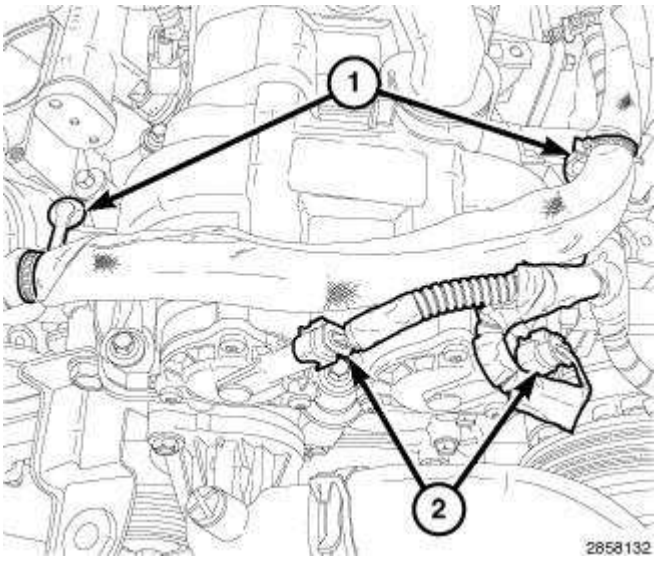

Fig. 91: Variable Valve Timing Solenoid Connectors & Wire Harness Retainers
Courtesy of CHRYSLER GROUP, LLC

61. Connect the electrical connectors (2) to the left variable valve timing solenoids.
62. Secure the two starter wire harness retainers (1) to the left cylinder head cover.

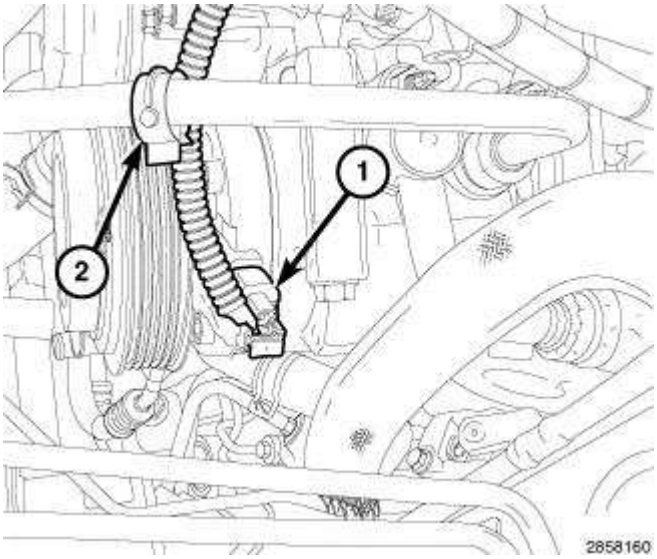

Fig. 92: A/C Compressor Electrical Connector & Wire Harness Retainer
Courtesy of CHRYSLER GROUP, LLC

63. Connect the A/C compressor electrical connector (1) and secure the wire harness retainer (2) to the A/C compressor discharge line.

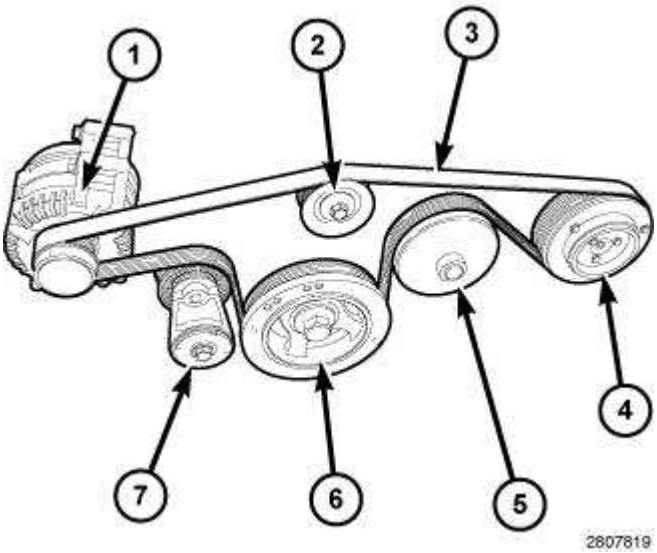

Fig. 93: Idler Pulley, Tensioner Arm, Belt, Idler, Tensioner & Belt Routing
Courtesy of CHRYSLER GROUP, LLC

64. Install the generator (1). Refer to **GENERATOR, INSTALLATION** .
65. Rotate the accessory drive belt tensioner (7) counterclockwise until it contacts the stop and install the accessory drive belt (3), then slowly rotate the tensioner into position.

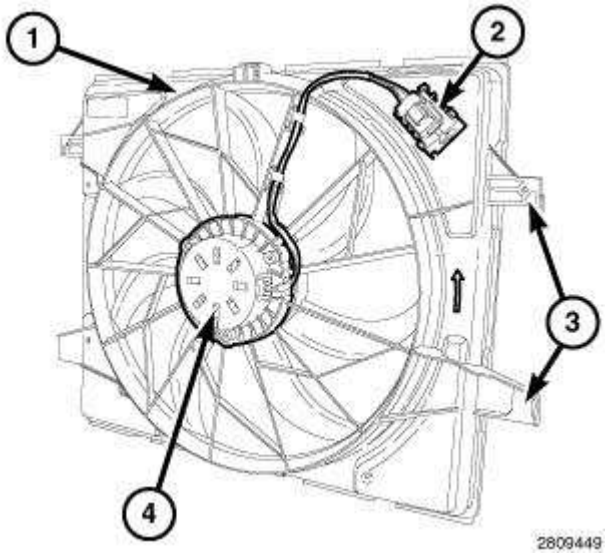

Fig. 94: Cooling Fan Module Components
Courtesy of CHRYSLER GROUP, LLC

66. Install the cooling fan module. Refer to **FAN, COOLING, INSTALLATION** .

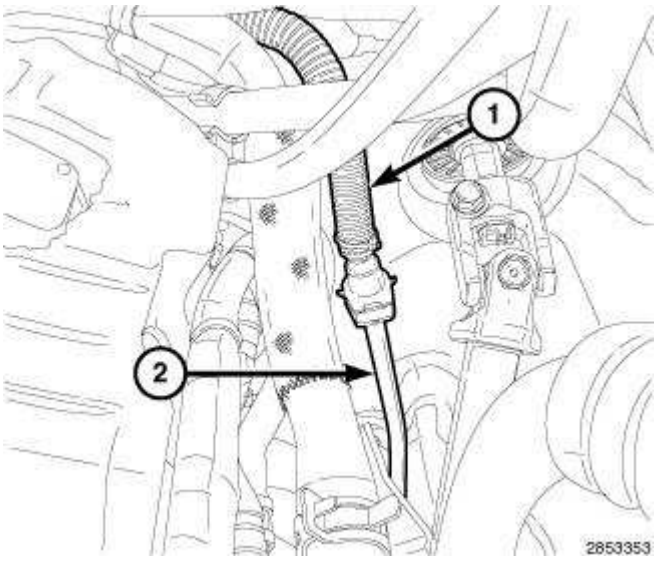

Fig. 95: Fuel Supply Hose At Underbody Fuel Supply Tube
Courtesy of CHRYSLER GROUP, LLC

67. Connect the fuel supply hose (1) to the underbody fuel tube (2). Refer to **FITTING, QUICK CONNECT, STANDARD PROCEDURE** .

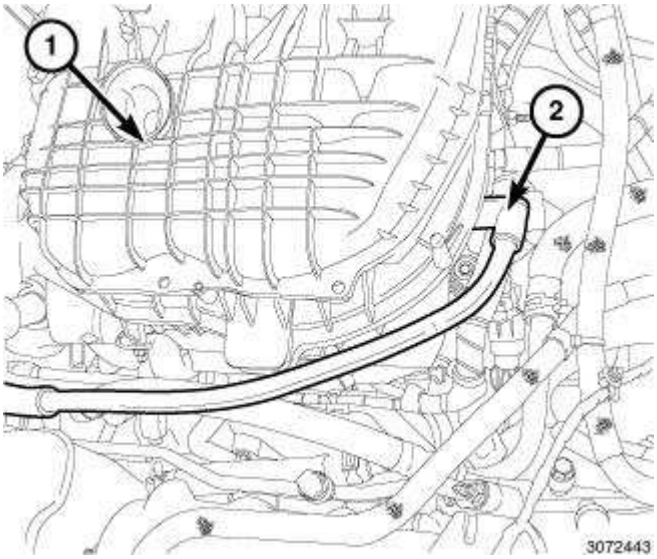

Fig. 96: Fresh Air Makeup Hose At Rear Of Intake Manifold
Courtesy of CHRYSLER GROUP, LLC

68. Connect the fresh air makeup hose (2) to the rear of the intake manifold (1).

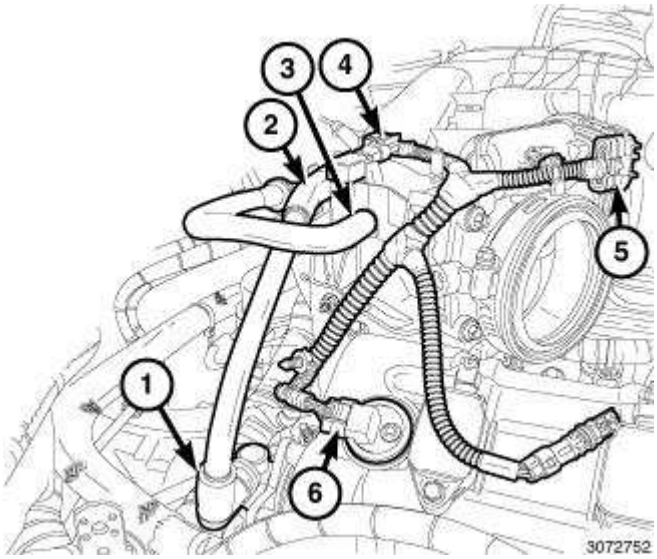

Fig. 97: PCV Valve, Intake Manifold, Brake Booster Vacuum Hose, MAP Sensor, ETC & CMP Sensor Electrical Connectors
Courtesy of CHRYSLER GROUP, LLC

69. Connect the electrical connector to the right Camshaft Position Sensor (CMP) (6).
70. Secure the main wire harness retainer to the right cylinder head cover mounting stud.
71. Connect the electrical connector to the Electronic Throttle Control (ETC) (5).
72. Connect the electrical connector to the Manifold Absolute Pressure (MAP) Sensor (4).
73. Connect the brake booster vacuum hose (3).
74. Connect the PCV hose to the PCV valve (1) and to the intake manifold (2).

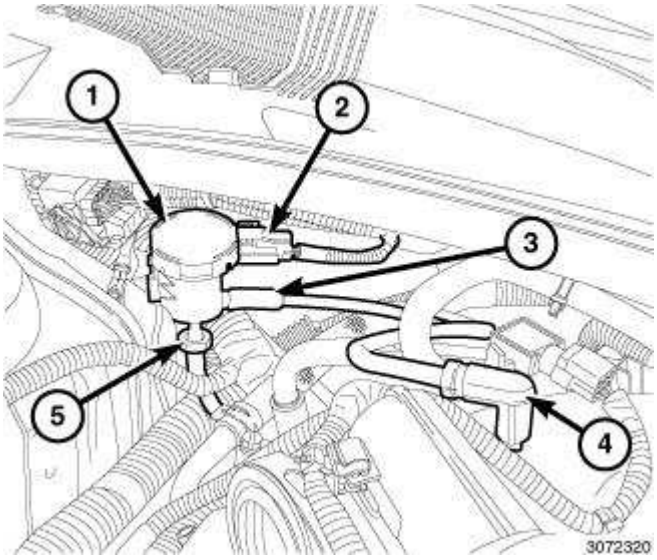

Fig. 98: EVAP Purge Solenoid, Electrical Connector & Vacuum Lines
Courtesy of CHRYSLER GROUP, LLC

75. Position the EVAP purge solenoid (1) vacuum line (4) and connect the vacuum line to the intake manifold.
76. Connect the other end of the vacuum line (3) to the EVAP purge solenoid (1).

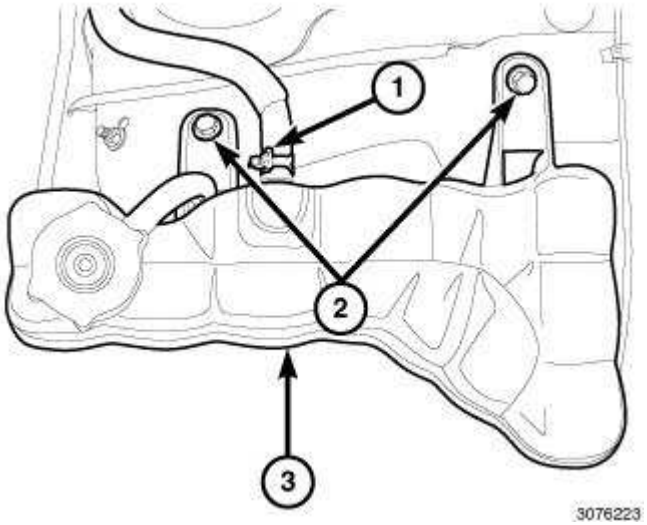

Fig. 99: Heater Core Purge Hose, Coolant Bottle Retaining Bolts & Coolant Bottle
Courtesy of CHRYSLER GROUP, LLC

77. Position the coolant bottle (3) into the engine compartment.
78. Install the coolant bottle retaining bolts (2) and tighten to 12 N.m (9 ft. lbs.).
79. Connect the heater core purge hose (1) to the coolant bottle.

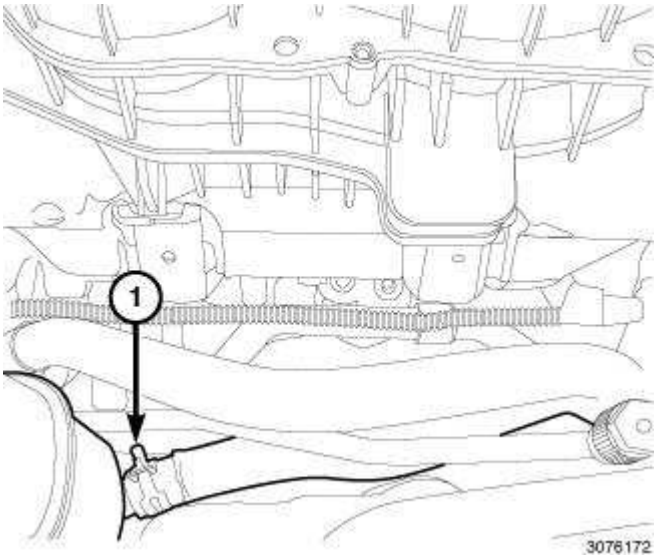

Fig. 100: Coolant Bottle Return Hose
Courtesy of CHRYSLER GROUP, LLC

80. Connect the coolant bottle return hose (1).

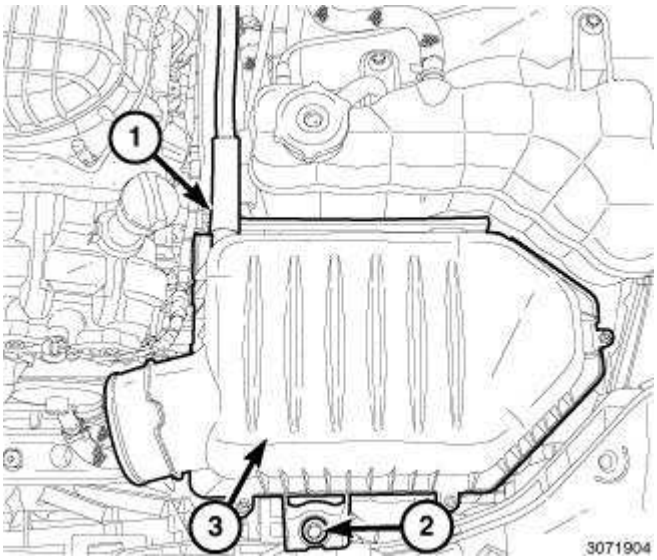

Fig. 101: Fresh Air Makeup Hose, Air Cleaner Housing & Bolt
Courtesy of CHRYSLER GROUP, LLC

81. Position the air cleaner housing (3) into the vehicle.
82. Install the air cleaner housing retaining bolt (2) and tighten to 12 N.m (9 ft. lbs.).
83. Connect the fresh air makeup hose (1) to the air cleaner housing.

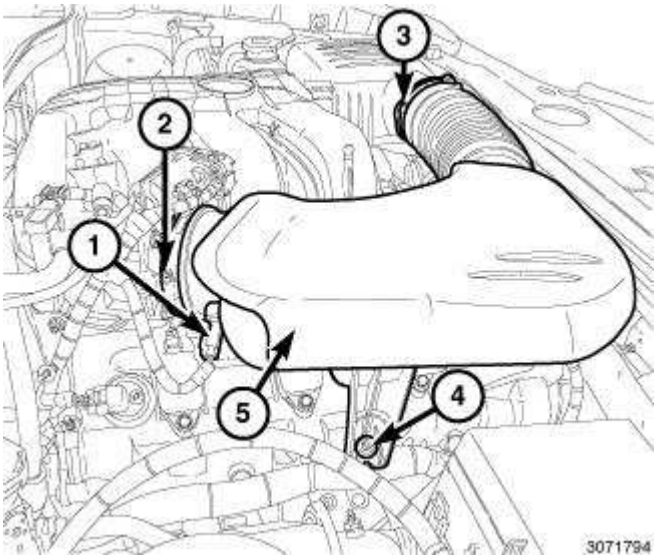

Fig. 102: Inlet Air Temperature (IAT) Sensor Electrical Connector, Air Inlet Hose Assembly & Fasteners
Courtesy of CHRYSLER GROUP, LLC

84. Position the air inlet hose assembly (5) onto the throttle body and the air cleaner housing.
85. Secure the air inlet hose assembly retaining grommet onto the ball stud (4).
86. Tighten the clamp at the air cleaner housing (3) to 5 N.m (44 in. lbs.).
87. Tighten the clamp (2) at the throttle body to 5 N.m (44 in. lbs.).
88. Connect the Inlet Air Temperature (IAT) sensor electrical connector (1).

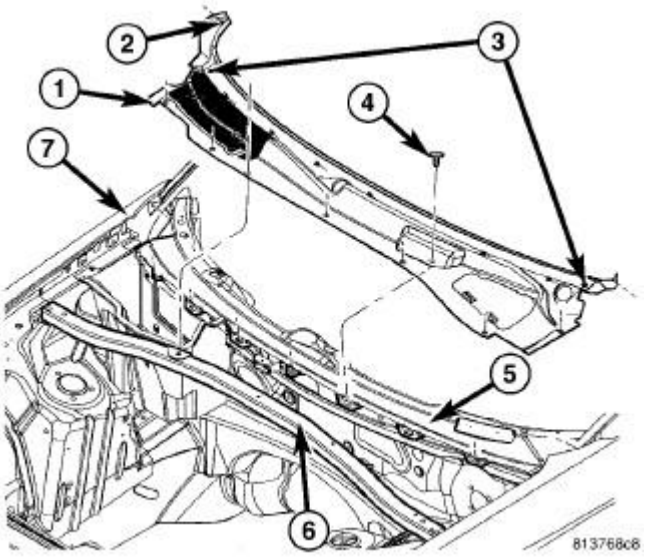

Fig. 103: Removing/Installing Cowl Panel
Courtesy of CHRYSLER GROUP, LLC

89. Install the strut tower support (6).

90. Install the cowl panel cover (2). Refer to **COVER, COWL PANEL, INSTALLATION** .
91. Install the hood. Refer to **HOOD, INSTALLATION** .

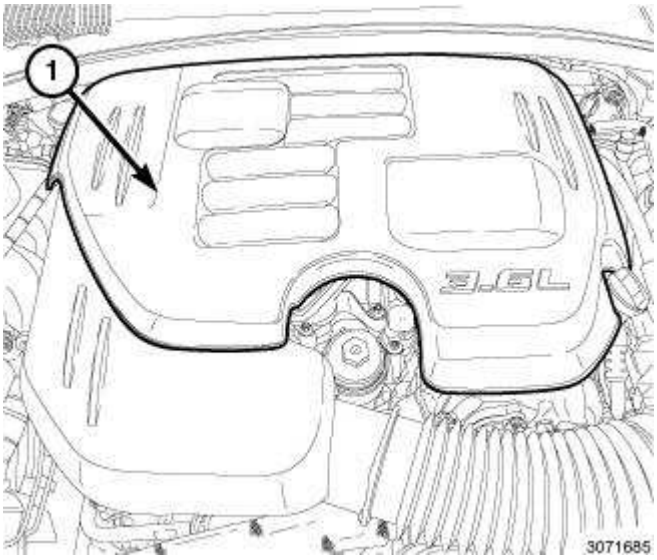

Fig. 104: Engine Cover
Courtesy of CHRYSLER GROUP, LLC

92. If removed, install the oil filter and fill the engine crankcase with the specified type and amount of engine oil. Refer to **CAPACITIES AND RECOMMENDED FLUIDS, SPECIFICATIONS** .
93. Fill the cooling system with the specified type and amount of engine coolant. Refer to **STANDARD PROCEDURE** .
94. Perform the Refrigerant System Charge procedure. Refer to **PLUMBING, STANDARD PROCEDURE** .
95. Position the engine cover (1) and secure the retaining grommets onto the ball studs.

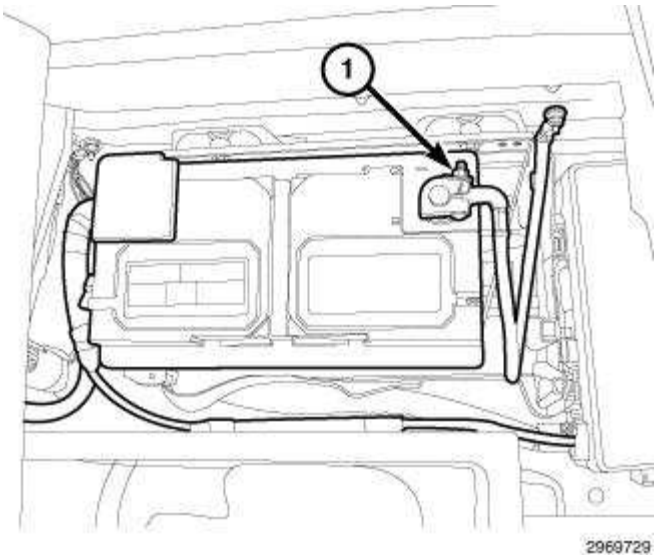

Fig. 105: Negative Battery Cable

Courtesy of CHRYSLER GROUP, LLC

96. Connect the negative battery cable and tighten nut to 5 N.m (45 in. lbs.).
97. Run the engine until it reaches normal operating temperature and check for leaks.

NOTE: The Cam/Crank Variation Relearn procedure must be performed using the scan tool anytime there has been a repair/replacement made to a powertrain system, for example: flywheel, valvetrain, camshaft and/or crankshaft sensors or components.

SPECIAL TOOLS

SPECIAL TOOLS

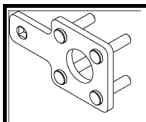	10198 - Holder, Vibration Damper (Originally Shipped In Kit Number(s) 10223.)
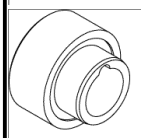	10199 - Installer, Crankshaft Front Oil Seal (Originally Shipped In Kit Number(s) 10223.)
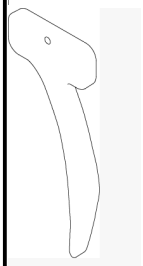	10200-1 - Holder, Timing Chain, Left Side
	10200-3 - Pin
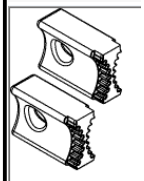	10202 - Locks, Camshaft/Phaser
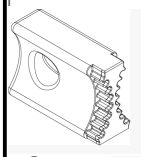	10202-1 - Lock, Camshaft/Phaser, Right Side
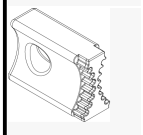	10202-2 - Lock, Camshaft/Phaser, Left Side
	10224 - Adapter, Valve Spring

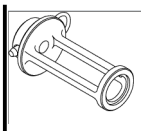	(Originally Shipped In Kit Number(s) 10223.)
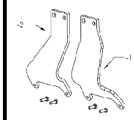	10242-1 - Brackets, Engine Lifting, Left Side (Originally Shipped In Kit Number(s) 10223.)
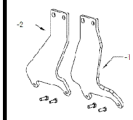	10242-2 - Brackets, Engine Lifting, Right Side (Originally Shipped In Kit Number(s) 10223.)
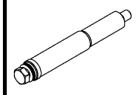	10255 - Installer, Spark Plug Tube
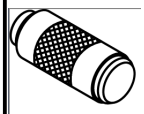	10256 - Installer, Cam Installer, Cam Sensor/Spark Plug Tube Seal (Originally Shipped In Kit Number(s) 10256.)
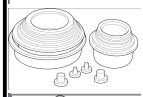	10368 - Set, Universal Protective Cap
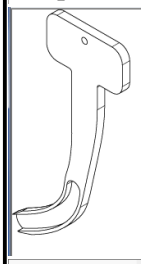	10369 - Holder, Timing Chain
	7700-A - Tester, Cooling System
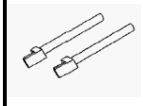	8189 - Guide Pins (Originally Shipped In Kit Number(s) 8180, 8180CC, 8263, 8263CC.)
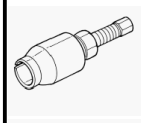	8511 - Remover, Seal (Originally Shipped In Kit Number(s) 8283, 8283CC, 8527, 8527CC, 8575, 8575CC, 9975.)
	8514 - Pins, Tensioner (Originally Shipped In Kit Number(s) 8283, 8283CC, 8527, 8527CC, 8575, 8575CC, 9975.)
	C-119 - Cylinder Indicator
	C-3292A - Gauge, Pressure
	C-3339A - Set, Dial Indicator (Originally Shipped In Kit Number(s) 9202.)

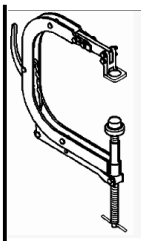	C-3422-D - Compressor, Valve Spring
	C-3685-A - Bloc-Chek Kit
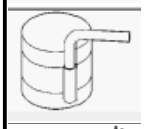	C-385 - Compressor, Piston
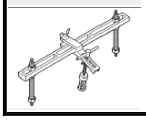	MD998772A - Compressor, Valve Spring (Originally Shipped In Kit Number(s) 8678, 8853, 8854.)

AIR INTAKE SYSTEM

AIR CLEANER

REMOVAL

REMOVAL

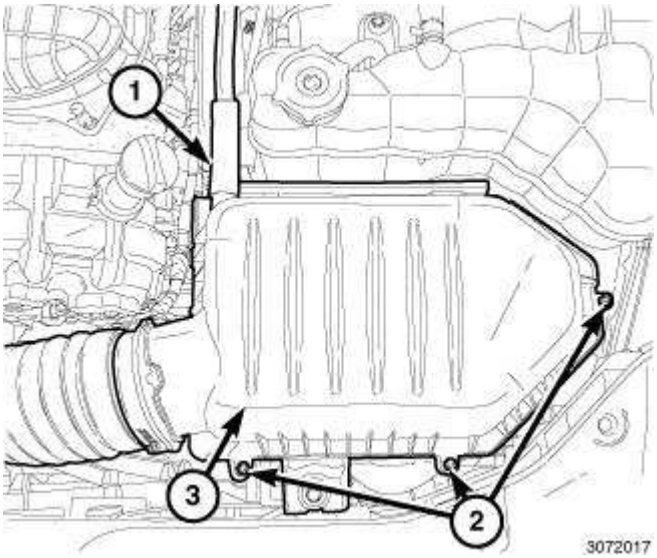

Fig. 106: Fresh Air Makeup Hose, Air Cleaner Housing & Retaining Bolts
Courtesy of CHRYSLER GROUP, LLC

1. Remove the fresh air makeup hose (1) at the air cleaner housing (3).
2. Remove the air cleaner housing cover retaining bolts (2).

CAUTION: Do not use compressed air to clean out the air cleaner housing without first covering the air inlet to the throttle body. Dirt or foreign objects could enter the intake manifold causing engine damage.

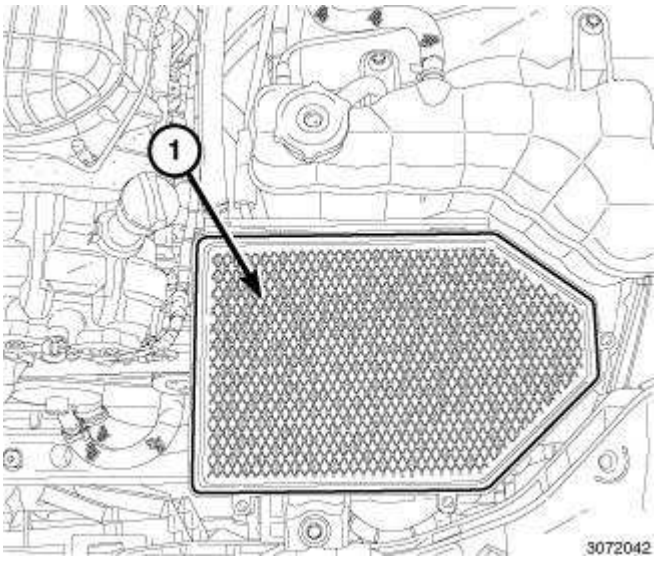

Fig. 107: Air Cleaner Element
Courtesy of CHRYSLER GROUP, LLC

3. Lift the air cleaner housing cover off the housing and position aside.
4. Remove the air cleaner element (1).
5. Remove any dirt or debris from the bottom of the air cleaner housing.

INSTALLATION

INSTALLATION

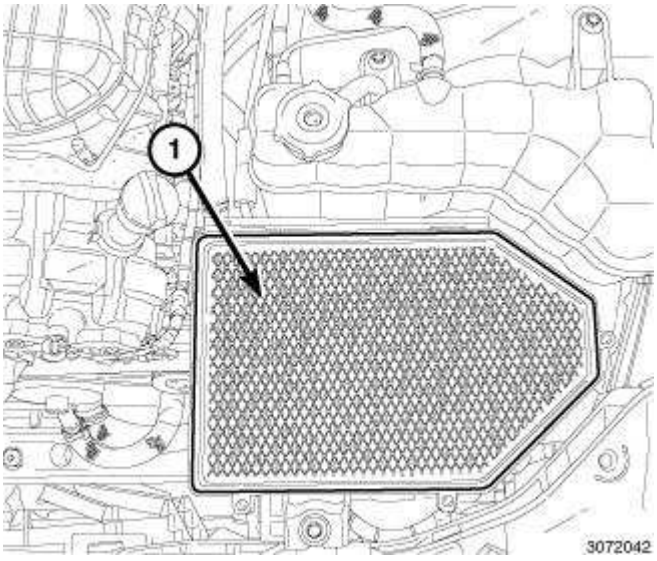

Fig. 108: Air Cleaner Element

Courtesy of CHRYSLER GROUP, LLC

1. Install a new air cleaner element (1) into the air cleaner housing.
2. Position the air cleaner housing cover so that the alignment tabs insert into the lower housing.

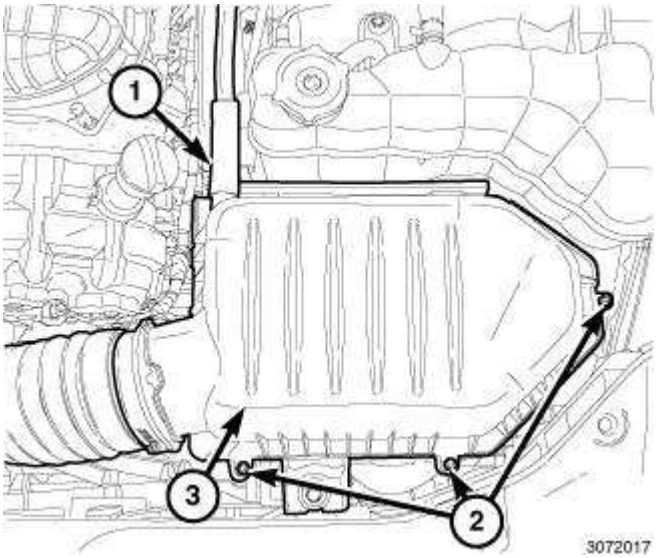

Fig. 109: Fresh Air Makeup Hose, Air Cleaner Housing & Retaining Bolts
Courtesy of CHRYSLER GROUP, LLC

3. Seat the cover (3) onto the housing and install the retaining bolts (2) and tighten to 4 N.m (35 in. lbs.).
4. Connect the fresh air makeup hose (1) onto the air cleaner housing.

BODY, AIR CLEANER

REMOVAL

REMOVAL

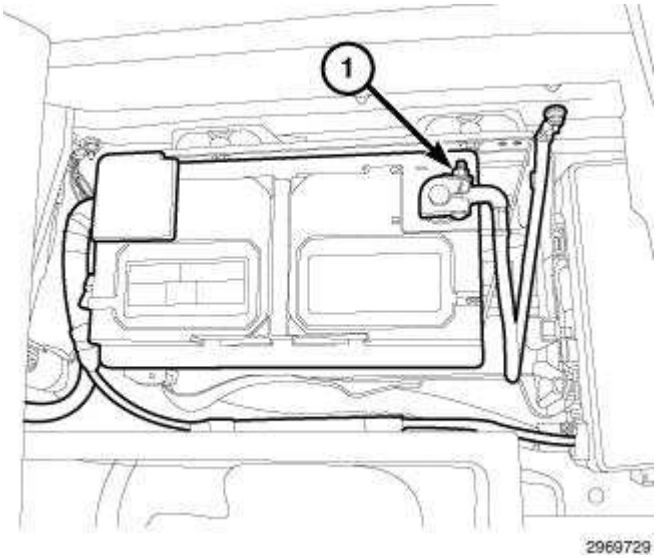

Fig. 110: Negative Battery Cable
Courtesy of CHRYSLER GROUP, LLC

1. Disconnect and isolate the negative battery cable.

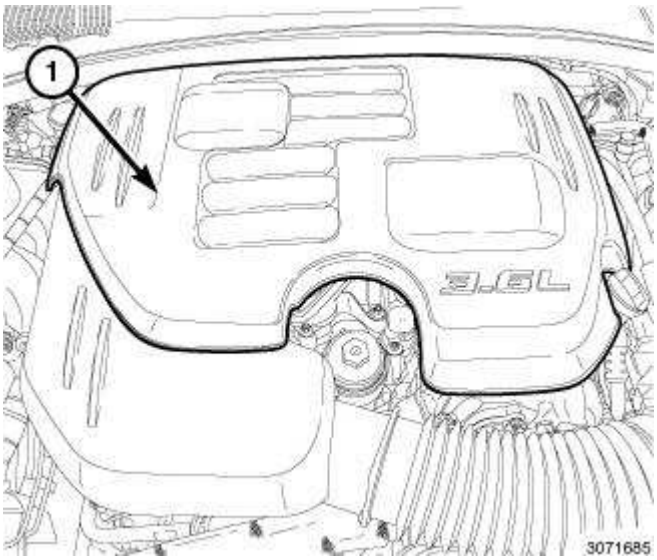

Fig. 111: Engine Cover
Courtesy of CHRYSLER GROUP, LLC

2. Lift the engine cover retaining grommets off the ball studs and remove the engine cover (1).

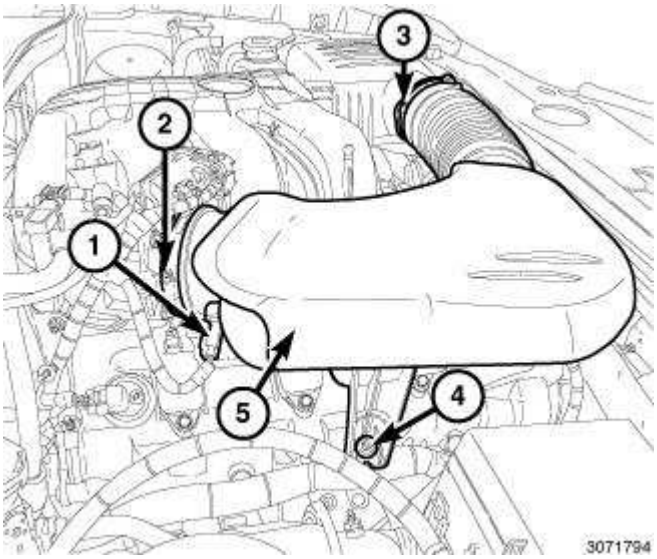

Fig. 112: Inlet Air Temperature (IAT) Sensor Electrical Connector, Air Inlet Hose Assembly & Fasteners
Courtesy of CHRYSLER GROUP, LLC

3. Disconnect the electrical connector (1) from the Inlet Air Temperature (IAT) sensor.
4. Loosen the clamp (2) at the throttle body.
5. Loosen the clamp (3) at the air cleaner housing.
6. Lift the air inlet hose assembly retaining grommet off the ball stud (4).
7. Remove the air inlet hose assembly (5).

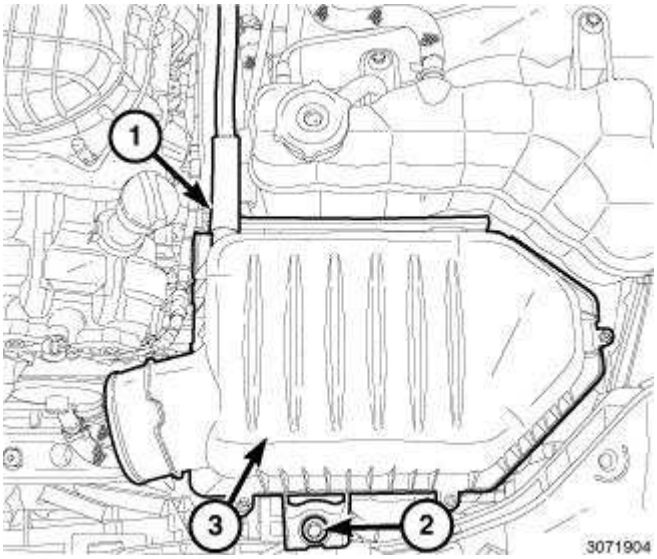

Fig. 113: Fresh Air Makeup Hose, Air Cleaner Housing & Bolt
Courtesy of CHRYSLER GROUP, LLC

8. Disconnect the fresh air makeup hose (1) from the air cleaner housing.
9. Remove the air cleaner housing retaining bolt (2).

10. Remove the air cleaner housing (3).

INSTALLATION

INSTALLATION

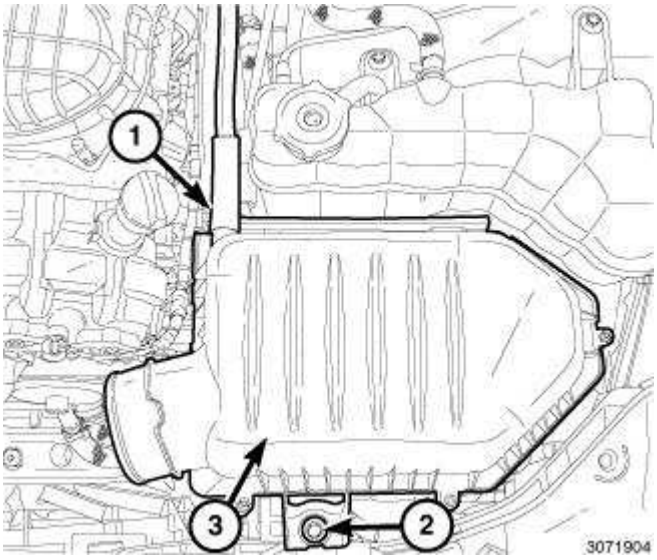

Fig. 114: Fresh Air Makeup Hose, Air Cleaner Housing & Bolt
Courtesy of CHRYSLER GROUP, LLC

1. Position the air cleaner housing (3) into the vehicle.
2. Install the air cleaner housing retaining bolt (2) and tighten to 4 N.m (35 in. lbs.).
3. Connect the fresh air makeup hose (1) onto the air cleaner housing.

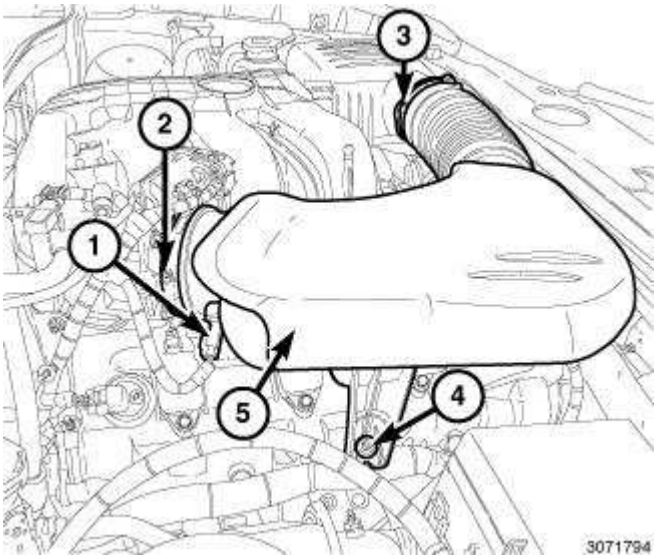

Fig. 115: Inlet Air Temperature (IAT) Sensor Electrical Connector, Air Inlet Hose Assembly & Fasteners
Courtesy of CHRYSLER GROUP, LLC

4. Position the air inlet hose assembly (5), connect the air inlet hose to the throttle body and the air cleaner housing.
5. Secure the air inlet hose assembly retaining grommet onto the ball stud (4).
6. Tighten the clamp (3) at the air cleaner housing to 4 N.m (35 in. lbs.).
7. Tighten the clamp (2) at the throttle body to 4 N.m (35 in. lbs.).
8. Connect the electrical connector (1) to the Inlet Air Temperature (IAT) sensor.

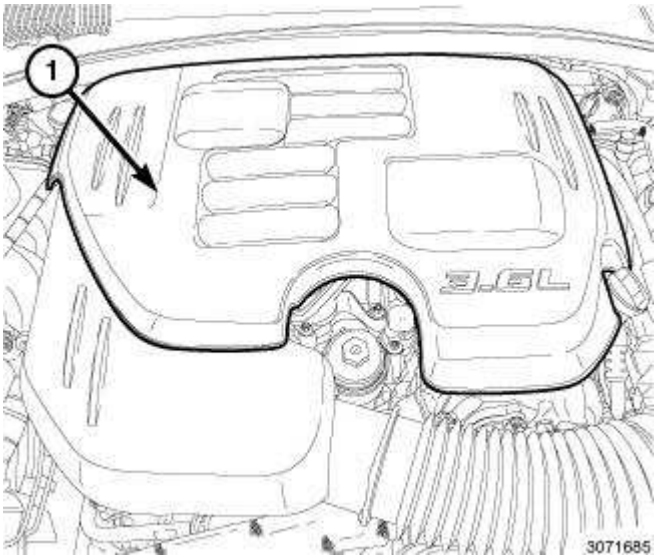

Fig. 116: Engine Cover
Courtesy of CHRYSLER GROUP, LLC

9. Position the engine cover (1) and secure the retaining grommets to the ball studs.

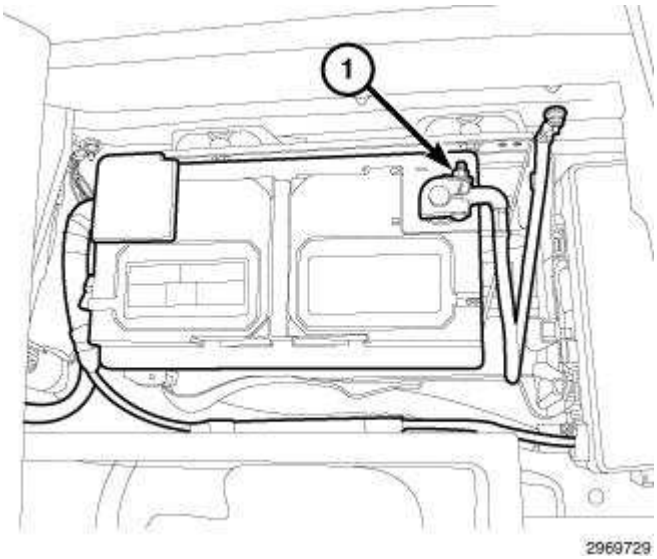

Fig. 117: Negative Battery Cable
Courtesy of CHRYSLER GROUP, LLC

10. Connect the negative battery cable and tighten nut (1) to 5 N.m (45 in. lbs.).

CYLINDER HEAD

DESCRIPTION

DESCRIPTION

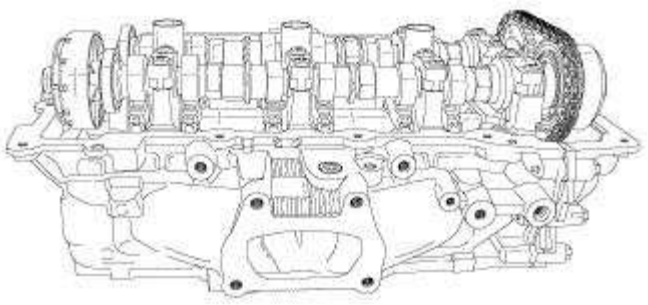

Fig. 118: Aluminum Cylinder Head
Courtesy of CHRYSLER GROUP, LLC

The 3.6L aluminum cylinder heads are a unique design with left and right castings. The exhaust manifolds are integrated into the cylinder heads. The cylinder head features four valves per cylinder with pressed in powdered metal valve guides. The valve guides are not serviceable. The DOHC valvetrain uses roller rocker arms with hydraulic lifters. The cylinder head's camshaft bearing caps are made of powdered metal and the location and direction of each cap is marked on the side of the caps. The spark plug tubes are pressed into the cylinder heads and sealed in place. The tubes are a thin wall design and caution must be taken when working in the spark plug tube area.

DIAGNOSIS AND TESTING

CYLINDER HEAD GASKET

A cylinder head gasket leak can be located between adjacent cylinders or between a cylinder and the adjacent water jacket.

Possible indications of the cylinder head gasket leaking between adjacent cylinders are:

- Loss of engine power
- Engine misfiring
- Poor fuel economy

Possible indications of the cylinder head gasket leaking between a cylinder and an adjacent water jacket are:

- Engine overheating
- Loss of coolant
- Excessive steam (white smoke) emitting from exhaust
- Coolant foaming

CYLINDER-TO-CYLINDER LEAKAGE TEST

To determine if an engine cylinder head gasket is leaking between adjacent cylinders, follow the procedures in Cylinder Compression Pressure Test. Refer to **CYLINDER COMPRESSION PRESSURE LEAKAGE**. An engine cylinder head gasket leaking between adjacent cylinders will result in approximately a 50 - 70% reduction in compression pressure.

CYLINDER-TO-WATER JACKET LEAKAGE TEST

WARNING: USE EXTREME CAUTION WHEN THE ENGINE IS OPERATING WITH COOLANT PRESSURE CAP REMOVED.

VISUAL TEST METHOD

With the engine cool, remove the coolant pressure cap. Start the engine and allow it to warm up until thermostat opens.

If a large combustion/compression pressure leak exists, bubbles will be visible in the coolant.

COOLING SYSTEM TESTER METHOD

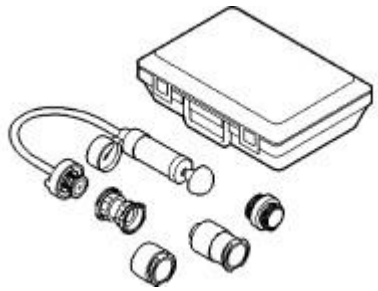

Fig. 119: Cooling System Pressure Tester - 7700-A
Courtesy of CHRYSLER GROUP, LLC

WARNING: WITH THE COOLING SYSTEM TESTER IN PLACE, PRESSURE WILL BUILD UP FAST. EXCESSIVE PRESSURE BUILT UP BY CONTINUOUS ENGINE OPERATION MUST BE RELEASED TO A SAFE PRESSURE POINT. NEVER PERMIT THE PRESSURE TO EXCEED 138 kPa (20 psi).

Install Cooling System Tester (special tool #7700-A, Tester, Cooling System) or equivalent to

pressure cap neck. Start the engine and observe the tester's pressure gauge. If gauge pulsates with every power stroke of a cylinder a combustion pressure leak is evident.

CHEMICAL TEST METHOD



Fig. 120: Bloc-Chek Kit C-3685-A
Courtesy of CHRYSLER GROUP, LLC

Combustion leaks into the cooling system can also be checked by using Bloc-Chek Kit (special tool #C-3685-A, Bloc-Chek Kit) or equivalent. Perform test following the procedures supplied with the tool kit.

HYDRAULIC LASH ADJUSTER

A tappet-like noise may be produced from several items. Check the following items.

1. Engine oil level too high or too low. This may cause aerated oil to enter the adjusters and cause them to be spongy.
2. Insufficient running time after rebuilding cylinder head. Low speed running up to 1 hour may be required.
3. Turn engine off and let set for a few minutes before restarting. Repeat this several times after engine has reached normal operating temperature.
4. Low oil pressure.
5. The oil restrictor in cylinder head gasket or the oil passage to the cylinder head is plugged with debris.
6. Air ingested into oil due to broken or cracked oil pump pick up.
7. Worn valve guides.
8. Rocker arm ears contacting valve spring retainer.
9. Rocker arm loose, adjuster stuck or at maximum extension and still leaves lash in the system.
10. Oil leak or excessive cam bore wear in cylinder head.
11. Faulty lash adjuster.

- Check lash adjusters for "sponginess" while installed in cylinder head and cam on camshaft at base circle. Depress part of rocker arm over adjuster. Normal adjusters should feel firm when pressed quickly. When pressed very slowly, lash adjusters should collapse.
- Remove suspected lash adjusters, and replace.
- Before installation, make sure adjusters are full of oil. This can be verified by little plunger travel when lash adjuster is depressed quickly.

REMOVAL

LEFT

CAUTION: The magnetic timing wheels (1) must not come in contact with magnets (pickup tools, trays, etc.) or any other strong magnetic field. This will destroy the timing wheels ability to correctly relay camshaft position to the camshaft position sensor.

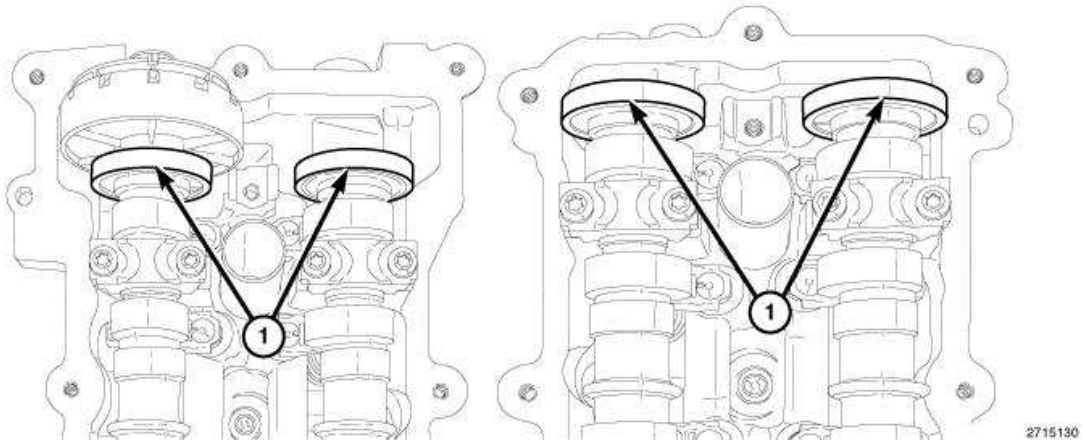

Fig. 121: Magnetic Timing Wheels
Courtesy of CHRYSLER GROUP, LLC

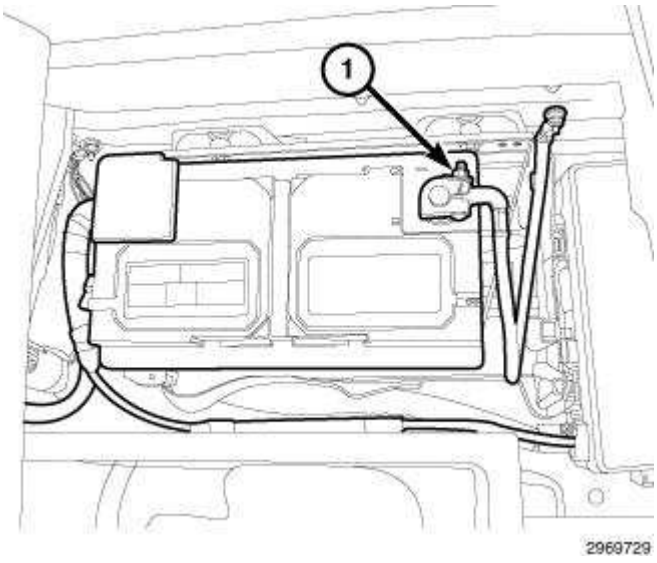

Fig. 122: Negative Battery Cable
Courtesy of CHRYSLER GROUP, LLC

1. Perform the fuel pressure release procedure. Refer to **FUEL DELIVERY, GAS, STANDARD PROCEDURE** .
2. Disconnect and isolate the negative battery cable (1).

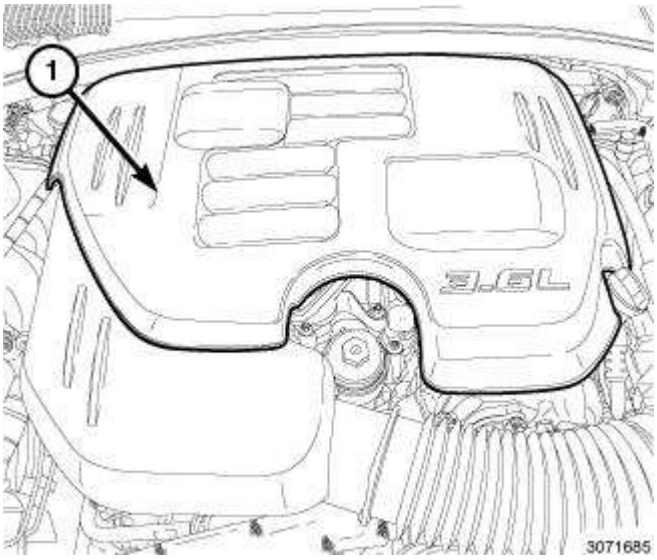

Fig. 123: Engine Cover
Courtesy of CHRYSLER GROUP, LLC

3. Lift the engine cover retaining grommets off the ball studs and remove the engine cover (1).

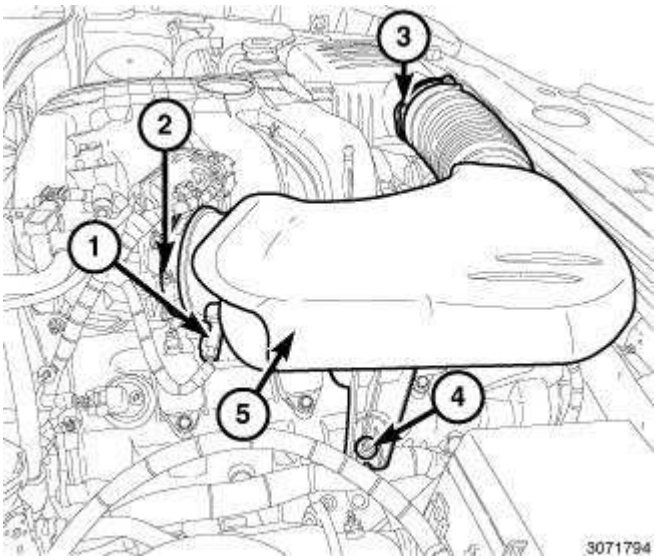

Fig. 124: Inlet Air Temperature (IAT) Sensor Electrical Connector, Air Inlet Hose Assembly & Fasteners
Courtesy of CHRYSLER GROUP, LLC

4. Disconnect the electrical connector (1) from the Inlet Air Temperature (IAT) sensor.
5. Loosen the clamp (2) at the throttle body.
6. Loosen the clamp (3) at the air cleaner housing.
7. Lift the air inlet hose assembly retaining grommet off the ball stud (4).
8. Remove the air inlet hose assembly (5).

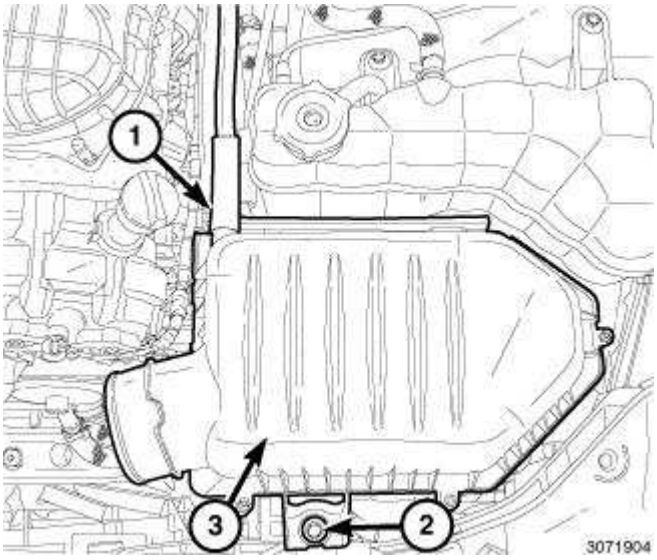

Fig. 125: Fresh Air Makeup Hose, Air Cleaner Housing & Bolt
Courtesy of CHRYSLER GROUP, LLC

9. Disconnect the fresh air makeup hose (1) from the air cleaner housing.
10. Remove the air cleaner housing retaining bolt (2).
11. Remove the air cleaner housing (3).

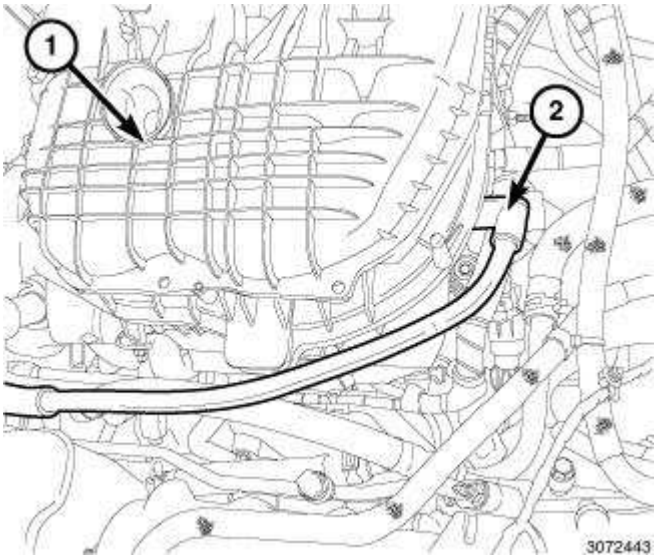

Fig. 126: Fresh Air Makeup Hose At Rear Of Intake Manifold
Courtesy of CHRYSLER GROUP, LLC

12. Remove the fresh air makeup hose (2) from the rear of the intake manifold (1).

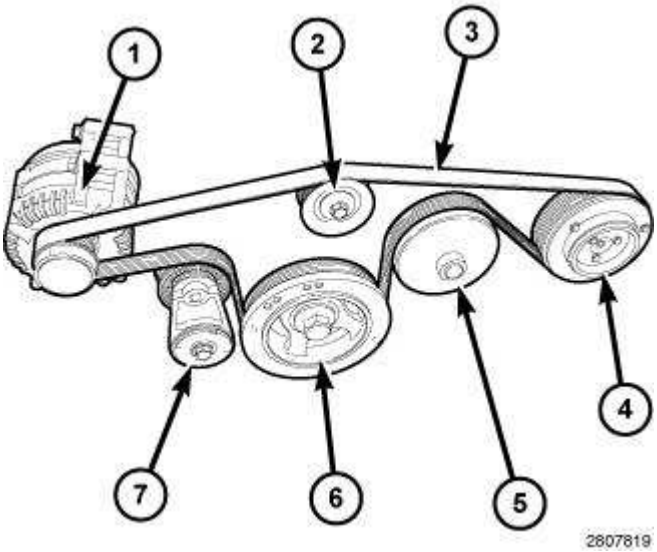

Fig. 127: Idler Pulley, Tensioner Arm, Belt, Idler, Tensioner & Belt Routing
Courtesy of CHRYSLER GROUP, LLC

13. Rotate the accessory drive belt tensioner (7) counterclockwise until it contacts the stop and remove the accessory drive belt (3), then slowly rotate the tensioner into the freearm position.

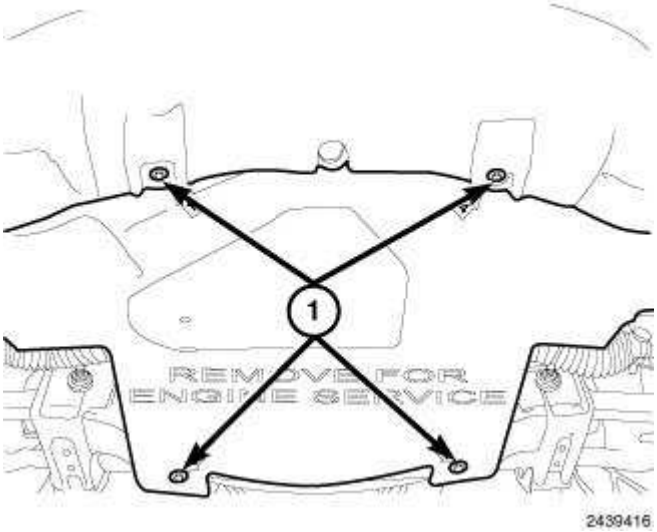

Fig. 128: Lower Splash Shield & Fasteners
Courtesy of CHRYSLER GROUP, LLC

14. Raise and support the vehicle. Refer to **HOISTING, STANDARD PROCEDURE** .
15. Remove the belly pan retainers (1) and remove the belly pan.
16. Drain the cooling system. Refer to **STANDARD PROCEDURE** .
17. Drain the engine oil. Refer to **STANDARD PROCEDURE**.

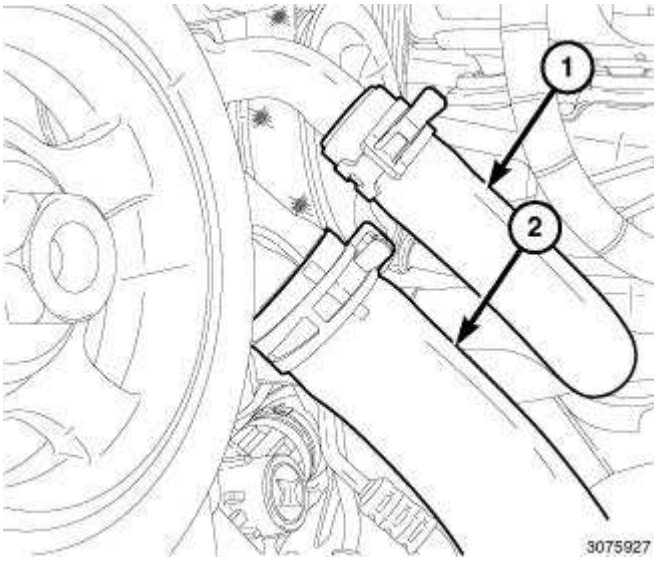

Fig. 129: Lower Heater Core Return Hose & Lower Radiator Hose
Courtesy of CHRYSLER GROUP, LLC

18. Remove the lower heater core return hose (1) from the engine coolant pump housing.

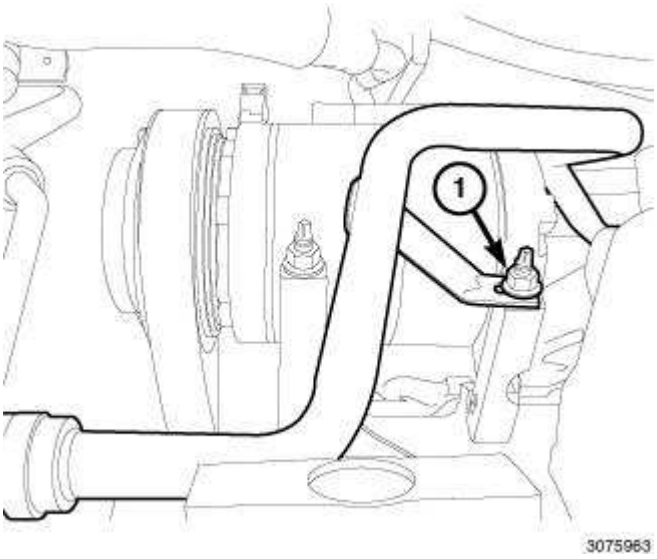

Fig. 130: Heater Core Return Tube Lower Support Bracket Retaining Nut
Courtesy of CHRYSLER GROUP, LLC

19. Remove the heater core return tube lower support bracket retaining nut (1).

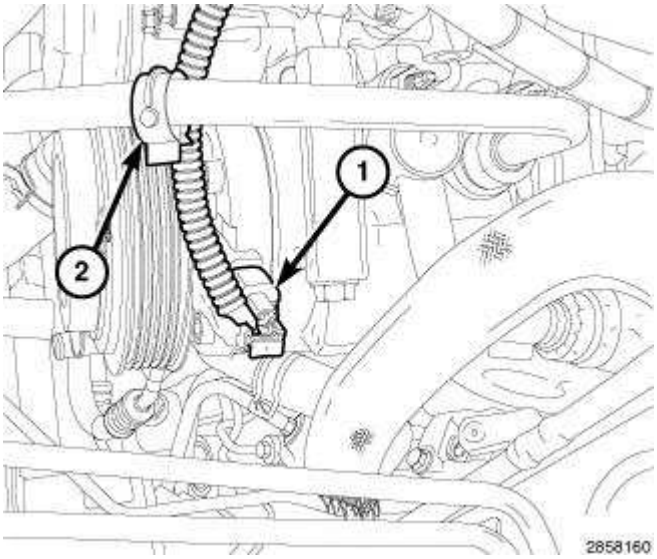

Fig. 131: A/C Compressor Electrical Connector & Wire Harness Retainer
Courtesy of CHRYSLER GROUP, LLC

20. Disconnect the A/C compressor electrical connector (1) and disengage the wire harness retainer (2) from the A/C compressor discharge line.

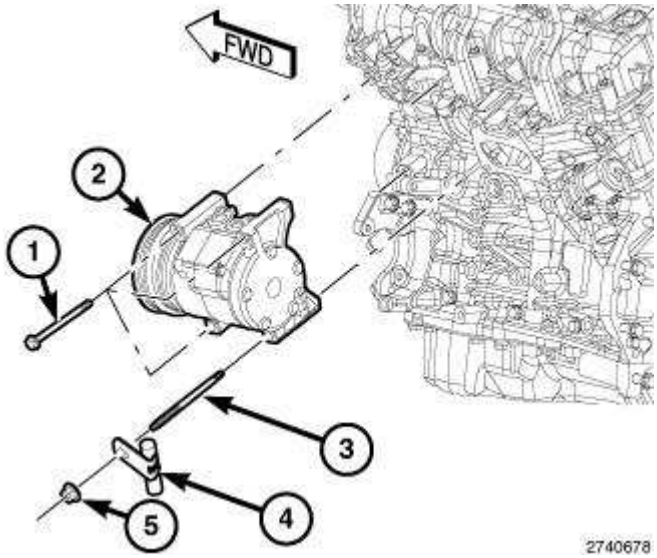

Fig. 132: A/C Compressor, Nut, Stud & Three Bolts
Courtesy of CHRYSLER GROUP, LLC

21. Remove the A/C compressor lower retaining studs (3).
22. Lower the vehicle.
23. Remove the A/C compressor upper retaining bolts (1) and reposition the A/C compressor aside (2).

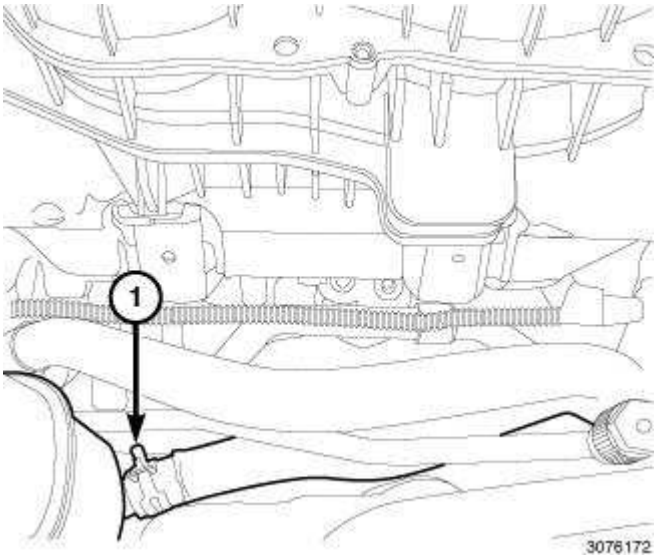

Fig. 133: Coolant Bottle Return Hose
Courtesy of CHRYSLER GROUP, LLC

24. Remove the coolant bottle return hose (1).

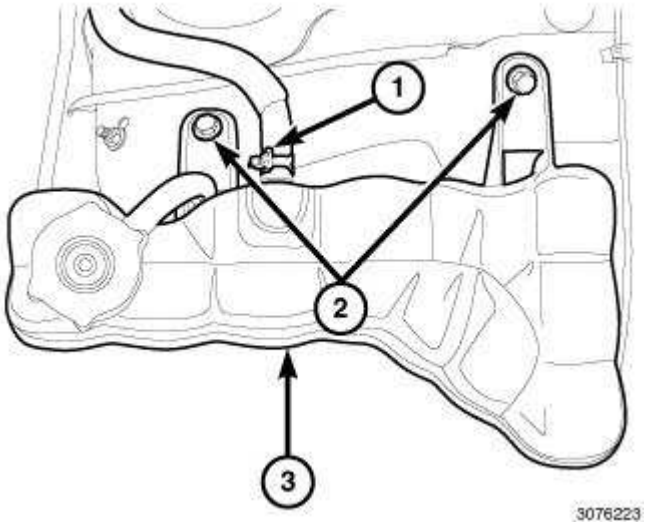

Fig. 134: Heater Core Purge Hose, Coolant Bottle Retaining Bolts & Coolant Bottle
Courtesy of CHRYSLER GROUP, LLC

25. Remove the heater core purge hose (1) from the coolant bottle.
26. Remove the coolant bottle retaining bolts (2).
27. Remove the coolant bottle (3).

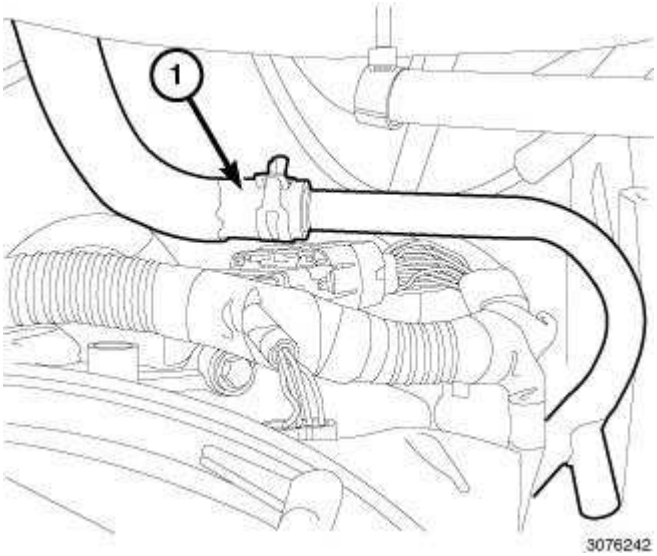

Fig. 135: Heater Core Return Hose
Courtesy of CHRYSLER GROUP, LLC

28. Disconnect the heater core return hose (1).

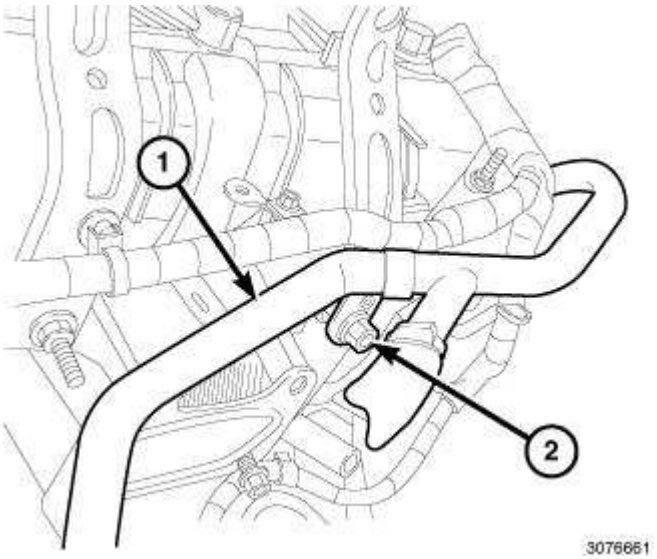

Fig. 136: Heater Core Return Tube Upper Support Bracket Retaining Nut & Tube
Courtesy of CHRYSLER GROUP, LLC

29. Remove the heater core return tube upper support bracket retaining nut (2) and remove the tube (1).

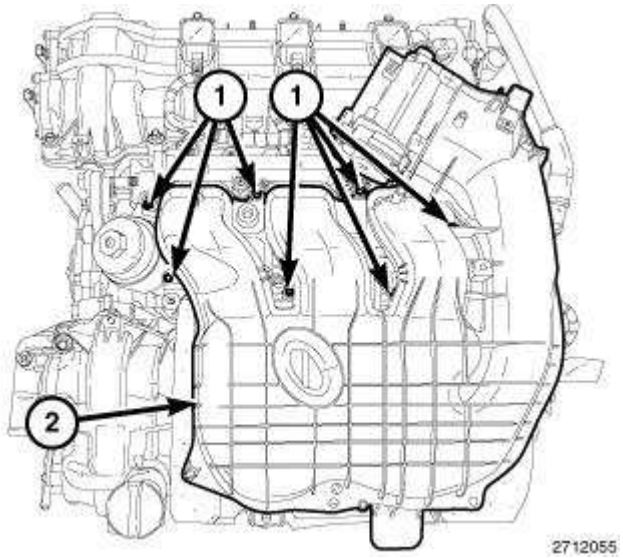

Fig. 137: Upper Intake Manifold & Bolts
Courtesy of CHRYSLER GROUP, LLC

30. Remove the upper and lower intake manifolds (2) and insulator. Refer to **MANIFOLD, INTAKE, REMOVAL** .

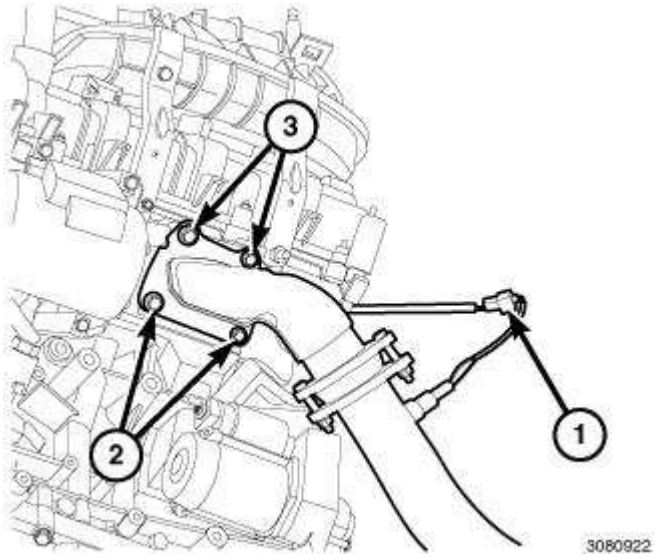

Fig. 138: Left Upstream Oxygen Sensor Electrical Connector & Down Pipe Flange Bolts
Courtesy of CHRYSLER GROUP, LLC

31. Disconnect the left upstream oxygen sensor electrical connector (1) from the main wire harness.
32. Loosen the lower down pipe flange bolts (2).
33. Remove the upper down pipe flange bolts (3) and position the down pipe and catalytic converter aside.

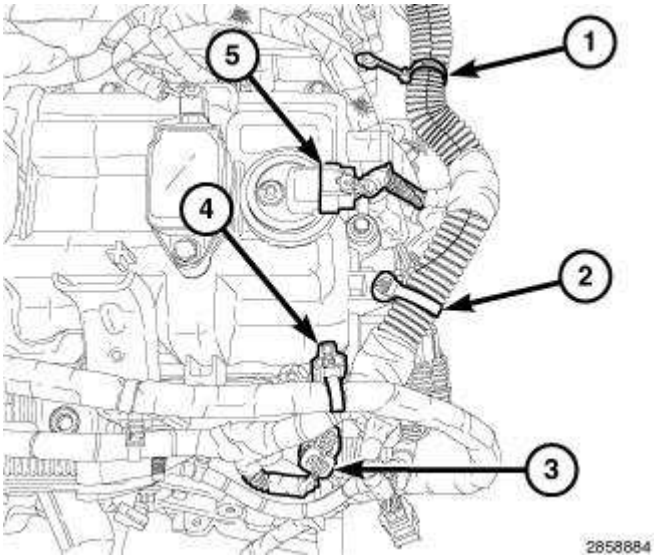

Fig. 139: ECT Sensor Connector, CMP Sensor & Main Wire Harness Retainers
Courtesy of CHRYSLER GROUP, LLC

34. Disconnect the Engine Coolant Temperature (ECT) sensor electrical connector (3).

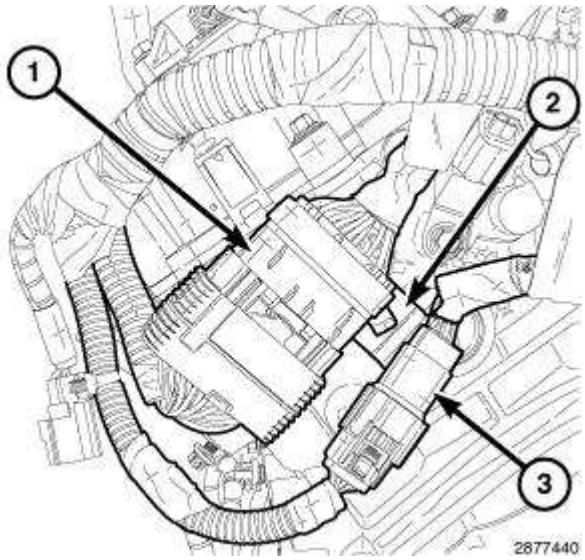

Fig. 140: Injection/Ignition Electrical Connector & Engine Oil Pressure/Temperature Sensor Electrical Connector
Courtesy of CHRYSLER GROUP, LLC

35. Disconnect the ignition coil capacitor electrical connector.
36. Disconnect the injection/ignition electrical connector (1).
37. Disconnect the engine oil pressure/temperature sensor electrical connector (3).
38. Unfasten the injection/ignition wire harness and the oil pressure/temperature sensor wire harness from the retainer bracket (2) on the rear of the left cylinder head.

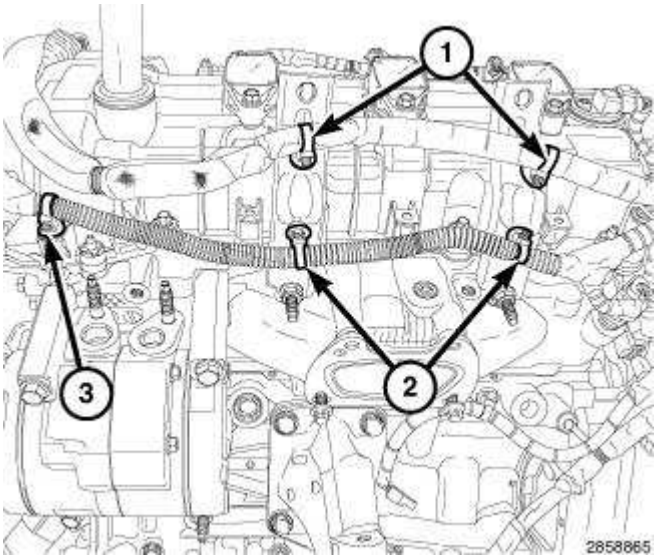

Fig. 141: Starter Wire Harness Retainers, Main Wire Harness Retainer & Manifold Support Bracket Retainers
Courtesy of CHRYSLER GROUP, LLC

39. Unfasten two starter wire harness retainers (1) from the upper intake manifold support brackets.
40. Unfasten one main wire harness retainer (3) from the left cylinder head cover and two retainers (2) from the upper intake manifold support brackets.

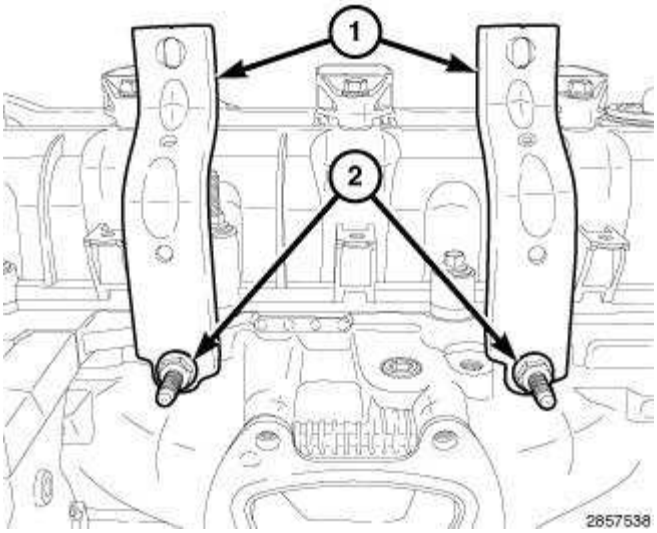

Fig. 142: Left Intake Manifold Support Brackets & Retaining Bolts
Courtesy of CHRYSLER GROUP, LLC

41. Remove the bolts (2) and remove the left upper intake manifold support brackets (1).

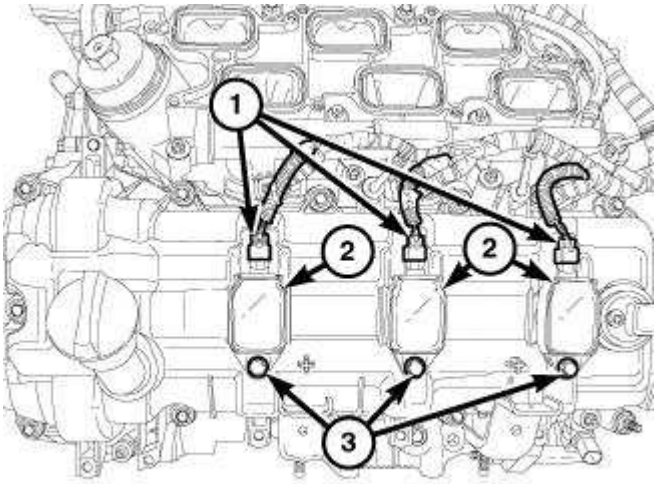

2726572

Fig. 143: Electrical Connector, Ignition Coils & Ignition Coil Retaining Bolts
Courtesy of CHRYSLER GROUP, LLC

42. Remove the ignition coils (2). Refer to **COIL, IGNITION, REMOVAL** .
43. Remove the cylinder head covers, lower and upper oil pans, crankshaft vibration damper and engine timing cover. Refer to **COVER(S), ENGINE TIMING, REMOVAL** .

NOTE: Take this opportunity to measure timing chain wear. Refer to VALVE TIMING, STANDARD PROCEDURE.

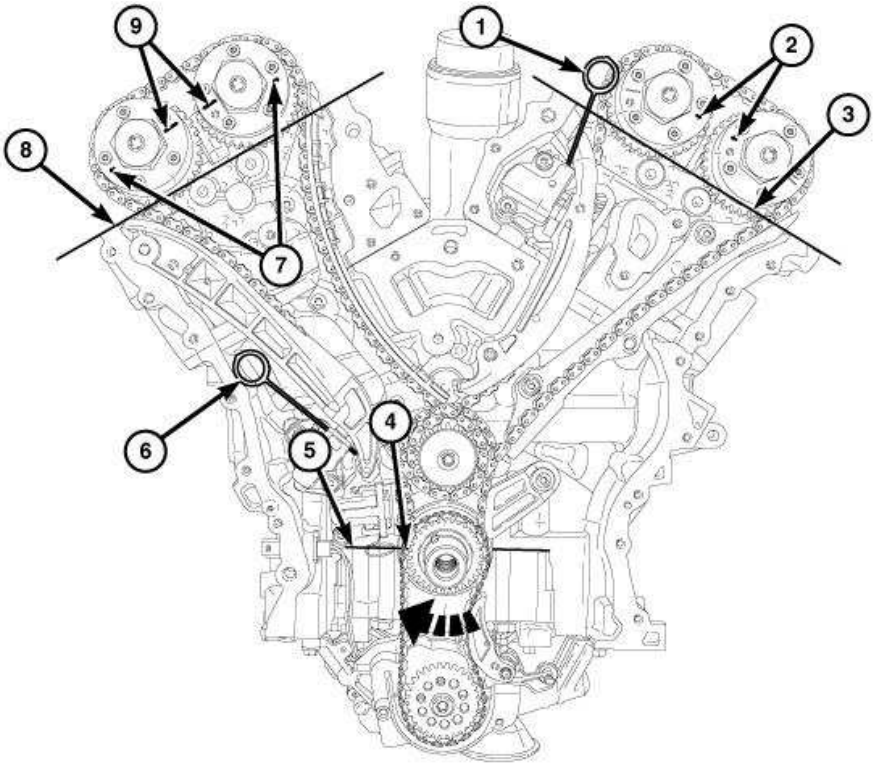

2661245

Fig. 144: Rotating Crankshaft Clockwise To Position No. 1 Piston At TDC On Exhaust Stroke
Courtesy of CHRYSLER GROUP, LLC

CAUTION: When aligning timing marks, always rotate engine by turning the crankshaft. Failure to do so will result in valve and/or piston damage.

44. Rotate the crankshaft clockwise to place the number one piston at TDC on the exhaust stroke by aligning the dimple (4) on the crankshaft with the block/bearing cap junction (5). The left side cam phaser arrows (2) should point toward each other and be parallel to the valve cover sealing surface (3). The right side cam phaser arrows (7) should point away from each other and the scribe lines (9) should be parallel to the valve cover sealing surface (8).

CAUTION: Always reinstall timing chains so that they maintain the same direction of rotation. Inverting a previously run chain on a previously run sprocket will result in excessive wear to both the chain and sprocket.

45. Mark the direction of rotation on the timing chain using a paint pen or equivalent to aid in reassembly.

CAUTION: When the timing chains are removed and the cylinder heads are still installed, DO NOT rotate the camshafts or crankshaft without first locating the proper crankshaft position. Failure to do so will result in valve and/or piston damage.

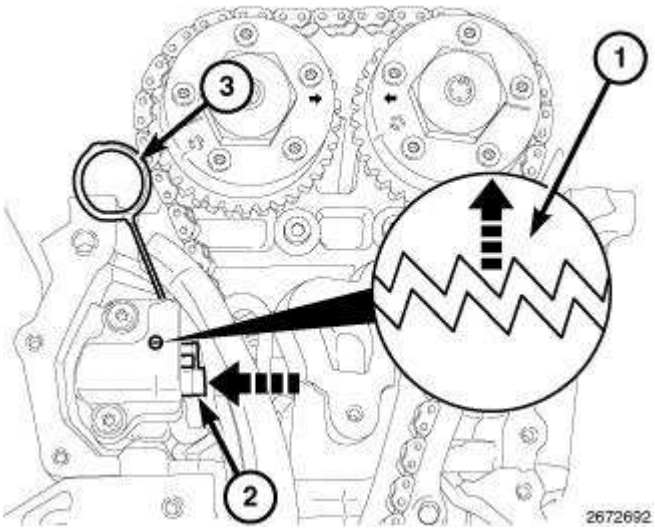

Fig. 145: Resetting Left Cam Chain Tensioner
Courtesy of CHRYSLER GROUP, LLC

46. Reset the left cam chain tensioner by lifting the pawl (1), pushing back the piston (2) and

installing Tensioner Pin (special tool #8514, Pins, Tensioner) (3). Refer to **VALVE TIMING, STANDARD PROCEDURE**.

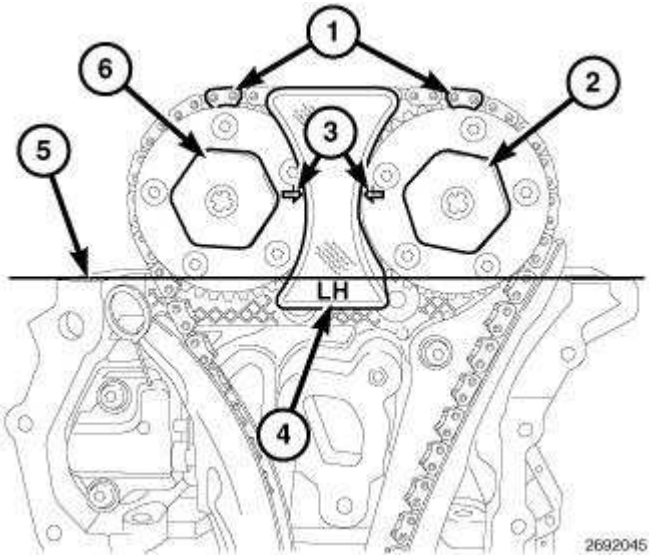

Fig. 146: Phaser Timing Marks, Oil Control Valves & LH Camshaft Phaser Lock
Courtesy of CHRYSLER GROUP, LLC

NOTE: Minor rotation of a camshaft (a few degrees) may be required to install the camshaft phaser lock.

47. Install the LH Camshaft Phaser Lock (special tool #10202, Locks, Camshaft/Phaser) (4).
48. Loosen both the intake oil control valve (6) and exhaust oil control valve (2).
49. Remove the LH Camshaft Phaser Lock (special tool #10202, Locks, Camshaft/Phaser) (4).
50. Remove the oil control valve (2) from the left side exhaust cam phaser and pull the phaser off of the camshaft.
51. Remove the oil control valve (6) from the left side intake cam phaser and pull the phaser off of the camshaft.

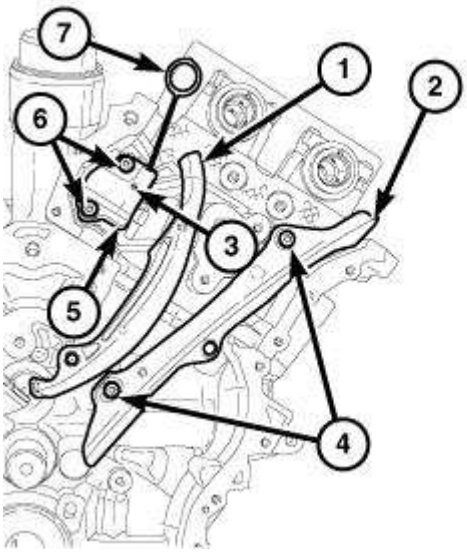

Fig. 147: Left Cam Chain Tensioner, Arm, Guide & Bolts
Courtesy of CHRYSLER GROUP, LLC

52. Remove the left cam chain tensioner arm (1).
53. Remove two T30 bolts (6) and the left cam chain tensioner (5).
54. Remove two T30 bolts (4) and the left cam chain guide (2).

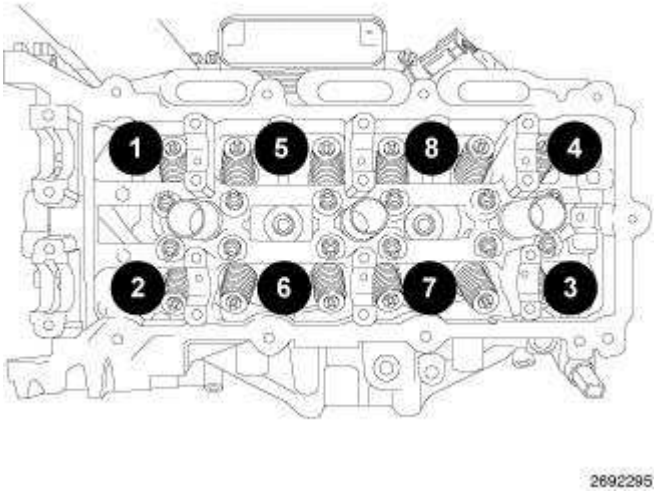

Fig. 148: Cylinder Head Retaining Bolt Removal Sequence - Left
Courtesy of CHRYSLER GROUP, LLC

55. Remove the left camshafts. Refer to **CAMSHAFT, ENGINE, REMOVAL**.

NOTE: **If the rocker arms are to be reused, identify their positions so that they can be reassembled into their original locations.**

56. Remove the rocker arms. Refer to **ROCKER ARM, VALVE, REMOVAL** .

NOTE: **If the hydraulic lifters are to be reused, identify their positions so that they can be reassembled into their original locations.**

57. If required, remove the hydraulic lifters. Refer to **LIFTER(S), HYDRAULIC, REMOVAL**.
58. Using the sequence shown in illustration, remove the cylinder head retaining bolts.

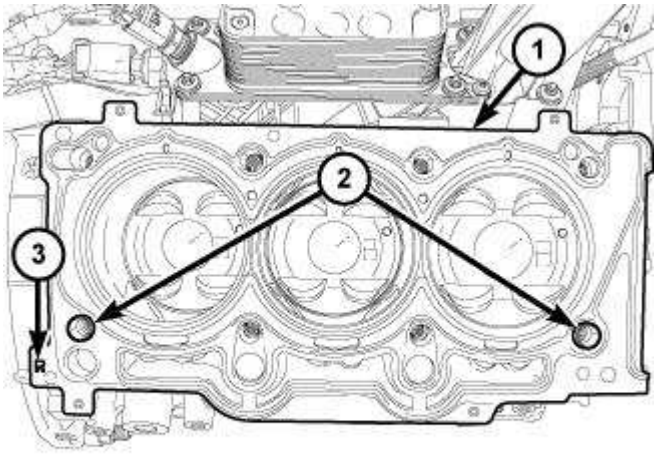

Fig. 149: Head Gasket & Locating Dowels
Courtesy of CHRYSLER GROUP, LLC

NOTE: **Right head gasket shown in illustration, left head gasket similar.**

WARNING: **The multi-layered steel head gaskets have very sharp edges that could cause personal injury if not handled carefully.**

CAUTION: **Do not lay the cylinder head on its gasket sealing surface, due to the design of the cylinder head gasket, any distortion to the cylinder head sealing surface may prevent the gasket from properly sealing resulting in leaks.**

NOTE: **The head gasket (1) crimps the locating dowels (2) and the dowels may pull out of the engine block when the head gasket is removed.**

59. Remove the cylinder head and gasket (1) and discard the gasket.

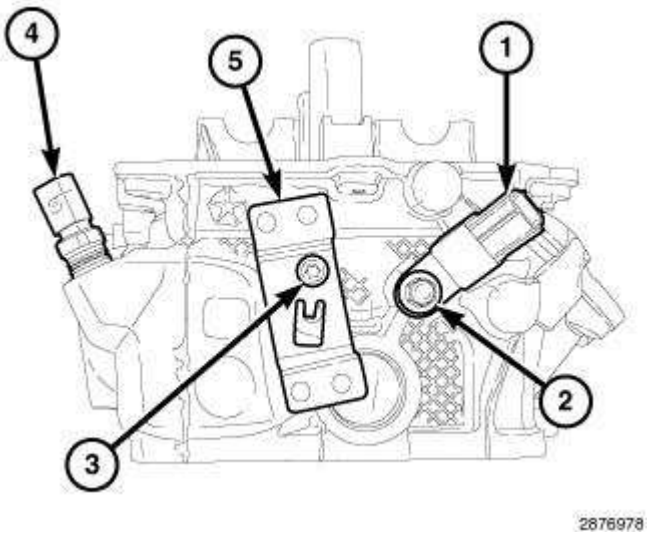

Fig. 150: ECT Sensor, Ignition Coil Capacitor, Engine Wire Harness Retainer Bracket & Bolts
Courtesy of CHRYSLER GROUP, LLC

60. If required, remove the Engine Coolant Temperature (ECT) sensor (4).
61. If required, remove the bolt (2) and the ignition coil capacitor (1).
62. If required, remove the bolt (3) and the engine wire harness retainer bracket (5).

RIGHT

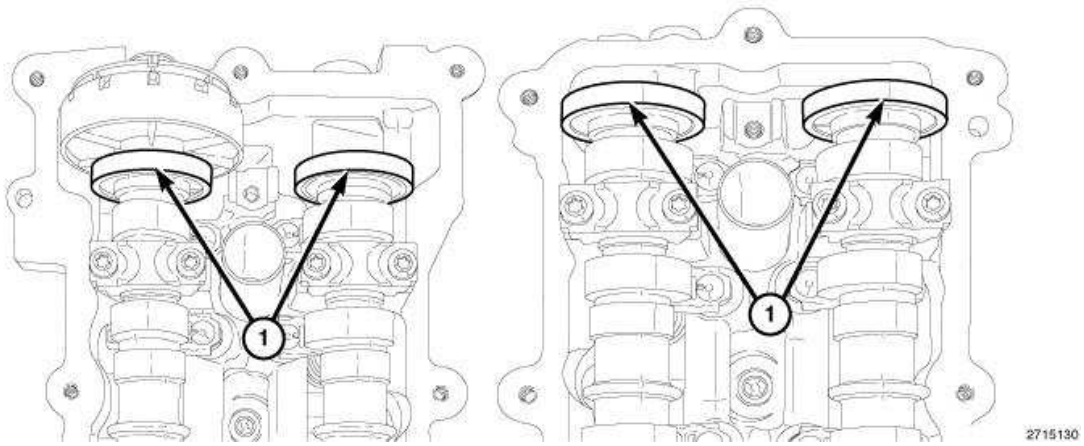

Fig. 151: Magnetic Timing Wheels
Courtesy of CHRYSLER GROUP, LLC

CAUTION: The magnetic timing wheels (1) must not come in contact with magnets (pickup tools, trays, etc.) or any other strong magnetic field. This will destroy the timing wheels ability to correctly relay camshaft position to the camshaft position sensor.

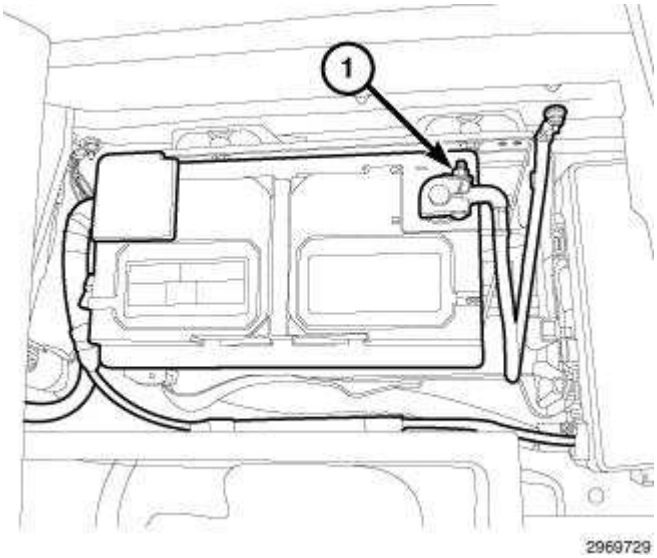

Fig. 152: Negative Battery Cable
Courtesy of CHRYSLER GROUP, LLC

1. Perform the fuel pressure release procedure. Refer to **FUEL DELIVERY, GAS, STANDARD PROCEDURE** .
2. Disconnect and isolate the negative battery cable (1).

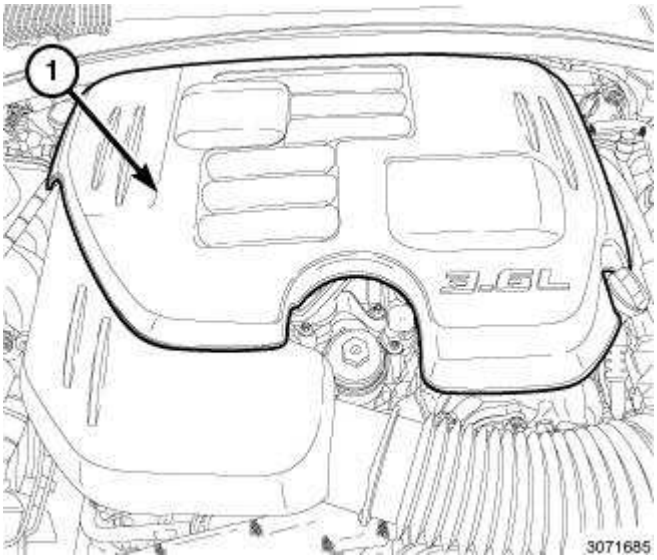

Fig. 153: Engine Cover
Courtesy of CHRYSLER GROUP, LLC

3. Lift the engine cover retaining grommets off the ball studs and remove the engine cover (1).

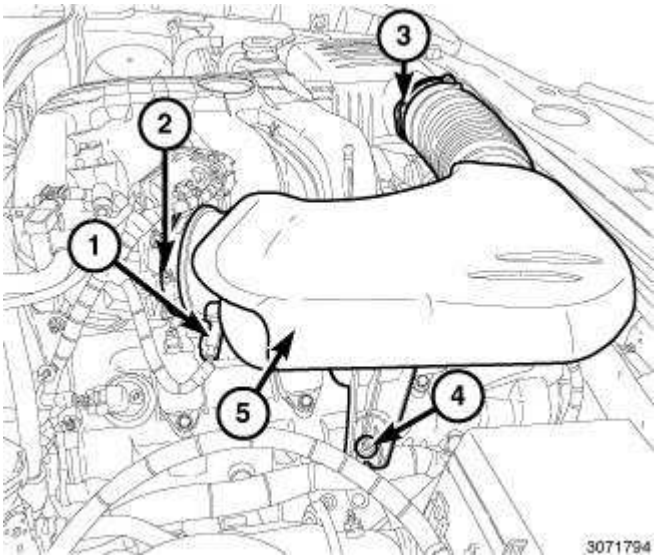

Fig. 154: Inlet Air Temperature (IAT) Sensor Electrical Connector, Air Inlet Hose Assembly & Fasteners
Courtesy of CHRYSLER GROUP, LLC

4. Disconnect the electrical connector (1) from the Inlet Air Temperature (IAT) sensor.
5. Loosen the clamp (2) at the throttle body.
6. Loosen the clamp (3) at the air cleaner housing.
7. Lift the air inlet hose assembly retaining grommet off the ball stud (4).
8. Remove the air inlet hose assembly (5).

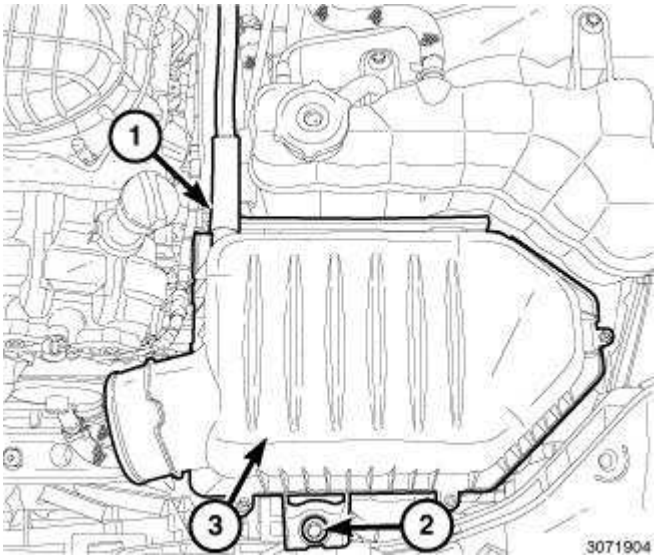

Fig. 155: Fresh Air Makeup Hose, Air Cleaner Housing & Bolt
Courtesy of CHRYSLER GROUP, LLC

9. Disconnect the fresh air makeup hose (1) from the air cleaner housing.
10. Remove the air cleaner housing retaining bolt (2).

11. Remove the air cleaner housing (3).

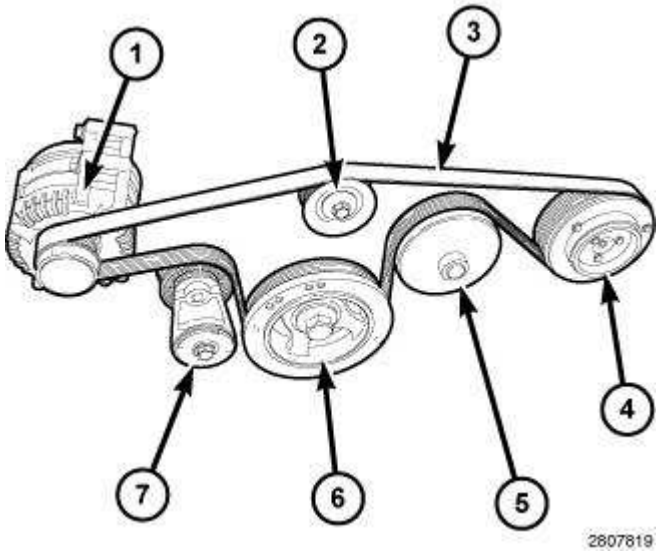

Fig. 156: Idler Pulley, Tensioner Arm, Belt, Idler, Tensioner & Belt Routing
Courtesy of CHRYSLER GROUP, LLC

12. Rotate the accessory drive belt tensioner (7) counterclockwise until it contacts the stop and remove the accessory drive belt (3), then slowly rotate the tensioner into the freearm position.
13. Remove the generator (1). Refer to **GENERATOR, REMOVAL** .

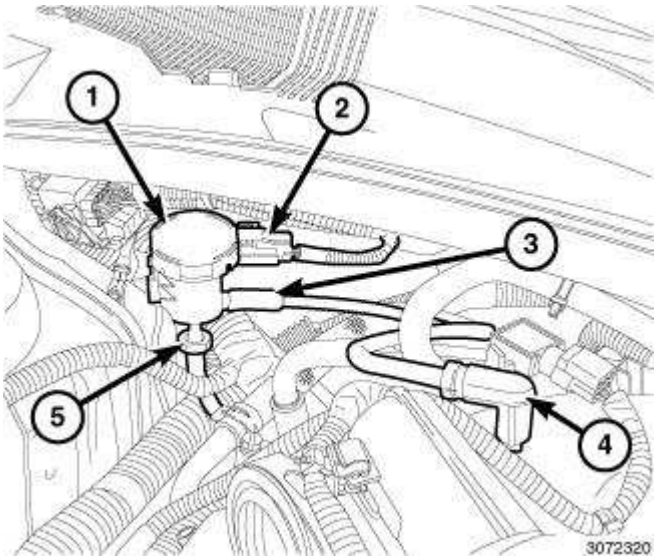

Fig. 157: EVAP Purge Solenoid, Electrical Connector & Vacuum Lines
Courtesy of CHRYSLER GROUP, LLC

14. Disconnect the vacuum line (3) at the EVAP purge solenoid (1).
15. Disconnect the EVAP purge solenoid vacuum line (4) at the intake manifold and remove the vacuum line.

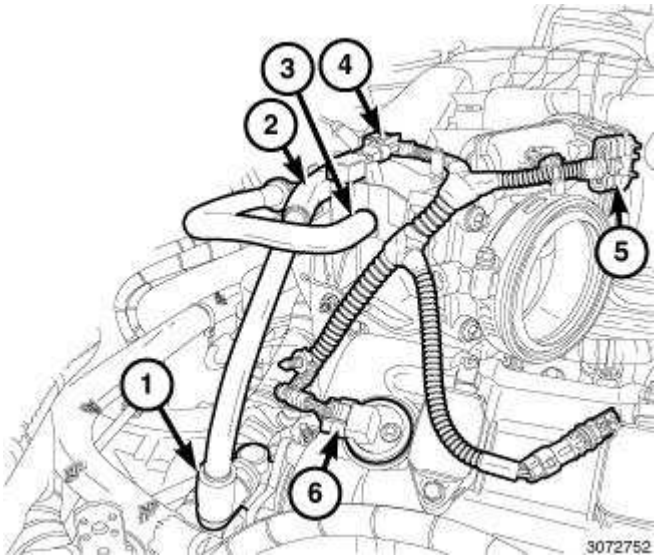

Fig. 158: PCV Valve, Intake Manifold, Brake Booster Vacuum Hose, MAP Sensor, ETC & CMP Sensor Electrical Connectors
Courtesy of CHRYSLER GROUP, LLC

16. Disconnect the PCV hose from the PCV valve (1) and the intake manifold (2) and remove hose.
17. Disconnect the brake booster vacuum hose (3) and position aside.
18. Disconnect the electrical connector at the Manifold Absolute Pressure (MAP) Sensor (4).
19. Disconnect the electrical connector at the Electronic Throttle Control (ETC) (5).
20. Disconnect the electrical connector at the Camshaft Position Sensor (CMP) (6) and position harness aside.

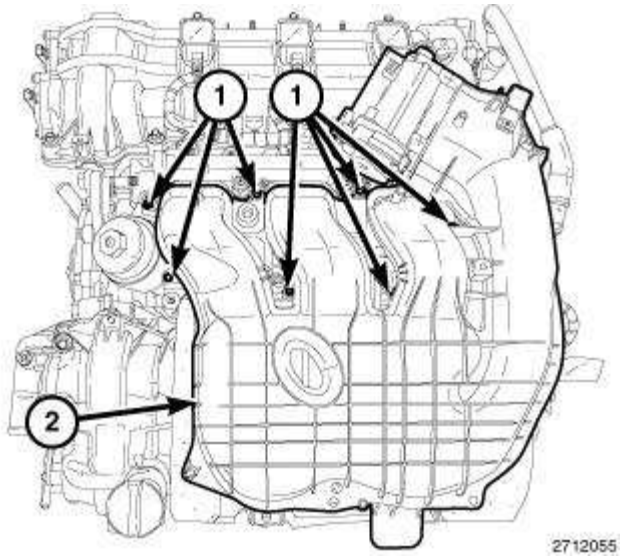

Fig. 159: Upper Intake Manifold & Bolts
Courtesy of CHRYSLER GROUP, LLC

21. Remove the upper and lower intake manifolds (2) and insulator. Refer to **MANIFOLD, INTAKE,**

REMOVAL .

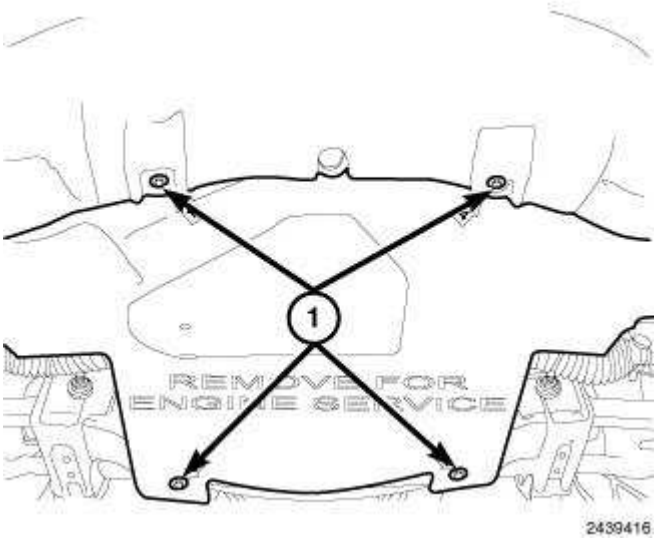

Fig. 160: Lower Splash Shield & Fasteners
Courtesy of CHRYSLER GROUP, LLC

22. Raise and support the vehicle. Refer to **HOISTING, STANDARD PROCEDURE** .
23. Remove the belly pan retainers (1) and remove the belly pan.
24. Drain the cooling system. Refer to **STANDARD PROCEDURE** .
25. Drain the engine oil. Refer to **STANDARD PROCEDURE**.

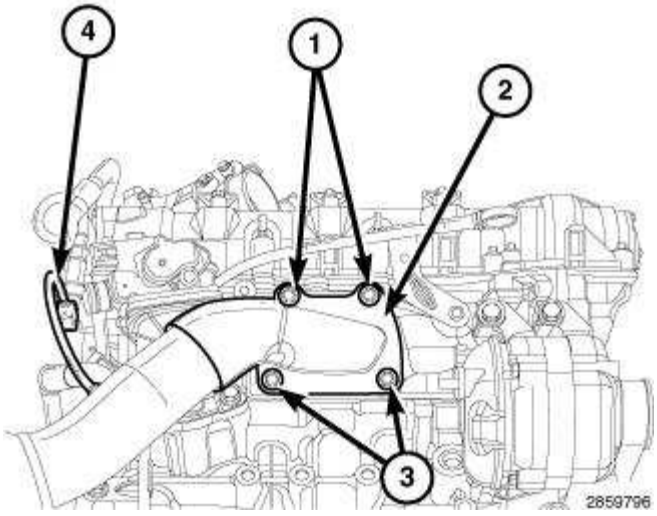

Fig. 161: Right Upstream Oxygen Electrical Sensor Connector, Down Pipe Flanges & Bolts
Courtesy of CHRYSLER GROUP, LLC

26. Disconnect the right upstream oxygen electrical sensor connector (4) from the main wire harness.

27. Loosen the lower down pipe flange bolts (3).
28. Remove the upper down pipe flange bolts (1) and position the down pipe and catalytic converter aside.

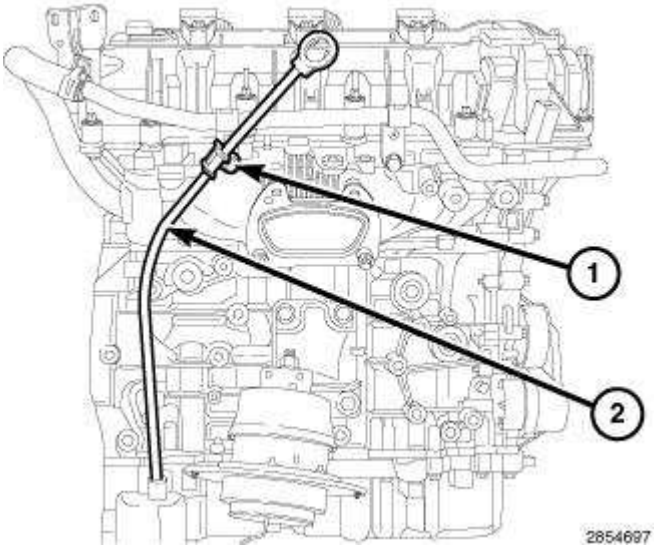

Fig. 162: Oil Level Indicator & Retaining Bolt
Courtesy of CHRYSLER GROUP, LLC

29. Remove the oil level indicator (2) retaining bolt (1) and remove the oil level indicator.

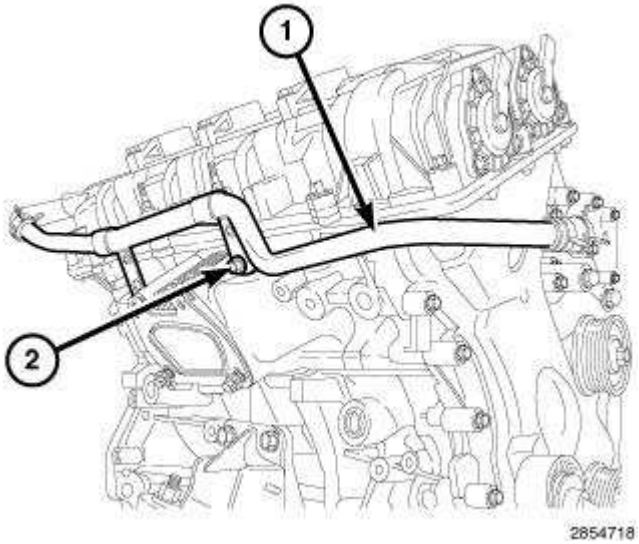

Fig. 163: Heater Core Supply Tube Support Bracket & Retaining Bolt
Courtesy of CHRYSLER GROUP, LLC

30. Remove the heater core supply tube (1) support bracket retaining bolt (2) and remove the heater core supply tube (1).

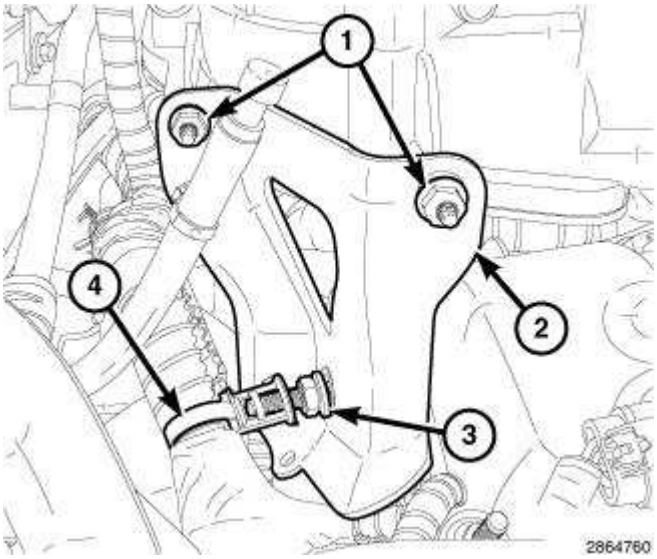

Fig. 164: Upper Intake Manifold Support Bracket, Stud & Fasteners
Courtesy of CHRYSLER GROUP, LLC

31. Disconnect the ignition coil capacitor electrical connector.
32. Remove the stud (3) and remove the upper intake manifold support bracket (2).
33. Remove the cylinder head covers, lower and upper oil pans, crankshaft vibration damper and engine timing cover. Refer to **COVER(S), ENGINE TIMING, REMOVAL** .

NOTE: Take this opportunity to measure timing chain wear. Refer to VALVE TIMING, STANDARD PROCEDURE.

34. Lower the vehicle.

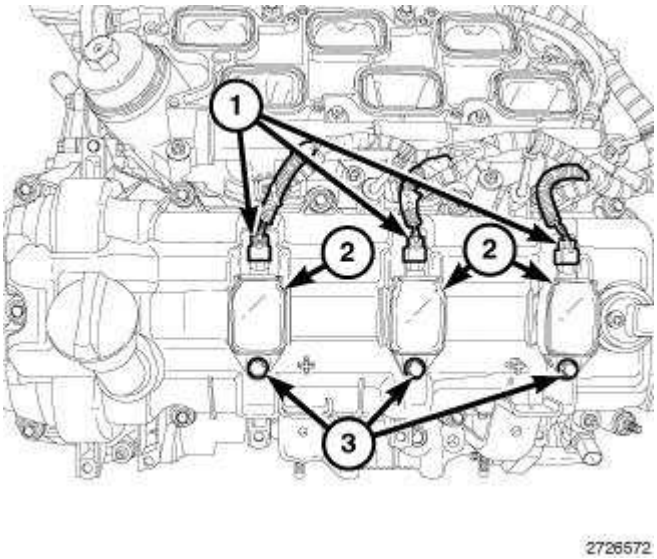

Fig. 165: Electrical Connector, Ignition Coils & Ignition Coil Retaining Bolts
Courtesy of CHRYSLER GROUP, LLC

NOTE: **The left side ignition coils are shown in illustration, the right side ignition coils are similar.**

35. Remove the ignition coils (2). Refer to **COIL, IGNITION, REMOVAL** .

CAUTION: When aligning timing marks, always rotate engine by turning the crankshaft. Failure to do so will result in valve and/or piston damage.

CAUTION: Always reinstall timing chains so that they maintain the same direction of rotation. Inverting a previously run chain on a previously run sprocket will result in excessive wear to both the chain and sprocket.

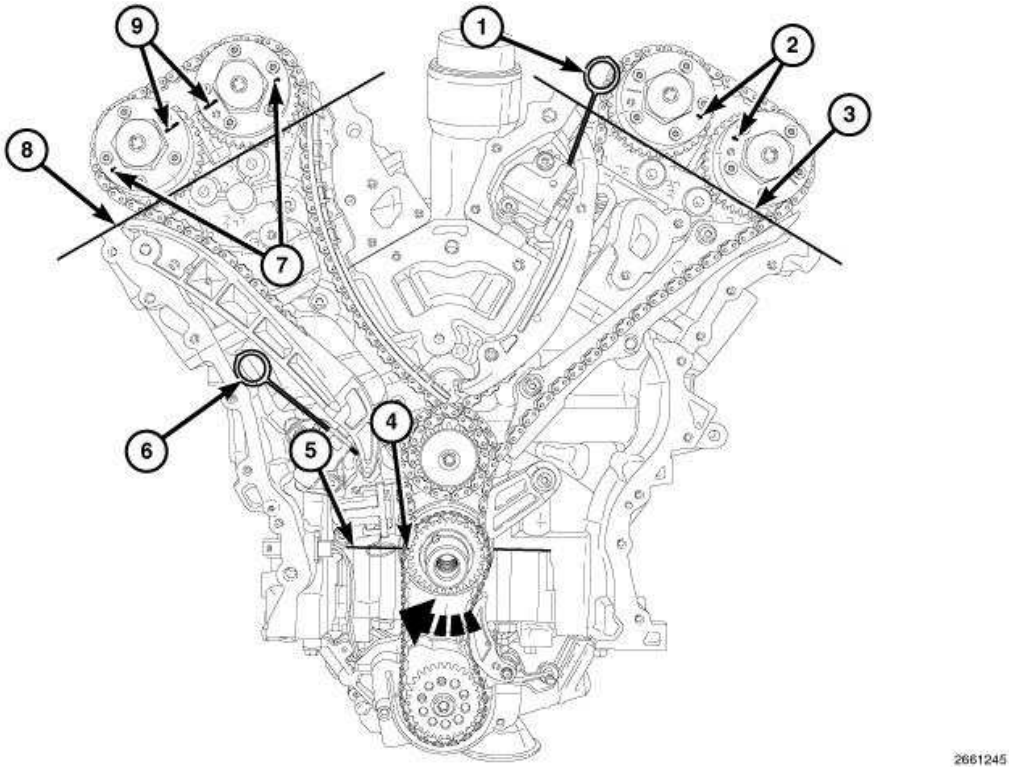

Fig. 166: Rotating Crankshaft Clockwise To Position No. 1 Piston At TDC On Exhaust Stroke
Courtesy of CHRYSLER GROUP, LLC

36. Rotate the crankshaft clockwise to place the number one piston at TDC on the exhaust stroke by aligning the dimple (4) on the crankshaft with the block/bearing cap junction (5). The left side cam phaser arrows (2) should point toward each other and be parallel to the valve cover sealing surface (3). The right side cam phaser arrows (7) should point away from each other and the scribe lines (9) should be parallel to the valve cover sealing surface (8).
37. Mark the direction of rotation on the timing chain using a paint pen or equivalent to aid in reassembly.

CAUTION: When the timing chains are removed and the cylinder heads are still installed, DO NOT rotate the camshafts or crankshaft without first locating the proper crankshaft position. Failure to do so will result in valve and/or piston damage.

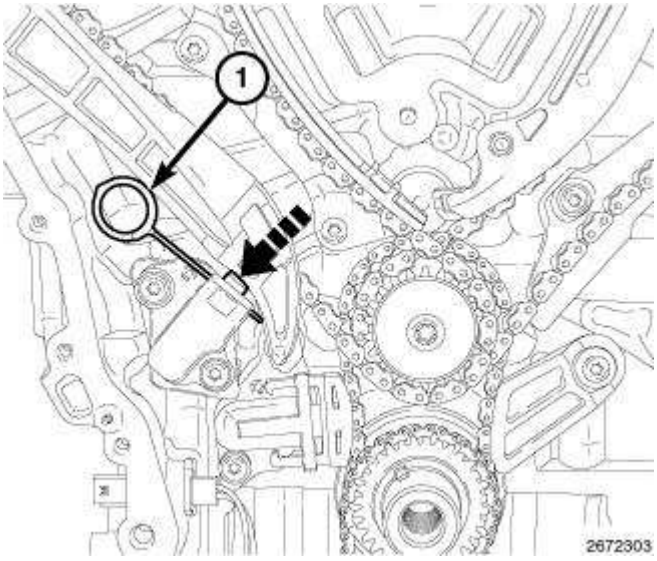

Fig. 167: Resetting Right Cam Chain Tensioner
Courtesy of CHRYSLER GROUP, LLC

38. Reset the right cam chain tensioner by pushing back the tensioner piston and installing Tensioner Pin (special tool #8514, Pins, Tensioner) (1).

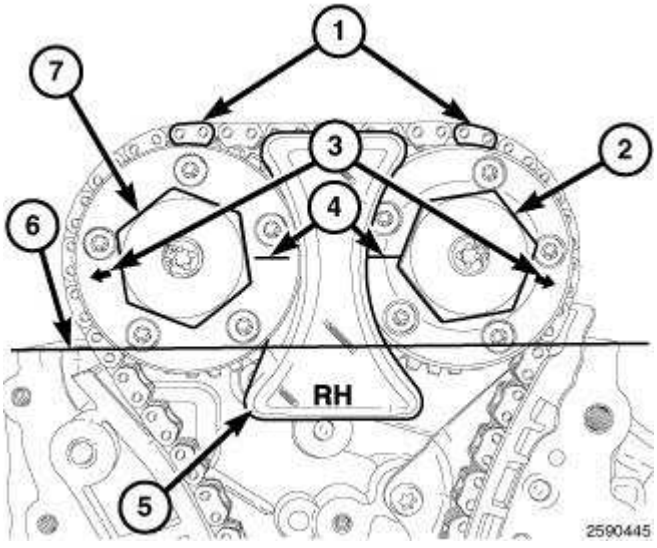

Fig. 168: Phaser Timing Marks, Oil Control Valves & RH Camshaft Phaser Lock
Courtesy of CHRYSLER GROUP, LLC

NOTE: Minor rotation of a camshaft (a few degrees) may be required to install the camshaft phaser lock.

39. Install the RH Camshaft Phaser Lock (special tool #10202, Locks, Camshaft/Phaser) (5).
40. Loosen both the intake oil control valve (2) and exhaust oil control valve (7).
41. Remove the RH Camshaft Phaser Lock (special tool #10202, Locks, Camshaft/Phaser) (5).
42. Remove the oil control valve (2) from the right side intake cam phaser and pull the phaser off of the camshaft.
43. Remove the oil control valve (7) from the right side exhaust cam phaser and pull the phaser off of the camshaft.

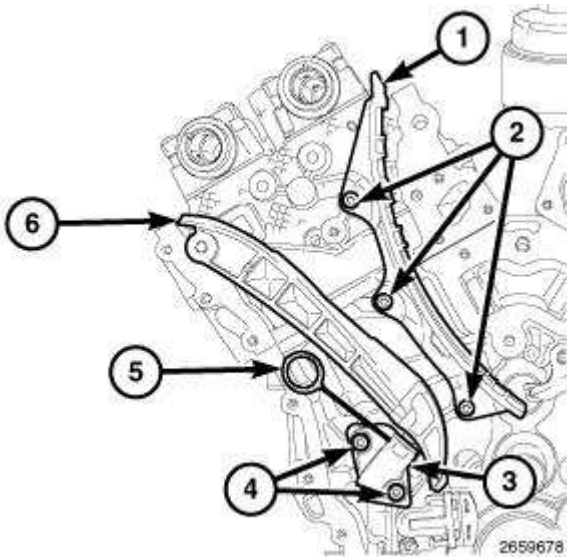

Fig. 169: Right Cam Chain Tensioner, Arm, Guide & Bolts
Courtesy of CHRYSLER GROUP, LLC

44. Remove the right cam chain tensioner arm (6).
45. Remove two T30 bolts (4) and the right cam chain tensioner (3).
46. Remove three T30 bolts (2) and the right cam chain guide (1).

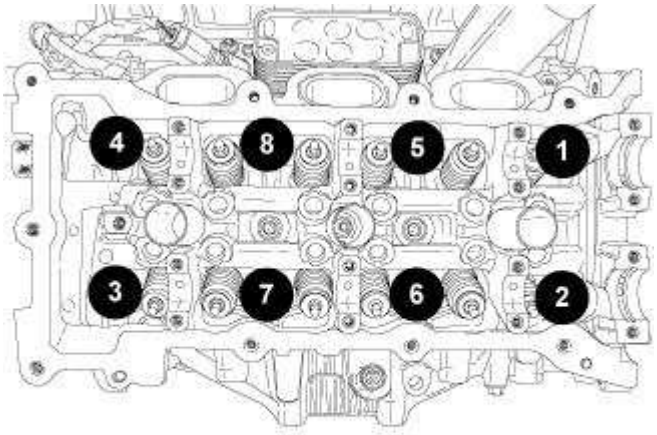

Fig. 170: Cylinder Head Retaining Bolt Removal Sequence - Right
Courtesy of CHRYSLER GROUP, LLC

47. Remove the right camshafts. Refer to **CAMSHAFT, ENGINE, REMOVAL**.

NOTE: If the rocker arms are to be reused, identify their positions so that they can be reassembled into their original locations.

48. Remove the rocker arms. Refer to **ROCKER ARM, VALVE, REMOVAL** .

NOTE: If the hydraulic lifters are to be reused, identify their positions so that they can be reassembled into their original locations.

49. If required, remove the hydraulic lifters. Refer to **LIFTER(S), HYDRAULIC, REMOVAL**.
50. Using the sequence shown in illustration, remove the cylinder head retaining bolts.

WARNING: The multi-layered steel head gaskets have very sharp edges that could cause personal injury if not handled carefully.

CAUTION: Do not lay the cylinder head on its gasket sealing surface, due to the design of the cylinder head gasket, any distortion to the cylinder head sealing surface may prevent the gasket from properly sealing resulting in leaks.

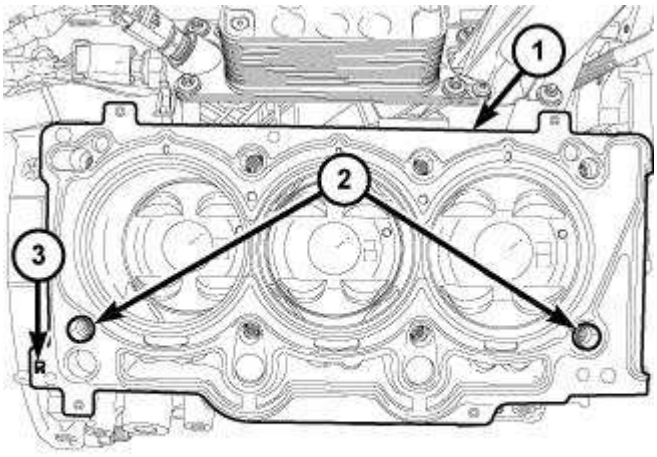

Fig. 171: Head Gasket & Locating Dowels
Courtesy of CHRYSLER GROUP, LLC

NOTE: The head gasket (1) crimps the locating dowels (2) and the dowels may pull out of the engine block when the head gasket is removed.

51. Remove the cylinder head and gasket. Discard the gasket.

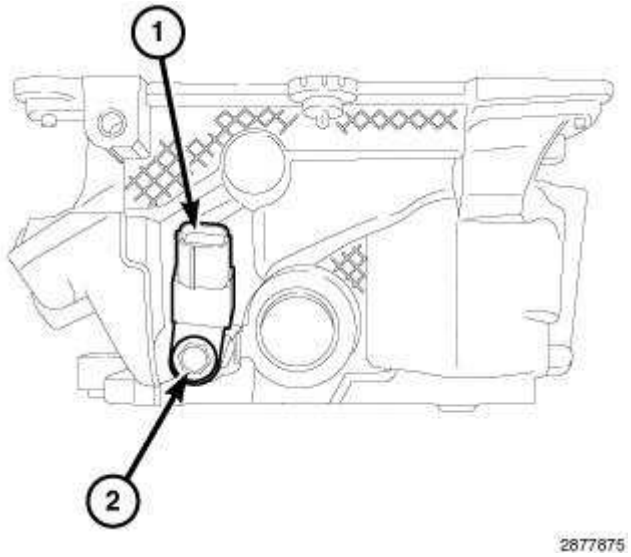

Fig. 172: Ignition Coil Capacitor & Bolt
Courtesy of CHRYSLER GROUP, LLC

52. If required, remove the bolt (2) and the ignition coil capacitor (1).

CLEANING

CLEANING

CAUTION: When cleaning cylinder head and cylinder block surfaces, DO NOT use a metal scraper because the surfaces could be cut or ground. Use ONLY a wooden or plastic scraper.

To ensure engine gasket sealing, proper surface preparation must be performed, especially with the use of aluminum engine components and multi-layer steel cylinder head gaskets.

NOTE: Multi-Layer Steel (MLS) head gaskets require a scratch free sealing surface.

1. Remove all gasket material from cylinder head and block. Refer to **STANDARD PROCEDURE**. Be careful not to gouge or scratch the aluminum head sealing surface.
2. Clean all engine oil passages.

CAUTION: Non-compressible debris such as oil, coolant or RTV sealants that are not removed from bolt holes can cause the aluminum casting to crack when tightening the bolts.

3. Clean out the cylinder head bolt holes in the engine block.

DO NOT USE any adhesives when installing the MLS head gaskets. The use of adhesives may cause the gasket not to seal properly and may leak. MLS gaskets are to be installed on a surface free of debris and oils.

INSPECTION

INSPECTION

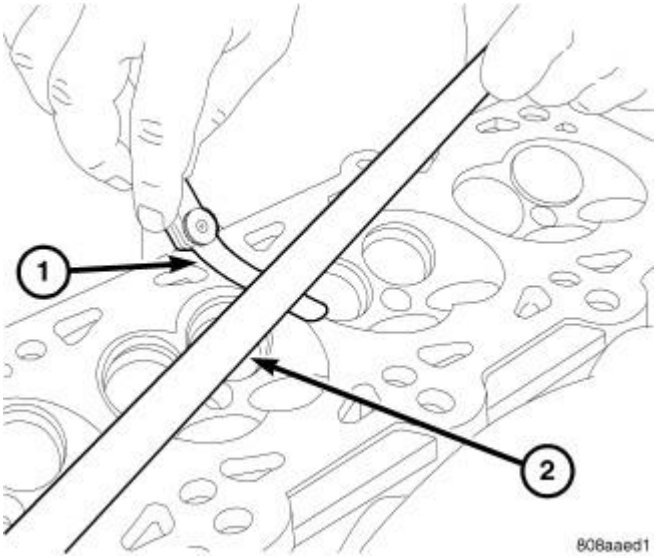

Fig. 173: Checking Cylinder Head Flatness
Courtesy of CHRYSLER GROUP, LLC

1. Check cylinder head warpage with a straight edge (2) and feeler gauge (1).
2. Cylinder head must be flat within specification. Refer to **SPECIFICATIONS**.
3. Verify that the valve tappets move freely in theirs bores and that they have been rotating.
4. Inspect camshaft bearing journals for scoring.
5. Remove carbon and varnish deposits from inside of valve guides with a reliable guide cleaner.
6. Inspect the following components and verify that they are within specification. Refer to **SPECIFICATIONS**.
    - Camshafts
    - Valve Tappets
    - Springs
    - Valve Seats
    - Valve Guides
    - Valves

INSTALLATION

LEFT

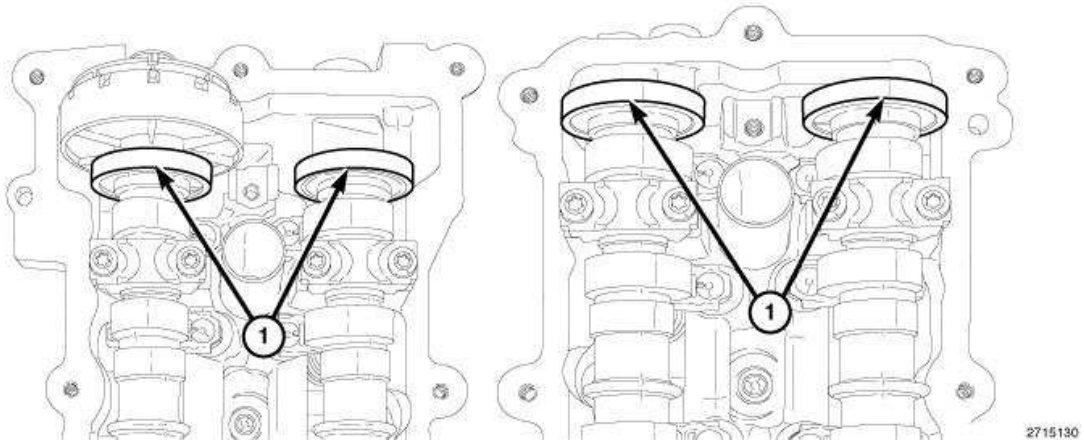

Fig. 174: Magnetic Timing Wheels
Courtesy of CHRYSLER GROUP, LLC

CAUTION: The magnetic timing wheels (1) must not come in contact with magnets (pickup tools, trays, etc.) or any other strong magnetic field. This will destroy the timing wheels ability to correctly relay camshaft position to the camshaft position sensor.

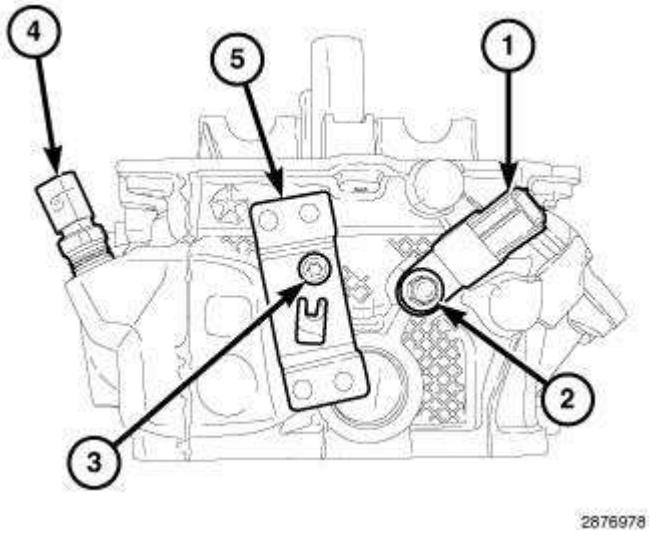

Fig. 175: ECT Sensor, Ignition Coil Capacitor, Engine Wire Harness Retainer Bracket & Bolts
Courtesy of CHRYSLER GROUP, LLC

1. If removed, install the Engine Coolant Temperature (ECT) sensor (4) and tighten to 11 N.m (97 in. lbs.).
2. If removed, install the ignition coil capacitor (1) with a M6 bolt (2) and tightened to 10 N.m (89 in. lbs.).
3. If removed, install the engine wire harness retainer bracket (5) with a T30 bolt (3) and tightened to 12 N.m (106 in. lbs.).

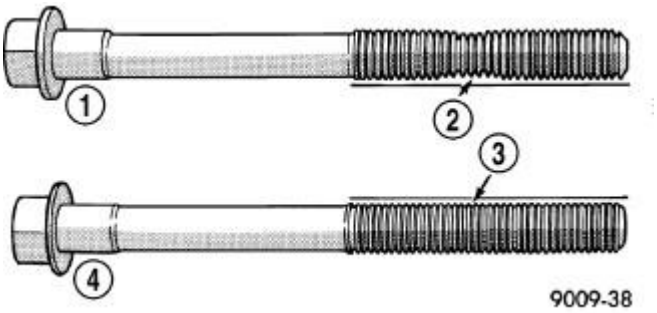

Fig. 176: Checking Cylinder Head Bolts For Stretching (Necking)
Courtesy of CHRYSLER GROUP, LLC

CAUTION: The cylinder head bolts are tightened using a torque plus angle procedure. The bolts must be examined BEFORE reuse. If the threads are necked down the bolts must be replaced.

NOTE: Typical cylinder head bolt shown in illustration.

4. Check cylinder head bolts for necking by holding a scale or straight edge against the threads. If all the threads do not contact the scale (2) the bolt must be replaced.

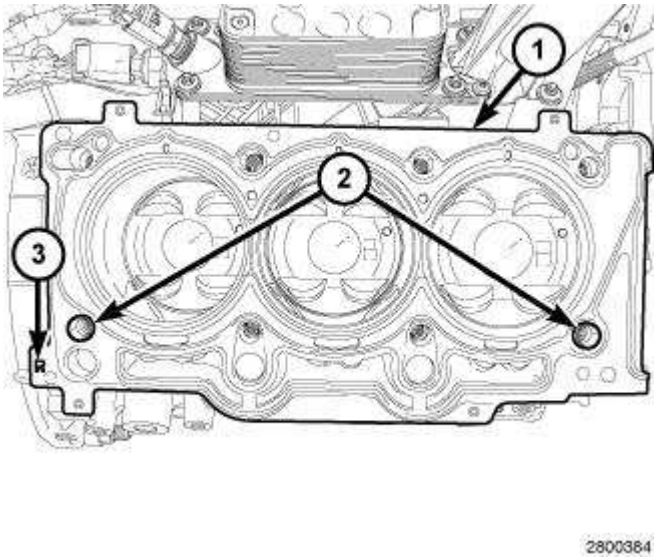

Fig. 177: Head Gasket & Locating Dowels
Courtesy of CHRYSLER GROUP, LLC

NOTE: Right head gasket shown in illustration, left head gasket similar.

CAUTION: When cleaning cylinder head and cylinder block surfaces, DO NOT use a metal scraper because the surfaces could be cut or ground. Use ONLY a wooden or plastic scraper.

5. Clean and prepare the gasket sealing surfaces of the cylinder head and block. Refer to **STANDARD PROCEDURE**.

CAUTION: Non-compressible debris such as oil, coolant or RTV sealants that are not removed from bolt holes can cause the aluminum casting to crack when tightening the bolts.

6. Clean out the cylinder head bolt holes in the engine block.

WARNING: The multi-layered steel head gaskets have very sharp edges that could cause personal injury if not handled carefully.

CAUTION: The installation of the cylinder head gaskets are not interchangeable between the left and right cylinder heads. They are clearly marked (3) with "R" for right and "L" for left. They must be applied on a dry surface, without the use of any adhesives.

7. Position the new cylinder head gasket (1) onto the locating dowels (2).

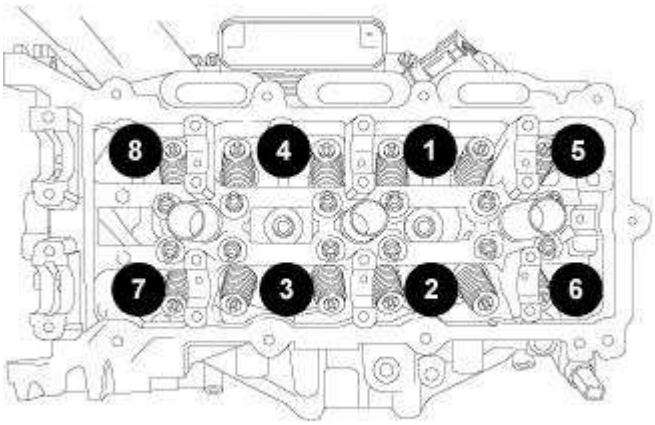

Fig. 178: Cylinder Head Retaining Bolt Tightening Sequence - Left
Courtesy of CHRYSLER GROUP, LLC

8. Position the cylinder head onto the cylinder block. Make sure the cylinder head seats fully over the locating dowels.

NOTE: Do not apply any additional oil to the bolt threads.

9. Install the eight cylinder head bolts finger tight.
10. Tighten the cylinder head bolts in the sequence shown in illustration, following this 9 step torque

plus angle method. Tighten according to the following torque values:

- Step 1: All to 30 N.m (22 ft. lbs.)
- Step 2: All to 45 N.m (33 ft. lbs.)
- Step 3: All + 75° Turn **Do not use a torque wrench for this step.**
- Step 4: All + 50° Turn **Do not use a torque wrench for this step.**
- Step 5: Loosen all fasteners in reverse of sequence shown in illustration
- Step 6: All to 30 N.m (22 ft. lbs.)
- Step 7: All to 45 N.m (33 ft. lbs.)
- Step 8: All + 70° Turn **Do not use a torque wrench for this step.**
- Step 9: All + 70° Turn **Do not use a torque wrench for this step.**

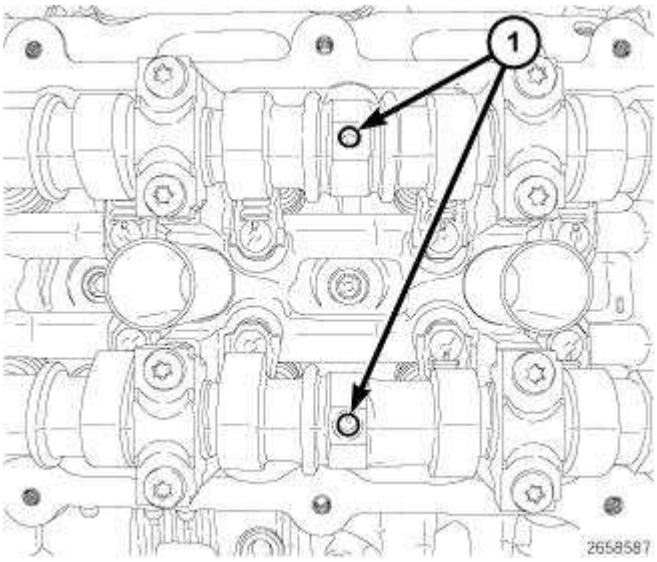

Fig. 179: Positioning Camshaft Alignment Holes Vertically
Courtesy of CHRYSLER GROUP, LLC

CAUTION: Do not rotate the camshafts more than a few degrees independently of the crankshaft. Valve to piston contact could occur resulting in possible valve damage. If the camshafts need to be rotated more than a few degrees, first move the pistons away from the cylinder heads by rotating the crankshaft counterclockwise to a position 30° before-top-dead-center. Once the camshafts are returned to their top-dead-center position, rotate the crankshaft clockwise to return the crankshaft to top-dead-center.

NOTE: If the hydraulic lifters are being reused, reassemble them into their original locations.

11. If removed, install the hydraulic lifters. Refer to **LIFTER(S), HYDRAULIC, INSTALLATION**.

NOTE: **If the rocker arms are being reused, reassemble them into their original locations.**

12. Install the rocker arms and camshafts. Refer to **CAMSHAFT, ENGINE, INSTALLATION**.
13. Rotate the camshafts clockwise to TDC by positioning the alignment holes (1) vertically.

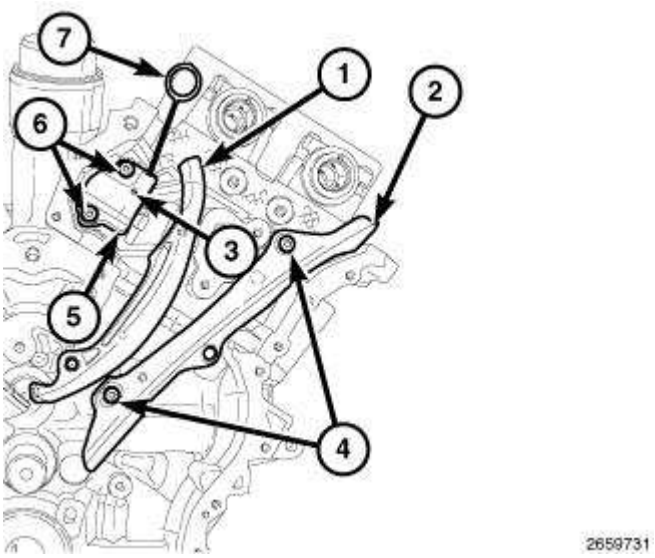

Fig. 180: Left Cam Chain Tensioner, Arm, Guide & Bolts
Courtesy of CHRYSLER GROUP, LLC

14. Install the left cam chain guide (2) with two bolts (4) and tighten the T30 bolts (4) to 12 N.m (9 ft. lbs.).
15. Install the left cam chain tensioner (5) to the cylinder head with two bolts (6) and tighten the T30 bolts (6) to 12 N.m (9 ft. lbs.).
16. Reset the left cam chain tensioner (5) by lifting the pawl (3), pushing back the piston and installing Tensioner Pin (special tool #8514, Pins, Tensioner) (7). Refer to **VALVE TIMING, STANDARD PROCEDURE**.
17. Install the left tensioner arm (1).

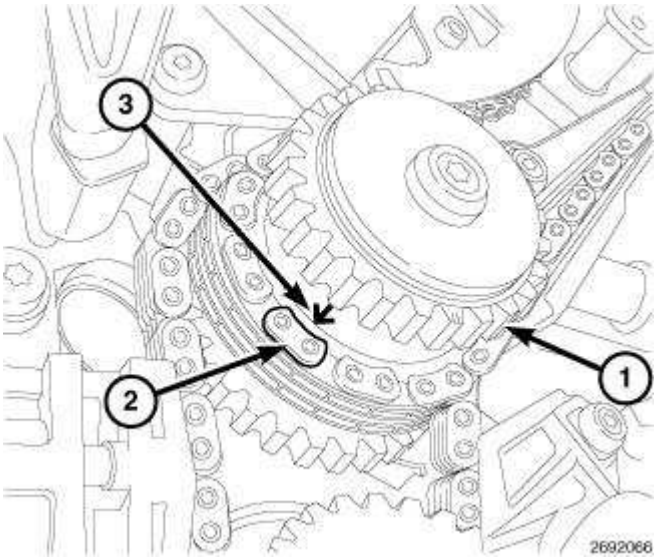

Fig. 181: Idler Sprocket, Plated Link & Arrow
Courtesy of CHRYSLER GROUP, LLC

18. Press the left intake cam phaser onto the intake camshaft, install and hand tighten the oil control valve.

> **CAUTION: Always reinstall timing chains so that they maintain the same direction of rotation. Inverting a previously run chain on a previously run sprocket will result in excessive wear to both the chain and sprocket.**

19. Drape the left side cam chain over the left intake cam phaser and onto the idler sprocket (1) so that the arrow (3) is aligned with the plated link (2) on the cam chain.

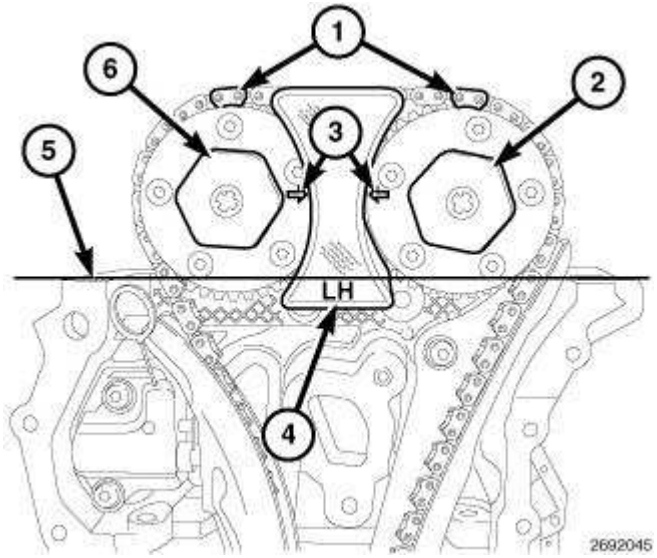

Fig. 182: Phaser Timing Marks, Oil Control Valves & LH Camshaft Phaser Lock
Courtesy of CHRYSLER GROUP, LLC

20. While maintaining this alignment, route the cam chain around the exhaust and intake cam phasers so that the plated links are aligned with the phaser timing marks (1). Position the left side cam phasers so that the arrows (3) point toward each other and are parallel to the valve cover sealing surface (5). Press the exhaust cam phaser onto the exhaust cam, install and hand tighten the oil control valve (2).

NOTE: Minor rotation of a camshaft (a few degrees) may be required to install the camshaft phaser or phaser lock.

21. Install the LH Camshaft Phaser Lock (special tool #10202, Locks, Camshaft/Phaser) (4) and tighten the oil control valves (2) and (6) to 150 N.m (110 ft. lbs.).

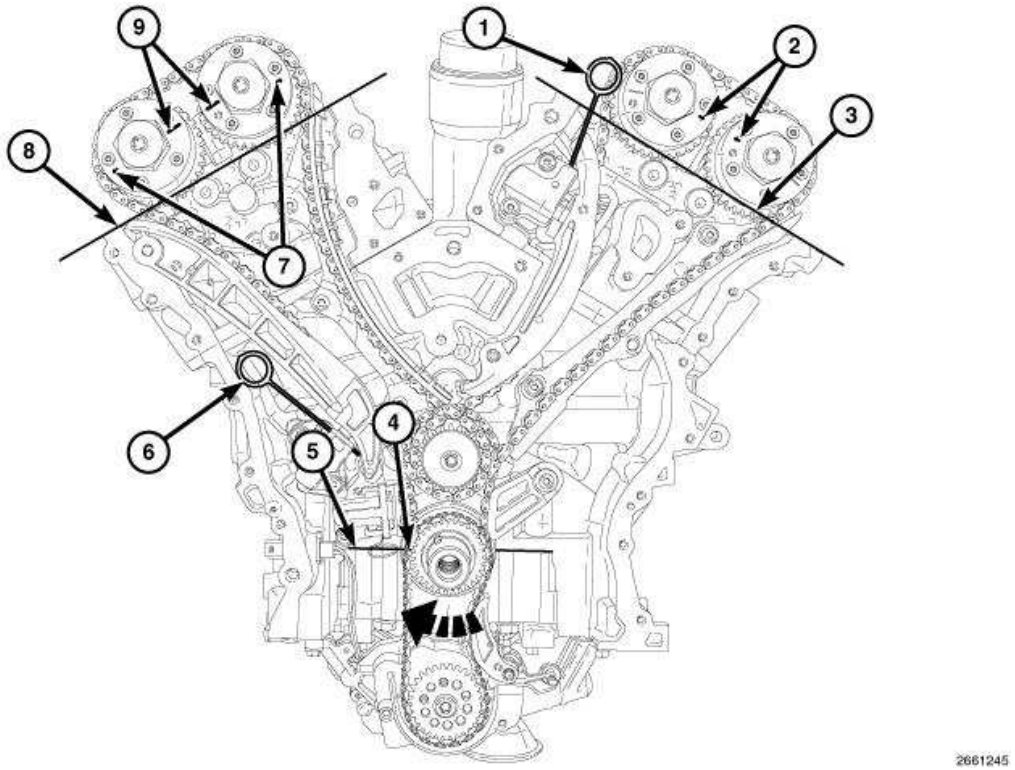

Fig. 183: Rotating Crankshaft Clockwise To Position No. 1 Piston At TDC On Exhaust Stroke
Courtesy of CHRYSLER GROUP, LLC

22. Remove the LH Camshaft Phaser Lock (special tool #10202, Locks, Camshaft/Phaser).
23. Remove the Tensioner Pin (special tool #8514, Pins, Tensioner) (1) from the left cam chain tensioner.
24. Rotate the crankshaft clockwise two complete revolutions stopping when the dimple (4) on the crankshaft is aligned the with the block/bearing cap junction (5).
25. While maintaining this alignment, verify that the arrows on the left side cam phasers (2) point toward each other and are parallel to the valve cover sealing surface (3) and that the right side cam phaser arrows (7) point away from each other and the scribe lines (9) are parallel to the valve cover sealing surface (8).

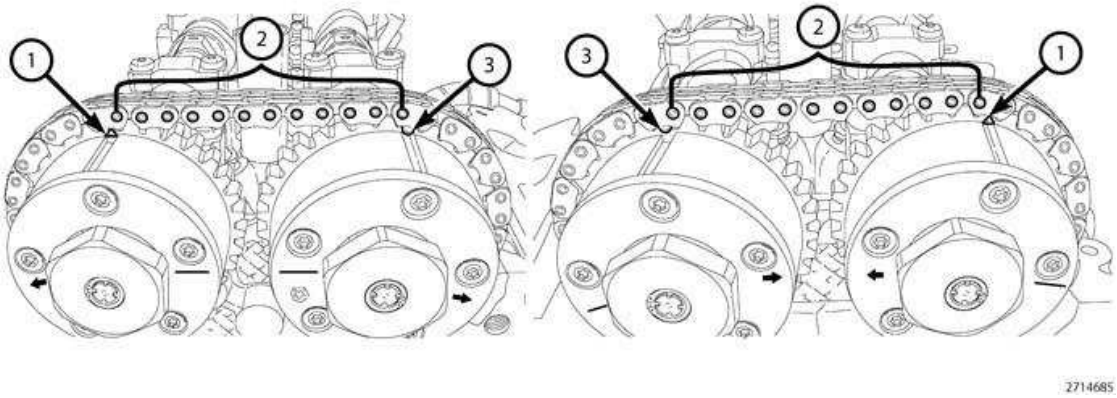

Fig. 184: Chain Pins, Exhaust Cam Phaser Triangle Marking & Circle Marking
Courtesy of CHRYSLER GROUP, LLC

26. There should be 12 chain pins (2) between the exhaust cam phaser triangle marking (1) and the intake cam phaser circle marking (3).
27. If the engine timing is not correct, repeat this procedure.
28. Install the engine timing cover, crankshaft vibration damper, upper and lower oil pans and cylinder head covers. Refer to **COVER(S), ENGINE TIMING, INSTALLATION** .

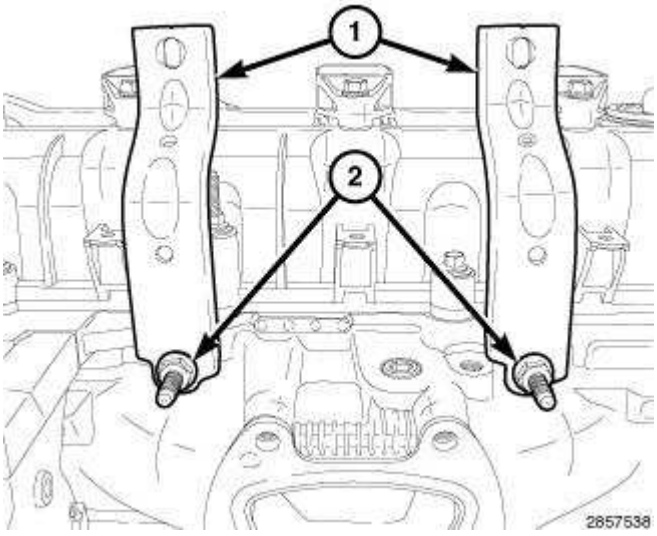

Fig. 185: Left Intake Manifold Support Brackets & Retaining Bolts
Courtesy of CHRYSLER GROUP, LLC

29. Install the left upper intake manifold support brackets (1) and tighten the stud (2) finger tight.

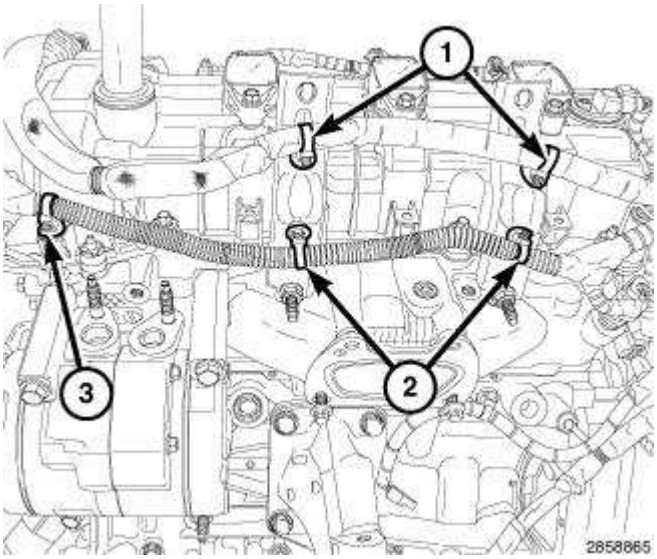

Fig. 186: Starter Wire Harness Retainers, Main Wire Harness Retainer & Manifold Support Bracket Retainers
Courtesy of CHRYSLER GROUP, LLC

30. Fasten two starter wire harness retainers (1) to the upper intake manifold support brackets.
31. Fasten one main wire harness retainer (3) to the left cylinder head cover and two retainers (2) to the upper intake manifold support brackets.

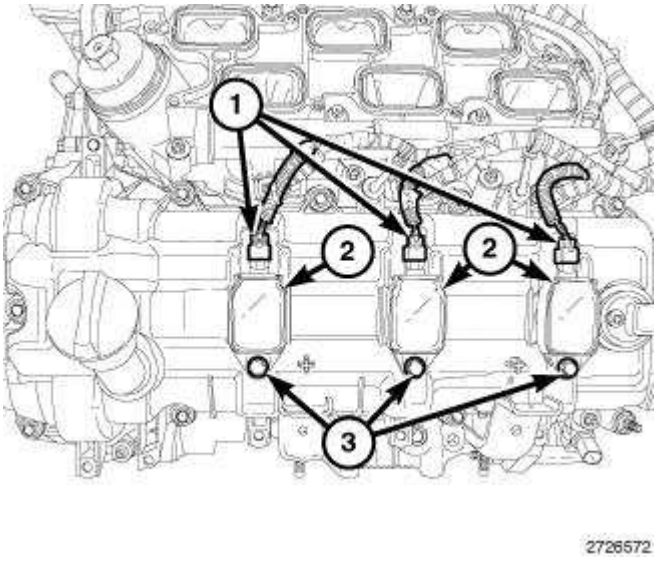

Fig. 187: Electrical Connector, Ignition Coils & Ignition Coil Retaining Bolts
Courtesy of CHRYSLER GROUP, LLC

32. Install the spark plugs and tighten to 18 N.m (13 ft. lbs.). Refer to **SPARK PLUG, INSTALLATION** .
33. Install the ignition coils (2). Refer to **COIL, IGNITION, INSTALLATION** .

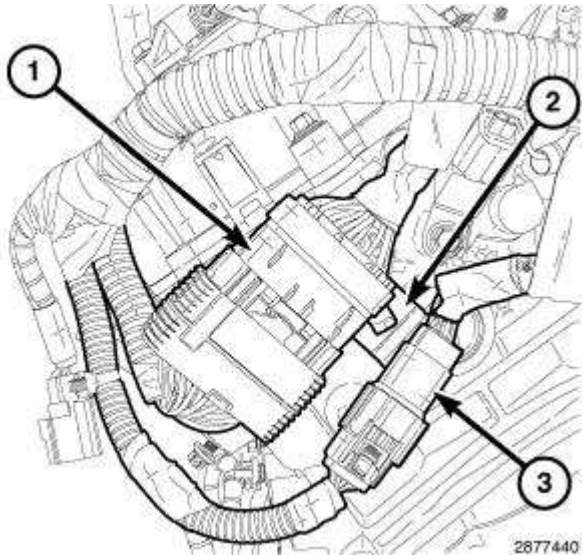

Fig. 188: Injection/Ignition Electrical Connector & Engine Oil Pressure/Temperature Sensor Electrical Connector
Courtesy of CHRYSLER GROUP, LLC

34. Connect the ignition coil capacitor electrical connector.
35. Connect the injection/ignition electrical connector (1).
36. Connect the engine oil pressure/temperature sensor electrical connector (3).
37. Fasten the injection/ignition wire harness and the oil pressure/temperature sensor wire harness from the retainer bracket (2) on the rear of the left cylinder head.

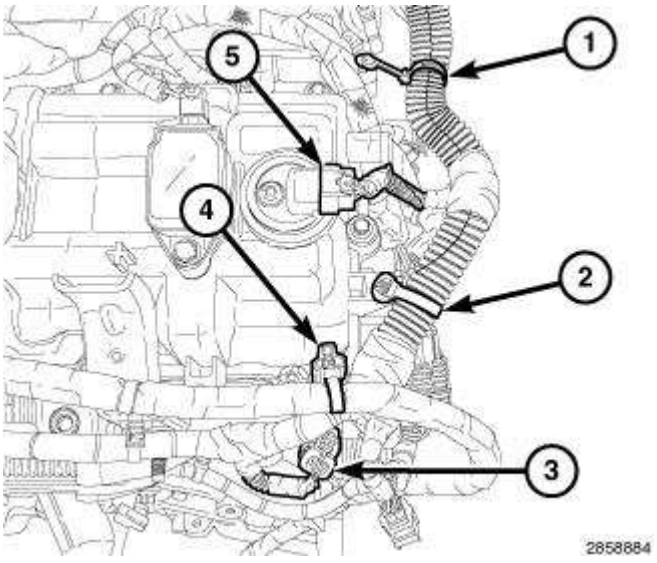

Fig. 189: ECT Sensor Connector, CMP Sensor & Main Wire Harness Retainers
Courtesy of CHRYSLER GROUP, LLC

38. Connect the Engine Coolant Temperature (ECT) sensor electrical connector (3).

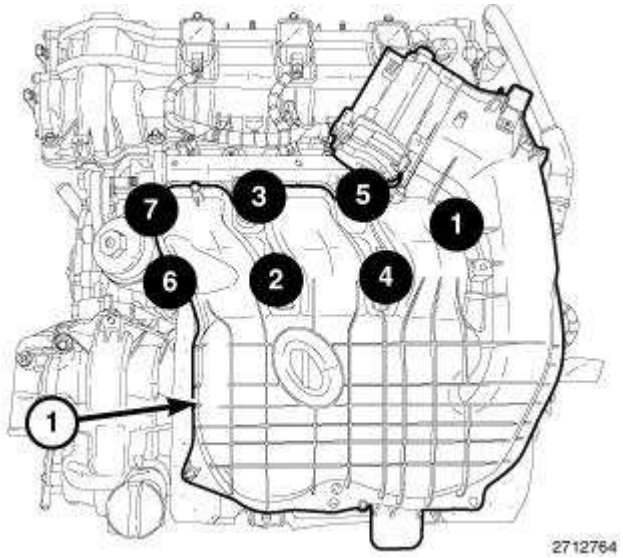

Fig. 190: Upper Intake Manifold Bolt Tightening Sequence
Courtesy of CHRYSLER GROUP, LLC

39. Install the upper and lower intake manifolds. Refer to **MANIFOLD, INTAKE, INSTALLATION** .

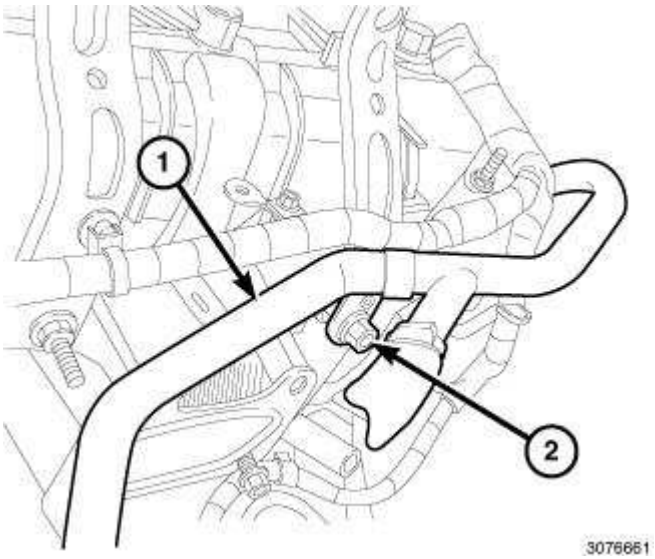

Fig. 191: Heater Core Return Tube Upper Support Bracket Retaining Nut & Tube
Courtesy of CHRYSLER GROUP, LLC

40. Position the heater core return tube (1) onto the upper support bracket, install the retaining nut (2) and tighten to 12 N.m (9 ft. lbs.).

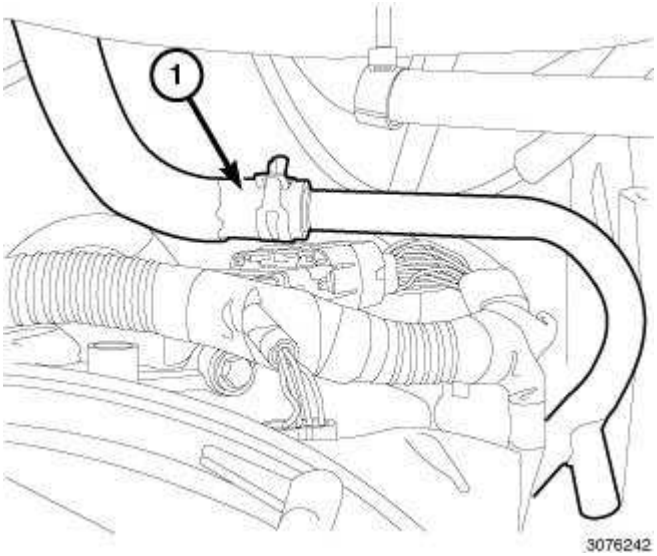

Fig. 192: Heater Core Return Hose
Courtesy of CHRYSLER GROUP, LLC

41. Connect the heater core return hose (1).

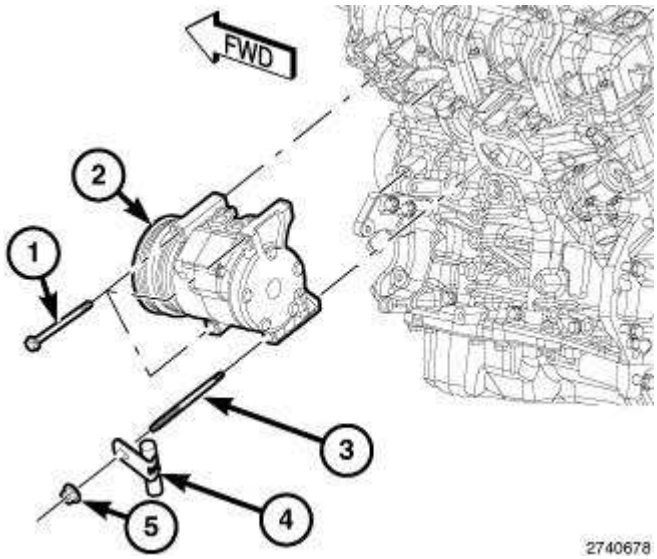

Fig. 193: A/C Compressor, Nut, Stud & Three Bolts
Courtesy of CHRYSLER GROUP, LLC

42. Position the A/C compressor (2), install the upper bolts (1) finger tight.
43. Install the lower A/C compressor retaining studs (3) finger tight
44. Tightened the A/C compressor upper bolts (1) to 25 N.m (18 ft. lbs.).
45. Raise and support the vehicle. Refer to **HOISTING, STANDARD PROCEDURE** .

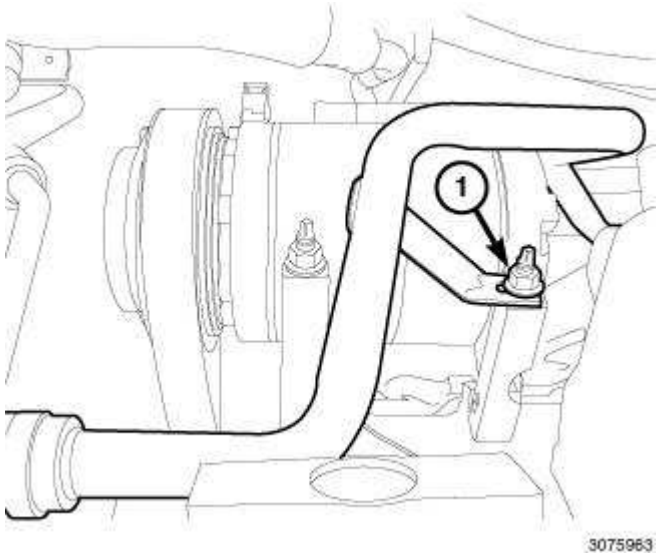

Fig. 194: Heater Core Return Tube Lower Support Bracket Retaining Nut
Courtesy of CHRYSLER GROUP, LLC

46. Position the heater core return tube lower support bracket onto the A/C compressor lower retaining stud, install the nut (1) and tighten both A/C compressor lower retaining nuts to 25 N.m (18 ft. lbs.).

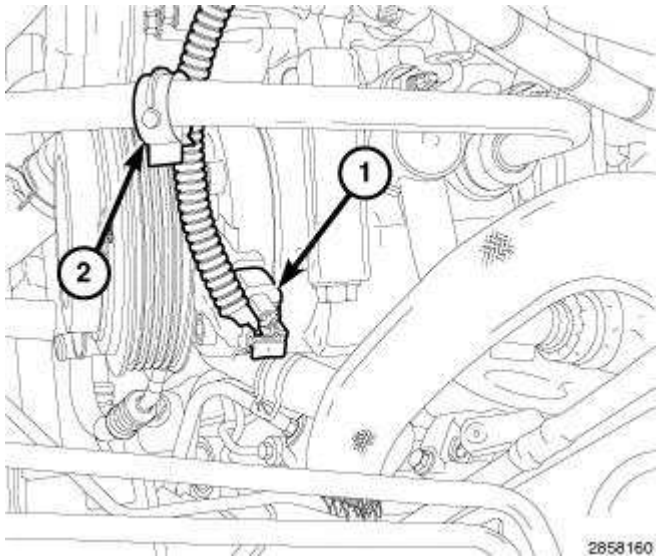

Fig. 195: A/C Compressor Electrical Connector & Wire Harness Retainer
Courtesy of CHRYSLER GROUP, LLC

47. Connect the A/C compressor electrical connector (1) and fasten the wire harness retainer (2) to the A/C compressor discharge line.

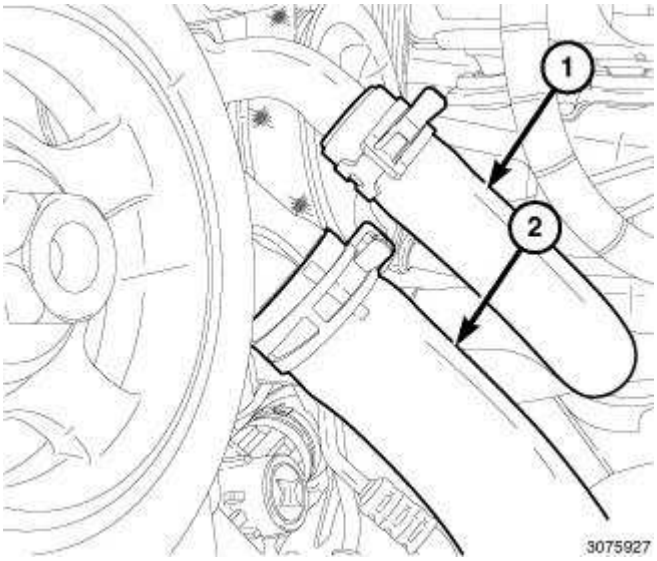

Fig. 196: Lower Heater Core Return Hose & Lower Radiator Hose
Courtesy of CHRYSLER GROUP, LLC

48. Connect the lower heater core return hose (1) to the engine coolant pump housing.

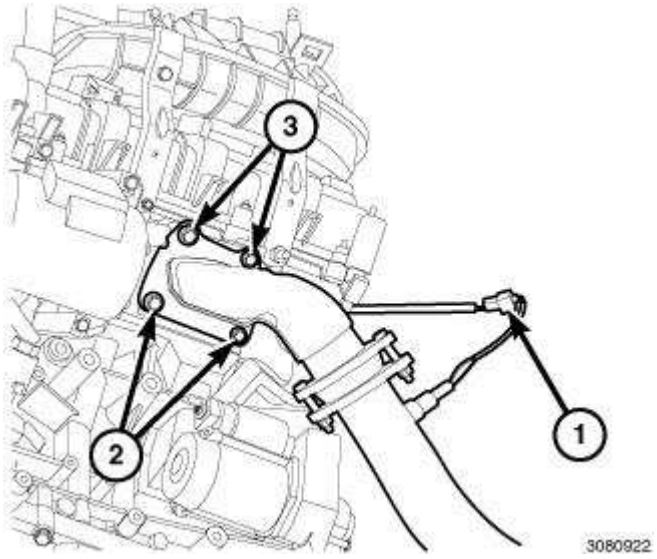

Fig. 197: Left Upstream Oxygen Sensor Electrical Connector & Down Pipe Flange Bolts
Courtesy of CHRYSLER GROUP, LLC

49. Position the left down pipe onto the partially installed lower flange bolts (2).
50. Install the upper down pipe flange bolts (1) and tighten to 23 N.m (17 ft. lbs.).
51. Tighten the lower down pipe flange bolts (2) to 23 N.m (17 ft. lbs.).
52. Connect the left upstream oxygen sensor electrical connector (4) to the main wire harness.

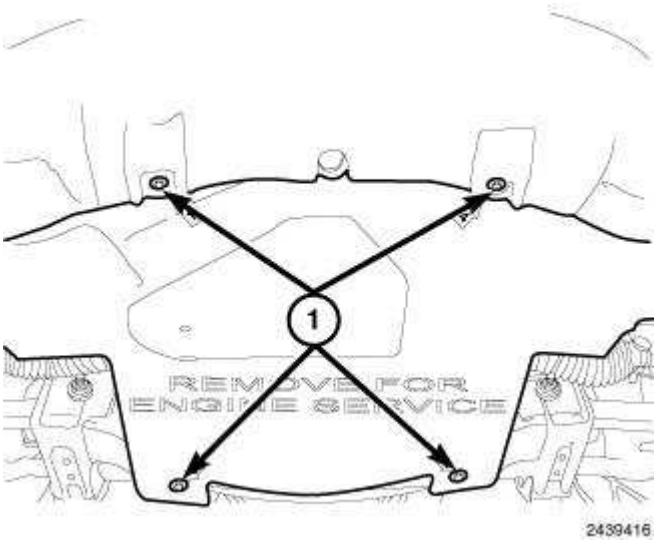

Fig. 198: Lower Splash Shield & Fasteners
Courtesy of CHRYSLER GROUP, LLC

53. If removed, install the oil filter.
54. Position the belly pan and install the retainers (1).
55. Lower the vehicle.

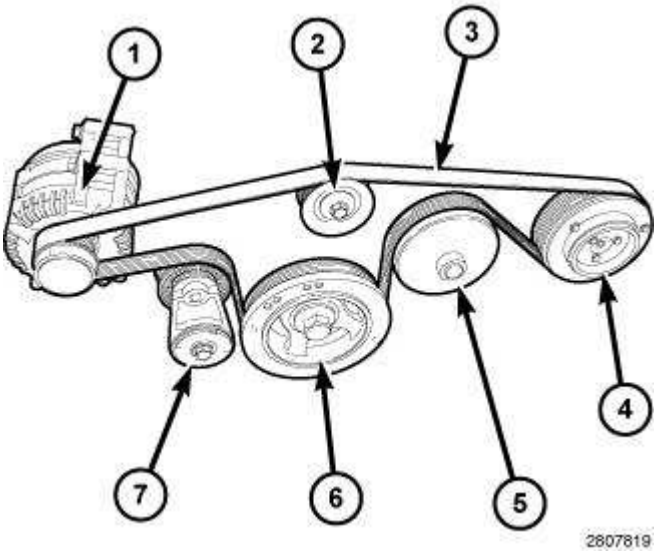

Fig. 199: Idler Pulley, Tensioner Arm, Belt, Idler, Tensioner & Belt Routing
Courtesy of CHRYSLER GROUP, LLC

56. Rotate the accessory drive belt tensioner (7) counterclockwise until it contacts the stop and install the accessory drive belt (3), then slowly rotate the tensioner into position.

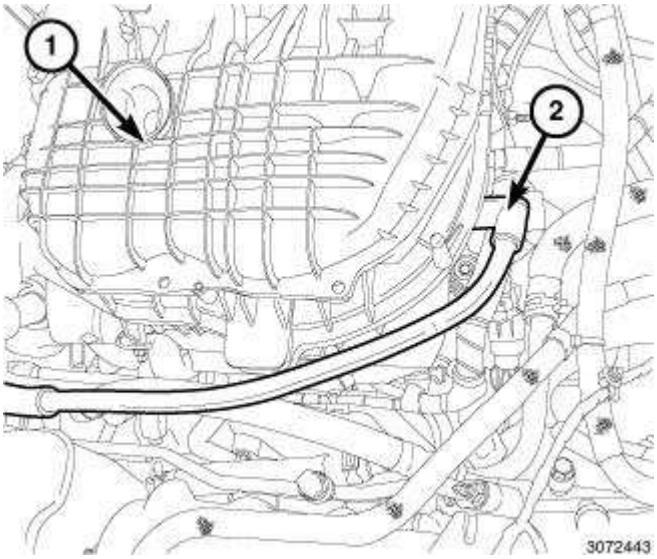

Fig. 200: Fresh Air Makeup Hose At Rear Of Intake Manifold
Courtesy of CHRYSLER GROUP, LLC

57. Connect the fresh air makeup hose (2) to the rear of the intake manifold (1).

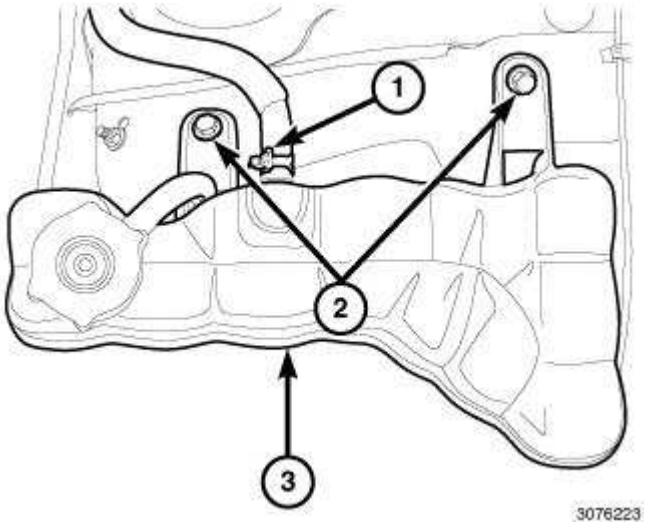

Fig. 201: Heater Core Purge Hose, Coolant Bottle Retaining Bolts & Coolant Bottle
Courtesy of CHRYSLER GROUP, LLC

58. Position the coolant bottle (3) into the engine compartment.
59. Install the coolant bottle retaining bolts (2) and tighten to 12 N.m (9 ft. lbs.).
60. Connect the heater core purge hose (1) to the coolant bottle.

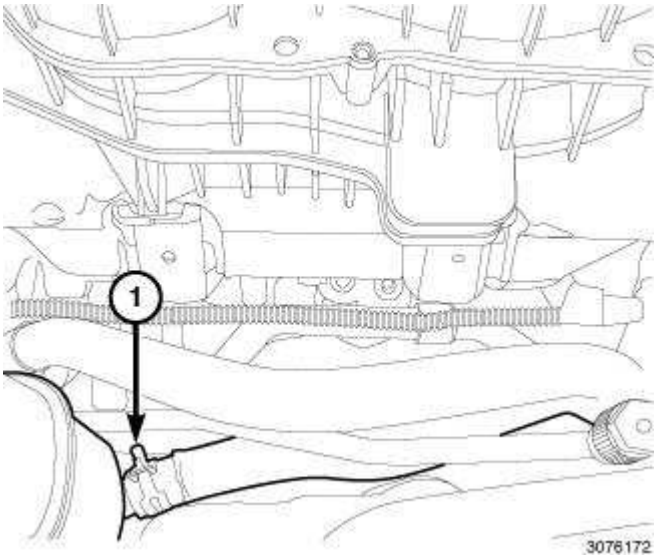

Fig. 202: Coolant Bottle Return Hose
Courtesy of CHRYSLER GROUP, LLC

61. Connect the coolant bottle return hose (1).

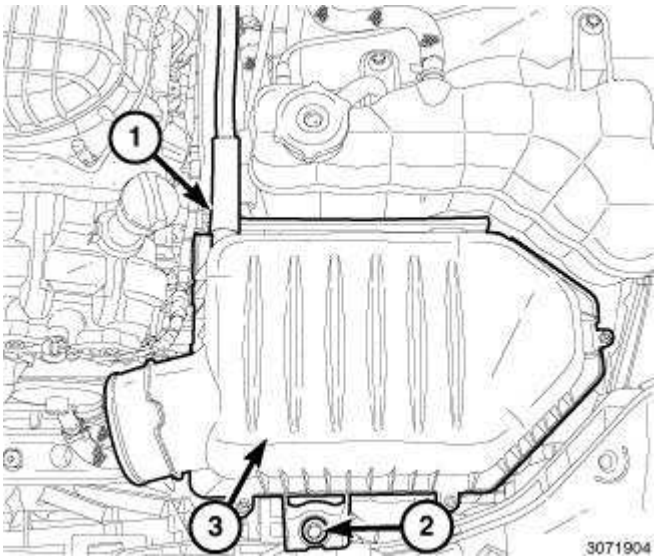

Fig. 203: Fresh Air Makeup Hose, Air Cleaner Housing & Bolt
Courtesy of CHRYSLER GROUP, LLC

62. Position the air cleaner housing (3) into the vehicle.
63. Install the air cleaner housing retaining bolt (2) and tighten to 12 N.m (9 ft. lbs.).
64. Connect the fresh air makeup hose (1) to the air cleaner housing.

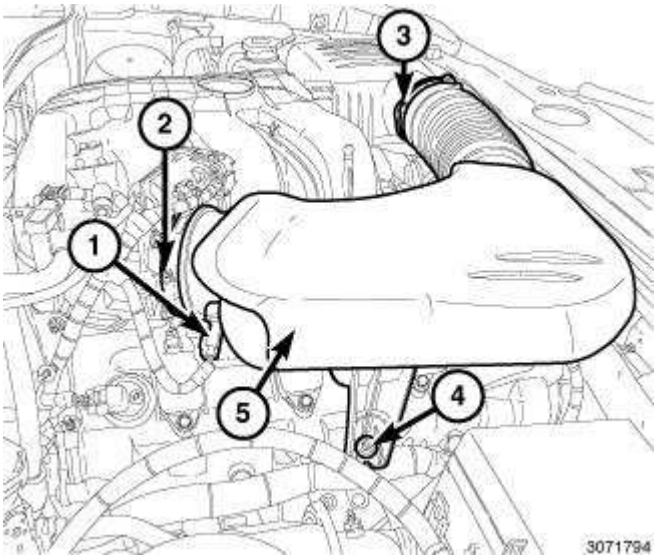

Fig. 204: Inlet Air Temperature (IAT) Sensor Electrical Connector, Air Inlet Hose Assembly & Fasteners
Courtesy of CHRYSLER GROUP, LLC

65. Position the air inlet hose assembly (5) onto the throttle body and the air cleaner housing.
66. Secure the air inlet hose assembly retaining grommet onto the ball stud (4).
67. Tighten the clamp at the air cleaner housing (3) to 5 N.m (44 in. lbs.).
68. Tighten the clamp (2) at the throttle body to 5 N.m (44 in. lbs.).
69. Connect the Inlet Air Temperature (IAT) sensor electrical connector (1).

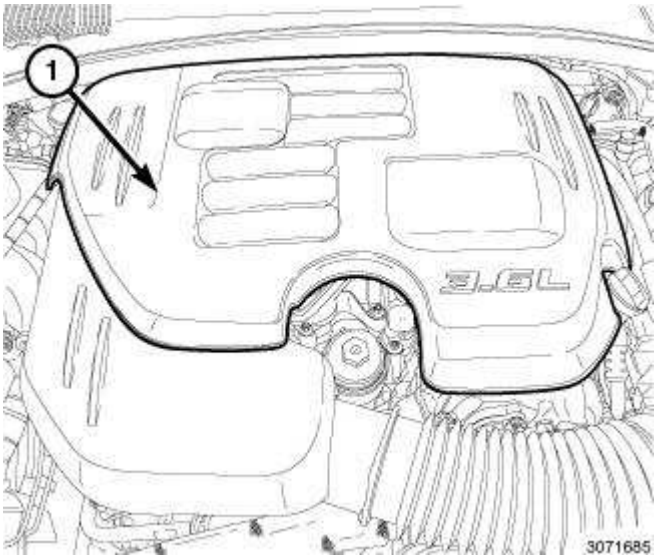

Fig. 205: Engine Cover
Courtesy of CHRYSLER GROUP, LLC

70. Fill the crankcase with the specified type and amount of engine oil. Refer to **CAPACITIES AND RECOMMENDED FLUIDS, SPECIFICATIONS** .

71. Fill the cooling system with the specified type and amount of engine coolant. Refer to **STANDARD PROCEDURE** .
72. Position the engine cover (1) and secure the retaining grommets onto the ball studs.

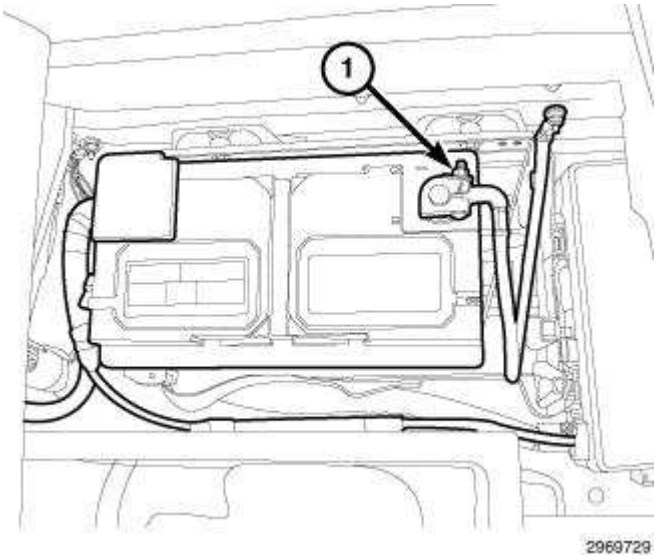

Fig. 206: Negative Battery Cable
Courtesy of CHRYSLER GROUP, LLC

73. Connect the negative battery cable and tighten nut to 5 N.m (45 in. lbs.).
74. Run the engine until it reaches normal operating temperature and check for leaks.

NOTE: **The Cam/Crank Variation Relearn procedure must be performed using the scan tool anytime there has been a repair/replacement made to a powertrain system, for example: flywheel, valvetrain, camshaft and/or crankshaft sensors or components.**

RIGHT

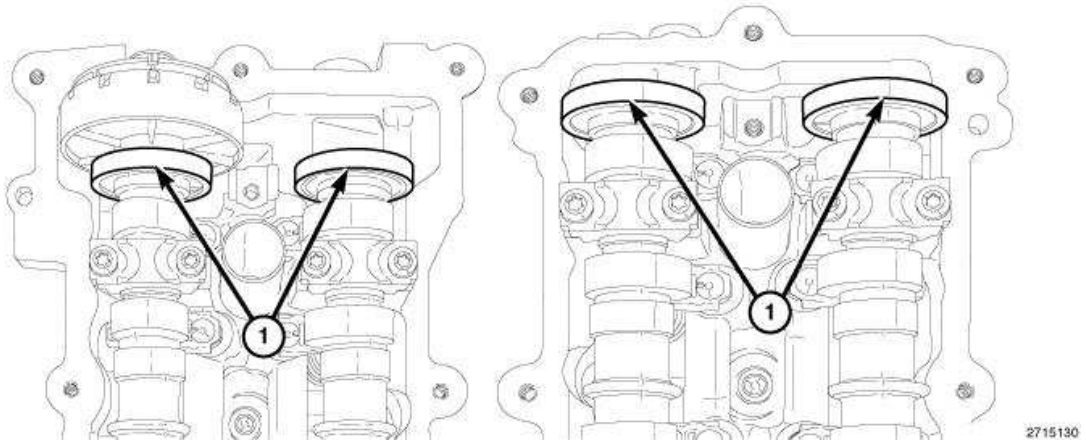

Fig. 207: Magnetic Timing Wheels

Courtesy of CHRYSLER GROUP, LLC

CAUTION: The magnetic timing wheels (1) must not come in contact with magnets (pickup tools, trays, etc.) or any other strong magnetic field. This will destroy the timing wheels ability to correctly relay camshaft position to the camshaft position sensor.

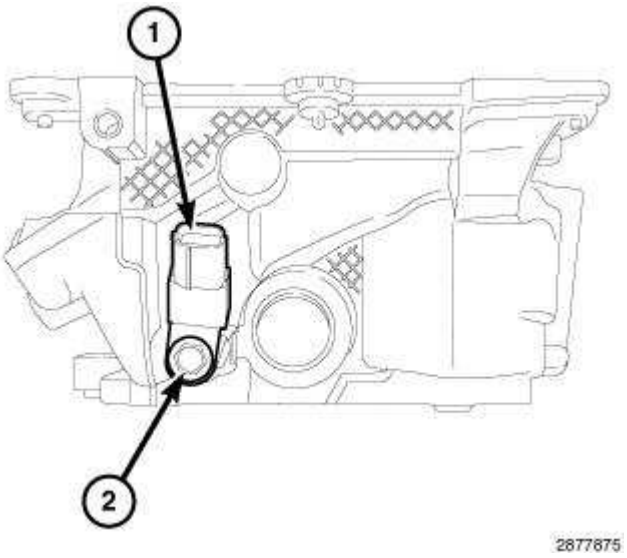

Fig. 208: Ignition Coil Capacitor & Bolt
Courtesy of CHRYSLER GROUP, LLC

1. If removed, install the ignition coil capacitor (1) with an M6 bolt (2) tightened to 10 N.m (89 in. lbs.).

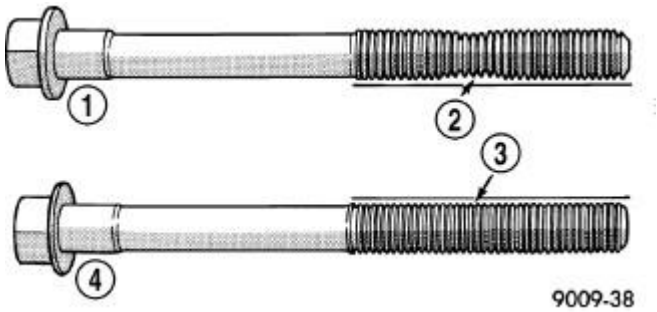

Fig. 209: Checking Cylinder Head Bolts For Stretching (Necking)
Courtesy of CHRYSLER GROUP, LLC

CAUTION: The cylinder head bolts are tightened using a torque plus angle procedure. The bolts must be examined BEFORE reuse. If the threads are necked down the bolts must be replaced.

NOTE: Typical cylinder head bolt shown in illustration.

2. Check the cylinder head bolts for necking by holding a scale or straight edge against the threads. If all the threads do not contact the scale (2) the bolt must be replaced.

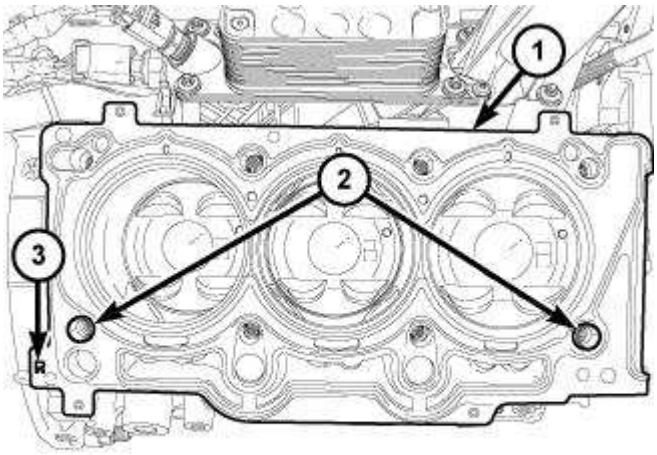

Fig. 210: Head Gasket & Locating Dowels
Courtesy of CHRYSLER GROUP, LLC

CAUTION: When cleaning cylinder head and cylinder block surfaces, DO NOT use a metal scraper because the surfaces could be cut or ground. Use ONLY a wooden or plastic scraper.

3. Clean and prepare the gasket sealing surfaces of the cylinder head and block. Refer to **STANDARD PROCEDURE**.

CAUTION: Non-compressible debris such as oil, coolant or RTV sealants that are not removed from bolt holes can cause the aluminum casting to crack when tightening the bolts.

4. Clean out the cylinder head bolt holes in the engine block.

WARNING: The multi-layered steel head gaskets have very sharp edges that could cause personal injury if not handled carefully.

CAUTION: The installation of the cylinder head gaskets are not interchangeable between the left and right cylinder heads. They are clearly marked (3) with "R" for right and "L" for left. They must be applied on a dry surface, without the use of any adhesives.

5. Position the new cylinder head gasket (1) on the locating dowels (2).

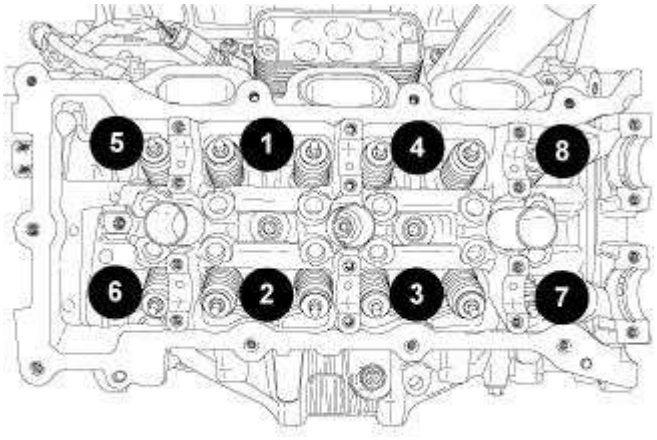

Fig. 211: Cylinder Head Retaining Bolt Tightening Sequence - Right
Courtesy of CHRYSLER GROUP, LLC

6. Position the cylinder head onto the cylinder block. Make sure the cylinder head seats fully over the locating dowels.

NOTE: Do not apply any additional oil to the bolt threads.

7. Install the eight cylinder head bolts finger tight.
8. Tighten the cylinder head bolts in the sequence shown in illustration, following this 9 step torque plus angle method. Tighten according to the following torque values:
   - Step 1: All to 30 N.m (22 ft. lbs.)
   - Step 2: All to 45 N.m (33 ft. lbs.)
   - Step 3: All + 75° Turn **Do not use a torque wrench for this step.**
   - Step 4: All + 50° Turn **Do not use a torque wrench for this step.**
   - Step 5: Loosen all fasteners in reverse of sequence shown in illustration
   - Step 6: All to 30 N.m (22 ft. lbs.)
   - Step 7: All to 45 N.m (33 ft. lbs.)
   - Step 8: All + 70° Turn **Do not use a torque wrench for this step.**
   - Step 9: All + 70° Turn **Do not use a torque wrench for this step.**

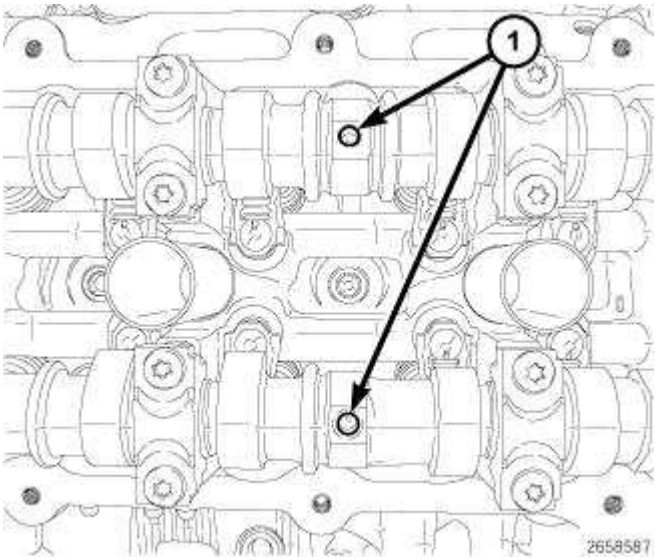

Fig. 212: Positioning Camshaft Alignment Holes Vertically
Courtesy of CHRYSLER GROUP, LLC

NOTE: If the hydraulic lifters are being reused, reassemble them into their original locations.

9. If removed, install the hydraulic lifters. Refer to **LIFTER(S), HYDRAULIC, INSTALLATION**.

NOTE: If the rocker arms are being reused, reassemble them into their original locations.

10. Install the rocker arms and camshafts. Refer to **CAMSHAFT, ENGINE, INSTALLATION**.

CAUTION: Do not rotate the camshafts more than a few degrees independently of the crankshaft. Valve to piston contact could occur resulting in possible valve damage. If the camshafts need to be rotated more than a few degrees, first move the pistons away from the cylinder heads by rotating the crankshaft counterclockwise to a position 30° before-top-dead-center. Once the camshafts are returned to their top-dead-center position, rotate the crankshaft clockwise to return the crankshaft to top-dead-center.

11. Verify that the camshafts are set at TDC by positioning the alignment holes (1) vertically.

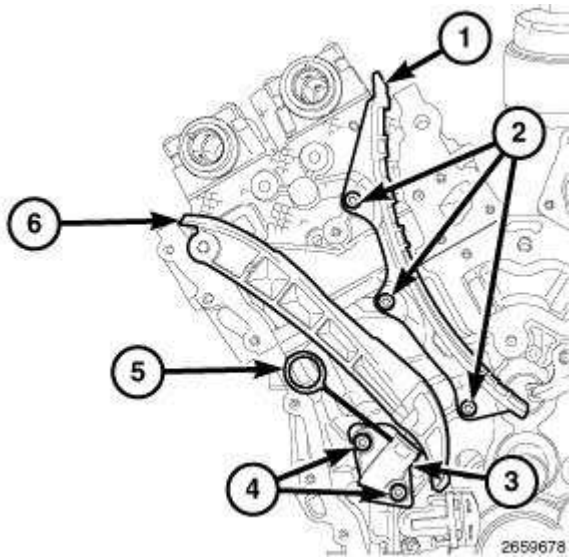

Fig. 213: Right Cam Chain Tensioner, Arm, Guide & Bolts
Courtesy of CHRYSLER GROUP, LLC

12. Install the right cam chain guide (1) with three bolts (2). Tighten the T30 bolts (2) to 12 N.m (106 in. lbs.).
13. Install the right cam chain tensioner (3) to the engine block with two bolts (4). Tighten the T30 bolts (4) to 12 N.m (106 in. lbs.).
14. Reset the right cam chain tensioner (3) by pushing back the tensioner piston and installing Tensioner Pin (special tool #8514, Pins, Tensioner) (5).
15. Install the right tensioner arm (6).

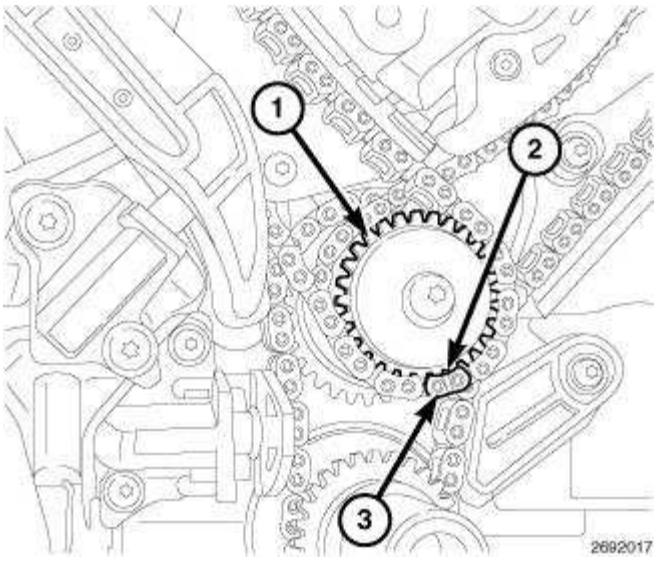

Fig. 214: Idler Sprocket, Dimple & Plated Link
Courtesy of CHRYSLER GROUP, LLC

CAUTION: Always reinstall timing chains so that they maintain the same

direction of rotation. Inverting a previously run chain on a previously run sprocket will result in excessive wear to both the chain and sprocket.

16. Press the right exhaust cam phaser onto the exhaust camshaft. Install and hand tighten the oil control valve.
17. Drape the right side cam chain over the right exhaust cam phaser and onto the idler sprocket (1) so that the dimple (2) is aligned with the plated link (3) on the cam chain.

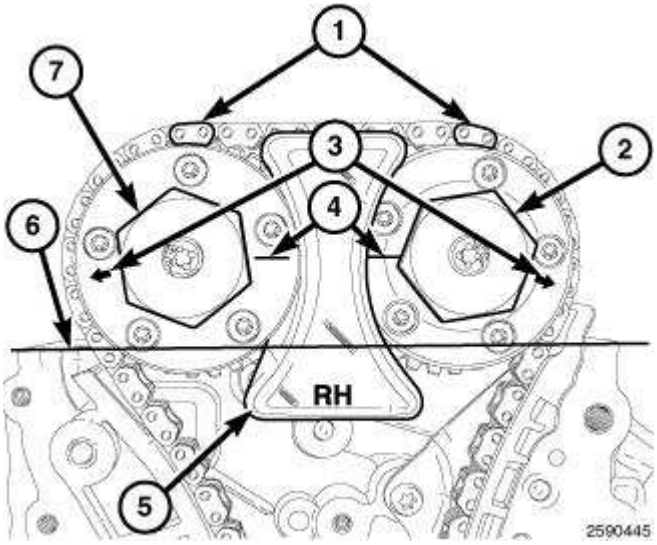

Fig. 215: Phaser Timing Marks, Oil Control Valves & RH Camshaft Phaser Lock
Courtesy of CHRYSLER GROUP, LLC

18. While maintaining this alignment, route the cam chain around the exhaust and intake cam phasers so that the plated links are aligned with the phaser timing marks (1). Position the right side cam phasers so that the arrows (3) point away from each other and the scribe lines (4) are parallel to the valve cover sealing surface (6). Press the intake cam phaser onto the intake cam, install and hand tighten the oil control valve (2).

NOTE: Minor rotation of a camshaft (a few degrees) may be required to install the camshaft phaser or phaser lock.

19. Install the RH Camshaft Phaser Lock (special tool #10202, Locks, Camshaft/Phaser) (5) and tighten the oil control valves (2) and (7) to 150 N.m (110 ft. lbs.).

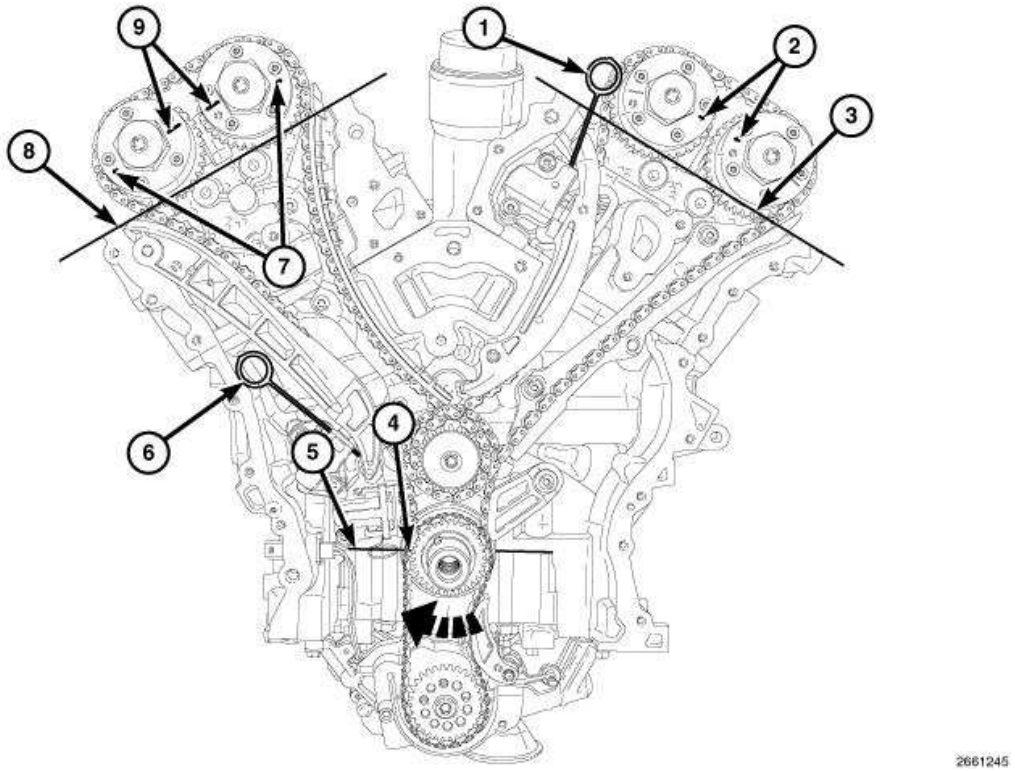

Fig. 216: Rotating Crankshaft Clockwise To Position No. 1 Piston At TDC On Exhaust Stroke
Courtesy of CHRYSLER GROUP, LLC

20. Remove the RH Camshaft Phaser Lock (special tool #10202, Locks, Camshaft/Phaser).
21. Remove the Tensioner Pin (special tool #8514, Pins, Tensioner) (6) from the RH cam chain tensioner.
22. Rotate the crankshaft clockwise two complete revolutions stopping when the dimple (4) on the crankshaft is aligned the with the block/bearing cap junction (5).
23. While maintaining this alignment, verify that the arrows on the left side cam phasers (2) point toward each other and are parallel to the valve cover sealing surface (3) and that the right side cam phaser arrows (7) point away from each other and the scribe lines (9) are parallel to the valve cover sealing surface (8).

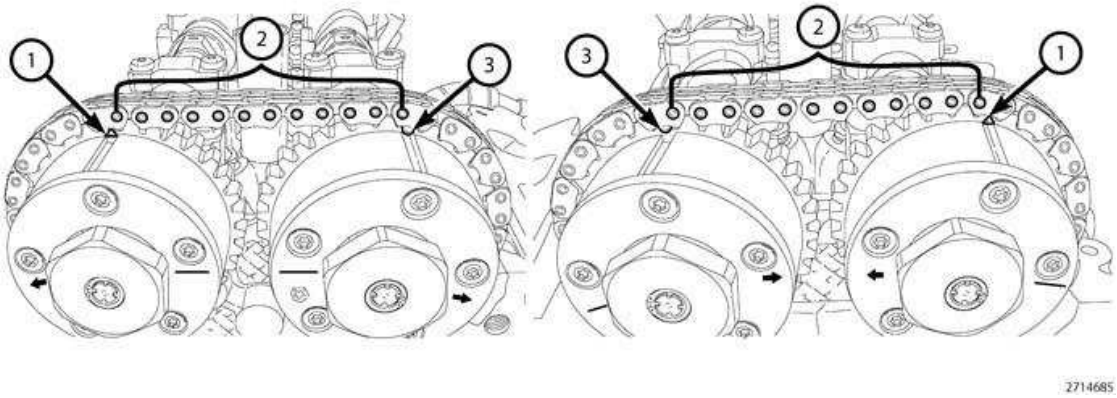

Fig. 217: Chain Pins, Exhaust Cam Phaser Triangle Marking & Circle Marking
Courtesy of CHRYSLER GROUP, LLC

24. There should be 12 chain pins (2) between the exhaust cam phaser triangle marking (1) and the intake cam phaser circle marking (3).
25. If the engine timing is not correct, repeat this procedure.
26. Install the engine timing cover, crankshaft vibration damper, upper and lower oil pans and cylinder head covers. Refer to **COVER(S), ENGINE TIMING, INSTALLATION** .

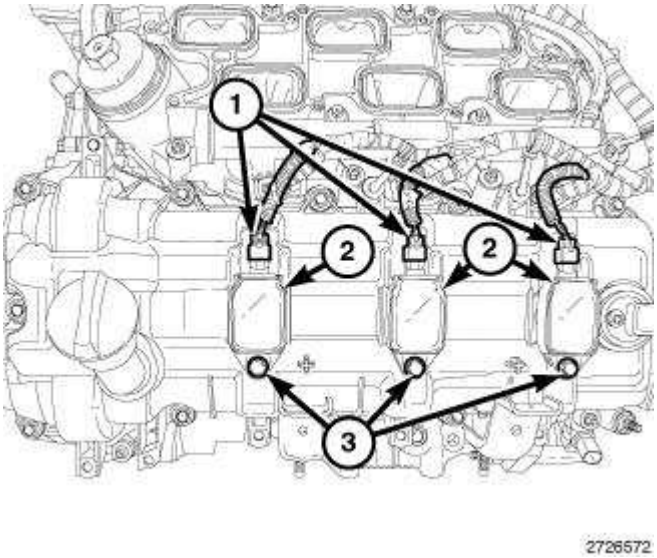

Fig. 218: Electrical Connector, Ignition Coils & Ignition Coil Retaining Bolts
Courtesy of CHRYSLER GROUP, LLC

NOTE: The left side ignition coils are shown in illustration, the right side ignition coils are similar.

27. Install the spark plugs and tighten to 18 N.m (13 ft. lbs.). Refer to **SPARK PLUG, INSTALLATION** .
28. Install the ignition coils (2). Refer to **COIL, IGNITION, INSTALLATION** .

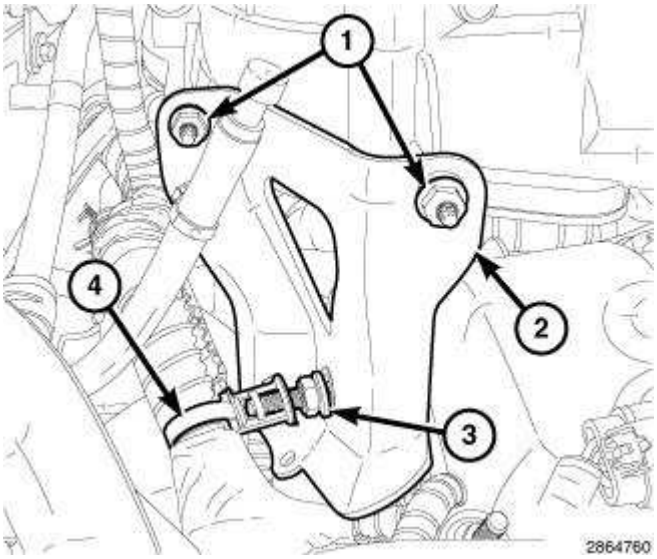

Fig. 219: Upper Intake Manifold Support Bracket, Stud & Fasteners
Courtesy of CHRYSLER GROUP, LLC

29. Position the upper intake manifold support bracket (2) and install the retaining stud (3) finger tight.

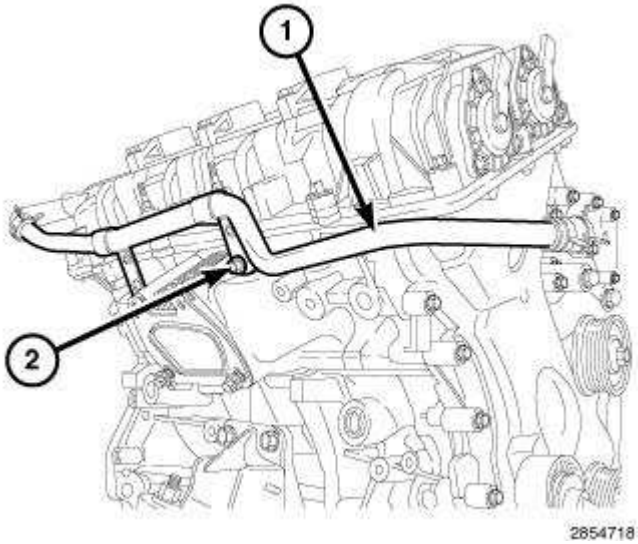

Fig. 220: Heater Core Supply Tube Support Bracket & Retaining Bolt
Courtesy of CHRYSLER GROUP, LLC

30. Install the heater core supply tube (1) with one bolt (2) tightened to 12 N.m (106 in. lbs.).

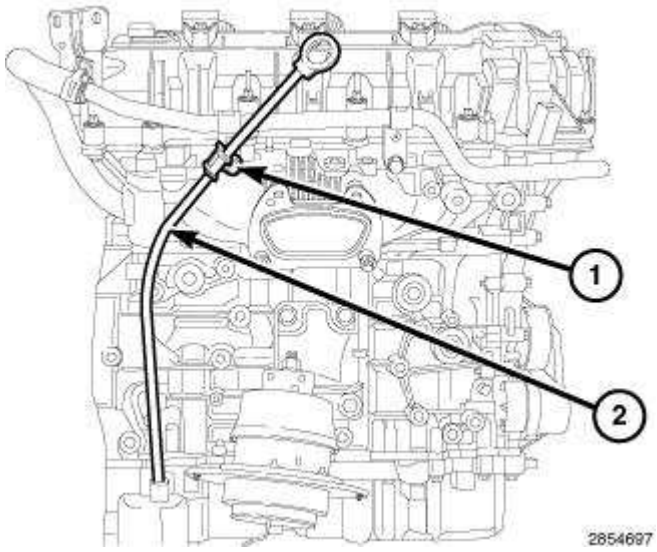

Fig. 221: Oil Level Indicator & Retaining Bolt
Courtesy of CHRYSLER GROUP, LLC

31. Position the oil level indicator (2), install the retaining bolt (1) and tighten to 12 N.m (106 in. lbs.).

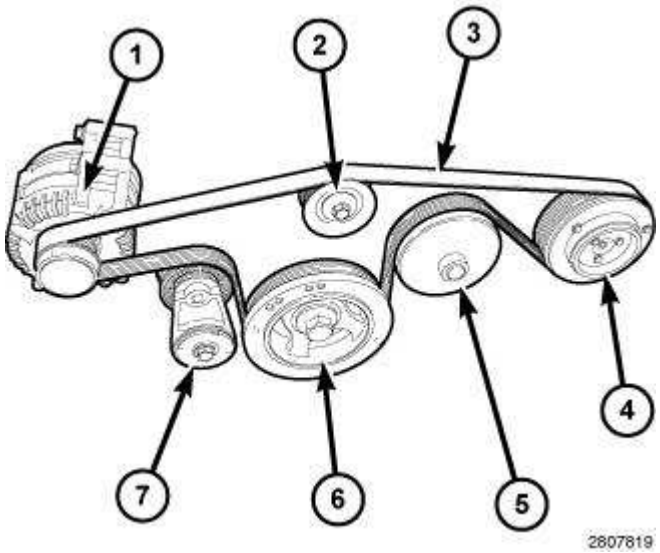

Fig. 222: Idler Pulley, Tensioner Arm, Belt, Idler, Tensioner & Belt Routing
Courtesy of CHRYSLER GROUP, LLC

32. Install the generator (1). Refer to **GENERATOR, INSTALLATION** .
33. Rotate the accessory drive belt tensioner (7) counterclockwise until it contacts the stop and install the accessory drive belt (3), then slowly rotate the tensioner into position.

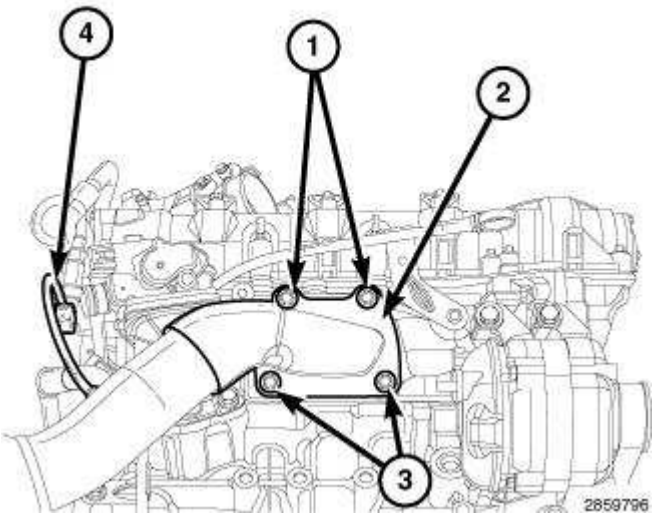

Fig. 223: Right Upstream Oxygen Electrical Sensor Connector, Down Pipe Flanges & Bolts
Courtesy of CHRYSLER GROUP, LLC

34. Install the right down pipe (2) onto the partially installed lower flange bolts (3).
35. Install the upper down pipe flange bolts (1) and tighten all M8 bolts to 23 N.m (17 ft. lbs.).
36. Connect the right upstream oxygen sensor connectors (4) to the main wire harness.

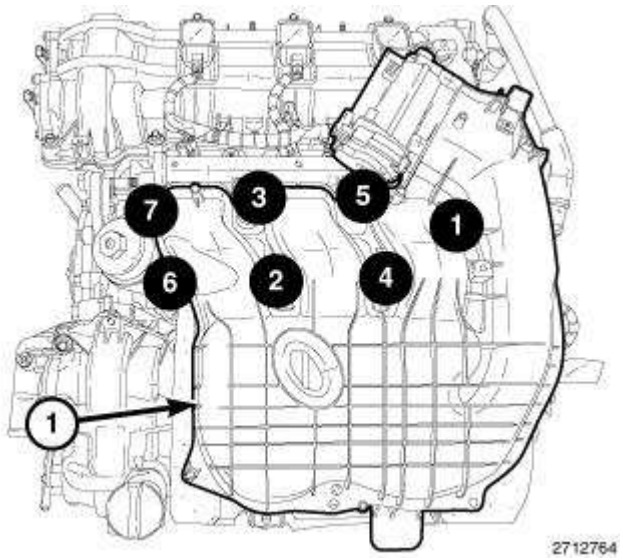

Fig. 224: Upper Intake Manifold Bolt Tightening Sequence
Courtesy of CHRYSLER GROUP, LLC

37. Install the upper and lower intake manifolds. Refer to **MANIFOLD, INTAKE, INSTALLATION** .

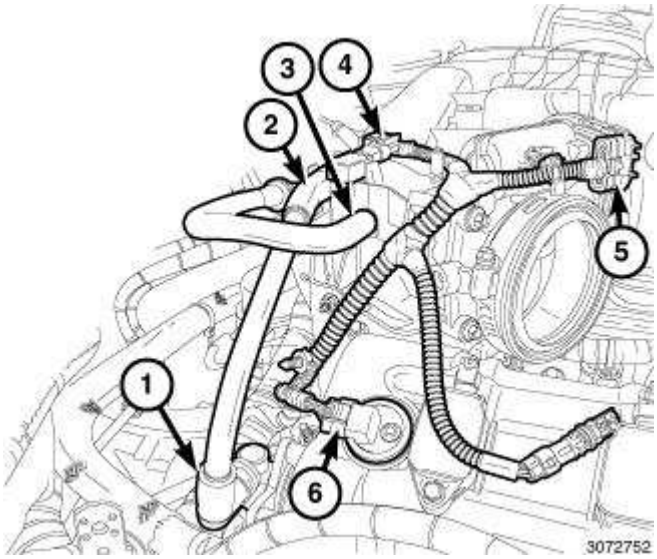

Fig. 225: PCV Valve, Intake Manifold, Brake Booster Vacuum Hose, MAP Sensor, ETC & CMP Sensor Electrical Connectors
Courtesy of CHRYSLER GROUP, LLC

38. Connect the electrical connector at the Camshaft Position Sensor (CMP) (6).
39. Connect the electrical connector at the Electronic Throttle Control (ETC) (5).
40. Connect the electrical connector at the Manifold Absolute Pressure (MAP) Sensor (4).
41. Connect the brake booster vacuum hose (3).
42. Connect the PCV hose to the PCV valve (1) and to the intake manifold (2).

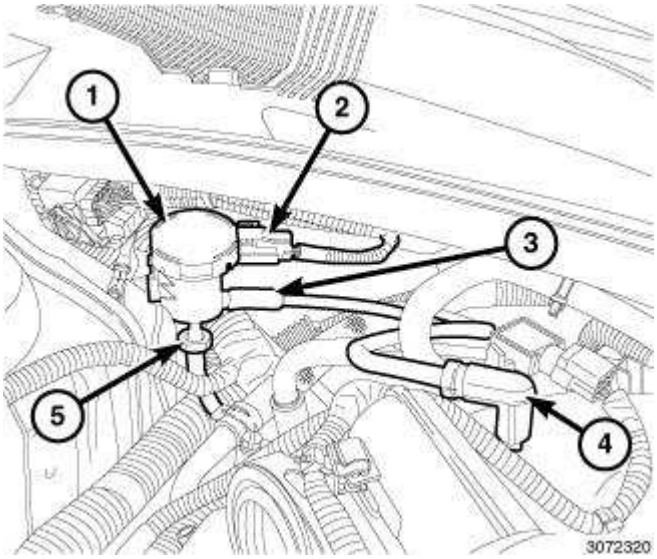

Fig. 226: EVAP Purge Solenoid, Electrical Connector & Vacuum Lines
Courtesy of CHRYSLER GROUP, LLC

43. Connect the EVAP purge solenoid vacuum line (4) to the intake manifold.
44. Connect the vacuum line (3) to the EVAP purge solenoid (1).

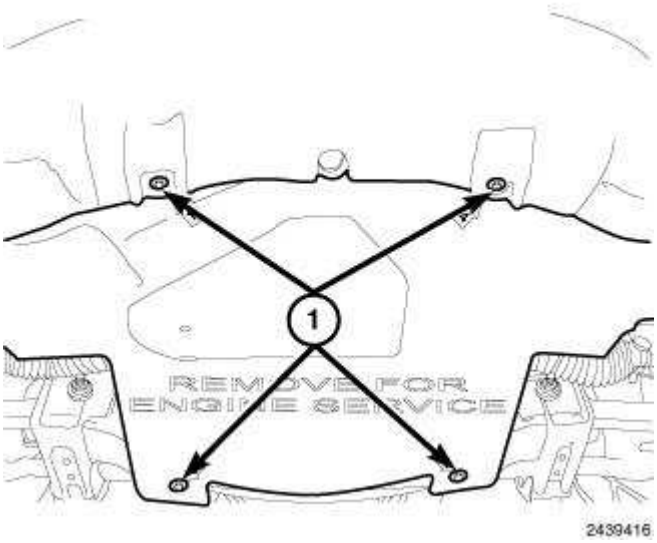

Fig. 227: Lower Splash Shield & Fasteners
Courtesy of CHRYSLER GROUP, LLC

45. Raise and support the vehicle. Refer to **HOISTING, STANDARD PROCEDURE** .
46. If removed, install the oil filter.
47. Position the belly pan and install the retainers (1).
48. Lower the vehicle.

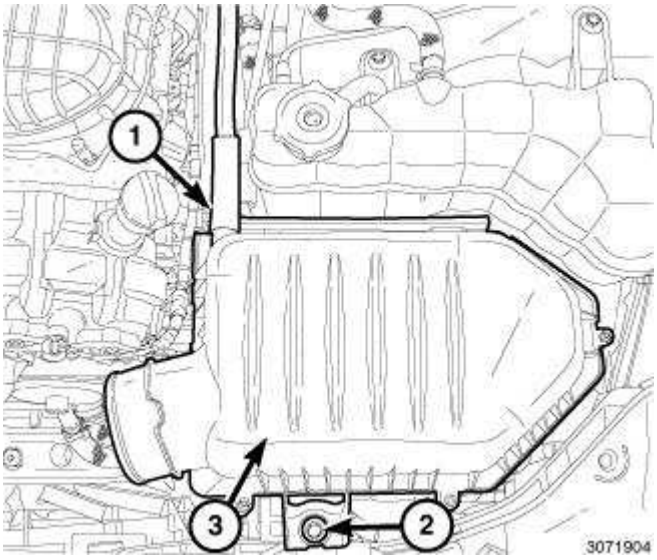

Fig. 228: Fresh Air Makeup Hose, Air Cleaner Housing & Bolt
Courtesy of CHRYSLER GROUP, LLC

49. Position the air cleaner housing (3) into the vehicle.
50. Install the air cleaner housing retaining bolt (2) and tighten to 12 N.m (9 ft. lbs.).
51. Connect the fresh air makeup hose (1) to the air cleaner housing.

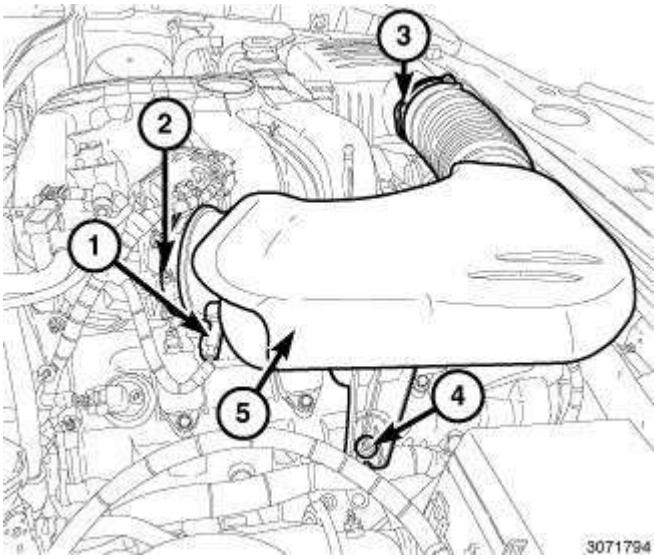

Fig. 229: Inlet Air Temperature (IAT) Sensor Electrical Connector, Air Inlet Hose Assembly & Fasteners
Courtesy of CHRYSLER GROUP, LLC

52. Position the air inlet hose assembly (5) onto the throttle body and the air cleaner housing.
53. Secure the air inlet hose assembly retaining grommet onto the ball stud (4).
54. Tighten the clamp at the air cleaner housing (3) to 5 N.m (44 in. lbs.).
55. Tighten the clamp (2) at the throttle body to 5 N.m (44 in. lbs.).
56. Connect the Inlet Air Temperature (IAT) sensor electrical connector (1).

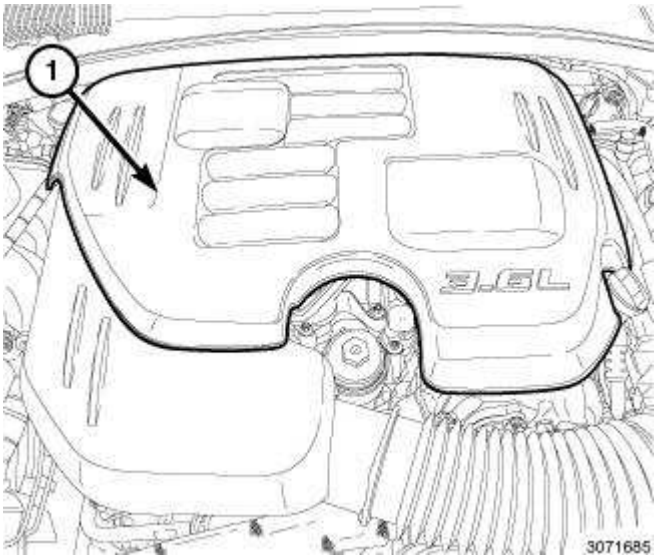

Fig. 230: Engine Cover
Courtesy of CHRYSLER GROUP, LLC

57. Fill the crankcase with the specified type and amount of engine oil. Refer to **CAPACITIES AND RECOMMENDED FLUIDS, SPECIFICATIONS** .

58. Fill the cooling system with the specified type and amount of engine coolant. Refer to **STANDARD PROCEDURE** .
59. Position the engine cover (1) and secure the retaining grommets onto the ball studs.

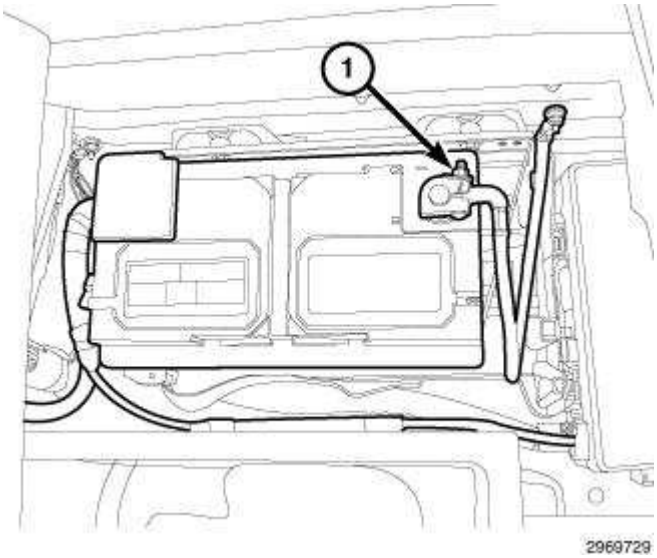

Fig. 231: Negative Battery Cable
Courtesy of CHRYSLER GROUP, LLC

60. Connect the negative battery cable and tighten nut to 5 N.m (45 in. lbs.).
61. Run the engine until it reaches normal operating temperature and check for leaks.

NOTE: The Cam/Crank Variation Relearn procedure must be performed using the scan tool anytime there has been a repair/replacement made to a powertrain system, for example: flywheel, valvetrain, camshaft and/or crankshaft sensors or components.

ASSEMBLY, VARIABLE VALVE TIMING, PHASER/OIL CONTROL VALVE

DESCRIPTION

DESCRIPTION

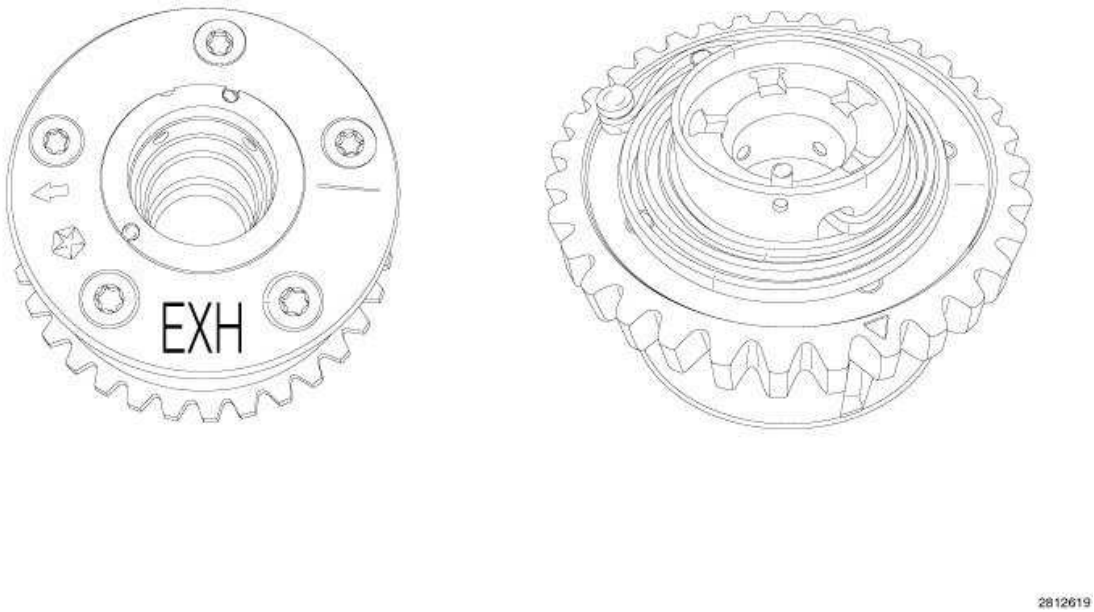

Fig. 232: Exhaust Phaser Assembly
Courtesy of CHRYSLER GROUP, LLC

The 3.6L engine is equipped with Variable Valve Timing (VVT). This system adjusts the timing of all four camshafts independently using solenoids and oil control valves to direct oil pressure into the camshaft phaser assemblies. The camshaft phaser assembly advances and/or retards camshaft timing to improve engine performance, mid-range torque, idle quality, fuel economy, and reduce emissions. The four phasers are located on the front of the camshafts, behind the VVT solenoids, inside of the engine timing cover. The exhaust phasers are identified with EXH and the intake phasers are identified with INT. The exhaust phaser has a clockspring, the intake phaser does not. The camshaft sprockets are integrated with the camshaft phaser and are serviced as an assembly. Do not attempt to disassemble the phasers, they are not serviceable. Phasers are interchangeable between the right and left cylinder heads but should be installed in the same location as removed.

The 3.6L engine has an Oil Control Valve (OCV) for each phaser. The OCV also acts as a bolt for mounting the Phaser to the camshaft. The OCVs spool valve is spring loaded and should move freely within the OCV body. The four OCVs are identical but should be installed in the same location as removed.

OPERATION

OPERATION

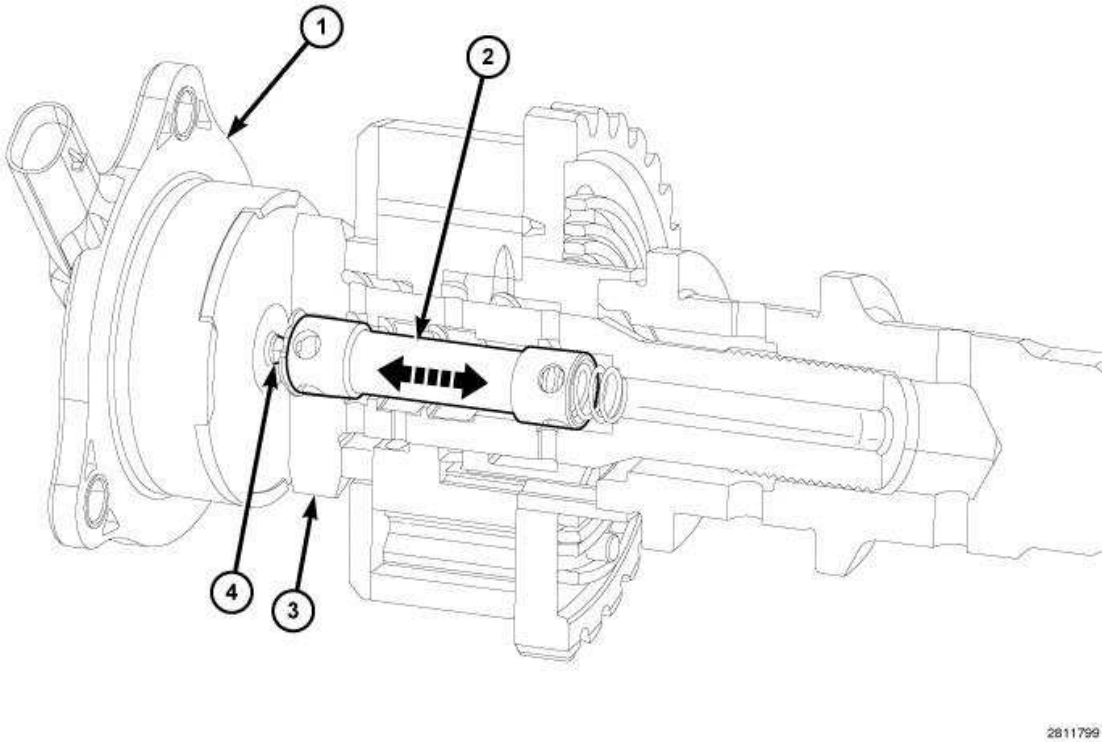

Fig. 233: Oil Control Valve (OCV), VVT Solenoid, Solenoid Pintle & Internal Spool Valve
Courtesy of CHRYSLER GROUP, LLC

Each phaser position is adjusted using regulated oil pressure through the Oil Control Valve (OCV) (3). To begin phaser movement, a voltage signal is applied to the VVT solenoid (1) to extend or retract the solenoid pintle (4). The pintle pushes against an internal spool valve (2) within the OCV moving the valve forwards and backwards to direct oil flow.

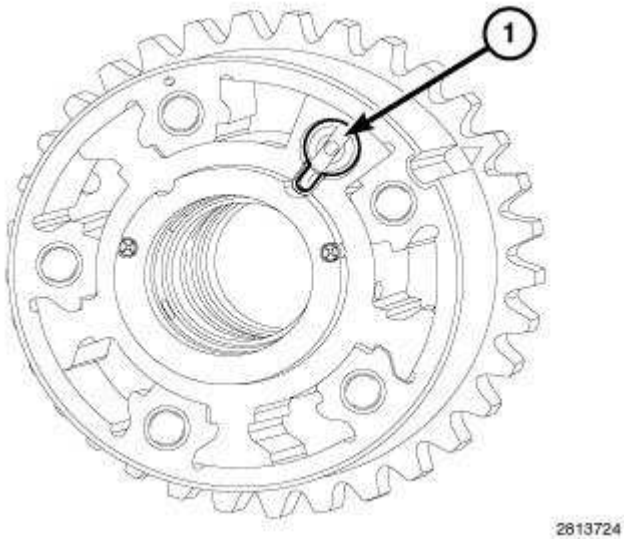

Fig. 234: Phasers In Lock-Pin Position
Courtesy of CHRYSLER GROUP, LLC

At engine startup, system oil pressure overcomes spring pressure and unlocks the phaser lock-pin (1) in preparation for phasing. The phasers remain in this position until a PCM signal is given to pulse-width modulate the VVT solenoid. At engine shutdown, as oil pressure is reduced, both Phasers return to their lock-pin position (1). However, because the exhaust Phaser needs to travel to a position above and beyond the standard camshaft clockwise rotation, the assistance of a clock spring is required. The intake Phaser on the other hand, simply relies on the torsional resistance from the valvetrain to push it back towards lock-pin position.

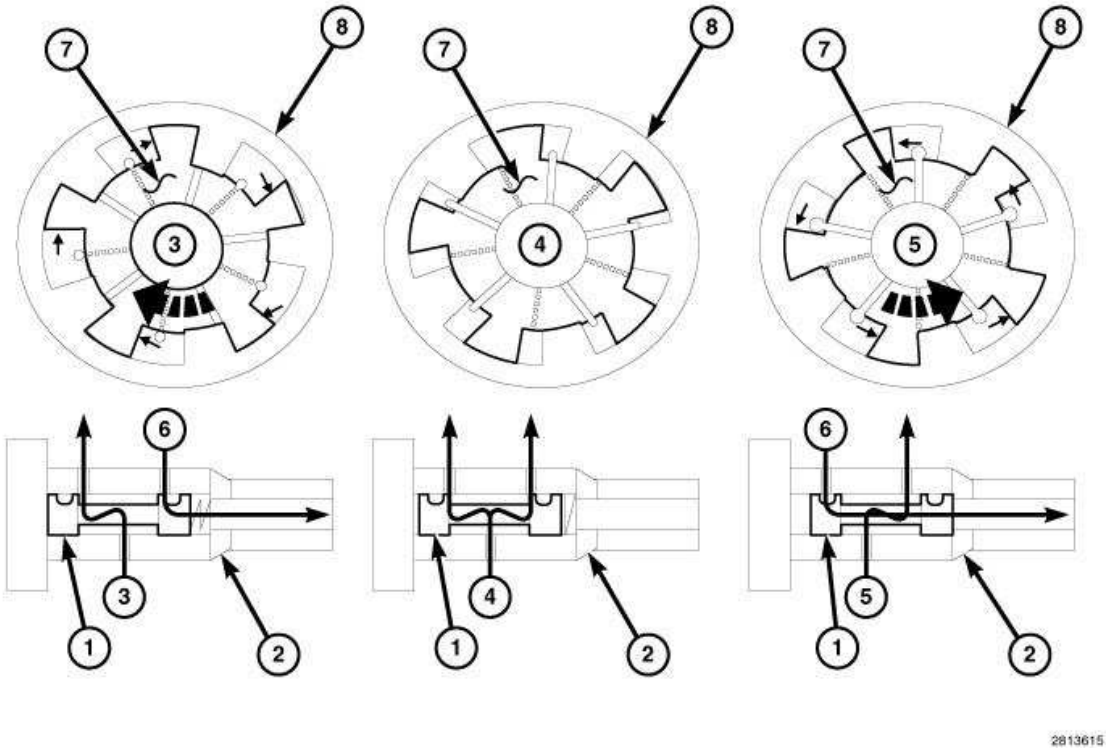

Fig. 235: Spool Valve, Vanes, OCV & Advance, Hold Or Retard Position
Courtesy of CHRYSLER GROUP, LLC

The position of the spool valve (1) inside the OCV (2) determines which ports and chambers inside the phaser are being fed, either to advance (3), hold (4) or retard (5) the timing of the phaser sprocket relative to the camshaft. The spool valve also returns oil from the chambers to the sump (6). The Camshaft Position (CMP) sensor monitors the position of the camshaft with respect to the crankshaft and provides feedback to the PCM. As oil pressure pushes against the vanes (6) of the phaser rotor, the rotor begins to move. Since this rotor is physically attached to the camshaft, rotor rotation causes the camshaft position to rotate relative to the standard sprocket (7) position.

REMOVAL

LEFT

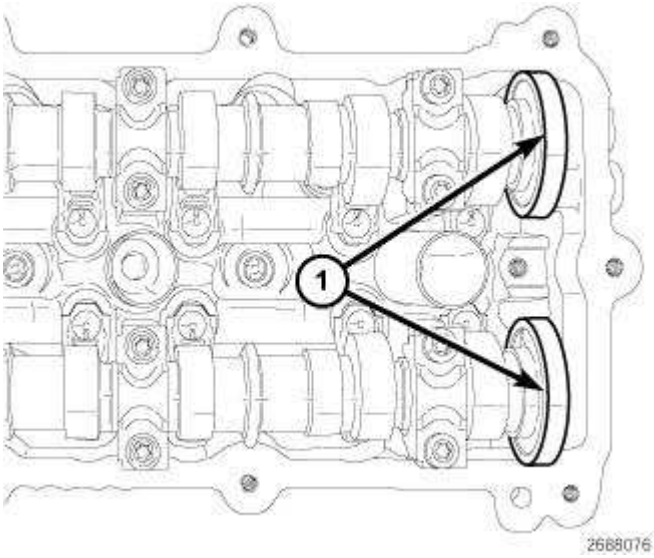

Fig. 236: Magnetic Timing Wheels
Courtesy of CHRYSLER GROUP, LLC

CAUTION: The magnetic timing wheels (1) must not come in contact with magnets (pickup tools, trays, etc.) or any other strong magnetic field. This will destroy the timing wheels ability to correctly relay camshaft position to the camshaft position sensor.

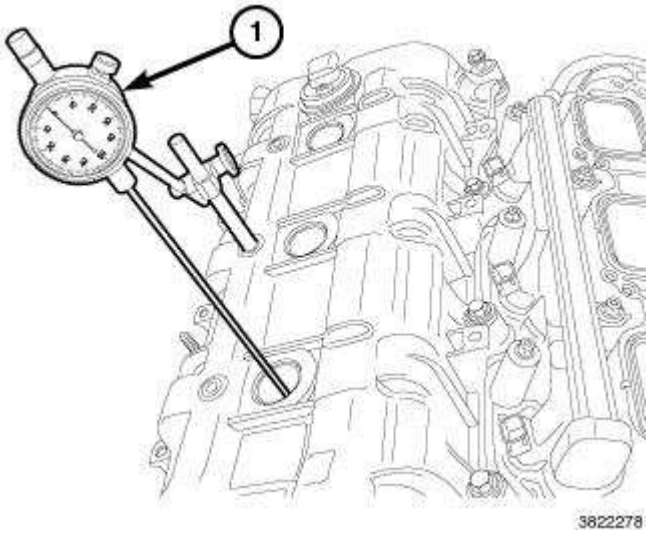

Fig. 237: Mount Dial Indicator Set To Stationary Point On Engine
Courtesy of CHRYSLER GROUP, LLC

1. Remove the upper intake manifold, left ignition coils and left cylinder head cover. Refer to **COVER(S), CYLINDER HEAD, REMOVAL** .
2. Remove the right ignition coils and all spark plugs. Refer to **SPARK PLUG, REMOVAL** .

CAUTION: When aligning timing marks, always rotate engine by turning the crankshaft. Failure to do so will result in valve and/or piston damage.

3. Mount Dial Indicator Set (special tool #C-3339A, Set, Dial Indicator) (1) to a stationary point on the engine, such as the number three cylinder ignition coil mount. Position the indicator probe into the number one cylinder, rotate the crankshaft clockwise (as viewed from the front) to place the number one cylinder piston at top-dead-center on the exhaust stroke and set the indicator dial to zero.

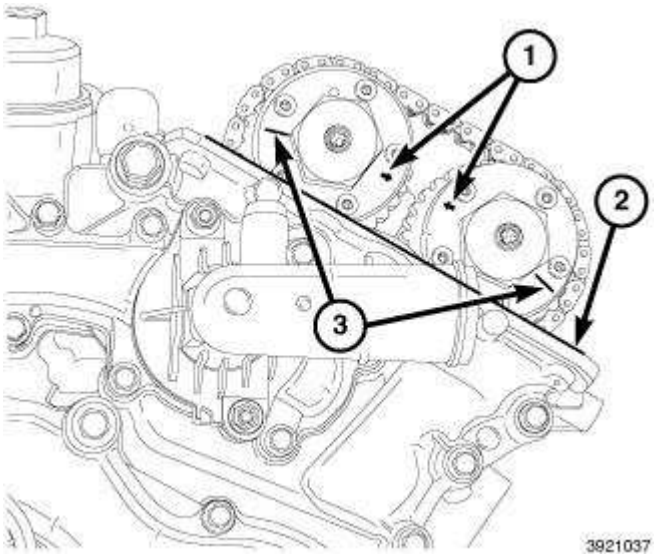

Fig. 238: Arrows, Scribe Lines & Cylinder Head Cover Mounting Surface
Courtesy of CHRYSLER GROUP, LLC

4. The left side cam phaser **SCRIBE LINES** (3) should face away from each other and the **ARROWS** (1) should point toward each other and be parallel to the cylinder head cover mounting surface (2) when the number one cylinder piston is positioned at top-dead-center on the exhaust stroke.

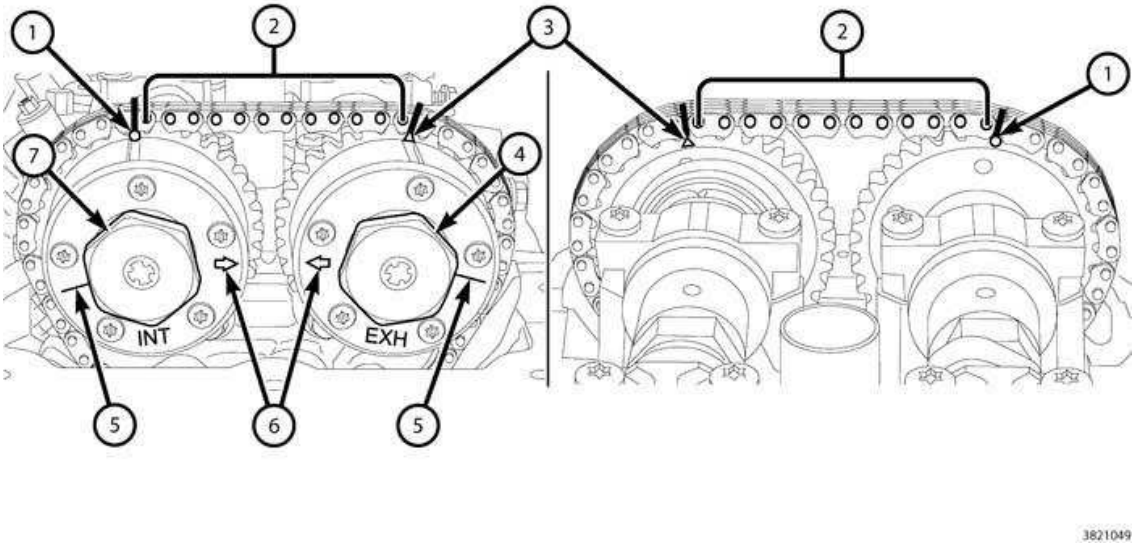

Fig. 239: Phaser Timing Mark, Chain Pins, Exhaust Cam Phaser Triangle Marking, Oil Control Valve, Scribe Lines & Arrows
Courtesy of CHRYSLER GROUP, LLC

NOTE: The cam phaser timing markings (1 and 3) could align with either an external or internal chain link. Either alignment is acceptable as long as there are twelve chain pins (2) between the markings.

NOTE: Using a paint pen or equivalent. Mark the timing chain links to the corresponding timing marks located on the cam phasers.

5. There should be twelve chain pins (2) **BETWEEN** the exhaust cam phaser triangle marking (3) and the intake cam phaser circle marking (1) as viewed from either the front or rear of the cam phasers.
6. Mark both sides of the cam chain at the phaser timing marks (1 and 3) using a paint pen or equivalent to aid in reassembly.

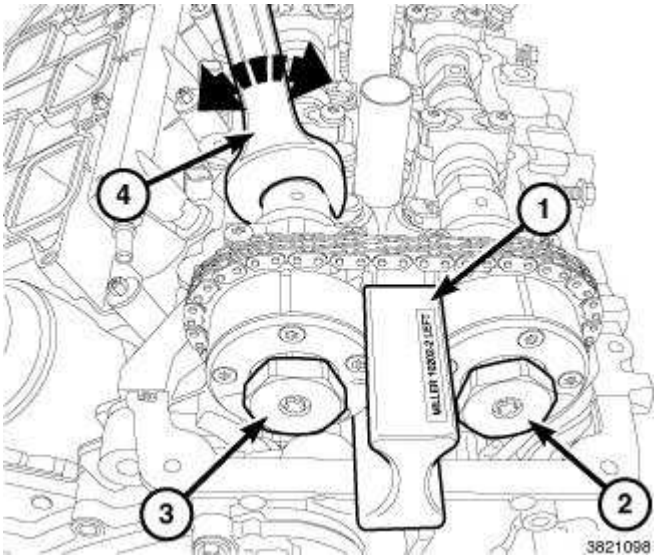

Fig. 240: Wrench, Oil Control Valves & Special Tool
Courtesy of CHRYSLER GROUP, LLC

NOTE: It may be necessary to rock the camshaft slightly (a few degrees) with a wrench (4) when installing the camshaft phaser lock.

7. Install the (special tool #10202-2, Lock, Camshaft/Phaser, Left Side) (1) against the cylinder head cover mounting surface with the tool number facing up.
8. Loosen, but do not remove, the exhaust oil control valve (2) and the intake oil control valve (3).
9. Remove the (special tool #10202-2, Lock, Camshaft/Phaser, Left Side) (1).

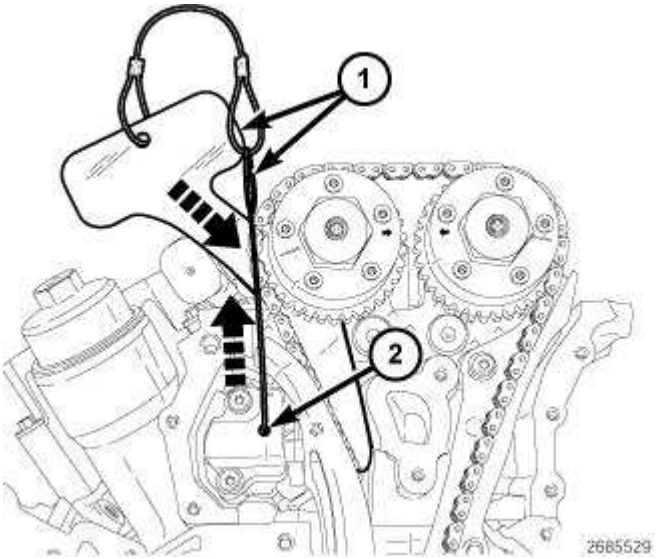

Fig. 241: Pin, Rack & Timing Chain Holder
Courtesy of CHRYSLER GROUP, LLC

NOTE: Illustration shows engine timing cover removed for clarity.

10. Using (special tool #10200-3, Pin) (2), lift the pawl off of the rack (3). While holding the pawl off of the rack, push (special tool #10200-1, Holder, Timing Chain, Left Side) (1) into place between the cylinder head and the cam chain guide to force the rack and piston back into the tensioner body. The holder remains in place while the phasers are removed. Refer to **VALVE TIMING, STANDARD PROCEDURE**.

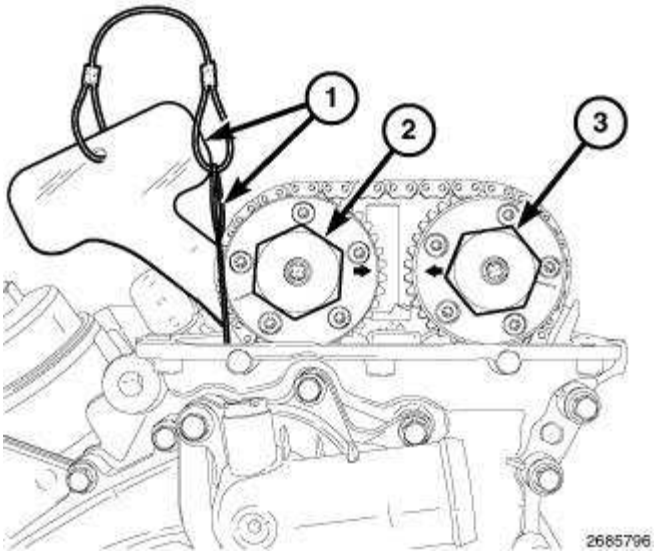

Fig. 242: Pin, Rack, Timing Chain Holder & Oil Control Valves
Courtesy of CHRYSLER GROUP, LLC

11. Remove the oil control valve (4) and pull the left side exhaust cam phaser off of the camshaft.
12. Remove the oil control valve (3) and pull the left side intake cam phaser off of the camshaft.

RIGHT

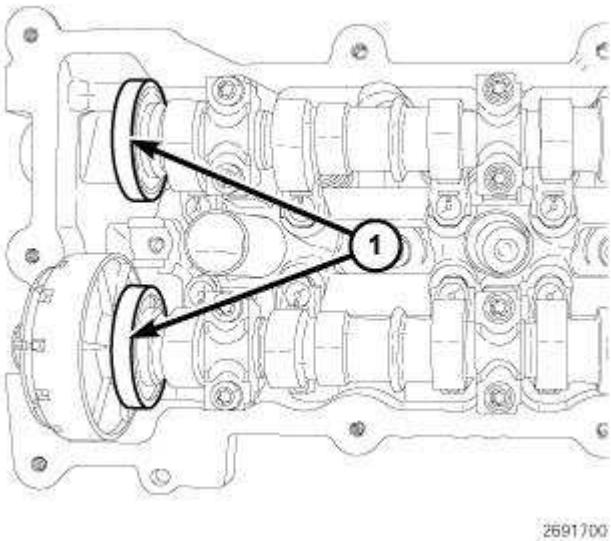

Fig. 243: Magnetic Timing Wheels
Courtesy of CHRYSLER GROUP, LLC

CAUTION: The magnetic timing wheels (1) must not come in contact with magnets (pickup tools, trays, etc.) or any other strong magnetic field. This will destroy the timing wheels ability to correctly relay camshaft position to the camshaft position sensor.

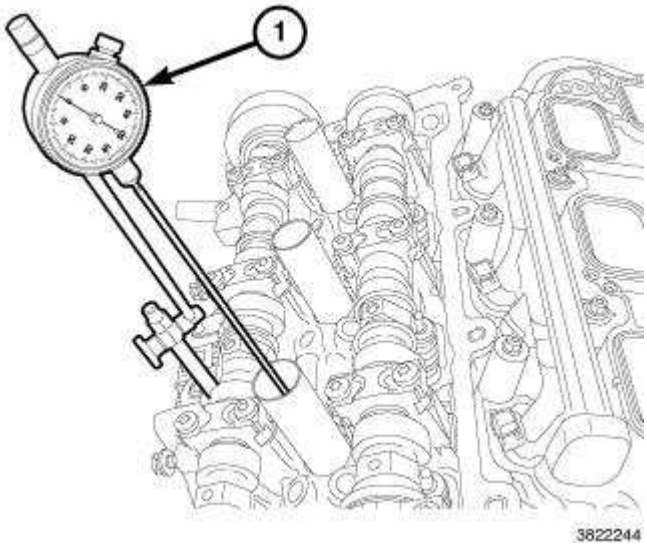

Fig. 244: Mount Dial Indicator Set To Stationary Point On Engine
Courtesy of CHRYSLER GROUP, LLC

1. Remove the upper intake manifold, right ignition coils and right cylinder head cover. Refer to **COVER(S), CYLINDER HEAD, REMOVAL** .
2. Remove the left ignition coils and all spark plugs. Refer to **SPARK PLUG, REMOVAL** .

CAUTION: When aligning timing marks, always rotate engine by turning the crankshaft. Failure to do so will result in valve and/or piston damage.

3. Mount Dial Indicator Set (special tool #C-3339A, Set, Dial Indicator) (1) to a stationary point on the engine, such as the cylinder head cover mounting surface. Position the indicator probe into the number one cylinder, rotate the crankshaft clockwise (as viewed from the front) to place the number one piston at top-dead-center on the exhaust stroke and set the indicator dial to zero.

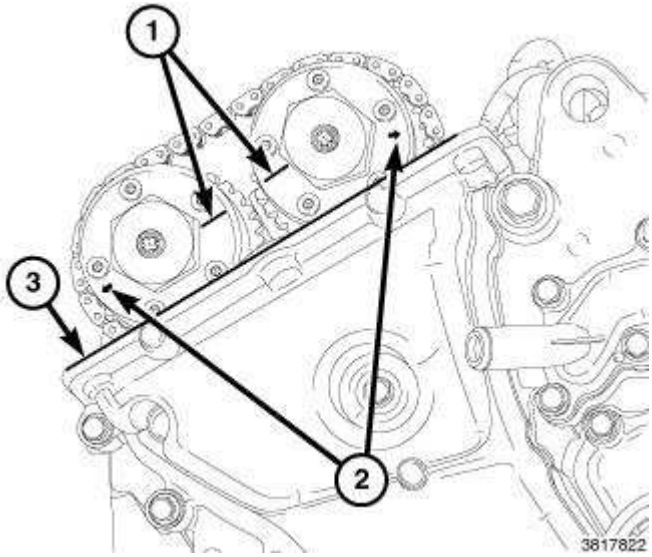

Fig. 245: Arrows, Scribe Lines & Cylinder Head Cover Mounting Surface
Courtesy of CHRYSLER GROUP, LLC

4. The right side cam phaser **ARROWS** (2) should point away from each other and the **SCRIBE LINES** (1) should be parallel to the cylinder head cover mounting surface (3) when the right side number one cylinder piston is positioned at top-dead-center on the exhaust stroke.

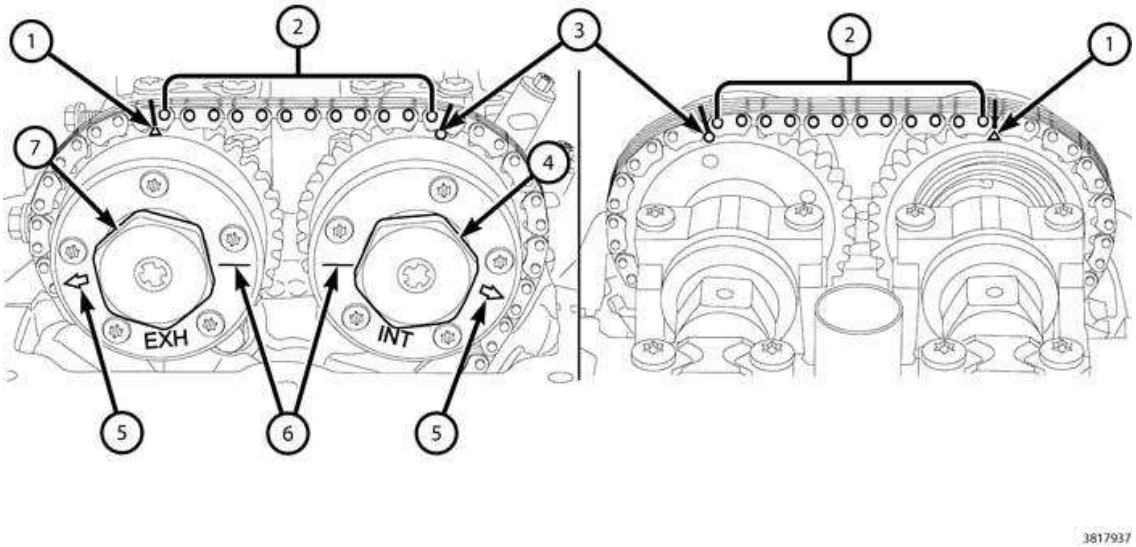

Fig. 246: Phaser Timing Mark, Chain Pins, Exhaust Cam Phaser Triangle Marking, Oil Control Valve, Scribe Lines & Arrows
Courtesy of CHRYSLER GROUP, LLC

NOTE: The phaser markings (1 and 3) could align with either an external or internal chain link. Either alignment is acceptable as long as there are twelve chain pins (2) between the markings.

NOTE: **Using a paint pen or equivalent. Mark the timing chain links to the corresponding timing marks located on the cam phasers.**

5. There should be twelve chain pins (2) **BETWEEN** the exhaust cam phaser triangle marking (1) and the intake cam phaser circle marking (3) as viewed from either the front or rear of the cam phasers.
6. Mark both sides of the cam chain at the phaser timing marks (1 and 3) using a paint pen or equivalent to aid in reassembly.

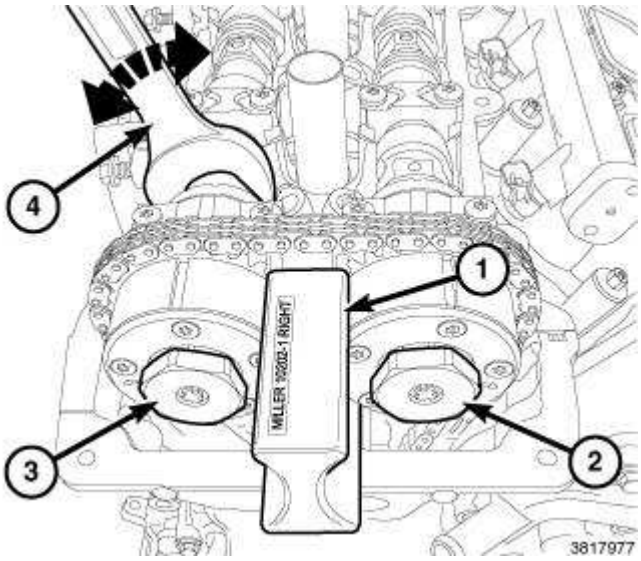

Fig. 247: Wrench, Oil Control Valves & Special Tool
Courtesy of CHRYSLER GROUP, LLC

NOTE: **It may be necessary to rock the camshaft slightly (a few degrees) with a wrench (4) when installing the camshaft phaser lock.**

7. Install the (special tool #10202-1, Lock, Camshaft/Phaser, Right Side) (1) against the cylinder head cover mounting surface with the tool number facing up.
8. Loosen, but do not remove, the exhaust oil control valve (3) and the intake oil control valve (2).
9. Remove the (special tool #10202-1, Lock, Camshaft/Phaser, Right Side) (1).

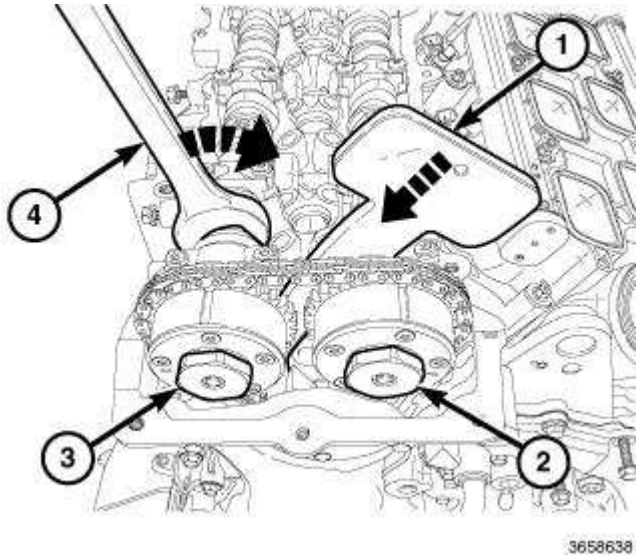

Fig. 248: Compressing Tensioner By Slightly Rotating Exhaust Camshaft Clockwise
Courtesy of CHRYSLER GROUP, LLC

CAUTION: Do not insert the Timing Chain Holder into position without first compressing the tensioner. The Timing Chain Holder is not designed to compress the tensioner and excessive force can damage the timing chain tensioner arm.

10. Use the timing chain to compress the tensioner by slightly rotating the exhaust camshaft clockwise (4). Insert (special tool #10369, Holder, Timing Chain) (1) into place between the cylinder head boss and the tensioner arm to hold the tensioner in the compressed position. The Timing Chain Holder remains in place while the phasers are removed.

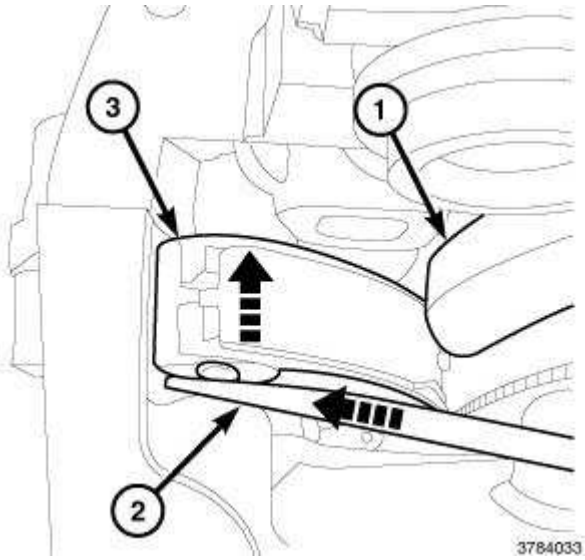

Fig. 249: Timing Chain Holder, Trim Stick & Tensioner Arm
Courtesy of CHRYSLER GROUP, LLC

NOTE: **If the Timing Chain Holder (1) does not engage or slips from position, wedge a trim stick (2) or equivalent between the front cover and the tensioner arm (3) to push the tensioner arm towards the rear of the engine and then repeat the previous step.**

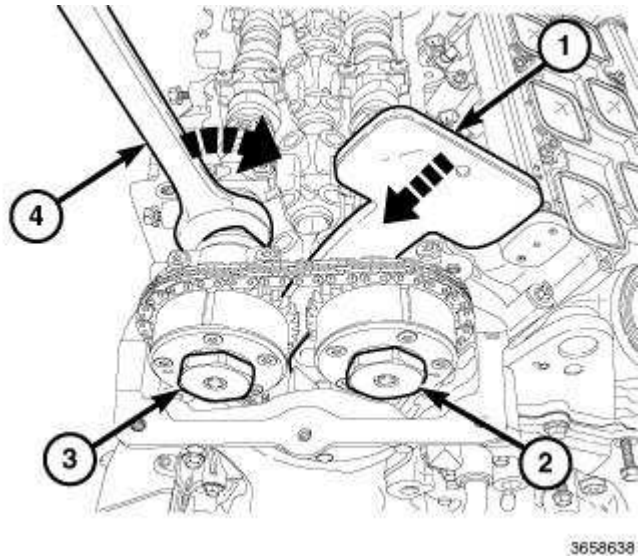

Fig. 250: Compressing Tensioner By Slightly Rotating Exhaust Camshaft Clockwise
Courtesy of CHRYSLER GROUP, LLC

11. Remove the oil control valve (3) and pull the right side exhaust cam phaser off of the camshaft.
12. Remove the oil control valve (2) and pull the right side intake cam phaser off of the camshaft.

INSTALLATION

LEFT

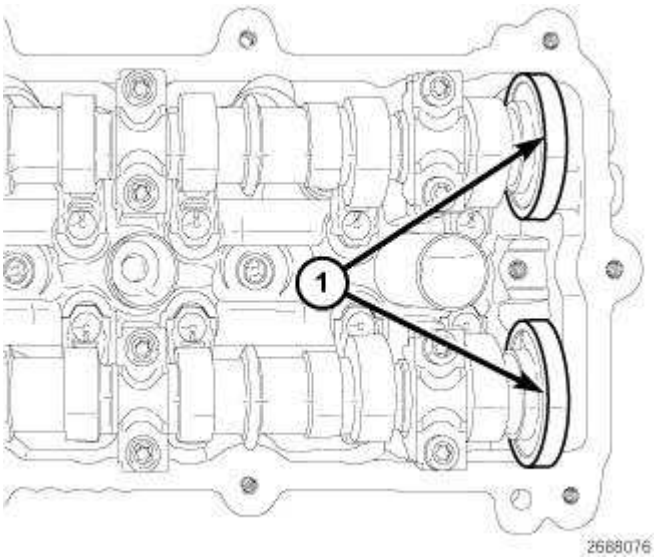

Fig. 251: Magnetic Timing Wheels

Courtesy of CHRYSLER GROUP, LLC

CAUTION: The magnetic timing wheels (1) must not come in contact with magnets (pickup tools, trays, etc.) or any other strong magnetic field. This will destroy the timing wheels ability to correctly relay camshaft position to the camshaft position sensor.

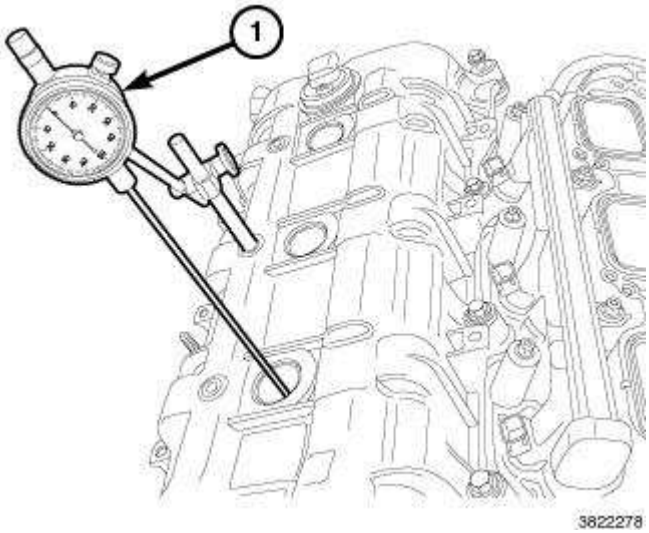

Fig. 252: Mount Dial Indicator Set To Stationary Point On Engine
Courtesy of CHRYSLER GROUP, LLC

CAUTION: Do not rotate the crankshaft more than a few degrees independently of the camshafts. Piston to valve contact could occur resulting in possible valve damage. If the crankshaft needs to be rotated more than a few degrees, first remove the camshafts.

1. Verify that the indicator dial (1) is set to zero when the right side number one cylinder piston is positioned at top-dead-center on the exhaust stroke.

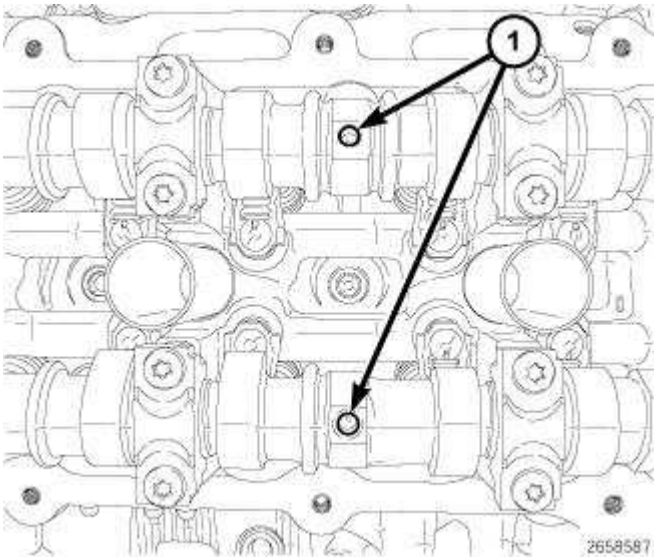

Fig. 253: Positioning Camshaft Alignment Holes Vertically
Courtesy of CHRYSLER GROUP, LLC

CAUTION: Do not rotate the camshafts more than a few degrees independently of the crankshaft. Valve to piston contact could occur resulting in possible valve damage.

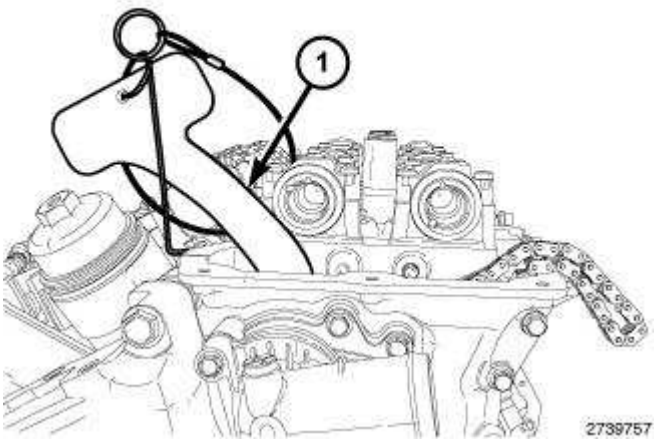

Fig. 254: Timing Chain Holder
Courtesy of CHRYSLER GROUP, LLC

NOTE: The Timing Chain Holder (1) should still be in place as inserted during the Removal procedure. If required, the Timing Chain Holder can be reinserted by repeating Step 10 of the Removal procedure. Refer to ASSEMBLY, VARIABLE VALVE TIMING, PHASER/OIL CONTROL VALVE, REMOVAL.

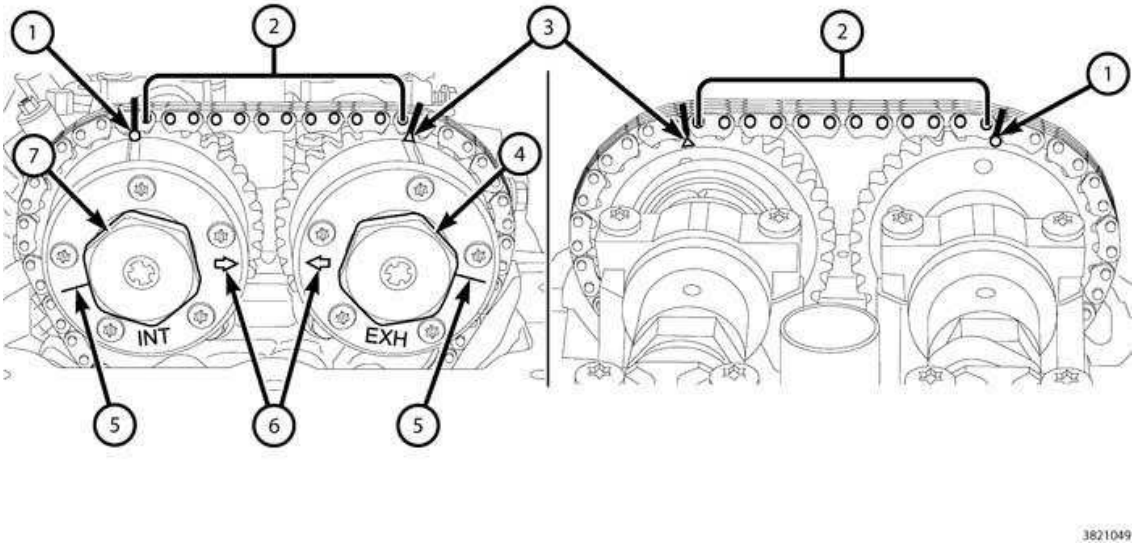

Fig. 255: Phaser Timing Mark, Chain Pins, Exhaust Cam Phaser Triangle Marking, Oil Control Valve, Scribe Lines & Arrows
Courtesy of CHRYSLER GROUP, LLC

NOTE: Minor rotation of a camshaft (a few degrees) may be required to install the camshaft phaser.

2. Verify that the camshafts are set at top-dead-center by positioning the alignment holes (1) vertically.
3. Route the cam chain around the left intake cam phaser while aligning the paint mark with the phaser timing mark (1). Press the left intake cam phaser onto the intake camshaft. Install and hand tighten the oil control valve (7).
4. While maintaining this alignment, route the cam chain around the exhaust cam phaser so that the paint mark is aligned with the phaser timing mark (3). Press the exhaust cam phaser onto the exhaust cam, install and hand tighten the oil control valve (4).
5. The **SCRIBE LINES** (5) on the cam phasers should face away from each other and the **ARROWS** (6) should point toward each other and be parallel to the cylinder head cover mounting surface. There should be twelve chain pins (2) **BETWEEN** the exhaust cam phaser triangle marking (3) and the intake cam phaser circle marking (1).

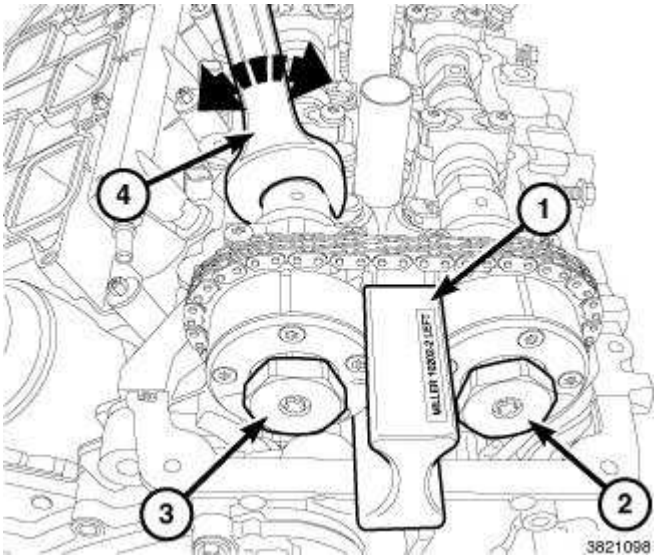

Fig. 256: Wrench, Oil Control Valves & Special Tool
Courtesy of CHRYSLER GROUP, LLC

NOTE: It may be necessary to rock the camshaft slightly (a few degrees) with a wrench (4) when installing the camshaft phaser lock.

6. Install the (special tool #10202-2, Lock, Camshaft/Phaser, Left Side) (1) against the cylinder head cover mounting surface with the tool number facing up.
7. Tighten the oil control valves (2) and (3) to 150 N.m (110 ft. lbs.).
8. Remove the Camshaft Phaser Lock (1) and the Timing Chain Holder.

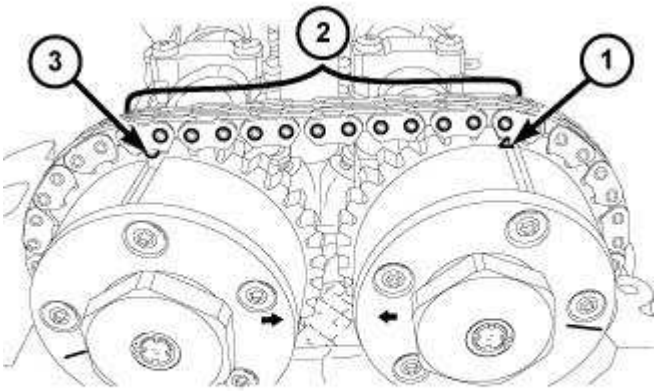

Fig. 257: Chain Pins, Arrows, Scribe Lines, Cam Phaser Triangle Marking & Circle Marking
Courtesy of CHRYSLER GROUP, LLC

9. Rotate the crankshaft clockwise two complete revolutions stopping when the right side number one cylinder piston is again positioned at top-dead-center on the exhaust stroke. To assure correct engine timing, verify the following;
    - The indicator dial is set to **ZERO** when the right side number one cylinder piston is positioned at top-dead-center on the exhaust stroke.
    - The **SCRIBE LINES** (3) on the left side cam phasers face away from each other.
    - The **ARROWS** (4) on the left side cam phasers point toward each other and are parallel to the cylinder head cover mounting surface.
    - There are twelve chain pins (2) **BETWEEN** the exhaust cam phaser triangle marking (1) and the intake cam phaser circle marking (3).
10. If the engine timing is not correct, repeat this procedure.
11. Install the spark plugs. Refer to **SPARK PLUG, INSTALLATION** .
12. Install the right ignition coils. Refer to **COIL, IGNITION, INSTALLATION** .
13. Install the left cylinder head cover and left ignition coils. Refer to **COVER(S), CYLINDER HEAD, INSTALLATION** .
14. Install the upper intake manifold and air cleaner housing assembly. Refer to **MANIFOLD, INTAKE, INSTALLATION** .
15. Connect the negative battery cable and tighten nut to 5 N.m (45 in. lbs.).
16. Start the engine and perform the following Powertrain Verification Tests. Refer to appropriate Electrical Diagnostics article.
    - Cam/Crank Variation Relearn
    - Target Coefficient Relearn

NOTE: **Following the first restart after a DTC driven phaser replacement, clear all DTCs and verify that subsequent restarts do not set any additional codes. for any DTCs that reset. Refer to appropriate Electrical Diagnostics article.**

RIGHT

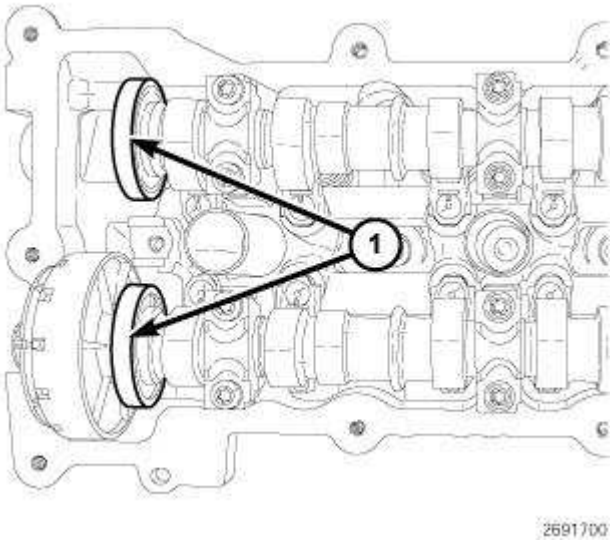

Fig. 258: Magnetic Timing Wheels
Courtesy of CHRYSLER GROUP, LLC

CAUTION: The magnetic timing wheels (1) must not come in contact with magnets (pickup tools, trays, etc.) or any other strong magnetic field. This will destroy the timing wheels ability to correctly relay camshaft position to the camshaft position sensor.

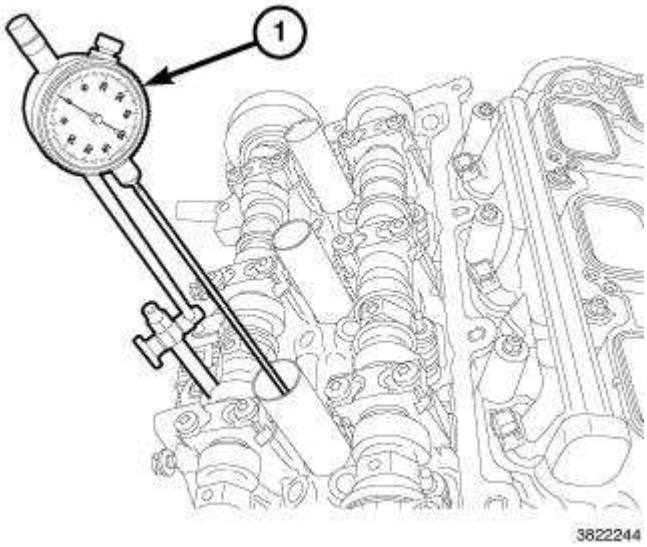

Fig. 259: Mount Dial Indicator Set To Stationary Point On Engine
Courtesy of CHRYSLER GROUP, LLC

CAUTION: Do not rotate the crankshaft more than a few degrees independently of the camshafts. Piston to valve contact could occur resulting in possible valve damage. If the crankshaft needs to be rotated more than a few degrees, first remove the camshafts.

1. Verify that the indicator dial (1) is set to zero when the right side number one cylinder piston is positioned at top-dead-center on the exhaust stroke.

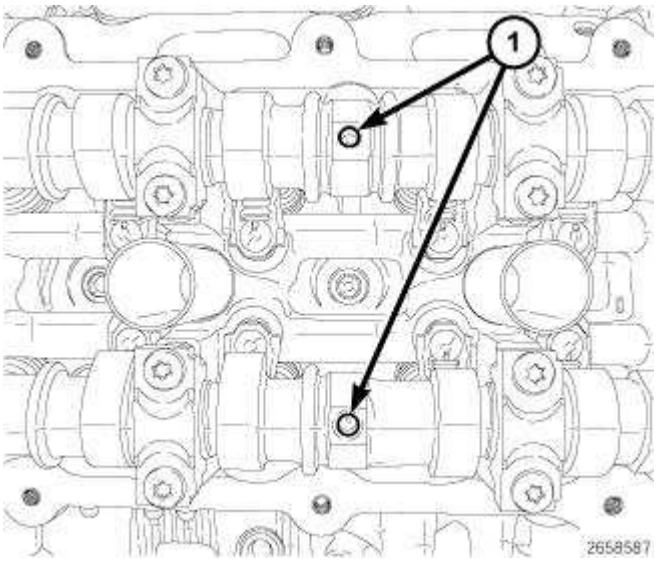

Fig. 260: Positioning Camshaft Alignment Holes Vertically
Courtesy of CHRYSLER GROUP, LLC

CAUTION: Do not rotate the camshafts more than a few degrees independently of the crankshaft. Valve to piston contact could occur resulting in possible valve damage.

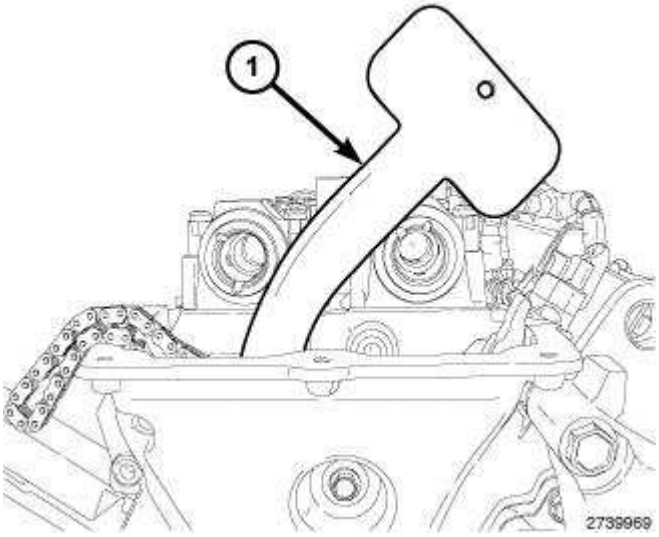

Fig. 261: Timing Chain Holder
Courtesy of CHRYSLER GROUP, LLC

NOTE: The Timing Chain Holder (1) should still be in place as inserted during the Removal procedure. If required, the Timing Chain Holder can be reinserted

by installing the exhaust cam phaser and repeating Step 10 of the Removal procedure. Refer to ASSEMBLY, VARIABLE VALVE TIMING, PHASER/OIL CONTROL VALVE, REMOVAL.

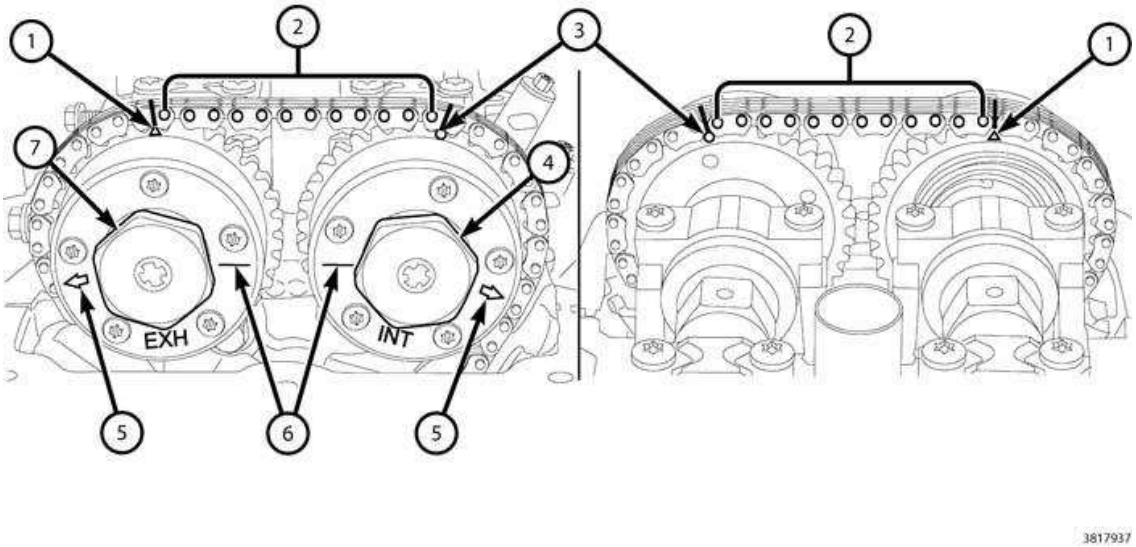

Fig. 262: Phaser Timing Mark, Chain Pins, Exhaust Cam Phaser Triangle Marking, Oil Control Valve, Scribe Lines & Arrows
Courtesy of CHRYSLER GROUP, LLC

NOTE: Minor rotation of a camshaft (a few degrees) may be required to install the camshaft phaser.

2. Verify that the camshafts are set at top-dead-center by positioning the alignment holes (1) vertically.
3. Route the cam chain around the right exhaust cam phaser while aligning the paint mark with the phaser timing mark (1). Press the right exhaust cam phaser onto the exhaust camshaft. Install and hand tighten the oil control valve (7).
4. While maintaining this alignment, route the cam chain around the intake cam phaser so that the paint mark is aligned with the phaser timing mark (3). Press the intake cam phaser onto the intake cam, install and hand tighten the oil control valve (4).
5. The **ARROWS** (5) on the cam phasers should point away from each other and the **SCRIBE LINES** (6) should be parallel to the cylinder head cover mounting surface. There should be twelve chain pins (2) **BETWEEN** the exhaust cam phaser triangle marking (1) and the intake cam phaser circle marking (3).

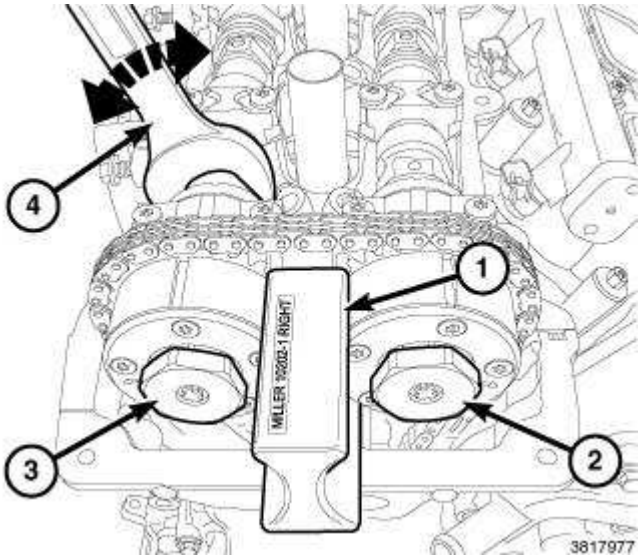

Fig. 263: Wrench, Oil Control Valves & Special Tool
Courtesy of CHRYSLER GROUP, LLC

NOTE: It may be necessary to rock the camshaft slightly (a few degrees) with a wrench (4) when installing the camshaft phaser lock.

6. Install the (special tool #10202-1, Lock, Camshaft/Phaser, Right Side) (1) against the cylinder head cover mounting surface with the tool number facing up.
7. Tighten the oil control valves (2) and (3) to 150 N.m (110 ft. lbs.).
8. Remove the Camshaft Phaser Lock (1) and the Timing Chain Holder.

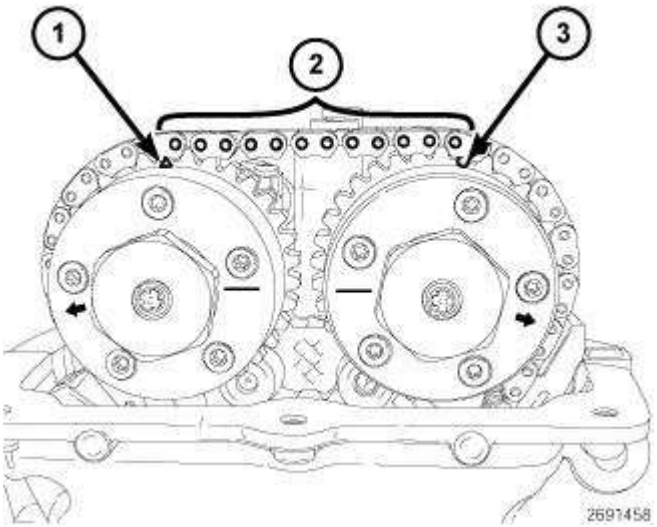

Fig. 264: Chain Pins, Arrows, Scribe Lines, Cam Phaser Triangle Marking & Circle Marking
Courtesy of CHRYSLER GROUP, LLC

9. Rotate the crankshaft clockwise two complete revolutions stopping when the right side number one cylinder piston is again positioned at top-dead-center on the exhaust stroke. To assure correct engine timing, verify the following;
    - The indicator dial is set to **ZERO** when the right side number one cylinder piston is positioned at top-dead-center on the exhaust stroke.
    - The **ARROWS** (4) on the right side cam phasers point away from each other.
    - The **SCRIBE LINES** (5) on the right side cam phasers are parallel to the cylinder head cover mounting surface.
    - There are twelve chain pins (2) **BETWEEN** the exhaust cam phaser triangle marking (1) and the intake cam phaser circle marking (3).
10. If the engine timing is not correct, repeat this procedure.
11. Install the spark plugs. Refer to **SPARK PLUG, INSTALLATION** .
12. Install the left ignition coils. Refer to **COIL, IGNITION, INSTALLATION** .
13. Install the right cylinder head cover and right ignition coils. Refer to **COVER(S), CYLINDER HEAD, INSTALLATION** .
14. Install the upper intake manifold and air cleaner housing assembly. Refer to **MANIFOLD, INTAKE, INSTALLATION** .
15. Connect the negative battery cable and tighten nut to 5 N.m (45 in. lbs.).
16. Start the engine and perform the following Powertrain Verification Tests. Refer to appropriate Electrical Diagnostics article.
    - Cam/Crank Variation Relearn
    - Target Coefficient Relearn

NOTE: Following the first restart after a DTC driven phaser replacement, clear all DTCs and verify that subsequent restarts do not set any additional codes. for any DTCs that reset. Refer to appropriate Electrical Diagnostics article.

CAMSHAFT, ENGINE

DESCRIPTION

DESCRIPTION

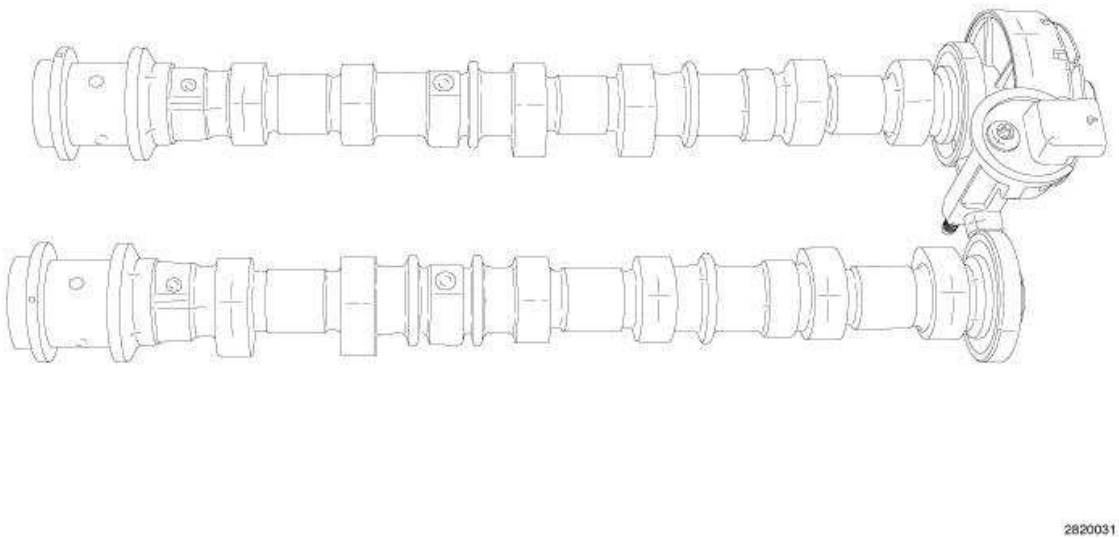

Fig. 265: Dual Over Head Camshaft (DOHC) Configuration
Courtesy of CHRYSLER GROUP, LLC

The Pentastar engine uses a Dual Over Head Camshaft (DOHC) configuration. The camshafts are a nodular cast iron design and have a pressed on magnetic timing wheel that is magnetic encoded. The two Camshaft Position (CMP) sensors are located between the timing wheels. Attached to the rear of the right exhaust camshaft is a centrifuge which is part of the crankcase ventilation system. The centrifuge is used to separate oil droplets from the crankcase gases before they enter the PCV valve. Four bearing journals are machined into the camshaft. Camshaft end play is controlled by two thrust walls that border the nose piece journal.

OPERATION

OPERATION

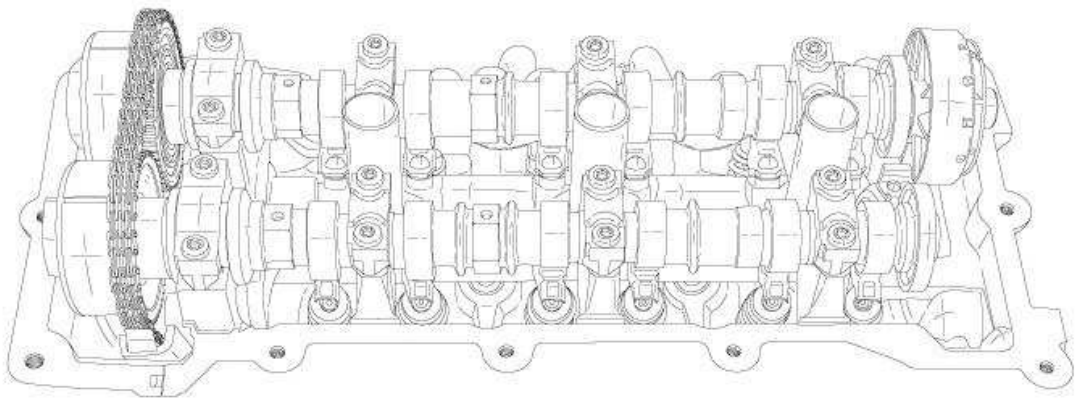

Fig. 266: Right Hand Camshafts
Courtesy of CHRYSLER GROUP, LLC

NOTE: RH camshafts shown in illustration, LH camshafts similar.

The camshaft has precisely machined (egg shaped) lobes to provide accurate valve timing and duration. The camshaft is driven by the crankshaft via drive sprockets and chains.

STANDARD PROCEDURE

CAMSHAFT END PLAY

NOTE: Right intake camshaft shown in illustration, other camshafts similar.

1. Remove the cylinder head cover. Refer to **COVER(S), CYLINDER HEAD, REMOVAL** .

NOTE: Cylinder #1 or #4 must be used when checking for Top Dead Center (TDC).

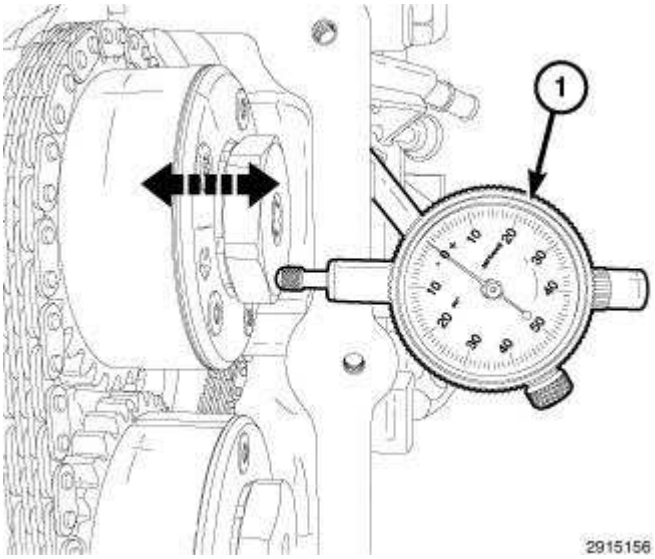

Fig. 267: Mount Dial Indicator Set To A Stationary Point At Front Of Engine
Courtesy of CHRYSLER GROUP, LLC

2. Mount Dial Indicator Set (special tool #C-3339A, Set, Dial Indicator) (1) to a stationary point at the front of the engine. Locate the probe perpendicular against the nose of the camshaft.
3. Move the camshaft all the way to the rear of its travel.
4. Zero the dial indicator.
5. Move the camshaft forward to the limit of travel and read the dial indicator. Compare the measured end play to the specification. Refer to **SPECIFICATIONS**.

REMOVAL

LEFT

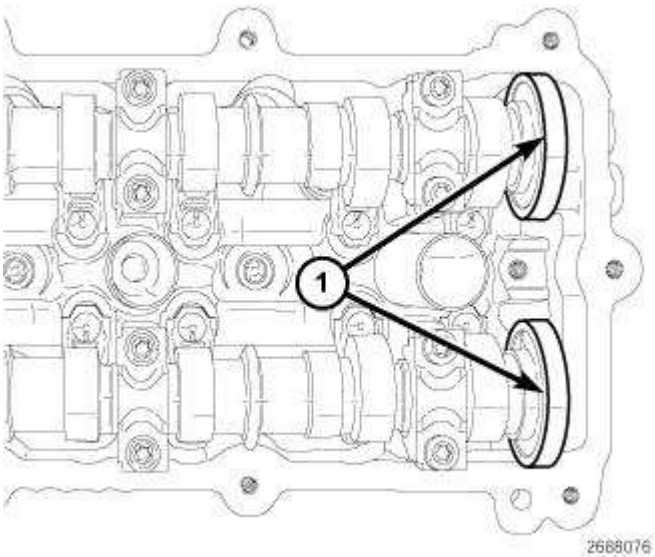

Fig. 268: Magnetic Timing Wheels
Courtesy of CHRYSLER GROUP, LLC

CAUTION: The magnetic timing wheels (1) must not come in contact with magnets (pickup tools, trays, etc.) or any other strong magnetic field. This will destroy the timing wheels ability to correctly relay camshaft position to the camshaft position sensor.

CAUTION: When the timing chain is removed and the cylinder heads are still installed, Do not forcefully rotate the camshafts or crankshaft independently of each other. Severe valve and/or piston damage can occur.

CAUTION: DO NOT STAMP OR STRIKE THE CAMSHAFT BEARING CAPS. SEVERE DAMAGE WILL OCCUR TO THE BEARING CAPS.

1. Remove the upper intake manifold, all ignition coils, all spark plugs and left cylinder head cover. Refer to **COVER(S), CYLINDER HEAD, REMOVAL** .

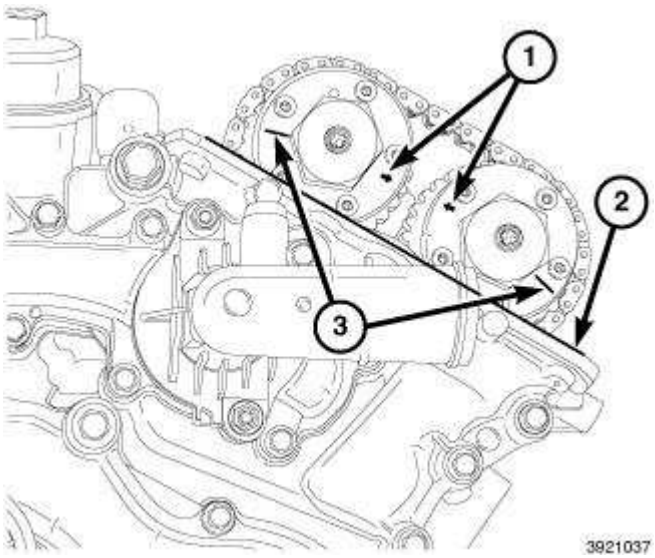

Fig. 269: Arrows, Scribe Lines & Cylinder Head Cover Mounting Surface
Courtesy of CHRYSLER GROUP, LLC

2. The left side cam phaser **SCRIBE LINES** (3) should face away from each other and the **ARROWS** (1) should point toward each other and be parallel to the cylinder head cover mounting surface (2). The number one cylinder piston is positioned at top-dead-center on the exhaust stroke.
3. Mark the camshaft phasers to the timing chain with a paint pen or equivalent.

NOTE: Illustration shows engine timing cover removed for clarity.

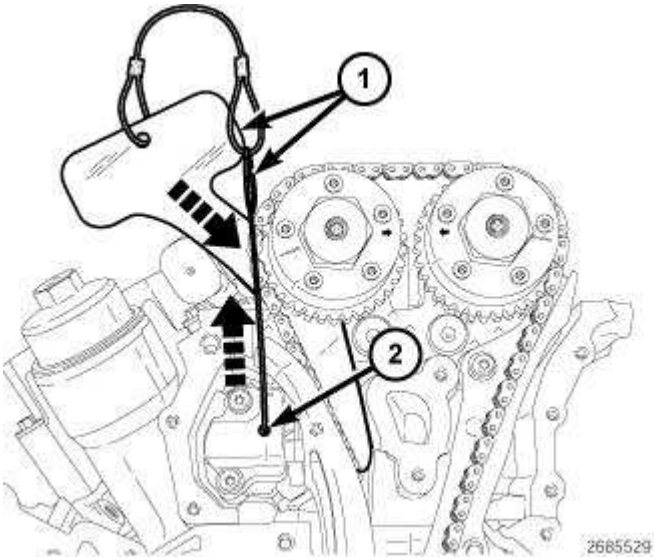

Fig. 270: Pin, Rack & Timing Chain Holder
Courtesy of CHRYSLER GROUP, LLC

4. Using the

   (special tool #10200-3, Pin)

   (2), lift the pawl off of the rack (3). While holding the pawl off of the rack, push

   (special tool #10200-1, Holder, Timing Chain, Left Side)

   (1) into place between the cylinder head and the cam chain guide to force the rack and piston back into the tensioner body.

   NOTE: The holder remains in place while the phasers are removed.

   NOTE: Minor rotation of a camshaft (a few degrees) may be required when installing the LH Camshaft/Phaser Lock.

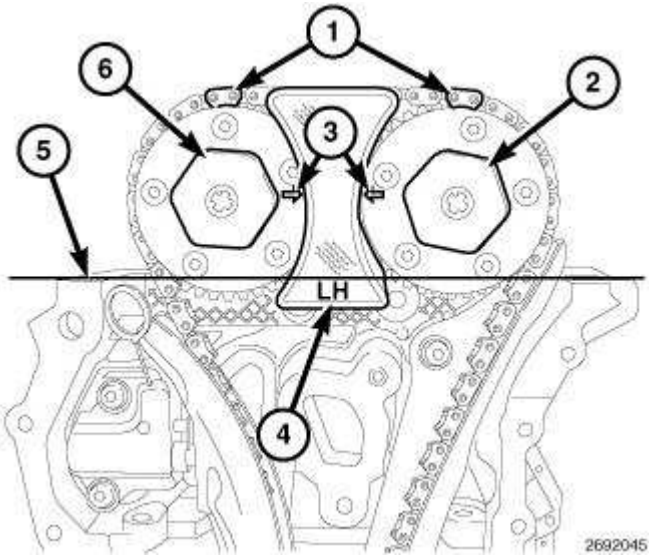

Fig. 271: Phaser Timing Marks, Oil Control Valves & LH Camshaft Phaser Lock
Courtesy of CHRYSLER GROUP, LLC

5. Install the (special tool #10202, Locks, Camshaft/Phaser) (4).
6. Remove the exhaust oil control valve (2) and the intake oil control valve (6).

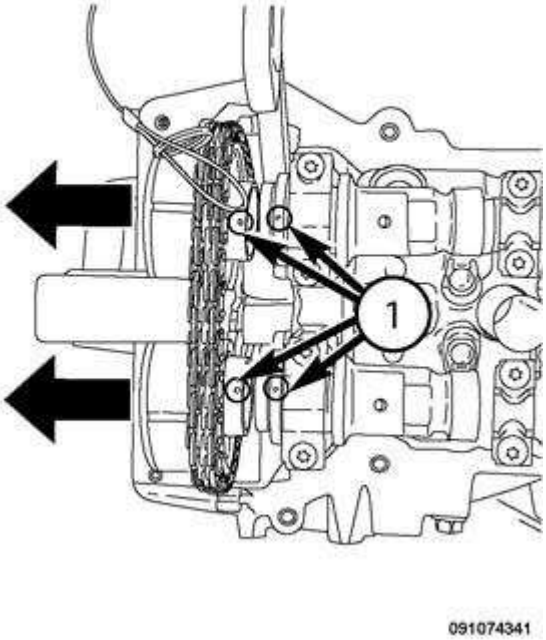

Fig. 272: Alignment Marks
Courtesy of CHRYSLER GROUP, LLC

NOTE: The alignment marks located on the camshaft specifies the location of the drive pin in reference to the phaser alignment mark.

7. Using care. Remove both the intake and exhaust oil control valves simultaneously.

NOTE: DO NOT REMOVE THE PHASER LOCK.

NOTE: Camshaft bearing caps should have been marked during engine manufacturing. For example, the number one exhaust camshaft bearing cap is marked "1E->". The caps should be installed with the notch forward.

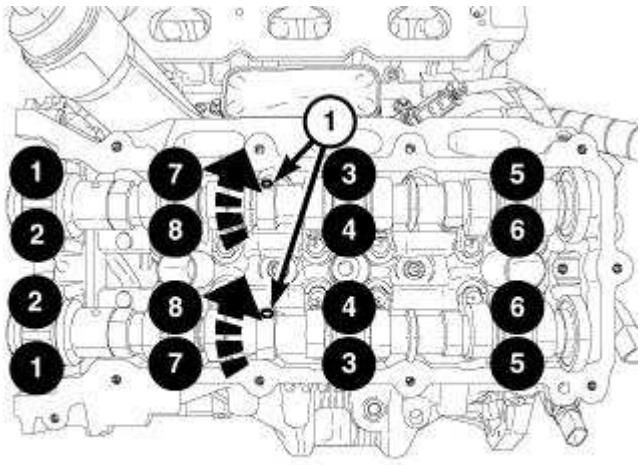

Fig. 273: Camshaft Bearing Cap Bolts Removal Sequence - Left
Courtesy of CHRYSLER GROUP, LLC

8. Rotate the camshafts counterclockwise to position the alignment holes (1) **approximately 30° before top-dead-center** . This places the camshafts in the neutral position (no valve load).
9. Loosen the camshaft bearing cap bolts in the sequence shown in illustration.

NOTE: When the camshaft is removed the rocker arms may slide downward, mark the rocker arms before removing the camshaft.

10. Remove the camshaft bearing caps and the camshafts.

RIGHT

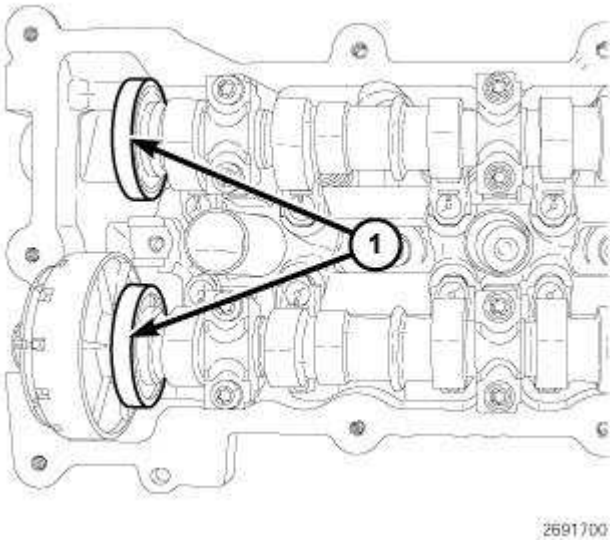

Fig. 274: Magnetic Timing Wheels
Courtesy of CHRYSLER GROUP, LLC

CAUTION: The magnetic timing wheels (1) must not come in contact with magnets (pickup tools, trays, etc.) or any other strong magnetic field. This will destroy the timing wheels ability to correctly relay camshaft position to the camshaft position sensor.

CAUTION: When the timing chain is removed and the cylinder heads are still installed, Do not forcefully rotate the camshafts or crankshaft independently of each other. Severe valve and/or piston damage can occur.

CAUTION: DO NOT STAMP OR STRIKE THE CAMSHAFT BEARING CAPS. SEVERE DAMAGE WILL OCCUR TO THE BEARING CAPS.

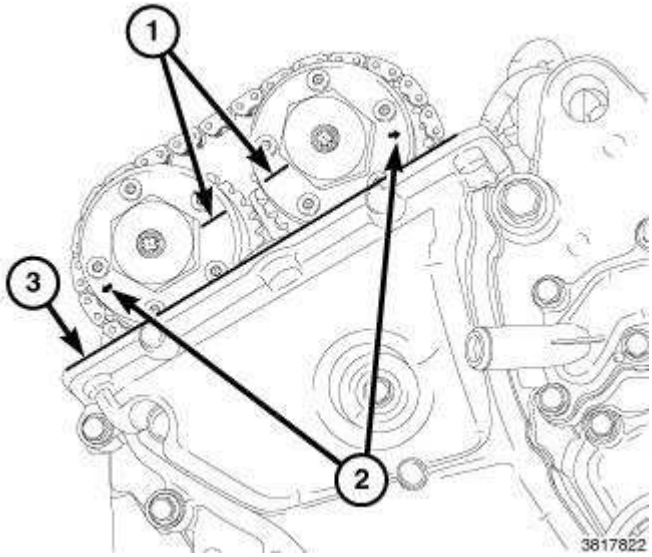

Fig. 275: Arrows, Scribe Lines & Cylinder Head Cover Mounting Surface
Courtesy of CHRYSLER GROUP, LLC

1. Remove the upper intake manifold, all ignition coils, all spark plugs, right cylinder head cover. Refer to **COVER(S), CYLINDER HEAD, REMOVAL** .
2. The right side cam phaser **ARROWS** (2) should point away from each other and the **SCRIBE LINES** (1) should be parallel to the cylinder head cover mounting surface (3) when the right side number one cylinder piston is positioned at top-dead-center on the exhaust stroke.
3. Mark the camshaft phasers to the timing chain with a paint pen or equivalent.

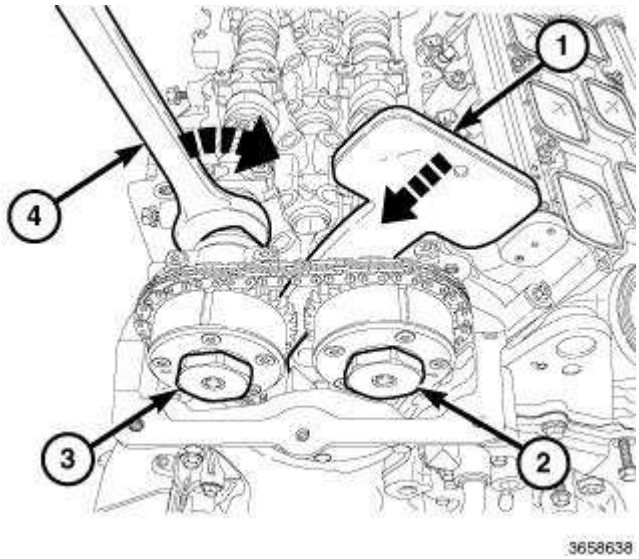

Fig. 276: Compressing Tensioner By Slightly Rotating Exhaust Camshaft Clockwise
Courtesy of CHRYSLER GROUP, LLC

4. Use the timing chain to compress the tensioner by slightly rotating the exhaust camshaft clockwise (4). Insert the (special tool #10369, Holder, Timing Chain) (1) into place between the cylinder head boss and the tensioner arm to hold the tensioner in the compressed position. The

Timing Chain Holder remains in place while the phasers are removed.

NOTE: Minor rotation of a camshaft (a few degrees) may be required when installing the RH Camshaft/Phaser Lock.

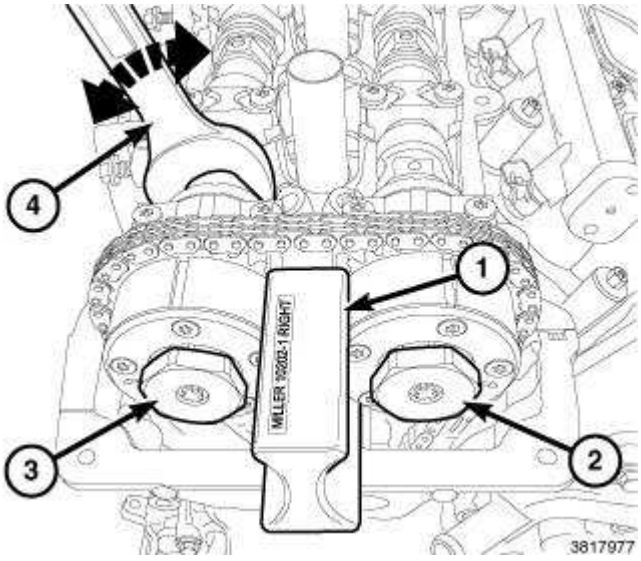

Fig. 277: Wrench, Oil Control Valves & Special Tool
Courtesy of CHRYSLER GROUP, LLC

5. Install (special tool #10202-1, Lock, Camshaft/Phaser, Right Side) (1).
6. Remove both the intake (2) and exhaust (3) oil control valves.

NOTE: Left side shown in illustration. Right side similar.

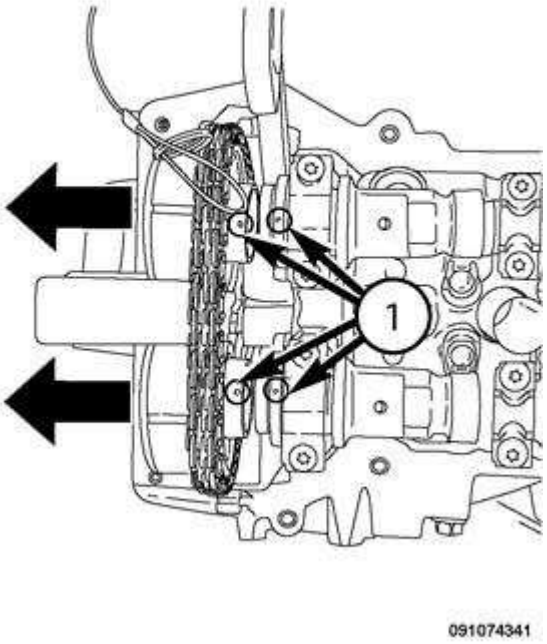

Fig. 278: Alignment Marks
Courtesy of CHRYSLER GROUP, LLC

7. Using care. Remove both the intake and exhaust oil control valves simultaneously.

NOTE: DO NOT REMOVE THE PHASER LOCK

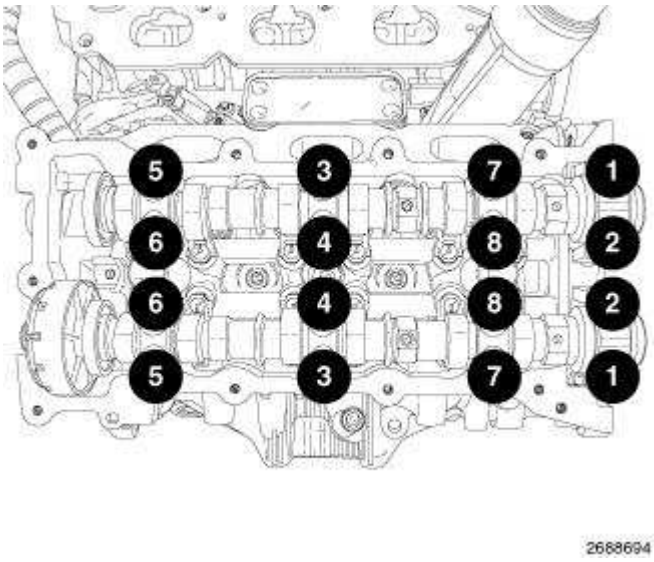

Fig. 279: Camshaft Bearing Cap Bolts Removal Sequence - Right
Courtesy of CHRYSLER GROUP, LLC

8. Camshaft bearing caps should have been marked during engine manufacturing. For example, the number one exhaust camshaft bearing cap is marked "1E->". The caps should be installed

with the notch forward.

NOTE: Loosen the camshaft bearing cap bolts in the sequence shown in illustration.

NOTE: When the camshaft is removed the rocker arms may slide downward, mark the rocker arms before removing the camshaft.

9. Remove the camshaft bearing caps and the camshafts.

INSPECTION

INSPECTION

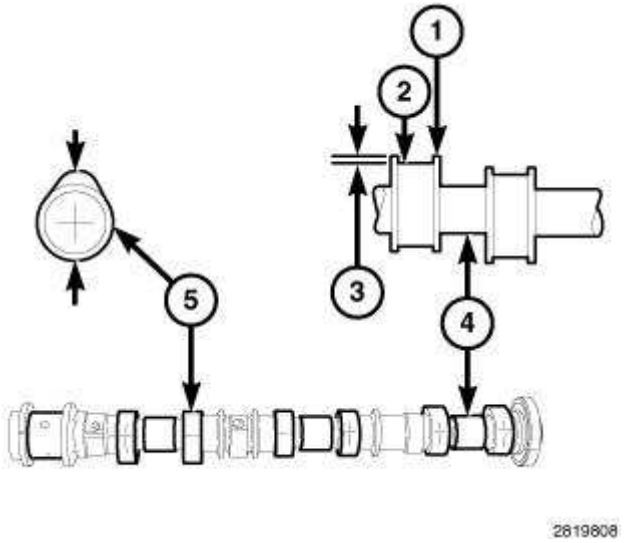

Fig. 280: Inspecting Camshaft Bearing Journals & Cam Lobes
Courtesy of CHRYSLER GROUP, LLC

NOTE: RH intake camshaft shown in illustration, other camshafts similar.

1. Inspect camshaft bearing journals (4) for damage and binding. If journals are binding, check the cylinder head for damage. Also check cylinder head oil holes for clogging.
2. Check the surface of the cam lobes (5) for abnormal wear (3). Measure and compare the unworn area (1) to the worn area (2). Replace camshafts that are not within specification. Refer to **SPECIFICATIONS**.

INSTALLATION

LEFT

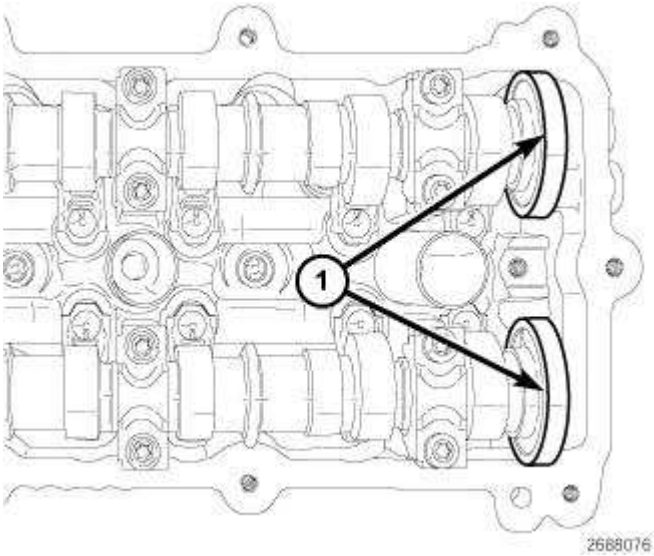

Fig. 281: Magnetic Timing Wheels
Courtesy of CHRYSLER GROUP, LLC

CAUTION: The magnetic timing wheels (1) must not come in contact with magnets (pickup tools, trays, etc.) or any other strong magnetic field. This will destroy the timing wheels ability to correctly relay camshaft position to the camshaft position sensor.

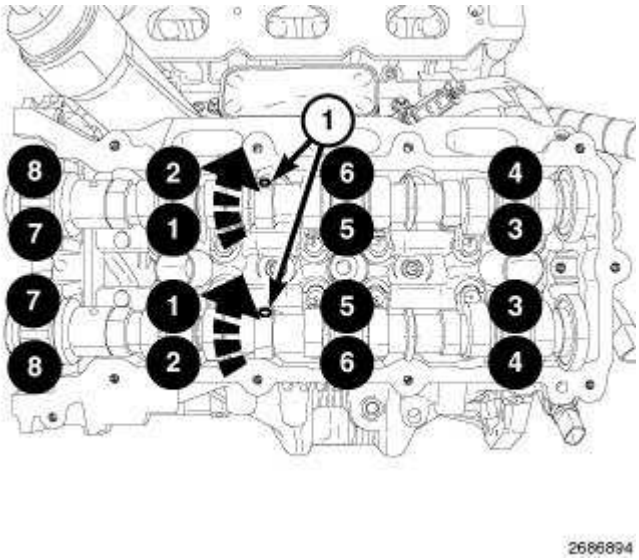

Fig. 282: Bearing Cap Retaining Bolts Tightening Sequence - Left
Courtesy of CHRYSLER GROUP, LLC

1. Lubricate the camshaft journals with clean engine oil.

CAUTION: Do not rotate the camshafts more than a few degrees independently of the crankshaft. Valve to piston contact could occur resulting in possible valve damage. If the camshafts need to be rotated more than

a few degrees, first move the pistons away from the cylinder heads by rotating the crankshaft counterclockwise to a position 30° before-top-dead-center. Once the camshafts are returned to their top-dead-center position, rotate the crankshaft clockwise to return the crankshaft to top-dead-center.

2. Install the left side camshaft(s) with the alignment holes (1) positioned approximately 30° before top-dead-center. This will place the camshafts at the neutral position (no valve load) easing the installation of the camshaft bearing caps.

   Caps are identified numerically (1 through 4), intake or exhaust (I or E) and should be installed from the front to the rear of the engine. All caps should be installed with the notch forward so that the stamped arrows (<) on the caps point toward the front of the engine.

3. Verify the rocker arms are aligned to the cam lobe. Refer to **ROCKER ARM, VALVE, INSTALLATION** .

   .

4. Install the camshaft bearing caps and hand tighten the retaining bolts to 2 N.m (18 in. lbs.).
5. Tighten the bearing cap retaining bolts in the sequence shown in illustration to 9.5 N.m (84 in. lbs.).

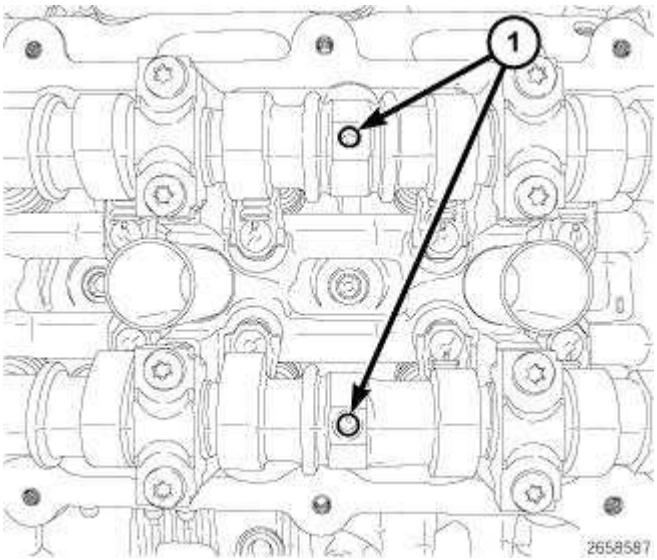

Fig. 283: Positioning Camshaft Alignment Holes Vertically
Courtesy of CHRYSLER GROUP, LLC

6. Rotate the camshafts clockwise to top-dead-center by positioning the alignment holes (1) vertically.
7. Install the timing chain tensioner holder.

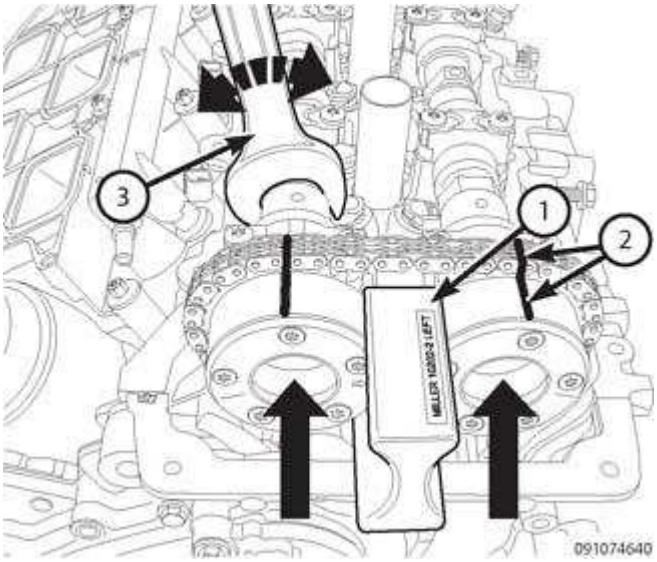

Fig. 284: Marks On Timing Chain
Courtesy of CHRYSLER GROUP, LLC

NOTE: Minor rotation of a camshaft (a few degrees) may be required when installing the LT Camshaft/Phasers to the camshaft alignment pins.

8. Verify the cam phasers are aligned with the marks (2) made on the timing chain.
9. Install the camshaft phasers onto the camshafts.

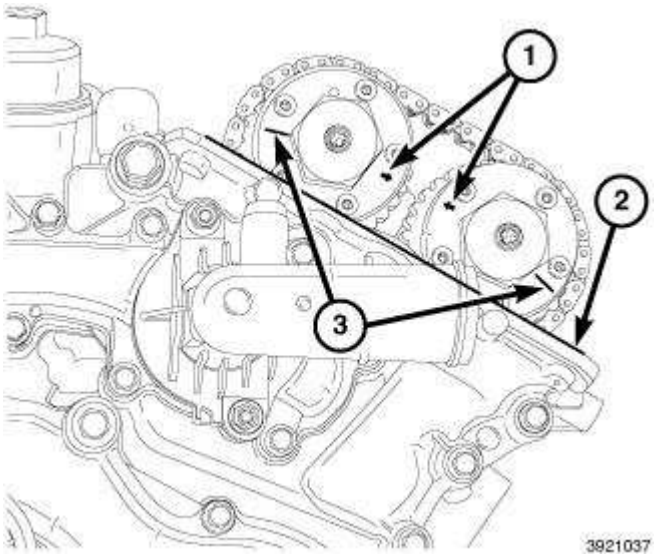

Fig. 285: Arrows, Scribe Lines & Cylinder Head Cover Mounting Surface
Courtesy of CHRYSLER GROUP, LLC

10. Using care, slowly rotate the engine four revolutions to verify the valve to piston clearance and camshaft phaser timing mark alignment (1).
11. Install the cylinder head cover, spark plugs, ignition coils and the upper intake manifold. Refer to

ASSEMBLY, VARIABLE VALVE TIMING, PHASER/OIL CONTROL VALVE, INSTALLATION.

NOTE: The Cam/Crank Variation Relearn procedure must be performed using the scan tool anytime there has been a repair/replacement made to a powertrain system, for example: flywheel, valvetrain, camshaft and/or crankshaft sensors or components.

RIGHT

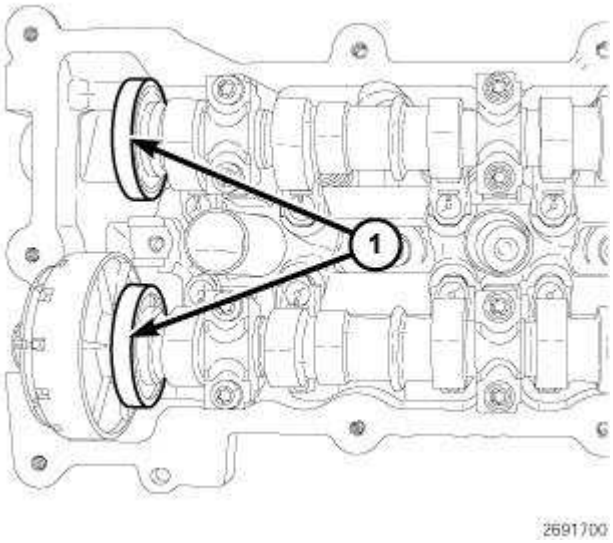

Fig. 286: Magnetic Timing Wheels
Courtesy of CHRYSLER GROUP, LLC

CAUTION: The magnetic timing wheels (1) must not come in contact with magnets (pickup tools, trays, etc.) or any other strong magnetic field. This will destroy the timing wheels ability to correctly relay camshaft position to the camshaft position sensor.

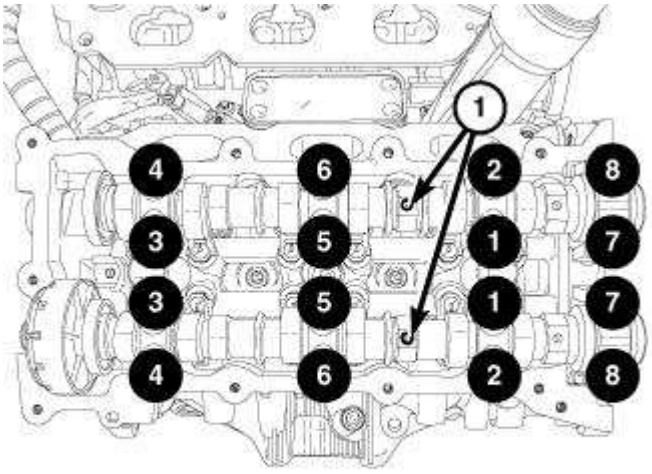

Fig. 287: Bearing Cap Retaining Bolts Tightening Sequence - Right
Courtesy of CHRYSLER GROUP, LLC

1. Lubricate camshaft journals with clean engine oil.

CAUTION: Do not rotate the camshafts more than a few degrees independently of the crankshaft. Valve to piston contact could occur resulting in possible valve damage. If the camshafts need to be rotated more than a few degrees, first move the pistons away from the cylinder heads by rotating the crankshaft counterclockwise to a position 30° before-top-dead-center. Once the camshafts are returned to their top-dead-center position, rotate the crankshaft clockwise to return the crankshaft to top-dead-center.

2. Install the right side camshaft(s) at top-dead-center by positioning the alignment holes (1) vertically. This will place the camshafts at the neutral position (no valve load) easing the installation of the camshaft bearing caps.

NOTE: Caps are identified numerically (1 through 4), intake or exhaust (I or E) and should be installed from the front to the rear of the engine. All caps should be installed with the notch forward so that the stamped arrows (<) on the caps point toward the front of the engine.

3. Install the camshaft bearing caps and hand tighten the retaining bolts to 2 N.m (18 in. lbs.).
4. Verify the rocker arms are aligned to the cam lobe

   Refer to **ROCKER ARM, VALVE, INSTALLATION** .

5. Tighten the bearing cap retaining bolts in the sequence shown in illustration to 9.5 N.m (84 in. lbs.).

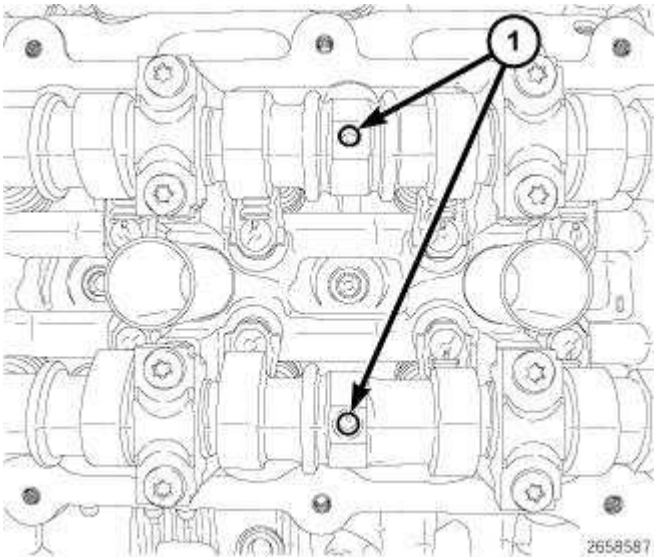

Fig. 288: Positioning Camshaft Alignment Holes Vertically
Courtesy of CHRYSLER GROUP, LLC

6. Verify the alignment holes are vertical to the cylinder head surface.

NOTE: Minor rotation of a camshaft (a few degrees) may be required when installing the RT Camshaft/Phasers to the camshaft alignment pins.

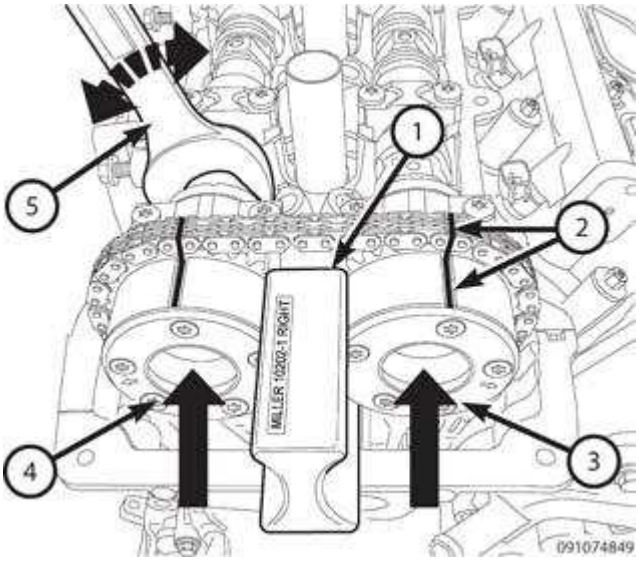

Fig. 289: Marks On Timing Chain
Courtesy of CHRYSLER GROUP, LLC

7. Verify the cam phasers (3 and 4) are aligned to the marks (2) made on the timing chain.
8. Install the phasers (3 and 4) onto the camshafts.
9. Install the oil control valves. Tighten to 150 N.m (110 ft. lbs.).

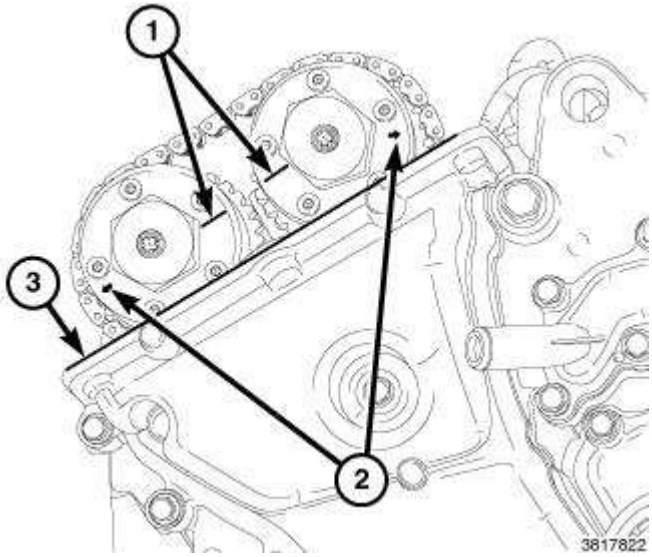

Fig. 290: Arrows, Scribe Lines & Cylinder Head Cover Mounting Surface
Courtesy of CHRYSLER GROUP, LLC

10. Using care, slowly rotate the engine four revolutions to verify the valve to piston clearance and camshaft phaser timing mark alignment (1).
11. Install the cylinder head cover, spark plugs, ignition coils and the upper intake manifold. Refer to **ASSEMBLY, VARIABLE VALVE TIMING, PHASER/OIL CONTROL VALVE, INSTALLATION**.

NOTE: The Cam/Crank Variation Relearn procedure must be performed using the scan tool anytime there has been a repair/replacement made to a powertrain system, for example: flywheel, valvetrain, camshaft and/or crankshaft sensors or components.

COVER(S), CYLINDER HEAD

DESCRIPTION

DESCRIPTION

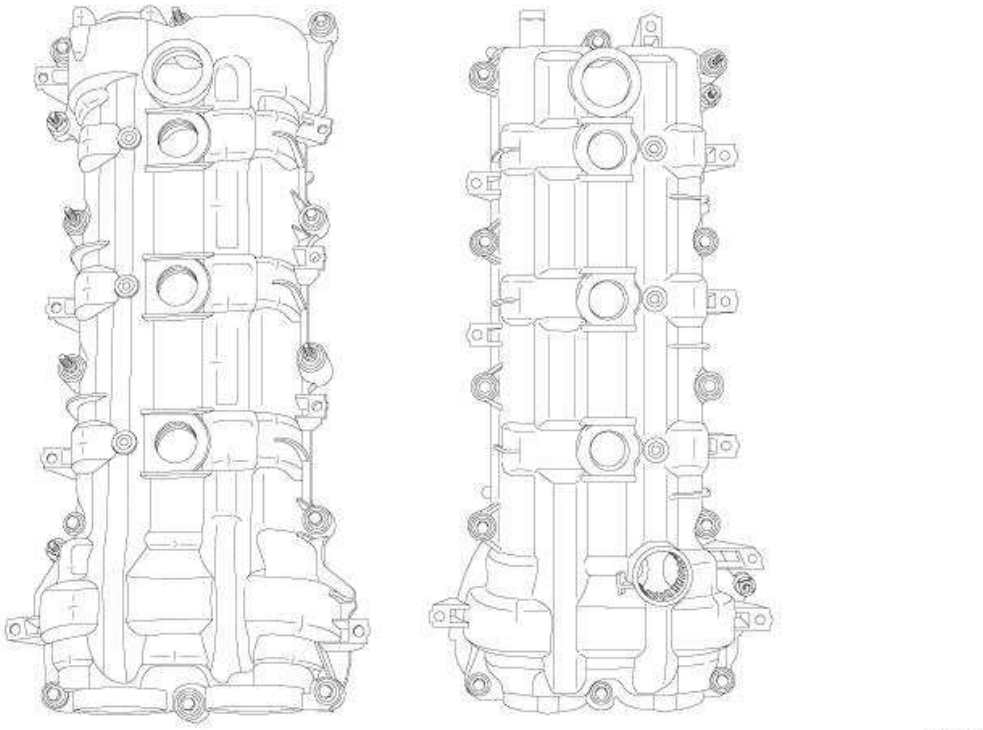

Fig. 291: Cylinder Head Covers
Courtesy of CHRYSLER GROUP, LLC

The cylinder head covers are made of a carbon and fiberglass composite. The cylinder head covers are not interchangeable from side-to-side. The cylinder head covers are sealed with a press-in-place gasket that is designed to isolate the cover from the cylinder head for improved NVH. There are two dowel pins on the outboard side of the cover flange to locate the cover to holes in the cylinder head. RTV is used to seal the T-joint at the timing cover, cylinder head and cylinder head cover.

REMOVAL

LEFT

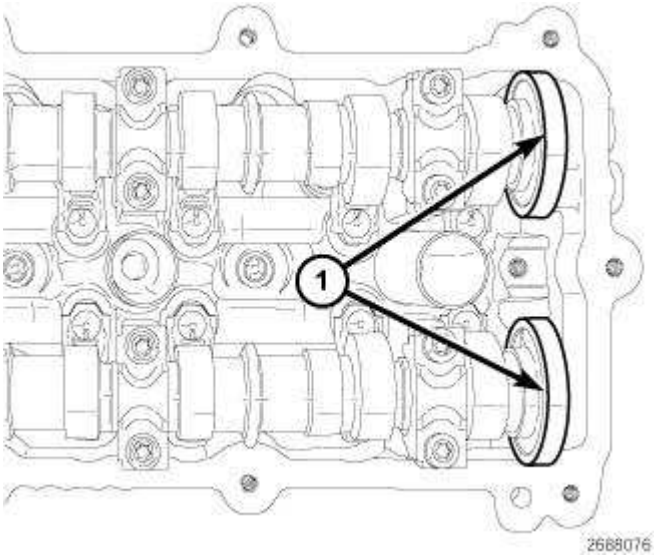

Fig. 292: Magnetic Timing Wheels
Courtesy of CHRYSLER GROUP, LLC

CAUTION: The magnetic timing wheels (1) must not come in contact with magnets (pickup tools, trays, etc.) or any other strong magnetic field. This will destroy the timing wheels ability to correctly relay camshaft position to the camshaft position sensor.

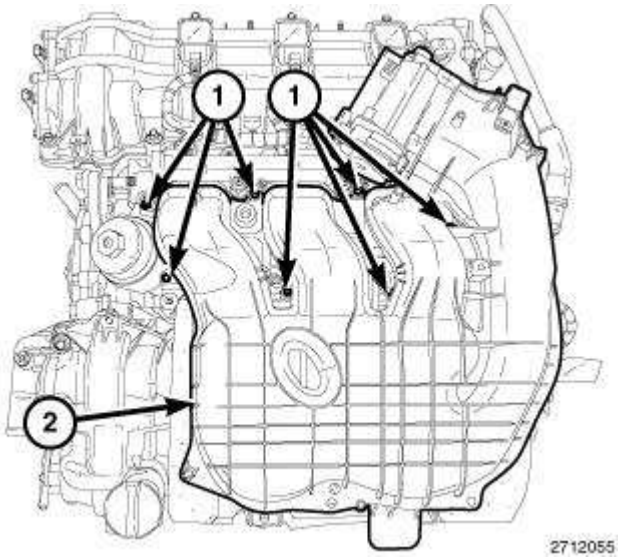

Fig. 293: Upper Intake Manifold & Bolts
Courtesy of CHRYSLER GROUP, LLC

1. Disconnect and isolate the negative battery cable.
2. Remove the air inlet hose and upper intake manifold (2). Refer to **MANIFOLD, INTAKE, REMOVAL** .

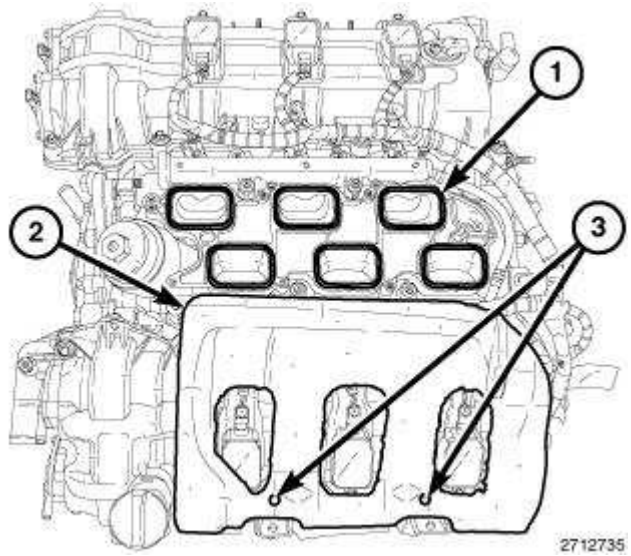

Fig. 294: Intake Ports, Insulator & Alignment Posts
Courtesy of CHRYSLER GROUP, LLC

3. Cover the open intake ports (1) to prevent debris from entering the engine.
4. Remove the insulator (2) from the LH cylinder head cover.

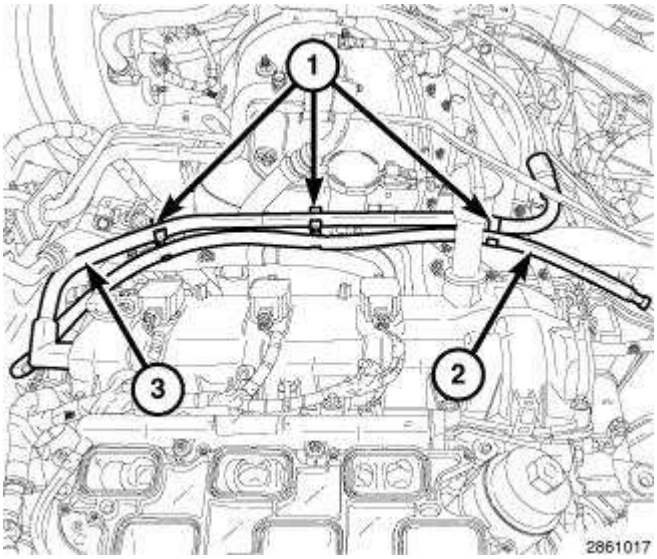

Fig. 295: Transmission Breather Hose, Make-Up Air Tube & Clips
Courtesy of CHRYSLER GROUP, LLC

5. Disengage the clips (1), remove the make-up air tube (3) from the left cylinder head cover and reposition the transmission breather hose (2).

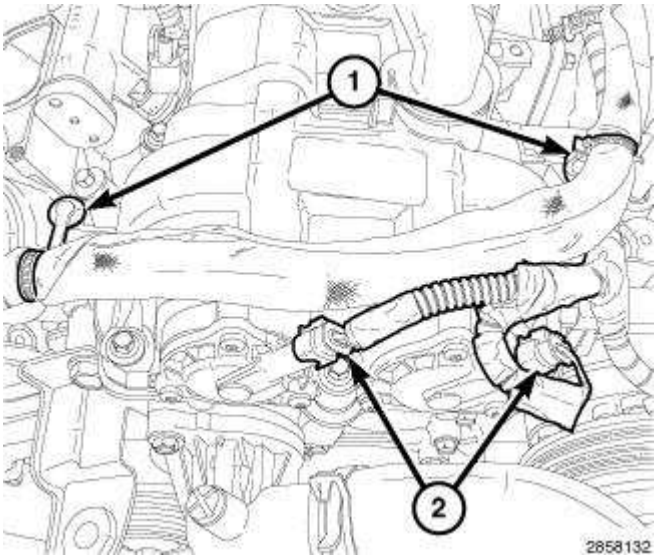

Fig. 296: Variable Valve Timing Solenoid Connectors & Wire Harness Retainers
Courtesy of CHRYSLER GROUP, LLC

NOTE: Mark the variable valve timing solenoid connectors (2) with a paint pen or equivalent so that they may be reinstalled in their original locations.

6. Disconnect the electrical connectors (2) from the left variable valve timing solenoids.
7. Disengage two starter wire harness retainers (1) from the left cylinder head cover.

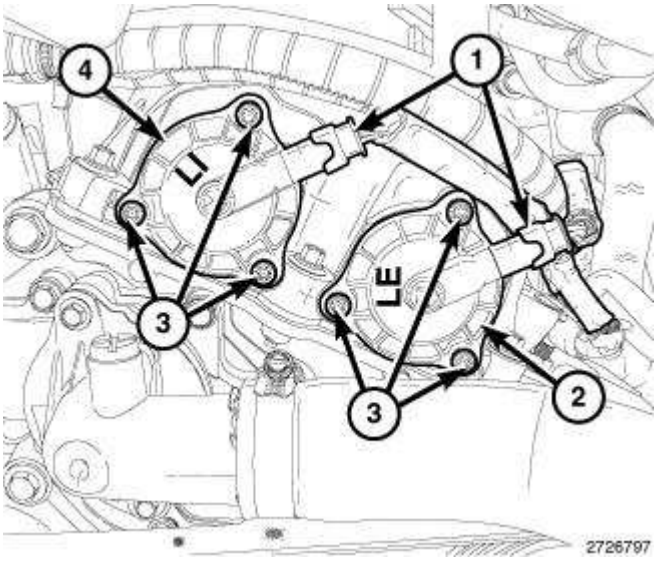

Fig. 297: Variable Valve Timing Solenoids, Connectors & Bolts
Courtesy of CHRYSLER GROUP, LLC

8. Mark the variable valve timing solenoids (2 and 4) with a paint pen or equivalent so that they may be reinstalled in their original locations.
9. Remove the variable valve timing solenoids. Refer to **SOLENOID, VARIABLE VALVE TIMING ,**

REMOVAL .

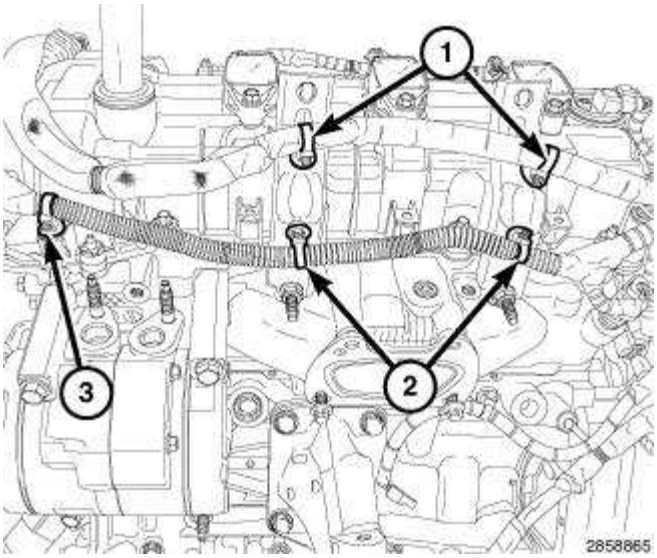

Fig. 298: Starter Wire Harness Retainers, Main Wire Harness Retainer & Manifold Support Bracket Retainers
Courtesy of CHRYSLER GROUP, LLC

10. Disengage one main wire harness retainer (3) from the left cylinder head cover.

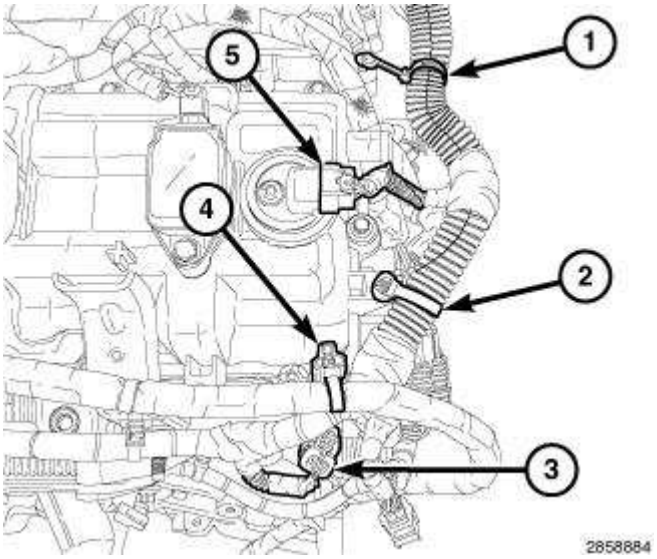

Fig. 299: ECT Sensor Connector, CMP Sensor & Main Wire Harness Retainers
Courtesy of CHRYSLER GROUP, LLC

11. Disconnect the left Camshaft Position (CMP) sensor (5).
12. Disengage one main wire harness retainer (2) from the cylinder head cover and one main wire harness retainer (4) from the cylinder head cover mounting stud.

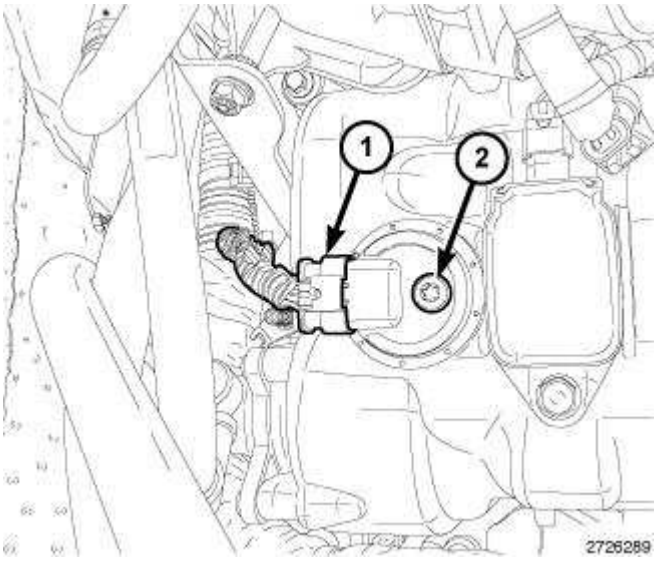

Fig. 300: CMP Sensor & Bolt
Courtesy of CHRYSLER GROUP, LLC

NOTE: The RH CMP sensor is shown in illustration, the LH CMP sensor is similar. If removing both RH and LH CMP sensors, mark the sensors so they can be installed in their original locations.

13. Remove the camshaft position sensor. Refer to **SENSOR, CAMSHAFT POSITION, REMOVAL** .

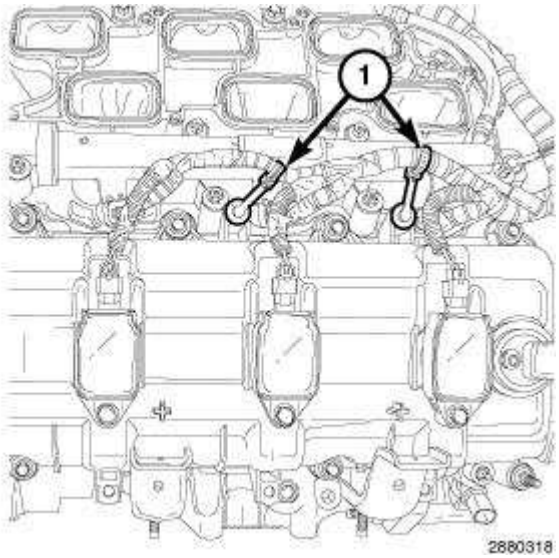

Fig. 301: Injection/Ignition Harness Retainers
Courtesy of CHRYSLER GROUP, LLC

14. Disengage two injection/ignition harness retainers (1) from the left cylinder head cover.

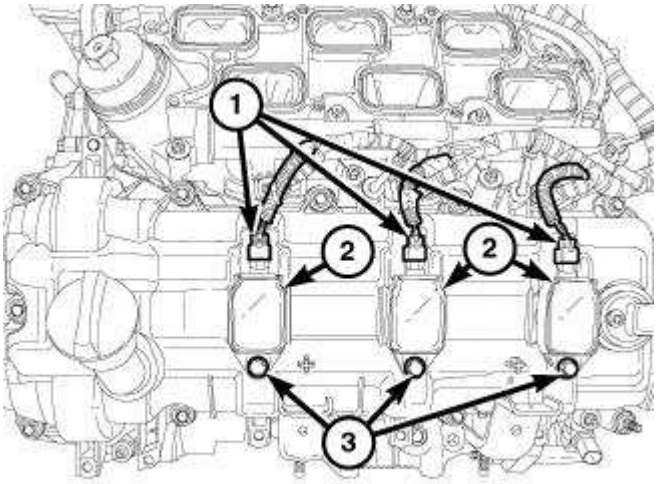

Fig. 302: Electrical Connector, Ignition Coils & Ignition Coil Retaining Bolts
Courtesy of CHRYSLER GROUP, LLC

15. Remove the ignition coils (2). Refer to **COIL, IGNITION, REMOVAL** .

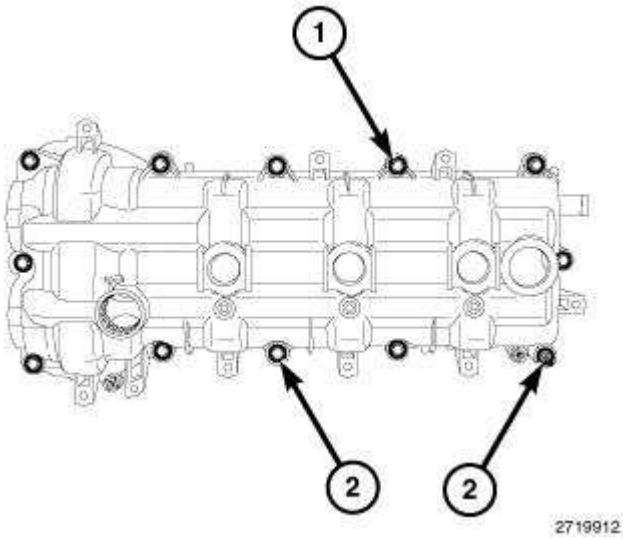

Fig. 303: Cylinder Head Cover Mounting Bolts & Studbolts
Courtesy of CHRYSLER GROUP, LLC

16. Loosen ten cylinder head cover mounting bolts (1) and two studbolts (2) and remove the cylinder head cover.

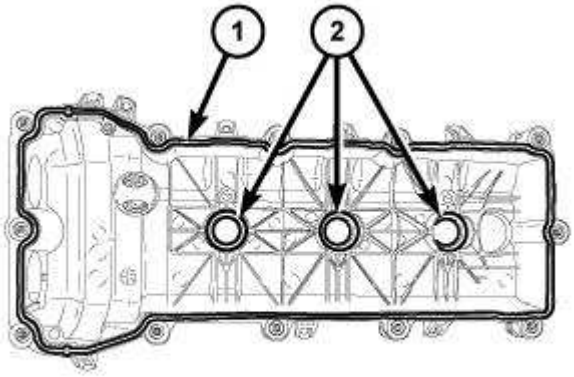

2776066

Fig. 304: Cylinder Head Cover Gasket & Spark Plug Tube Seals
Courtesy of CHRYSLER GROUP, LLC

17. Remove and discard the cylinder head cover gasket (1).
18. The spark plug tube seals (2) can be reused if not damaged.

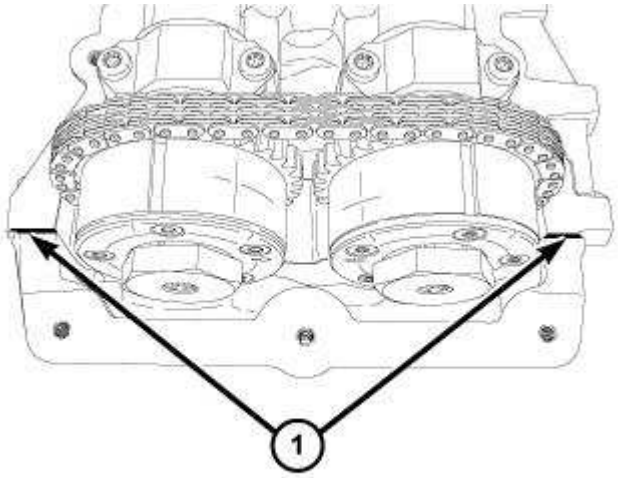

2776075

Fig. 305: RTV Sealant Locations
Courtesy of CHRYSLER GROUP, LLC

CAUTION: Do not use oil based liquids, wire brushes, abrasive wheels or metal scrapers to clean the engine gasket surfaces. Use only isopropyl (rubbing) alcohol, along with plastic or wooden scrapers. Improper gasket surface preparation may result in engine fluid leakage.

19. Remove all residual sealant (1) from the cylinder head, timing chain cover and cylinder head cover mating surfaces. Refer to **STANDARD PROCEDURE**.

RIGHT

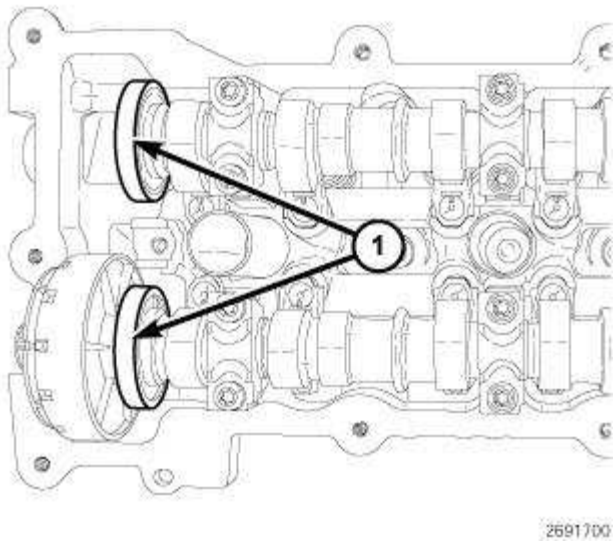

Fig. 306: Magnetic Timing Wheels
Courtesy of CHRYSLER GROUP, LLC

CAUTION: The magnetic timing wheels (1) must not come in contact with magnets (pickup tools, trays, etc.) or any other strong magnetic field. This will destroy the timing wheels ability to correctly relay camshaft position to the camshaft position sensor.

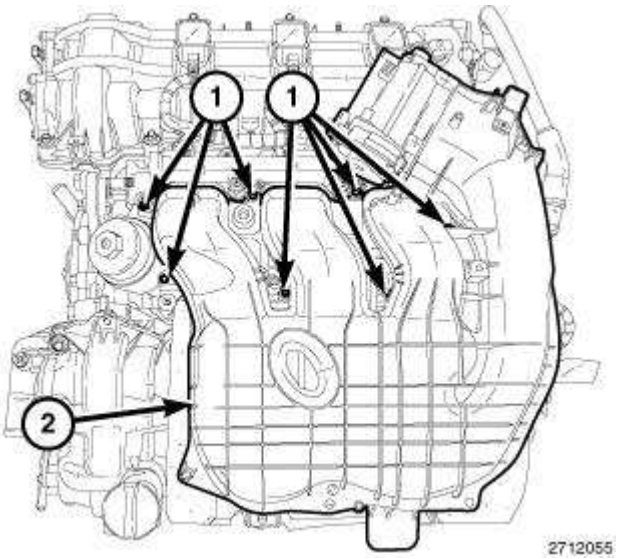

Fig. 307: Upper Intake Manifold & Bolts
Courtesy of CHRYSLER GROUP, LLC

1. Disconnect and isolate the negative battery cable.
2. Remove the air inlet hose and upper intake manifold (2). Refer to **MANIFOLD, INTAKE, REMOVAL** .

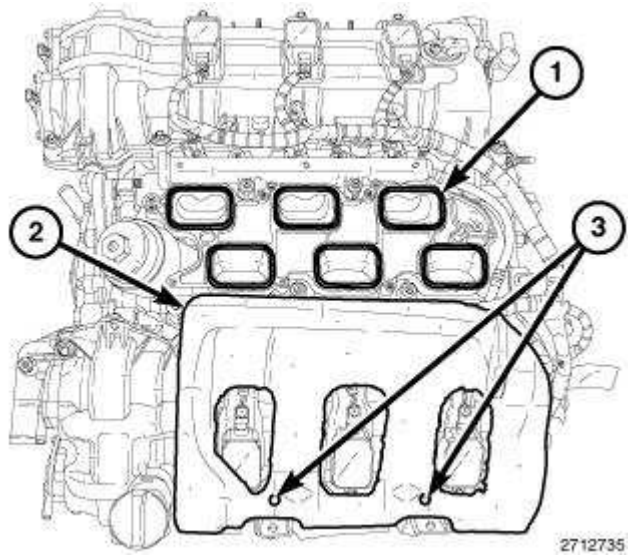

Fig. 308: Intake Ports, Insulator & Alignment Posts
Courtesy of CHRYSLER GROUP, LLC

3. Cover the open intake ports (1) to prevent debris from entering the engine.

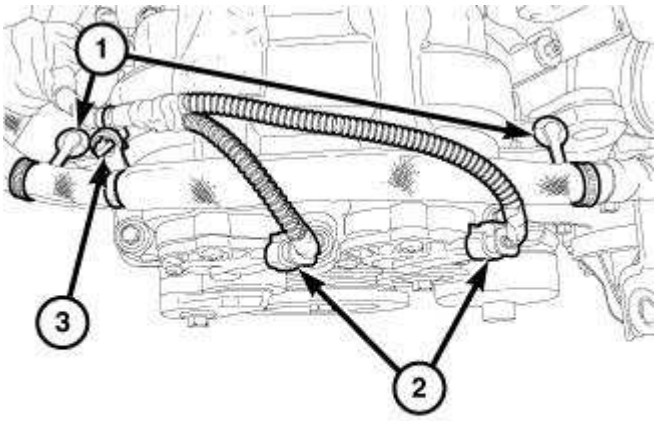

Fig. 309: Variable Valve Timing Solenoid Connectors & Harness Retainers
Courtesy of CHRYSLER GROUP, LLC

NOTE: Mark the variable valve timing solenoid connectors (2) with a paint pen or equivalent so that they may be reinstalled in their original locations.

4. Disconnect the electrical connectors (2) from the variable valve timing solenoids on the right cylinder head.
5. Disengage the starter harness to main harness retainer (3).
6. Disengage two starter wire harness retainers from the right cylinder head cover (1).

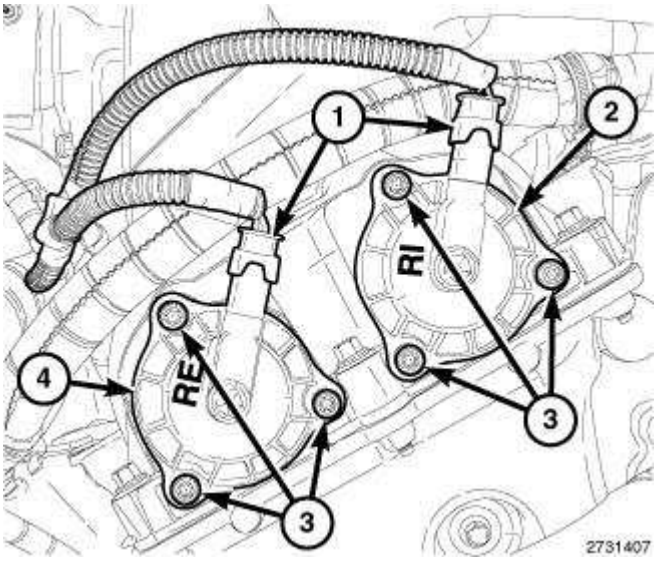

Fig. 310: Variable Valve Timing Solenoids, Connectors & Bolts
Courtesy of CHRYSLER GROUP, LLC

7. Mark the variable valve timing solenoids (2 and 4) with a paint pen or equivalent so that they may be reinstalled in their original locations.
8. Remove the variable valve timing solenoids. Refer to **SOLENOID, VARIABLE VALVE TIMING , REMOVAL** .

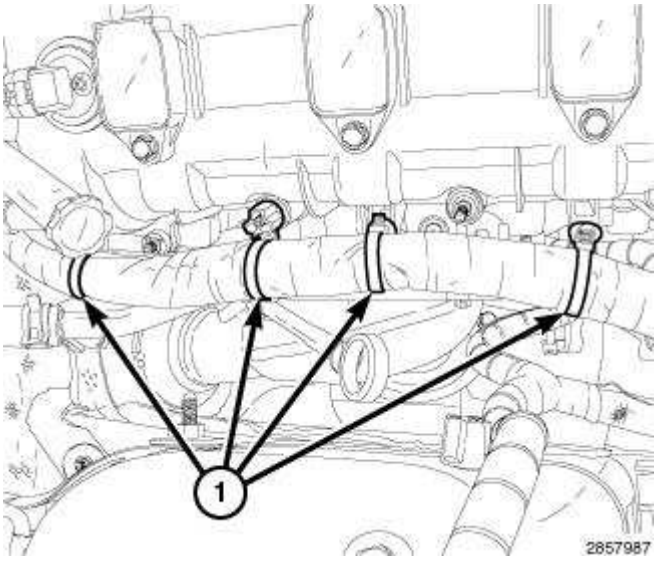

Fig. 311: Main Wire Harness Retainers At Right Cylinder Head Cover
Courtesy of CHRYSLER GROUP, LLC

9. Disengage four main wire harness retainers (1) from the right cylinder head cover.

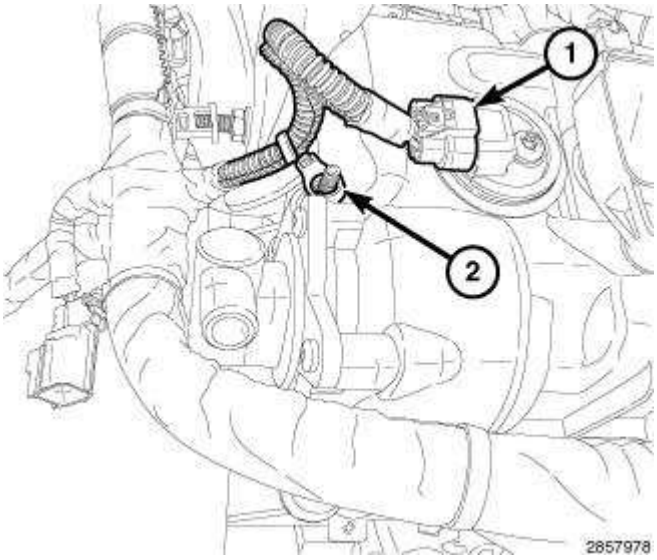

Fig. 312: Main Wire Harness Retainer & Connector
Courtesy of CHRYSLER GROUP, LLC

10. Disconnect the electrical connector (1) from the right Camshaft Position (CMP) sensor.
11. Disengage the main wire harness retainer (2) from the right cylinder head cover mounting stud.

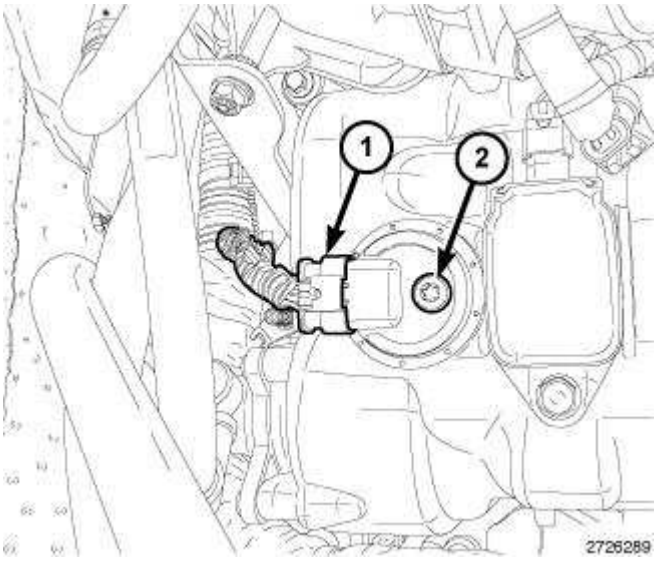

Fig. 313: CMP Sensor & Bolt
Courtesy of CHRYSLER GROUP, LLC

NOTE: If removing both RH and LH CMP sensors, mark the sensors so they can be installed in their original locations.

12. Remove the camshaft position sensor. Refer to **SENSOR, CAMSHAFT POSITION, REMOVAL** .

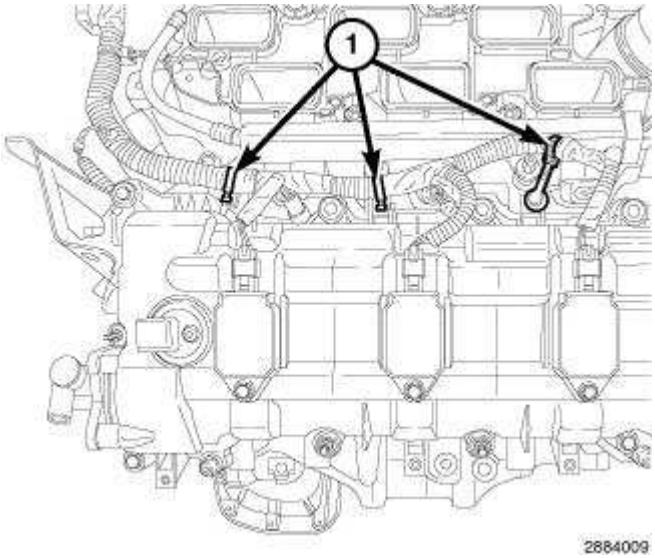

Fig. 314: Injection/Ignition Harness Retainers
Courtesy of CHRYSLER GROUP, LLC

13. Disengage three injection/ignition harness retainers (1) from the right cylinder head cover.

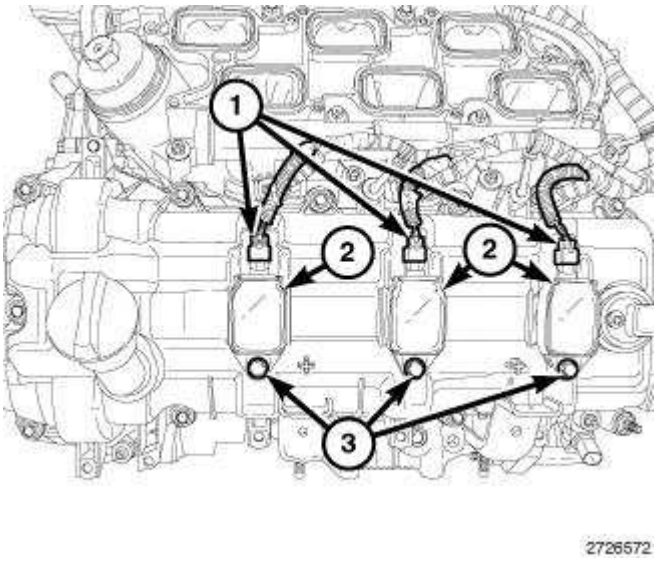

Fig. 315: Electrical Connector, Ignition Coils & Ignition Coil Retaining Bolts
Courtesy of CHRYSLER GROUP, LLC

NOTE: The LH ignition coils are shown in illustration, the RH ignition coils are similar.

14. Remove the ignition coils (2). Refer to **COIL, IGNITION, REMOVAL** .

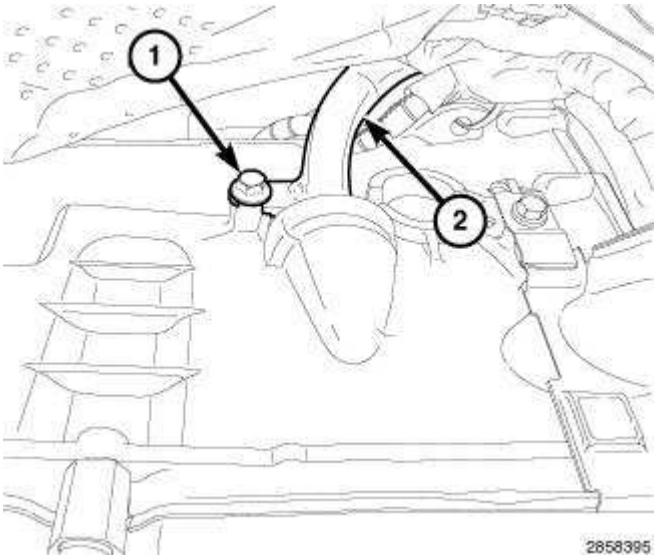

Fig. 316: Transmission Fluid Level Indicator Tube & Bolt
Courtesy of CHRYSLER GROUP, LLC

15. Raise and support the vehicle. Refer to **HOISTING, STANDARD PROCEDURE** .
16. Loosen the bolt (1) securing the transmission fluid level indicator tube (2) to the transmission housing.

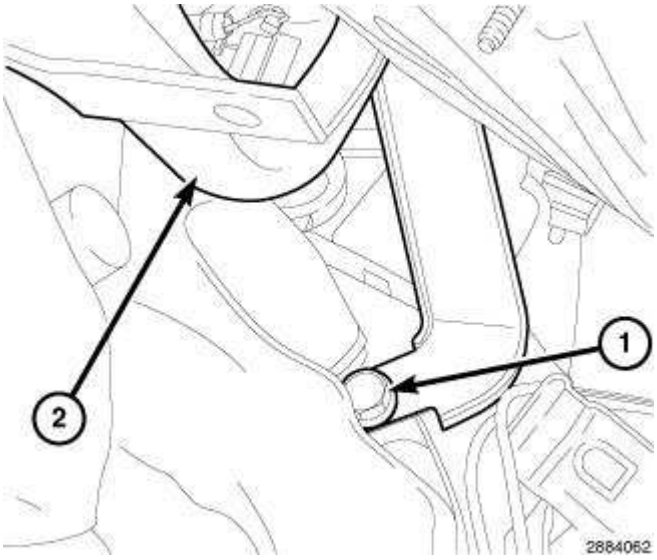

Fig. 317: Upper Transmission-To-Engine Bolt & Transmission Oil Level Indicator Tube
Courtesy of CHRYSLER GROUP, LLC

17. Remove the upper transmission to engine bolt (1) and reposition the transmission oil level indicator tube (2).

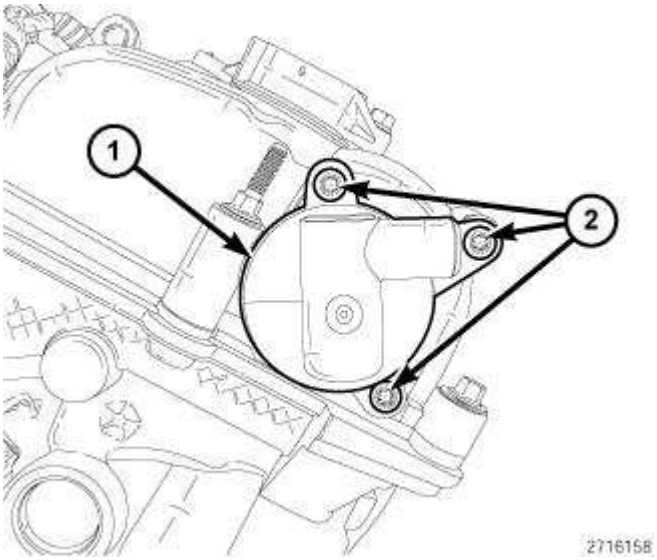

Fig. 318: PCV Valve & Screws
Courtesy of CHRYSLER GROUP, LLC

18. Lower the vehicle.
19. Remove the PCV valve (1). Refer to **VALVE, POSITIVE CRANKCASE VENTILATION (PCV), REMOVAL** .

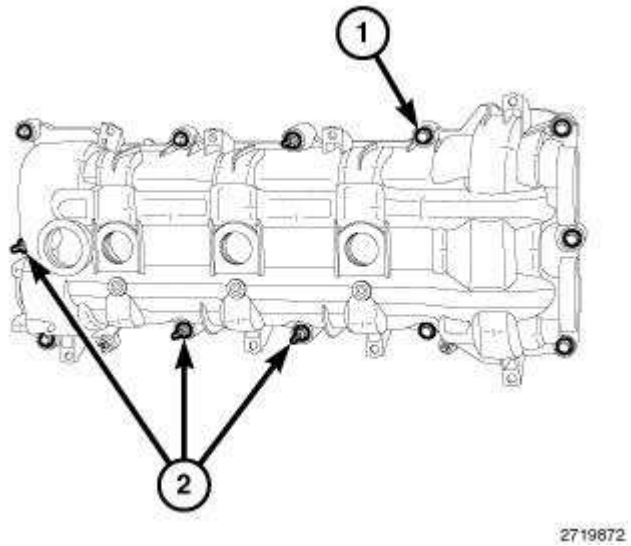

Fig. 319: Cylinder Head Cover Mounting Bolts & Studbolts
Courtesy of CHRYSLER GROUP, LLC

20. Loosen nine cylinder head cover mounting bolts (1) and three studbolts (2) and remove the cylinder head cover.

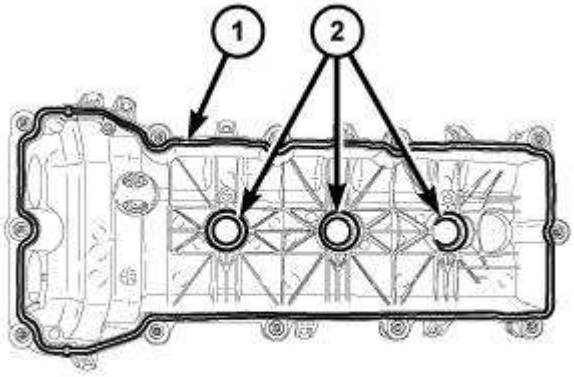

2776066

Fig. 320: Cylinder Head Cover Gasket & Spark Plug Tube Seals
Courtesy of CHRYSLER GROUP, LLC

NOTE: The LH cylinder head cover is shown in illustration, the RH cylinder head cover is similar.

21. Remove and discard the cylinder head cover gasket (1).
22. The spark plug tube seals (2) can be reused if not damaged.

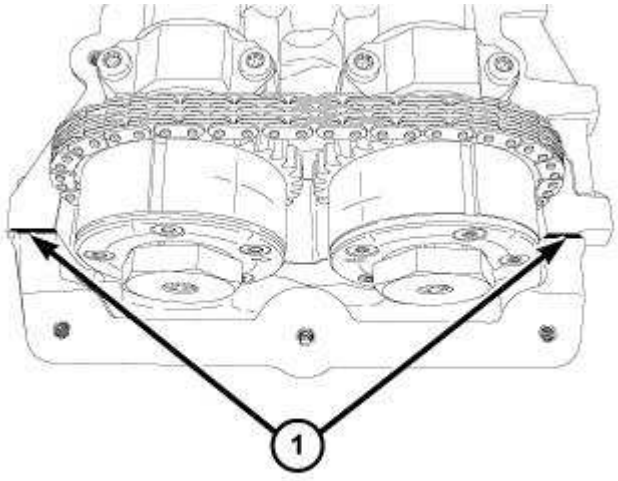

2776075

Fig. 321: RTV Sealant Locations
Courtesy of CHRYSLER GROUP, LLC

NOTE: The LH cylinder head cover T-joints are shown in illustration, the RH cylinder head cover T-joints are similar.

CAUTION: Do not use oil based liquids, wire brushes, abrasive wheels or metal scrapers to clean the engine gasket surfaces. Use only isopropyl (rubbing) alcohol, along with plastic or wooden scrapers. Improper gasket surface preparation may result in engine fluid leakage.

23. Remove all residual sealant (1) from the cylinder head, timing chain cover and cylinder head cover mating surfaces. Refer to **STANDARD PROCEDURE**.

INSTALLATION

LEFT

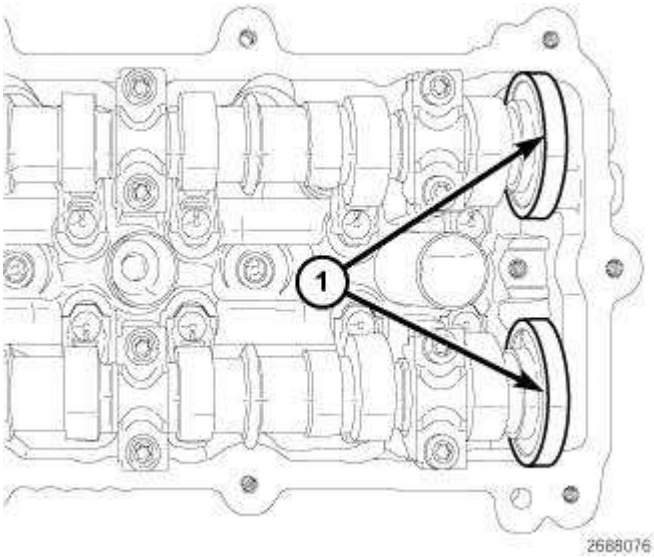

Fig. 322: Magnetic Timing Wheels
Courtesy of CHRYSLER GROUP, LLC

CAUTION: The magnetic timing wheels (1) must not come in contact with magnets (pickup tools, trays, etc.) or any other strong magnetic field. This will destroy the timing wheels ability to correctly relay camshaft position to the camshaft position sensor.

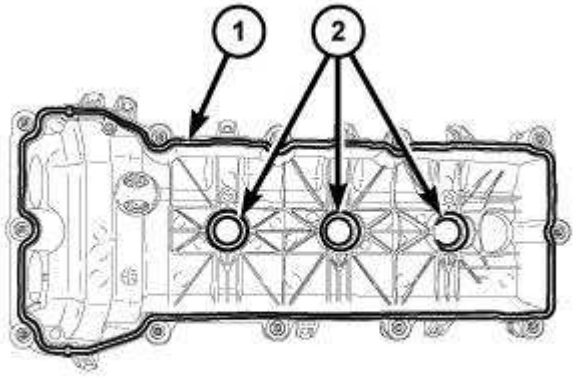

Fig. 323: Cylinder Head Cover Gasket & Spark Plug Tube Seals
Courtesy of CHRYSLER GROUP, LLC

1. Install the cylinder head cover gasket (1).
2. The spark plug tube seals (2) can be reused if not damaged.

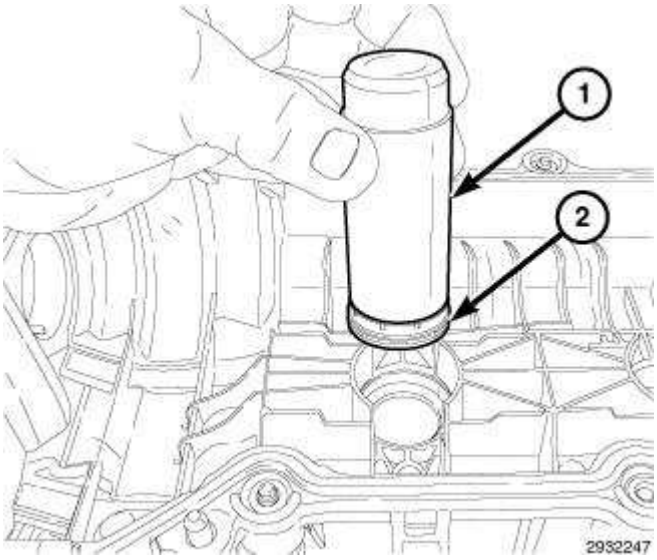

Fig. 324: Spark Plug Tube Seal & Installer
Courtesy of CHRYSLER GROUP, LLC

3. If required, install new spark plug tube seals (2) in the cylinder head cover:
   - Lubricate the spark plug tube seal inner and outer diameters with clean engine oil.
   - Place the spark plug tube seal (2) on the Cam Sensor/Spark Plug Tube Seal Installer (special tool #10256, Installer, Cam Installer, Cam Sensor/Spark Plug Tube Seal) (1).
   - Push the seal into the cylinder head cover until the base of the seal is seated.
   - Remove the tool.

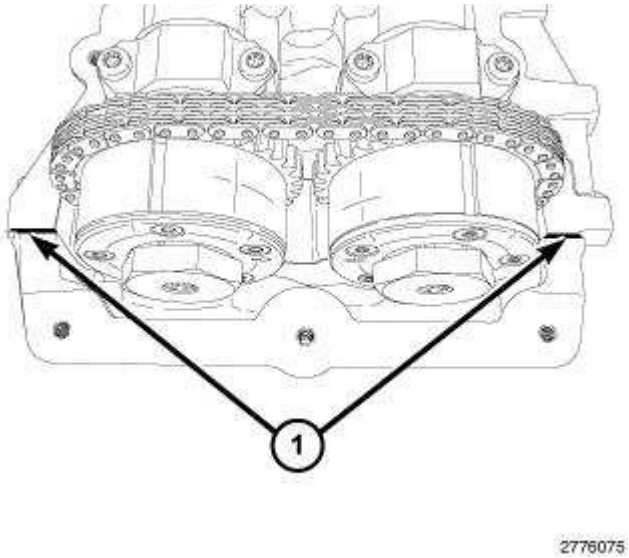

Fig. 325: RTV Sealant Locations
Courtesy of CHRYSLER GROUP, LLC

4. Clean the timing engine timing cover, cylinder head and cylinder head cover mating surfaces with isopropyl alcohol in preparation for sealant application.

CAUTION: Engine assembly requires the use of a unique sealant that is compatible with engine oil. Using a sealant other than Mopar® Threebond Engine RTV Sealant may result in engine fluid leakage.

CAUTION: Following the application of Mopar® Threebond Engine RTV Sealant to the gasket surfaces, the components must be assembled within 20 minutes and the attaching fasteners must be tightened to specification within 45 minutes. Prolonged exposure to the air prior to assembly may result in engine fluid leakage.

5. Apply a 2 to 3 mm wide bead of Mopar® Threebond Engine RTV Sealant (1) to the two engine timing cover to cylinder head T-joints as shown in illustration.

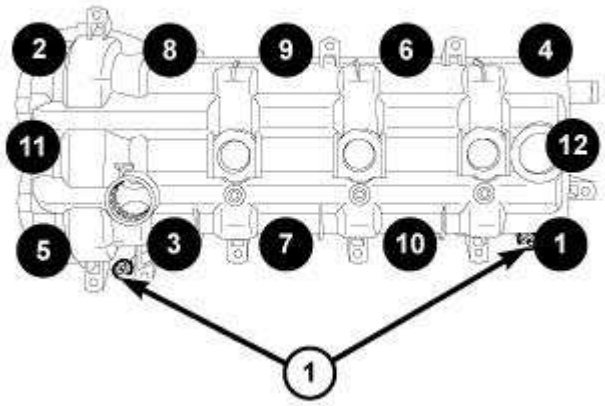

Fig. 326: Cylinder Head Cover Bolts & Double Ended Studs Tightening Sequence - Left
Courtesy of CHRYSLER GROUP, LLC

6. Align the locator pins (1) to the cylinder head and install the cylinder head cover.
7. Tighten the cylinder head cover bolts and double ended studs in the sequence shown in illustration to 12 N.m (106 in. lbs.).

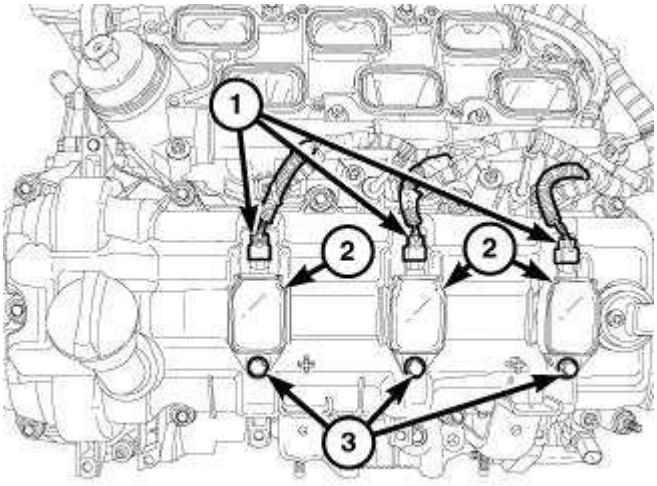

Fig. 327: Electrical Connector, Ignition Coils & Ignition Coil Retaining Bolts
Courtesy of CHRYSLER GROUP, LLC

8. If removed, install the spark plugs. Refer to **SPARK PLUG, INSTALLATION** .
9. Install the ignition coils. Refer to **COIL, IGNITION, INSTALLATION** .

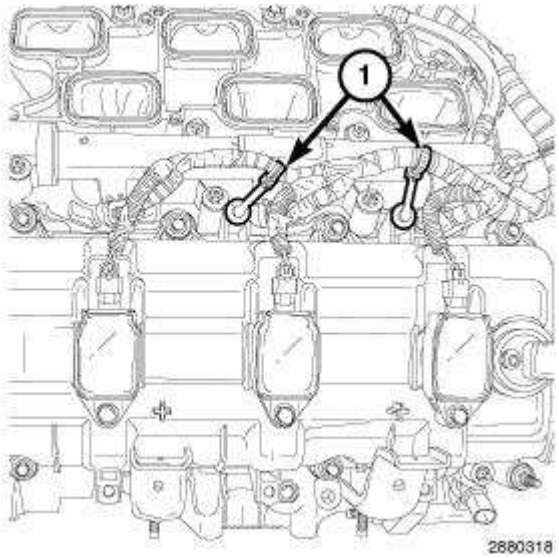

Fig. 328: Injection/Ignition Harness Retainers
Courtesy of CHRYSLER GROUP, LLC

10. Engage two injection/ignition harness retainers (1) to the left cylinder head cover.

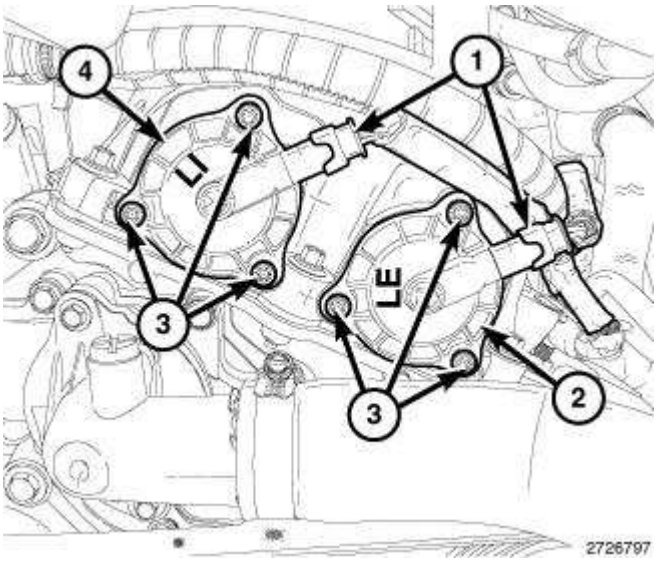

Fig. 329: Variable Valve Timing Solenoids, Connectors & Bolts
Courtesy of CHRYSLER GROUP, LLC

11. Refer to the markings made at disassembly and install the variable valve timing solenoids (2 and 4) in their original locations. Refer to **SOLENOID, VARIABLE VALVE TIMING , INSTALLATION** .

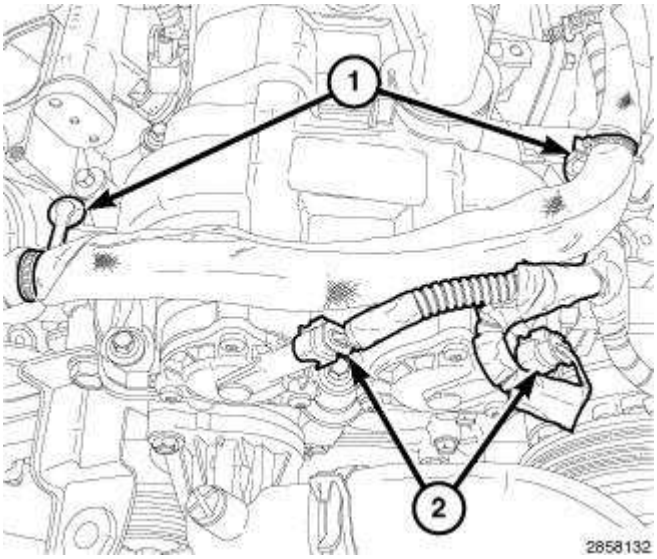

Fig. 330: Variable Valve Timing Solenoid Connectors & Wire Harness Retainers
Courtesy of CHRYSLER GROUP, LLC

12. Connect the electrical connectors (2) to the left variable valve timing solenoids.
13. Engage two starter wire harness retainers (1) to the left cylinder head cover.

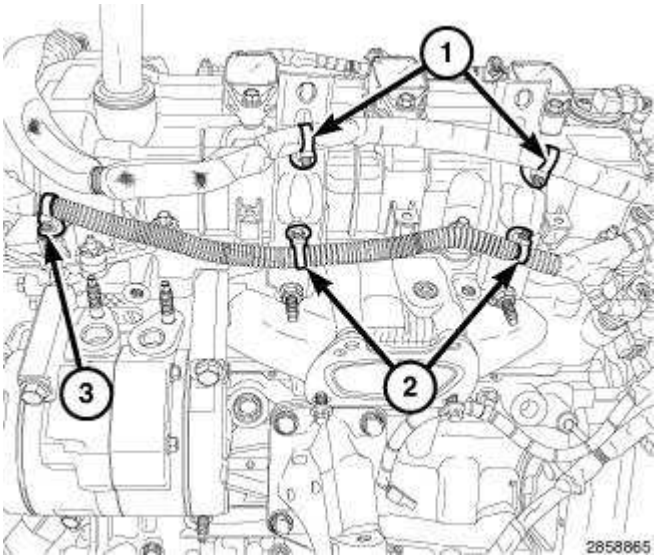

Fig. 331: Starter Wire Harness Retainers, Main Wire Harness Retainer & Manifold Support Bracket Retainers
Courtesy of CHRYSLER GROUP, LLC

14. Engage one main wire harness retainer (3) to the left cylinder head cover.

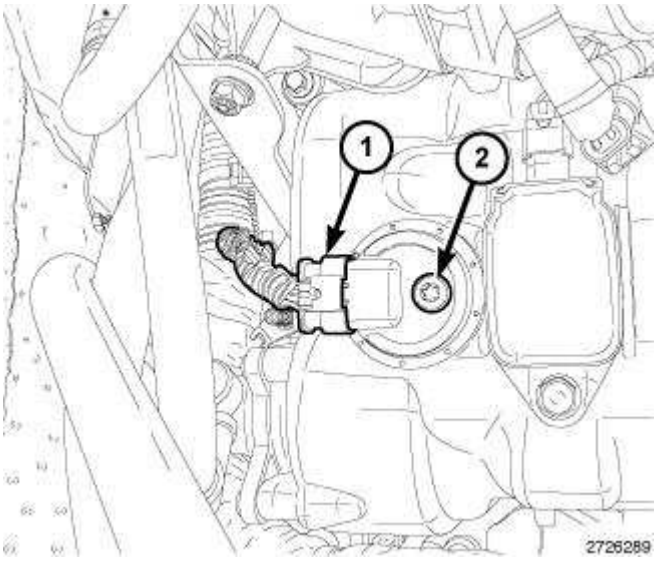

Fig. 332: CMP Sensor & Bolt
Courtesy of CHRYSLER GROUP, LLC

NOTE: The RH CMP sensor is shown in illustration, the LH CMP sensor is similar. If both RH and LH CMP sensors where removed, install them into their original locations.

15. Install the camshaft position sensor. Refer to **SENSOR, CAMSHAFT POSITION, INSTALLATION** .

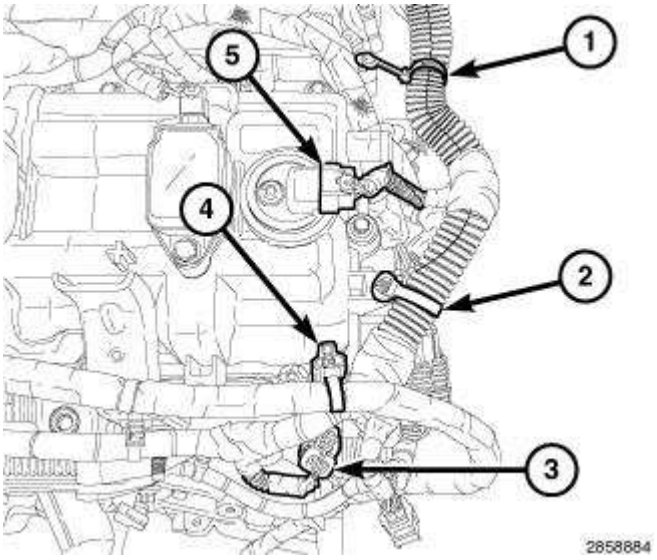

Fig. 333: ECT Sensor Connector, CMP Sensor & Main Wire Harness Retainers
Courtesy of CHRYSLER GROUP, LLC

16. Connect the electrical connector (5) to the left Camshaft Position (CMP) sensor.
17. Engage one main wire harness retainer (2) to the cylinder head cover and one main wire harness retainer (4) to the cylinder head cover mounting stud.

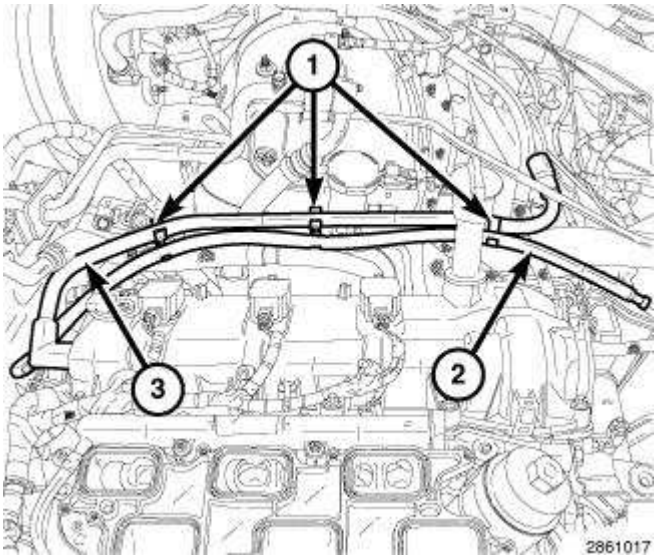

Fig. 334: Transmission Breather Hose, Make-Up Air Tube & Clips
Courtesy of CHRYSLER GROUP, LLC

18. Install the make-up air tube (3) to the left cylinder head cover and engage the clips (1) to the transmission breather hose (2).

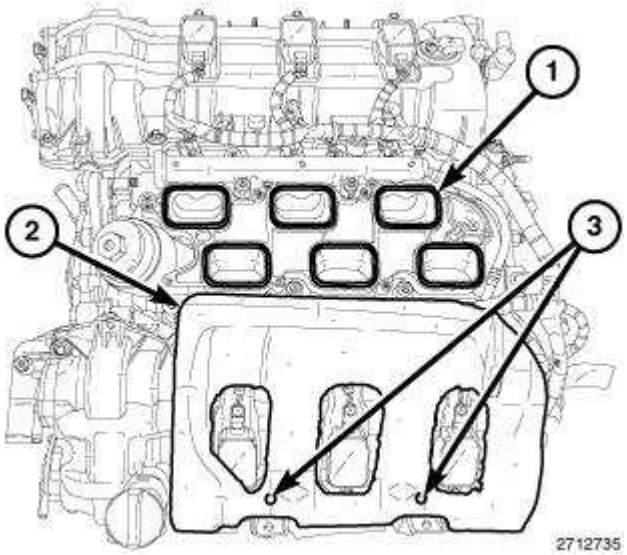

Fig. 335: Intake Ports, Insulator & Alignment Posts
Courtesy of CHRYSLER GROUP, LLC

19. Install the insulator (2) to the two alignment posts (3) on top of the LH cylinder head cover.

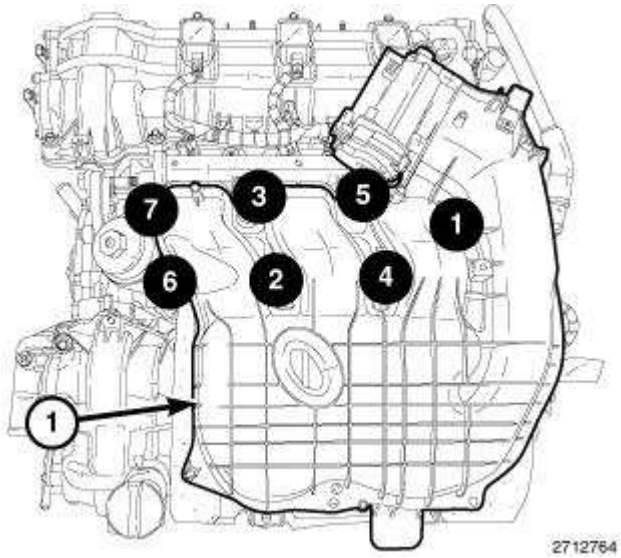

Fig. 336: Upper Intake Manifold Bolt Tightening Sequence
Courtesy of CHRYSLER GROUP, LLC

20. Install the upper intake manifold (1), support brackets and air inlet hose. Refer to **MANIFOLD, INTAKE, INSTALLATION** .
21. Connect the negative battery cable and tighten nut to 5 N.m (45 in. lbs.).

NOTE: The Cam/Crank Variation Relearn procedure must be performed using the scan tool anytime there has been a repair/replacement made to a powertrain system, for example: flywheel, valvetrain, camshaft and/or crankshaft sensors or components.

RIGHT

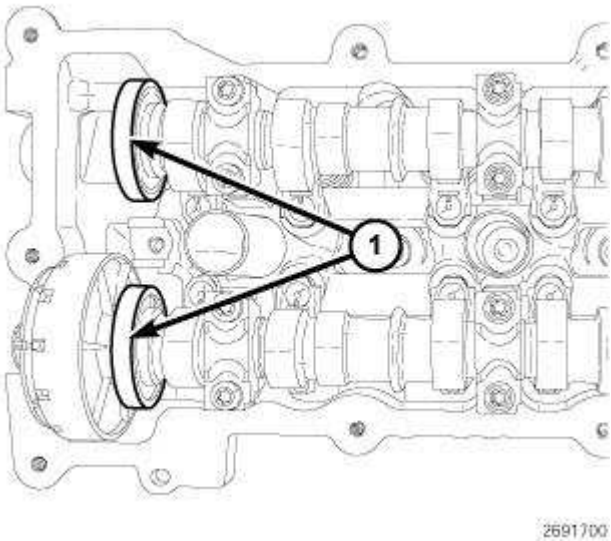

Fig. 337: Magnetic Timing Wheels
Courtesy of CHRYSLER GROUP, LLC

CAUTION: The magnetic timing wheels (1) must not come in contact with magnets (pickup tools, trays, etc.) or any other strong magnetic field. This will destroy the timing wheels ability to correctly relay camshaft position to the camshaft position sensor.

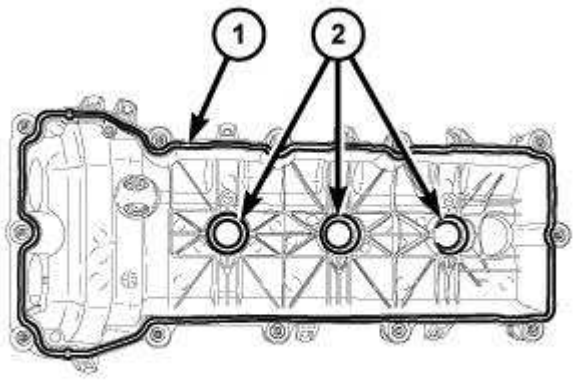

Fig. 338: Cylinder Head Cover Gasket & Spark Plug Tube Seals
Courtesy of CHRYSLER GROUP, LLC

NOTE: The LH cylinder head cover is shown in illustration, the RH cylinder head cover is similar.

1. Install the cylinder head cover gasket (1).
2. The spark plug tube seals (2) can be reused if not damaged.

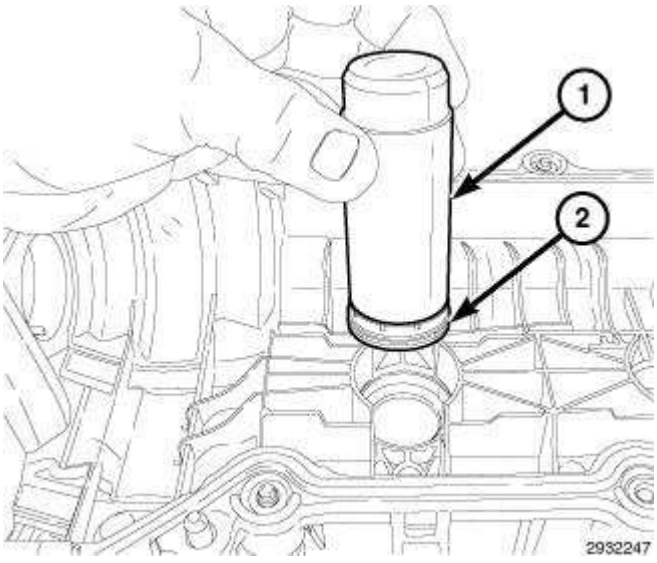

Fig. 339: Spark Plug Tube Seal & Installer

Courtesy of CHRYSLER GROUP, LLC

3. If required, install new spark plug tube seals (2) in the cylinder head cover:
   - Lubricate the spark plug tube seal inner and outer diameters with clean engine oil.
   - Place the spark plug tube seal (2) on the Cam Sensor/Spark Plug Tube Seal Installer (special tool #10256, Installer, Cam Installer, Cam Sensor/Spark Plug Tube Seal) (1).
   - Push the seal into the cylinder head cover until the base of the seal is seated.
   - Remove the tool.

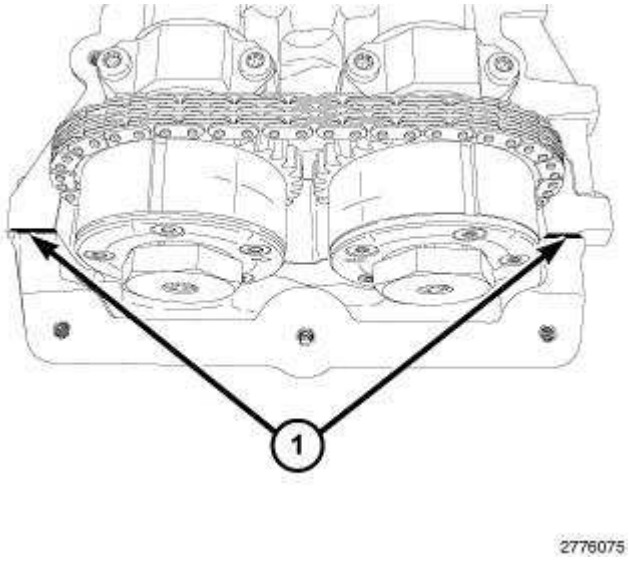

Fig. 340: RTV Sealant Locations
Courtesy of CHRYSLER GROUP, LLC

NOTE: The LH cylinder head cover T-joint is shown in illustration, the RH cylinder head cover T-joint is similar.

4. Clean the timing engine timing cover, cylinder head and cylinder head cover mating surfaces with isopropyl alcohol in preparation for sealant application.

CAUTION: Engine assembly requires the use of a unique sealant that is compatible with engine oil. Using a sealant other than Mopar® Threebond Engine RTV Sealant may result in engine fluid leakage.

CAUTION: Following the application of Mopar® Threebond Engine RTV Sealant to the gasket surfaces, the components must be assembled within 20 minutes and the attaching fasteners must be tightened to specification within 45 minutes. Prolonged exposure to the air prior to assembly may result in engine fluid leakage.

5. Apply a 2 to 3 mm wide bead of Mopar® Threebond Engine RTV Sealant (1) to the two engine timing cover to cylinder head T-joints as shown in illustration.

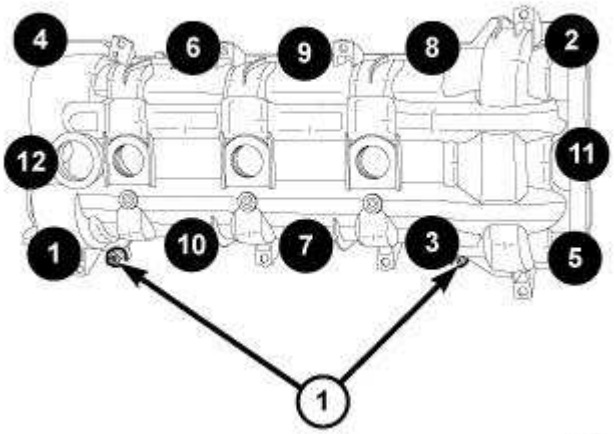

Fig. 341: Cylinder Head Cover Bolts & Double Ended Studs Tightening Sequence - Right
Courtesy of CHRYSLER GROUP, LLC

6. Align the locator pins (1) to the cylinder head and install the cylinder head cover.
7. Tighten the cylinder head cover bolts and double ended studs in the sequence shown in illustration to 12 N.m (106 in. lbs.).

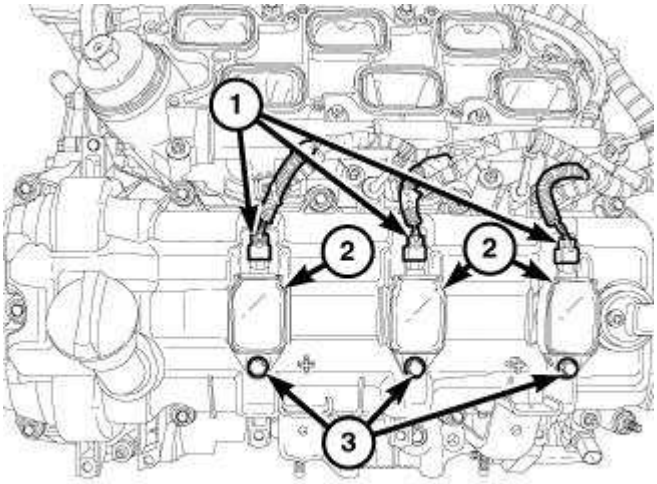

Fig. 342: Electrical Connector, Ignition Coils & Ignition Coil Retaining Bolts
Courtesy of CHRYSLER GROUP, LLC

NOTE: The LH ignition coils are shown in illustration, the RH ignition coils are similar.

8. If removed, install the spark plugs. Refer to **SPARK PLUG, INSTALLATION** .
9. Install the ignition coils (2). Refer to **COIL, IGNITION, INSTALLATION** .

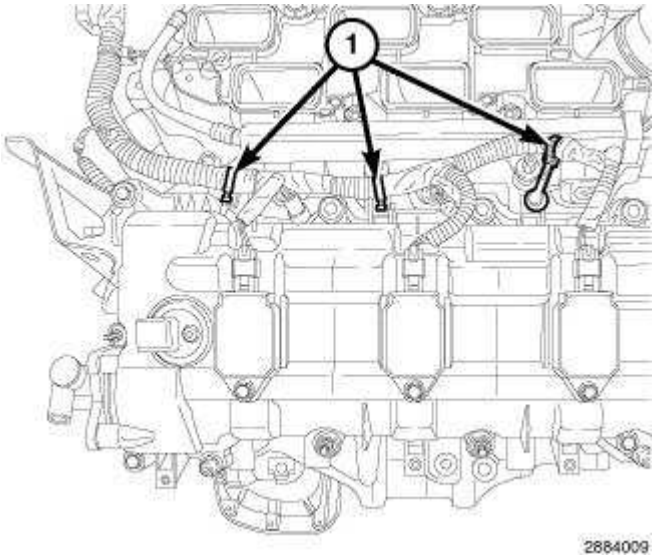

Fig. 343: Injection/Ignition Harness Retainers
Courtesy of CHRYSLER GROUP, LLC

10. Engage three injection/ignition harness retainers (1) to the right cylinder head cover.

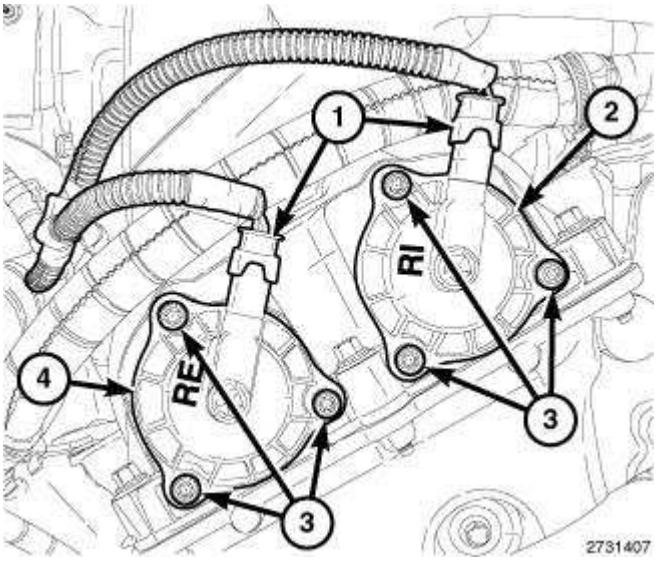

Fig. 344: Variable Valve Timing Solenoids, Connectors & Bolts
Courtesy of CHRYSLER GROUP, LLC

11. Refer to the markings made at disassembly and install the variable valve timing solenoids (2 and 4) in their original locations. Refer to **SOLENOID, VARIABLE VALVE TIMING , INSTALLATION** .

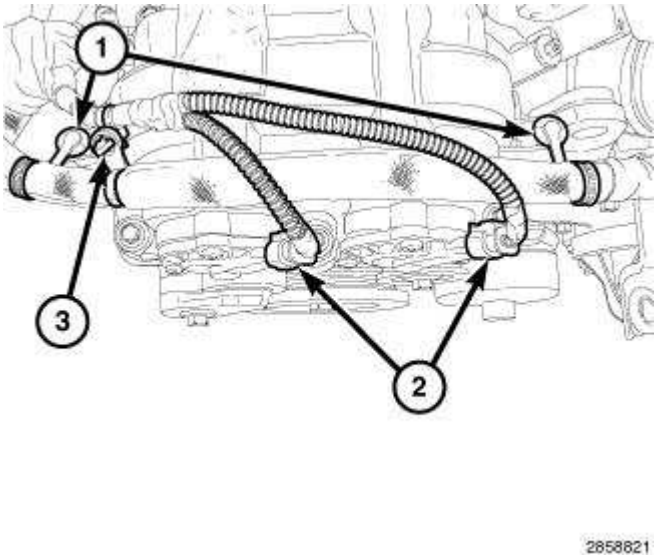

Fig. 345: Variable Valve Timing Solenoid Connectors & Harness Retainers
Courtesy of CHRYSLER GROUP, LLC

12. Connect the electrical connectors (2) to the variable valve timing solenoids on the right cylinder head.
13. Engage two starter wire harness retainers to the right cylinder head cover (1).
14. Engage the starter harness to main harness retainer (3).

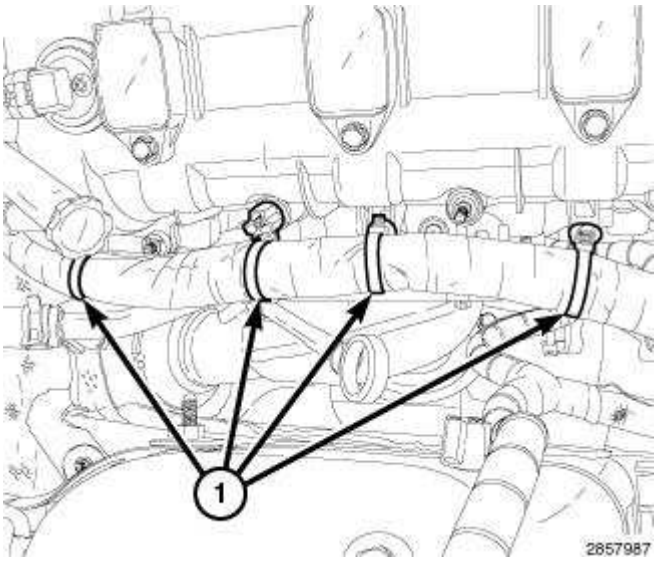

Fig. 346: Main Wire Harness Retainers At Right Cylinder Head Cover
Courtesy of CHRYSLER GROUP, LLC

15. Engage four main wire harness retainers (1) to the right cylinder head cover.

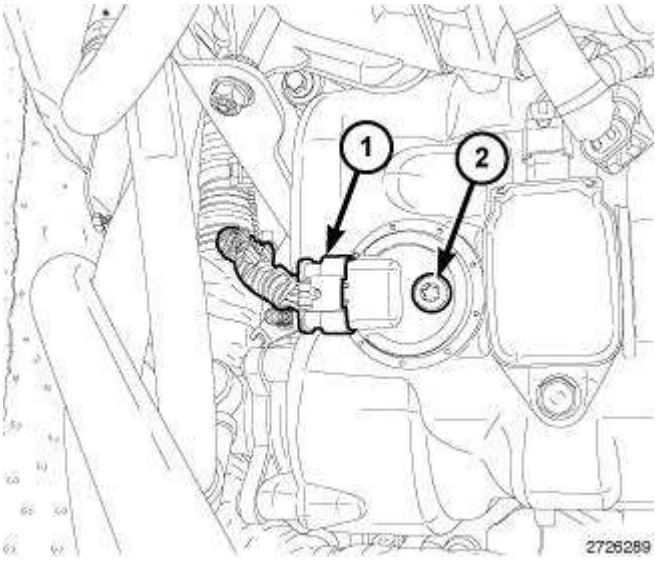

Fig. 347: CMP Sensor & Bolt
Courtesy of CHRYSLER GROUP, LLC

NOTE: If both RH and LH CMP sensors where removed, install them into their original locations.

16. Install the camshaft position sensor. Refer to **SENSOR, CAMSHAFT POSITION, INSTALLATION** .

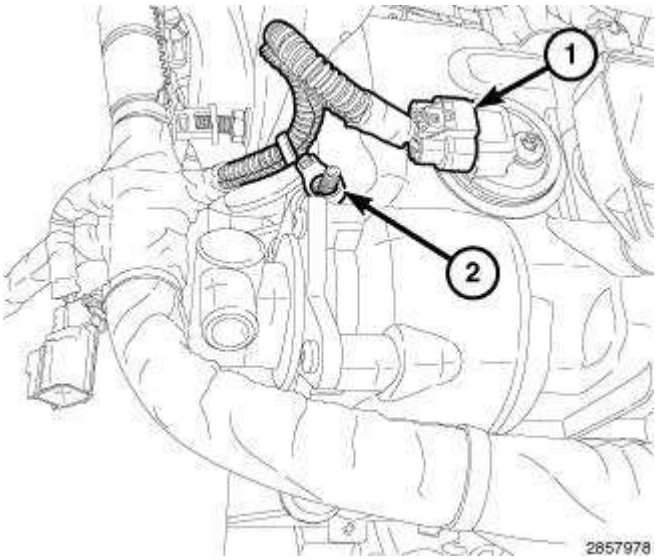

Fig. 348: Main Wire Harness Retainer & Connector
Courtesy of CHRYSLER GROUP, LLC

17. Connect the electrical connector (1) to the right Camshaft Position (CMP) sensor.
18. Engage the main wire harness retainer (2) to the right cylinder head cover mounting stud.

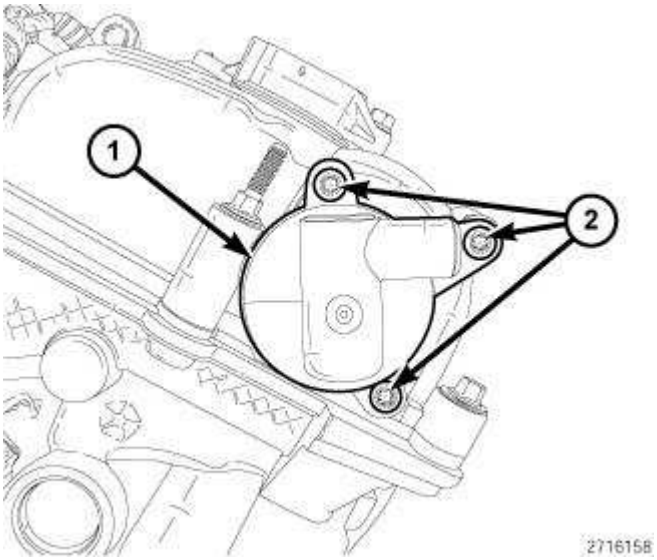

Fig. 349: PCV Valve & Screws
Courtesy of CHRYSLER GROUP, LLC

19. Install the PCV valve (1). Refer to **VALVE, POSITIVE CRANKCASE VENTILATION (PCV), REMOVAL** .

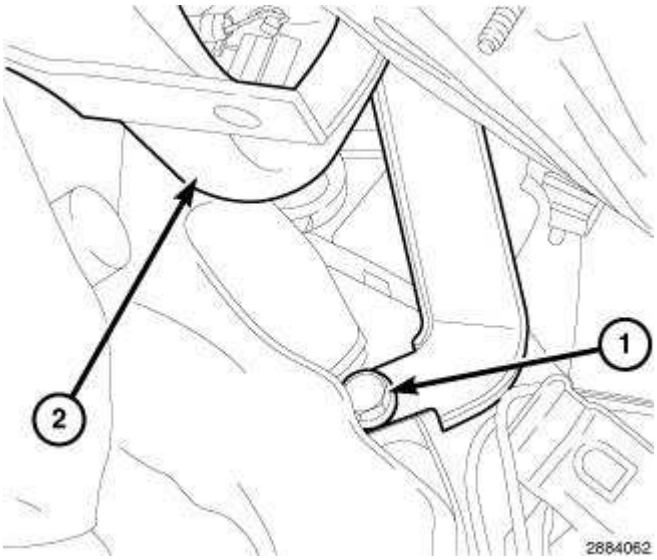

Fig. 350: Upper Transmission-To-Engine Bolt & Transmission Oil Level Indicator Tube
Courtesy of CHRYSLER GROUP, LLC

20. Raise and support the vehicle. Refer to **HOISTING, STANDARD PROCEDURE** .
21. Install the transmission oil level indicator tube (2) with the upper transmission to engine bolt (1) tightened to 55 N.m (41 ft. lbs.).

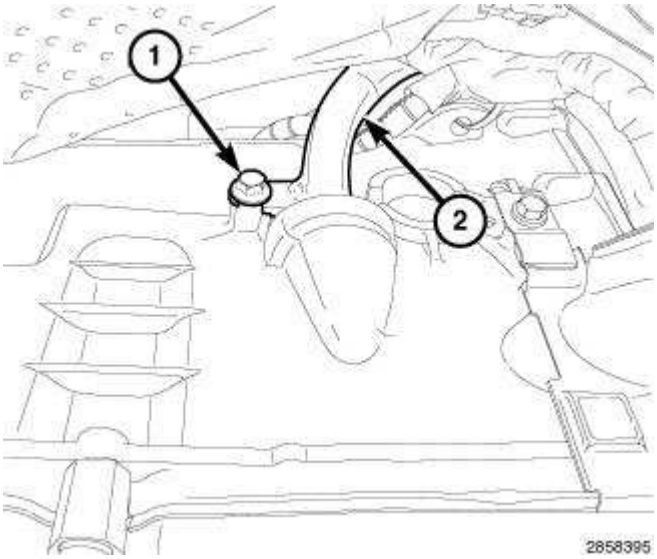

Fig. 351: Transmission Fluid Level Indicator Tube & Bolt
Courtesy of CHRYSLER GROUP, LLC

22. Install the bolt (1) securing the transmission fluid level indicator tube (2) to the transmission housing and tighten to 12 N.m (106 in. lbs.).

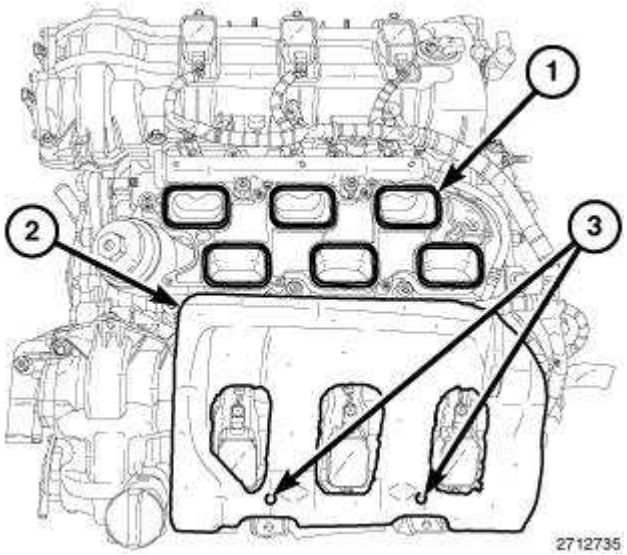

Fig. 352: Intake Ports, Insulator & Alignment Posts
Courtesy of CHRYSLER GROUP, LLC

23. Lower the vehicle.
24. If removed, install the insulator (2) to the two alignment posts (3) on top of the LH cylinder head cover.

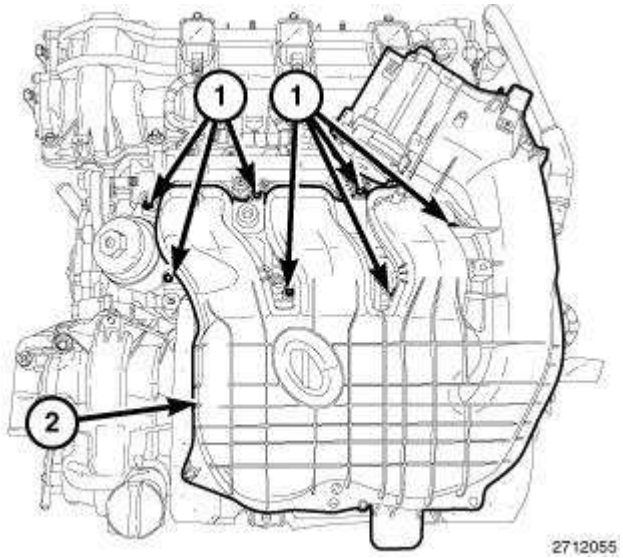

Fig. 353: Upper Intake Manifold & Bolts
Courtesy of CHRYSLER GROUP, LLC

25. Install the upper intake manifold (1), support brackets and air inlet hose. Refer to **MANIFOLD, INTAKE, INSTALLATION** .
26. Connect the negative battery cable and tighten nut to 5 N.m (45 in. lbs.).

NOTE: The Cam/Crank Variation Relearn procedure must be performed using the scan tool anytime there has been a repair/replacement made to a powertrain system, for example: flywheel, valvetrain, camshaft and/or crankshaft sensors or components.

LIFTER(S), HYDRAULIC

DIAGNOSIS AND TESTING

DIAGNOSIS AND TESTING - HYDRAULIC LIFTER(S) NOISE DIAGNOSIS

Proper noise diagnosis is essential in locating the source of an NVH complaint. Locating a lash adjuster (tappet) type noise can sometimes be difficult. As a result, an initial misdiagnosis may occur.

Refer to the following chart for possible causes and correction of a lash adjuster (tappet) type noise.

LASH ADJUSTER (TAPPET) NOISE CHART

POSSIBLE CAUSES	CORRECTION
1. Engine oil level-too high or too low. This may allow aerated oil to enter the adjusters and cause them to be spongy.	1. Check and correct the engine oil level.
2. Insufficient running time after rebuilding a cylinder head.	2. Low speed running of up to 1 hour may be required to fully evacuate trapped air from the valve train system. During this time, turn engine

	off and let set for a few minutes before restarting. Repeat this several times after engine has reached normal operating temperature.
3. Air trapped in the lash adjuster (after 1 hour of run time).	3. See below: (a) Check lash adjusters for sponginess while installed in the cylinder head. Depress the rocker arm over the adjuster. Normal adjusters should feel very firm. Very spongy adjusters can be bottomed out easily. (b) If the lash adjuster(s) are still spongy, replace the lash adjuster(s). Refer to **LIFTER(S), HYDRAULIC, REMOVAL**.
4. Low oil pressure.	4. See below: (a) Check and correct the engine oil level. (b) Check the engine oil pressure. Refer to **CHECKING ENGINE OIL PRESSURE**. (c) Check for excessive main bearing clearance and correct. Refer to **STANDARD PROCEDURE**. (d) Check for a worn oil pump. Refer to **INSPECTION**.
5. Oil passage to the cylinder head(s) plugged with debris.	5. Check cylinder head oil passages for blockage. Clean or replace as necessary.
6. Worn valve guide(s).	6. Measure valve stem-to-guide clearance. Refer to **VALVES, INTAKE AND EXHAUST, INSPECTION**.
7. Air ingested into oil due to broken or cracked oil pump pickup tube.	7. Inspect pickup tube and replace as necessary. Refer to **PICK-UP, OIL PUMP, REMOVAL**.
8. Collapsed lash adjuster due to debris ingestion.	8. Clean debris from engine and replace lash adjuster(s). Refer to **LIFTER(S), HYDRAULIC, REMOVAL**.

REMOVAL

REMOVAL

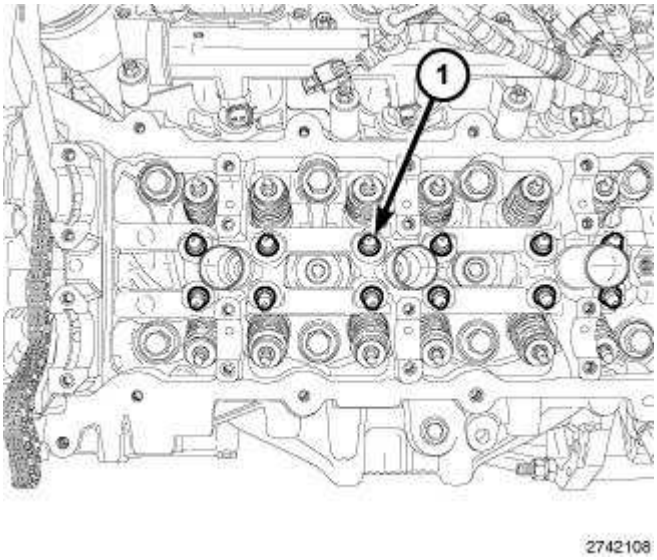

Fig. 354: Hydraulic Lifters
Courtesy of CHRYSLER GROUP, LLC

NOTE: The LH cylinder head hydraulic lifters are shown in illustration, the RH cylinder head hydraulic lifters are similar.

1. Disconnect and isolate the negative battery cable.
2. Remove the camshaft(s). Refer to **CAMSHAFT, ENGINE, REMOVAL**.

   NOTE: If the rocker arms are to be reused, identify their positions so that they can be reassembled into their original locations.

3. Remove the rocker arm(s). Refer to **ROCKER ARM, VALVE, REMOVAL** .

   NOTE: If the hydraulic lifters are to be reused, identify their positions so that they can be reassembled into their original locations.

4. Remove the hydraulic lifter(s) (1).

INSTALLATION

INSTALLATION

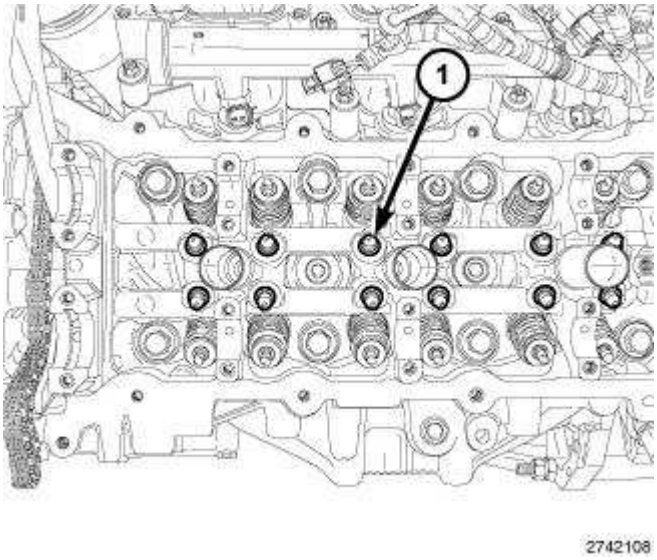

Fig. 355: Hydraulic Lifters
Courtesy of CHRYSLER GROUP, LLC

NOTE: The LH cylinder head hydraulic lifters are shown in illustration, the RH cylinder head hydraulic lifters are similar. If the hydraulic lifters are being reused, reassemble them into their original locations.

1. Verify that the hydraulic lifters are at least partially full of oil. There should be little or no plunger travel when the hydraulic lifter is depressed.
2. Install the hydraulic lifter(s) (1).

NOTE: If the rocker arms are being reused, reassemble them into their original locations.

3. Install the rocker arm(s). Refer to **ROCKER ARM, VALVE, INSTALLATION** .
4. Install the camshaft(s), phasers, cylinder head cover(s) and upper intake manifold. Refer to **CAMSHAFT, ENGINE, INSTALLATION**.
5. Connect the negative battery cable and tighten nut to 5 N.m (45 in. lbs.).

ROCKER ARM, VALVE

DESCRIPTION

DESCRIPTION

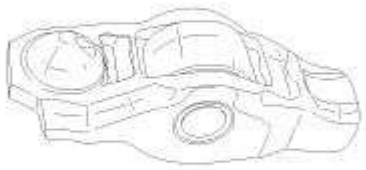

2804799

Fig. 356: Rocker Arm
Courtesy of CHRYSLER GROUP, LLC

The rocker arms are steel stampings with an integral roller bearing. The rocker arms incorporate a 0.5 mm oil hole in the lash adjuster socket for roller and camshaft lubrication.

REMOVAL

REMOVAL

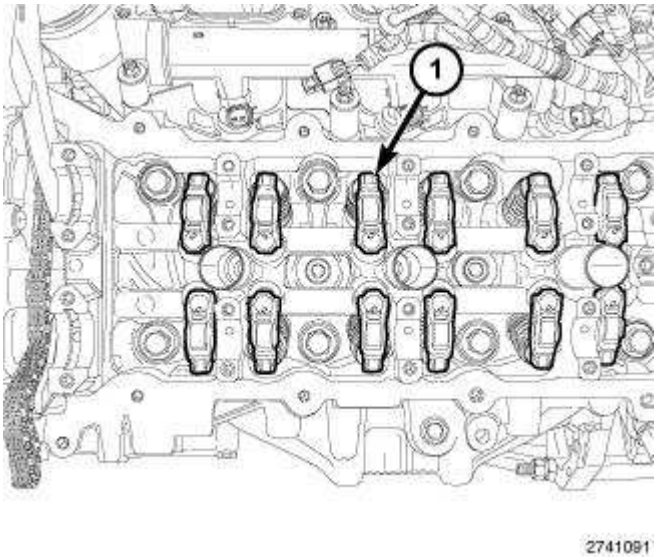

2741091

Fig. 357: Locating Rocker Arms
Courtesy of CHRYSLER GROUP, LLC

NOTE: The LH cylinder head rocker arms are shown in illustration, the RH cylinder head rocker arms are similar.

1. Disconnect and isolate the negative battery cable.
2. Remove the camshaft(s). Refer to **CAMSHAFT, ENGINE, REMOVAL**.

NOTE: If the rocker arms are to be reused, identify their positions so that they can

be reassembled into their original locations.

3. Remove the rocker arm(s) (1).

INSPECTION

INSPECTION

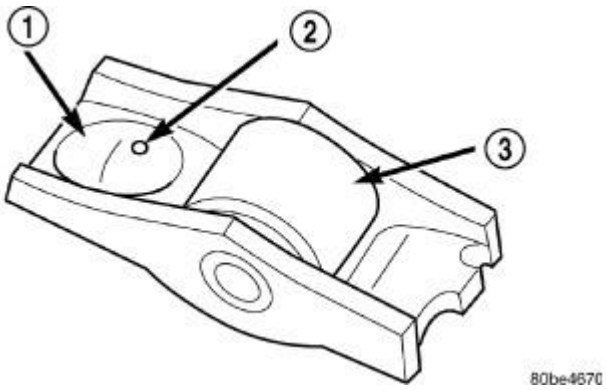

Fig. 358: Rocker Arm
Courtesy of CHRYSLER GROUP, LLC

Inspect the cam follower assembly for wear or damage. Replace as necessary.

INSTALLATION

INSTALLATION

CAUTION: Proper inspection of the rocker arms is required to ensure proper installation. Inspection from the top and also side view is critical to verify the proper seated position of each and every rocker arm. Failure to install the rocker arms correctly may cause severe engine damage.

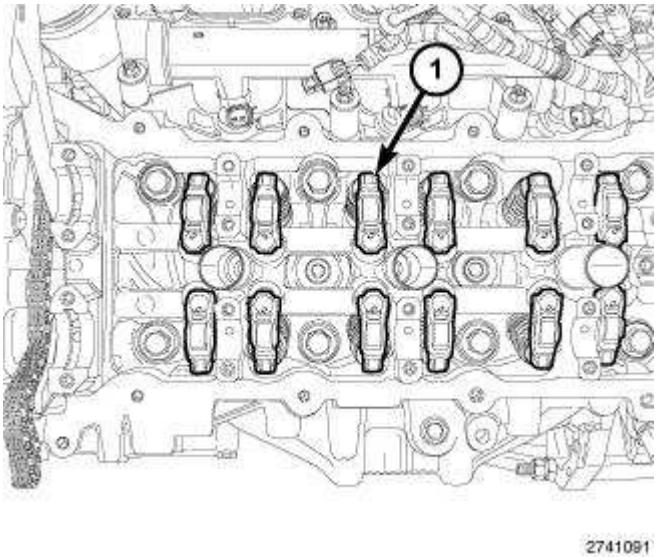

Fig. 359: Locating Rocker Arms
Courtesy of CHRYSLER GROUP, LLC

NOTE: The LH cylinder head rocker arms are shown in illustration, the RH cylinder head rocker arms are similar. If the rocker arms are being reused, reassemble them into their original locations.

1. Lubricate the rocker arms with clean engine oil before installation.

NOTE: When placing the rocker arms. The valve stem should fit securely into the rocker arm guides.

2. Position the rocker arm(s) (1) onto the lifter(s) and valve stem(s).

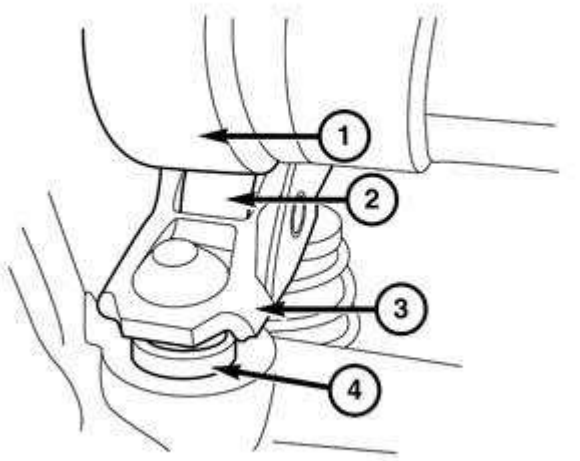

Fig. 360: Rocker Arm & Lifter
Courtesy of CHRYSLER GROUP, LLC

3. Position the camshaft(s) onto the mounts and install the camshaft caps. Hand tighten the cap retaining bolts to 2 N.m (18 in. lbs.).

NOTE: If any of the rocker arms are not installed properly. Loosen the camshaft caps and reposition the rocker arms.

4. Verify that the rocker arm (3) is positioned over the lifter (4).
5. Verify that the rocker arm roller (2) is seated to the camshaft lobe (1).

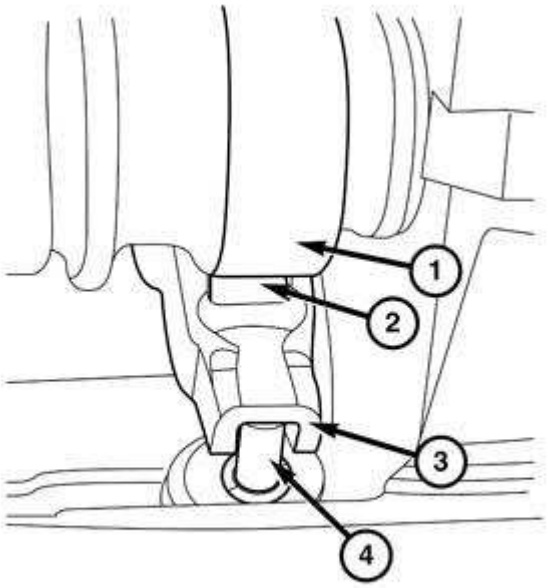

Fig. 361: Camshaft Lobe, Rocker Arm Roller, Rocker Arm Guide & Valve Stem
Courtesy of CHRYSLER GROUP, LLC

6. Use a mirror to verify the valve stem (4) is centered between the rocker arm guides (3).
7. Verify the camshaft lobe (1) is centered over the rocker arm roller (2).
8. Tighten the camshaft caps. Refer to **CAMSHAFT, ENGINE, INSTALLATION**.

SEAL(S), VALVE GUIDE

DESCRIPTION

DESCRIPTION

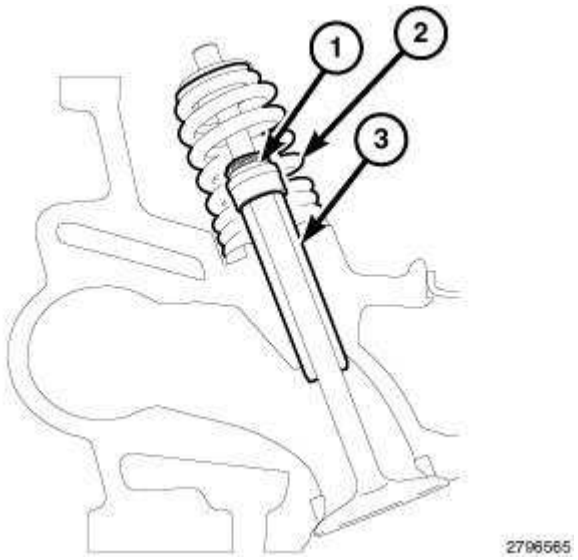

Fig. 362: Valve Stem Oil Seal, Valve Spring & Valve Guide
Courtesy of CHRYSLER GROUP, LLC

The valve stem oil seals (1) are made of elastomer over-molded steel in a non-integrated type guide mounted configuration. The seal is not held in place by the valve spring (2). The valve stem seals are not reusable if removed from the valve guides (3), they must be replaced. Always coat the valve seals with clean engine oil before installing the valves.

REMOVAL

REMOVAL

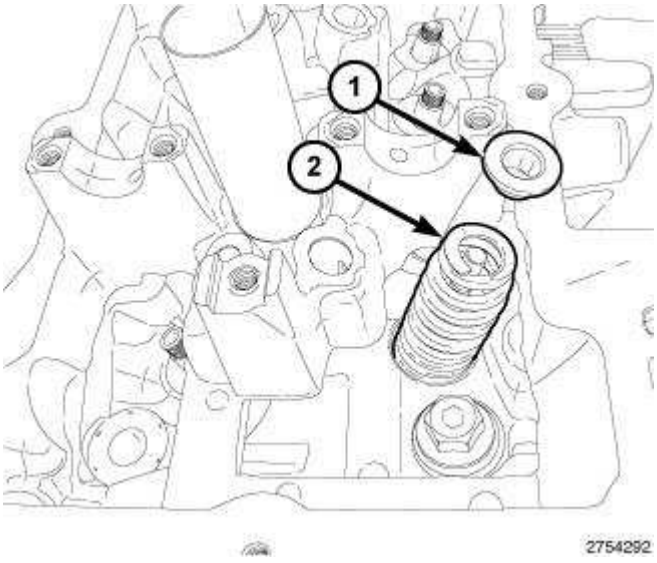

Fig. 363: Valve Spring & Valve Spring Retainer
Courtesy of CHRYSLER GROUP, LLC

NOTE: If the springs are to be reused, identify their positions so that they can be

reassembled into their original locations. Number 5 cylinder exhaust valve spring shown in illustration, all other valve springs similar.

1. Remove the valve spring(s) (2). Refer to **SPRING(S), VALVE, REMOVAL** .

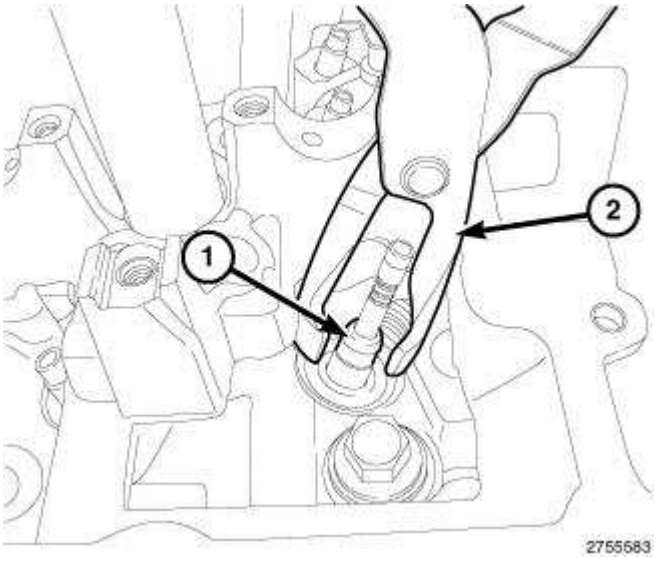

Fig. 364: Valve Guide Seal & Valve Seal Tool
Courtesy of CHRYSLER GROUP, LLC

NOTE: Number 5 cylinder exhaust valve guide seal shown in illustration, all other valve guide seals similar.

2. Remove the valve guide seal (1) using a valve seal tool (2). Discard the removed seal.

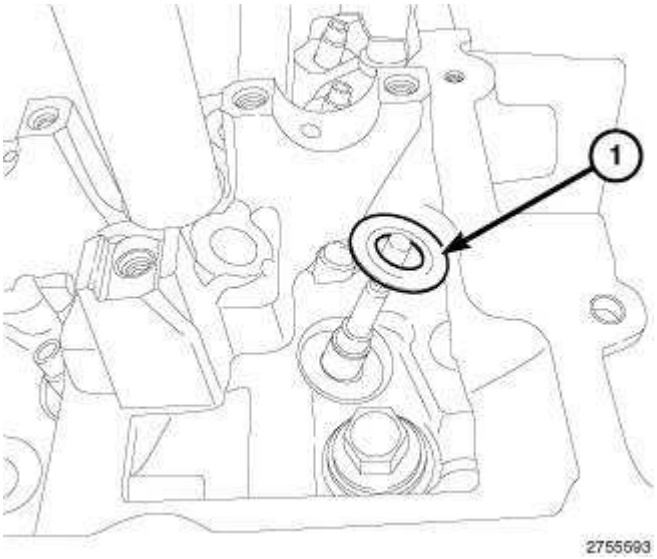

Fig. 365: Valve Spring Seat
Courtesy of CHRYSLER GROUP, LLC

NOTE: **Number 5 cylinder exhaust valve spring seat shown in illustration, all other valve spring seats similar.**

3. If required, remove the valve spring seat (1).
4. If required, remove the valve(s). Refer to **VALVES, INTAKE AND EXHAUST, REMOVAL** .

INSTALLATION

INSTALLATION

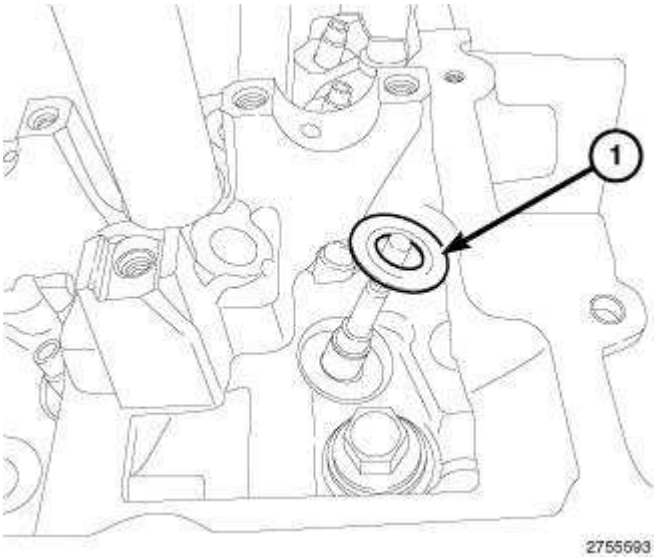

Fig. 366: Valve Spring Seat
Courtesy of CHRYSLER GROUP, LLC

1. If removed, install the valve(s). Refer to **VALVES, INTAKE AND EXHAUST, INSTALLATION** .

NOTE: **Reassemble the valves into their original locations. If the valves or valve seats have been refinished, verify that the valve stem tip height is within specification. Refer to SPECIFICATIONS. Number 5 cylinder exhaust valve shown in illustration, all other valves similar.**

2. If removed, install the spring seat (1) over the valve guide.

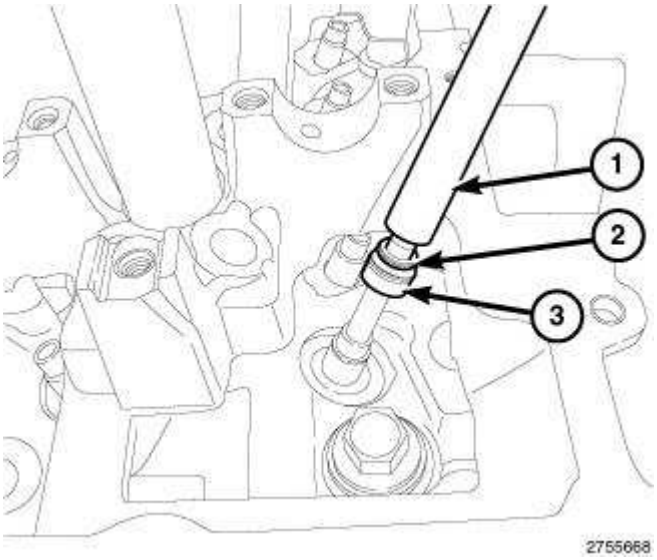

Fig. 367: Installing Valve Guide Seal
Courtesy of CHRYSLER GROUP, LLC

3. Apply engine oil to the lip of the valve guide seal (3). Install the valve guide seal (3) over the valve stem. Using an appropriate driver (1), push the seal firmly and squarely over the valve guide. **Do Not Force** the seal against the top of guide.

NOTE: **Ensure that the garter spring (2) is intact around the top of the valve guide seal (3). Number 5 cylinder exhaust valve guide seal shown in illustration, all other valves similar.**

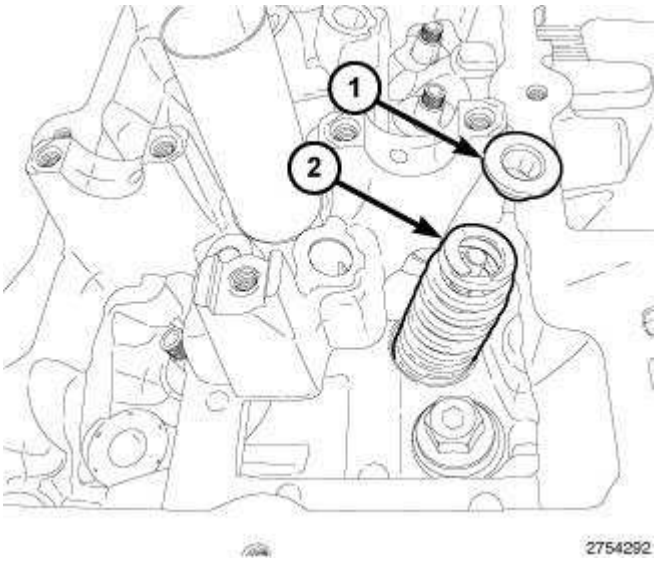

Fig. 368: Valve Spring & Valve Spring Retainer
Courtesy of CHRYSLER GROUP, LLC

NOTE: **If the valve springs are being reused, reassemble them into their original locations. Number 5 cylinder exhaust valve spring shown in illustration, all**

other valves similar.

4. Install the valve spring(s) (2). Refer to **SPRING(S), VALVE, INSTALLATION** .

SPRING(S), VALVE

DESCRIPTION

DESCRIPTION

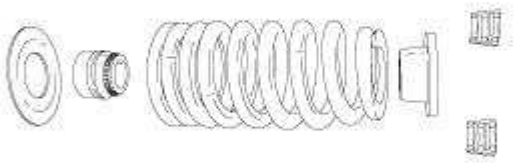

Fig. 369: Valve Spring Components
Courtesy of CHRYSLER GROUP, LLC

The valve springs are a beehive design and made from high strength chrome silicon steel. The springs are common for intake and exhaust applications. Valve guide seals are rubber overmolded on a steel support cylinder with a garter spring at the seal lip. The seals are not integrated with the valve spring seat. The valve spring seat is a flat steel washer. The steel valve spring retainers are designed for use with beehive springs and the valve spring retainer locks are a three bead Butt type design.

REMOVAL

IN VEHICLE

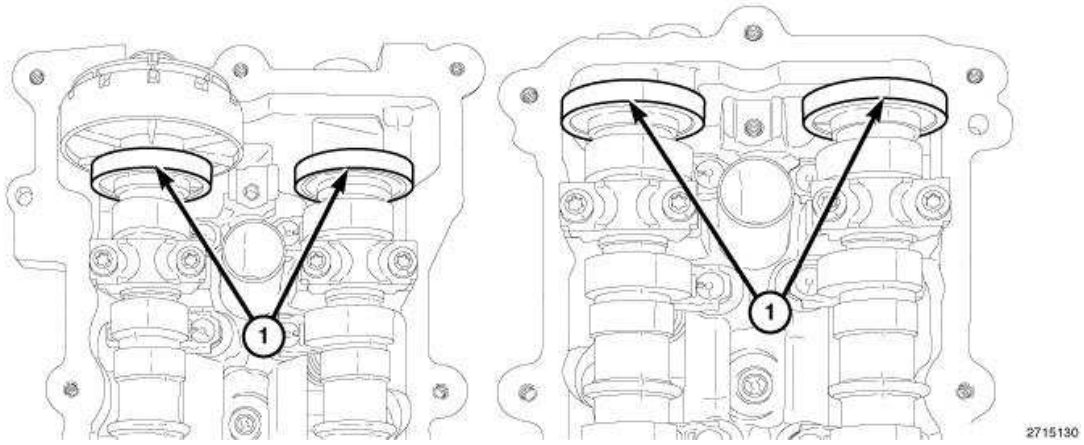

Fig. 370: Magnetic Timing Wheels
Courtesy of CHRYSLER GROUP, LLC

CAUTION: The magnetic timing wheels (1) must not come in contact with magnets (pickup tools, trays, etc.) or any other strong magnetic field. This will destroy the timing wheels ability to correctly relay camshaft position to the camshaft position sensor.

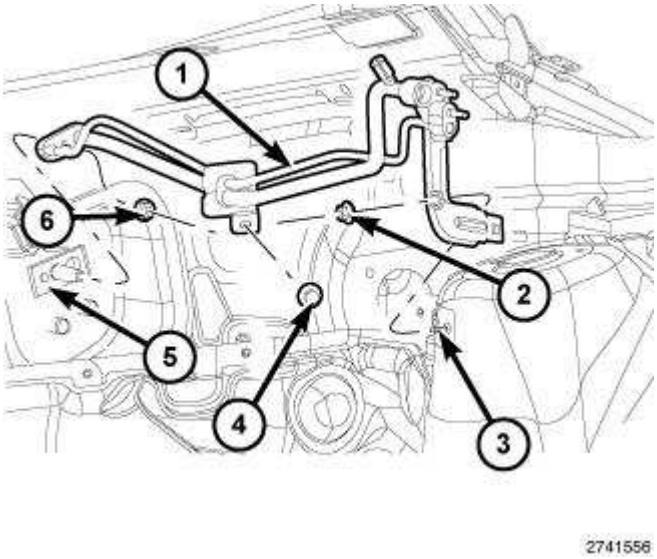

Fig. 371: A/C Suction & Liquid Line Assembly
Courtesy of CHRYSLER GROUP, LLC

1. Disconnect and isolate the negative battery cable.
2. If removing the LH exhaust valve springs, recover the refrigerant from the refrigerant system and remove the A/C suction and liquid line assembly (1). Refer to **LINE, A/C SUCTION, REMOVAL** .

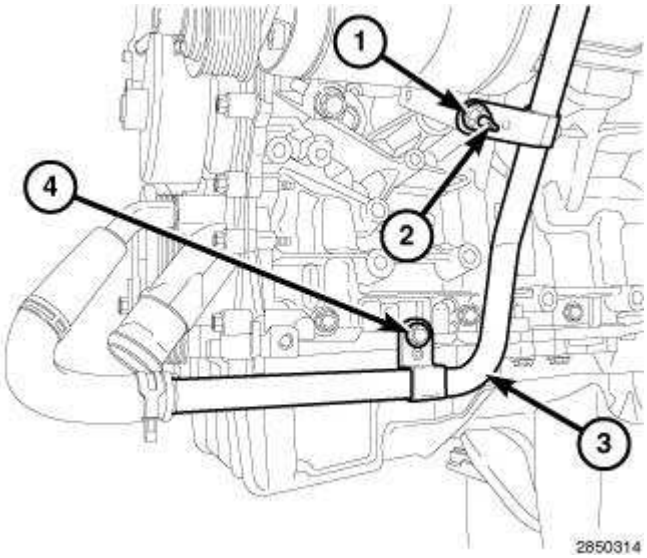

Fig. 372: Heater Core Return Tube, Nut & Bolt
Courtesy of CHRYSLER GROUP, LLC

NOTE: Power steering pump not shown in illustration.

3. If removing the LH exhaust valve springs, remove the nut (1) and bolt (4) from the support brackets of the heater core return tube (3) and reposition the tube.

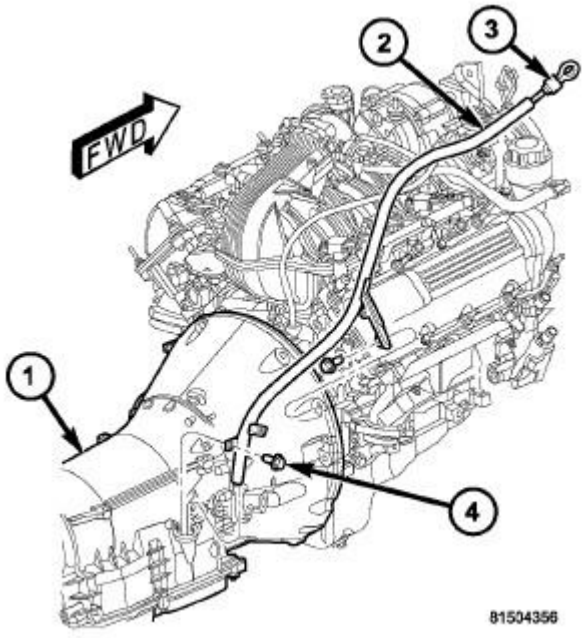

Fig. 373: Transmission Fluid Level Indicator Tube Assembly
Courtesy of CHRYSLER GROUP, LLC

4. If removing the RH valve springs, remove the transmission fluid level indicator tube (2). Refer to

SEAL, FILL TUBE, REMOVAL .

5. Remove both cylinder head covers. Refer to **COVER(S), CYLINDER HEAD, REMOVAL** .

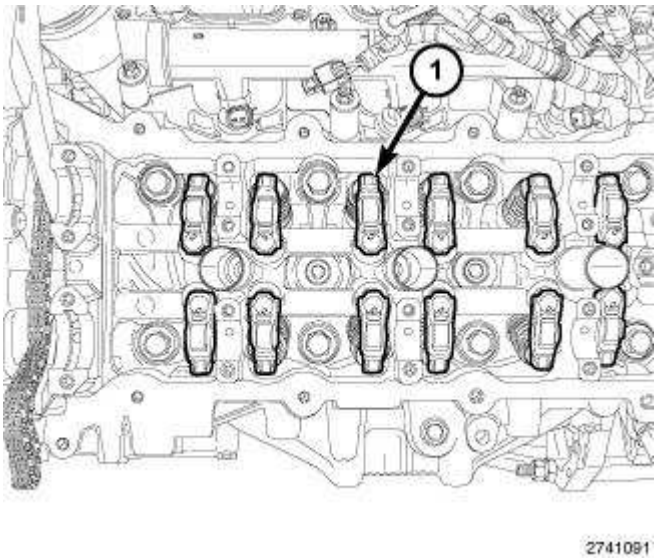

Fig. 374: Locating Rocker Arms
Courtesy of CHRYSLER GROUP, LLC

NOTE: The LH cylinder head rocker arms are shown in illustration, the RH cylinder head rocker arms are similar.

NOTE: Only remove the camshafts from one head at a time. The opposite head must remain assembled in order to lock the crankshaft against rotation.

6. Remove the camshaft(s). Refer to **CAMSHAFT, ENGINE, REMOVAL**.

NOTE: If the rocker arms are to be reused, identify their positions so that they can be reassembled into their original locations.

7. Remove the rocker arm(s) (1). Refer to **ROCKER ARM, VALVE, REMOVAL** .

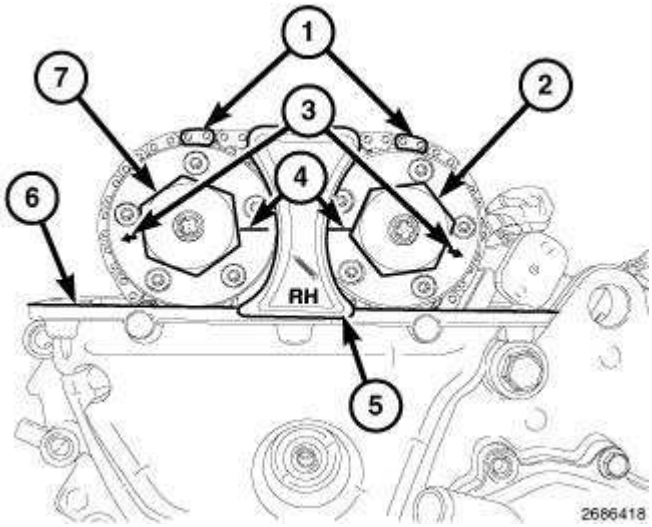

Fig. 375: Phaser Timing Marks, Oil Control Valves & RH Camshaft Phaser Lock
Courtesy of CHRYSLER GROUP, LLC

NOTE: RH camshaft phaser lock shown in illustration, LH camshaft phaser lock similar.

CAUTION: Air pressure applied to the cylinder holds the valves in place. This air pressure also has a tendency to force the piston down and rotate the crankshaft. Do not allow the crankshaft to rotate. Crankshaft rotation may damage the timing chain or front timing cover and affect camshaft timing.

8. If removing the LH camshafts, install the RH Camshaft Phaser Lock (special tool #10202, Locks, Camshaft/Phaser)-1 (5) to lock the crankshaft against rotation. If removing the RH camshafts, install the LH Camshaft Phaser Lock (special tool #10202, Locks, Camshaft/Phaser)-2 to lock the crankshaft against rotation.

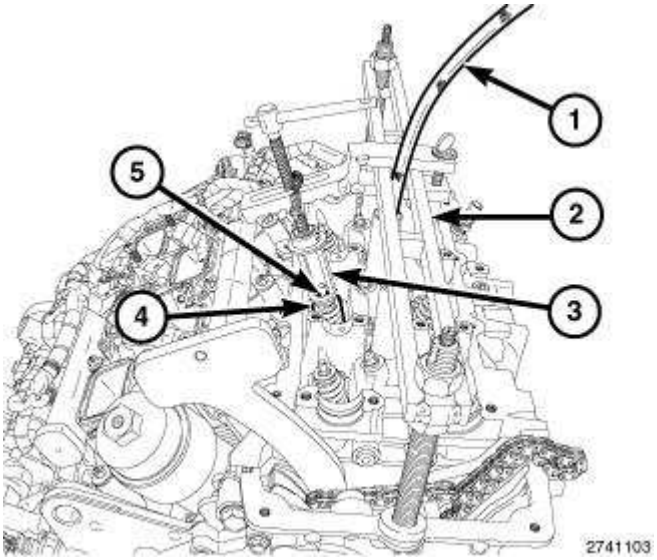

Fig. 376: Shop Air Supply & Valve Spring Compressor
Courtesy of CHRYSLER GROUP, LLC

NOTE: Number 4 cylinder intake valve spring compression shown in illustration, all other valves similar.

9. Remove the spark plug. Refer to **SPARK PLUG, REMOVAL** .
10. Install Valve Spring Compressor (special tool #MD998772A, Compressor, Valve Spring) (2) onto the cylinder head.
11. Install a spark plug adapter attached to a regulated shop air supply (1). Pressurize the cylinder being serviced to 620.5 - 689 kPa (90 - 100 psi) to hold the valves in place.

CAUTION: Air pressure must be maintained as long as the valve springs are removed to prevent the valves from dropping into the cylinders.

12. Using Valve Spring Compressor Adapter (special tool #10224, Adapter, Valve Spring) (3), compress valve spring (4) and remove valve retaining locks (5).

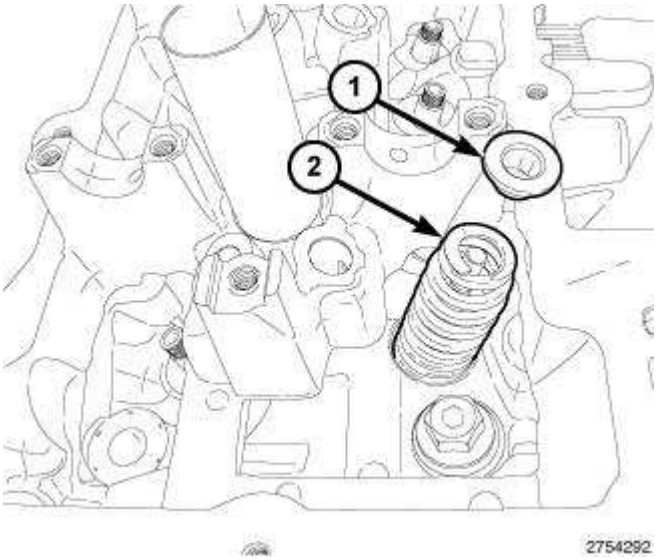

Fig. 377: Valve Spring & Valve Spring Retainer
Courtesy of CHRYSLER GROUP, LLC

NOTE: If the springs are to be reused, identify their positions so that they can be reassembled into their original locations. Number 5 cylinder exhaust valve spring shown in illustration, all other valve springs similar.

13. Release the valve spring compression and remove the valve spring retainer (1) and valve spring (2).
14. If required, remove the valve guide seal and spring seat. Refer to **SEAL(S), VALVE GUIDE, REMOVAL**.

OFF VEHICLE

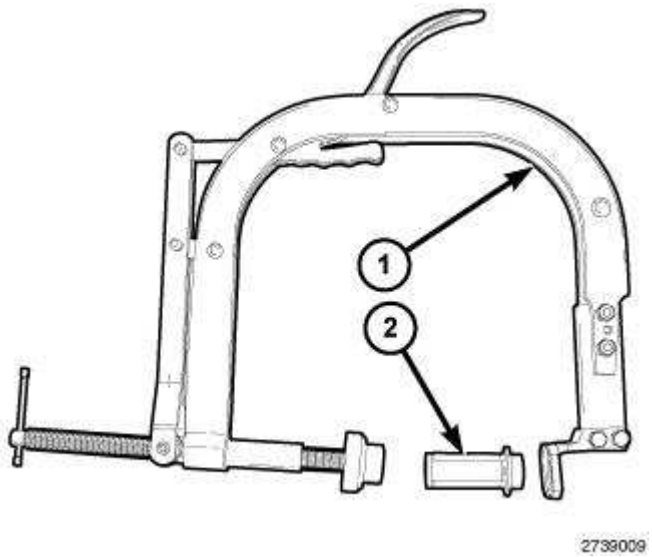

Fig. 378: Valve Spring Compressor Components
Courtesy of CHRYSLER GROUP, LLC

1. Remove the cylinder head(s). Refer to **CYLINDER HEAD , REMOVAL** .
2. Position the Valve Spring Compressor Adapter (special tool #10224, Adapter, Valve Spring) (2) in the Valve Spring Compressor (special tool #C-3422-D, Compressor, Valve Spring) (1).

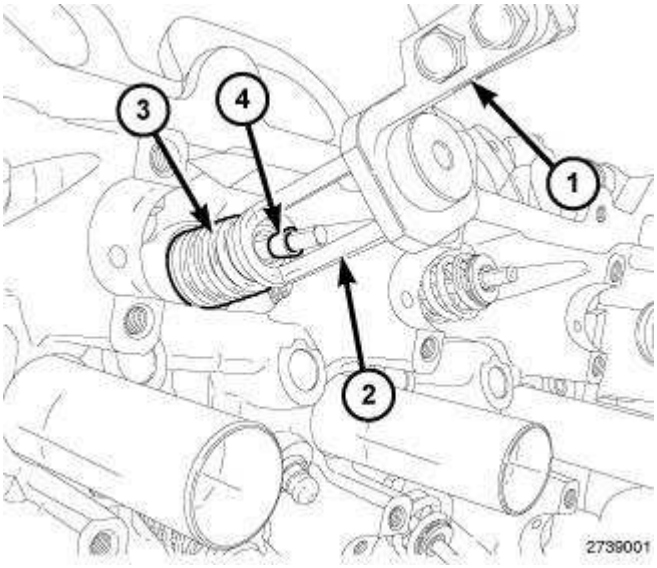

Fig. 379: Compressing Valve Spring & Locating Valve Retaining Locks
Courtesy of CHRYSLER GROUP, LLC

NOTE: Number 3 cylinder intake valve spring compression shown in illustration, all other valves similar.

3. Compress the valve spring (3) and remove the valve retaining locks (4).

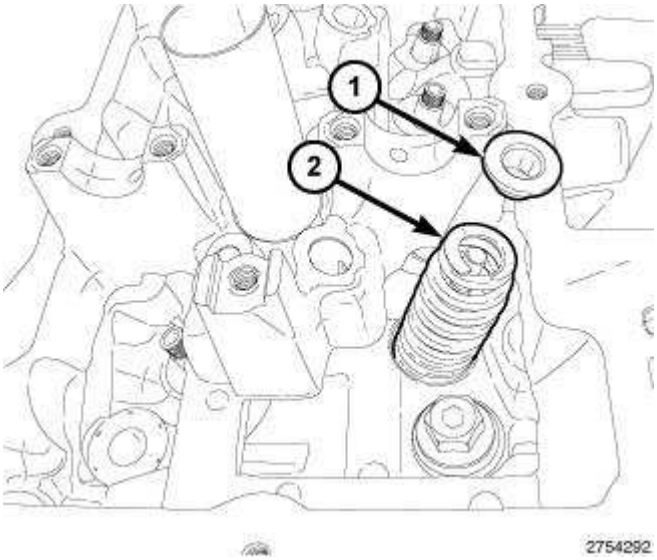

Fig. 380: Valve Spring & Valve Spring Retainer
Courtesy of CHRYSLER GROUP, LLC

NOTE: **If the springs are to be reused, identify their positions so that they can be reassembled into their original locations. Number 5 cylinder exhaust valve spring shown in illustration, all other valves similar.**

4. Release the valve spring compression and remove the valve spring retainer (1) and valve spring (2).
5. If required, remove the valve(s). Refer to **VALVES, INTAKE AND EXHAUST, REMOVAL**
6. If required, remove the valve guide seal and spring seat. Refer to **SEAL(S), VALVE GUIDE, REMOVAL**.

INSPECTION

INSPECTION

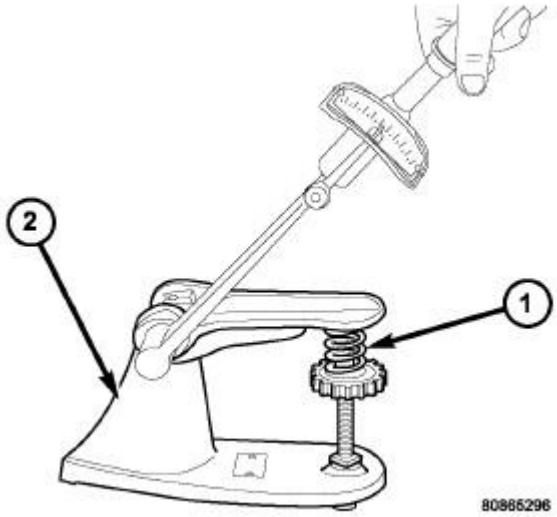

Fig. 381: Testing Valve Spring
Courtesy of CHRYSLER GROUP, LLC

When valves have been removed for inspection, reconditioning or replacement, valve springs should be checked against specifications for free-length, spring force and spring installed height. Refer to **SPECIFICATIONS**.

Spring force can be measured with a test fixture (2). Follow the tool manufactures instructions. Replace any springs that do not meet specifications.

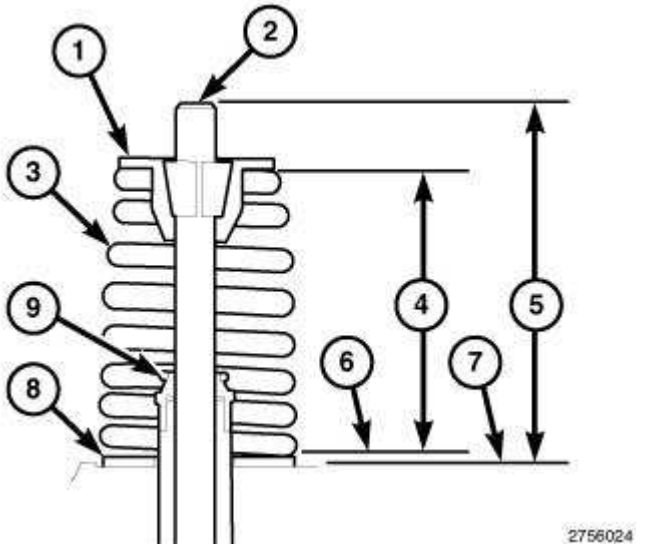

Fig. 382: Checking Valve Spring Installed Height
Courtesy of CHRYSLER GROUP, LLC

Installed height of the valve spring must be checked with the valve assembled into the cylinder head. Refer to **SPRING(S), VALVE, INSTALLATION** .

If the valves or valve seats have been refinished and the installed valve spring height (4) is greater than 40.0 mm (1.575 in.), install an additional spring seat (8) in the head counterbore under the original valve spring seat (8) to bring the spring height back within specification. Make sure the measurement is taken from the top of spring seat (6) to the bottom surface of spring retainer (1).

INSTALLATION

IN VEHICLE

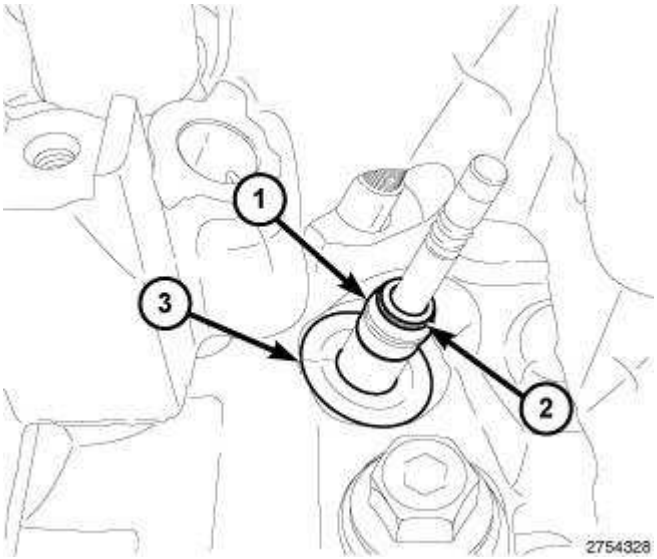

Fig. 383: Spring Seat, Valve Guide Seal & Garter Spring
Courtesy of CHRYSLER GROUP, LLC

1. If removed, install the spring seat (3) and valve guide seal (1) over the valve guide. Refer to **SEAL(S), VALVE GUIDE, INSTALLATION**.

NOTE: **Ensure that the garter spring (2) is intact around the top of the valve guide seal (1). Number 5 cylinder exhaust valve guide seal shown in illustration, all other valves similar.**

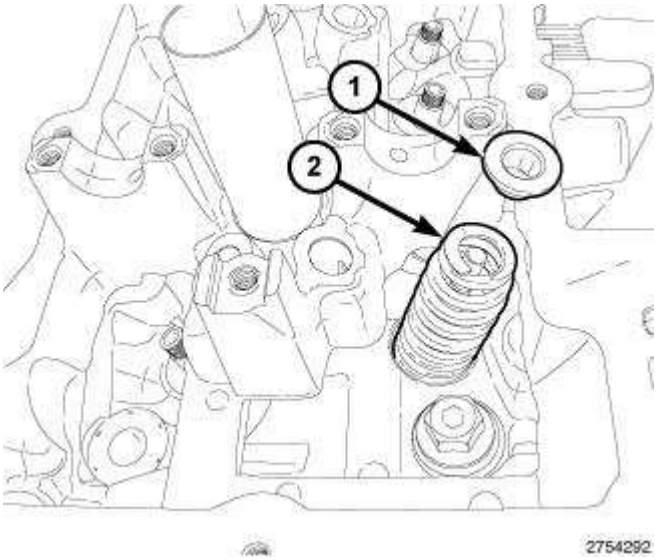

Fig. 384: Valve Spring & Valve Spring Retainer
Courtesy of CHRYSLER GROUP, LLC

NOTE: **If the valve springs are being reused, reassemble them into their original locations. Number 5 cylinder exhaust valve spring shown in illustration, all other valves similar.**

2. Install the valve spring (2) and valve spring retainer (1).

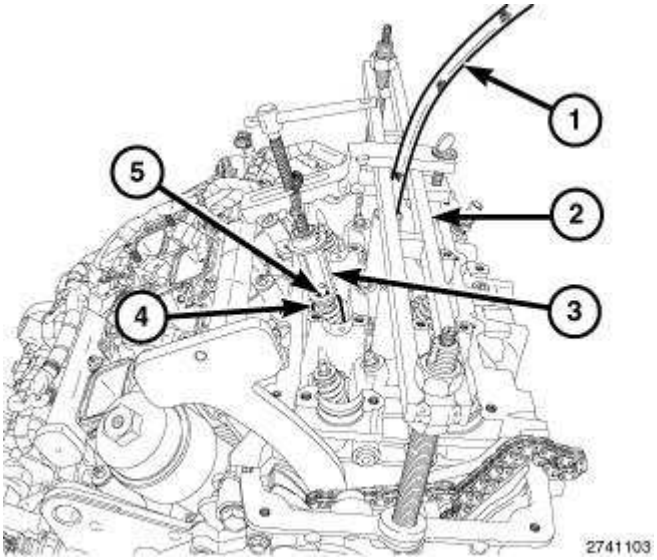

Fig. 385: Shop Air Supply & Valve Spring Compressor
Courtesy of CHRYSLER GROUP, LLC

NOTE: Number 4 cylinder intake valve spring compression shown in illustration, all other valves similar.

3. Using Valve Spring Compressor Adapter (special tool #10224, Adapter, Valve Spring) (3) with Valve Spring Compressor (special tool #MD998772A, Compressor, Valve Spring) (2), compress the valve spring (4) **only enough** to install the valve retaining locks (5).
4. Relieve the air pressure and remove the spark plug adapter.
5. Install the spark plug and tighten to 17.5 N.m (13 ft. lbs.). Refer to **SPARK PLUG, INSTALLATION** .

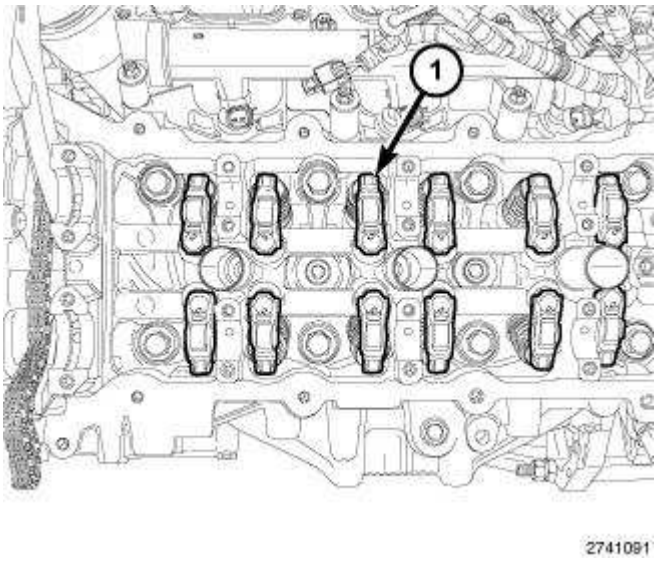

Fig. 386: Locating Rocker Arms
Courtesy of CHRYSLER GROUP, LLC

NOTE: The LH cylinder head rocker arms are shown in illustration, the RH cylinder head rocker arms are similar. If the rocker arms are being reused, reassemble them into their original locations.

6. Install the rocker arm(s) (1). Refer to **ROCKER ARM, VALVE, INSTALLATION** .
7. Install the camshaft(s), phasers, cylinder head cover(s) and upper intake manifold. Refer to **CAMSHAFT, ENGINE, INSTALLATION**.

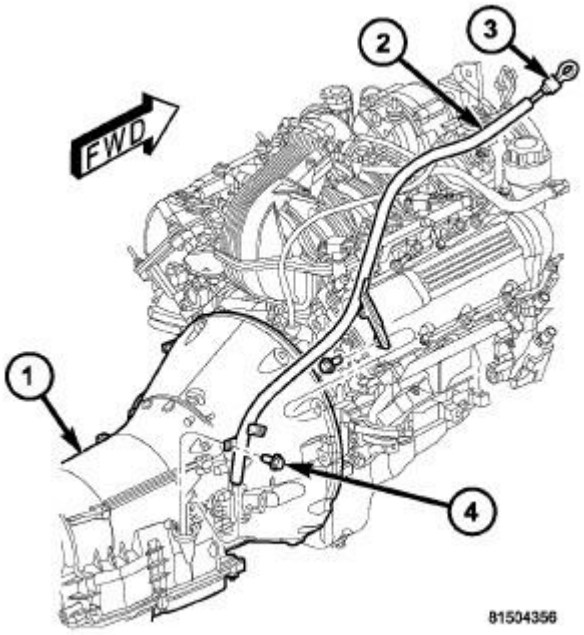

Fig. 387: Transmission Fluid Level Indicator Tube Assembly
Courtesy of CHRYSLER GROUP, LLC

8. If removed, install the transmission fluid level indicator tube (2). Refer to **SEAL, FILL TUBE, INSTALLATION** .

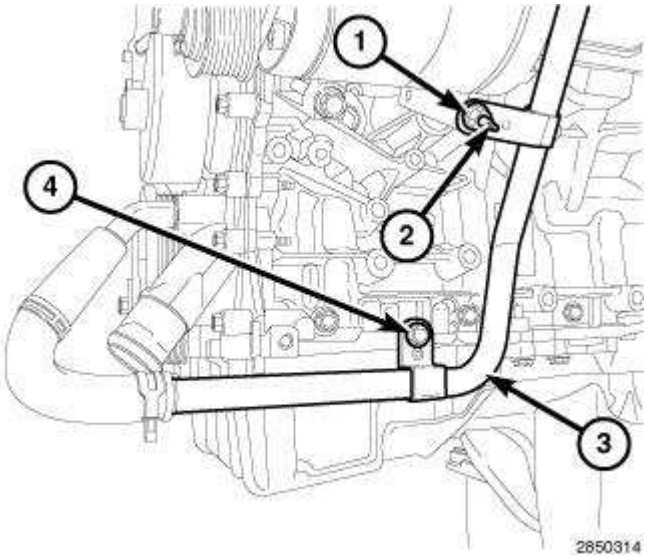

Fig. 388: Heater Core Return Tube, Nut & Bolt
Courtesy of CHRYSLER GROUP, LLC

NOTE: Power steering pump not shown in illustration.

9. If removed, install the nut (1) and bolt (4) to the support brackets of the heater core return tube

(3). Tighten the fasteners to 12 N.m (106 in. lbs.).

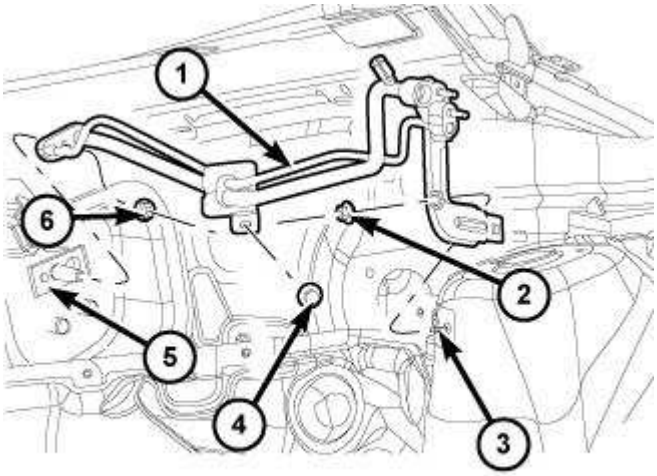

Fig. 389: A/C Suction & Liquid Line Assembly
Courtesy of CHRYSLER GROUP, LLC

10. If removed, install the A/C suction and liquid line assembly (1). Refer to **LINE, A/C SUCTION, INSTALLATION** .
11. Connect the negative battery cable and tighten nut to 5 N.m (45 in. lbs.).

OFF VEHICLE

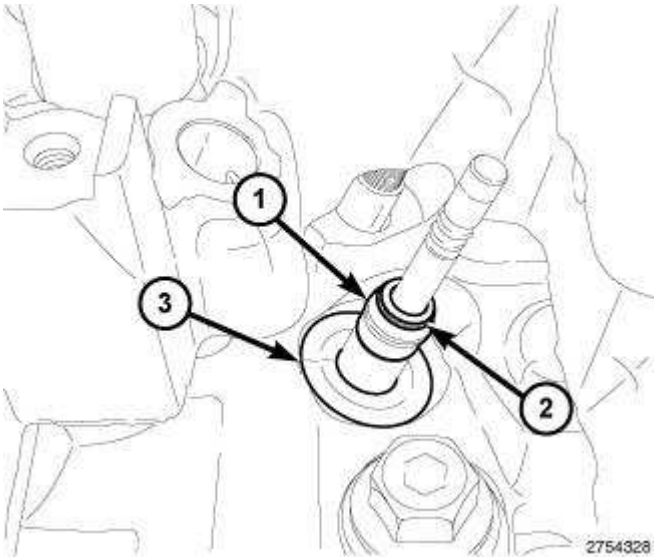

Fig. 390: Spring Seat, Valve Guide Seal & Garter Spring
Courtesy of CHRYSLER GROUP, LLC

1. If removed, install the valve(s). Refer to **VALVES, INTAKE AND EXHAUST, INSTALLATION** .

NOTE: **Reassemble the valves into their original locations. If the valves or valve seats have been refinished, verify that the valve stem tip height is within specification. Refer to SPECIFICATIONS. Number 5 cylinder exhaust valve shown in illustration, all other valves similar.**

2. If removed, install the spring seat (3) and valve guide seal (1) over the valve guide. Refer to **SEAL(S), VALVE GUIDE, INSTALLATION**.

NOTE: **Ensure that the garter spring (2) is intact around the top of the valve guide seal (1). Number 5 cylinder exhaust valve guide seal shown in illustration, all other valves similar.**

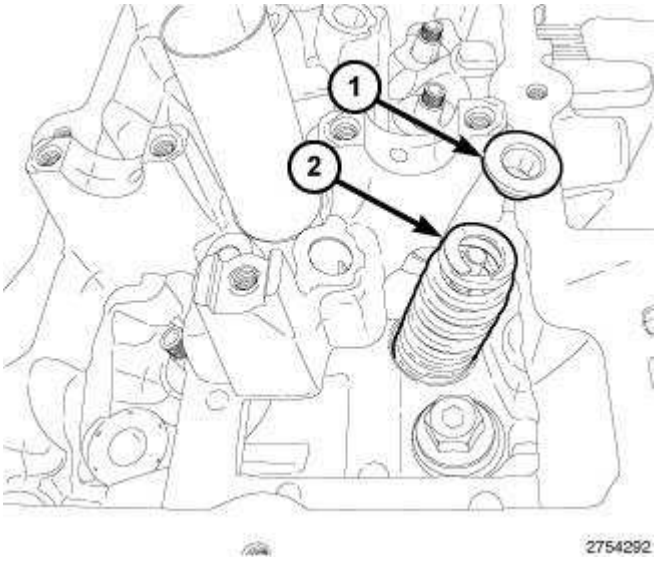

Fig. 391: Valve Spring & Valve Spring Retainer
Courtesy of CHRYSLER GROUP, LLC

NOTE: **If the valve springs are being reused, reassemble them into their original locations. Number 5 cylinder exhaust valve spring shown in illustration, all other valves similar.**

3. Install the valve spring (2) and valve spring retainer (1).

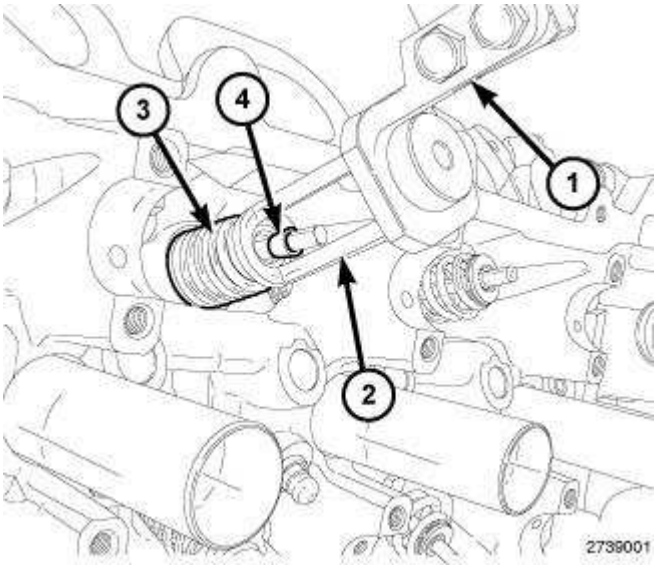

Fig. 392: Compressing Valve Spring & Locating Valve Retaining Locks
Courtesy of CHRYSLER GROUP, LLC

NOTE: Number 3 cylinder intake valve spring compression shown in illustration, all other valves similar.

4. Compress valve springs (3) with the Valve Spring Compressor Adapter (special tool #10224, Adapter, Valve Spring) (2) mounted in the Valve Spring Compressor (special tool #C-3422-D, Compressor, Valve Spring) (1). Install the retaining locks (4) and release the valve spring compression.

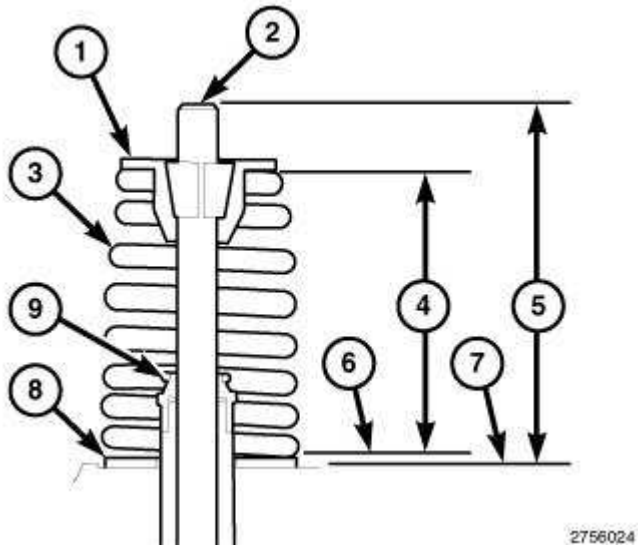

Fig. 393: Checking Valve Spring Installed Height
Courtesy of CHRYSLER GROUP, LLC

5. If the valves or valve seats have been refinished, check the installed height of the valve springs (4). If the installed valve spring height (4) is greater than 40.0 mm (1.575 in.), install an

additional spring seat (8) in the head counterbore under the original valve spring seat (8) to bring the spring height back within specification. Make sure the measurement is taken from the top of spring seat (6) to the bottom surface of spring retainer (1).

6. Install the cylinder head(s). Refer to **CYLINDER HEAD , INSTALLATION** .

TUBE, SPARK PLUG

REMOVAL

REMOVAL

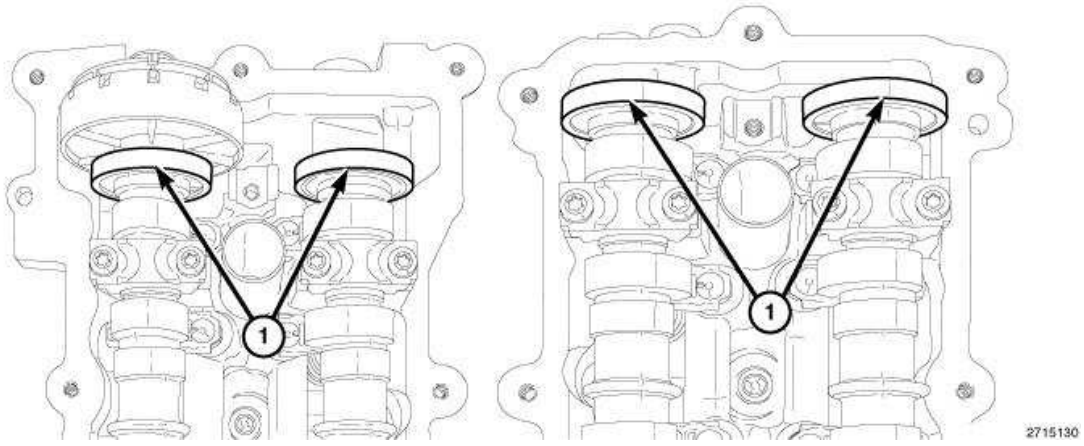

Fig. 394: Magnetic Timing Wheels
Courtesy of CHRYSLER GROUP, LLC

CAUTION: The magnetic timing wheels (1) must not come in contact with magnets (pickup tools, trays, etc.) or any other strong magnetic field. This will destroy the timing wheels ability to correctly relay camshaft position to the camshaft position sensor.

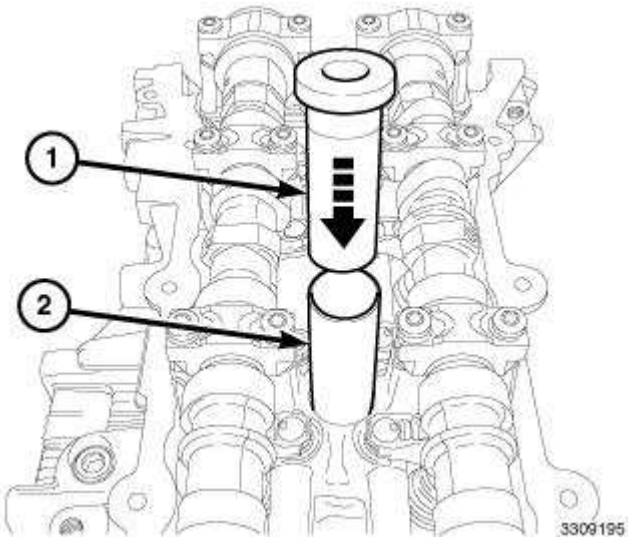

Fig. 395: Spark Plug Tube Installer & Spark Plug Tube
Courtesy of CHRYSLER GROUP, LLC

1. Disconnect and isolate the negative battery cable.
2. Remove the ignition coils. Refer to **COIL, IGNITION, REMOVAL** .
3. Using compressed air, blow out any dirt or contaminates from around the top of the spark plugs.
4. Remove the cylinder head cover(s). Refer to **COVER(S), CYLINDER HEAD, REMOVAL** .
5. Install the top half of Spark Plug Tube Installer (special tool #10255, Installer, Spark Plug Tube) (1) into the spark plug tube to be removed (2).

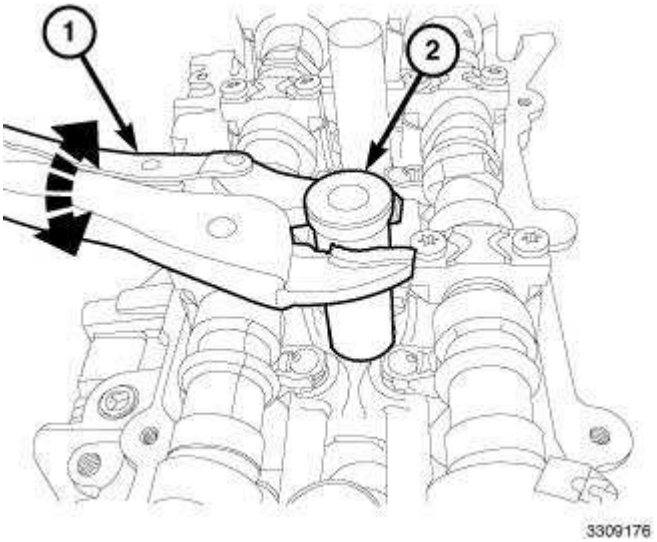

Fig. 396: Locking Pliers & Spark Plug Tube
Courtesy of CHRYSLER GROUP, LLC

6. Using suitable locking pliers (1), remove the spark plug tube (2) from the cylinder head and discard the tube.
7. Clean the area around the spark plug tube mounting with Mopar® Parts Cleaner or equivalent.

INSTALLATION

INSTALLATION

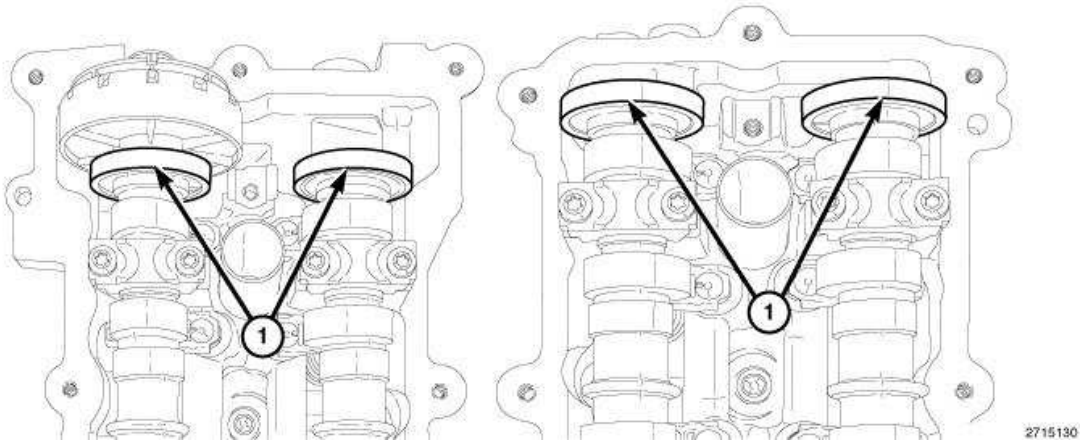

Fig. 397: Magnetic Timing Wheels
Courtesy of CHRYSLER GROUP, LLC

CAUTION: The magnetic timing wheels (1) must not come in contact with magnets (pickup tools, trays, etc.) or any other strong magnetic field. This will destroy the timing wheels ability to correctly relay camshaft position to the camshaft position sensor.

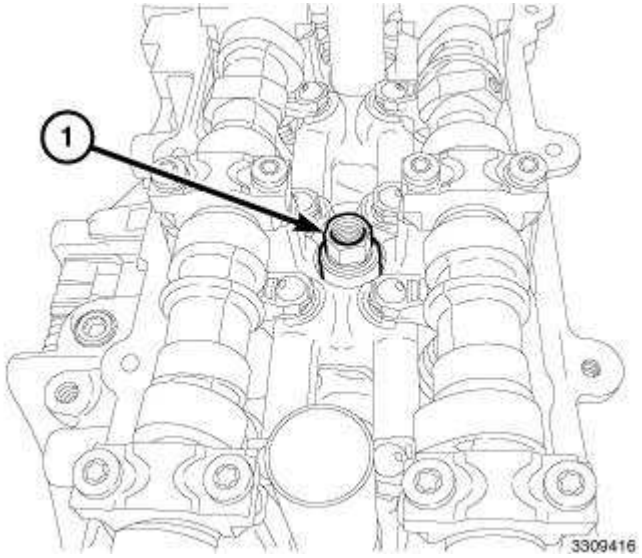

Fig. 398: Spark Plug Tube Installer
Courtesy of CHRYSLER GROUP, LLC

1. Remove the spark plug. Refer to **SPARK PLUG, REMOVAL** .
2. Install the lower half of Spark Plug Tube Installer (special tool #10255, Installer, Spark Plug Tube) (1) into the cylinder head and tighten to 17.5 N.m (13 ft. lbs.).

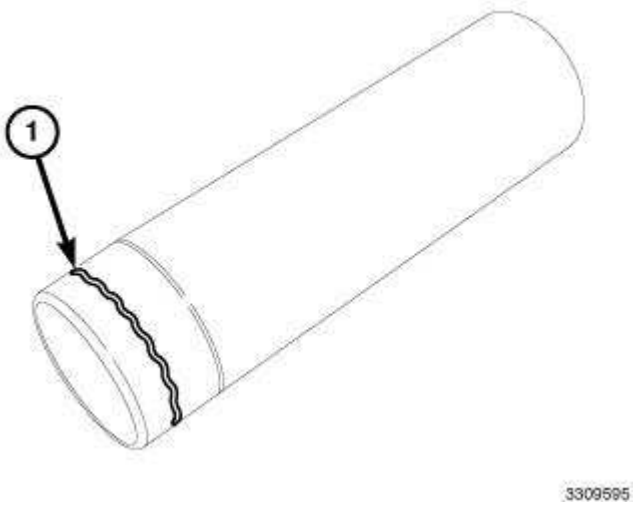

Fig. 399: Applying Stud & Bearing Mount Bead To Spark Plug Tube
Courtesy of CHRYSLER GROUP, LLC

3. Apply Mopar® Stud and Bearing Mount to the new spark plug tube approximately 3 mm (0.118 in.) from the end of the tube, in a 2 mm (0.078 in.) wide bead (1).

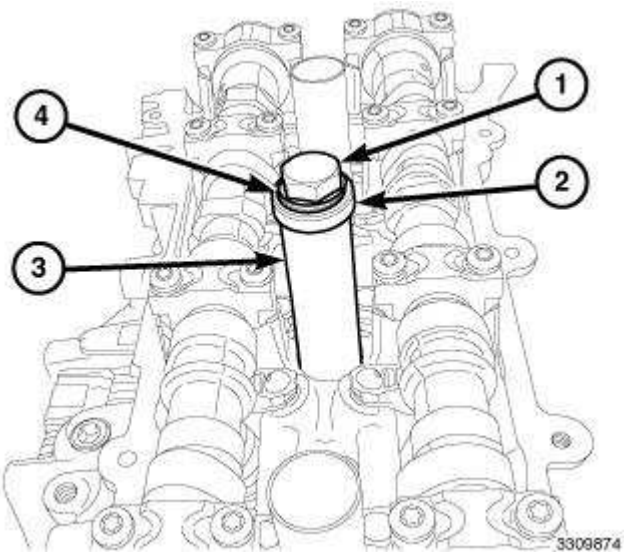

Fig. 400: Spark Plug Tube, Thrust Washers, Spark Plug Tube Installer & Bolt
Courtesy of CHRYSLER GROUP, LLC

4. Position the spark plug tube (3) on the top half of Spark Plug Tube Installer (special tool #10255, Installer, Spark Plug Tube) (2) and assemble the tool on the cylinder head. Make sure there are two thrust washers (4) installed.

CAUTION: Do not overtighten the bolt (1). Overtightening can damage the cylinder head spark plug threads.

5. Tighten the bolt (1) to draw the spark plug tube into position. When the top half of the tool contacts the bottom half of the tool, the tube is installed.

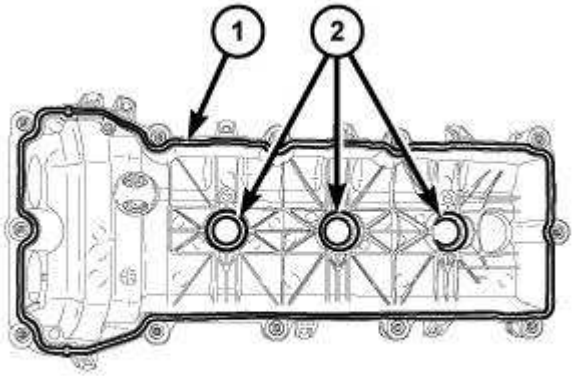

2776066

Fig. 401: Cylinder Head Cover Gasket & Spark Plug Tube Seals
Courtesy of CHRYSLER GROUP, LLC

NOTE: LH cylinder head cover shown in illustration, RH cylinder head cover similar.

CAUTION: Spark plug torque is critical and must not exceed the specified value. Overtightening stretches the spark plug shell reducing its heat transfer capability resulting in possible catastrophic engine failure.

6. Install the spark plug and tighten to 17.5 N.m (13 ft. lbs.). Refer to **SPARK PLUG, INSTALLATION** .
7. If required, install a new spark plug tube seal (2). Refer to **COVER(S), CYLINDER HEAD, INSTALLATION** .
8. Install the cylinder head cover(s). Refer to **COVER(S), CYLINDER HEAD, INSTALLATION** .

Connect the negative battery cable and tighten nut to 5 N.m (45 in. lbs.).

VALVES, INTAKE AND EXHAUST

DESCRIPTION

DESCRIPTION

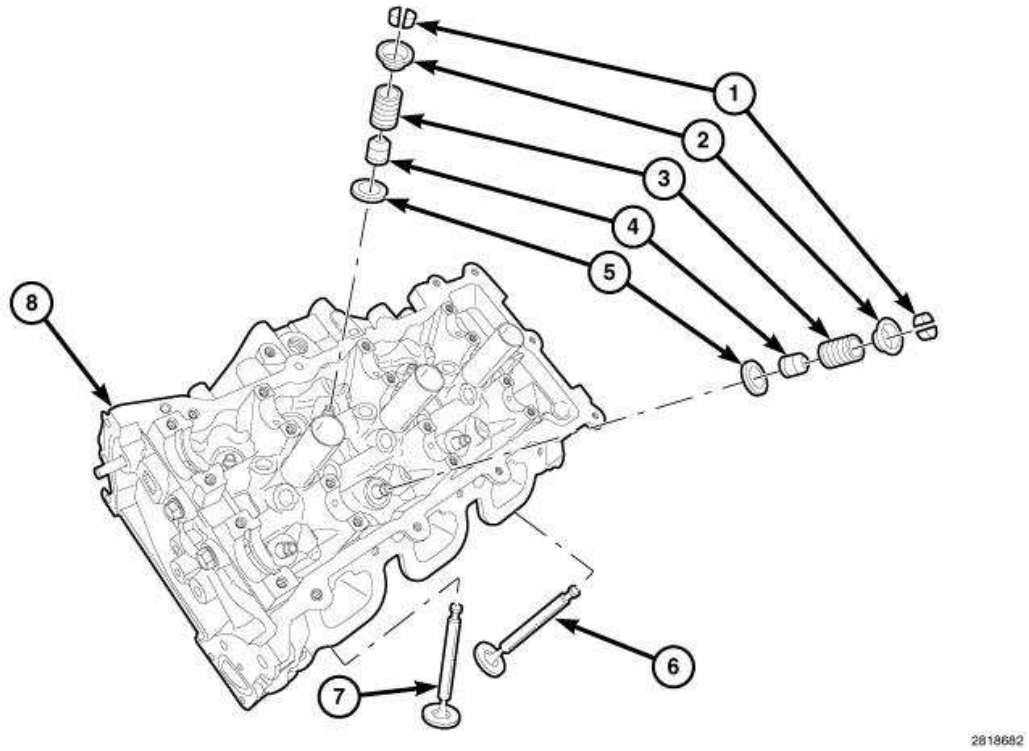

Fig. 402: Intake Valve & Exhaust Valve Component Configuration
Courtesy of CHRYSLER GROUP, LLC

The intake valve (6) is made from a one piece forged heat resistant (martensitic) steel. The exhaust valve (7) is a two piece construction with a forged (austenitic) head welded to the (martensitic) stem. Both valves have a nitrided surface treatment to prevent scuffing except at the tip and lock grooves. The four valves per cylinder are actuated by roller rocker arms, which pivot on stationary lash adjusters. All valves use three bead lock keepers (1) to retain springs (3) and to promote valve rotation.

STANDARD PROCEDURE

REFACING INTAKE AND EXHAUST VALVES

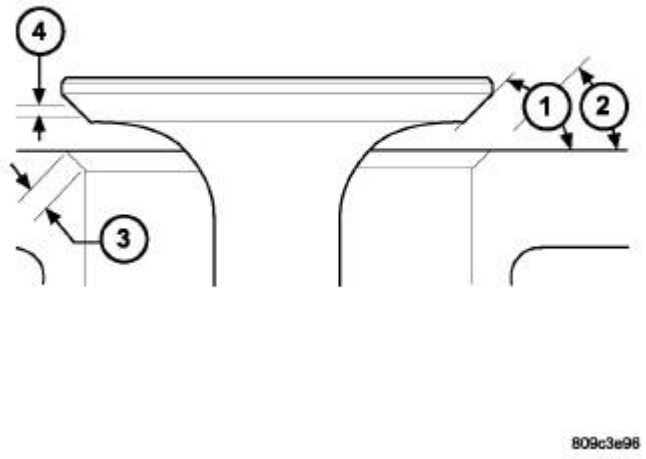

Fig. 403: Valve Face & Seat
Courtesy of CHRYSLER GROUP, LLC

1 - SEAT WIDTH 2 - FACE ANGLE 3 - SEAT ANGLE 4 - SEAT CONTACT AREA

The intake and exhaust valves have a 45.25 ± 0.25 degree face angle (1). The valve seats (2) have a 44.75 ± 0.25 degree face angle.

VALVES

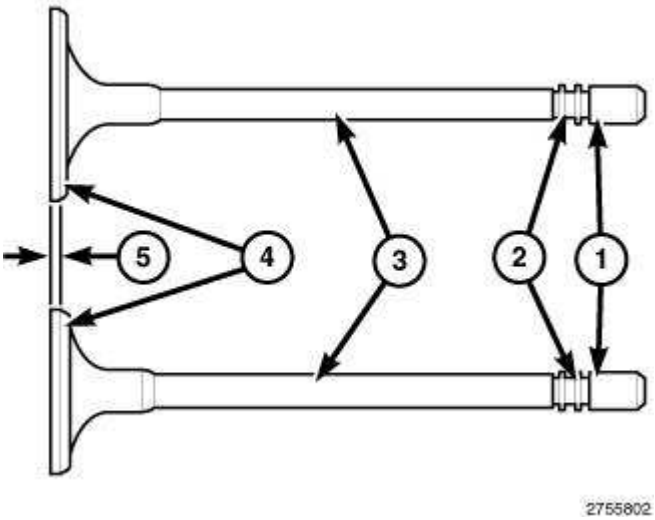

Fig. 404: Inspecting Valve Margin
Courtesy of CHRYSLER GROUP, LLC

Inspect the remaining margin (5) after the valves are refaced. Refer to **SPECIFICATIONS**.

VALVE SEATS

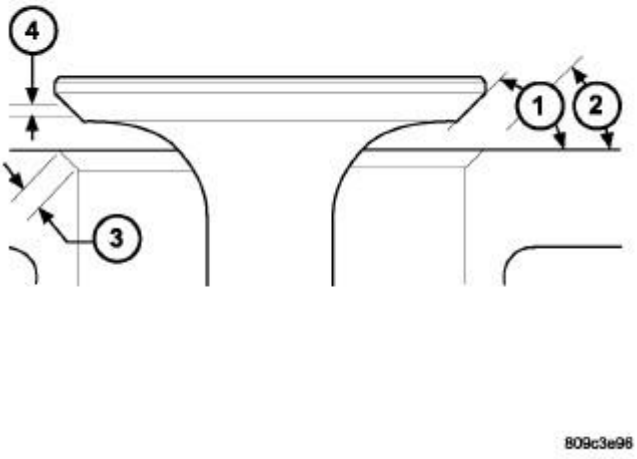

Fig. 405: Valve Face & Seat
Courtesy of CHRYSLER GROUP, LLC

1 - SEAT WIDTH
2 - FACE ANGLE
3 - SEAT ANGLE
4 - SEAT CONTACT AREA

NOTE: When refacing the valve seats, it is important that the correct size valve guide pilot be used for the reseating stones. A true and complete surface must be obtained.

1. Measure the concentricity of the valve seat using a dial indicator. Total runout should not exceed 0.050 mm (0.002 inch.) total indicator reading.
2. Inspect the valve seat (3) with Prussian blue to determine where the valve contacts the seat. To do this, coat the valve seat (3) **LIGHTLY** with Prussian blue then set the valve in place. Rotate the valve with light pressure. If the blue is transferred to the center of the valve face (4), contact is satisfactory. If the blue is transferred to the top edge of the valve face, then lower the valve seat with a 15 degree stone. If the blue is transferred to the bottom edge of the valve face, then raise the valve seat with a 65 degree stone.

NOTE: Valve seats which are worn or burned can be reworked, provided that the correct angle and seat width are maintained. Otherwise the cylinder head must be replaced.

3. When the seat is properly positioned the width of the intake seat should be 1.0 - 1.2 mm (0.04 - 0.05 in.) and the exhaust seats should be 1.41 - 1.61 mm (0.055 - 0.063 in.).

VALVE AND SPRING INSTALLED HEIGHT

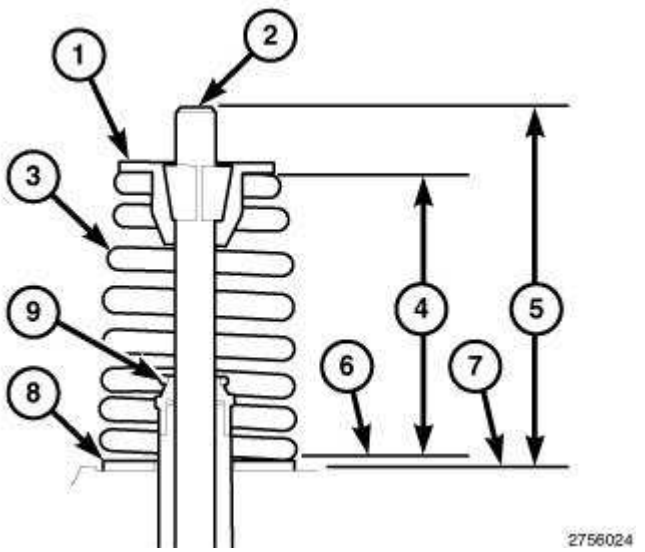

Fig. 406: Checking Valve Spring Installed Height
Courtesy of CHRYSLER GROUP, LLC

1. Coat the valve stems (2) with clean engine oil and install the valves into the cylinder head.

   NOTE: If the valves are being reused, reassemble them into their original locations.

2. If the valves or valve seats have been refinished, check the valve tip height (5). If the valve tip height (5) exceeds the specification, grind the valve tip until it is within specification. Refer to **SPECIFICATIONS**. Make sure the measurement is taken from the cylinder head surface (7) to the top of the valve stem (2).

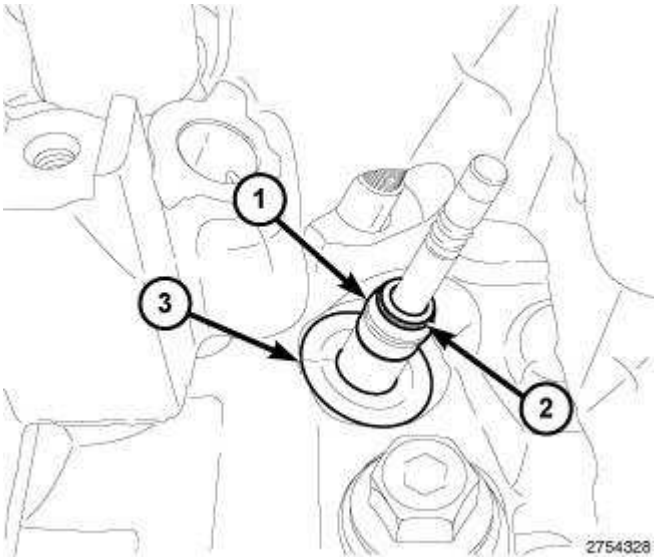

Fig. 407: Spring Seat, Valve Guide Seal & Garter Spring
Courtesy of CHRYSLER GROUP, LLC

3. If removed, install the spring seat (3) and valve guide seal (1) over the valve guide. Refer to **SEAL(S), VALVE GUIDE, INSTALLATION**.

NOTE: **Ensure that the garter spring (2) is intact around the top of the valve guide seal (1). Number 5 cylinder exhaust valve guide seal shown in illustration, all other valves similar.**

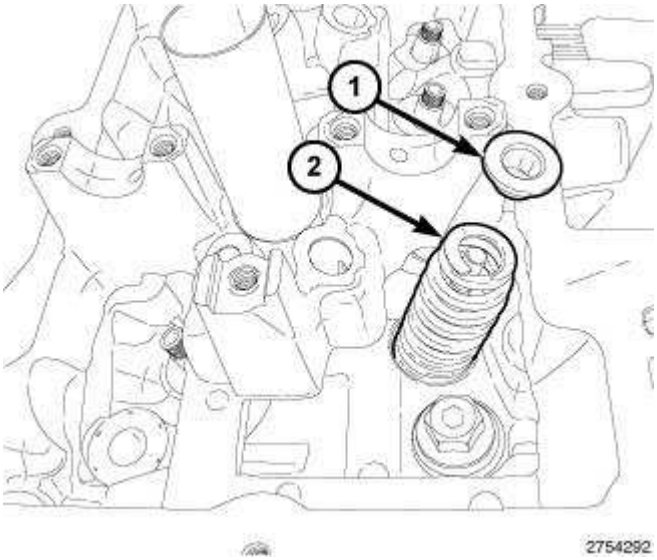

Fig. 408: Valve Spring & Valve Spring Retainer
Courtesy of CHRYSLER GROUP, LLC

NOTE: **If the valve springs are being reused, reassemble them into their original locations. Number 5 cylinder exhaust valve spring shown in illustration, all other valves similar.**

4. Install the valve spring (2) and valve spring retainer (1).

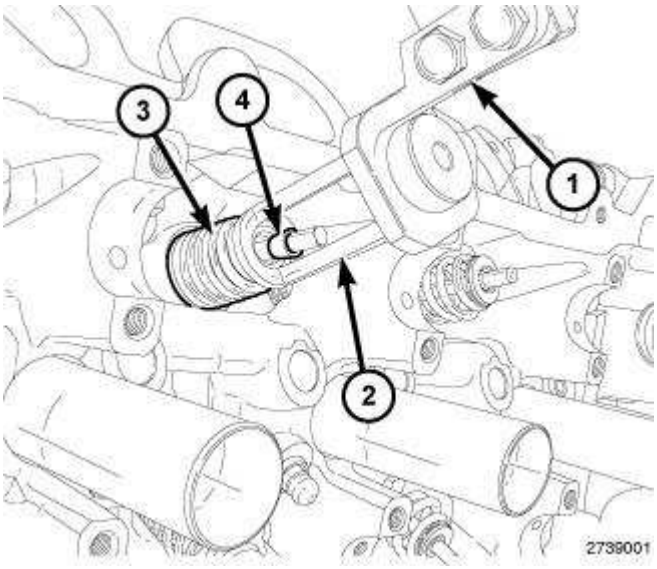

Fig. 409: Compressing Valve Spring & Locating Valve Retaining Locks
Courtesy of CHRYSLER GROUP, LLC

NOTE: Number 3 cylinder intake valve spring compression shown in illustration, all other valves similar.

5. Compress valve springs (3) with the Valve Spring Compressor Adapter (special tool #10224, Adapter, Valve Spring) (2) mounted in the Valve Spring Compressor (special tool #C-3422-D, Compressor, Valve Spring) (1). Install the retaining locks (4) and release the valve spring compression.

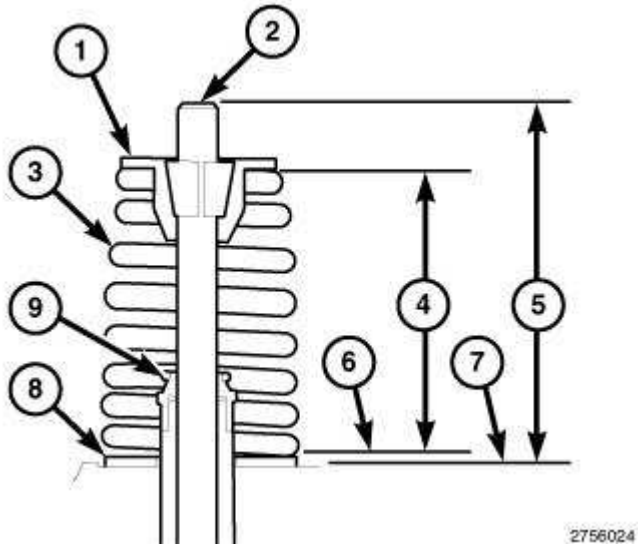

Fig. 410: Checking Valve Spring Installed Height
Courtesy of CHRYSLER GROUP, LLC

6. If the valves or valve seats have been refinished, check the installed height of the valve springs (4). If the installed valve spring height (4) is greater than 40.0 mm (1.575 in.), install a second spring seat (8) in the head counterbore under the valve spring seat (8) to bring the spring height back within specification. Make sure the measurement is taken from the top of spring seat (6) to the bottom surface of spring retainer (1).

REMOVAL

REMOVAL

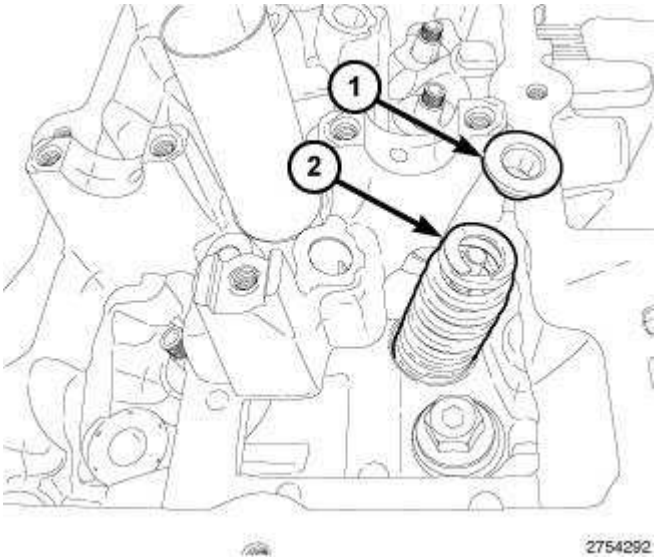

Fig. 411: Valve Spring & Valve Spring Retainer
Courtesy of CHRYSLER GROUP, LLC

1. Remove the cylinder head(s). Refer to **CYLINDER HEAD , REMOVAL** .

   NOTE: If the springs are to be reused, identify their positions so that they can be reassembled into their original locations. Number 5 cylinder exhaust valve spring shown in illustration, all other valve springs similar.

2. Remove the valve spring(s) (2). Refer to **SPRING(S), VALVE, REMOVAL** .

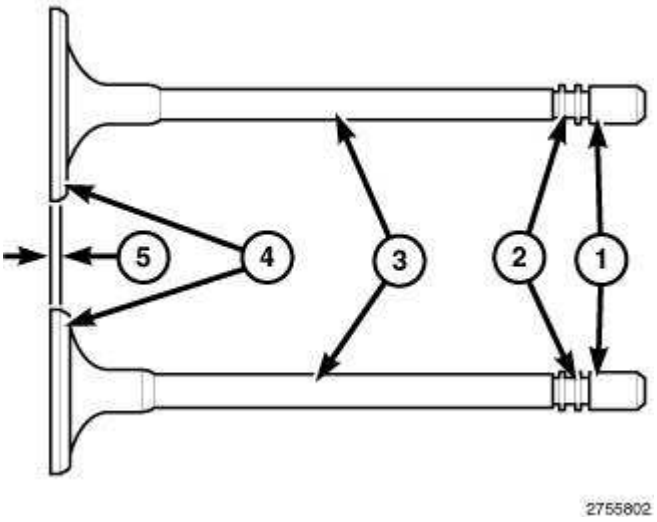

Fig. 412: Inspecting Valve Margin
Courtesy of CHRYSLER GROUP, LLC

CAUTION: Before removing the valves, remove any burrs from the valve stem retainer lock grooves (2) and stem tip (1) to prevent damage to the valve guides.

3. Remove the valve(s) (3). Identify each valve to ensure installation in the original location.

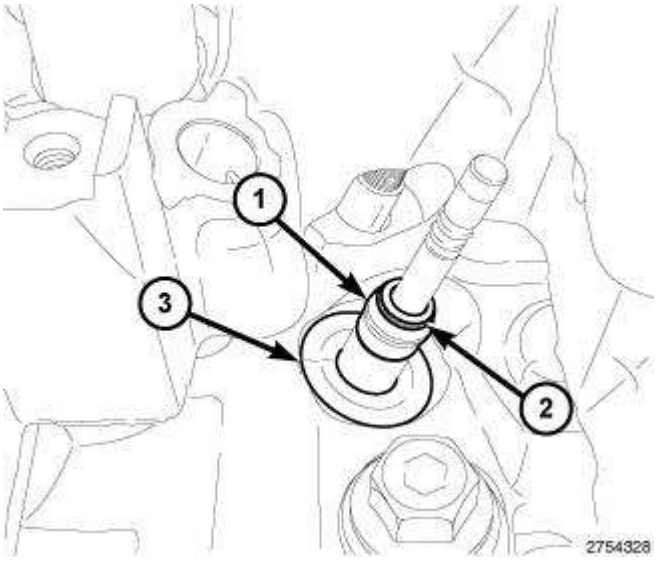

Fig. 413: Spring Seat, Valve Guide Seal & Garter Spring
Courtesy of CHRYSLER GROUP, LLC

4. If required, remove the valve guide seal (1) and spring seat (3). Refer to **SEAL(S), VALVE GUIDE, REMOVAL**.

INSPECTION

INSPECTION

VALVES

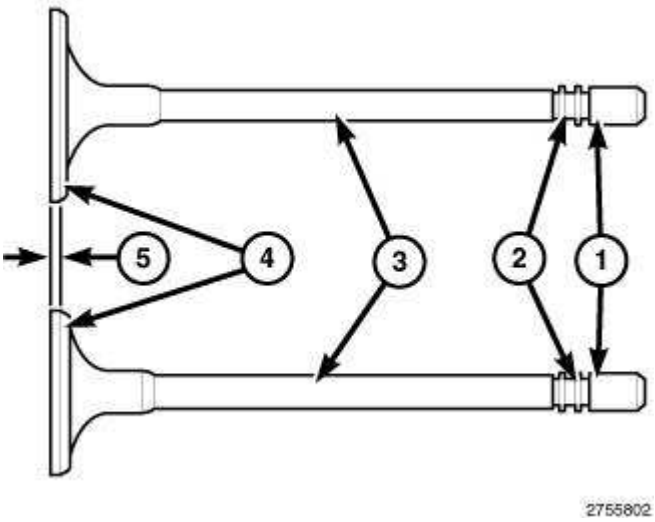

Fig. 414: Inspecting Valve Margin
Courtesy of CHRYSLER GROUP, LLC

1. Clean and inspect the valves thoroughly. Replace burned, warped and cracked valves.
2. Inspect the retainer lock grooves for wear or damage (2).
3. Inspect the valve face (4) for wear and pitting.
4. Measure the valve stems (3) and margins (5) for wear. Refer to **SPECIFICATIONS**.

VALVE GUIDES

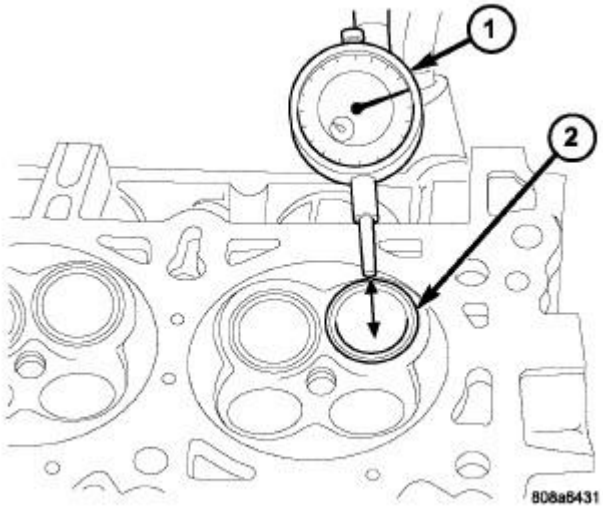

Fig. 415: Measuring Valve Guide Wear

Courtesy of CHRYSLER GROUP, LLC

1. Remove carbon and varnish deposits from inside of the valve guides with a reliable guide cleaner.
2. Measure valve stem-to-guide clearance as follows:
3. Install the valve (2) into the cylinder head so that it is 15 mm (0.590 inch.) off of the valve seat. A small piece of hose may be used to hold the valve in place.
4. Attach the Dial Indicator Set (special tool #C-3339A, Set, Dial Indicator) (1) to the cylinder head and set it at a right angle to the valve stem being measured.
5. Move the valve to and from the indicator. Compare this reading to the specification. Refer to **SPECIFICATIONS**.

NOTE: If stem-to-guide clearance exceeds specifications, you must measure the valve stem. If the valve stem is within specification or if the valve guide is loose in the cylinder head, replace the cylinder head.

INSTALLATION

INSTALLATION

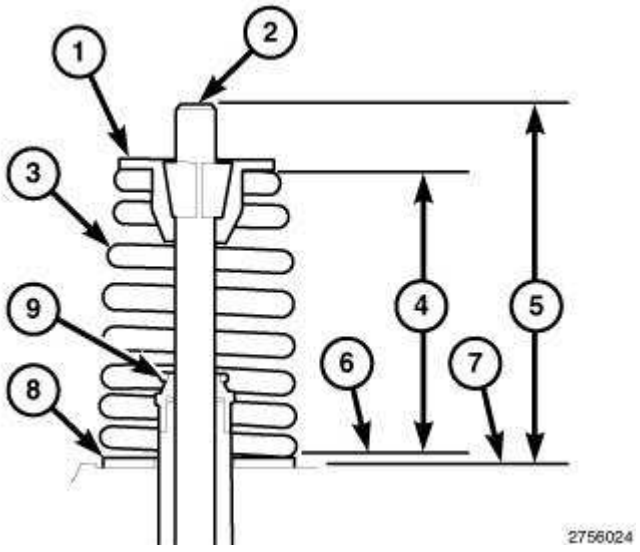

Fig. 416: Checking Valve Spring Installed Height
Courtesy of CHRYSLER GROUP, LLC

1. Coat the valve stems (2) with clean engine oil and install the valves into the cylinder head.

NOTE: If the valves are being reused, reassemble them into their original locations.

2. If the valves or valve seats have been refinished, check the valve tip height (5). If the valve tip height (5) exceeds the specification, grind the valve tip until it is within specification. Refer to

SPECIFICATIONS. Make sure the measurement is taken from the cylinder head surface (7) to the top of the valve stem (2).

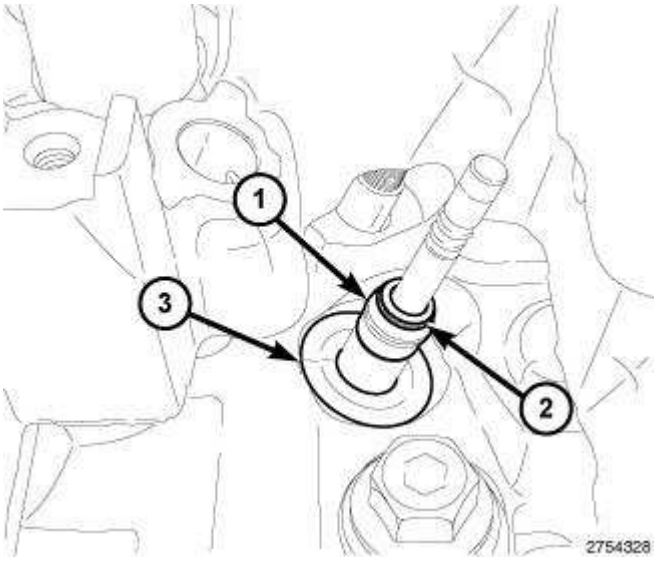

Fig. 417: Spring Seat, Valve Guide Seal & Garter Spring
Courtesy of CHRYSLER GROUP, LLC

3. If removed, install the spring seat (3) and valve guide seal (1) over the valve guide. Refer to **SEAL(S), VALVE GUIDE, INSTALLATION**.

NOTE: Ensure that the garter spring (2) is intact around the top of the valve guide seal (1). Number 5 cylinder exhaust valve guide seal shown in illustration, all other valves similar.

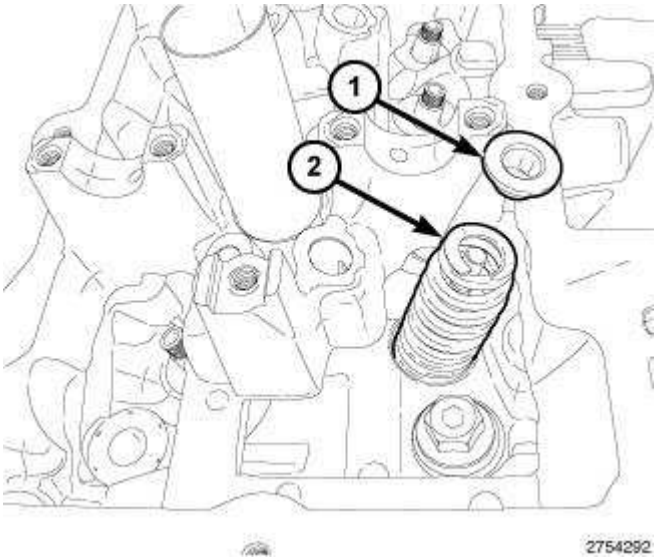

Fig. 418: Valve Spring & Valve Spring Retainer
Courtesy of CHRYSLER GROUP, LLC

4. Install the valve spring(s) (2). Refer to **SPRING(S), VALVE, INSTALLATION** .

NOTE: Reassemble the valves springs into their original locations. If the valves or valve seats have been refinished, verify that the valve spring installed height is within specification. Refer to SPECIFICATIONS. Number 5 cylinder exhaust valve spring shown in illustration, all other valves springs similar.

5. Install the cylinder head(s). Refer to **CYLINDER HEAD , INSTALLATION** .

ENGINE BLOCK

DESCRIPTION

DESCRIPTION

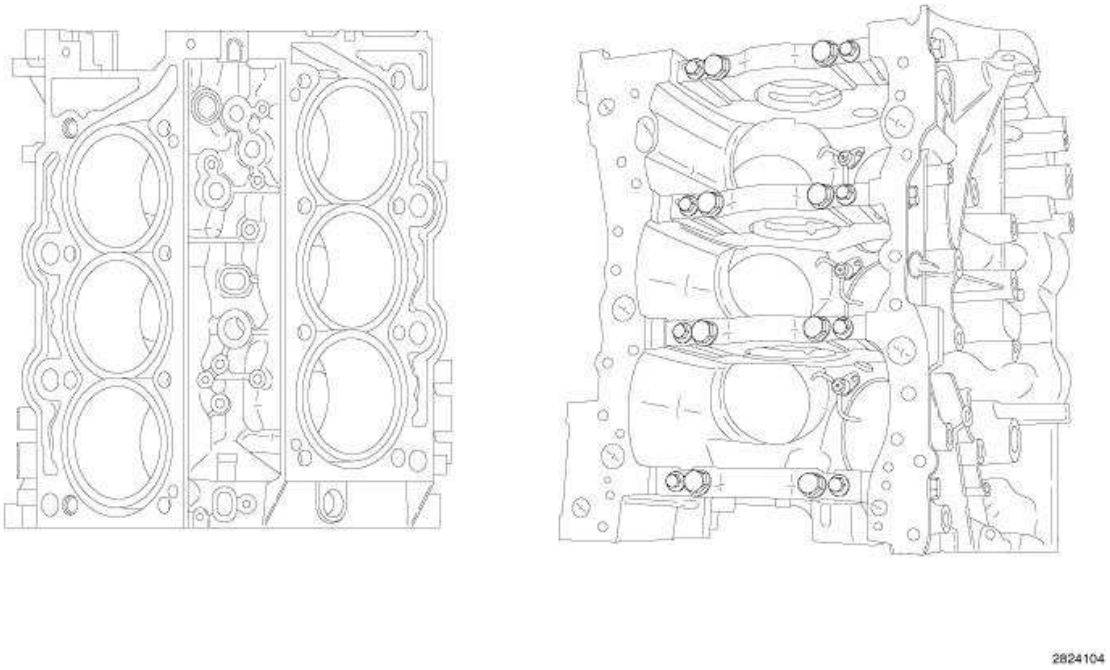

Fig. 419: Cylinder Block & Main Bearing Caps
Courtesy of CHRYSLER GROUP, LLC

The cylinder block is a 60 degree high-pressure die cast aluminum design with cast steel cylinder liners. The leading side of the block is on the right side and houses cylinders 1, 3 and 5. The cylinder block is an open deck design with cut slots between each cylinder. Two knock sensors are located in the block valley. The cylinder block has three sets of piston cooling jets which are attached to the main oil gallery. The four powdered metal main bearing caps are a cross-bolted design and have directional arrows molded into the caps. The number 2 main bearing is the location for the two piece

upper half thrust bearings. The thrust bearings are installed with the oil groves facing outward. The main bearing caps are a 6-bolt design and cross-bolted for improved lower end strength. There are three oil drain back drillings located on each of the cylinder banks.

STANDARD PROCEDURE

MEASURING BEARING CLEARANCE USING PLASTIGAGE

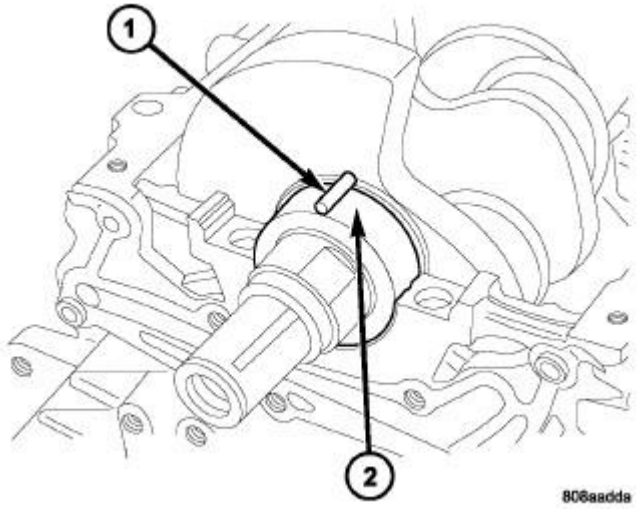

Fig. 420: Plastigage Placed In Lower Shell
Courtesy of CHRYSLER GROUP, LLC

NOTE: Typical crankshaft journal shown in illustration.

Engine crankshaft and connecting rod bearing clearances can be determined by the use of Plastigage or equivalent. The following is the recommended procedure for the use of Plastigage:

1. Remove the oil film from surface to be checked. Plastigage is soluble in oil.
2. Place a piece of Plastigage (1) across the entire width of the journal (In addition, suspected areas can be checked by placing the Plastigage in the suspected area). Plastigage must not crumble in use. If brittle, obtain fresh stock.
3. Torque the bearing cap bolts of the bearing being checked to the proper specifications. Refer to **SPECIFICATIONS**.

NOTE: DO NOT rotate the crankshaft. Plastigage will smear, causing inaccurate results.

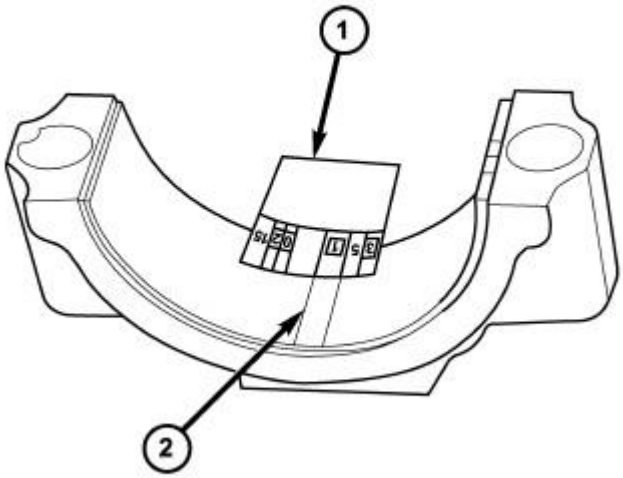

Fig. 421: Measuring Bearing Clearance With Plastigage
Courtesy of CHRYSLER GROUP, LLC

NOTE: Typical connecting rod cap shown in illustration.

4. Remove the bearing cap and compare the width of the flattened Plastigage (2) with the scale provided on the package (1). Locate the band closest to the same width. This band shows the amount of clearance. Differences in readings between the ends indicate the amount of taper present or the possibility of foreign material trapped under the bearing insert.
5. Record all readings taken. Compare clearance measurements to engine specifications. Refer to **SPECIFICATIONS**.

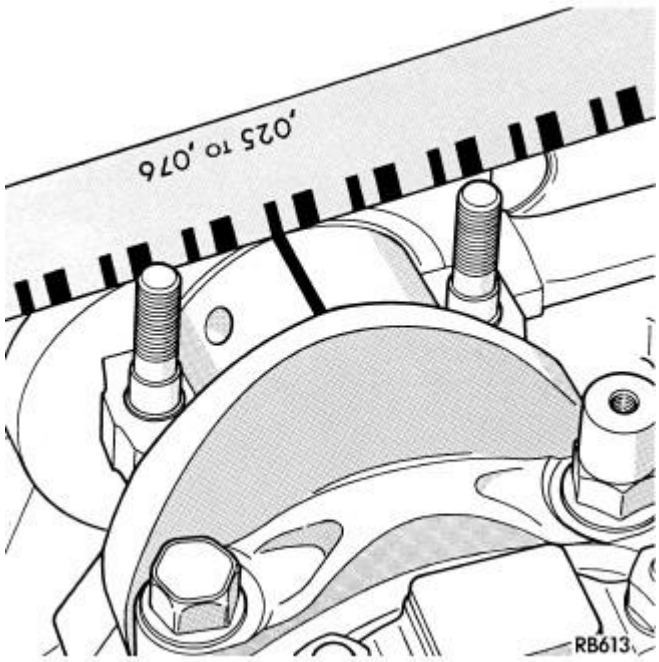

Fig. 422: Checking Connecting Rod Bearing Clearance With Plastigage
Courtesy of CHRYSLER GROUP, LLC

NOTE: Typical connecting rod journal shown in illustration.

NOTE: Plastigage is available in a variety of clearance ranges. Use the most appropriate range for the specifications you are checking. Plastigage generally is accompanied by two scales. One scale is in inches, the other is a metric scale.

6. Install the proper bearings to achieve the specified bearing clearances.
7. Repeat the Plastigage measurement to verify your bearing selection prior to final assembly.

CYLINDER BORE HONING

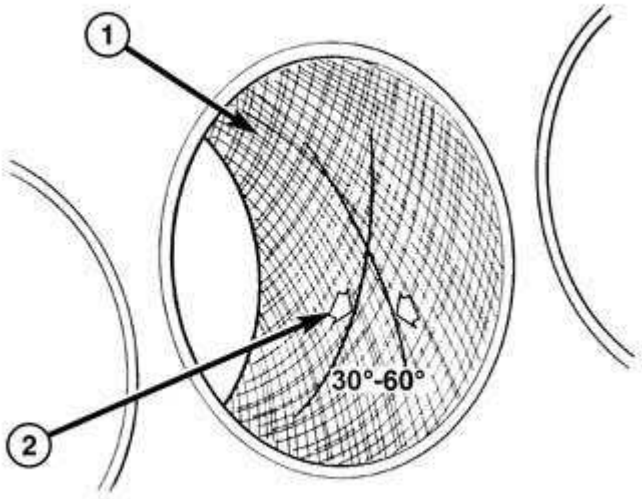

Fig. 423: Identifying Cylinder Bore Crosshatch Pattern
Courtesy of CHRYSLER GROUP, LLC

Before honing, stuff plenty of clean shop towels under the bores and over the crankshaft to keep abrasive materials from entering the crankshaft area.

1. Used carefully, a cylinder bore sizing hone equipped with 220 grit stones, is the best tool for this job. In addition to deglazing, it will reduce taper and out-of-round, as well as removing light scuffing, scoring and scratches. Usually, a few strokes will clean up a bore and maintain the required limits.

   CAUTION: DO NOT use rigid type hones to remove cylinder wall glaze.

2. Deglazing of the cylinder walls may be done if the cylinder bore is straight and round. Use of a cylinder surfacing hone equipped with 280 grit stones, about 20-60 strokes, depending on the bore condition, will be sufficient to provide a satisfactory surface. Use a light honing oil, available from major oil distributors.

   CAUTION: DO NOT use engine or transmission oil, mineral spirits, or kerosene.

3. Honing should be done by moving the hone up and down fast enough to get a crosshatch pattern. The hone marks should INTERSECT at 50° to 60° for proper seating of rings.
4. A controlled hone motor speed between 200 and 300 RPM is necessary to obtain the proper crosshatch angle (1). The number of up and down strokes per minute can be regulated to get

the desired 50° to 60° angle (2). Faster up and down strokes increase the crosshatch angle.

5. After honing, it is necessary that the block be cleaned to remove all traces of abrasive. Use a brush to wash parts with a solution of hot water and detergent. Dry parts thoroughly. Use a clean, white, lint-free cloth to check that the bore is clean. Oil the bores after cleaning to prevent rusting.

INSPECTION

INSPECTION

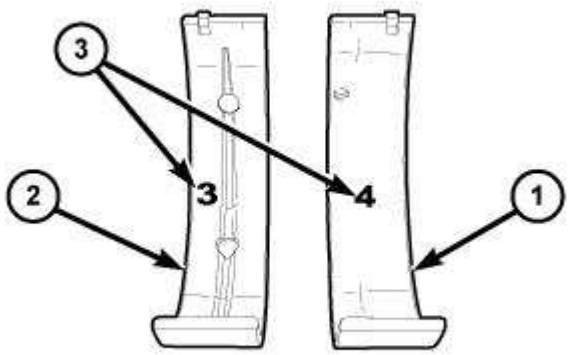

2787936

Fig. 424: Main Bearing Inserts
Courtesy of CHRYSLER GROUP, LLC

1. Wipe the main bearing inserts (1 and 2) clean.
2. Inspect the inserts for abnormal wear patterns, scoring, grooving, fatigue, pitting and for metal or other foreign material imbedded in the lining.
3. Inspect the back of the inserts for fractures, scrapes, or irregular wear patterns.
4. Inspect the insert locking tabs for damage.
5. Inspect the crankshaft thrust washers for scoring, scratches, wear or blueing.
6. Replace any bearing that shows abnormal wear. Refer to **STANDARD PROCEDURE**.
7. Inspect the main bearing bores for signs of scoring, nicks and burrs.
8. If the cylinder block main bearing bores show damage the engine block must be replaced.

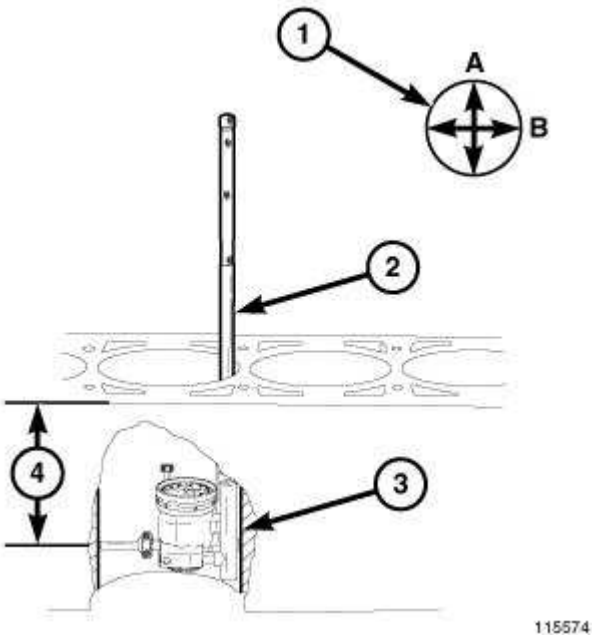

Fig. 425: Measuring Cylinder Bore Diameter
Courtesy of CHRYSLER GROUP, LLC

9. Use Cylinder Indicator (special tool #C-119, Cylinder Indicator) (2) to correctly measure the inside diameter of the cylinder bore (3). A cylinder bore gauge capable of reading in 0.003 mm (0.0001 in.) INCREMENTS is required. If a bore gauge is not available, do not use an inside micrometer.
10. Measure the inside diameter of the cylinder bore at three levels below the top of the bore (4). Start at the top of the bore, perpendicular (across or at 90 degrees) to the axis of the crankshaft at point A (1).
11. Repeat the measurement near the middle of the bore, then repeat the measurement near the bottom of the bore.
12. Determine taper by subtracting the smaller diameter from the larger diameter.
13. Rotate measuring device 90° to point B (1) and repeat the three measurements. Verify that the maximum taper is within specifications. Refer to **SPECIFICATIONS**.
14. Determine out-of-roundness by comparing the difference between A and B at each of the three levels. Verify that the maximum out of round is within specifications. Refer to **SPECIFICATIONS**.
15. If cylinder bore taper and out-of-roundness are within specification, the cylinder bore can be honed. Refer to **ENGINE BLOCK, STANDARD PROCEDURE**. If the cylinder bore taper or out-of-round condition exceeds the maximum limits, the cylinder block must be replaced.

NOTE: A slight amount of taper always exists in the cylinder bore after the engine has been in use for a period of time.

BEARING(S), CONNECTING ROD

STANDARD PROCEDURE

CONNECTING ROD BEARING FITTING

Bearing oil clearance can also be determined by using Plastigage or equivalent. Refer to **ENGINE BLOCK, STANDARD PROCEDURE**.

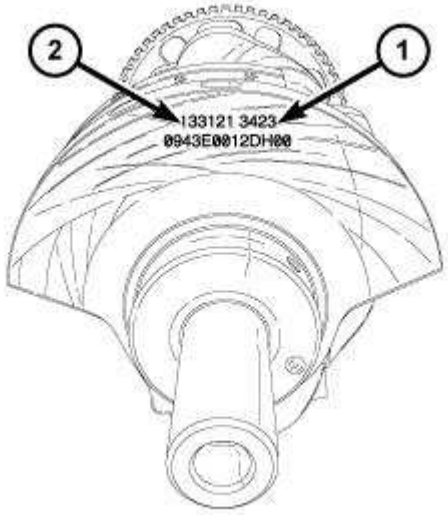

Fig. 426: Crankshaft Main Bearing Journal Diameter Grade Markings & Connecting Rod Bearing Journal Diameter Grade Markings
Courtesy of CHRYSLER GROUP, LLC

The connecting rod bearings are "select fit" to achieve proper oil clearance. Connecting rod bearing journal diameter grade markings (2) are stamped into the front crankshaft counterweight. These marks are read from left to right, corresponding with journal number 1, 2, 3, 4, 5, 6. Select the bearing size that corresponds to the crankshaft markings for each rod bearing journal.

Connecting rod bearing journal diameter grade markings correspond to specific journal diameters. The chart below identifies the three crankshaft grade markings and their associated journal diameters.

Crankshaft Marking	Journal Size mm (in.)
1	58.9910 - 58.9969 mm (2.3225 - 2.3227 in.)
2	58.9970 - 59.0029 mm (2.3227 - 2.3229 in.)
3	59.0030 - 59.0090 mm (2.3229 - 2.3232 in.)

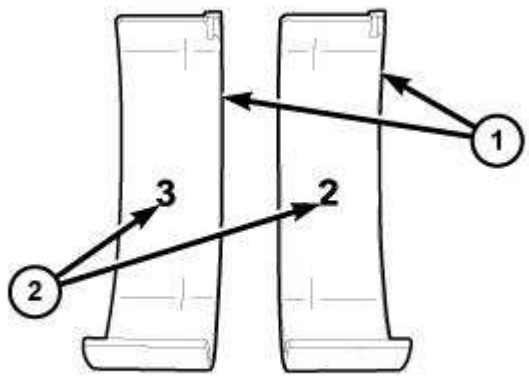

2769568

Fig. 427: Connecting Rod Bearing Shells & Bearing Size
Courtesy of CHRYSLER GROUP, LLC

NOTE: Install the rod bearings in pairs. Do not mix sizes or use a new bearing half with an old bearing half.

The connecting rod bearing shells (1) are marked with the bearing size (2) on the bearing lining surface. The bearings are available in three different sizes in order to achieve the desired oil clearance.

Rod bearing shells are available in three sizes. The chart below identifies the three bearing sizes.

Bearing Marking	Size mm (in.)
1	1.583 - 1.580 mm (0.0623 - 0.0622 in.)
2	1.580 - 1.577 mm (0.0622 - 0.0621 in.)
3	1.577 - 1.574 mm (0.0621 - 0.0620 in.)

CONNECTING ROD BEARING REPLACEMENT

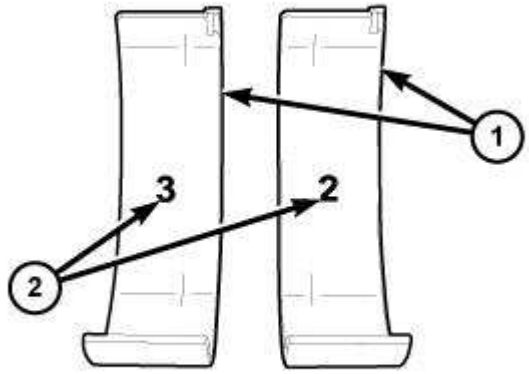

Fig. 428: Connecting Rod Bearing Shells & Bearing Size
Courtesy of CHRYSLER GROUP, LLC

The connecting rod bearings (1) are serviced in-vehicle. They must be replaced one-at-a-time in order to prevent the pistons from contacting the valves. The connecting rod bearings are "select fit" to achieve proper oil clearances. Refer to **BEARING(S), CONNECTING ROD, STANDARD PROCEDURE**.

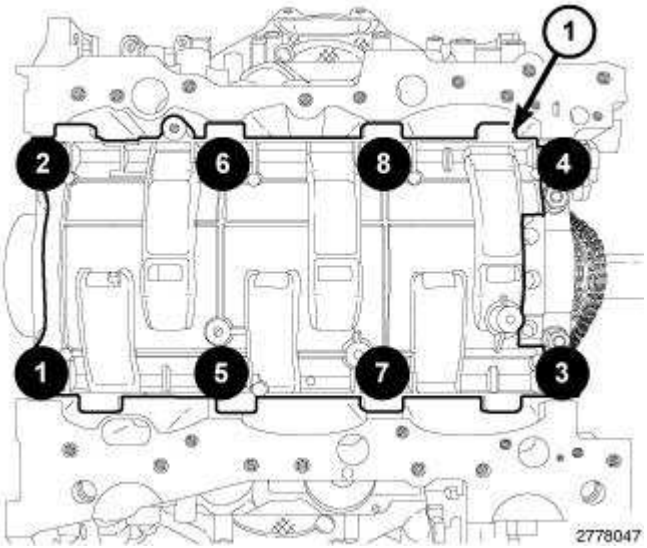

Fig. 429: Main Bearing Cap Bolts From Windage Tray Removal Sequence
Courtesy of CHRYSLER GROUP, LLC

1. Disconnect and isolate the negative battery cable.
2. Remove the spark plugs. Refer to **SPARK PLUG, REMOVAL** .
3. Remove the oil pan, oil pump pick-up and engine oil pump. Refer to **PUMP, ENGINE OIL, REMOVAL** .
4. Remove the eight main bearing cap bolts from the windage tray in the sequence shown in

illustration and remove the windage tray (1).

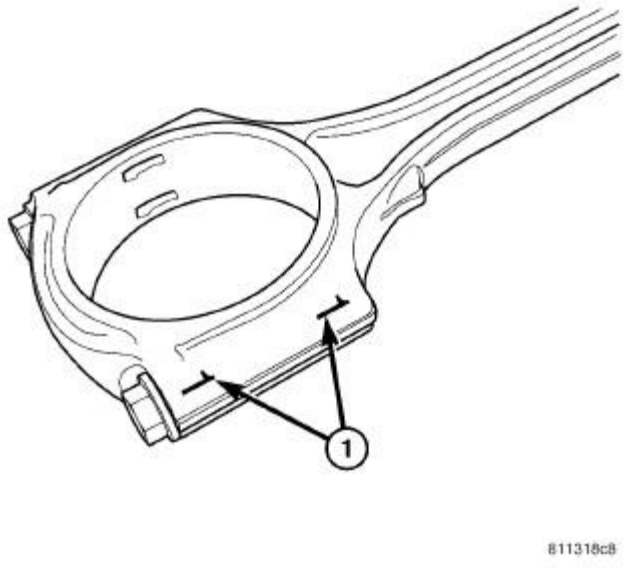

Fig. 430: Connecting Rod To Cylinder Identification
Courtesy of CHRYSLER GROUP, LLC

CAUTION: DO NOT use a number stamp or a punch to mark connecting rods or caps, as damage to connecting rods could occur

NOTE: Connecting rods and bearing caps are not interchangeable and should be marked before removing to ensure correct reassembly.

5. Mark connecting rod and bearing cap positions (1) using a permanent ink marker or scribe tool.

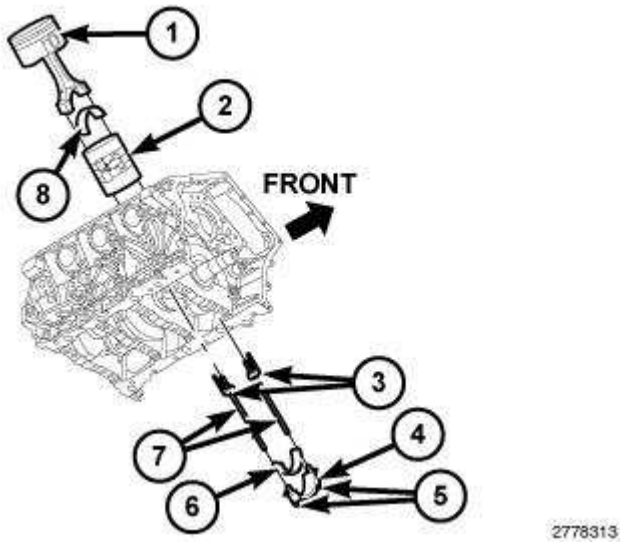

Fig. 431: Piston, Connecting Rod Cap, Bolts, Plastic Guide Plates & Guide Pins
Courtesy of CHRYSLER GROUP, LLC

NOTE: Typical V6 engine configuration shown in illustration.

CAUTION: Replace only one connecting rod bearing at a time while all other connecting rod bearing caps remain properly tightened. If all connecting rod bearing caps are removed, crankshaft rotation will result in valve and/or piston damage.

CAUTION: Care must be taken not to damage the fractured rod and cap joint face surfaces, as engine damage may occur.

6. Remove the connecting rod cap bolts (5) and the connecting rod cap (4). Discard the cap bolts.
7. Remove the plastic guide plates (3) from the Guide Pins (special tool #8189, Guide Pins) (7) and install the Guide Pins to the connecting rod being removed.

CAUTION: Care must be taken not to nick crankshaft journals, as engine damage may occur.

8. Rotate the crankshaft away from the connecting rod and remove the bearing shell.
9. If required, select and fit new bearings to the connecting rod. Refer to **BEARING(S), CONNECTING ROD, STANDARD PROCEDURE**.
10. Install the bearing shell (8) on the connecting rod with the tang inserted into the machined groove in the rod. Lubricate the bearing surface with clean engine oil.
11. Rotate the crankshaft while guiding the connecting rod into position over the rod journal.

CAUTION: The connecting rod bolts must not be reused. Always replace the

connecting rod bolts whenever they are loosened or removed.

12. Install the bearing shell (6) on the connecting rod cap (4) with the tang inserted into the machined groove in the cap. Lubricate the bearing surface with clean engine oil.

NOTE: Do not lubricate the threads of the connecting rod cap bolts (5).

13. Install the connecting rod cap and bearing with the tang on the same side as the rod. Tighten the **NEW** connecting rod cap bolts (5) to 20 N.m (15 ft. lbs.) plus 90°.
14. If required, check the connecting rod side clearance. Refer to **STANDARD PROCEDURE**.
15. Repeat the previous steps for each connecting rod bearing being replaced.

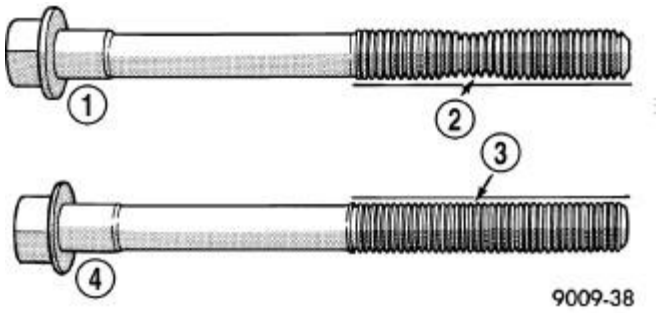

Fig. 432: Checking Cylinder Head Bolts For Stretching (Necking)
Courtesy of CHRYSLER GROUP, LLC

CAUTION: The main bearing cap bolts are tightened using a torque plus angle procedure. The bolts must be examined BEFORE reuse. If the threads are necked down the bolts must be replaced.

16. Check the main bearing cap bolts for necking by holding a scale or straight edge against the threads. If all the threads do not contact the scale (2) the bolt must be replaced.

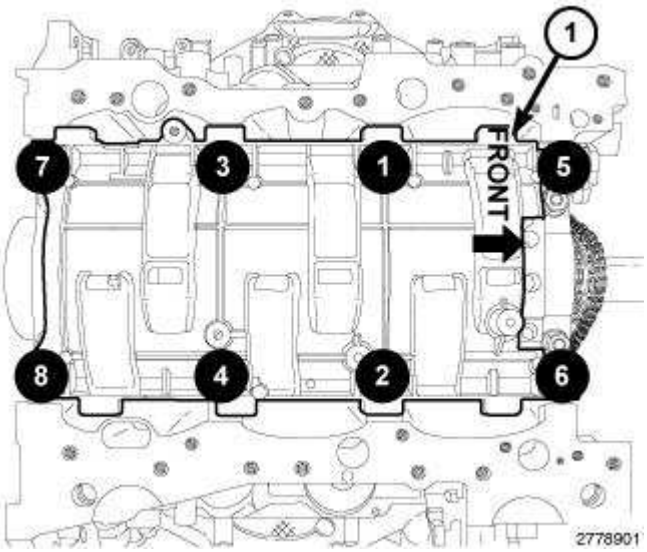

Fig. 433: Windage Tray With Main Bearing Cap Bolts Installation Sequence
Courtesy of CHRYSLER GROUP, LLC

17. Install the windage tray with eight main bearing cap bolts. Tighten the bolts in the sequence shown in illustration to 21 N.m (16 ft. lbs.) plus 90°.
18. Install the engine oil pump, oil pump pick-up and oil pan. Refer to **PUMP, ENGINE OIL, INSTALLATION** .
19. Install the spark plugs and ignition coils. Refer to **SPARK PLUG, INSTALLATION** .
20. If removed, install the oil filter and fill the engine crankcase with the proper oil to the correct level. Refer to **STANDARD PROCEDURE**.
21. Connect the negative battery cable and tighten nut to 5 N.m (45 in. lbs.).
22. Operate the engine until it reaches normal operating temperature.

BEARING(S), CRANKSHAFT, MAIN

STANDARD PROCEDURE

MAIN BEARING FITTING

NOTE: Crankshaft thrust washers are not selectable and are only available in a single thickness.

Bearing oil clearance can also be determined by using Plastigage or equivalent. Refer to **ENGINE BLOCK, STANDARD PROCEDURE**.

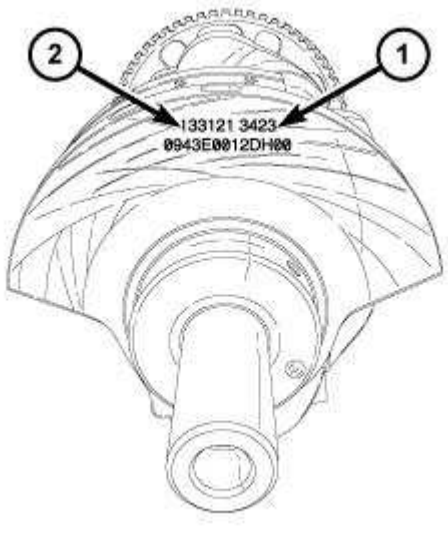

Fig. 434: Crankshaft Main Bearing Journal Diameter Grade Markings & Connecting Rod Bearing Journal Diameter Grade Markings
Courtesy of CHRYSLER GROUP, LLC

The upper and lower main bearings are "select fit" to achieve proper oil clearances. Crankshaft main bearing journal diameter grade markings (1) are stamped into the front crankshaft counterweight. These marks are read from left to right, corresponding with journal number 1, 2, 3, 4.

Crankshaft main bearing journal diameter grade markings correspond to specific journal diameters. The chart below identifies the five crankshaft grade markings and their associated journal diameters.

Crankshaft Marking	Journal Size mm (in.)
1	71.9870 - 71.9905 mm (2.8341 - 2.8343 in.)
2	71.9906 - 71.9941 mm (2.8343 - 2.8344 in.)
3	71.9942 - 71.9977 mm (2.8344 - 2.8345 in.)
4	71.9978 - 72.0013 mm (2.8346 - 2.8347 in.)
5	72.0014 - 72.0050 mm (2.8347 - 2.8348 in.)

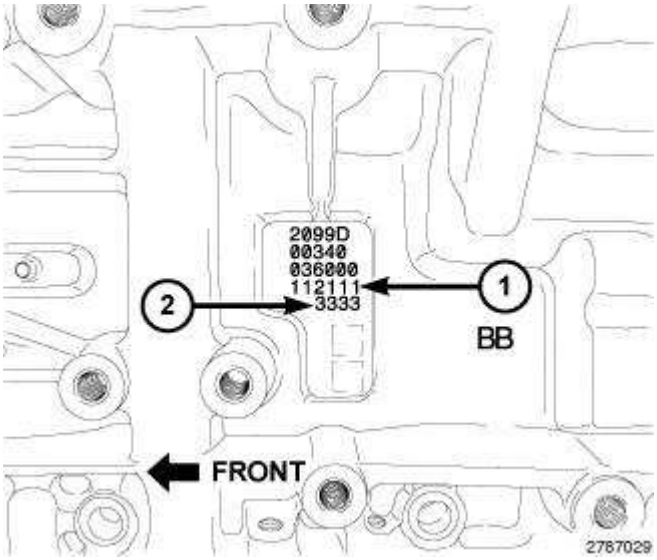

Fig. 435: Engine Block Cylinder Bore Diameter Grade Markings & Engine Block Main Bearing Journal Diameter Grade Markings
Courtesy of CHRYSLER GROUP, LLC

Engine block main bearing journal diameter grade markings (2) are stamped into the left side of the engine block. These marks are read from left to right, corresponding with journal number 1, 2, 3, 4.

Engine block main bearing journal grade markings correspond to specific journal diameters. The chart below identifies the five engine block grade markings and their associated journal diameters.

Engine Block Marking	Journal Size mm (in.)
1	77.0055 - 77.0090 mm (3.0317 - 3.0318 in.)
2	77.0019 - 77.0054 mm (3.0316 - 3.0317 in.)
3	76.9983 - 77.0018 mm (3.0314 - 3.0316 in.)
4	76.9947 - 76.9982 mm (3.0313 - 3.0314 in.)
5	76.9910 - 76.9946 mm (3.0311 - 3.0313 in.)

For upper and lower main bearing selection, obtain the grade identification marks from the crankshaft and engine block. Main bearings are available in five sizes. Upper and lower sizes can be mixed on a journal in order to achieve the desired oil clearance. The chart below identifies the five sizes available and how they should be selected based on crankshaft and engine block grade markings.

Engine Block Marking	Crankshaft Marking				
	1	**2**	**3**	**4**	**5**
1	1/1	1/2	2/2	2/3	3/3
2	1/2	2/2	2/3	3/3	3/4
3	2/2	2/3	3/3	3/4	4/4
4	2/3	3/3	3/4	4/4	4/5
5	3/3	3/4	4/4	4/5	5/5

UPPER/LOWER Main Bearings to Achieve 0.024 - 0.050 mm (0.0009 - 0.0020 in.) Oil Clearance

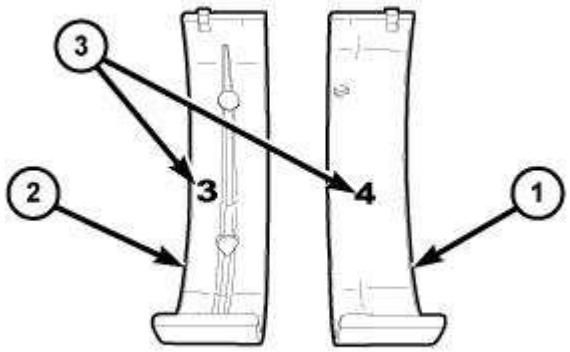

Fig. 436: Main Bearing Inserts
Courtesy of CHRYSLER GROUP, LLC

The upper main bearing shell (2) and lower main bearing shell (1) are marked with the bearing size (3) on the bearing lining surface. The upper and lower bearings are available in five different sizes and can be mixed on a journal in order to achieve the proper oil clearance.

Upper and lower main bearing shells are available in five sizes. The chart below identifies the five bearing sizes.

Bearing Marking	Size mm (in.)
1	2.4951 - 2.4987 mm (0.0982 - 0.0984 in.)
2	2.4915 - 2.4951 mm (0.0981 - 0.0982 in.)
3	2.4879 - 2.4915 mm (0.0979 - 0.0981 in.)
4	2.4843 - 2.4879 mm (0.0978 - 0.0979 in.)
5	2.4807 - 2.4843 mm (0.0977 - 0.0978 in.)

MAIN BEARING REPLACEMENT

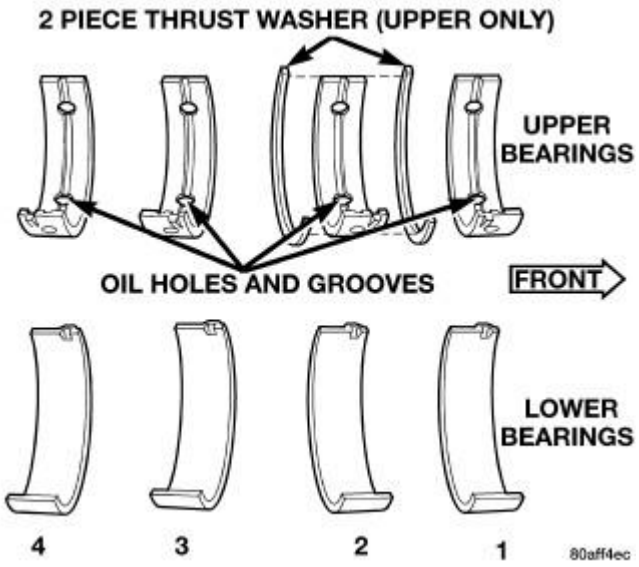

Fig. 437: Main Bearing Identification
Courtesy of CHRYSLER GROUP, LLC

The main bearings are serviced in-vehicle. They must be replaced one-at-a-time in order to properly support the crankshaft. The upper and lower main bearing shells are NOT interchangeable. The upper and lower main bearings are "select fit" to achieve proper oil clearances. Refer to **STANDARD PROCEDURE**.

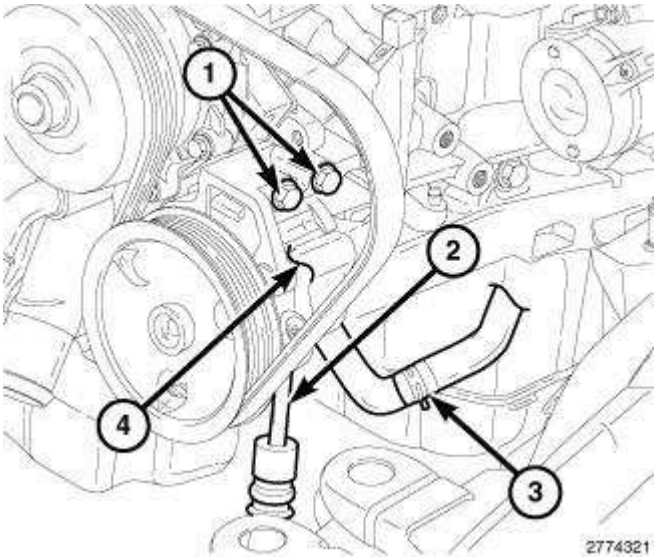

Fig. 438: Power Steering Pump, Hoses & Mounting Bolts
Courtesy of CHRYSLER GROUP, LLC

NOTE: Late production vehicles are equipped with Electro-Hydraulic Power Steering (EHPS) and do not have an engine mounted power steering pump.

1. Disconnect and isolate the negative battery cable.

2. If equipped with an engine mounted power steering pump, remove the serpentine drive belt. Refer to **BELT, SERPENTINE, REMOVAL** .

NOTE: Only two power steering pump mounting bolts are shown in illustration. Another bolt is on the lower end of the pump near the pulley.

3. Remove the three power steering pump mounting bolts (1) and reposition the power steering pump, if equipped.

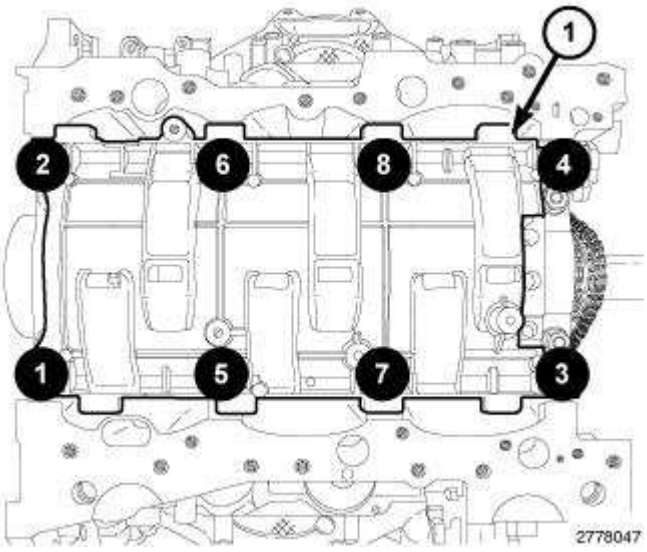

Fig. 439: Main Bearing Cap Bolts From Windage Tray Removal Sequence
Courtesy of CHRYSLER GROUP, LLC

4. Remove the oil pan, oil pump pick-up and engine oil pump. Refer to **PUMP, ENGINE OIL, REMOVAL** .
5. Remove the eight main bearing cap bolts from the windage tray in the sequence shown in illustration and remove the windage tray (1).

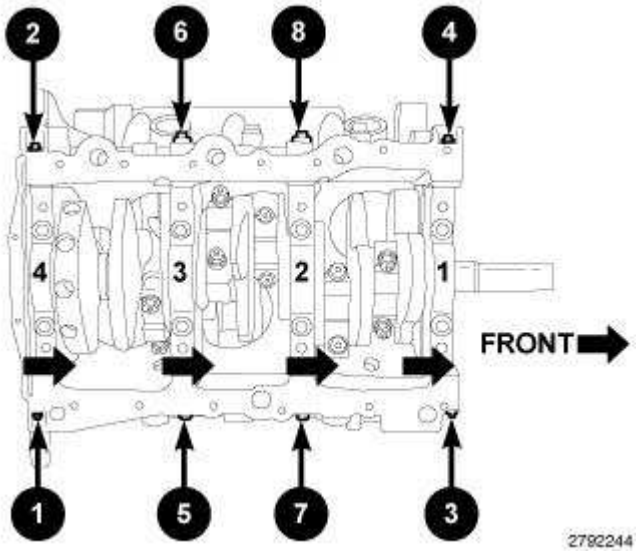

Fig. 440: Main Bearing Tie Bolts Removal Sequence
Courtesy of CHRYSLER GROUP, LLC

NOTE: Typical V6 engine configuration shown in illustration.

6. Remove the eight main bearing tie bolts in the sequence shown in illustration.

CAUTION: DO NOT use a number stamp or a punch to mark main bearing caps, as damage to main bearings could occur.

NOTE: Main bearing caps are not interchangeable and are marked to insure correct assembly.

7. Mark the main bearing cap positions using a permanent ink marker or a scribe tool.

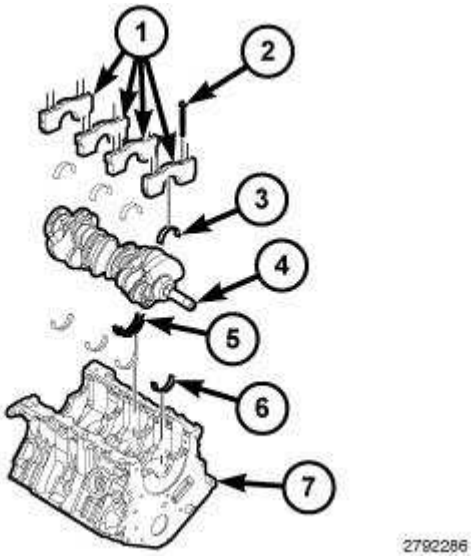

Fig. 441: Main Bearing Caps, Bolts, Crankshaft & Engine Block
Courtesy of CHRYSLER GROUP, LLC

NOTE: Typical V6 engine configuration shown in illustration.

CAUTION: Replace only one main bearing at a time while all other main bearing caps remain properly tightened. If all main bearing caps are removed, the weight of the unsupported crankshaft will damage the crankshaft oil seals.

NOTE: Replace the main bearings in the following order; 2, 3, 1, 4.

8. Remove the two cap bolts (2) and remove the main bearing cap (1).
9. When removing the No. 2 bearing cap, also remove the thrust washers (5).
10. Slide the upper main bearing half (6) out from between the crankshaft and the engine block.
11. If required, select fit new main bearings to the engine block. Refer to **STANDARD PROCEDURE**.
12. Lubricate the upper main bearing half (6) with clean engine oil and slide the bearing into position.

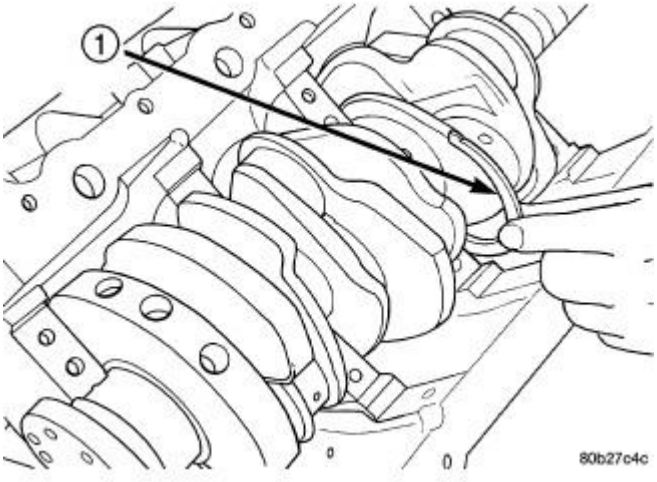

Fig. 442: Thrust Washer Installation
Courtesy of CHRYSLER GROUP, LLC

NOTE: Typical V6 engine configuration shown in illustration.

13. When installing thrust washers (1) at the No. 2 main bearing location, use the following procedure:
    a. Move the crankshaft forward to the limit of travel. Lubricate and install the front thrust washer (1) by rolling the washer onto the machined shelf between the No. 2 upper main bulk head and crankshaft thrust surface.

b. Move the crankshaft rearward to the limit of travel. Lubricate and install the rear thrust washer by rolling the washer onto the machined shelf between the No. 2 upper main bulk head and crankshaft thrust surface.

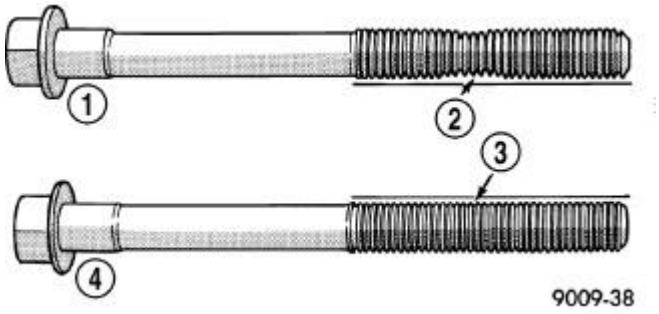

Fig. 443: Checking Cylinder Head Bolts For Stretching (Necking)
Courtesy of CHRYSLER GROUP, LLC

CAUTION: The main bearing cap bolts are tightened using a torque plus angle procedure. The bolts must be examined BEFORE reuse. If the threads are necked down the bolts must be replaced.

14. Check the main bearing cap bolts for necking by holding a scale or straight edge against the threads. If all the threads do not contact the scale (2) the bolt must be replaced.

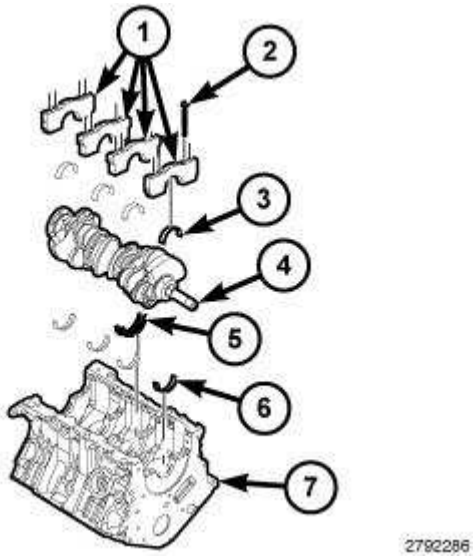

Fig. 444: Main Bearing Caps, Bolts, Crankshaft & Engine Block
Courtesy of CHRYSLER GROUP, LLC

NOTE: Typical V6 engine configuration shown in illustration.

15. Lubricate and install the lower bearing half (3) onto the main cap (1).
16. Install the main bearing cap (1) with two inner main bearing cap bolts (2) tightened to 20 N.m

(15 ft. lbs.) plus 90°.

17. Repeat the previous steps for main bearings 3, 1 and 4.
18. Measure crankshaft end play. Refer to **CRANKSHAFT, STANDARD PROCEDURE**.

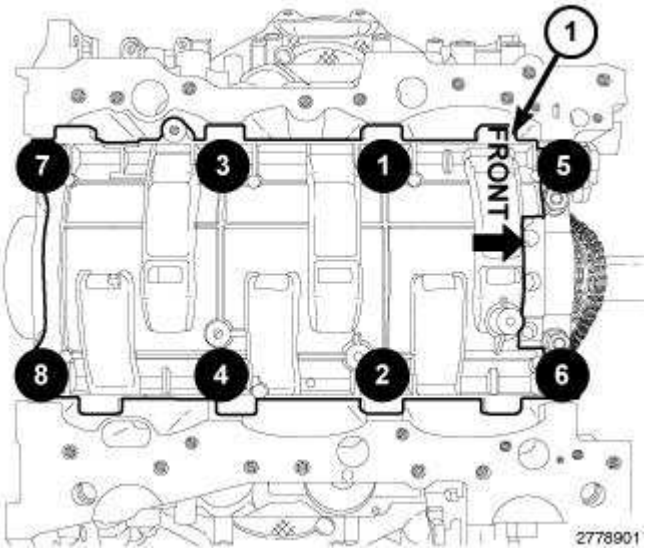

Fig. 445: Windage Tray With Main Bearing Cap Bolts Installation Sequence
Courtesy of CHRYSLER GROUP, LLC

19. Install the windage tray with eight main bearing cap bolts. Tighten the bolts in the sequence shown in illustration to 21 N.m (16 ft. lbs.) plus 90°.

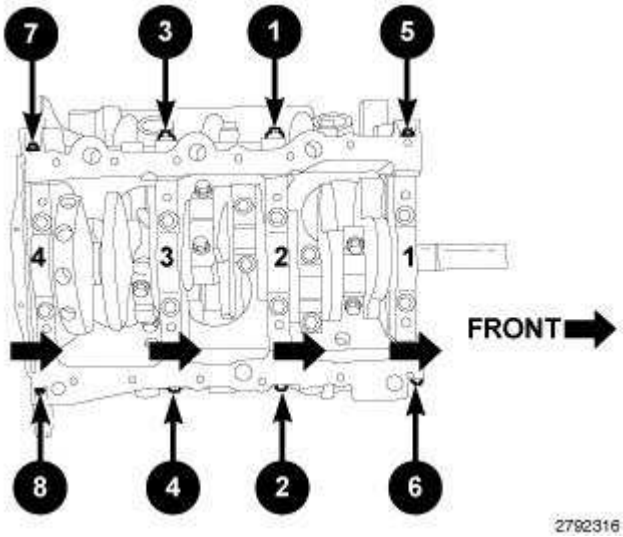

Fig. 446: Main Bearing Tie Bolts Installation Sequence
Courtesy of CHRYSLER GROUP, LLC

NOTE: Typical V6 engine configuration shown in illustration.

20. Install the eight main bearing tie bolts. Tighten the bolts in the sequence shown in illustration to 28 N.m (21 ft. lbs.).
21. Install the engine oil pump, oil pump pick-up and oil pan. Refer to **PUMP, ENGINE OIL, INSTALLATION** .

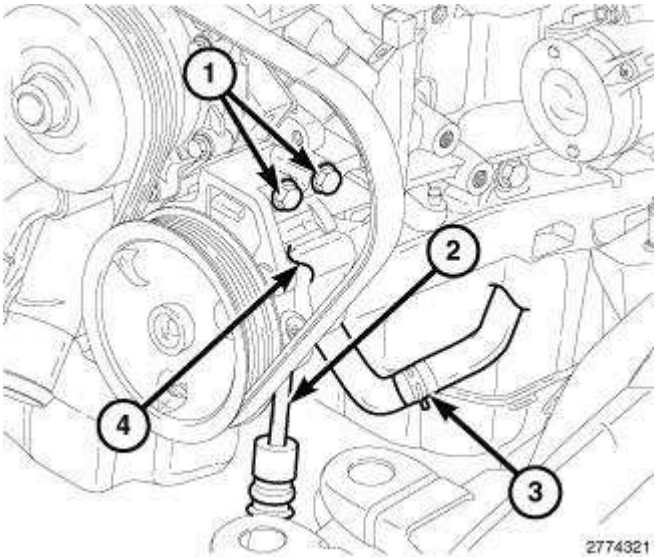

Fig. 447: Power Steering Pump, Hoses & Mounting Bolts
Courtesy of CHRYSLER GROUP, LLC

NOTE: Only two power steering pump mounting bolts are shown in illustration. Another bolt is on the lower end of the pump near the pulley.

22. If removed, position the power steering pump (4) to the engine block. Install the three pump mounting bolts (1) and tighten to 25 N.m (18 ft. lbs.).
23. If removed, install the accessory drive belt. Refer to **BELT, SERPENTINE, INSTALLATION** .
24. Install the spark plugs and ignition coils. Refer to **SPARK PLUG, INSTALLATION** .
25. If removed, install the oil filter and fill the engine crankcase with the proper oil to the correct level. Refer to **STANDARD PROCEDURE**.
26. Connect the negative battery cable and tighten nut to 5 N.m (45 in. lbs.).
27. Operate the engine until it reaches normal operating temperature.

CRANKSHAFT

DESCRIPTION

DESCRIPTION

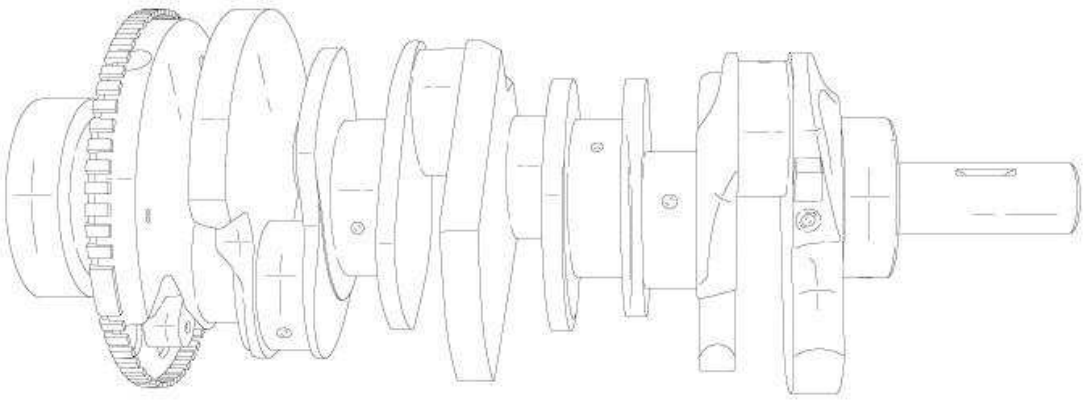

Fig. 448: Crankshaft
Courtesy of CHRYSLER GROUP, LLC

The crankshaft is a cast design and is constructed using ductile iron. The crankshaft is a three throw split pin design with counterweights for balancing purposes. The main journals are crossed drilled for rod bearing lubrication. The crankshaft is supported by four select fit main bearings with number 2 serving as the thrust washer location. The rear counterweight has provisions for crankshaft position sensor target wheel mounting. Both the front and rear seals are a single piece design and are mounted to the timing cover and cylinder block.

STANDARD PROCEDURE

STANDARD PROCEDURE - END PLAY

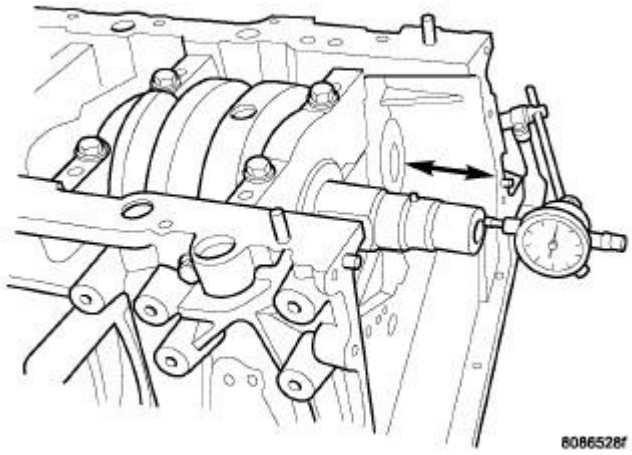

Fig. 449: Checking Crankshaft End Play
Courtesy of CHRYSLER GROUP, LLC

NOTE: Typical V6 engine shown in illustration.

1. Mount Dial Indicator Set (special tool #C-3339A, Set, Dial Indicator) to a stationary point at the front of the engine. Locate the probe perpendicular against the nose of the crankshaft.
2. Move the crankshaft all the way to the rear of its travel.
3. Zero the dial indicator.
4. Move the crankshaft forward to the limit of travel and read the dial indicator. Compare the measured end play to the specification. Refer to **SPECIFICATIONS**.

NOTE: Crankshaft thrust washers are not selectable and are only available in a single thickness.

REMOVAL

REMOVAL

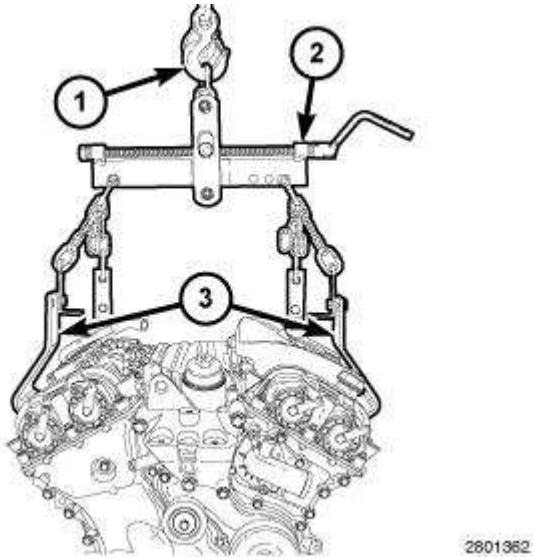

Fig. 450: Lifting Sling, Engine Lifting Brackets & Engine Hoist
Courtesy of CHRYSLER GROUP, LLC

NOTE: To remove the crankshaft from the engine, the engine must be removed from the vehicle.

1. Remove the engine. Refer to **REMOVAL** .

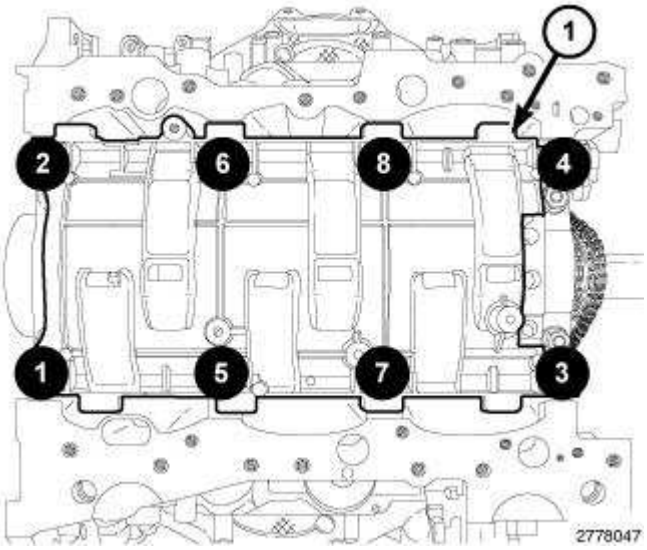

Fig. 451: Main Bearing Cap Bolts From Windage Tray Removal Sequence
Courtesy of CHRYSLER GROUP, LLC

2. Remove the cylinder head covers, spark plugs, upper oil pan, engine timing cover, timing chain and sprockets. Refer to **CHAIN AND SPROCKETS, TIMING, REMOVAL** .
3. Remove the flexplate and the rear crankshaft oil seal. Refer to **SEAL, CRANKSHAFT OIL, REAR, REMOVAL**.

4. Remove the oil pump pick-up and engine oil pump. Refer to **PUMP, ENGINE OIL, REMOVAL** .
5. Remove the eight main bearing cap bolts from the windage tray in the sequence shown in illustration and remove the windage tray (1).

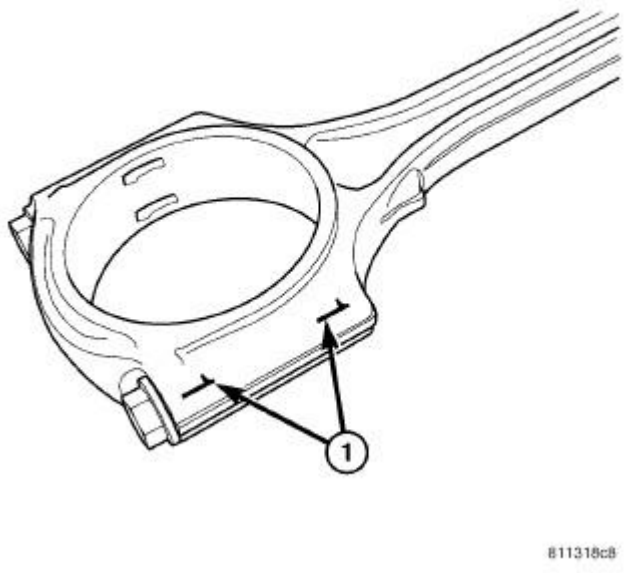

Fig. 452: Connecting Rod To Cylinder Identification
Courtesy of CHRYSLER GROUP, LLC

CAUTION: DO NOT use a number stamp or a punch to mark connecting rods or caps, as damage to connecting rods could occur

NOTE: Connecting rods and bearing caps are not interchangeable and should be marked before removing to ensure correct reassembly.

6. Mark connecting rod and bearing cap positions (1) using a permanent ink marker or scribe tool.

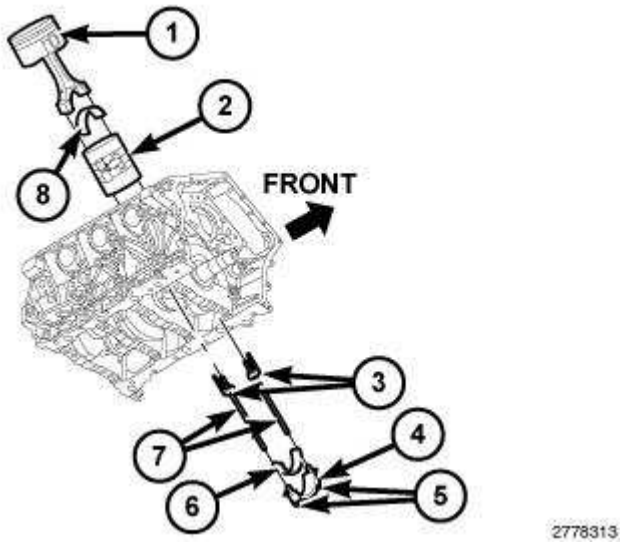

Fig. 453: Piston, Connecting Rod Cap, Bolts, Plastic Guide Plates & Guide Pins
Courtesy of CHRYSLER GROUP, LLC

NOTE: Typical V6 engine configuration shown in illustration.

CAUTION: Care must be taken not to damage the fractured rod and cap joint face surfaces, as engine damage may occur.

7. Remove the connecting rod cap bolts (5) and the connecting rod caps (4). Discard the cap bolts.

CAUTION: Care must be taken not to nick crankshaft journals, as engine damage may occur.

8. Remove the plastic guide plates (3) from the Guide Pins (special tool #8189, Guide Pins) (7) and install the Guide Pins to the connecting rod.

CAUTION: Avoid contact with the piston oil cooler jet(s). Positioning of the oil cooler jet(s) is critical for proper engine operation.

9. Push the connecting rod and piston into the cylinder until the connecting rod is clear of the crankshaft journal. Remove the guide pins. Repeat this procedure at each cylinder until all of the connecting rods are clear of the crankshaft.

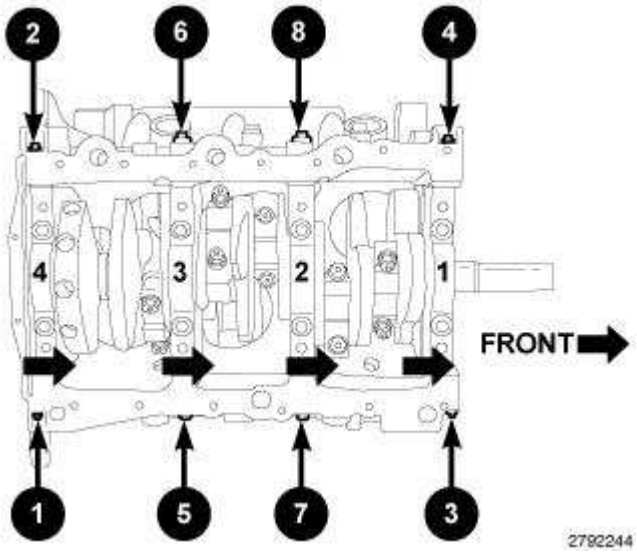

Fig. 454: Main Bearing Tie Bolts Removal Sequence
Courtesy of CHRYSLER GROUP, LLC

NOTE: Typical V6 engine configuration shown in illustration.

Remove the main bearing cross bolts in the sequence shown in illustration.

CAUTION: DO NOT use a number stamp or a punch to mark main bearing caps, as damage to main bearings could occur.

NOTE: Main bearing caps are not interchangeable and are marked to insure correct assembly.

10. Mark the main bearing cap positions using a permanent ink marker or a scribe tool.

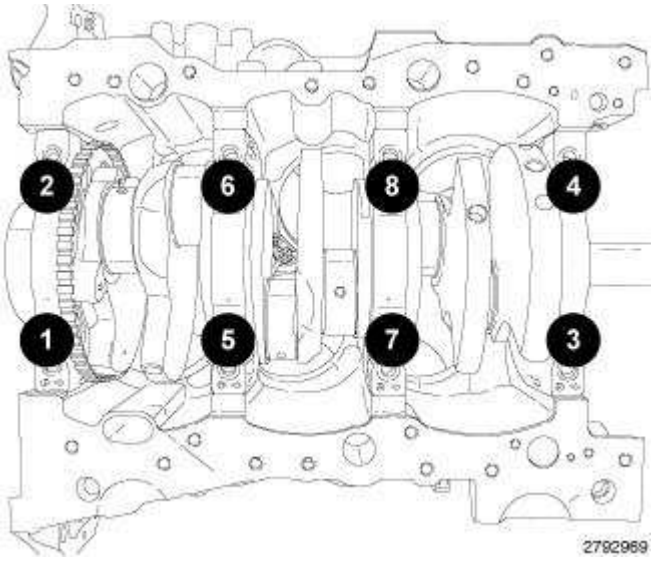

Fig. 455: Main Bearing Cap Bolts Removal Sequence
Courtesy of CHRYSLER GROUP, LLC

11. Remove the eight main bearing cap bolts in the sequence shown in illustration and remove the main bearing caps.

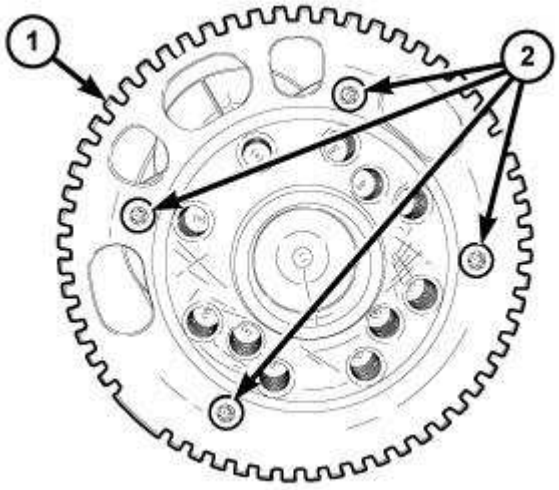

2792895

Fig. 456: Target Wheel & Bolts
Courtesy of CHRYSLER GROUP, LLC

CAUTION: Do not rest the crankshaft on the target wheel (1). Damaged or bent target wheel teeth will destroy the target wheels ability to correctly relay crankshaft position to the crankshaft position sensor.

12. Remove the crankshaft from the engine block.
13. If required, remove the four bolts (2) and the target wheel (1). Discard the four bolts.

INSPECTION

INSPECTION

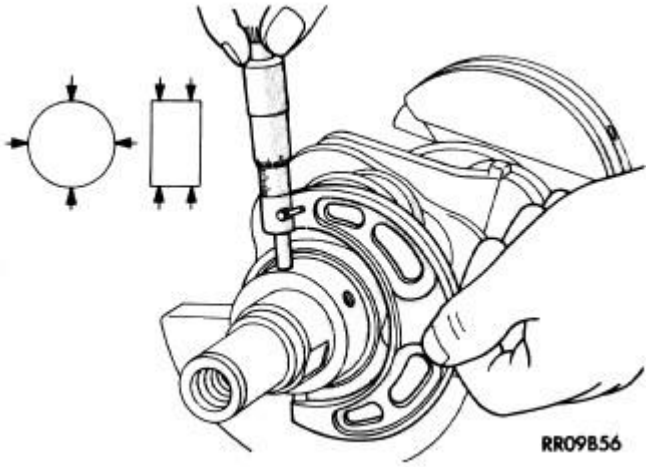

Fig. 457: Measuring Crankshaft Journal
Courtesy of CHRYSLER GROUP, LLC

NOTE: Typical crankshaft journal measurements shown in illustration.

1. Clean the oil off the bearing journals.
2. Determine the maximum diameter of the journals with a micrometer. Measure at two locations 90° apart at each end of the journals.
3. Compare the measured rod journal diameter to the crankshaft connecting rod bearing journal diameter grade marking chart Select the bearing size that corresponds to the crankshaft markings for each rod bearing journal that will provide the proper oil clearance. Refer to **BEARING(S), CONNECTING ROD, STANDARD PROCEDURE**.
4. Compare the measured main bearing journal diameter to the crankshaft main bearing journal diameter grade marking chart Obtain the main bearing journal grade identification marks from the engine block and select the upper and lower main bearing sizes that will provide the proper oil clearance. Refer to **STANDARD PROCEDURE**.
5. For connecting rod journals, verify that the maximum taper and maximum out of round are within specifications. Refer to **SPECIFICATIONS**.
6. For main bearing journals, verify that the maximum taper and maximum out of round are within specifications. Refer to **SPECIFICATIONS**.

INSTALLATION

INSTALLATION

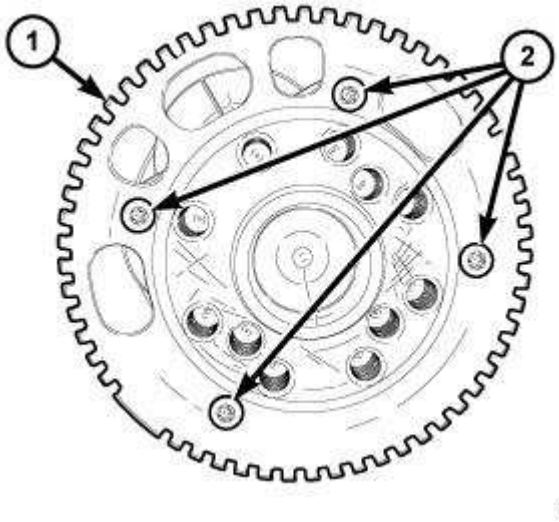

Fig. 458: Target Wheel & Bolts
Courtesy of CHRYSLER GROUP, LLC

1. If required, select and fit new crankshaft main bearings to the engine block. Refer to **STANDARD PROCEDURE**.
2. If required, select and fit new bearings to the connecting rod. Refer to **BEARING(S), CONNECTING ROD, STANDARD PROCEDURE**.
3. If removed, install the target wheel (1) to the crankshaft with four new bolts (2). Ensure the threaded holes in the crankshaft are free of residual thread lock adhesive. Tighten the bolts to 10 N.m (89 in. lbs.).

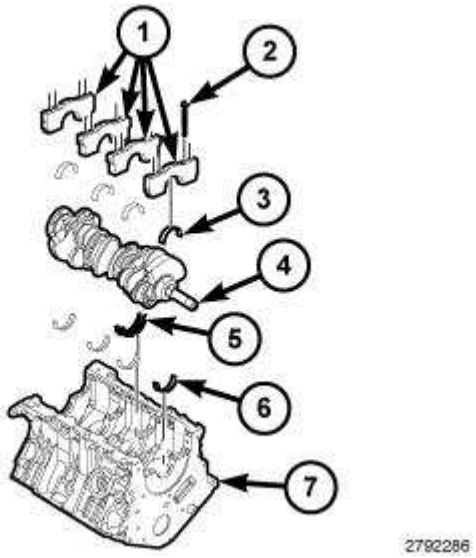

Fig. 459: Main Bearing Caps, Bolts, Crankshaft & Engine Block
Courtesy of CHRYSLER GROUP, LLC

NOTE: Typical V6 engine configuration shown in illustration.

4. If removed, lubricate and install the upper main bearing halves (6) into the engine block (7).

CAUTION: When installing the crankshaft, use care not to damage bearing surfaces on the crankshaft.

5. Install the crankshaft (4) into the engine block (7).

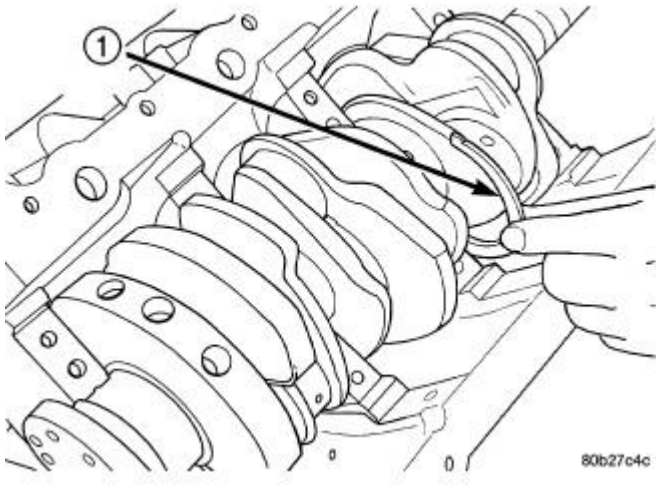

Fig. 460: Thrust Washer Installation
Courtesy of CHRYSLER GROUP, LLC

NOTE: Typical V6 engine configuration shown in illustration.

6. Installing thrust washers (1) at the No. 2 main bearing location, using the following procedure:
   a. Move the crankshaft forward to the limit of travel. Lubricate and install the front thrust washer (1) by rolling the washer onto the machined shelf between the No. 2 upper main bulk head and crankshaft thrust surface.
   b. Move the crankshaft rearward to the limit of travel. Lubricate and install the rear thrust washer by rolling the washer onto the machined shelf between the No. 2 upper main bulk head and crankshaft thrust surface.

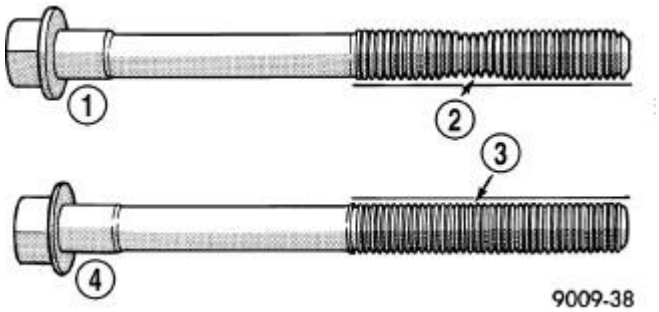

Fig. 461: Checking Cylinder Head Bolts For Stretching (Necking)
Courtesy of CHRYSLER GROUP, LLC

CAUTION: The main bearing cap bolts are tightened using a torque plus angle procedure. The bolts must be examined BEFORE reuse. If the threads are necked down the bolts must be replaced.

7. Check the main bearing cap bolts for necking by holding a scale or straight edge against the threads. If all the threads do not contact the scale (2) the bolt must be replaced.

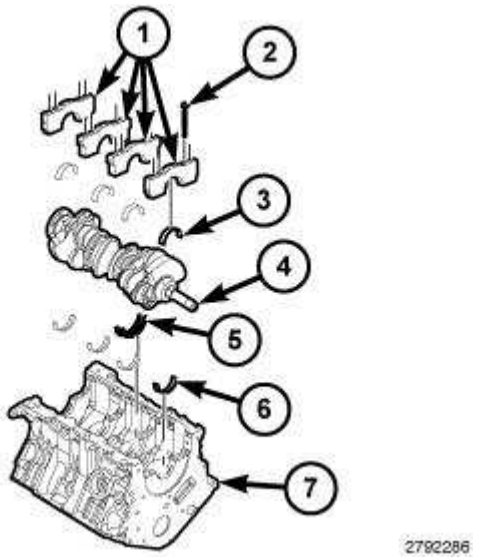

Fig. 462: Main Bearing Caps, Bolts, Crankshaft & Engine Block
Courtesy of CHRYSLER GROUP, LLC

NOTE: Typical V6 engine configuration shown in illustration.

8. If removed, lubricate and install the lower main bearing halves (3) onto the main caps (1).
9. Install the main bearing caps (1) with two inner main bearing cap bolts (2).

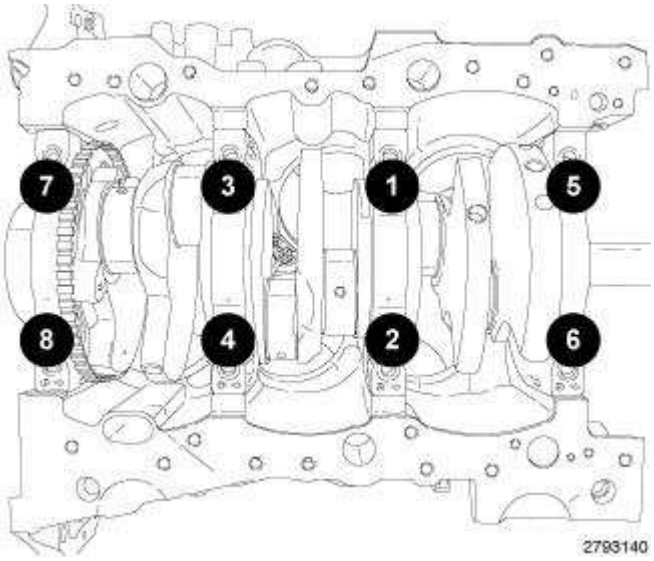

Fig. 463: Inner Main Bearing Cap Bolts Tightening Sequence
Courtesy of CHRYSLER GROUP, LLC

10. Tighten the inner main bearing cap bolts in the sequence shown in illustration to 20 N.m (15 ft. lbs.) plus 90°.
11. Measure crankshaft end play. Refer to **CRANKSHAFT, STANDARD PROCEDURE**.

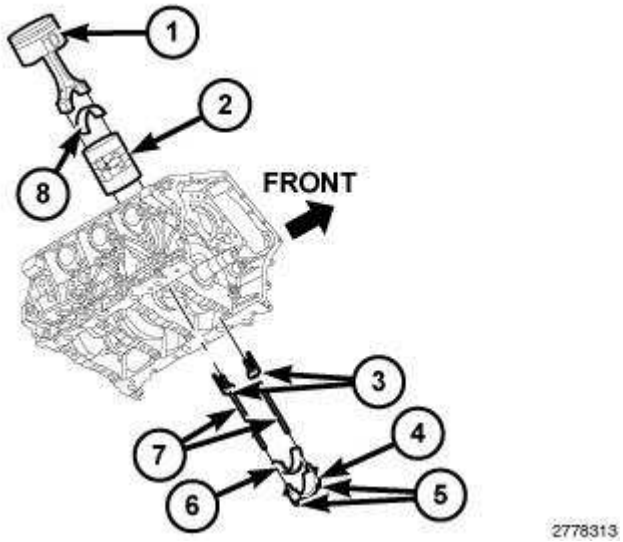

Fig. 464: Piston, Connecting Rod Cap, Bolts, Plastic Guide Plates & Guide Pins
Courtesy of CHRYSLER GROUP, LLC

NOTE: Typical V6 engine configuration shown in illustration.

12. If removed, install the bearing shell (8) on the connecting rod with the tang inserted into the machined groove in the rod. Lubricate the bearing surface with clean engine oil.

CAUTION: Care must be taken not to nick crankshaft journals, as engine damage may occur.

13. Remove the plastic guide plates (3) from the Guide Pins (special tool #8189, Guide Pins) (7) and install the Guide Pins to the connecting rod.

CAUTION: Avoid contact with the piston oil cooler jet(s). Positioning of the oil cooler jet(s) is critical for proper engine operation.

14. Pull the connecting rod and piston toward the crankshaft until the connecting rod is seated on the crankshaft journal. Remove the guide pins.

CAUTION: The connecting rod bolts must not be reused. Always replace the connecting rod bolts whenever they are loosened or removed.

15. If removed, install the bearing shell (6) on the connecting rod cap (4) with the tang inserted into the machined groove in the cap. Lubricate the bearing surface with clean engine oil.

NOTE: Do not lubricate the threads of the connecting rod cap bolts (5).

16. Install the connecting rod cap and bearing with the tang on the same side as the rod. Tighten the **NEW** connecting rod cap bolts (5) to 20 N.m (15 ft. lbs.) plus 90°.
17. If required, check the connecting rod side clearance. Refer to **STANDARD PROCEDURE**.
18. Repeat the previous steps for the remaining connecting rods.

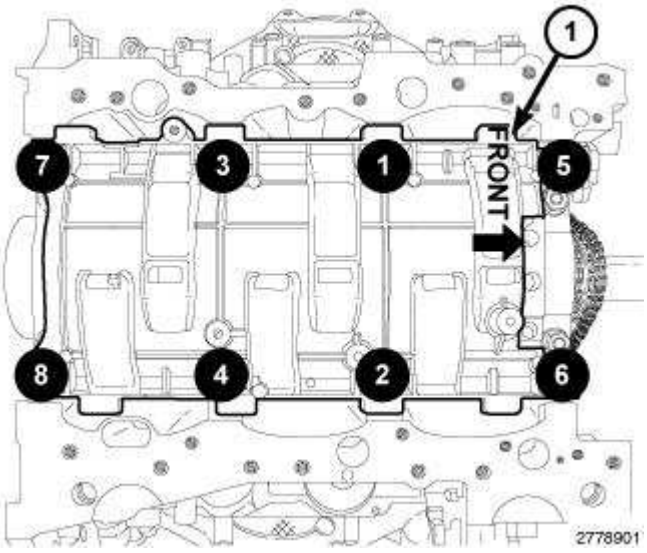

Fig. 465: Windage Tray With Main Bearing Cap Bolts Installation Sequence
Courtesy of CHRYSLER GROUP, LLC

19. Install the windage tray (1) with eight main bearing cap bolts. Tighten the bolts in the sequence shown in illustration to 21 N.m (16 ft. lbs.) plus 90°.

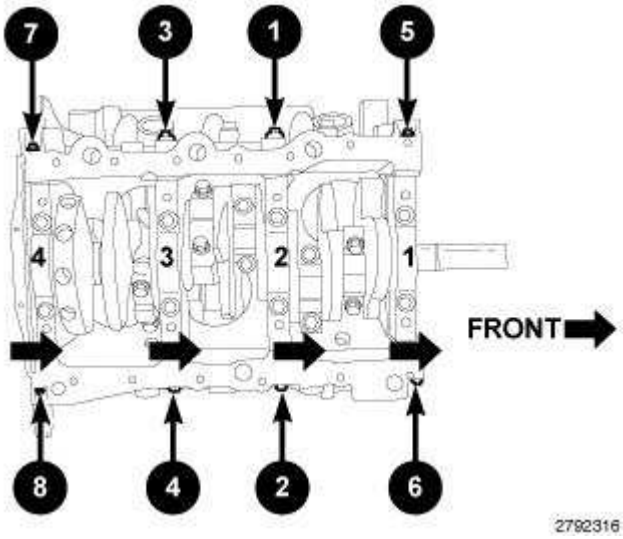

Fig. 466: Main Bearing Tie Bolts Installation Sequence
Courtesy of CHRYSLER GROUP, LLC

NOTE: Typical V6 engine configuration shown in illustration.

20. Install the eight main bearing tie bolts. Tighten the bolts in the sequence shown in illustration to 28 N.m (21 ft. lbs.).
21. Install the engine oil pump and oil pump pick-up. Refer to **PUMP, ENGINE OIL, INSTALLATION** .
22. Install the rear crankshaft oil seal and flexplate. Refer to **SEAL, CRANKSHAFT OIL, REAR, INSTALLATION**.
23. Install the timing chain and sprockets, engine timing cover, oil pans, spark plugs and cylinder head covers. Refer to **CHAIN AND SPROCKETS, TIMING, INSTALLATION** .

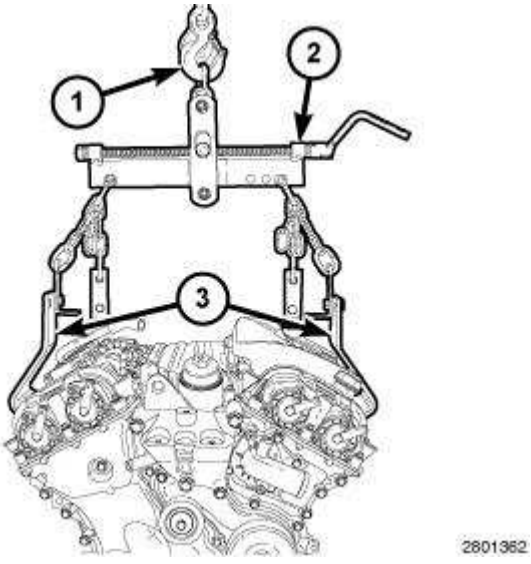

Fig. 467: Lifting Sling, Engine Lifting Brackets & Engine Hoist

Courtesy of CHRYSLER GROUP, LLC

24. Install the engine. Refer to **INSTALLATION** .
25. If removed, install the oil filter and fill the engine crankcase with the proper oil to the correct level. Refer to **STANDARD PROCEDURE**.
26. Connect the negative battery cable and tighten nut to 5 N.m (45 in. lbs.).
27. Fill the cooling system. Refer to **STANDARD PROCEDURE** .
28. Operate the engine until it reaches normal operating temperature. Check cooling system for correct fluid level. Refer to **STANDARD PROCEDURE** .

NOTE: The Cam/Crank Variation Relearn procedure must be performed using the scan tool anytime there has been a repair/replacement made to a powertrain system, for example: flywheel, valvetrain, camshaft and/or crankshaft sensors or components.

DAMPER, VIBRATION

REMOVAL

REMOVAL

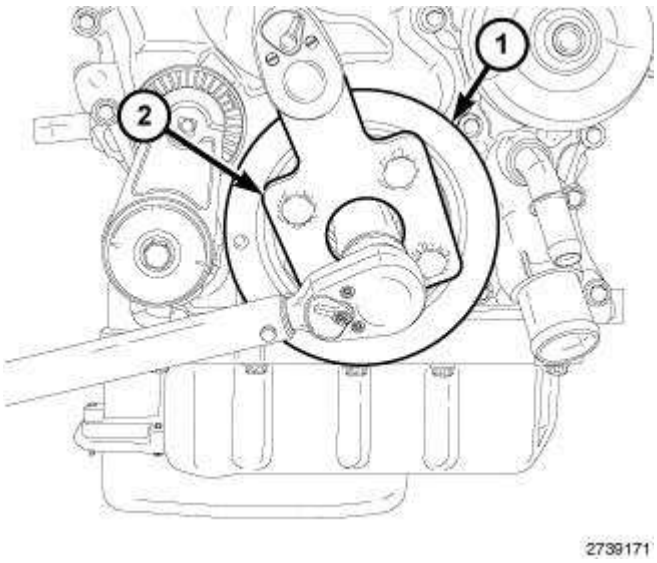

Fig. 468: Crankshaft Vibration Damper & Vibration Damper Holder
Courtesy of CHRYSLER GROUP, LLC

1. Remove the accessory drive belt. Refer to **BELT, SERPENTINE, REMOVAL** .

NOTE: A force greater than 350 N.m (260 ft. lbs.) may be required to remove the crankshaft vibration damper bolt.

2. Hold the crankshaft vibration damper (1) with Vibration Damper Holder (special tool #10198,

Holder, Vibration Damper) (2) and remove the crankshaft vibration damper bolt.

3. Pull the crankshaft vibration damper (1) off of the crankshaft.

INSTALLATION

INSTALLATION

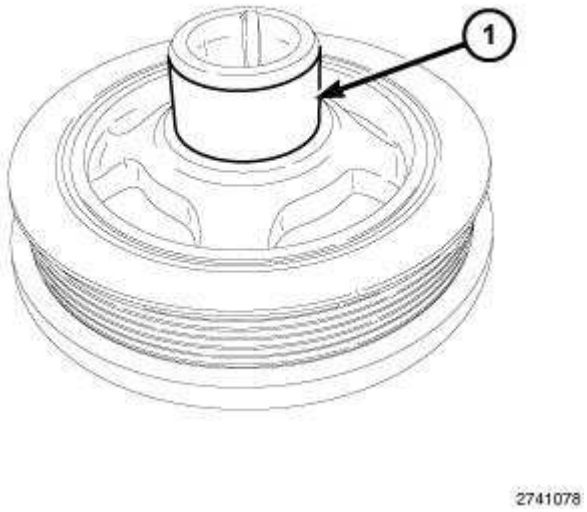

Fig. 469: Front Crankshaft Seal Surface
Courtesy of CHRYSLER GROUP, LLC

1. Apply a light coating of engine oil to the front crankshaft seal surface (1).

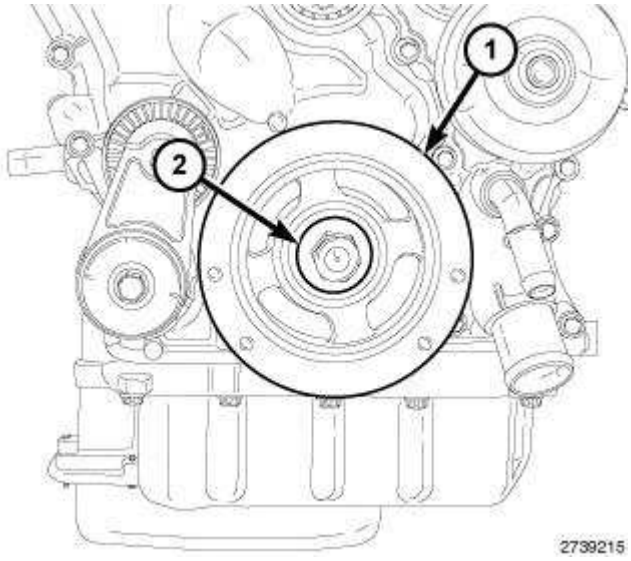

Fig. 470: Crankshaft Vibration Damper & Bolt
Courtesy of CHRYSLER GROUP, LLC

2. Align the crankshaft vibration damper (1) to the flywheel key on the crankshaft and install the

damper. Seat the damper on the crankshaft sprocket.

3. Install and hand tighten the crankshaft vibration damper bolt (2).

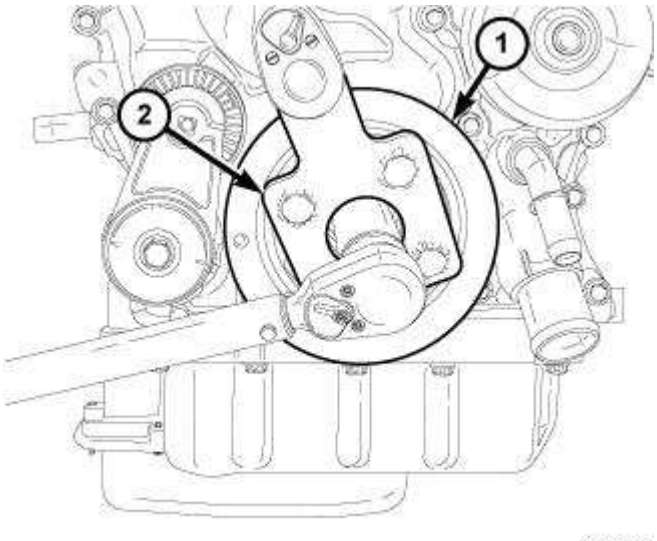

Fig. 471: Crankshaft Vibration Damper & Vibration Damper Holder
Courtesy of CHRYSLER GROUP, LLC

4. Hold the crankshaft vibration damper (1) with Vibration Damper Holder (special tool #10198, Holder, Vibration Damper) (2) and tighten the crankshaft vibration damper bolt to 260 N.m + 105° (192 ft. lbs. + 105°).
5. Install the accessory drive belt. Refer to **BELT, SERPENTINE, INSTALLATION** .

FLEXPLATE

REMOVAL

REMOVAL

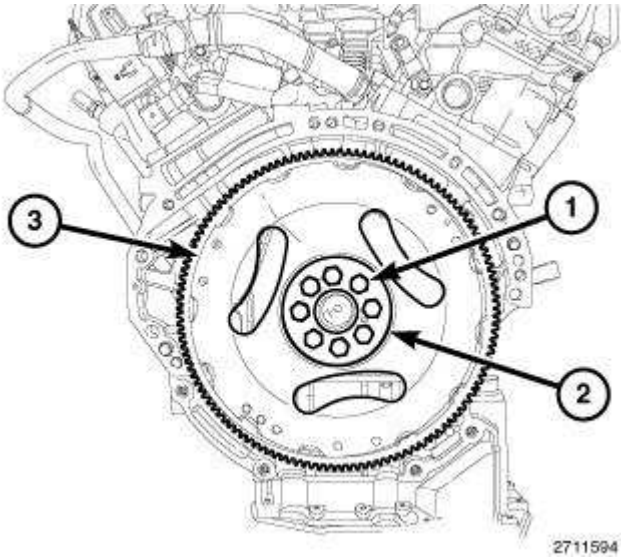

Fig. 472: Flexplate, Spacer Plate & Bolts
Courtesy of CHRYSLER GROUP, LLC

1. Remove the transmission.
2. Remove the bolts (1) and the spacer plate (2).
3. Remove the flexplate (3).

INSTALLATION

INSTALLATION

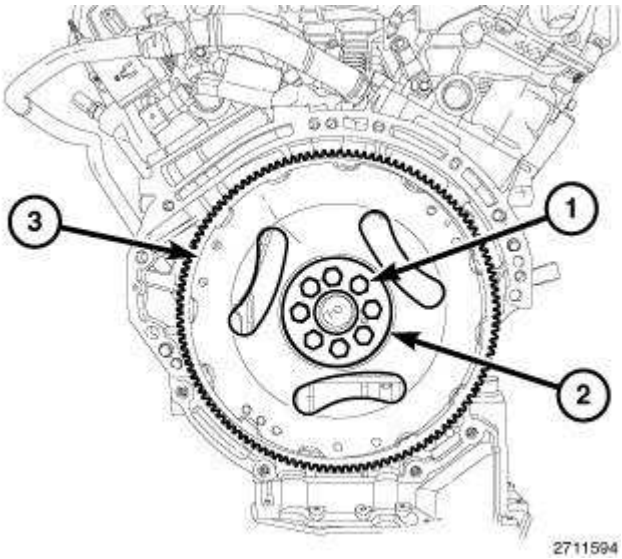

Fig. 473: Flexplate, Spacer Plate & Bolts
Courtesy of CHRYSLER GROUP, LLC

1. Position the flexplate (3) onto the crankshaft.
2. Install the spacer (2) and the bolts (1) hand tight.

3. Tighten the flexplate retaining bolts (1) to 95 N.m (70 ft. lbs.) in a criss-cross pattern.
4. Install the transmission.

RING(S), PISTON

STANDARD PROCEDURE

STANDARD PROCEDURE - PISTON RING FITTING

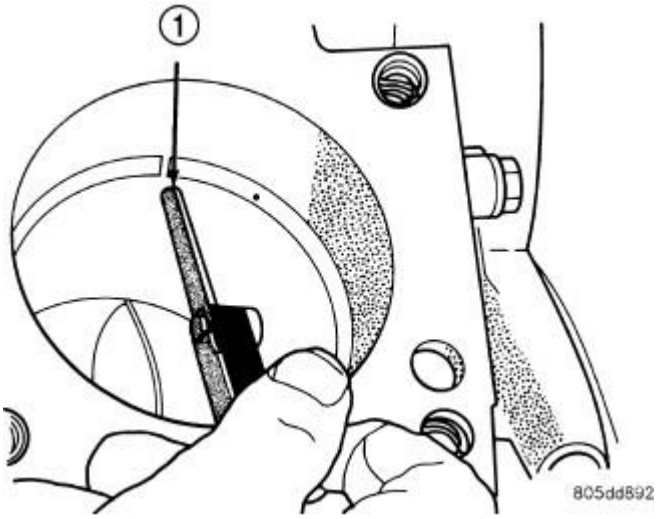

Fig. 474: Measuring Piston Ring End Gap
Courtesy of CHRYSLER GROUP, LLC

1. Wipe the cylinder bore clean.
2. Using a piston, to ensure that the ring is squared in the cylinder bore, slide the ring downward into the cylinder to a position 12 mm (0.50 in.) from the bottom of the cylinder bore.
3. Using a feeler gauge (1), check the ring end gap. Replace any rings not within specification.

Ring Position	Ring End Gap
No. 1 (top) Ring	0.25 - 0.40 mm (0.010 - 0.016 in.)
No. 2 (center) Ring	0.30 - 0.45 mm (0.012 - 0.018 in.)
Oil Control Ring (Steel Rail)	0.15 - 0.66 mm (0.006-0.26 in.)

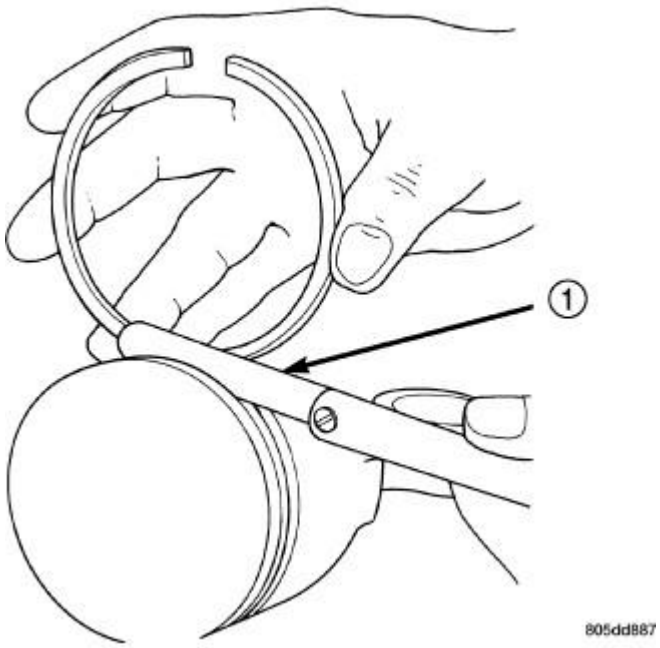

Fig. 475: Checking Piston Ring Grooves Clearances
Courtesy of CHRYSLER GROUP, LLC

4. Clean the piston ring grooves. Remove any nicks or burrs.
5. Measure the ring side clearance as shown in illustration. Make sure the feeler gauge (1) fits snugly between the ring land and the ring. Replace any ring not within specification.

Ring Position	Ring Side Clearance
No. 1 (top) Ring	0.025 - 0.033 mm (0.0010 - 0.0013 in.)
No. 2 (center) Ring	0.030 - 0.078 mm (0.0012 - 0.0031 in.)
Oil Control Ring (Steel Rails)	0.007 - 0.173 mm (.0003 - 0.0068 in.)

REMOVAL

REMOVAL

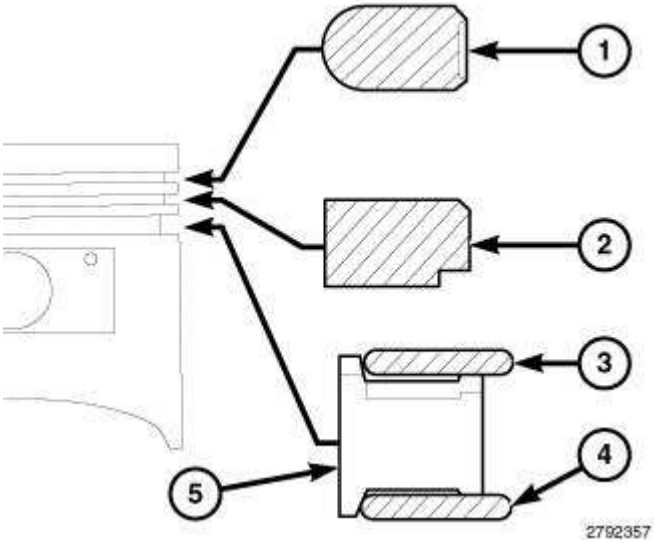

Fig. 476: Piston Ring Removal/Installation Sequence
Courtesy of CHRYSLER GROUP, LLC

NOTE: Typical piston shown in illustration.

1. Remove the piston and connecting rod(s). Refer to **ROD, PISTON AND CONNECTING, REMOVAL** .

CAUTION: To avoid damage to the piston rings, they must be removed in the following order:

- **No. 1 (upper) piston ring (1)**
- **No. 2 (intermediate) piston ring (2)**
- **Oil ring upper side rail (3)**
- **Oil ring lower side rail (4)**
- **Oil ring expander (5)**

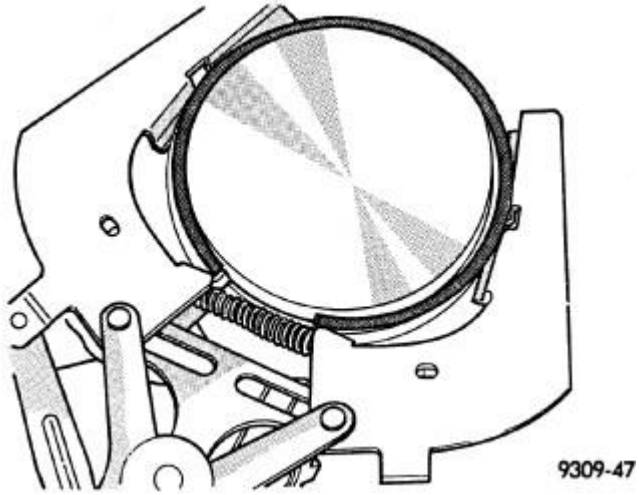

Fig. 477: Removing/Installing Upper & Intermediate Rings
Courtesy of CHRYSLER GROUP, LLC

NOTE: Typical piston shown in illustration.

2. Remove the No. 1 (upper) piston ring using a ring expander tool.
3. Remove the No. 2 (intermediate) piston ring using a ring expander tool.

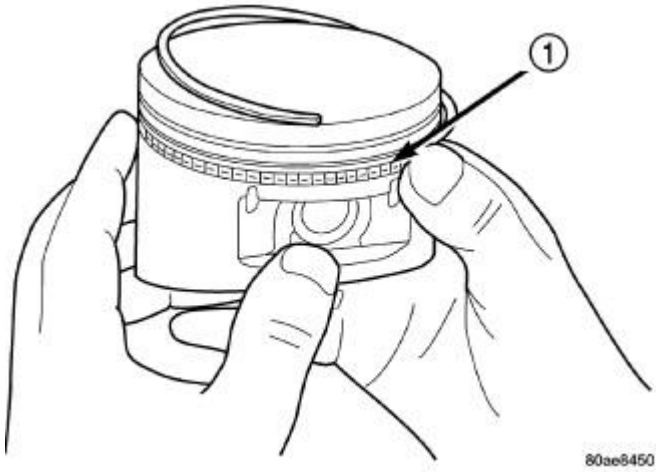

Fig. 478: Removing/Installing Piston Ring Side Rail
Courtesy of CHRYSLER GROUP, LLC

NOTE: Typical piston shown in illustration. Do not use a piston ring expander to remove the oil ring side rails.

4. Remove the oil ring upper side rail.
5. Remove the oil ring lower side rail.
6. Remove the oil ring expander (1).

INSTALLATION

INSTALLATION

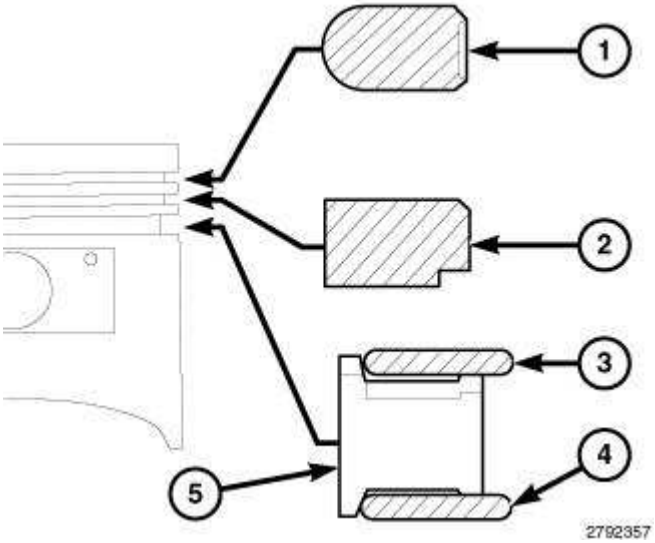

Fig. 479: Piston Ring Removal/Installation Sequence
Courtesy of CHRYSLER GROUP, LLC

NOTE: Typical piston shown in illustration.

1. If required, fit new rings to the piston. Refer to **STANDARD PROCEDURE**.

CAUTION: To avoid damage to the piston rings, they must be installed in the following order:

- **Oil ring expander (5)**
- **Oil ring lower side rail (4)**
- **Oil ring upper side rail (3)**
- **No. 2 (intermediate) piston ring (2)**
- **No. 1 (upper) piston ring (1)**

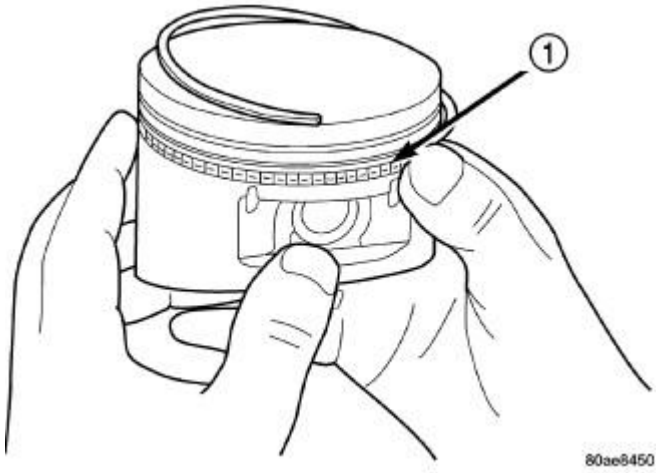

Fig. 480: Removing/Installing Piston Ring Side Rail
Courtesy of CHRYSLER GROUP, LLC

NOTE: Typical piston shown in illustration. Do not use a piston ring expander to install the oil ring side rails.

2. Install the oil ring expander (1).
3. Install the oil ring lower side rail by placing one end between the piston ring groove and the oil ring expander. Hold this end firmly and press down the portion to be installed until the side rail is in position.
4. Install the oil ring upper side rail in the same manner as the lower side rail.

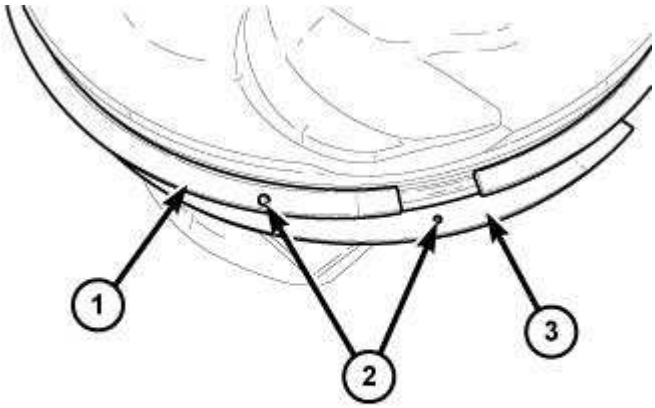

Fig. 481: Dot Marks On Piston Rings
Courtesy of CHRYSLER GROUP, LLC

NOTE: The No. 1 (upper) piston ring (1) and No. 2 (intermediate) piston ring (3) have a different cross section. Install the rings with manufacturers I.D.

mark (dot) (2) facing up, towards the top of the piston.

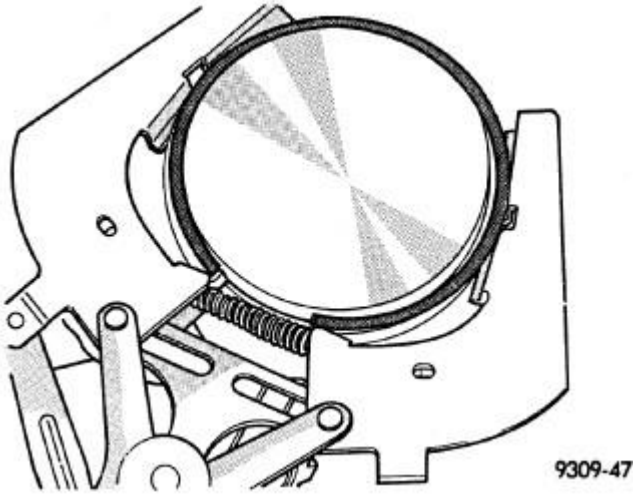

Fig. 482: Removing/Installing Upper & Intermediate Rings
Courtesy of CHRYSLER GROUP, LLC

NOTE: Typical piston shown in illustration.

5. Install the No. 2 (intermediate) piston ring using a ring expander tool.
6. Install the No. 1 (upper) piston ring using a ring expander tool.
7. Rotate the rings around the piston, the rings must rotate in the grooves with out binding.

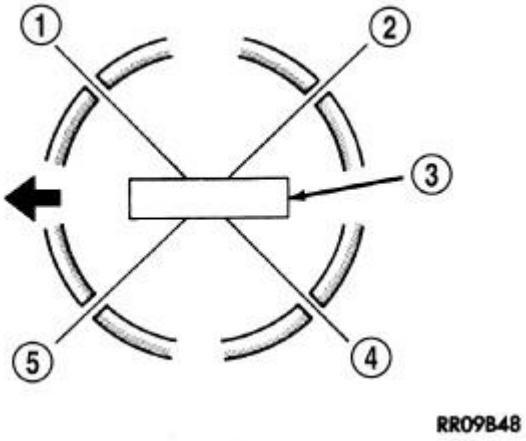

Fig. 483: Piston Ring End Gap Position
Courtesy of CHRYSLER GROUP, LLC

8. Position the piston ring end gaps as follows:
   - Oil ring expander gap (5)
   - Oil ring lower side rail end gap (4)
   - Oil ring upper side rail end gap (1)

- No. 2 (intermediate) ring end gap (5)
- No. 1 (upper) ring end gap (2)

9. Install the piston and connecting rod(s). Refer to **ROD, PISTON AND CONNECTING, INSTALLATION** .

ROD, PISTON AND CONNECTING

DESCRIPTION

DESCRIPTION

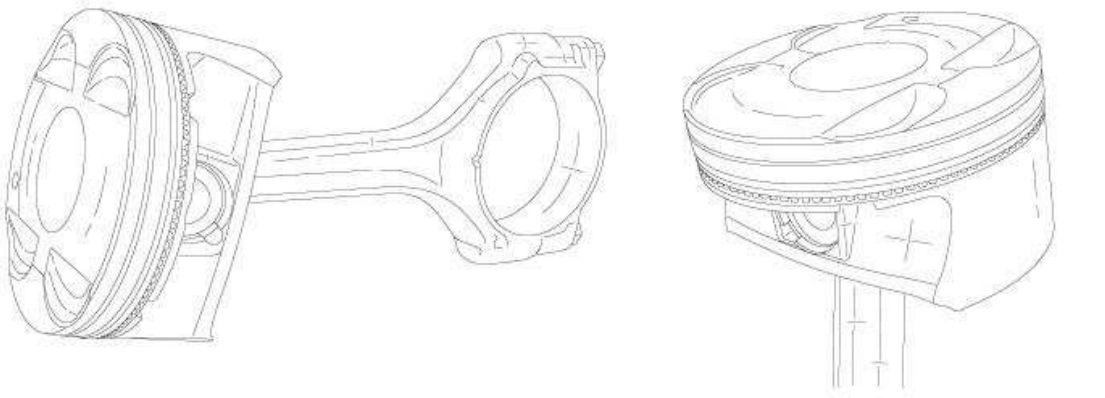

Fig. 484: Piston & Connecting Rod
Courtesy of CHRYSLER GROUP, LLC

CAUTION: Do not use a metal stamp to mark connecting rods as damage may result, instead use ink or a scratch awl.

The pistons are a lightweight design with ultra low tension piston rings for improved fuel economy. The pistons are made of a high strength aluminum alloy and the piston skirt has a Moly® coating. The top piston ring land has an anodized coating for improved wear. The piston is connected to the rod using a full floating pin with two locking clips. The connecting rod is forged steel with a bolted cracked cap design. The connecting rod bolts are not reusable. Pistons are available in two different diameters with grade markings for each bore indicated on the side of the cylinder block. The upper compression ring is a 1.2 mm steel ring with a spray coating. The intermediate compression ring is 1.2 mm micro Napier design. Both compression rings have a dot or a mark on the piston ring. The

marked side of the ring must face the top of the piston. The 2 mm three piece oil control ring is very thin. These are chrome plated rings and have a stainless steel expander.

STANDARD PROCEDURE

PISTON FITTING

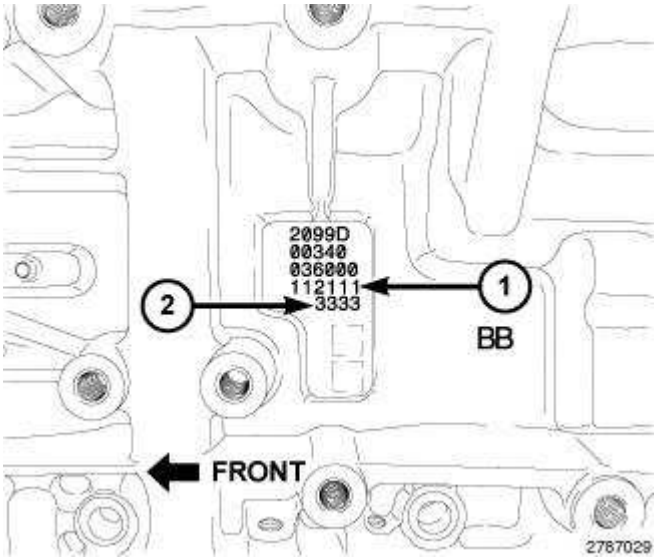

Fig. 485: Engine Block Cylinder Bore Diameter Grade Markings & Engine Block Main Bearing Journal Diameter Grade Markings
Courtesy of CHRYSLER GROUP, LLC

The pistons are "select fit" to achieve proper oil clearance. Engine block cylinder bore diameter grade markings (1) are stamped into the left side of the engine block. These marks are read from left to right, corresponding with cylinder number 1, 2, 3, 4, 5, 6.

Engine block cylinder bore diameter grade markings correspond to specific cylinder bore diameters. The chart below identifies the two engine block grade markings and their associated cylinder bore diameters.

Engine Block Marking	Cylinder Bore Size mm (in.)
1	95.995 ± 0.005 mm (3.7793 ± 0.0002 in.)
2	96.005 ± 0.005 mm (3.7797 ± 0.0002 in.)

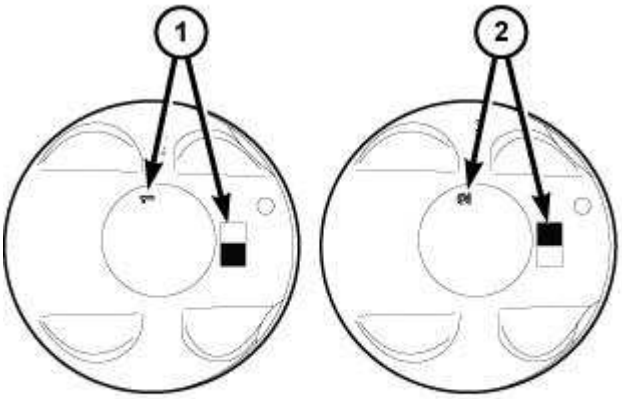

2790134

Fig. 486: Piston Size Located On Piston Crown
Courtesy of CHRYSLER GROUP, LLC

The piston is marked with the piston size (1 and 2) on the piston crown. The pistons are available in two different sizes in order to achieve the desired oil clearance. Select the piston size that corresponds to the engine block cylinder bore diameter grade markings for each cylinder.

Pistons are available in two sizes. The chart below identifies the two piston sizes.

Piston Marking	Size mm (in.)	
	Metal to Metal	Metal to Coating
1	95.995 ± 0.005 mm (3.7793 ± 0.0002 in.)	95.970 - 96.000 mm (3.7783 - 3.7795 in.)
2	95.965 ± 0.005 mm (3.7781 ± 0.0002 in.)	95.980 - 96.010 mm (3.7787 - 3.7835 in.)

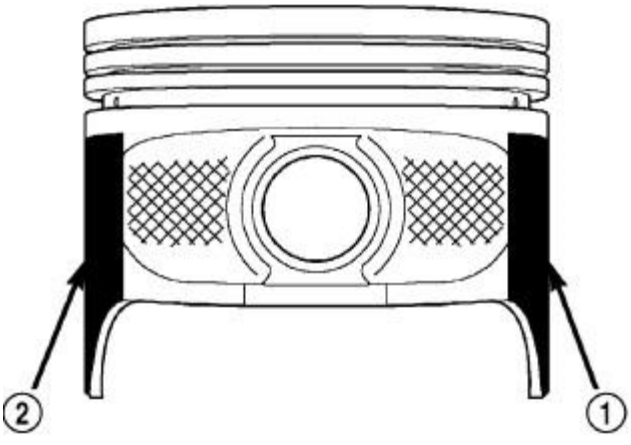

80aac2ao

Fig. 487: Coating Material On Piston
Courtesy of CHRYSLER GROUP, LLC

NOTE: Typical coated piston shown in illustration.

The coated pistons are serviced with the piston pin and connecting rod pre-assembled. The coating material (1 and 2) is applied to the piston after the final piston machining process. Piston installation into the cylinder bore requires slightly more pressure than that required for non-coated pistons. The bonded coating on the piston will give the appearance of a line-to-line fit with the cylinder bore.

CONNECTING ROD SIDE CLEARANCE

DIAL INDICATOR

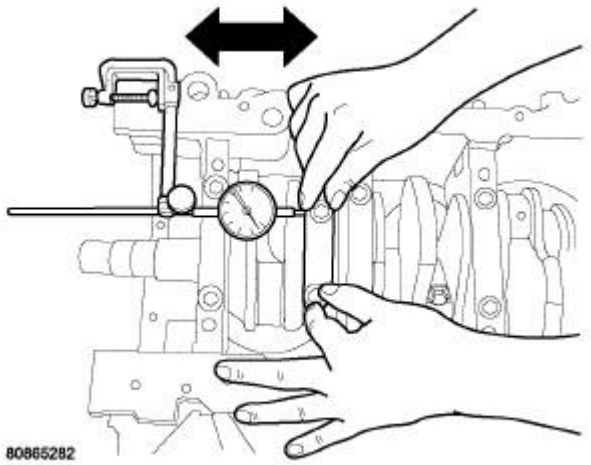

Fig. 488: Measuring Connecting Rod Side Clearance
Courtesy of CHRYSLER GROUP, LLC

1. Mount Dial Indicator Set (special tool #C-3339A, Set, Dial Indicator) to a stationary point on the engine. Locate the probe perpendicular to and resting against the connecting rod cap being checked.
2. Move the connecting rod all the way to the rear of its travel.
3. Zero the dial indicator.
4. Move the connecting rod forward to the limit of travel and read the dial indicator. Compare the measured side clearance to the specification. Refer to **SPECIFICATIONS**.
5. Repeat this procedure for each connecting rod. Rotate the crankshaft for connecting rod accessibility.

FEELER GAUGE

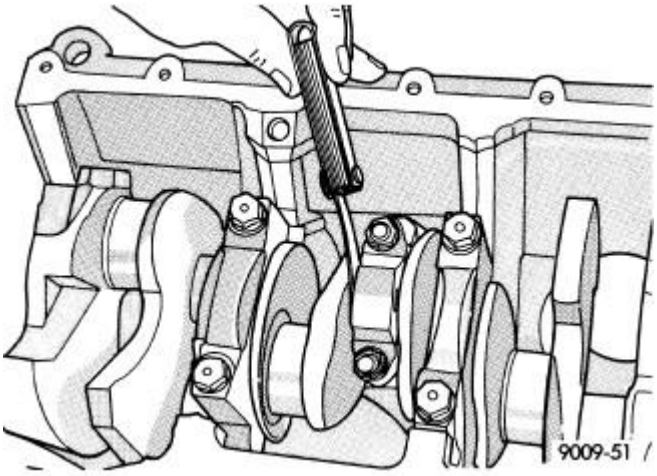

Fig. 489: Measuring Gap Between Connecting Rod & Crankshaft Journal Flange
Courtesy of CHRYSLER GROUP, LLC

1. Slide a snug-fitting feeler gauge between the connecting rod and crankshaft journal flange. Compare the measured side clearance to the specification. Refer to **SPECIFICATIONS**.
2. Repeat this procedure for each connecting rod. Rotate the crankshaft for connecting rod accessibility.

REMOVAL

REMOVAL

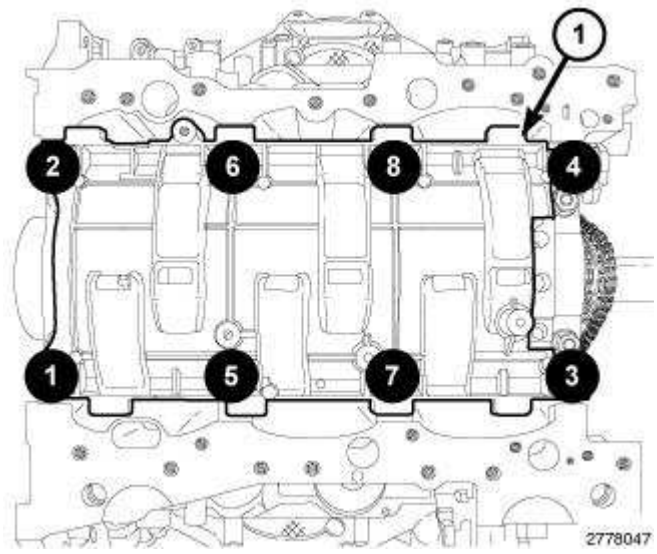

Fig. 490: Main Bearing Cap Bolts From Windage Tray Removal Sequence
Courtesy of CHRYSLER GROUP, LLC

1. Disconnect and isolate the negative battery cable.
2. Remove the oil pans, engine timing cover and cylinder heads. Refer to **CYLINDER HEAD , REMOVAL** .

3. Remove the engine oil pump. Refer to **PUMP, ENGINE OIL, REMOVAL** .
4. Remove the eight main bearing cap bolts from the windage tray in the sequence shown in illustration and remove the windage tray (1).

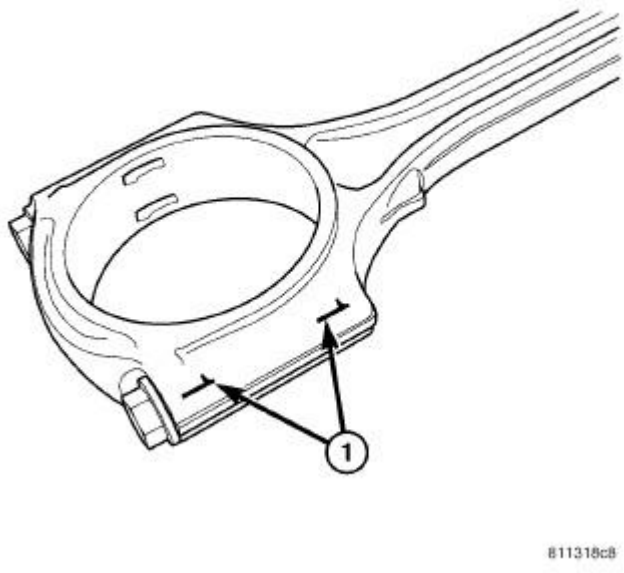

Fig. 491: Connecting Rod To Cylinder Identification
Courtesy of CHRYSLER GROUP, LLC

5. If necessary, remove the top ridge of the cylinder bores with a reliable ridge reamer before removing the pistons from the engine block. **Be sure to keep the tops of pistons covered during this operation.** Pistons and connecting rods must be removed from the top of the engine block. When removing piston and connecting rod assemblies from the engine, rotate the crankshaft CW so that each connecting rod is centered in the cylinder bore.

CAUTION: DO NOT use a number stamp or a punch to mark connecting rods or caps, as damage to connecting rods could occur

NOTE: Connecting rods and bearing caps are not interchangeable and should be marked before removing to ensure correct reassembly.

6. Mark connecting rod and bearing cap positions (1) using a permanent ink marker or scribe tool.

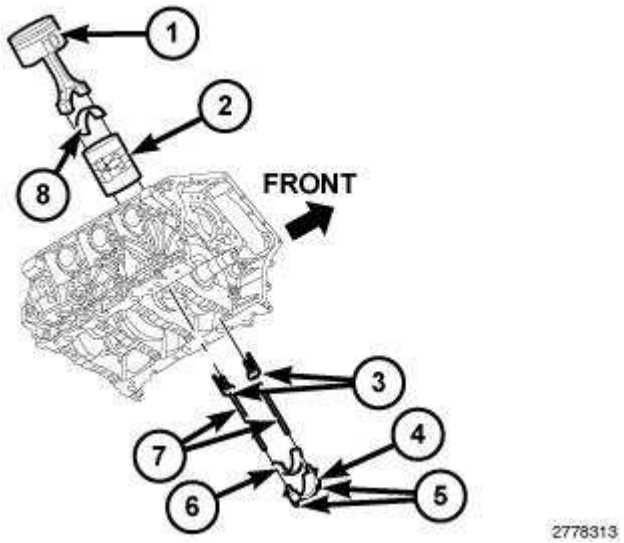

Fig. 492: Piston, Connecting Rod Cap, Bolts, Plastic Guide Plates & Guide Pins
Courtesy of CHRYSLER GROUP, LLC

NOTE: Typical V6 engine configuration shown in illustration.

CAUTION: Care must be taken not to damage the fractured rod and cap joint face surfaces, as engine damage may occur.

7. Remove the connecting rod cap bolts (5) and the connecting rod cap (4). Discard the cap bolts.

CAUTION: Care must be taken not to nick crankshaft journals, as engine damage may occur.

8. Remove the plastic guide plates (3) from the Guide Pins (special tool #8189, Guide Pins) (7) and install the Guide Pins to the connecting rod being removed.

CAUTION: Avoid contact with the piston oil cooler jet(s). Positioning of the oil cooler jet(s) is critical for proper engine operation.

9. Remove the piston and connecting rod (1) from cylinder bore.
10. Repeat the previous steps for each piston being removed.
11. Immediately after piston and connecting rod removal, reinstall the bearing cap (4) on the mating connecting rod to prevent damage to the fractured cap and rod surfaces.
12. If required, remove the piston rings. Refer to **RING(S), PISTON, REMOVAL**.
13. Repeat the previous steps for each piston being removed.

CLEANING

CLEANING

CAUTION: DO NOT use a wire wheel or other abrasive cleaning devise to clean the pistons or connecting rods. The pistons have a Moly® coating, this coating must not be damaged.

CAUTION: Do not remove the piston pin from the piston and connecting rod assembly.

1. Using a suitable cleaning solvent clean the pistons in warm water and towel dry.
2. Use a wood or plastic scraper to clean the ring land grooves.

INSPECTION

INSPECTION

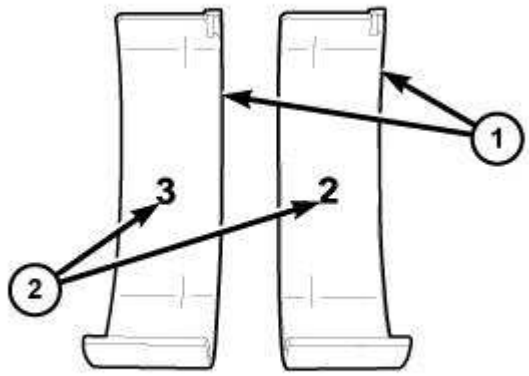

2769568

Fig. 493: Connecting Rod Bearing Shells & Bearing Size
Courtesy of CHRYSLER GROUP, LLC

1. Wipe the inserts (1) clean.
2. Inspect the inserts for abnormal wear patterns, scoring, grooving, fatigue, pitting and for metal or other foreign material imbedded in the lining.
3. Inspect the back of the inserts for fractures, scrapes, or irregular wear patterns.
4. Inspect the insert locking tabs for damage.
5. Replace any bearing that shows abnormal wear. Refer to **BEARING(S), CONNECTING ROD, STANDARD PROCEDURE**.

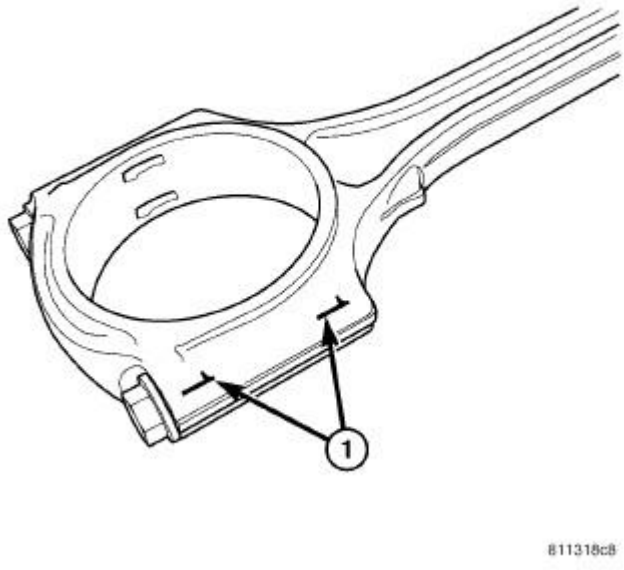

Fig. 494: Connecting Rod To Cylinder Identification
Courtesy of CHRYSLER GROUP, LLC

6. Inspect the connecting rod bearing bores for signs of scoring, nicks and burrs.

NOTE: Misaligned or bent connecting rods can cause abnormal wear on pistons, piston rings, cylinder walls, connecting rod bearings and crankshaft connecting rod journals. If wear patterns or damage to any of these components indicate the probability of a misaligned connecting rod, inspect it for correct rod alignment.

7. Replace misaligned, bent or twisted connecting rods.

NOTE: Connecting rods are serviced with the piston pre-assembled. The pistons are "select fit" to achieve proper oil clearance. Refer to STANDARD PROCEDURE.

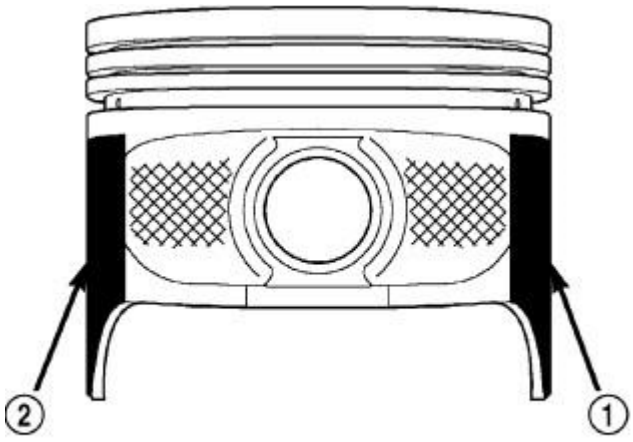

Fig. 495: Coating Material On Piston
Courtesy of CHRYSLER GROUP, LLC

NOTE: Typical coated piston shown in illustration.

8. Inspect the piston for scoring or scraping marks in the piston skirts. Check the ring lands for cracks and/or deterioration.
9. Check the piston for taper and out of round shape.

NOTE: The coating material (1 and 2) is applied to the piston after the final piston machining process. Measuring the outside diameter of a coated piston will not provide accurate results. Therefore measuring the inside diameter of the cylinder bore with a dial Bore Gauge is MANDATORY . Refer to INSPECTION.

10. Compare the measured cylinder bore diameter to the engine block cylinder bore grade marking chart Select the piston size that corresponds to the engine block markings for each cylinder to provide the proper oil clearance. Refer to **STANDARD PROCEDURE**.

NOTE: Piston installation into the cylinder bore requires slightly more pressure than that required for non-coated pistons. The bonded coating on the piston will give the appearance of a line-to-line fit with the cylinder bore.

NOTE: The coated pistons will be serviced with the piston pin and connecting rod pre-assembled.

INSTALLATION

INSTALLATION

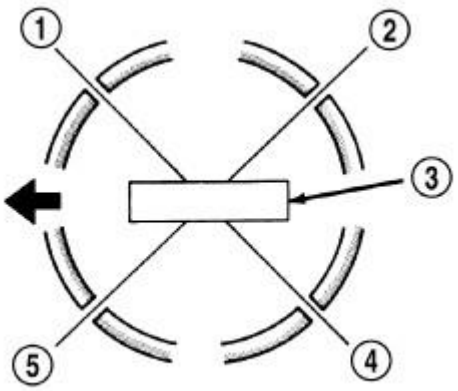

Fig. 496: Piston Ring End Gap Position
Courtesy of CHRYSLER GROUP, LLC

1. If required, select and fit new piston and connecting rod assemblies to the engine block. Refer to **STANDARD PROCEDURE**.
2. If required, select and fit new bearings to the connecting rod. Refer to **BEARING(S), CONNECTING ROD, STANDARD PROCEDURE**.
3. If required, hone the cylinder bores. Refer to **ENGINE BLOCK, STANDARD PROCEDURE**.
4. If removed, install the piston rings. Refer to **RING(S), PISTON, INSTALLATION**.
5. Position the piston ring end gaps as follows:
    - Oil ring expander gap (5)
    - Oil ring lower side rail end gap (4)
    - Oil ring upper side rail end gap (1)
    - No. 2 (intermediate) ring end gap (5)
    - No. 1 (upper) ring end gap (2)

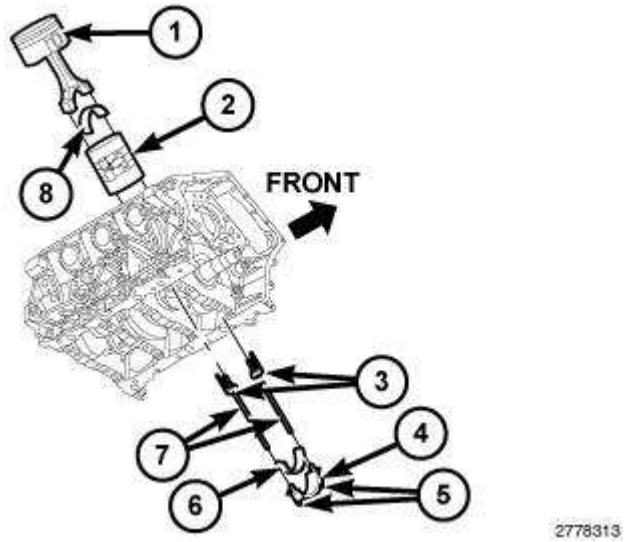

Fig. 497: Piston, Connecting Rod Cap, Bolts, Plastic Guide Plates & Guide Pins
Courtesy of CHRYSLER GROUP, LLC

NOTE: Typical V6 engine configuration shown in illustration.

NOTE: Ensure the position of the ring end gaps does not change when installing the ring compressor.

6. Lubricate the piston rings with clean engine oil. Position Piston Compressor (special tool #C-385, Compressor, Piston) (2) over the piston and rings. Tighten the compressor (2).

NOTE: Install the rod bearings in pairs. Do not mix sizes or use a new bearing half with an old bearing half.

7. Install the bearing shell (8) on the connecting rod with the tang inserted into the machined groove in the rod. Lubricate the bearing surface with clean engine oil.
8. Remove the plastic guide plates (3) from the Guide Pins (special tool #8189, Guide Pins) (7) and install the Guide Pins to the connecting rod being installed.

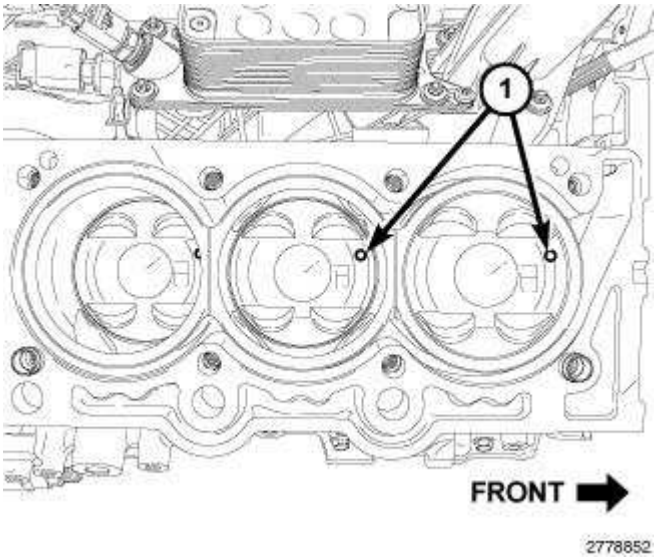

Fig. 498: Piston Installation Position
Courtesy of CHRYSLER GROUP, LLC

NOTE: Right cylinder bank shown in illustration, left cylinder bank similar.

9. The pistons crowns are stamped with a mark (1) indicating installation position. This mark must be positioned toward the front of engine on both cylinder banks.
10. Wipe the cylinder bore clean and lubricate with clean engine oil.
11. Rotate the crankshaft until the connecting rod journal is on the center of cylinder bore.

CAUTION: Avoid contact with the piston oil cooler jet(s). Positioning of the oil cooler jet(s) is critical for proper engine operation.

12. Insert the piston and connecting rod into the cylinder bore and carefully position the guide pins over the crankshaft journal.
13. Tap the piston down in the cylinder bore using a hammer handle while guiding the connecting rod into position over the rod journal.

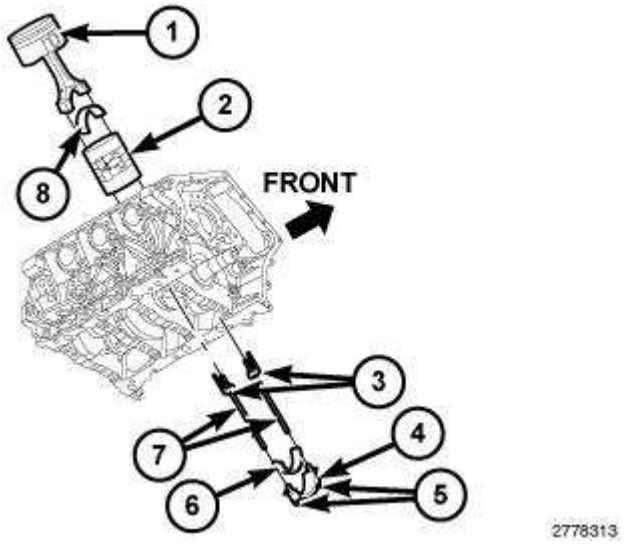

Fig. 499: Piston, Connecting Rod Cap, Bolts, Plastic Guide Plates & Guide Pins
Courtesy of CHRYSLER GROUP, LLC

NOTE: Typical V6 engine configuration shown in illustration.

CAUTION: The connecting rod bolts must not be reused. Always replace the connecting rod bolts whenever they are loosened or removed.

14. Install the bearing shell (6) on the connecting rod cap (4) with the tang inserted into the machined groove in the cap. Lubricate the bearing surface with clean engine oil.

NOTE: Do not lubricate the threads of the connecting rod cap bolts (5).

15. Install the connecting rod cap and bearing with the tang on the same side as the rod. Tighten the **NEW** connecting rod cap bolts (5) to 20 N.m (15 ft. lbs.) plus 90°.
16. If required, check the connecting rod side clearance. Refer to **STANDARD PROCEDURE**.
17. Repeat the previous steps for each piston being installed.

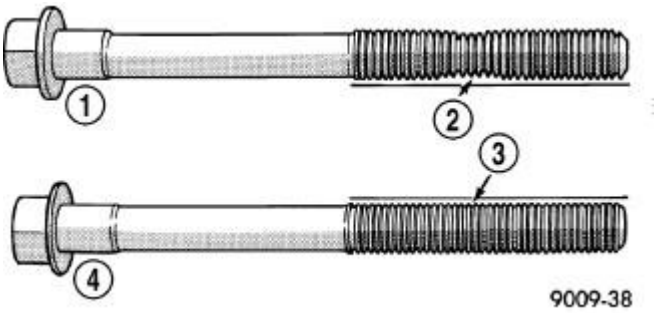

Fig. 500: Checking Cylinder Head Bolts For Stretching (Necking)
Courtesy of CHRYSLER GROUP, LLC

CAUTION: The main bearing cap bolts are tightened using a torque plus angle procedure. The bolts must be examined BEFORE reuse. If the threads are necked down the bolts must be replaced.

18. Check the main bearing cap bolts for necking by holding a scale or straight edge against the threads. If all the threads do not contact the scale (2) the bolt must be replaced.

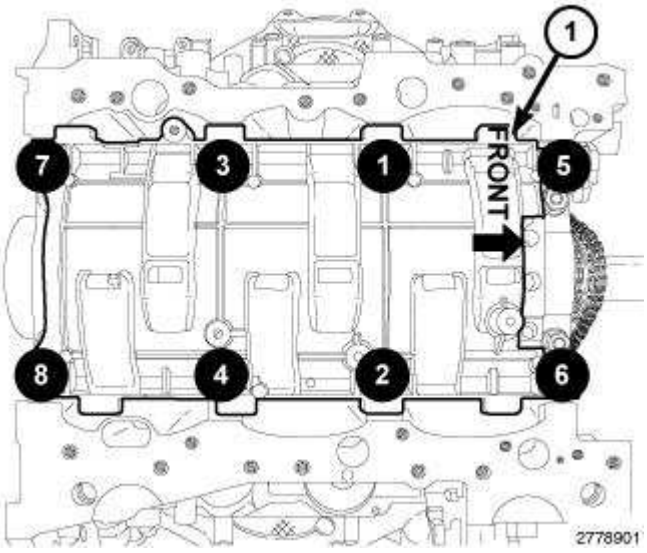

Fig. 501: Windage Tray With Main Bearing Cap Bolts Installation Sequence
Courtesy of CHRYSLER GROUP, LLC

19. Install the windage tray with eight main bearing cap bolts. Tighten the bolts in the sequence shown in illustration to 21 N.m (16 ft. lbs.) plus 90°.
20. Install the engine oil pump and oil pump pick-up. Refer to **PUMP, ENGINE OIL, INSTALLATION** .
21. Install the cylinder heads, engine timing cover and oil pans. Refer to **CYLINDER HEAD , INSTALLATION** .
22. If removed, install the oil filter and fill the engine crankcase with the proper oil to the correct level. Refer to **STANDARD PROCEDURE**.

23. Connect the negative battery cable and tighten nut to 5 N.m (45 in. lbs.).
24. Fill the cooling system. Refer to **STANDARD PROCEDURE** .
25. Operate the engine until it reaches normal operating temperature. Check cooling system for correct fluid level. Refer to **STANDARD PROCEDURE** .

SEAL, CRANKSHAFT OIL, FRONT

REMOVAL

REMOVAL

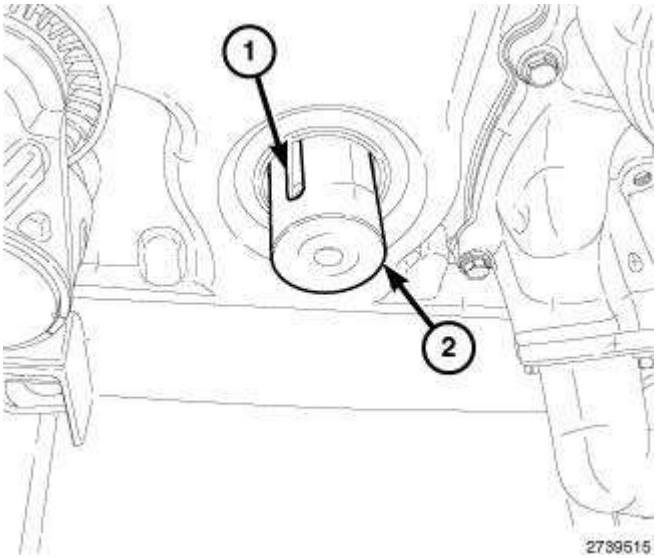

Fig. 502: Sleeve & Flywheel Key
Courtesy of CHRYSLER GROUP, LLC

1. Remove the accessory drive belt and the crankshaft vibration damper. Refer to **DAMPER, VIBRATION, REMOVAL** .
2. Install the sleeve (2) from Seal Remover (special tool #8511, Remover, Seal) around the flywheel key (1) and onto the nose of the crankshaft.

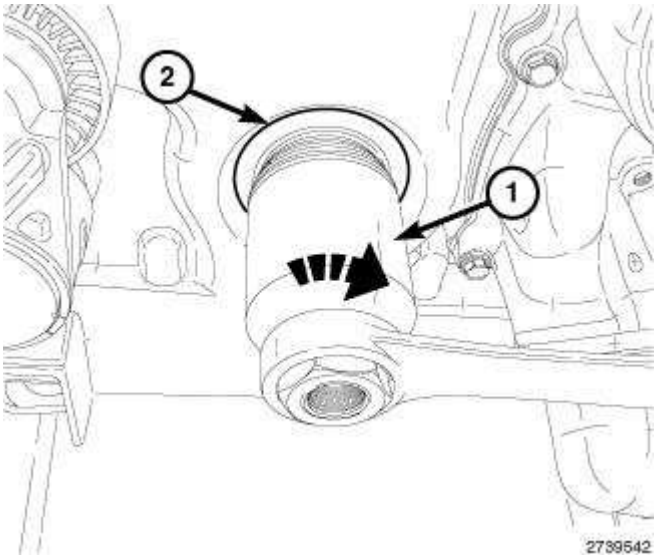

Fig. 503: Seal Remover & Front Crankshaft Oil Seal
Courtesy of CHRYSLER GROUP, LLC

3. Screw Seal Remover (special tool #8511, Remover, Seal) (1) into the front crankshaft oil seal (2).

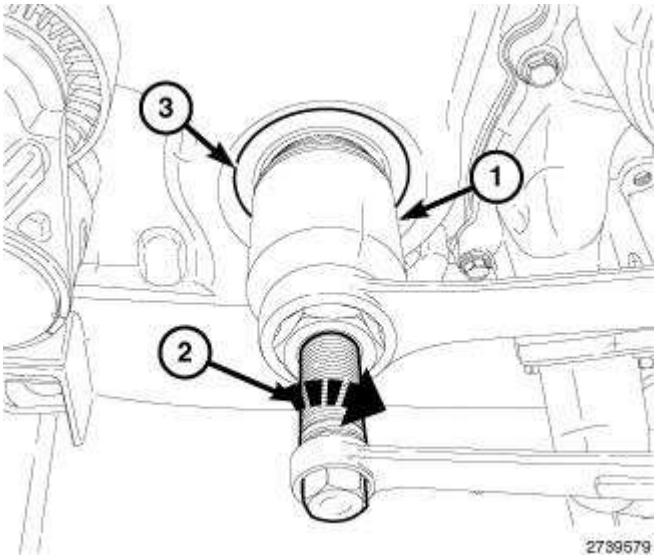

Fig. 504: Extractor Screw, Seal Remover & Front Crankshaft Oil Seal
Courtesy of CHRYSLER GROUP, LLC

4. Install the extractor screw (2) into the Seal Remover (special tool #8511, Remover, Seal) (1). Hold the seal remover stationary and tighten the extractor screw against the sleeve until the front crankshaft oil seal (3) is removed from the engine timing cover.

INSTALLATION

INSTALLATION

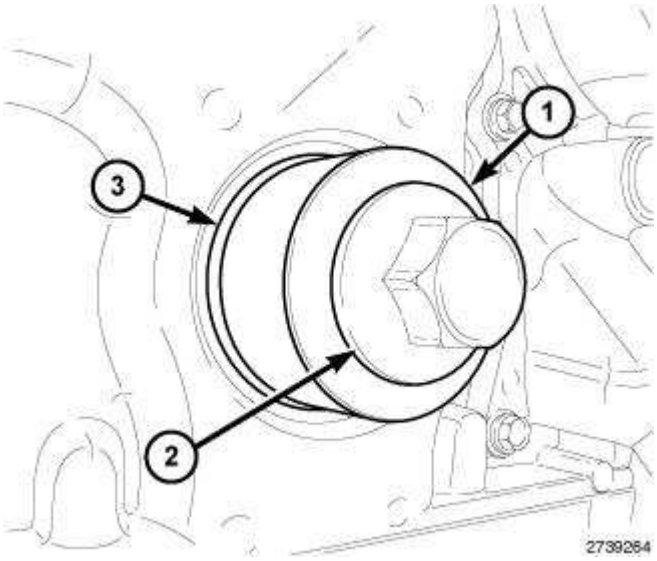

Fig. 505: Front Crankshaft Seal Installer & Oil Seal
Courtesy of CHRYSLER GROUP, LLC

1. Position the front crankshaft oil seal (3) into place on the engine timing cover.
2. Align the Front Crankshaft Seal Installer (special tool #10199, Installer, Crankshaft Front Oil Seal) (1) to the flywheel key on the crankshaft and against the front crankshaft oil seal (3).

CAUTION: Only tighten the crankshaft vibration damper bolt until the oil seal is seated in the cover. Overtightening of the bolt can crack the front timing cover.

3. Install and tighten the crankshaft vibration damper bolt (2) until the Crankshaft oil seal is seated in the engine timing cover.
4. Install the crankshaft vibration damper and accessory drive belt. Refer to **DAMPER, VIBRATION, INSTALLATION** .

SEAL, CRANKSHAFT OIL, REAR

REMOVAL

REMOVAL

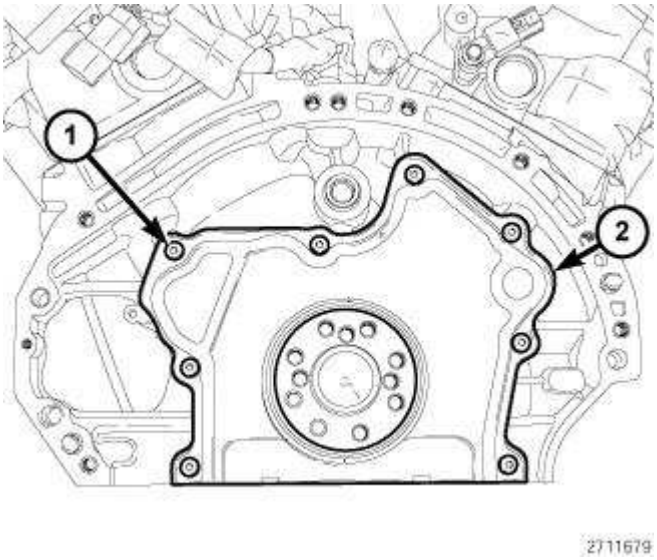

Fig. 506: Seal Retainer & Attaching Screws
Courtesy of CHRYSLER GROUP, LLC

The rear crankshaft oil seal is incorporated into the seal retainer (2) and can not be removed from the retainer. The rear crankshaft oil seal and seal retainer (2) are serviced as an assembly.

1. Remove the transmission. Refer to **REMOVAL** .
2. Remove the flexplate. Refer to **FLEXPLATE, REMOVAL** .
3. Remove the upper oil pan. Refer to **PAN, OIL, REMOVAL** .
4. Remove the eight seal retainer attaching screws (1).
5. Remove and discard the seal retainer (2).

INSTALLATION

INSTALLATION

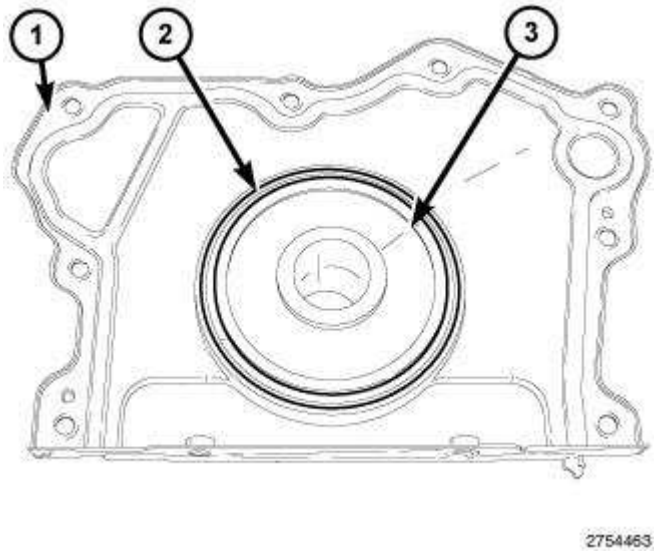

Fig. 507: Rear Crankshaft Oil Seal, Retainer & Seal Protector
Courtesy of CHRYSLER GROUP, LLC

CAUTION: The rear crankshaft oil seal (2) and retainer (1) are an assembly. To avoid damage to the seal lip, DO NOT remove the seal protector (3) from the rear crankshaft oil seal before installation onto the engine.

CAUTION: Whenever the crankshaft is replaced, the rear crankshaft oil seal must also be replaced. Failure to do so may result in engine fluid leakage.

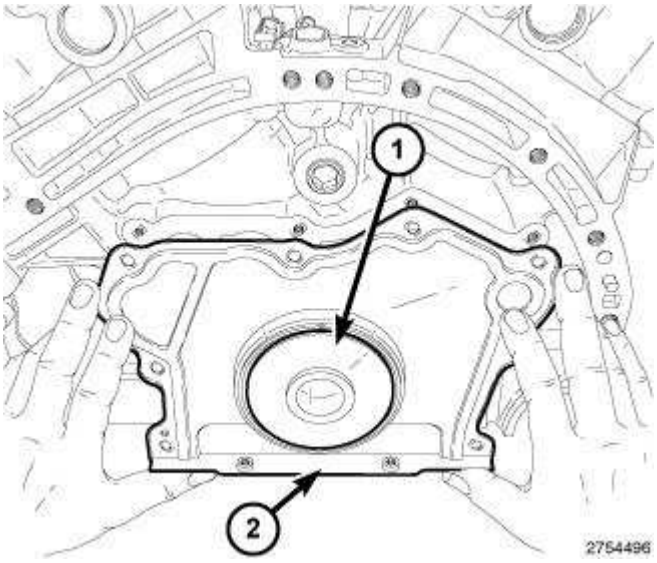

Fig. 508: Oil Seal Retainer Assembly & Seal Protector
Courtesy of CHRYSLER GROUP, LLC

1. Inspect the crankshaft to make sure there are no nicks or burrs on the seal surface.
2. Clean the engine block sealing surfaces thoroughly.

NOTE: It is not necessary to lubricate the seal or the crankshaft when installing the seal retainer. Residual oil following installation can be mistaken for seal leakage.

3. Carefully position the oil seal retainer assembly (2), and seal protector (1) on the crankshaft and push firmly into place on the engine block (during this step, the seal protector will be pushed from the rear oil seal assembly as a result of installing the rear oil seal).

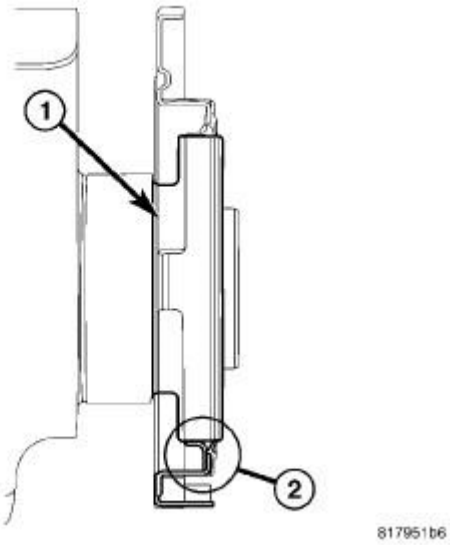

Fig. 509: Rear Seal Installed
Courtesy of CHRYSLER GROUP, LLC

4. Verify that the seal lip (2) on the retainer is uniformly curled inward toward the engine on the crankshaft (1).

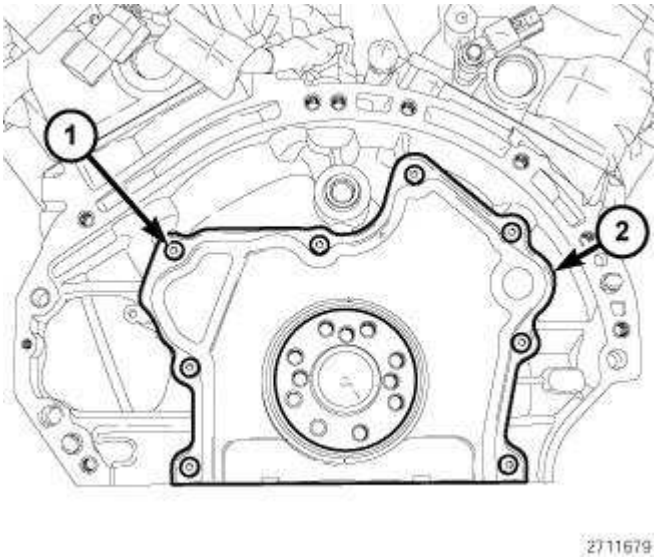

Fig. 510: Seal Retainer & Attaching Screws
Courtesy of CHRYSLER GROUP, LLC

5. Install the eight seal retainer bolts (1) and tighten to 12 N.m (106 in. lbs.).

NOTE: Make sure that the seal retainer flange is flush with the engine block oil pan sealing surface.

6. Install the upper oil pan. Refer to **PAN, OIL, INSTALLATION** .

7. Install the flexplate. Refer to **FLEXPLATE, INSTALLATION** .
8. Install the transmission. Refer to **INSTALLATION** .
9. Fill the engine crankcase with the proper oil to the correct level. Refer to **STANDARD PROCEDURE**.

ENGINE MOUNTING

INSULATOR, ENGINE MOUNT, LEFT

REMOVAL

REMOVAL

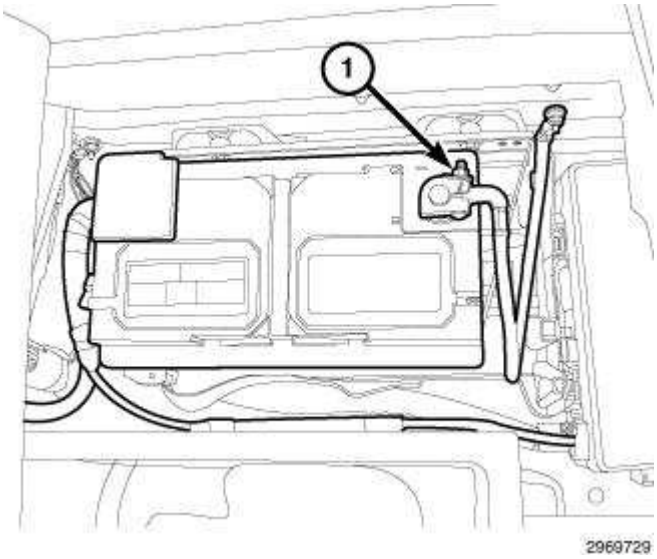

Fig. 511: Negative Battery Cable
Courtesy of CHRYSLER GROUP, LLC

1. Disconnect and isolate the negative battery cable (1).

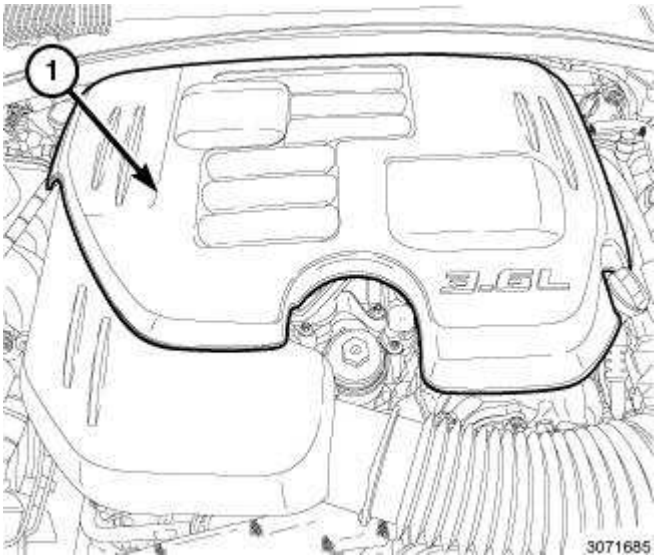

Fig. 512: Engine Cover
Courtesy of CHRYSLER GROUP, LLC

2. Lift the engine cover retaining grommets off the ball studs and remove the engine cover (1).

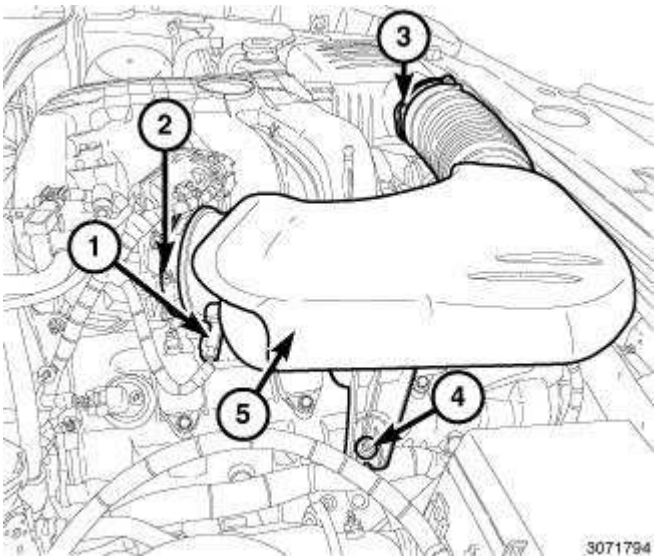

Fig. 513: Inlet Air Temperature (IAT) Sensor Electrical Connector, Air Inlet Hose Assembly & Fasteners
Courtesy of CHRYSLER GROUP, LLC

3. Disconnect the electrical connector (1) from the Inlet Air Temperature (IAT) sensor.
4. Loosen the clamp (2) at the throttle body.
5. Loosen the clamp (3) at the air cleaner housing.
6. Lift the air inlet hose assembly retaining grommet off the ball stud (4).
7. Remove the air inlet hose assembly (5).

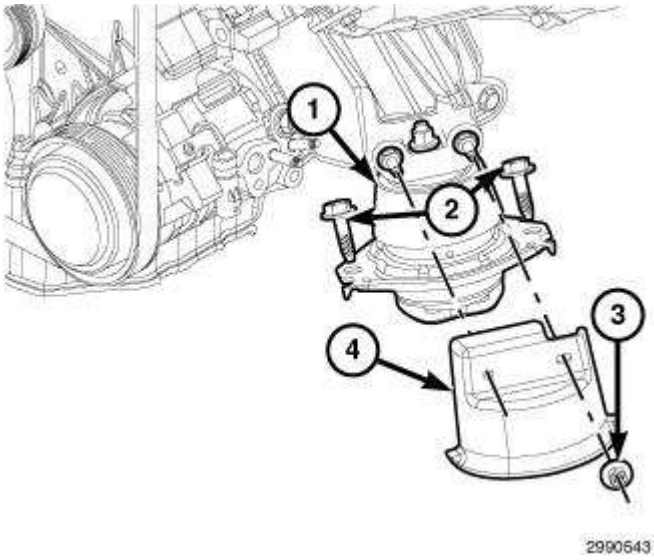

Fig. 514: Engine Mount Heat Shield Retaining Nuts, Lower Mount Retaining Bolts & Heat Shields
Courtesy of CHRYSLER GROUP, LLC

NOTE: Left engine mount shown in illustration, right engine mount similar.

8. Remove the left engine mount isolator heat shield retaining nuts (3) and remove the heat shield (4).
9. Remove both left and right engine mount isolator to frame retaining bolts (2).

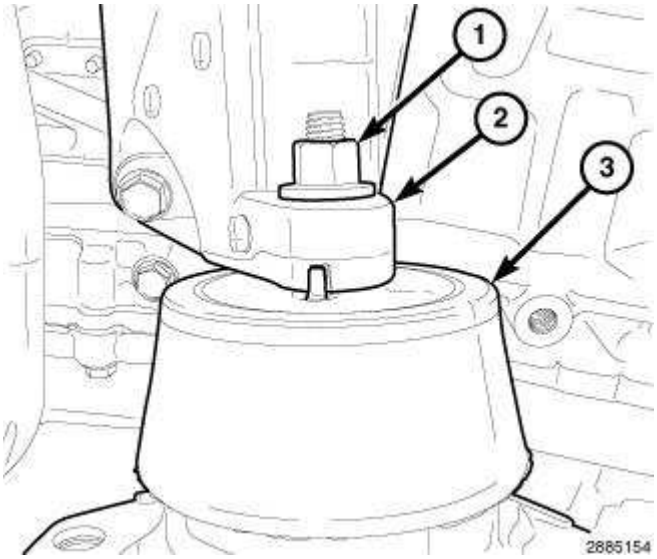

Fig. 515: Left Engine Mount Isolator & Upper Retaining Nut
Courtesy of CHRYSLER GROUP, LLC

10. Remove the left engine mount isolator (3) upper retaining nut (1).

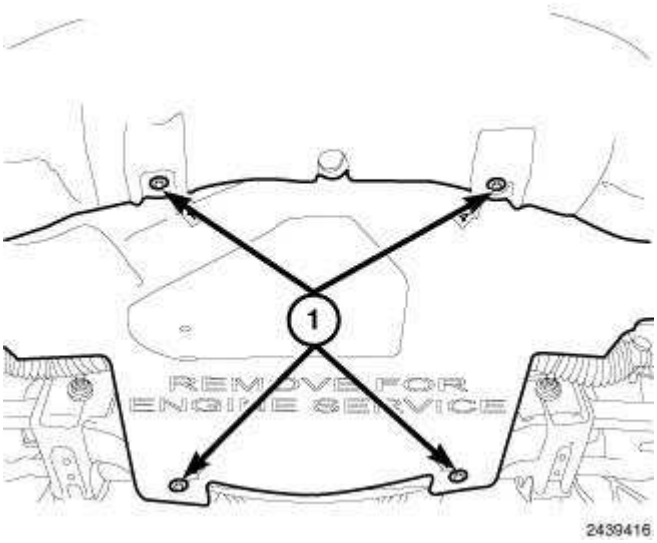

Fig. 516: Lower Splash Shield & Fasteners
Courtesy of CHRYSLER GROUP, LLC

11. Raise and support the vehicle. Refer to **HOISTING, STANDARD PROCEDURE** .
12. Remove the belly pan retainers (1) and remove the belly pan.
13. Using a suitable screw jack, raise the engine to gain clearance for engine mount isolator removal.

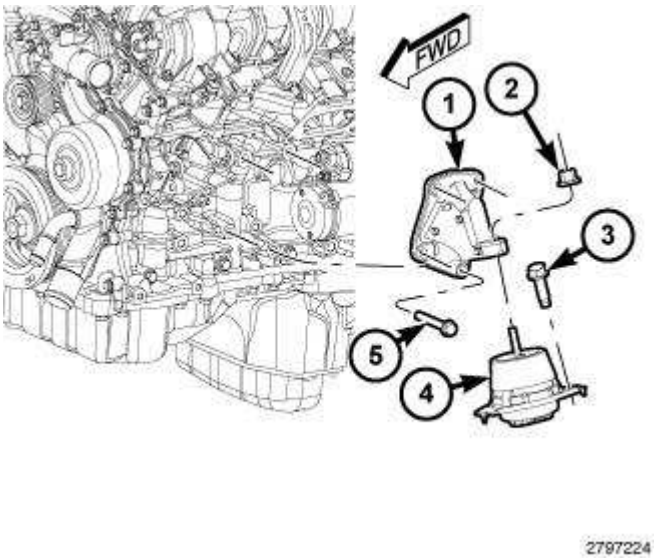

Fig. 517: Engine Mount Isolator, Left Engine Mount Bracket & Retaining Bolts
Courtesy of CHRYSLER GROUP, LLC

14. Remove the engine mount isolator (4) from the vehicle.
15. If required, remove the left engine mount bracket (1) four retaining bolts (5) and remove the left engine mount bracket.

INSTALLATION

INSTALLATION

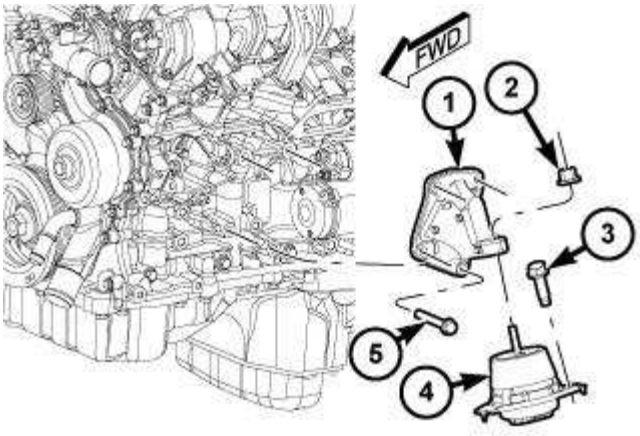

2797224

Fig. 518: Engine Mount Isolator, Left Engine Mount Bracket & Retaining Bolts
Courtesy of CHRYSLER GROUP, LLC

1. If removed, position the left engine mount bracket (1), install the four retaining bolts (5) and tighten to 61 N.m (45 ft. lbs.).
2. Position the left engine mount isolator (4) stud into the bracket, align the tab on the isolator with the notch in the engine mount bracket, install the retaining nut (2) finger tight.
3. Lower the screw jack until both engine mount isolators are in position.
4. Install both left and right engine mount isolator to frame bolts (3) finger tight.
5. Lower the engine so the weight is resting on the isolators and remove the screw jack.

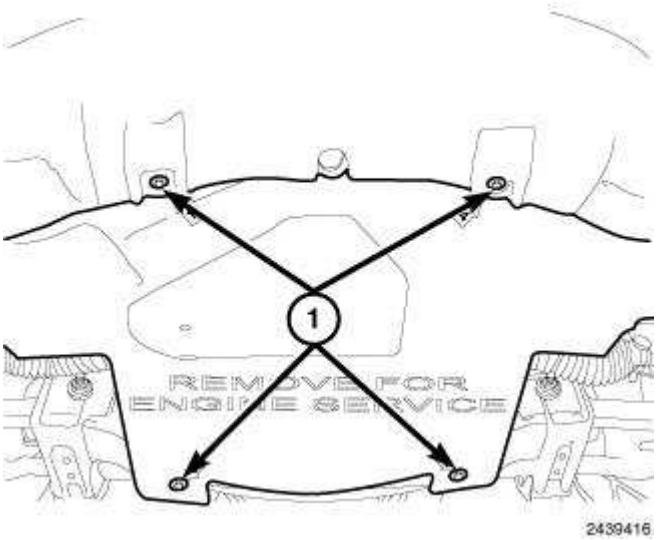

2439416

Fig. 519: Lower Splash Shield & Fasteners
Courtesy of CHRYSLER GROUP, LLC

6. Position the belly pan and install the retainers (1).
7. Lower the vehicle.

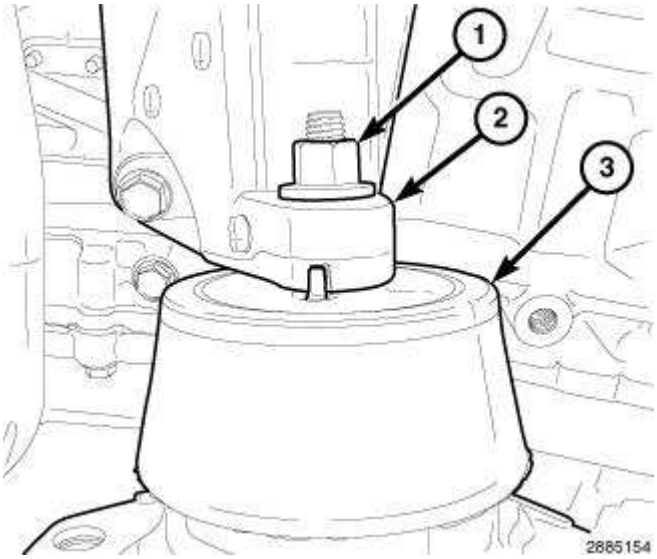

Fig. 520: Left Engine Mount Isolator & Upper Retaining Nut
Courtesy of CHRYSLER GROUP, LLC

8. Tighten the left engine mount isolator (3) upper retaining nut (1) 61 N.m (45 ft. lbs.).

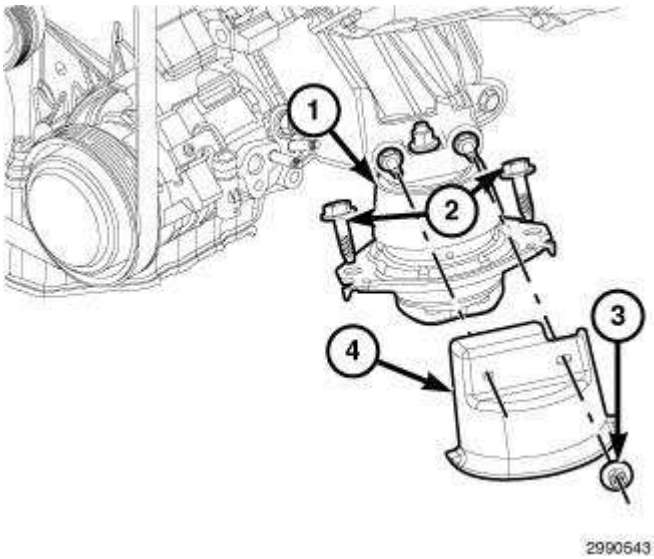

Fig. 521: Engine Mount Heat Shield Retaining Nuts, Lower Mount Retaining Bolts & Heat Shields
Courtesy of CHRYSLER GROUP, LLC

NOTE: Left engine mount shown in illustration, right engine mount similar.

9. Tighten both left and right engine mount isolator to frame bolts (2) to 61 N.m (45 ft. lbs.).

10. Position the left engine mount isolator heat shield (4), install the retaining nuts and tighten to 12 N.m (9 ft. lbs.).

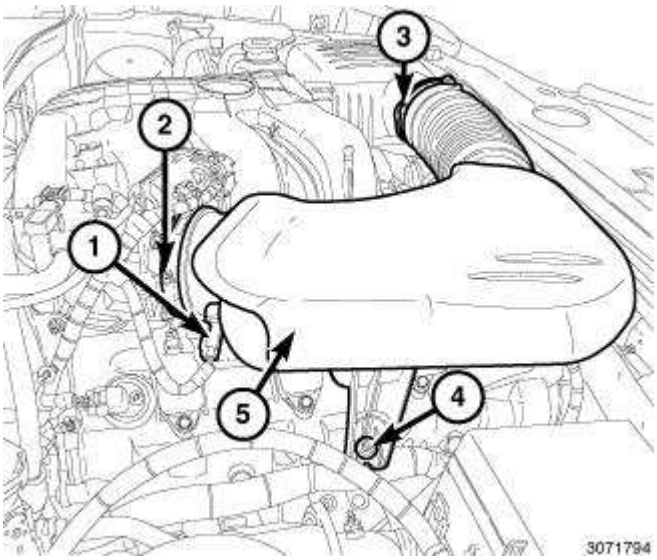

Fig. 522: Inlet Air Temperature (IAT) Sensor Electrical Connector, Air Inlet Hose Assembly & Fasteners
Courtesy of CHRYSLER GROUP, LLC

11. Position the air inlet hose assembly (5) onto the throttle body and the air cleaner housing.
12. Secure the air inlet hose assembly retaining grommet onto the ball stud (4).
13. Tighten the clamp at the air cleaner housing (3) to 5 N.m (44 in. lbs.).
14. Tighten the clamp (2) at the throttle body to 5 N.m (44 in. lbs.).
15. Connect the Inlet Air Temperature (IAT) sensor electrical connector (1).

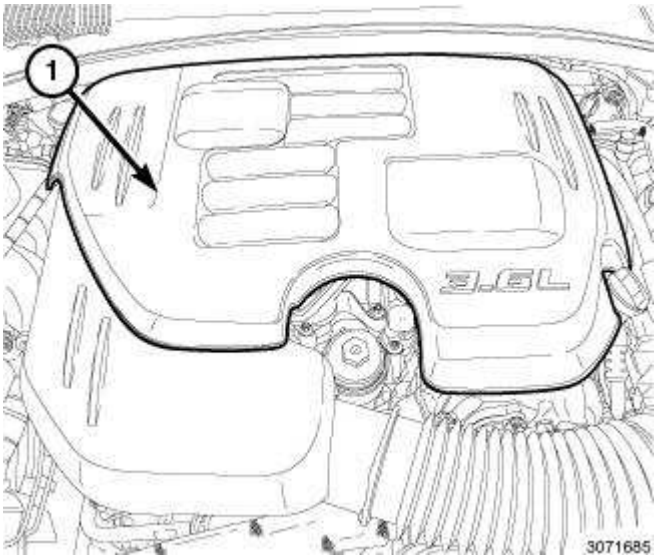

Fig. 523: Engine Cover
Courtesy of CHRYSLER GROUP, LLC

16. Position the engine cover (1) and secure the retaining grommets onto the ball studs.

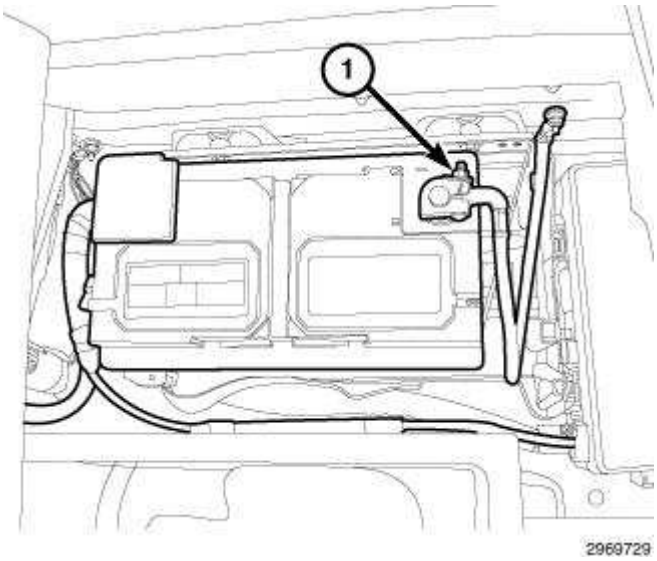

Fig. 524: Negative Battery Cable
Courtesy of CHRYSLER GROUP, LLC

17. Connect the negative battery cable and tighten nut (1) to 5 N.m (45 in. lbs.).

INSULATOR, ENGINE MOUNT, RIGHT

REMOVAL

REMOVAL

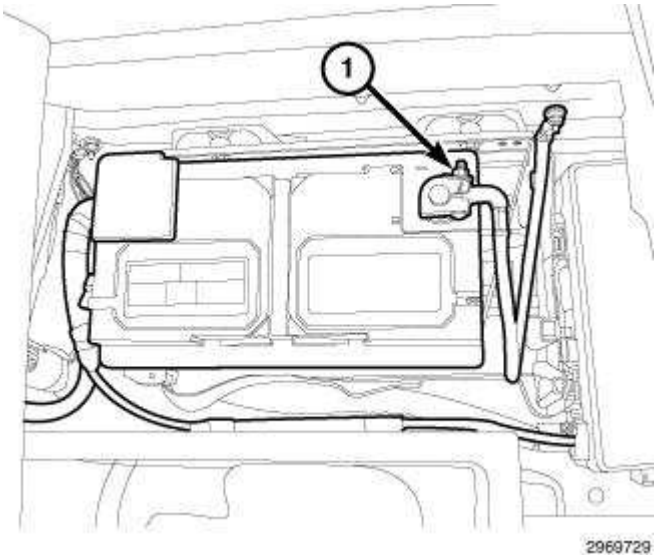

Fig. 525: Negative Battery Cable
Courtesy of CHRYSLER GROUP, LLC

1. Disconnect and isolate the negative battery cable (1).

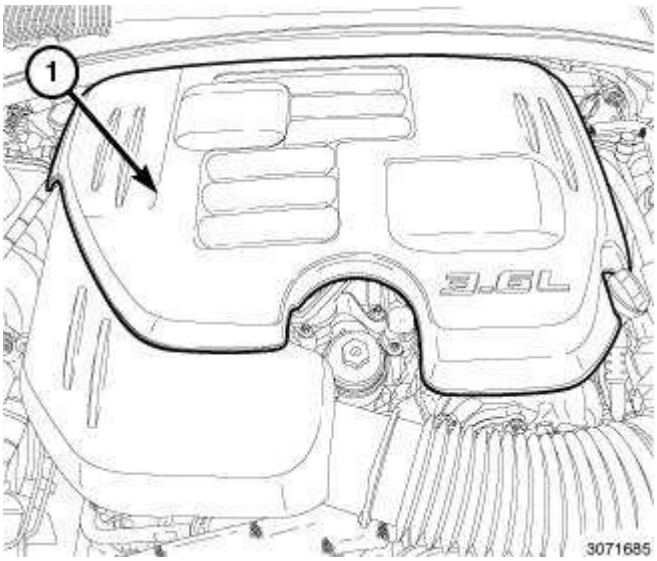

Fig. 526: Engine Cover
Courtesy of CHRYSLER GROUP, LLC

2. Lift the engine cover retaining grommets off the ball studs and remove the engine cover (1).

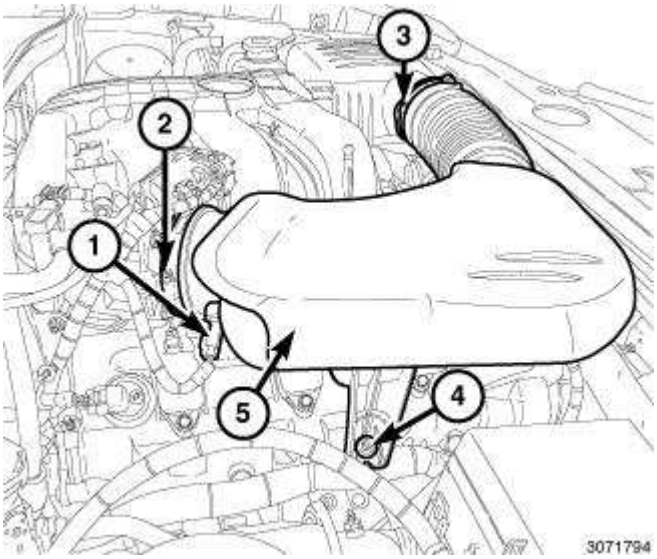

Fig. 527: Inlet Air Temperature (IAT) Sensor Electrical Connector, Air Inlet Hose Assembly & Fasteners
Courtesy of CHRYSLER GROUP, LLC

3. Disconnect the electrical connector (1) from the Inlet Air Temperature (IAT) sensor.
4. Loosen the clamp (2) at the throttle body.
5. Loosen the clamp (3) at the air cleaner housing.
6. Lift the air inlet hose assembly retaining grommet off the ball stud (4).

7. Remove the air inlet hose assembly (5).

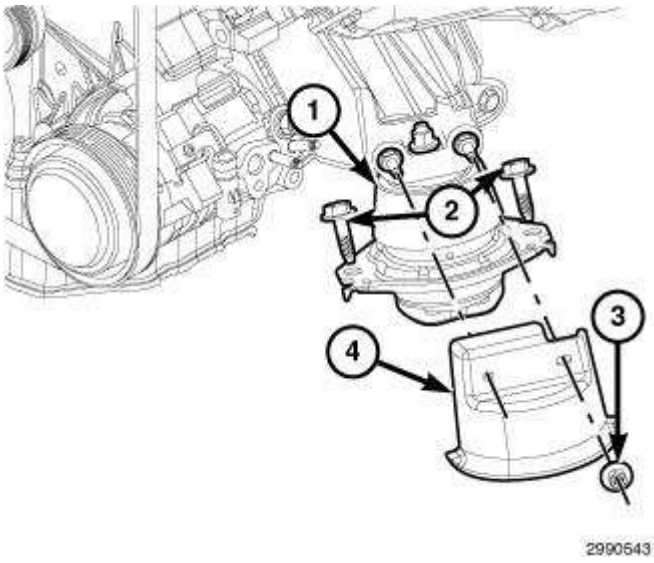

Fig. 528: Engine Mount Heat Shield Retaining Nuts, Lower Mount Retaining Bolts & Heat Shields
Courtesy of CHRYSLER GROUP, LLC

NOTE: Left engine mount shown in illustration, right engine mount similar.

8. Remove the right engine mount isolator heat shield retaining nuts (3) and remove the heat shield (4).
9. Remove both left and right engine mount isolator to frame retaining bolts (2).

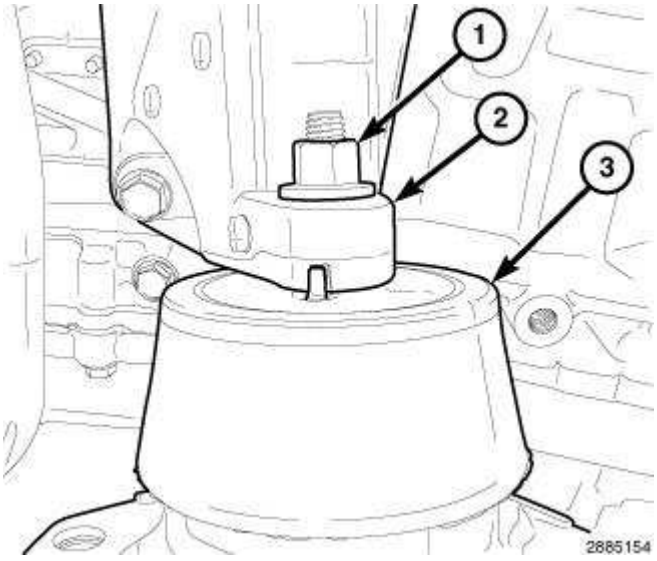

Fig. 529: Left Engine Mount Isolator & Upper Retaining Nut
Courtesy of CHRYSLER GROUP, LLC

10. Remove the right engine mount isolator (3) upper retaining nut (1).

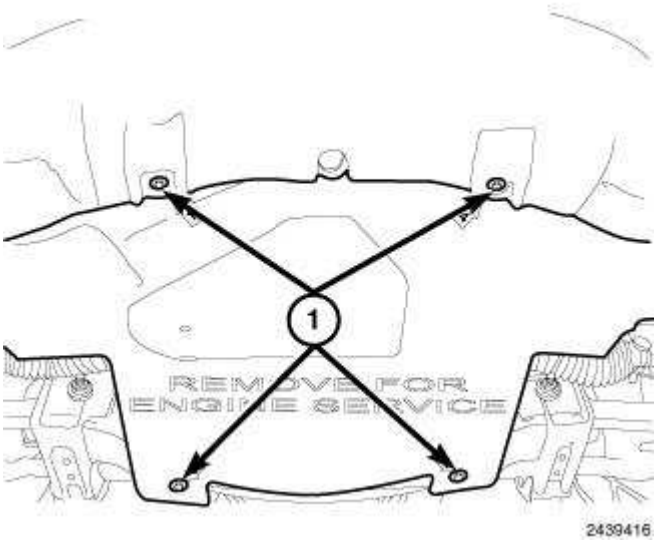

Fig. 530: Lower Splash Shield & Fasteners
Courtesy of CHRYSLER GROUP, LLC

11. Raise and support the vehicle. Refer to **HOISTING, STANDARD PROCEDURE** .
12. Remove the belly pan retainers (1) and remove the belly pan.
13. Using a suitable screw jack, raise the engine to gain clearance for engine mount isolator removal.

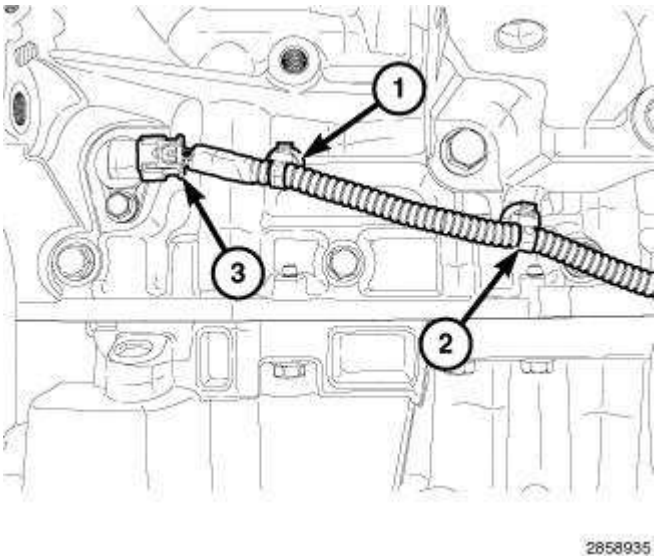

Fig. 531: Main Wire Harness Retainers & CKP Sensor
Courtesy of CHRYSLER GROUP, LLC

14. If required, disconnect the main wire harness from the Crankshaft Position (CKP) sensor (3).
15. If required, unfasten the main wire harness retainer (1) from the engine block and one main wire harness retainer (2) from the right engine mount bracket and position harness aside.

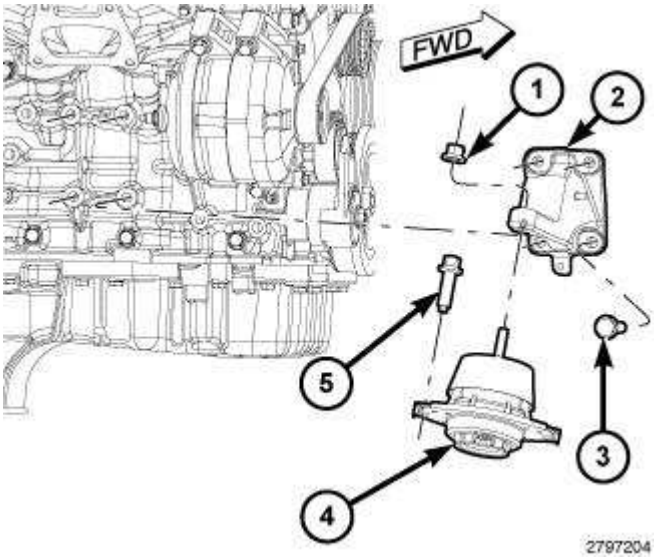

Fig. 532: Engine Mount Isolator, Right Engine Mount Bracket & Retaining Bolts
Courtesy of CHRYSLER GROUP, LLC

16. Remove the engine mount isolator (4) from the vehicle.
17. If required, remove the right engine mount bracket (2) four retaining bolts (3) and remove the right engine mount bracket.

INSTALLATION

INSTALLATION

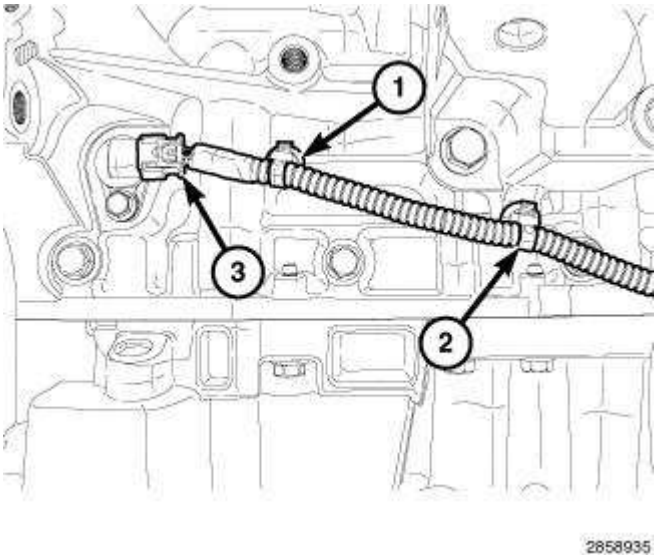

Fig. 533: Main Wire Harness Retainers & CKP Sensor
Courtesy of CHRYSLER GROUP, LLC

1. If removed, connect the main wire harness to the Crankshaft Position (CKP) sensor (3).
2. If removed, fasten the CKP main wire harness retainer (1) to the engine block and one main

wire harness retainer (2) to the right engine mount bracket.

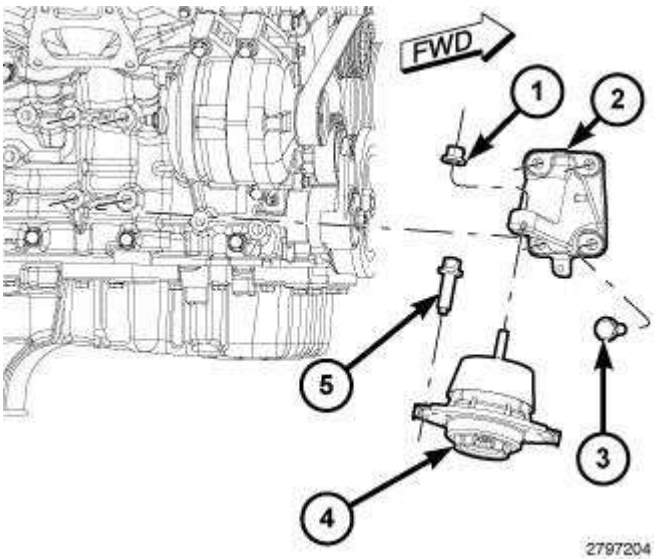

Fig. 534: Engine Mount Isolator, Right Engine Mount Bracket & Retaining Bolts
Courtesy of CHRYSLER GROUP, LLC

3. If removed, position the right engine mount bracket (2), install the four retaining bolts (5) and tighten to 61 N.m (45 ft. lbs.).
4. Position the right engine mount isolator (4) stud into the bracket, align the tab on the isolator with the notch in the engine mount bracket, install the retaining nut (1) finger tight.
5. Lower the screw jack until both engine mount isolators are in position.
6. Install the both left and right engine mount isolator to frame bolts (3) finger tight.
7. Lower the engine so the weight is resting on the isolators and remove the screw jack.

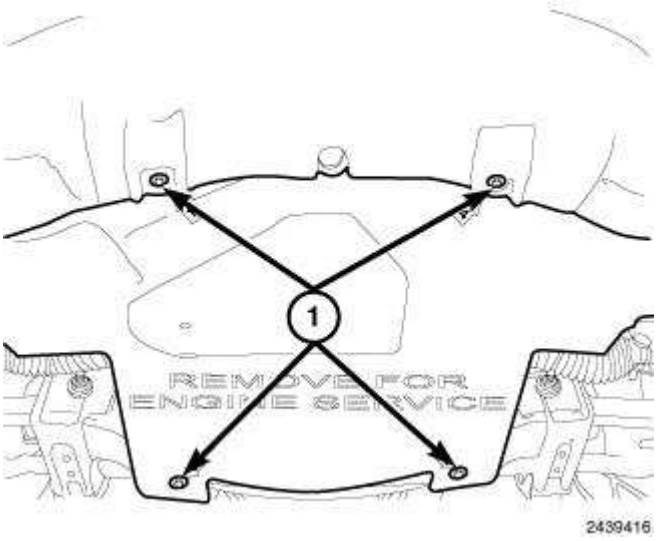

Fig. 535: Lower Splash Shield & Fasteners
Courtesy of CHRYSLER GROUP, LLC

8. Position the belly pan and install the retainers (1).
9. Lower the vehicle.

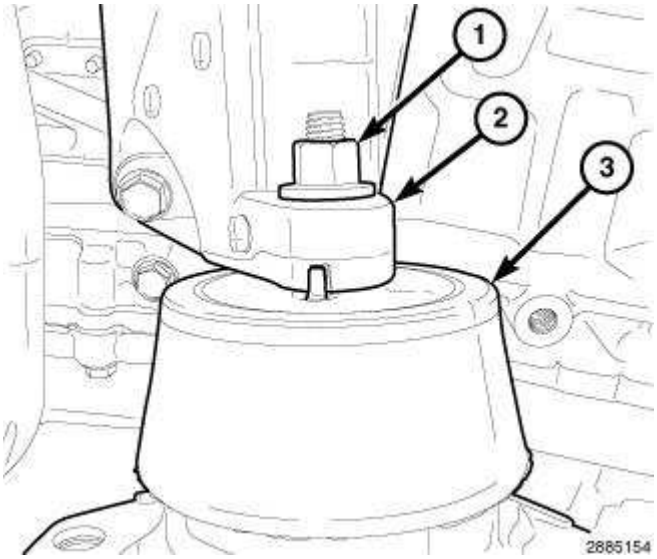

Fig. 536: Left Engine Mount Isolator & Upper Retaining Nut
Courtesy of CHRYSLER GROUP, LLC

NOTE: Left engine mount shown in illustration, right engine mount similar.

10. Tighten the right engine mount isolator (3) upper retaining nut (1) 61 N.m (45 ft. lbs.).

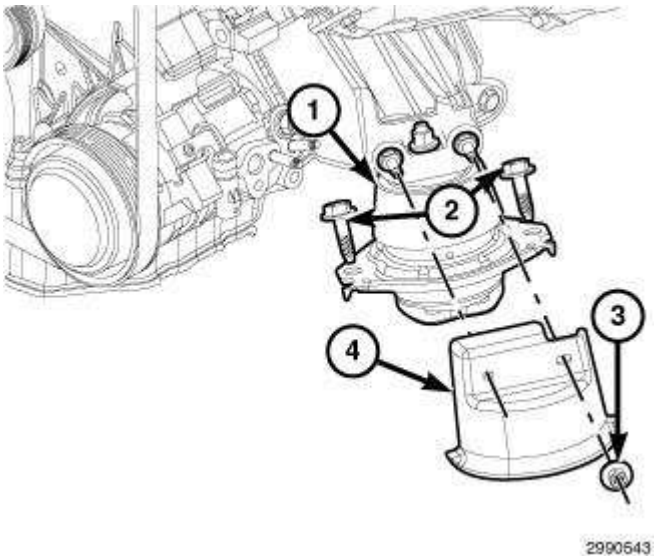

Fig. 537: Engine Mount Heat Shield Retaining Nuts, Lower Mount Retaining Bolts & Heat Shields
Courtesy of CHRYSLER GROUP, LLC

NOTE: Left engine mount shown in illustration, right engine mount similar.

11. Tighten both left and right engine mount isolator to frame bolts (2) to 61 N.m (45 ft. lbs.).
12. Position the right engine mount isolator heat shield (4), install the retaining nuts and tighten to 12 N.m (9 ft. lbs.).

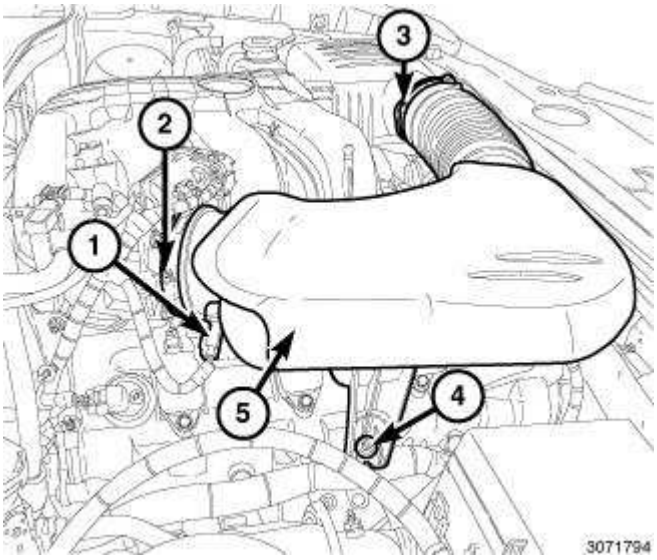

Fig. 538: Inlet Air Temperature (IAT) Sensor Electrical Connector, Air Inlet Hose Assembly & Fasteners
Courtesy of CHRYSLER GROUP, LLC

13. Position the air inlet hose assembly (5) onto the throttle body and the air cleaner housing.
14. Secure the air inlet hose assembly retaining grommet onto the ball stud (4).
15. Tighten the clamp at the air cleaner housing (3) to 5 N.m (44 in. lbs.).
16. Tighten the clamp (2) at the throttle body to 5 N.m (44 in. lbs.).
17. Connect the Inlet Air Temperature (IAT) sensor electrical connector (1).

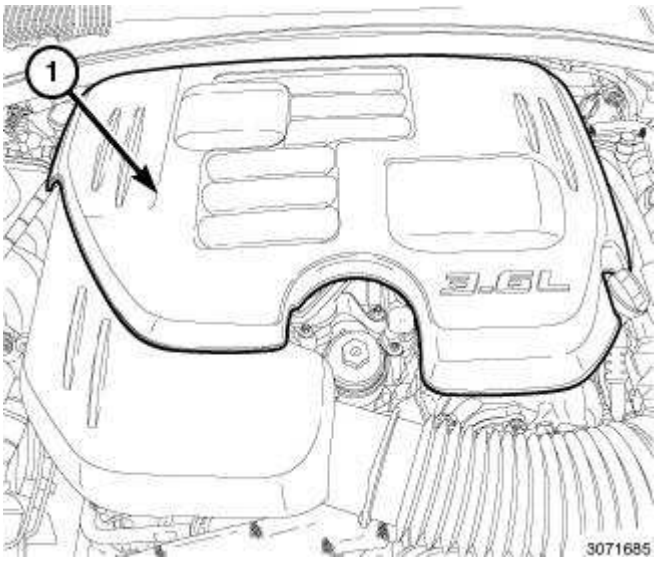

Fig. 539: Engine Cover

Courtesy of CHRYSLER GROUP, LLC

18. Position the engine cover (1) and secure the retaining grommets onto the ball studs.

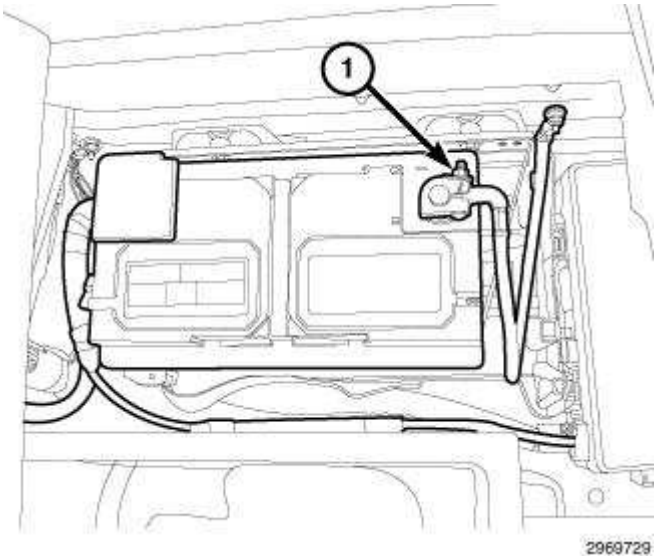

Fig. 540: Negative Battery Cable
Courtesy of CHRYSLER GROUP, LLC

19. Connect the negative battery cable and tighten nut (1) to 5 N.m (45 in. lbs.).

INSULATOR, ENGINE MOUNT, REAR

REMOVAL

REMOVAL

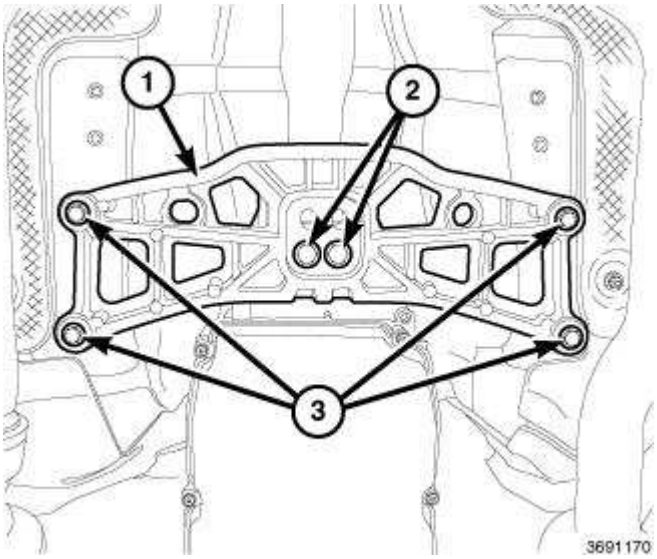

Fig. 541: Crossmember & Bolts (RWD)
Courtesy of CHRYSLER GROUP, LLC

1. Raise and support the vehicle. Refer to **HOISTING, STANDARD PROCEDURE** .
2. Remove the two bolts (2) from the rear engine mount isolator.
3. Using a suitable jack stand and a block of wood positioned under the transmission oil pan, raise the transmission until the weight is off of the isolator (approximately 5 mm).
4. Remove four bolts (3) and the crossmember (1).

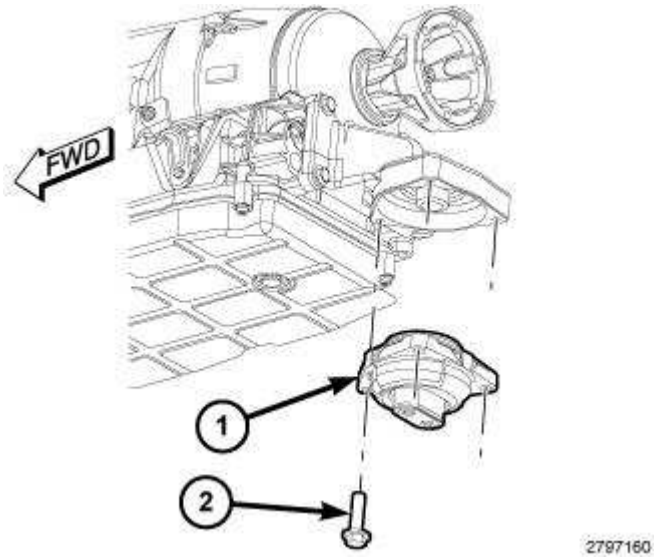

Fig. 542: Rear Engine Mount Isolator & Bolts (4x2)
Courtesy of CHRYSLER GROUP, LLC

5. Remove four bolts (2) and the rear engine mount isolator (1).

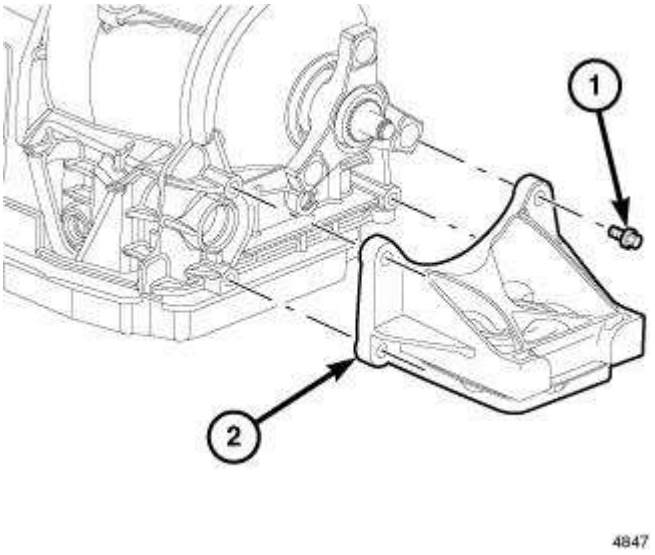

Fig. 543: Rear Transmission Mount Bracket
Courtesy of CHRYSLER GROUP, LLC

6. If required, remove four bolts (1) and the rear engine mount bracket (2).

INSTALLATION

INSTALLATION

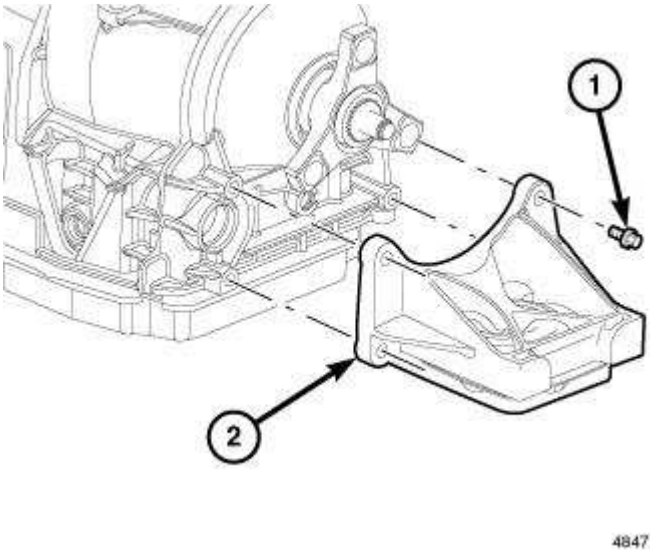

Fig. 544: Rear Transmission Mount Bracket
Courtesy of CHRYSLER GROUP, LLC

1. If removed, install the rear engine mount bracket (2) with four bolts (1) tightened to 33 N.m (24 ft. lbs.).

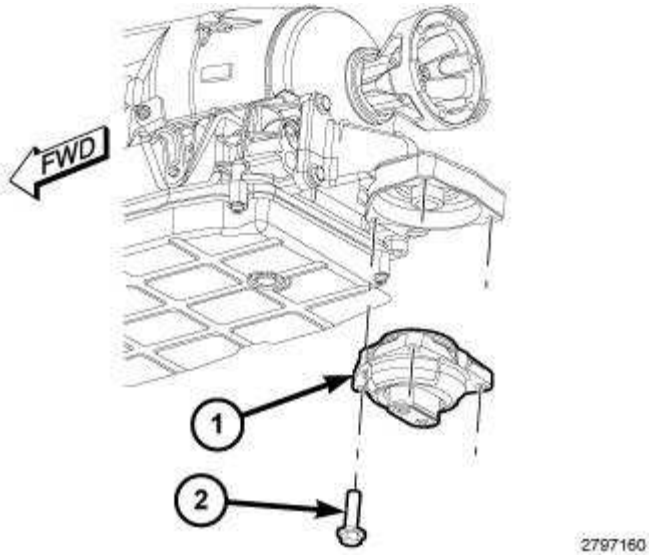

Fig. 545: Rear Engine Mount Isolator & Bolts (4x2)
Courtesy of CHRYSLER GROUP, LLC

2. Install the rear engine mount isolator (1) with bolts (2) tightened to 33 N.m (24 ft. lbs.).

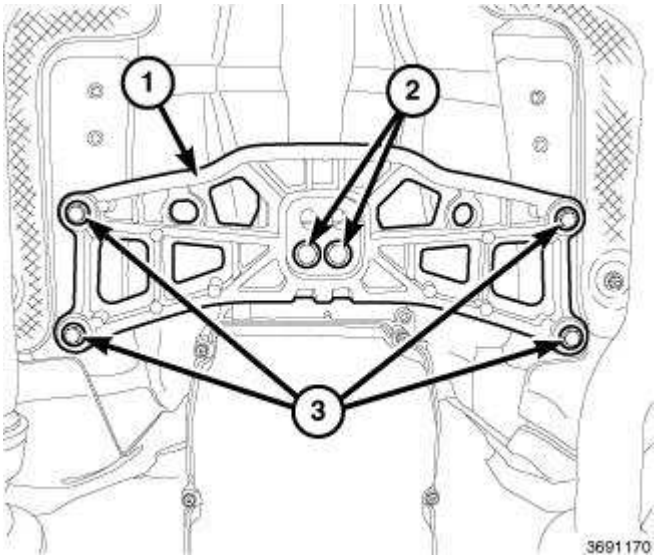

Fig. 546: Crossmember & Bolts (RWD)
Courtesy of CHRYSLER GROUP, LLC

3. Install the crossmember (1) with four bolts (3) tightened to 65 N.m (48 ft. lbs.).
4. Lower the transmission so the weight is resting on the isolator.
5. Install two bolts (2) to the rear engine mount isolator and tighten to 65 N.m (48 ft. lbs.).
6. Lower the vehicle.

LUBRICATION

DESCRIPTION

DESCRIPTION

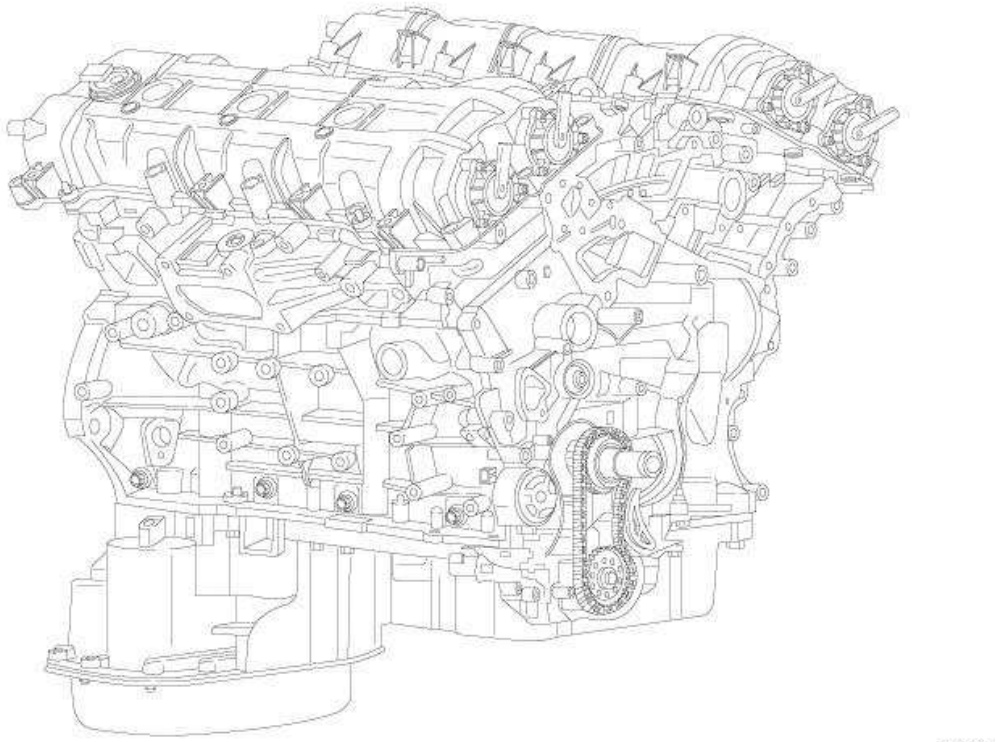

Fig. 547: 3.6L Engine
Courtesy of CHRYSLER GROUP, LLC

The lubrication system is a full flow filtration, pressure feed type lubrication system. The oil pump is mounted to the bottom of the cylinder block and chain driven by the crankshaft sprocket. The oil pump pick-up tube is attached to the oil pump and supported at the windage tray. There are three oil gallery plugs installed in the engine block. A system oil pressure sensor allows oil pressure to be monitored with a diagnostic scan tool. The oil pressure and oil temperature sensors are located on the oil filter housing assembly which is mounted to the top of the engine block between the cylinder heads. The oil cooler is mounted to the oil filter housing. There is a pressure relief valve in the oil pump that is only activated on a cold start or for emergency relief since the oil pump output is self-regulating. There are three piston oil cooler jets mounted to the engine block. Each jet cools two pistons.

OPERATION

OPERATION

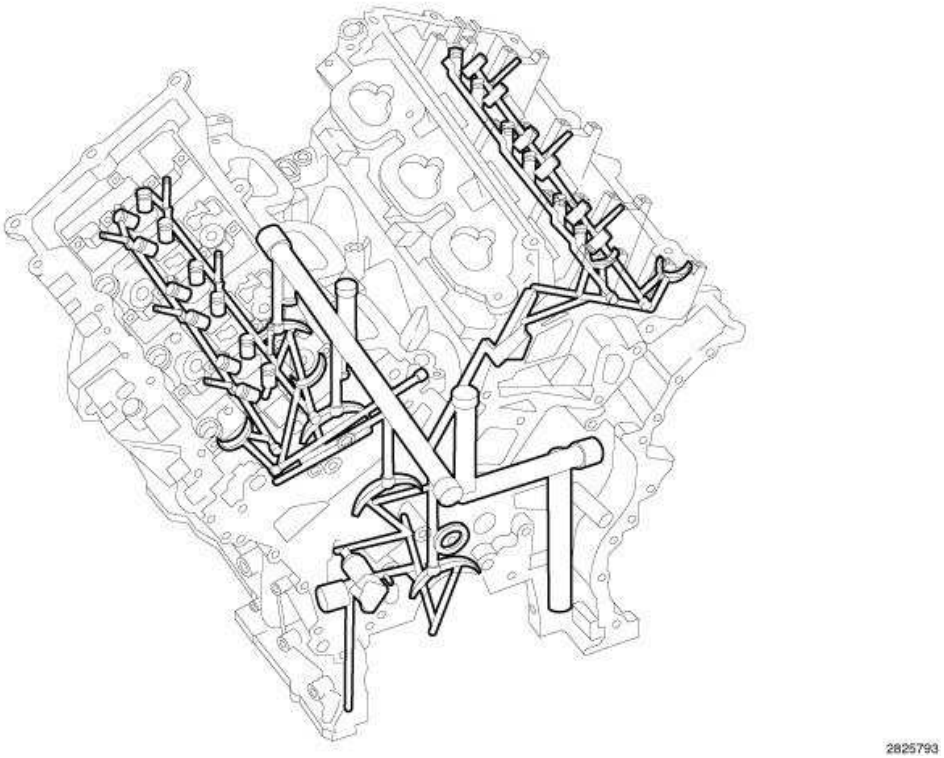

Fig. 548: Engine Lubrication Flow
Courtesy of CHRYSLER GROUP, LLC

The oil from the oil pan is pumped by a vane type oil pump mounted to the bottom of the cylinder block that is chain driven by the crankshaft sprocket. The oil from the pump travels to the oil filter element and then to the oil cooler assembly. After the oil has been filtered and cooled, the oil enters the main oil gallery. The pressurized oil travels through the main gallery to the four main journals to lubricate the crankshaft main bearings. The pressurized oil travels through the crankshaft main journals to cross-drilling supplying oil to the connecting rod journals. From the number one main bearing gallery, oil travels to the right secondary chain tensioner and to the primary chain idler shaft. The main oil gallery also supplies oil to three sets of piston oil cooling jets. From the cylinder block the oil flows through drillings into the left and right cylinder heads. Left cylinder head oil is supplied to the left secondary timing chain tensioner, camshaft journals and hydraulic lash adjusters. Right cylinder hear oil is supplied to the right camshaft journals and hydraulic lash adjusters. The camshaft valve lobes and rocker arms are lubricated through a small hole in the rocker arm; oil flows through the lash adjuster then through the rocker arm and onto the camshaft lobe. Oil also flows through each of the four forward camshaft bearings into the camshafts and phasers.

ENGINE LUBRICATION FLOW CHART

FROM	TO
Oil Pickup Tube	Oil Pump
Oil Pump	Oil Filter
Oil Filter	Oil Cooler
Oil Cooler	Block Main Oil Gallery
Block Main Oil Gallery	1. Crankshaft Main Journals

	2. Left Cylinder Head 3. Right Cylinder Head 4. Piston Cooling Jets
Crankshaft Number One Main Journal	1. Primary Chain Idler Shaft 2. Right Secondary Chain Tensioner 3. Oil Pump Feedback
Crankshaft Main Journals	Crankshaft Rod Journals
Left Cylinder Head	1. Left Secondary Chain Tensioner 2. Hydraulic Lash Adjusters 3. Camshaft Journals 4. Phaser Oil Control Valves
Right Cylinder Head	1. Hydraulic Lash Adjusters 2. Camshaft Journals 3. Phaser Oil Control Valves
Hydraulic Lash Adjusters	1. Rocker Arms 2. Cam Lobes

DIAGNOSIS AND TESTING

ENGINE OIL LEAK

Begin with a thorough visual inspection of the engine, particularly at the area of the suspected leak. If an oil leak source is not readily identifiable, the following steps should be followed:

1. Do not clean or de-grease the engine at this time because some solvents may cause rubber to swell, temporarily stopping the leak.
2. Add an oil soluble dye (use as recommended by manufacturer). Start the engine and let idle for approximately 15 minutes. Check the oil dipstick to make sure the dye is thoroughly mixed as indicated with a bright yellow color under a black light.
3. Using a black light, inspect the entire engine for fluorescent dye, particularly at the suspected area of the oil leak. If the oil leak is found and identified, repair per service manual instructions.
4. If dye is not observed, drive the vehicle at various speeds for approximately 24 km (15 miles), and repeat the inspection.

   If the oil leak source is not positively identified at this time, proceed with the **AIR LEAK DETECTION TEST METHOD**.

AIR LEAK DETECTION TEST METHOD

1. Disconnect the make-up air hose from the cylinder head cover. Cap or plug the make-up air hose nipple.
2. Remove the PCV hose from the PCV valve. Cap or plug the PCV valve nipple.
3. Attach an air hose with a pressure gauge and regulator to the dipstick tube.

CAUTION: Do not subject the engine assembly to more than 20.6 kPa (3 PSI) of test pressure.

4. Gradually increase air pressure from 1 psi to 2.5 psi maximum while applying soapy water at the suspected leak source. Adjust the regulator to a suitable test pressure within this range that provides the best bubble generation which will pinpoint the leak source. If the oil leak is detected and identified, repair per Service Information procedures.
5. If the leakage occurs at the rear oil seal area, follow the procedures for rear seal area leaks. Refer to **REAR SEAL AREA LEAKS**.
6. If no leaks are detected, turn off the air supply and remove the air hose and all plugs and caps. Install the PCV valve and make-up air hoses.
7. Clean the oil off of the suspect oil leak area using a suitable solvent. Drive the vehicle at various speeds approximately 24 km (15 miles). Inspect the engine for signs of an oil leak by using a black light.

CHECKING ENGINE OIL PRESSURE

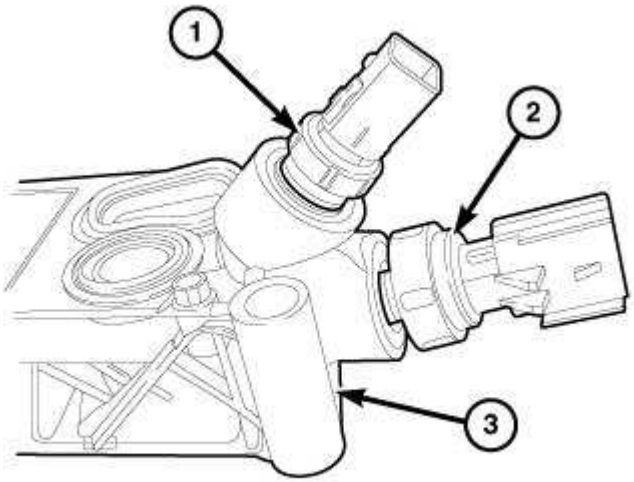

Fig. 549: Oil Temperature Sensor, Oil Pressure Sensor & Oil Filter Housing
Courtesy of CHRYSLER GROUP, LLC

1. Disconnect and isolate the negative battery cable.
2. Remove the oil pressure sensor (2) from the oil filter housing (3). Refer to **SENSOR, OIL PRESSURE, REMOVAL** .

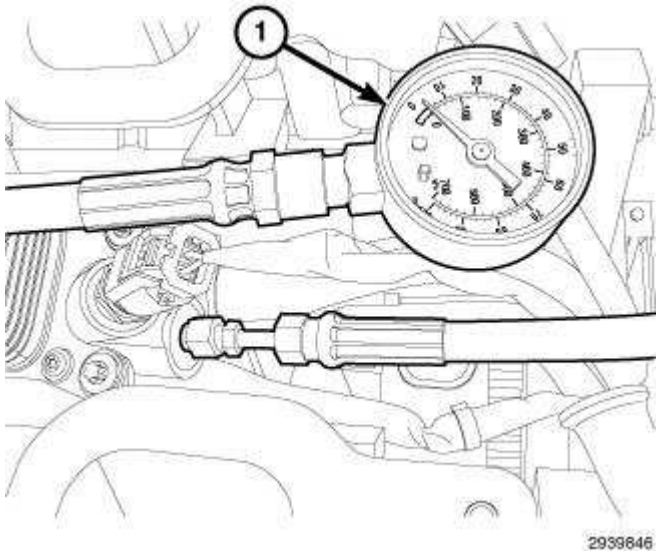

Fig. 550: Pressure Gauge Installed To Oil Pressure Port
Courtesy of CHRYSLER GROUP, LLC

3. Install Pressure Gauge (special tool #C-3292A, Gauge, Pressure) (1) to the oil pressure port. Tighten to 20 N.m (177 in. lbs.).
4. Install the upper and lower intake manifolds and air inlet hose. Refer to **MANIFOLD, INTAKE, INSTALLATION** .
5. Connect the negative battery cable and tighten nut to 5 N.m (45 in. lbs.).
6. Start and idle the engine. If oil pressure is 0 at idle, shut off the engine and consult the Engine Lubrication and Diagnostic Table. Refer to **ENGINE LUBRICATION DIAGNOSTIC TABLE**.
7. Run the engine until it reaches normal operating temperature.
8. Verify that the engine has acceptable oil pressure. Refer to **SPECIFICATIONS**.

REAR SEAL AREA LEAKS

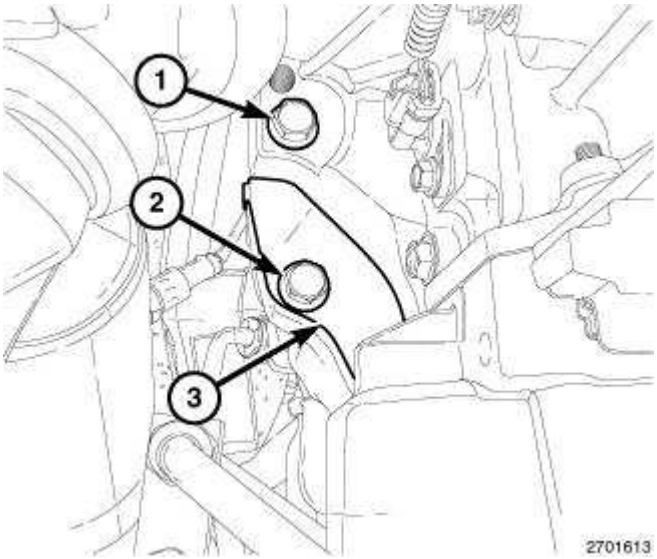

Fig. 551: Side Engine-To-Transmission Bolt, Transmission Dust Shield Retaining Bolt & Dust Shield
Courtesy of CHRYSLER GROUP, LLC

Since it is sometimes difficult to determine the source of an oil leak in the rear seal area of the engine, a more involved inspection is necessary. The following steps should be followed to help pinpoint the source of the leak.

If the leakage occurs at the crankshaft rear oil seal area:

1. Disconnect and isolate the negative battery cable.
2. Raise and support the vehicle. Refer to **HOISTING, STANDARD PROCEDURE** .
3. Remove the bolt (2) and the torque converter dust shield (3).

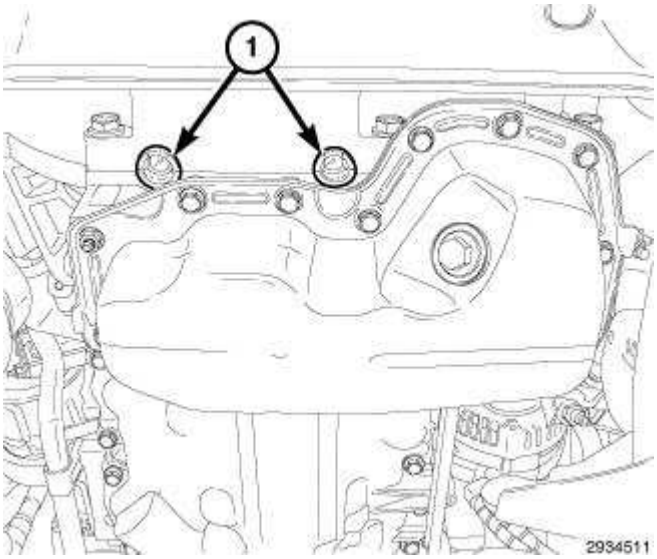

Fig. 552: Rubber Plugs
Courtesy of CHRYSLER GROUP, LLC

4. Remove two rubber plugs (1) covering the rear oil seal retainer flange bolts.
5. Inspect the flexplate and rear of the block for evidence of oil. Use a black light to check for the oil leak:
    a. Circular spray pattern generally indicates seal leakage or crankshaft damage.
    b. Where leakage tends to run straight down, possible causes are a porous block, rear oil seal retainer, oil galley pipe plug and rear seal retainer to oil pan mating surfaces.
6. If no leaks are detected, use the Air Leak Detection Method as outlined in Engine Oil Leak. Refer to **AIR LEAK DETECTION TEST METHOD**.

CAUTION: Do not subject the engine assembly to more than 20.6 kPa (3 PSI) of test pressure.

7. If the leak is not detected, very slowly turn the crankshaft and watch for leakage. If a leak is

detected between the crankshaft and seal while slowly turning the crankshaft, it is possible the crankshaft seal surface is damaged. The seal area on the crankshaft could have minor nicks or scratches that can be polished out with emery cloth.

CAUTION: Use extreme caution when crankshaft polishing is necessary to remove minor nicks or scratches. The crankshaft seal flange is specially machined to complement the function of the rear oil seal.

8. For bubbles that remain steady with shaft rotation, no further inspection can be done until disassembled. Refer to **SEAL, CRANKSHAFT OIL, REAR, REMOVAL**.

COOLER, OIL

DESCRIPTION

DESCRIPTION

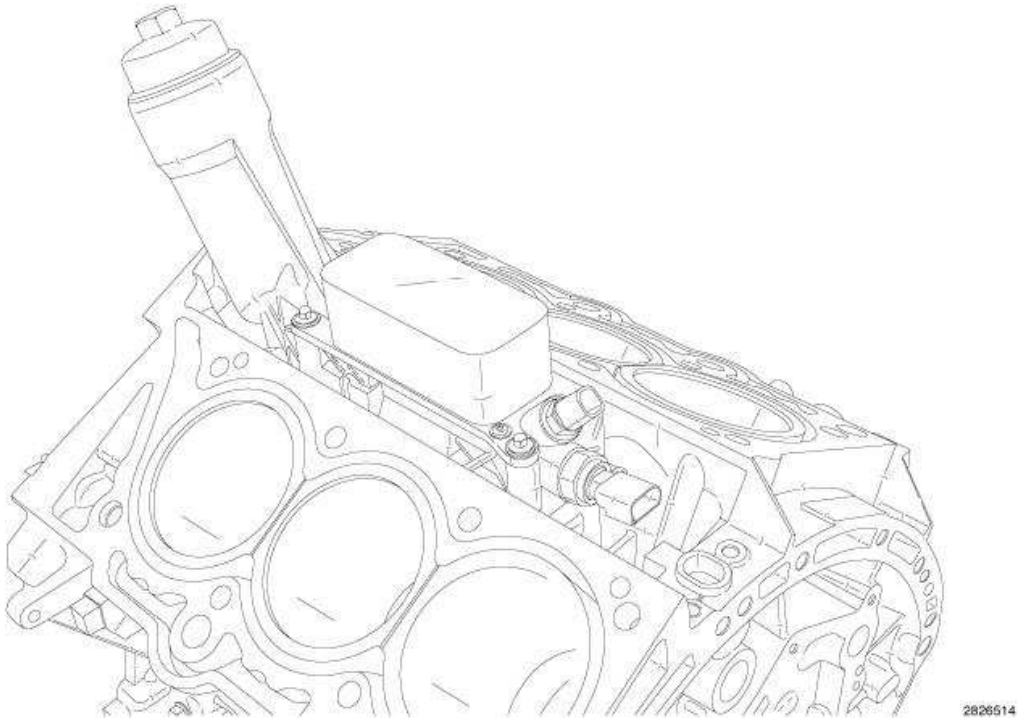

Fig. 553: Oil Filter Housing
Courtesy of CHRYSLER GROUP, LLC

The oil cooler is attached to the top of the oil filter housing which is located in the V of the cylinder block. The oil cooler is a plate style coolant-to-oil heat exchanger.

OPERATION

OPERATION

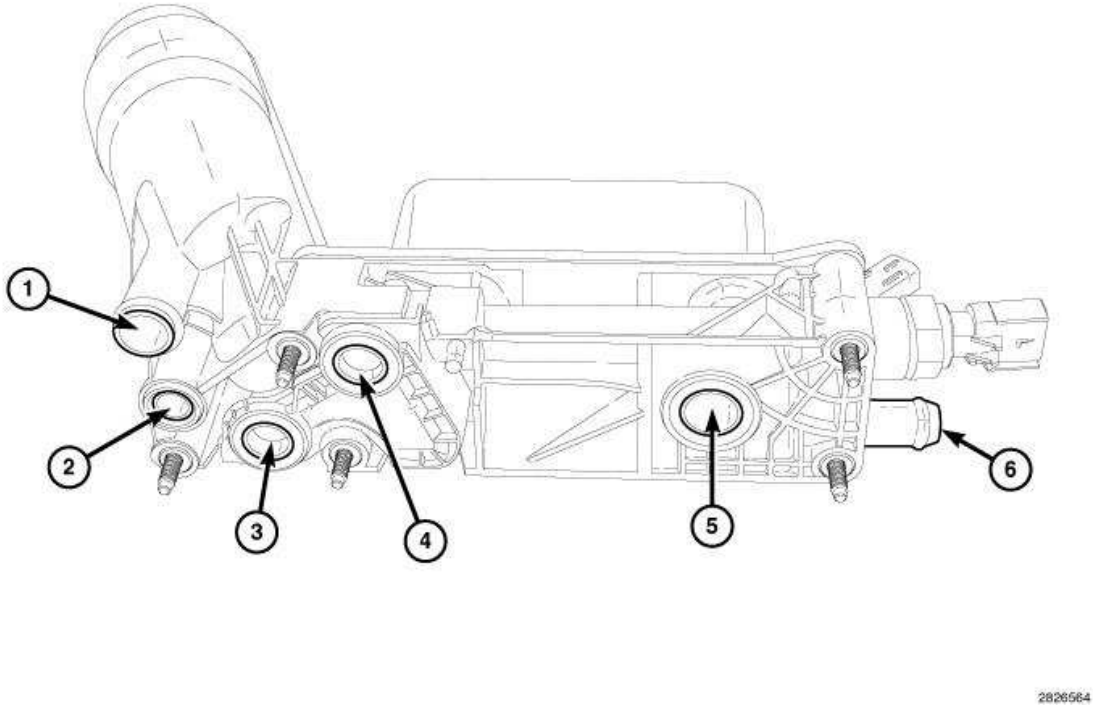

Fig. 554: Oil Flow & Coolant Flow Locations
Courtesy of CHRYSLER GROUP, LLC

Oil flows from the engine oil pump to the oil filter housing inlet (1) and to the oil filter element located within the oil filter housing. After the oil is filtered it travels internally through the engine oil cooler and then to the main oil gallery (5).

Coolant flows from the right cylinder block water jacket (3) and from the left cylinder block water jacket (4) into the housing. The coolant flows through the oil cooler and exits the housing from the rear hose nipple (6) where it is returned to the water pump. A coolant by-pass in the housing is designed to direct excessive coolant flow around the oil cooler for continuous circulation.

REMOVAL

REMOVAL

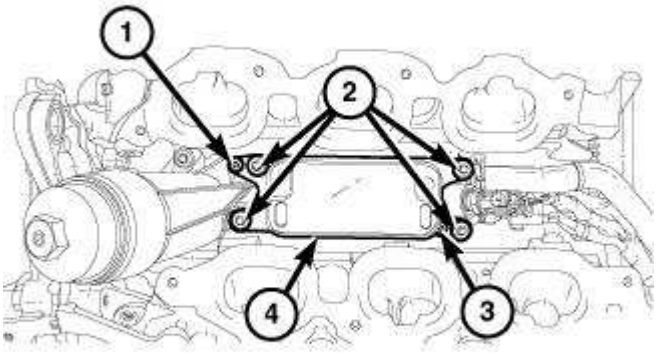

2707169

Fig. 555: Oil Cooler & Screws
Courtesy of CHRYSLER GROUP, LLC

NOTE: The oil cooler can not be cleaned out. In the event that the engine requires rebuilding or replacement, replace the oil cooler.

1. Perform the fuel pressure release procedure. Refer to **FUEL DELIVERY, GAS, STANDARD PROCEDURE** .
2. Disconnect and isolate the negative battery cable.
3. Drain the cooling system. Refer to **STANDARD PROCEDURE** .
4. Remove the air cleaner housing assembly, upper and lower intake manifolds. Refer to **MANIFOLD, INTAKE, REMOVAL** .
5. Remove four bolts (2) and two screws (1) and (3).
6. Remove the oil cooler (4).

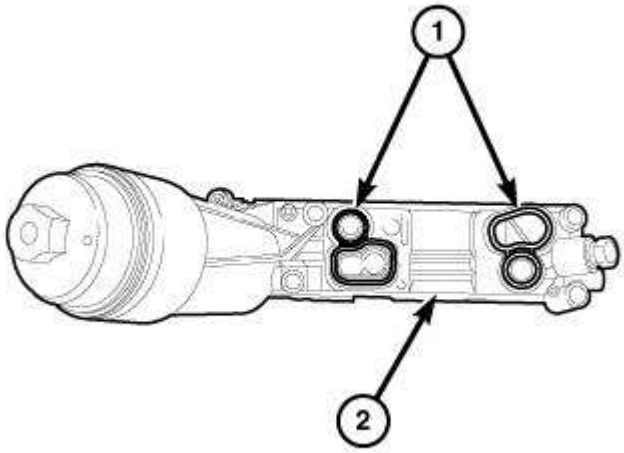

2710718

Fig. 556: Oil Cooler Seals & Oil Filter Housing
Courtesy of CHRYSLER GROUP, LLC

7. Remove and discard the oil cooler seals (1).

INSTALLATION

INSTALLATION

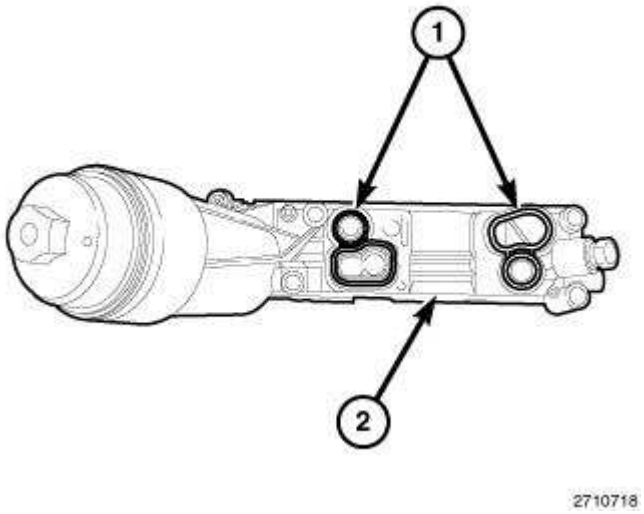

Fig. 557: Oil Cooler Seals & Oil Filter Housing
Courtesy of CHRYSLER GROUP, LLC

NOTE: Always use new dry seals (1) when installing the oil cooler. Do not lubricate the seals.

1. Install the new oil cooler seals (1) onto the oil filter housing (2).

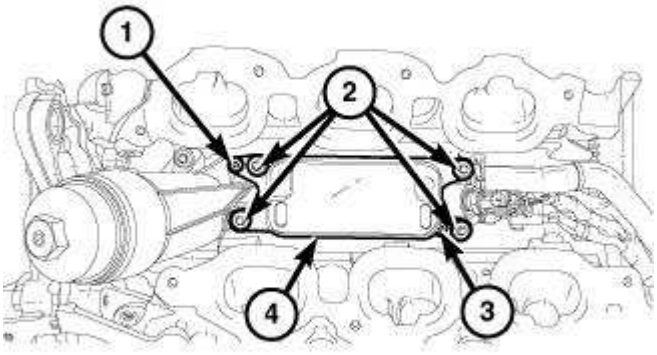

Fig. 558: Oil Cooler & Screws
Courtesy of CHRYSLER GROUP, LLC

2. Position the oil cooler (4) on the oil filter housing.
3. Install two screws (1) and (3). Tighten the screws to 4 N.m (35 in. lbs.).
4. Install four bolts (2) and tighten to 12 N.m (106 in. lbs.).
5. Install the upper and lower intake manifolds and air cleaner housing assembly. Refer to **MANIFOLD, INTAKE, INSTALLATION** .
6. Fill the engine crankcase with the proper oil to the correct level. Refer to **STANDARD PROCEDURE**.
7. Connect the negative battery cable and tighten nut to 5 N.m (45 in. lbs.).
8. Fill the cooling system. Refer to **STANDARD PROCEDURE** .
9. Operate the engine until it reaches normal operating temperature. Check cooling system for correct fluid level. Refer to **STANDARD PROCEDURE** .

FILTER, ENGINE OIL

REMOVAL

REMOVAL

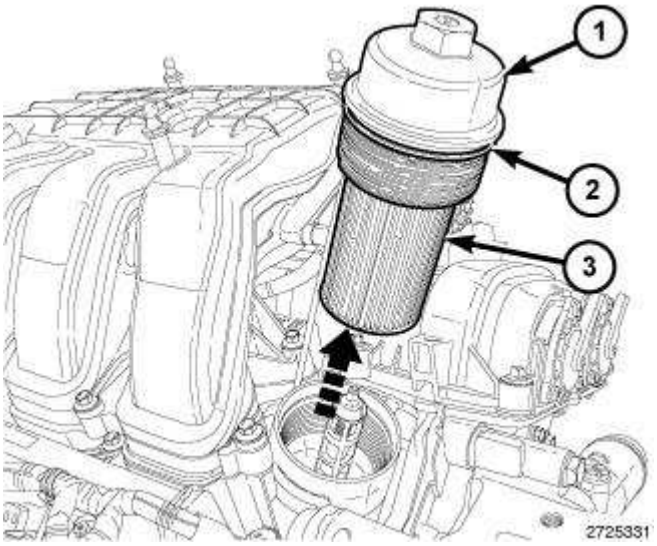

Fig. 559: Oil Filter Cap, O-Ring Seal & Oil Filter
Courtesy of CHRYSLER GROUP, LLC

All engines are equipped with a high quality full-flow, disposable type oil filter. Chrysler Corporation recommends a Mopar® or equivalent oil filter be used.

CAUTION: When performing an engine oil change, the oil filter cap must be removed. Removing the oil filter cap releases oil held within the oil filter cavity and allows it to drain into the sump. Failure to remove the cap prior to reinstallation of the drain plug will not allow complete draining of the used engine oil.

1. Place an oil absorbent cloth around the oil filter housing at the base of the oil filter cap.

NOTE: The oil filter (3) is attached to the oil filter cap (2).

2. Rotate the oil filter cap (1) counterclockwise and remove the cap (1) and filter (3) from the oil filter housing.



Fig. 560: O-Ring Seal, Oil Filter Cap & Oil Filter
Courtesy of CHRYSLER GROUP, LLC

3. Remove the oil filter (3) from the oil filter cap (2).
4. Remove and discard the O-ring seal (1).

INSTALLATION

INSTALLATION

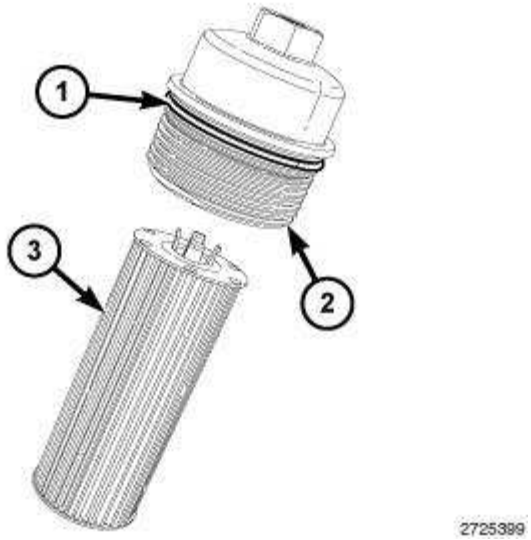

Fig. 561: O-Ring Seal, Oil Filter Cap & Oil Filter
Courtesy of CHRYSLER GROUP, LLC

NOTE: It is not necessary to pre-oil the oil filter or fill the oil filter housing.

1. Lightly lubricate the new O-ring seal (1) with clean engine oil.

2. Install the O-ring seal (1) on the filter cap (2).
3. Install the new oil filter (3) into the oil filter cap (2).

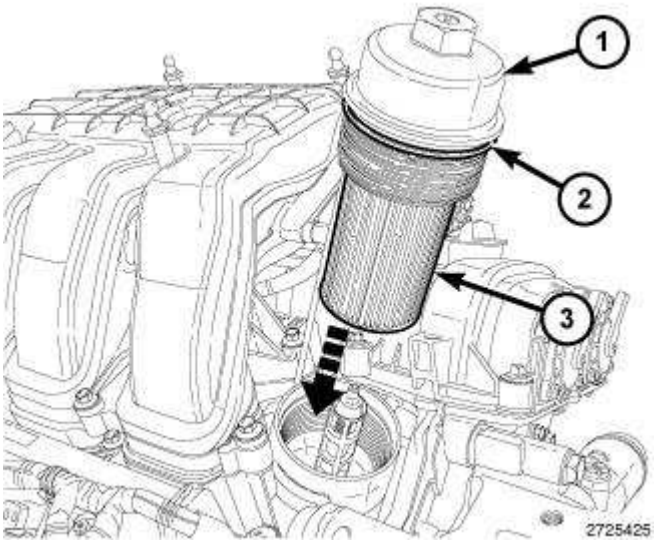

Fig. 562: Oil Filter Cap, O-Ring Seal & Oil Filter
Courtesy of CHRYSLER GROUP, LLC

4. Thread the oil filter cap (1) into the oil filter housing and tighten to 25 N.m (18 ft. lbs.).
5. Add oil, verify crankcase oil level and start engine. Inspect for oil leaks. Refer to **STANDARD PROCEDURE**.

HOUSING, OIL FILTER

DESCRIPTION

DESCRIPTION

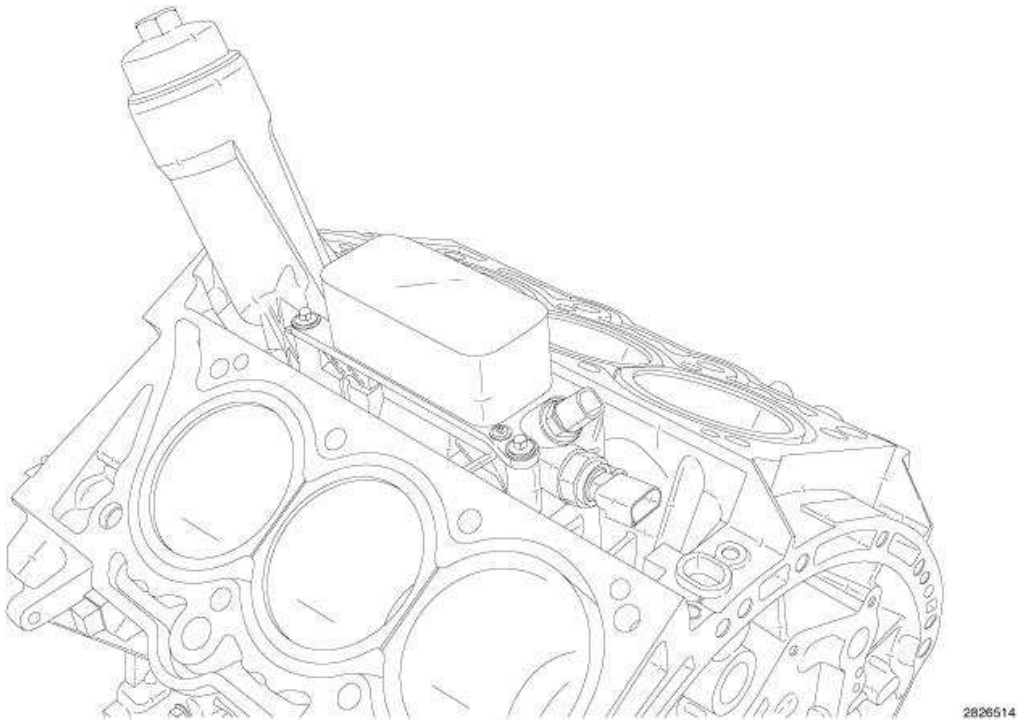

Fig. 563: Oil Filter Housing
Courtesy of CHRYSLER GROUP, LLC

The oil filter housing is located in the V of the cylinder block. The oil filter element is located within the housing and the engine oil cooler is attached to the top of the housing. Both the oil pressure and oil temperature sensors are located at the rear of the housing.

OPERATION

OPERATION

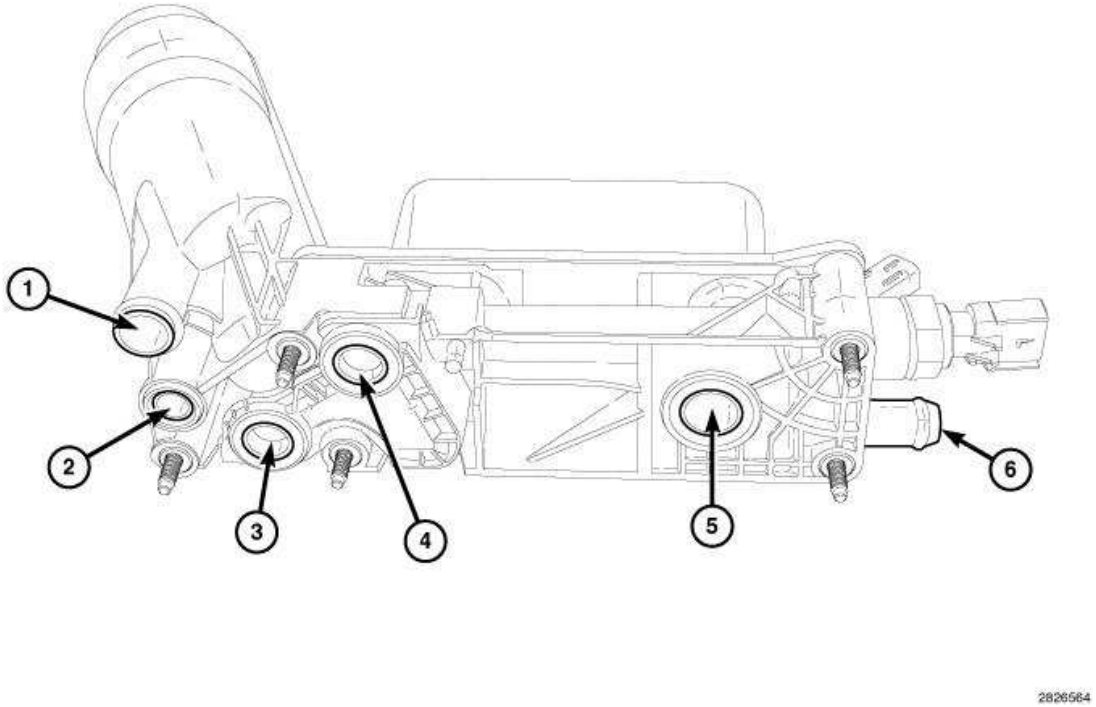

Fig. 564: Oil Flow & Coolant Flow Locations
Courtesy of CHRYSLER GROUP, LLC

Oil flows from the engine oil pump to the oil filter housing inlet (1) and to the oil filter element located within the oil filter housing. After the oil is filtered and then cooled it travels to the main oil gallery (5). An oil filter by-pass is built into the housing and is not serviceable. Removing the oil filter cap from the housing allows oil to drain from the oil filter cavity into to the crankcase (2).

Coolant flows from the right cylinder block water jacket (3) and from the left cylinder block water jacket (4) into the housing. The coolant flows through the oil cooler and exits the housing from the rear hose nipple (6) where it is returned to the water pump. A coolant by-pass in the housing is designed to direct excessive coolant flow around the oil cooler for continuous circulation.

REMOVAL

REMOVAL

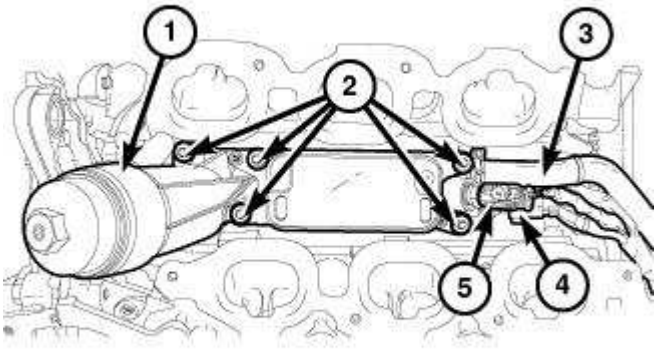

2707704

Fig. 565: Oil Temperature Sensor Electrical Connector, Oil Pressure Sensor Electrical Connector, Oil Filter Housing, Heater Hose & Bolts
Courtesy of CHRYSLER GROUP, LLC

1. Perform the fuel pressure release procedure. Refer to **FUEL DELIVERY, GAS, STANDARD PROCEDURE** .
2. Disconnect and isolate the negative battery cable.
3. Drain the cooling system. Refer to **STANDARD PROCEDURE** .
4. Remove the air cleaner housing assembly, upper and lower intake manifolds. Refer to **MANIFOLD, INTAKE, REMOVAL** .
5. Disconnect the oil temperature sensor electrical connector (5).
6. Disconnect the oil pressure sensor electrical connector (4).
7. Remove five bolts (2) and remove the oil filter housing (1).
8. Lift the oil filter housing (1) and remove the heater hose (3).

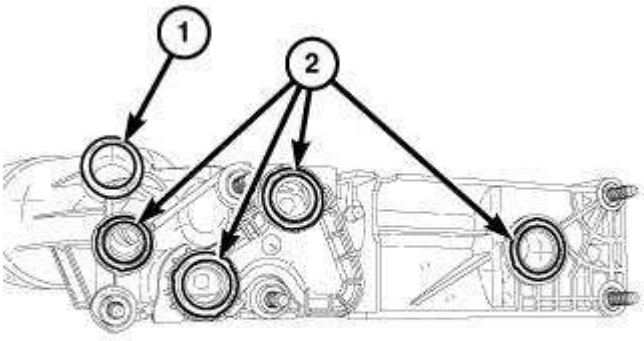

2707844

Fig. 566: Oil Filter Housing Seals & O-Ring Seal
Courtesy of CHRYSLER GROUP, LLC

9. Remove and discard the oil filter housing seals (2). The O-ring seal (1) can be reused.

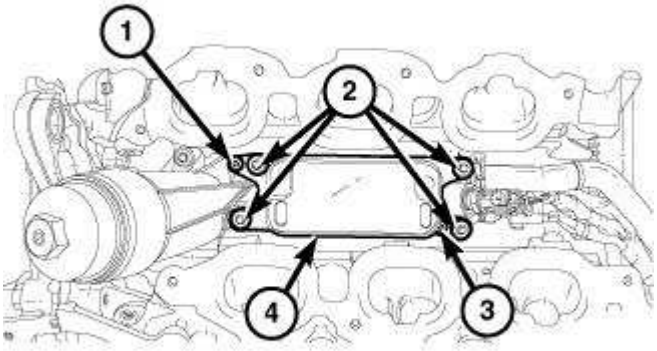

2707169

Fig. 567: Oil Cooler & Screws
Courtesy of CHRYSLER GROUP, LLC

10. If required, remove two screws (1) and (3) and remove the oil cooler (4) from the oil filter housing.

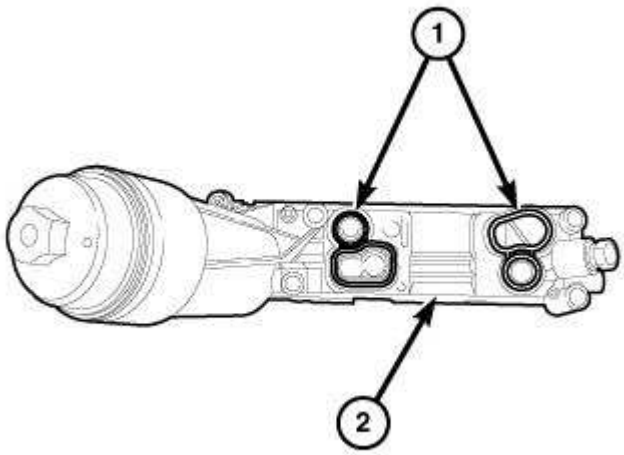

2710718

Fig. 568: Oil Cooler Seals & Oil Filter Housing
Courtesy of CHRYSLER GROUP, LLC

11. Remove and discard the oil cooler seals (1).

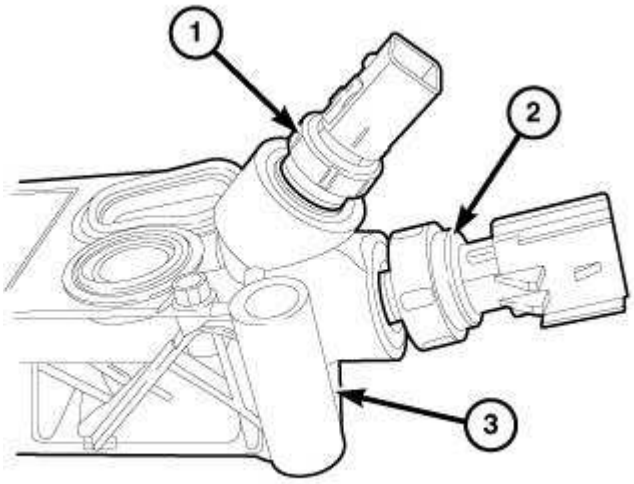

Fig. 569: Oil Temperature Sensor, Oil Pressure Sensor & Oil Filter Housing
Courtesy of CHRYSLER GROUP, LLC

12. If required, remove the oil temperature sensor (1) from the oil filter housing (3).
13. If required, remove the oil pressure sensor (2) from the oil filter housing (3).

INSTALLATION

INSTALLATION

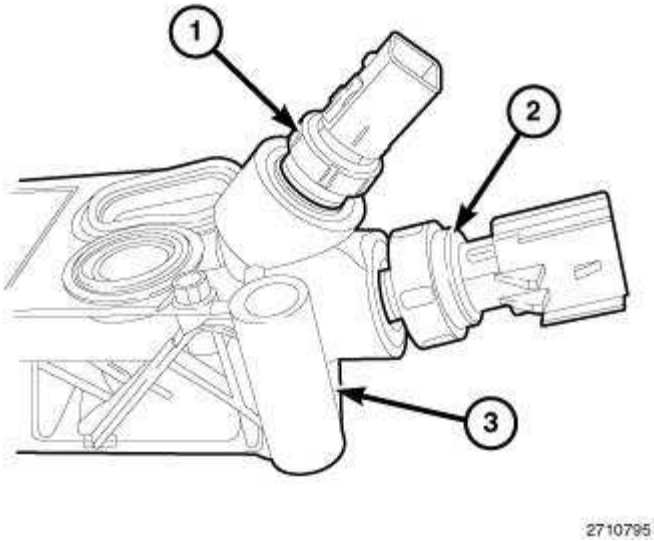

Fig. 570: Oil Temperature Sensor, Oil Pressure Sensor & Oil Filter Housing
Courtesy of CHRYSLER GROUP, LLC

1. If removed, install the oil pressure sensor (2) and tighten to 23 N.m (17 ft. lbs.).
2. If removed, install the oil temperature sensor (1) and tighten to 30 N.m (22 ft. lbs.).

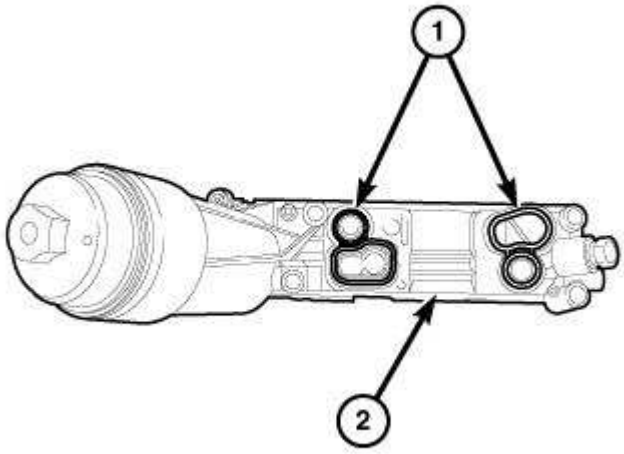

Fig. 571: Oil Cooler Seals & Oil Filter Housing
Courtesy of CHRYSLER GROUP, LLC

NOTE: Always use new dry seals (1) when installing the oil cooler. Do not lubricate the seals.

3. If removed, install the new oil cooler seals (1) onto the oil filter housing (2).

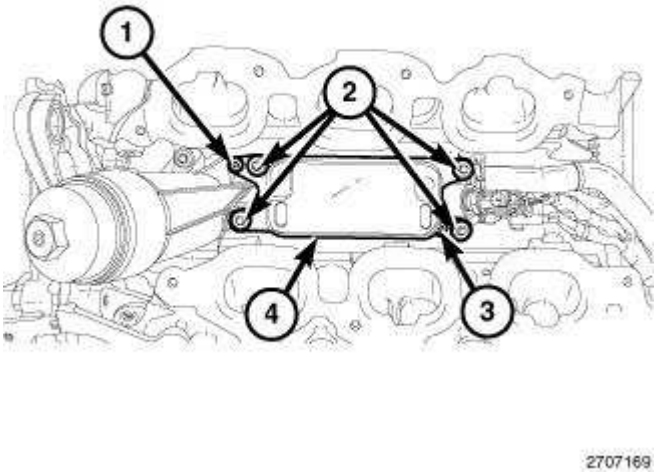

Fig. 572: Oil Cooler & Screws
Courtesy of CHRYSLER GROUP, LLC

4. If removed, position the oil cooler (4) on the oil filter housing.

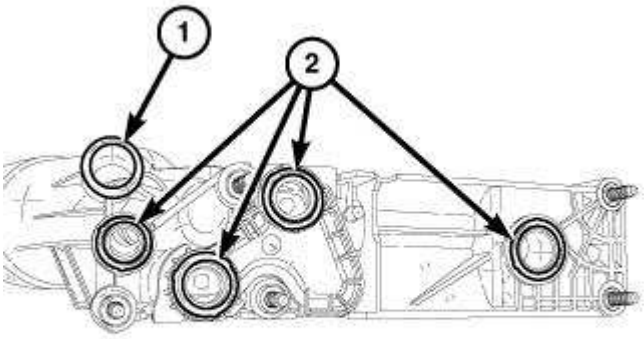

2707844

Fig. 573: Oil Filter Housing Seals & O-Ring Seal
Courtesy of CHRYSLER GROUP, LLC

NOTE: Always use new dry seals (2) when installing the oil filter housing. Lubricate the O-ring seal with clean engine oil prior to installation.

5. Install new oil filter housing seals (2) onto the oil filter housing.

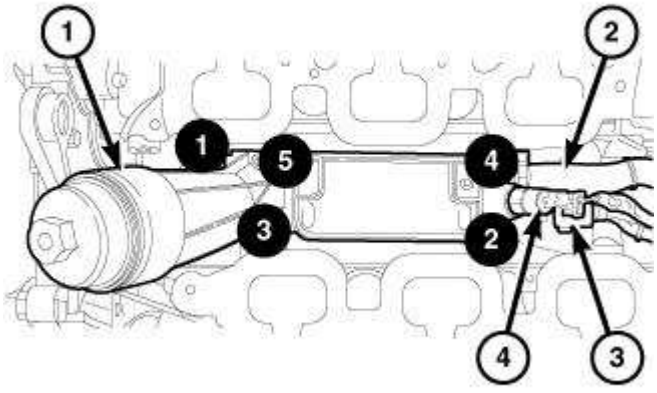

2710852

Fig. 574: Heater Hose, Electrical Connectors, Oil Filter Housing & Bolt Tightening Sequence
Courtesy of CHRYSLER GROUP, LLC

6. Install the heater hose (2) to the oil filter housing (1).
7. Position the oil filter housing (1) on the engine block.
8. Install five bolts and tighten in the sequence shown in illustration to 12 N.m (106 in. lbs.).

9. Connect the oil pressure sensor electrical connector (3).
10. Connect the oil temperature sensor electrical connector (4).
11. Install the upper and lower intake manifolds and air cleaner housing assembly. Refer to **MANIFOLD, INTAKE, INSTALLATION** .
12. If removed, install the oil filter and fill the engine crankcase with the proper oil to the correct level. Refer to **STANDARD PROCEDURE**.
13. Connect the negative battery cable and tighten nut to 5 N.m (45 in. lbs.).
14. Fill the cooling system. Refer to **STANDARD PROCEDURE** .
15. Operate the engine until it reaches normal operating temperature. Check cooling system for correct fluid level. Refer to **STANDARD PROCEDURE** .

JET, PISTON OIL COOLER

DESCRIPTION

DESCRIPTION

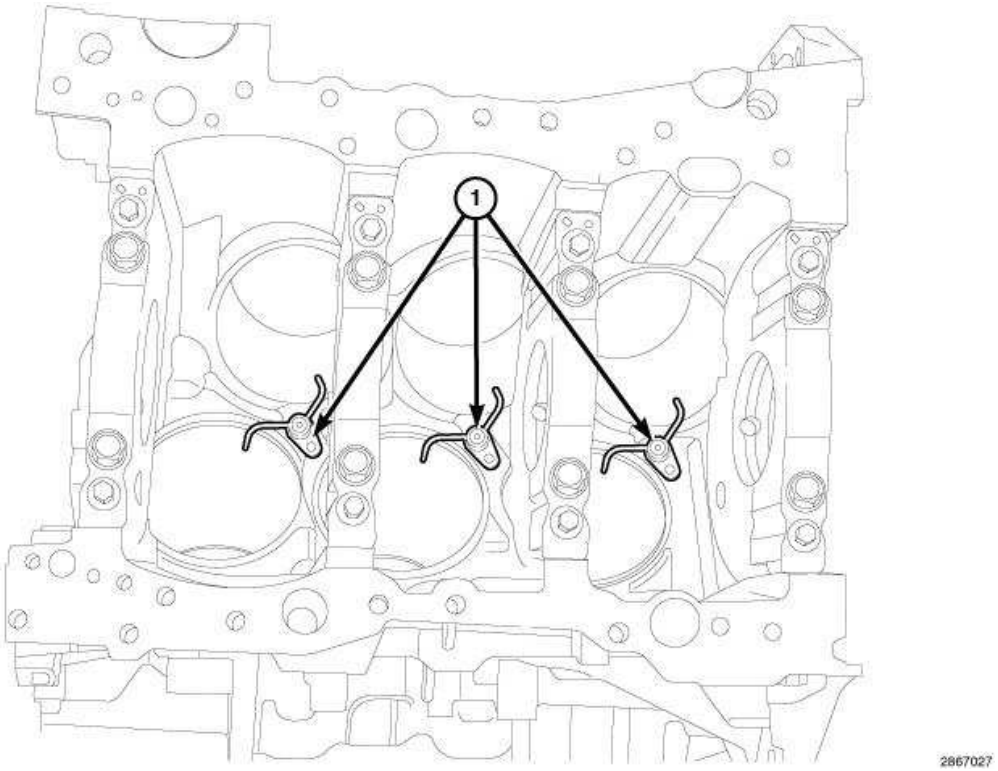

Fig. 575: Engine Blocked-Mounted Oil Jets
Courtesy of CHRYSLER GROUP, LLC

The 3.6 liter engine has three engine blocked-mounted oil jets (1) installed to cool the underside of each piston. The oil jets are fed by the main oil gallery, and spray upward on the bottom of the pistons and cylinder walls. Each set of jets has a check valve which closes below 2.5 bar (35 psi) to maintain ample oil pressure at idle. All three sets of oil jets are identical and seal to the engine block using an

o-ring and fastener.

REMOVAL

REMOVAL

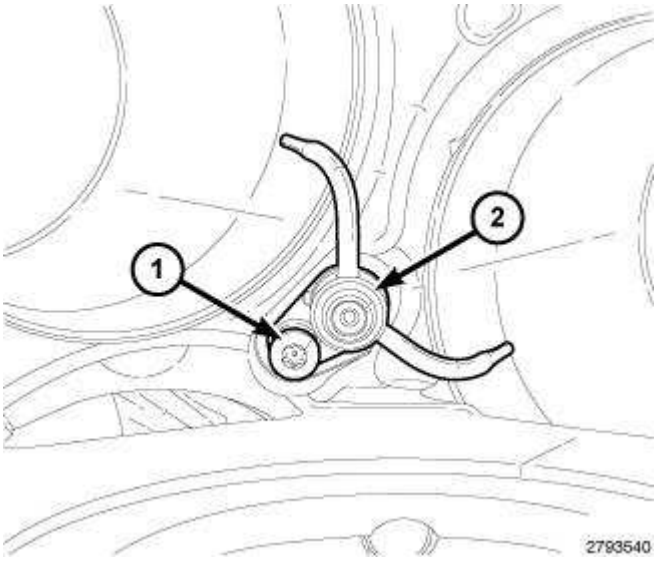

Fig. 576: Piston Oil Cooler Jet & Bolt
Courtesy of CHRYSLER GROUP, LLC

NOTE: Piston oil cooler jet for cylinders one/two shown in illustration. Piston oil cooler jets for cylinders three/four and five/six are similar.

1. Remove the crankshaft. Refer to **CRANKSHAFT, REMOVAL** .
2. Remove the bolt (1) and the piston oil cooler jet(s) (2) from the engine block.

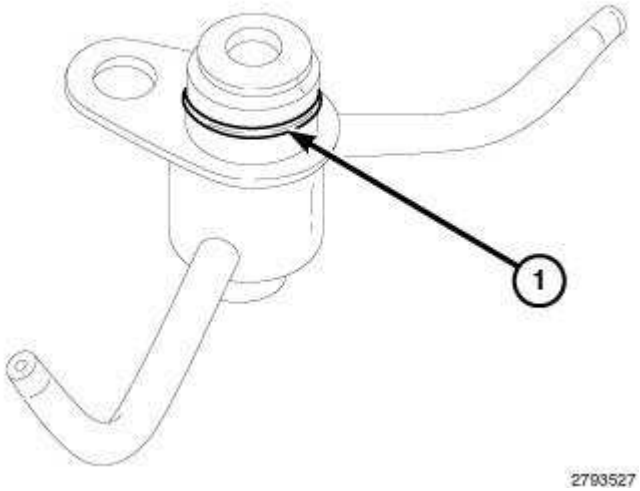

Fig. 577: Piston Oil Cooler Jet O-Ring Seal

Courtesy of CHRYSLER GROUP, LLC

3. Remove and discard the O-ring seal (1) from the piston oil cooler jet(s).

INSTALLATION

INSTALLATION

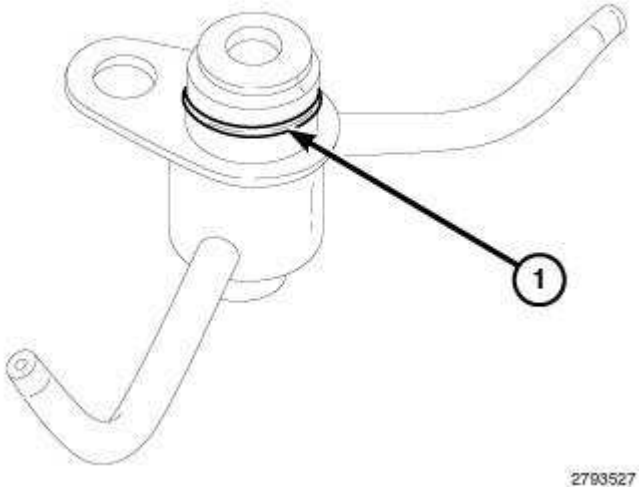

Fig. 578: Piston Oil Cooler Jet O-Ring Seal
Courtesy of CHRYSLER GROUP, LLC

1. Lubricate a new O-ring seal (1) with engine oil and install on the piston oil cooler jet(s).

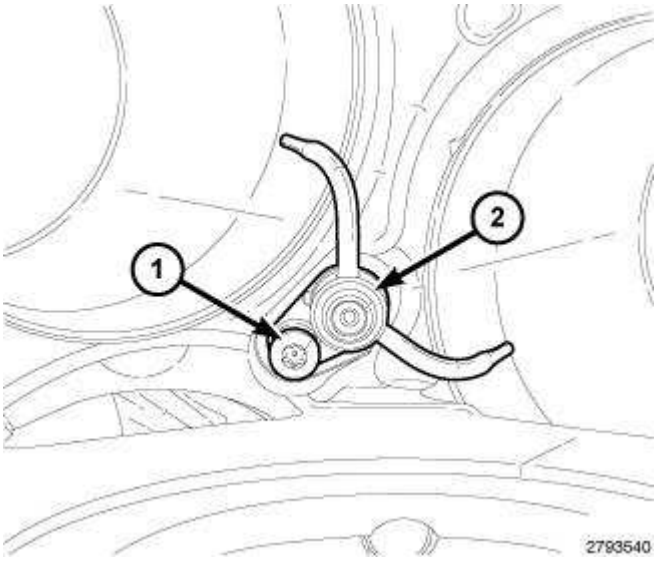

Fig. 579: Piston Oil Cooler Jet & Bolt
Courtesy of CHRYSLER GROUP, LLC

NOTE: **Piston oil cooler jet for cylinders one/two shown in illustration. Piston oil cooler jets for cylinders three/four and five/six are similar.**

2. Install the piston oil cooler jet(s) (2) into the engine block and tighten the retaining bolt (1) to 6 N.m (53 in. lbs.).
3. Install the crankshaft. Refer to **CRANKSHAFT, INSTALLATION** .
4. If removed, install the oil filter and fill the engine crankcase with the proper oil to the correct level. Refer to **STANDARD PROCEDURE**.
5. Fill the cooling system. Refer to **STANDARD PROCEDURE** .
6. Connect the negative battery cable and tighten nut to 5 N.m (45 in. lbs.).
7. Run the engine until it reaches normal operating temperature. Check cooling system for correct fluid level. Refer to **STANDARD PROCEDURE** .

OIL

STANDARD PROCEDURE

STANDARD PROCEDURE - ENGINE OIL AND FILTER CHANGE

WARNING: **New or used engine oil can be irritating to the skin. Avoid prolonged or repeated skin contact with engine oil. Contaminants in used engine oil, caused by internal combustion, can be hazardous to your health. Thoroughly wash exposed skin with soap and water. Do not wash skin with gasoline, diesel fuel, thinner, or solvents, health problems can result. Do not pollute, dispose of used engine oil properly. Contact your dealer or government agency for location of collection center in your area.**

Change the engine oil and filter at mileage and time intervals described in the Maintenance Schedule. Refer to **MAINTENANCE SCHEDULES, DESCRIPTION** .

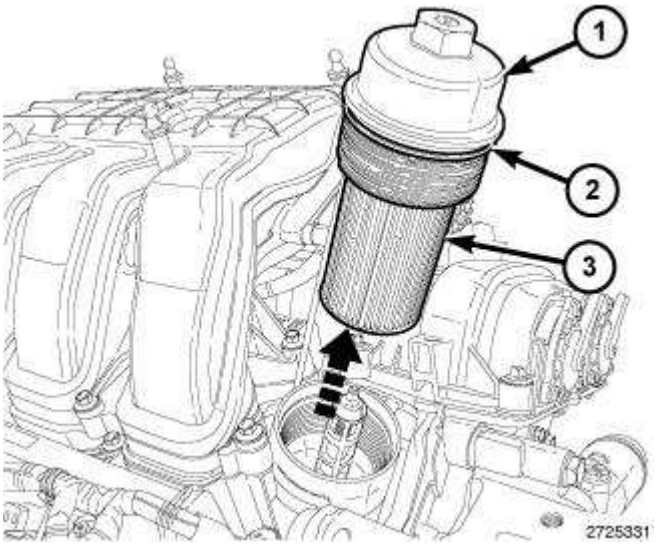

Fig. 580: Oil Filter Cap, O-Ring Seal & Oil Filter
Courtesy of CHRYSLER GROUP, LLC

NOTE: Illustration shows engine cover removed for clarity.

CAUTION: When performing an engine oil change, the oil filter cap must be removed. Removing the oil filter cap releases oil held within the oil filter cavity and allows it to drain into the sump. Failure to remove the cap prior to reinstallation of the drain plug will not allow complete draining of the used engine oil.

1. Run the engine until achieving normal operating temperature.
2. Position the vehicle on a level surface and turn the engine off.
3. Place an oil absorbent cloth around the oil filter housing at the base of the oil filter cap.

NOTE: The oil filter (3) is attached to the oil filter cap (2).

4. Rotate the oil filter cap (1) counterclockwise and remove the cap (1) and filter (3) from the oil filter housing.

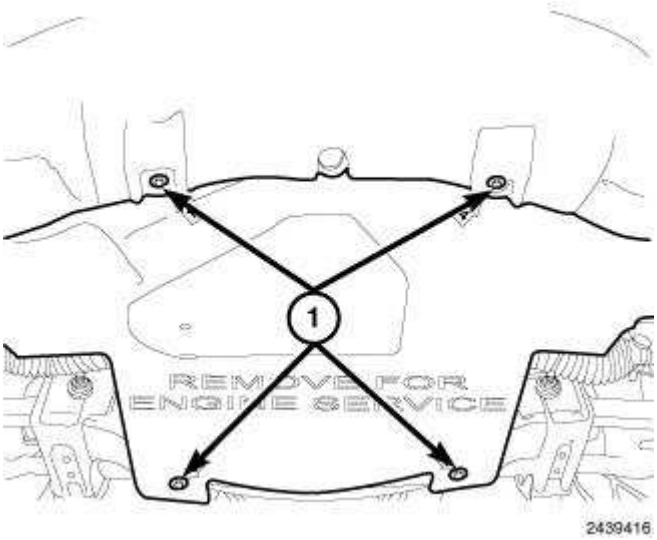

Fig. 581: Lower Splash Shield & Fasteners
Courtesy of CHRYSLER GROUP, LLC

5. Raise and support the vehicle. Refer to **HOISTING, STANDARD PROCEDURE** .
6. Remove the belly pan retainers (1) and remove the belly pan.

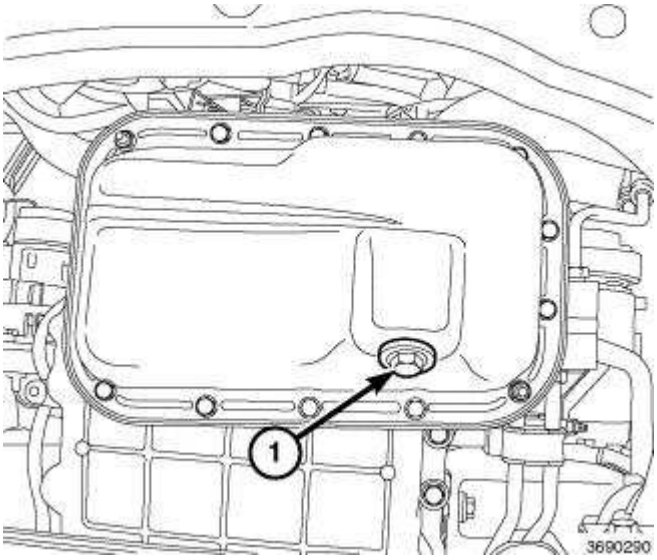

Fig. 582: Oil Pan Drain Plug
Courtesy of CHRYSLER GROUP, LLC

7. Place a suitable drain pan under the crankcase drain plug (1).
8. Remove the drain plug (1) from oil pan and allow the oil to drain into the pan. Inspect the drain plug threads for stretching or other damage. Replace the drain plug and gasket if damaged.
9. Install the drain plug (1) in the oil pan and tighten to 27 N.m (20 ft. lbs.).

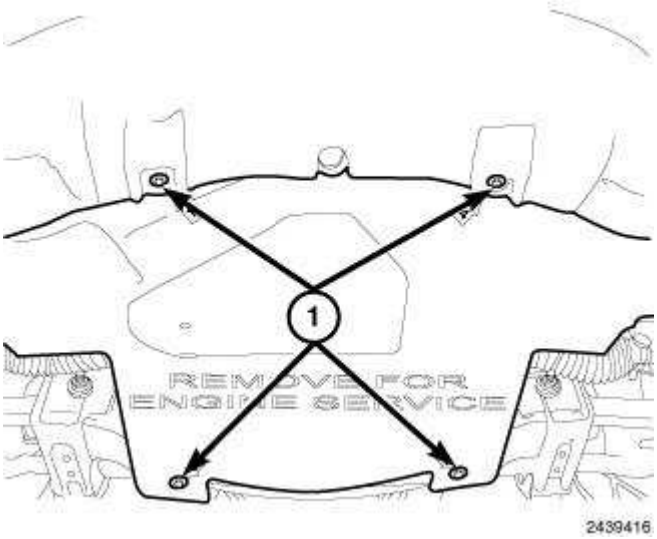

Fig. 583: Lower Splash Shield & Fasteners
Courtesy of CHRYSLER GROUP, LLC

10. Position the belly pan and install the retainers (1).



Fig. 584: O-Ring Seal, Oil Filter Cap & Oil Filter
Courtesy of CHRYSLER GROUP, LLC

11. Lower the vehicle.
12. Remove the oil filter (3) from the oil filter cap (2).
13. Remove and discard the O-ring seal (1).

NOTE: It is not necessary to pre-oil the oil filter or fill the oil filter housing.

14. Lightly lubricate the new O-ring seal (1) with clean engine oil.
15. Install the O-ring seal (1) on the filter cap (2).
16. Install the new oil filter (3) into the oil filter cap (2).

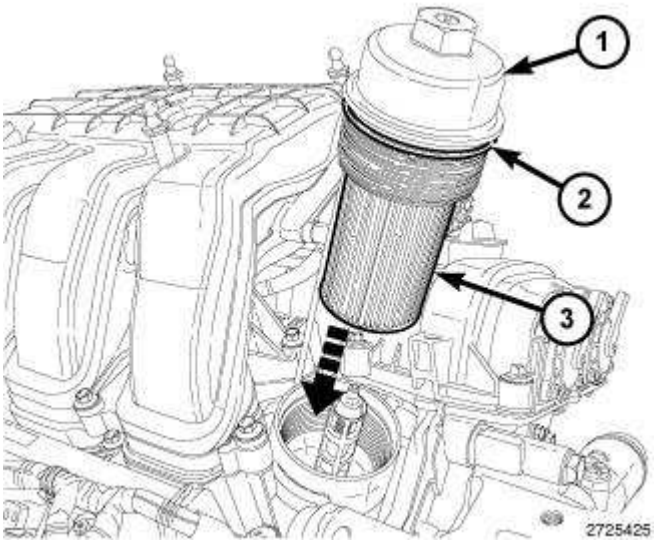

Fig. 585: Oil Filter Cap, O-Ring Seal & Oil Filter
Courtesy of CHRYSLER GROUP, LLC

NOTE: Illustration shows engine cover removed for clarity.

17. Thread the oil filter cap (1) into the oil filter housing and tighten to 25 N.m (18 ft. lbs.).

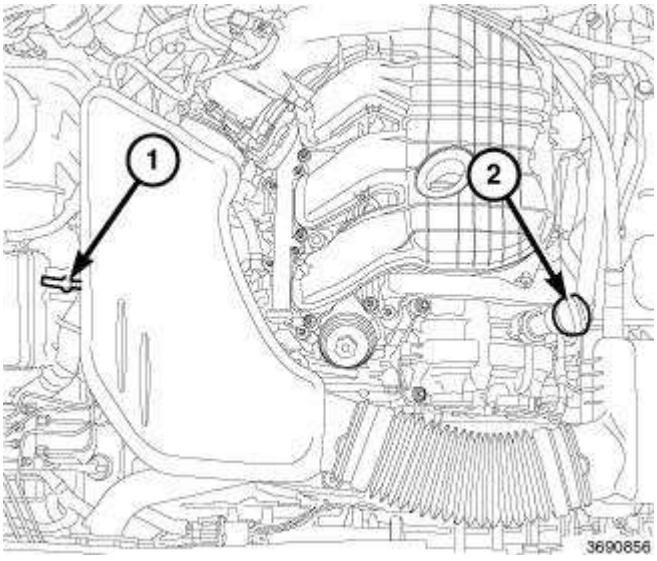

Fig. 586: Oil Fill Cap & Oil Level Gauge
Courtesy of CHRYSLER GROUP, LLC

18. Remove the oil fill cap (2). Fill the crankcase with the specified type and amount of engine oil. Refer to **CAPACITIES AND RECOMMENDED FLUIDS, SPECIFICATIONS** .
19. Install the oil fill cap (2).
20. Start the engine and inspect for leaks.
21. Stop the engine and check the oil level (1).

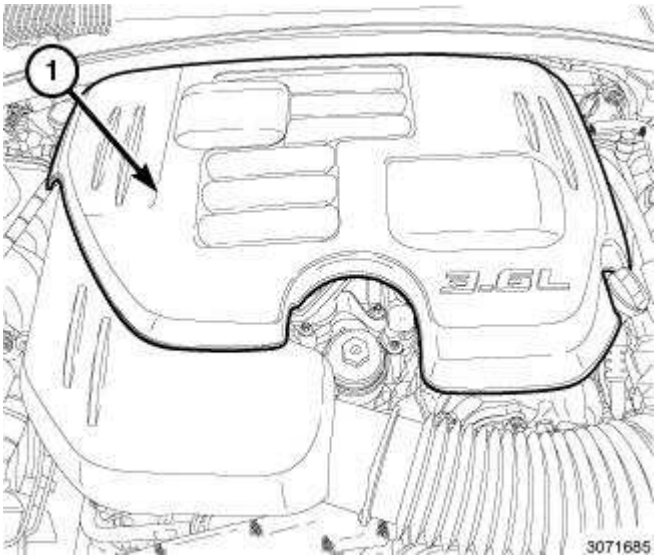

Fig. 587: Engine Cover
Courtesy of CHRYSLER GROUP, LLC

22. Install the engine cover (1), if removed.

OIL FILTER SPECIFICATION

All engines are equipped with a high quality full-flow, disposable type oil filter. When replacing oil filter, use a Mopar® filter or equivalent.

USED ENGINE OIL DISPOSAL

Care should be exercised when disposing of used engine oil after it has been drained from a vehicle engine. Refer to the WARNING listed above.

PAN, OIL

DESCRIPTION

DESCRIPTION

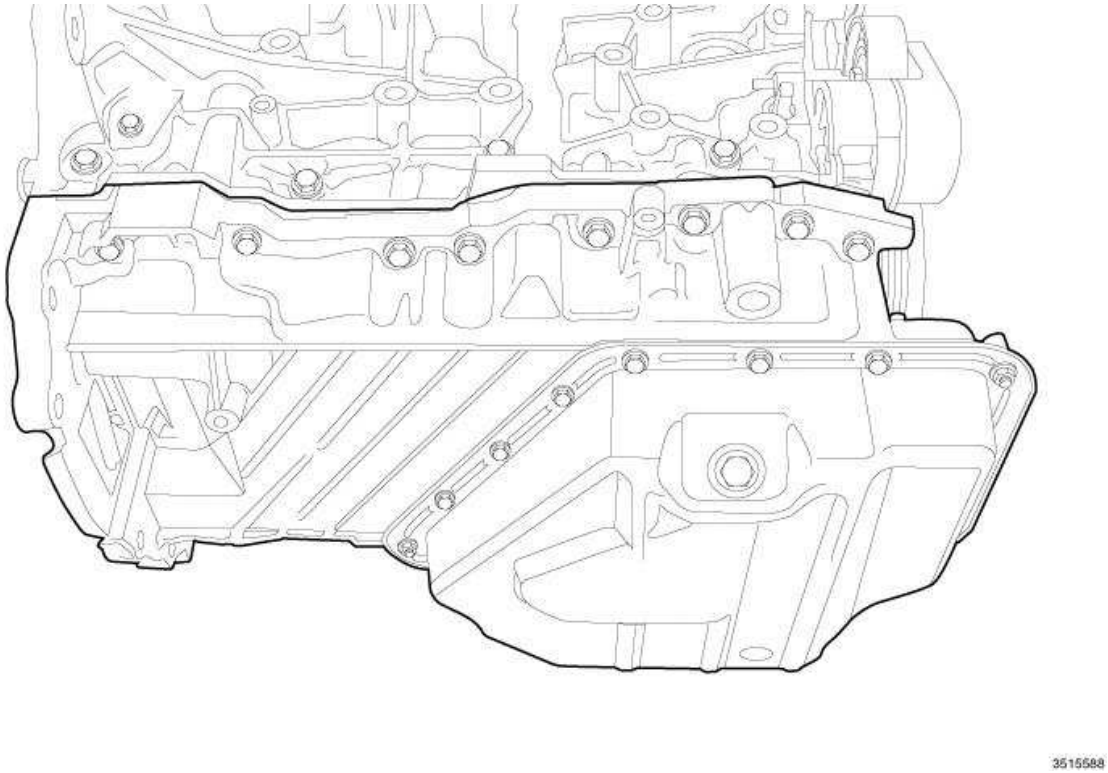

Fig. 588: Upper & Lower Oil Pan
Courtesy of CHRYSLER GROUP, LLC

There is an upper and lower oil pan. The upper oil pan is cast aluminum and also serves as the lower end structural support. The lower pan is a stamped steel design. Both upper and lower oil pans are sealed using Mopar® Threebond Engine RTV Sealant. The lower oil pan must be removed in order to access all of the upper oil pan attaching bolts.

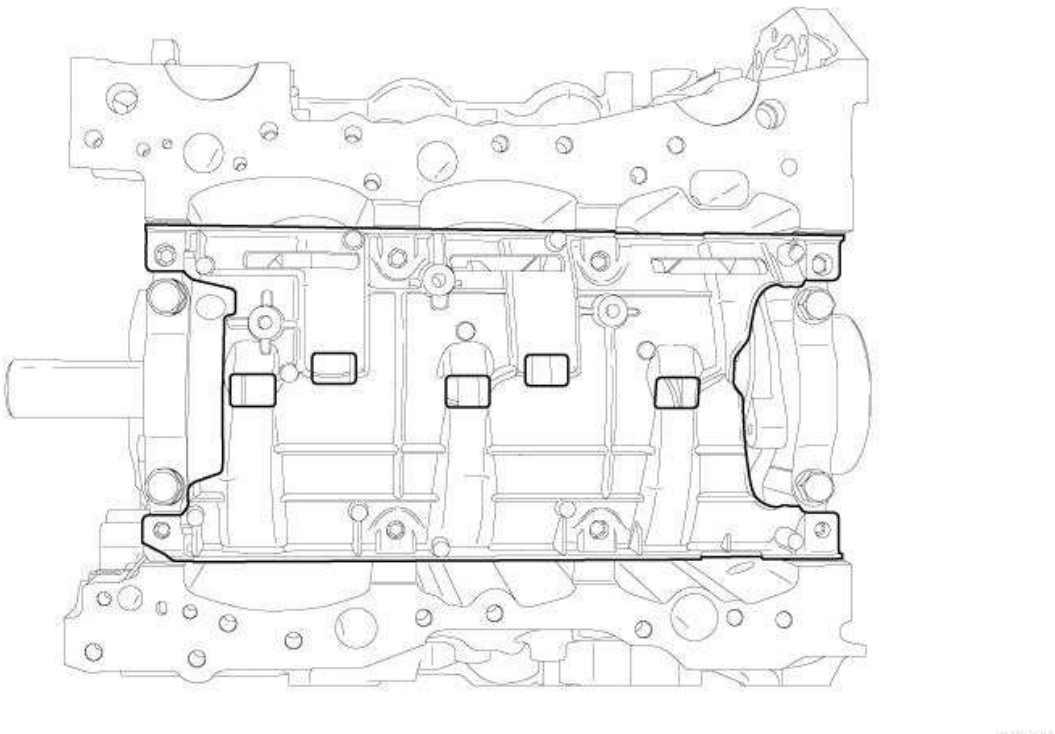

Fig. 589: Windage Tray
Courtesy of CHRYSLER GROUP, LLC

CAUTION: Do not attempt to support the weight of the engine on the windage tray. The windage tray is a thin cast aluminum construction and can be easily damaged.

The high pressure die cast aluminum windage tray is mounted to the main bearing caps and is designed to keep oil off of the connecting rods as the crankshaft rotates. When the oil is kept off the connecting rods, the engine rotates easier and oil foaming decreases. Like the oil pan, the windage tray is designed to stiffen the lower end of the engine. The tray is directional and the main bearing cap bolts hold it in place.

REMOVAL

LOWER

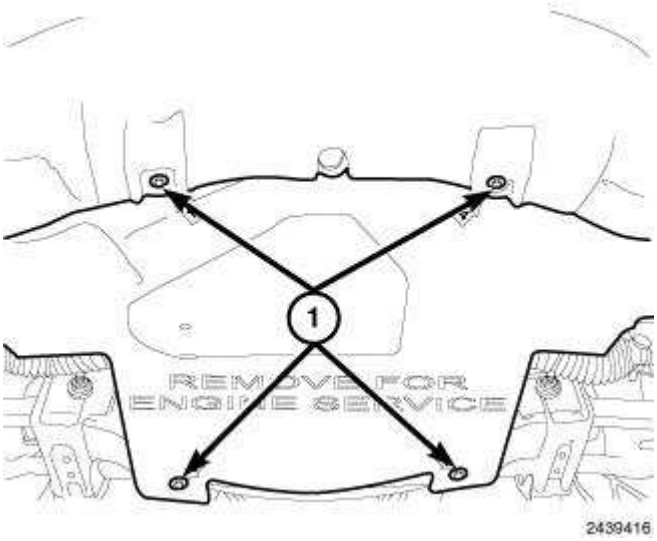

Fig. 590: Lower Splash Shield & Fasteners
Courtesy of CHRYSLER GROUP, LLC

1. Raise and support the vehicle. Refer to **HOISTING, STANDARD PROCEDURE** .
2. Remove the belly pan retainers (1) and remove the belly pan.
3. Drain the engine oil. Refer to **STANDARD PROCEDURE**.

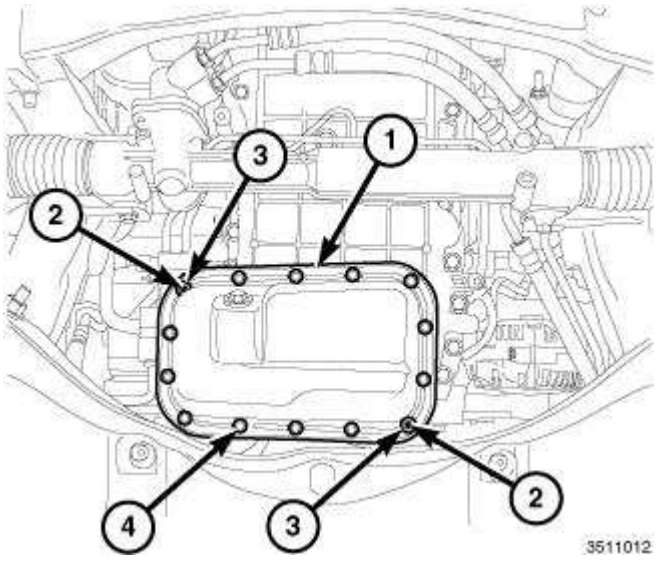

Fig. 591: Bolts, Studs, Nuts & Lower Oil Pan
Courtesy of CHRYSLER GROUP, LLC

NOTE: The lower oil pan must be removed to access all of the upper oil pan retaining bolts.

4. Remove twelve bolts (4), two studs (2) and two nuts (3) from the flange of the lower oil pan (1).

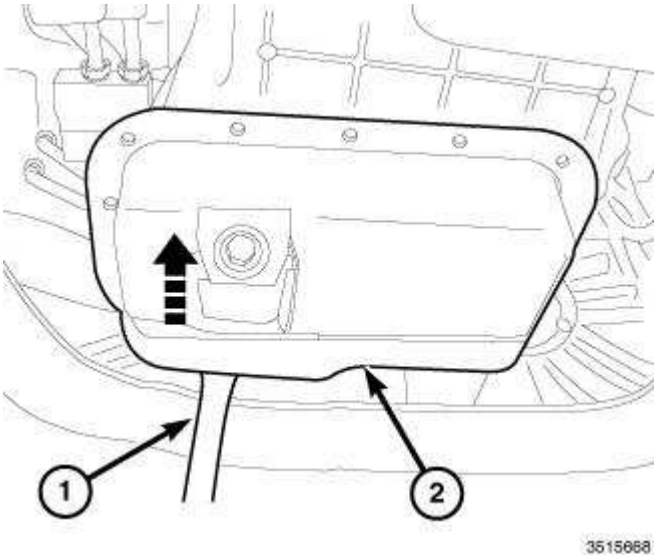

Fig. 592: Using Pry Bar To Remove Oil Pan
Courtesy of CHRYSLER GROUP, LLC

CAUTION: Do not pry on the lower oil pan flange. There are no designated pry points for lower oil pan removal. Prying on only one or a few locations could bend the flange and damage the pan.

5. Using a pry bar (1), apply side force to the lower oil pan (2) in order to sever the sealant bond and remove the pan.
6. Remove all residual sealant from the upper and lower oil pans. Refer to **PAN, OIL, CLEANING**.

UPPER

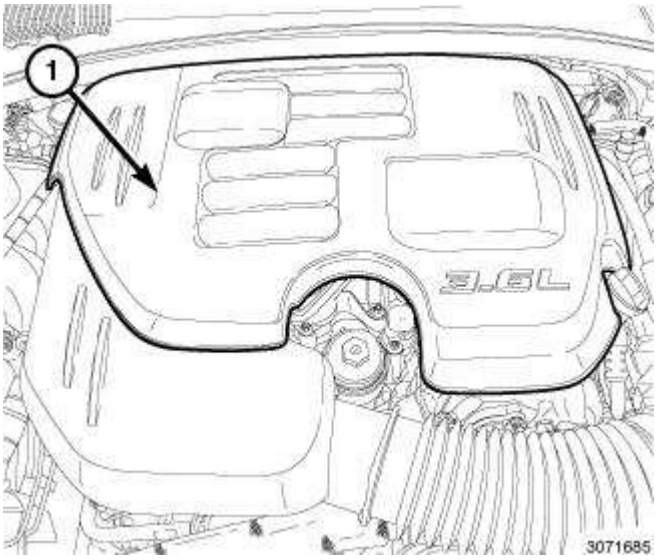

Fig. 593: Engine Cover
Courtesy of CHRYSLER GROUP, LLC

1. Disconnect and isolate the negative battery cable.
2. Lift the engine cover retaining grommets off the ball studs and remove the engine cover (1).

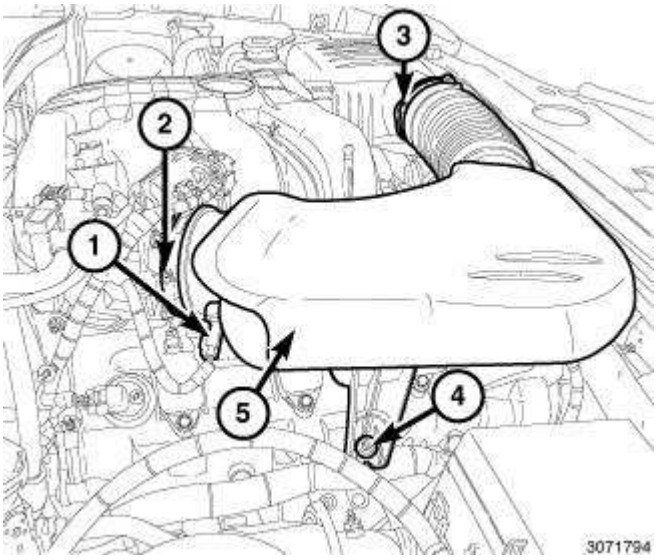

Fig. 594: Inlet Air Temperature (IAT) Sensor Electrical Connector, Air Inlet Hose Assembly & Fasteners
Courtesy of CHRYSLER GROUP, LLC

3. Disconnect the electrical connector (1) from the Inlet Air Temperature (IAT) sensor.
4. Loosen the clamp (2) at the throttle body.
5. Loosen the clamp (3) at the air cleaner housing.
6. Lift the air inlet hose assembly retaining grommet off the ball stud (4).
7. Remove the air inlet hose assembly (5).

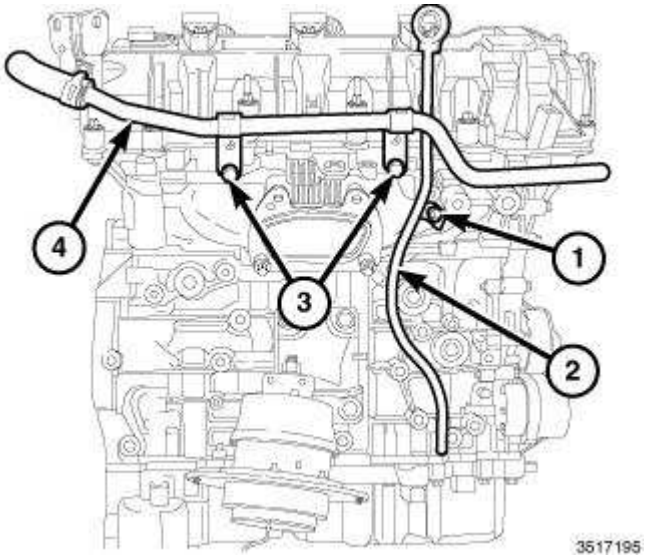

Fig. 595: Heater Core Inlet Tube, Oil Level Indicator & Bolts
Courtesy of CHRYSLER GROUP, LLC

8. Remove two bolts (3) from the heater core inlet tube (4) and reposition the tube.
9. Remove the bolt (1) and remove the oil level indicator (2).

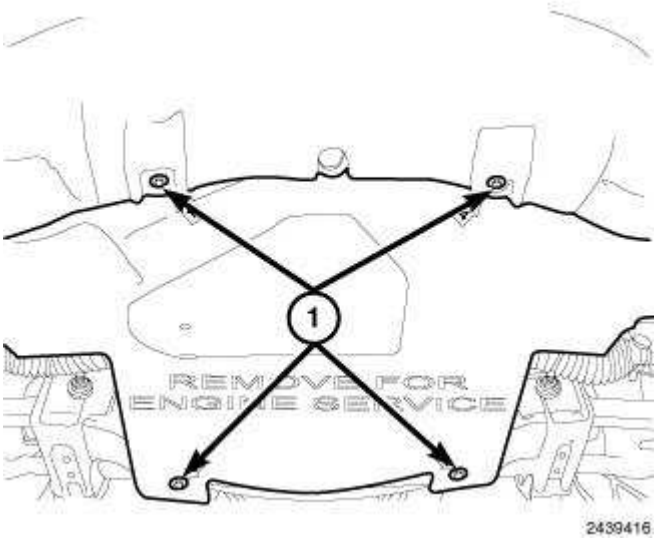

Fig. 596: Lower Splash Shield & Fasteners
Courtesy of CHRYSLER GROUP, LLC

10. Raise and support the vehicle. Refer to **HOISTING, STANDARD PROCEDURE** .
11. Remove the belly pan retainers (1) and remove the belly pan.
12. Drain the engine oil. Refer to **STANDARD PROCEDURE**.

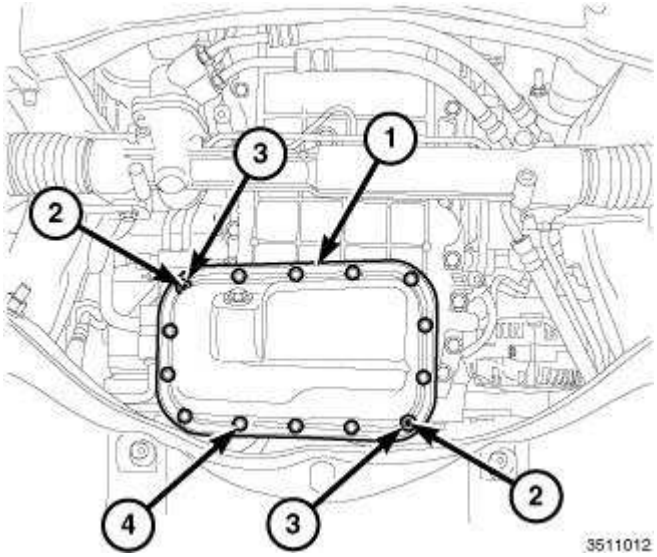

Fig. 597: Bolts, Studs, Nuts & Lower Oil Pan
Courtesy of CHRYSLER GROUP, LLC

NOTE: **The lower oil pan must be removed to access all of the upper oil pan retaining bolts.**

13. Remove the lower oil pan (1). Refer to **PAN, OIL, REMOVAL** .

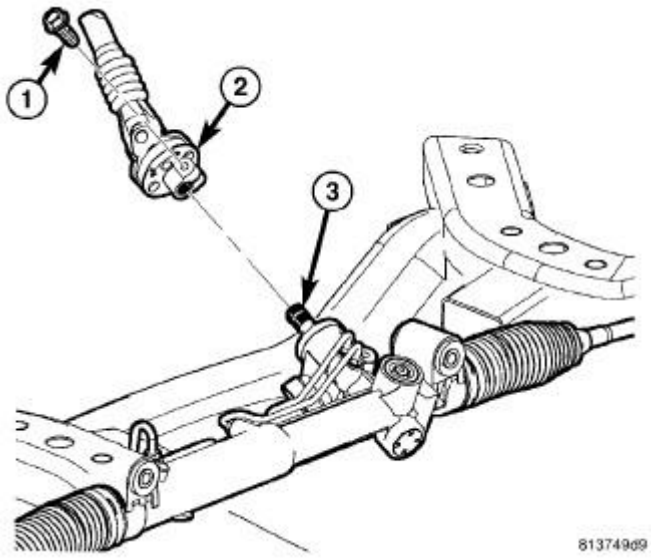

Fig. 598: Steering Coupling
Courtesy of CHRYSLER GROUP, LLC

14. Remove the lower intermediate coupling pinch bolt (1) at the steering gear (3). Separate the lower intermediate shaft (2) from the steering gear shaft (3).

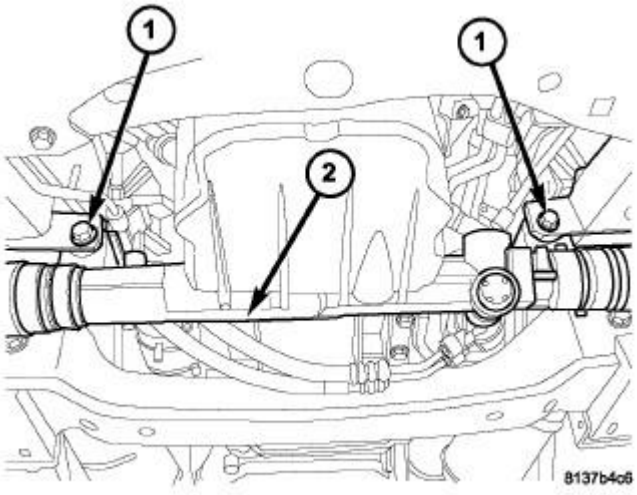

Fig. 599: Gear Mounting Bolts
Courtesy of CHRYSLER GROUP, LLC

15. Remove the steering gear mounting bolts (1) and reposition the steering gear (2).

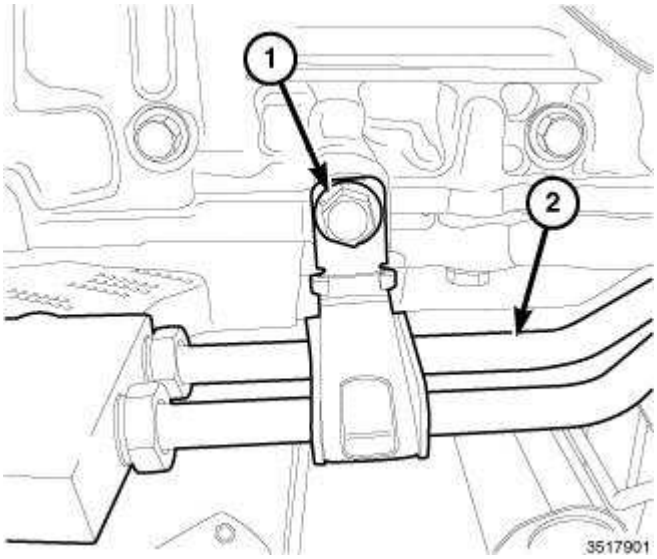

Fig. 600: Bolt & Transmission Cooling Lines
Courtesy of CHRYSLER GROUP, LLC

16. Remove the bolt (1) and reposition the transmission cooling lines (2).

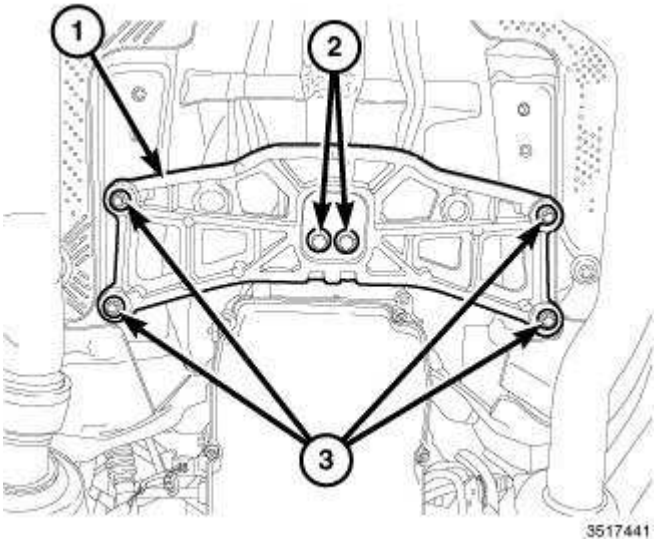

Fig. 601: Rear Engine Mount Isolator Bolts
Courtesy of CHRYSLER GROUP, LLC

17. Remove the two bolts (2) from the rear engine mount isolator.
18. Using a suitable jack stand and a block of wood positioned under the transmission oil pan, raise the rear of the engine.

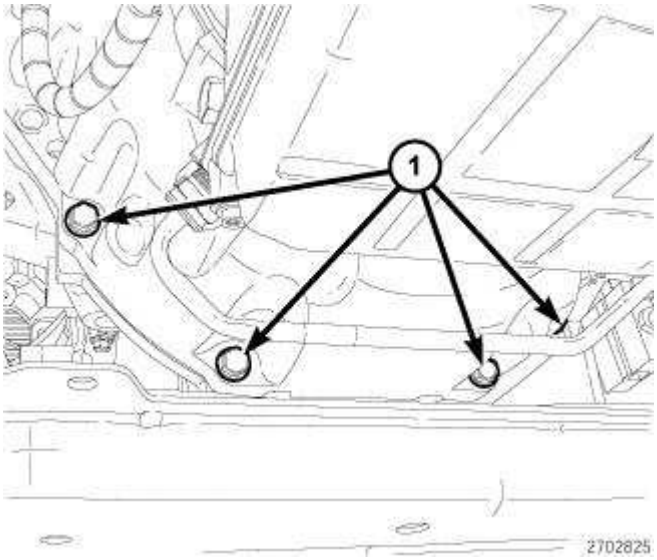

Fig. 602: Transmission-To-Engine Oil Pan Bolts
Courtesy of CHRYSLER GROUP, LLC

19. Remove the four transmission to the engine oil pan bolts (1).

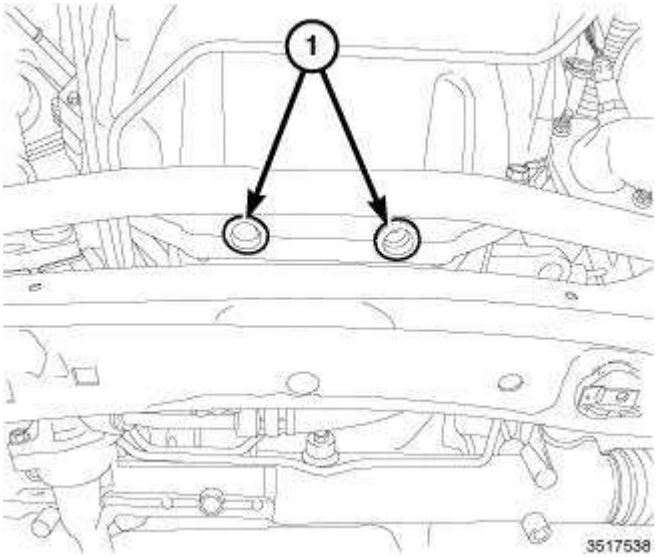

Fig. 603: Rubber Plugs
Courtesy of CHRYSLER GROUP, LLC

20. Remove the two rubber plugs (1) covering the rear oil seal retainer flange bolts.

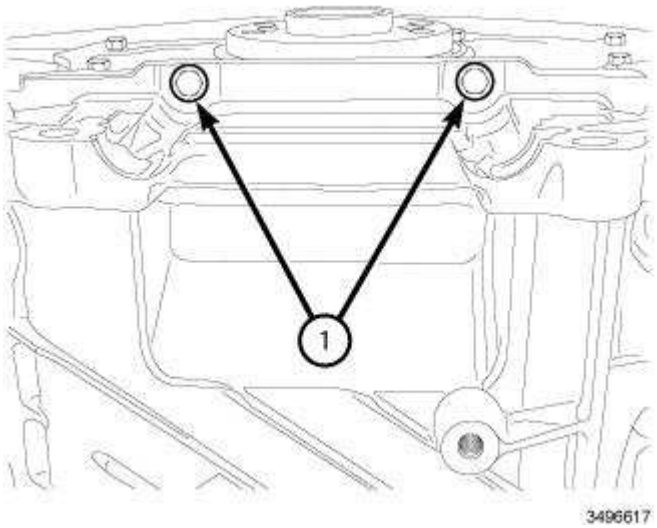

Fig. 604: Rear Oil Seal Retainer Flange Bolts
Courtesy of CHRYSLER GROUP, LLC

NOTE: shown in illustration with transmission removed for clarity.

CAUTION: There are two hidden M6 bolts that must be removed from the rear of the upper oil pan flange. If these bolts are not removed, the rear oil seal retainer flange will be severely damaged.

21. Remove two M6 bolts (1) from the rear oil seal retainer flange.

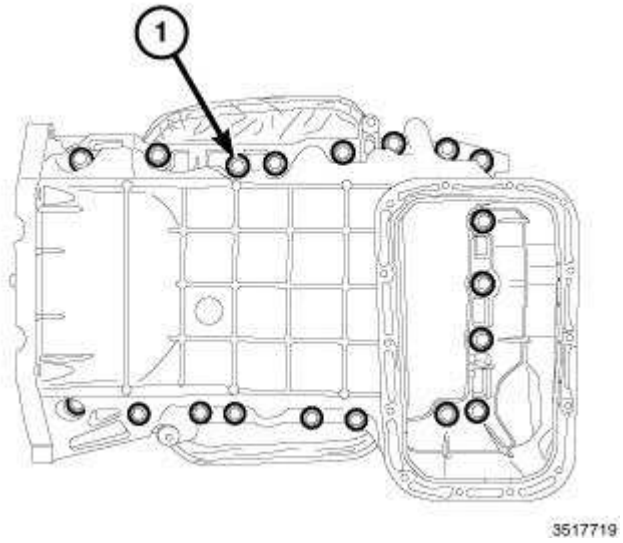

Fig. 605: Oil Pan Mounting Bolts (M8)
Courtesy of CHRYSLER GROUP, LLC

22. Remove nineteen M8 oil pan mounting bolts (1).

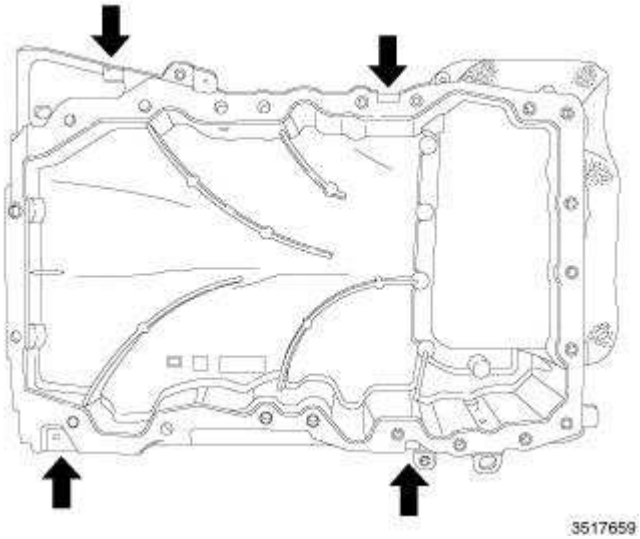

Fig. 606: Locating Pry Points To Remove Oil Pan
Courtesy of CHRYSLER GROUP, LLC

23. Using the four pry points indicated in illustration, carefully remove the upper oil pan.
24. Remove all residual sealant from the upper and lower oil pans, timing chain cover, rear seal retainer and engine block mating surfaces. Refer to **PAN, OIL, CLEANING**.

CLEANING

CLEANING

CAUTION: Clean the upper and lower oil pans, timing chain cover, rear seal retainer and engine block mating surfaces thoroughly with isopropyl alcohol in preparation for sealant application. All surfaces that seal with RTV must be oil and contamination free to ensure proper adhesion of the RTV to the mating surface to prevent leaks.

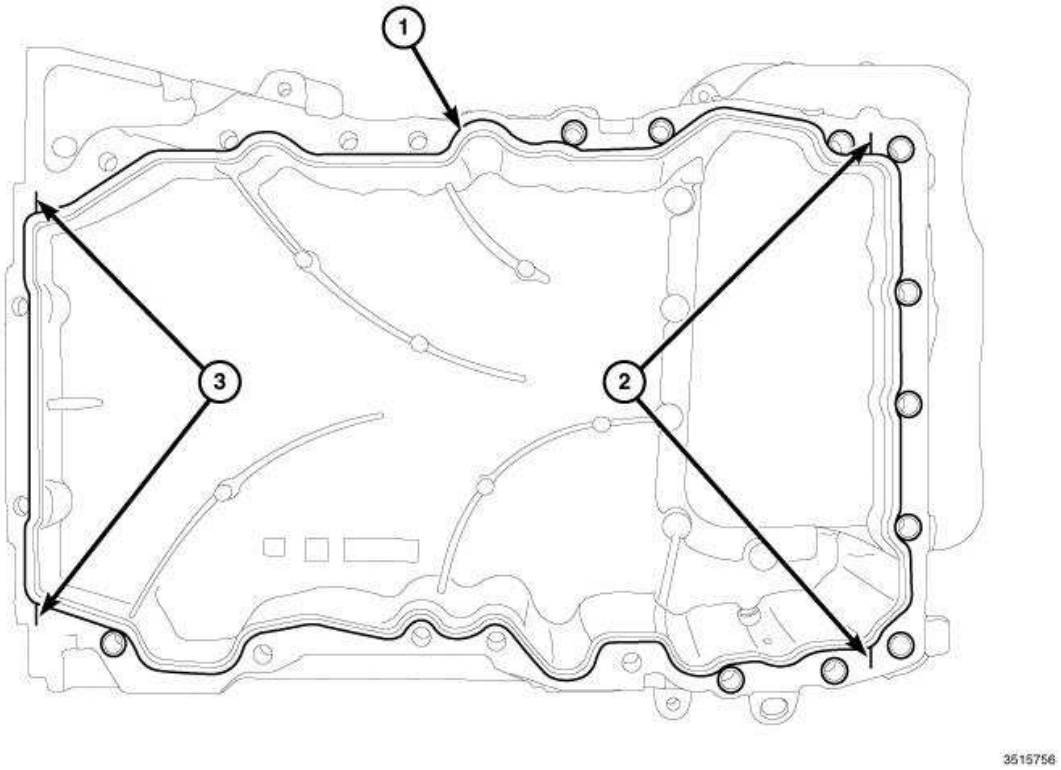

Fig. 607: Locating Sealant On Upper Oil Pan
Courtesy of CHRYSLER GROUP, LLC

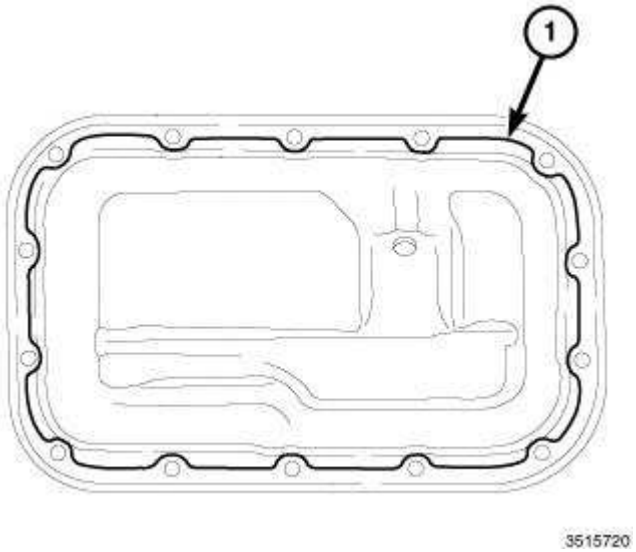

Fig. 608: Locating Sealant On Lower Oil Pan
Courtesy of CHRYSLER GROUP, LLC

1. Clean the oil pan in solvent and wipe dry with a clean cloth.

CAUTION: Do not use oil based liquids, wire brushes, abrasive wheels or metal scrapers to clean the engine gasket surfaces. Use only isopropyl

(rubbing) alcohol, along with plastic or wooden scrapers. Improper gasket surface preparation may result in engine fluid leakage.

2. Remove all residual sealant (1) from the upper and lower oil pans. Refer to **CLEANING**.

INSTALLATION

LOWER

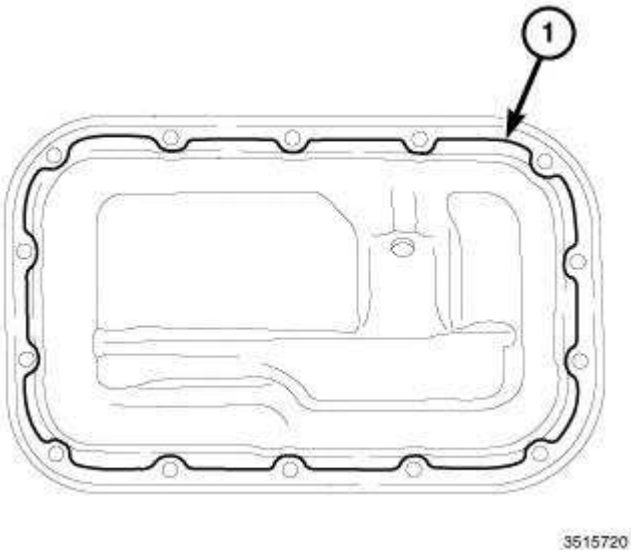

Fig. 609: Locating Sealant On Lower Oil Pan
Courtesy of CHRYSLER GROUP, LLC

CAUTION: Engine assembly requires the use of a unique sealant that is compatible with engine oil. Using a sealant other than Mopar® Threebond Engine RTV Sealant may result in engine fluid leakage.

CAUTION: Following the application of Mopar® Threebond Engine RTV Sealant to the gasket surfaces, the components must be assembled within 20 minutes and the attaching fasteners must be tightened to specification within 45 minutes. Prolonged exposure to the air prior to assembly may result in engine fluid leakage.

1. Clean the upper and lower oil pan mating surfaces with isopropyl alcohol in preparation for sealant application.
2. Apply a 2 to 3 mm wide bead of Mopar® Threebond Engine RTV Sealant (1) to the lower oil pan as shown in illustration.

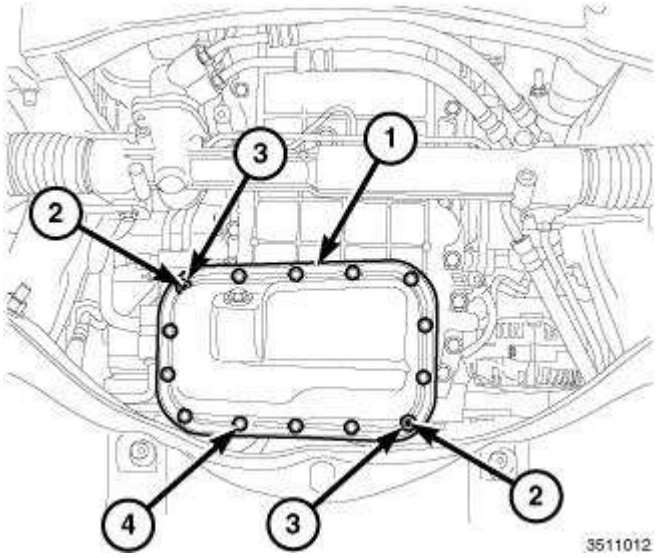

Fig. 610: Bolts, Studs, Nuts & Lower Oil Pan
Courtesy of CHRYSLER GROUP, LLC

CAUTION: Following assembly, the Mopar® Threebond Engine RTV Sealant must be allowed to dry for 45 minutes prior to adding oil and engine operation. Premature exposure to oil prior to drying may result in engine fluid leakage.

3. Install two studs (2) into the upper oil pan flange.
4. Install the lower oil pan (1) to the upper oil pan with twelve bolts (4) and two nuts (3) tightened to 11 N.m (8 ft. lbs.).

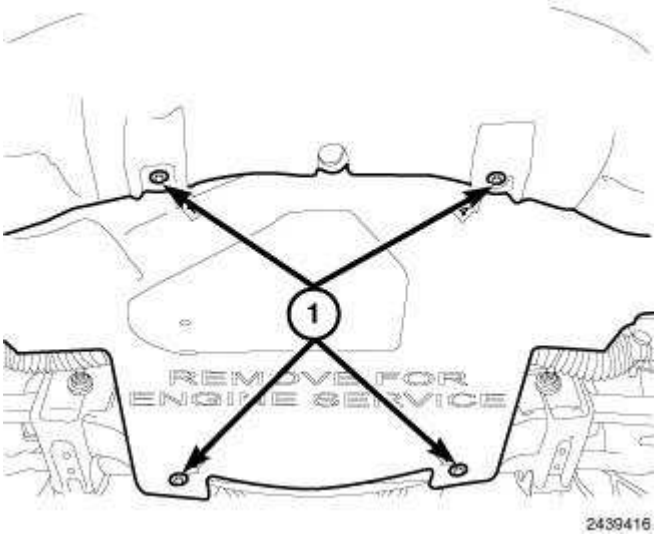

Fig. 611: Lower Splash Shield & Fasteners
Courtesy of CHRYSLER GROUP, LLC

5. Position the belly pan and install the retainers (1).

6. Lower the vehicle.
7. Fill the crankcase with the specified type and amount of engine oil. Refer to **CAPACITIES AND RECOMMENDED FLUIDS, SPECIFICATIONS** .
8. Start and run the engine until it reaches normal operating temperature and check for leaks.

UPPER

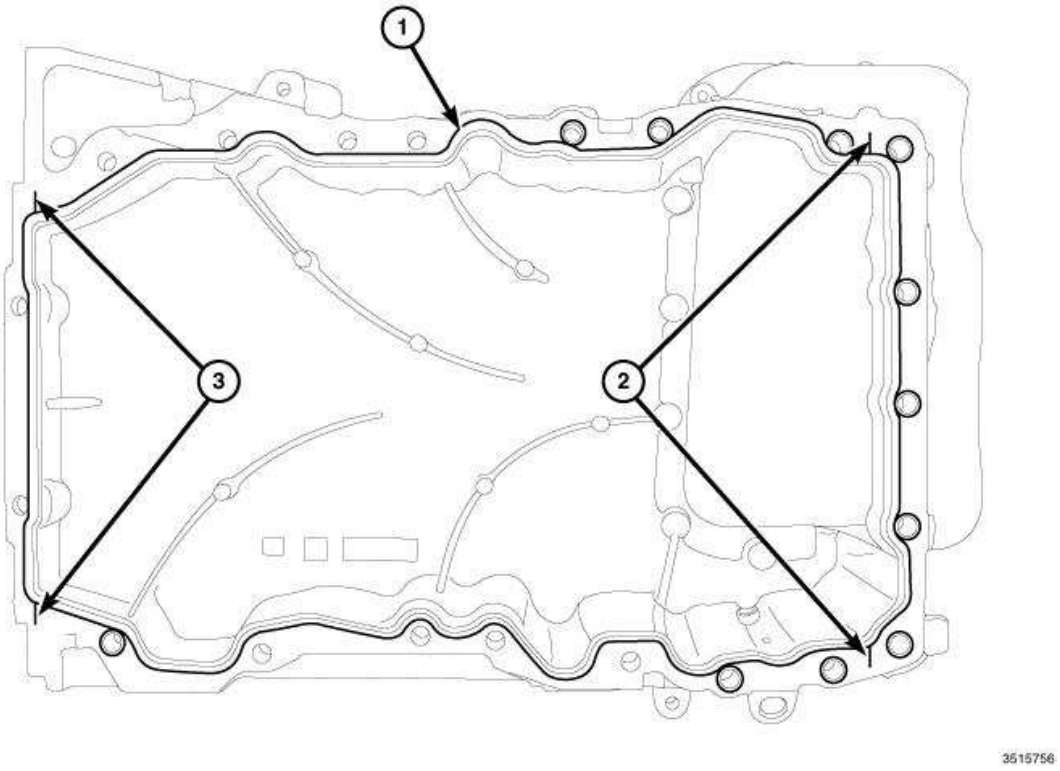

Fig. 612: Locating Sealant On Upper Oil Pan
Courtesy of CHRYSLER GROUP, LLC

CAUTION: Engine assembly requires the use of a unique sealant that is compatible with engine oil. Using a sealant other than Mopar® Threebond Engine RTV Sealant may result in engine fluid leakage.

CAUTION: Clean the upper and lower oil pans, timing chain cover, rear seal retainer and engine block mating surfaces thoroughly with isopropyl alcohol in preparation for sealant application. All surfaces that seal with RTV must be oil and contamination free to ensure proper adhesion of the RTV to the mating surface to prevent leaks.

CAUTION: Following the application of Mopar® Threebond Engine RTV Sealant to the gasket surfaces, the components must be assembled within 20 minutes and the attaching fasteners must be tightened to specification within 45 minutes. Prolonged exposure to the air prior to assembly may result in

engine fluid leakage.

1. Clean the upper and lower oil pans, timing chain cover, rear seal retainer and engine block mating surfaces with isopropyl alcohol in preparation for sealant application.
2. Apply a 2 to 3 mm wide bead of Mopar® Threebond Engine RTV Sealant to the upper oil pan as shown in illustration in the following locations:
   - Oil pan to engine block flange (1)
   - Two timing cover to engine block T-joints (2)
   - Two rear seal retainer to engine block T-joints (3)

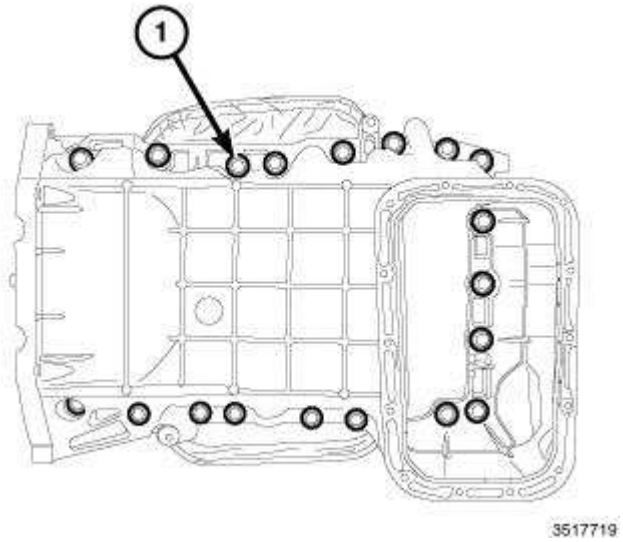

Fig. 613: Oil Pan Mounting Bolts (M8)
Courtesy of CHRYSLER GROUP, LLC

CAUTION: Make sure that the rear face of the oil pan is flush to the transmission bell housing before tightening any of the oil pan mounting bolts. A gap between the oil pan and the transmission could crack the oil pan or transmission casting.

3. Install the oil pan to the engine block making sure the oil pan is flush to the transmission bell housing. Secure the oil pan to the engine block with nineteen M8 oil pan mounting bolts (1) finger tight.

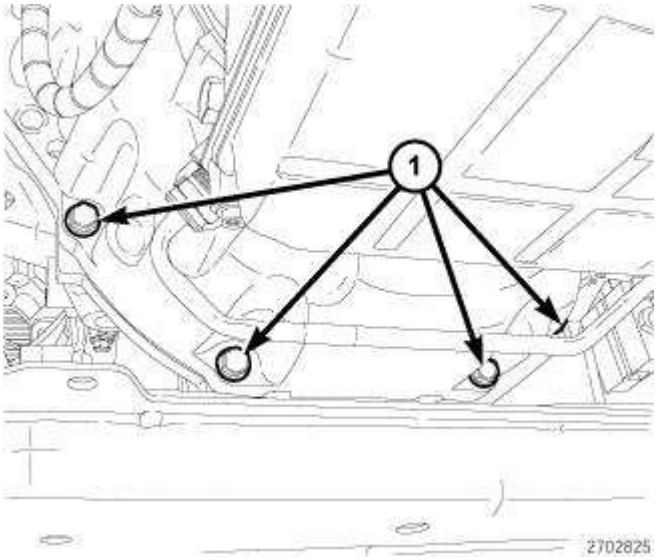

Fig. 614: Transmission-To-Engine Oil Pan Bolts
Courtesy of CHRYSLER GROUP, LLC

4. Install the four transmission to the engine oil pan bolts (1) and tighten to 55 N.m (41 ft. lbs.).

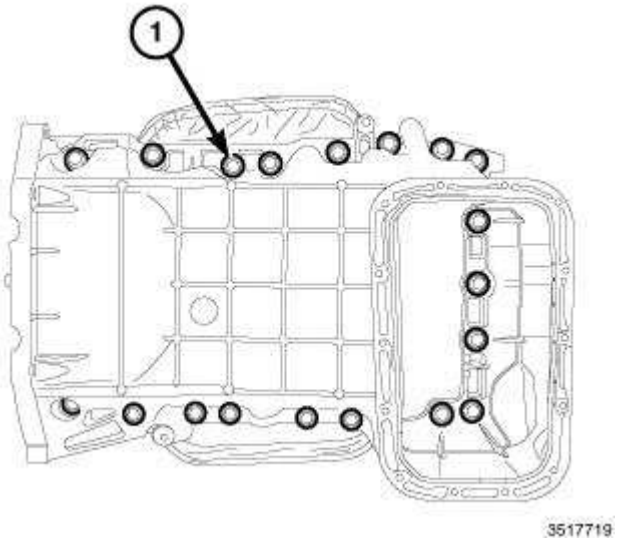

Fig. 615: Oil Pan Mounting Bolts (M8)
Courtesy of CHRYSLER GROUP, LLC

5. Tighten the nineteen previously installed M8 oil pan mounting bolts (1) to 25 N.m (18 ft. lbs.).

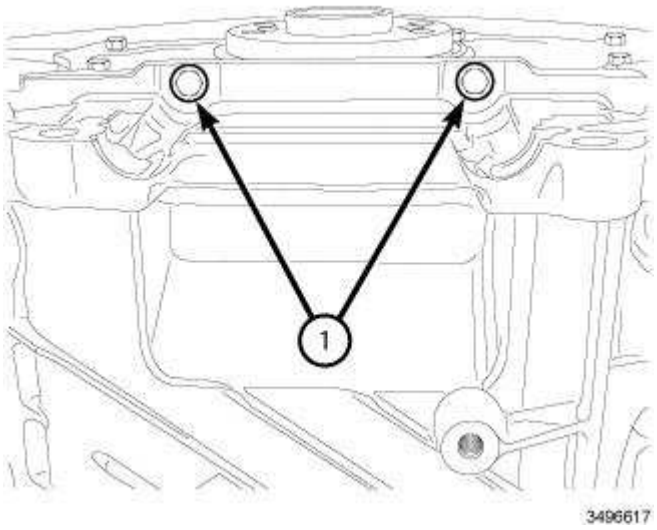

Fig. 616: Rear Oil Seal Retainer Flange Bolts
Courtesy of CHRYSLER GROUP, LLC

NOTE: shown in illustration with transmission removed for clarity.

6. Install the two M6 bolts (1) to the rear oil seal retainer flange and tighten to 12 N.m (9 ft. lbs.).

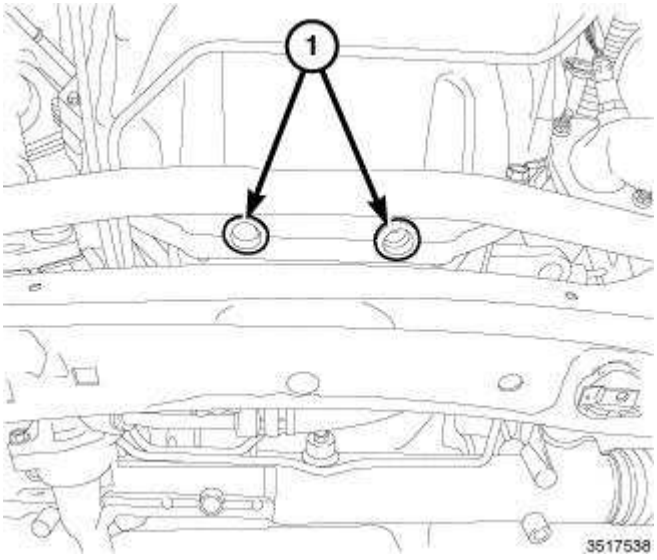

Fig. 617: Rubber Plugs
Courtesy of CHRYSLER GROUP, LLC

7. Install the two rubber plugs (1) covering the rear oil seal retainer flange bolts.

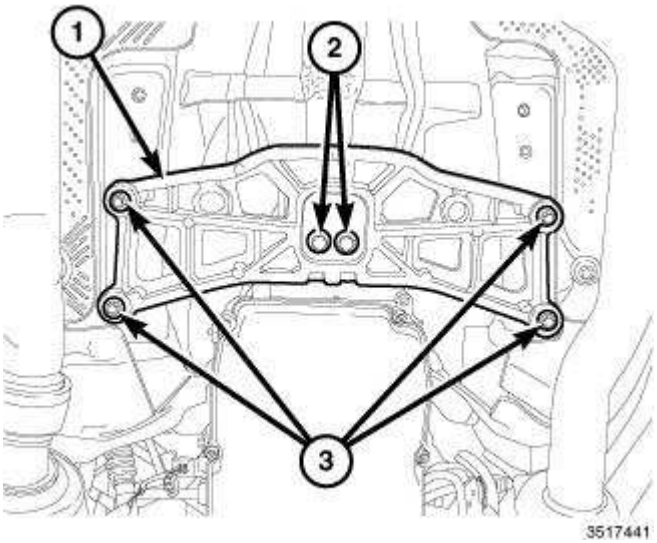

Fig. 618: Rear Engine Mount Isolator Bolts
Courtesy of CHRYSLER GROUP, LLC

8. Lower the rear of the engine and install the two bolts (2) to the rear engine mount isolator. Tighten the bolts to 65 N.m (48 ft. lbs.).

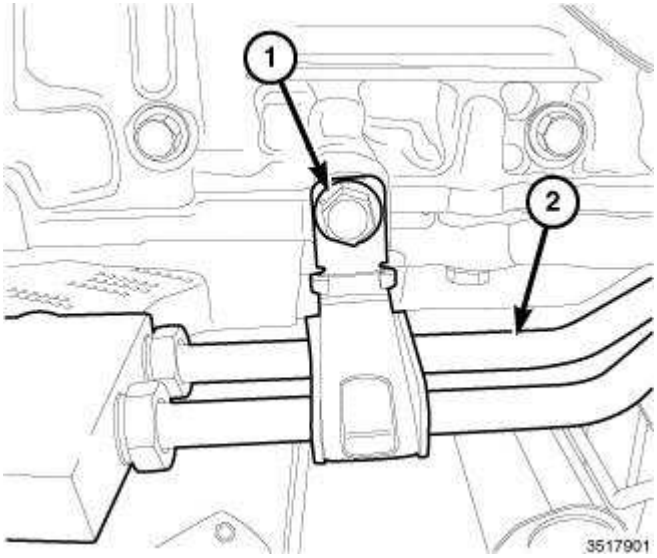

Fig. 619: Bolt & Transmission Cooling Lines
Courtesy of CHRYSLER GROUP, LLC

9. Install the transmission cooling lines (2) and tighten the bolt (1) to 12 N.m (106 in. lbs.).

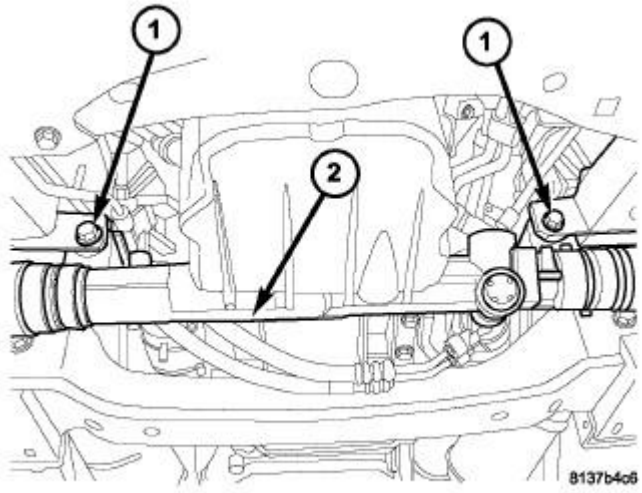

Fig. 620: Gear Mounting Bolts
Courtesy of CHRYSLER GROUP, LLC

10. Lift the steering gear (2) into the mounted position and install the steering gear mounting bolts (1). Tighten the bolts to 95 N.m (70 ft. lbs.).

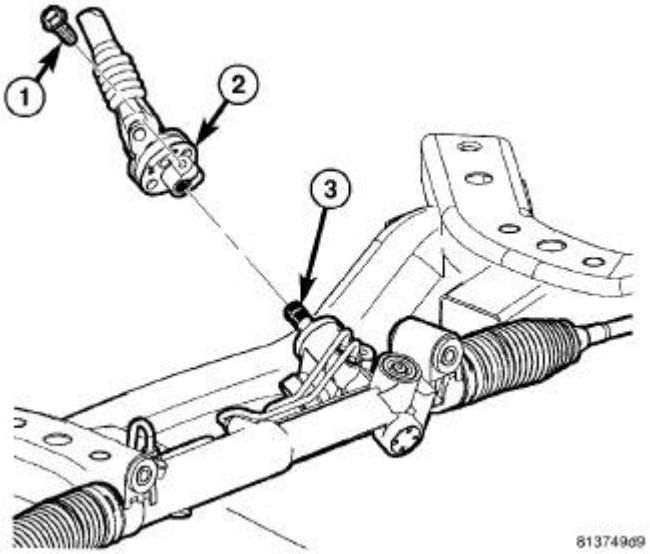

Fig. 621: Steering Coupling
Courtesy of CHRYSLER GROUP, LLC

11. Align the lower intermediate shaft (2) with the input shaft (3) and install the steering coupling. Install a NEW pinch bolt (1) and tighten to 45 N.m (33 ft. lbs.).

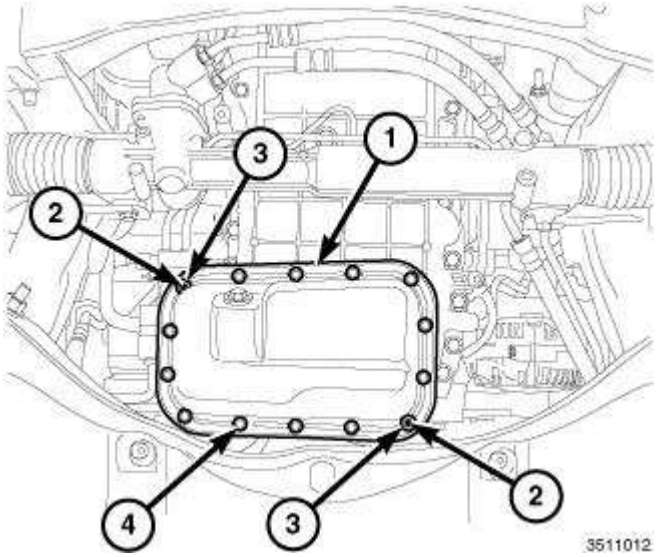

Fig. 622: Bolts, Studs, Nuts & Lower Oil Pan
Courtesy of CHRYSLER GROUP, LLC

12. Install the lower oil pan. Refer to **PAN, OIL, INSTALLATION** .

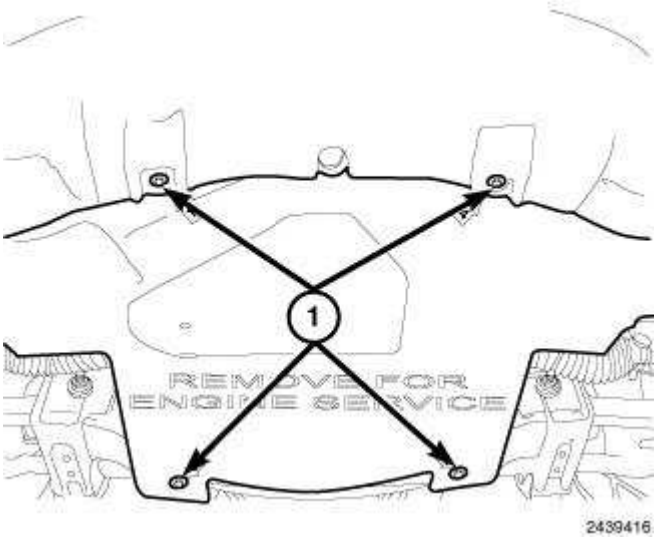

Fig. 623: Lower Splash Shield & Fasteners
Courtesy of CHRYSLER GROUP, LLC

13. Position the belly pan and install the retainers (1).
14. Lower the vehicle.

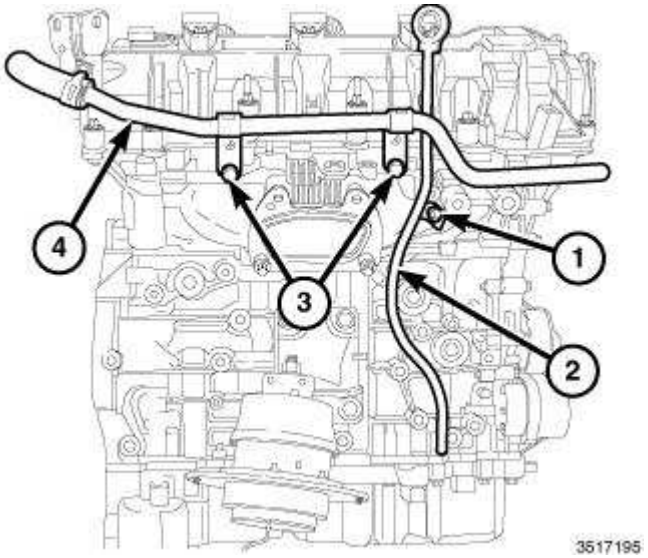

Fig. 624: Heater Core Inlet Tube, Oil Level Indicator & Bolts
Courtesy of CHRYSLER GROUP, LLC

15. Install the oil level indicator (2) with bolt (1) tightened to 12 N.m (106 in. lbs.).
16. Position the heater core inlet tube (4) and install two bolts (3) tightened to 12 N.m (106 in. lbs.).
17. Fill the crankcase with the specified type and amount of engine oil. Refer to **CAPACITIES AND RECOMMENDED FLUIDS, SPECIFICATIONS** .

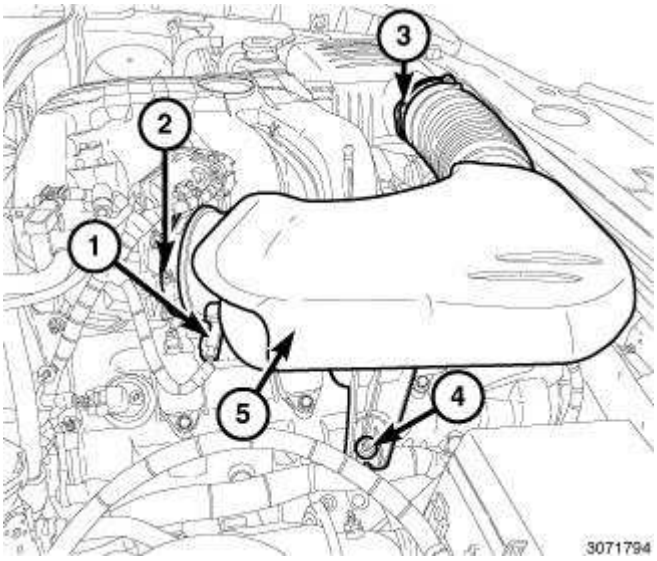

Fig. 625: Inlet Air Temperature (IAT) Sensor Electrical Connector, Air Inlet Hose Assembly & Fasteners
Courtesy of CHRYSLER GROUP, LLC

18. Position the air inlet hose assembly (5) onto the throttle body and the air cleaner housing.
19. Secure the air inlet hose assembly retaining grommet onto the ball stud (4).
20. Tighten the clamp at the air cleaner housing (3) to 5 N.m (44 in. lbs.).

21. Tighten the clamp (2) at the throttle body to 5 N.m (44 in. lbs.).
22. Connect the Inlet Air Temperature (IAT) sensor electrical connector (1).

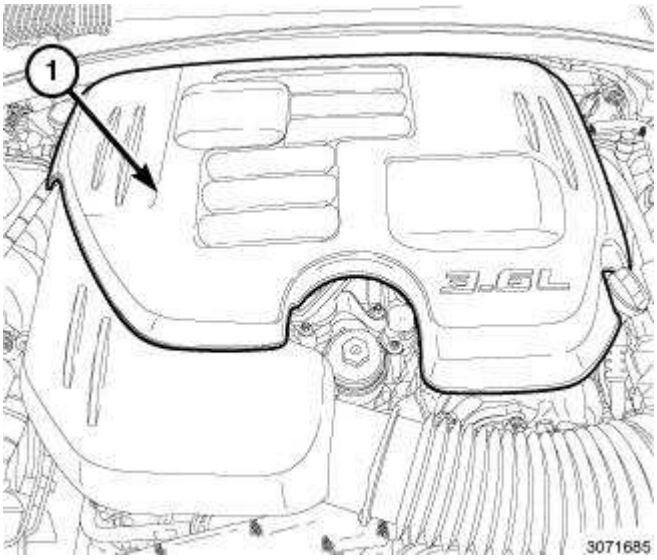

Fig. 626: Engine Cover
Courtesy of CHRYSLER GROUP, LLC

23. Position the engine cover (1) and secure the retaining grommets onto the ball studs.
24. Connect the negative battery cable and tighten nut to 5 N.m (45 in. lbs.).
25. Start and run the engine until it reaches normal operating temperature and check for leaks.

PICK-UP, OIL PUMP

REMOVAL

REMOVAL

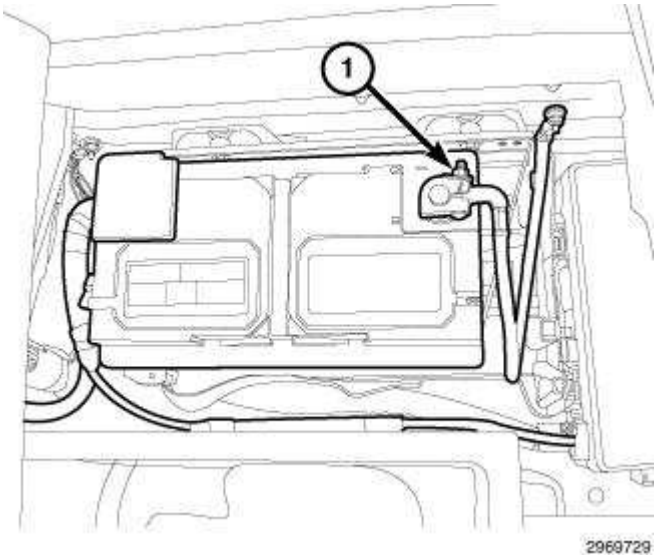

Fig. 627: Negative Battery Cable
Courtesy of CHRYSLER GROUP, LLC

1. Disconnect and isolate the negative battery cable (1).

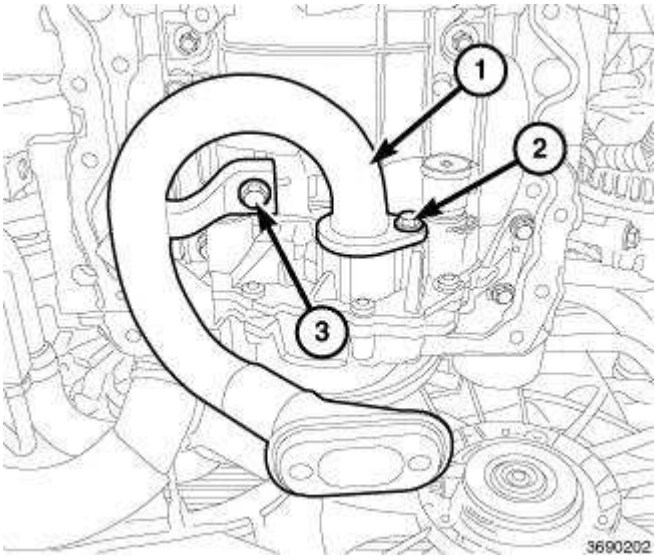

Fig. 628: Oil Pump Pick-Up Tube & Support Bracket Retaining Bolts
Courtesy of CHRYSLER GROUP, LLC

2. Remove the upper oil pan. Refer to **PAN, OIL, REMOVAL** .
3. Remove the oil pump pick-up tube support bracket retaining bolt (3).
4. Remove the oil pump pick-up tube retaining bolt (2) and remove the pick-up tube (1) from the oil pump.

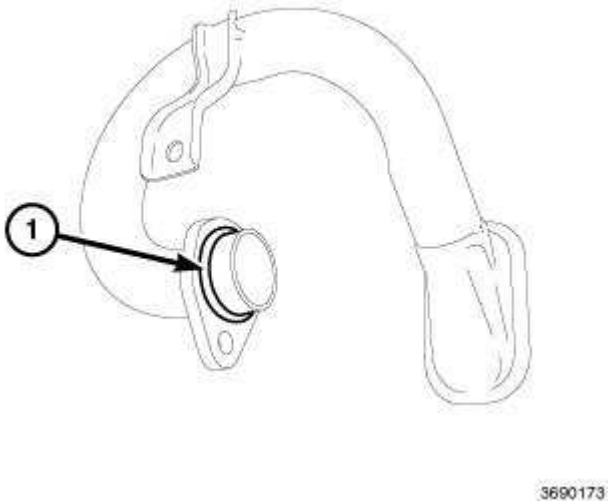

Fig. 629: Oil Pump Pick-Up Tube O-Ring Seal
Courtesy of CHRYSLER GROUP, LLC

5. Remove and discard the O-ring seal (1) from the oil pump pick-up tube.

INSTALLATION

INSTALLATION

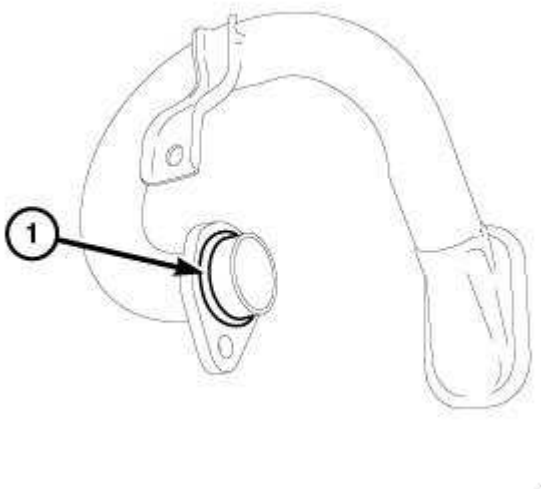

Fig. 630: Oil Pump Pick-Up Tube O-Ring Seal
Courtesy of CHRYSLER GROUP, LLC

1. Lubricate the new O-ring seal (1) with clean engine oil and install the O-ring onto the oil pump pick-up tube.

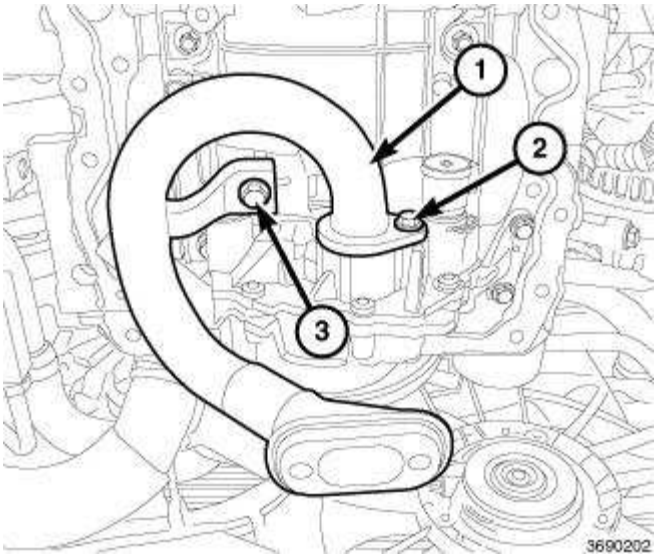

Fig. 631: Oil Pump Pick-Up Tube & Support Bracket Retaining Bolts
Courtesy of CHRYSLER GROUP, LLC

2. Position the oil pump pick-up tube (1) onto the oil pump and install the retaining bolt (2) finger

tight.

3. Install the oil pump pick-up tube support bracket retaining bolt (3) and tighten to 12 N.m (9 ft. lbs.).
4. Tighten the oil pump pick-up tube retaining bolt (2) to 12 N.m (9 ft. lbs.).
5. Install the oil pan. Refer to **PAN, OIL, INSTALLATION** .
6. If removed, install the oil filter and fill the engine crankcase with the proper oil to the correct level. Refer to **STANDARD PROCEDURE**.

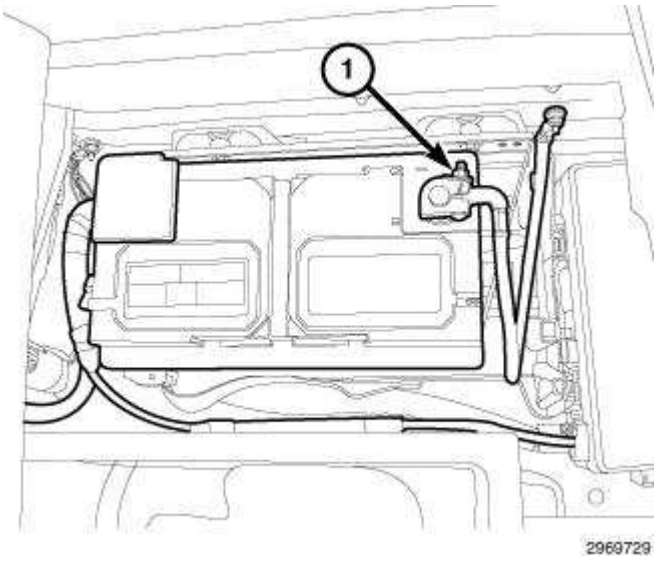

Fig. 632: Negative Battery Cable
Courtesy of CHRYSLER GROUP, LLC

7. Connect the negative battery cable (1) and tighten nut to 5 N.m (45 in. lbs.).
8. Run the engine until it reaches normal operating temperature and check for leaks.

PUMP, ENGINE OIL

DESCRIPTION

DESCRIPTION

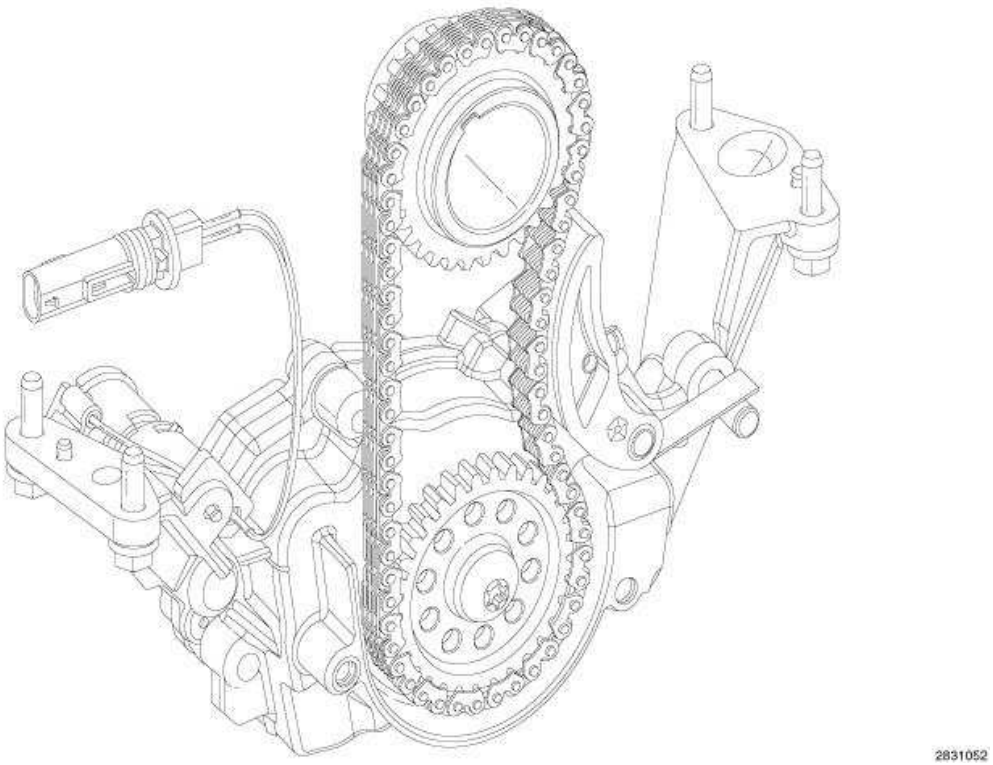

Fig. 633: Oil Pump Chain
Courtesy of CHRYSLER GROUP, LLC

The vane type engine oil pump is mounted to the underside of the cylinder block and is driven by the oil pump chain off the crankshaft at a 1:1 drive ratio. This pump location improves efficiency compared to an on-crankshaft location. The pump is driven with a silent chain which is tensioned using a spring loaded tensioner. The pump is not timed to the engine.

An internal mechanical ball and spring type relief valve prevents excess pressure in the engine by dumping oil into the sump and provides emergency protection at conditions such as a cold start with high engine speed.

The pump has a moving slide mechanism for variable displacement capability and an on-off solenoid for two-stage pressure regulation. The pump and the solenoid are not to be disassembled. Both are non-serviceable components and are to be replaced as a complete assembly.

OPERATION

OPERATION

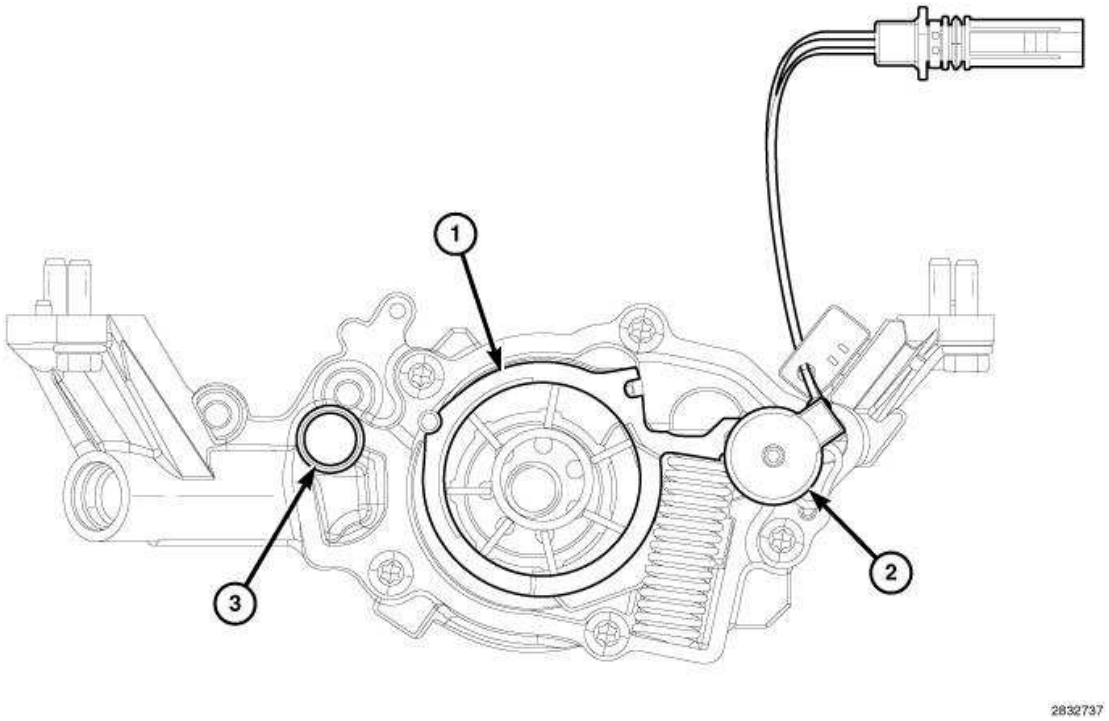

Fig. 634: Moving Element, On/Off Solenoid & Relief Valve
Courtesy of CHRYSLER GROUP, LLC

The engine oil pump features seven vanes and a moving element (1) that continuously adjusts to maintain a regulated oil pressure supply by varying the displacement of the pump. The pump has two regulated pressure stages of operation controlled by an on/off solenoid (2). Low pressure mode regulation (solenoid on) is approximately 200 kPa (29 psi) and high pressure mode regulation (solenoid off) is approximately 450 kPa (65 psi). The Powertrain Control Module (PCM) switches the pump between stages based on engine operating conditions, oil and coolant temperatures, speed and load. Under most typical conditions, the pump will run in low mode from idle up to around 3000 RPM, and switch from low to high mode between 3000 and 4000 RPM.

The maximum oil pressure in the engine is limited to 1000 kPa (145 psi) by the relief valve (3). Pressure in the main oil gallery of the engine can be monitored with diagnostic equipment through the oil pressure sensor mounted on the rear of the oil filter module. The minimum pressure for the engine is 41 kPa (6 psi) at any operating condition. Anything under this pressure could result in damage to critical moving parts.

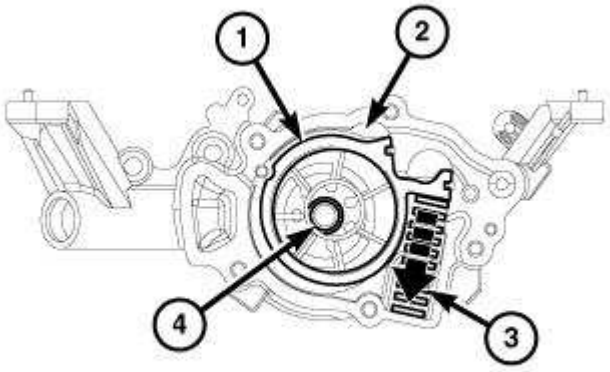

2832771

Fig. 635: Moving Element, Main Gallery Oil Pressure, Spring Pressure & Pump Driveshaft
Courtesy of CHRYSLER GROUP, LLC

In high pressure mode regulation (solenoid off) main gallery oil pressure (2) is applied to the moving element (1). The main gallery oil pressure works against spring pressure (3) to move the element to a more concentric location about the pump driveshaft (4) thus reducing displacement and pump output.

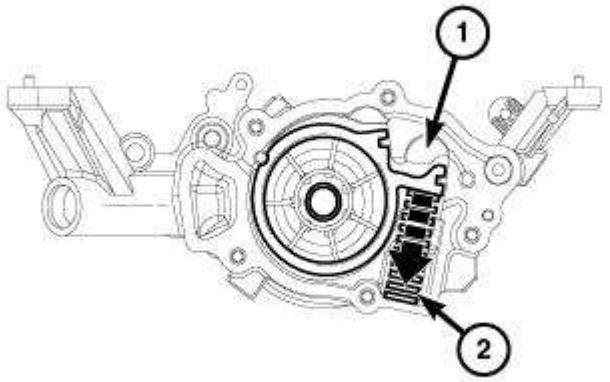

2832798

Fig. 636: Chamber & Spring
Courtesy of CHRYSLER GROUP, LLC

In low pressure mode regulation (solenoid on) the energized solenoid opens an additional chamber (1) to main gallery oil pressure increasing the force on the spring (2) to further reduce displacement and output pressure.

REMOVAL

REMOVAL

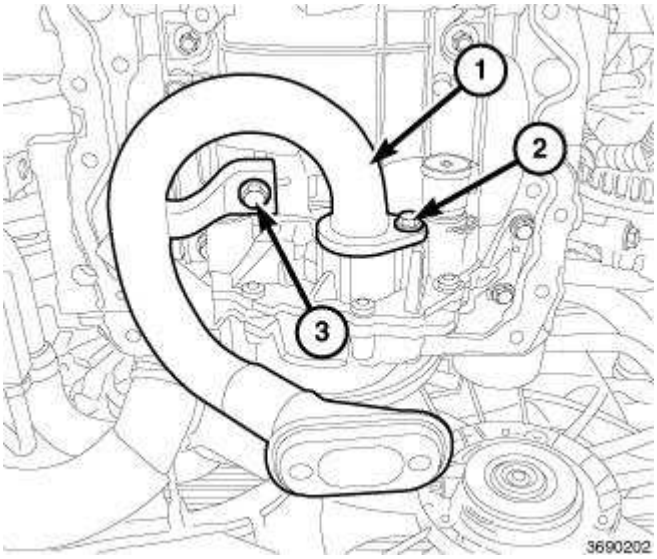

Fig. 637: Oil Pump Pick-Up Tube & Support Bracket Retaining Bolts
Courtesy of CHRYSLER GROUP, LLC

1. Disconnect and isolate the negative battery cable.
2. Remove the upper oil pan. Refer to **PAN, OIL, REMOVAL** .
3. Remove the oil pump pick-up (1). Refer to **PICK-UP, OIL PUMP, REMOVAL**.

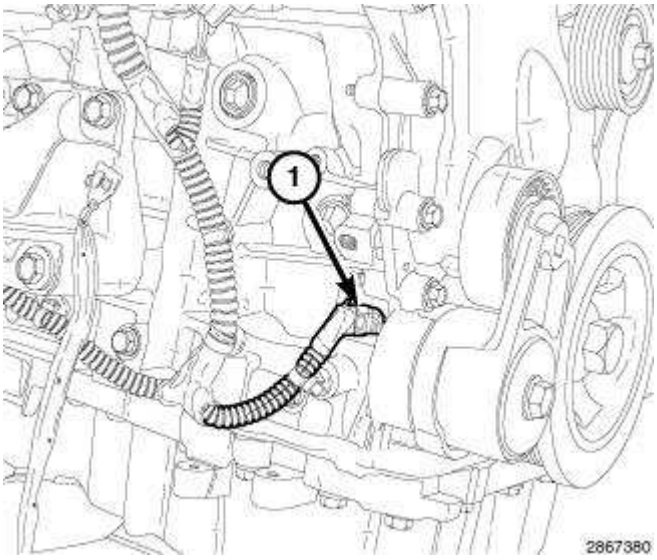

Fig. 638: Oil Pump Solenoid Electrical Connector
Courtesy of CHRYSLER GROUP, LLC

4. Disconnect the engine wire harness from the oil pump solenoid electrical connector (1).

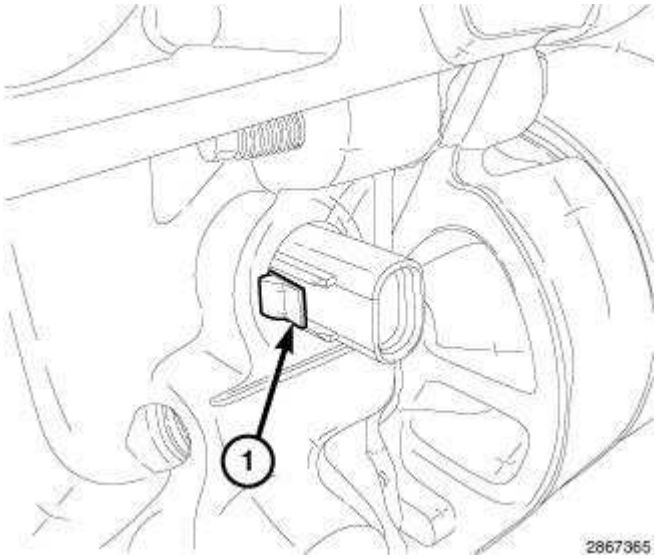

Fig. 639: Oil Pump Solenoid Electrical Connector Retention Lock Tab
Courtesy of CHRYSLER GROUP, LLC

5. Depress the connector retention lock tab (1) to disengage the oil pump solenoid electrical connector from the engine block.

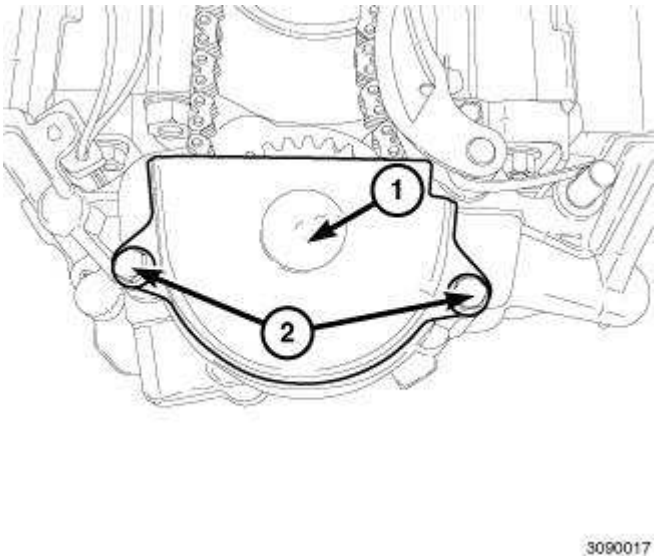

Fig. 640: Timing Gear Splash Shield & Bolts
Courtesy of CHRYSLER GROUP, LLC

6. Remove bolts (2) and the timing gear splash shield (1).

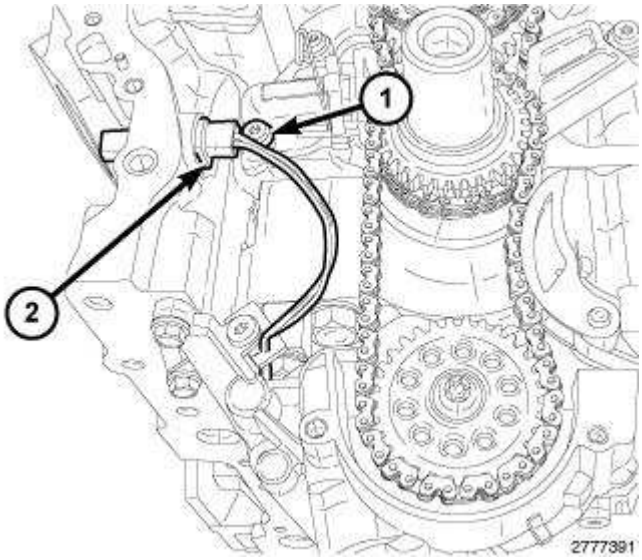

Fig. 641: Oil Pump Solenoid Electrical Connector & Primary Chain Tensioner Mounting Bolt
Courtesy of CHRYSLER GROUP, LLC

NOTE: Illustration shows the engine timing cover removed for clarity.

7. Push the oil pump solenoid electrical connector into the engine block, rotate the connector slightly CW, push it past the primary chain tensioner mounting bolt (1) and into the engine.

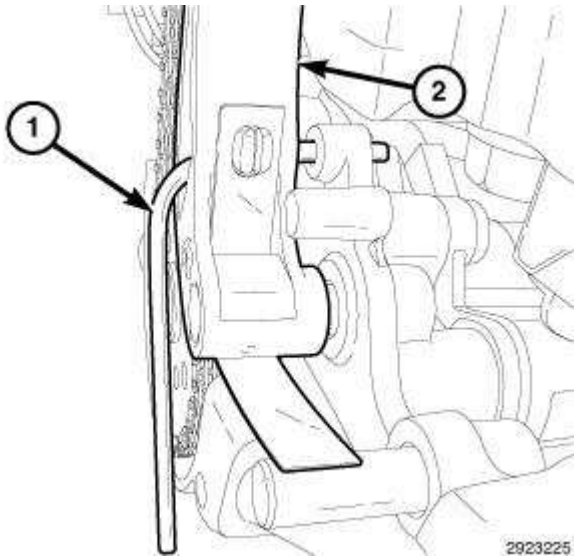

Fig. 642: Oil Pump Chain Tensioner & Retaining Pin
Courtesy of CHRYSLER GROUP, LLC

8. Push back the oil pump chain tensioner (2) and insert a suitable retaining pin (1) such as a 3 mm Allen wrench.

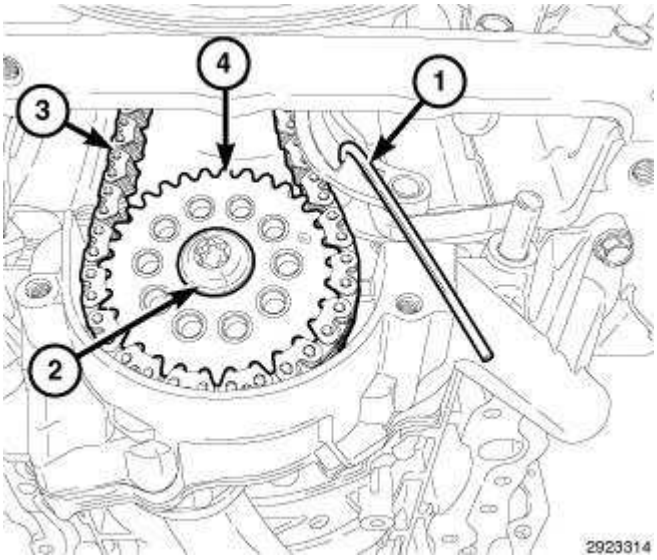

Fig. 643: Retaining Pin, Retaining Bolt, Oil Pump Chain & Sprocket
Courtesy of CHRYSLER GROUP, LLC

CAUTION: Always reinstall timing chains so that they maintain the same direction of rotation. Inverting a previously run chain on a previously run sprocket will result in excessive wear to both the chain and sprocket.

9. Mark the direction of rotation on the oil pump chain (3) and sprocket (4) using a paint pen or equivalent to aid in reassembly.

NOTE: There are no timing marks on the oil pump gear or chain. Timing of the oil pump is not required.

10. Remove the oil pump sprocket T45 retaining bolt (2) and remove the oil pump sprocket (4).

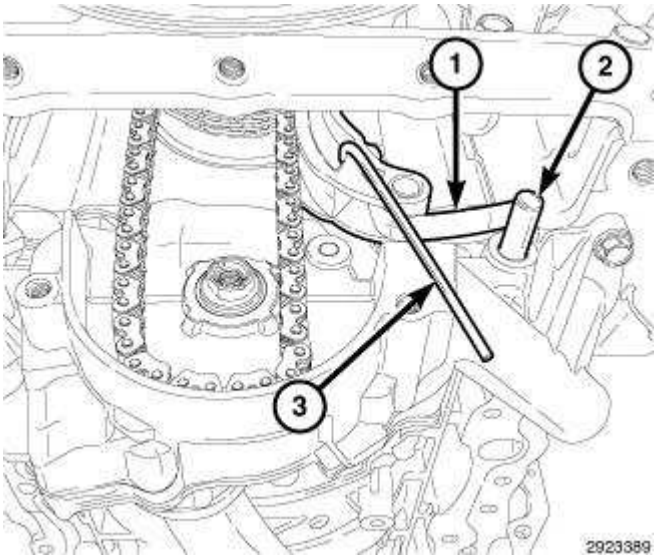

Fig. 644: Retaining Pin, Oil Pump Chain Tensioner Spring & Dowel Pin
Courtesy of CHRYSLER GROUP, LLC

11. Remove the retaining pin (3) and disengage the oil pump chain tensioner spring (1) from the dowel pin (2).
12. Remove the oil pump chain tensioner from the oil pump.

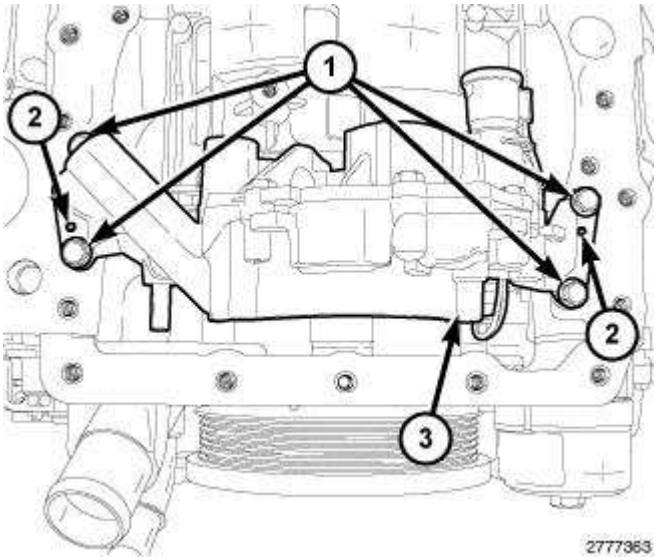

Fig. 645: Oil Pump, Locator Pins & Bolts
Courtesy of CHRYSLER GROUP, LLC

13. Remove the four oil pump bolts (1) and remove the oil pump (3).

INSPECTION

INSPECTION

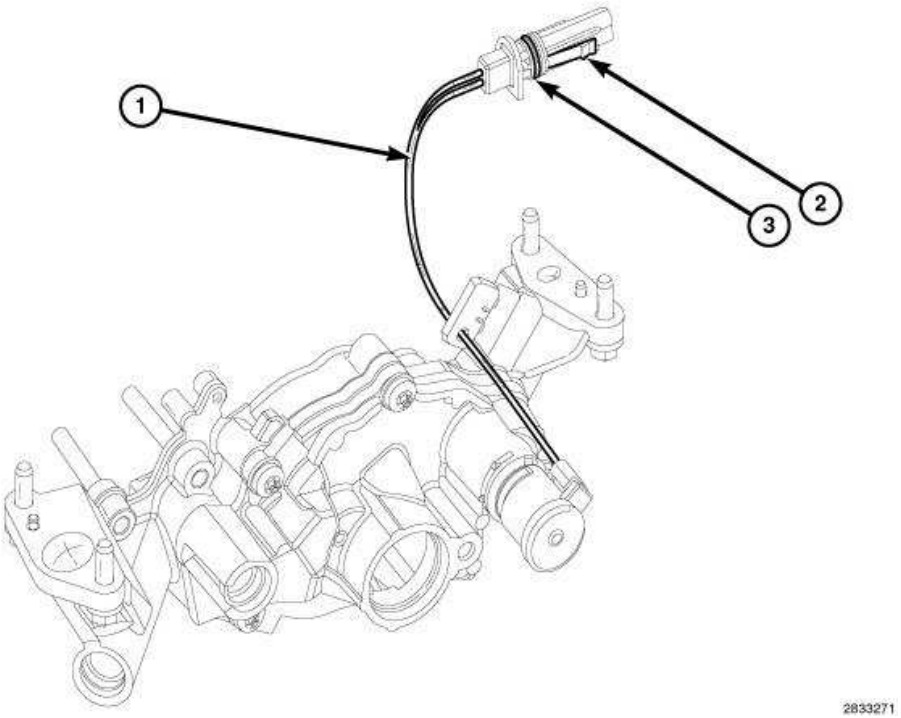

Fig. 646: Solenoid Wires, Connector Retention Lock Tab & O-Ring Seal
Courtesy of CHRYSLER GROUP, LLC

NOTE: The 3.6L Oil pump is released as an assembly. The assembly includes both the pump and the solenoid. There are no serviceable sub-assembly components. In the event the oil pump or solenoid are not functioning or out of specification they must be replaced as an assembly.

1. Inspect the solenoid wires (1) for cuts or chaffing.
2. Inspect the condition of the connector O-ring seal (3).
3. Inspect the connector retention lock tab (2) for fatigue or damage.

INSTALLATION

INSTALLATION

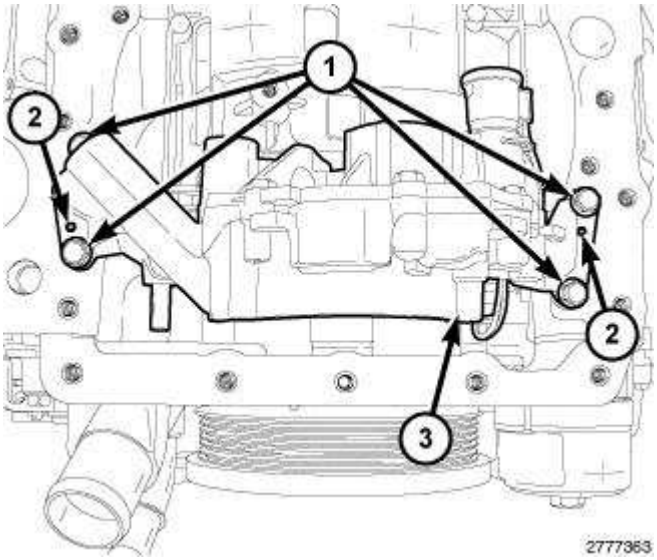

Fig. 647: Oil Pump, Locator Pins & Bolts
Courtesy of CHRYSLER GROUP, LLC

1. Align the locator pins (2) to the engine block and install the oil pump (3) with four bolts (1). Tighten the bolts to 12 N.m (106 in. lbs.).

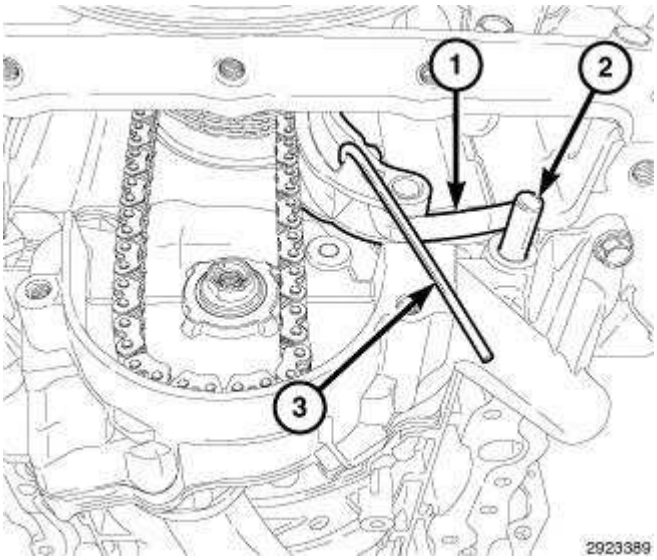

Fig. 648: Retaining Pin, Oil Pump Chain Tensioner Spring & Dowel Pin
Courtesy of CHRYSLER GROUP, LLC

2. Install the oil pump chain tensioner on the oil pump.
3. Position the oil pump chain tensioner spring (1) above the dowel pin (2).
4. Push back the oil pump chain tensioner and insert a suitable retaining pin (3) such as a 3 mm Allen wrench.

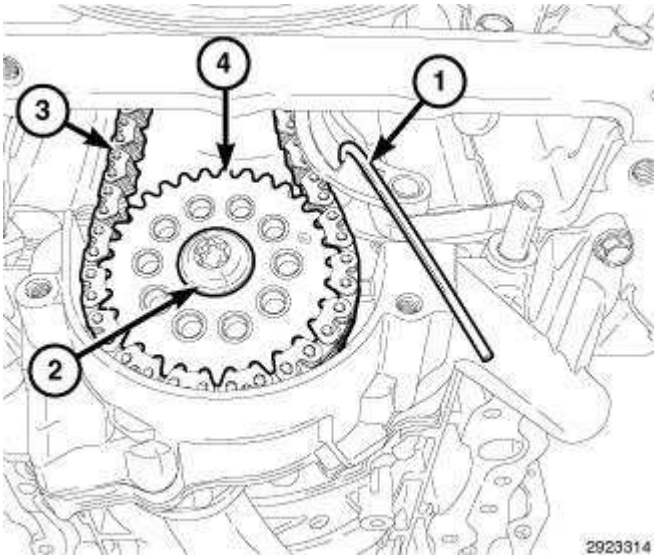

Fig. 649: Retaining Pin, Retaining Bolt, Oil Pump Chain & Sprocket
Courtesy of CHRYSLER GROUP, LLC

NOTE: There are no timing marks on the oil pump gear or chain. Timing of the oil pump is not required.

CAUTION: Always reinstall timing chains so that they maintain the same direction of rotation. Inverting a previously run chain on a previously run sprocket will result in excessive wear to both the chain and sprocket.

5. Place the oil pump sprocket (4) into the oil pump chain (3). Align the oil pump sprocket with the oil pump shaft and install the sprocket. Install the T45 retaining bolt (2) and tighten to 25 N.m (18 ft. lbs.).
6. Remove the retaining pin (1). Verify that the oil pump chain is centered on the tensioner and crankshaft sprocket.
7. Rotate the crankshaft CW one complete revolution to verify proper oil pump chain installation.

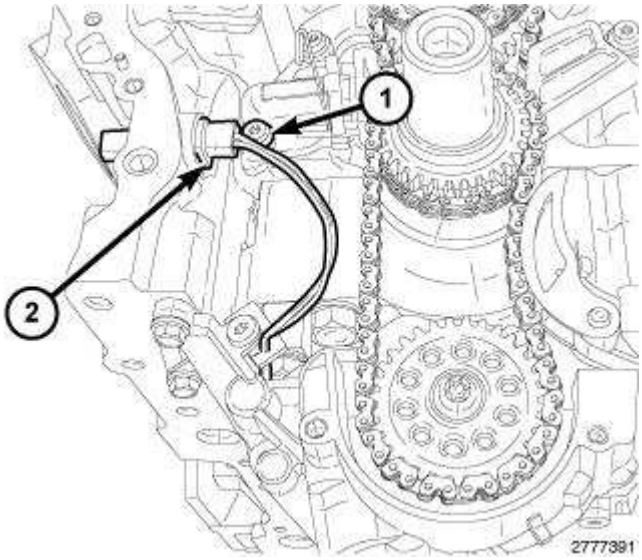

Fig. 650: Oil Pump Solenoid Electrical Connector & Primary Chain Tensioner Mounting Bolt
Courtesy of CHRYSLER GROUP, LLC

NOTE: Illustration shows the engine timing cover removed for clarity.

8. Position the oil pump solenoid electrical connector (2) into the engine block. Rotate the connector so that it can be pushed past the primary chain tensioner mounting bolt (1). Then rotate the connector slightly CCW and push it into the engine block until it locks in place.

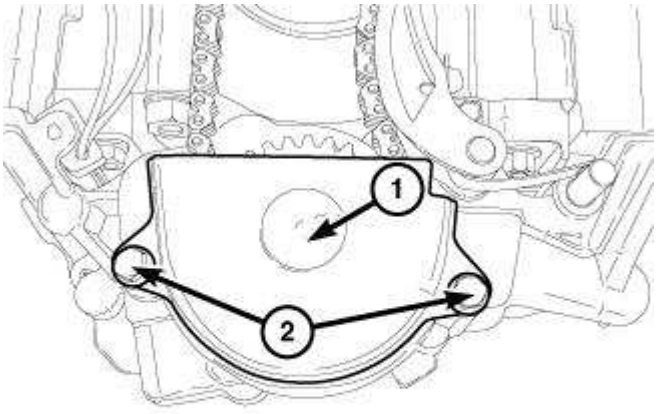

Fig. 651: Timing Gear Splash Shield & Bolts
Courtesy of CHRYSLER GROUP, LLC

9. Install the timing gear splash shield (1). Tighten bolts (2) to 5 N.m (35 in. lbs.).

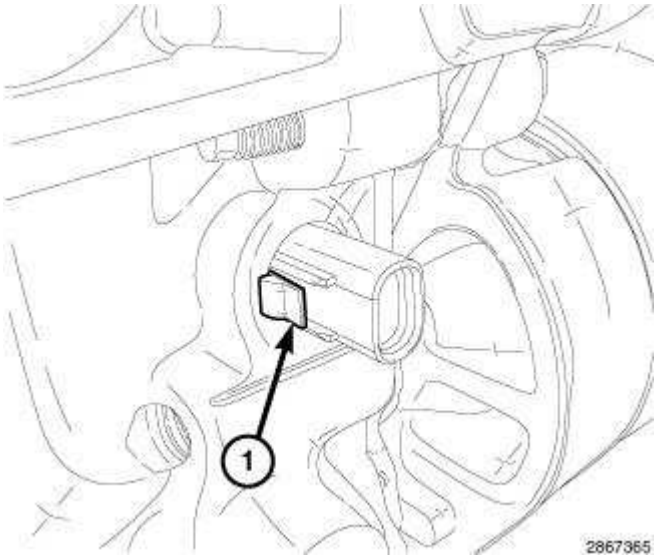

Fig. 652: Oil Pump Solenoid Electrical Connector Retention Lock Tab
Courtesy of CHRYSLER GROUP, LLC

10. Verify that the oil pump solenoid electrical connector retention lock tab (1) is engaged to the engine block.

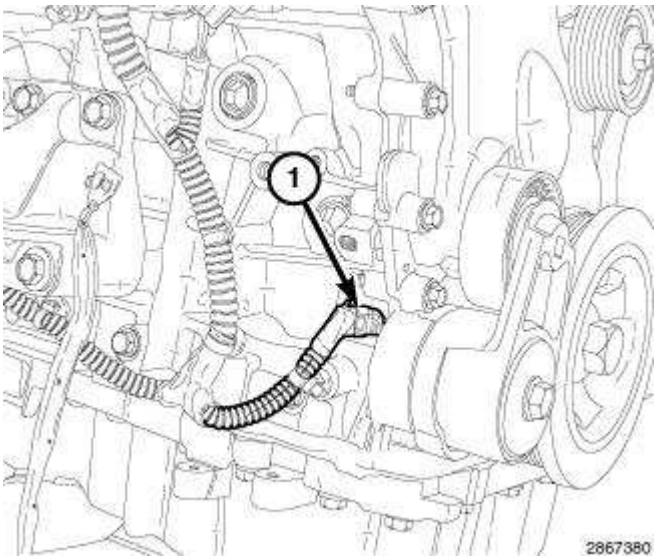

Fig. 653: Oil Pump Solenoid Electrical Connector
Courtesy of CHRYSLER GROUP, LLC

11. Connect the engine wire harness to the oil pump solenoid electrical connector (1).

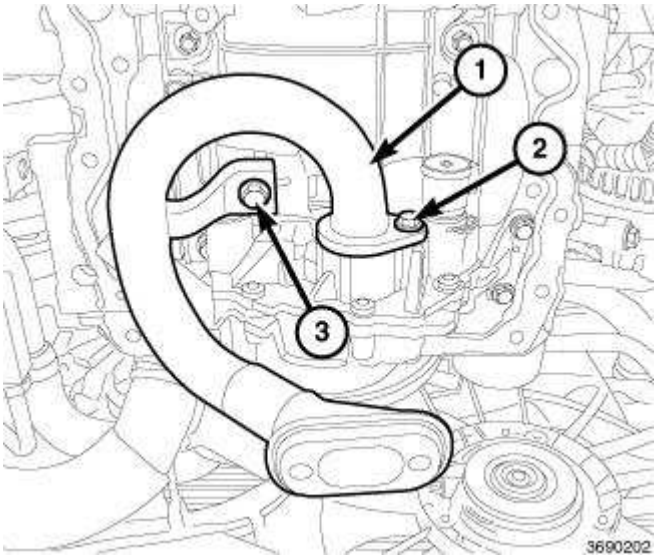

Fig. 654: Oil Pump Pick-Up Tube & Support Bracket Retaining Bolts
Courtesy of CHRYSLER GROUP, LLC

12. Install the oil pump pick-up (1). Refer to **PICK-UP, OIL PUMP, INSTALLATION**.
13. Install the oil pan. Refer to **PAN, OIL, INSTALLATION** .
14. If removed, install the oil filter and fill the engine crankcase with the proper oil to the correct level. Refer to **STANDARD PROCEDURE**.
15. Connect the negative battery cable and tighten nut to 5 N.m (45 in. lbs.).

CAUTION: A MIL or low oil pressure indicator that remains illuminated for more than 2 seconds may indicate low or no engine oil pressure. Stop the engine and investigate the cause of the indication.

16. Start and run the engine until it reaches normal operating temperature.

SENSOR, OIL PRESSURE

DESCRIPTION

DESCRIPTION

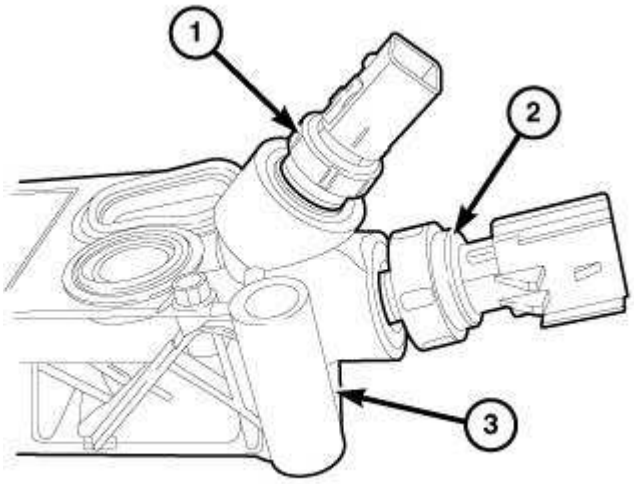

2710795

Fig. 655: Oil Temperature Sensor, Oil Pressure Sensor & Oil Filter Housing
Courtesy of CHRYSLER GROUP, LLC

The oil pressure sensor (2) is located on the oil filter housing (3). The oil pressure sensor is a three wire sensor with a tapered threaded sensor port. The sensor port is mounted to the oil filter housing through an access hole. A thread lock patch seals the oil pressure sensor to the oil filter housing.

OPERATION

OPERATION

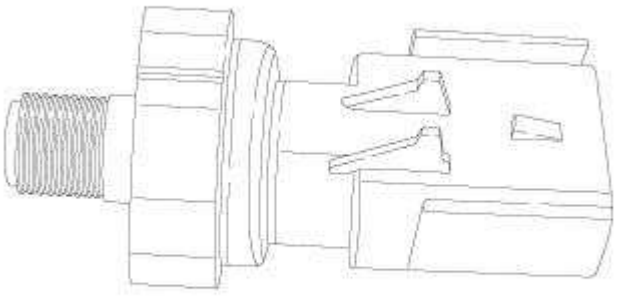

2867304

Fig. 656: Oil Pressure Sensor
Courtesy of CHRYSLER GROUP, LLC

The oil pressure sensor is a silicon based sensing unit that measures the pressure of the engine oil. The Powertrain Control Module (PCM) supplies a 5 volt reference and a ground to the sensor. The input to the PCM occurs on the signal return circuit. The oil pressure sensor is a linear sensor; as

pressure changes, voltage changes proportionately and returns a voltage signal to the PCM that reflects oil pressure. The zero pressure reading is 0.5 volt and full scale is 4.5 volt.

REMOVAL

REMOVAL

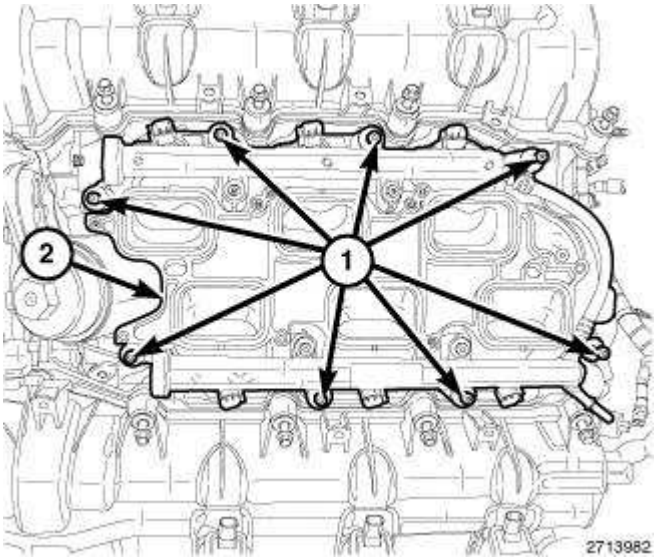

Fig. 657: Lower Intake Manifold & Attaching Bolts
Courtesy of CHRYSLER GROUP, LLC

1. Release fuel system pressure. Refer to **FUEL DELIVERY, GAS, STANDARD PROCEDURE** .
2. Disconnect and isolate the negative battery cable.
3. Remove the air inlet hose, upper intake manifold and lower intake manifold with the fuel injectors and fuel rail (2). Refer to **MANIFOLD, INTAKE, REMOVAL** .

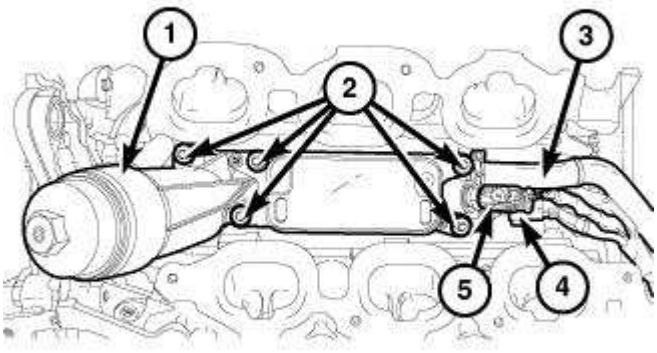

Fig. 658: Oil Temperature Sensor Electrical Connector, Oil Pressure Sensor Electrical

Connector, Oil Filter Housing, Heater Hose & Bolts
Courtesy of CHRYSLER GROUP, LLC

4. Disconnect the oil pressure sensor electrical connector (4).

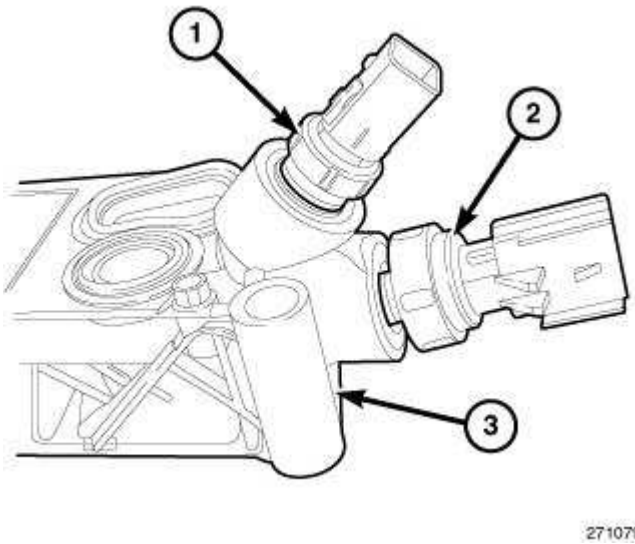

Fig. 659: Oil Temperature Sensor, Oil Pressure Sensor & Oil Filter Housing
Courtesy of CHRYSLER GROUP, LLC

5. Remove the oil pressure sensor (2) from the oil filter housing (3).

INSTALLATION

INSTALLATION

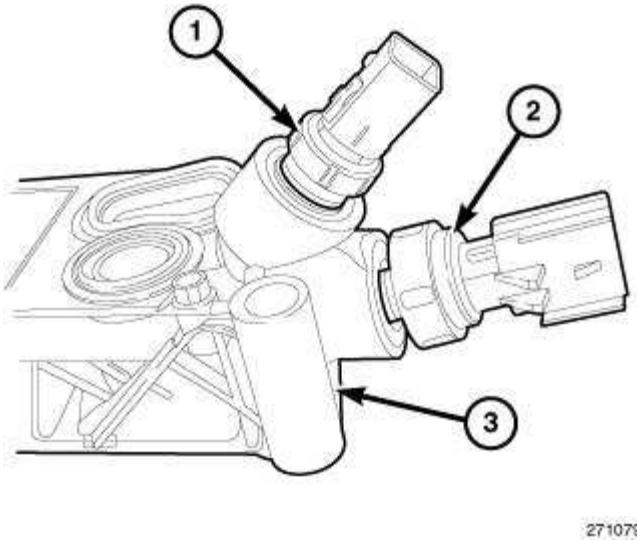

Fig. 660: Oil Temperature Sensor, Oil Pressure Sensor & Oil Filter Housing
Courtesy of CHRYSLER GROUP, LLC

1. Install the oil pressure sensor (2) and tighten to 23 N.m (17 ft. lbs.).

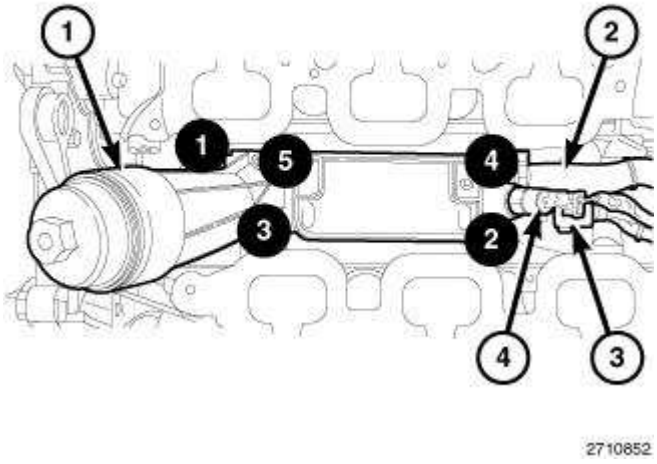

Fig. 661: Heater Hose, Electrical Connectors, Oil Filter Housing & Bolt Tightening Sequence
Courtesy of CHRYSLER GROUP, LLC

2. Connect the oil pressure sensor electrical connector (3).
3. Install the upper and lower intake manifolds and air cleaner housing assembly. Refer to **MANIFOLD, INTAKE, INSTALLATION** .
4. Connect the negative battery cable and tighten nut to 5 N.m (45 in. lbs.).

SENSOR, OIL TEMPERATURE

DESCRIPTION

DESCRIPTION

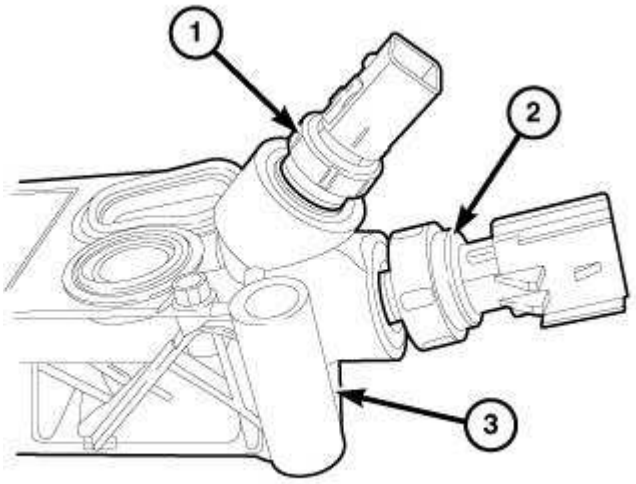

2710795

Fig. 662: Oil Temperature Sensor, Oil Pressure Sensor & Oil Filter Housing
Courtesy of CHRYSLER GROUP, LLC

The oil temperature sensor (1) is located on the oil filter housing (3). The oil temperature sensor is a two wire sensor with a tapered threaded sensor probe. The sensor probe is mounted to the oil filter housing through an access hole. A thread lock patch seals the oil temperature sensor to the oil filter housing.

OPERATION

OPERATION

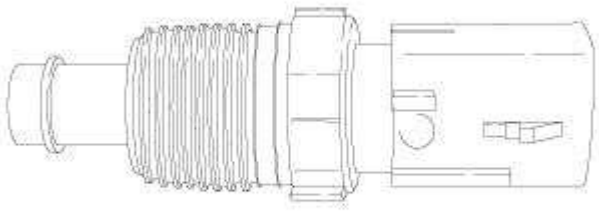

2867292

Fig. 663: Oil Temperature Sensor
Courtesy of CHRYSLER GROUP, LLC

The oil temperature sensor is a variable resistor that measures the temperature of the engine oil. The Powertrain Control Module (PCM) supplies a 5 volt reference and a ground to the sensors low

reference signal circuit. When the oil temperature is low, the sensor resistance is high. When the oil temperature is high, the sensor resistance is low.

REMOVAL

REMOVAL

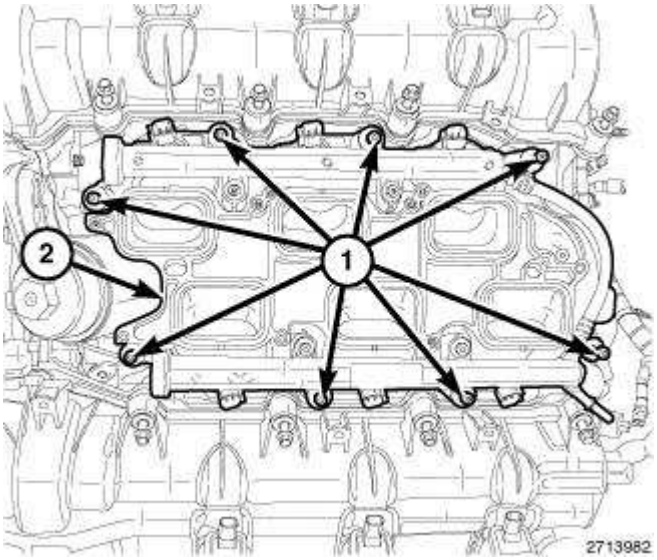

Fig. 664: Lower Intake Manifold & Attaching Bolts
Courtesy of CHRYSLER GROUP, LLC

1. Release fuel system pressure. Refer to **FUEL DELIVERY, GAS, STANDARD PROCEDURE** .
2. Disconnect and isolate the negative battery cable.
3. Remove the air inlet hose, upper intake manifold and lower intake manifold with the fuel injectors and fuel rail (2). Refer to **MANIFOLD, INTAKE, REMOVAL** .

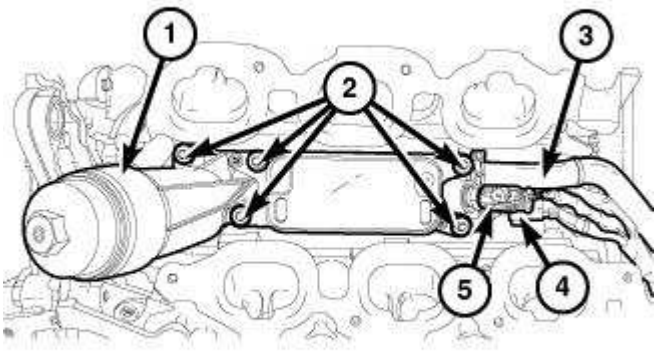

Fig. 665: Oil Temperature Sensor Electrical Connector, Oil Pressure Sensor Electrical

Connector, Oil Filter Housing, Heater Hose & Bolts
Courtesy of CHRYSLER GROUP, LLC

4. Disconnect the oil temperature sensor electrical connector (5).

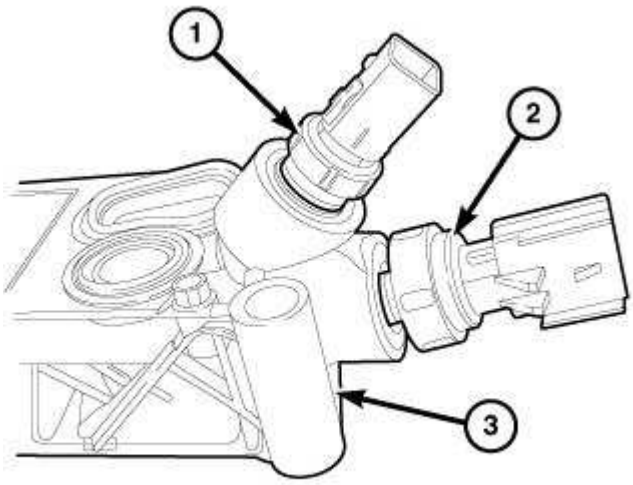

Fig. 666: Oil Temperature Sensor, Oil Pressure Sensor & Oil Filter Housing
Courtesy of CHRYSLER GROUP, LLC

5. Remove the oil temperature sensor (1) from the oil filter housing (3).

INSTALLATION

INSTALLATION

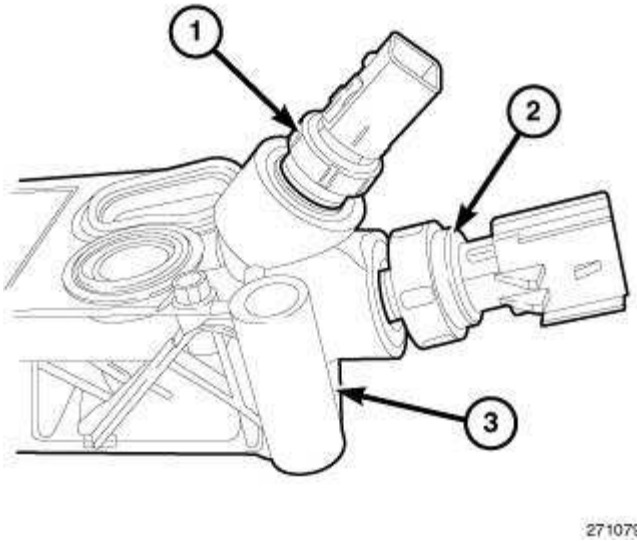

Fig. 667: Oil Temperature Sensor, Oil Pressure Sensor & Oil Filter Housing
Courtesy of CHRYSLER GROUP, LLC

Install the oil temperature sensor (1) and tighten to 30 N.m (22 ft. lbs.).

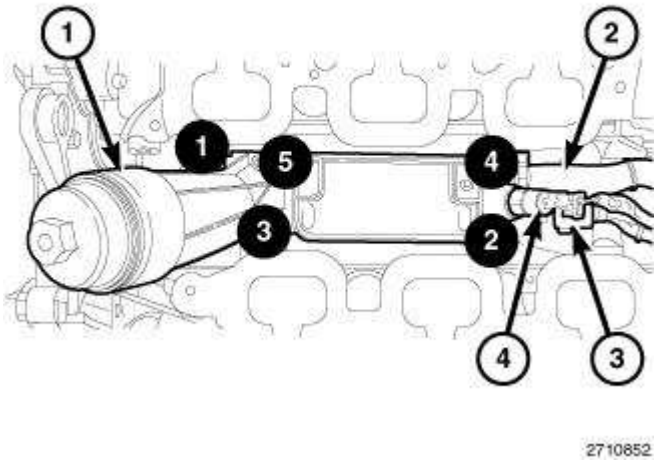

Fig. 668: Heater Hose, Electrical Connectors, Oil Filter Housing & Bolt Tightening Sequence
Courtesy of CHRYSLER GROUP, LLC

1. Connect the oil temperature sensor electrical connector (4).
2. Install the upper and lower intake manifolds and air cleaner housing assembly. Refer to **MANIFOLD, INTAKE, INSTALLATION** .
3. Connect the negative battery cable and tighten nut to 5 N.m (45 in. lbs.).

MANIFOLDS

MANIFOLD, EXHAUST

DESCRIPTION

DESCRIPTION

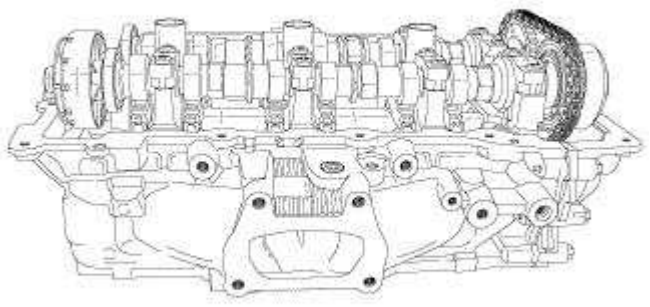

2793404

Fig. 669: Aluminum Cylinder Head
Courtesy of CHRYSLER GROUP, LLC

The 3.6L aluminum cylinder heads are a unique design with left and right castings. The exhaust manifolds are integrated into the cylinder heads. If any damaged is found to the exhaust manifold portion, the cylinder head must be removed for repair or replacement. Refer to **CYLINDER HEAD , REMOVAL** .

MANIFOLD, INTAKE

DESCRIPTION

DESCRIPTION

UPPER INTAKE MANIFOLD

CAUTION: If the engine has experienced a catastrophic failure, THE INTAKE MANIFOLD MUST BE REPLACED!

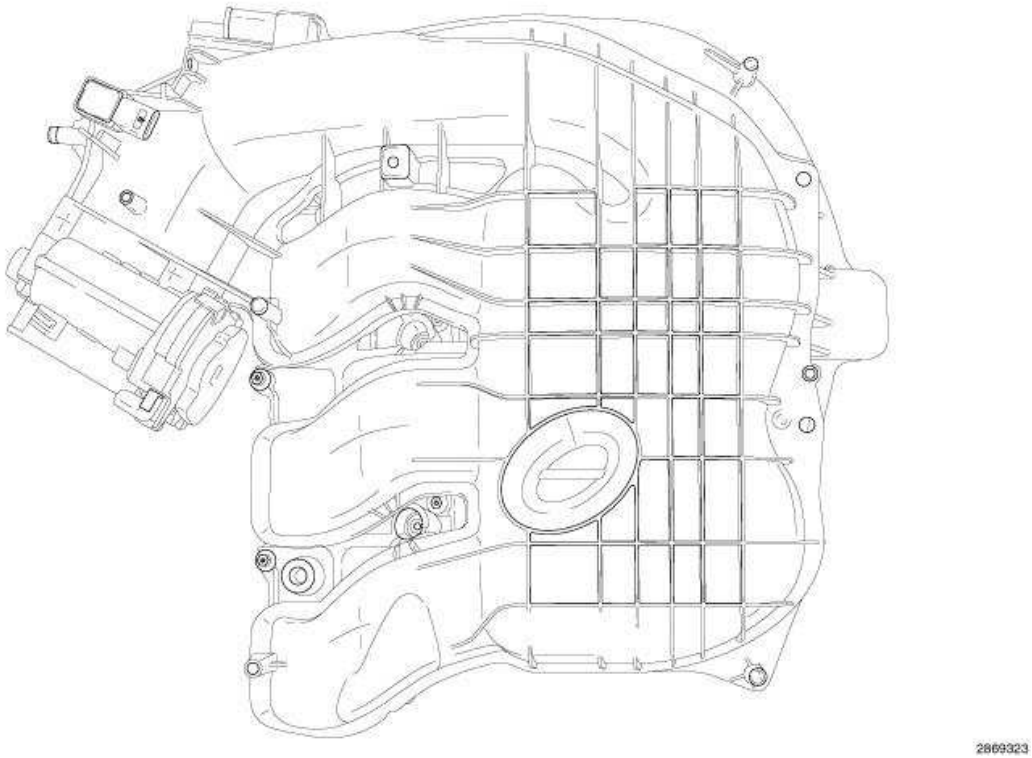

Fig. 670: Upper Intake Manifold Design
Courtesy of CHRYSLER GROUP, LLC

The upper intake manifold is an injection molded nylon composite design. The upper intake manifold is sealed to the lower intake manifold using six individual press-in-place port silicone gaskets. Replace the gaskets whenever the upper intake manifold is removed from the engine. There is a silencer pad positioned between the upper and lower intake manifolds for improved noise, vibration and harshness (NVH). The left cylinder head cover has two alignment posts to aid proper installation of the silencer pad. The seven upper intake manifold fasteners thread directly into the composite lower intake manifold and are a self-taping design. If the upper intake manifold is damaged or cracked, it must be replaced.

The Electronic Throttle Control (ETC) and Manifold Air Pressure (MAP) sensor are attached directly to the upper intake manifold. The upper intake manifold also provides vacuum ports for brake booster, positive crankcase ventilation (PCV) and emissions control.

LOWER INTAKE MANIFOLD

CAUTION: If the engine has experienced a catastrophic failure, THE INTAKE MANIFOLD MUST BE REPLACED!

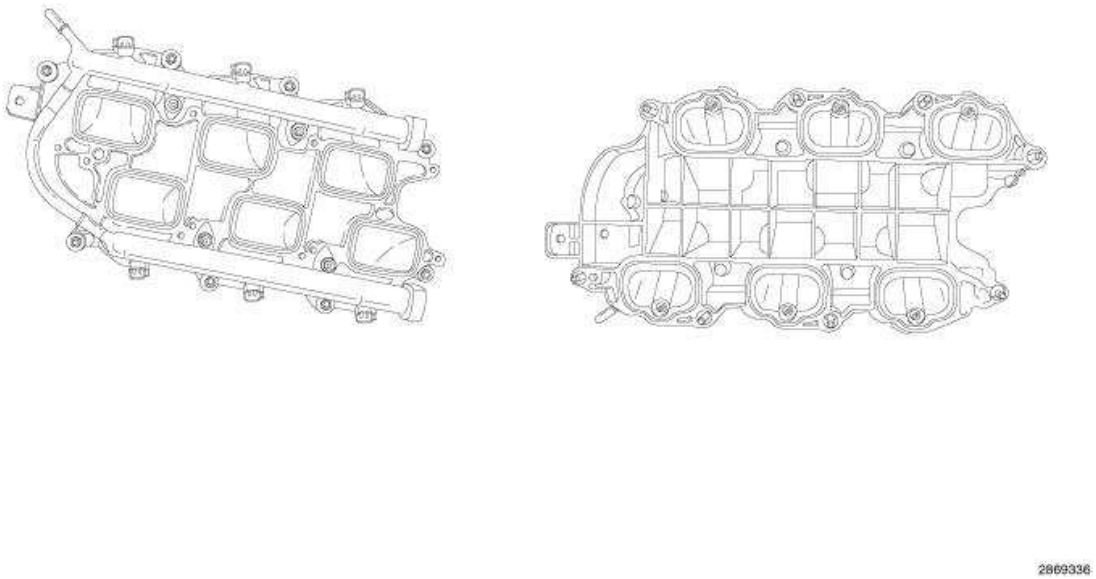

Fig. 671: Lower Intake Manifold Design
Courtesy of CHRYSLER GROUP, LLC

The lower intake manifold is an injection molded nylon composite design. The lower intake manifold is sealed to the cylinder heads using six individual press-in-place port silicone gaskets. Replace the gaskets whenever the lower intake manifold is removed from the engine. The seven upper intake manifold fasteners thread directly into the composite lower intake manifold and are a self-taping design.

The fuel injection fuel rail is also a composite design. The four fuel rail fasteners thread directly into the composite lower intake manifold and are a self-taping design. The lower intake manifold can be serviced without removing the fuel injector rail. The fuel rail and fuel injectors must be installed into the lower intake manifold as an assembly. Do not attempt to install the fuel rail when the injectors are in the manifold. Always install new O-rings on the fuel injectors.

If the lower intake manifold is damaged or cracked, it must be replaced.

DIAGNOSIS AND TESTING

DIAGNOSIS AND TESTING - INTAKE MANIFOLD LEAKS

An intake manifold air leak is characterized by lower than normal manifold vacuum. Also, one or more cylinders may not be functioning.

WARNING: Use extreme caution when the engine is operating. Do not stand in a direct line with the fan. Do not put your hands near the pulleys, belts or

the fan. Do not wear loose clothing.

1. Start the engine.
2. Spray a small stream of water (spray bottle) at the suspected leak area.
3. If engine RPM'S change, the area of the suspected leak has been found.
4. Repair as required.

REMOVAL

UPPER

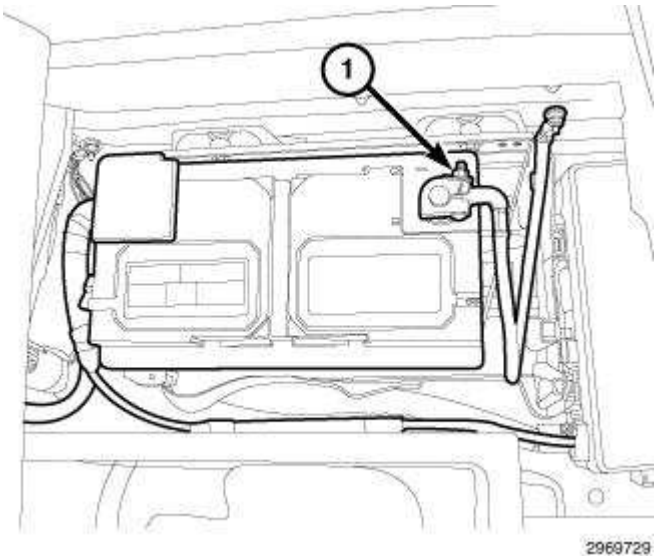

Fig. 672: Negative Battery Cable
Courtesy of CHRYSLER GROUP, LLC

1. Disconnect and isolate the negative battery cable (1).

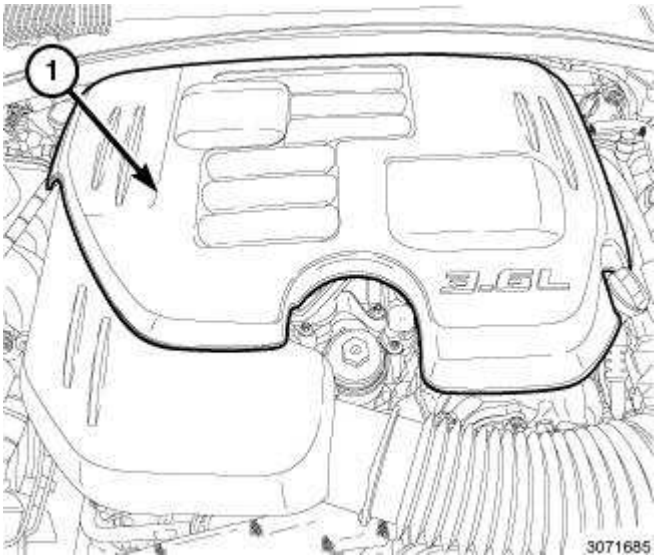

Fig. 673: Engine Cover
Courtesy of CHRYSLER GROUP, LLC

2. Lift the engine cover retaining grommets off the ball studs and remove the engine cover (1).

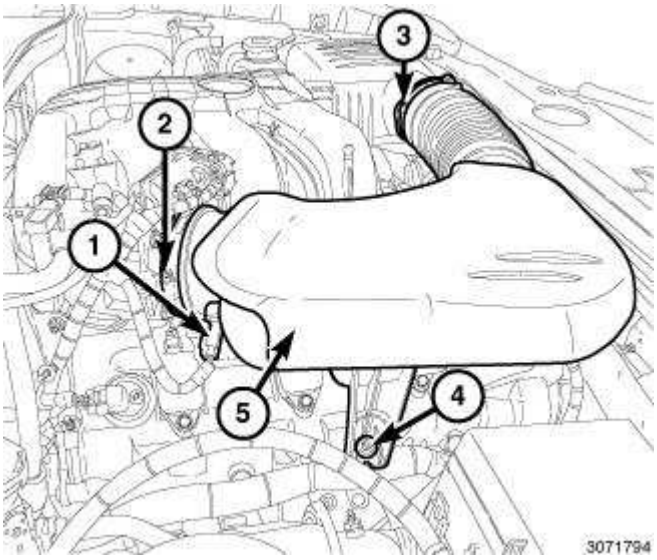

Fig. 674: Inlet Air Temperature (IAT) Sensor Electrical Connector, Air Inlet Hose Assembly & Fasteners
Courtesy of CHRYSLER GROUP, LLC

3. Disconnect the electrical connector (1) from the Inlet Air Temperature (IAT) sensor.
4. Loosen the clamp (2) at the throttle body.
5. Loosen the clamp (3) at the air cleaner housing.
6. Lift the air inlet hose assembly retaining grommet off the ball stud (4).
7. Remove the air inlet hose assembly (5).

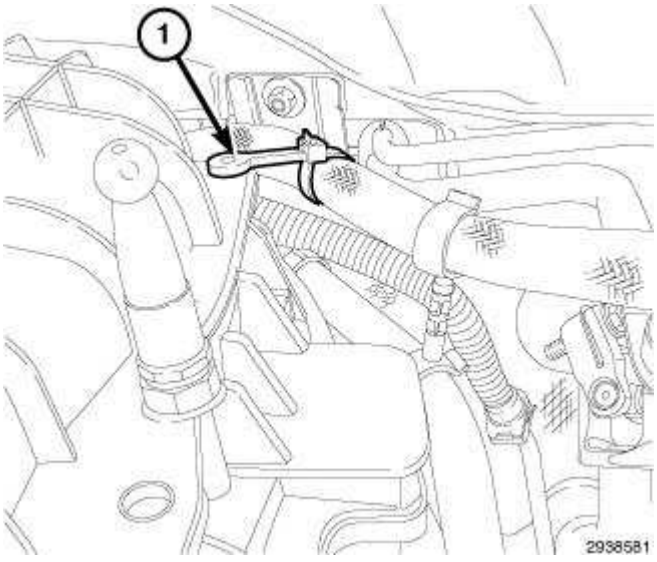

Fig. 675: Brake Booster Hose Retainer
Courtesy of CHRYSLER GROUP, LLC

8. Disengage the brake booster hose retainer (1) from the upper intake manifold.

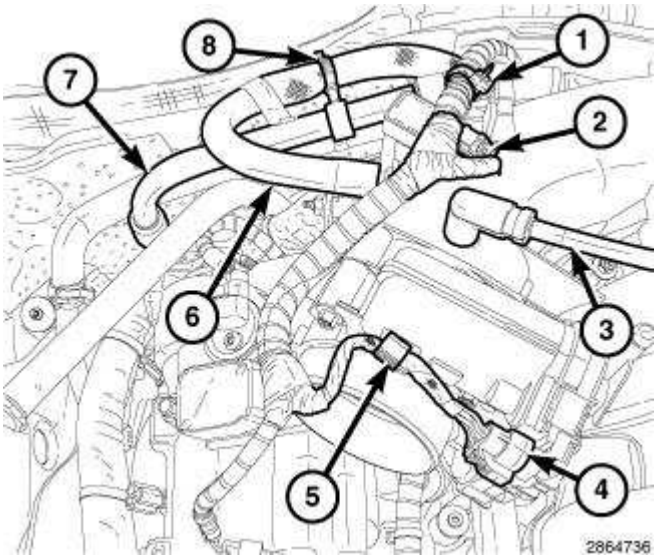

Fig. 676: MAP Sensor, ETC, PCV Hose, Brake Booster Vacuum Hose, EVAP Vapor Purge Line, Clip & Wire Harness Retainer
Courtesy of CHRYSLER GROUP, LLC

9. Disconnect the electrical connectors from the Manifold Absolute Pressure (MAP) sensor (2) and the Electronic Throttle Control (ETC) (4).
10. Disengage the ETC harness from the clip (5) on the throttle body and unfasten the wire harness retainer (1) from the upper intake manifold near the MAP sensor and reposition the wire harness.
11. Disconnect the following hoses from the upper intake manifold:
    - Positive Crankcase Ventilation (PCV) (7)
    - Brake booster vacuum hose (6)
    - EVAP vapor purge line (3)

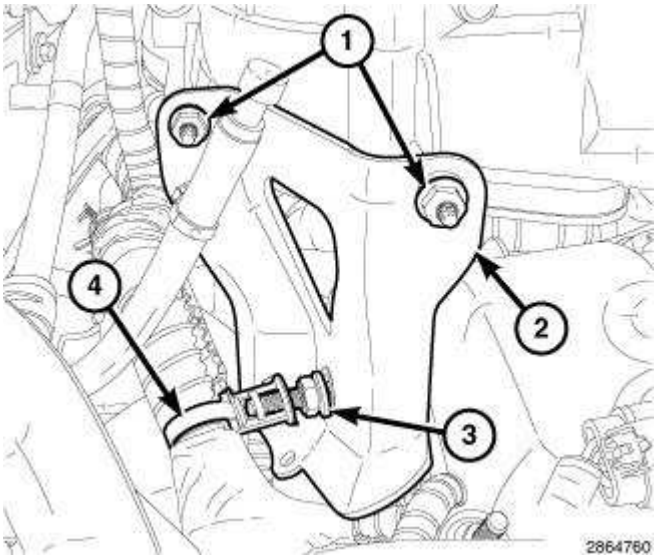

Fig. 677: Upper Intake Manifold Support Bracket, Stud & Fasteners
Courtesy of CHRYSLER GROUP, LLC

12. Unfasten the wire harness retainer (4) from the upper intake manifold support bracket (2) stud retainer (3).
13. Remove the two nuts (1), loosen the stud (3) and reposition the upper intake manifold support bracket (2).

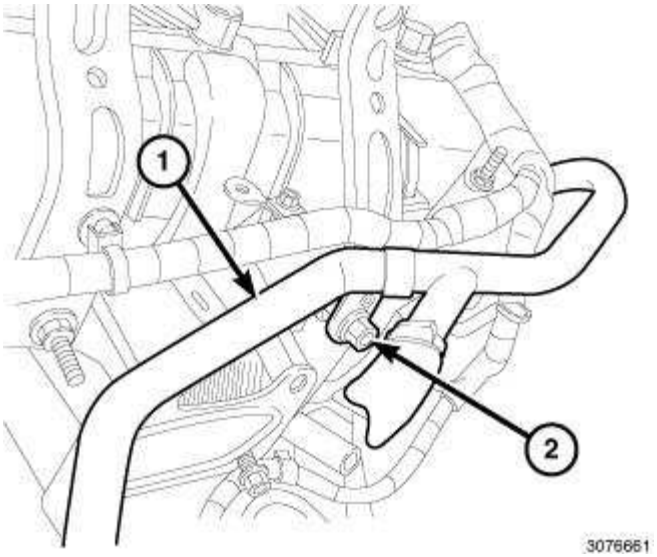

Fig. 678: Heater Core Return Tube Upper Support Bracket Retaining Nut & Tube
Courtesy of CHRYSLER GROUP, LLC

14. Remove the heater core return tube upper support bracket retaining nut (2) and reposition tube (1).

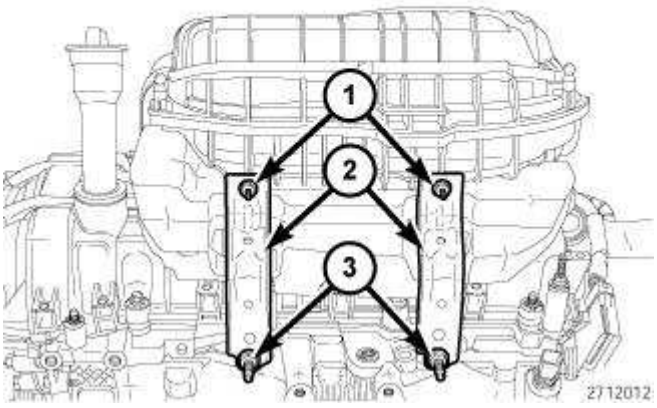

Fig. 679: Nuts, Stud Retainers & Upper Intake Manifold Support Brackets
Courtesy of CHRYSLER GROUP, LLC

15. Remove the two nuts (1), loosen two stud retainers (3) and reposition the two upper intake manifold support brackets (2).

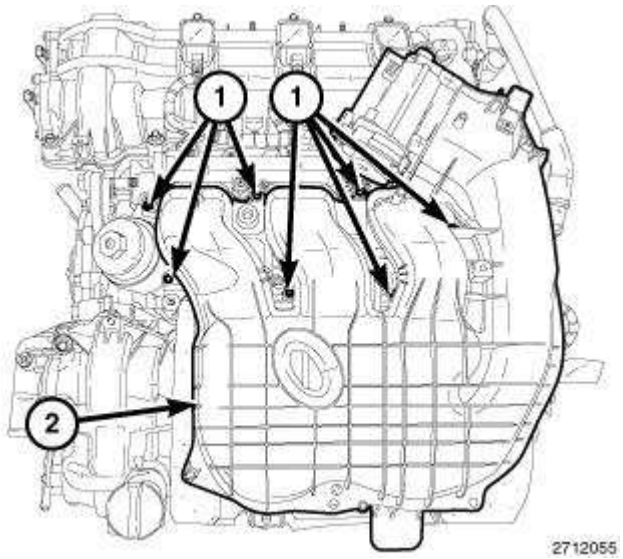

Fig. 680: Upper Intake Manifold & Bolts
Courtesy of CHRYSLER GROUP, LLC

NOTE: The upper intake manifold attaching bolts are captured in the upper intake manifold. Once loosened, the bolts will have to be lifted out of the lower intake manifold and held while removing the upper intake manifold.

NOTE: Exercise care not to inadvertently loosen the two fuel rail attachment bolts that are in close proximity of the upper intake manifold attaching bolts.

16. Remove the seven manifold attaching bolts (1) and remove the upper intake manifold (2).

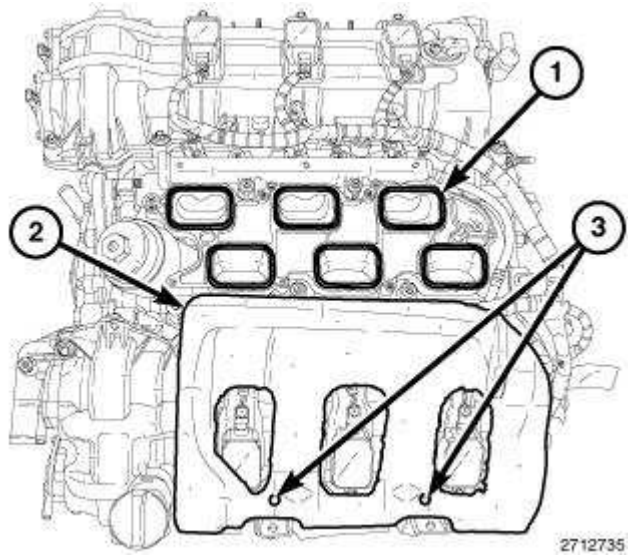

Fig. 681: Intake Ports, Insulator & Alignment Posts
Courtesy of CHRYSLER GROUP, LLC

17. Remove and discard the six upper to lower intake manifold seals (1).
18. Cover the open intake ports to prevent debris from entering the engine.
19. If required, remove the insulator (2) from the left cylinder head cover.

LOWER

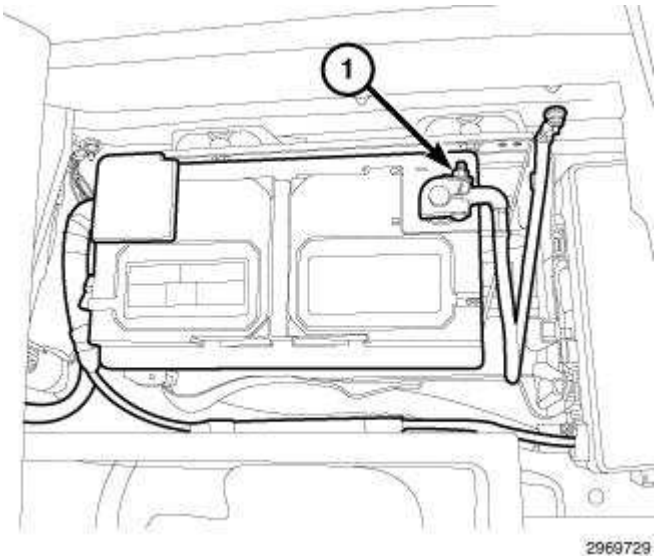

Fig. 682: Negative Battery Cable
Courtesy of CHRYSLER GROUP, LLC

1. Perform the fuel pressure release procedure. Refer to **FUEL DELIVERY, GAS, STANDARD PROCEDURE** .

2. Disconnect and isolate the negative battery cable (1).

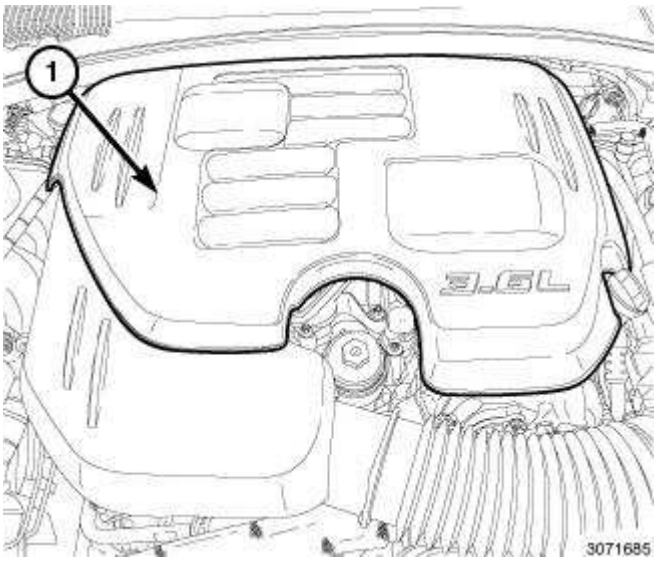

Fig. 683: Engine Cover
Courtesy of CHRYSLER GROUP, LLC

3. Lift the engine cover retaining grommets off the ball studs and remove the engine cover (1).

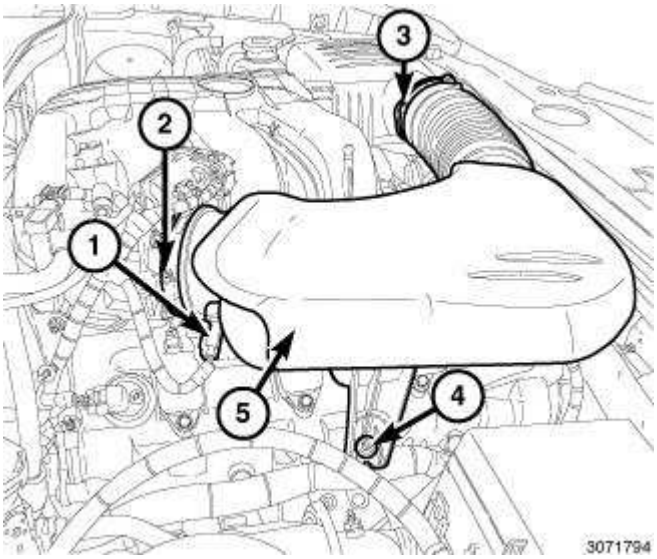

Fig. 684: Inlet Air Temperature (IAT) Sensor Electrical Connector, Air Inlet Hose Assembly & Fasteners
Courtesy of CHRYSLER GROUP, LLC

4. Disconnect the electrical connector (1) from the Inlet Air Temperature (IAT) sensor.
5. Loosen the clamp (2) at the throttle body.
6. Loosen the clamp (3) at the air cleaner housing.
7. Lift the air inlet hose assembly retaining grommet off the ball stud (4).

8. Remove the air inlet hose assembly (5).

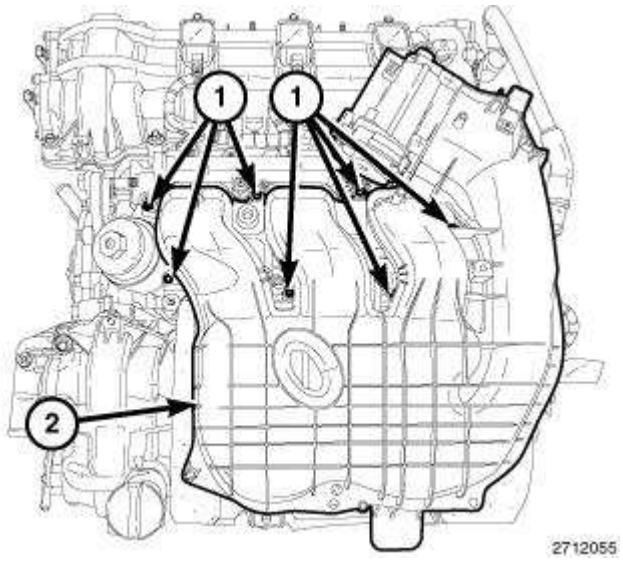

Fig. 685: Upper Intake Manifold & Bolts
Courtesy of CHRYSLER GROUP, LLC

WARNING: The fuel system is under constant pressure even with engine off. Before servicing the fuel rail, fuel system pressure must be released.

9. Remove the upper intake manifold (2) and support brackets. Refer to **MANIFOLD, INTAKE, REMOVAL** .

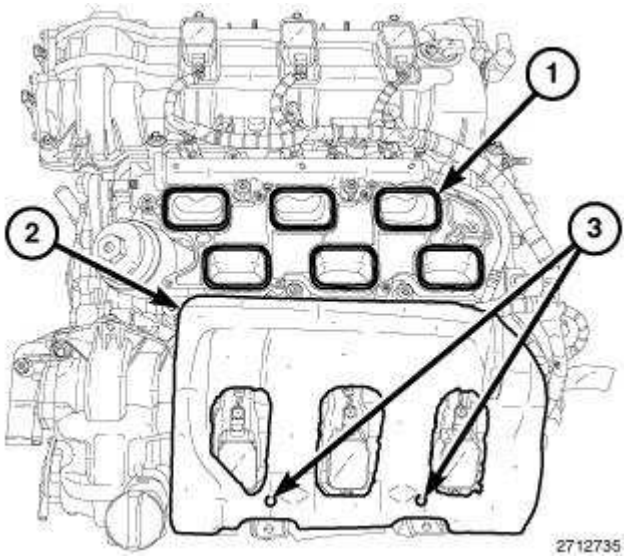

Fig. 686: Intake Ports, Insulator & Alignment Posts
Courtesy of CHRYSLER GROUP, LLC

10. Remove the insulator (2) from the left cylinder head cover.

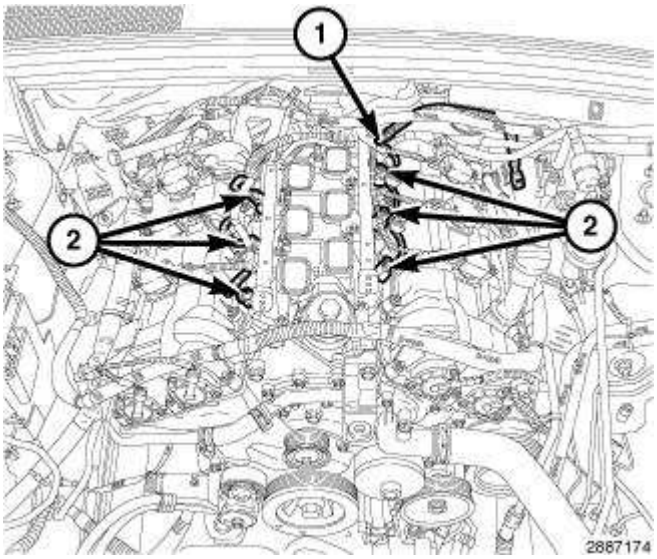

Fig. 687: Fuel Supply Hose & Fuel Injector Electrical Connectors
Courtesy of CHRYSLER GROUP, LLC

11. Disconnect the fuel supply hose (1) from the fuel rail. Refer to **FITTING, QUICK CONNECT, STANDARD PROCEDURE** .
12. Disconnect the fuel injector electrical connectors (2).

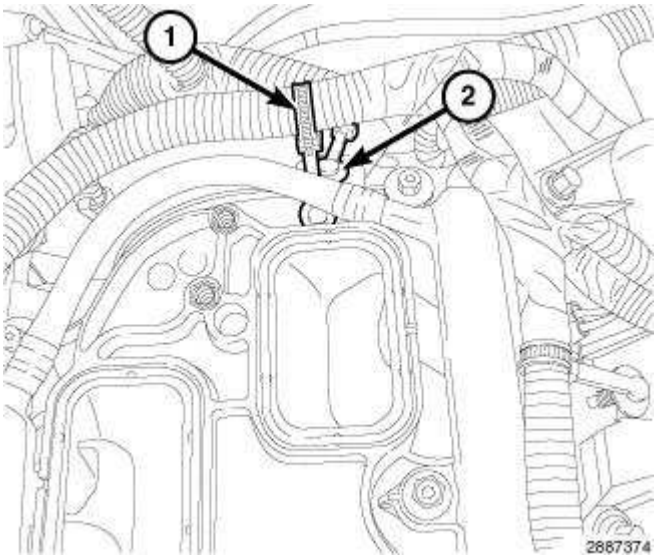

Fig. 688: Injection/Ignition Harness Retainer & Main Wire Harness Retainer
Courtesy of CHRYSLER GROUP, LLC

13. Unfasten the injection/ignition harness retainer (1) from the rear of the lower intake manifold.
14. Disengage the main wire harness retainer (2) form the rear of the lower intake manifold.

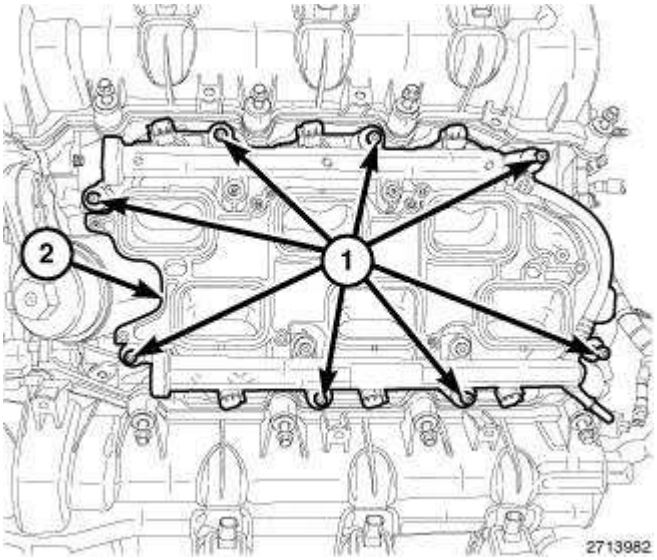

Fig. 689: Lower Intake Manifold & Attaching Bolts
Courtesy of CHRYSLER GROUP, LLC

15. Remove the eight lower intake manifold attaching bolts (1).
16. Remove the lower intake manifold (2) with the fuel injectors and fuel rail as an assembly.

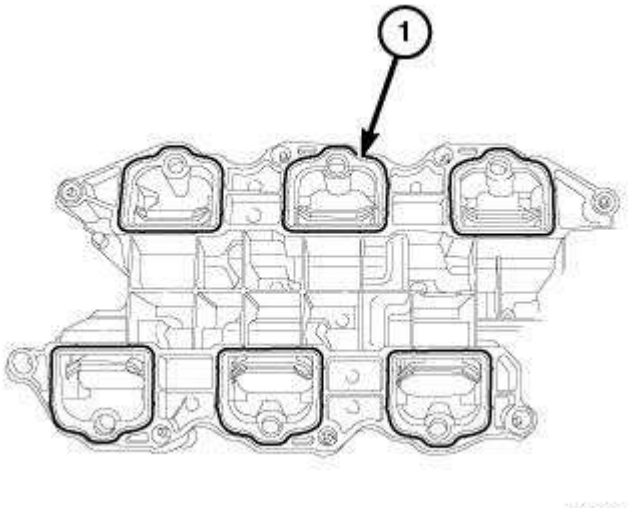

Fig. 690: Lower Intake Manifold To Cylinder Head Seals
Courtesy of CHRYSLER GROUP, LLC

17. Remove and discard the six lower intake manifold to cylinder head seals (1).

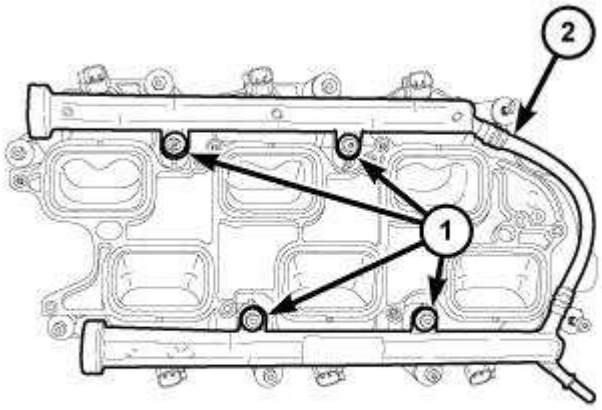

2714021

Fig. 691: Fuel Rail & Retaining Bolts
Courtesy of CHRYSLER GROUP, LLC

18. If required, remove the fuel rail (2) and fuel injectors from the lower intake manifold. Refer to **RAIL, FUEL, REMOVAL** .

INSPECTION

INSPECTION

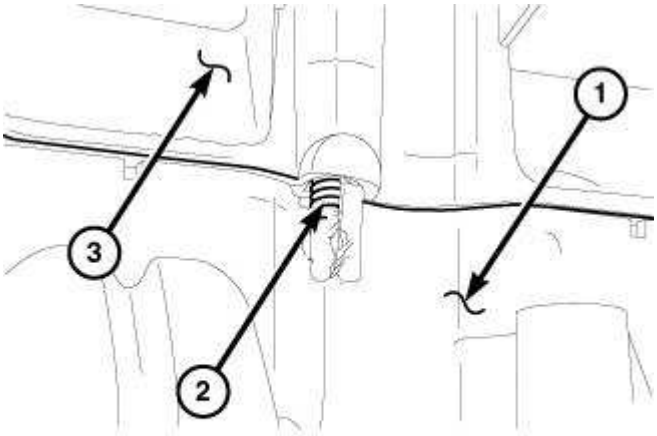

2869717

Fig. 692: Non-Repairable Damage To Lower Intake Manifold Due To Cross Threading Of An Upper Intake Manifold Attaching Bolt
Courtesy of CHRYSLER GROUP, LLC

NOTE: When the upper intake manifold (3) and lower intake manifold (1) are not aligned properly, cross threading of the upper intake manifold attaching bolts can

occur. The Illustration shows non-repairable damage to the lower intake manifold (1) due to cross threading of an upper intake manifold attaching bolt (2).

Check both the upper and lower intake manifolds for:

- Damage and cracks
- Gasket surface damage or warping

Check the lower intake manifold for:

- Damaged fuel injector ports

If either the upper or lower manifold exhibits any damaged or warped conditions, replace the manifold.

INSTALLATION

UPPER

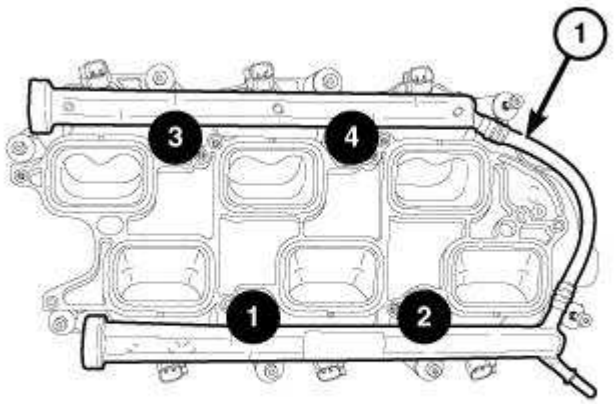

Fig. 693: Fuel Rail Bolt Tightening Sequence
Courtesy of CHRYSLER GROUP, LLC

NOTE: Prior to installing the upper intake manifold, verify that the four fuel rail bolts were not inadvertently loosened. The bolts must tightened in the sequence shown in illustration to 7 N.m (62 in. lbs.). Refer to RAIL, FUEL, INSTALLATION .

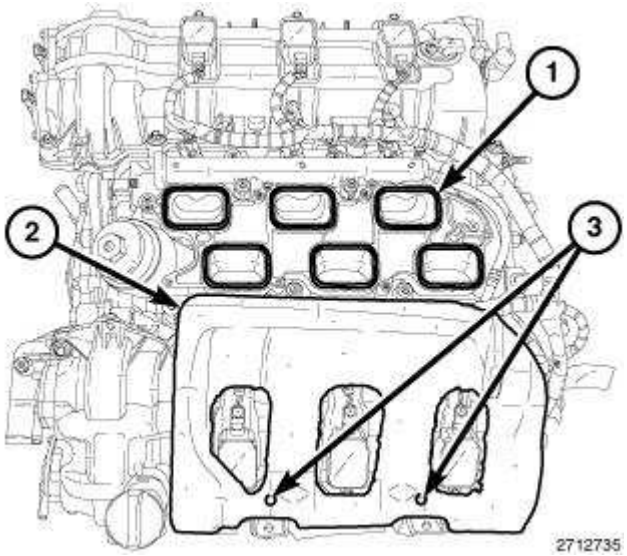

Fig. 694: Intake Ports, Insulator & Alignment Posts
Courtesy of CHRYSLER GROUP, LLC

1. Clean and inspect the sealing surfaces. Install new upper to lower intake manifold seals (1).

   NOTE: Make sure the fuel injectors and wiring harnesses are in the correct position so that they don't interfere with the upper intake manifold installation.

2. If removed, position the insulator (2) onto the two alignment posts (3) on top of the left cylinder head cover.

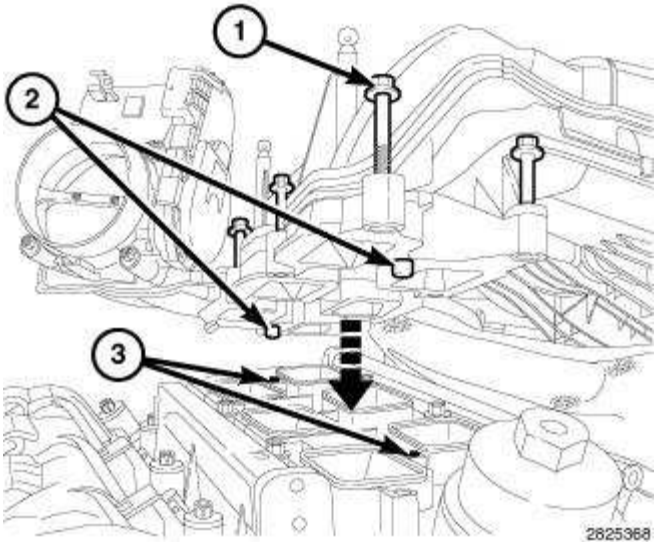

Fig. 695: Upper Intake Attaching Bolts, Locating Posts & Holes
Courtesy of CHRYSLER GROUP, LLC

3. Lift and hold the seven upper intake attaching bolts (1) clear of the mating surface. Back the

bolts out slightly or if required, use an elastic band to hold the bolts clear of the mating surface.

4. Position the upper intake manifold (1) onto the lower intake manifold so that the two locating posts (2) on the upper intake manifold align with corresponding holes (3) in the lower intake manifold.

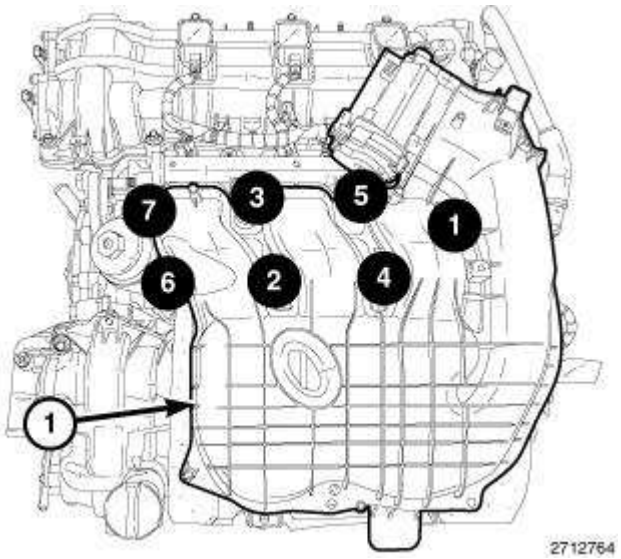

Fig. 696: Upper Intake Manifold Bolt Tightening Sequence
Courtesy of CHRYSLER GROUP, LLC

5. Install the seven upper intake manifold attaching bolts. Tighten the bolts in the sequence shown in illustration to 8 N.m (71 in. lbs.).

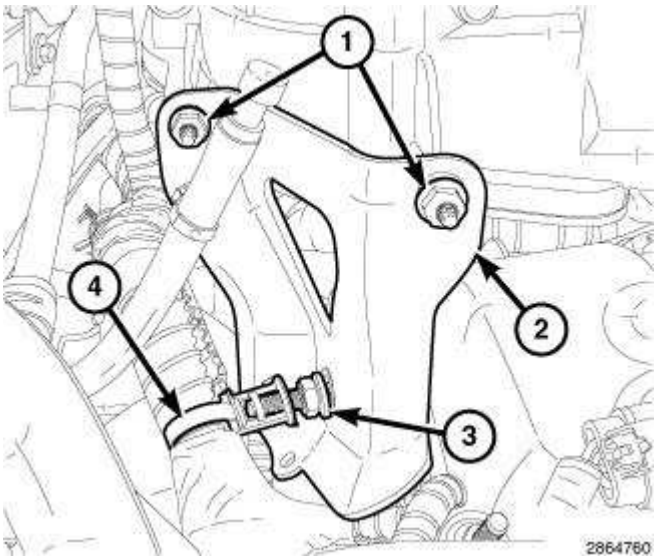

Fig. 697: Upper Intake Manifold Support Bracket, Stud & Fasteners
Courtesy of CHRYSLER GROUP, LLC

6. Install two nuts (1) to the upper intake manifold support bracket (2). Tighten the nuts (1) to 10 N.m (89 in. lbs.) and tighten the stud (3) to 20 N.m (15 ft. lbs.)

7. Engage the wire harness retainer (4) to the stud (3).

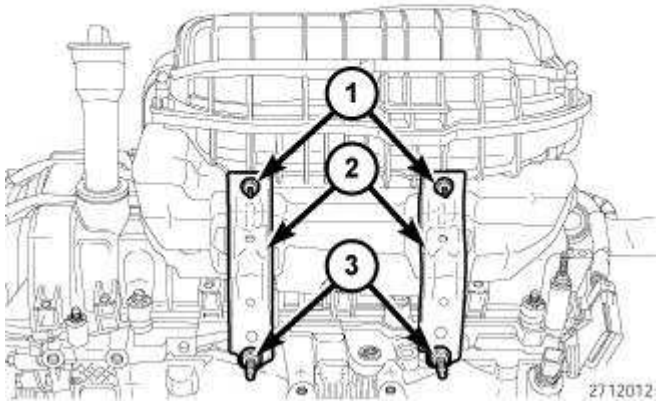

Fig. 698: Nuts, Stud Retainers & Upper Intake Manifold Support Brackets
Courtesy of CHRYSLER GROUP, LLC

8. Install the two upper intake manifold support brackets (2) with two stud retainers (3) and two nuts (1). Tighten the stud retainers (3) to 20 N.m (15 ft. lbs.) and tighten the nuts (1) to 10 N.m (89 in. lbs.).

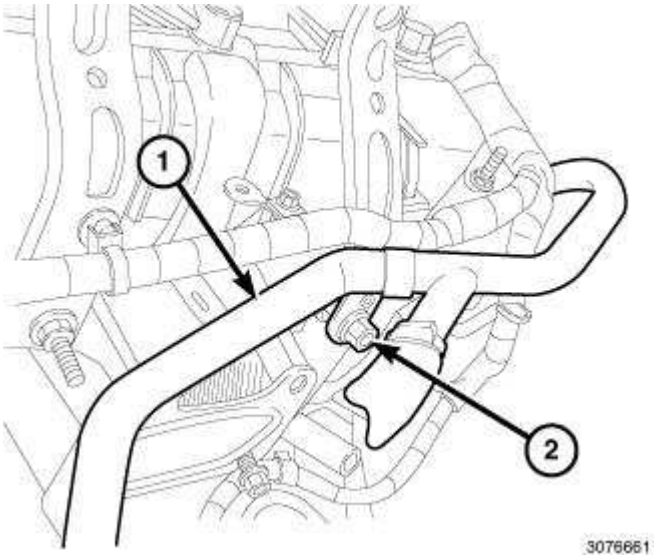

Fig. 699: Heater Core Return Tube Upper Support Bracket Retaining Nut & Tube
Courtesy of CHRYSLER GROUP, LLC

9. Position the heater core return tube (1), install the retaining nut (2) and tighten to 12 N.m (9 ft. lbs.).

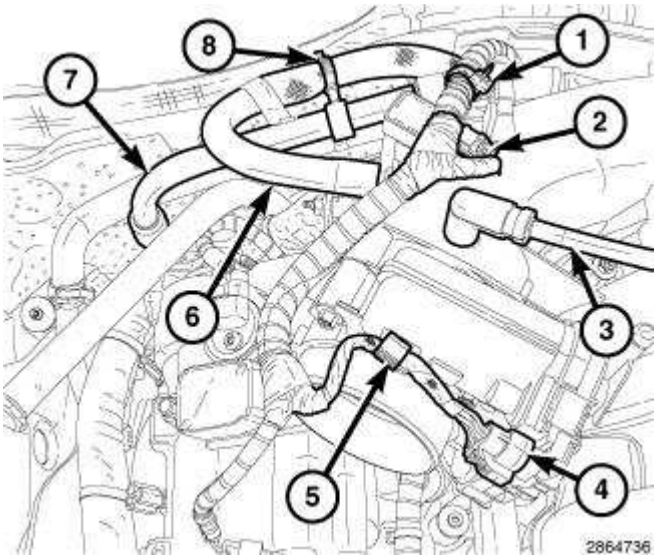

Fig. 700: MAP Sensor, ETC, PCV Hose, Brake Booster Vacuum Hose, EVAP Vapor Purge Line, Clip & Wire Harness Retainer
Courtesy of CHRYSLER GROUP, LLC

10. Connect the following hoses to the upper intake manifold:
    - Positive Crankcase Ventilation (PCV) (7)
    - Brake booster vacuum hose (6)
    - EVAP vapor purge line (3)
11. Connect the electrical connectors to the Manifold Absolute Pressure (MAP) sensor (2) and the Electronic Throttle Control (ETC) (4).
12. Secure the ETC harness to the clip (5) on the throttle body and fasten the wire harness retainer (1) to the upper intake manifold near the MAP sensor.

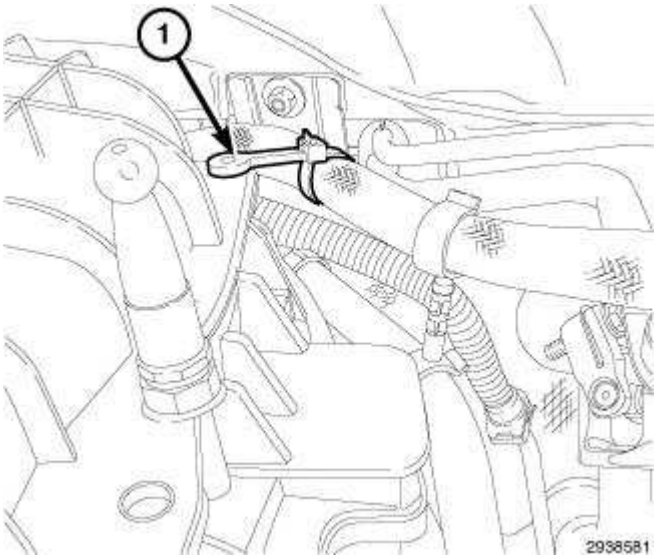

Fig. 701: Brake Booster Hose Retainer
Courtesy of CHRYSLER GROUP, LLC

13. Fasten the brake booster vacuum hose retainer (1) to the upper intake manifold.

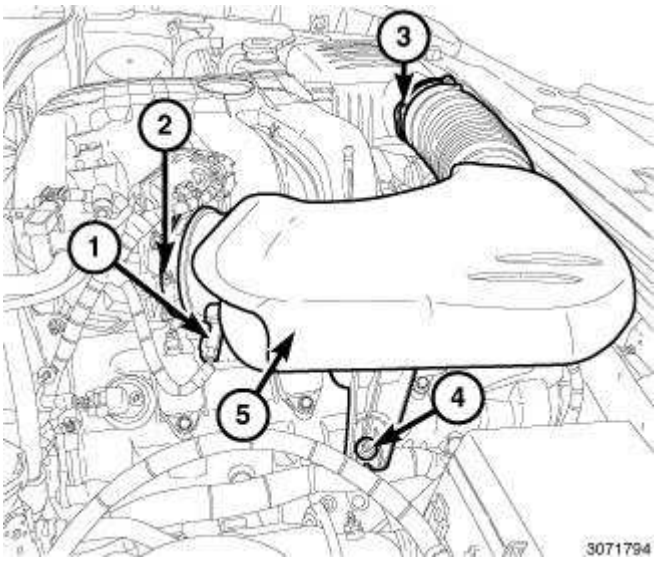

Fig. 702: Inlet Air Temperature (IAT) Sensor Electrical Connector, Air Inlet Hose Assembly & Fasteners
Courtesy of CHRYSLER GROUP, LLC

14. Position the air inlet hose assembly (5) onto the throttle body and the air cleaner housing.
15. Secure the air inlet hose assembly retaining grommet onto the ball stud (4).
16. Tighten the clamp at the air cleaner housing (3) to 5 N.m (44 in. lbs.).
17. Tighten the clamp (2) at the throttle body to 5 N.m (44 in. lbs.).
18. Connect the Inlet Air Temperature (IAT) sensor electrical connector (1).

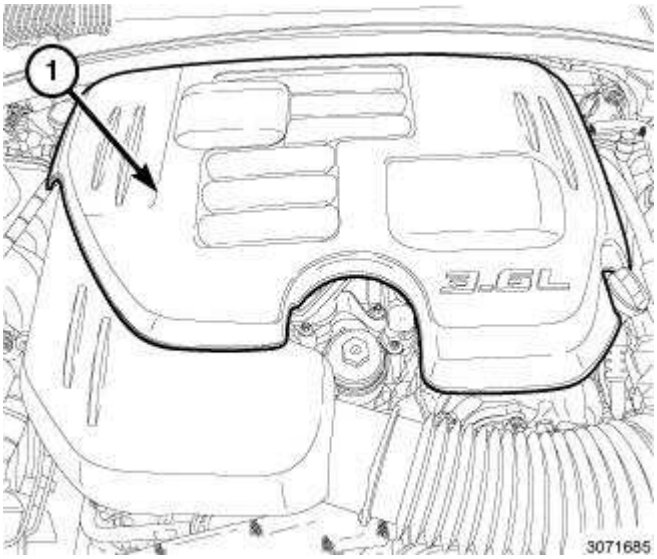

Fig. 703: Engine Cover
Courtesy of CHRYSLER GROUP, LLC

19. Position the engine cover (1) and secure the retaining grommets onto the ball studs.

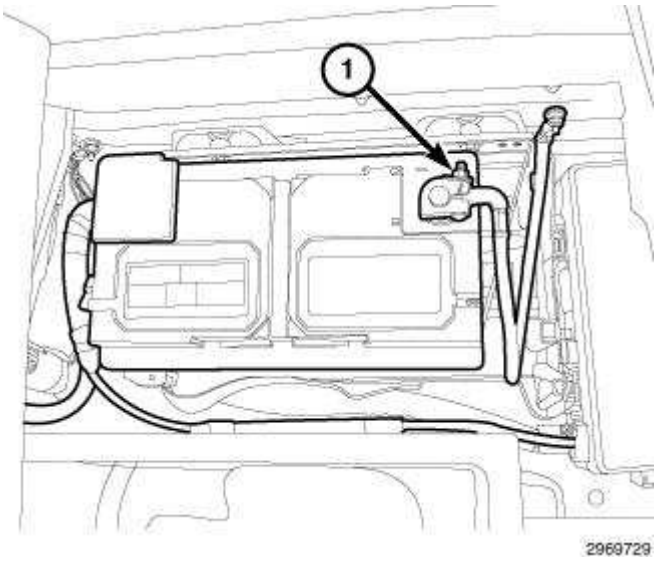

Fig. 704: Negative Battery Cable
Courtesy of CHRYSLER GROUP, LLC

20. Connect the negative battery cable and tighten nut to 5 N.m (45 in. lbs.).
21. Start the engine and check for leaks.

LOWER

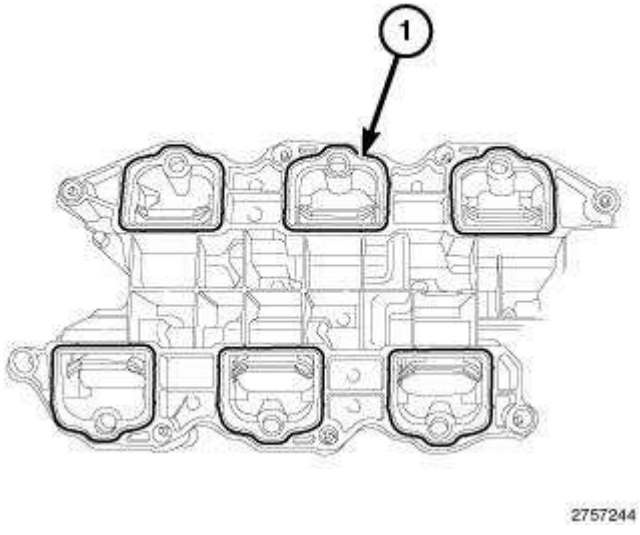

Fig. 705: Lower Intake Manifold To Cylinder Head Seals
Courtesy of CHRYSLER GROUP, LLC

1. Clean and inspect the sealing surfaces. Install new lower intake manifold to cylinder head seals (1).

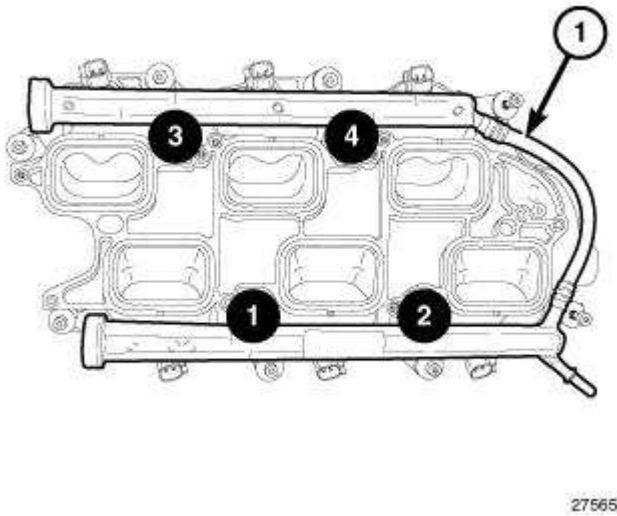

Fig. 706: Fuel Rail Bolt Tightening Sequence
Courtesy of CHRYSLER GROUP, LLC

2. If removed, install the fuel injectors and the fuel rail (1) to the lower intake manifold. Tighten the four bolts in the sequence shown in illustration to 7 N.m (62 in. lbs.). Refer to **RAIL, FUEL, INSTALLATION** .

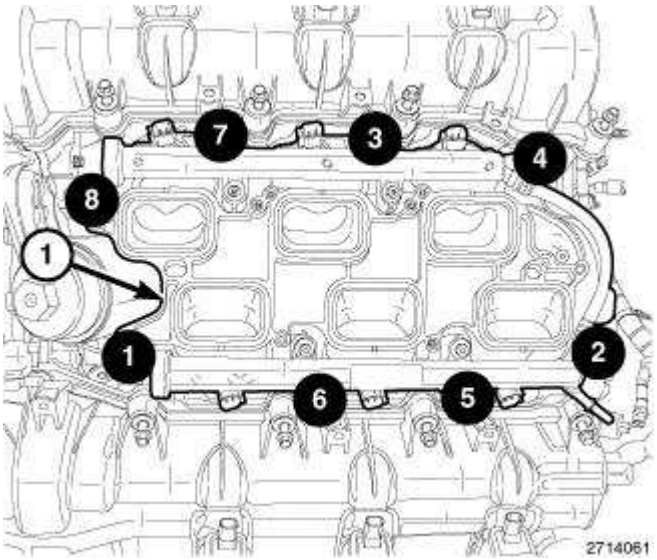

Fig. 707: Intake Manifold Retaining Bolts Tightening Sequence
Courtesy of CHRYSLER GROUP, LLC

3. Position the lower intake manifold (1) onto the cylinder head surfaces.
4. Install the intake manifold retaining bolts and tighten in the sequence shown in illustration to 8 N.m (71 in. lbs.).

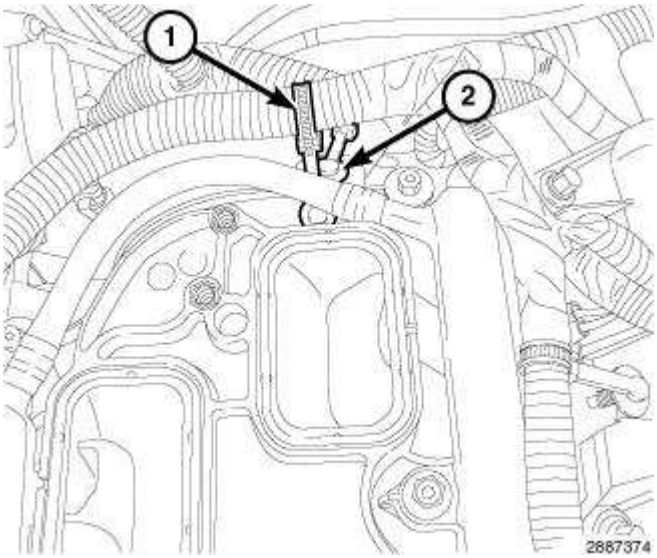

Fig. 708: Injection/Ignition Harness Retainer & Main Wire Harness Retainer
Courtesy of CHRYSLER GROUP, LLC

5. Fasten the main wire harness retainer (2) to the rear of the lower intake manifold.
6. Fasten the injection/ignition harness retainer (1) to the rear of the lower intake manifold.

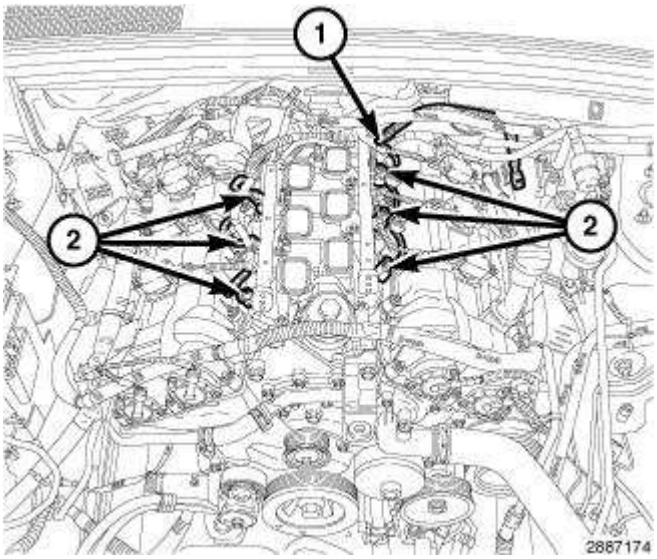

Fig. 709: Fuel Supply Hose & Fuel Injector Electrical Connectors
Courtesy of CHRYSLER GROUP, LLC

7. Connect the fuel injector electrical connectors (2).
8. Connect the fuel supply hose to the fuel rail (1). Refer to **FITTING, QUICK CONNECT, STANDARD PROCEDURE** .

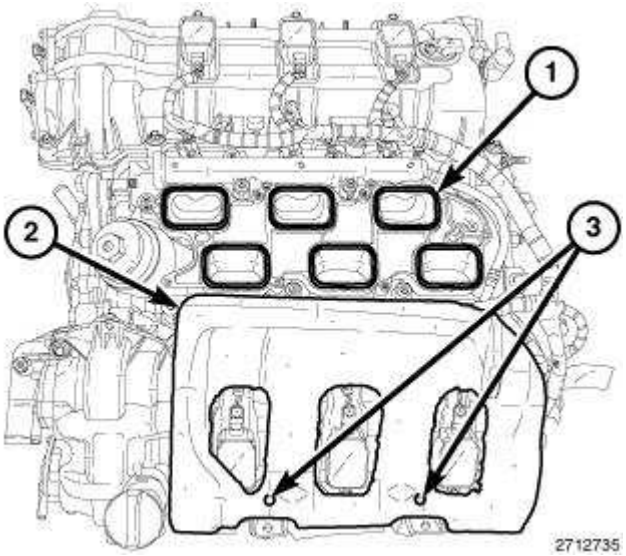

Fig. 710: Intake Ports, Insulator & Alignment Posts
Courtesy of CHRYSLER GROUP, LLC

9. Install the insulator (2) to the two alignment posts (3) on top of the left cylinder head cover.

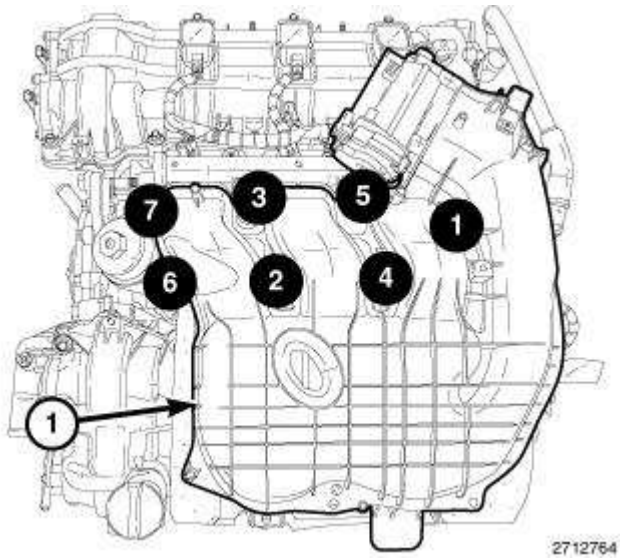

Fig. 711: Upper Intake Manifold Bolt Tightening Sequence
Courtesy of CHRYSLER GROUP, LLC

10. Install the upper intake manifold (1) and support brackets. Refer to **MANIFOLD, INTAKE, INSTALLATION** .

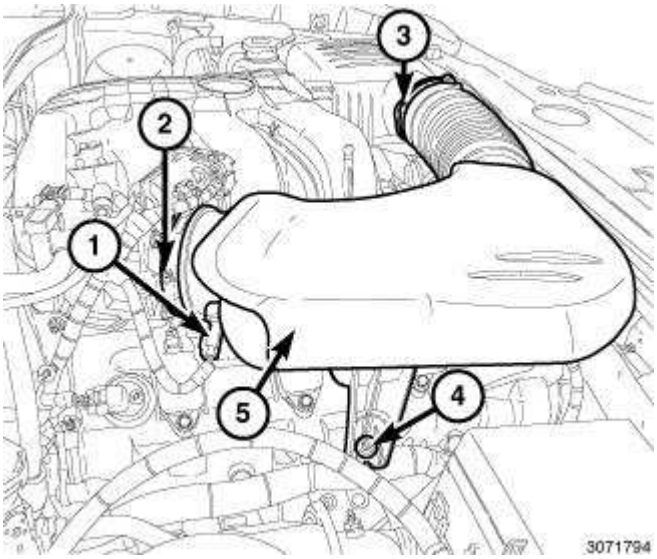

Fig. 712: Inlet Air Temperature (IAT) Sensor Electrical Connector, Air Inlet Hose Assembly & Fasteners
Courtesy of CHRYSLER GROUP, LLC

11. Position the air inlet hose assembly (5) onto the throttle body and the air cleaner housing.
12. Secure the air inlet hose assembly retaining grommet onto the ball stud (4).
13. Tighten the clamp at the air cleaner housing (3) to 5 N.m (44 in. lbs.).
14. Tighten the clamp (2) at the throttle body to 5 N.m (44 in. lbs.).
15. Connect the Inlet Air Temperature (IAT) sensor electrical connector (1).

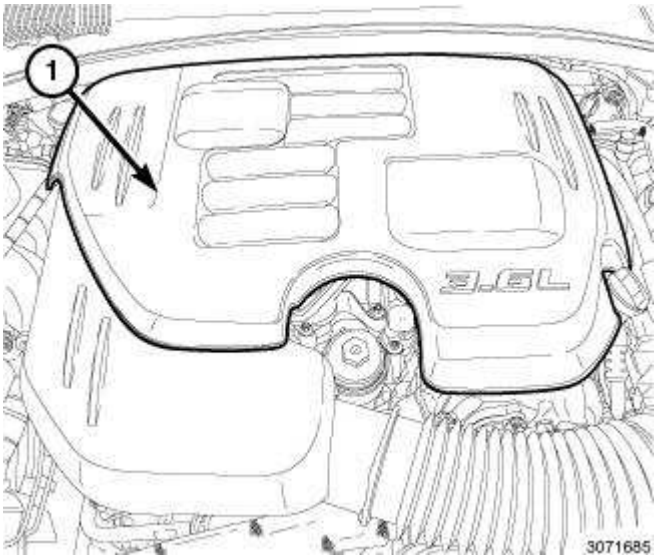

Fig. 713: Engine Cover
Courtesy of CHRYSLER GROUP, LLC

16. Position the engine cover (1) and secure the retaining grommets onto the ball studs.

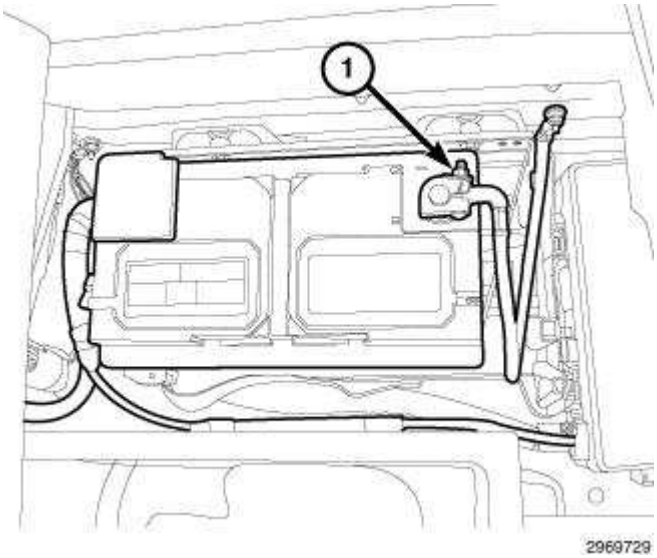

Fig. 714: Negative Battery Cable
Courtesy of CHRYSLER GROUP, LLC

17. Connect the negative battery cable and tighten nut to 5 N.m (45 in. lbs.).
18. Start the engine and check for leaks.

VALVE TIMING

DESCRIPTION

DESCRIPTION

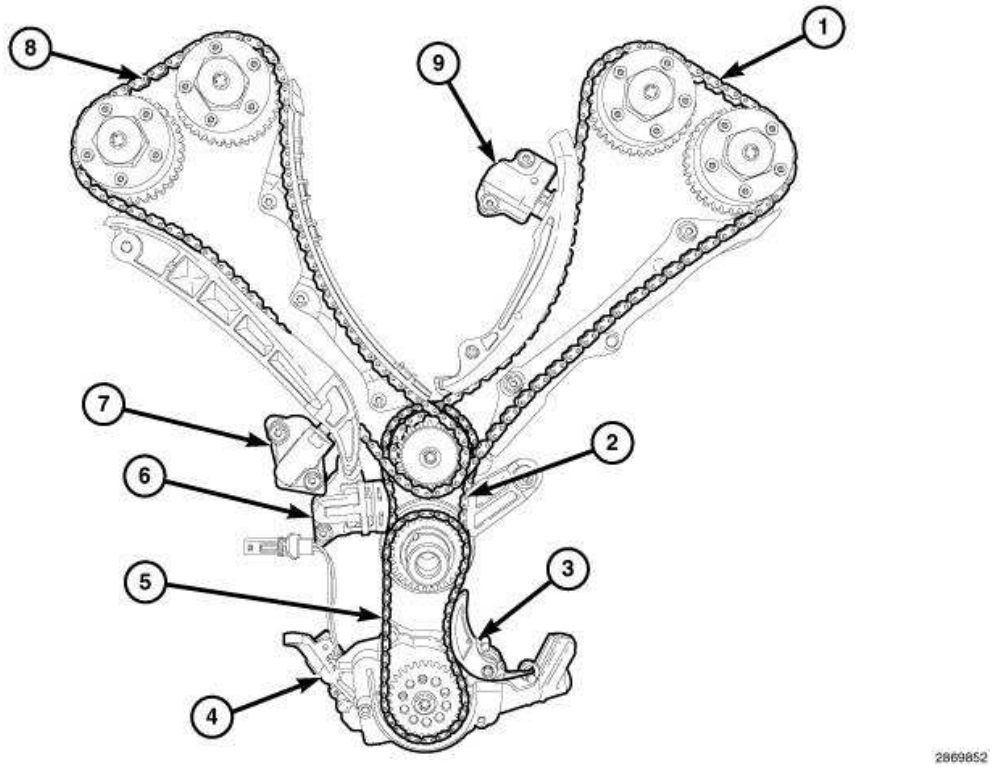

Fig. 715: Valve Timing System Components
Courtesy of CHRYSLER GROUP, LLC

The timing drive uses four silent chains. The silent chain link design improves sprocket engagement and reduces noise, vibration and harshness (NVH). One chain (5) drives the oil pump (4) and three chains drive the camshafts in a two stage design. The left secondary camshaft chain (1) uses an oil pressure controlled chain tensioner (9) with a ratcheting device. The right secondary camshaft chain (8) uses an oil pressure controlled tensioner (7) without a ratchet. The primary chain (2) also uses an oil pressure controlled tensioner (6) without a ratchet. A spring loaded tensioner (3) takes up the slack in the oil pump chain (5). The chain guides and tensioner arms are made of glass filled nylon with nylon wear faces.

OPERATION

OPERATION



Fig. 716: Primary Chain, Idler Sprocket & Crankshaft Sprocket
Courtesy of CHRYSLER GROUP, LLC

The primary timing chain is a silent type. The primary chain drives the 28 tooth idler sprocket directly from a 21 tooth crankshaft sprocket. This results in a 75% speed reduction to the idler sprocket. The idler sprocket assembly connects the primary chain drive and the secondary chain drive. The idler sprocket assembly consists of two integral 22 tooth sprockets a 28 tooth sprocket. The idler sprocket assembly spins on a stationary idler shaft. The idler shaft is a light press-fit into the cylinder block. A large washer on the idler shaft bolt and the rear flange of the idler shaft are used to control sprocket thrust movement. Pressurized oil is routed through the center of the idler shaft to provide lubrication for the bushings used in the idler sprocket assembly. Primary chain motion is controlled by a hydraulic oil damped tensioner and a fixed guide. The tensioner and the guide both use nylon plastic wear faces for low friction and long wear. The primary chain receives oil splash lubrication.

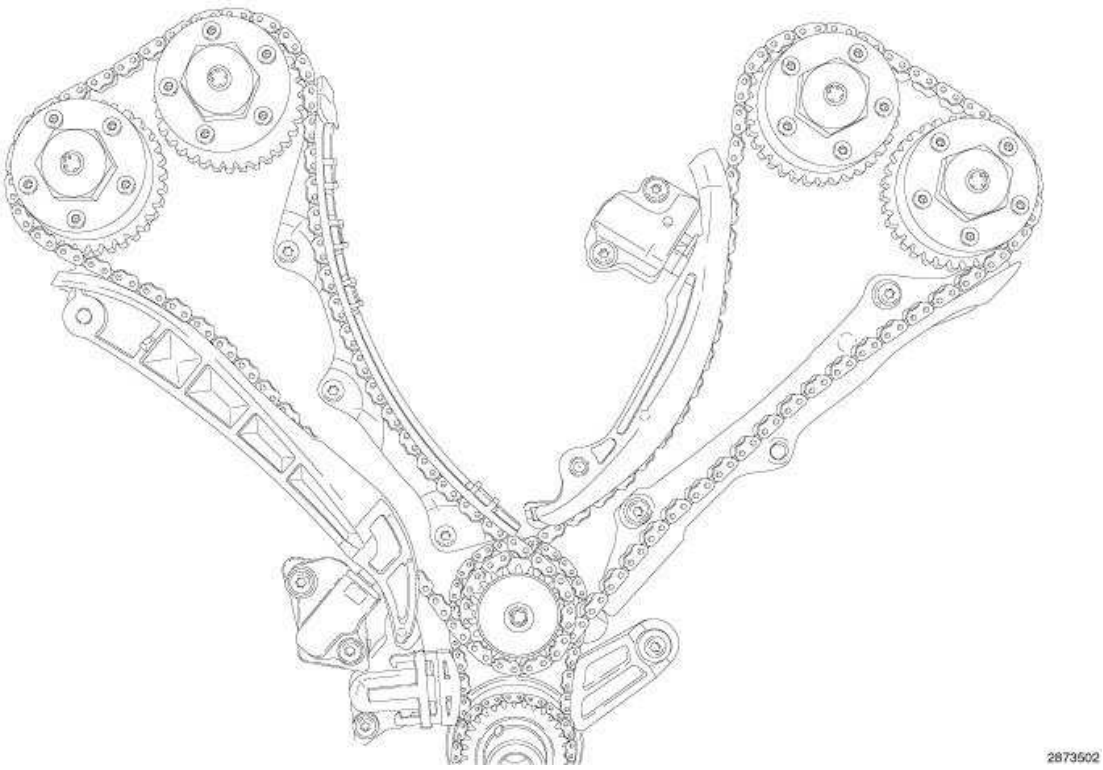

Fig. 717: Secondary Drive Chains
Courtesy of CHRYSLER GROUP, LLC

There are two identical secondary drive chains, both are silent type, one to drive the camshafts in each double overhead cam (DOHC) cylinder head. The secondary chains drive the 33 tooth camshaft sprockets directly from the 22 tooth idler sprockets. This speed reduction combined with the crankshaft to idler sprocket speed reduction produces the required 2:1 camshaft drive ratio. A fixed chain guide and a hydraulic oil damped tensioner are used to maintain tension in each secondary chain system. The left hydraulic secondary chain tensioner is fed from the main oil gallery through the cylinder head. The right hydraulic secondary chain tensioner is fed from the number one main bearing journal. Each tensioner incorporates a controlled leak path through a device known as a vent disc located in the nose of the piston to manage chain loads. Only the left tensioner has a mechanical ratchet system that limits chain slack if the tensioner piston bleeds down after engine shut down. The tensioner arms and guides also utilize nylon wear faces for low friction and long wear. The two secondary timing chains are lubricated by holes in the oil controlled tensioners that spray oil through an opening in the tensioner arms. The holes are protected from clogging by a fine mesh screen which is located on the back of the hydraulic tensioners.

STANDARD PROCEDURE

RESETTING LEFT CAM CHAIN TENSIONER

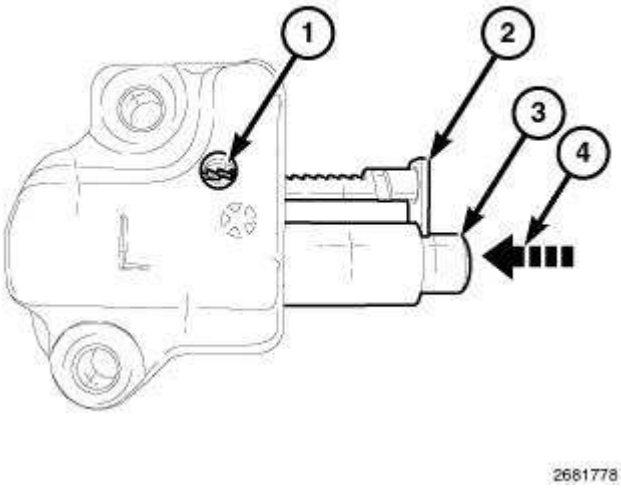

Fig. 718: Left Side Cam Chain Tensioner Ratchet Components
Courtesy of CHRYSLER GROUP, LLC

The left side can chain tensioner used on the 3.6L engine is equipped with a ratchet. The ratchet consists of a rack (2) and a pawl (1). In use, the rack (2) extends with the piston (3) from the tensioner body. The pawl (1) will not allow the rack (2) to retract back into the tensioner body. In order to reset the tensioner, the pawl (1) must be disengaged from the rack (2) so that the piston (3) and rack (2) can be pushed back (4) into the tensioner body.

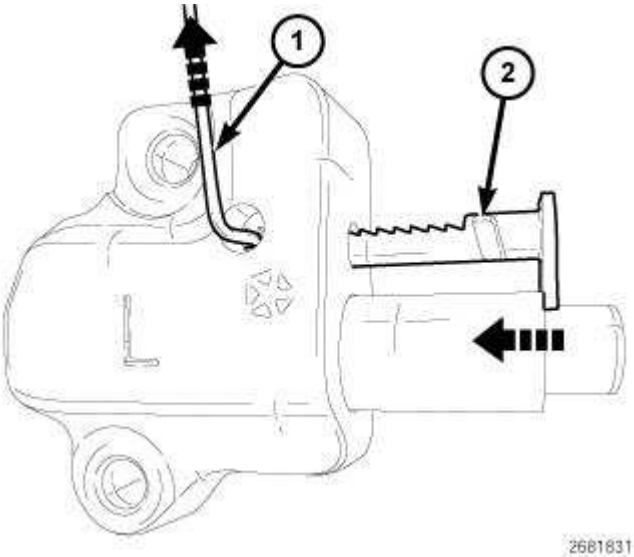

Fig. 719: Locating Slot In Rack & Allen Wrench
Courtesy of CHRYSLER GROUP, LLC

WITH ENGINE TIMING COVER REMOVED

NOTE: The slot (2) in the rack provides an anchor point for a pin that holds the rack in the retracted position.

1. Using a suitable tool, such as an Allen wrench (1), lift the pawl off of the rack.
2. While holding the pawl off of the rack, push the rack and the piston into the tensioner body.

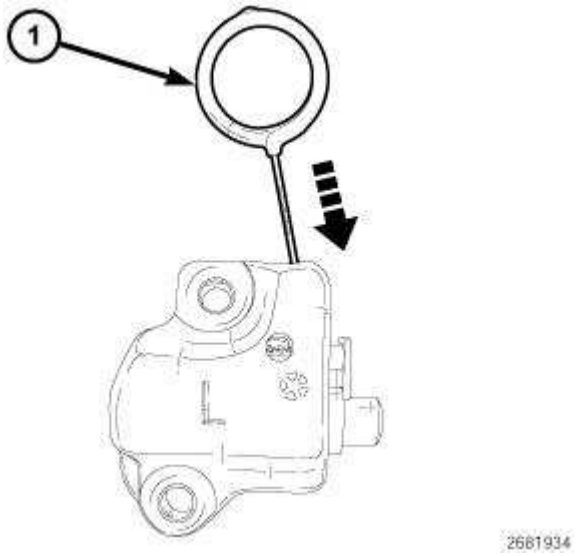

Fig. 720: Inserting Tensioner Pin To Hold Rack & Piston In Retracted Position
Courtesy of CHRYSLER GROUP, LLC

3. When the slot is aligned with the hole in the tensioner body, insert Tensioner Pin (special tool #8514, Pins, Tensioner) (1) to hold the rack and piston in the retracted position.

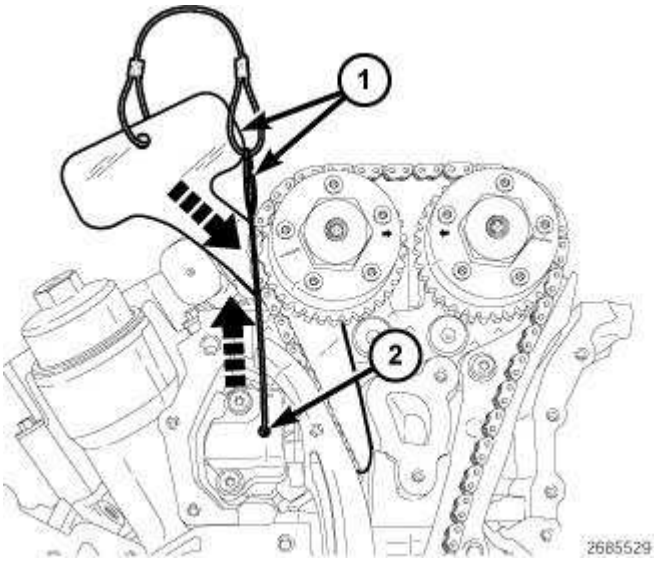

Fig. 721: Pin, Rack & Timing Chain Holder
Courtesy of CHRYSLER GROUP, LLC

WITH ENGINE TIMING COVER INSTALLED

NOTE: Illustration shows timing cover removed for clarity.

1. Using (special tool #10200-3, Pin) (2), lift the pawl off of the rack (3).

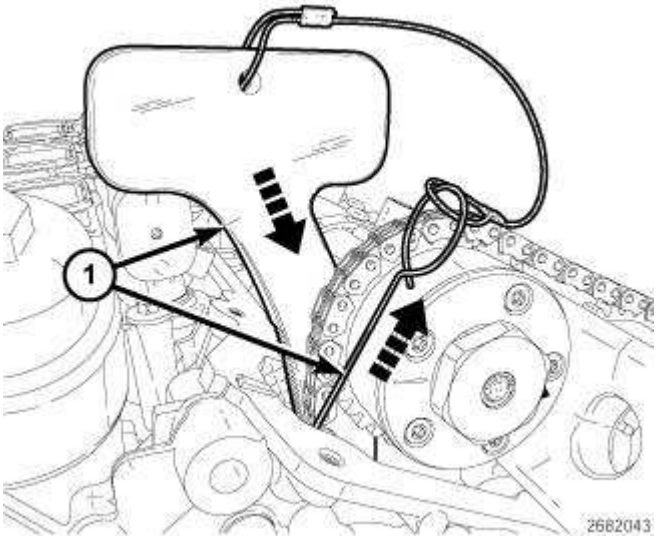

Fig. 722: Positioning Timing Chain Holder To Force Rack & Piston Back Into Tensioner Body
Courtesy of CHRYSLER GROUP, LLC

2. While holding the pawl off of the rack, push (special tool #10200-1, Holder, Timing Chain, Left Side) (1) into place between the cylinder head and the cam chain guide to force the rack and piston back into the tensioner body. The holder must remain in place during service to keep the rack and piston in the retracted position.

MEASURING TIMING CHAIN WEAR

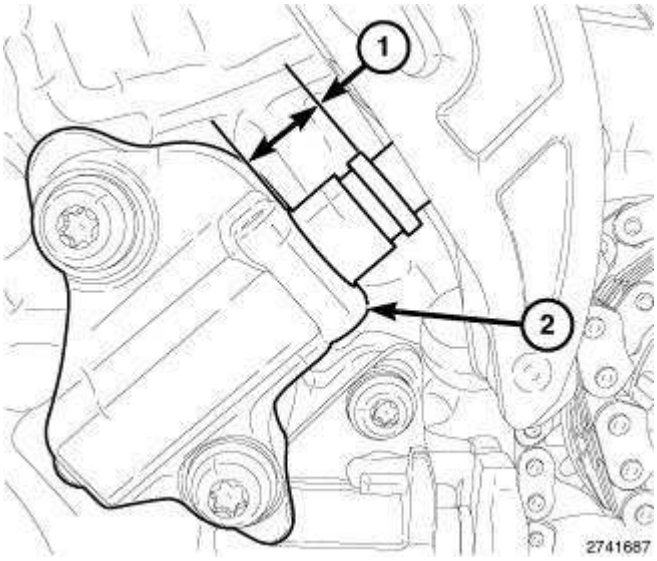

Fig. 723: Piston Extension & Right Hand Cam Chain Tensioner
Courtesy of CHRYSLER GROUP, LLC

1. Remove the engine timing chain cover. Refer to **COVER(S), ENGINE TIMING, REMOVAL** .
2. To determine if the timing chains are worn, rotate the crankshaft clockwise until maximum tensioner piston extension (1) is obtained on the RH cam chain tensioner (2). Measure the distance between the secondary timing chain tensioner housing and the step ledge on the tensioner piston (1). Piston extension (1) must be less than 16 mm (0.630 in.).
3. Piston extension greater than 16 mm (0.630 in.) indicates that all timing chains are worn and require replacement. Refer to **CHAIN AND SPROCKETS, TIMING, REMOVAL** .

ENGINE TIMING VERIFICATION

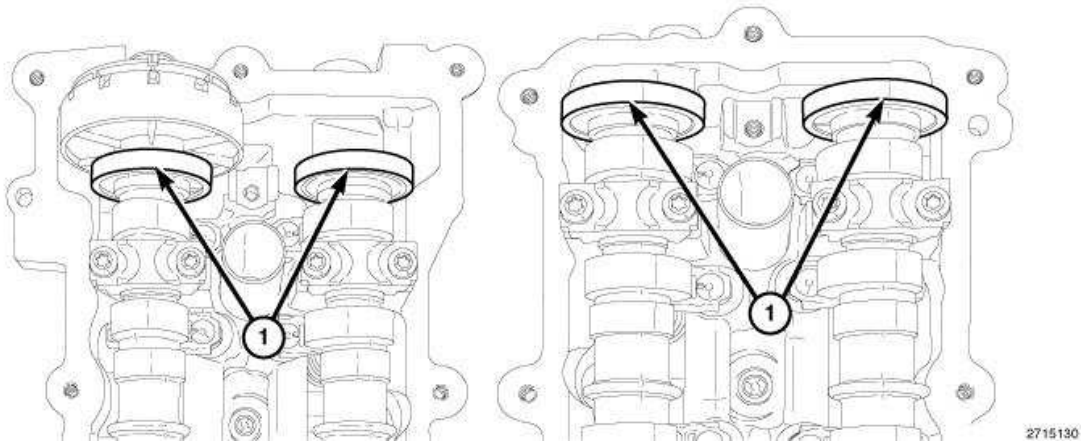

Fig. 724: Magnetic Timing Wheels
Courtesy of CHRYSLER GROUP, LLC

CAUTION: The magnetic timing wheels (1) must not come in contact with magnets (pickup tools, trays, etc.) or any other strong magnetic field. This will destroy the timing wheels ability to correctly relay camshaft position to the camshaft position sensor.

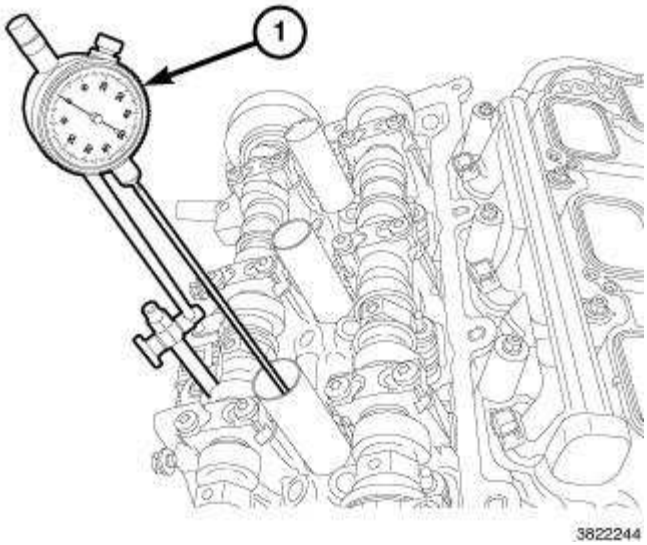

Fig. 725: Mount Dial Indicator Set To Stationary Point On Engine
Courtesy of CHRYSLER GROUP, LLC

Correct timing is critical for the NON free-wheeling designed, 3.6L engine. Engine timing can be verified by using the following procedures:

1. Remove the upper intake manifold and both cylinder head covers. Refer to **COVER(S), CYLINDER HEAD, REMOVAL** .
2. Remove the spark plugs. Refer to **SPARK PLUG, REMOVAL** .

CAUTION: When aligning timing marks, always rotate engine by turning the crankshaft. Failure to do so will result in valve and/or piston damage.

3. Mount Dial Indicator Set (special tool #C-3339A, Set, Dial Indicator) (1) to a stationary point on the engine, such as the cylinder head cover mounting surface. Position the indicator probe into the number one cylinder, rotate the crankshaft clockwise (as viewed from the front) to place the number one piston at top-dead-center on the exhaust stroke and set the indicator dial to **ZERO** .

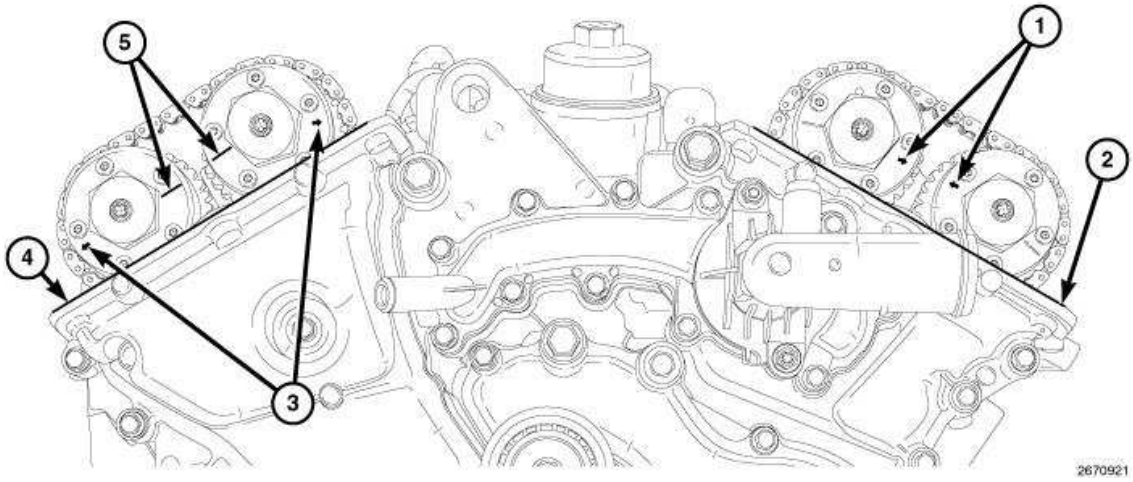

Fig. 726: Arrows, Scribe Lines, & Cam Phasers
Courtesy of CHRYSLER GROUP, LLC

4. While maintaining this alignment, verify that the **ARROWS** (1) on the left side cam phasers point toward each other and are parallel to the cylinder head cover mounting surface (2) and that the right side cam phaser **ARROWS** (3) point away from each other and the **SCRIBE LINES** (5) are parallel to the cylinder head cover mounting surface (4).

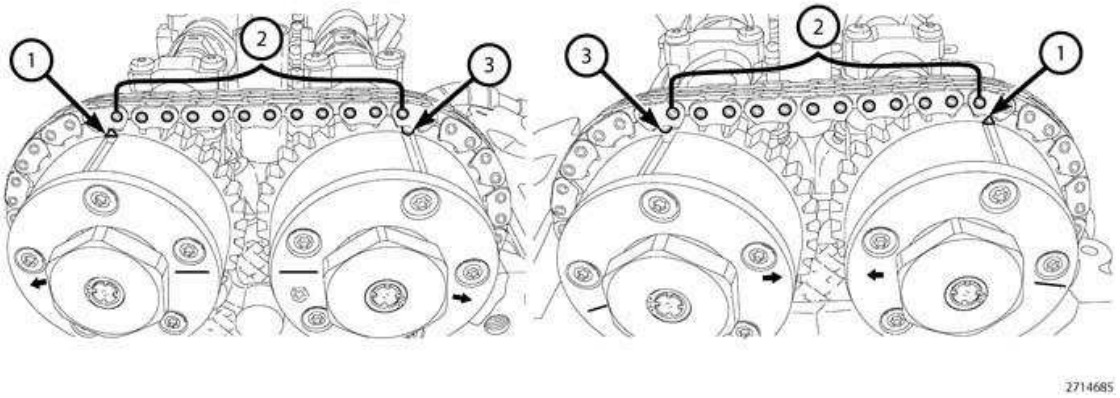

Fig. 727: Chain Pins, Exhaust Cam Phaser Triangle Marking & Circle Marking
Courtesy of CHRYSLER GROUP, LLC

NOTE: The phaser markings (1 and 3) could align with either an external or internal chain link. Either alignment is acceptable as long as there are twelve chain pins between the markings.

5. There should be twelve chain pins (2) **BETWEEN** the exhaust cam phaser triangle marking (1) and the intake cam phaser circle marking (3) as viewed from either the front or rear of the cam phasers.
6. If the engine timing is not correct, proceed to Timing Chain and Sprockets for service procedures. Refer to **CHAIN AND SPROCKETS, TIMING, REMOVAL** .

CHAIN AND SPROCKETS, TIMING

REMOVAL

REMOVAL

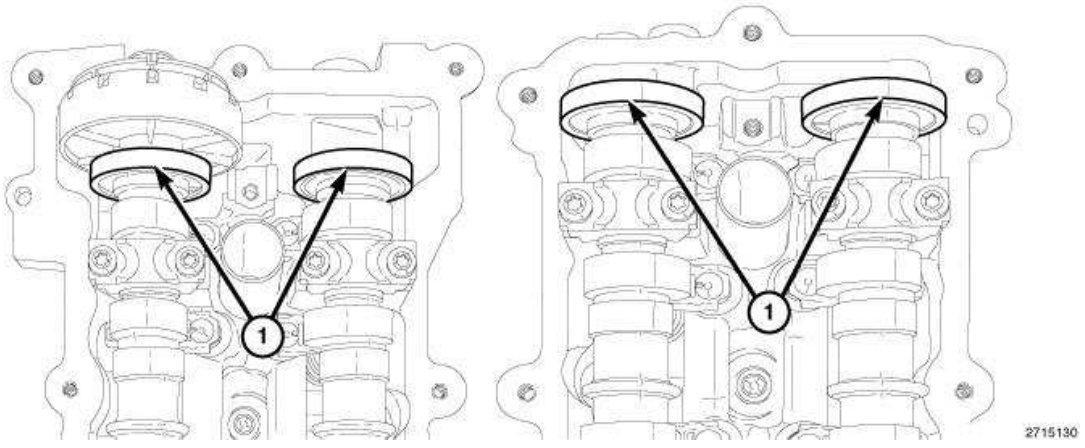

Fig. 728: Magnetic Timing Wheels
Courtesy of CHRYSLER GROUP, LLC

CAUTION: The magnetic timing wheels (1) must not come in contact with magnets (pickup tools, trays, etc.) or any other strong magnetic field. This will destroy the timing wheels ability to correctly relay camshaft position to the camshaft position sensor.

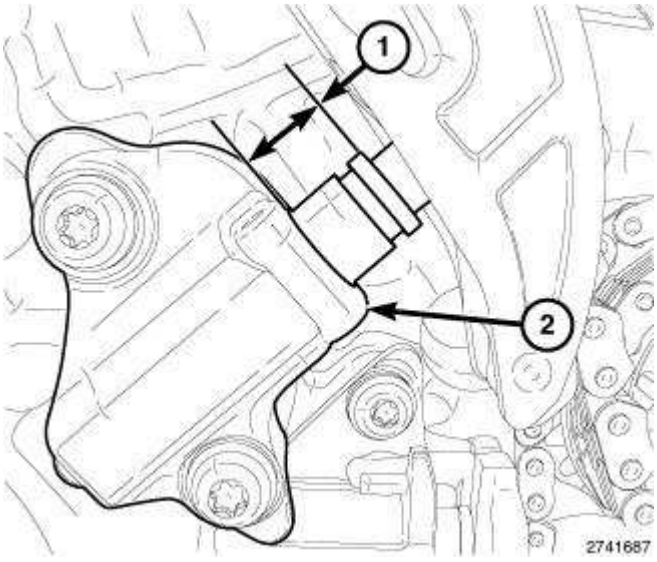

Fig. 729: Piston Extension & Right Hand Cam Chain Tensioner
Courtesy of CHRYSLER GROUP, LLC

CAUTION: When the timing chains are removed and the cylinder heads are still installed, DO NOT rotate the camshafts or crankshaft without first locating the proper crankshaft position. Failure to do so will result in valve and/or piston damage.

NOTE: The Variable Valve Timing (VVT) assemblies (Phasers) and Oil Control Valves (OCVs) can be serviced without removing the engine timing cover. Refer to ASSEMBLY, VARIABLE VALVE TIMING, PHASER/OIL CONTROL VALVE, REMOVAL.

1. Disconnect and isolate the negative battery cable.
2. Remove the air cleaner housing assembly and upper intake manifold. Refer to **MANIFOLD, INTAKE, REMOVAL** .
3. Remove both cylinder head covers. Refer to **COVER(S), CYLINDER HEAD, REMOVAL** .
4. Remove the spark plugs. Refer to **SPARK PLUG, REMOVAL** .
5. Raise and support the vehicle. Refer to **HOISTING, STANDARD PROCEDURE** .
6. Drain the cooling system. Refer to **STANDARD PROCEDURE** .
7. Remove the oil pan, accessory drive belts, crankshaft vibration damper and engine timing cover. Refer to **COVER(S), ENGINE TIMING, REMOVAL** .

NOTE: Take this opportunity to measure timing chain wear. Refer to VALVE

TIMING, STANDARD PROCEDURE.

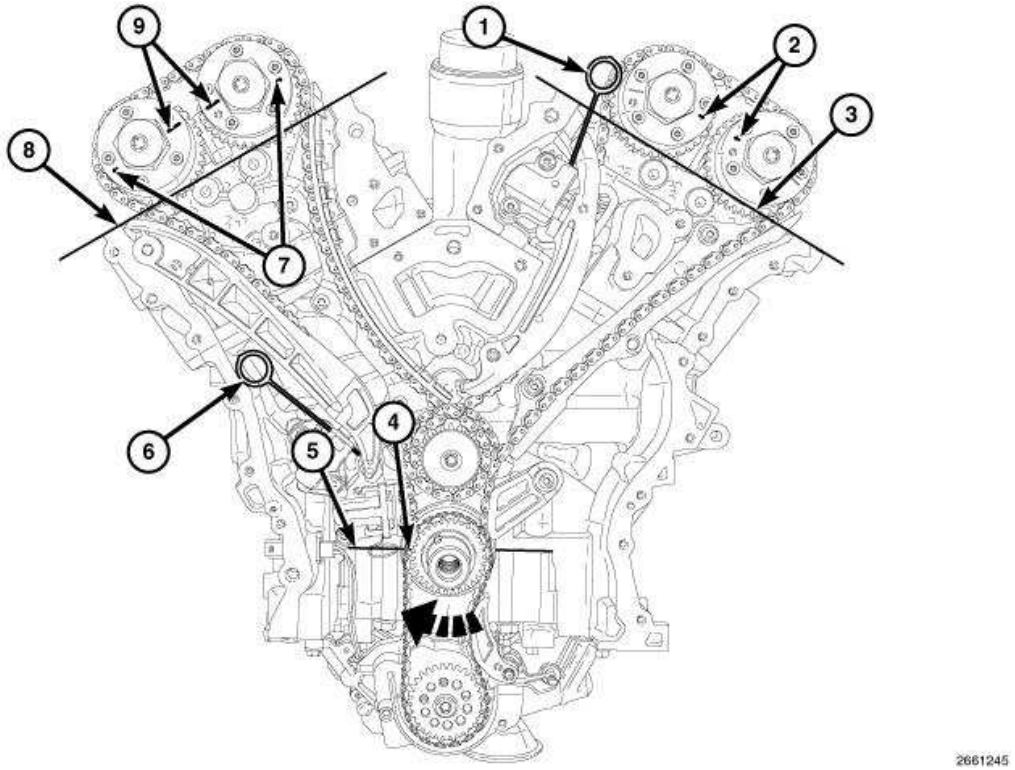

Fig. 730: Rotating Crankshaft Clockwise To Position No. 1 Piston At TDC On Exhaust Stroke
Courtesy of CHRYSLER GROUP, LLC

CAUTION: When aligning timing marks, always rotate engine by turning the crankshaft. Failure to do so will result in valve and/or piston damage.

8. Rotate the crankshaft clockwise (as viewed from the front) to place the number one cylinder piston at top-dead-center on the exhaust stroke by aligning the dimple (4) on the crankshaft with the block/bearing cap junction (5).
9. While maintaining this alignment, verify that the **ARROWS** (2) on the left side cam phasers point toward each other and are parallel to the cylinder head cover mounting surface (3) and that the right side cam phaser **ARROWS** (7) point away from each other and the **SCRIBE LINES** (9) are parallel to the cylinder head cover mounting surface (8).

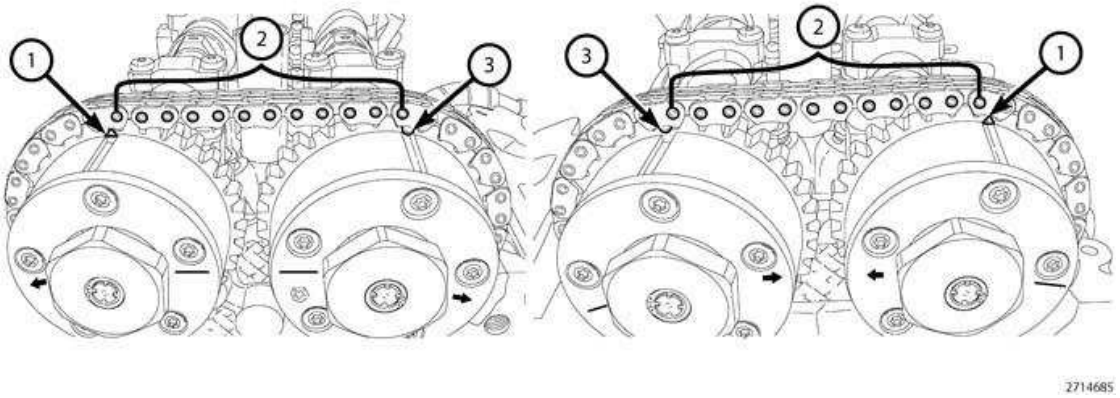

Fig. 731: Chain Pins, Exhaust Cam Phaser Triangle Marking & Circle Marking
Courtesy of CHRYSLER GROUP, LLC

NOTE: The phaser markings (1 and 3) could align with either an external or internal chain link. Either alignment is acceptable as long as there are twelve chain pins between the markings.

10. There should be twelve chain pins (2) **BETWEEN** the exhaust cam phaser triangle marking (1) and the intake cam phaser circle marking (3) as viewed from either the front or rear of the cam phasers.

CAUTION: Always reinstall timing chains so that they maintain the same direction of rotation. Inverting a previously run chain on a previously run sprocket will result in excessive wear to both the chain and sprocket.

11. Mark the direction of rotation on the following timing chains using a paint pen or equivalent to aid in reassembly:
    - Left side cam chain
    - Right side cam chain
    - Oil pump chain
    - Primary chain

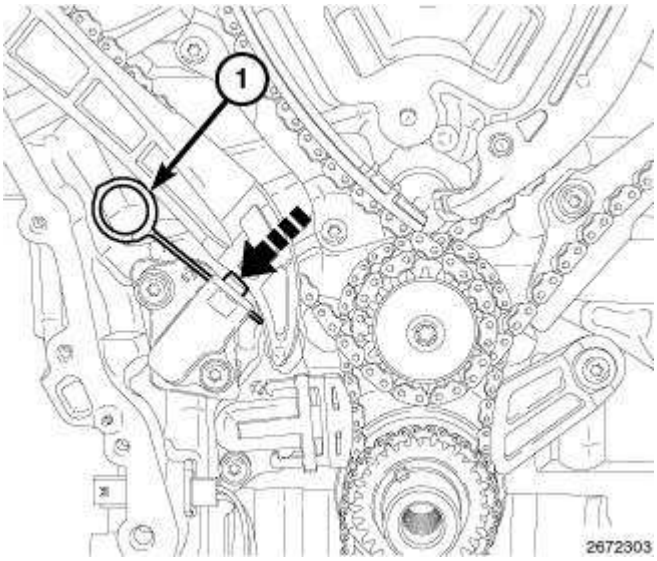

Fig. 732: Resetting Right Cam Chain Tensioner
Courtesy of CHRYSLER GROUP, LLC

12. Reset the right side cam chain tensioner by pushing back the tensioner piston and installing Tensioner Pin (special tool #8514, Pins, Tensioner) (1).

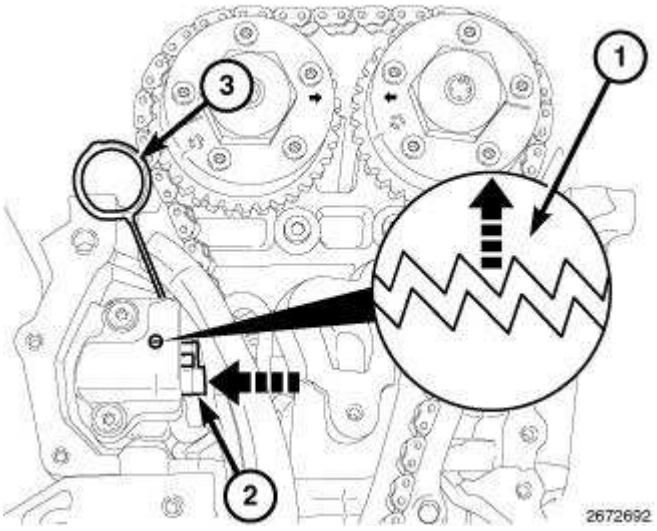

Fig. 733: Resetting Left Cam Chain Tensioner
Courtesy of CHRYSLER GROUP, LLC

13. Reset the left side cam chain tensioner by lifting the pawl (1), pushing back the piston (2) and installing Tensioner Pin (special tool #8514, Pins, Tensioner) (3). Refer to **VALVE TIMING, STANDARD PROCEDURE**.

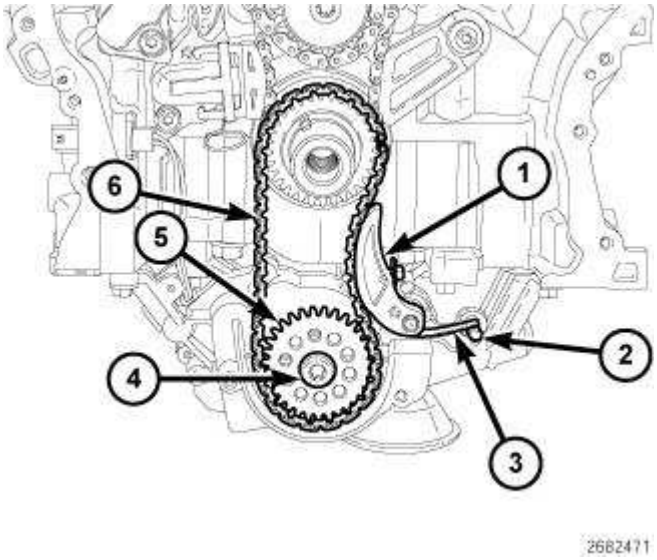

Fig. 734: Oil Pump Chain Tensioner, Spring, Retaining Bolt, Dowel Pin, Oil Pump Sprocket & Oil Pump Chain
Courtesy of CHRYSLER GROUP, LLC

14. Disengage the oil pump chain tensioner spring (3) from the dowel pin (2) and remove the oil pump chain tensioner (1).
15. Remove the oil pump sprocket T45 retaining bolt (4) and remove the oil pump sprocket (5) and oil pump chain (6).

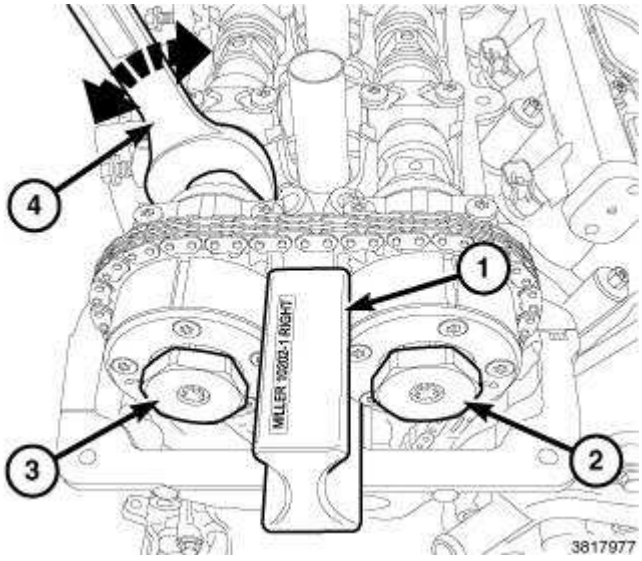

Fig. 735: Wrench, Oil Control Valves & Special Tool
Courtesy of CHRYSLER GROUP, LLC

NOTE: It may be necessary to rock the camshaft slightly (a few degrees) with a wrench (4) when installing the camshaft phaser lock.

16. Install the (special tool #10202-1, Lock, Camshaft/Phaser, Right Side) (1) with the tool number

facing up.

17. Loosen, but do not remove, the exhaust oil control valve (3) and the intake oil control valve (2).
18. Remove the (special tool #10202-1, Lock, Camshaft/Phaser, Right Side) (1).
19. Remove the oil control valve (2) from the right side intake cam phaser.
20. Pull the right side intake cam phaser off of the camshaft and remove the right side cam chain.
21. If required, remove the oil control valve (3) and pull the right side exhaust cam phaser off of the camshaft.

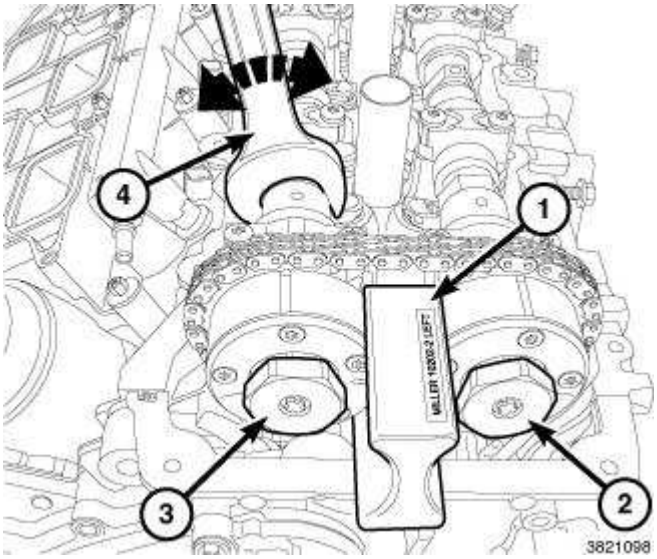

Fig. 736: Wrench, Oil Control Valves & Special Tool
Courtesy of CHRYSLER GROUP, LLC

NOTE: It may be necessary to rock the camshaft slightly (a few degrees) with a wrench (4) when installing the camshaft phaser lock.

22. Install the (special tool #10202-2, Lock, Camshaft/Phaser, Left Side) (1) with the tool number facing up.
23. Loosen, but do not remove, the exhaust oil control valve (2) and the intake oil control valve (3).
24. Remove the (special tool #10202-2, Lock, Camshaft/Phaser, Left Side) (1).
25. Remove the oil control valve (2) from the left side exhaust cam phaser.
26. Pull the left side exhaust cam phaser off of the camshaft and remove the left side cam chain.
27. If required, remove the oil control valve (3) and pull the left side intake cam phaser off of the camshaft.

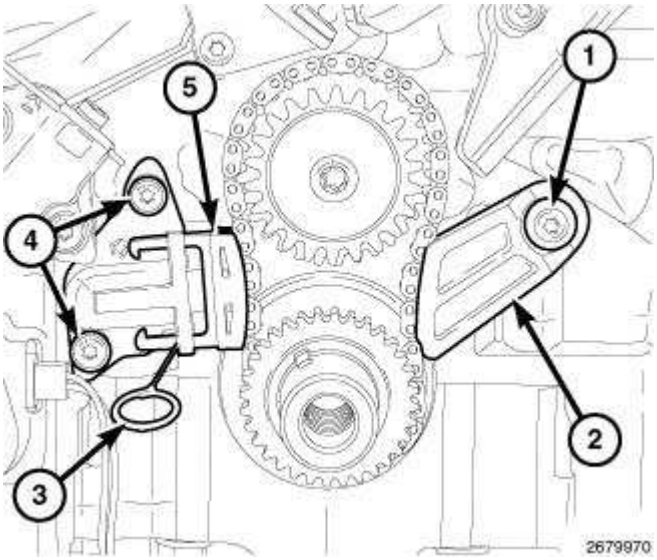

Fig. 737: Primary Chain Tensioner, Tensioner Pin, Primary Chain Guide & Bolts
Courtesy of CHRYSLER GROUP, LLC

28. Reset the primary chain tensioner (5) by pushing back the tensioner piston and installing Tensioner Pin (special tool #8514, Pins, Tensioner) (3). Remove two T30 bolts (4) and remove the primary chain tensioner.
29. Remove the T30 bolt (1) and the primary chain guide (2).

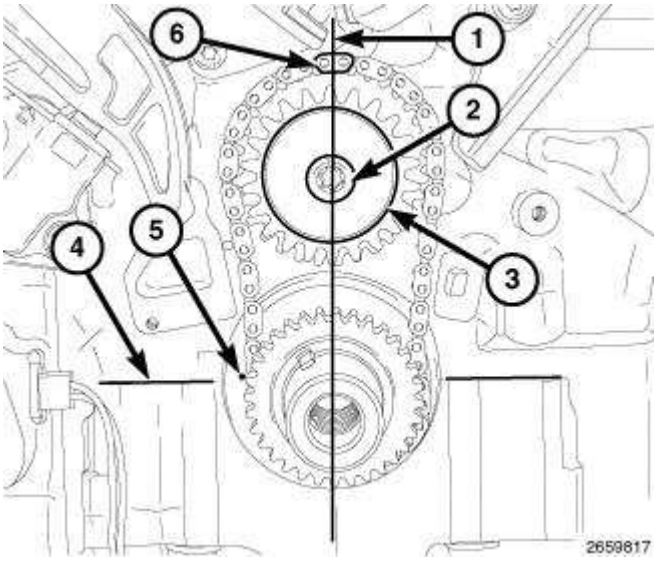

Fig. 738: Timing Chain Plated Link At 12 O'Clock, Washer, Retaining Bolt, Block/Bearing Cap Junction & Dimple
Courtesy of CHRYSLER GROUP, LLC

30. Remove the idler sprocket T45 retaining bolt (2) and washer (3).
31. Remove the primary chain, idler sprocket and crankshaft sprocket as an assembly.

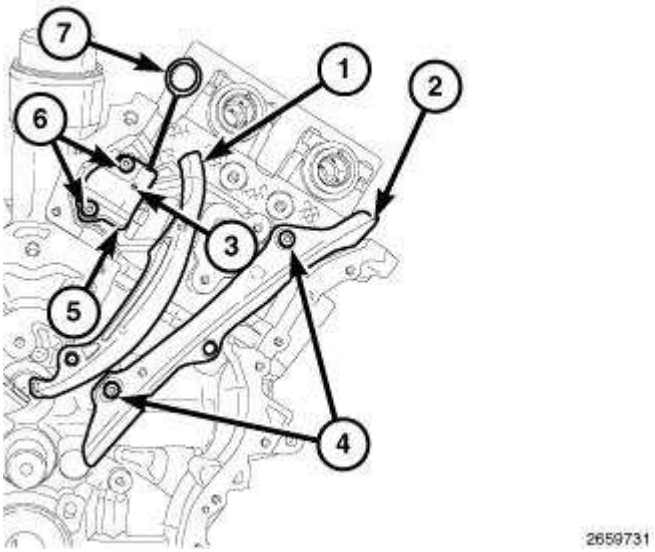

Fig. 739: Left Cam Chain Tensioner, Arm, Guide & Bolts
Courtesy of CHRYSLER GROUP, LLC

32. If required, remove two T30 bolts (6) and the left side cam chain tensioner (5).
33. If required, remove two T30 bolts (4) and the left side cam chain guide (2) and tensioner arm (1).

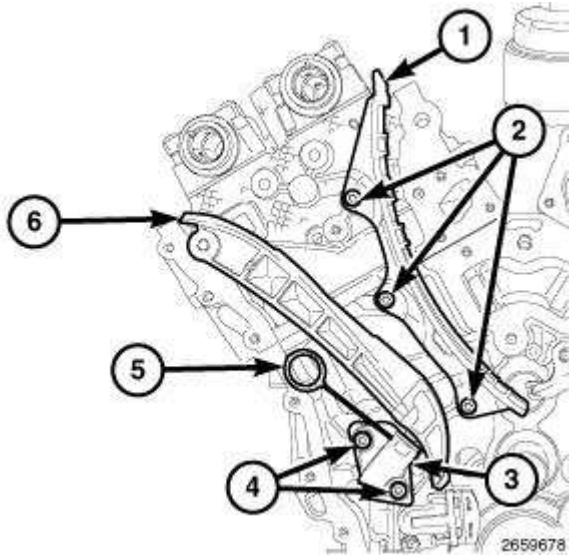

Fig. 740: Right Cam Chain Tensioner, Arm, Guide & Bolts
Courtesy of CHRYSLER GROUP, LLC

34. If required, remove two T30 bolts (4) and the right side cam chain tensioner (3).
35. If required, remove three T30 bolts (2) and the right side cam chain guide (1) and tensioner arm (6).
36. Inspect all sprockets and chain guides. Replace if damaged.

INSPECTION

INSPECTION

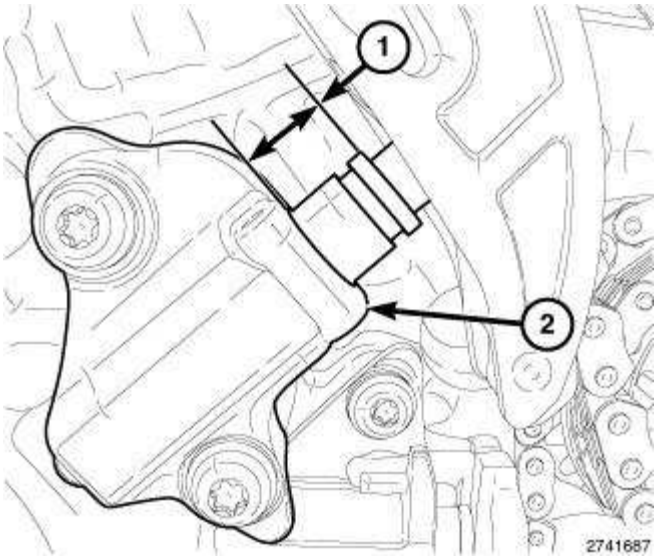

Fig. 741: Piston Extension & Right Hand Cam Chain Tensioner
Courtesy of CHRYSLER GROUP, LLC

Prior to disassembly of the timing chains and sprockets, measure the timing chain wear (1). Refer to **VALVE TIMING, STANDARD PROCEDURE**.

Inspect the following valve timing components:

- Sprockets for excessive tooth wear. Some tooth markings are normal and not a cause for sprocket replacement.
- Idler sprocket assembly bushing and shaft for excessive wear.
- Chain guides and tensioner arms. Replace these parts if grooving in plastic face is more than 1 mm (0.039 in.) deep.
- Secondary chain tensioner piston and ratcheting device. Inspect for evidence of heavy contact between tensioner piston and tensioner arm. If this condition exist the tensioner arm and chain should be replaced.
- Primary chain tensioner plastic faces. Replace as required.

INSTALLATION

INSTALLATION

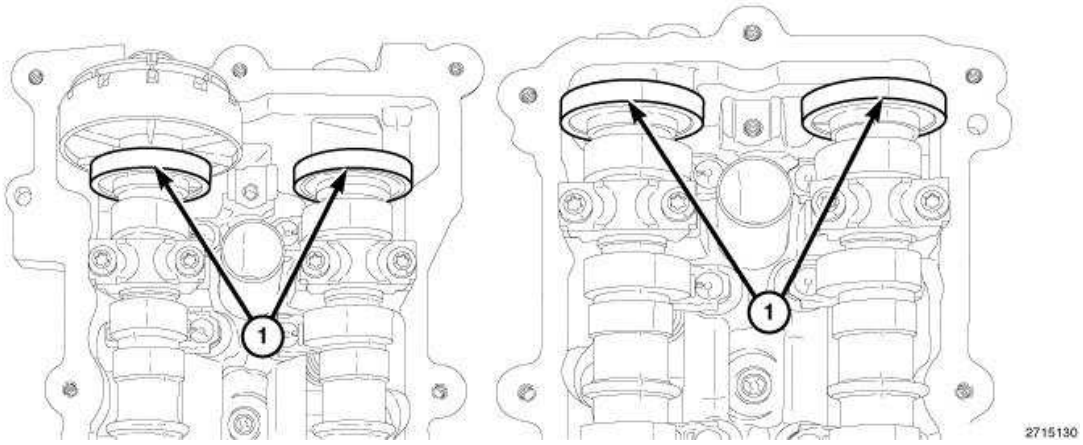

Fig. 742: Magnetic Timing Wheels
Courtesy of CHRYSLER GROUP, LLC

CAUTION: The magnetic timing wheels (1) must not come in contact with magnets (pickup tools, trays, etc.) or any other strong magnetic field. This will destroy the timing wheels ability to correctly relay camshaft position to the camshaft position sensor.

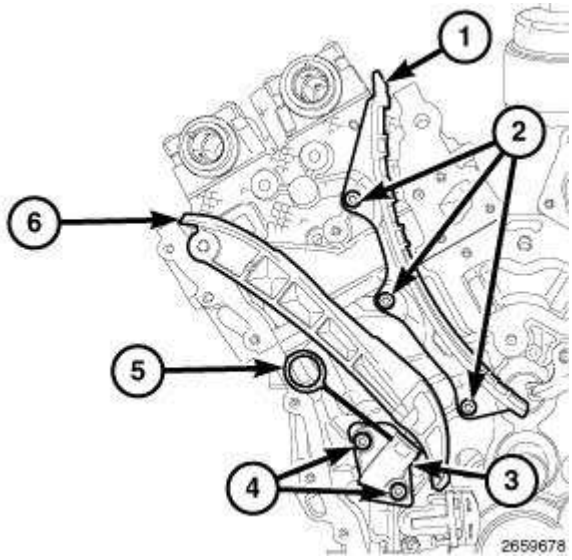

Fig. 743: Right Cam Chain Tensioner, Arm, Guide & Bolts
Courtesy of CHRYSLER GROUP, LLC

1. Inspect all sprockets and chain guides. Replace if damaged.
2. If removed, install the right side cam chain guide (1) and tensioner arm (6). Tighten attaching T30 bolts (2) to 12 N.m (106 in. lbs.).
3. If removed, install the right side cam chain tensioner (3) to the engine block with two bolts (4). Tighten the T30 bolts (4) to 12 N.m (106 in. lbs.).
4. Reset the right side cam chain tensioner (3) by pushing back the tensioner piston and installing Tensioner Pin (special tool #8514, Pins, Tensioner) (5).

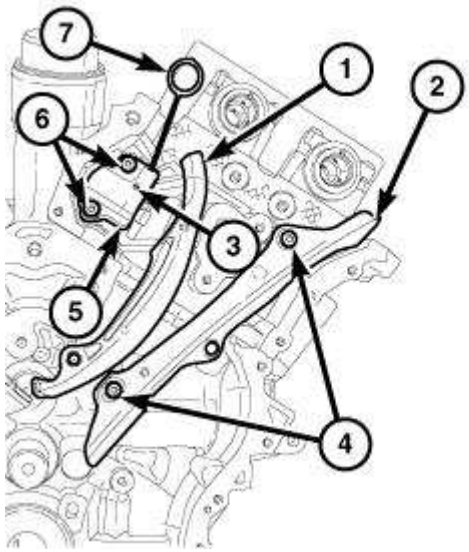

Fig. 744: Left Cam Chain Tensioner, Arm, Guide & Bolts
Courtesy of CHRYSLER GROUP, LLC

5. If removed, install the left side cam chain guide (2) and tensioner arm (1). Tighten attaching T30 bolts (4) to 12 N.m (106 in. lbs.).
6. If removed, install the left side cam chain tensioner (5) to the cylinder head with two bolts (6). Tighten the T30 bolts (6) to 12 N.m (106 in. lbs.).
7. Reset the left side cam chain tensioner (5) by lifting the pawl (3), pushing back the piston and installing Tensioner Pin (special tool #8514, Pins, Tensioner) (7). Refer to **VALVE TIMING, STANDARD PROCEDURE**.

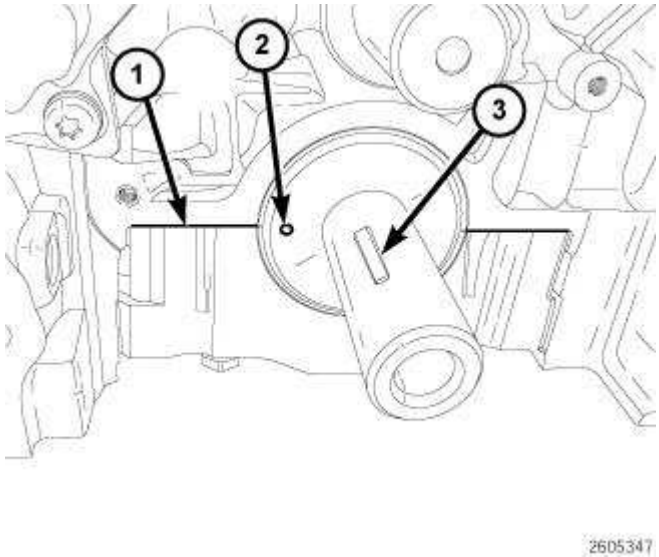

Fig. 745: Crankshaft Key, Dimple & Block/Bearing Cap Junction
Courtesy of CHRYSLER GROUP, LLC

8. Verify that the key (3) is installed in the crankshaft.

CAUTION: Do not rotate the crankshaft more than a few degrees independently of the camshafts. Piston to valve contact could occur resulting in possible valve damage. If the crankshaft needs to be rotated more than a few degrees, first remove the camshafts.

9. Verify that the number one cylinder piston is positioned at top-dead-center by aligning the dimple (2) on the crankshaft with the block/bearing cap junction (1).

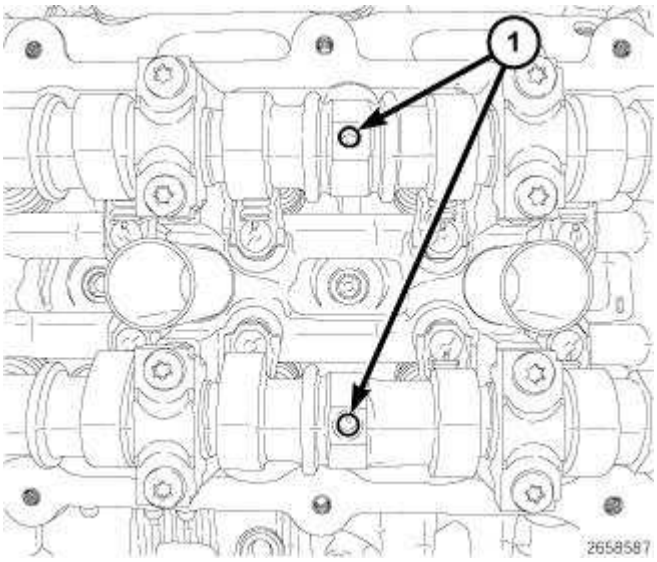

Fig. 746: Positioning Camshaft Alignment Holes Vertically
Courtesy of CHRYSLER GROUP, LLC

CAUTION: Do not rotate the camshafts more than a few degrees independently of the crankshaft. Valve to piston contact could occur resulting in possible valve damage. If the camshafts need to be rotated more than a few degrees, first move the pistons away from the cylinder heads by rotating the crankshaft counterclockwise to a position 30° before-top-dead-center. Once the camshafts are returned to their top-dead-center position, rotate the crankshaft clockwise to return the crankshaft to top-dead-center.

10. Verify that the camshafts are set at top-dead-center by positioning the alignment holes (1) vertically.

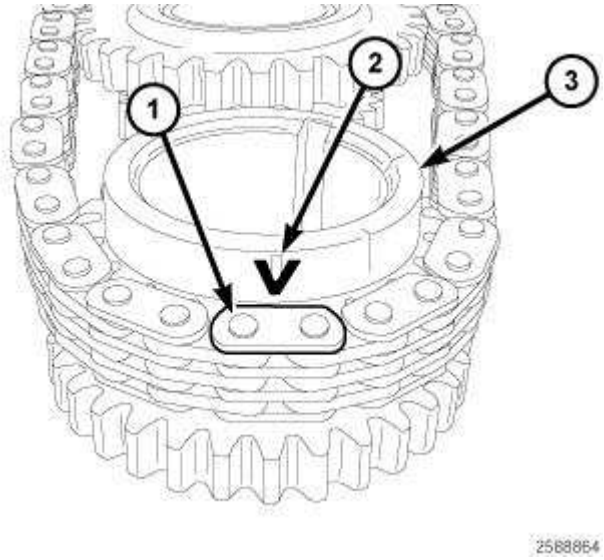

Fig. 747: Aligning Arrow With Plated Link On Primary Chain
Courtesy of CHRYSLER GROUP, LLC

CAUTION: Always reinstall timing chains so that they maintain the same direction of rotation. Inverting a previously run chain on a previously run sprocket will result in excessive wear to both the chain and sprocket.

11. Place the primary chain onto the crankshaft sprocket (3) so that the arrow (2) is aligned with the plated link (1) on the timing chain.

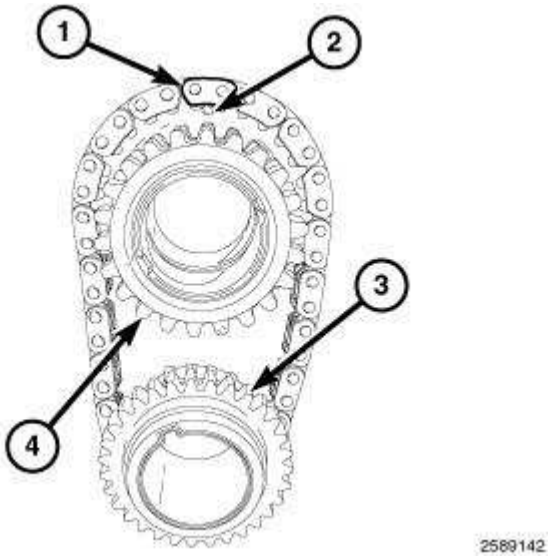

Fig. 748: Placing Idler Sprocket Into Timing Chain So That Dimple Is Aligned With Plated Link On Timing Chain
Courtesy of CHRYSLER GROUP, LLC

12. While maintaining this alignment, invert the crankshaft sprocket and timing chain and place the

idler sprocket (4) into the timing chain so that the dimple (2) is aligned with the plated link (1) on the timing chain.

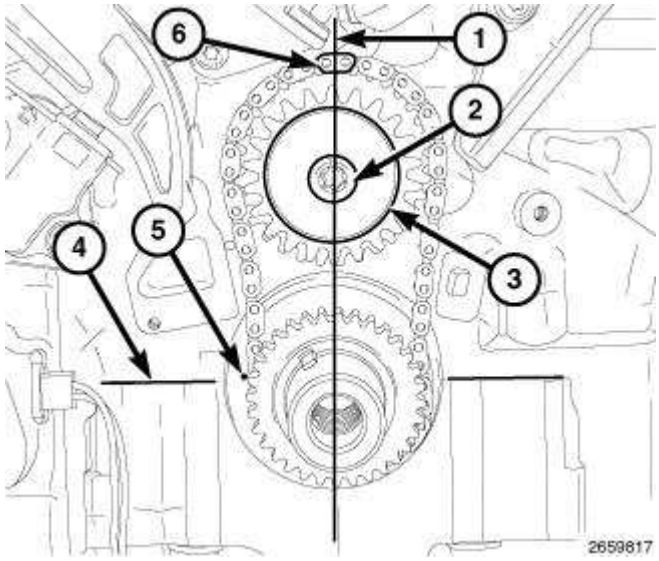

Fig. 749: Timing Chain Plated Link At 12 O'Clock, Washer, Retaining Bolt, Block/Bearing Cap Junction & Dimple
Courtesy of CHRYSLER GROUP, LLC

13. While maintaining this alignment, lubricate the idler sprocket bushing with clean engine oil and install the sprockets and timing chain on the engine. To verify that the timing is still correct, the timing chain plated link (6) should be located at 12:00 (1) when the dimple (5) on the crankshaft is aligned with the block/bearing cap junction (4).
14. Install the idler sprocket retaining bolt (2) and washer (3). Tighten the T45 bolt (2) to 25 N.m (18 ft. lbs.).

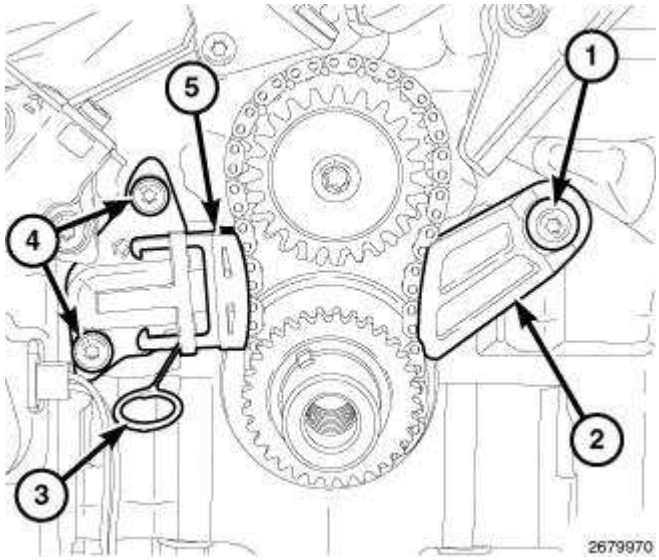

Fig. 750: Primary Chain Tensioner, Tensioner Pin, Primary Chain Guide & Bolts
Courtesy of CHRYSLER GROUP, LLC

15. Install the primary chain guide (2). Tighten attaching T30 bolt (1) to 12 N.m (106 in. lbs.).
16. Reset the primary chain tensioner (5) by pushing back the tensioner piston and installing Tensioner Pin (special tool #8514, Pins, Tensioner) (3).
17. Install the primary chain tensioner (5) to the engine block with two bolts (4). Tighten the T30 bolts (4) to 12 N.m (106 in. lbs.) and remove the Tensioner Pin (special tool #8514, Pins, Tensioner) (3).

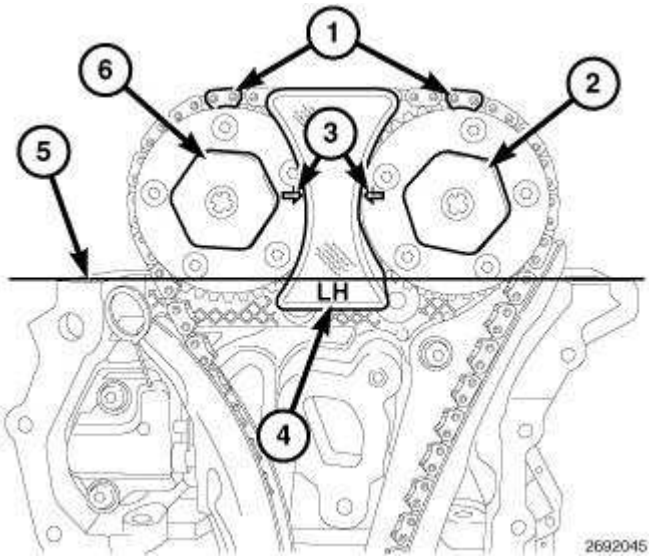

Fig. 751: Phaser Timing Marks, Oil Control Valves & LH Camshaft Phaser Lock
Courtesy of CHRYSLER GROUP, LLC

18. Press the left side intake cam phaser onto the intake camshaft. Install and hand tighten the oil control valve (6).

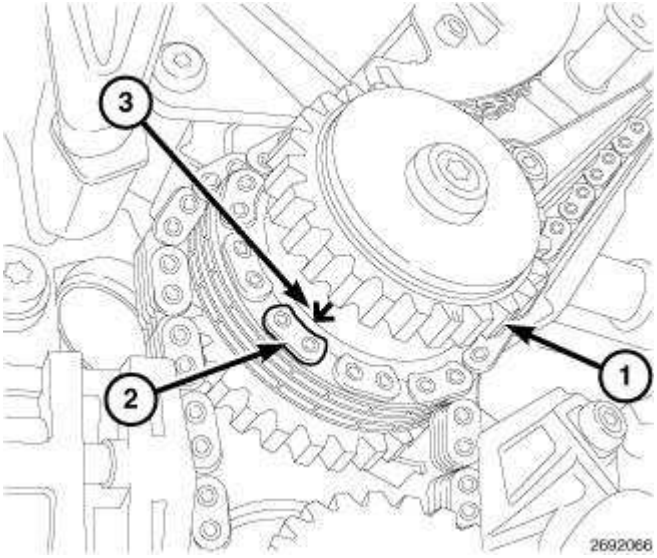

Fig. 752: Idler Sprocket, Plated Link & Arrow
Courtesy of CHRYSLER GROUP, LLC

NOTE: **The left side and right side cam chains are identical.**

CAUTION: Always reinstall timing chains so that they maintain the same direction of rotation. Inverting a previously run chain on a previously run sprocket will result in excessive wear to both the chain and sprocket.

19. Drape the left side cam chain over the left side intake cam phaser and onto the idler sprocket (1) so that the arrow (3) is aligned with the plated link (2) on the cam chain.

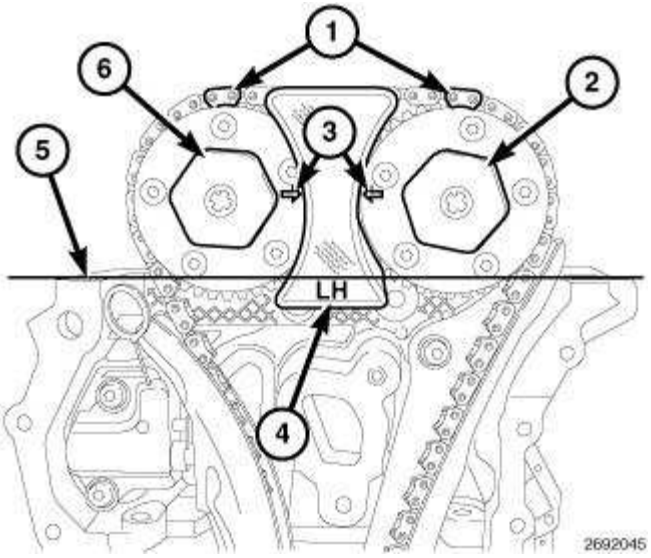

Fig. 753: Phaser Timing Marks, Oil Control Valves & LH Camshaft Phaser Lock
Courtesy of CHRYSLER GROUP, LLC

20. While maintaining this alignment, route the cam chain around the exhaust and intake cam phasers so that the plated links are aligned with the phaser timing marks (1). Position the left side cam phasers so that the arrows (3) point toward each other and are parallel to the cylinder head cover mounting surface (5). Press the exhaust cam phaser onto the exhaust cam, install and hand tighten the oil control valve (2).

NOTE: **Minor rotation of a camshaft (a few degrees) may be required to install the camshaft phaser or phaser lock.**

21. Install the (special tool #10202-2, Lock, Camshaft/Phaser, Left Side) (4) with the tool number facing up.
22. Tighten the oil control valves (2) and (6) to 150 N.m (110 ft. lbs.).
23. Remove the Camshaft Phaser Lock (4).

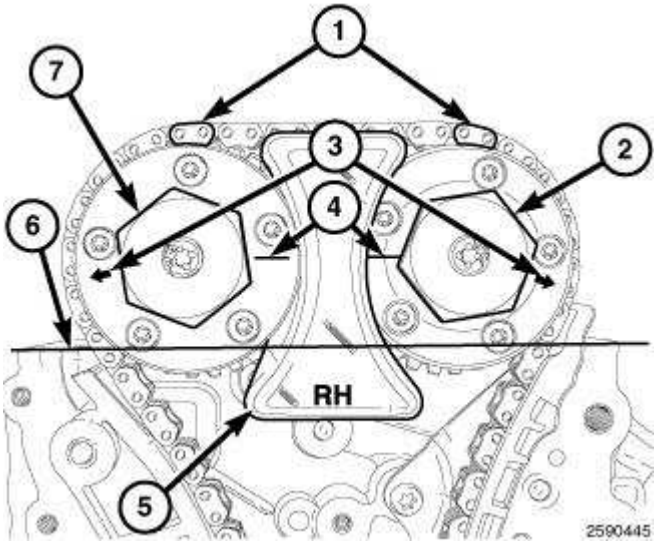

Fig. 754: Phaser Timing Marks, Oil Control Valves & RH Camshaft Phaser Lock
Courtesy of CHRYSLER GROUP, LLC

24. Press the right side exhaust cam phaser onto the exhaust camshaft. Install and hand tighten the oil control valve (7).

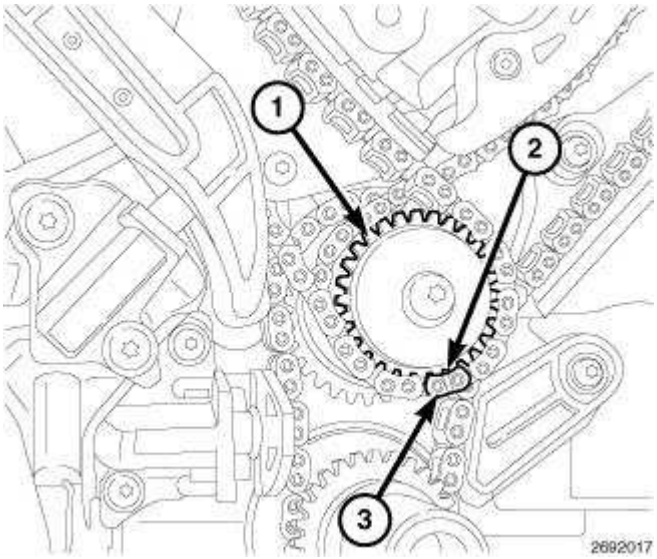

Fig. 755: Idler Sprocket, Dimple & Plated Link
Courtesy of CHRYSLER GROUP, LLC

CAUTION: Always reinstall timing chains so that they maintain the same direction of rotation. Inverting a previously run chain on a previously run sprocket will result in excessive wear to both the chain and sprocket.

25. Drape the right side cam chain over the right side exhaust cam phaser and onto the idler sprocket (1) so that the dimple (2) is aligned with the plated link (3) on the cam chain.

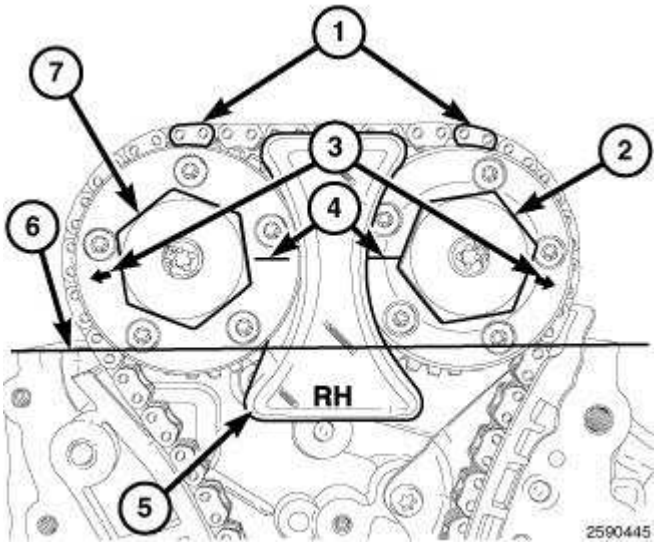

Fig. 756: Phaser Timing Marks, Oil Control Valves & RH Camshaft Phaser Lock
Courtesy of CHRYSLER GROUP, LLC

26. While maintaining this alignment, route the cam chain around the exhaust and intake cam phasers so that the plated links are aligned with the phaser timing marks (1). Position the right side cam phasers so that the arrows (3) point away from each other and the scribe lines (4) are parallel to the cylinder head cover mounting surface (6). Press the intake cam phaser onto the intake cam, install and hand tighten the oil control valve (2).

    NOTE: Minor rotation of a camshaft (a few degrees) may be required to install the camshaft phaser or phaser lock.

27. Install the (special tool #10202-1, Lock, Camshaft/Phaser, Right Side) (5) with the tool number facing up.
28. Tighten the oil control valves (2) and (7) to 150 N.m (110 ft. lbs.).
29. Remove the Camshaft Phaser Lock (5).

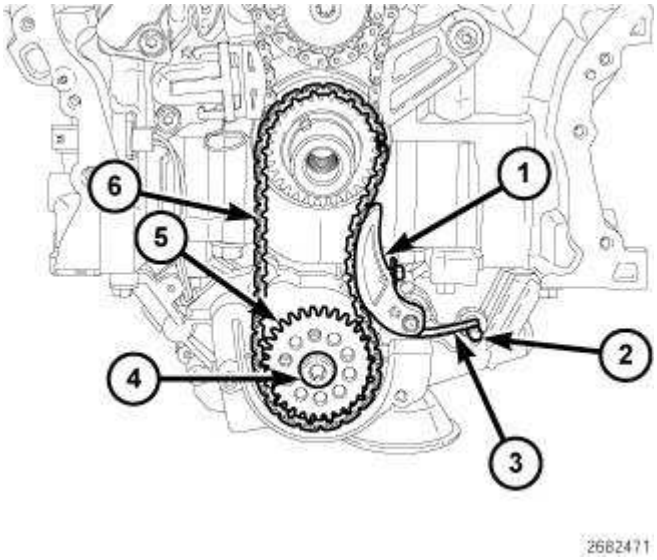

Fig. 757: Oil Pump Chain Tensioner, Spring, Retaining Bolt, Dowel Pin, Oil Pump Sprocket & Oil Pump Chain
Courtesy of CHRYSLER GROUP, LLC

NOTE: There are no timing marks on the oil pump gear or chain.

CAUTION: Always reinstall timing chains so that they maintain the same direction of rotation. Inverting a previously run chain on a previously run sprocket will result in excessive wear to both the chain and sprocket.

30. Place the oil pump sprocket (5) into the oil pump chain (6). Place the oil pump chain onto the crankshaft sprocket while aligning the oil pump sprocket with the oil pump shaft. Install the oil pump sprocket T45 retaining bolt (4) and tighten to 25 N.m (18 ft. lbs.).
31. Install the oil pump chain tensioner (1). Make sure that the spring (3) is positioned above the dowel pin (2).

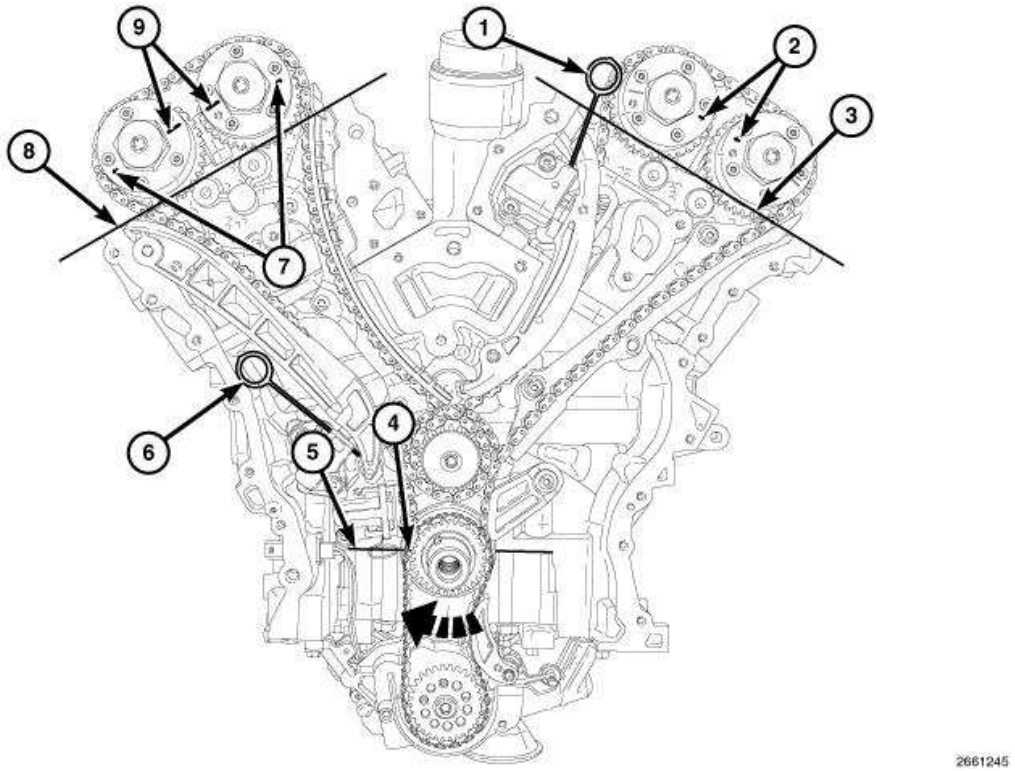

Fig. 758: Rotating Crankshaft Clockwise To Position No. 1 Piston At TDC On Exhaust Stroke
Courtesy of CHRYSLER GROUP, LLC

32. Remove the Tensioner Pins (special tool #8514, Pins, Tensioner) (1) and (6) from the right side and left side cam chain tensioners.
33. Rotate the crankshaft clockwise (as viewed from the front) two complete revolutions stopping when the dimple (4) on the crankshaft is aligned with the block/bearing cap junction (5).
34. While maintaining this alignment, verify that the **ARROWS** (2) on the left side cam phasers point toward each other and are parallel to the cylinder head cover mounting surface (3) and that the right side cam phaser **ARROWS** (7) point away from each other and the **SCRIBE LINES** (9) are parallel to the cylinder head cover mounting surface (8).

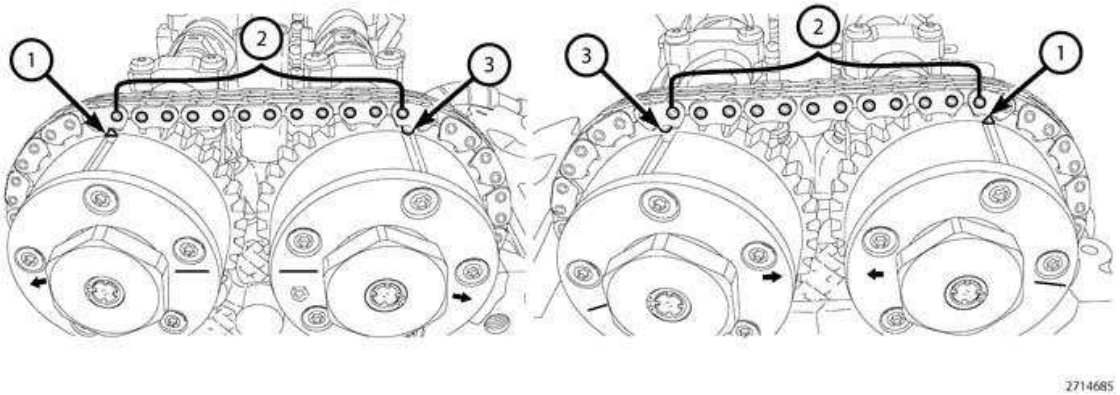

Fig. 759: Chain Pins, Exhaust Cam Phaser Triangle Marking & Circle Marking
Courtesy of CHRYSLER GROUP, LLC

35. There should be 12 chain pins (2) **BETWEEN** the exhaust cam phaser triangle marking (1) and the intake cam phaser circle marking (3) as viewed from either the front or rear of the cam phasers.
36. If the engine timing is not correct, repeat this procedure.
37. Install the engine timing cover, crankshaft vibration damper, accessory drive belts and oil pan. Refer to **COVER(S), ENGINE TIMING, INSTALLATION** .
38. Install the spark plugs. Tighten to 17.5 N.m (13 ft. lbs.). Refer to **SPARK PLUG, INSTALLATION** .
39. Install the cylinder head covers. Refer to **COVER(S), CYLINDER HEAD, INSTALLATION** .
40. Install the upper intake manifold and air cleaner housing assembly. Refer to **MANIFOLD, INTAKE, INSTALLATION** .
41. Fill the engine crankcase with the proper oil to the correct level. Refer to **STANDARD PROCEDURE**.
42. Connect the negative battery cable and tighten nut to 5 N.m (45 in. lbs.).
43. Fill the cooling system. Refer to **STANDARD PROCEDURE** .
44. Operate the engine until it reaches normal operating temperature. Check cooling system for correct fluid level. Refer to **STANDARD PROCEDURE** .

NOTE: **The Cam/Crank Variation Relearn procedure must be performed using the scan tool anytime there has been a repair/replacement made to a powertrain system, for example: flywheel, valvetrain, camshaft and/or crankshaft sensors or components.**

COVER(S), ENGINE TIMING

REMOVAL

REMOVAL

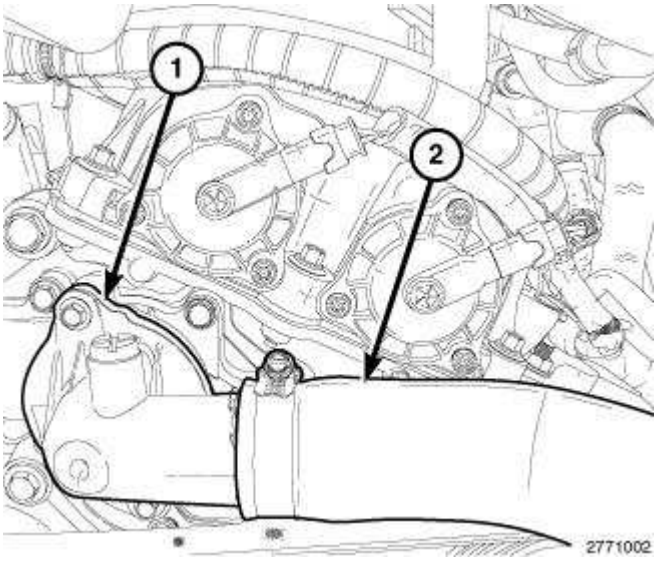

Fig. 760: Upper Radiator Hose & Thermostat Housing
Courtesy of CHRYSLER GROUP, LLC

1. Disconnect and isolate the negative battery cable.
2. Drain the cooling system. Refer to **STANDARD PROCEDURE** .
3. Remove the upper radiator hose (2) and thermostat housing (1). Refer to **THERMOSTAT, REMOVAL** .

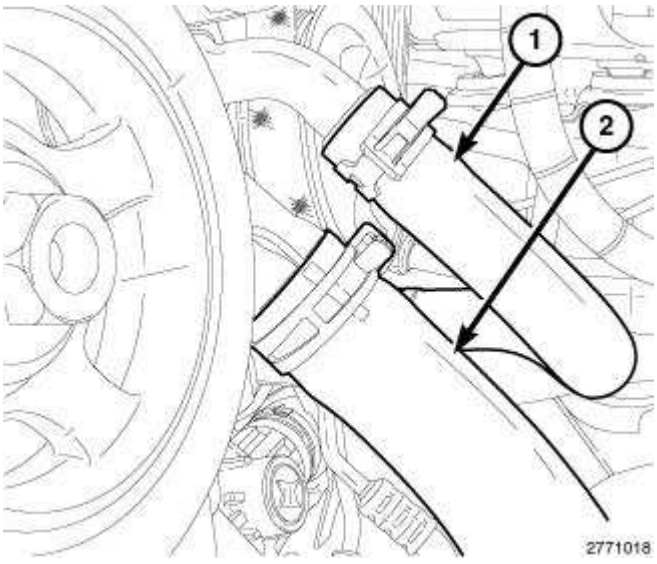

Fig. 761: Radiator Hose & Heater Hose
Courtesy of CHRYSLER GROUP, LLC

4. Remove the heater core return hose (1) from the water pump housing.
5. Remove the lower radiator hose (2) from the water pump housing.

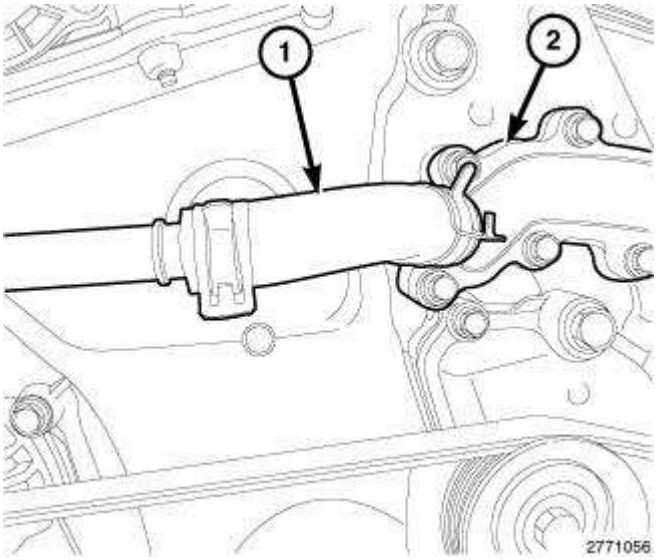

Fig. 762: Heater Core Supply Hose & Coolant Outlet Housing
Courtesy of CHRYSLER GROUP, LLC

6. Remove the heater core supply hose (1) from the coolant outlet housing (2).

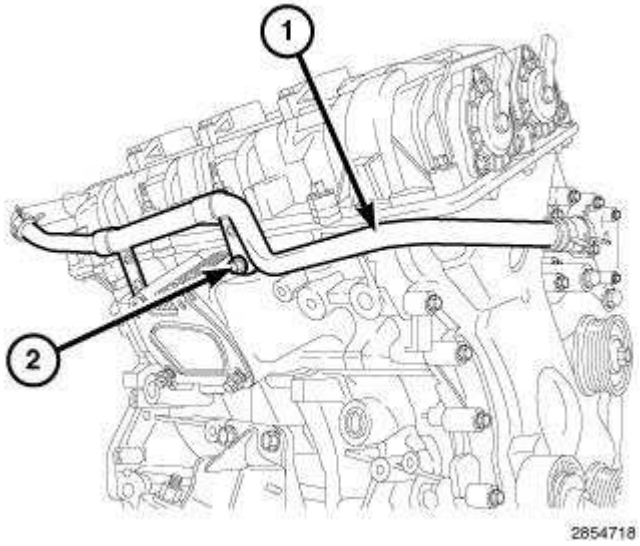

Fig. 763: Heater Core Supply Tube Support Bracket & Retaining Bolt
Courtesy of CHRYSLER GROUP, LLC

7. Remove the bolt (2) and reposition the heater core supply tube (1).

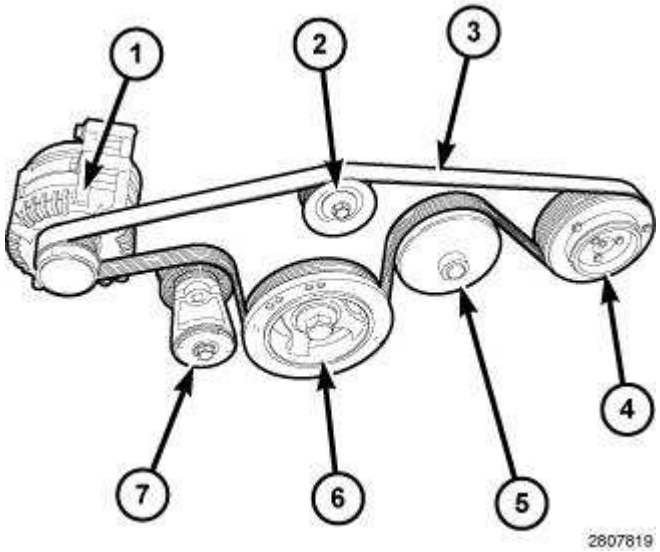

Fig. 764: Idler Pulley, Tensioner Arm, Belt, Idler, Tensioner & Belt Routing
Courtesy of CHRYSLER GROUP, LLC

8. Remove the accessory drive belt (3). Refer to **BELT, SERPENTINE, REMOVAL** .
9. Remove the accessory drive belt tensioner (7). Refer to **TENSIONER, BELT, REMOVAL** .
10. Remove the accessory idler pulley (2). Refer to **PULLEY, IDLER, REMOVAL** .
11. Remove the crankshaft vibration damper (6). Refer to **DAMPER, VIBRATION, REMOVAL** .
12. Remove the right and left cylinder head covers. Refer to **COVER(S), CYLINDER HEAD, REMOVAL** .
13. Remove the upper and lower oil pans. Refer to **PAN, OIL, REMOVAL** .

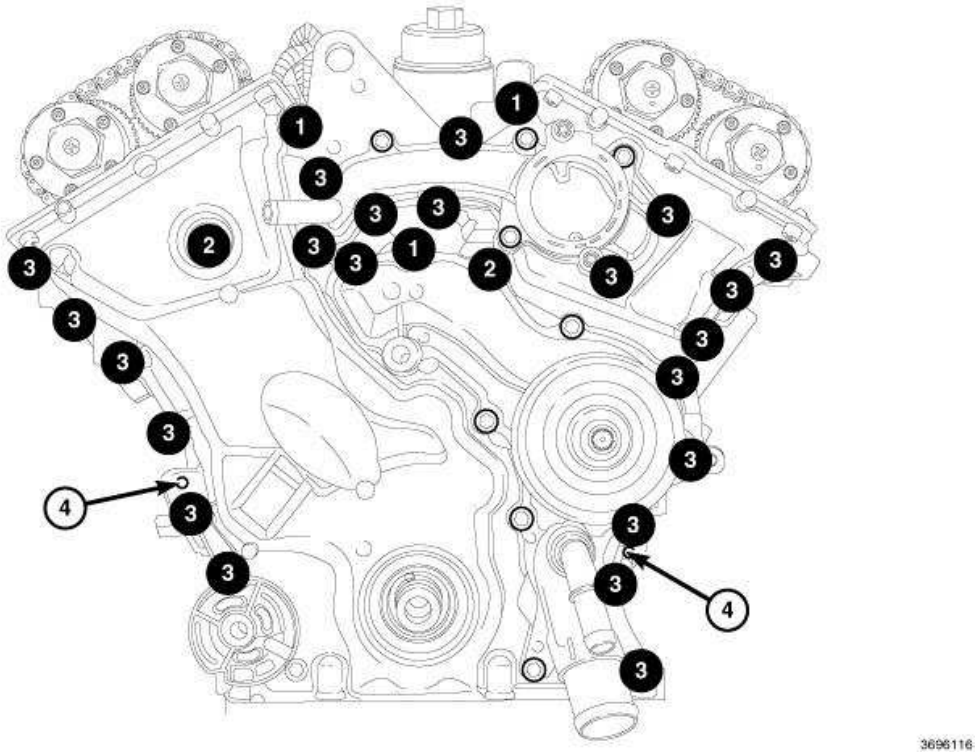

Fig. 765: Timing Cover Bolts
Courtesy of CHRYSLER GROUP, LLC

NOTE: It is not necessary to remove the water pump or the coolant outlet housing for engine timing cover removal.

14. Remove the following timing cover attaching bolts:
    - Three M10 bolts (1)
    - Two M8 bolts (2)
    - Twenty-two M6 bolts (3)

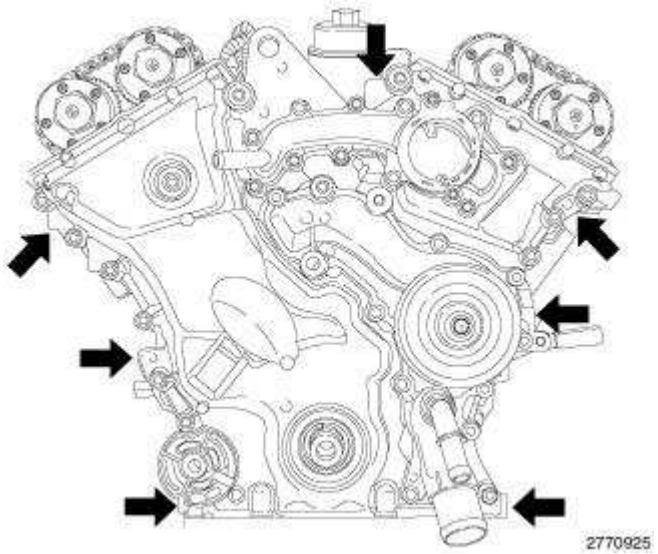

Fig. 766: Timing Cover Removal Pry Points
Courtesy of CHRYSLER GROUP, LLC

15. Using the seven pry points indicated in illustration, carefully remove the timing cover.

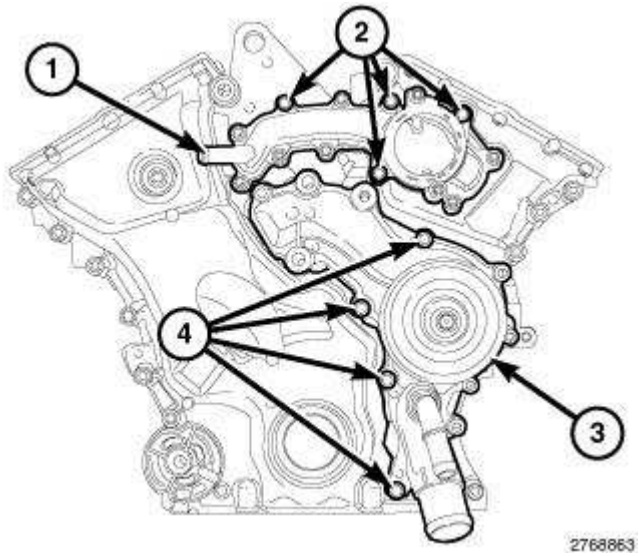

Fig. 767: Coolant Outlet Housing, Water Pump & Bolts
Courtesy of CHRYSLER GROUP, LLC

16. If required, remove the remaining four M6 bolts (2) and the coolant outlet housing (1) from the engine timing cover.
17. If required, remove the remaining four M6 bolts (4) and the water pump (3) from the engine timing cover.

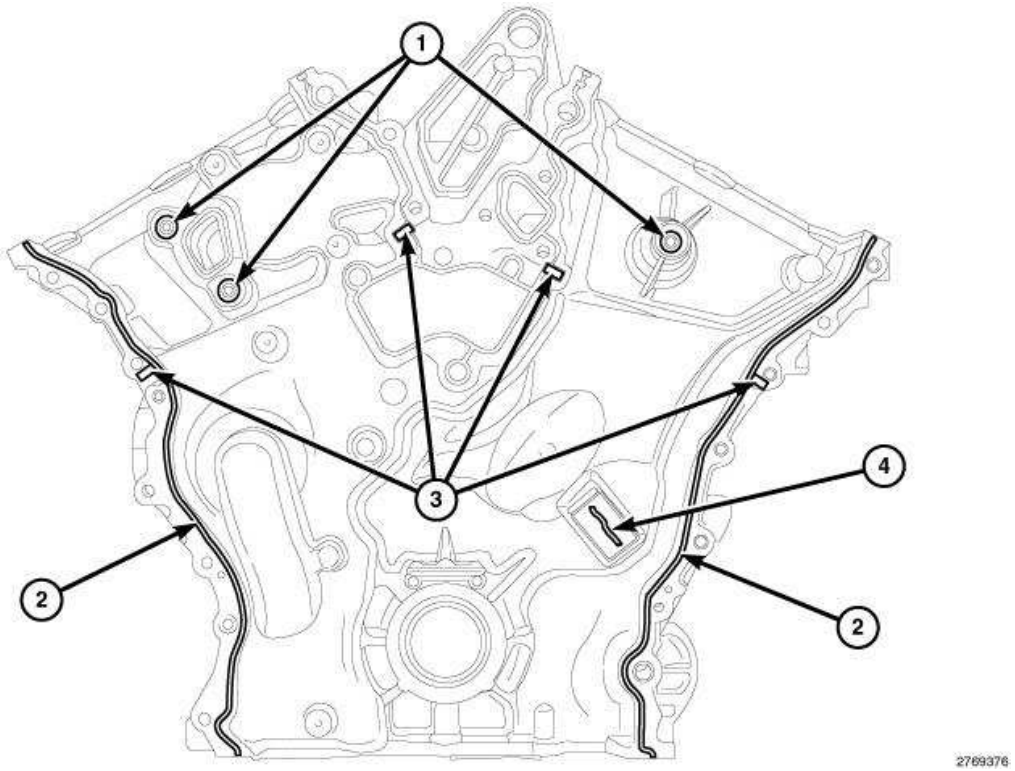

Fig. 768: Sealant At Cylinder Head Bosses, Right & Left Flanges, Cylinder Head-To-Engine Block T-Joints & Cover To Right Cam Chain Tensioner Gap
Courtesy of CHRYSLER GROUP, LLC

CAUTION: Do not use oil based liquids, wire brushes, abrasive wheels or metal scrapers to clean the engine gasket surfaces. Use only isopropyl (rubbing) alcohol, along with plastic or wooden scrapers. Improper gasket surface preparation may result in engine fluid leakage.

18. Remove all residual sealant from the timing chain cover, cylinder head and engine block mating surfaces. Refer to **CLEANING**.

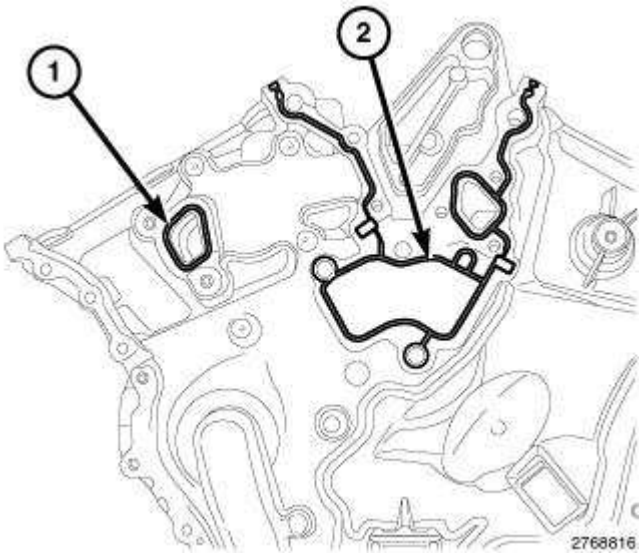

Fig. 769: Coolant Outlet Housing Gasket & Water Pump Gasket
Courtesy of CHRYSLER GROUP, LLC

19. Remove and discard the coolant outlet housing gasket (1) and the water pump gasket (2).

INSTALLATION

INSTALLATION

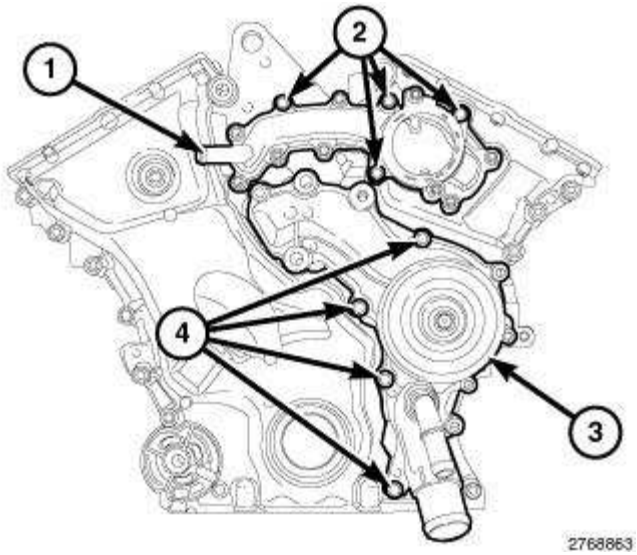

Fig. 770: Coolant Outlet Housing, Water Pump & Bolts
Courtesy of CHRYSLER GROUP, LLC

1. If removed, install the coolant outlet housing (1) to the timing cover with a new gasket using only the four bolts (2) shown in illustration tightened to 12 N.m (106 in. lbs.).
2. If removed, install the water pump (3) to the timing cover using only the four bolts (4) shown in illustration tightened to 12 N.m (106 in. lbs.). Refer to **PUMP, WATER, INSTALLATION** .

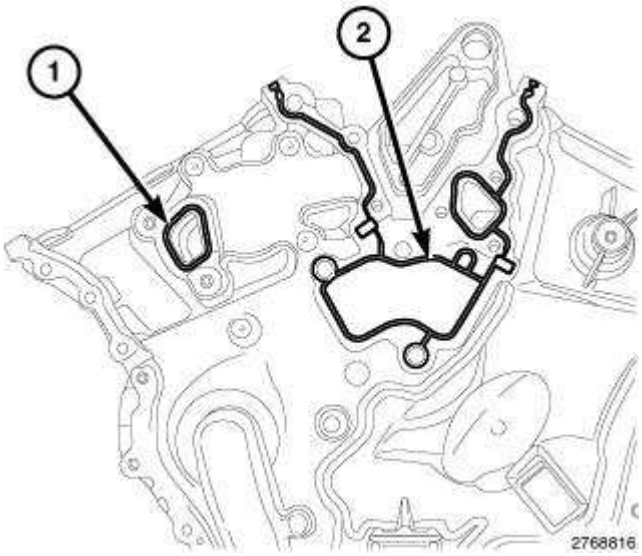

Fig. 771: Coolant Outlet Housing Gasket & Water Pump Gasket
Courtesy of CHRYSLER GROUP, LLC

3. Install the coolant outlet housing gasket (1) and the water pump gasket (2).

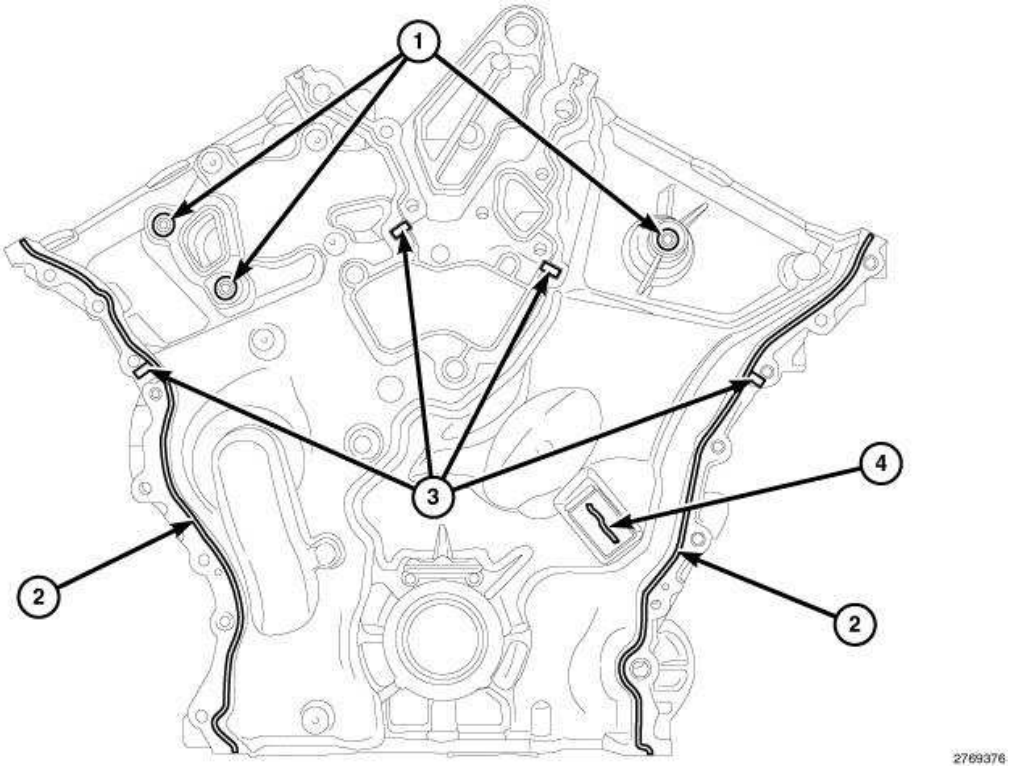

Fig. 772: Sealant At Cylinder Head Bosses, Right & Left Flanges, Cylinder Head-To-Engine Block T-Joints & Cover To Right Cam Chain Tensioner Gap
Courtesy of CHRYSLER GROUP, LLC

4. Clean the engine timing cover, cylinder head and block mating surfaces with isopropyl alcohol in

preparation for sealant application.

CAUTION: Engine assembly requires the use of a unique sealant that is compatible with engine oil. Using a sealant other than Mopar® Threebond Engine RTV Sealant may result in engine fluid leakage.

CAUTION: Following the application of Mopar® Threebond Engine RTV Sealant to the gasket surfaces, the components must be assembled within 20 minutes and the attaching fasteners must be tightened to specification within 45 minutes. Prolonged exposure to the air prior to assembly may result in engine fluid leakage.

5. Apply a 2 to 3 mm wide bead of Mopar® Threebond Engine RTV Sealant to the front cover as shown in illustration in the following locations:
   - Three cylinder head bosses (1)
   - Right and left flanges (2)
   - Four cylinder head to engine block T-joints (3)
   - Cover to right cam chain tensioner gap (4)

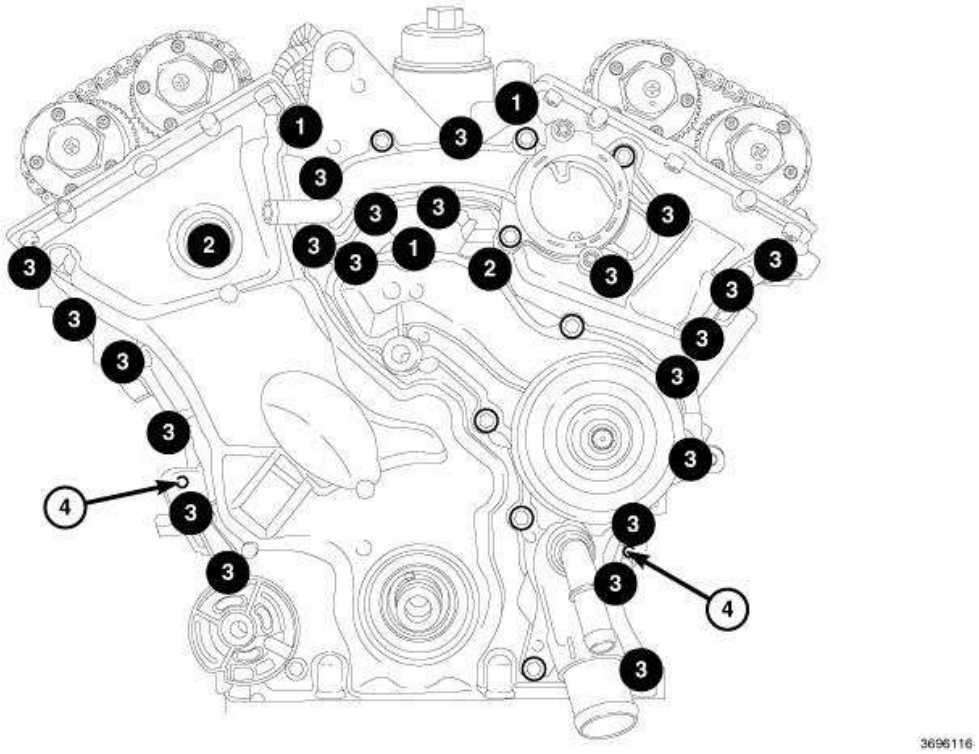

Fig. 773: Timing Cover Bolts
Courtesy of CHRYSLER GROUP, LLC

6. Align the locator pins (4) on the engine block to the engine timing cover and install the cover.
7. Install and tighten the timing cover attaching bolts:

- Twenty-two M6 bolts (3) to 12 N.m (106 in. lbs.).
- Two M8 bolts (2) to 25 N.m (18 ft. lbs.).
- Three M10 bolts (1) to 55 N.m (41 ft. lbs.)

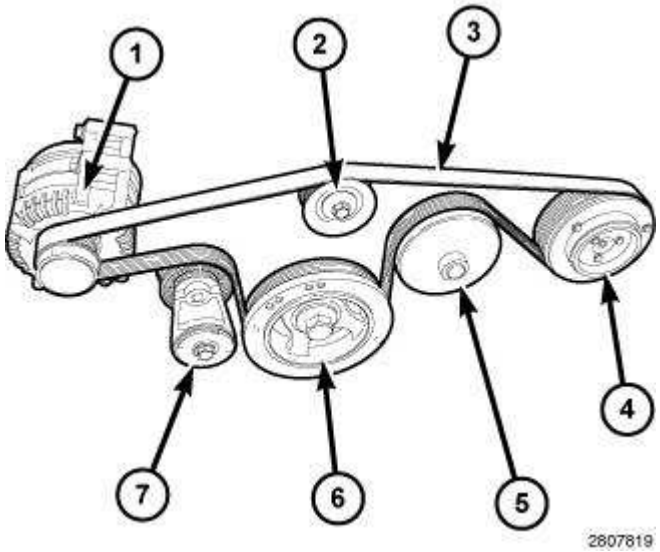

Fig. 774: Idler Pulley, Tensioner Arm, Belt, Idler, Tensioner & Belt Routing
Courtesy of CHRYSLER GROUP, LLC

8. Install the upper and lower oil pans. Refer to **PAN, OIL, INSTALLATION** .
9. Install the right and left cylinder head covers. Refer to **COVER(S), CYLINDER HEAD, INSTALLATION** .
10. Install the crankshaft vibration damper (6). Refer to **DAMPER, VIBRATION, INSTALLATION** .
11. Install the accessory idler pulley (2). Refer to **PULLEY, IDLER, INSTALLATION** .
12. Install accessory drive belt tensioner (7). Refer to **TENSIONER, BELT, INSTALLATION** .
13. Install the accessory drive belt (3). Refer to **BELT, SERPENTINE, REMOVAL** .

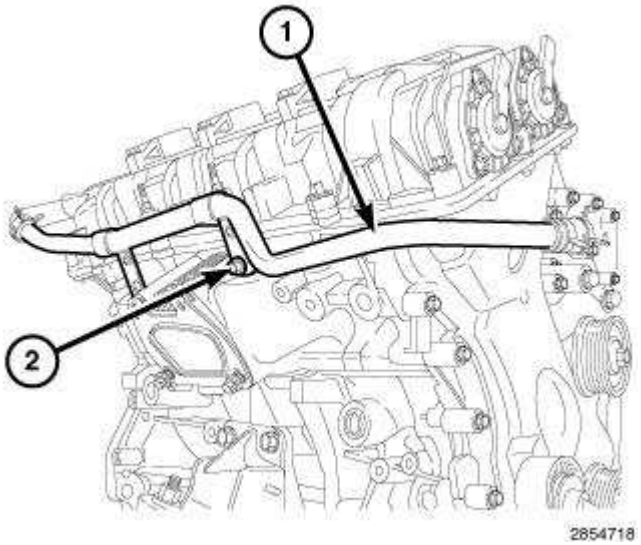

Fig. 775: Heater Core Supply Tube Support Bracket & Retaining Bolt
Courtesy of CHRYSLER GROUP, LLC

14. Install the heater core supply tube (1) with one bolt (2) tightened to 12 N.m (106 in. lbs.).

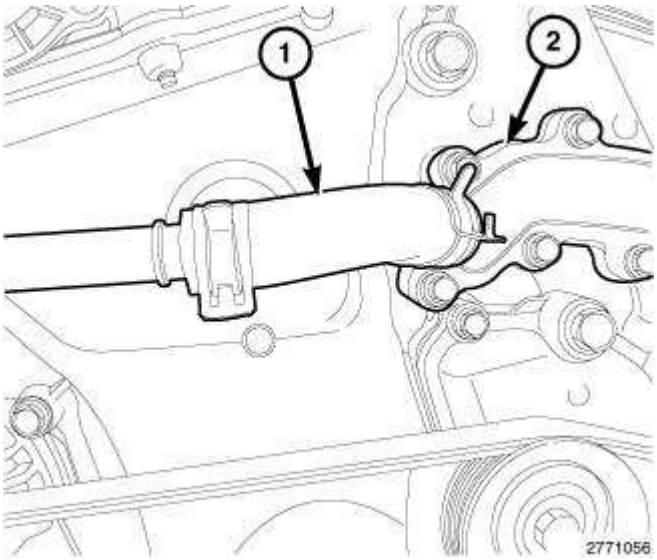

Fig. 776: Heater Core Supply Hose & Coolant Outlet Housing
Courtesy of CHRYSLER GROUP, LLC

15. Install the heater core supply hose (1) to the coolant outlet housing (2).

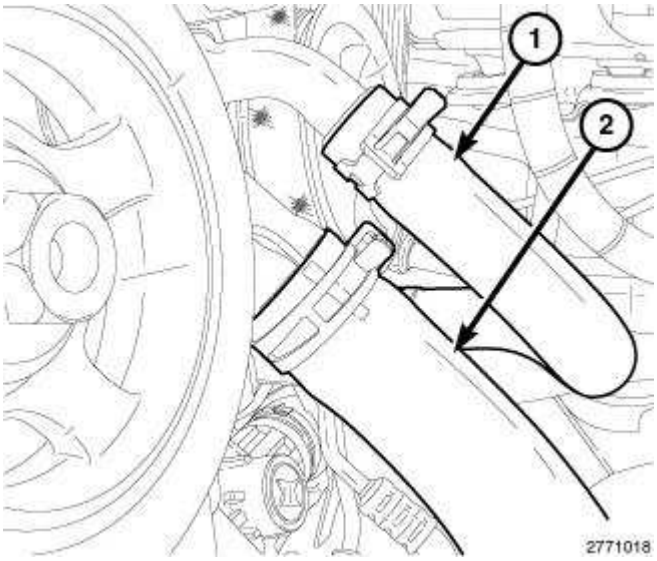

Fig. 777: Radiator Hose & Heater Hose
Courtesy of CHRYSLER GROUP, LLC

16. Install the lower radiator hose (2) to the water pump housing.
17. Install the heater core return hose (1) to the water pump housing.

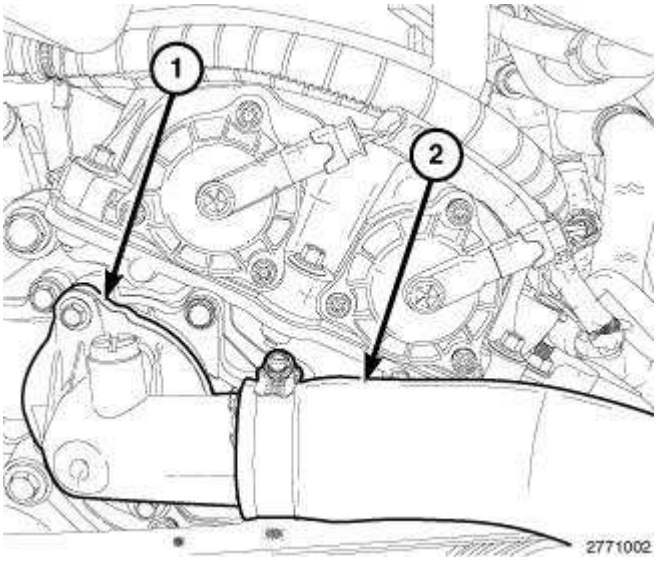

Fig. 778: Upper Radiator Hose & Thermostat Housing
Courtesy of CHRYSLER GROUP, LLC

18. Install the thermostat housing (1) and upper radiator hose (2). Refer to **THERMOSTAT, REMOVAL** .
19. If removed, install the oil filter and fill the engine crankcase with the proper oil to the correct level. Refer to **STANDARD PROCEDURE**.
20. Connect the negative battery cable and tighten nut to 5 N.m (45 in. lbs.).
21. Fill the cooling system. Refer to **STANDARD PROCEDURE** .

22. Run the engine until it reaches normal operating temperature. Check cooling system for correct fluid level. Refer to **STANDARD PROCEDURE** .

ENGINE

5.7L - Service Information - Challenger

DESCRIPTION

DESCRIPTION

The 5.7L engine (348 CID) eight-cylinder engine is a 90° V-Type lightweight, deep skirt cast iron block, aluminum heads, single cam, overhead valve engine with hydraulic roller tappets. The heads incorporate splayed valves with a hemispherical style combustion chamber and dual spark plugs. The cylinders are numbered from front to rear; 1, 3, 5, 7 on the left bank and 2, 4, 6, 8 on the right bank. The firing order is 1-8-4-3-6-5-7-2.

DIAGNOSIS AND TESTING

INTRODUCTION

Engine diagnosis is helpful in determining the causes of malfunctions not detected and remedied by routine maintenance.

These malfunctions may be classified as either performance (e.g., engine idles rough and stalls) or mechanical (e.g., a strange noise).

See **PERFORMANCE** and **MECHANICAL** for possible causes and corrections of malfunctions.

Additional tests and diagnostic procedures may be necessary for specific engine malfunctions that can not be isolated with the Service Diagnosis charts. Information concerning additional tests and diagnosis is provided within the following diagnosis:

- Cylinder Compression Pressure Test. See **CYLINDER COMPRESSION PRESSURE LEAKAGE**.
- Cylinder Combustion Pressure Leakage Test. See **CYLINDER COMBUSTION PRESSURE LEAKAGE**.
- Engine Cylinder Head Gasket Failure Diagnosis. See **Engine/Cylinder Head - Diagnosis and Testing**.
- Intake Manifold Leakage Diagnosis. See **Engine/Manifolds/MANIFOLD, Intake - Diagnosis and Testing**.

PERFORMANCE

CONDITION	POSSIBLE CAUSE	CORRECTION
ENGINE WILL NOT START	1. Weak battery.	1. Charge or replace as necessary.
	2. Corroded or loose battery	2. Clean and tighten battery

	connections.	connections. Apply a coat of light mineral grease to the terminals.
	3. Faulty starter.	3. Refer to **Electrical/Starting - Diagnosis and Testing** .
	4. Incorrect spark plug gap.	4. Refer to **Electrical/Ignition Control - Specifications** .
	5. Dirt or water in fuel system.	5. Clean system and replace fuel filter.
	6. Faulty fuel pump, relay or wiring.	6. See **Engine - Diagnosis and Testing**.
ENGINE STALLS OR ROUGH IDLE	1. Idle speed set to low.	1. See **Engine - Diagnosis and Testing**.
	2. Vacuum leak.	2. Inspect intake manifold and vacuum hoses, repair or replace as necessary.
ENGINE LOSS OF POWER	1. Dirty or incorrectly gapped spark plugs.	1. Replace spark plugs.
	2. Dirt or water in fuel system.	2. Clean system and replace fuel filter.
	3. Blown cylinder head gasket.	3. Replace cylinder head gasket.
	4. Low compression.	4. See **CYLINDER COMPRESSION PRESSURE LEAKAGE**.
	5. Burned, warped or pitted valves.	5. Replace as necessary.
	6. Plugged or restricted exhaust system.	6. Inspect and replace as necessary.

MECHANICAL

CONDITION	POSSIBLE CAUSES	CORRECTIONS
NOISY VALVES	1. High or low oil level in crankcase.	1. Refer to **Vehicle Quick Reference/Capacities and Recommended Fluids - Specifications** .
	2. Thin or diluted oil.	2. Change oil and filter.
	3. Low oil pressure.	3. Check oil pump, if Ok, check rod and main bearings for excessive wear.
	4. Dirt in lash adjusters.	4. Replace as necessary.
	5. Worn rocker arms.	5. Replace as necessary.
	6. Worn lash adjusters	6. Replace as necessary.
	7. Worn valve guides.	7. Replace cylinder head.

	8. Excessive runout of valve seats on valve faces.	8. See **Engine/Cylinder Head/SEAL(S), Valve Guide - Description**.
CONNECTING ROD NOISE	1. Insufficient oil supply.	1. Refer to **Vehicle Quick Reference/Capacities and Recommended Fluids - Specifications** .
	2. Low oil pressure.	2. Check oil pump, if Ok, check rod and main bearings for excessive wear.
	3. Thin or diluted oil.	3. Change oil and filter.
	4. Excessive bearing clearance.	4. Replace as necessary.
	5. Connecting rod journal out-of-round.	5. Replace crankshaft.
	6. Misaligned connecting rods.	6. Replace bent connecting rods.
MAIN BEARING NOISE	1. Insufficient oil supply.	1. Refer to **Vehicle Quick Reference/Capacities and Recommended Fluids - Specifications** .
	2. Low oil pressure.	2. Check oil pump, if Ok, check rod and main bearings for excessive wear.
	3. Thin or diluted oil.	3. Change oil and filter.
	4. Excessive bearing clearance.	4. Replace as necessary.
	5. Excessive end play.	5. Check thrust washers for wear.
	6. Crankshaft journal out-of round.	6. Replace crankshaft.
	7. Loose flywheel or torque converter.	7. Tighten to correct torque

CYLINDER COMPRESSION PRESSURE LEAKAGE

NOTE: The results of a cylinder compression pressure test can be utilized to diagnose several engine malfunctions.

NOTE: Ensure the battery is completely charged and the engine starter motor is in good operating condition. Otherwise the indicated compression pressures may not be valid for diagnosis purposes.

1. Clean the spark plug recesses with compressed air.
2. Remove the spark plugs and record the cylinder number of each spark plug for future reference.

3. Inspect the spark plug electrodes for abnormal firing indicators such as fouled, hot, oily, etc.
4. Disable the fuel system. Refer to **Fuel System/Fuel Delivery - Standard Procedure** and perform the fuel system pressure release procedure.
5. Insert a compression pressure gauge and rotate the engine with the engine starter motor for three revolutions.
6. Record the compression pressure on the 3rd revolution. Continue the test for the remaining cylinders.

NOTE: **The recommended compression pressures are to be used only as a guide to diagnosing engine problems. An engine should not be disassembled to determine the cause of low compression unless some malfunction is present.**

7. Compression should not be less than 689 kPa (100 psi) and not vary more than 25 percent from cylinder to cylinder.
8. If one or more cylinders have abnormally low compression pressures, repeat the compression test.

NOTE: **If the same cylinder or cylinders repeat an abnormally low reading on the second compression test, it could indicate the existence of a problem in the cylinder in question.**

9. If one or more cylinders continue to have abnormally low compression pressures, perform the CYLINDER COMBUSTION PRESSURE LEAKAGE test.

CYLINDER COMBUSTION PRESSURE LEAKAGE

The combustion pressure leakage test provides an accurate means for determining engine condition.

Combustion pressure leakage testing will detect:

- Exhaust and intake valve leaks (improper seating).
- Leaks between adjacent cylinders or into water jacket.
- Any causes for combustion/compression pressure loss.

1. Check the coolant level and fill as required. DO NOT install the radiator cap.
2. Start and operate the engine until it attains normal operating temperature, then turn the engine OFF.
3. Remove the spark plugs.
4. Remove the oil filler cap.
5. Remove the air cleaner hose.
6. Calibrate the tester according to the manufacturer's instructions. The shop air source for testing should maintain 483 kPa (70 psi) minimum, 1,379 kPa (200 psi) maximum and 552 kPa (80 psi)

recommended.

7. Perform the test procedures on each cylinder according to the tester manufacturer's instructions. Set piston of cylinder to be tested at TDC compression, While testing, listen for pressurized air escaping through the throttle body, tailpipe and oil filler cap opening. Check for bubbles in the radiator coolant.

All gauge pressure indications should be equal, with no more than 25% leakage.

FOR EXAMPLE: At 552 kPa (80 psi) input pressure, a minimum of 414 kPa (60 psi) should be maintained in the cylinder.

Refer to **CYLINDER COMBUSTION PRESSURE LEAKAGE DIAGNOSIS CHART**.

CYLINDER COMBUSTION PRESSURE LEAKAGE DIAGNOSIS CHART

CONDITION	POSSIBLE CAUSE	CORRECTION
AIR ESCAPES THROUGH THROTTLE BODY	Intake valve bent, burnt, or not seated properly	Inspect valve and valve seat. Reface or replace, as necessary. Inspect valve springs. Replace as necessary.
AIR ESCAPES THROUGH TAILPIPE	Exhaust valve bent, burnt, or not seated properly	Inspect valve and valve seat. Reface or replace, as necessary. Inspect valve springs. Replace as necessary.
AIR ESCAPES THROUGH RADIATOR	Head gasket leaking or cracked cylinder head or block	Remove cylinder head and inspect. Replace defective part.
MORE THAN 50% LEAKAGE FROM ADJACENT CYLINDERS	Head gasket leaking or crack in cylinder head or block between adjacent cylinders	Remove cylinder head and inspect. Replace gasket, head, or block as necessary.
MORE THAN 25% LEAKAGE AND AIR ESCAPES THROUGH OIL FILLER CAP OPENING ONLY	Stuck or broken piston rings; cracked piston; worn rings and/or cylinder wall	Inspect for broken rings or piston. Measure ring gap and cylinder diameter, taper and out-of-round. Replace defective part as necessary.

LUBRICATION

CONDITION	POSSIBLE CAUSES	CORRECTION
OIL LEAKS	1. Gaskets and O-Rings.	1. Replace as necessary.
	a. Misaligned or damaged.	a. Replace as necessary.
	b. Loose fasteners, broken or porous metal parts.	b. Tighten fasteners, Repair or replace metal parts.
	2. Crankshaft rear seal.	2. Replace as necessary.
	3. Crankshaft seal flange.	3. Polish or replace crankshaft.

	Scratched, nicked or grooved.	
	4. Oil pan flange cracked.	4. Replace oil pan.
	5. Front cover seal, damaged or misaligned.	5. Replace seal.
	6. Scratched or damaged vibration damper hub.	6. Polish or replace damper.
-	7. Crankshaft Rear Flange Microporosity.	7. Replace Crankshaft.
OIL PRESSURE DROP	1. Low oil level.	1. Check and correct oil level.
	2. Faulty oil pressure sending unit.	2. Replace sending unit.
	3. Low oil pressure.	3. Check pump and bearing clearance.
	4. Clogged oil filter.	4. Replace oil filter.
	5. Worn oil pump.	5. Replace as necessary.
	6. Thin or diluted oil.	6. Change oil and filter.
	7. Excessive bearing clearance.	7. Replace as necessary.
	8. Oil pump relief valve stuck.	8. Replace oil pump.
	9. Oil pickup tube loose or damaged.	9. Replace as necessary.
OIL PUMPING AT RINGS; SPARK PLUGS FOULING	1. Worn or damaged rings.	1. Hone cylinder bores and replace rings.
	2. Carbon in oil ring slots.	2. Replace rings.
	3. Incorrect ring size installed.	3. Replace rings.
	4. Worn valve guides.	4. Ream guides and replace valves.
	5. Leaking intake gasket(s).	5. Replace intake gasket(s).
	6. Leaking valve guide seals.	6. Replace valve guide seals.

MECHANICAL

ENGINE MECHANICAL DIAGNOSIS CHART

CONDITION	POSSIBLE CAUSES	CORRECTION
NOISY VALVES/LIFTERS	1. High or low oil level in crankcase.	1. Check for correct oil level. Adjust the oil level by draining or adding as needed. See **Engine/Lubrication/OIL - Standard Procedure**.
	2. Thin or diluted oil.	2. Change the engine oil. See **Engine/Lubrication/OIL - Standard Procedure**.
	3. Low oil pressure.	3. Check the engine oil level. If OK, Perform oil pressure test. See **Engine/Lubrication -**

		Diagnosis and Testing.
	4. Dirt in tappets/lash adjusters.	4. Clean and/or replace the hydraulic tappets/lash adjusters. See **Engine/Engine Block/LIFTER(S), Hydraulic - Diagnosis and Testing**.
	5. Bent push rod(s).	5. Install new push rods. See **Engine/Cylinder Head/SPRING(S), Valve - Removal**.
	6. Worn rocker arms	6. Inspect the oil supply to the rocker arms and replace worn rocker arms as needed. See **Engine/Cylinder Head/ROCKER ARM, Valve - Removal**.
	7. Worn tappets/lash adjusters.	7. Install new hydraulic tappets/lash adjusters. See **Engine/Engine Block/LIFTER (S), Hydraulic - Removal**.
	8. Worn valve guides.	8. Inspect the valve guides for wear, cracks or looseness. If either condition exist, replace the cylinder head.
	9. Excessive runout of valve seats or valve faces.	9. Grind the valves and seats. See **Engine/Cylinder Head/VALVES, Intake and Exhaust - Standard Procedure**.
CONNECTING ROD NOISE	1. Insufficient oil supply.	1. Check the engine oil level.
	2. Low oil pressure.	2. Check the engine oil level. If OK, Perform the engine oil pressure test. See **Engine/Lubrication - Diagnosis and Testing**.
	3. Thin or diluted oil.	3. Change the engine oil to correct the viscosity. See **Engine/Lubrication/OIL - Standard Procedure**.
	4. Excessive connecting rod bearing clearance.	4. Measure the bearings for correct clearance with plasti-gage. Repair as necessary.
	5. Connecting rod journal out of round.	5. Replace the crankshaft. See **Engine/Engine Block/CRANKSHAFT - Removal**.

	6. Misaligned connecting rods.	6. Replace the bent connecting rods. See **Engine/Cylinder Head/SPRING(S), Valve - Removal**.
MAIN BEARING NOISE	1. Insufficient oil supply.	1. Check the engine oil level.
	2. Low oil pressure.	2. Check the engine oil level. If OK, Perform the engine oil pressure test. See **Engine/Lubrication - Diagnosis and Testing**.
	3. Thin or diluted oil.	3. Change the engine oil to correct viscosity. See **Engine/Lubrication/OIL - Standard Procedure**.
	4. Excessive main bearing clearance.	4. Measure the bearings for correct clearance with plasti-gage. Repair as necessary.
	5. Excessive end play.	5. Check the crankshaft thrust bearing for excessive wear on flanges. See **Engine/Engine Block/CAMSHAFT, Engine - Inspection**.
	6. Crankshaft main journal out of round or worn.	6. Replace the crankshaft. See **Engine/Engine Block/CRANKSHAFT - Removal**.
	7. Loose flywheel or torque converter.	7. Inspect the crankshaft, flexplate/flywheel and bolts for damage. Tighten to correct torque.
LOW OIL PRESSURE	1. Low oil level.	1. Check the oil level and fill if necessary.
	2. Faulty oil pressure sending unit.	2. Install a new sending unit.
	3. Clogged oil filter.	3. Install a new oil filter. See **Engine/Lubrication/FILTER, Engine Oil - Removal**.
	4. Worn oil pump.	4. Replace the oil pump assembly. See **Engine/Lubrication/PUMP, Engine Oil - Removal**.
	5. Thin or diluted oil.	5. Change the engine oil to correct viscosity. See **Engine/Lubrication/OIL - Standard Procedure**.
	6. Excessive bearing	6. Measure the bearings for

	clearance.	correct clearance with plasti-gage. Repair as necessary.
	7. Oil pump relief valve stuck.	7. The oil pump pressure relief valve and spring should not be removed from the oil pump. If these components are disassembled and or removed from the pump the entire oil pump assembly must be replaced. See **Engine/Lubrication/PUMP, Engine Oil - Removal**.
	8. Oil pickup tube loose, broken, bent or clogged.	8. Inspect the oil pickup tube and pump, and clean or replace as necessary. See **Engine/Lubrication/PAN, Oil - Removal**.
	9. Oil pump cover warped or cracked.	9. Install a new oil pump. See **Engine/Lubrication/PUMP, Engine Oil - Removal**.
OIL LEAKS	1. Misaligned or deteriorated gaskets.	1. Replace gasket.
	2. Loose fastener, broken or porous metal part.	2. Tighten, repair or replace the part.
	3. Front or rear crankshaft oil seal leaking.	3. Replace the front seal or rear seal. See **Engine/Engine Block/SEAL, Crankshaft Oil - Removal**. Refer to **Engine/Engine Block/SEAL, Crankshaft Oil - Removal** .
	4. Leaking oil gallery plug or cup plug.	4. Remove and reseal threaded plug. Replace the cup style plug.
EXCESSIVE OIL CONSUMPTION OR SPARK PLUGS OIL FOULED	1. CCV System malfunction.	1. Check for correct operation. Refer to **Emissions Control - Description** .
	2. Defective valve stem seal (s).	2. Repair or replace the seal(s). See **Engine/Cylinder Head/SPRING(S), Valve - Removal**.
	3. Worn or broken piston rings.	3. Hone the cylinder bores and Install new rings. See **Engine/Engine Block/ROD, Piston and Connecting - Removal**.
	4. Scuffed pistons/cylinder	4. Hone the cylinder bores and

	walls.	replace pistons as required. See **Engine/Engine Block/ROD, Piston and Connecting - Removal**.
	5. Carbon in oil control ring groove.	5. Remove the rings and de-carbon the piston. See **Engine/Engine Block/RING (S), Piston - Standard Procedure**.
	6. Worn valve guides.	6. Inspect the valve guides for wear, cracks or looseness. If either condition exist, replace the cylinder head.
	7. Piston rings fitted too tightly in grooves.	7. Remove the rings and check the ring end gap and side clearance. Replace if necessary. See **Engine/Engine Block/RING(S), Piston - Standard Procedure**.

STANDARD PROCEDURE

REPAIR DAMAGED OR WORN THREADS

CAUTION: Be sure that the tapped holes maintain the original center line.

Damaged or worn threads can be repaired. Essentially, this repair consists of:

- Drilling out worn or damaged threads.
- Tapping the hole with a special Heli-Coil Tap.
- Installing an insert into the tapped hole to bring the hole back to its original thread size.

HYDROSTATIC LOCK

CAUTION: Do not attempt to run engine. Severe damage could occur.

When an engine is suspected of hydrostatic lock (regardless of what caused the problem), follow the steps below.

1. Perform the Fuel Pressure Release Procedure. Refer to **Fuel System/Fuel Delivery - Standard Procedure** .
2. Disconnect the negative battery cable(s) from the battery.

3. Inspect air cleaner, induction system, and intake manifold to make sure the system is dry and clear of foreign material.
4. Place a shop towel around the spark plugs to catch any fluid that may possibly be under pressure in the cylinder head. Remove the spark plugs.
5. With all spark plugs removed, rotate the crankshaft using a breaker bar and socket.
6. Identify the fluid in the cylinders (coolant, fuel, oil).
7. Make sure all fluid has been removed from the cylinders.
8. Repair engine or components as necessary to prevent this problem from occurring again.
9. Squirt a small amount of engine oil into the cylinders to lubricate the walls. This prevents damage on restart.
10. Install new spark plugs. Tighten the spark plugs to 41 N.m (30 ft. lbs.).
11. Drain engine oil. Remove and discard the oil filter.
12. Install the drain plug. Tighten the plug to 34 N.m (25 ft. lbs.).
13. Install a new oil filter.
14. Fill the engine crankcase with the specified amount and grade of oil. Refer to **Vehicle Quick Reference/Capacities and Recommended Fluids - Specifications** .
15. Connect the negative battery cable(s).
16. Start the engine and check for any leaks.

FORM-IN-PLACE GASKETS AND SEALERS

NOTE: All sealants mentioned below are not used on every engine, they are listed as general reference guide. See service information for specific sealer usage.

There are numerous places where form-in-place gaskets are used on the engine. Care must be taken when applying form-in-place gaskets to assure obtaining the desired results. **Do not use form-in-place gasket material unless specified.** Bead size, continuity, and location are of great importance. Too thin of a bead can result in leakage while too much can result in spill-over which can break off and obstruct fluid feed lines. A continuous bead of the proper width is essential to obtain a leak-free gasket. All sealing surfaces that use form-in-place gaskets and sealers must be free of grease or oil. Clean surfaces with Mopar® brake parts cleaner prior to sealer application. After the sealer is applied, assemble the parts within 10 minutes.

Numerous types of form-in-place gasket materials are used in the engine area. Mopar® Sealant RTV Silicone Rubber Adhesive, MOPAR® Silicone Rubber RTV, Mopar® ATF-RTV and Mopar® Gasket Maker gasket materials, each have different properties and cannot be used in place of the other.

MOPAR® SEALANT RTV SILICONE RUBBER ADHESIVE is used to seal components exposed to engine oil. This material is a specially designed black silicone rubber RTV that retains adhesion and sealing properties when exposed to engine oil. Moisture in the air causes the material to cure. This material is available in three ounce tubes and has a shelf life of one year. After one year this material will not properly cure. Always inspect the package for the expiration date before use.

MOPAR® SILICONE RUBBER RTV is used to seal components exposed to engine oil, gear lubricant, and coolant. This material is a specially designed gray silicone rubber RTV that retains adhesion and sealing properties when exposed to engine oil, gear lubricant and coolant. Excellent adhesion even on oily surfaces, withstands temperatures to 330° C (626° F). Moisture in the air causes the material to cure. This material is available in three ounce tubes and has a shelf life of one year. After one year this material will not properly cure. Always inspect the package for the expiration date before use.

MOPAR® ATF-RTV is a specially designed black silicone rubber RTV that retains adhesion and sealing properties to seal components exposed to automatic transmission fluid, engine coolants, and moisture. This material is available in three ounce tubes and has a shelf life of one year. After one year this material will not properly cure. Always inspect the package for the expiration date before use.

MOPAR® GASKET MAKER is an anaerobic type gasket material. The material cures in the absence of air when squeezed between two metallic surfaces. It will not cure if left in the uncovered tube. The anaerobic material is for use between two machined surfaces. Do not use on flexible metal flanges.

MOPAR® GASKET SEALANT is a slow drying, permanently soft sealer. This material is recommended for sealing threaded fittings and gaskets against leakage of oil and coolant. It can be used on threaded and machined parts under all temperatures. This material also prevents corrosion. Mopar® Gasket Sealant is available in a 13 oz. aerosol can or in a 4 oz. or 6 oz. can with applicator.

SEALER APPLICATION

Apply 1 mm (0.040 in.) diameter or less of Mopar® Gasket Maker material to one gasket surface. Be certain the material surrounds each mounting hole. Excess material can easily be wiped off. Tighten the components in place within 15 minutes. Use a locating dowel during assembly to prevent smearing material off the location.

Apply Mopar® RTV or ATF-RTV gasket material in a continuous bead approximately 3 mm (0.120 in.) in diameter. For corner sealing and "T-Joint" locations and waffle pad area, a 0.635 mm (0.025 in.) drop is placed in the center of the gasket contact area. Remove uncured sealant with a shop towel. Tighten the components in place while the sealant is still wet to the touch (within 10 minutes). Use a locating dowel during assembly to prevent smearing material off the location.

REMOVAL

REMOVAL

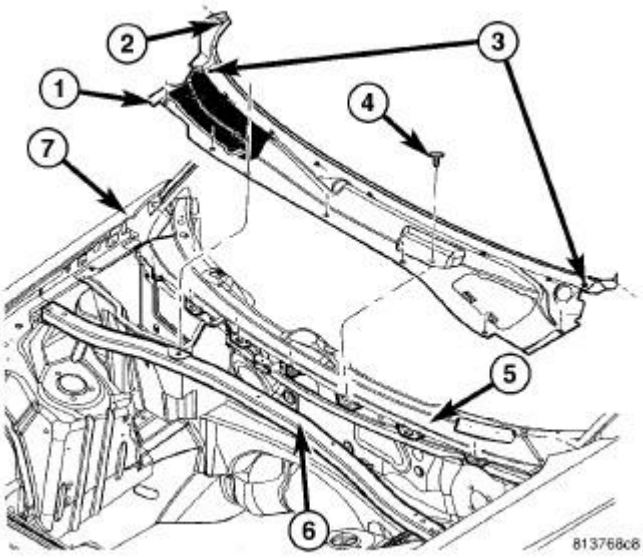

Fig. 1: Removing/Installing Cowl Panel
Courtesy of CHRYSLER LLC

1. Remove the hood. Refer to **Body/Hood/HOOD - Removal** .
2. Remove the cowl top panel (2). Refer to **Body/Exterior/COVER, Cowl Panel - Removal** .
3. Remove the strut tower support (6).

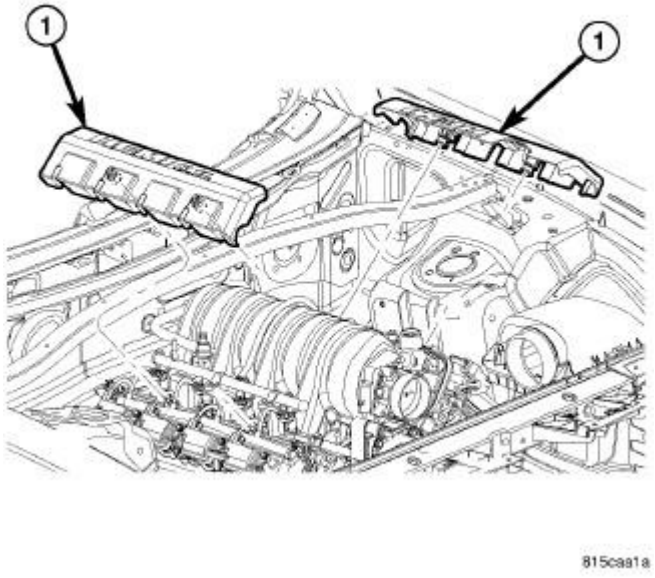

Fig. 2: Engine Covers
Courtesy of CHRYSLER LLC

4. Remove the engine covers (1).

5. Perform the fuel system pressure release procedure. Refer to **Fuel System/Fuel Delivery - Standard Procedure** .

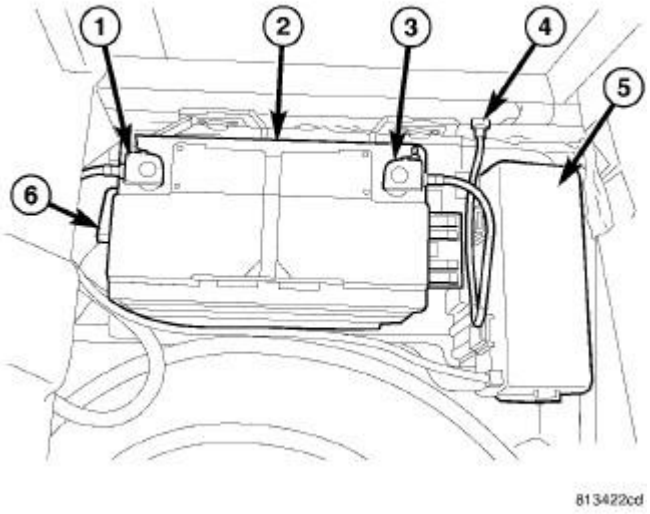

Fig. 3: Battery System Components And PDC Cover
Courtesy of CHRYSLER LLC

6. Disconnect and isolate the negative battery cable (3).

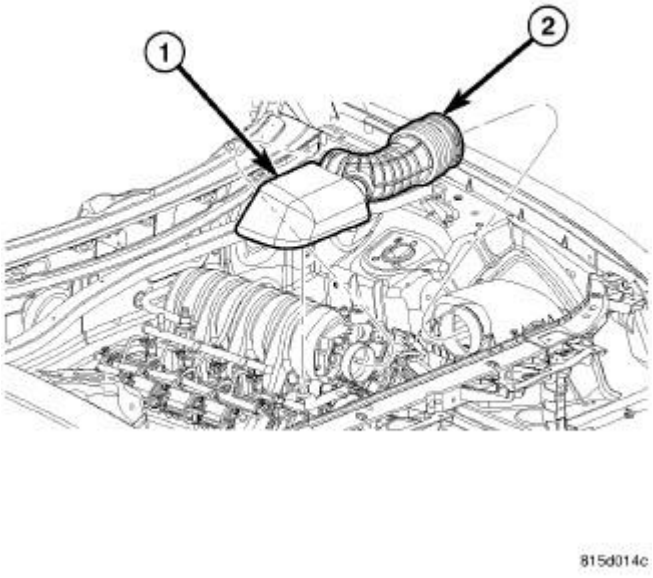

Fig. 4: Air Cleaner Duct
Courtesy of CHRYSLER LLC

7. Disconnect the make up air hose.
8. Disconnect the intake air temperature (IAT) sensor electrical connector.
9. Remove the air cleaner housing (1) and clean air tube (2).

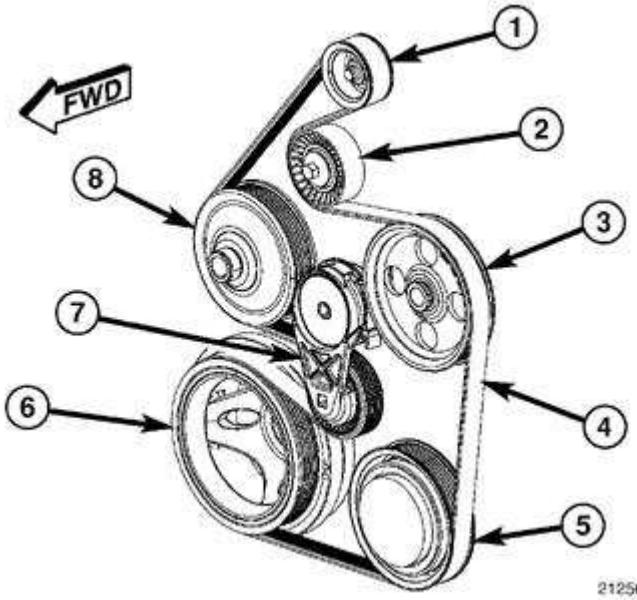

Fig. 5: Identifying Accessory Drive Belt Routing - 5.7L
Courtesy of CHRYSLER LLC

CAUTION: Do not let the tensioner arm snap back to the freearm position, sever damage may occur to the tensioner.

10. Rotate the accessory drive belt tensioner (7) counterclockwise until it contacts it's stop and remove the accessory drive belt (4), then slowly rotate the tensioner into the freearm position.
11. Remove the cooling fan. Refer to **Cooling/Engine/FAN, Cooling - Removal** .

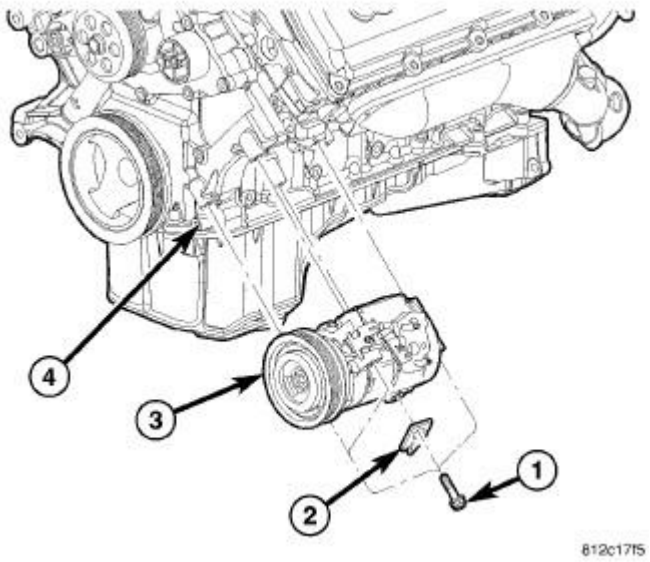

Fig. 6: Removing/Installing A/C Compressor
Courtesy of CHRYSLER LLC

12. Remove the A/C compressor (3). Refer to **Heating and Air Conditioning/Plumbing/COMPRESSOR, A/C - Removal** .

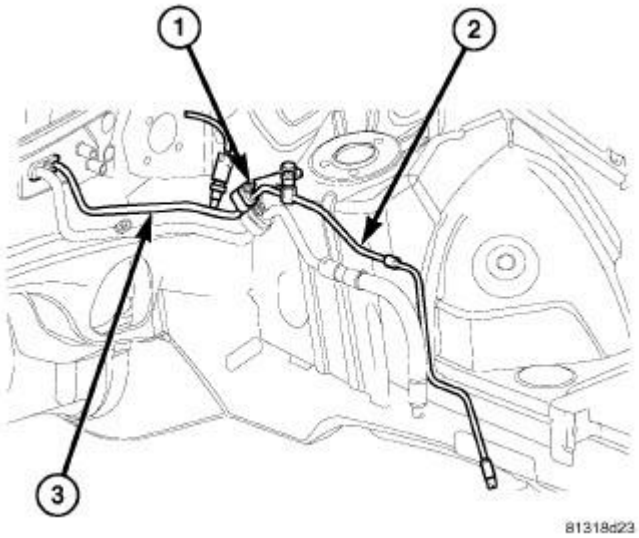

Fig. 7: Removing/Installing Front Liquid A/C Line
Courtesy of CHRYSLER LLC

13. Remove the nut (1) from the front section of the A/C liquid line (2) to the rear section of the liquid line (3), separate the lines, remove and discard the dual plane seal.
14. Install plugs or tape over the opened liquid line fittings.
15. Remove the front section of the A/C liquid line from the engine compartment.

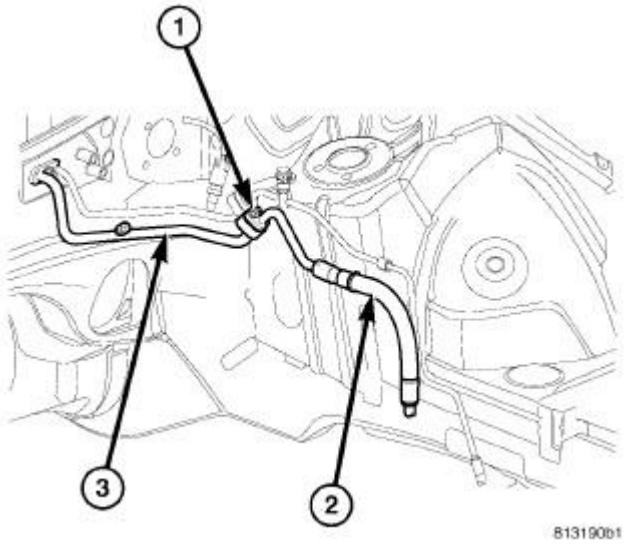

Fig. 8: Removing/Installing Front Suction A/C Line
Courtesy of CHRYSLER LLC

16. Remove the nut (1) from the front section of the A/C suction line (2) to the rear section of the suction line (3), separate the lines, remove and discard the dual plane seal.
17. Install plugs or tape over the opened suction line fittings.
18. Remove the front section of the A/C suction line from the engine compartment.

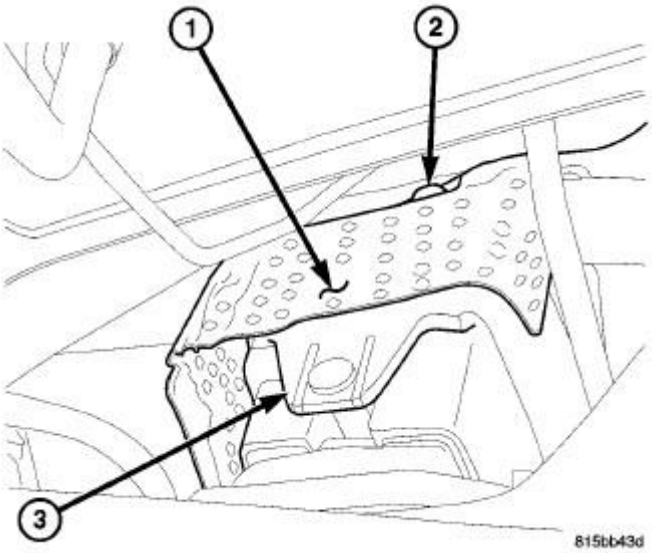

Fig. 9: Engine Mount Heat Shield
Courtesy of CHRYSLER LLC

19. Remove the engine mount heat shield retaining bolt (2) and heat shield (1).

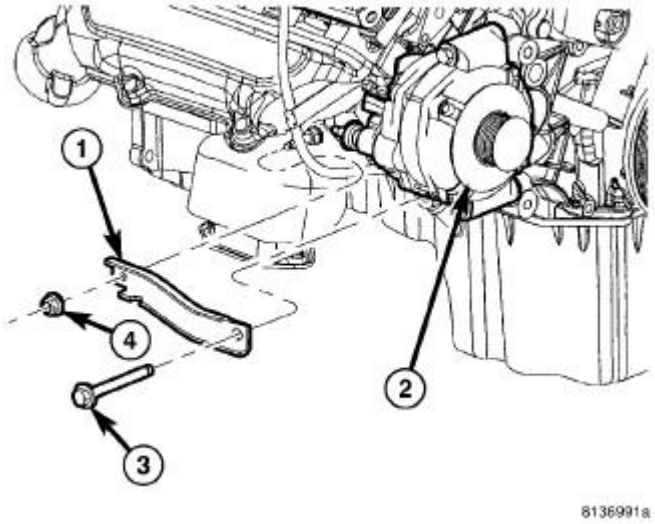

Fig. 10: GENERATOR SUPPORT BRACKET
Courtesy of CHRYSLER LLC

20. Remove the generator (2) and support bracket (1). Refer to **Electrical/Charging/GENERATOR - Removal** .

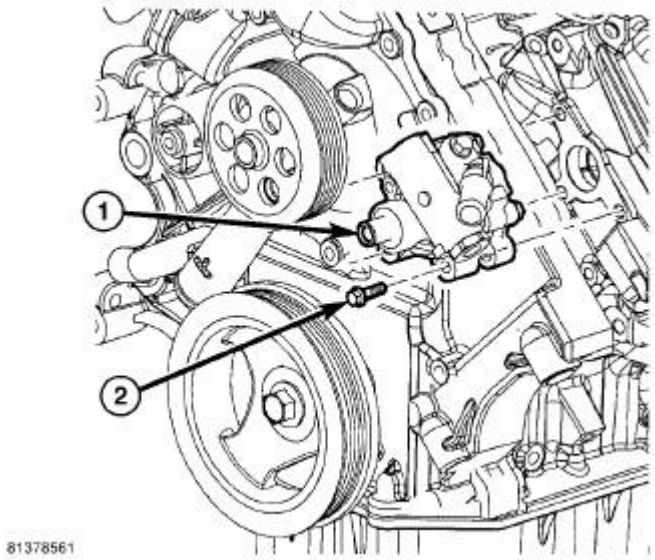

Fig. 11: POWER STEERING PUMP - 5.7L
Courtesy of CHRYSLER LLC

NOTE: It is not necessary to disconnect power steering pump hoses from power steering pump for power steering pump removal.

21. Remove the three power steering pump (1) mounting bolts (2) through the access holes in the

pulley and position the pump aside.

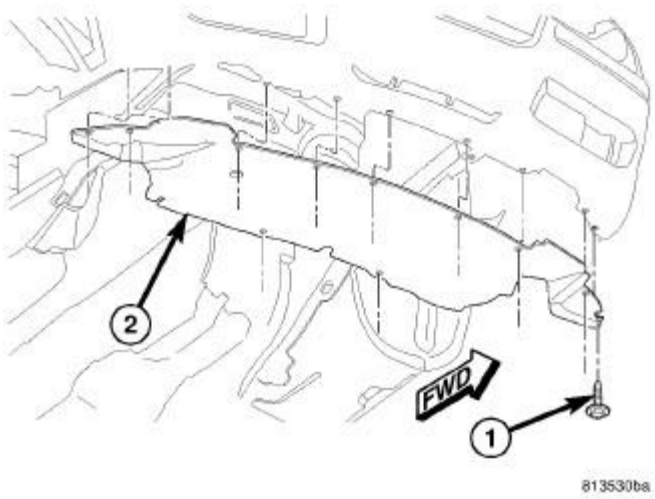

Fig. 12: FRONT BELLY PAN
Courtesy of CHRYSLER LLC

22. Raise and support the vehicle.
23. Remove the belly pan (2).
24. Drain the engine oil.
25. Drain the cooling system. Refer to **Cooling - Standard Procedure** .

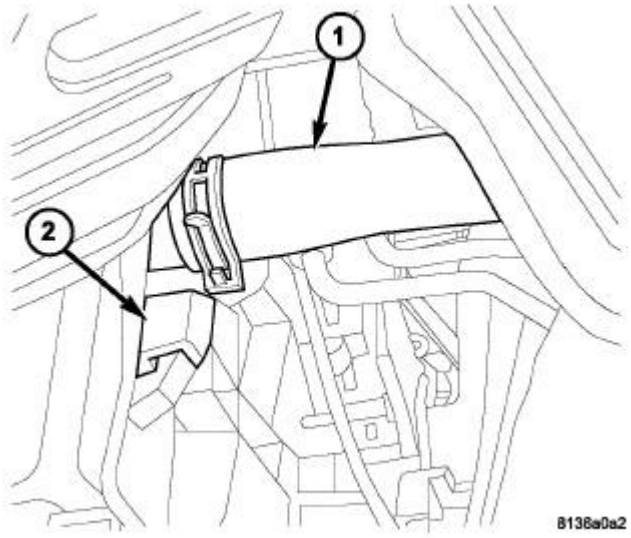

Fig. 13: LOWER RADIATOR HOSE
Courtesy of CHRYSLER LLC

1 - LOWER RADIATOR HOSE
2 - RADIATOR FAN ASSEMBLY

26. Remove lower radiator hose (1).

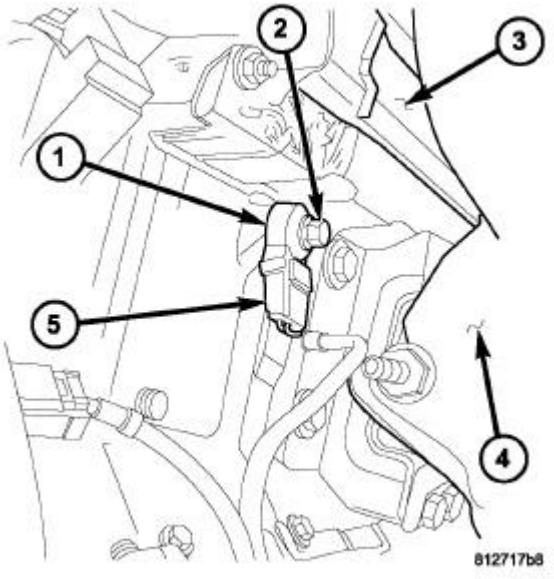

Fig. 14: Knock Sensor 5.7L
Courtesy of CHRYSLER LLC

NOTE: Two knock sensors are used. Each sensor is bolted to the outside of cylinder block below the exhaust manifold.

27. Remove the right and left knock sensor electrical connectors.

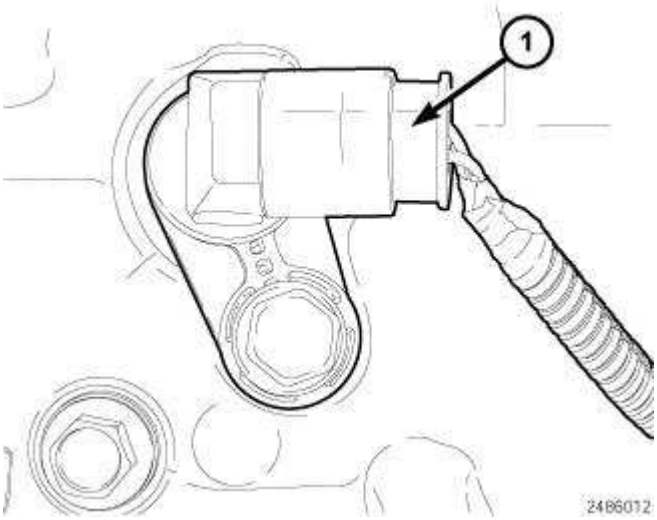

Fig. 15: Crankshaft Position Sensor Electrical Connector
Courtesy of CHRYSLER LLC

NOTE: The Crankshaft Position (CKP) sensor is located at the right-rear side of the engine block.

28. Remove the CKP sensor electrical connector (1).
29. Remove the oil temperature sensor electrical connector.
30. Remove the oil pressure sensor electrical connector.
31. Lower the vehicle.

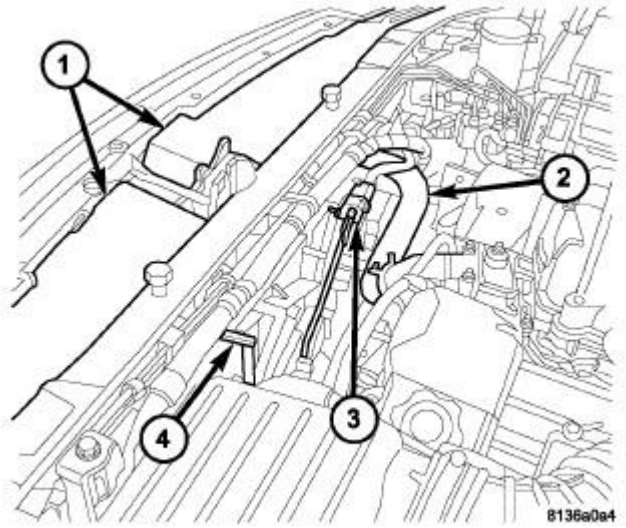

Fig. 16: RADIATOR FAN ASSEMBLY
Courtesy of CHRYSLER LLC

1 - UPPER RADIATOR CLOSURE PANELS
2 - UPPER RADIATOR HOSE
3 - RADIATOR FAN ELECTRICAL CONNECTOR
4 - RADIATOR FAN ASSEMBLY

32. Remove upper radiator hose (2).

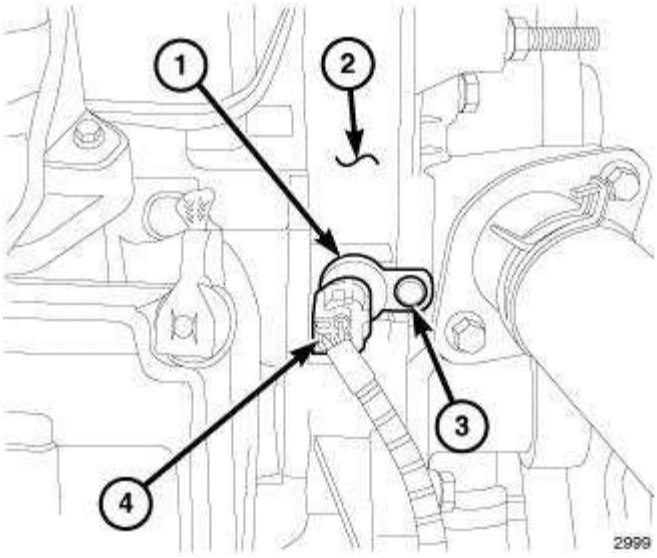

Fig. 17: CAMSHAFT POSITION SENSOR-5.7L
Courtesy of CHRYSLER LLC

33. Disconnect the camshaft position (CMP) sensor electrical connector (4).

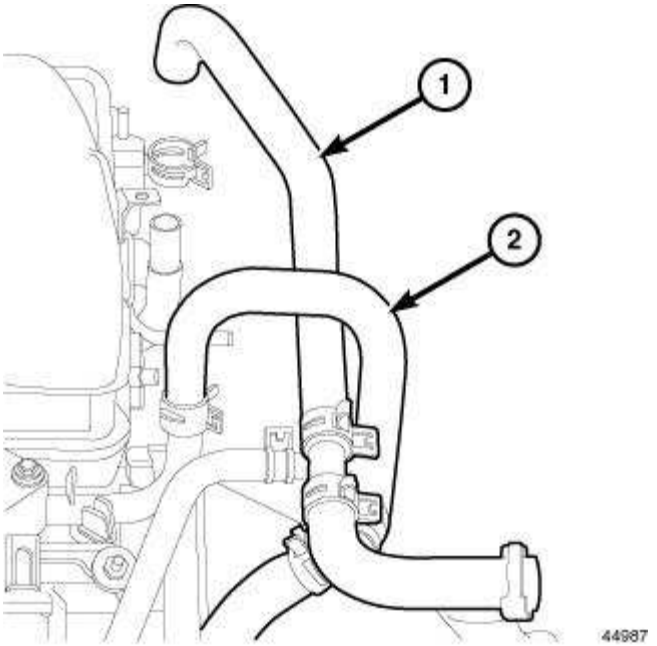

Fig. 18: HEATER HOSE SUPPLY

Courtesy of CHRYSLER LLC

34. Remove the heater hoses (1,2).

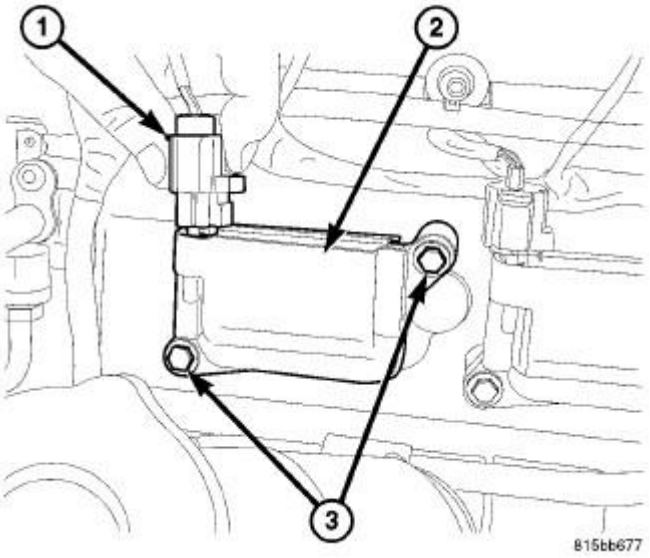

Fig. 19: Ignition Coil Mounting Bolts
Courtesy of CHRYSLER LLC

35. Remove all ignition coil electrical connectors (1).
36. Remove all fuel injector electrical connectors.

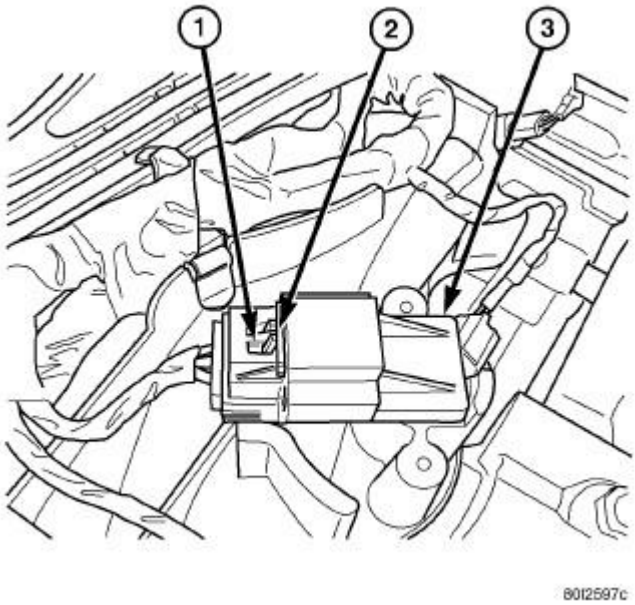

Fig. 20: Removing/Installing MAP Sensor

Courtesy of CHRYSLER LLC

NOTE: The Manifold Absolute Pressure (MAP) sensor (3) is mounted into the top rear of the intake manifold near the cowl hood seal (1).

37. Disconnect the MAP sensor electrical connector by sliding release lock out (1) and pressing down on the lock tab (2).

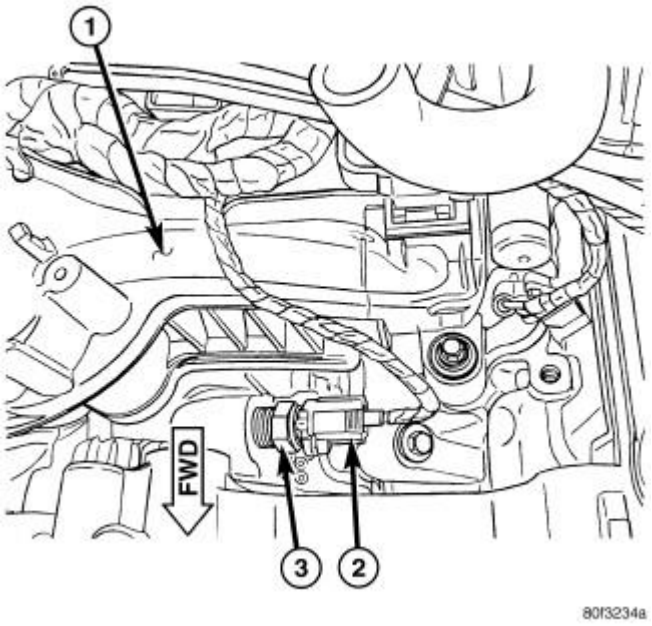

Fig. 21: Removing/Installing ECT
Courtesy of CHRYSLER LLC

38. Remove the coolant temperature sensor (3) electrical connector (2).

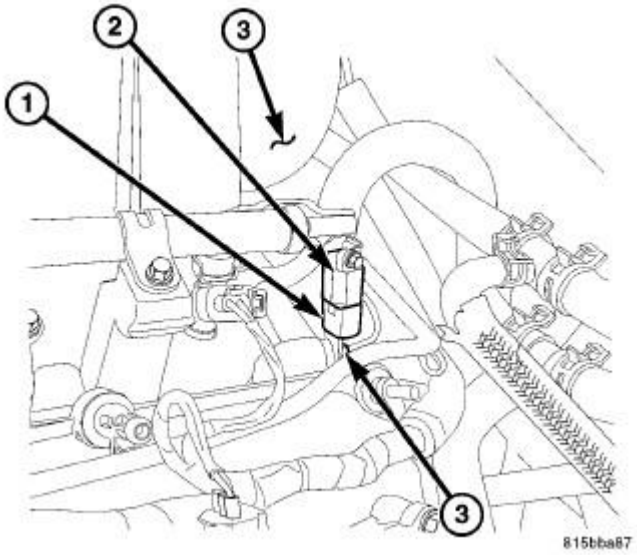

Fig. 22: Ignition Capacitor
Courtesy of CHRYSLER LLC

NOTE: The ignition capacitor (2) is attached to the left rear corner of the intake manifold (3).

39. Remove the ignition capacitor (2) electrical connector (1).

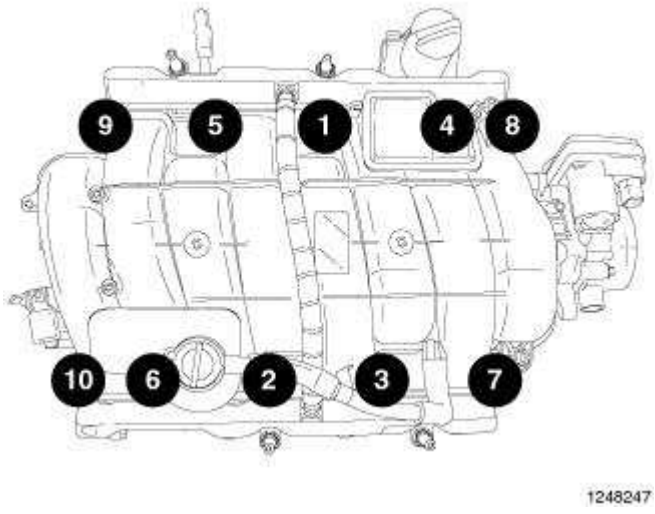

Fig. 23: Intake Manifold Removal & Tightening Sequence
Courtesy of CHRYSLER LLC

NOTE: Remove the intake manifold and throttle body as an assembly.

40. Remove the intake manifold. See **Engine/Manifolds/MANIFOLD, Intake - Removal**.

41. Remove the ground wires from the rear of each cylinder head.
42. Remove the right and left side engine wiring harness and position aside.

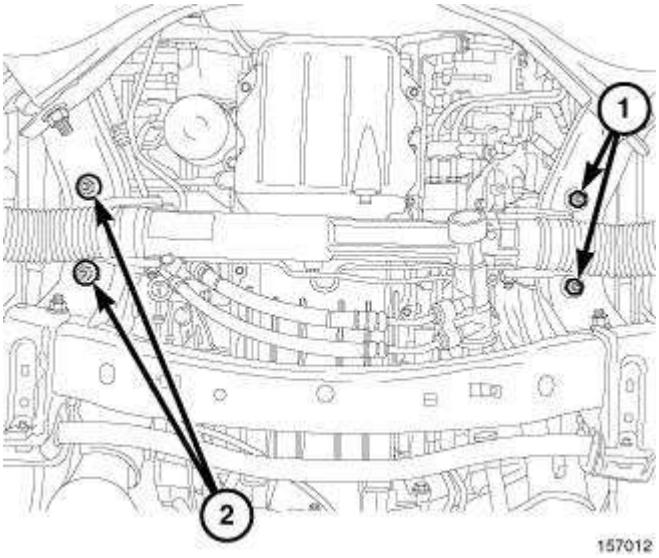

Fig. 24: Engine Mount Nuts
Courtesy of CHRYSLER LLC

43. Raise and support the vehicle.
44. Remove the front engine mount nuts (1,2).
45. Disconnect the transmission oil cooler lines from their retainers at the oil pan.

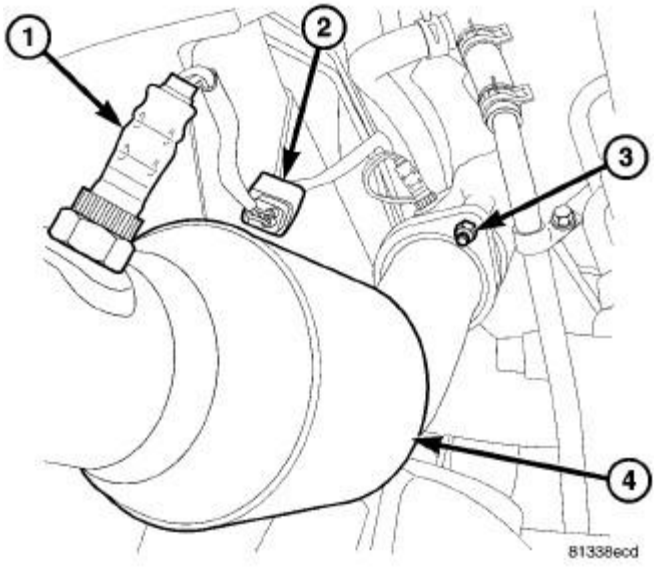

Fig. 25: LH CATALYTIC CONVERTER
Courtesy of CHRYSLER LLC

CAUTION: When separating the exhaust pipes from the manifolds, disconnect

the oxygen sensor connector(s). Allowing the exhaust pipes hanging from the oxygen sensor wires damages the harness and/or sensor.

46. Disconnect the oxygen sensor electrical connectors (2).
47. Saturate all exhaust bolts and nuts with Mopar® Rust Penetrant and allow five minutes for penetration.
48. Remove the exhaust pipe to manifold bolts (3) and separate the exhaust pipes (4) from the exhaust manifolds.

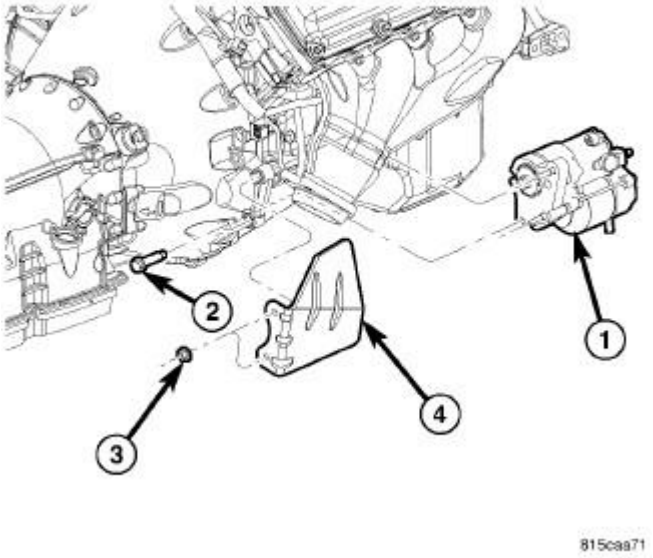

Fig. 26: Removing/Installing Starter
Courtesy of CHRYSLER LLC

49. Remove the starter motor (1) heat shield (4).
50. Disconnect the starter wires, remove the starter motor retaining bolts (2) and remove the starter (1). Refer to **Electrical/Starting/STARTER - Removal** .

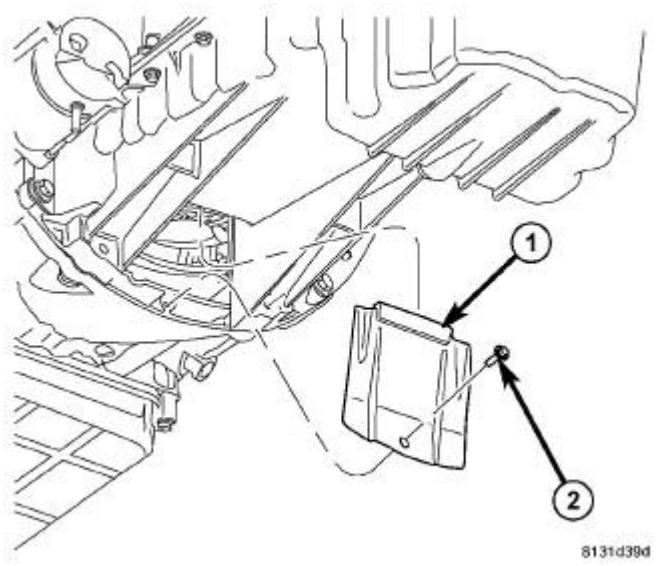

Fig. 27: Remove/Install Torque Converter Access Cover
Courtesy of CHRYSLER LLC

51. Remove the inspection cover (1).

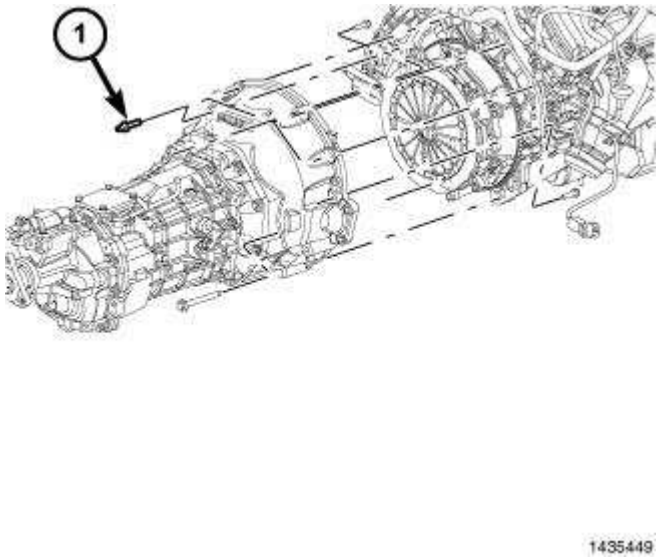

Fig. 28: Removing/Installing Transmission
Courtesy of CHRYSLER LLC

52. Manual transmission equipped vehicles, remove the transmission. Refer to **Transmission and Transfer Case/Manual - Removal** .

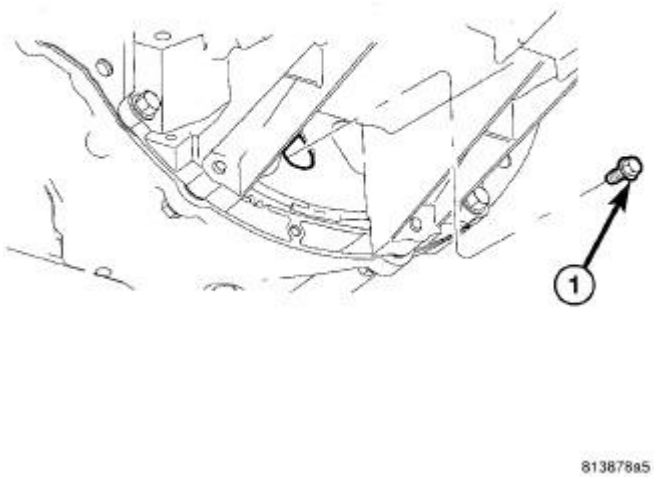

Fig. 29: TORQUE CONVERTER BOLTS
Courtesy of CHRYSLER LLC

53. Automatic transmission equipped vehicles, rotate the crankshaft in clockwise direction until converter bolts (1) are accessible and remove the flexplate to converter bolts (1).

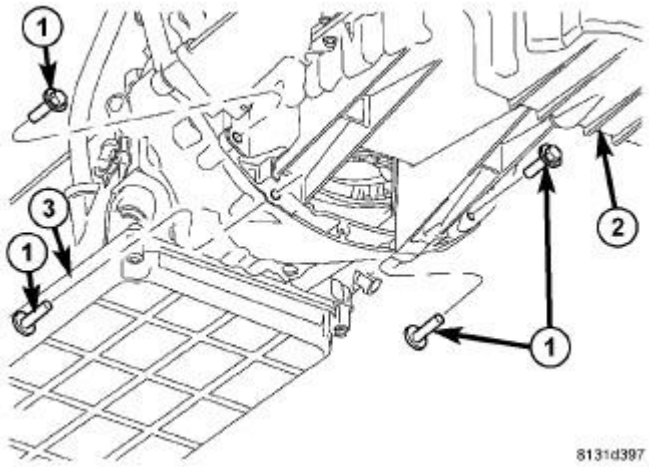

Fig. 30: Remove/Install Transmission To Oil Pan Bolts
Courtesy of CHRYSLER LLC

54. Remove the oil pan to transmission bolts (1).

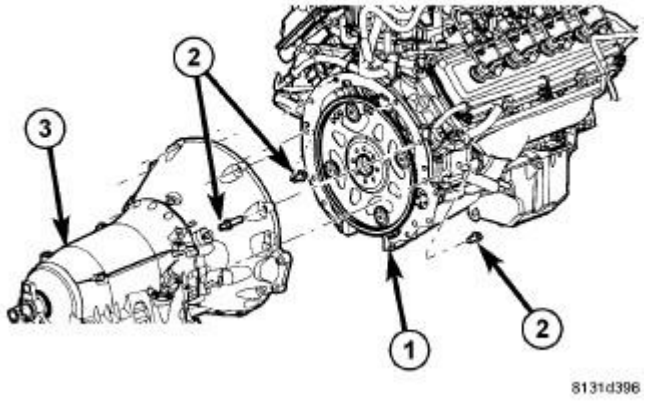

Fig. 31: Remove/Install Transmission To Engine Bolts
Courtesy of CHRYSLER LLC

55. Remove the transmission bell housing to engine block bolts (2).

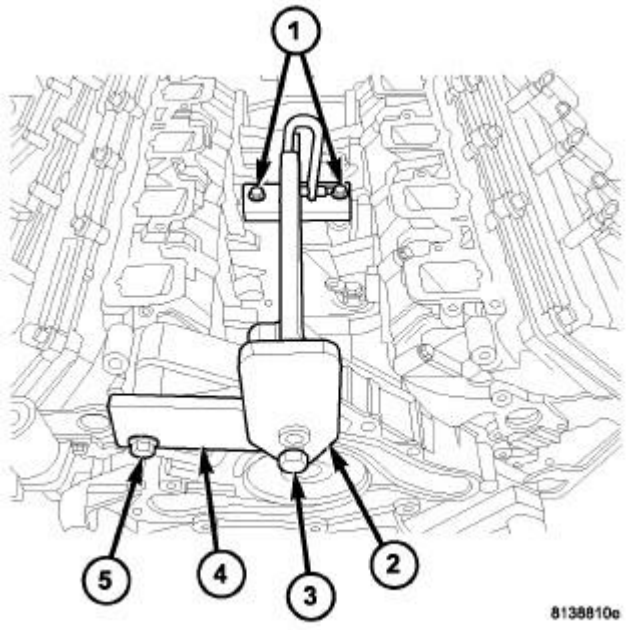

Fig. 32: ENGINE LIFT FIXTURE and ADAPTER
Courtesy of CHRYSLER LLC

56. Lower the vehicle.
57. Remove the left coolant tube.

NOTE: Do not use air tools to install engine lift fixture.

58. Install the engine lift fixture 8984A (2) and adapter 8984-UPD (4).
59. Using a suitable engine hoist, separate the engine from the transmission and remove the engine from the vehicle.
60. Install the engine assembly on a suitable repair stand.

INSTALLATION

INSTALLATION

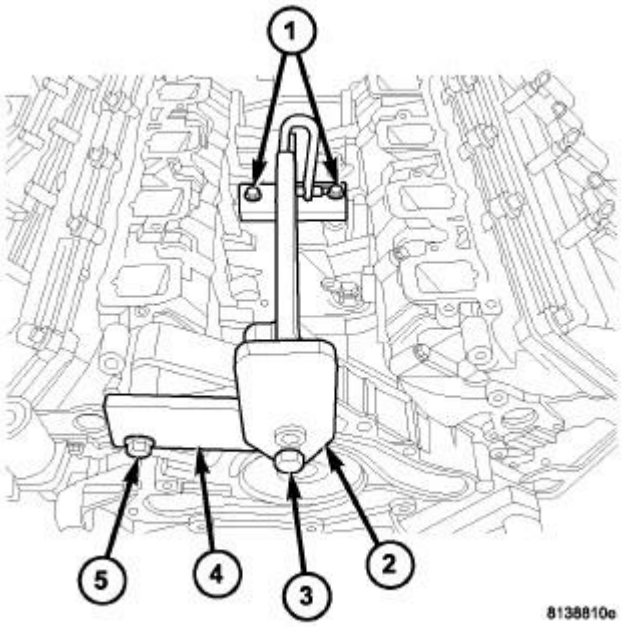

Fig. 33: ENGINE LIFT FIXTURE and ADAPTER
Courtesy of CHRYSLER LLC

NOTE: Do not use air tools to install Engine Lift Fixture and Adapter 8984A (2,3).

1. Install the engine lift fixture 8984A (2) and adapter 8984-UPD (4).
2. Using a suitable engine hoist, lower the engine into in the engine compartment.
3. Automatic transmission equipped vehicles, align the engine with the transmission.
4. Install two transmission to engine block mounting bolts finger tight.
5. Lower the engine assembly until the engine mount studs rest in the frame brackets and remove the engine hoist.

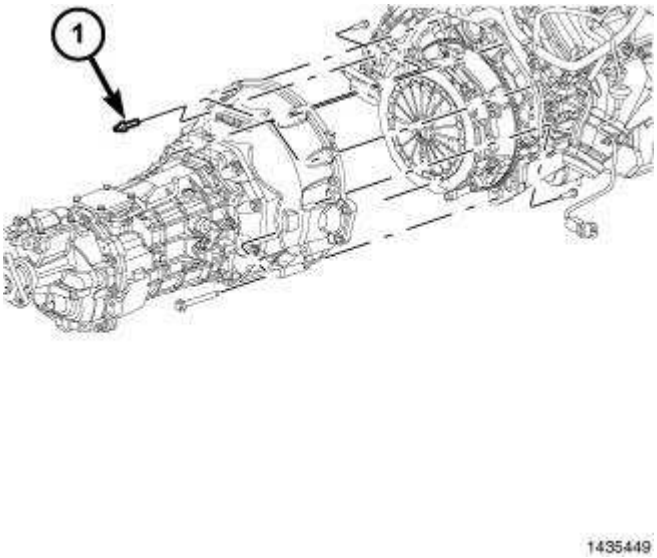

Fig. 34: Removing/Installing Transmission
Courtesy of CHRYSLER LLC

6. Manual transmission equipped vehicles, install the transmission. Refer to **Transmission and Transfer Case/Manual - Installation** .
7. Raise and support the vehicle.

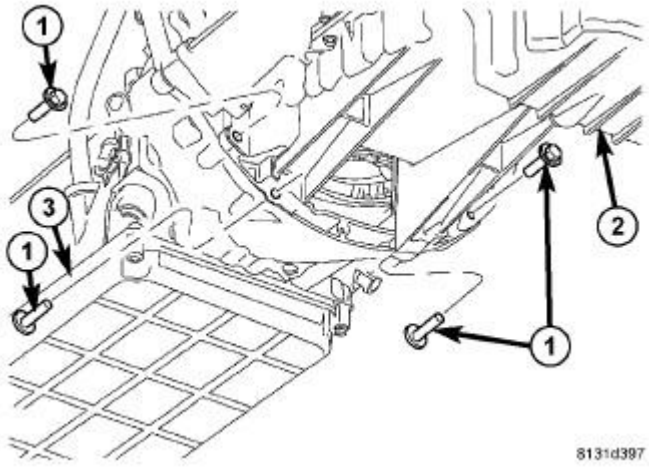

Fig. 35: Remove/Install Transmission To Oil Pan Bolts
Courtesy of CHRYSLER LLC

8. Install the transmission (3) to oil pan (2) bolts (1) and tighten to 39 N.m (29 ft. lbs.).

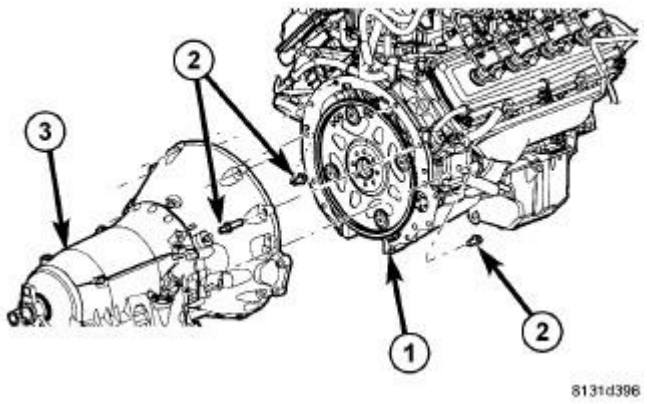

Fig. 36: Removing/Installing Transmission To Engine Bolts
Courtesy of CHRYSLER LLC

9. Install the remaining transmission (3) to engine block (1) mounting bolts (2) and tighten to 68 N.m (50 ft. lbs.).

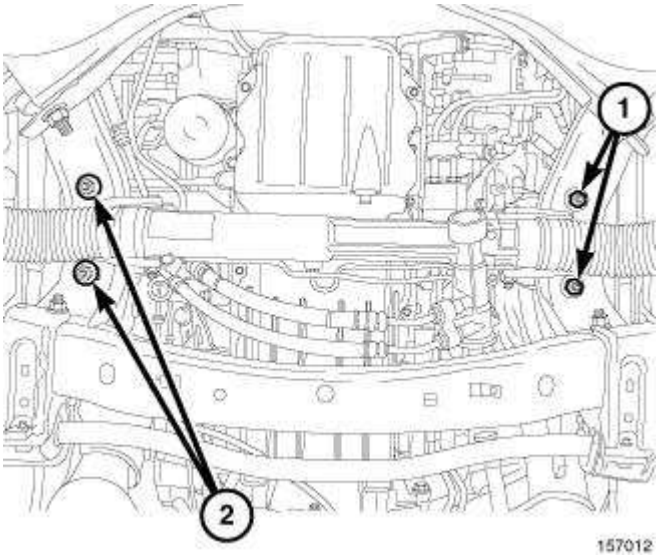

Fig. 37: Engine Mount Nuts
Courtesy of CHRYSLER LLC

10. Install and tighten the front engine mount retaining nuts to 95 N.m (70 ft. lbs.).

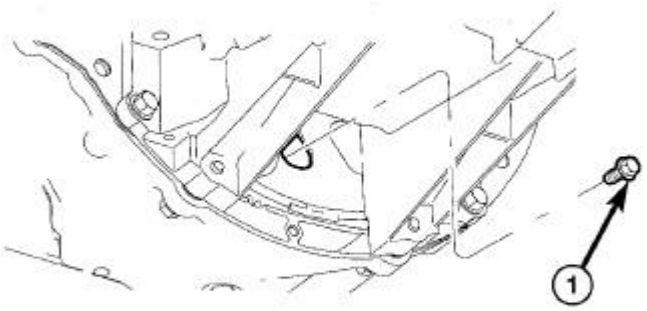

81387885

Fig. 38: TORQUE CONVERTER BOLTS
Courtesy of CHRYSLER LLC

CAUTION: It is essential that the correct length bolts are used to attach the converter to the flexplate. Bolts that are too long will damage the clutch surface inside the torque converter.

11. Automatic transmission equipped vehicles, rotate the crankshaft in clockwise direction and install all torque converter to flexplate bolts (1) finger tight.
12. Verify that the torque converter is pulled flush to the flexplate and tighten bolts to 88 N.m (65 ft. lbs.).

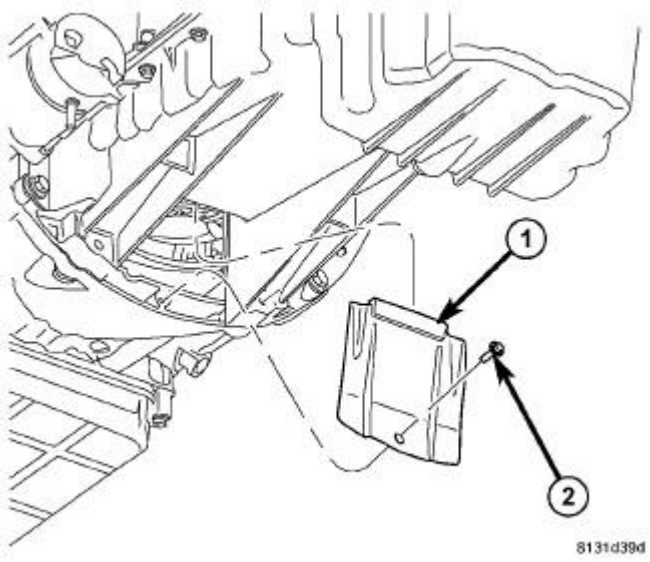

Fig. 39: Remove/Install Torque Converter Access Cover
Courtesy of CHRYSLER LLC

13. Install the inspection cover (1) and tighten bolt (2) to 11 N.m (8 ft. lbs.).

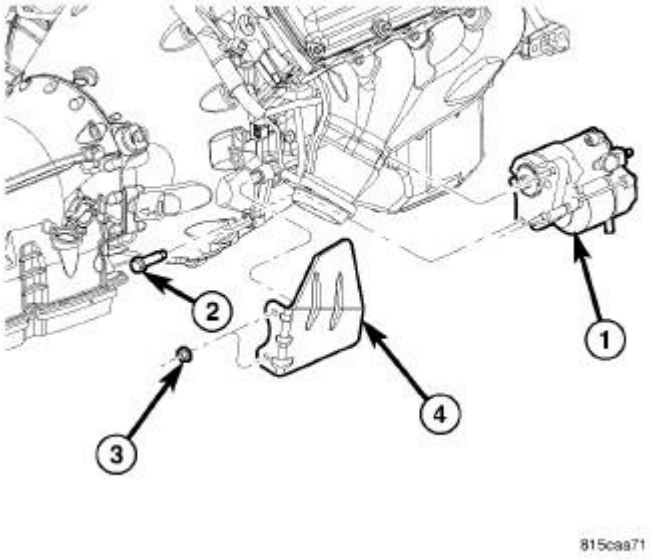

Fig. 40: Removing/Installing Starter
Courtesy of CHRYSLER LLC

14. Position the starter motor into the transmission.
15. Connect the solenoid wire to the starter motor (snaps on).
16. Position the battery cable to the solenoid stud, install the battery cable eyelet nut and tighten to

11 N.m (8 ft. lbs.).

17. Install the three starter motor retaining bolts (2) and tighten to 54 N.m (40 ft. lbs.).
18. Install the starter (1) heat shield (4) and securely tighten nuts (3).

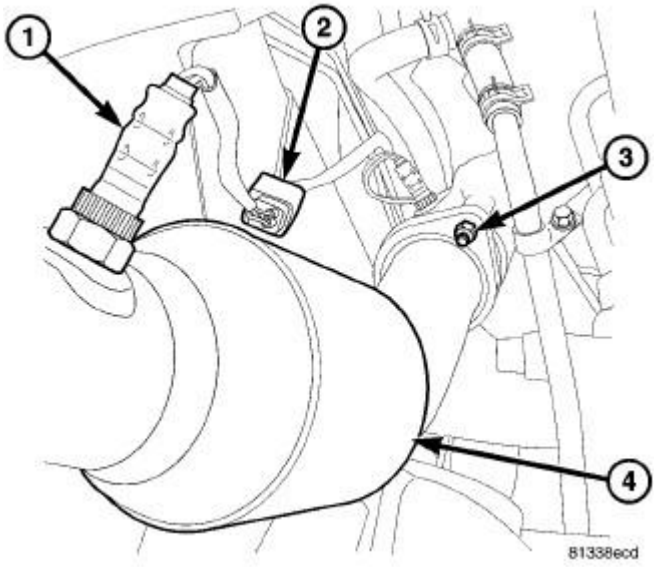

Fig. 41: LH CATALYTIC CONVERTER
Courtesy of CHRYSLER LLC

19. Install the exhaust pipes (4) to the manifolds and connect the oxygen sensor electrical connectors (2). Refer to **Exhaust System/CONVERTER, Catalytic - Installation** .

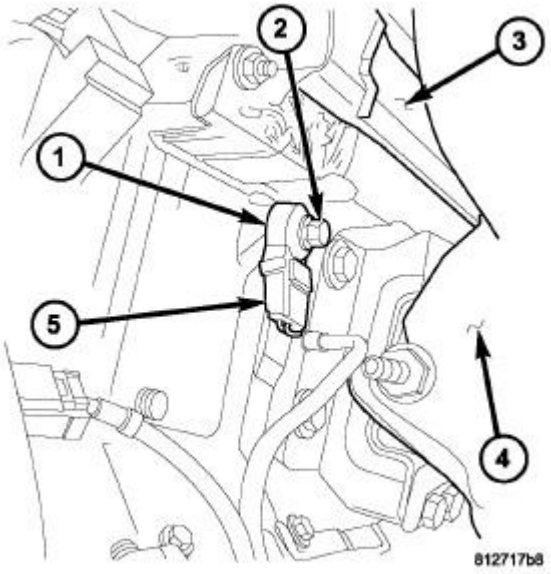

Fig. 42: Knock Sensor 5.7L

Courtesy of CHRYSLER LLC

20. Connect the right and left knock sensor (1) electrical connectors (5).

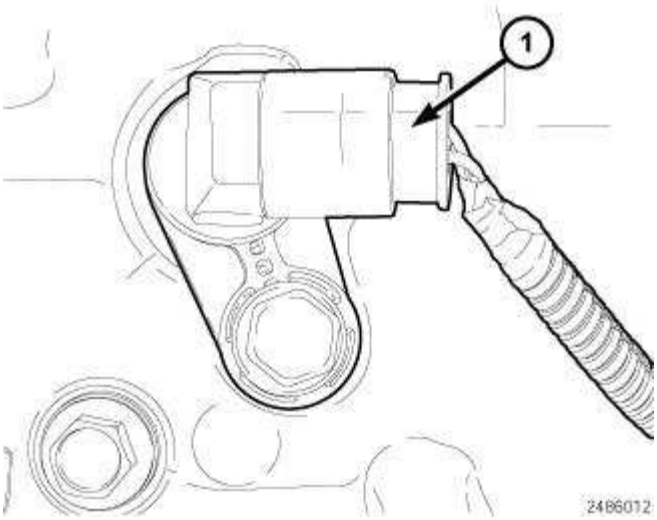

Fig. 43: Crankshaft Position Sensor Electrical Connector
Courtesy of CHRYSLER LLC

NOTE: The Crankshaft Position (CKP) sensor is located at the right-rear side of the engine block.

21. Connect the CKP sensor electrical connector (1).
22. Connect the oil temperature sensor electrical connector.
23. Connect the oil pressure sensor electrical connector.
24. Connect the transmission oil cooler lines to their retainers at the oil pan.

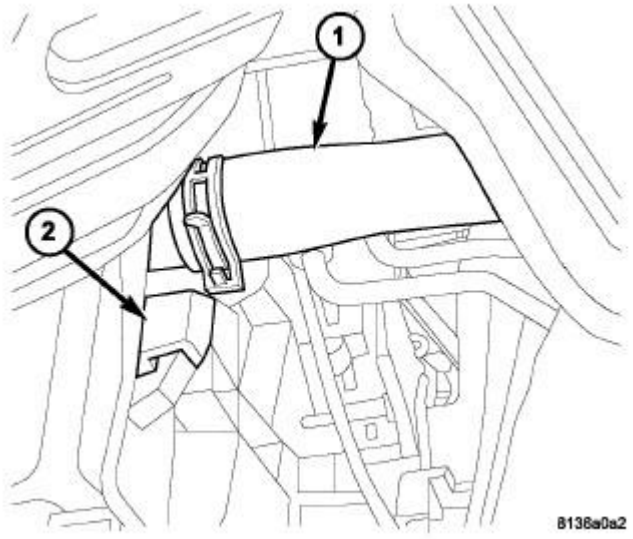

Fig. 44: LOWER RADIATOR HOSE
Courtesy of CHRYSLER LLC

1 - LOWER RADIATOR HOSE 2 - RADIATOR FAN ASSEMBLY

25. Install the lower radiator hose (1).

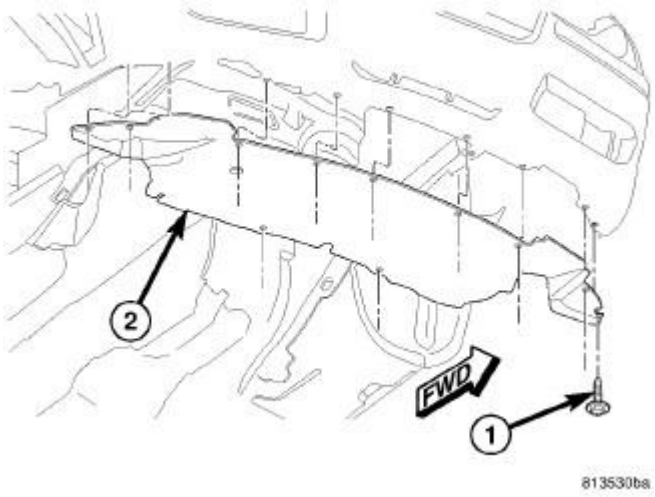

Fig. 45: FRONT BELLY PAN
Courtesy of CHRYSLER LLC

26. Install the belly pan (2).
27. Lower the vehicle.

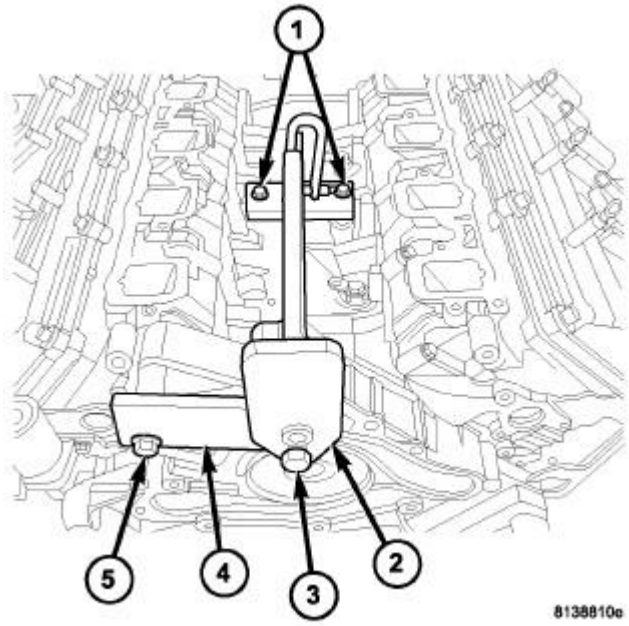

Fig. 46: ENGINE LIFT FIXTURE and ADAPTER
Courtesy of CHRYSLER LLC

28. Remove the engine lift fixture 8984A (2) and adapter 8984-UPD (4).
29. Install the left coolant tube.
30. Install the left and right side wiring harness.

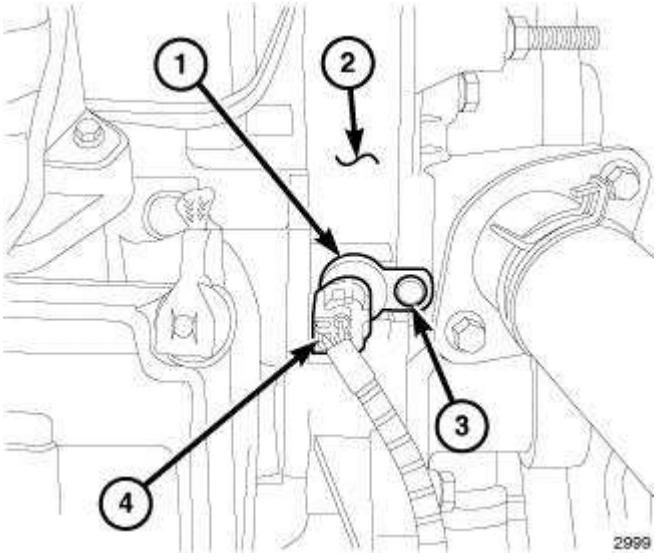

Fig. 47: CAMSHAFT POSITION SENSOR-5.7L
Courtesy of CHRYSLER LLC

31. Connect the camshaft position sensor electrical connector (4).

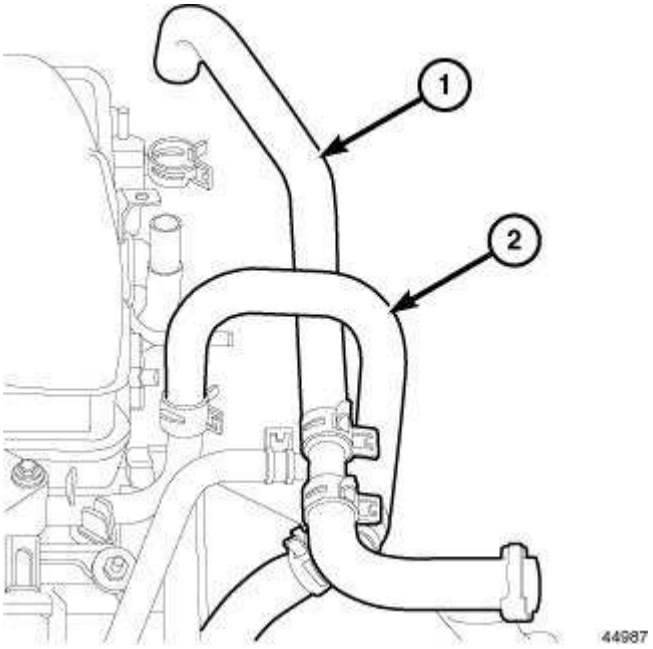

Fig. 48: HEATER HOSE SUPPLY
Courtesy of CHRYSLER LLC

32. Connect the heater hoses (1,2).
33. Connect the ground wires to the rear of each cylinder head.

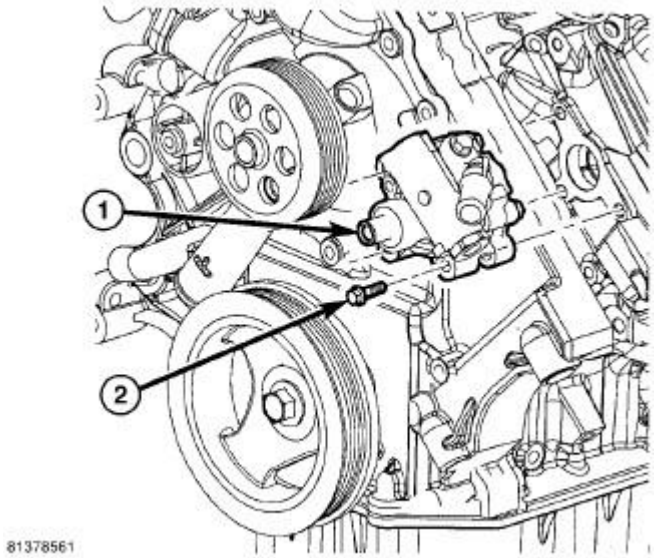

Fig. 49: POWER STEERING PUMP - 5.7L
Courtesy of CHRYSLER LLC

34. Install the three power steering pump (1) retaining bolts (2) through the access holes in the pulley and tighten the bolts to 28 N.m (21 ft. lbs.).

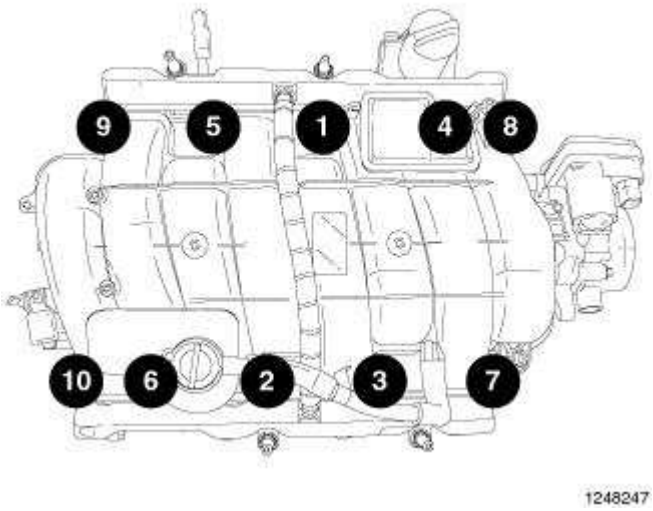

Fig. 50: Intake Manifold Removal & Tightening Sequence
Courtesy of CHRYSLER LLC

35. Install the intake manifold. See **Engine/Manifolds/MANIFOLD, Intake - Installation**.

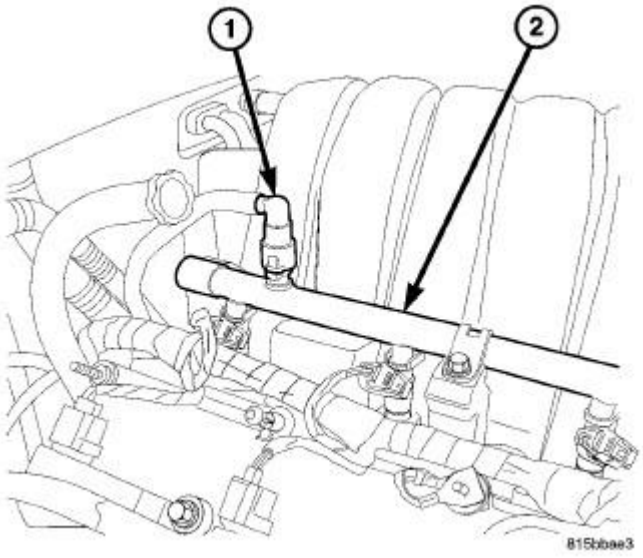

Fig. 51: Fuel Line At Fuel Rail
Courtesy of CHRYSLER LLC

36. Connect the fuel line (1) to the fuel rail. Refer to **Fuel System/Fuel Delivery/FITTING, Quick Connect - Standard Procedure** .

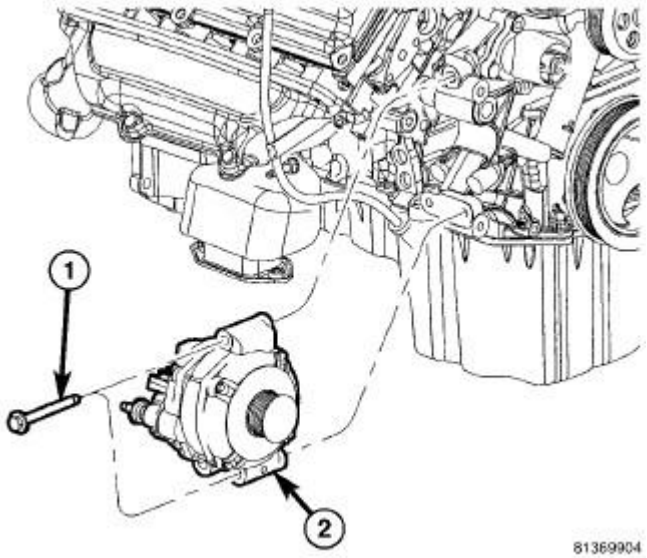

Fig. 52: GENERATOR
Courtesy of CHRYSLER LLC

37. Install the generator (2) and connect the electrical connectors. Refer to **Electrical/Charging/GENERATOR - Installation** .

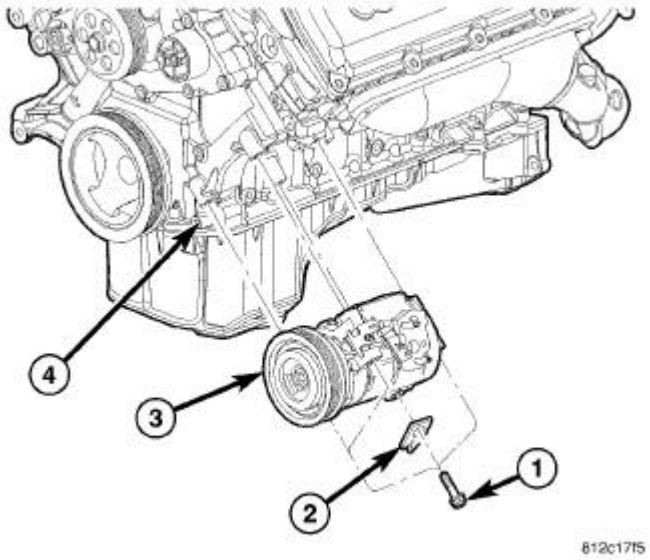

Fig. 53: Removing/Installing A/C Compressor
Courtesy of CHRYSLER LLC

38. Install the A/C compressor (3). Refer to **Heating and Air Conditioning/Plumbing/COMPRESSOR, A/C - Removal** .

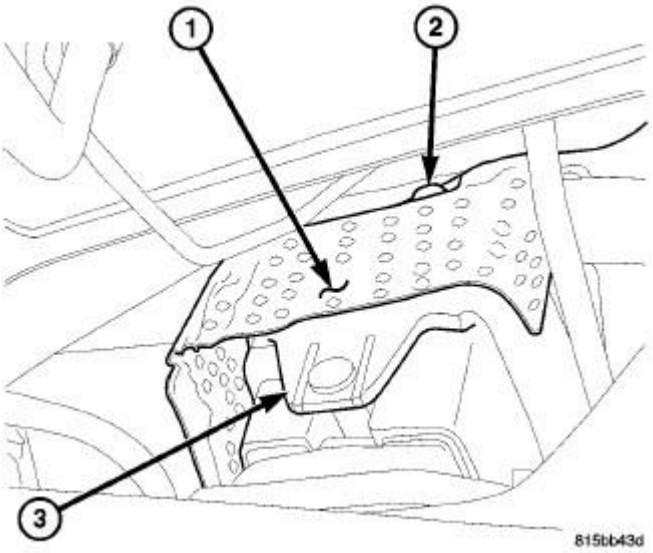

Fig. 54: Engine Mount Heat Shield
Courtesy of CHRYSLER LLC

39. Install the engine mount heat shield (1) and tighten fastener (2).

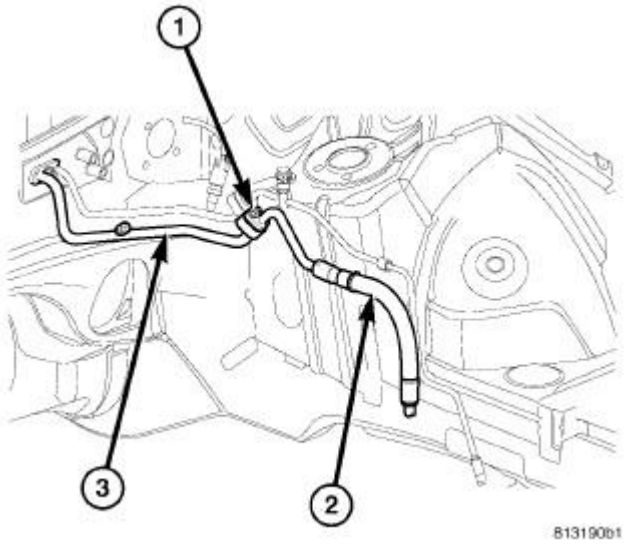

Fig. 55: Removing/Installing Front Suction A/C Line
Courtesy of CHRYSLER LLC

40. Position the front section of the A/C suction line (2) into the engine compartment.
41. Remove the tape or plugs from the fittings that connect the front section of the A/C suction line to the rear section of the A/C suction line (3).
42. Lubricate a new dual plane seal with clean refrigerant oil and install it onto the suction line fitting. Use only the specified seal as it is made of a special material for the R-134a system. Use

only refrigerant oil of the type recommended for the A/C compressor in the vehicle.

43. Connect the front section of the A/C suction line to the rear section of the A/C suction line.
44. Install the nut (1) that secures the front section of the A/C suction line to the rear section of the A/C suction line and tighten the nut to 22 N.m (16 ft. lbs.).

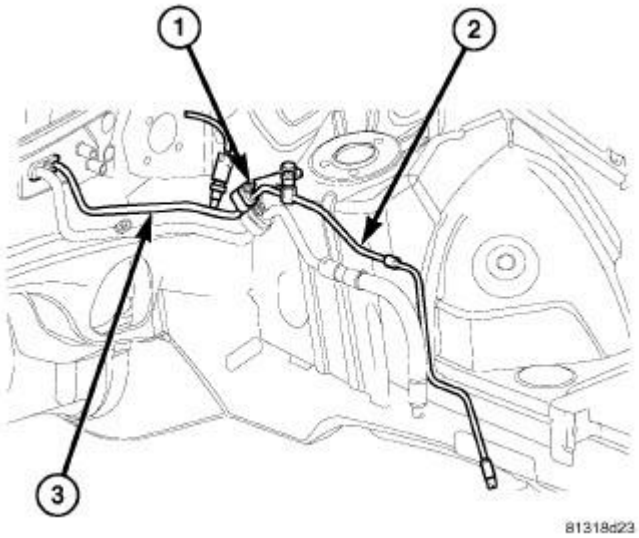

Fig. 56: Removing/Installing Front Liquid A/C Line
Courtesy of CHRYSLER LLC

45. Position the front section of the A/C liquid line into the engine compartment.
46. Remove the tape or plugs from the fittings that connect the front section of the A/C liquid line to the rear section of the A/C liquid line (3).
47. Lubricate a new dual plane seal with clean refrigerant oil and install it onto the liquid line fitting. Use only the specified seal as it is made of a special material for the R-134a system. Use only refrigerant oil of the type recommended for the A/C compressor in the vehicle.
48. Connect the front section of the A/C liquid line to the rear section of the A/C liquid line.
49. Install the nut (1) that secures the front section of the A/C liquid line to the rear section of the A/C liquid line and tighten the nut to 22 N.m (16 ft. lbs.).

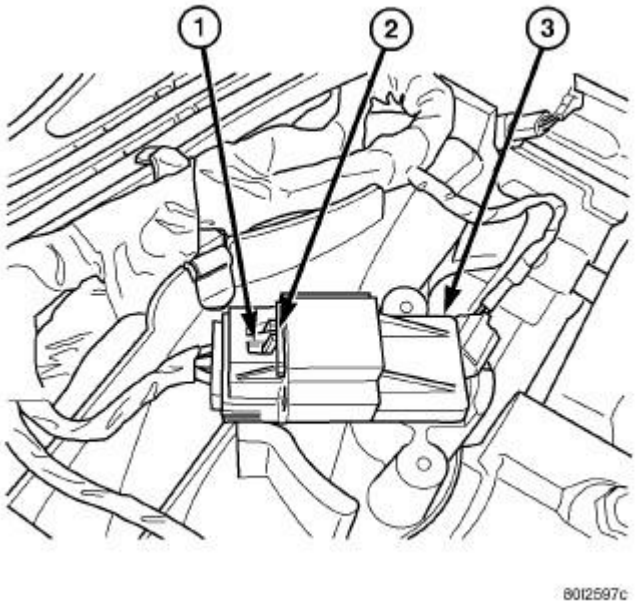

Fig. 57: Removing/Installing MAP Sensor
Courtesy of CHRYSLER LLC

NOTE: The Manifold Absolute Pressure (MAP) sensor (3) is mounted into the top rear of the intake manifold near the cowl hood seal (1).

50. Connect the MAP sensor electrical connector and slide the release lock into position.

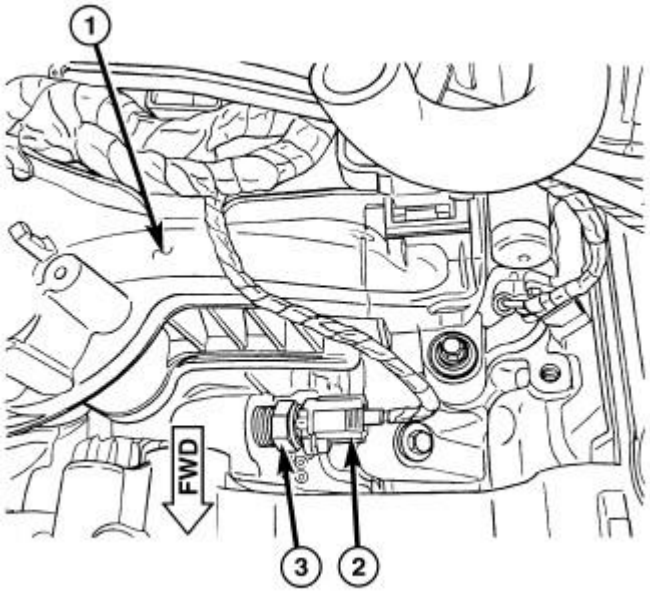

Fig. 58: Removing/Installing ECT
Courtesy of CHRYSLER LLC

51. Connect the coolant temperature sensor (3) electrical connector (2).

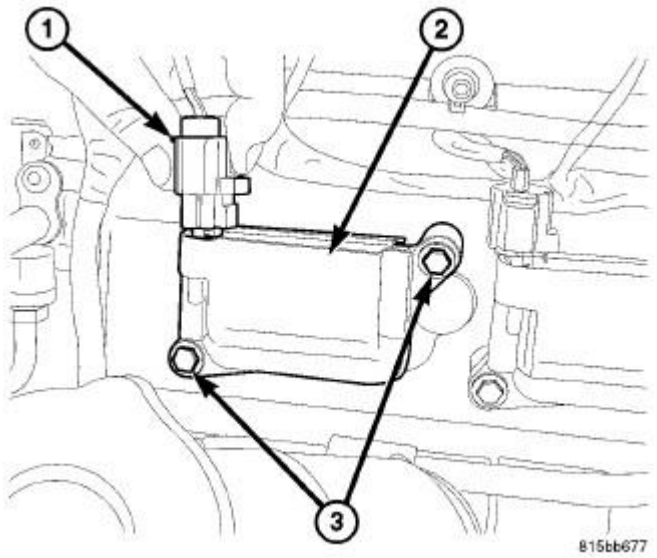

Fig. 59: Ignition Coil Mounting Bolts
Courtesy of CHRYSLER LLC

52. Connect all ignition coil electrical connectors (1).
53. Connect all fuel injector electrical connectors.

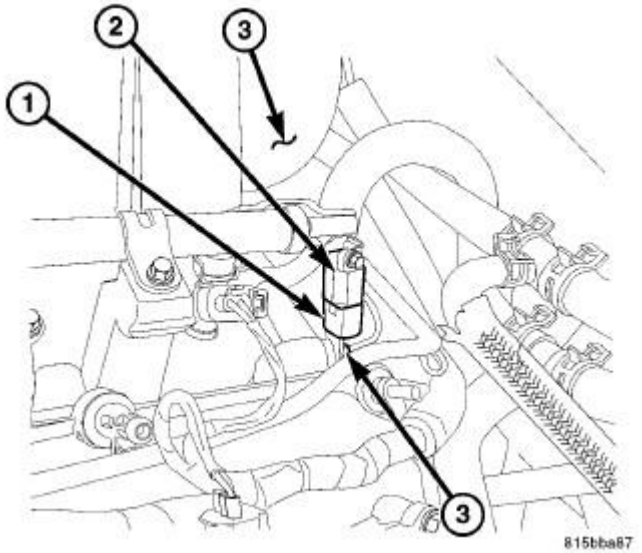

Fig. 60: Ignition Capacitor
Courtesy of CHRYSLER LLC

NOTE: The ignition capacitor (2) is attached to the left rear corner of the intake manifold (3).

54. Connect the ignition capacitor (2) electrical connector (1).

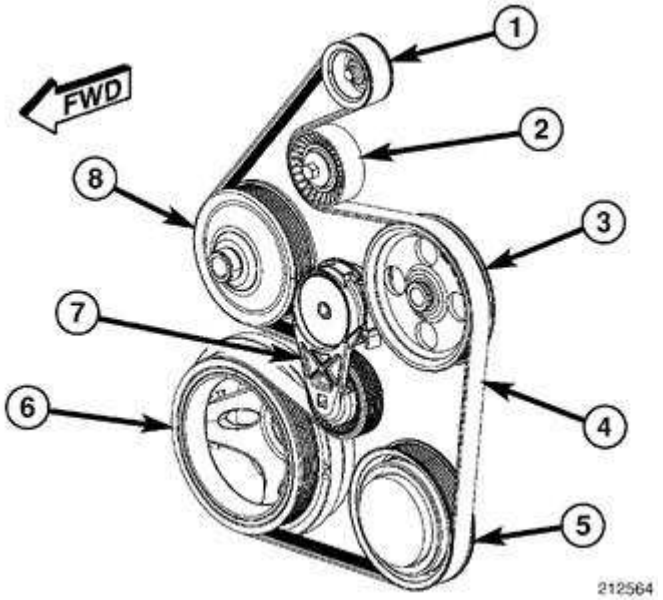

Fig. 61: Identifying Accessory Drive Belt Routing - 5.7L
Courtesy of CHRYSLER LLC

CAUTION: Do not let the tensioner arm snap back to the freearm position, sever damage may occur to the tensioner.

55. Rotate the accessory drive belt tensioner (7) counterclockwise until it contacts it's stop and install the accessory drive belt (4) onto the pulleys, then slowly release the tensioner.
56. Install the cooling fan. Refer to **Cooling/Engine/FAN, Cooling - Installation** .

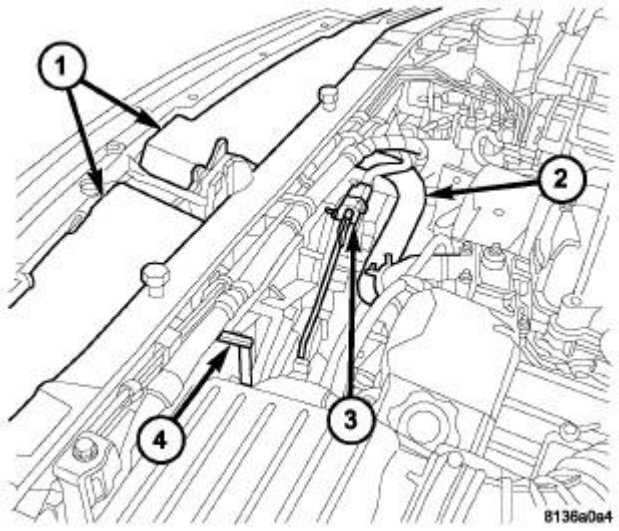

Fig. 62: RADIATOR FAN ASSEMBLY
Courtesy of CHRYSLER LLC

1 - UPPER RADIATOR CLOSURE PANELS
2 - UPPER RADIATOR HOSE
3 - RADIATOR FAN ELECTRICAL CONNECTOR
4 - RADIATOR FAN ASSEMBLY

57. Install the upper radiator hose (2).

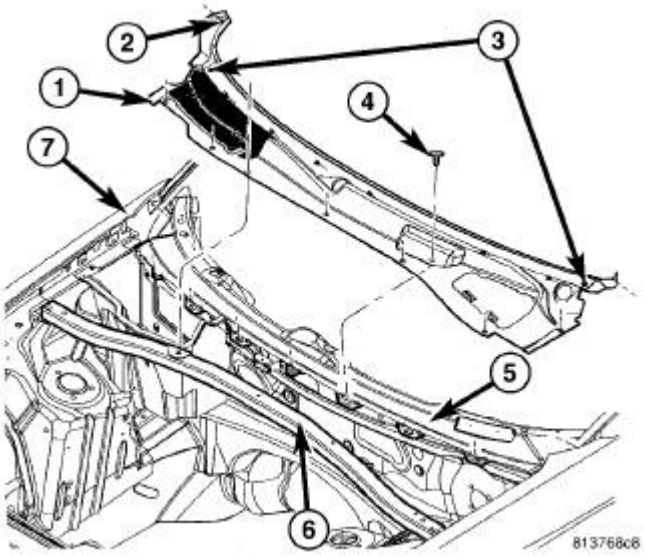

Fig. 63: Removing/Installing Cowl Panel
Courtesy of CHRYSLER LLC

58. Install the strut tower support (6) and tighten bolts to 38 N.m (28 ft. lbs.).
59. Install the cowl top panel. Refer to **Body/Exterior/COVER, Cowl Panel - Installation** .

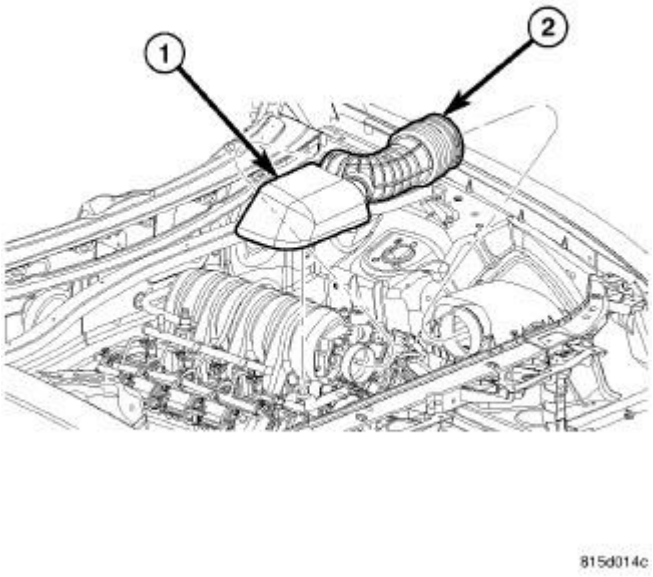

Fig. 64: Air Cleaner Duct
Courtesy of CHRYSLER LLC

60. Install the air cleaner housing (1) and clean air tube (2). See **Engine/Air Intake System/BODY, Air Cleaner - Installation**.
61. Install the make up air hose.
62. Connect the intake air temperature (IAT) sensor connector.
63. Fill the engine with oil. Refer to **Vehicle Quick Reference/Capacities and Recommended Fluids - Specifications** .
64. Fill the cooling system. Refer to **Cooling - Standard Procedure** .

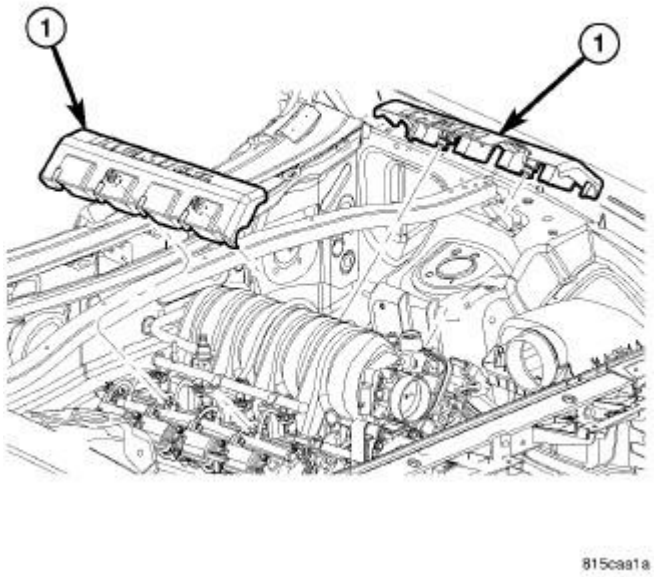

Fig. 65: Engine Covers
Courtesy of CHRYSLER LLC

65. Snap the engine covers (1) onto the fuel rails.

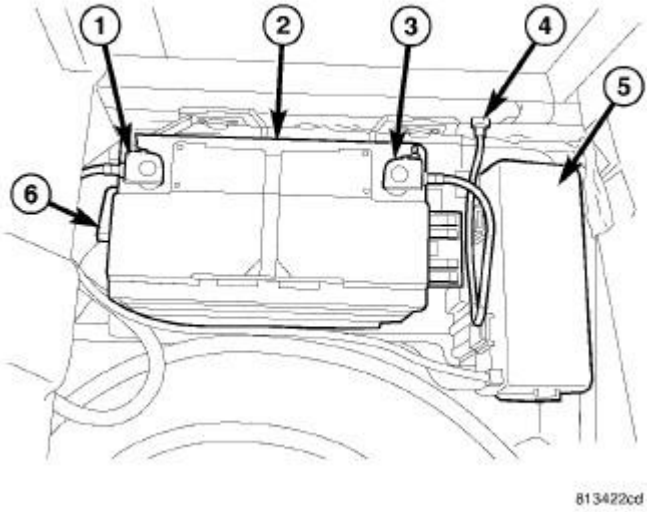

Fig. 66: Battery System Components And PDC Cover
Courtesy of CHRYSLER LLC

66. Connect the negative battery cable (3).
67. Charge the A/C system. Refer to **Heating and Air Conditioning/Plumbing - Standard Procedure** .

68. Start the engine and check for leaks.
69. Road test the vehicle.

SPECIFICATIONS

SPECIFICATIONS

EAGLE ENGINE - 90° V-8 OHV

DESCRIPTION	SPECIFICATION	
-	**Metric**	**Standard**
Displacement	5.7 Liters	348 CID
Bore	99.5 mm	3.92 in.
Stroke	90.9 mm	3.58 in.
Compression Ratio	10.5:1	
Max. Variation Between Cylinders	25%	
Firing Order	1-8-4-3-6-5-7-2	
Lubrication	Pressure Feed - Full Flow Filtration	
Cooling System	Liquid Cooled	
Cylinder Block	Cast Iron	
Cylinder Head	Aluminum	
Crankshaft	Nodular Iron	
Camshaft	Cast Iron	
Pistons	Aluminum Alloy	
Connecting Rods	Powdered Metal	

CYLINDER BLOCK

DESCRIPTION	SPECIFICATION	
-	**Metric**	**Standard**
Cylinder Bore Diameter	99.50 mm	3.92 in.
Out of Round (MAX)	0.0076 mm	0.0003 in.
Taper (MAX)	0.0127 mm	0.0005 in.
Lifter Bore Diameter	21.45 - 21.425 mm	0.8444 - 0.8435 in.

PISTONS

DESCRIPTION	SPECIFICATION	
-	**Metric**	**Standard**
Clearance Measured at 38.0 mm (1.5 in.) Below Deck	- 0.031 - 0.058 mm	- 0.012 - 0.023 in.
Ring Groove Diameter	-	
Top Groove	90.4 - 90.6 mm	3.56 - 3.57 in.

Second Groove	88.4 - 88.7 mm	3.48 - 3.49 in.
Weight	413 grams	14.56 oz.
Piston Length	53.3 mm	2.10 in.
Ring Groove Width	-	-
No. 1	1.23 - 1.26 mm	0.048 - 0.0496 in
No. 2	1.23 - 1.25 mm	0.048 - 0.0492 in.
No. 3	2.03 - 2.05 mm	0.079 - 0.080 in.

PISTON PINS

DESCRIPTION	SPECIFICATION	
-	Metric	Standard
Clearance In Piston	0.005 - 0.014 mm	0.0001 - 0.0005 in.
Diameter	24.004 - 24.007 mm	0.945 - 0.9451 in.
Length	62.99 - 63.21 mm	2.47 - 2.48 in.

PISTON RINGS

DESCRIPTION	SPECIFICATION	
-	Metric	Standard
Ring Gap	-	
Top Compression Ring	0.40 - 0.55 mm	0.015 - 0.021 in.
Second Compression Ring	0.24 - 0.51 mm	0.009 - 0.020 in.
Oil Control Rails	0.15 - 0.66 mm	0.0059 - 0.0259 in.
Side Clearance	-	
Top Compression Ring	0.04 - 0.09 mm	0.001 - 0.0035 in.
Second Compression Ring	0.04 -.08 mm	0.001 - 0.0031 in.
Oil Control Rails	0.06 - 0.21 mm	0.002 - 0.008 in.
Ring Width	-	
Top Compression Ring	1.17 - 1.19 mm	0.0460 - 0.0468 in.
Second Compression Ring	1.17 - 1.19 mm	0.0460 - 0.0468 in.
Oil Control Rails	0.387 - 0.413 mm	0.015 - 0.016 in.

CONNECTING RODS

DESCRIPTION	SPECIFICATION	
-	Metric	Standard
Piston Pin Bore Diameter	24.014 - 24.024 mm	0.9454 - 0.9458 in.
Side Clearance	0.10 - 0.35 mm	0.003 - 0.0137 in.

CRANKSHAFT

DESCRIPTION	SPECIFICATION	
-	Metric	Standard
Main Bearing Journal Diameter	64.988 - 65.012 mm	2.5585 - 2.5595 in.

Bearing Clearance	0.023 - 0.051 mm	0.0009 - 0.002 in.
Out of Round (MAX)	0.005 mm	0.0002 in.
Taper (MAX)	0.003 mm	0.0001 in.
End Play	0.052 - 0.282 mm	0.002 - 0.011 in.
End Play (MAX)	0.282 mm	0.011 in.
Connecting Rod Journal Diameter	53.992 - 54.008 mm	2.126 in.
Bearing Clearance	0.020 - 0.060 mm	0.0007 - 0.0023 in.
Out of Round (MAX)	0.005 mm	0.0002 in.
Taper (MAX)	0.003 mm	0.0001 in.

CAMSHAFT

DESCRIPTION	SPECIFICATION	
-	Metric	Standard
Bearing Journal Diameter	-	
No. 1	58.2 mm	2.29 in.
No. 2	57.8 mm	2.28 in.
No. 3	57.4 mm	2.26 in.
No. 4	57.0 mm	2.24 in.
No. 5	43.633 mm	1.72 in.
Bearing To Journal Clearance Standard	-	
No. 1	0.040 - 0.080 mm	0015 -.003 in.
No. 2	0.050 -0.090 mm	0.0019 -.0035 in.
No. 3	0.040 - 0.080 mm	0015 -.003 in.
No. 4	0.050 - 0.090 mm	0.0019 -.0035 in.
No. 5	0.040 - 0.080 mm	0015 -.003 in.
Camshaft End Play	080 - 0.290 mm	0.0031 - 0.0114 in.

VALVE TIMING

DESCRIPTION	SPECIFICATION
Intake	-
Opens (BTDC)	21.7°
Closes (ATDC)	236.3°
Duration	258°
Exhaust	-
Opens (BTDC)	270.2°
Closes (ATDC)	17.8°
Duration	288°
Valve Overlap	39.5°

CYLINDER HEAD

DESCRIPTION	SPECIFICATION	
-	Metric	Standard
Valve Seat Angle	44.5° - 45.0°	
Valve Seat Runout (MAX)	0.05 mm	0.0019 in.
Valve Seat Width (finish)	-	-
Intake	1.18 - 1.62 mm	0638 in.
Exhaust	1.48 - 1.92 mm	0.0583 - 0.0756 in.
Guide Bore Diameter (Std.)	7.975 - 8.00 mm	0.3134 - 0.315 in.

HYDRAULIC TAPPETS

DESCRIPTION	SPECIFICATION	
-	Metric	Standard
Body Diameter	21.387 - 21.405 mm	0.8420 - 0.8427 in.
Clearance (to bore)	0.020 - 0.063 mm	0.0008 - 0.0025 in.
Dry Lash	3.0 mm (at the valve)	0.1181 in. (at the valve)

VALVES

DESCRIPTION	SPECIFICATION	
-	Metric	Standard
Face Angle	45.0° - 45.5°	
Head Diameter	-	
Intake	50.67 - 50.93 mm	1.99 - 2.01 in.
Exhaust	39.27 - 39.53 mm	1.55 - 1.56 in.
Length (overall)	-	
Intake	123.38 - 123.76 mm	4.857 - 4.872 in.
Exhaust	120.475 - 120.855 mm	4.743 - 4.758 in.
Stem Diameter	-	
Intake	7.935 - 7.953 mm	0.312 - 0.313 in.
Exhaust	7.932 - 7.950 mm	0.312 - 0.313 in.
Stem - to - Guide Clearance	-	
Intake	0.022 - 0.065 mm	0.0008 - 0.0025 in.
Exhaust	0.025 - 0.065 mm	0.0009 - 0.0025 in.
Valve Lift (@ zero lash)	-	
Intake	12.0 mm	0.472 in.
Exhaust	11.70 mm	0.460 in.

VALVE SPRING

DESCRIPTION	SPECIFICATION	
-	Metric	Standard
Spring Force (valve closed)	435.0 N +/- 22.0 N @ 45 mm	97.8 lbs +/- 5.0 lbs. @ 1.771 in.
Spring Force (valve open)	1077.0 N +/- 48.0 N @ 32.6	242.0 lbs. +/- 11 lbs. @ 1.283

	mm.	in.
Free Length (approx).	55.6 mm	2.189 in.
Number of Coils	7.95	
Wire Diameter	4.95 x 4.1 mm	0.194 - 0.161 in.
Installed Height (spring seat to bottom of retainer)	46.0 mm	1.81 in.

OIL PUMP

DESCRIPTION -	SPECIFICATION	
	Metric	**Standard**
Clearance Over Rotors (MAX)	0.095 mm	0.0038 in.
Outer Rotor to Pump Body Clearance (MAX)	235 mm	0.009 in.
Tip Clearance Between Rotors (MAX)	0.150 mm	0.006 in.

OIL PRESSURE

DESCRIPTION -	SPECIFICATION	
	Metric	**Standard**
At Curb Idle Speed (MIN)*	25 kPa	4 psi
@ 3000 RPM	170 - 758 kPa	25 - 110 psi
*** CAUTION: If pressure is zero at curb idle, DO NOT run engine.**		

TORQUE

TORQUE CHART 5.7L ENGINE

DESCRIPTION	N.m	Ft. Lbs.	In. Lbs.
Block Pipe Plugs			
(1/4 - 18 NPT) Oil Galley Plug	20	15	-
(1/4 - 18 NPT) Coolant Drain Plug	34	25	-
(3/8 NPT)	27	20	-
Camshaft Sprocket Bolt	122	90	-
Camshaft Tensioner Plate Bolts	28	21	-
Coil to Cylinder Head Cover Bolts	7	-	62
Timing Chain Case Cover Bolts	28	21	-
Lifting Stud	55	41	-
Connecting Rod Cap Bolts	21 plus 90° Turn	15 plus 90° Turn	-
Main Bearing Cap Bolts	See **Engine/Engine Block/CRANKSHAFT - Installation**.		

Cylinder Head Bolts	See **Engine/Cylinder Head - Installation**.		
Cylinder Head Cover Bolts	8	-	71
Exhaust Manifold-to-Cylinder Head	25	18	-
Flexplate-to-Crankshaft Bolts	95	70	-
Flywheel-to-Crankshaft Bolts	75	55	-
Front Insulator Through Bolt/Nut	95	70	-
Through Bolt/Nut (4WD)	102	75	-
Stud Nut (4WD)	41	30	-
Front Insulator-to-Block Bolts (2WD)	95	70	-
Intake Manifold Bolts	See **Engine/Manifolds/MANIFOLD, Intake - Installation**.		
Lifter Guide Holder	12	9	-
Oil Pan Bolts	12	9	-
Oil Dipstick Tube	12	9	-
Oil Pan Drain Plug	34	25	-
Oil Pump Attaching Bolts	28	21	-
Oil Pump Pickup Tube Bolt/Nut	28	21	-
Rear Seal Retainer Attaching Bolts	15	11	-
Rear Insulator-to-Bracket Bolt	68	50	-
Rear Insulator-to-Crossmember	41	30	-
Rear Insulator-to-Crossmember Bolt	68	50	-
Rear Insulator-to-Transmission Bolt	68	50	-
Rear Insulator Bracket Bolts	68	50	-
Rear Support Bracket Bolt	41	30	-
Rear Support Plate-to-Transfer Case Bolts	41	30	-
Rocker Arm Bolts	22	16	-
Thermostat Housing Bolts	28	21	-
Throttle Body Bolts	12	9	-
Transfer Case-to-Insulator Bolt	204	150	-
Transmission Support Bracket Bolt	68	50	-
Vibration Damper Bolt	176	130	-
Water Pump-to-Timing Chain Case Cover Bolts	28	21	-

SPECIAL TOOLS

SPECIAL TOOLS



Fig. 67: BLOC-CHEK-KIT - C-3685-A
Courtesy of CHRYSLER LLC

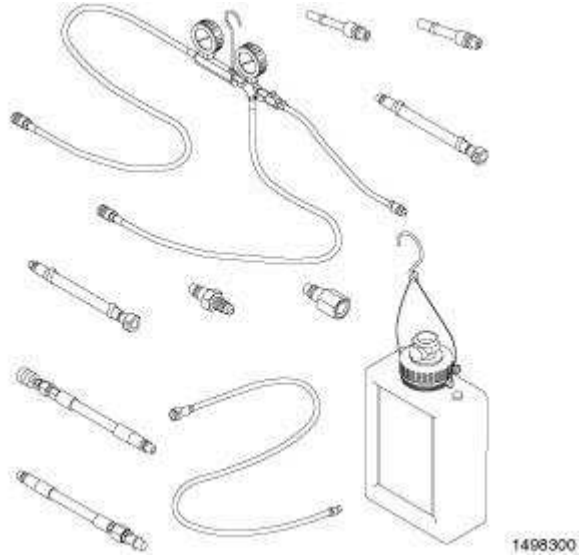

Fig. 68: DECAY TOOL, FUEL - 8978A
Courtesy of CHRYSLER LLC

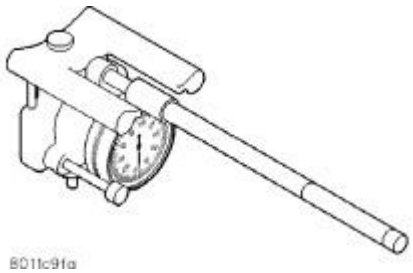

Fig. 69: CYLINDER INDICATOR - C-119
Courtesy of CHRYSLER LLC

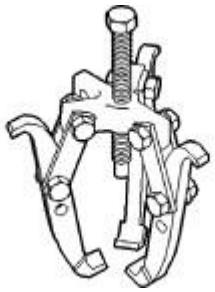

Fig. 70: PULLER - 1023
Courtesy of CHRYSLER LLC

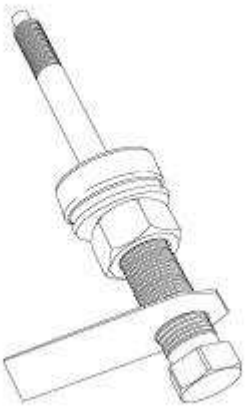

Fig. 71: INSTALLER, DAMPER - 8512A
Courtesy of CHRYSLER LLC

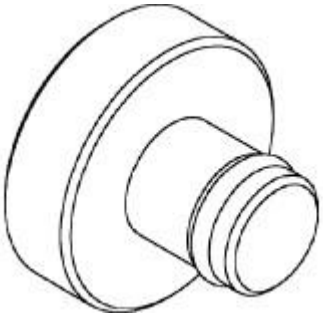

Fig. 72: INSERT, CRANKSHAFT - 8513A
Courtesy of CHRYSLER LLC

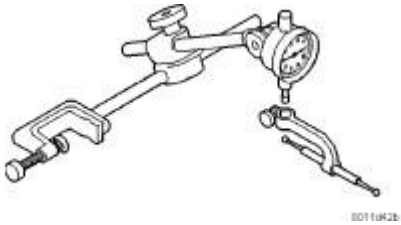

Fig. 73: SET, DIAL INDICATOR - C-3339A
Courtesy of CHRYSLER LLC

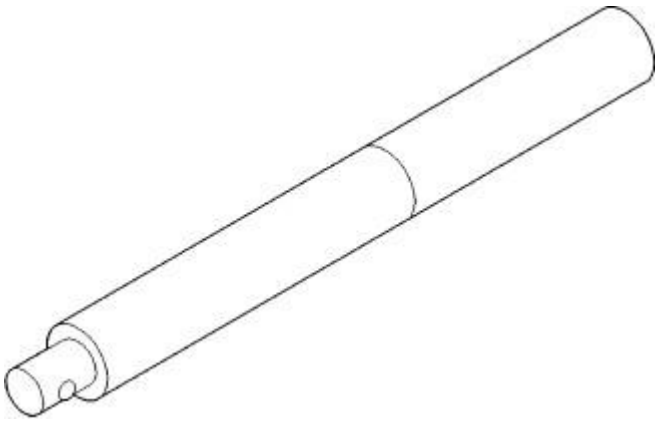

Fig. 74: DRIVER HANDLE, UNIVERSAL - C-4171
Courtesy of CHRYSLER LLC

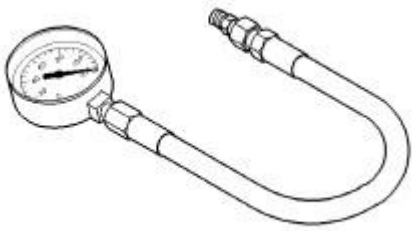

Fig. 75: GAUGE, PRESSURE - C-3292A
Courtesy of CHRYSLER LLC

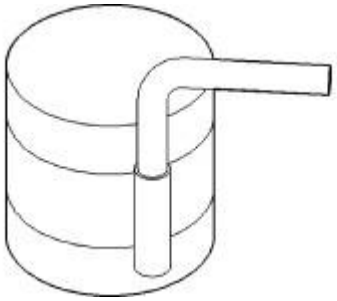

Fig. 76: COMPRESSOR, PISTON - C-385
Courtesy of CHRYSLER LLC

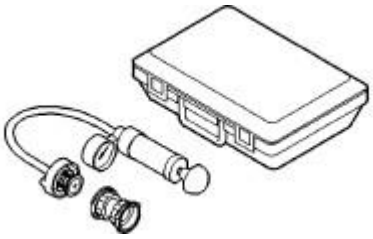

Fig. 77: TESTER, COOLING SYSTEM - 7700-A
Courtesy of CHRYSLER LLC

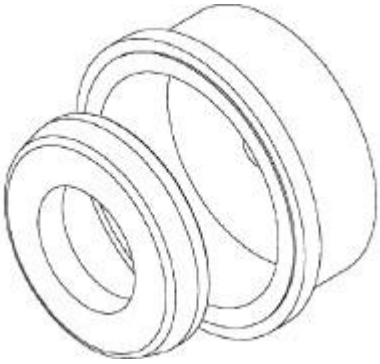

Fig. 78: INSTALLER, SEAL - 8349
Courtesy of CHRYSLER LLC

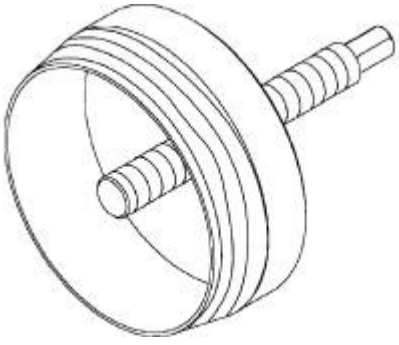

Fig. 79: REMOVER, SEAL - 8506
Courtesy of CHRYSLER LLC

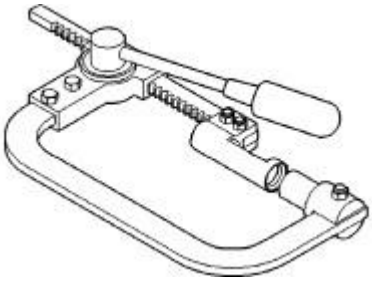

Fig. 80: COMPRESSOR, VALVE SPRING - C-3422-D
Courtesy of CHRYSLER LLC

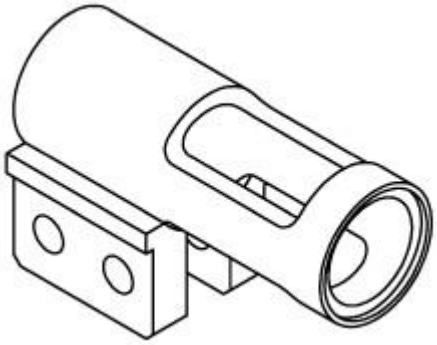

Fig. 81: ADAPTER, VALVE SPRING - 8464
Courtesy of CHRYSLER LLC

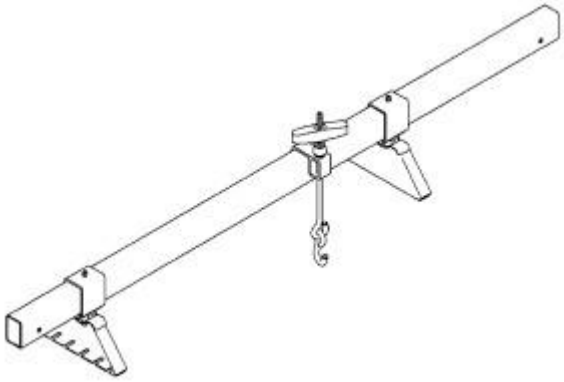

Fig. 82: SUPPORT FIXTURE, ENGINE - 8534B
Courtesy of CHRYSLER LLC

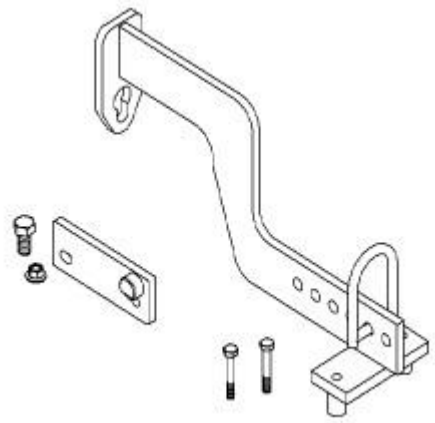

Fig. 83: ENGINE LIFT FIXTURE - 8984A
Courtesy of CHRYSLER LLC

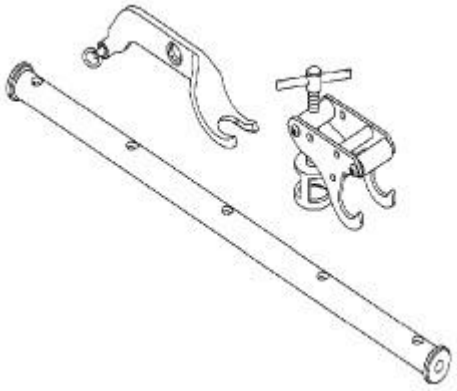

Fig. 84: COMPRESSOR, VALVE SPRING - 9065A
Courtesy of CHRYSLER LLC

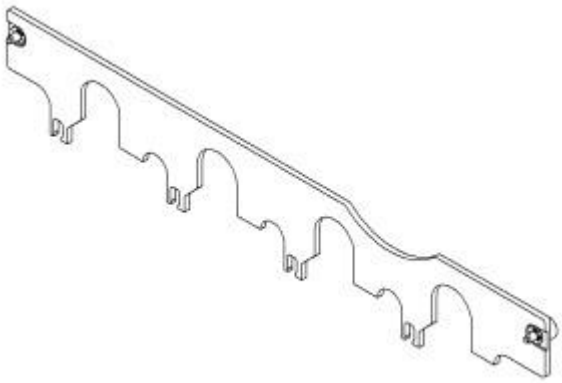

Fig. 85: RETAINER, PUSH ROD - 9070
Courtesy of CHRYSLER LLC

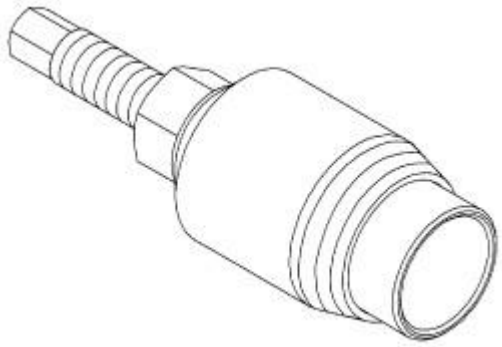

Fig. 86: REMOVER, SEAL - 9071
Courtesy of CHRYSLER LLC



Fig. 87: INSTALLER, SEAL - 9072
Courtesy of CHRYSLER LLC

MDS SYSTEM

DESCRIPTION

DESCRIPTION

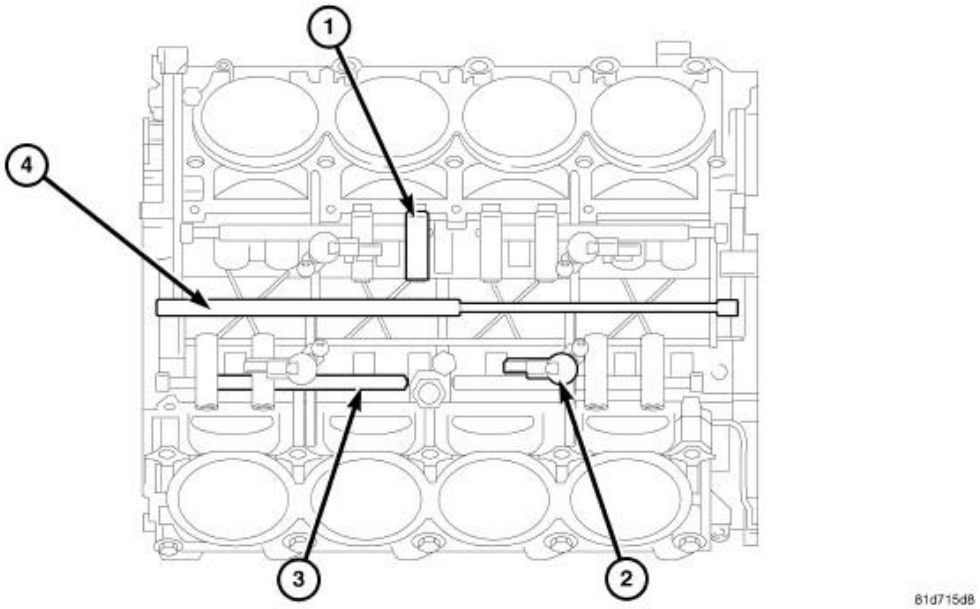

Fig. 88: MDS CYLINDER VIEW
Courtesy of CHRYSLER LLC

1 - DEACTIVATING LIFTERS
2 - SOLENOIDS
3 - LIFTER OIL GALLERY
4 - MAIN OIL GALLERY

The Multiple Displacement System (MDS) provides cylinder deactivation during steady-speed, low-acceleration and shallow grade climbing conditions to increase fuel economy.

MDS can provide a 5-20 percent fuel economy benefit when operating in four-cylinder mode, depending on driving habits and vehicle usage. For EPA rating purposes, fuel economy is 8-15 percent higher than if the engine was operating on eight cylinders at all times.

MDS is integrated into the basic engine architecture, requiring a minimum of additional parts - four additional solenoids, an oil temperature sensor and a wire harness. Eight unique valve lifters and a modified camshaft are also required.

OPERATION

OPERATION

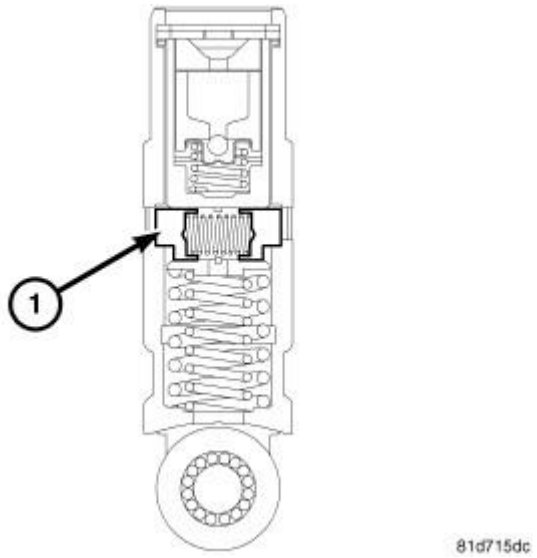

Fig. 89: MDS LIFTER CROSS-SECTION
Courtesy of CHRYSLER LLC

The Multiple Displacement System (MDS) provides cylinder deactivation during steady speed, low acceleration and shallow grade climbing conditions to increase fuel economy. Both four and eight cylinder configurations have even firing intervals provide smooth operation. Two cylinders on each bank are active when the engine is in four-cylinder mode - every other cylinder in the firing order. All of the cylinders that are deactivated have unique hydraulic valve lifters that collapse when deactivated to prevent the valves from opening. Engine oil pressure is used to activate and deactivate the valves. It is delivered through special oil passages drilled into the cylinder block. Solenoid valves control the flow. When activated, pressurized oil pushes a latching pin on each valve lifter, which then becomes a "lost motion" link. Its base follows the camshaft, but its top remains stationary, held in place against the pushrod by light spring pressure but unable to move because of the much higher force of the valve spring.

NOTE: It is critical to use the recommended oil viscosity in 5.7L engines that use MDS.

Deactivation occurs during the compression stroke of each cylinder, after air and fuel enter the cylinder. Ignition then occurs, but the combustion products remain trapped in the cylinder under high pressure, because the valves no longer open. No air enters or leaves. During subsequent piston strokes, this high-pressure gas is repeatedly compressed and expanded like an air spring, but fuel is not injected.

AIR INTAKE SYSTEM

AIR CLEANER

Removal

REMOVAL

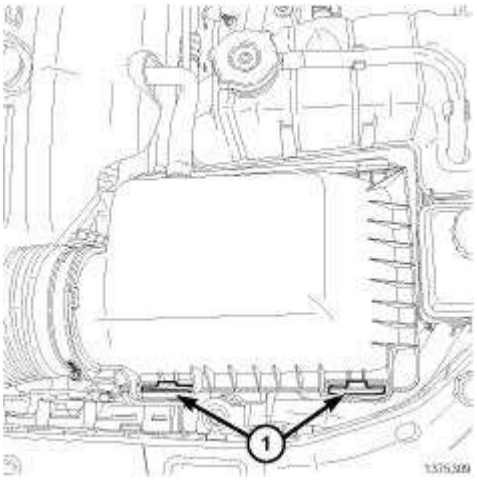

Fig. 90: View of Retaining Clamps
Courtesy of CHRYSLER LLC

1. Disengage the two retaining clamps (1) and lift the cover upwards.
2. Remove the air cleaner element from the inside of the air cleaner housing.

Installation

INSTALLATION

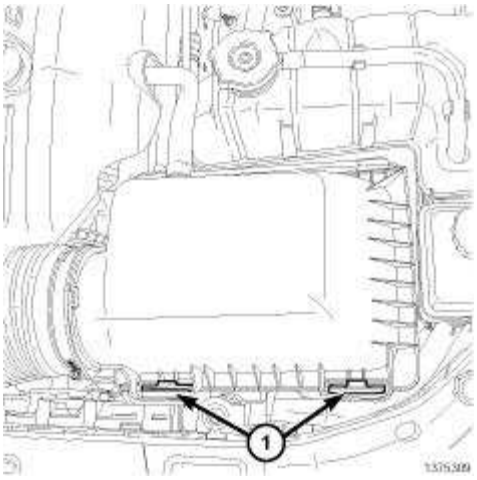

Fig. 91: View of Retaining Clamps
Courtesy of CHRYSLER LLC

1. Clean any dirt or foreign matter from the inside of the air cleaner housing.

NOTE: The air cleaner element must be properly seated for the air cleaner housing cover to fit correctly.

2. Install the air cleaner element into the air cleaner housing.
3. Position the air cleaner housing cover in place and secure the two retainer clips (1).

BODY, AIR CLEANER

Removal

REMOVAL

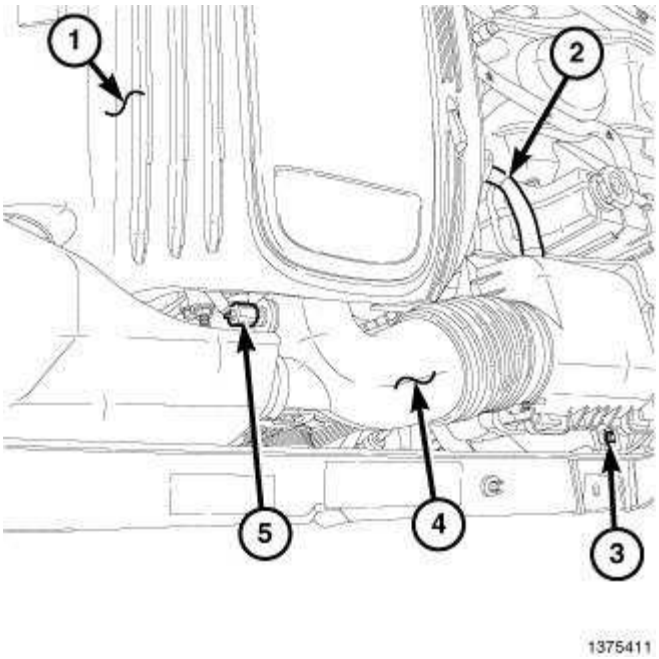

Fig. 92: Air Filter Assembly
Courtesy of CHRYSLER LLC

1. Remove the engine cover (1).
2. Disconnect the intake air temperature (IAT) sensor (5) connector.
3. Loosen the clamps at the throttle body and the air filter assembly and remove the air tube (4).
4. Disconnect the make up air hose (MUA) (2).
5. Remove the air filter assembly retaining bolt (3).
6. Remove the air filter assembly from the vehicle.

Installation

INSTALLATION

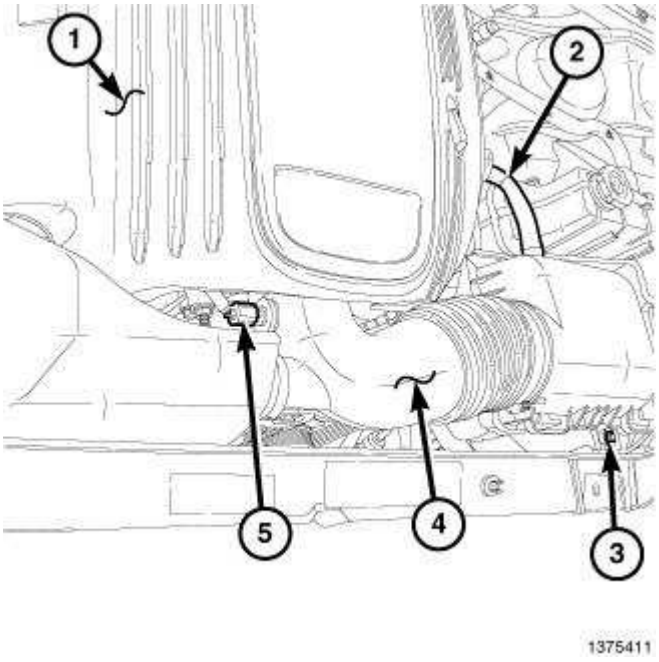

Fig. 93: Air Filter Assembly
Courtesy of CHRYSLER LLC

1. Position the air filter assembly into the engine compartment.
2. Install the air filter assembly retaining bolt (3) and tighten.
3. Connect the clean air tube to the throttle body and the air filter assembly and tighten clamps.
4. Connect the make up air hose (MUA) (2).
5. Connect the intake air temperature (IAT) sensor (5) connector.
6. Install the engine cover (1).

CYLINDER HEAD

OPERATION

CYLINDER HEAD

The cylinder head closes the combustion chamber allowing the pistons to compress the air fuel mixture to the correct ratio for ignition. The valves located in the cylinder head open and close to either allow clean air into the combustion chamber or to allow the exhaust gases out, depending on the stroke of the engine.

DIAGNOSIS AND TESTING

CYLINDER HEAD GASKET FAILURE

A cylinder head gasket leak can be located between adjacent cylinders or between a cylinder and the adjacent water jacket.

- Possible indications of the cylinder head gasket leaking between adjacent cylinders are:
  - Loss of engine power
  - Engine misfiring
  - Poor fuel economy
- Possible indications of the cylinder head gasket leaking between a cylinder and an adjacent water jacket are:
  - Engine overheating
  - Loss of coolant
  - Excessive steam (white smoke) emitting from exhaust
  - Coolant foaming

CYLINDER-TO-CYLINDER LEAKAGE TEST

To determine if an engine cylinder head gasket is leaking between adjacent cylinders, follow the procedures in the **CYLINDER COMPRESSION PRESSURE LEAKAGE**. An engine cylinder head gasket leaking between adjacent cylinders will results in approximately a 50 - 70% reduction in compression pressure.

CYLINDER-TO-WATER JACKET LEAKAGE TEST

WARNING: Use extreme care when the engine is operating with the coolant pressure cap removed. Failure to follow these instructions may result in possible serious or fatal injury.

VISUAL TEST METHOD

With the engine cool, remove the coolant pressure cap. Start the engine and allow it to warm up until thermostat opens.

If a large combustion/compression pressure leak exists, bubbles will be visible in the coolant.

COOLING SYSTEM TESTER METHOD

CAUTION: With the cooling system tester in place, pressure builds up fast. Excessive pressure built up by continuous engine operation must be released to a safe pressure point. Never permit pressure to exceed 138 kPa (20 psi).

Install the Cooling System Tester 7700 or equivalent to pressure cap neck. Start the engine and observe the tester's pressure gauge. If the gauge pulsates with every power stroke of a cylinder a combustion pressure leak is evident.

CHEMICAL TEST METHOD

Combustion leaks into the cooling system can also be checked by using the Bloc-Chek Kit C-3685-A or equivalent. Perform the test following the procedures supplied with the tool kit.

REMOVAL

REMOVAL

WARNING: The fuel system is under a constant pressure (even with engine off). Before servicing any fuel system hose, fitting or line, fuel system pressure must be released.

1. Perform the Fuel System Pressure Release procedure. Refer to **Fuel System/Fuel Delivery - Standard Procedure** .

   CAUTION: Before separating a quick-connect fitting, pay attention to what type of fitting is being used by referring to Quick-Connect Fitting Removal. This will prevent unnecessary fitting or fitting latch breakage.

2. Disconnect the fuel supply line. Refer to **Fuel System/Fuel Delivery/FITTING, Quick Connect - Standard Procedure** .
3. Disconnect the negative battery cable.

   WARNING: Do not remove cylinder block drain plugs or loosen radiator draincock with system hot and under pressure. Serious burns from coolant can occur.

4. Drain the cooling system. Refer to **Cooling - Standard Procedure** .

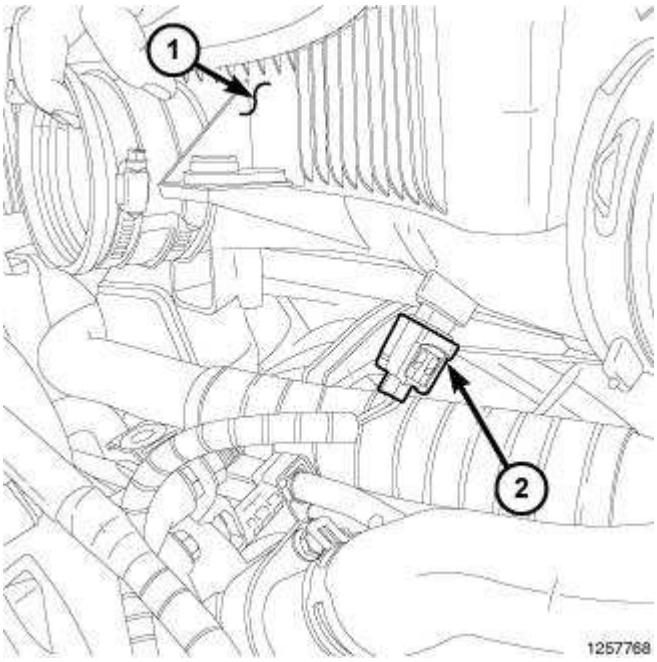

Fig. 94: IAT Sensor Electrical Connector
Courtesy of CHRYSLER LLC

5. Disconnect the Intake Air Temperature (IAT) sensor electrical connector (2).
6. Remove the air cleaner resonator and duct work as an assembly (1). See **Engine/Air Intake System/BODY, Air Cleaner - Removal**.

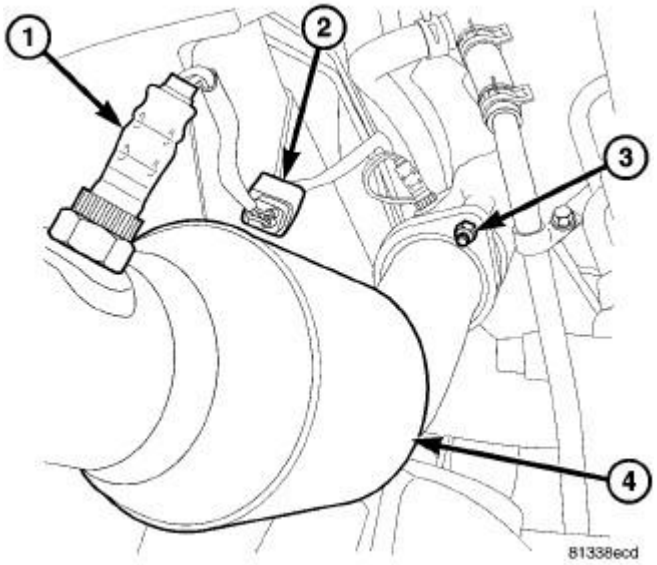

Fig. 95: LH CATALYTIC CONVERTER
Courtesy of CHRYSLER LLC

CAUTION: When servicing or replacing exhaust system components, disconnect the oxygen sensor connector(s). Allowing the exhaust to hang by the oxygen sensor wires will damage the harness and/or sensor.

7. Saturate all exhaust bolts and nuts with Mopar® Rust Penetrant. Allow 5 minutes for penetration.
8. Remove exhaust pipe to manifold bolts (3).
9. Disconnect the evaporation control system.

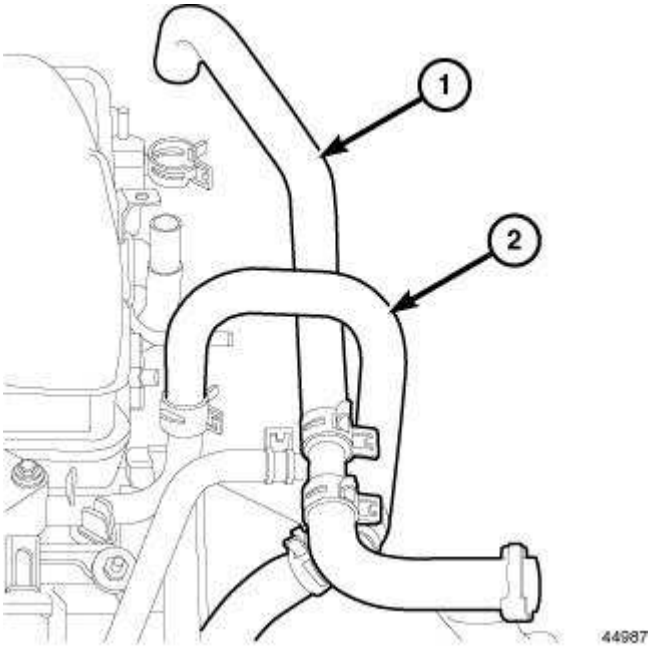

Fig. 96: HEATER HOSE SUPPLY
Courtesy of CHRYSLER LLC

10. Disconnect the heater hoses (1,2).

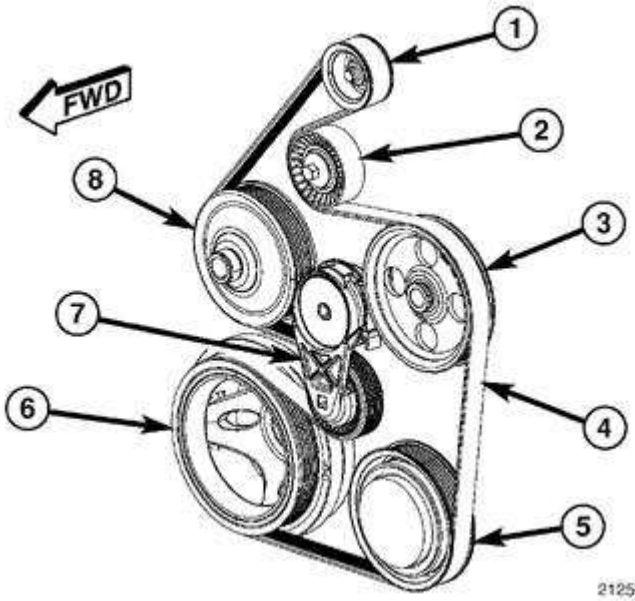

Fig. 97: Identifying Accessory Drive Belt Routing - 5.7L
Courtesy of CHRYSLER LLC

11. Insert a suitable square drive ratchet into the square hole on the belt tensioner arm (7).
12. Release the belt tension by rotating the tensioner (7)**clockwise** . Rotate the belt tensioner and remove the accessory drive belt (4) from the pulleys.

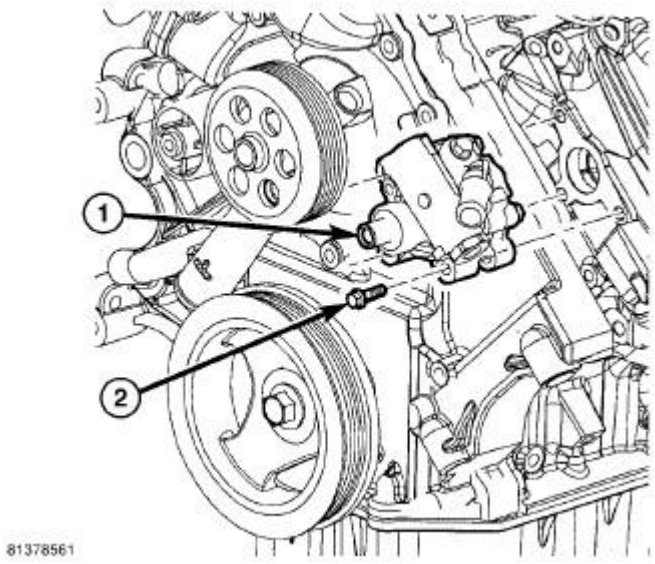

Fig. 98: POWER STEERING PUMP - 5.7L
Courtesy of CHRYSLER LLC

NOTE: It is not necessary to disconnect the P/S hoses from the pump, for P/S pump removal.

13. Remove three power steering pump (1) mounting bolts (2) through access holes in pulley. Refer to **Steering/Pump - Removal** .

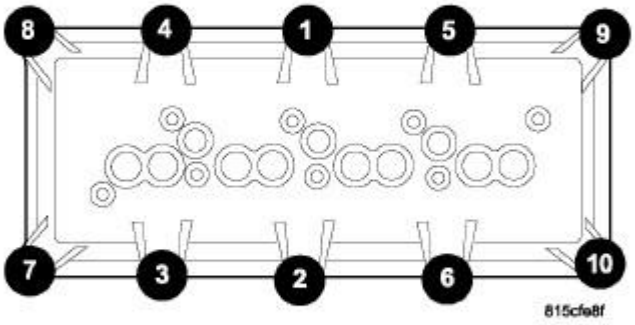

Fig. 99: Cylinder Head Cover Torque Sequence
Courtesy of CHRYSLER LLC

14. Remove the cylinder head covers and gaskets, using the sequence shown in illustration. See **Engine/Cylinder Head/COVER(S), Cylinder Head - Removal**.

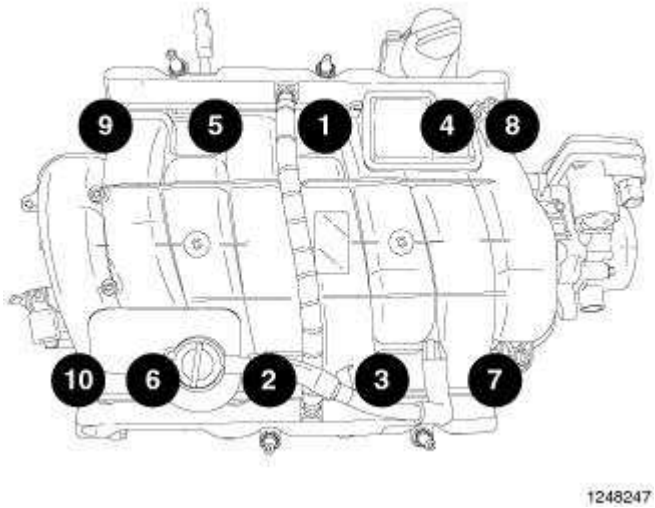

Fig. 100: Intake Manifold Removal & Tightening Sequence
Courtesy of CHRYSLER LLC

NOTE: Remove the intake manifold and throttle body as an assembly.

15. Remove intake manifold retaining fasteners in the sequence shown in illustration. See **Engine/Manifolds/MANIFOLD, Intake - Removal**.

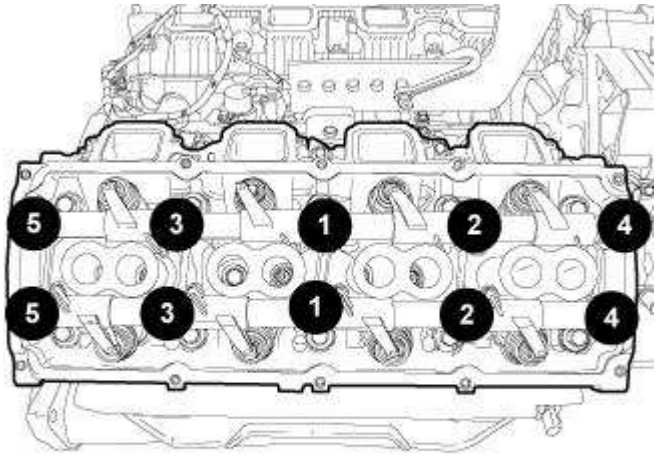

Fig. 101: Rocker Shafts Retaining Bolt Removal & Tightening Sequence
Courtesy of CHRYSLER LLC

NOTE: Make sure to identify the original location of the rocker arms and push

rods for correct assembly.

16. Remove the rocker arm assemblies using the sequence shown in illustration. See **Engine/Cylinder Head/ROCKER ARM, Valve - Removal**.
17. Remove the push rods.

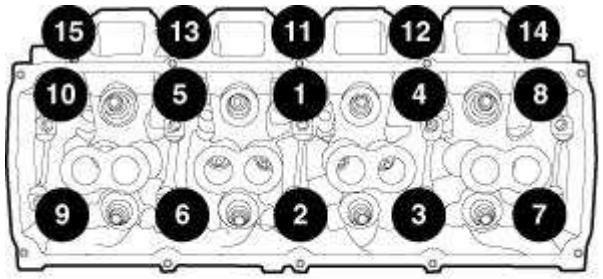

Fig. 102: Cylinder Head Bolt Removal & Tightening Sequence
Courtesy of CHRYSLER LLC

18. Remove the head bolts from each cylinder head using the sequence shown in illustration.
19. Remove the cylinder head and discard the cylinder head gasket(s).

CLEANING

CLEANING

Clean all sealing surfaces of the cylinder block and cylinder heads using Mopar® Brake Parts Cleaner (or equivalent).

INSPECTION

INSPECTION

1. Inspect the cylinder head for out-of-flatness using a straightedge and a feeler gauge. If tolerances exceed 0.0508 mm (0.002 in.) replace the cylinder head.
2. Inspect the valve seats for damage. Service the valve seats as necessary.
3. Inspect the valve guides for wear, cracks or looseness. If either condition exist, replace the cylinder head.
4. Inspect the pushrods. Replace worn or bent pushrods.

INSTALLATION

INSTALLATION

CAUTION: The cylinder head gaskets are not interchangeable between the left and right sides. They are marked with an "L" and "R" to indicate the left or right side and they are marked "TOP" to indicate which side goes up.

CAUTION: The head gaskets are marked "TOP" to indicate which side goes up.

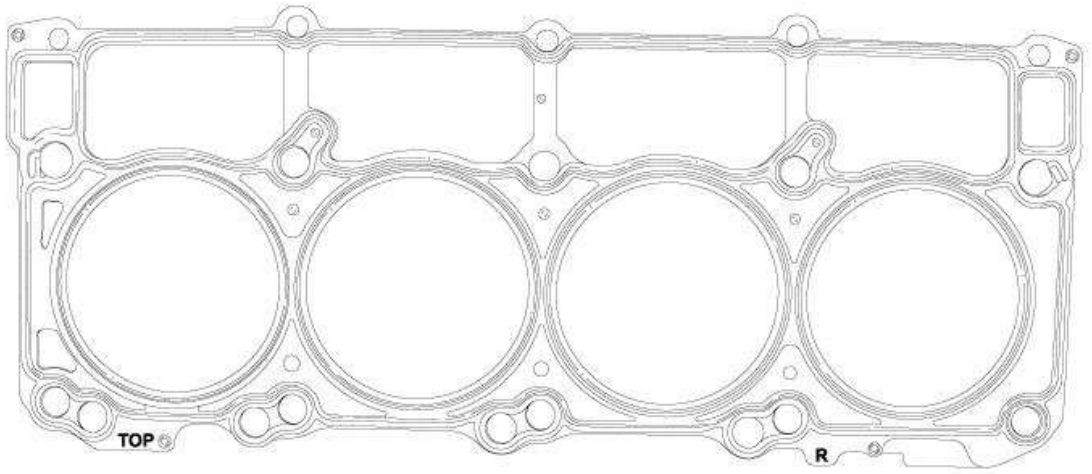

Fig. 103: Identifying Cylinder Head Gasket Marking
Courtesy of CHRYSLER LLC

1. Clean all surfaces of the cylinder block and cylinder heads.
2. Clean the cylinder block front and the rear gasket surfaces using a suitable solvent.

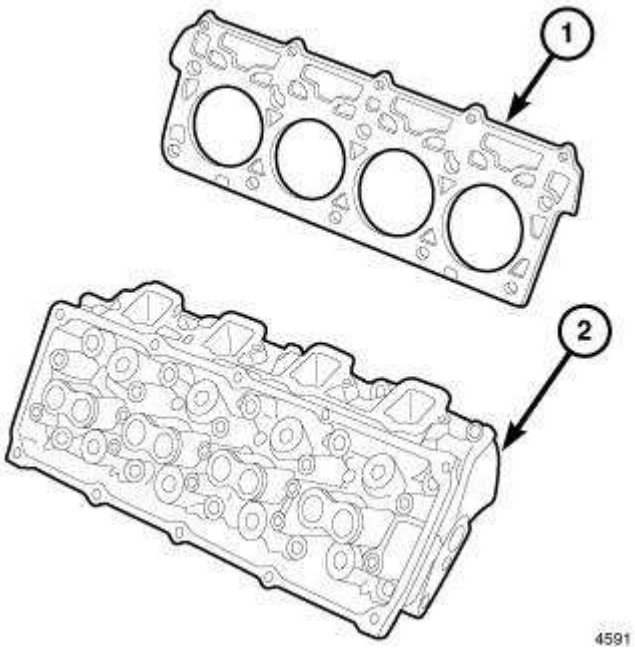

Fig. 104: Cylinder Head Components
Courtesy of CHRYSLER LLC

3. Position the new cylinder head gaskets (5) onto the cylinder block.
4. Position the cylinder heads (4) onto the head gaskets (5) and the cylinder block.

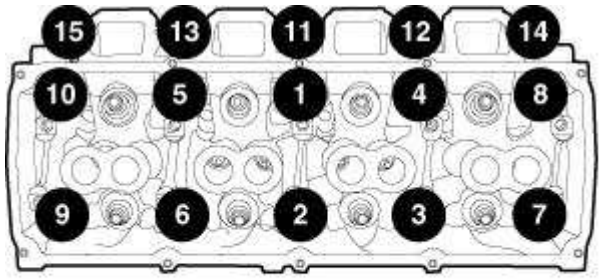

Fig. 105: Cylinder Head Bolt Removal & Tightening Sequence
Courtesy of CHRYSLER LLC

5. Tighten the cylinder head bolts 1 through 10 to 34 N.m (25 ft. lbs.) using the sequence shown in illustration.
6. Tighten the cylinder head bolts 11 through 15 to 20 N.m (15 ft. lbs.) using the sequence shown in illustration.
7. Tighten the cylinder head bolts 1 through 10 to 54 N.m (40 ft. lbs.) using the sequence shown in illustration.
8. Tighten the cylinder head bolts 11 through 15 to 20 N.m (15 ft. lbs.) using the sequence shown in illustration.

9. Rotate the cylinder head bolts 1 through 10 90° using the sequence shown in illustration.
10. Tighten the cylinder head bolts 11 through 15 to 34 N.m (25 ft. lbs.) using the sequence shown in illustration.

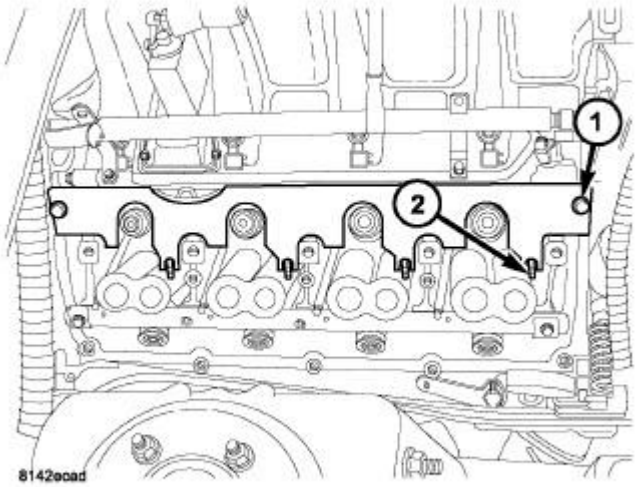

Fig. 106: PUSH ROD RETAINER 9070
Courtesy of CHRYSLER LLC

11. Install the push rods and rocker arm assemblies in their original position, using Pushrod Retainer 9070 (1). See **Engine/Cylinder Head/ROCKER ARM, Valve - Installation**.

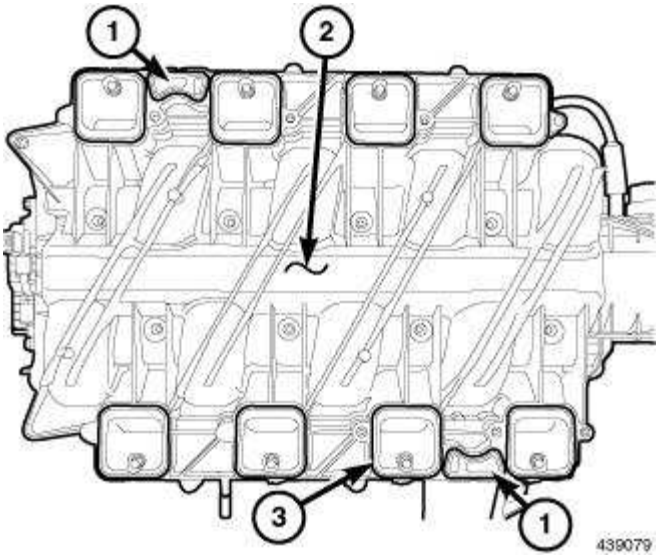

Fig. 107: Intake Manifold & PCV Seals
Courtesy of CHRYSLER LLC

12. Install intake manifold seals (1,3).
13. Position the intake manifold (2) in place.

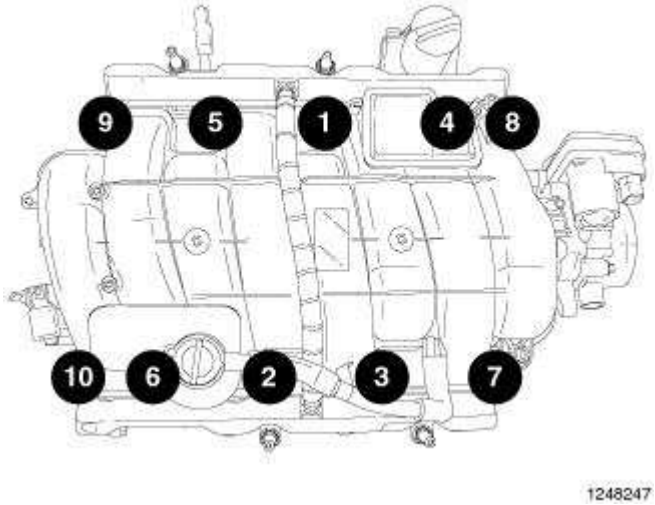

Fig. 108: Intake Manifold Removal & Tightening Sequence
Courtesy of CHRYSLER LLC

14. Install new intake manifold bolts (with thread lock patch) and tighten to 12 N.m (105 in. lbs.) in the sequence shown in illustration. See **Engine/Manifolds/MANIFOLD, Intake - Installation**.

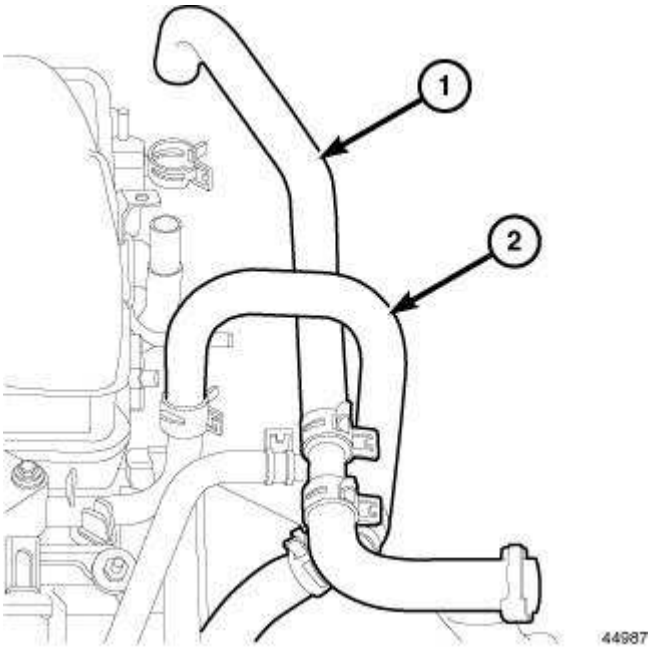

Fig. 109: HEATER HOSE SUPPLY
Courtesy of CHRYSLER LLC

15. Connect the heater hoses (1,2).

16. Connect the fuel supply line.

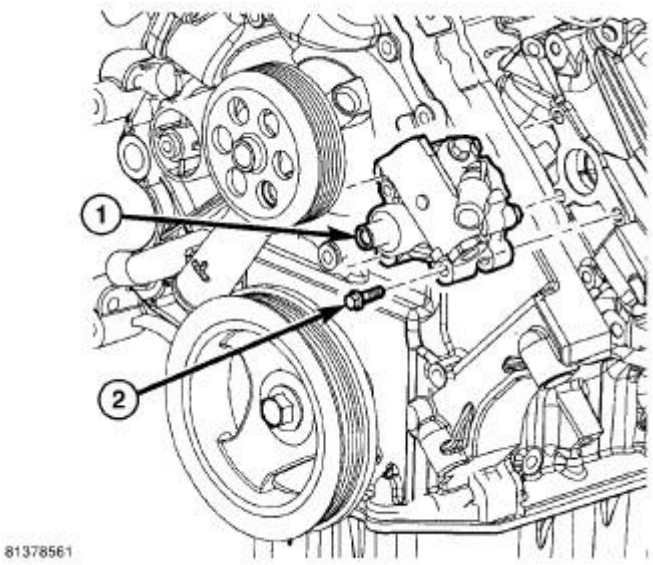

Fig. 110: POWER STEERING PUMP - 5.7L
Courtesy of CHRYSLER LLC

17. Install three power steering pump mounting bolts (2) through access holes in pulley. Tighten bolts to 28 N.m (21 ft. lbs.). Refer to **Steering/Pump - Installation** .

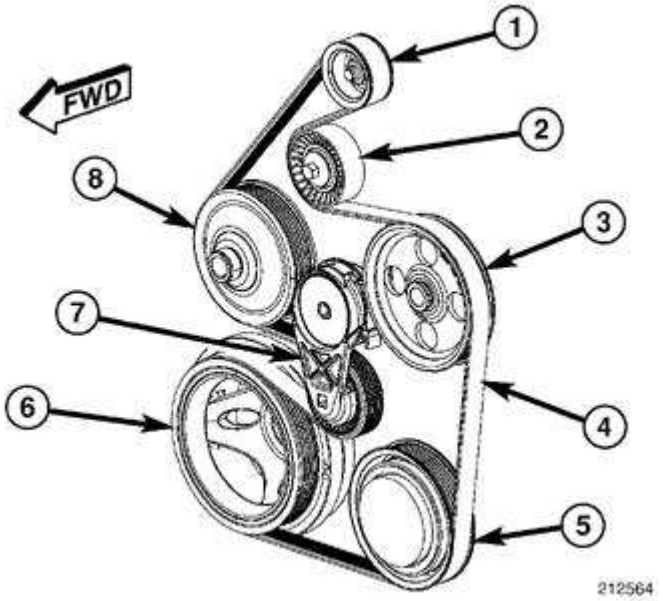

Fig. 111: Identifying Accessory Drive Belt Routing - 5.7L
Courtesy of CHRYSLER LLC

18. Position the accessory drive belt (4) over all pulleys except for the water pump pulley (8).
19. Insert a suitable square drive ratchet into the square hole on the belt tensioner arm (7).

20. Rotate the tensioner (7) **clockwise** and slip the accessory drive belt over the water pump pulley (8).

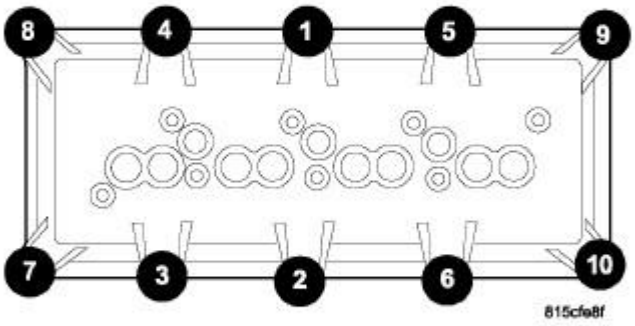

Fig. 112: Cylinder Head Cover Torque Sequence
Courtesy of CHRYSLER LLC

21. Install the cylinder head covers (1) and tighten retainers in the sequence shown in illustration. See **Engine/Cylinder Head/COVER(S), Cylinder Head - Installation**.
22. Connect the evaporation control system.

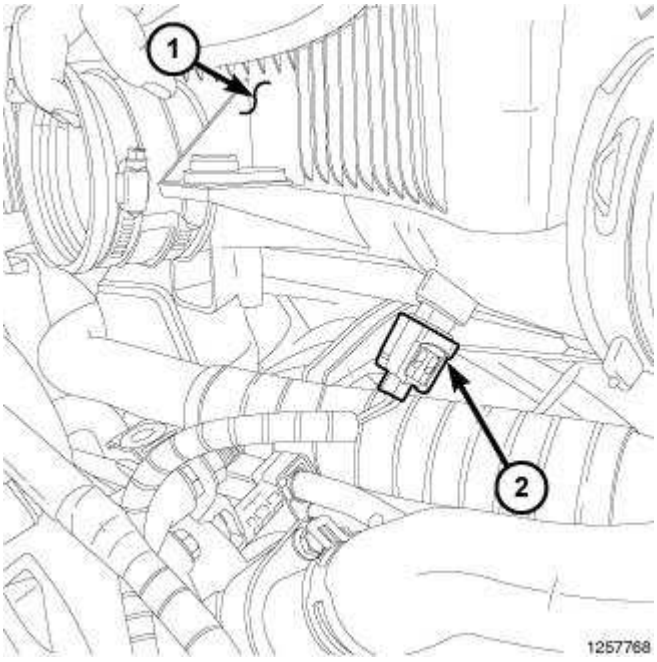

Fig. 113: IAT Sensor Electrical Connector
Courtesy of CHRYSLER LLC

23. Install the air cleaner resonator and duct work as an assembly (1). See **Engine/Air Intake System/BODY, Air Cleaner - Installation**.
24. Connect the Intake Air Temperature (IAT) sensor electrical connector (2).
25. Fill the cooling system. Refer to **Cooling - Standard Procedure** .
26. Change the engine oil and engine oil filter. See **Engine/Lubrication/OIL - Standard Procedure**.
27. Connect the negative battery cable.
28. Start the engine and check for leaks.

COVER(S), CYLINDER HEAD

Removal

REMOVAL

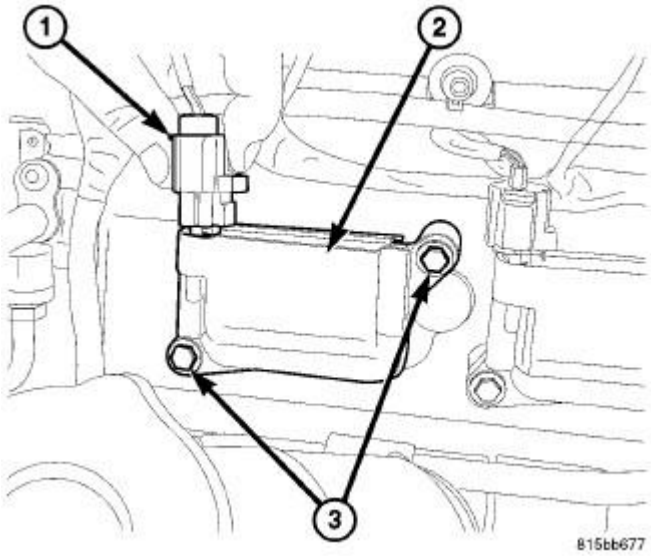

Fig. 114: Ignition Coil Mounting Bolts
Courtesy of CHRYSLER LLC

1. Disconnect negative battery cable.
2. Disconnect ignition coil connector (1).
3. Remove ignition coil retaining bolts (3).

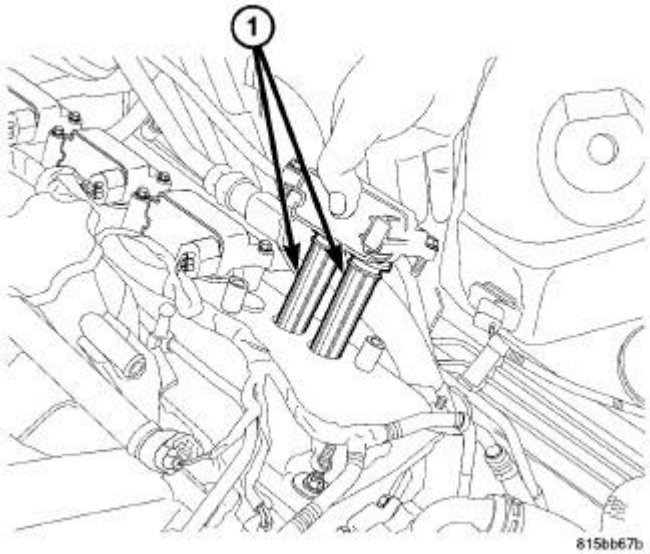

Fig. 115: Removing/Installing Ignition Coil
Courtesy of CHRYSLER LLC

4. Remove ignition coil (1).

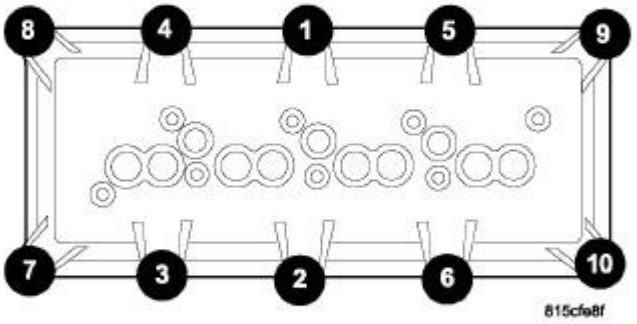

Fig. 116: Cylinder Head Cover Torque Sequence
Courtesy of CHRYSLER LLC

5. Remove cylinder head cover retaining bolts.

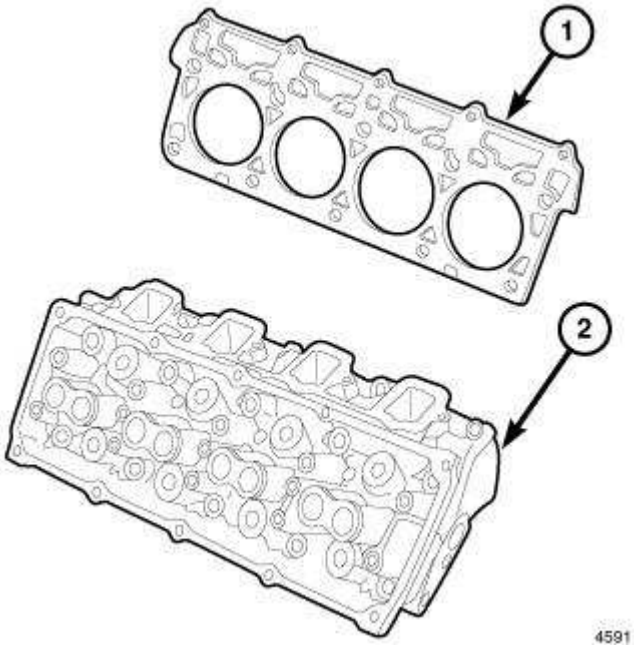

Fig. 117: Cylinder Head Components
Courtesy of CHRYSLER LLC

6. Remove cylinder head cover (1).

NOTE: **The gasket (2) may be used again, provided no cuts, tears, or deformation have occurred.**

Installation

INSTALLATION

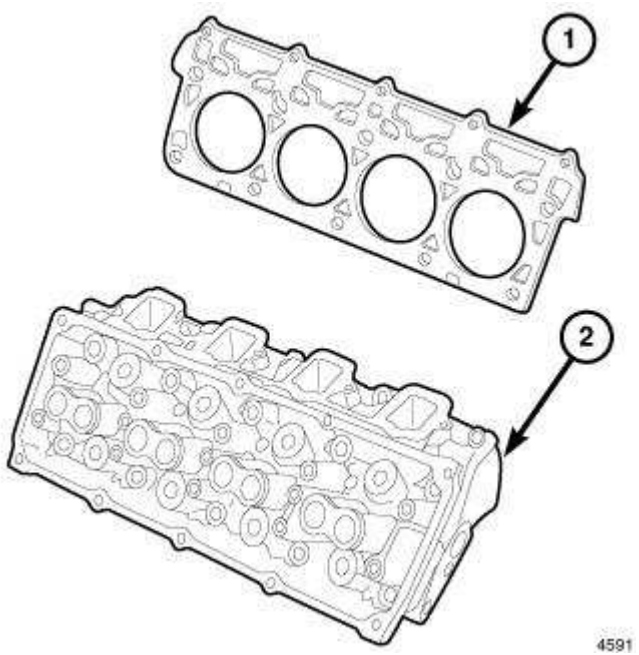

Fig. 118: Cylinder Head Components
Courtesy of CHRYSLER LLC

CAUTION: **Do not use harsh cleaners to clean the cylinder head covers. Severe damage to covers may occur.**

CAUTION: **Do not allow other components including the wire harness to rest on or against the engine cylinder head cover. Prolonged contact with other objects may wear a hole in the cylinder head cover.**

1. Clean cylinder head cover (1) and both sealing surface (4). Inspect and replace gasket (2) as necessary.
2. Install cylinder head cover and hand start all fasteners. Verify that all double ended studs (3) are in the correct location.

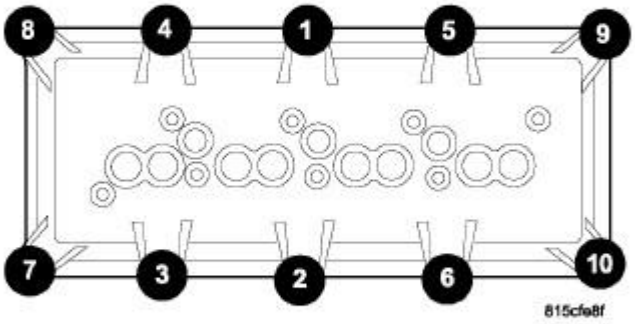

Fig. 119: Cylinder Head Cover Torque Sequence
Courtesy of CHRYSLER LLC

3. Tighten cylinder head cover bolts and double ended studs to 8 N.m (70 lbs. in.) in the sequence shown in illustration.

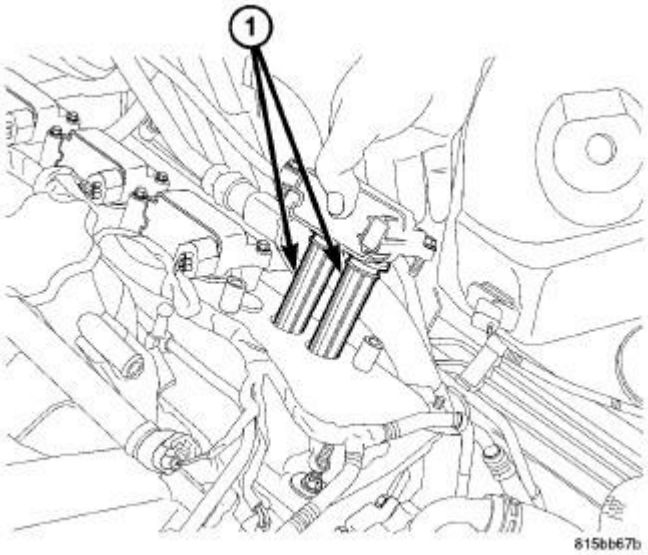

Fig. 120: Removing/Installing Ignition Coil
Courtesy of CHRYSLER LLC

4. Before installing coil(s), apply dielectric grease to inside of spark plug boots (1).
5. Install ignition coils.

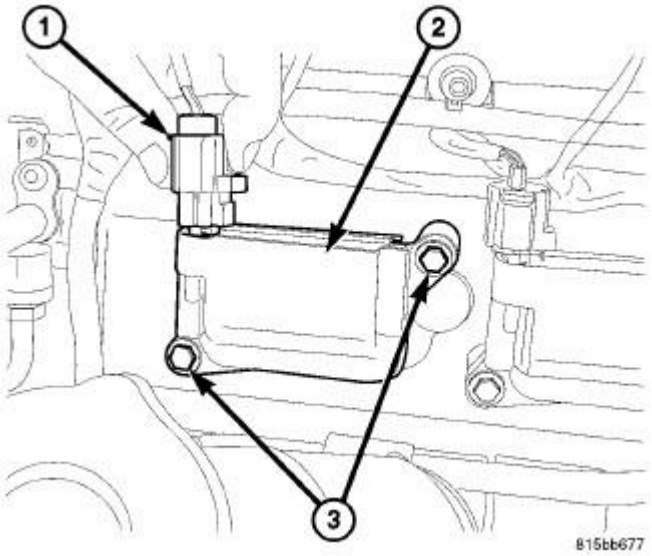

Fig. 121: Ignition Coil Mounting Bolts
Courtesy of CHRYSLER LLC

6. Tighten fasteners (3) to 7 N.m (62 in. lbs.).
7. Connect ignition coil electrical connectors (1).
8. Install PCV hose.
9. Connect battery negative cable.

ROCKER ARM, VALVE

Removal

REMOVAL

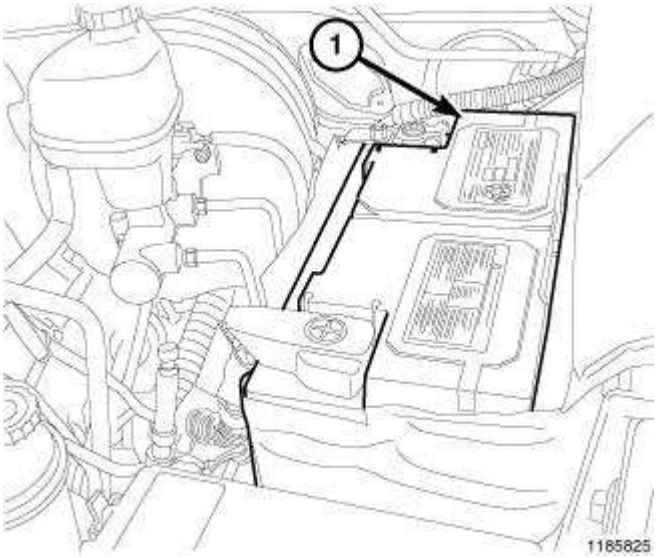

Fig. 122: Battery

Courtesy of CHRYSLER LLC

1. Disconnect the negative battery cable (1).
2. Remove the engine cover.

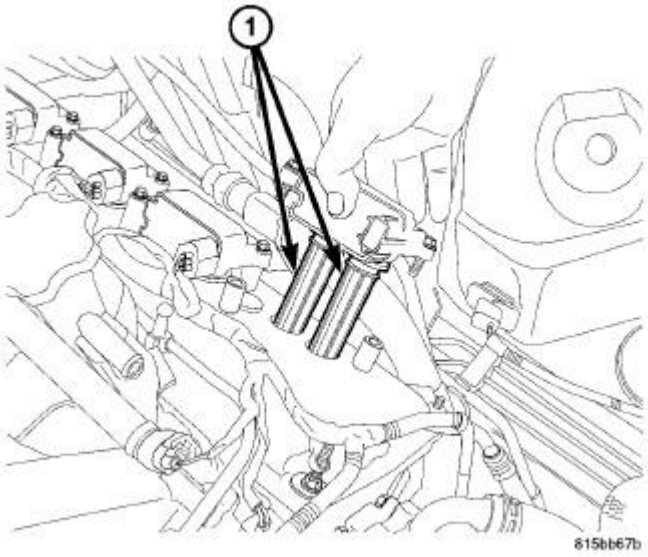

Fig. 123: Removing/Installing Ignition Coil
Courtesy of CHRYSLER LLC

3. Remove the ignition coils (1). Refer to **Electrical/Ignition Control/COIL, Ignition - Removal** .

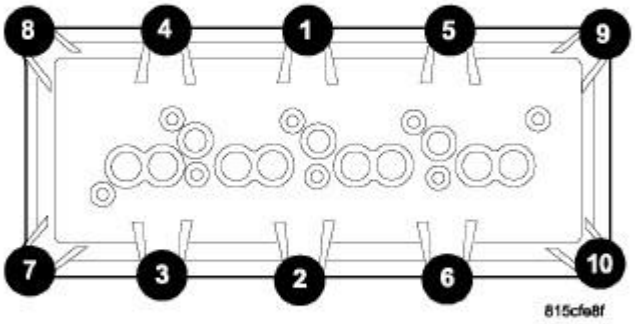

Fig. 124: Cylinder Head Cover Torque Sequence

Courtesy of CHRYSLER LLC

4. Using the sequence shown in illustration, remove the cylinder head cover. See **Engine/Cylinder Head/COVER(S), Cylinder Head - Removal**.

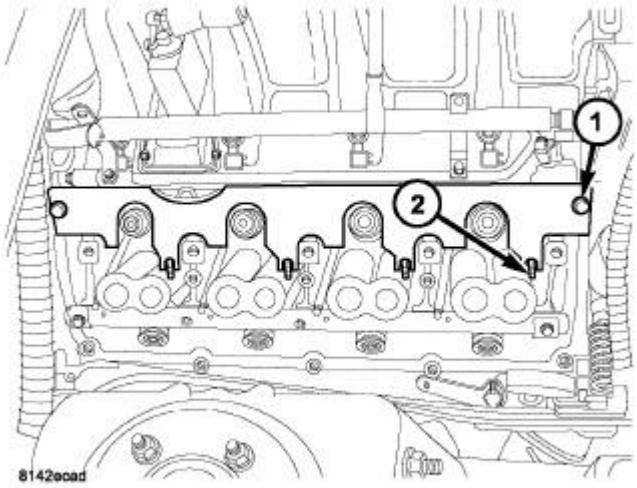

Fig. 125: PUSH ROD RETAINER 9070
Courtesy of CHRYSLER LLC

5. Install the pushrod retainer 9070 (1).

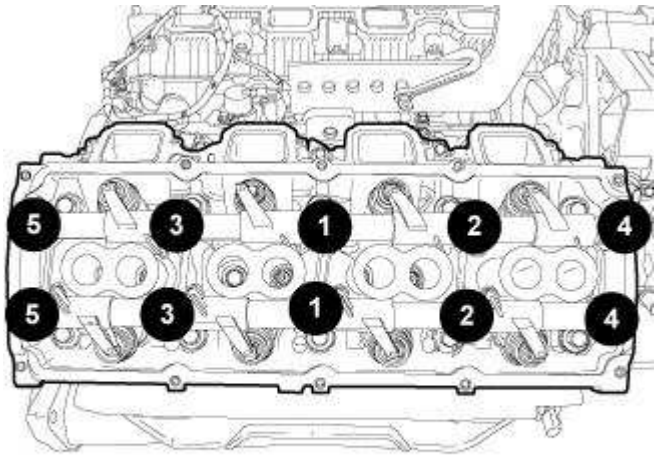

Fig. 126: Rocker Shafts Retaining Bolt Removal & Tightening Sequence
Courtesy of CHRYSLER LLC

6. Using the sequence shown in illustration, loosen the rocker shafts retaining bolts.

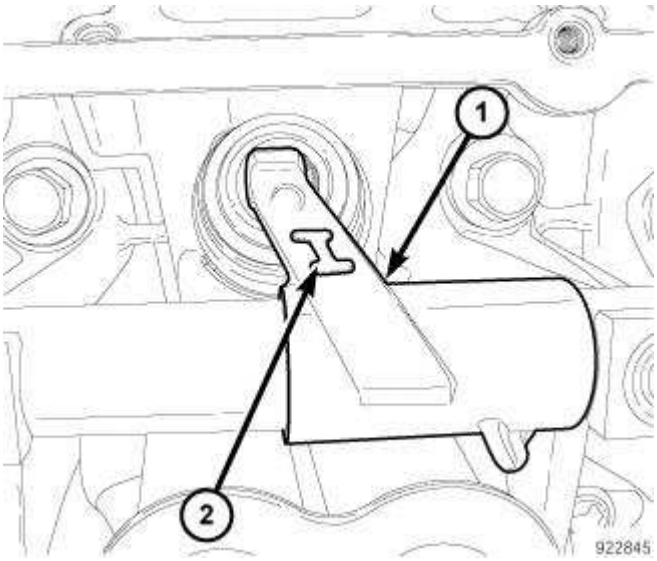

Fig. 127: Intake Rocker Arm Marking
Courtesy of CHRYSLER LLC

CAUTION: The rocker shaft assemblies are not interchangeable between the intake and the exhaust, failure to install them in the correct location could result in engine damage. The intake rocker arms (1) are marked with the letter "I" (2).

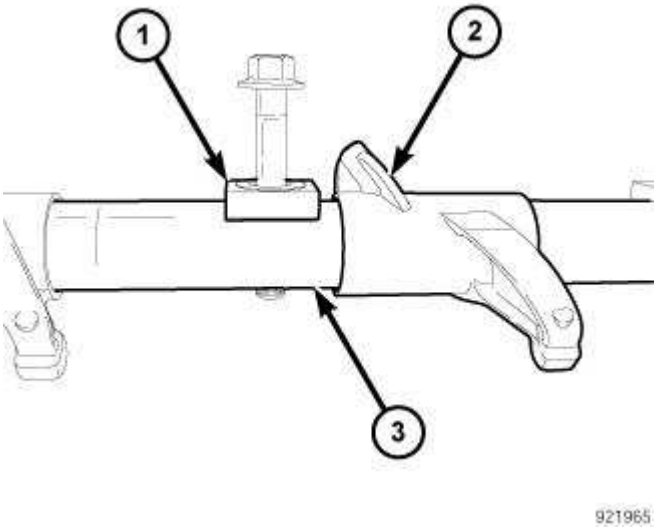

Fig. 128: Rocker Shaft Retainers
Courtesy of CHRYSLER LLC

CAUTION: Do not remove the retainers (1) from the rocker shaft (3).

7. Remove the rocker shaft (3). Note the rocker shaft location during removal.

CAUTION: The longer pushrods are for the exhaust side and the shorter pushrods are for the intake side.

8. Remove the pushrods. Note the pushrod location during removal.

Installation

INSTALLATION

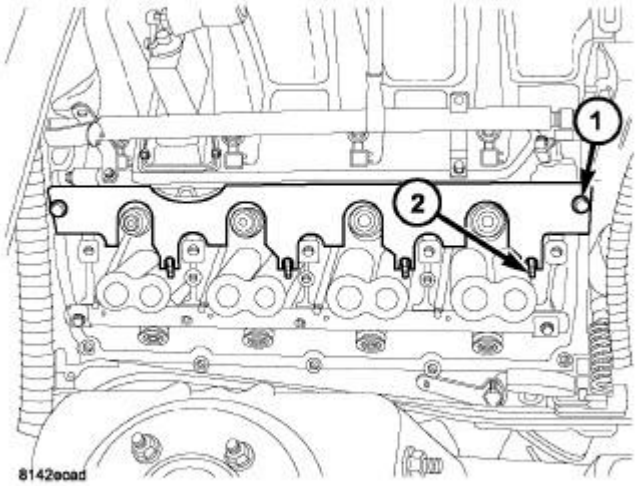

Fig. 129: PUSH ROD RETAINER 9070
Courtesy of CHRYSLER LLC

CAUTION: The longer pushrods are for the exhaust side and the shorter pushrods are for the intake side.

1. Install the pushrods in the same order as removed.
2. Install the pushrod retainer 9070 (1).

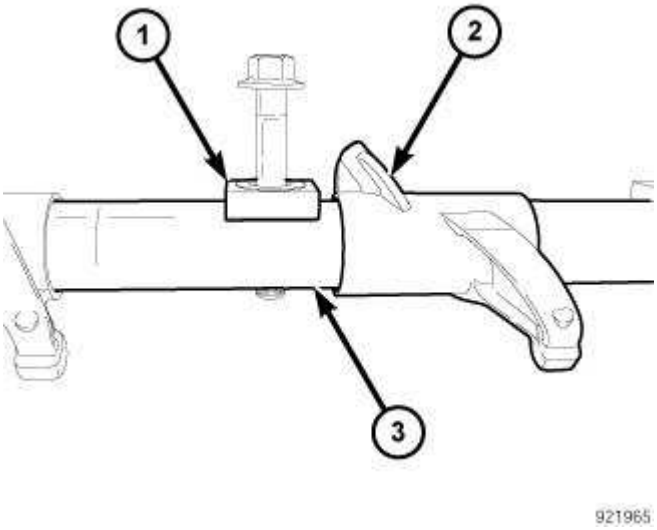

Fig. 130: Rocker Shaft Retainers
Courtesy of CHRYSLER LLC

CAUTION: Make sure that the retainers (1) and the rocker arms (2) are not overlapped when tightening bolts or engine damage could result.

CAUTION: Due to the changes in the pushrod clearance holes in the Eagle 5.7L cylinder heads, close attention must be given when installing the pushrod(s) into the tappet(s). Once the pushrod(s) have been installed, use a suitable light to look down through the pushrod hole (s). This will allow you to verify the pushrod(s) are centered properly in the tappet(s) and avoid engine damage. Recheck after the rocker shaft assembly has been installed and tightened to specification.

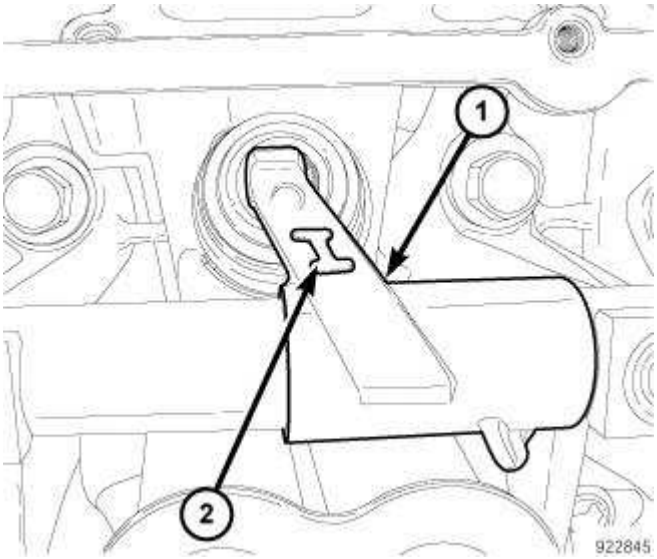

Fig. 131: Intake Rocker Arm Marking

Courtesy of CHRYSLER LLC

CAUTION: The rocker shaft assemblies are not interchangeable between the intake and the exhaust, failure to install them in the correct location could result in engine damage. The intake rocker arms (1) are marked with the letter "I" (2).

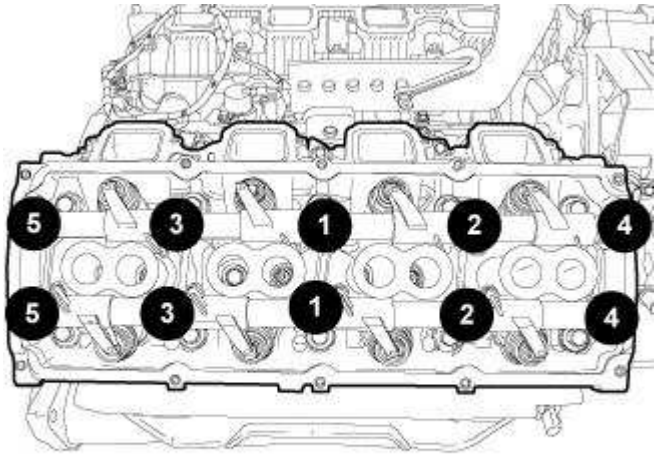

Fig. 132: Rocker Shafts Retaining Bolt Removal & Tightening Sequence
Courtesy of CHRYSLER LLC

3. Install the rocker shaft assemblies in the same order as removed.
4. Using the sequence shown in illustration, tighten the rocker shaft bolts to 22 N.m (16 ft. lbs.).

CAUTION: Do Not rotate or crank the engine during or immediately after rocker arm installation. Allow the hydraulic roller tappets adequate time to bleed down (about five minutes).

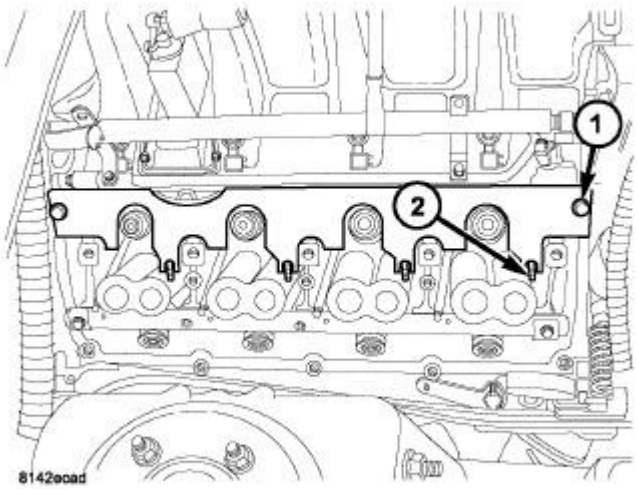

Fig. 133: PUSH ROD RETAINER 9070
Courtesy of CHRYSLER LLC

5. Remove pushrod retainer 9070 (1).

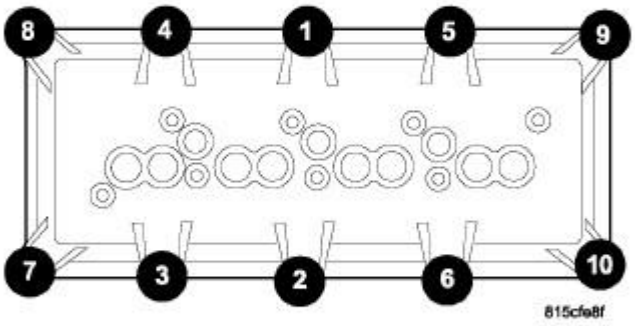

Fig. 134: Cylinder Head Cover Torque Sequence
Courtesy of CHRYSLER LLC

6. Using the sequence shown in illustration, install the cylinder head cover. See **Engine/Cylinder Head/COVER(S), Cylinder Head - Installation**.

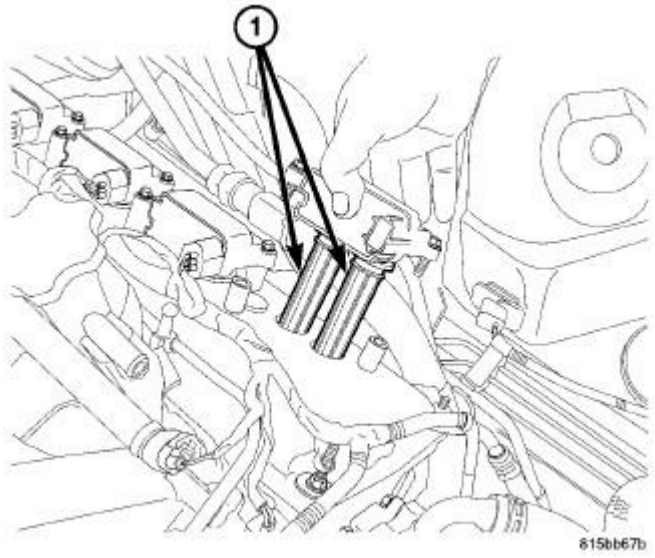

Fig. 135: Removing/Installing Ignition Coil
Courtesy of CHRYSLER LLC

7. Install the ignition coils (1). Refer to **Electrical/Ignition Control/COIL, Ignition - Removal** .
8. Install the engine cover.

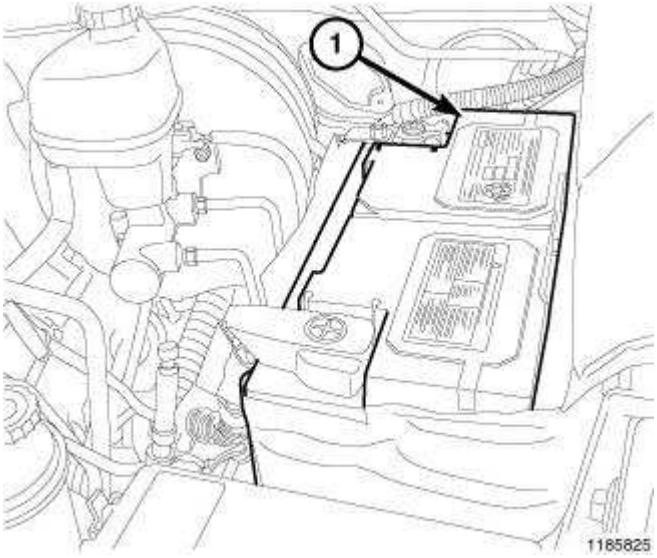

Fig. 136: Battery
Courtesy of CHRYSLER LLC

9. Connect the negative battery cable (1).

SEAL(S), VALVE GUIDE

Description

DESCRIPTION

The valve guide seals are made of rubber and incorporate an integral steel valve spring seat. The integral garter spring maintains consistent lubrication control to the valve stems.

SPRING(S), VALVE

Removal

REMOVAL

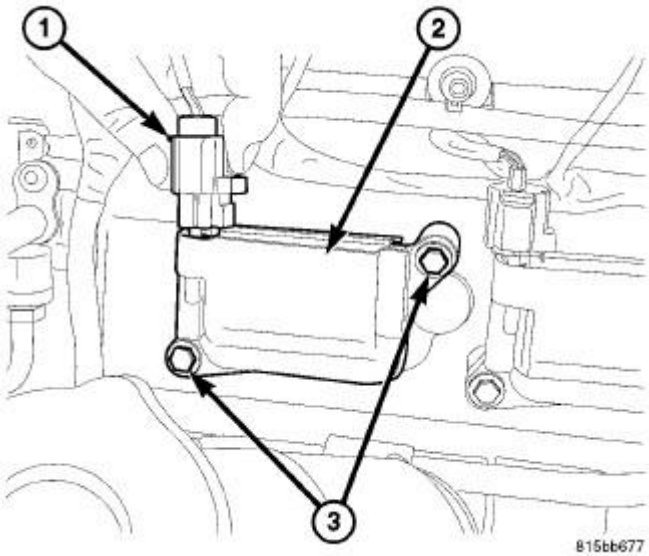

Fig. 137: Ignition Coil Mounting Bolts
Courtesy of CHRYSLER LLC

1. Disconnect the negative battery cable.
2. Remove the air cleaner assembly. See **Engine/Air Intake System/BODY, Air Cleaner - Removal**.
3. Remove the air intake resonator. Refer to **AIR CLEANER**.
4. Remove the ignition coil electrical connectors (1).
5. Remove the ignition coils (2).
6. Remove the spark plugs.

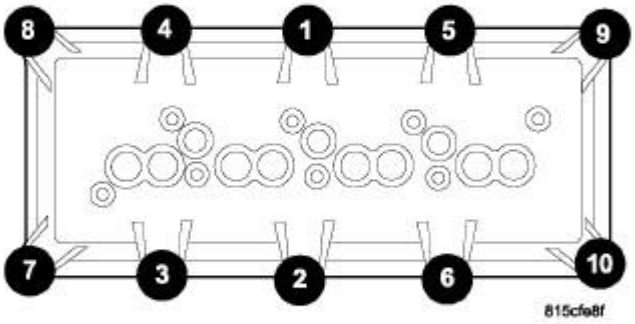

Fig. 138: Cylinder Head Cover Torque Sequence
Courtesy of CHRYSLER LLC

7. Using the sequence shown in illustration, remove the cylinder head cover retaining bolts and remove the cylinder head cover. See **Engine/Cylinder Head/COVER(S), Cylinder Head - Removal**.

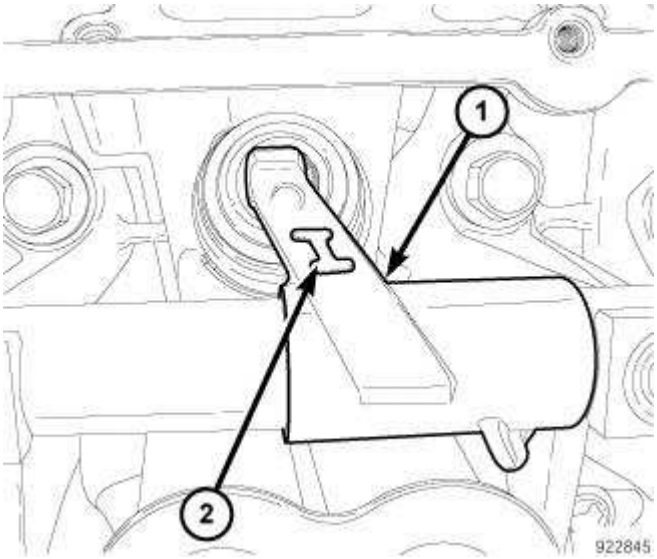

Fig. 139: Intake Rocker Arm Marking
Courtesy of CHRYSLER LLC

CAUTION: The rocker shaft assemblies are not interchangeable between the intake and the exhaust, failure to install them in the correct location

could result in engine damage. The intake rocker arms (1) are marked with the letter "I" (2).

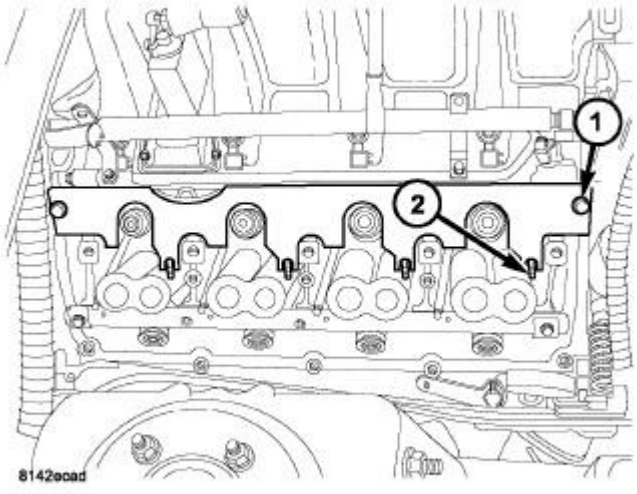

Fig. 140: PUSH ROD RETAINER 9070
Courtesy of CHRYSLER LLC

CAUTION: The piston must be at TDC and both valves closed on the cylinder to be serviced.

CAUTION: The longer pushrods are for the exhaust side and the shorter pushrods are for the intake side.

NOTE: Pushrods must be installed in the same order as removed.

NOTE: If removing the intake valve spring, install the pushrod retainer 9070 (1).

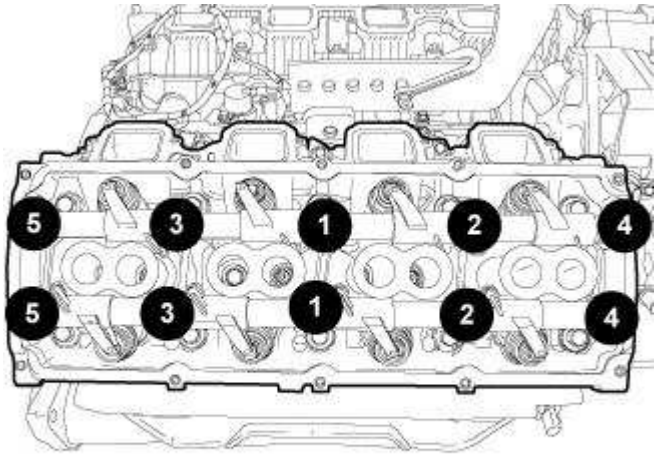

Fig. 141: Rocker Shafts Retaining Bolt Removal & Tightening Sequence
Courtesy of CHRYSLER LLC

8. Using the sequence shown in illustration, remove the exhaust/intake rocker arm shaft retaining bolts.

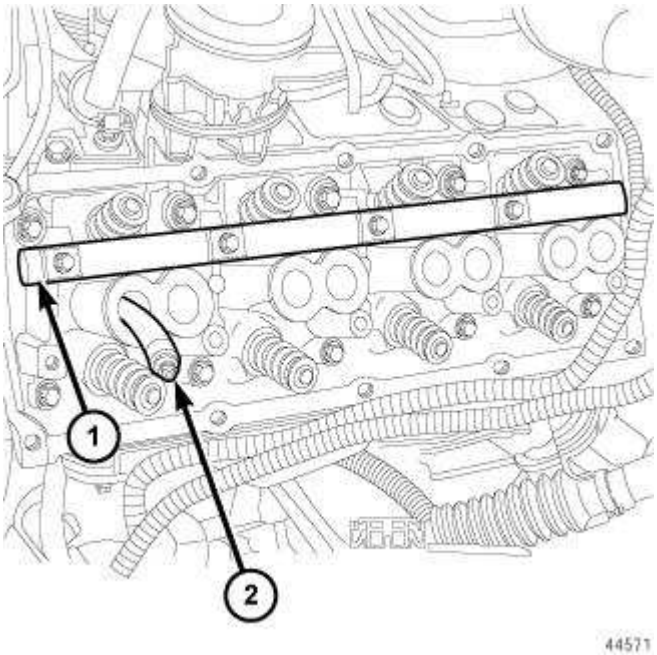

Fig. 142: ROCKER SHAFT
Courtesy of CHRYSLER LLC

NOTE: Tap the top of the valve spring retainer to loosen the spring retainers locks.

9. Install the rocker arm valve spring compressor shaft 9065A (1).

10. Install the spring compressor adapter arm 9065A if needed.
11. Insert an air hose (2) into the spark plug hole and charge the cylinder with air.

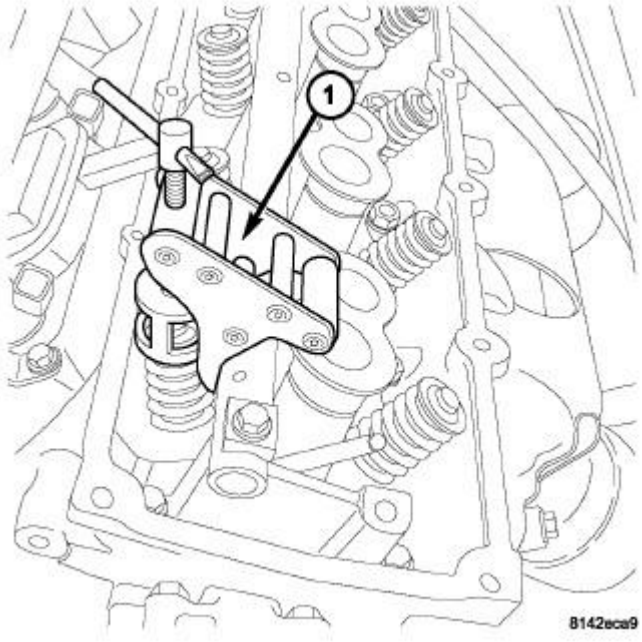

Fig. 143: Remove/Install Valve Spring Intake
Courtesy of CHRYSLER LLC

NOTE: Tap the top of the valve spring retainer to loosen the spring retainers locks.

12. Compress the valve spring with valve spring compressor (1) and remove the valve retainer locks.
13. Release the spring compressor and remove valve spring.

NOTE: The valve springs are interchangeable between intake and exhaust.

14. Remove the valve seal.

NOTE: All valve springs and seals are removed in the same manner.

Installation

INSTALLATION

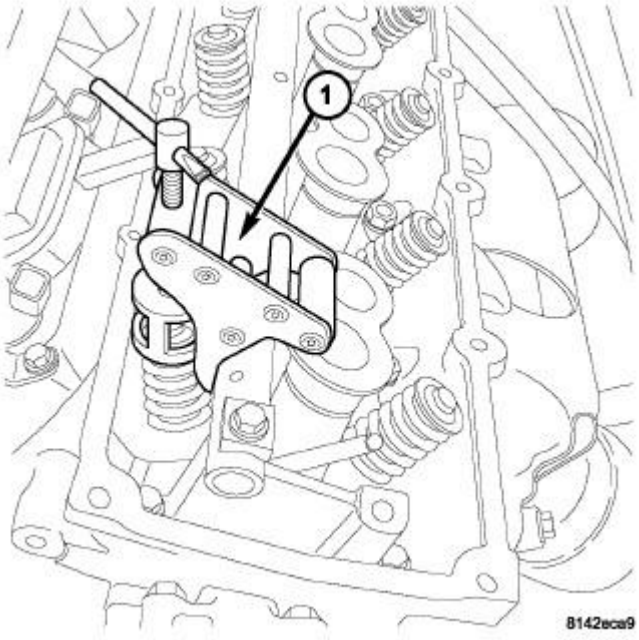

Fig. 144: Remove/Install Valve Spring Intake
Courtesy of CHRYSLER LLC

1. Install the valve seal.
2. Install the valve spring.
3. Using the valve spring compressor 9065A (1), compress the valve spring and install the valve spring retainer and locks.
4. Remove the spring compressor.
5. Remove the air hose from the spark plug hole.

NOTE: All valve springs and seals are installed in the same manner.

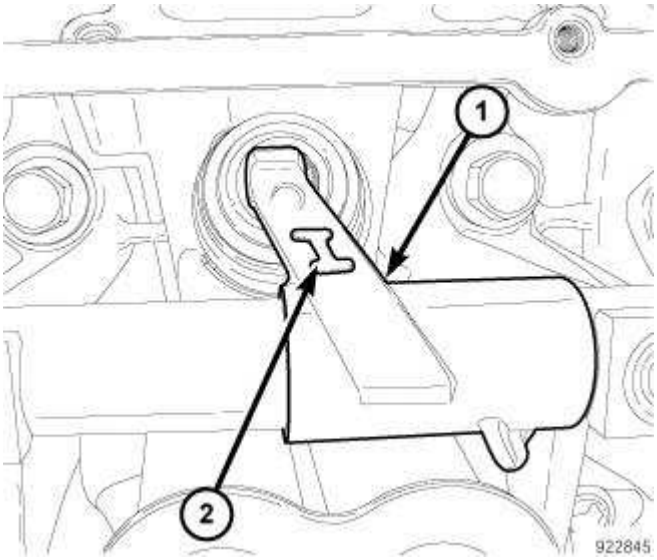

Fig. 145: Intake Rocker Arm Marking
Courtesy of CHRYSLER LLC

CAUTION: The rocker shaft assemblies are not interchangeable between the intake and the exhaust, failure to install them in the correct location could result in engine damage. The intake rocker arms (1) are marked with the letter "I" (2).

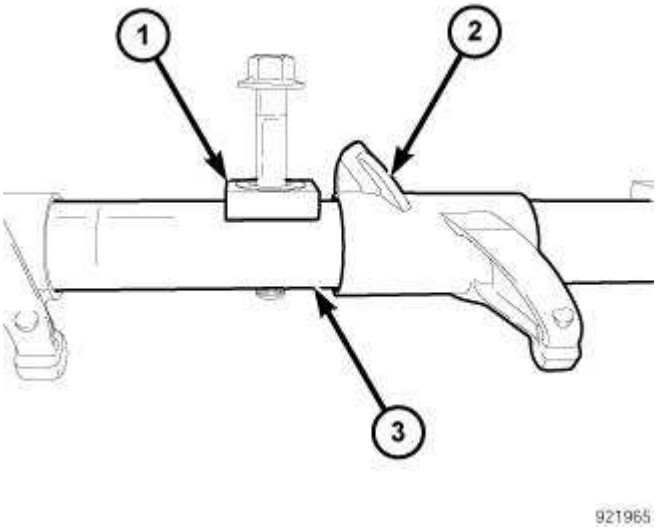

Fig. 146: Rocker Shaft Retainers
Courtesy of CHRYSLER LLC

CAUTION: Make sure that the retainers (1) and the rocker arms (2) are not overlapped when tightening bolts or engine damage could result.

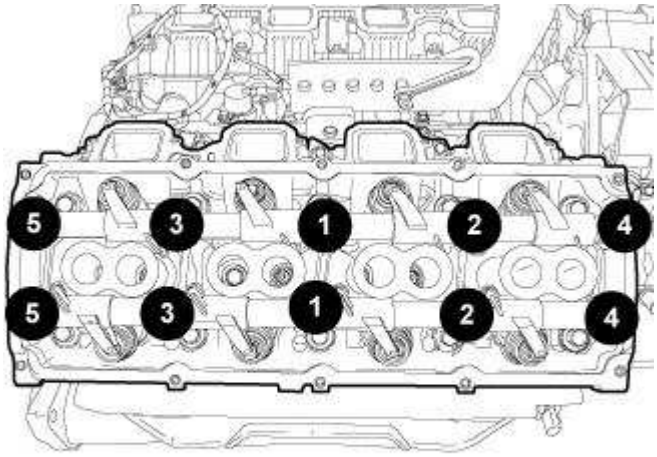

Fig. 147: Rocker Shafts Retaining Bolt Removal & Tightening Sequence
Courtesy of CHRYSLER LLC

CAUTION: Due to the changes in the pushrod clearance holes in the Eagle 5.7L cylinder heads, close attention must be given when installing the pushrod(s) into the tappet(s). Once the pushrod(s) have been installed, use a suitable light to look down through the pushrod hole (s). This will allow you to verify the pushrod(s) are centered properly in the tappet(s) and avoid engine damage. Recheck after the rocker shaft assembly has been installed and tightened to specification.

CAUTION: The longer pushrods are for the exhaust side and the shorter pushrods are for the intake side.

NOTE: Pushrods must be installed in the same order as removed.

6. Install the rocker arm shaft and pushrods. See **Engine/Cylinder Head/ROCKER ARM, Valve - Installation**.
7. Using the sequence shown in illustration, tighten the rocker shaft bolts to 22 N.m (16 ft. lbs.).

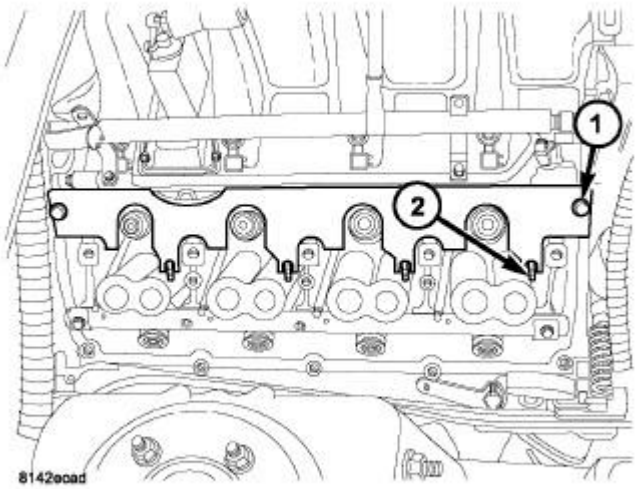

Fig. 148: PUSH ROD RETAINER 9070
Courtesy of CHRYSLER LLC

8. If used, remove the pushrod retainer 9070 (1).

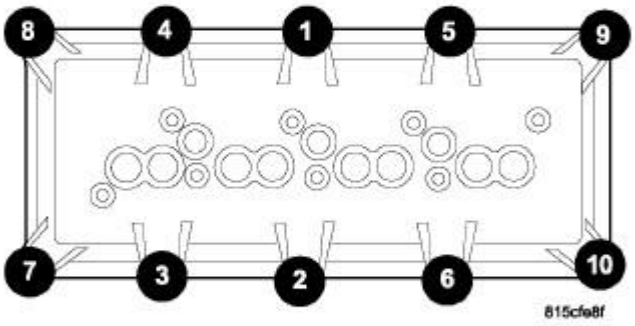

Fig. 149: Cylinder Head Cover Torque Sequence
Courtesy of CHRYSLER LLC

CAUTION: Do not use harsh cleaners to clean the cylinder head covers. Severe damage to covers may occur.

CAUTION: Do not allow other components including the wire harness to rest on or against the engine cylinder head cover. Prolonged contact with other objects may wear a hole in the cylinder head cover.

9. Clean the cylinder head cover and both sealing surfaces, inspect and replace the gasket as necessary.
10. Install the cylinder head cover and hand start all fasteners. Verify that all double ended studs are in the correct location.
11. Using the sequence shown in illustration, tighten the cylinder head cover retaining bolts to 8 N.m (71 in. lbs.).
12. Install the spark plugs.

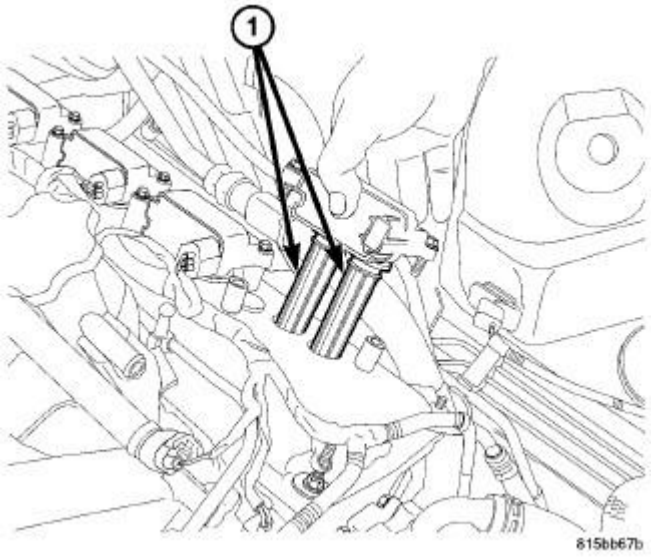

Fig. 150: Removing/Installing Ignition Coil
Courtesy of CHRYSLER LLC

13. Before installing the ignition coils, apply dielectric grease to the inside of the spark plug boots.

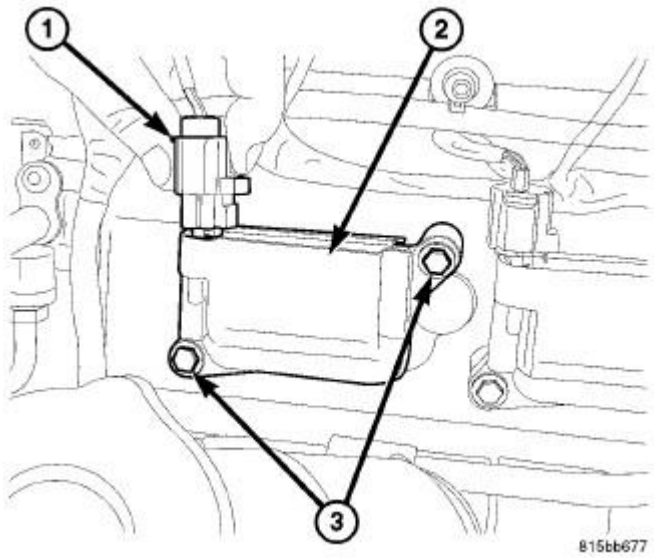

Fig. 151: Ignition Coil Mounting Bolts
Courtesy of CHRYSLER LLC

14. Install the ignition coil (2) on the plugs and tighten the fasteners (3) to 7 N.m (62 in. lbs).
15. Connect the ignition coil electrical connectors (1).
16. Install the air cleaner assembly. See **Engine/Air Intake System/BODY, Air Cleaner - Installation**.
17. Install the air intake resonator. Refer to **AIR CLEANER**.
18. Connect the negative battery cable.

VALVES, INTAKE AND EXHAUST

Description

VALVE GUIDES

The valve guides are made of powdered metal and pressed into the cylinder head. The guides are not replaceable or serviceable, and valve guide reaming is not recommended. If the guides are worn beyond acceptable limits, replace the cylinder heads.

VALVES

Both the intake and the exhaust valves are made of steel. The intake valve is 50.93 mm (2.00 inches) in diameter and the exhaust valve is 39.53 mm (1.55 inches) in diameter. All valves use three-bead lock keepers to retain the springs and promote valve rotation.

Standard Procedure

REFACING

VALVE FACE AND VALVE SEAT ANGLE CHART

DESCRIPTION	SPECIFICATION	
-	Metric	Standard
Seat Width	-	
Intake	1.18 - 1.62 mm	0.0464 - 0.0637 in.
Exhaust	1.48 - 1.92 mm	0.058 - 0.075 in.
Face Angle	45° - 451/2°	
Seat Angle	441/2° - 45°	

NOTE: Valve seats that are worn or burned can be reworked, provided that correct angle and seat width are maintained. Otherwise the cylinder head must be replaced.

NOTE: When refacing valves and valve seats, it is important that the correct size valve guide pilot be used for reseating stones. A true and complete surface must be obtained.

1. Using a suitable dial indicator, measure the center of the valve seat. Total run out must not exceed 0.051 mm (0.002 in).
2. Apply a small amount of Prussian Blue to the valve seat. Insert the valve into the cylinder head. Rotate valve while applying light pressure on the valve seat. Remove the valve and examine the valve face. If the blue is transferred below the top edge of the valve face, lower the valve seat using a 15 degree stone. If the blue is transferred to the bottom edge of the valve face, raise the valve seat using a 65 degree stone.
3. When the seat is properly positioned the width of the intake seat must be 1.18 - 1.62 mm (0.0464 - 0.0637 in.) and the exhaust seat must be 1.48 - 1.92 mm (0.058 - 0.075 in.).
4. Check the valve spring installed height after refacing the valve and seat. The installed height for both intake and exhaust valve springs must not exceed 46.0 mm (1.81 in.).
5. The valve seat must maintain a seat angle of 441/2° - 45°.
6. The valve face must maintain a face angle of 45° - 451/2°.

Removal

REMOVAL

1. Remove the cylinder head. See **Engine/Cylinder Head - Removal**.
2. Compress valve springs using Valve Spring Compressor Tool C-3422-D and Adapter 8464.
3. Remove valve retaining locks, valve spring retainers, valve stem seals and valve springs.
4. Before removing valves, remove any burrs from valve stem lock grooves to prevent damage to the valve guides. Identify valves to ensure installation in original location.

Installation

INSTALLATION

1. Clean valves thoroughly. Discard burned, warped and cracked valves.
2. Remove carbon and varnish deposits from inside of valve guides with a reliable guide cleaner.
3. Measure valve stems for wear. If wear exceeds 0.051 mm (0.002 inch), replace the valve.
4. Coat valve stems with lubrication oil and insert them in cylinder head.
5. If valves or seats are reground, check valve stem height. If valve is too long, replace cylinder head.
6. Install new seals on all valve guides. Install valve springs and valve retainers.
7. Compress valve springs with Valve Spring Compressor Tool special tool # C- 3422 and adapter 8464, install locks and release tool. If valves and/or seats are ground, measure the installed height of springs. Make sure the measurement is taken from bottom of spring seat in cylinder head to the bottom surface of spring retainer.
8. Install cylinder head. See **Engine/Cylinder Head - Installation**.

ENGINE BLOCK

CLEANING

CLEANING

Thoroughly clean the oil pan and engine block gasket surfaces.

Use compressed air to clean out:

- The galley at the oil filter adaptor hole.
- The front and rear oil galley holes.
- The MDS oil galley holes in the valley.
- The feed holes for the crankshaft main bearings.

Drill and tapped holes should be free of debris upon assembly.

Once the block has been completely cleaned, apply Loctite PST pipe sealant with Teflon 592 to the threads of the front and rear oil galley plugs, and coolant drain plugs. Tighten the oil galley 1/4 inch x 18 NPT plugs to 20 N.m (177 in. lbs.). Tighten the coolant drain 1/4 inch x 18 NPT plugs to 34 N.m (300 in. lbs.). Tighten the 3/8 inch x 18 NPT plugs to 27 N.m (240 in. lbs.).

INSPECTION

INSPECTION

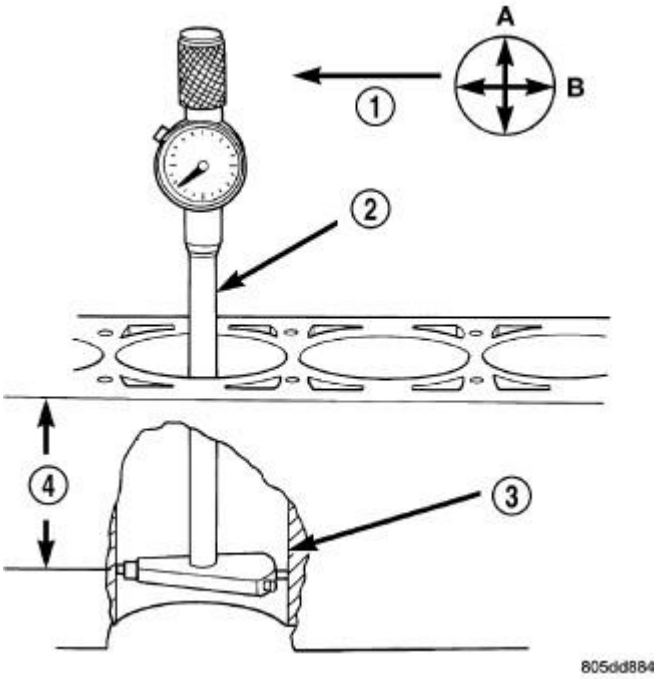

Fig. 152: Bore Gauge - Typical
Courtesy of CHRYSLER LLC

1. It is mandatory to use a dial bore gauge to measure each cylinder bore diameter. To correctly select the proper size piston, a cylinder bore gauge, capable of reading in 0.003 mm (.0001 in.) increments is required. If a bore gauge is not available, do not use an inside micrometer.
2. Measure the inside diameter of the cylinder bore at three levels below top of bore. Start perpendicular (across or at 90 degrees) to the axis of the crankshaft and then take two additional reading.
3. Measure the cylinder bore diameter crosswise to the cylinder block near the top of the bore. Repeat the measurement near the middle of the bore, then repeat the measurement near the bottom of the bore.
4. Determine taper by subtracting the smaller diameter from the larger diameter.
5. Rotate measuring device 90° and repeat steps above.
6. Determine out-of-roundness by comparing the difference between each measurement.
7. If cylinder bore taper does not exceed 0.025 mm (0.001 inch) and out-of-roundness does not exceed 0.015 mm (0.0006 inch), the cylinder bore can be honed. If the cylinder bore taper or out- of-round condition exceeds these maximum limits, the cylinder block must be replaced. A slight amount of taper always exists in the cylinder bore after the engine has been in use for a period of time.

ASSEMBLY, VARIABLE VALVE TIMING

Description

DESCRIPTION

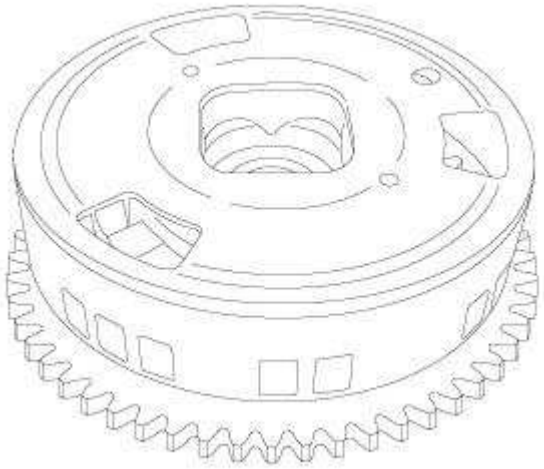

Fig. 153: Variable Cam Timing (VCT) Assembly
Courtesy of CHRYSLER LLC

The 5.7L Eagle engine is equipped with Variable Cam Timing (VCT). This system advances and/or retards the camshaft timing to improve engine performance, mid-range torque, idle quality, fuel economy, and reduce emissions. The VCT assembly is sometimes referred to as a camshaft phaser.

CAUTION: Never attempt to disassemble the camshaft phaser, severe engine damage could result.

The VCT assembly consists of the camshaft sprocket and a timing phaser. The VCT phaser assembly bolts to the camshaft and is serviced as an assembly.

Operation

OPERATION

The Variable Cam Timing (VCT) assembly is actuated with engine oil pressure. The oil flow to the VCT assemblies are controlled by an Oil Control Valve (OCV). The OCV consist of a Pulse Width Modulated (PWM) solenoid and a spool valve. The PCM actuates the OCV to control oil flow through the spool valve into the VCT assemblies. The VCT assembly consists of a rotor, stator, and sprocket. The stator is connected to the timing chain through the sprocket. The rotor is connected to the camshaft. Oil flow in to the VCT assembly rotates the rotor with respect to the stator, thus rotating the exhaust camshaft with respect to the timing chain and intake camshaft. An infinitely variable cam timing position can be achieved within the limits of the hardware. The CMP monitors the position of the camshaft with respect to the crankshaft and provides feedback to the PCM.

CAUTION: Never attempt to disassemble the camshaft phaser, severe engine damage could result.

Removal

REMOVAL

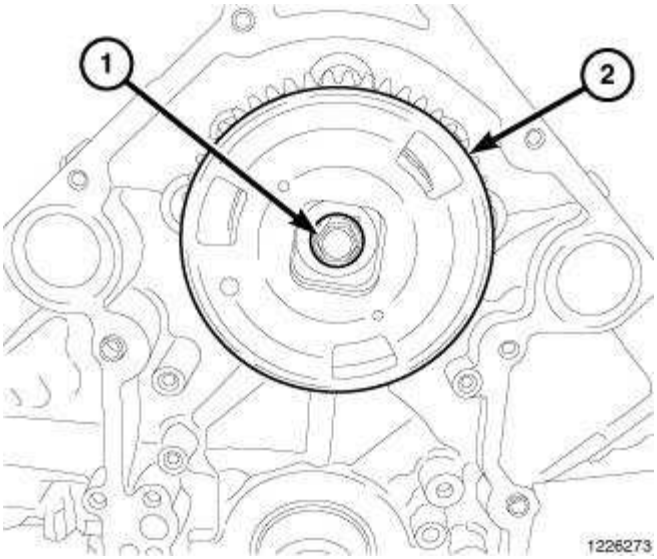

Fig. 154: Camshaft Phaser & Bolt
Courtesy of CHRYSLER LLC

CAUTION: Never attempt to disassemble the camshaft phaser, severe engine damage could result.

1. Remove the timing chain and sprockets. See **Engine/Valve Timing/CHAIN and SPROCKETS, Timing - Removal**.
2. Remove the camshaft phaser bolt (1).
3. Remove camshaft phaser (2).

Installation

INSTALLATION

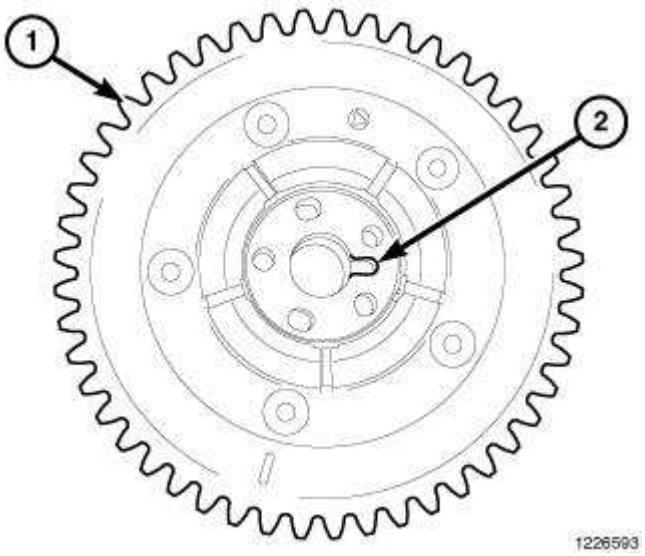

Fig. 155: Phaser Alignment Slot
Courtesy of CHRYSLER LLC

1. Align the slot (2) in the phaser (1) with the dowel on the camshaft.

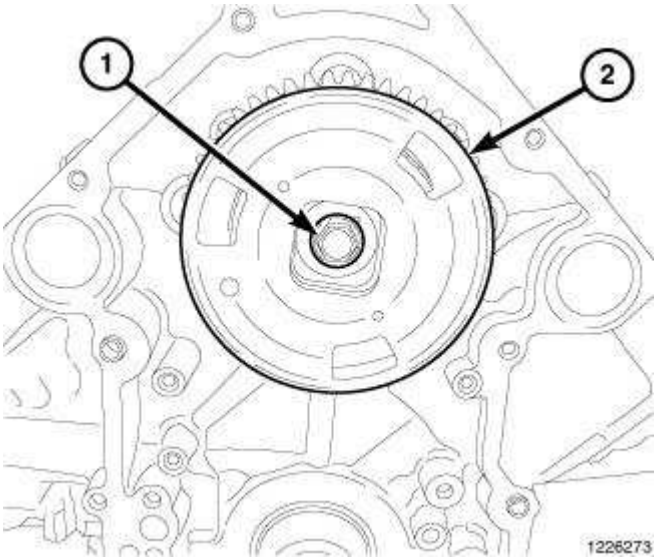

Fig. 156: Camshaft Phaser & Bolt
Courtesy of CHRYSLER LLC

CAUTION: Never attempt to disassemble the camshaft phaser, severe engine damage could result.

2. Position the phaser (2) in place and install phaser retaining bolt (1) and tighten to 122 N.m (90 ft. lbs.).
3. Install the timing chain and sprockets. See **Engine/Valve Timing/CHAIN and SPROCKETS, Timing - Installation**.

BEARING(S), CRANKSHAFT, MAIN

Standard Procedure

CRANKSHAFT MAIN BEARING - FITTING

MAIN BEARING JOURNAL DIAMETER (CRANKSHAFT REMOVED)

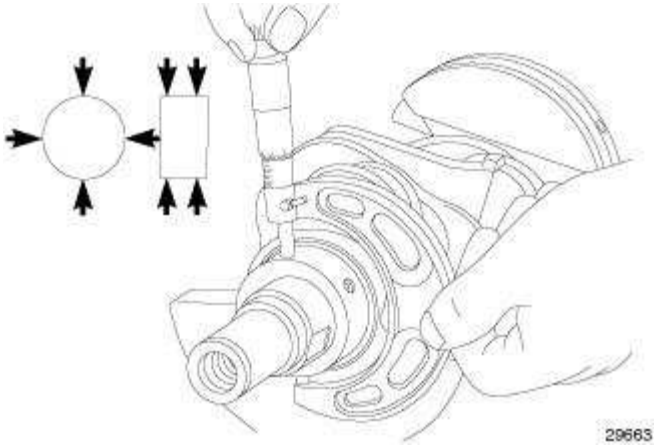

Fig. 157: Crankshaft Journal Measurements - Typical
Courtesy of CHRYSLER LLC

With the crankshaft removed from the cylinder block.

Clean the oil off the main bearing journal.

Determine the maximum diameter of the journal with a micrometer. Measure at two locations 90° apart at each end of the journal.

The maximum allowable taper is 0.008 mm (0.0004 inch.) and maximum out of round is 0.005 mm (0.0002 inch). Compare the measured diameter with the journal diameter specification (MAIN BEARING FITTING CHART). Select the inserts required to obtain the specified bearing-to-journal clearance.

CRANKSHAFT MAIN BEARING SELECTION

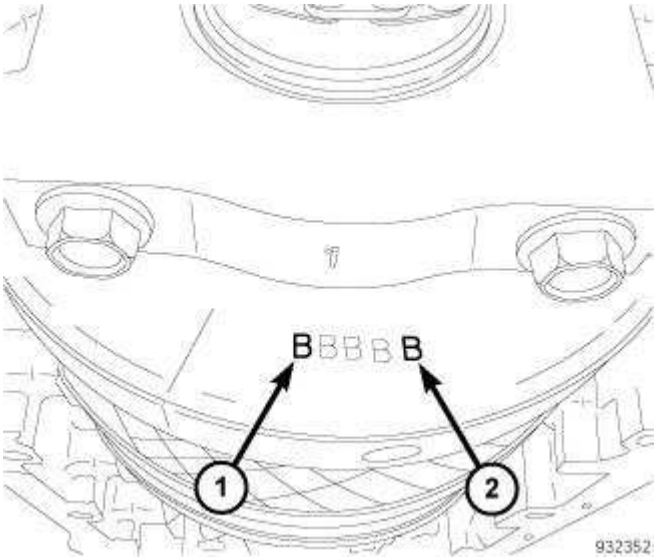

Fig. 158: Crankshaft Counterweight Stamped Grade Identification Marks
Courtesy of CHRYSLER LLC

The main bearings are "select fit" to achieve proper oil clearances. For main bearing selection, the crankshaft counterweight has grade identification marks stamped into it. These marks are read from left to right. The left letter (1) refers to the number one main journal and the right letter (2) refers to the number 5 journal.

NOTE: Service main bearings are coded. These codes identify what size or grade of the bearing.

MAIN BEARING SELECTION CHART - 5.7L

GRADE MARKING	BEARING SIZE		FOR USE WITH JOURNAL SIZE	
-	METRIC	STANDARD	METRIC	STANDARD
A	0.008 mm U/S	0.0004 in. U/S	64.988 - 64.995 mm	2.5585 - 2.5588 in.
B	NOMINAL		64.996 - 65.004 mm	2.5588 - 2.5592 in.
C	0.008 mm O/S	0.0004 in. O/S	65.005 - 65.012 mm	2.5592 - 2.5595 in.

Inspection

INSPECTION

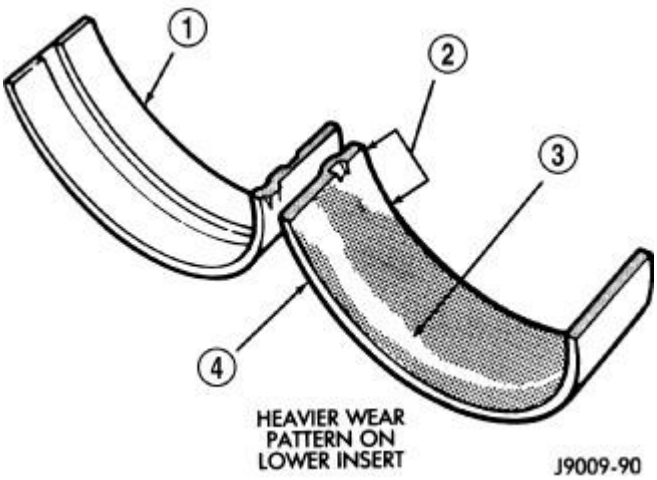

Fig. 159: Main Bearing Wear Patterns
Courtesy of CHRYSLER LLC

Wipe the inserts clean and inspect for abnormal wear patterns and for metal or other foreign material imbedded in the lining. Normal main bearing insert wear patterns are illustrated.

NOTE: If any crankshaft journals are scored, the crankshaft must be repaired or replaced.

Inspect the back of the inserts for fractures, scrapping or irregular wear patterns.

Inspect the upper insert locking tabs for damage.

Replace all damaged or worn bearing inserts.

CAMSHAFT, ENGINE

Removal

CAMSHAFT CORE HOLE PLUG

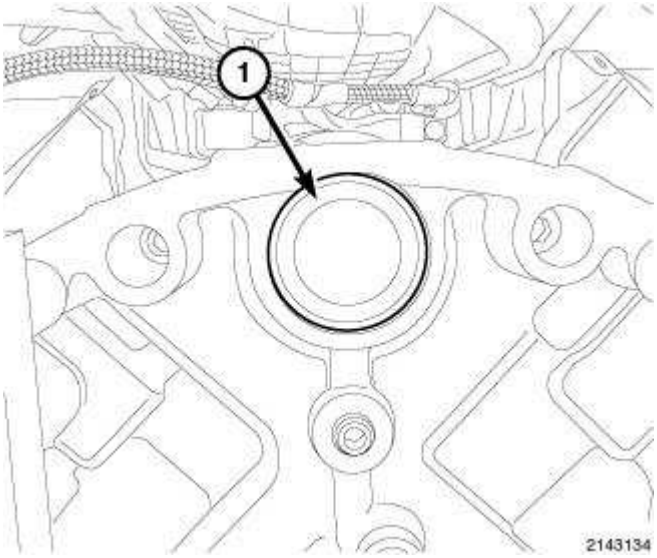

Fig. 160: Camshaft Core Hole Plug
Courtesy of CHRYSLER LLC

1. Perform the fuel system pressure release procedure. Refer to **Fuel System/Fuel Delivery - Standard Procedure** .
2. Remove the engine from the vehicle. See **Engine - Removal**.
3. Remove the flexplate. See **Engine/Engine Block/FLEXPLATE - Removal**.

CAUTION: Do not damage the rear surface of the camshaft or the core plug sealing surface, when removing the core plug.

4. Using a suitable sharp punch, punch a small hole in the camshaft core hole plug (1).
5. Insert a short sheet metal screw into the small hole in the camshaft core hole plug.
6. Using a suitable slide hammer puller, remove the rear camshaft core hole plug.

CAMSHAFT

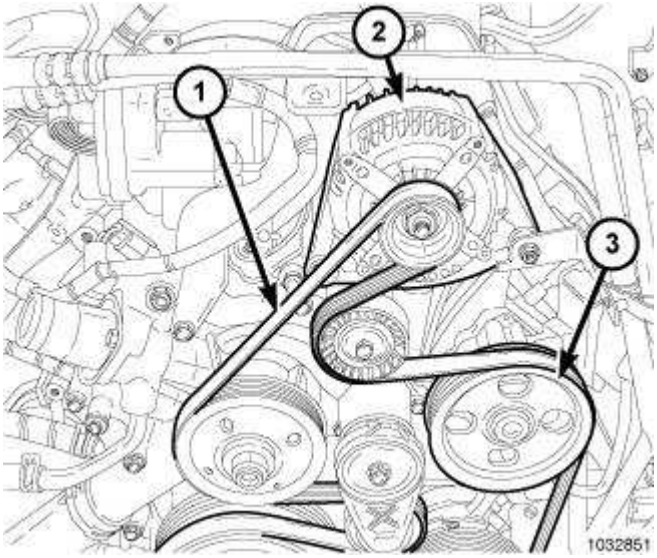

Fig. 161: Accessory Drive Belt Routing
Courtesy of CHRYSLER LLC

1. Remove the battery negative cable.
2. Remove the air cleaner assembly. See **Engine/Air Intake System/BODY, Air Cleaner - Removal**.
3. Drain coolant. Refer to **Cooling - Standard Procedure** .
4. Remove the accessory drive belt. Refer to **Cooling/Accessory Drive/BELT, Serpentine - Removal** .
5. Remove the left and right cylinder heads. See **Engine/Cylinder Head - Removal**.
6. Remove the radiator. Refer to **Cooling/Engine/RADIATOR, Engine Cooling - Removal** .
7. Remove the oil pan. See **Engine/Lubrication/PAN, Oil - Removal**.
8. Remove timing case cover. See **Engine/Valve Timing/COVER(S), Engine Timing - Removal**.

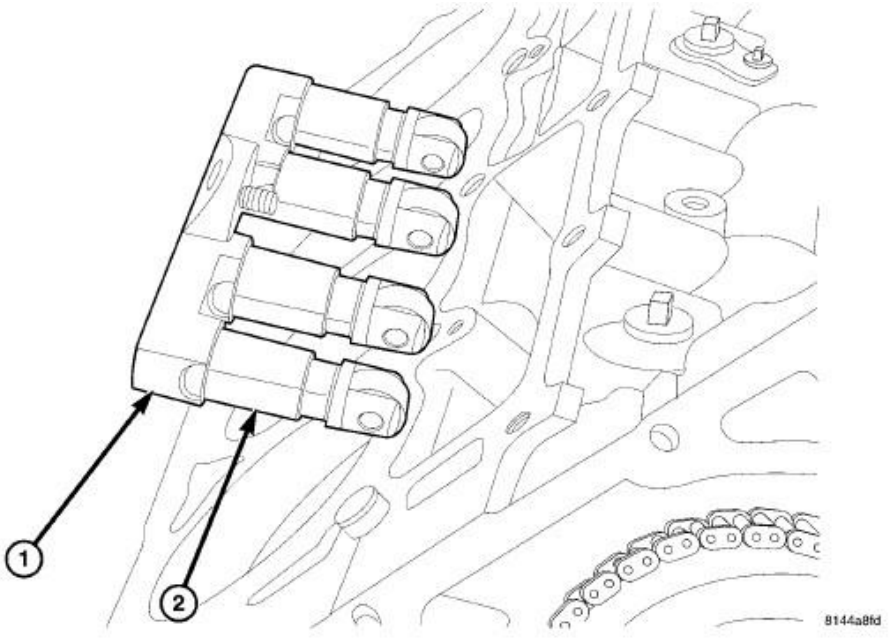

Fig. 162: Removing/Installing Hydraulic Roller Tappet
Courtesy of CHRYSLER LLC

NOTE: Identify lifters to ensure installation in original location.

9. Remove the tappets (2) and retainer (1) assembly.

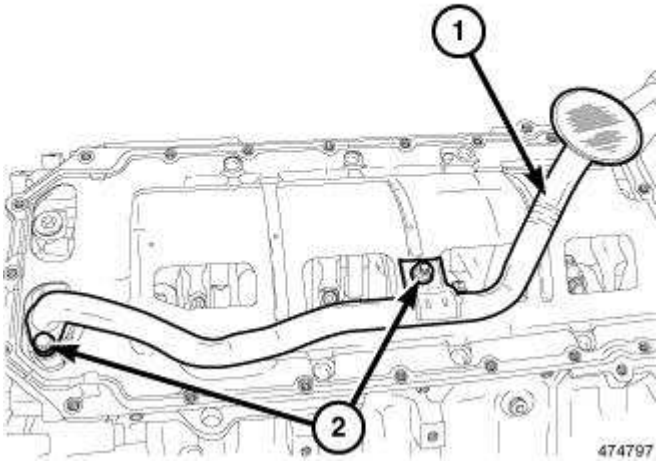

Fig. 163: Oil Pick Up Tube
Courtesy of CHRYSLER LLC

10. Remove the oil pick up tube (1).

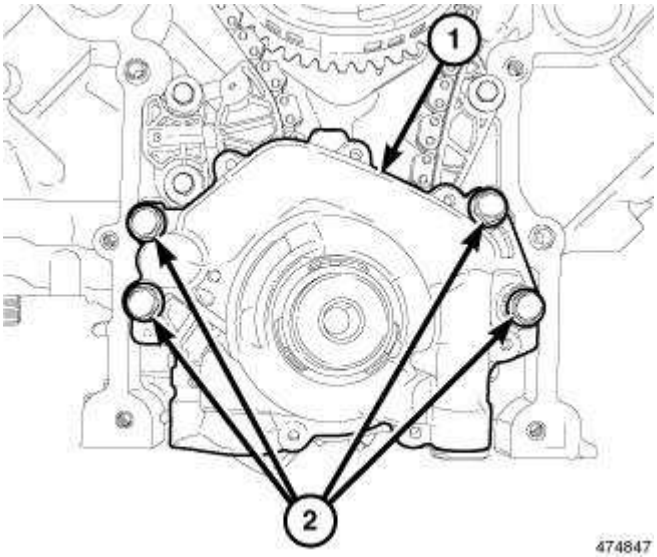

Fig. 164: Oil Pump Retaining Bolts
Courtesy of CHRYSLER LLC

11. Remove the oil pump retaining bolts (2) and remove the oil pump (1).

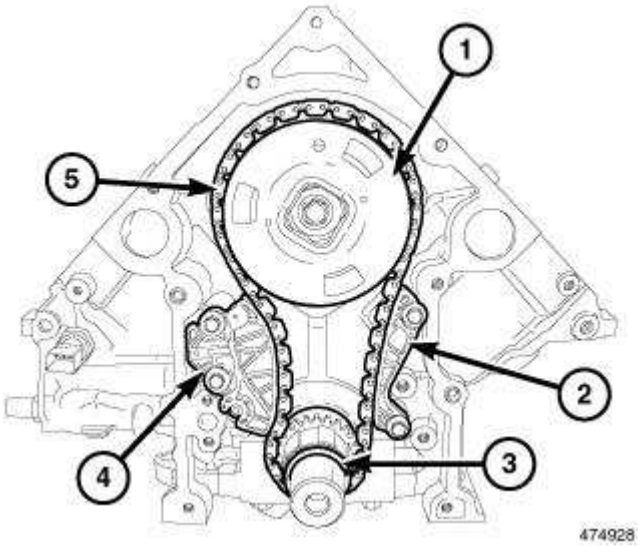

Fig. 165: Timing Chain
Courtesy of CHRYSLER LLC

12. Remove timing chain (5). Refer to **CHAIN and SPROCKETS, Timing** .

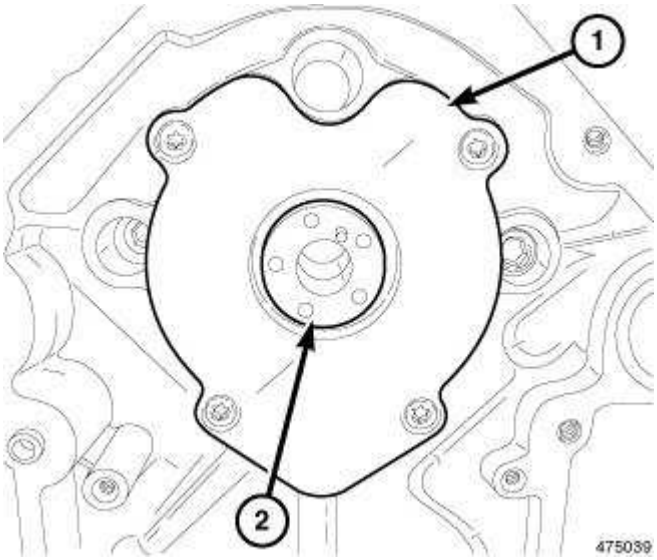

Fig. 166: Camshaft Thrust Plate
Courtesy of CHRYSLER LLC

13. Remove camshaft thrust plate (1).

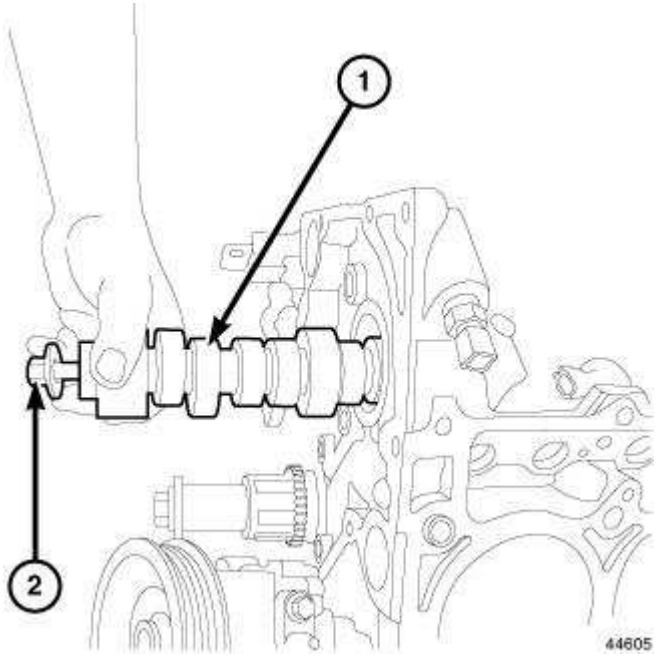

Fig. 167: Removing/Installing Camshaft
Courtesy of CHRYSLER LLC

NOTE: Slowly rotate the camshaft while pulling camshaft out.

14. Install a long bolt (2) into front of camshaft (1) to aid in removal of the camshaft. Remove camshaft, being careful not to damage cam bearings with the cam lobes.

Inspection

INSPECTION

The cam bearings are not serviceable. Do not attempt to replace cam bearings for any reason. If the cam bearings are damaged, the cylinder block must be replaced.

Installation

CAMSHAFT CORE HOLE PLUG

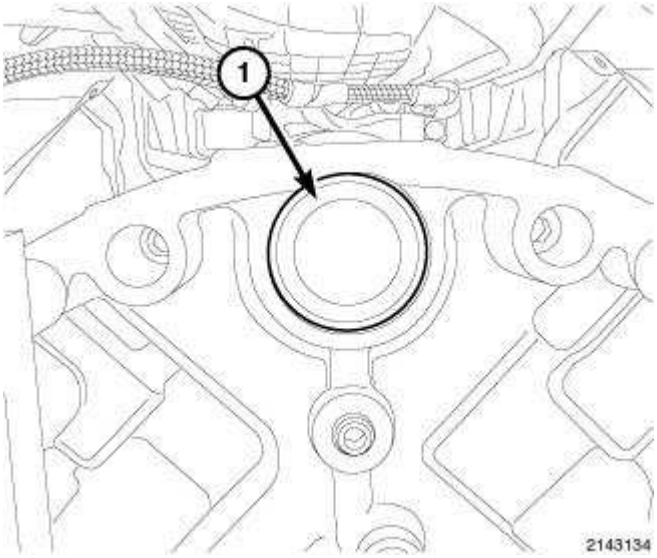

Fig. 168: Camshaft Core Hole Plug
Courtesy of CHRYSLER LLC

1. Clean the core hole in the cylinder block.

   NOTE: Do not apply adhesive to the new camshaft core hole plug. A new plug has adhesive pre-applied.

2. Install a new camshaft core hole plug (1) located at the rear of cylinder block, using a suitable flat faced tool. The plug must be fully seated on the cylinder block shoulder.
3. Install the flexplate. See **Engine/Engine Block/FLEXPLATE - Installation**.
4. Install the engine. See **Engine - Installation**.

CAMSHAFT

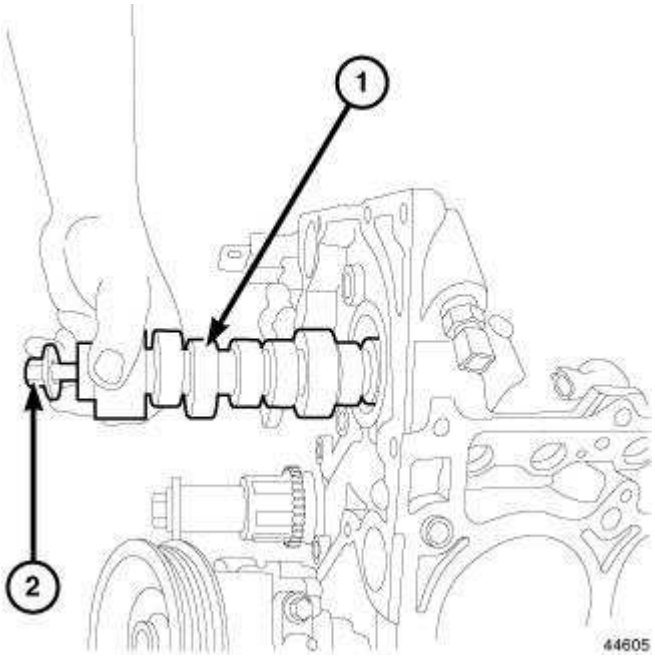

Fig. 169: Removing/Installing Camshaft
Courtesy of CHRYSLER LLC

1. Lubricate camshaft lobes and camshaft bearing journals and insert the camshaft (1).

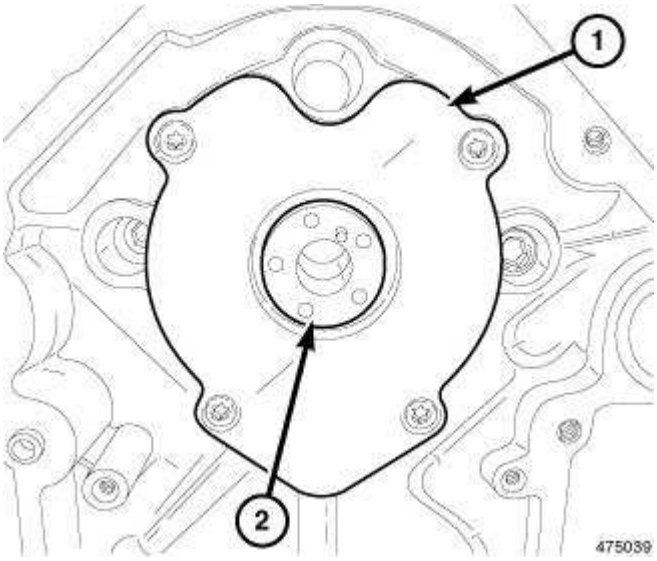

Fig. 170: Camshaft Thrust Plate
Courtesy of CHRYSLER LLC

2. Install camshaft thrust plate (1).

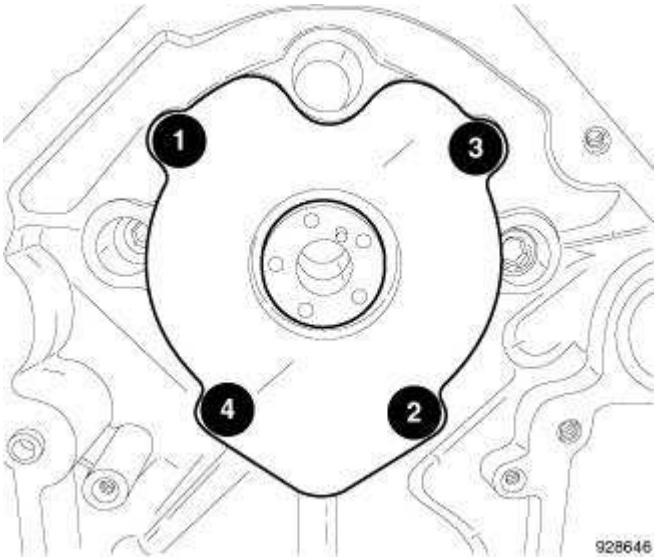

Fig. 171: Camshaft Thrust Plate Bolt Tightening Sequence
Courtesy of CHRYSLER LLC

3. Tighten the bolts to 28 N.m (250 in. lbs.) in the sequence shown in illustration.
4. Measure camshaft end play. See **Engine - Specifications**. If not within limits install a new thrust plate.

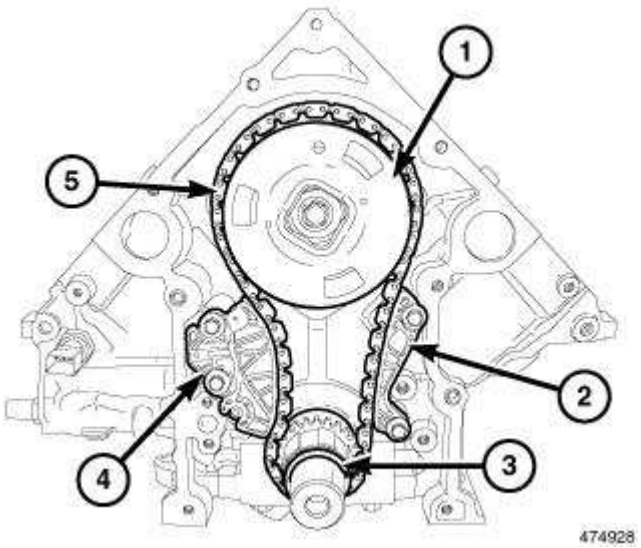

Fig. 172: Timing Chain
Courtesy of CHRYSLER LLC

5. Install timing chain (5) and sprockets (1,3). See **Engine/Valve Timing/CHAIN and SPROCKETS, Timing - Installation**.
6. Install timing chain tensioner (4) and guide (2).

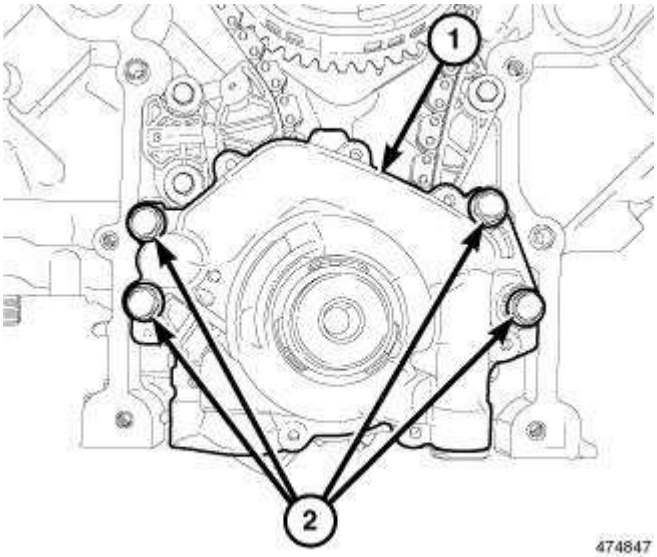

Fig. 173: Oil Pump Retaining Bolts
Courtesy of CHRYSLER LLC

7. Install the oil pump (1) and tighten bolts to 28 N.m (248 in. lbs.). See **Engine/Lubrication/PUMP, Engine Oil - Installation**.

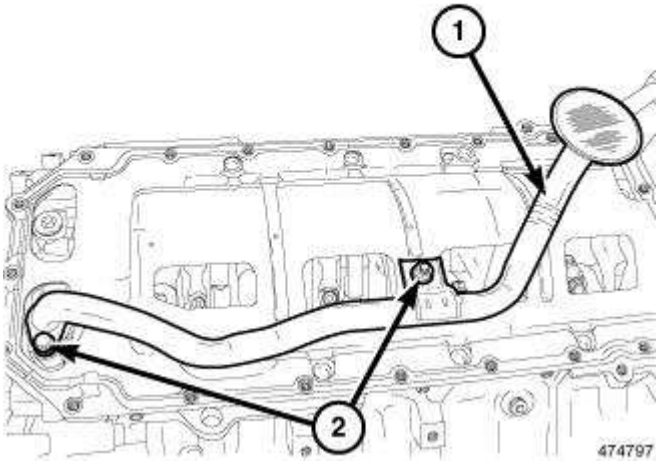

Fig. 174: Oil Pick Up Tube
Courtesy of CHRYSLER LLC

8. Inspect oil pick up tube O-rings and replace as necessary.
9. Install the oil pick up tube (1) and tighten fasteners (2) to 28 N.m (248 in. lbs.).
10. Install the timing chain cover. See **Engine/Valve Timing/COVER(S), Engine Timing - Installation**.
11. Install the oil pan. See **Engine/Lubrication/PAN, Oil - Installation**.

CAUTION: Engines equipped with MDS use both standard roller tappets (2) and deactivating roller tappets (1). The deactivating roller tappets must be used in cylinders 1,4,6,7. The deactivating tappets can be identified by the two holes in the side of the tappet body (3), for the latching pins.

NOTE: Each tappet reused must be installed in the same position from which it was removed. When camshaft is replaced, all of the tappets must be replaced.

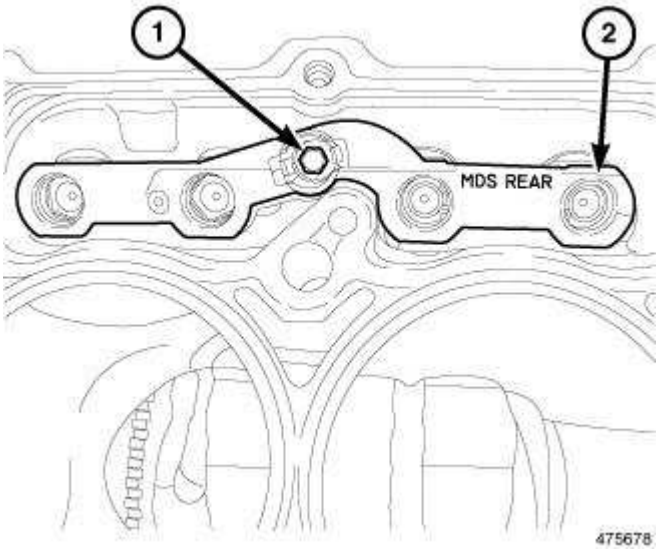

Fig. 175: Rear MDS Lifter Assembly
Courtesy of CHRYSLER LLC

12. Install the rear MDS lifter assembly (2) and tighten bolt (1) to 12 N.m (106 in. lbs.).

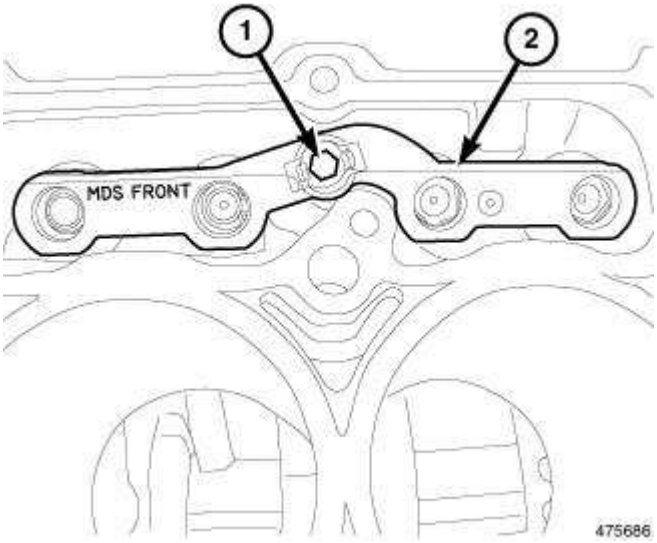

Fig. 176: Front MDS Lifter Assembly

Courtesy of CHRYSLER LLC

13. Install the front MDS lifter assembly (2) and tighten bolt (1) to 12 N.m (106 in. lbs.).

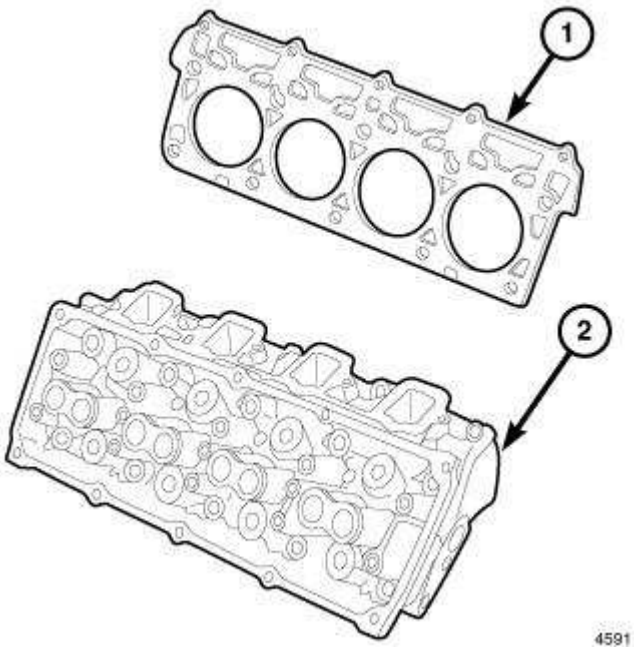

Fig. 177: Cylinder Head Components
Courtesy of CHRYSLER LLC

14. Install both left and right cylinder heads (4). See **Engine/Cylinder Head - Installation**.
15. Install pushrods.
16. Install rocker arms. See **Engine/Cylinder Head/ROCKER ARM, Valve - Installation**.

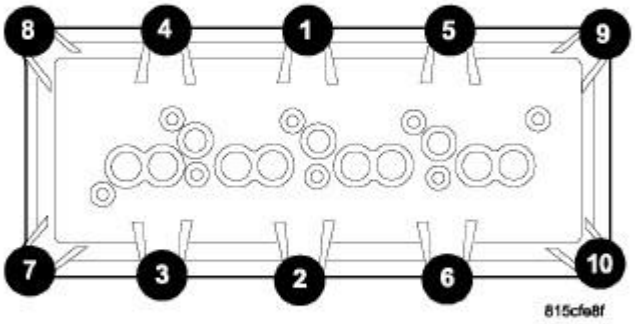

Fig. 178: Cylinder Head Cover Torque Sequence
Courtesy of CHRYSLER LLC

17. Install cylinder head covers. See **Engine/Cylinder Head/COVER(S), Cylinder Head - Installation**.

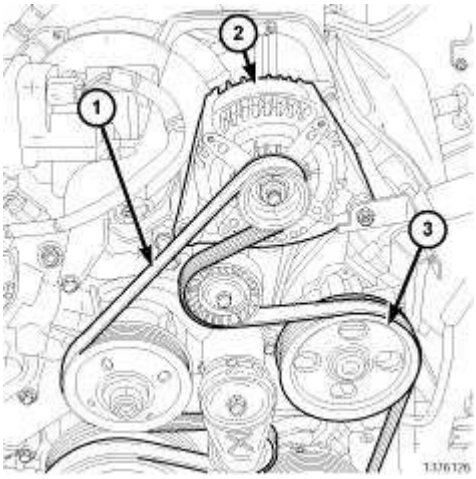

Fig. 179: Generator & Power Steering Pump
Courtesy of CHRYSLER LLC

18. Install intake manifold. See **Engine/Manifolds/MANIFOLD, Intake - Installation**.
19. Install the generator (2).
20. Install the power steering pump (3).
21. Install the accessory drive belt (1). Refer to **Cooling/Accessory Drive/BELT, Serpentine - Installation** .

22. Install the radiator. Refer to **Cooling/Engine/RADIATOR, Engine Cooling - Installation** .
23. Install the air cleaner assembly. See **Engine/Air Intake System/BODY, Air Cleaner - Installation**.
24. Install the battery negative cable.
25. Refill coolant. Refer to **Cooling - Standard Procedure** .
26. Refill engine oil.
27. Start engine and check for leaks.

COVER, STRUCTURAL DUST

Description

DESCRIPTION

The structural dust cover is made of die cast aluminum and joins the lower half of the transmission bell housing to the engine.

Operation

OPERATION

The structural cover provides additional powertrain stiffness and reduces noise and vibration.

Removal

REMOVAL

1. Raise and support the vehicle.

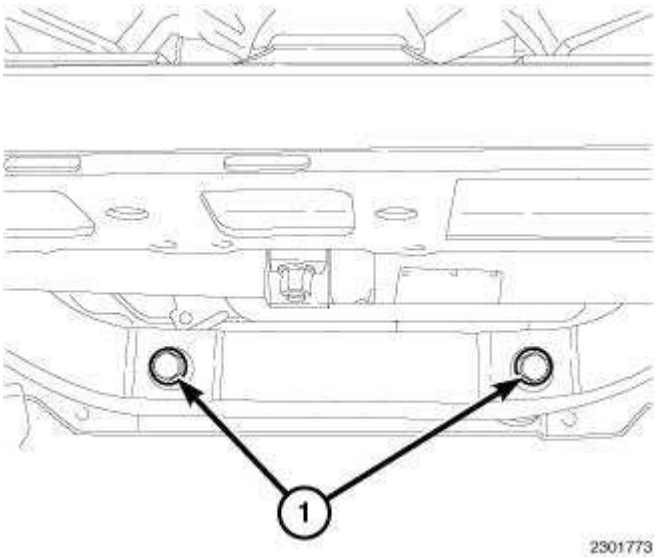

Fig. 180: Steering Rack To Frame Mounting Bolts
Courtesy of CHRYSLER LLC

2. Remove the steering rack to frame mounting bolts (1) and lower the steering rack enough to gain clearance for the structural dust cover removal.

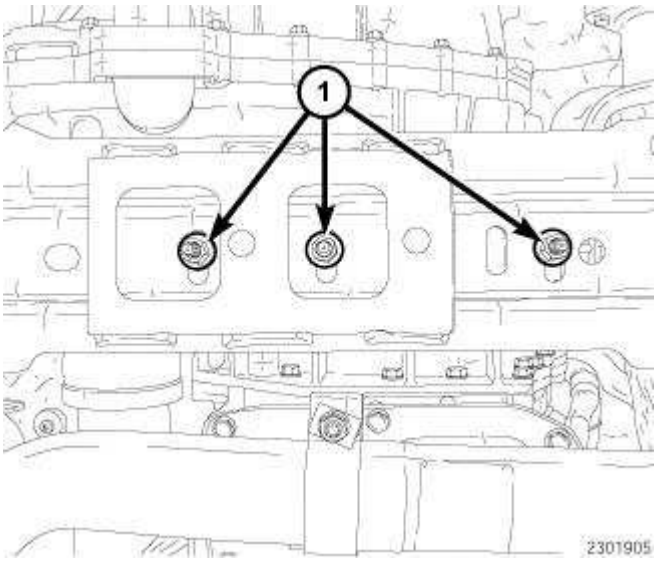

Fig. 181: Transmission Mount To Crossmember Retaining Nuts
Courtesy of CHRYSLER LLC

3. Remove the transmission mount to crossmember retaining nuts (1).
4. Using a suitable jack, lift the transmission enough to gain clearance for the structural dust cover removal.

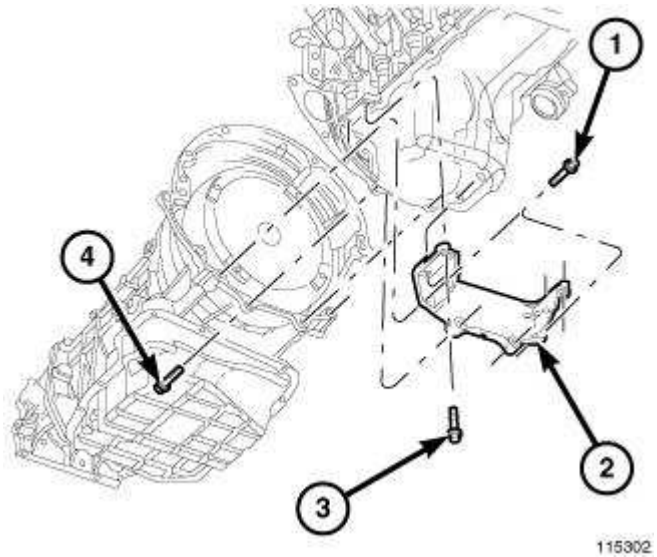

Fig. 182: Structural Cover
Courtesy of CHRYSLER LLC

5. Remove the structural dust cover retaining bolts (1,3 & 4).
6. Remove the structural dust cover (2).

Installation

INSTALLATION

CAUTION: The structural dust cover must be installed as described in the following steps. Failure to do so may cause severe damage to the cover.

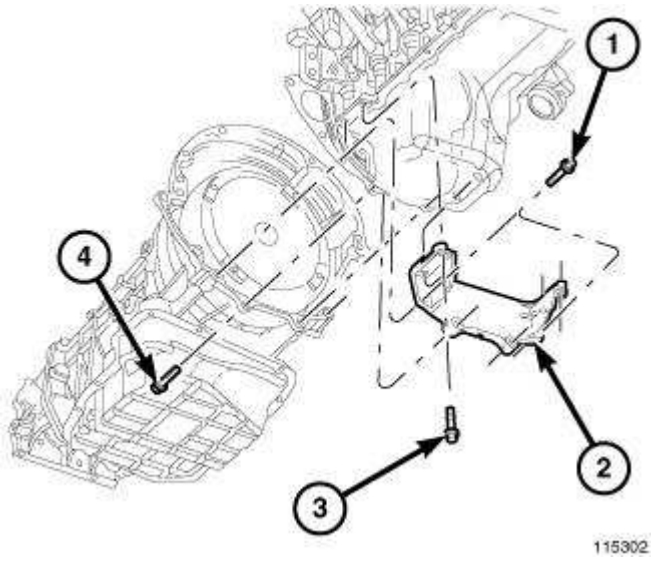

Fig. 183: Structural Cover
Courtesy of CHRYSLER LLC

1. Position the structural dust cover in the vehicle
2. Install all four bolts retaining the structural dust cover to the engine (3) hand tight.
3. Install the four cover to transmission bolts (1, 2 & 4) hand tight.

CAUTION: The structural dust cover must be held tightly against both the engine and the transmission bell housing during the tightening sequence. Failure to do so may cause severe damage to the cover.

4. Tighten the structural dust cover-to-transmission bolts (1, 2 & 4) to 9 N.m (80 in. lbs.).
5. Tighten the structural dust cover-to-engine block bolts (3) to 9 N.m (80 in. lbs.).
6. Retighten the structural dust cover-to-transmission bolts to 54 N.m (40 ft. lbs.).
7. Retighten the structural dust cover-to-engine block bolts to 54 N.m (40 ft. lbs.).

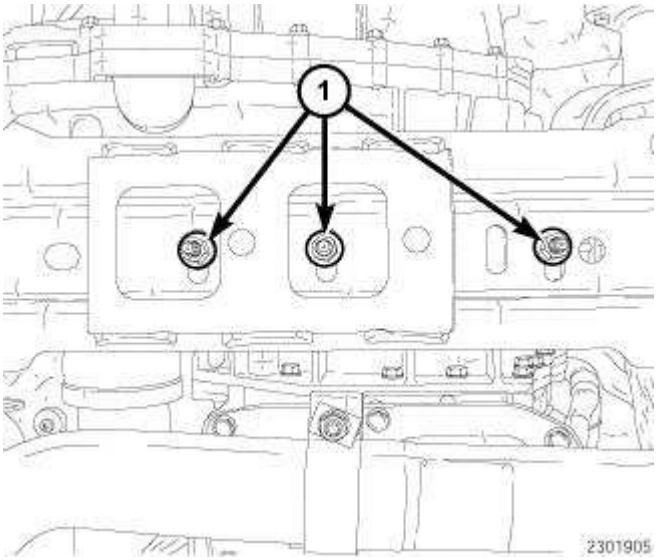

Fig. 184: Transmission Mount To Crossmember Retaining Nuts
Courtesy of CHRYSLER LLC

8. Lower the transmission onto the crossmember and remove the jack.
9. Install the transmission mount to crossmember retaining nuts (1) and tighten to 54 N.m (40 ft. lbs.).

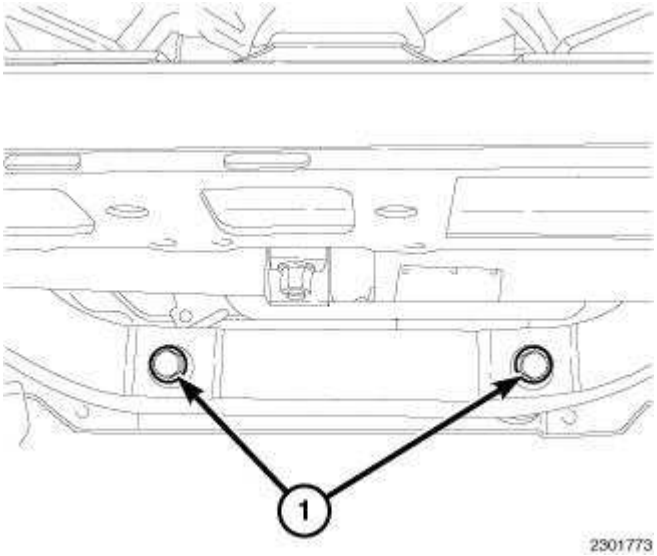

Fig. 185: Steering Rack To Frame Mounting Bolts
Courtesy of CHRYSLER LLC

10. Position the steering rack to the frame, install the bolts (1) and tighten bolts/nuts to 258 N.m (190 ft. lbs.).
11. Lower the vehicle.

CRANKSHAFT

Removal

REMOVAL

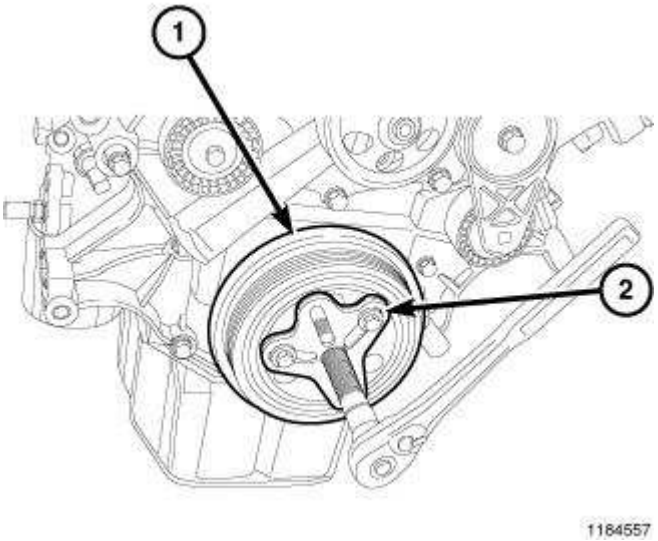

Fig. 186: Vibration Damper & Bolt Grip Puller
Courtesy of CHRYSLER LLC

1. Remove engine. See **Engine - Removal**.
2. Remove the vibration damper (1) using a bolt grip puller (2). See **Engine/Engine Block/DAMPER, Vibration - Removal**.

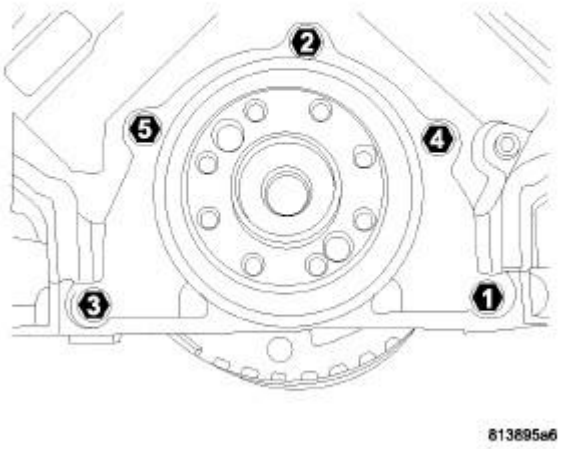

Fig. 187: REAR SEAL RETAINER TORQUE SEQUENCE

Courtesy of CHRYSLER LLC

3. Remove the rear oil seal retainer. See **Engine/Engine Block/RETAINER, Crankshaft Rear Oil Seal - Removal**.
4. Remove the oil pan. See **Engine/Lubrication/PAN, Oil - Removal**.

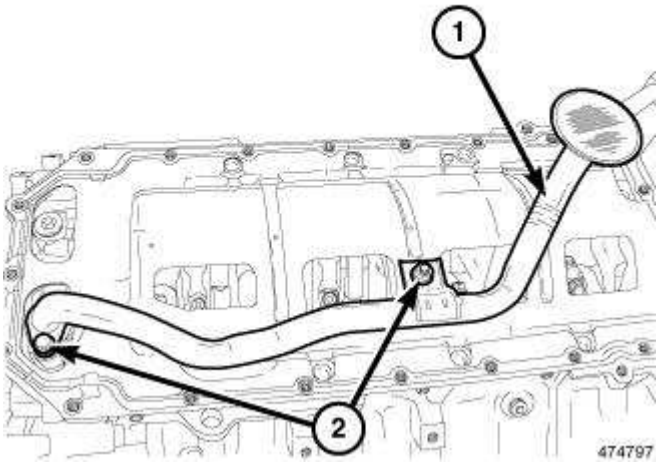

Fig. 188: Oil Pick Up Tube
Courtesy of CHRYSLER LLC

5. Remove the oil pump pickup (1).
6. Remove the windage tray/oil pan gasket.
7. Remove the timing chain cover. See **Engine/Valve Timing/COVER(S), Engine Timing - Removal**.

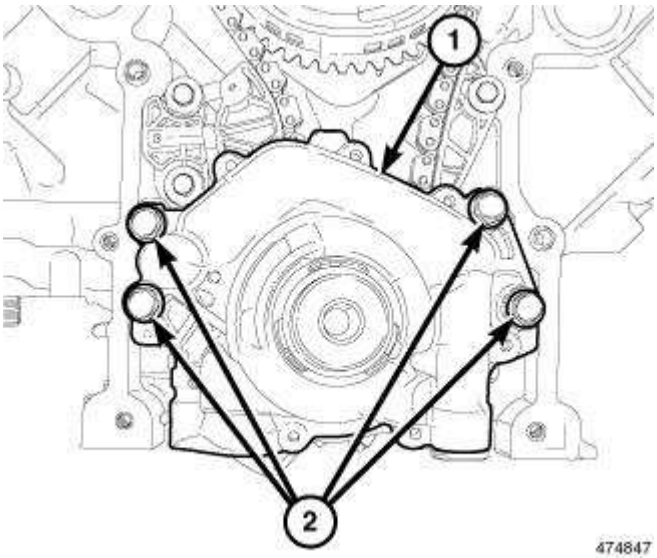

Fig. 189: Oil Pump Retaining Bolts

Courtesy of CHRYSLER LLC

8. Remove the oil pump (1). See **Engine/Lubrication/PUMP, Engine Oil - Removal**.

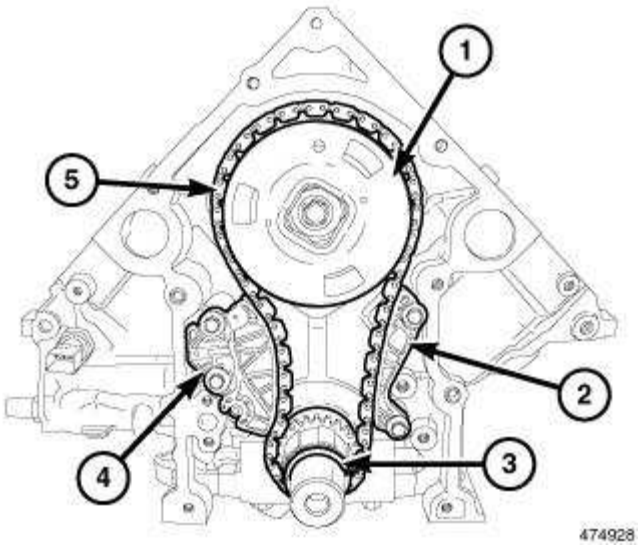

Fig. 190: Timing Chain
Courtesy of CHRYSLER LLC

9. Remove the timing chain (5) and sprockets (1,3). See **Engine/Valve Timing/CHAIN and SPROCKETS, Timing - Removal**.

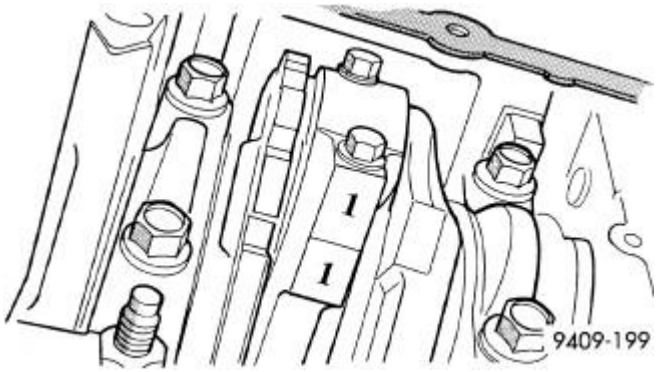

Fig. 191: Identifying Mark On Connecting Rod And Bearing Cap
Courtesy of CHRYSLER LLC

10. Identify rod bearing caps before removal. Remove rod bearing caps with bearings.

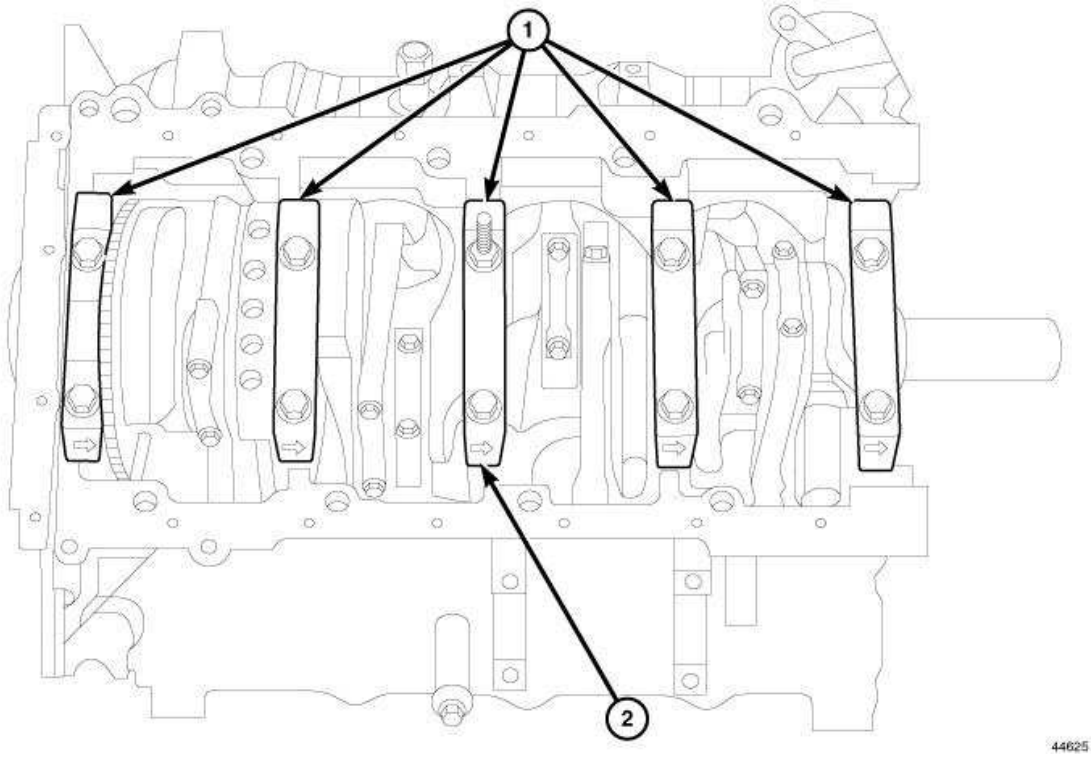

Fig. 192: MAIN BEARING CAPS
Courtesy of CHRYSLER LLC

11. Identify main bearing caps (1) before removal.

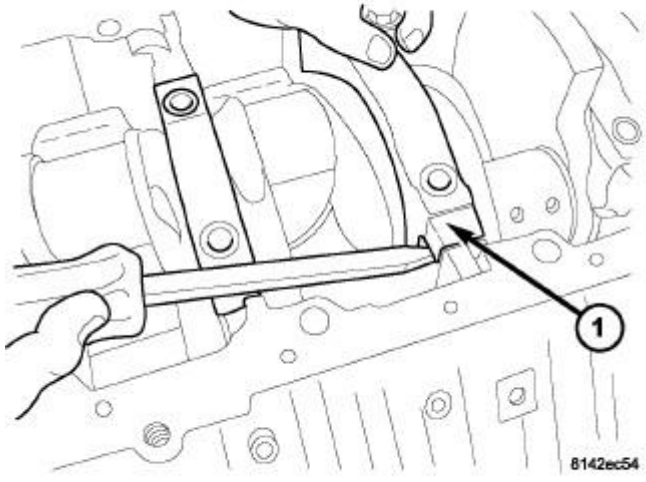

Fig. 193: MAIN CAP REMOVAL

Courtesy of CHRYSLER LLC

12. Remove main bearing cap bolts.
13. Remove main bearing caps (1) and bearings one at a time.

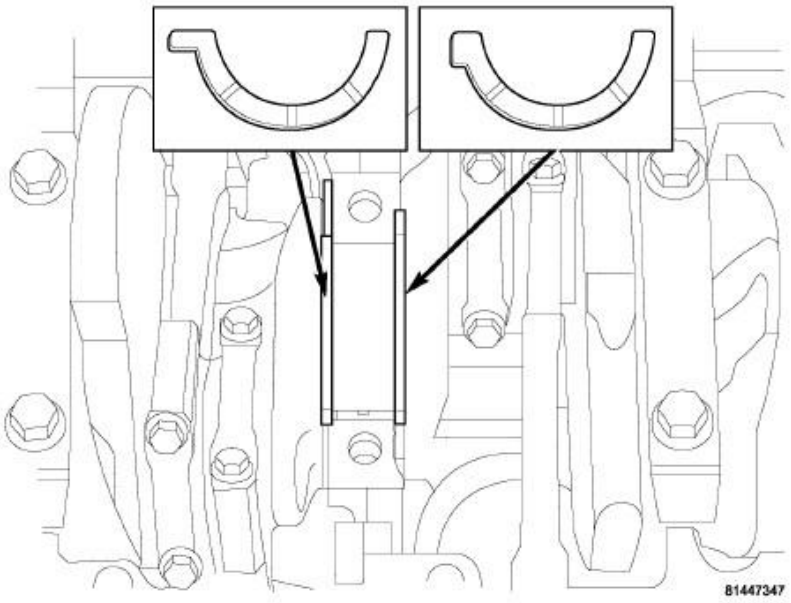

Fig. 194: THRUST WASHER LOCATION
Courtesy of CHRYSLER LLC

14. Remove the thrust washers.
15. Remove the crankshaft out of the block.

Installation

INSTALLATION

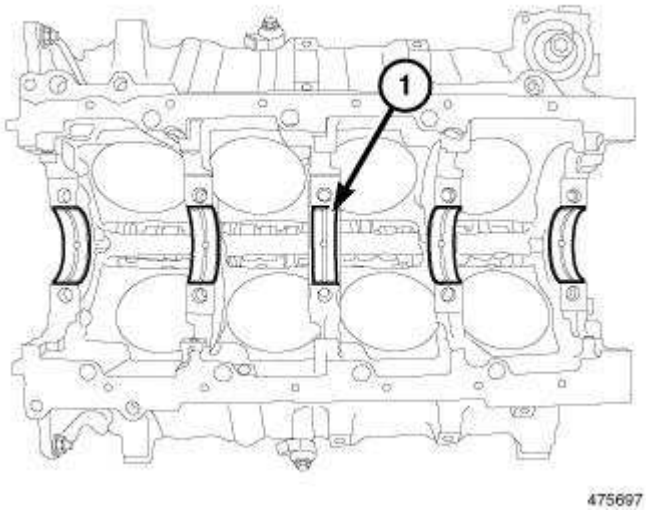

Fig. 195: Main Bearings
Courtesy of CHRYSLER LLC

1. Select the proper main bearings. See **Engine/Engine Block/BEARING(S), Crankshaft - Standard Procedure**.
2. Install main bearings in block (1).

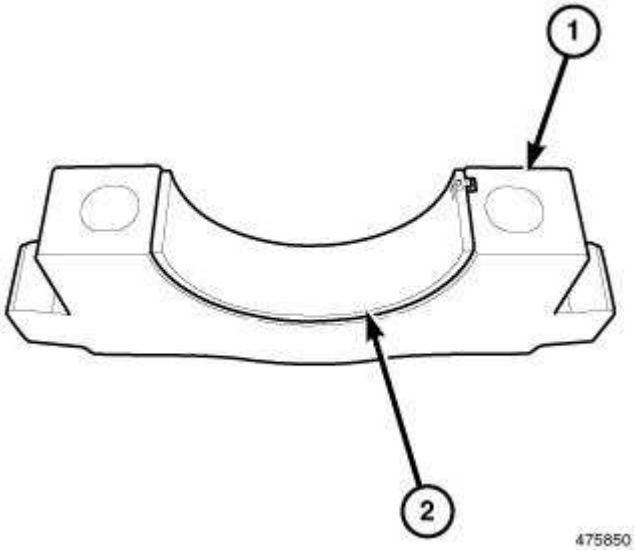

Fig. 196: Main Bearing Shells In The Bearing Caps
Courtesy of CHRYSLER LLC

3. Install main bearing shells (2) in the bearing caps (1).

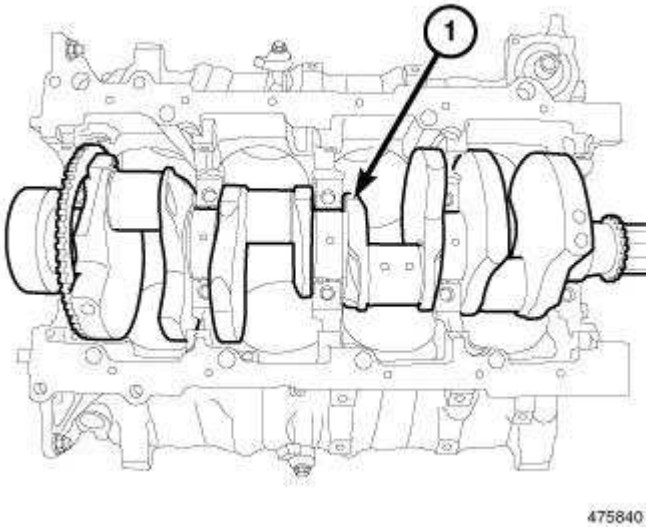

Fig. 197: Crankshaft
Courtesy of CHRYSLER LLC

4. Lubricate the main bearing shells with clean engine oil.
5. Position the crankshaft (1) into the cylinder block.

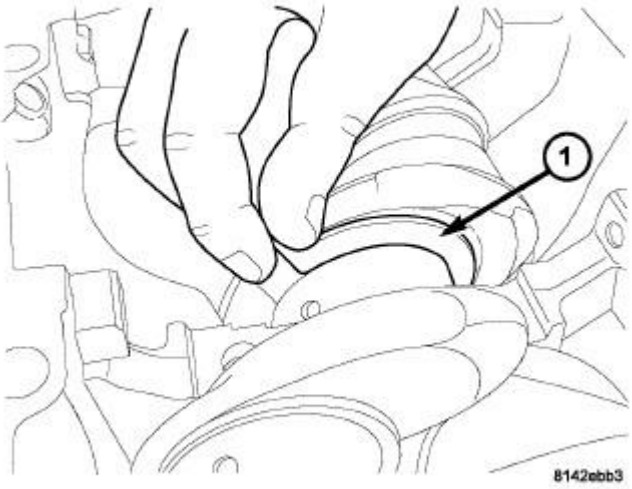

Fig. 198: Removing/Installing Thrust Washer
Courtesy of CHRYSLER LLC

6. Lubricate and install the thrust bearings (1).

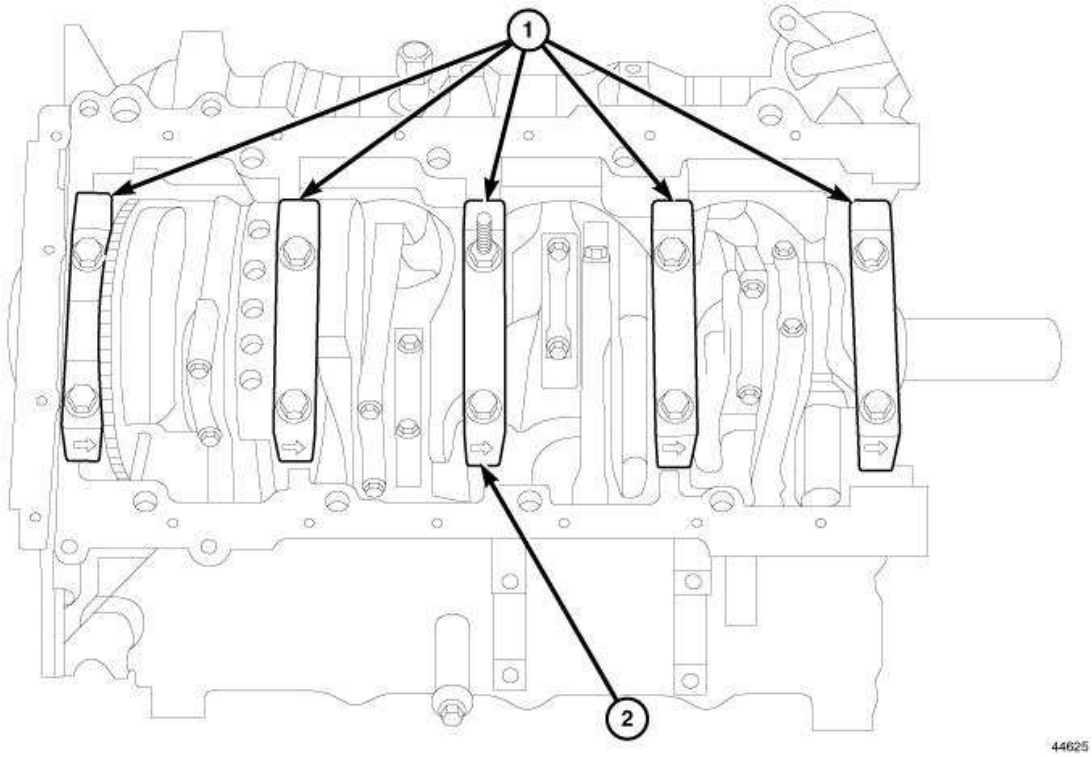

Fig. 199: MAIN BEARING CAPS
Courtesy of CHRYSLER LLC

NOTE: The main cap crossbolts are torqued after final torque of the main cap bolts. Always use a new washer/seal on crossbolts.

7. Clean and oil all cap bolts. Install all main bearing caps (1) making sure the arrow (2) faces forward.

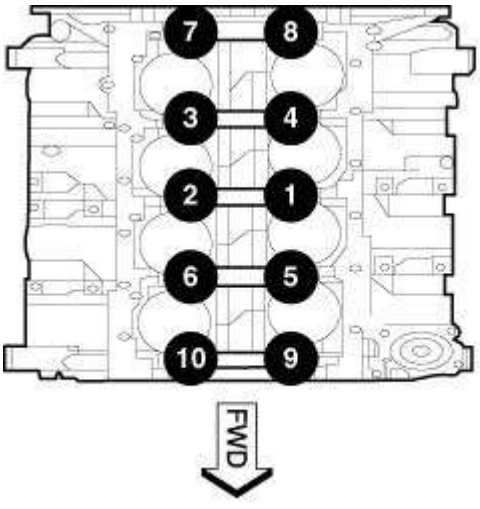

Fig. 200: Main Bearing Cap Bolt Tightening Sequence
Courtesy of CHRYSLER LLC

8. Tighten main bearing cap bolts to 13 N.m (10 ft. lbs.) in the sequence shown in illustration.
9. Tighten main bearing cap bolts to 27 N.m (20 ft. lbs.) in the sequence shown in illustration.
10. Rotate main cap bolts an additional 90° in the sequence shown in illustration.

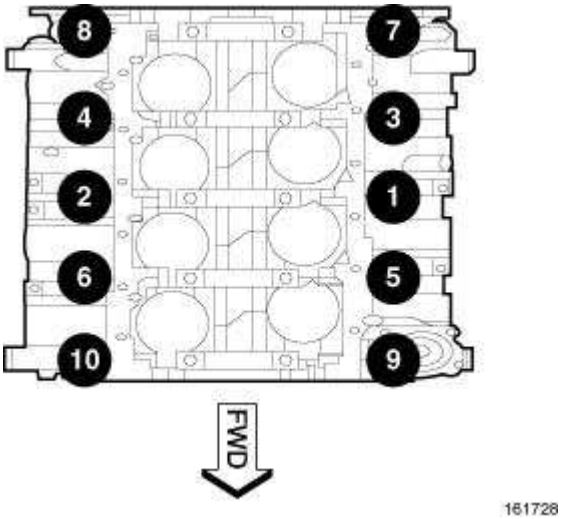

Fig. 201: Crossbolt Tightening Sequence
Courtesy of CHRYSLER LLC

11. Install the crossbolts with new seal washer. Starting with crossbolt A,
12. Tighten crossbolt to 28 N.m (21 ft. lbs.).
13. Repeat crossbolt tightening procedure.
14. Measure crankshaft end play. See **Engine/Engine Block/BEARING(S), Crankshaft - Standard Procedure**.
15. Position the connecting rods onto the crankshaft and install the rod bearing caps. See **Engine/Engine Block/ROD, Piston and Connecting - Installation**.

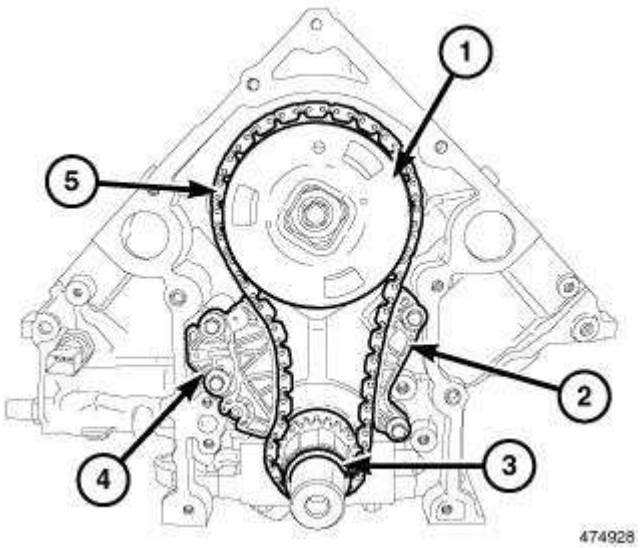

Fig. 202: Timing Chain
Courtesy of CHRYSLER LLC

16. Install timing chain (5) and sprockets (1,3). See **Engine/Valve Timing/CHAIN and SPROCKETS, Timing - Installation**.
17. Install the timing chain tensioner (4) and guide (2).

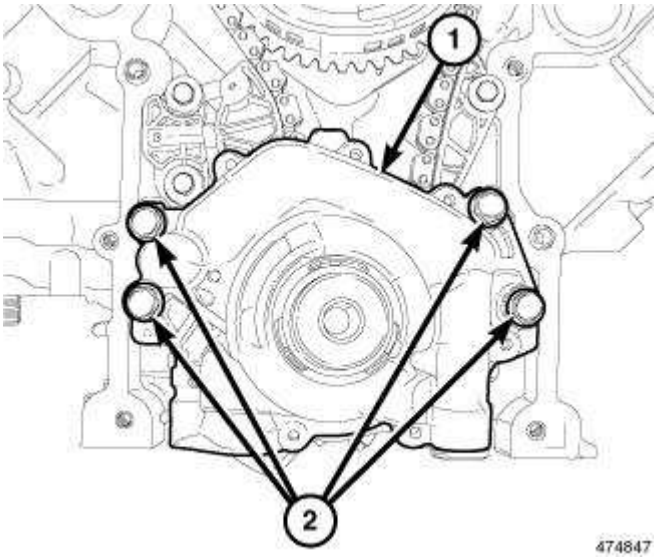

Fig. 203: Oil Pump Retaining Bolts
Courtesy of CHRYSLER LLC

18. Install the oil pump (1). See **Engine/Lubrication/PUMP, Engine Oil - Installation**.
19. Install the timing chain case cover (1). See **Engine/Valve Timing/COVER(S), Engine Timing - Installation**.

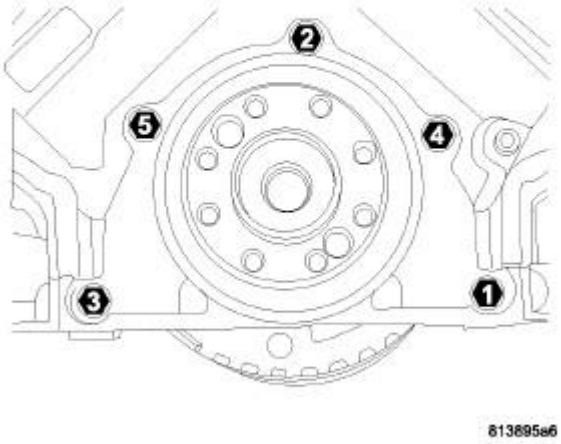

Fig. 204: REAR SEAL RETAINER TORQUE SEQUENCE
Courtesy of CHRYSLER LLC

20. Install the rear main seal and retainer. See **Engine/Engine Block/RETAINER, Crankshaft Rear Oil Seal - Installation**.

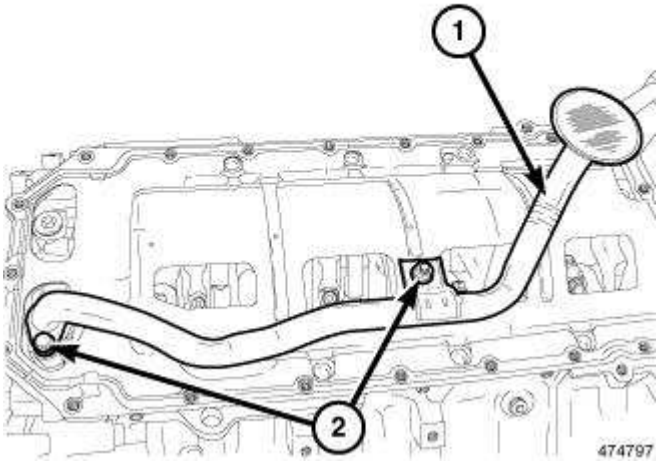

Fig. 205: Oil Pick Up Tube
Courtesy of CHRYSLER LLC

21. Install the windage tray/oil pan gasket.
22. Inspect oil pick up tube O-rings, replace as necessary.
23. Install the oil pick up tube (1) and tighten fasteners (2) to 28 Nm (248 in. lbs.).

24. Install the oil pan. See **Engine/Lubrication/PAN, Oil - Installation**.
25. Install the vibration damper. See **Engine/Engine Block/DAMPER, Vibration - Installation**.
26. Install the engine. See **Engine - Installation**.

DAMPER, VIBRATION

Removal

REMOVAL

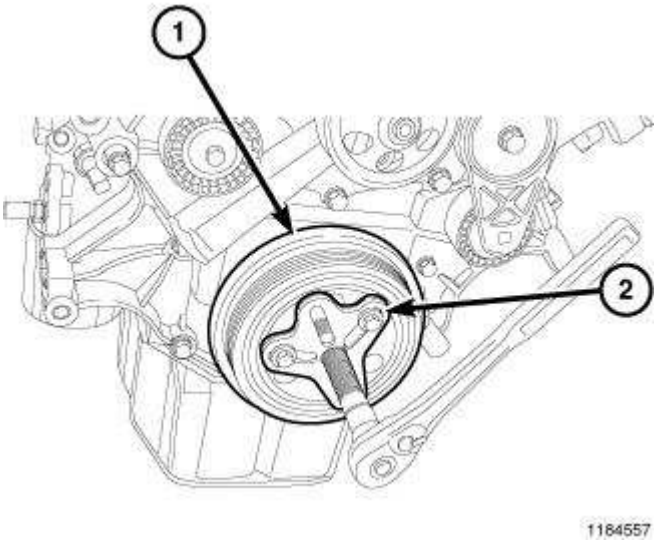

Fig. 206: Vibration Damper & Bolt Grip Puller
Courtesy of CHRYSLER LLC

1. Disconnect negative cable from battery.
2. Remove accessory drive belt. Refer to **Cooling/Accessory Drive/BELT, Serpentine - Removal** .
3. Drain cooling system. Refer to **Cooling - Standard Procedure** .
4. Remove radiator upper hose.
5. Remove fan shroud. Refer to **Cooling/Engine/FAN, Cooling - Removal** .
6. Remove crankshaft damper bolt.
7. Install puller (2) and remove damper (1).

Installation

INSTALLATION

CAUTION: To prevent severe damage to the crankshaft, damper, and damper installer 8512A, thoroughly clean the damper bore and the crankshaft nose before installing damper.

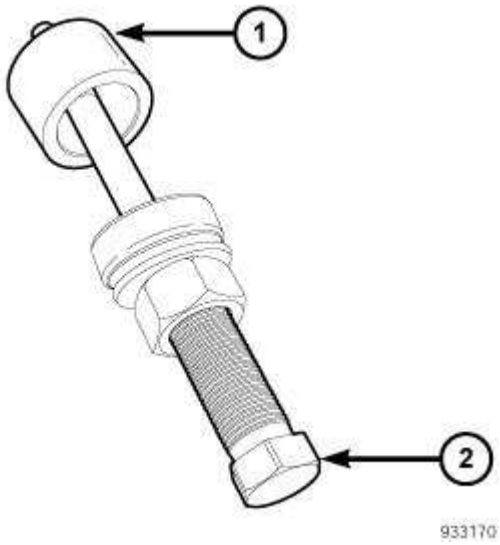

Fig. 207: Removing/Installing Crankshaft Damper Bolt
Courtesy of CHRYSLER LLC

1. Position damper onto crankshaft.
2. Assemble Damper Installer 8512A (2) , and the Pressing Cup (1) from A/C Hub Installer 6871.

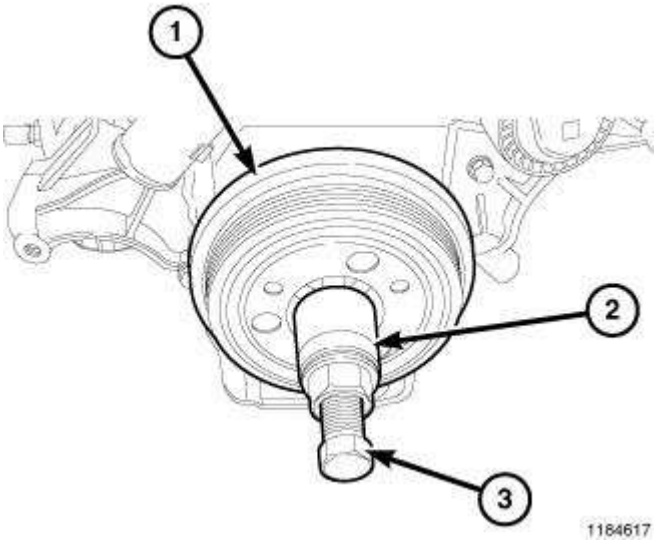

Fig. 208: Pressing Damper Onto Crankshaft
Courtesy of CHRYSLER LLC

3. Using Damper Installer 8512A (3), and the pressing cup (2) from A/C hub installer 6871 press damper (1) onto crankshaft.
4. Install and tighten crankshaft damper bolt to 176 N.m (129 ft. lbs.).
5. Install cooling fan.
6. Install radiator upper shroud and tighten fasteners to 11 N.m (95 in. lbs.).
7. Install radiator upper hose.

8. Install accessory drive belt (1). Refer to **Cooling/Accessory Drive/BELT, Serpentine - Installation** .
9. Refill cooling system. Refer to **Cooling - Standard Procedure** .
10. Connect negative cable to battery.

FLEXPLATE

Removal

REMOVAL

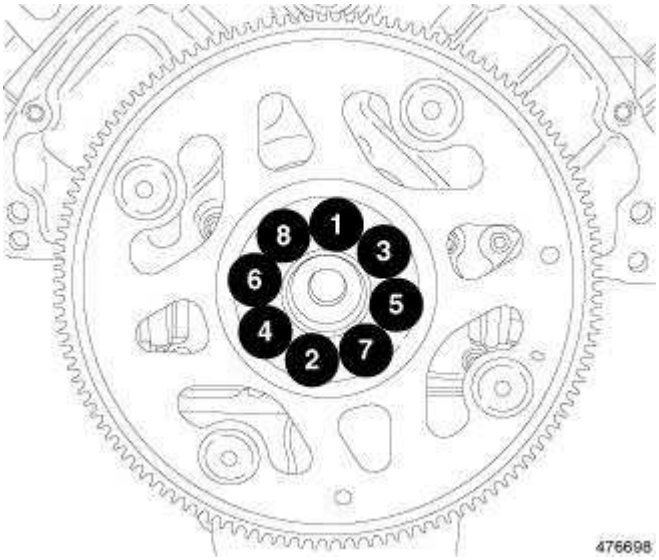

Fig. 209: Flexplate Retaining Bolt Removal & Tightening Sequence
Courtesy of CHRYSLER LLC

1. Remove the transmission. Refer to **Transmission and Transfer Case/Manual - Removal** . Refer to **Transmission and Transfer Case/Automatic - NAG1 - Removal** .
2. Using the sequence shown in illustration, remove the flexplate retaining the bolts.
3. Remove the flexplate.

Installation

INSTALLATION

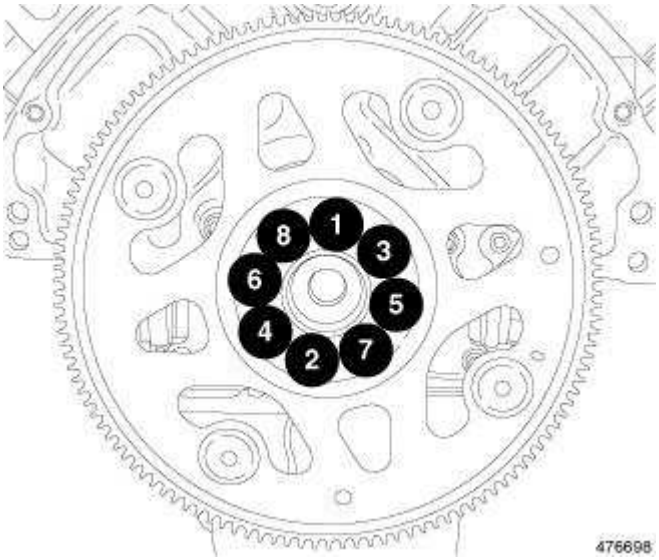

Fig. 210: Flexplate Retaining Bolt Removal & Tightening Sequence
Courtesy of CHRYSLER LLC

1. Position the flexplate onto the crankshaft and install the retaining bolts hand tight.
2. Using the sequence shown in illustration, tighten the flexplate retaining bolts to 95 N.m (70 ft. lbs.).
3. Install the transmission. Refer to **Transmission and Transfer Case/Manual - Installation** . Refer to **Transmission and Transfer Case/Automatic - NAG1 - Removal** .

LIFTER(S), HYDRAULIC, ROLLER

Description

DESCRIPTION

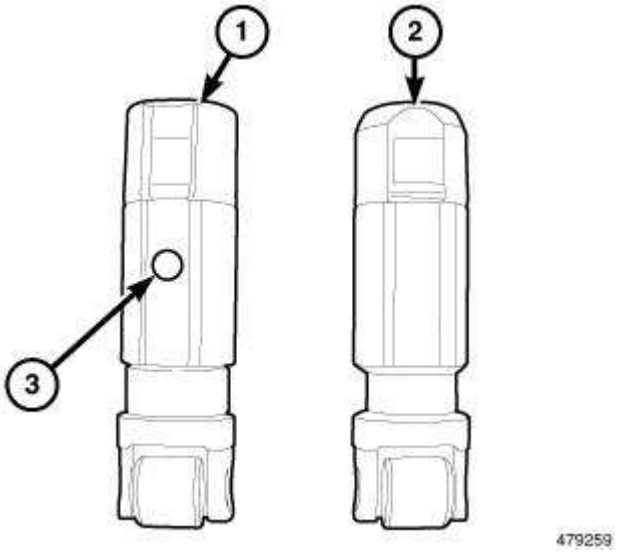

Fig. 211: MDS Lifter

Courtesy of CHRYSLER LLC

The Multiple Displacement System (MDS) provides cylinder deactivation during steady speed, low acceleration and shallow grade climbing conditions to increase fuel economy.

The MDS can provide a 5 to 20 percent fuel economy benefit when operating in four-cylinder mode. Depending on driving habits and vehicle usage. Fuel economy is 8 to 15 percent higher than if the engine was operating on eight-cylinders at all times.

MDS is integrated into the basic engine architecture, requiring a minimum of additional parts - four additional solenoids, an oil temperature sensor, a wire harness, eight unique valve lifters (1), and a modified camshaft.

The MDS lifter (1) can be identified by the disconnecting pin (3) on the side of the lifter.

Operation

OPERATION

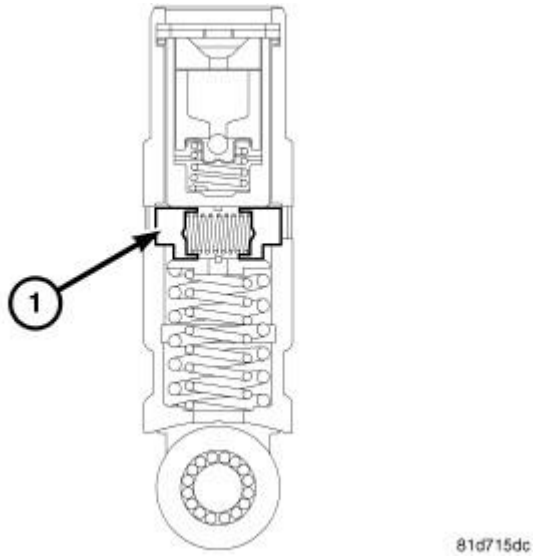

Fig. 212: MDS LIFTER CROSS-SECTION
Courtesy of CHRYSLER LLC

The Multiple Displacement System (MDS) provides cylinder deactivation during steady speed, low acceleration and shallow grade climbing conditions to increase fuel economy. Both four and eight cylinder configurations have even firing intervals provide smooth operation. Two cylinders on each bank are active when the engine is in four-cylinder mode - every other cylinder in the firing order. All of the cylinders that are deactivated have unique hydraulic valve lifters that collapse when deactivated to prevent the valves from opening. Engine oil pressure is used to activate and deactivate the valves. It is delivered through special oil passages drilled into the cylinder block. Solenoid valves control the flow. When activated, pressurized oil pushes a latching pin on each valve lifter, which then becomes a "lost motion" link. Its base follows the camshaft, but its top remains stationary, held in place against the pushrod by light spring pressure but unable to move because of the much higher

force of the valve spring.

NOTE: It is critical to use the recommended oil viscosity in 5.7L engines that use MDS.

Deactivation occurs during the compression stroke of each cylinder, after air and fuel enter the cylinder. Ignition then occurs, but the combustion products remain trapped in the cylinder under high pressure, because the valves no longer open. No air enters or leaves. During subsequent piston strokes, this high-pressure gas is repeatedly compressed and expanded like an air spring, but fuel is not injected.

Diagnosis and Testing

HYDRAULIC TAPPETS

Check the oil pressure before disassembling any part of the engine to correct tappet noise. If vehicle has no oil pressure gauge, install a reliable gauge at the pressure sending-unit. The pressure should be between 207-552 kPa (30-80 psi) at 3,000 RPM.

Check the oil level after the engine reaches normal operating temperature. Allow five minutes for the oil level to stabilize before checking the oil level. The oil level in the pan should never be above the FULL mark or below the ADD OIL mark on the dipstick. Either of these two conditions could be responsible for noisy tappets.

OIL LEVEL - HIGH

If the oil level is above the FULL mark, it is possible for the connecting rods to dip into the oil. With the engine running, this condition could create foam in the oil pan. Foam in the oil pan would be fed to the hydraulic tappets by the oil pump causing them to lose length and allow the valves to seat noisily.

OIL LEVEL - LOW

Low oil level may allow the oil pump to take in air. When air is fed to the tappets, they lose length, which allows valves to seat noisily. Any leaks on the intake side of the oil pump through which air can be drawn creates the same tappet action. Check the lubrication system from the intake strainer to the pump cover, including the relief valve retainer cap. When tappet noise is due to aeration, it may be intermittent or constant, and usually more than one tappet will be noisy. When the oil level and leaks have been corrected, operate the engine at fast idle. Run the engine for a sufficient amount of time to allow all of the air inside the tappets to be bleed out.

TAPPET NOISE DIAGNOSIS

1. To determine the source of tappet noise, crank the engine over with the cylinder head covers removed.
2. Feel each valve spring or rocker arm to detect the noisy tappet. The noisy tappet will cause the affected spring and/or rocker arm to vibrate or feel rough in operation.

NOTE: Worn valve guides or cocked springs are sometimes mistaken for noisy

tappets. If such is the case, noise may be dampened by applying side thrust on the valve spring. If noise is not appreciably reduced, it can be assumed the noise is in the tappet. Inspect the rocker arm pushrod sockets and pushrod ends for wear.

3. Valve tappet noise ranges from light noise to a heavy click. A light noise is usually caused by excessive leak-down around the unit plunger, or by the plunger partially sticking in the tappet body cylinder. The tappet should be replaced. A heavy click is caused by a tappet check valve not seating, or by foreign particles wedged between the plunger and the tappet body. This will cause the plunger to stick in the down position. This heavy click will be accompanied by excessive clearance between the valve stem and rocker arm as valve closes. In either case, tappet assembly should be removed for inspection and cleaning.
4. The valve train generates a noise very much like a light tappet noise during normal operation. Care must be taken to ensure that tappets are making the noise. If more than one tappet seems to be noisy, it's probably not the tappets.

Removal

REMOVAL

1. Disconnect and isolate the negative battery cable.
2. Remove the cylinder head. See **Engine/Cylinder Head - Removal**.

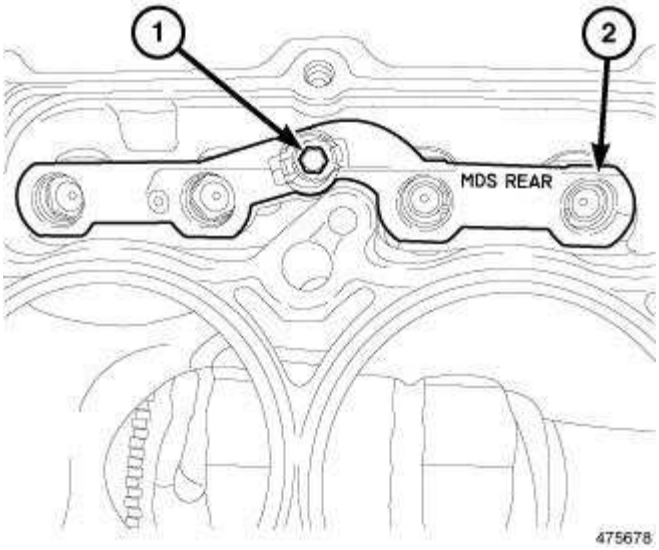

Fig. 213: Rear MDS Lifter Assembly
Courtesy of CHRYSLER LLC

3. Remove the tappet guide holder retaining bolt (1) from the tappet guide holder assembly (2).

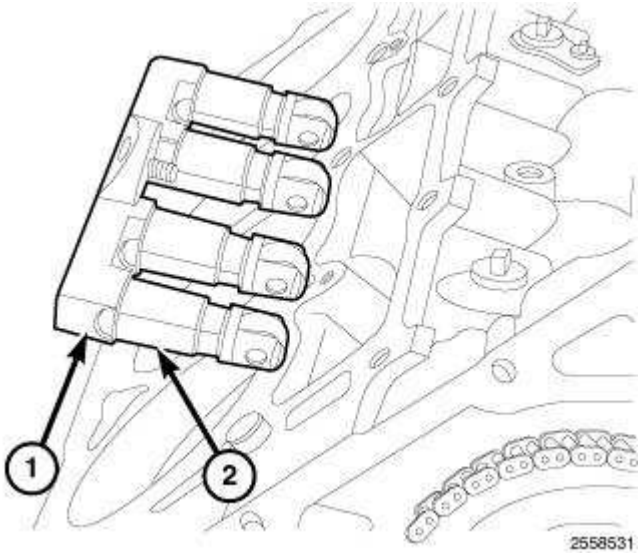

Fig. 214: Tappet Guide Holder Assembly
Courtesy of CHRYSLER LLC

CAUTION: The tappets and guide holder assembly must be installed as an assembly and in their original locations or engine damage could result.

CAUTION: If the tappets and guide holder assembly are to be reused, identify tappets to ensure installation in their original location.

4. Remove the tappet guide holder (1) and tappets (2) as an assembly.
5. Check the camshaft lobes for abnormal wear.

Installation

INSTALLATION

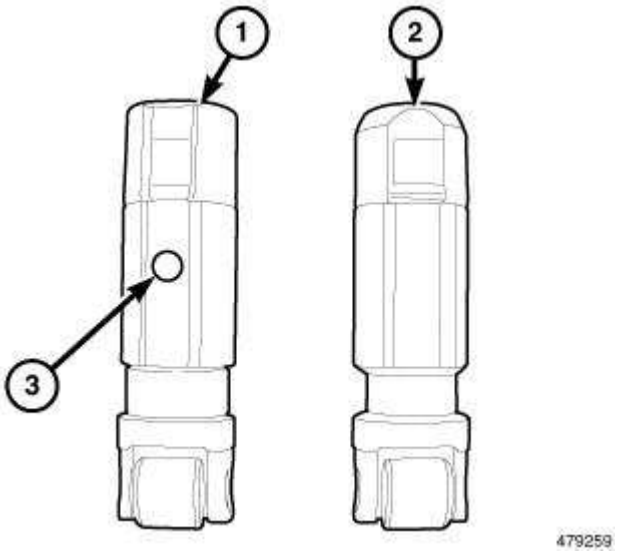

Fig. 215: MDS Lifter
Courtesy of CHRYSLER LLC

The Multiple Displacement System (MDS) provides cylinder deactivation during steady speed, low acceleration and shallow grade climbing conditions to increase fuel economy.

CAUTION: Engines equipped with MDS use both standard roller tappets (2) and deactivating roller tappets (1). The deactivating roller tappets must be used in cylinders 1,4,6,7. The deactivating tappets can be identified by the two holes in the side of the tappet body (3), for the latching pins.

CAUTION: The tappets and guide holder assembly must be installed as an assembly and in their original locations or engine damage could result.

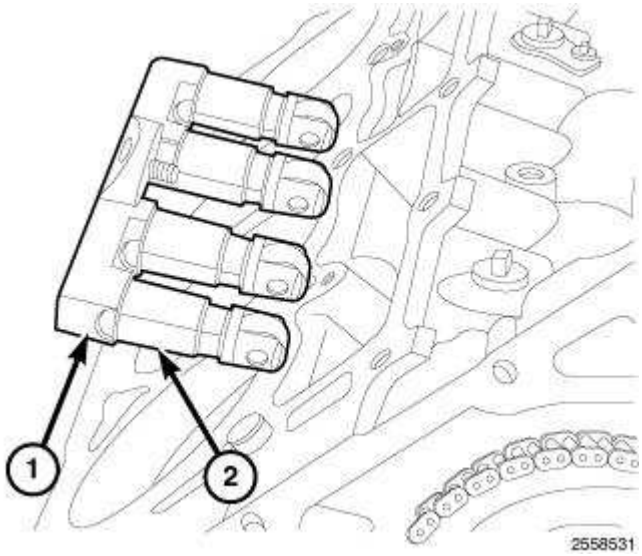

Fig. 216: Tappet Guide Holder Assembly

Courtesy of CHRYSLER LLC

1. Lubricate the tappet guide holder (1) and tappets (2).

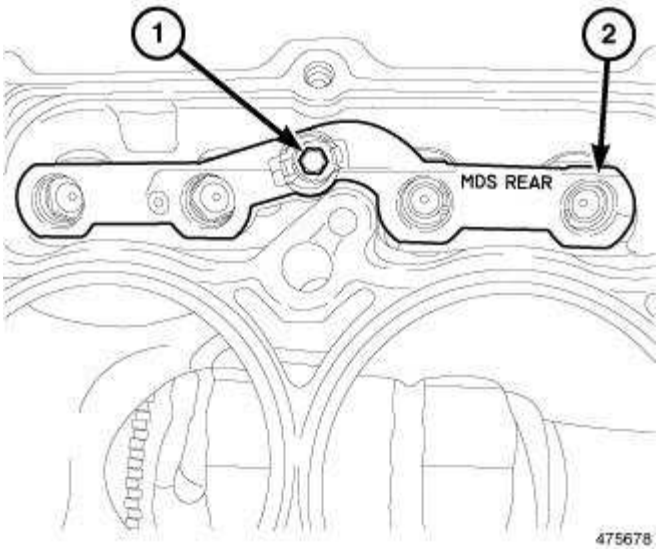

Fig. 217: Rear MDS Lifter Assembly
Courtesy of CHRYSLER LLC

CAUTION: If the tappets and guide holder assembly are to be reused, they must me installed in their original location.

2. Install the tappet guide holder (2) and tappets.
3. Tighten the tappet retainer bolt (1) to 12 N.m (9 ft. lbs.).
4. Install the cylinder head. See **Engine/Cylinder Head - Installation**.
5. Connect the negative battery cable.

CAUTION: To prevent damage to valve assemblies, do not run the engine above fast idle until all hydraulic tappets have filled with oil and have become quiet.

6. Start the engine and check for leaks.
7. Road test the vehicle.

RETAINER, CRANKSHAFT REAR OIL SEAL

Diagnosis and Testing

REAR SEAL AREA LEAKS

The crankshaft rear oil seal is integral to the crankshaft rear oil seal retainer and cannot be serviced separately.

Since it is sometimes difficult to determine the source of an oil leak in the rear seal area of the engine, a more involved inspection is necessary. The following steps should be followed to help pinpoint the source of the leak.

If the leakage occurs at the crankshaft rear oil seal area:

1. Raise and support the vehicle.
2. Remove the structural dust cover. See **Engine/Engine Block/COVER, Structural Dust - Removal**.
3. Inspect the rear of the cylinder block for evidence of oil leakage, note the following:
   - Circular spray pattern generally indicates seal leakage or crankshaft damage.
   - Where leakage tends to run straight down, possible causes are a porous block, camshaft bore cup plugs, oil galley pipe plugs, oil filter runoff, and main bearing cap to cylinder block mating surfaces. See appropriate component repair procedures of these items.
4. If no leaks are detected, pressurize the crankcase as outlined in the **AIR LEAK DETECTION TEST METHOD**.

   CAUTION: Do not exceed 20.6 kPa (3 psi).

5. If the leak is not detected, very slowly turn the crankshaft and watch for leakage. If a leak is detected between the crankshaft and seal while slowly turning the crankshaft, it is possible the crankshaft seal surface is damaged. The seal area on the crankshaft could have minor nicks or scratches that can be polished out using an emery cloth.

   CAUTION: Use extreme caution when crankshaft polishing is necessary to remove minor nicks or scratches. The crankshaft seal flange is specially machined to complement the function of the rear oil seal.

6. For bubbles that remain steady with shaft rotation, no further inspection can be done. See **Engine/Engine Block/RETAINER, Crankshaft Rear Oil Seal - Removal**.

Removal

REMOVAL

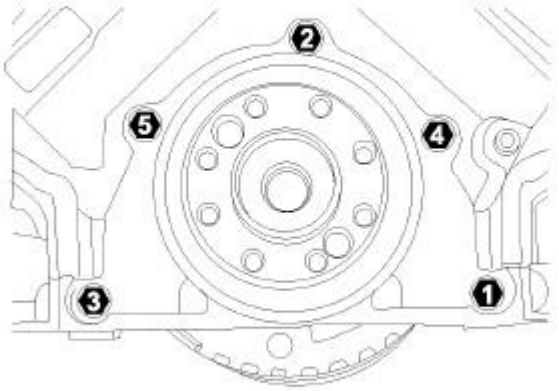

Fig. 218: REAR SEAL RETAINER TORQUE SEQUENCE
Courtesy of CHRYSLER LLC

NOTE: The crankshaft rear oil seal is integral to the crankshaft rear oil seal retainer and must be replaced as an assembly.

NOTE: The crankshaft rear oil seal retainer can not be reused after removal.

NOTE: This procedure can be performed in vehicle.

1. Disconnect the negative battery cable.
2. Remove the transmission (Refer to appropriate Transmission SERVICE INFORMATION article).
3. Remove the flexplate. See **Engine/Engine Block/FLEXPLATE - Removal**.
4. Remove the oil pan. See **Engine/Lubrication/PAN, Oil - Removal**.
5. Using the sequence shown in illustration, remove the rear oil seal retainer mounting bolts.
6. Carefully remove the retainer from the engine block.

Installation

INSTALLATION

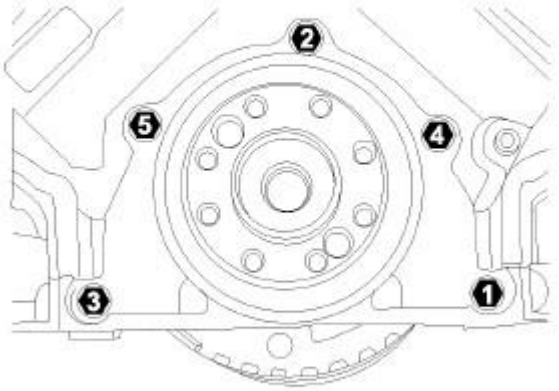

Fig. 219: REAR SEAL RETAINER TORQUE SEQUENCE
Courtesy of CHRYSLER LLC

NOTE: The crankshaft rear oil seal is integral to the crankshaft rear oil seal retainer and must be replaced as an assembly.

NOTE: The crankshaft rear oil seal retainer can not be reused after removal.

1. Thoroughly clean all gasket residue from the engine block.
2. Position the gasket onto the new crankshaft rear oil seal retainer.
3. Position the crankshaft rear oil seal retainer onto the engine block.
4. Using the sequence shown in illustration, install the crankshaft rear oil seal retainer mounting bolts and tighten to 15 N.m (11 ft. lbs.).
5. Install the oil pan. See **Engine/Lubrication/PAN, Oil - Installation**.
6. Install the flexplate. See **Engine/Engine Block/FLEXPLATE - Installation**.
7. Install the transmission (Refer to appropriate Transmission SERVICE INFORMATION article).
8. Fill the engine with oil.
9. Start the engine and check for leaks.

RING(S), PISTON

Standard Procedure

PISTON RING FITTING

PISTON RING END GAP

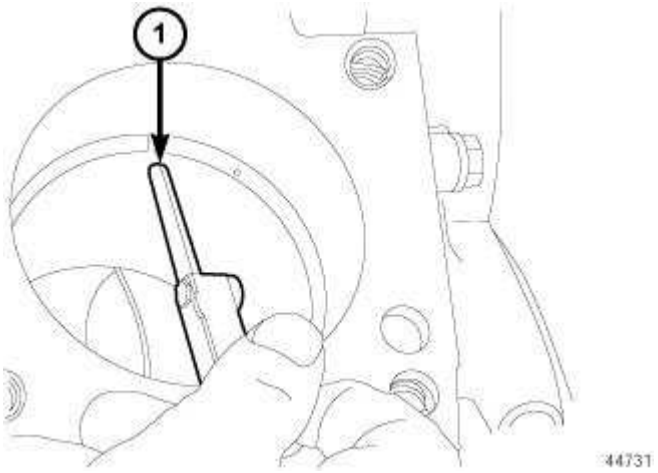

Fig. 220: Checking Piston Ring End Gap Using Feeler Gauge
Courtesy of CHRYSLER LLC

NOTE: Before reinstalling used rings or installing new rings, the ring clearances must be checked.

1. Wipe the cylinder bore clean.
2. Insert the ring in the cylinder bore.

NOTE: The ring gap measurement must be made with the ring positioned at least 12 mm (0.50 inch.) from bottom of cylinder bore.

3. Using a piston, to ensure that the ring is squared in the cylinder bore, slide the ring downward into the cylinder.
4. Using a feeler gauge check the ring end gap. Replace any rings not within specification.

PISTON RING SIDE CLEARANCE

NOTE: Make sure the piston ring grooves are clean and free of nicks and burrs.

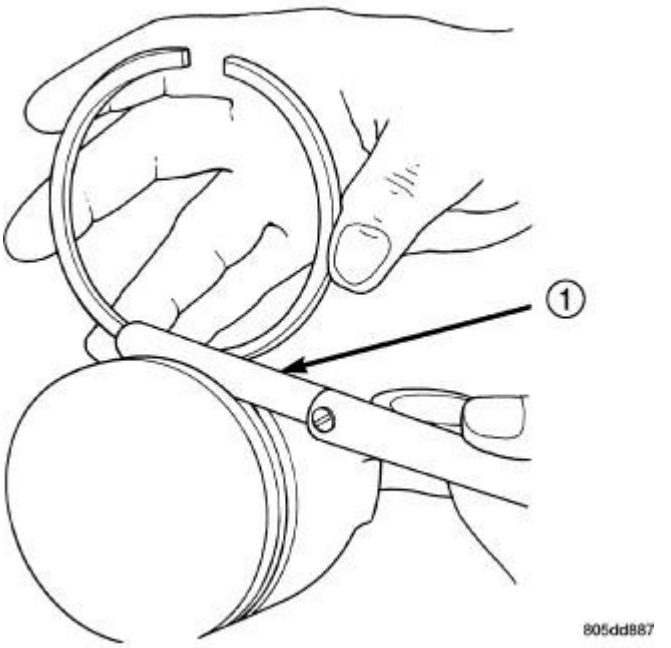

Fig. 221: Measuring Piston Ring Side Clearance
Courtesy of CHRYSLER LLC

1. Measure the ring side clearance as shown in illustration, make sure the feeler gauge (1) fits snugly between the ring land and the ring. Replace any ring not within specification.
2. Rotate the ring around the piston, the ring must rotate in the groove with out binding.

PISTON RING SPECIFICATION CHART

Piston Ring Position	Piston Ring Side Clearance	Maximum Clearance
Upper Ring	-	-
Metric	0.04 - 0.09 mm	0.11 mm
Standard	0.0015 - 0.0035 in.	0.004 in.
Intermediate Ring	-	-
Metric	0.04 - 0.08 mm	0.10 mm
Standard	0.0015 - 0.0031 in.	0.004 in.
Piston Ring Position	**Piston Ring End Gap**	**Wear Limit**
Upper Ring	-	-
Metric	0.40 - 0.55 mm	0.43 mm
Standard	0.0157 - 0.0216 in.	0.017 in.
Intermediate Ring	-	-
Metric	0.24 - 0.51 mm	0.74 mm
Standard	0.0094 - 0.0200 in.	0.029 in.
Oil Control Ring (Steel Rail)	-	-
Metric	0.015 - 0.66 mm	0.76 mm
Standard	0.0059 - 0.0259 in.	0.030 in.

PISTON RING INSTALLATION



Fig. 222: SIDE RAIL - INSTALLATION
Courtesy of CHRYSLER LLC

NOTE: The No. 1 and No. 2 piston rings have a different cross section. Ensure No. 2 ring is installed with manufacturers I.D. mark (Dot) facing up, towards top of the piston.

NOTE: Piston rings are installed in the following order:

- **Oil ring expander.**
- **Lower oil ring side rail.**
- **Upper oil ring side rail.**
- **No. 2 Intermediate piston ring.**
- **No. 1 Upper piston ring.**

1. Install the oil ring expander.
2. Install upper side rail by placing one end between the piston ring groove and the expander ring. Hold end firmly and press down the portion to be installed until side rail is in position. Repeat this step for the lower side rail.

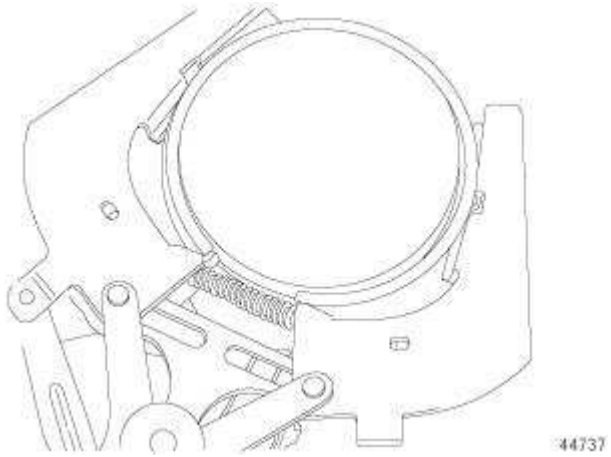

Fig. 223: UPPER AND INTERMEDIATE RINGS
Courtesy of CHRYSLER LLC

3. Install No. 2 intermediate piston ring using a piston ring installer.
4. Install No. 1 upper piston ring using a piston ring installer.

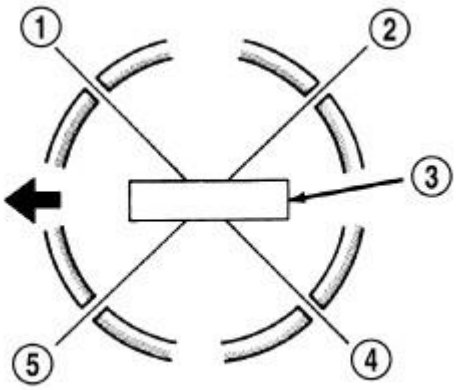

Fig. 224: PISTON RING END GAP POSITION
Courtesy of CHRYSLER LLC

NOTE: Install the piston rings so the gaps positioned as indicated with the piston viewed from the top.

NOTE: Staggering ring gap is important for oil control.

5. Install the oil expander so the ring gap is located in the (1) position.
6. Install the oil ring rails so the ring gap is located in the (2,4) position.
7. Install the second compression ring so the ring gap is located in the (3) position.
8. Install the top compression so the ring gap is located in the (1) position.

ROD, PISTON AND CONNECTING

Description

DESCRIPTION

CAUTION: Do not use a metal stamp to mark connecting rods as damage may result, instead use ink or a scratch awl.

The pistons are made of a high strength aluminum alloy. Piston skirts are coated with a solid lubricant (Molykote®) to reduce friction and provide scuff resistance. The piston top ring groove and land is anodized. The connecting rods are made of forged powdered metal, with a fractured cap design.

Standard Procedure

PISTON FITTING

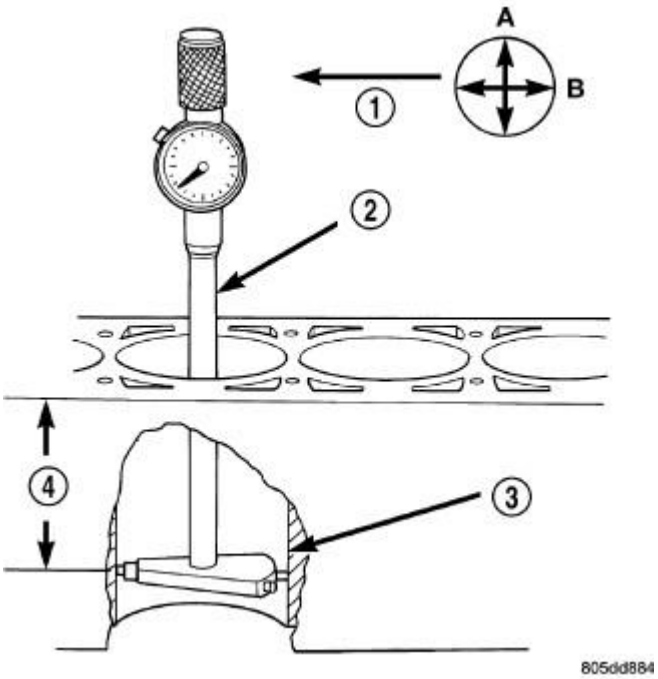

Fig. 225: Measuring Inside Diameter Of Cylinder Bore Using Dial Bore Gauge
Courtesy of CHRYSLER LLC

1. To correctly select the proper size piston, a cylinder bore gauge (2), capable of reading in 0.003 mm (0.0001 in.) INCREMENTS is required. If a bore gauge is not available, do not use an inside micrometer.
2. Measure the inside diameter of the cylinder bore at a point 38.0 mm (1.5 inches) below top of bore (4). Start perpendicular (across or at 90 degrees) to the axis of the crankshaft at point A (1) and then take an additional bore reading 90 degrees to that at point B (1).
3. The coated pistons will be serviced with the piston pin and connecting rod pre-assembled. The

piston-rod assembly is specific for the left cylinder bank (odd numbered) and the right cylinder bank (even numbered) and must not be interchanged.

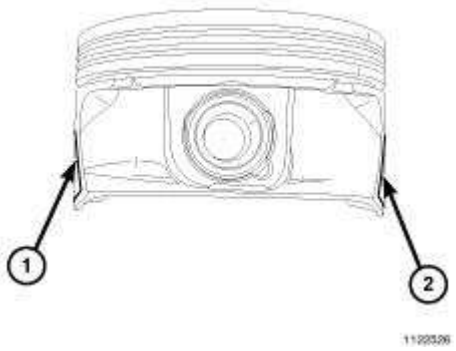

Fig. 226: Piston Diameter Measuring Points
Courtesy of CHRYSLER LLC

4. Measure the piston diameter with a micrometer at points (1,2).

Removal

REMOVAL

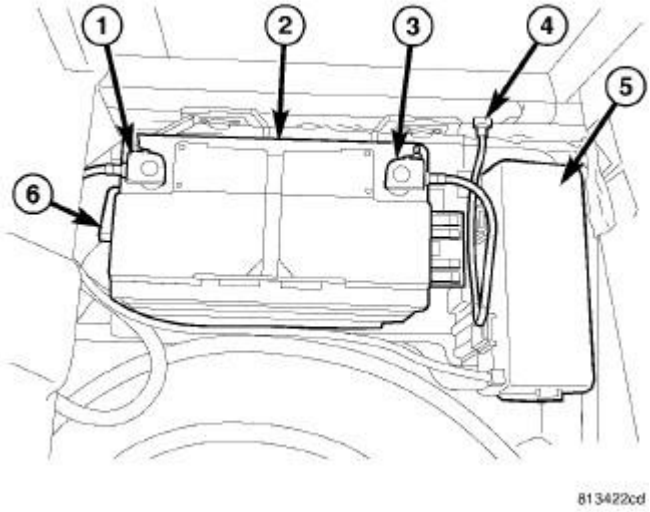

Fig. 227: Battery System Components And PDC Cover
Courtesy of CHRYSLER LLC

1. Perform the fuel system pressure release procedure. Refer to **Fuel System/Fuel Delivery - Standard Procedure** .
2. Disconnect and isolate the negative battery cable (3).

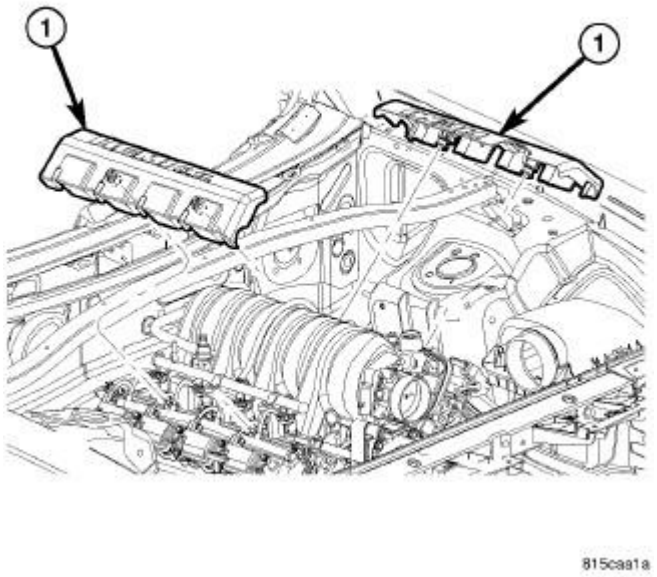

Fig. 228: Engine Covers
Courtesy of CHRYSLER LLC

3. Remove the engine covers (1).

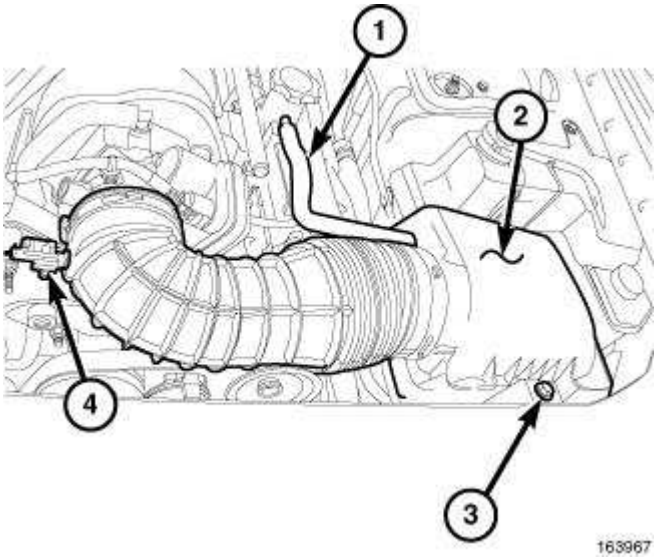

Fig. 229: Air Duct To Throttle Body
Courtesy of CHRYSLER LLC

4. Loosen clamp and disconnect the air duct at throttle body.
5. Disconnect the intake air temperature sensor (4) electrical connector.
6. Remove the makeup air hose (1).
7. Remove the air cleaner housing retaining bolt (3) and remove the air cleaner housing (2).

8. Remove the cylinder head(s). See **Engine/Cylinder Head - Removal**.
9. Raise and support the vehicle.

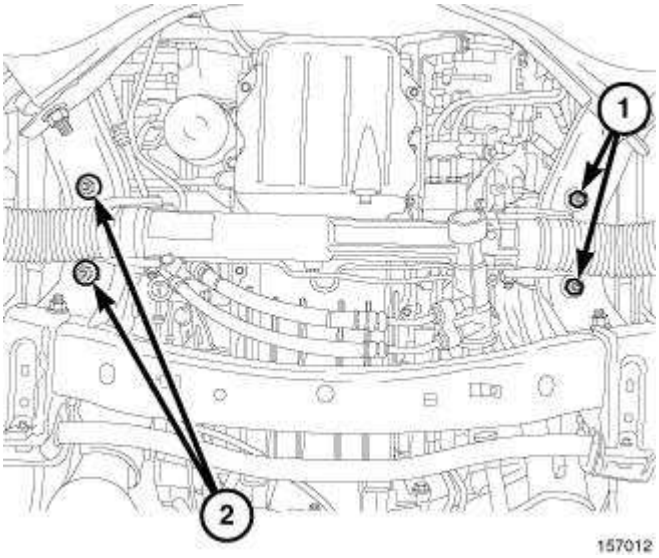

Fig. 230: Engine Mount Nuts
Courtesy of CHRYSLER LLC

10. Remove the engine mount nuts (1,2).

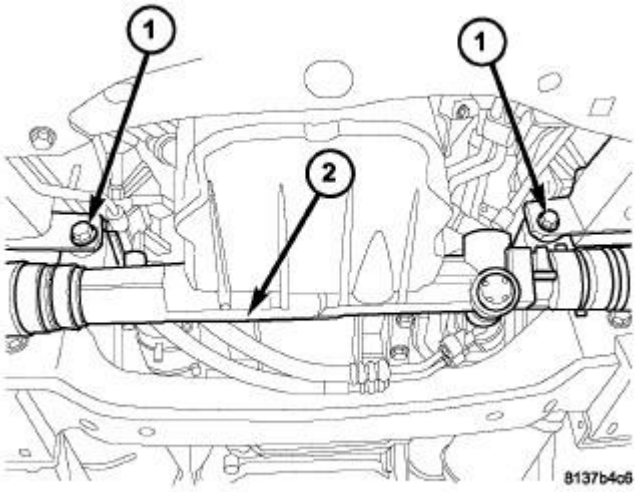

Fig. 231: GEAR MOUNTING BOLTS
Courtesy of CHRYSLER LLC

11. Remove the steering gear mounting bolts (1) and position the steering gear (2) aside.
12. Remove the engine oil dipstick and tube from the oil pan.
13. Lower the vehicle.

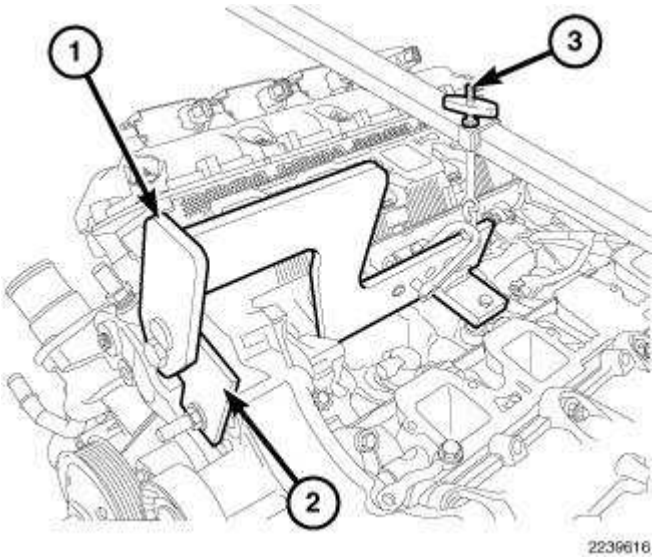

Fig. 232: Engine Lift Fixture & Adapter
Courtesy of CHRYSLER LLC

NOTE: Do not use air tools to install engine lift fixture.

14. Install the Engine Lift Fixture 8984A (1), Engine Lift Adapter 8984-UPD (2) and the Engine Support Fixture 8534B (3).
15. Raise the engine to provide clearance to remove the oil pan.
16. Raise and support the vehicle.
17. Remove the oil pan. See **Engine/Lubrication/PAN, Oil - Removal**.
18. Lower the vehicle.
19. Remove the timing chain cover. See **Engine/Valve Timing/COVER(S), Engine Timing - Removal**.
20. If necessary, remove the ridge on top of the cylinder bores with a reliable ridge reamer before removing the pistons from the cylinder block. **Be sure to keep the tops of the pistons covered during this operation.**

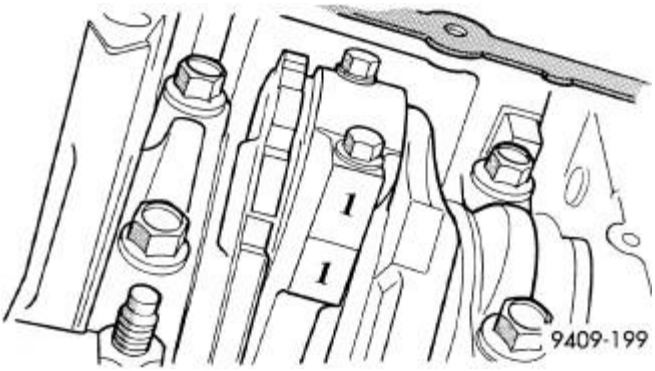

Fig. 233: Identifying Mark On Connecting Rod And Bearing Cap
Courtesy of CHRYSLER LLC

CAUTION: Do Not use a number stamp or a punch to mark connecting rods or caps, as damage to connecting rods could occur.

NOTE: Connecting rods and bearing caps are not interchangeable and should be marked before removal to ensure correct reassembly.

21. Raise and support the vehicle.
22. Mark the connecting rod and bearing cap positions using a permanent ink marker or scribe tool.

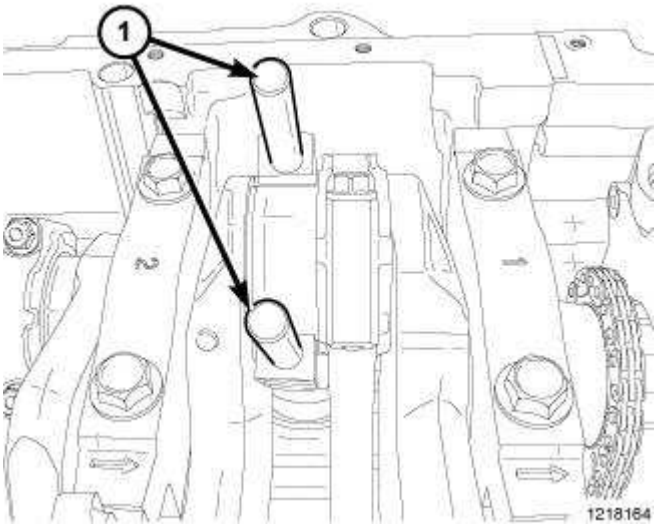

Fig. 234: Connecting Rod Guides
Courtesy of CHRYSLER LLC

CAUTION: Care must be taken not to damage the fractured rod and cap joint face surfaces, as engine damage may occur.

CAUTION: Care must be taken not to nick crankshaft journals, as engine damage may occur.

NOTE: Pistons and connecting rods assemblies must be removed from the top of cylinder block. When removing the piston and connecting rod assemblies from the engine, rotate the crankshaft so each connecting rod is centered in the cylinder bore.

23. Remove the connecting rod cap, install the Connecting Rod Guides 8507 (1) and carefully remove the piston from the cylinder bore, repeat this procedure for each piston being removed.
24. Immediately after removing the piston and connecting rod, install the bearing cap on the mating connecting rod to prevent damage to the fractured cap and rod surfaces.
25. Carefully remove the piston rings from the piston(s), starting from the top ring down.

Cleaning

CLEANING

CAUTION: Do not use a wire wheel or other abrasive cleaning devise to clean the pistons or connecting rods. The pistons have a moly coating, this coating must not be damaged.

1. Using a suitable cleaning solvent, clean the pistons in warm water and towel dry.
2. Use a wood or plastic scraper to clean the ring land grooves.

CAUTION: Do not remove the piston pin from the piston and connecting rod assembly.

Inspection

INSPECTION

Check the connecting rod journal for excessive wear, taper and scoring. See **Engine/Engine Block/ROD, Piston and Connecting - Standard Procedure**.

Check the connecting rod for signs of twist or bending.

Check the piston for taper and elliptical shape before it is fitted into the cylinder bore. See **Engine/Engine Block/ROD, Piston and Connecting - Standard Procedure**.

Check the piston for scoring or scraping marks in the piston skirts. Check the ring lands for cracks and/or deterioration.

Installation

INSTALLATION

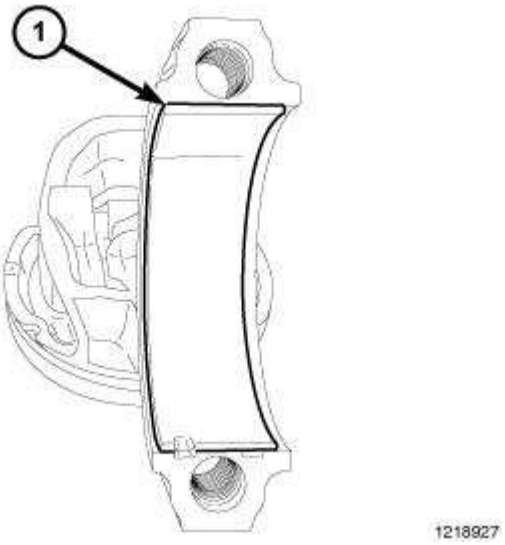

Fig. 235: Rod Bearing
Courtesy of CHRYSLER LLC

NOTE: Before reinstalling used rings or installing new rings, the ring clearances must be checked.

NOTE: Make sure the piston ring grooves are clean and free of nicks and burrs.

1. Check piston ring clearance. See **Engine/Engine Block/RING(S), Piston - Standard Procedure**.
2. Before installing piston and connecting rod assemblies into the bore, install the piston rings. See **Engine/Engine Block/RING(S), Piston - Standard Procedure**.
3. Immerse the piston head and rings in clean engine oil and position a ring compressor over the piston and rings and tighten the ring compressor. **Ensure the position of rings do not change during this operation.**
4. Position the rod bearing (1) onto the connecting rod and lubricate bearing surface with clean engine oil.

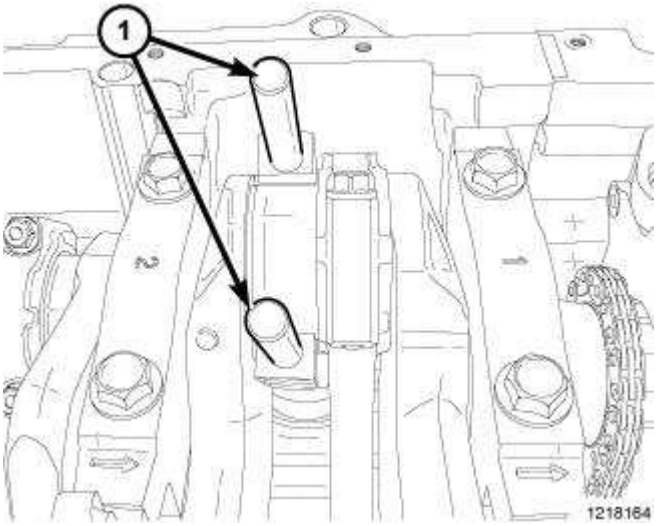

Fig. 236: Connecting Rod Guides
Courtesy of CHRYSLER LLC

5. Install Connecting Rod Guides 8507 (1) into the connecting rod bolt threads.

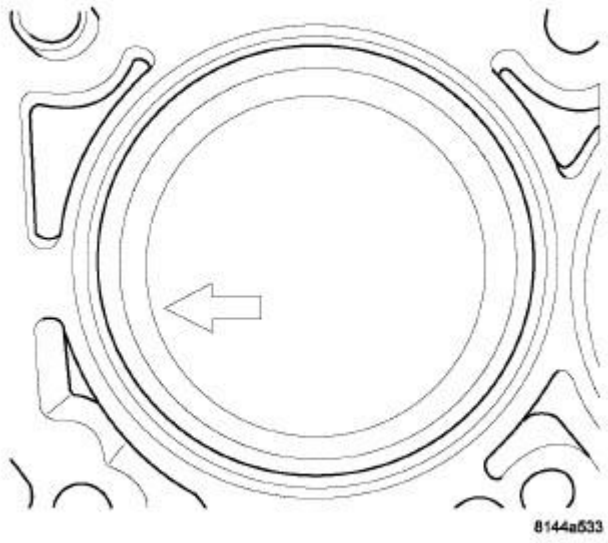

Fig. 237: PISTON DIRECTION ARROW
Courtesy of CHRYSLER LLC

6. The pistons are marked on the piston pin bore surface with an raised "F" or arrow on top of piston indicating installation position. This mark must be pointing toward the front of engine on both cylinder banks.
7. Wipe cylinder bore clean and lubricate with clean engine oil.

8. Rotate the crankshaft until the connecting rod journal is centered with the cylinder bore.
9. Insert the piston and rod assembly into the cylinder bore and carefully position the connecting rod over the crankshaft journal.
10. Tap the piston down into the cylinder bore using a hammer handle while guiding the connecting rod into position on the rod journal.

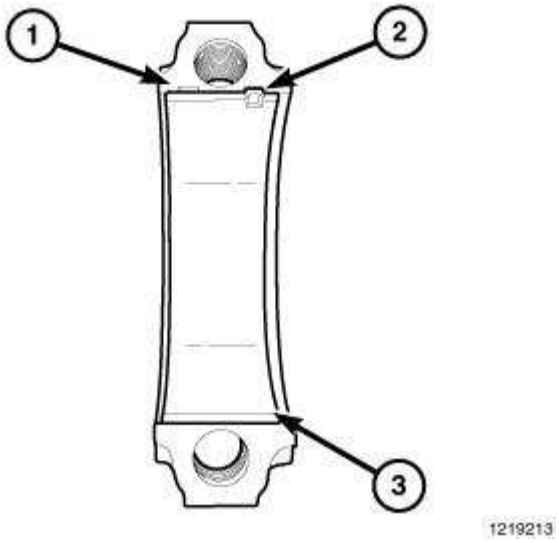

Fig. 238: Connecting Rod Cap
Courtesy of CHRYSLER LLC

11. Remove the Connecting Rod Guides 8507.
12. Wipe the connecting rod cap (1) clean and lubricate with clean engine oil and install the bearing (3).

NOTE: The connecting rods and bearing caps are not interchangeable, line up the previously marked bearing caps and connecting rods to ensure assembly to their original location.

13. Lubricate the bearing surfaces with clean engine oil and position the rod cap in place.

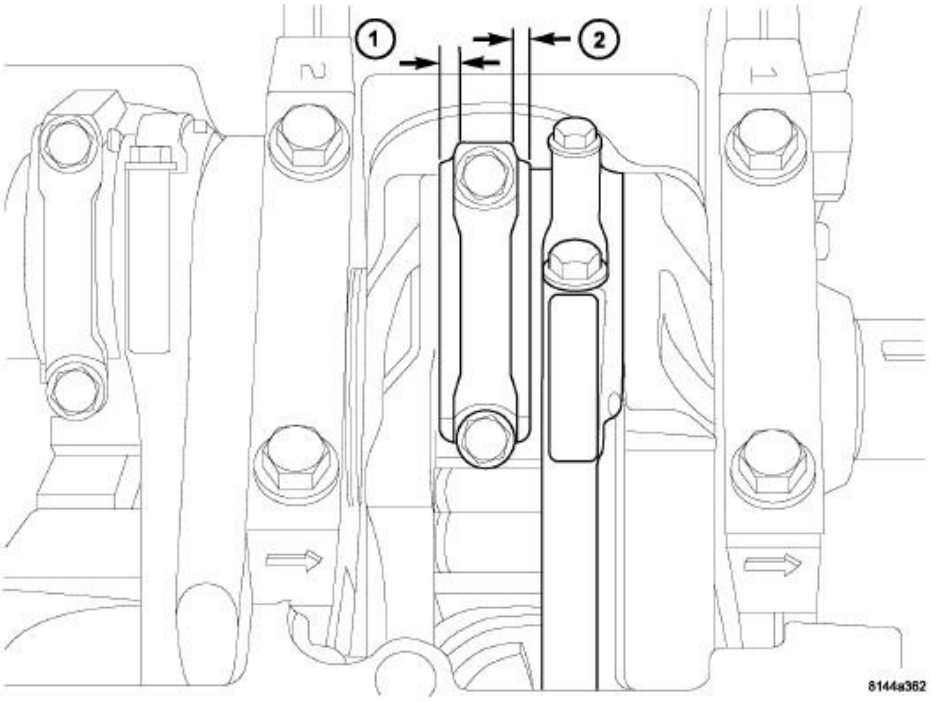

Fig. 239: Removing/Installing Connecting Rod
Courtesy of CHRYSLER LLC

CAUTION: When installing connecting rods, make sure the wide side (1) is towards the crankshaft and narrow sides (2) face each other.

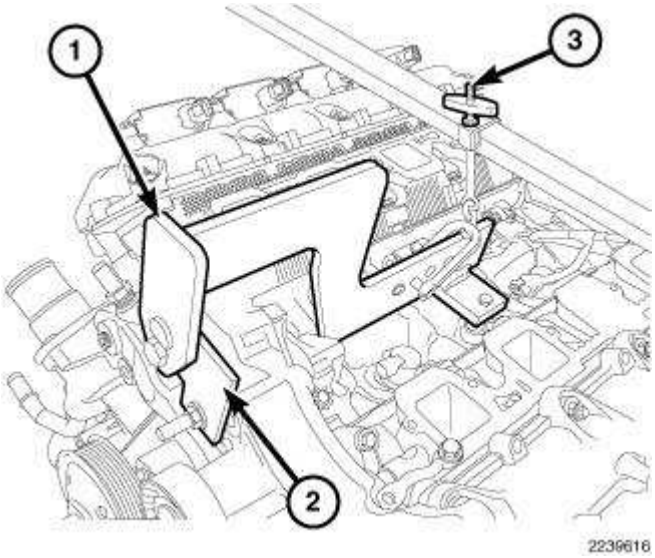

Fig. 240: Engine Lift Fixture & Adapter
Courtesy of CHRYSLER LLC

CAUTION: Always replace the Rod Bolts whenever they are loosened or removed.

14. Lubricate the new rod cap bolts with clean engine oil, install and tighten to 21 N.m (15 ft. lbs.) plus 90°.
15. Install the timing chain cover. See **Engine/Valve Timing/COVER(S), Engine Timing - Installation**.
16. Install the new oil pan gasket/windage tray and oil pan. See **Engine/Lubrication/PAN, Oil - Installation**.
17. Install the engine oil dipstick tube and dipstick.
18. Lower the vehicle.
19. Using the Engine Lift Fixture 8984A (1), Engine Lift Adapter 8984-UPD (2) and the Engine Support Fixture 8534B (3) lower the engine into position and remove.
20. Raise and support the vehicle.

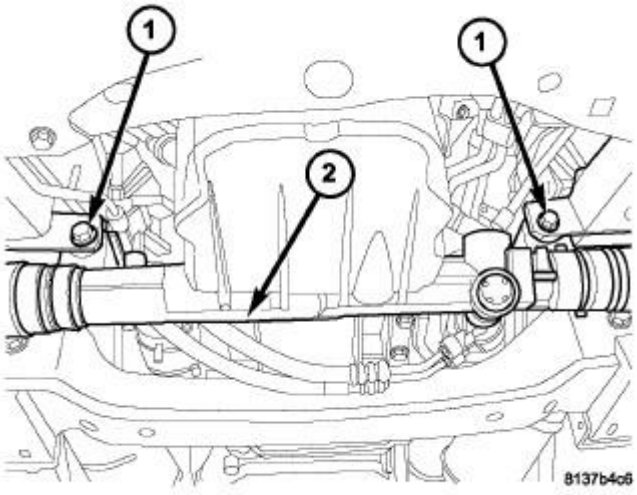

Fig. 241: GEAR MOUNTING BOLTS
Courtesy of CHRYSLER LLC

21. Position the steering gear (2), install mounting bolts (1) and tighten to 95 N.m (70 ft. lbs.).

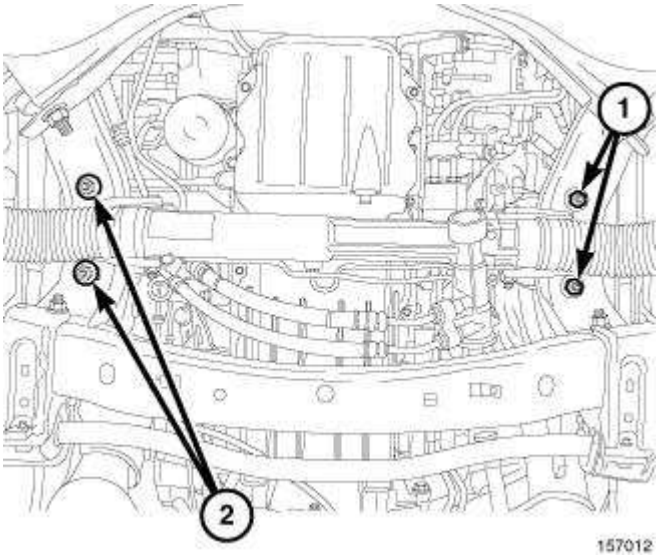

Fig. 242: Engine Mount Nuts
Courtesy of CHRYSLER LLC

22. Install the engine mount nuts (1,2) and tighten to 95 N.m (70 ft. lbs.).
23. Lower the vehicle.
24. Install the cylinder head(s). See **Engine/Cylinder Head - Installation**.

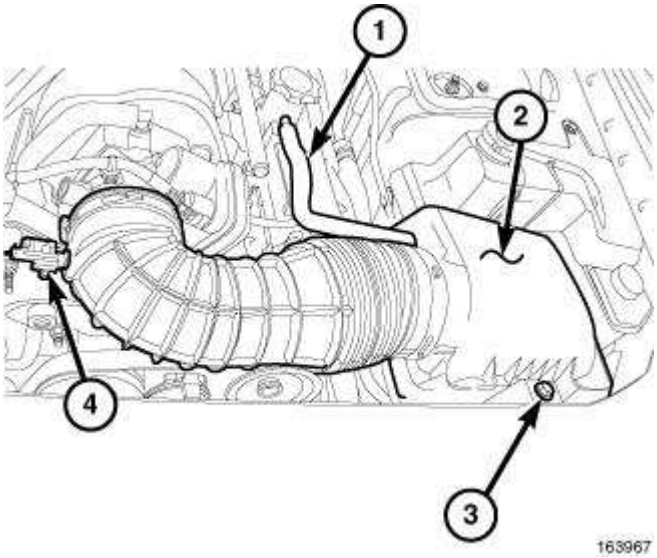

Fig. 243: Air Duct To Throttle Body
Courtesy of CHRYSLER LLC

25. Position the air cleaner housing (2), install the air cleaner housing retaining bolt (3) and securely tighten.
26. Connect the makeup air hose (1).
27. Connect the intake air temperature sensor (4) electrical connector.
28. Connect the air duct to the throttle body and tighten clamp to 3 N.m (30 in. lbs.).

29. Fill the engine with oil. See **Engine/Lubrication/OIL - Standard Procedure**.

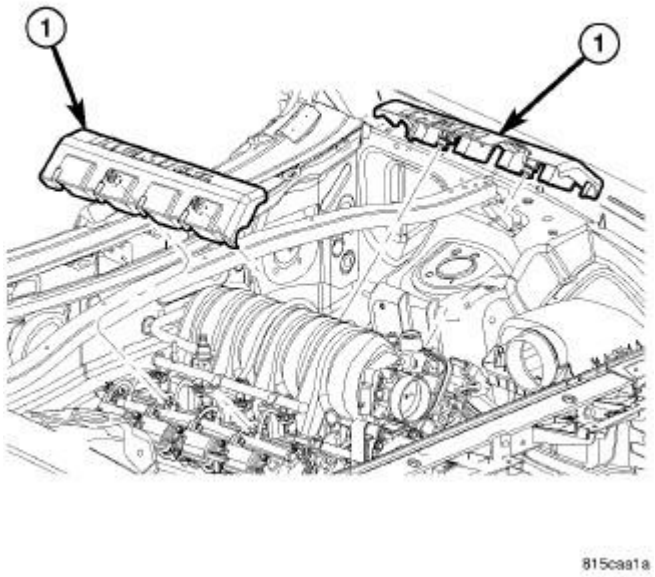

Fig. 244: Engine Covers
Courtesy of CHRYSLER LLC

30. Install the engine covers (1).

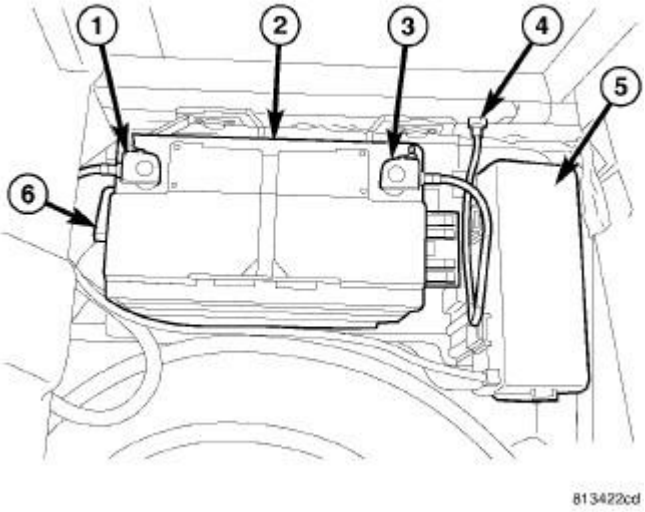

Fig. 245: Battery System Components And PDC Cover
Courtesy of CHRYSLER LLC

31. Connect the negative battery cable (3).

SEAL, CRANKSHAFT OIL, FRONT

Removal

REMOVAL

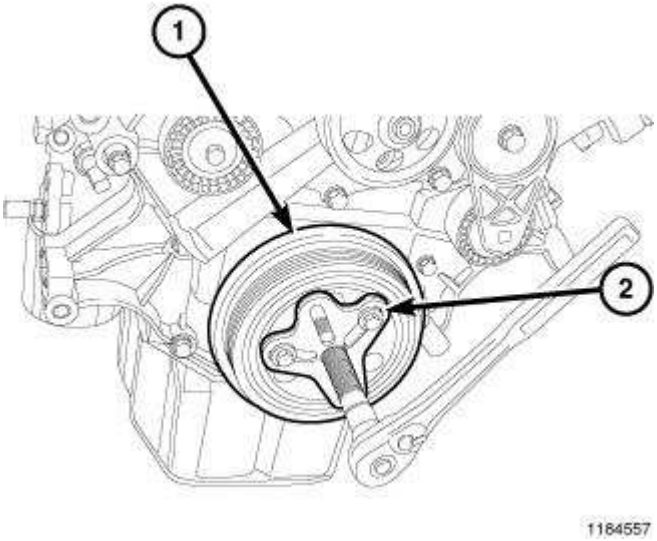

Fig. 246: Vibration Damper & Bolt Grip Puller
Courtesy of CHRYSLER LLC

1. Disconnect negative cable from battery.
2. Remove accessory drive belt. Refer to **Cooling/Accessory Drive/BELT, Serpentine - Removal** .
3. Drain cooling system. Refer to **Cooling - Standard Procedure** .
4. Remove upper radiator hose.
5. Remove radiator shroud attaching fasteners.
6. Remove radiator cooling fan and shroud. Refer to **Cooling/Engine/FAN, Cooling - Removal** .
7. Remove crankshaft damper bolt.
8. Remove damper (1) using bolt grip type puller (2). See **Engine/Engine Block/DAMPER, Vibration - Removal**.

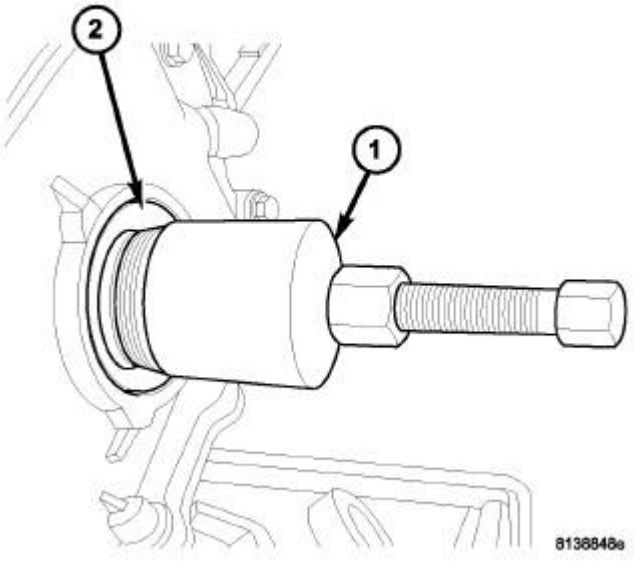

Fig. 247: FRONT CRANKSHAFT SEAL REMOVAL
Courtesy of CHRYSLER LLC

9. Using Seal Remover 9071 (1), remove crankshaft front seal (2).

Installation

INSTALLATION

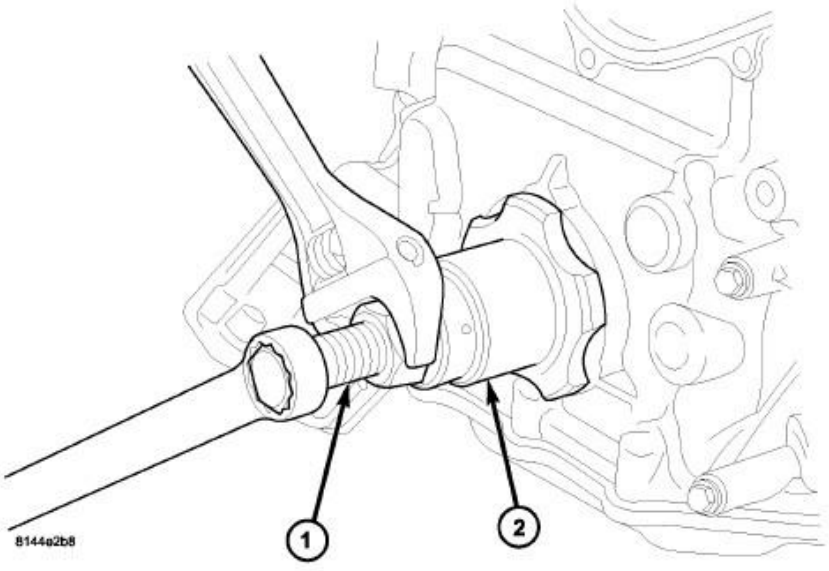

Fig. 248: FRONT SEAL INSTALLATION

Courtesy of CHRYSLER LLC

CAUTION: The front crankshaft seal must be installed dry. Do not apply lubricant to the sealing lip or the outer edge.

1. Using Crankshaft Front Oil Seal Installer 9072 (2) and Damper Installer 8512A (1), install crankshaft front seal.

   CAUTION: To prevent severe damage to the crankshaft or damper, thoroughly clean the damper bore and the crankshaft nose before installing damper.

2. Install vibration damper. See **Engine/Engine Block/DAMPER, Vibration - Installation**.
3. Install radiator cooling fan and shroud. Refer to **Cooling/Engine/FAN, Cooling - Installation** .
4. Install upper radiator hose.
5. Install accessory drive belt refer. Refer to **Cooling/Accessory Drive/BELT, Serpentine - Installation** .
6. Refill cooling system. Refer to **Cooling - Standard Procedure** .
7. Connect negative cable to battery.

SEAL, CRANKSHAFT OIL, REAR

Description

DESCRIPTION

The crankshaft rear oil seal is integral to the crankshaft rear oil seal retainer, for more information refer to the following;

- **Diagnosis and Testing** . See **Engine/Engine Block/RETAINER, Crankshaft Rear Oil Seal - Diagnosis and Testing**.
- **Removal** . See **Engine/Engine Block/RETAINER, Crankshaft Rear Oil Seal - Removal**.
- **Installation** . See **Engine/Engine Block/RETAINER, Crankshaft Rear Oil Seal - Installation**.

SOLENOID, MULTIPLE DISPLACEMENT

Description

DESCRIPTION

The Multi Displacement System selectively deactivates cylinders 1,4,6, and 7, to improve fuel economy. It has two modes of operation:

- 8 cylinders for acceleration and heavy loads.
- 4 cylinders for cruising and city traffic.

The main components of the Multi Displacement System are:

- Unique MDS camshaft.
- Deactivating roller tappets.
- 4 control valves/solenoids.
- control valve/solenoid wiring harness.
- oil temp sensor.

Operation

OPERATION

Cylinder Deactivation

- Trap an exhaust charge from a normal combustion event
- Normal combustion event
- Don't open the exhaust valve
- Don't open the intake valve
- Piston is an air spring
- Cylinders deactivated in firing sequence

Cylinder Reactivation

- Open the exhaust valve
- Empty the cylinder
- Open the intake valve
- Normal combustion event
- Cylinders reactivated in firing sequence

Diagnosis and Testing

MDS SOLENOID

The Multi-Displacement System (MDS) has the following detectable issues:

- solenoid circuit
- fail to deactivate a cylinder(s)
- fail to reactivate a cylinder(s)
- low oil pressure

CONDITION	POSSIBLE CAUSES	CORRECTION
MDS does not activate	1. Low oil pressure. 2. Bad oil temperature sensor.	1. Check for proper oil pressure. 2. Replace the oil temperature

		sensor.
-	3. Malfunctioning MDS solenoid.	3. Replace the solenoid.
-	4. Malfunctioning MDS tappet.	4. Replace tappet (s).
MDS does not deactivate	1. Low oil pressure.	1. Check or proper oil pressure.
	2. Bad oil temperature sensor.	2. Replace the oil temp sensor.
-	3. Malfunctioning MDS solenoid.	3. Replace the solenoid.
-	4. Malfunctioning MDS tappet.	4. Replace tappet(s).

Removal

REMOVAL

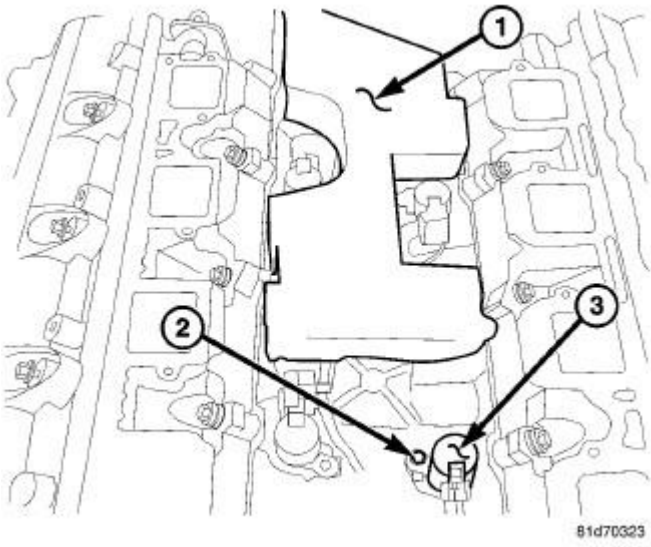

Fig. 249: MDS SOLENOIDS
Courtesy of CHRYSLER LLC

1. Disconnect the negative battery cable.
2. Remove the intake manifold. See **Engine/Manifolds/MANIFOLD, Intake - Removal**.
3. Remove foam insulator pad (1).

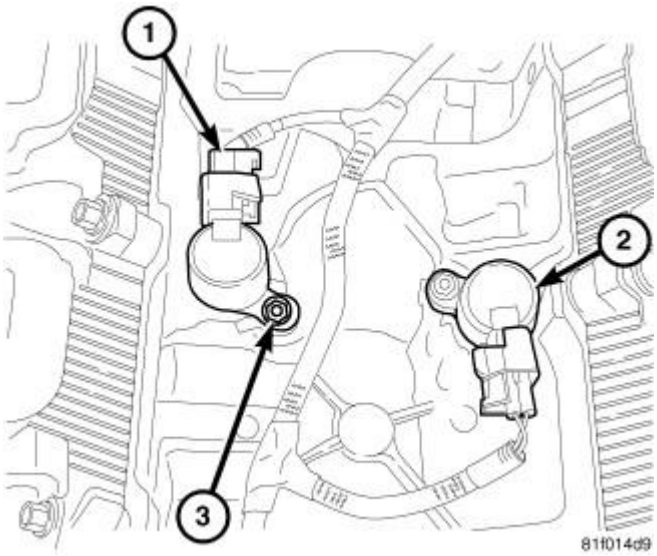

Fig. 250: MDS SOLENOID CONNECTOR
Courtesy of CHRYSLER LLC

4. Remove wiring harness connectors (1) from the MDS solenoid(s) (2) that require removal.
5. Remove hold down bolt (3) from MDS solenoid(s) (2).

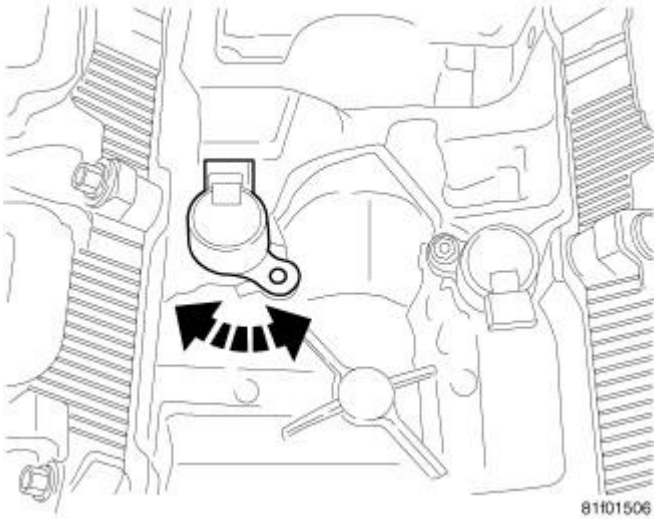

Fig. 251: MDS SOLENOID REMOVAL
Courtesy of CHRYSLER LLC

CAUTION: Do not try to pry the solenoid out. This could lead to breakage and contamination of the lubrication system.

6. Lightly tap on solenoid with a rubber mallet. Wiggle solenoid from side to side.
7. Remove MDS solenoid(s).

Installation

INSTALLATION

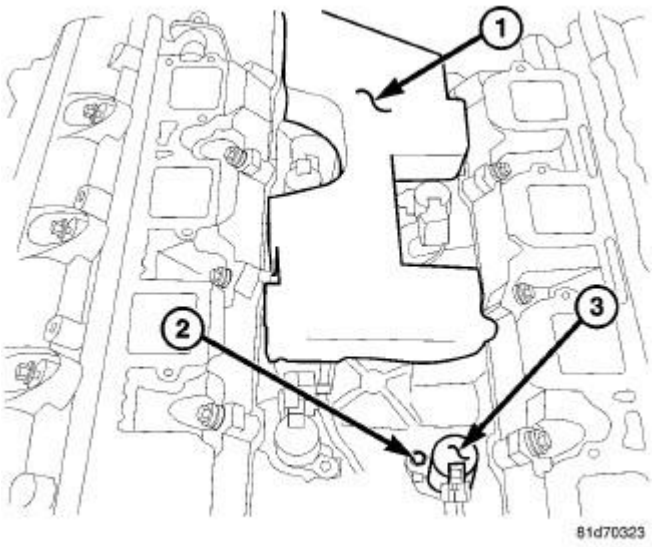

Fig. 252: MDS SOLENOIDS
Courtesy of CHRYSLER LLC

1. Verify that MDS bores are free of debris, before solenoid installation.
2. Install MDS solenoid(s) (3) fully into block.
3. Install hold down bolt (2) and tighten to 11 N.m (97 in. lbs.).
4. Reconnect the MDS wiring harness to the solenoid(s) (3).
5. Install foam insulator pad (1) if removed.
6. Install the intake manifold. See **Engine/Manifolds/MANIFOLD, Intake - Installation**.

ENGINE MOUNTING

INSULATOR, ENGINE MOUNT, FRONT

Removal

REMOVAL

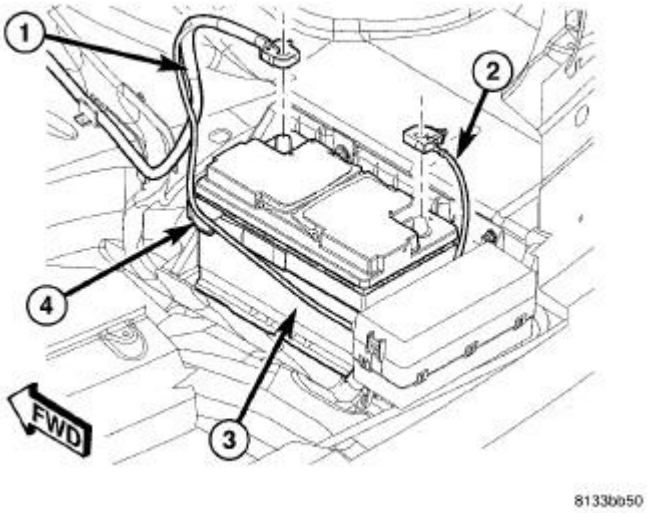

Fig. 253: Disconnecting/Connecting Battery Cables
Courtesy of CHRYSLER LLC

1. Disconnect the negative battery cable (2).

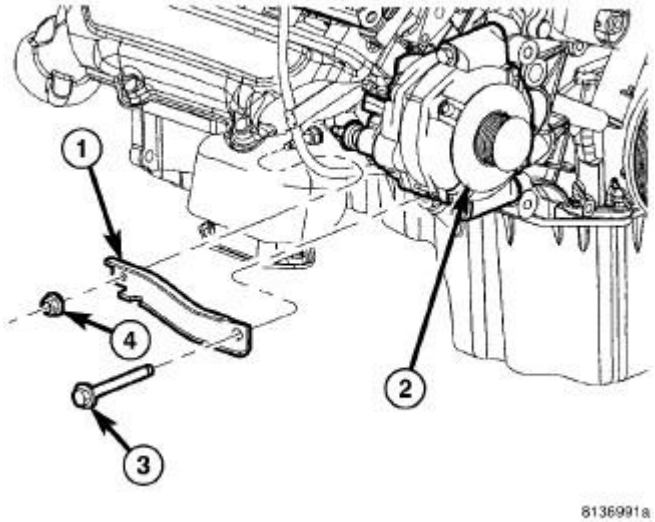

Fig. 254: GENERATOR SUPPORT BRACKET-5.7L
Courtesy of CHRYSLER LLC

2. Remove the generator support bracket (1).

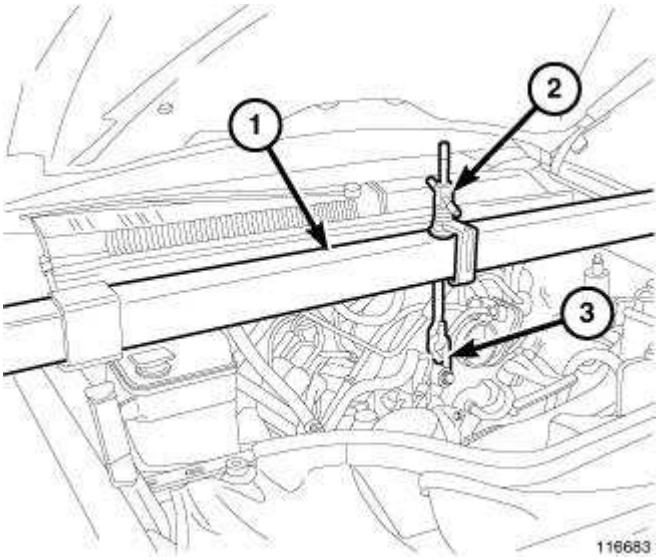

Fig. 255: ENGINE SUPPORT TOOL
Courtesy of CHRYSLER LLC

3. Support the engine using the engine support fixture (1) 8534B.
4. Raise and support the vehicle.

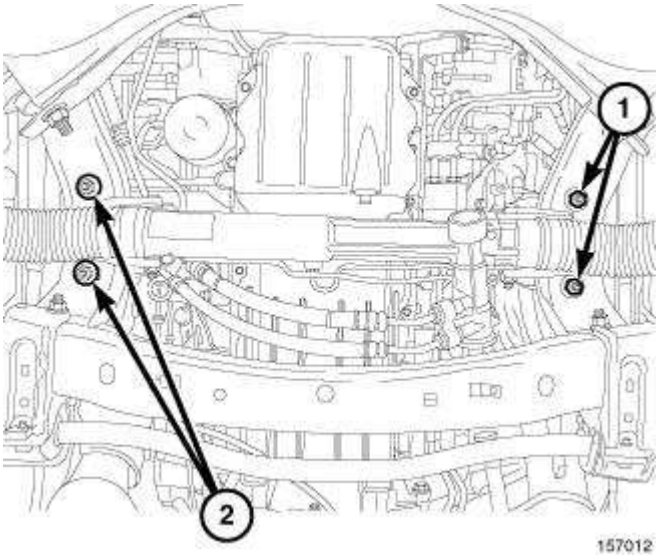

Fig. 256: Engine Mount Nuts
Courtesy of CHRYSLER LLC

5. Remove the engine mount nuts (1,2).
6. Lower the vehicle.

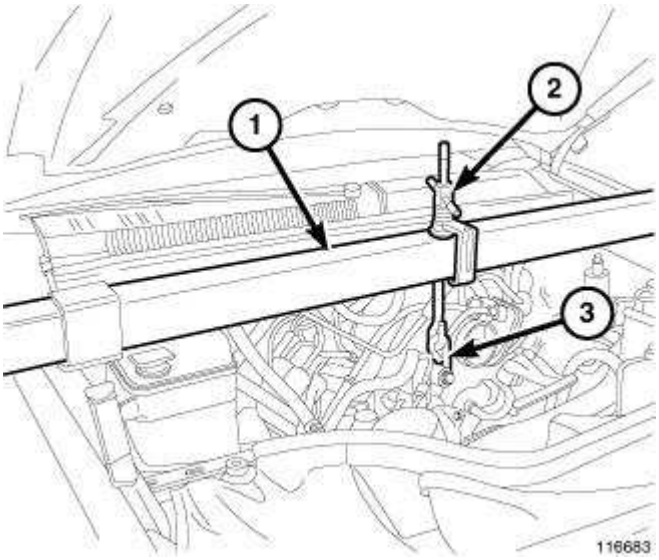

Fig. 257: ENGINE SUPPORT TOOL
Courtesy of CHRYSLER LLC

7. Using the engine support fixture (1) 8534B raise the engine far enough to be able to remove the left and right engine mounts.

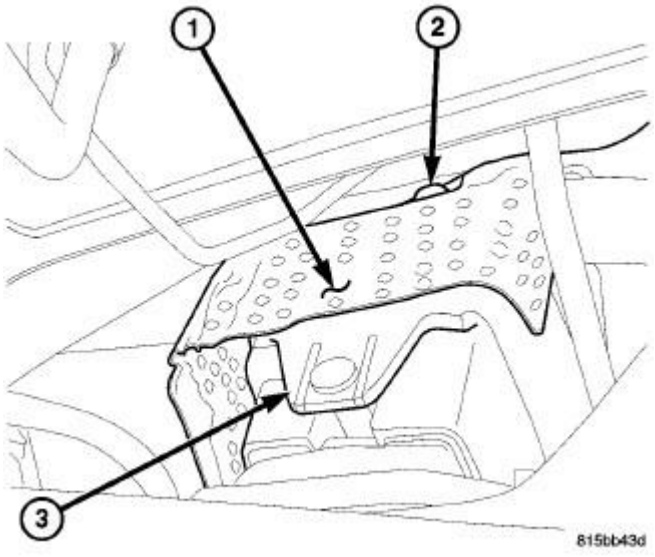

Fig. 258: Engine Mount Heat Shield
Courtesy of CHRYSLER LLC

8. Remove the engine mount heat shield (1).

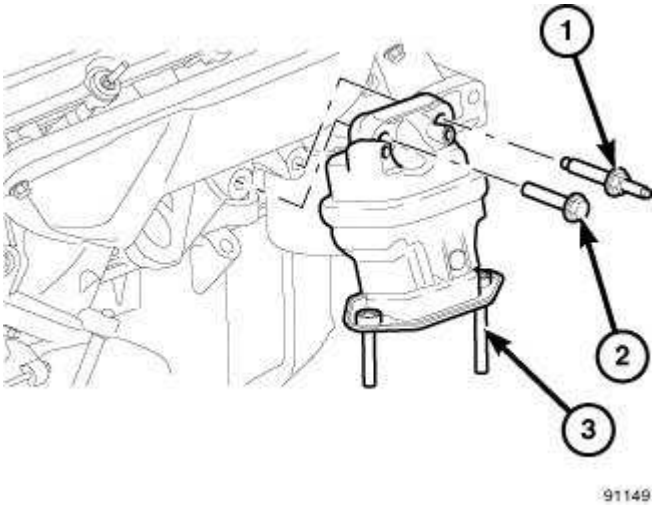

Fig. 259: Identifying Hydromount
Courtesy of CHRYSLER LLC

9. Remove the hydromount (3) retaining bolts (1,2) and remove the hydromount from the engine.

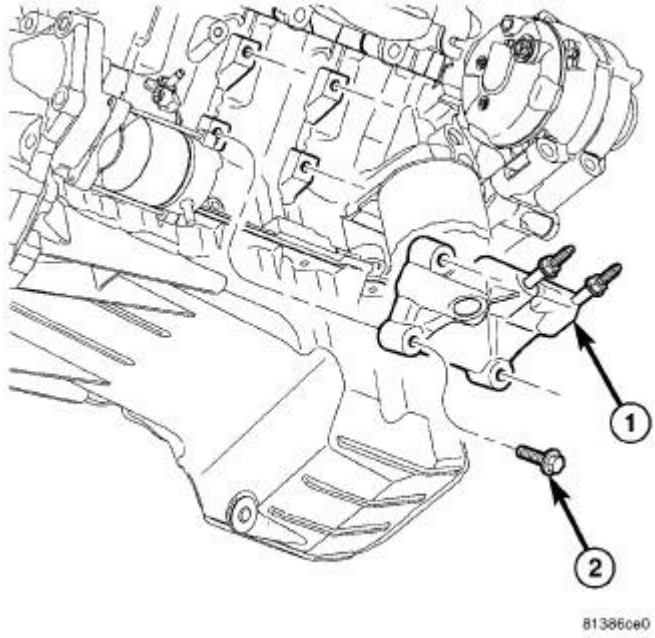

Fig. 260: ENGINE MOUNT BRACKET RH
Courtesy of CHRYSLER LLC

10. If necessary, remove the engine mount brackets (1).

Installation

INSTALLATION

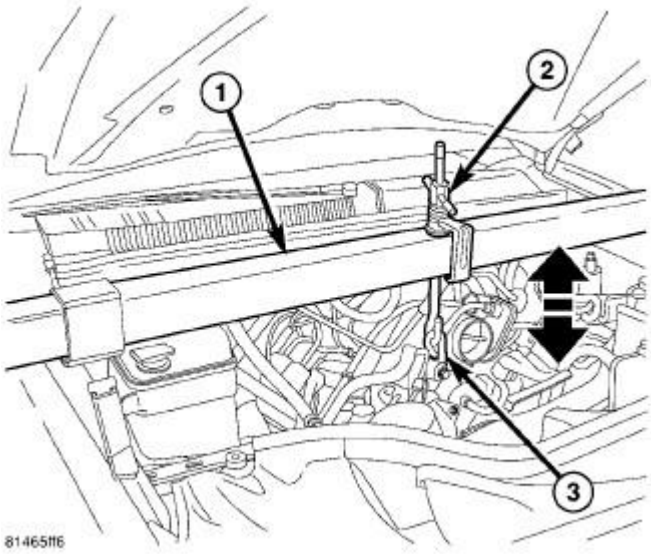

Fig. 261: ENGINE SUPPORT TOOL
Courtesy of CHRYSLER LLC

1. Using the engine support fixture 8534B (1) raise the engine far enough to be able to install the left and right engine mounts.
2. Raise the vehicle.

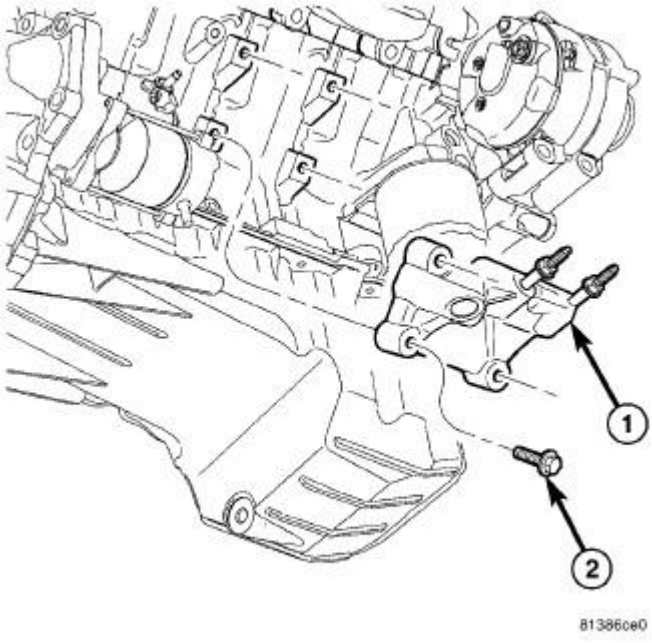

Fig. 262: ENGINE MOUNT BRACKET RH
Courtesy of CHRYSLER LLC

NOTE: For engine mount to block bolts, apply Mopar® Lock and Seal Adhesive,

Medium Strength Threadlocker.

3. If removed, install the engine mount brackets (1) and tighten bolts to 95 N.m (70 ft. lbs.).

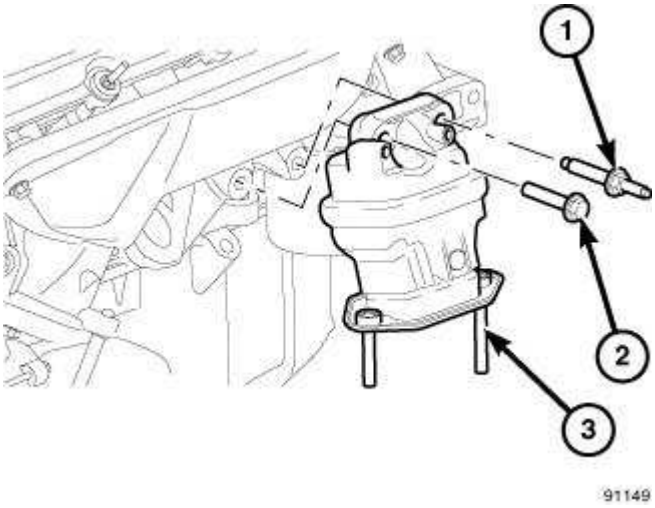

Fig. 263: Identifying Hydromount
Courtesy of CHRYSLER LLC

4. Position the hydromount (3) on the engine and tighten bolts (1,2) to 95 N.m (70 ft. lbs.).

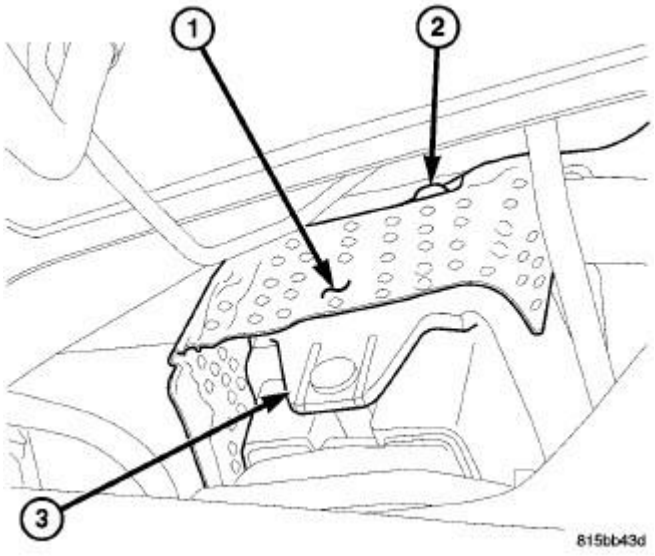

Fig. 264: Engine Mount Heat Shield
Courtesy of CHRYSLER LLC

5. Install the engine mount heat shield (1) and securely tighten the fasteners (2,3).
6. Lower the vehicle.

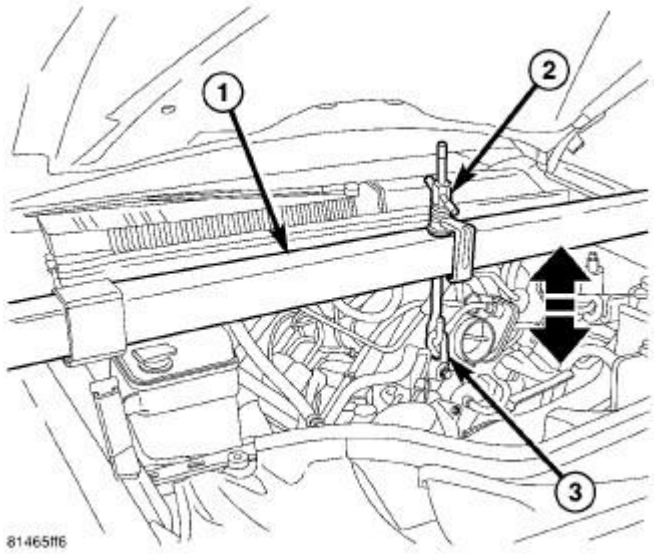

Fig. 265: ENGINE SUPPORT TOOL
Courtesy of CHRYSLER LLC

7. Lower the engine using the engine support fixture 8534B (1) and remove support fixture.
8. Raise and support the vehicle.

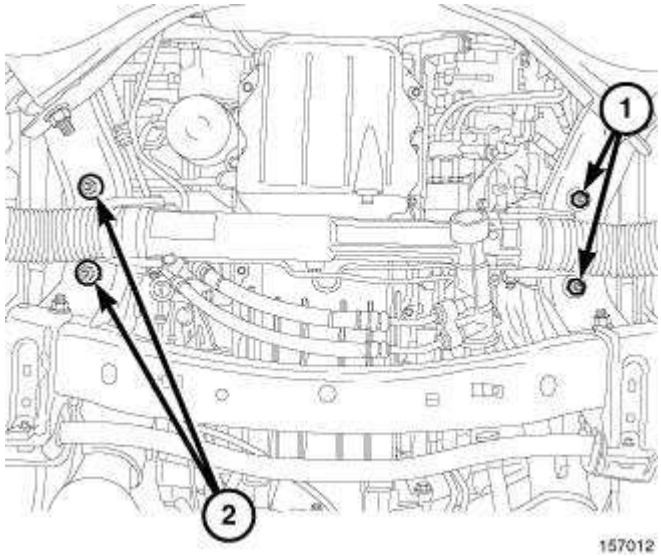

Fig. 266: Engine Mount Nuts
Courtesy of CHRYSLER LLC

9. Install the engine mount nuts (1,2) and tighten nuts to 95 N.m (70 ft. lbs.).
10. Lower the vehicle.

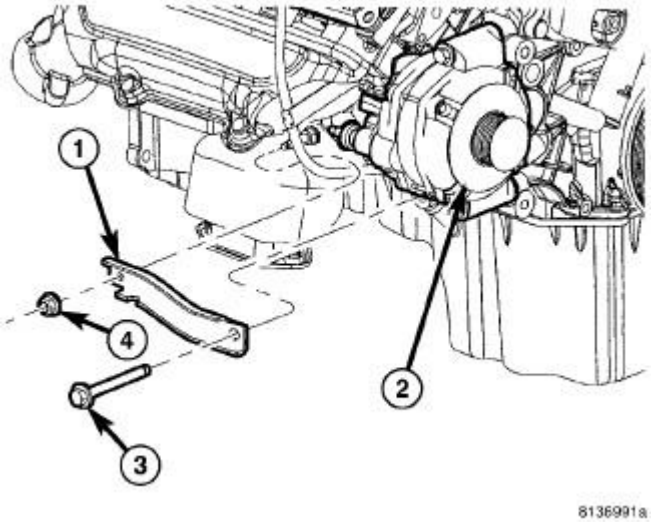

Fig. 267: GENERATOR SUPPORT BRACKET-5.7L
Courtesy of CHRYSLER LLC

11. Install the generator support bracket (1) and tighten bolts (3) to 55 N.m (40 ft. lbs.).

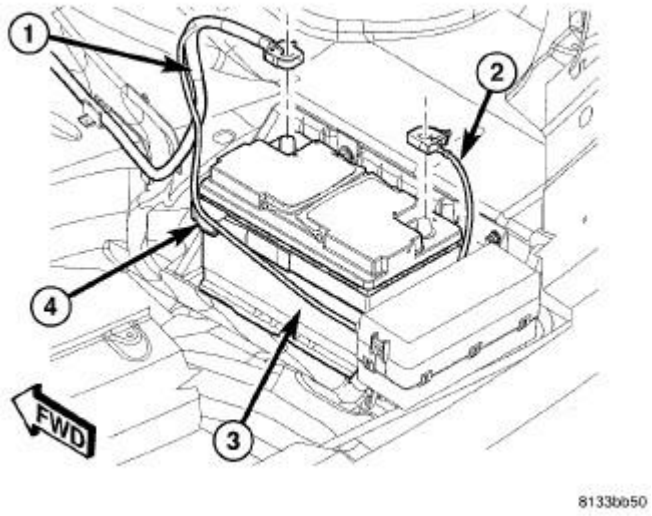

Fig. 268: Disconnecting/Connecting Battery Cables
Courtesy of CHRYSLER LLC

12. Connect the negative battery cable (2).

INSULATOR, ENGINE MOUNT, REAR

Removal

REMOVAL

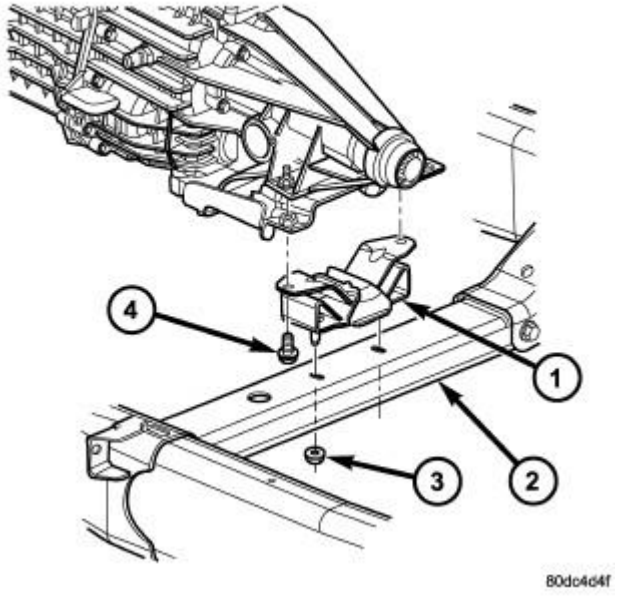

Fig. 269: TRANSMISSION MOUNT
Courtesy of CHRYSLER LLC

1. Raise the vehicle on a hoist.
2. Using a suitable jack, support transmission.
3. Remove the nuts (3) from the transmission mount.
4. Remove the transmission to mount bolts (4).
5. Raise the transmission enough to remove the rear mount (1).
6. Remove the mount (1).

Installation

INSTALLATION

NOTE: Threadlocking compound must be applied to the bolts before installation.

1. Install the two bolts that attach the transmission mount to the transmission bracket.
2. Tighten the bolts to 61 N.m (45 ft. lbs.) torque.
3. Lower the transmission so the transmission mount rests on the crossmember, and the studs of the transmission mount are aligned in the slots in the crossmember.
4. Install the nuts onto the transmission mount studs through the crossmember access slot.
5. Tighten the nuts to 54 N.m (40 ft. lbs.).

LUBRICATION

DESCRIPTION

DESCRIPTION

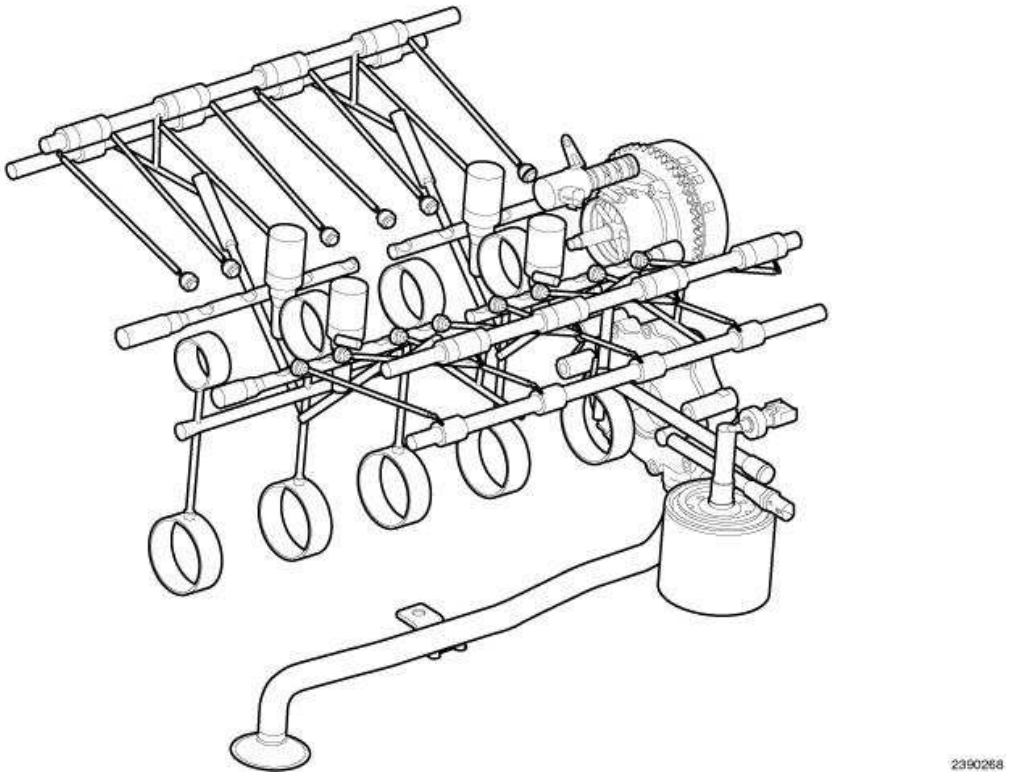

Fig. 270: 5.7L MDS Lubrication System
Courtesy of CHRYSLER LLC

The 5.7L MDS lubrication system is a full flow filtration pressure feed type.

DIAGNOSIS AND TESTING

CHECKING ENGINE OIL PRESSURE

1. Remove the oil pressure sending unit and install gauge assembly C-3292A.
2. Run the engine until thermostat opens.
3. Oil Pressure:
   - Curb Idle-25 kPa (4 psi) minimum
   - 3000 RPM-170 - 758 kPa (25 - 110 psi)
4. If oil pressure is 0 at idle, shut off engine. Check for a clogged oil pick-up screen or a pressure relief valve stuck open.

ENGINE OIL LEAK

Begin with a thorough visual inspection of the engine, particularly at the area of the suspected leak. If an oil leak source is not readily identifiable, the following steps should be followed:

1. Do not clean or degrease the engine at this time because some solvents may cause rubber to swell, temporarily stopping the leak.
2. Add an oil soluble dye (use as recommended by manufacturer). Start the engine and let idle for approximately 15 minutes. Check the oil dipstick to make sure the dye is thoroughly mixed as indicated with a bright yellow color under a black light.
3. Using a black light, inspect the entire engine for fluorescent dye, particularly at the suspected area of the oil leak. If the oil leak is found and identified, repair per service information instructions.
4. If dye is not observed, drive the vehicle at various speeds for approximately 24 km (15 miles), and repeat inspection.

   If the oil leak source is not positively identified at this time , proceed with the AIR LEAK DETECTION TEST METHOD.

AIR LEAK DETECTION TEST METHOD

1. Remove the PCV valve from the IAFM. Cap or plug the PCV valve grommet.
2. Attach an air hose with a pressure gauge and regulator to the dipstick tube.

   CAUTION: Do not subject the engine assembly to more than 20.6 kPa (3 PSI) of test pressure.

3. Gradually apply air pressure from 1 psi to 2.5 psi maximum while applying soapy water at the suspected source. Adjust the regulator to the suitable test pressure that provide the best bubbles which will pinpoint the leak source. If the oil leak is detected and identified, repair per service information procedures.
4. If the leakage occurs at the rear oil seal area, refer to INSPECTION FOR REAR SEAL AREA LEAKS.
5. If no leaks are detected, turn off the air supply and remove the air hose and all plugs and caps. Install the PCV valve.
6. Clean the oil off the suspect oil leak area using a suitable solvent. Drive the vehicle at various speeds approximately 24 km (15 miles). Inspect the engine for signs of an oil leak by using a black light.

INSPECTION FOR REAR SEAL AREA LEAKS

Since it is sometimes difficult to determine the source of an oil leak in the rear seal area of the engine, a more involved inspection is necessary. The following steps should be followed to help pinpoint the source of the leak.

If the leakage occurs at the crankshaft rear oil seal area:

1. Disconnect the battery.
2. Raise the vehicle.
3. Remove torque converter or clutch housing cover and inspect rear of block for evidence of oil. Use a black light to check for the oil leak:
   a. Circular spray pattern generally indicates seal leakage or crankshaft damage.
   b. Where leakage tends to run straight down, possible causes are a porous block, distributor seal, camshaft bore cup plugs oil galley pipe plugs, oil filter runoff, and main bearing cap to cylinder block mating surfaces.
4. If no leaks are detected, pressurize the crankcase as outlined in the**AIR LEAK DETECTION TEST METHOD**.

   CAUTION: Do not exceed 20.6 kPa (3 psi).

5. If the leak is not detected, very slowly turn the crankshaft and watch for leakage. If a leak is detected between the crankshaft and seal while slowly turning the crankshaft, it is possible the crankshaft seal surface is damaged. The seal area on the crankshaft could have minor nicks or scratches that can be polished out with emery cloth.

   CAUTION: Use extreme caution when crankshaft polishing is necessary to remove minor nicks and scratches. The crankshaft seal flange is especially machined to complement the function of the rear oil seal.

6. For bubbles that remain steady with shaft rotation, no further inspection can be done until disassembled.

CONTROL VALVE, OIL INTAKE

Operation

OPERATION

The Variable Valve Timing (VVT) assembly is actuated with engine oil pressure. The oil flow to the VVT assemblies are controlled by an Oil Control Valve (OCV). The OCV consist of a Pulse Width Modulated (PWM) solenoid and a spool valve. The PCM actuates the OCV to control oil flow through the spool valve into the VVT assemblies. The VVT assembly consists of a rotor, stator, and sprocket. The stator is connected to the timing chain through the sprocket. The rotor is connected to the camshaft. Oil flow in to the VVT assembly rotates the rotor with respect to the stator, thus rotating the exhaust camshaft with respect to the timing chain and intake camshaft. An infinitely variable valve timing position can be achieved within the limits of the hardware. The CMP monitors the position of the camshaft with respect to the crankshaft and provides feedback to the PCM.

Description

DESCRIPTION

The 5.7L engine is equipped with Variable Valve Timing (VVT). This system uses an oil control valve to direct oil pressure into the camshaft phaser assembly. The camshaft phaser assembly advances and/or retards camshaft timing to improve engine performance, mid-range torque, idle quality, fuel economy, and reduce emissions. The oil control valve is located under the intake manifold.

Installation

INSTALLATION

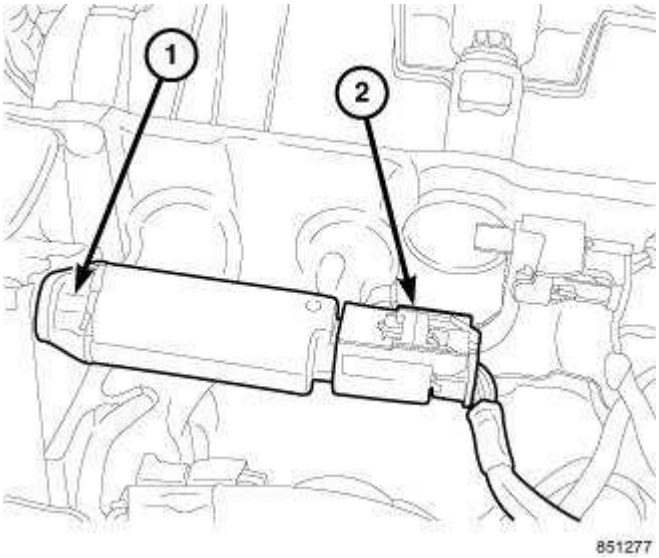

Fig. 271: Oil Control Valve
Courtesy of CHRYSLER LLC

1. Install oil control valve.
2. Tighten oil control valve fastener (1).
3. Connect oil control valve electrical connector (2).
4. Install intake manifold. See **Engine/Manifolds/MANIFOLD, Intake - Installation**.

Removal

REMOVAL

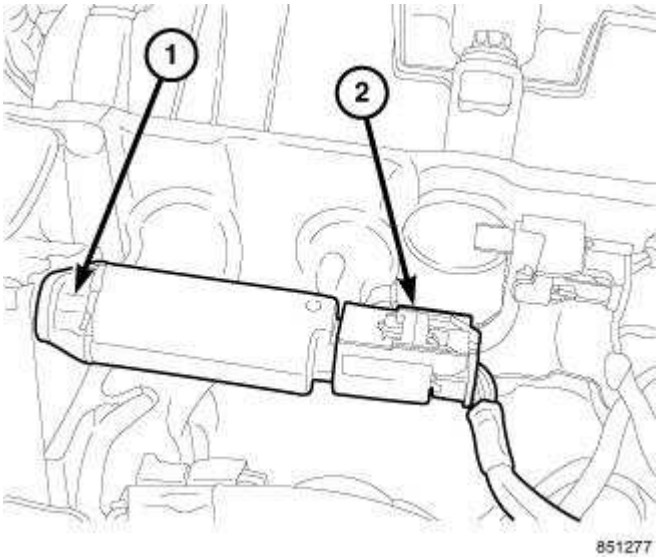

Fig. 272: Oil Control Valve
Courtesy of CHRYSLER LLC

1. Remove intake manifold. See **Engine/Manifolds/MANIFOLD, Intake - Removal**.
2. Disconnect oil control valve electrical connector (2).
3. Remove oil control valve fastener (1).

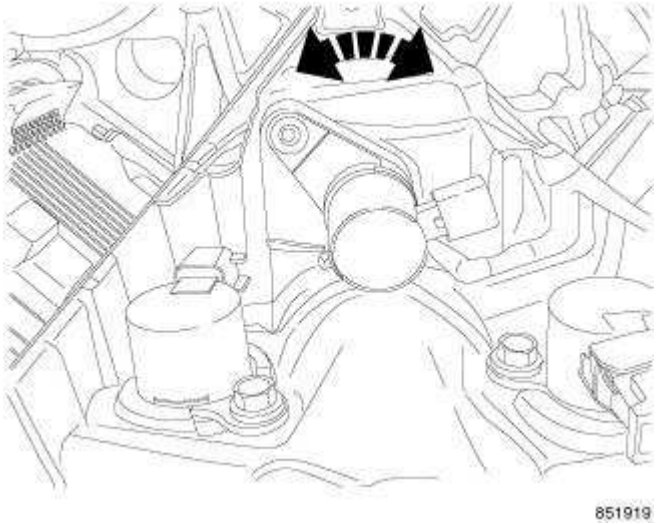

Fig. 273: Oil Control Valve
Courtesy of CHRYSLER LLC

NOTE: To remove the oil control valve, the engine must be at room temperature.

4. Rotate the oil control valve to break the seal. Pull the oil control valve out.

FILTER, ENGINE OIL

Removal

REMOVAL

All engines are equipped with a high quality full-flow, disposable type oil filter. Chrysler Corporation recommends a Mopar® or equivalent oil filter be used.

1. Position a drain pan under the oil filter.
2. Using a suitable oil filter wrench loosen filter.
3. Rotate the oil filter counterclockwise to remove it from the cylinder block oil filter boss.
4. When filter separates from cylinder block oil filter boss, tip gasket end upward to minimize oil spill. Remove filter from vehicle.

   NOTE: Make sure filter gasket was removed with filter.

5. With a wiping cloth, clean the gasket sealing surface of oil and grime.

Installation

INSTALLATION

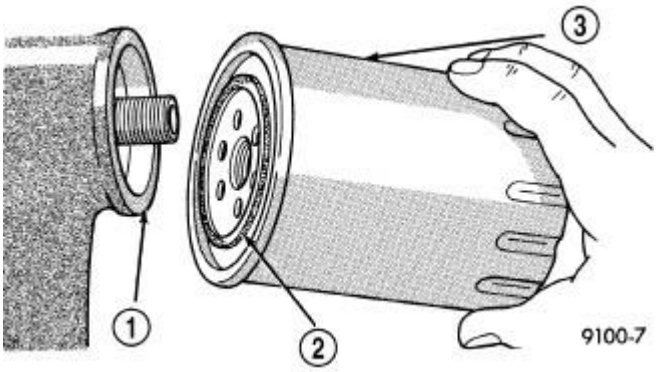

Fig. 274: Oil Filter Sealing Surface - Typical
Courtesy of CHRYSLER LLC

1. Lightly lubricate oil filter gasket (2) with engine oil.
2. Thread filter (3) onto adapter nipple. When gasket makes contact with sealing surface (1), hand tighten filter one half turn, or 180°. Do not over tighten.
3. Add oil, verify crankcase oil level and start engine. Inspect for oil leaks.

OIL

Standard Procedure

ENGINE OIL SERVICE

The engine oil level indicator is located at the left hand of the engine on the 5.7L engines.

CRANKCASE OIL LEVEL INSPECTION

CAUTION: Do not overfill crankcase with engine oil, pressure loss or oil foaming can result.

Inspect engine oil level approximately every 800 kilometers (500 miles). Unless the engine has exhibited loss of oil pressure, run the engine for about ten minutes before checking oil level. Checking engine oil level on a cold engine is not accurate.

To ensure proper lubrication of an engine, the engine oil must be maintained at an acceptable level. The acceptable levels are indicated between the ADD and SAFE marks on the engine oil dipstick.

1. Position vehicle on level surface.
2. With engine OFF, allow approximately five minutes for oil to settle to bottom of crankcase, remove engine oil dipstick.
3. Wipe dipstick clean.
4. Install dipstick and verify it is seated in the tube.
5. Remove dipstick, with handle held above the tip, take oil level reading.
6. Add oil only if level is below the ADD mark on dipstick.

ENGINE OIL CHANGE

Change engine oil at mileage and time intervals described in Maintenance Schedules. Refer to **Vehicle Quick Reference/Maintenance Schedules - Description** .

Run engine until achieving normal operating temperature.

1. Position the vehicle on a level surface and turn engine off.
2. Hoist and support vehicle on safety stands.
3. Remove oil fill cap.
4. Place a suitable drain pan under crankcase drain.
5. Remove drain plug from crankcase and allow oil to drain into pan. Inspect drain plug threads for stretching or other damage. Replace drain plug if damaged.
6. Install drain plug in crankcase. Torque to 34 N.m (25 ft. lbs.).
7. Lower vehicle and fill crankcase with specified type and amount of engine oil described in this service information.
8. Install oil fill cap.
9. Start engine and inspect for leaks.
10. Stop engine and inspect oil level.

NOTE: Care should be exercised when disposing used engine oil after it has been

drained from a vehicle engine. Refer to the WARNING at beginning of this service information.

PAN, OIL

Removal

REMOVAL

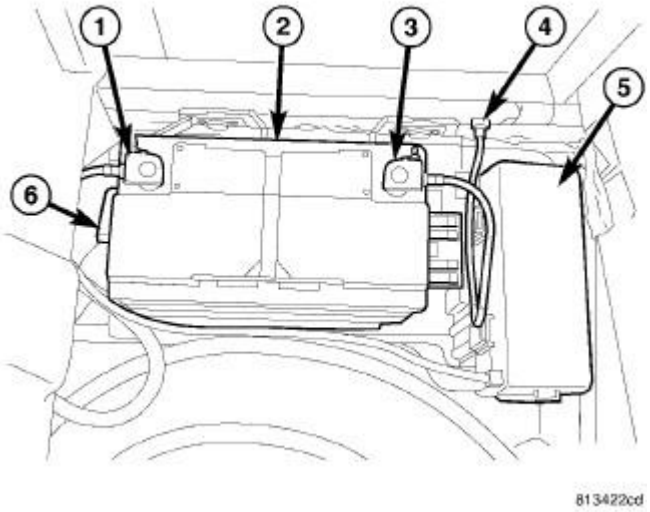

Fig. 275: Battery System Components And PDC Cover
Courtesy of CHRYSLER LLC

1. Disconnect and isolate the negative battery cable (3).
2. Remove the intake manifold. See **Engine/Manifolds/MANIFOLD, Intake - Removal**.
3. Raise and support the vehicle.

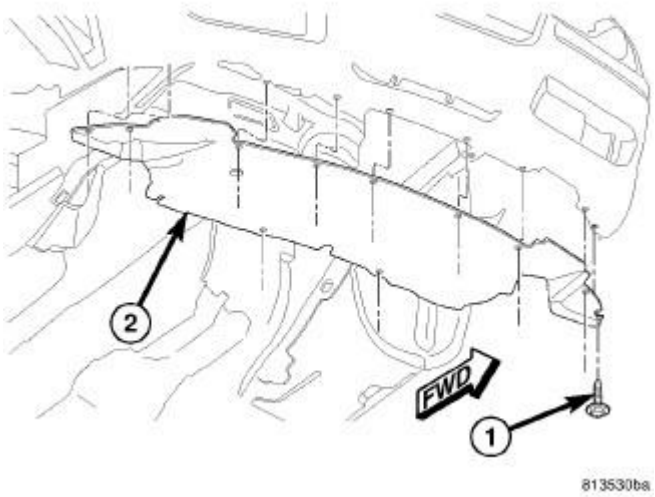

Fig. 276: FRONT BELLY PAN
Courtesy of CHRYSLER LLC

4. Remove the belly pan (2).
5. Drain the engine oil and remove the oil filter.

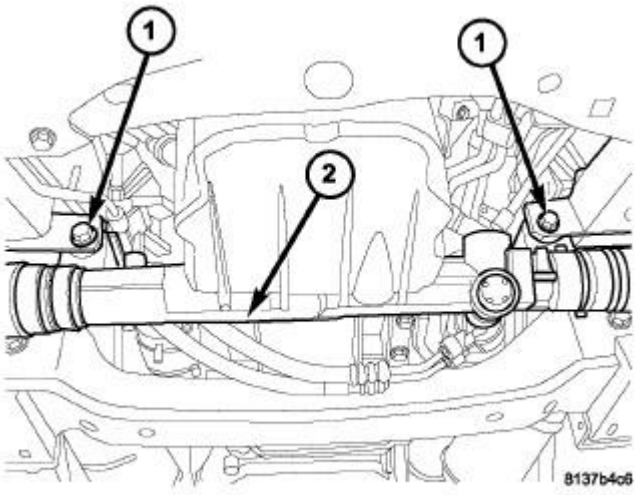

Fig. 277: GEAR MOUNTING BOLTS
Courtesy of CHRYSLER LLC

NOTE: Do not remove P/S hoses, tie rod ends or disconnect steering column coupler.

6. Remove the steering gear mounting bolts (1) and position the steering gear (2) aside.

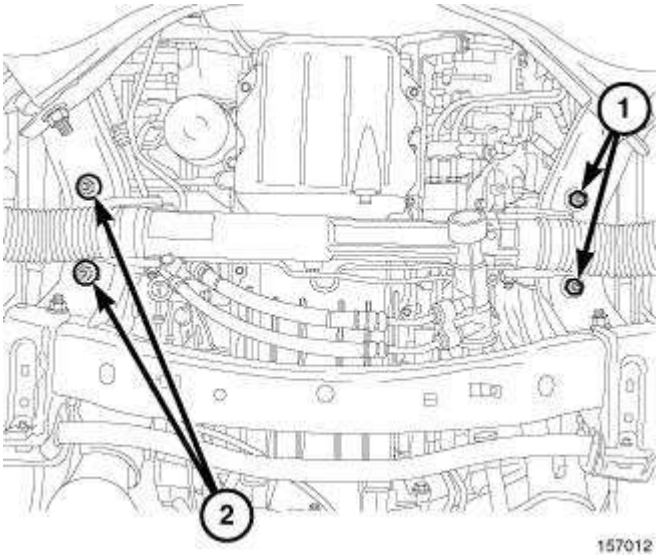

Fig. 278: Engine Mount Nuts
Courtesy of CHRYSLER LLC

7. Remove the engine mount nuts (1,2).
8. Remove the engine oil dipstick and tube from the oil pan.
9. Lower the vehicle.

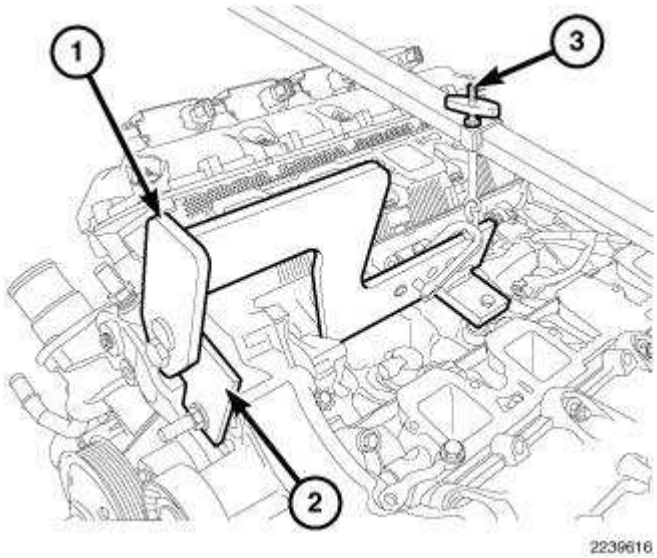

Fig. 279: Engine Lift Fixture & Adapter
Courtesy of CHRYSLER LLC

NOTE: Do not use air tools to install engine lift fixture.

10. Install the Engine Lift Fixture 8984A (1), Engine Lift Adapter 8984-UPD (2) and the Engine Support Fixture 8534B (3).
11. Raise the engine to provide clearance to remove the oil pan.

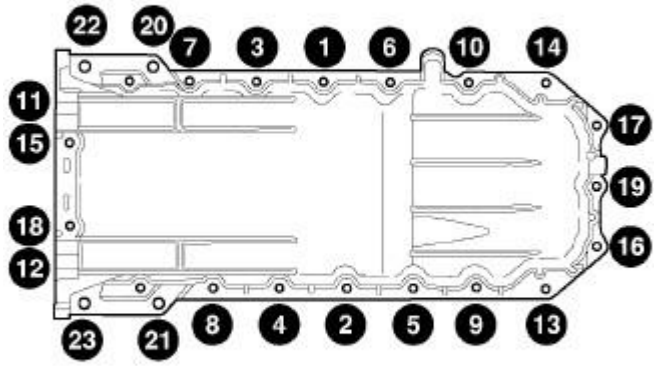

Fig. 280: OIL PAN TORQUE SEQUENCE
Courtesy of CHRYSLER LLC

NOTE: Do not pry on oil pan or oil pan gasket. The gasket is integral to engine windage tray and does not come out with oil pan.

NOTE: The horizontal M10 fasteners are 5 mm longer in length, and must be reinstalled in original locations.

12. Remove the M10 fasteners (vertical and horizontal) from the rear of the oil pan to the transmission.
13. Using the sequence shown in illustration, the oil pan mounting bolts and remove the oil pan.

NOTE: When the oil pan is removed a new oil pan gasket/windage tray assembly must be installed, the old gasket cannot be reused.

14. Remove and discard the integral windage tray and gasket.

Installation

INSTALLATION

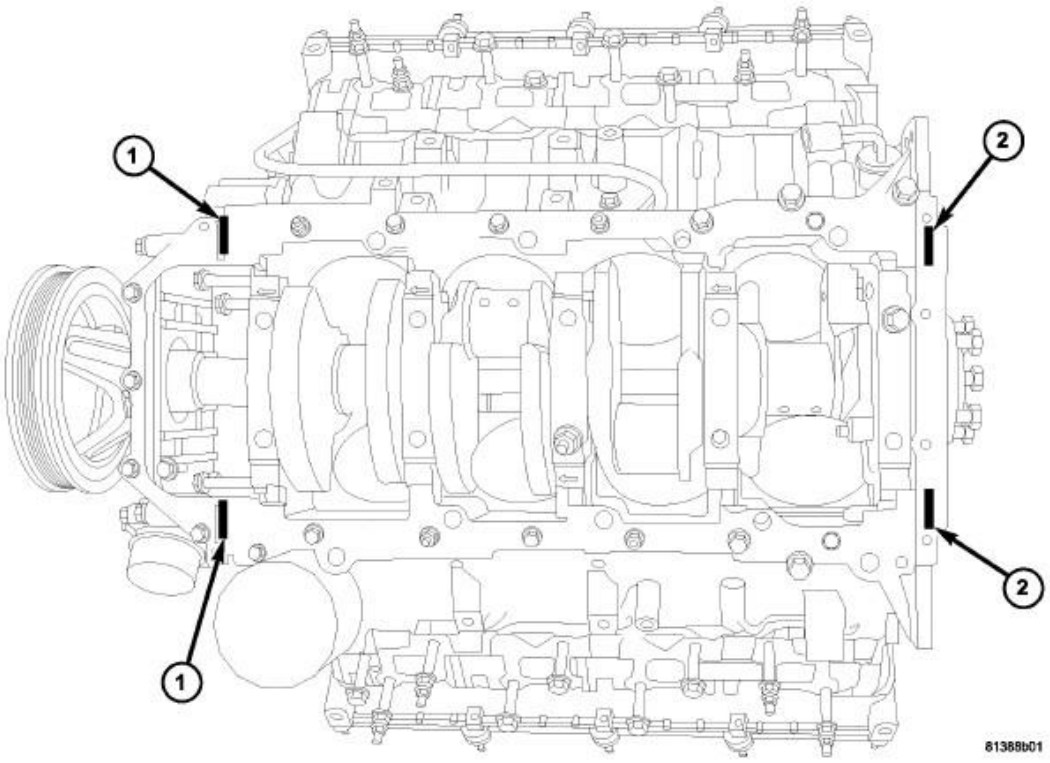

Fig. 281: T-JOINT RTV APPLICATION
Courtesy of CHRYSLER LLC

1 - Front Cover T-Joints 2 - Rear Oil Retainer T-Joints

1. Clean the oil pan gasket mating surface of the engine block and oil pan.

NOTE: **Mopar® Engine RTV must be applied to the 4 T-joints, (area where the front cover, rear retainer and oil pan gasket meet). The bead of RTV should cover the bottom of the gasket. This area is approximately 4.5 mm x 25 mm in each of the 4 T-joint locations.**

2. Apply Mopar® Engine RTV at the 4 T- joints (1,2).

NOTE: **When the oil pan is removed, a new oil pan gasket/windage tray assembly must be installed, the old gasket cannot be reused.**

3. Install a new oil pan gasket/windage tray assembly.
4. If removed, reinstall the oil pump pickup tube with a new O-ring and tighten the pickup tube retainers to 28 N.m (21 ft. lbs.).

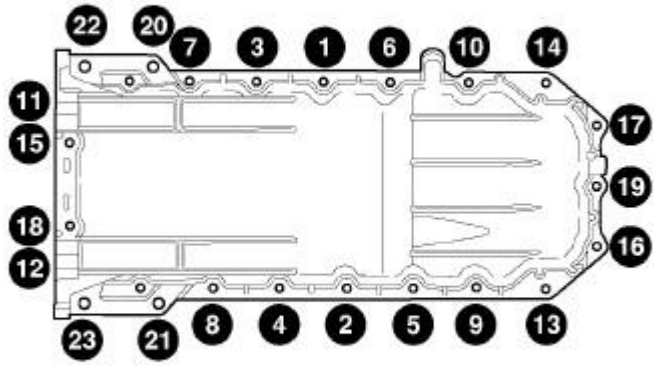

Fig. 282: OIL PAN TORQUE SEQUENCE
Courtesy of CHRYSLER LLC

NOTE: The horizontal M10 fasteners are 5 mm longer in length, and must be reinstalled in original locations.

NOTE: New M6 fasteners must be used when reinstalling the oil pan. Do not reuse the old M6 fasteners.

5. Align the rear of the oil pan with the rear face of the engine block and install the M10 and M6 oil pan retainers finger tight.
6. Using the sequence shown in illustration, tighten the M6 bolts to 5 N.m (44 in. lbs.).
7. Using the sequence shown in illustration, tighten the M10 bolts to 54 N.m (39 ft. lbs.).
8. Using the sequence shown in illustration, tighten the M6 bolts to 12 N.m (9 ft. lbs.).
9. Lower the vehicle.

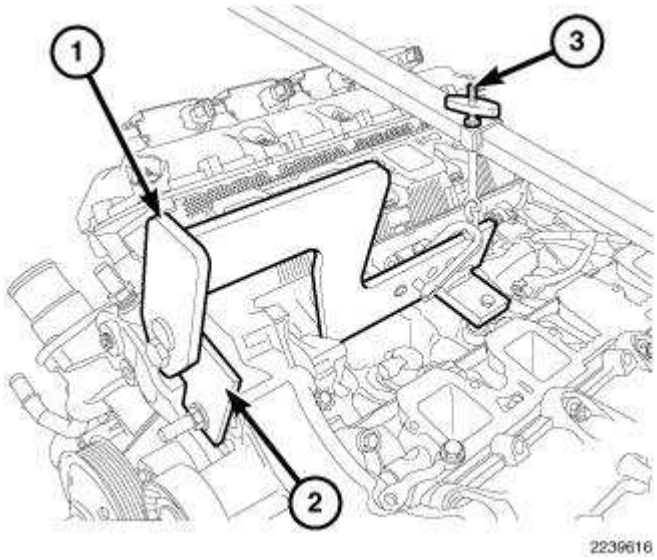

Fig. 283: Engine Lift Fixture & Adapter
Courtesy of CHRYSLER LLC

10. Using the Engine Lift Fixture 8984A (1), Engine Lift Adapter 8984-UPD (2) and the Engine Support Fixture 8534B (3) lower the engine into position and remove.

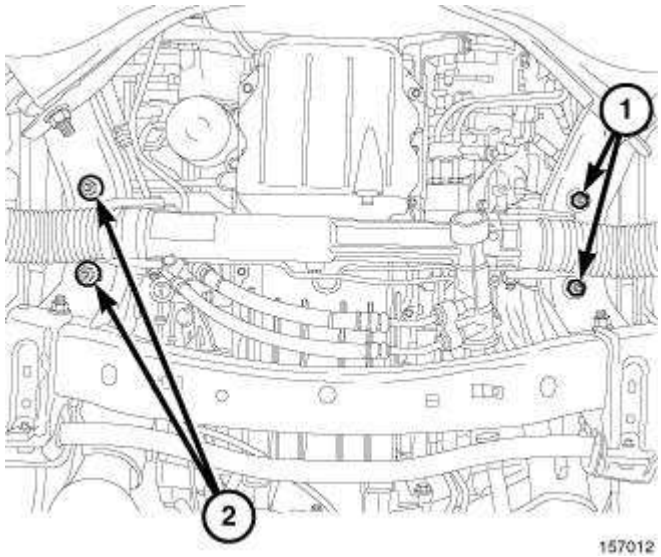

Fig. 284: Engine Mount Nuts
Courtesy of CHRYSLER LLC

11. Raise and support the vehicle.
12. Install the engine mount nuts (1,2) and tighten to 95 N.m (70 ft. lbs.).
13. Install the engine oil dipstick and tube.

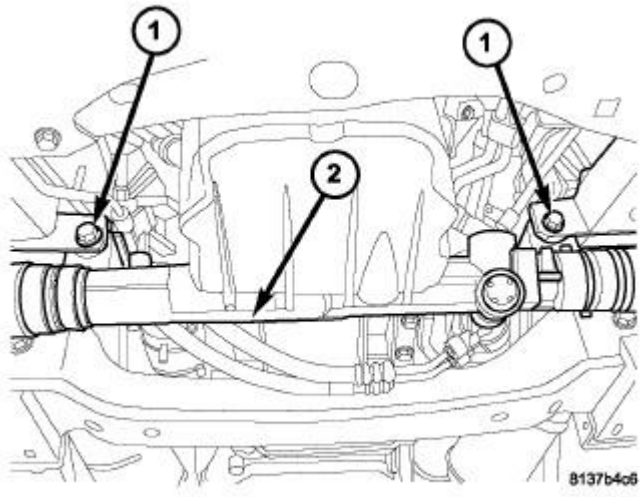

Fig. 285: GEAR MOUNTING BOLTS
Courtesy of CHRYSLER LLC

14. Position the steering gear (2), install mounting bolts (1) and tighten to 95 N.m (70 ft. lbs.).
15. Lower the vehicle.
16. Install the intake manifold. See **Engine/Manifolds/MANIFOLD, Intake - Installation**.
17. Fill the engine oil.
18. Install the oil filter.

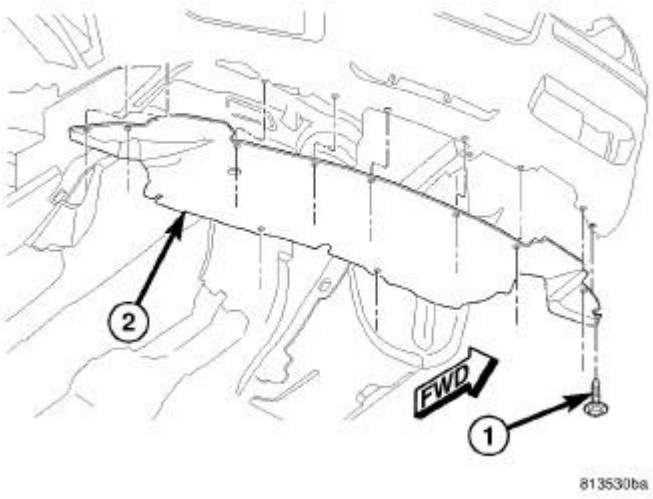

Fig. 286: FRONT BELLY PAN
Courtesy of CHRYSLER LLC

19. Install the belly pan (2).

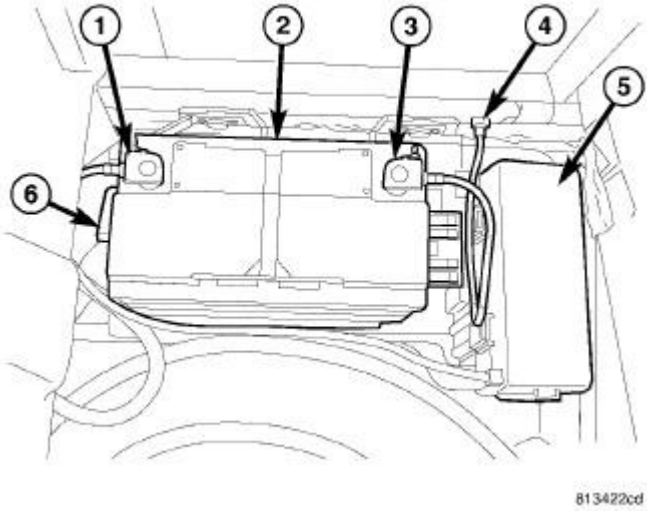

Fig. 287: Battery System Components And PDC Cover
Courtesy of CHRYSLER LLC

20. Connect the negative battery cable (3).
21. Start engine and check for leaks.

PUMP, ENGINE OIL

Removal

REMOVAL

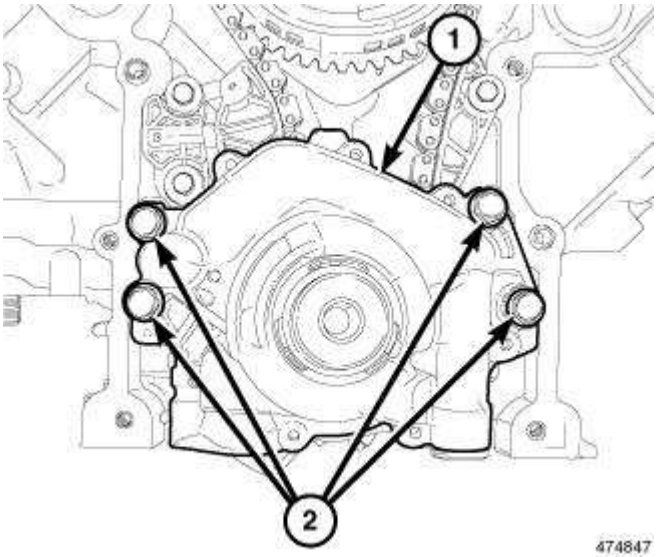

Fig. 288: Oil Pump Retaining Bolts
Courtesy of CHRYSLER LLC

1. Remove the oil pan and pick-up tube. See **Engine/Lubrication/PAN, Oil - Removal**.
2. Remove the timing chain cover. See **Engine/Valve Timing/COVER(S), Engine Timing - Removal**.
3. Remove the four bolts (2) and the oil pump (1).

Cleaning

CLEANING

1. Wash all parts in a suitable solvent.

Inspection

INSPECTION

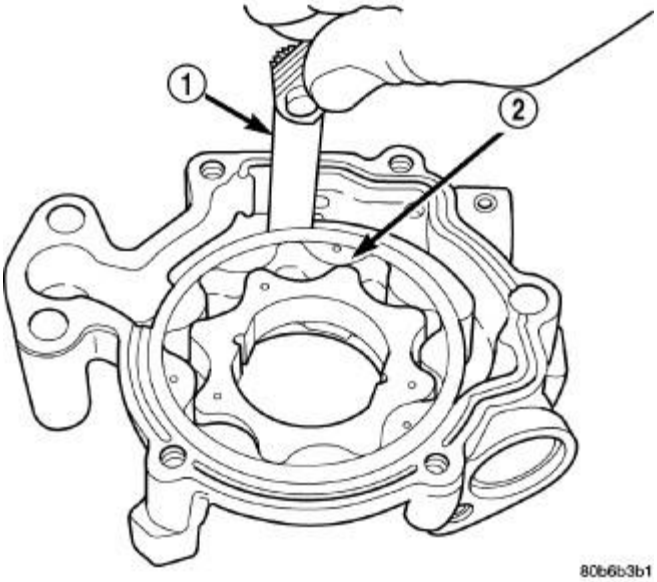

Fig. 289: Measuring Outer Rotor Clearance in Housing
Courtesy of CHRYSLER LLC

CAUTION: The oil pump pressure relief valve and spring should not be removed from the oil pump. If these components are disassembled and or removed from the pump the entire oil pump assembly must be replaced.

1. Remove the pump cover.
2. Clean all parts thoroughly. Mating surface of the oil pump housing should be smooth. If the pump cover is scratched or grooved the oil pump assembly should be replaced.
3. Slide outer rotor into the body of the oil pump. Press the outer rotor to one side of the oil pump body and measure clearance between the outer rotor (2) and the body. If the measurement is 0.235 mm (0.009 in.) or more the oil pump assembly must be replaced.

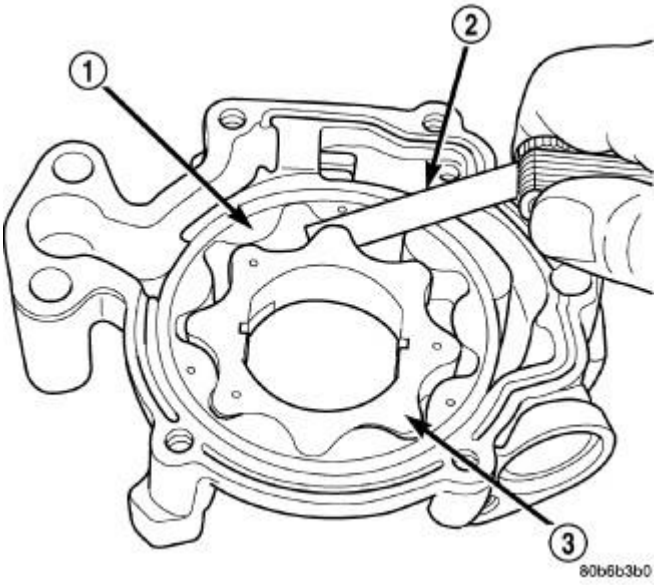

Fig. 290: Measuring Clearance Between Rotors
Courtesy of CHRYSLER LLC

4. Install the inner rotor into the oil pump body. Measure the clearance between the inner (3) and outer rotors (1). If the clearance between the rotors is 0.150 mm (0.006 in.) or more the oil pump assembly must be replaced.

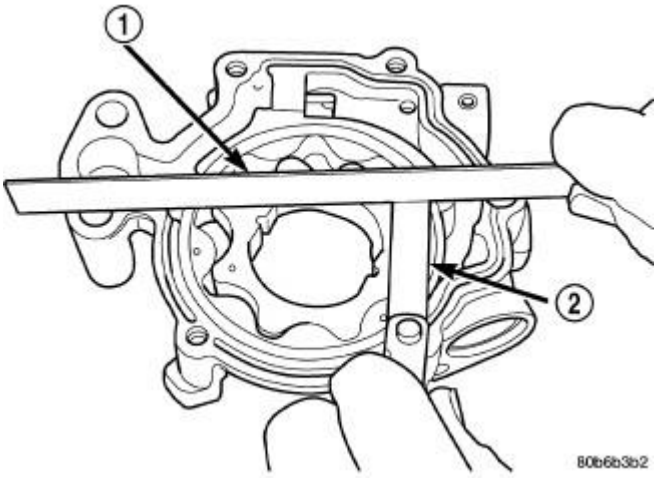

Fig. 291: Measuring Clearance Over Rotors
Courtesy of CHRYSLER LLC

5. Place a straight edge (1) across the body of the oil pump (between the bolt holes), if a feeler gauge (2) of 0.095 mm (0.0038 in.) or greater can be inserted between the straightedge and the rotors, the pump must be replaced.
6. Reinstall the pump cover. Tighten fasteners to 15 N.m (132 in. lbs.).

NOTE: **The 5.7 Oil pump is serviced as an assembly. In the event the oil pump is not functioning or out of specification, it must be replaced as an assembly.**

Installation

INSTALLATION

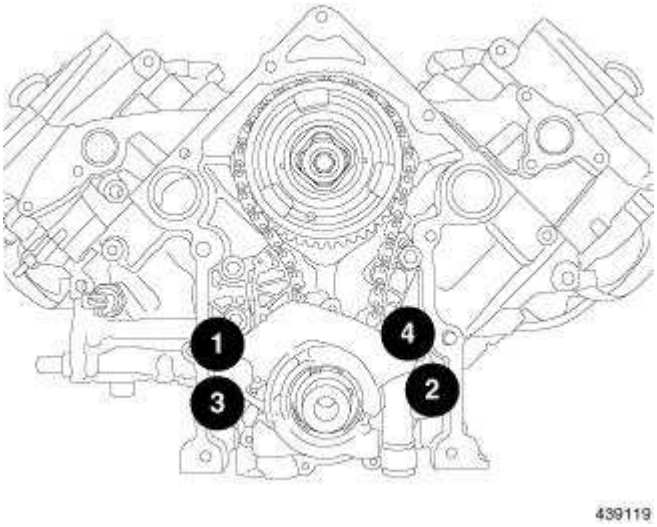

Fig. 292: Oil Pump Retaining Bolt Tightening Sequence
Courtesy of CHRYSLER LLC

1. Position the oil pump onto the crankshaft and install the 4 oil pump retaining bolts.
2. Tighten the oil pump retaining bolts to 28 N.m (250 in. lbs.) in the sequence shown in illustration.
3. Install the timing chain cover. See **Engine/Valve Timing/COVER(S), Engine Timing - Installation**.
4. Install the pick-up tube and oil pan. See **Engine/Lubrication/PAN, Oil - Installation**.

SENSOR, OIL PRESSURE

Description

DESCRIPTION

The oil pressure sensor uses the following three circuits:

- Signal circuit to the PCM
- Sensor ground circuit through the PCM
- 5 volt reference circuit from the PCM

The oil pressure sensor returns a voltage signal back to the PCM with reference to oil pressure. Ground for the sensor is supplied by the PCM.

The oil pressure sensor is located on the right side of the engine block. The sensor screws into the engines main oil gallery.

Removal

REMOVAL

1. Disconnect and isolate the negative battery cable.
2. Remove the accessory drive belt. Refer to **Cooling/Accessory Drive/BELT, Serpentine - Removal** .
3. Remove the upper generator mounting bolt.
4. Raise and support the vehicle.

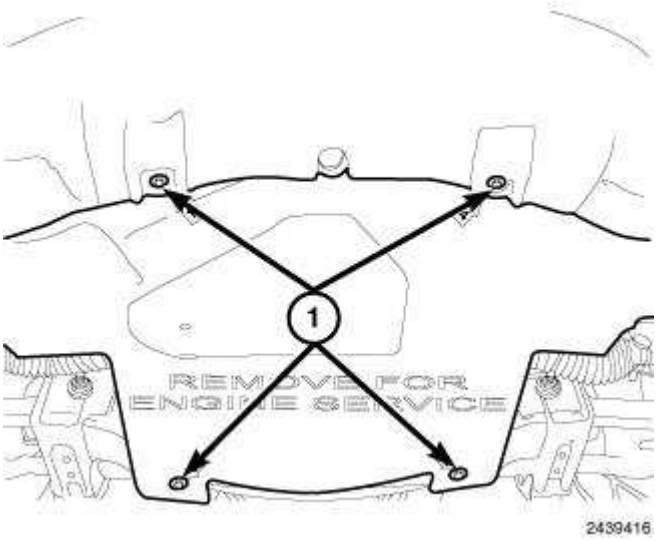

Fig. 293: Lower Splash Shield & Fasteners
Courtesy of CHRYSLER LLC

5. Remove the lower splash shield retaining bolts (1) and the splash shield.

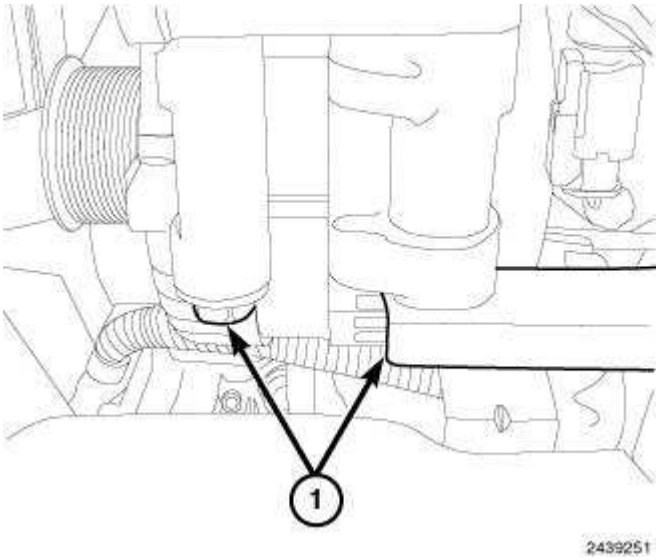

Fig. 294: Identifying Lower Generator Retaining Bolts
Courtesy of CHRYSLER LLC

6. Remove the lower generator retaining bolts (1).
7. Lower the vehicle.
8. Position the generator aside to gain access to the oil pressure sensor.

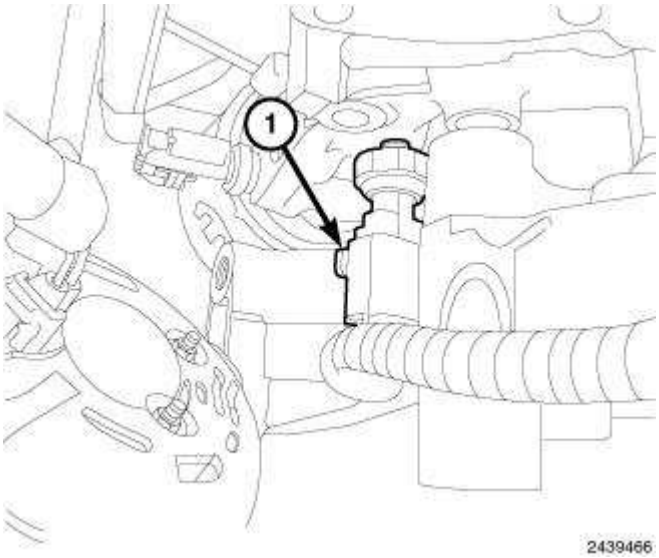

Fig. 295: Identifying Oil Pressure Sensor Electrical Connector
Courtesy of CHRYSLER LLC

9. Disconnect the oil pressure sensor electrical connector (1).

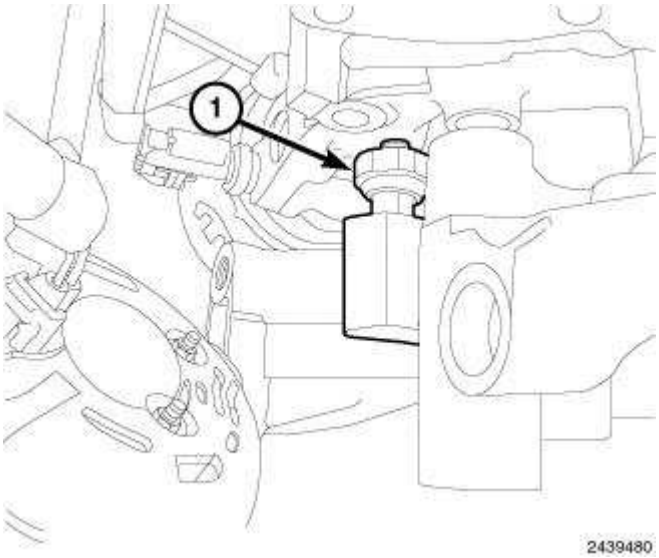

Fig. 296: Identifying Oil Pressure Sensor
Courtesy of CHRYSLER LLC

10. Remove the oil pressure sensor (1).

Installation

INSTALLATION

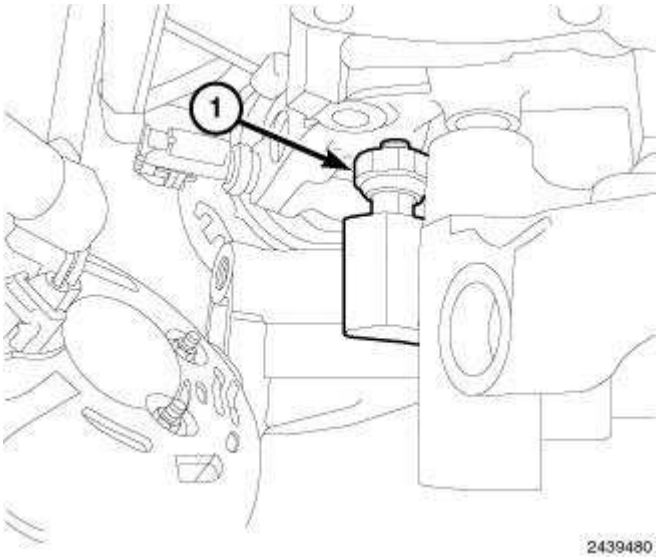

Fig. 297: Identifying Oil Pressure Sensor
Courtesy of CHRYSLER LLC

NOTE: Apply Mopar® Thread Sealant with PTFE to the sensor threads before installing into the engine block.

1. Install the oil pressure sensor (1).

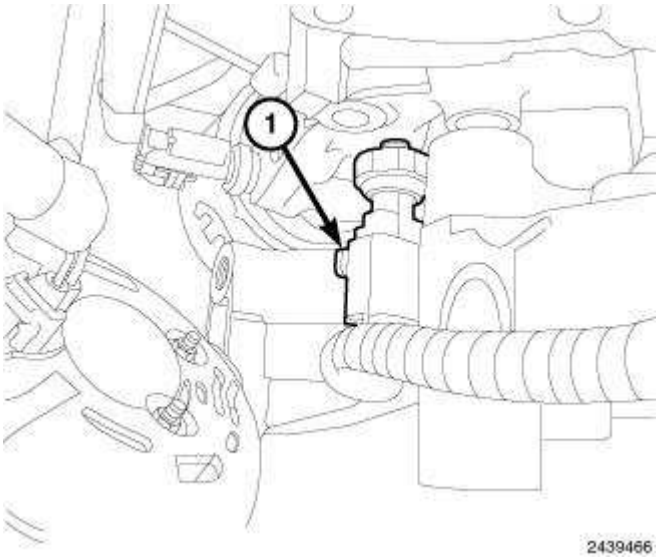

Fig. 298: Identifying Oil Pressure Sensor Electrical Connector
Courtesy of CHRYSLER LLC

2. Connect the oil pressure sensor electrical connector (1).
3. Position the generator and install the upper mounting bolt finger tight.
4. Raise and support the vehicle.

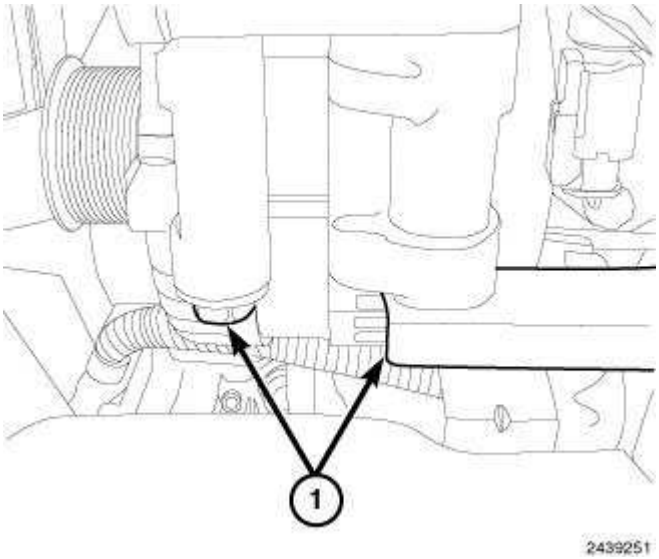

Fig. 299: Identifying Lower Generator Retaining Bolts
Courtesy of CHRYSLER LLC

5. Install the lower mounting bolts (1) and tighten to 55 N.m (41 ft. lbs).

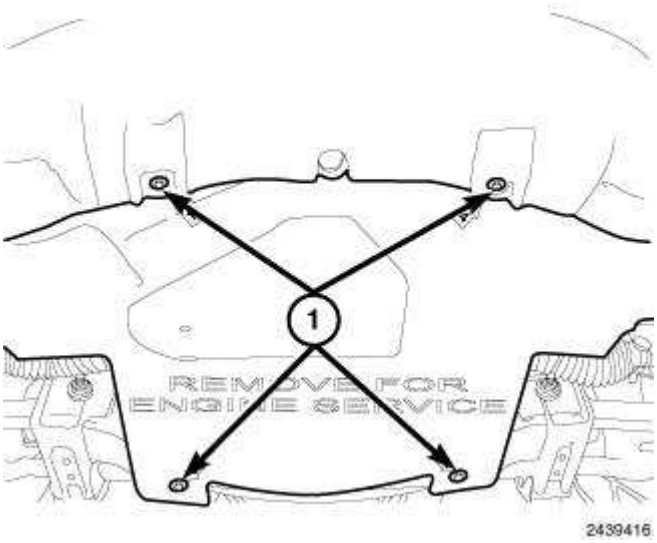

Fig. 300: Lower Splash Shield & Fasteners
Courtesy of CHRYSLER LLC

6. Position the lower splash shield and install the retaining bolts (1).
7. Lower the vehicle
8. Tighten the upper generator mounting bolt to 55 N.m (41 ft. lbs).

CAUTION: When installing a serpentine accessory drive belt, the belt MUST be routed correctly. The water pump may be rotating in the wrong direction if the belt is installed incorrectly, causing the engine to overheat.

9. Install the accessory drive belt. Refer to **Cooling/Accessory Drive/BELT, Serpentine - Installation** .
10. Connect the negative battery cable.

SENSOR, OIL TEMPERATURE

Description

DESCRIPTION

The oil temperature sensor uses the following two circuits:

- Signal circuit to the PCM
- Ground circuit from the PCM

The oil temperature sensor is a Negative Thermal Coefficient sensor. The resistance of the sensor changes as oil temperature changes. This results in different output voltages back to the PCM.

The oil temperature sensor is located on the right side of the engine block.

Removal

REMOVAL

1. Disconnect and isolate the negative battery cable.
2. Remove the accessory drive belt. Refer to **Cooling/Accessory Drive/BELT, Serpentine - Removal** .
3. Remove the generator upper mounting bolt.
4. Raise and support the vehicle.

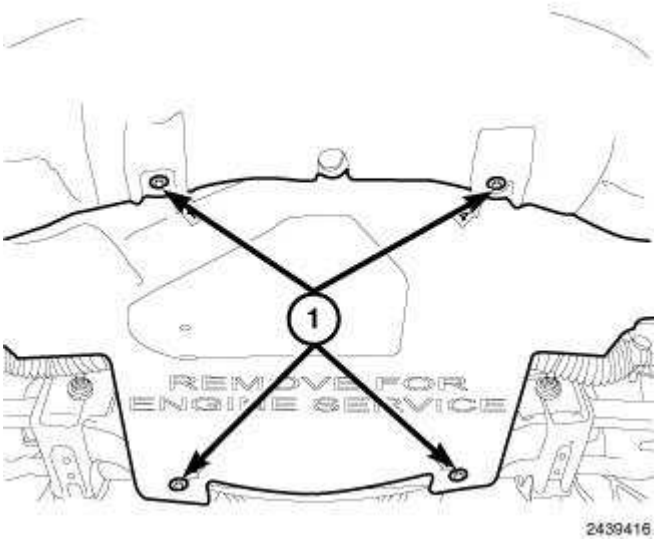

Fig. 301: Lower Splash Shield & Fasteners
Courtesy of CHRYSLER LLC

5. Remove the lower splash shield retaining bolts (1) and the splash shield.

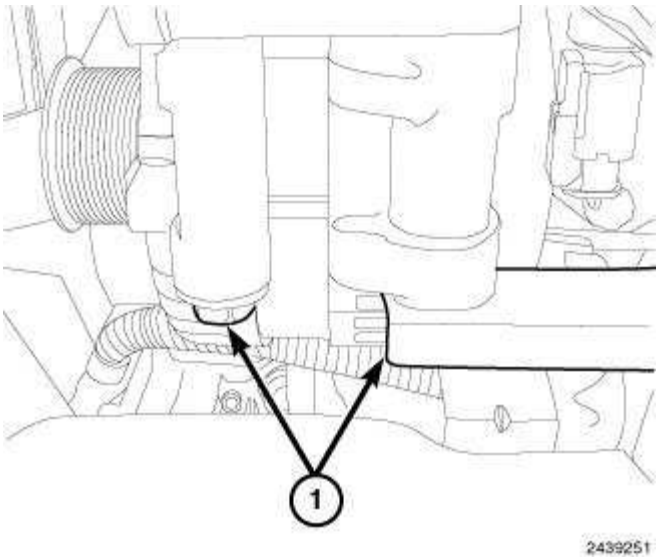

Fig. 302: Identifying Lower Generator Retaining Bolts

Courtesy of CHRYSLER LLC

6. Remove the generator lower mounting bolts (1).
7. Lower the vehicle.
8. Position the generator aside to gain access to the oil temperature sensor.

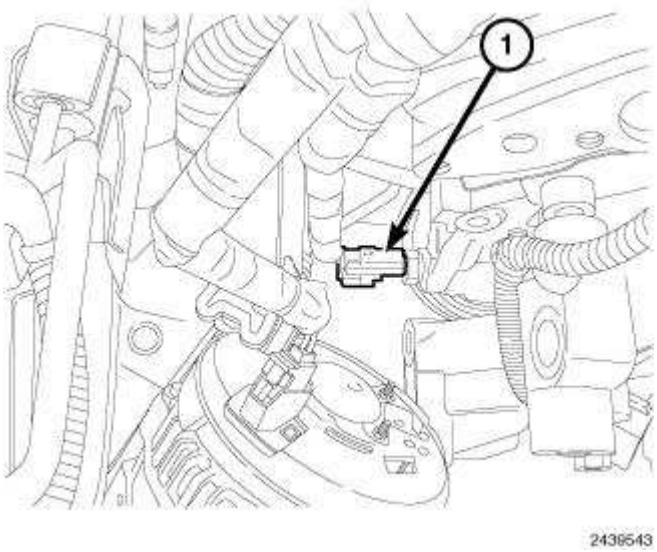

Fig. 303: Identifying Oil Temperature Sensor Electrical Connector
Courtesy of CHRYSLER LLC

9. Disconnect the oil temperature sensor electrical connector (1).

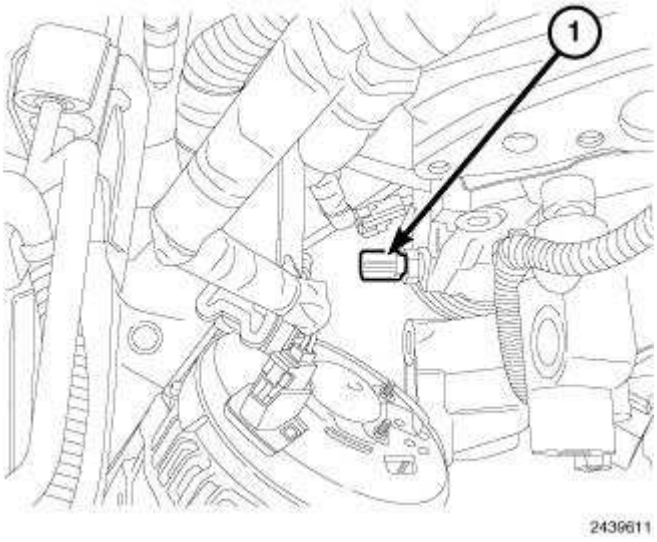

Fig. 304: Identifying Oil Temperature Sensor
Courtesy of CHRYSLER LLC

10. Remove the oil temperature sensor (1).

Installation

INSTALLATION

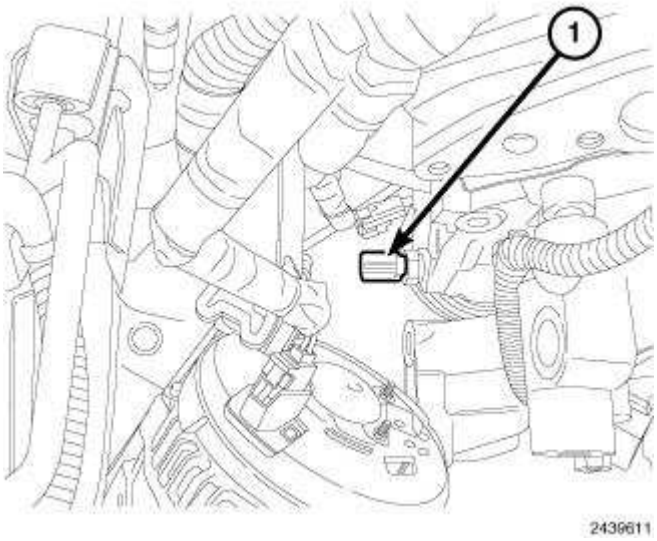

Fig. 305: Identifying Oil Temperature Sensor
Courtesy of CHRYSLER LLC

NOTE: Apply Mopar® Thread Sealant with PTFE to the sensor threads before installing into the engine block.

1. Install the oil temperature sensor (1).

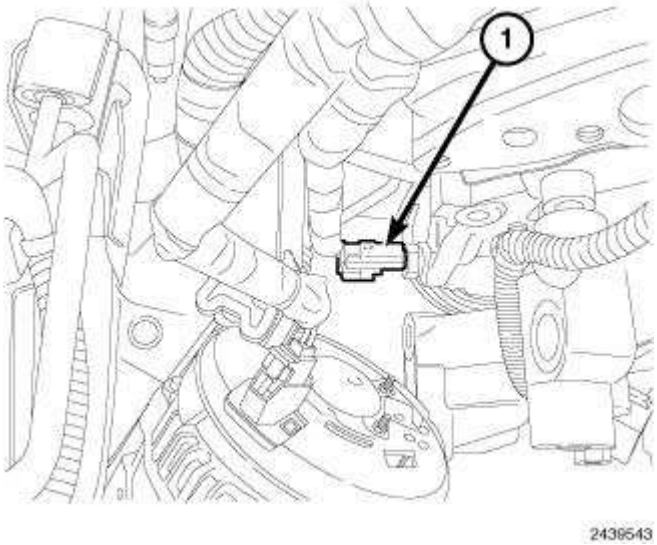

Fig. 306: Identifying Oil Temperature Sensor Electrical Connector
Courtesy of CHRYSLER LLC

2. Connect the oil temperature sensor electrical connector (1).

3. Position the generator and install the upper mounting bolt finger tight.
4. Raise and support the vehicle.

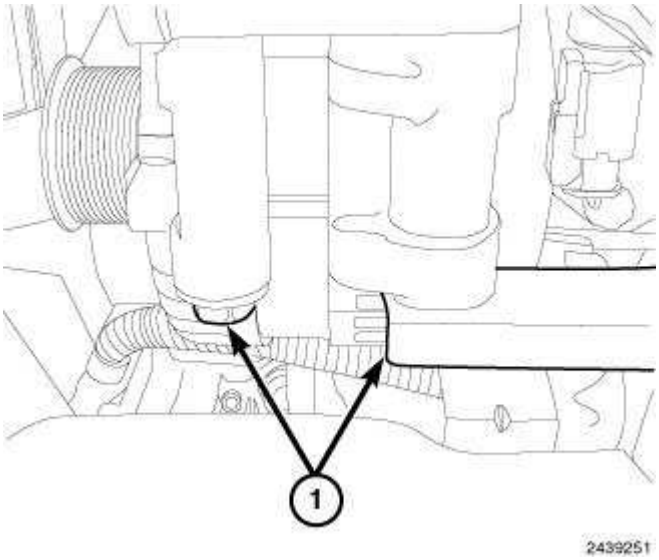

Fig. 307: Identifying Lower Generator Retaining Bolts
Courtesy of CHRYSLER LLC

5. Install the generator lower mounting bolts (1) and tighten to 55 N.m (41 ft. lbs.).

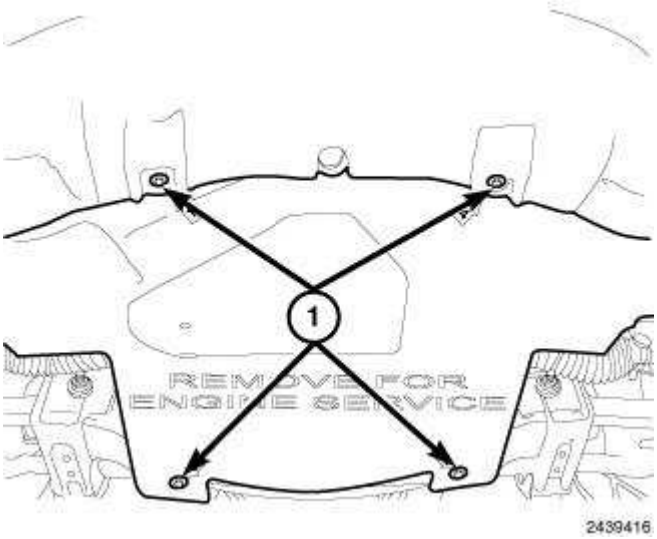

Fig. 308: Lower Splash Shield & Fasteners
Courtesy of CHRYSLER LLC

6. Position the lower splash shield and install the splash shield retaining bolts (1).
7. Lower the vehicle.
8. Tighten the generator upper mounting bolt to 55 N.m (41 ft. lbs.).

CAUTION: When installing a serpentine accessory drive belt, the belt MUST be routed correctly. The water pump may be rotating in the wrong direction if the belt is installed incorrectly, causing the engine to overheat.

9. Install the accessory drive belt. Refer to **Cooling/Accessory Drive/BELT, Serpentine - Removal** .
10. Connect the negative battery cable.

MANIFOLDS

MANIFOLD, EXHAUST

Description

DESCRIPTION

The exhaust manifolds are log style with a patented flow enhancing design to maximize performance. The exhaust manifolds are made of high silicon molybdenum cast iron. A multi-layer stainless steel exhaust manifold gasket is used to improve sealing to the cylinder head. The exhaust manifolds are covered by a three layer laminated heat shield for thermal protection and noise reduction. The heat shields are fastened with a torque prevailing nut that is backed off slightly to allow for the thermal expansion of the exhaust manifold, with the exception of the nut, which also secures the oil dipstick tube bracket. That nut should not be backed off.

Operation

OPERATION

The exhaust manifolds collect the engine exhaust exiting the combustion chambers, then channels the exhaust gases to the exhaust pipes attached to the manifolds.

Removal

REMOVAL

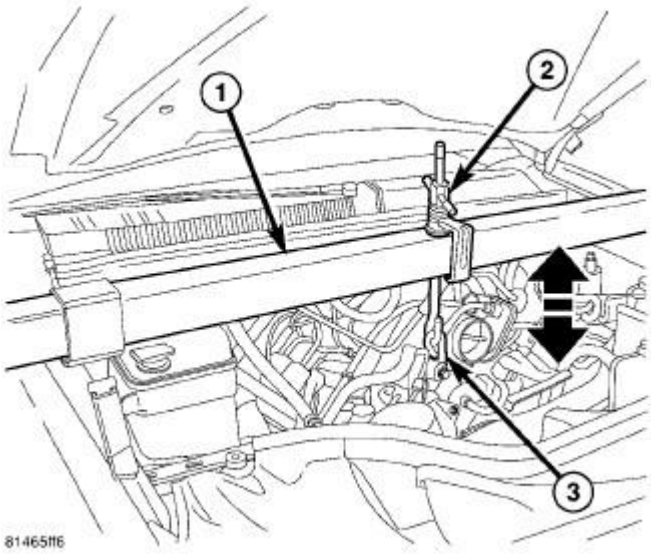

Fig. 309: Engine Support Tool
Courtesy of CHRYSLER LLC

1. Disconnect negative battery cable.
2. Raise vehicle.
3. Remove exhaust pipe to manifold bolts.
4. Remove engine mount through bolts.
5. Lower vehicle.
6. Install Engine Support Fixture 8534B (1).
7. Raise engine enough to remove manifolds.

CAUTION: Do not damage engine harness while raising the engine.

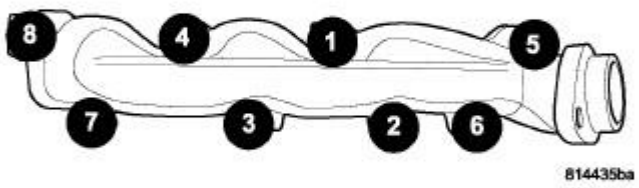

Fig. 310: Exhaust Manifold Bolt Tightening Sequence - Left
Courtesy of CHRYSLER LLC

8. Remove heat shield.
9. Remove manifold bolts.
10. Remove manifold and gasket.

Cleaning

CLEANING

Clean mating surfaces on cylinder head and manifold. Wash with solvent and blow dry with compressed air.

Inspection

INSPECTION

Inspect manifold for cracks.

Inspect mating surfaces of manifold for flatness with a straight edge. Gasket surfaces must be flat within 0.2 mm per 300 mm (0.008 inch per foot).

Installation

INSTALLATION

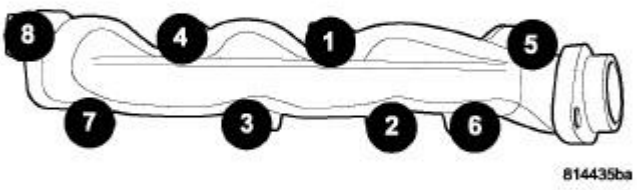

Fig. 311: Exhaust Manifold Bolt Tightening Sequence - Left
Courtesy of CHRYSLER LLC

1. Install manifold gasket and manifold.
2. Install manifold bolts and tighten to 25 N.m (18 ft. lbs.) in the sequence shown in illustration.
3. Install heat shield and tighten nuts to 8 N.m (70 in. lbs.).

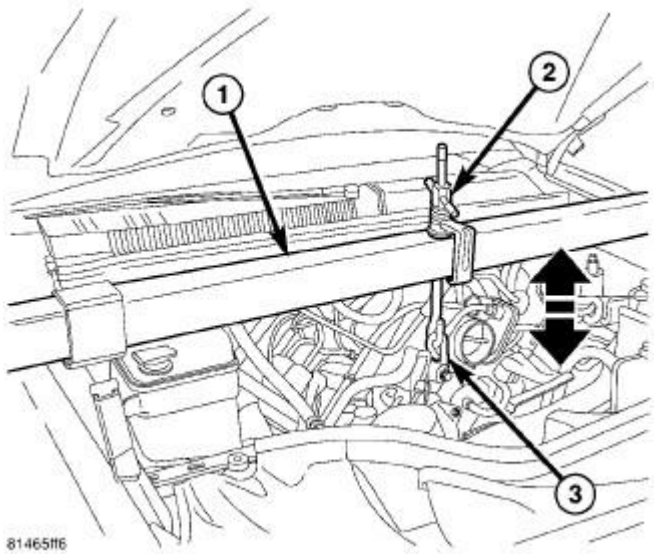

Fig. 312: Engine Support Tool
Courtesy of CHRYSLER LLC

4. Lower engine.

CAUTION: Do not damage engine harness while lowering the engine.

5. Remove Engine Support Fixture 8534B from engine.
6. Raise vehicle.
7. Install and tighten right and left side engine mount through bolts.
8. Install exhaust flange to pipe bolts.
9. Lower vehicle.
10. Connect negative battery cable.

MANIFOLD, INTAKE

Description

DESCRIPTION

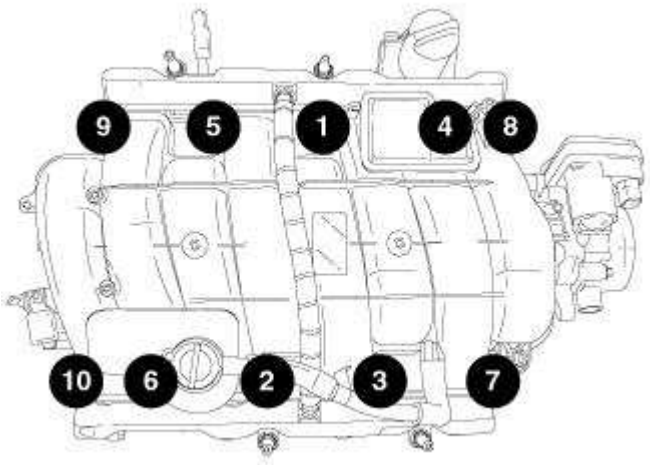

Fig. 313: Intake Manifold Removal & Tightening Sequence
Courtesy of CHRYSLER LLC

The intake manifold is made of a composite material with the runners tuned to give the best balance of power and torque. The manifold uses a single plane sealing system and separate PCV port seals to prevent leaks. The screws connecting the manifold to the head use a thread lock patch, and must be replaced when the manifold is serviced.

Diagnosis and Testing

INTAKE MANIFOLD LEAKAGE

An intake manifold air leak is characterized by lower than normal manifold vacuum. Also, one or more cylinders may not be functioning.

WARNING: Use extreme caution when the engine is operating. Do not stand in a direct line with the fan. Do not put your hands near the pulleys, belts or the fan. Do not wear loose clothing. Failure to follow these instructions may result in possible serious or fatal injury.

1. Start the engine.
2. Spray a small stream of water at the suspected leak area.
3. If a change in RPM is observed the area of the suspected leak has been found.
4. Repair as required.

Removal

REMOVAL

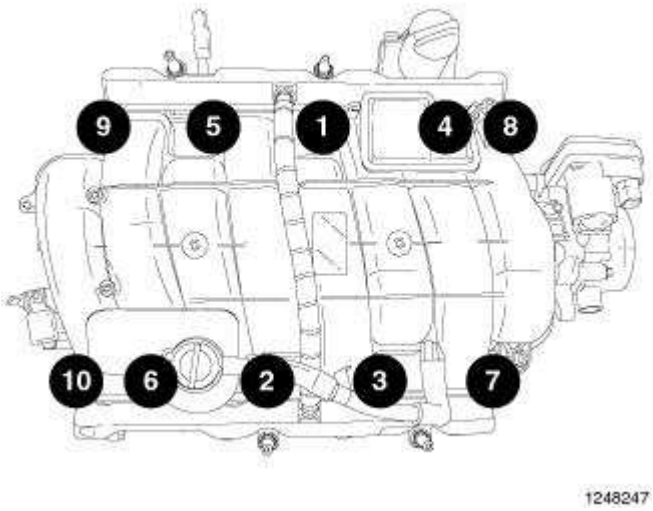

Fig. 314: Intake Manifold Removal & Tightening Sequence
Courtesy of CHRYSLER LLC

1. Disconnect negative cable from battery (4).
2. Remove air cleaner assembly. See **Engine/Air Intake System/BODY, Air Cleaner - Removal**.
3. Disconnect electrical connectors and reposition harness.
4. Disconnect vacuum lines.
5. Perform fuel pressure release procedure. Refer to **Fuel System/Fuel Delivery - Standard Procedure** .
6. Remove intake manifold retaining fasteners.
7. Remove intake manifold.

Cleaning

CLEANING

NOTE: There is NO approved repair procedure for the intake manifold. If severe damage is found during inspection, the intake manifold must be replaced.

Before installing the intake manifold thoroughly clean the mating surfaces. Use a suitable cleaning solvent, then air dry.

Inspection

INSPECTION

1. Inspect the intake sealing surface for cracks, nicks and distortion.
2. Inspect the intake manifold vacuum hose fittings for looseness or blockage.

Installation

INSTALLATION

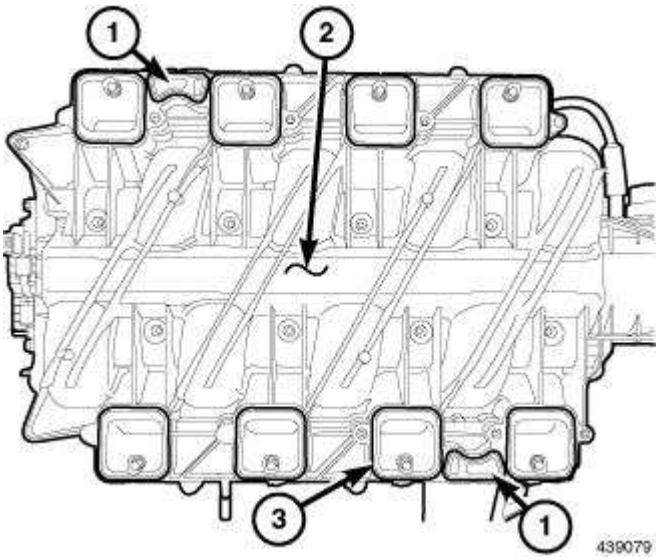

Fig. 315: Intake Manifold & PCV Seals
Courtesy of CHRYSLER LLC

1. Install intake manifold seals (1,3).
2. Position intake manifold (2) in place.

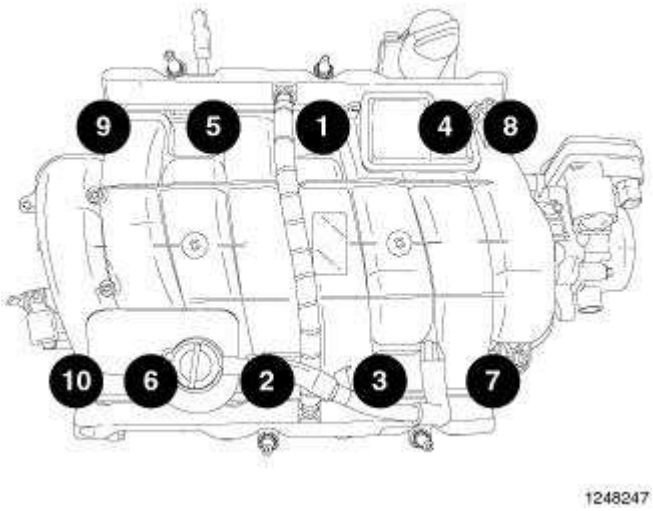

Fig. 316: Intake Manifold Removal & Tightening Sequence
Courtesy of CHRYSLER LLC

3. Install new intake manifold bolts (with thread lock patch) and tighten to 12 N.m (105 in. lbs.) in the sequence shown in illustration.
4. Position wiring harness in place and connect electrical connectors.
5. Connect fuel line.
6. Connect brake booster and vacuum hoses.
7. Install air cleaner assembly. See **Engine/Air Intake System/BODY, Air Cleaner - Installation**.
8. Connect negative battery cable.

VALVE TIMING

CHAIN AND SPROCKETS, TIMING

Removal

REMOVAL

1. Disconnect the negative battery cable.
2. Drain the cooling system. Refer to **Cooling - Standard Procedure** .

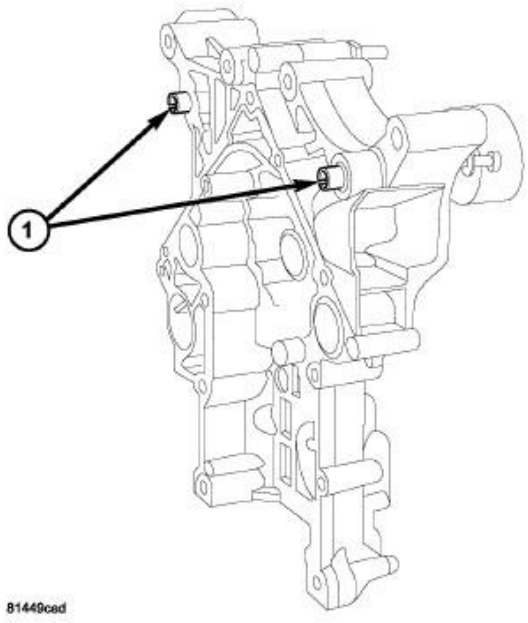

Fig. 317: FRONT COVER SLIDE BUSHINGS
Courtesy of CHRYSLER LLC

NOTE: It is not necessary to remove water pump for timing chain cover removal.

3. Remove the timing chain cover. See **Engine/Valve Timing/COVER(S), Engine Timing - Removal**.
4. Verify the slide bushings (1) remain installed in the timing chain cover during removal.

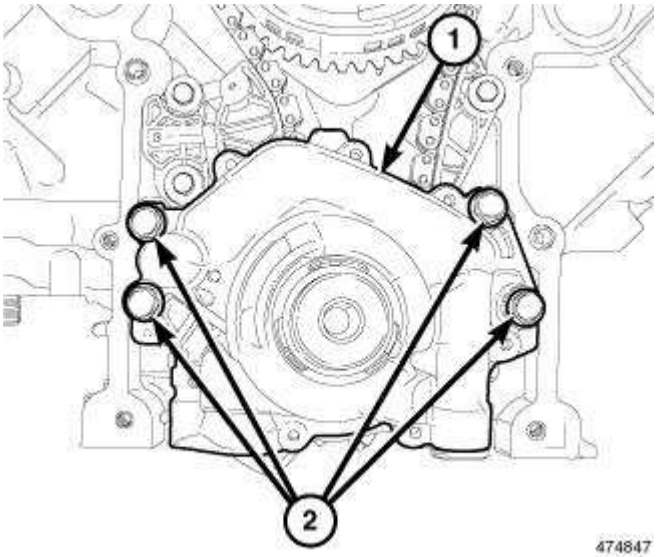

Fig. 318: Oil Pump Retaining Bolts
Courtesy of CHRYSLER LLC

5. Remove the oil pump retaining bolts (2) and remove the oil pump (1).

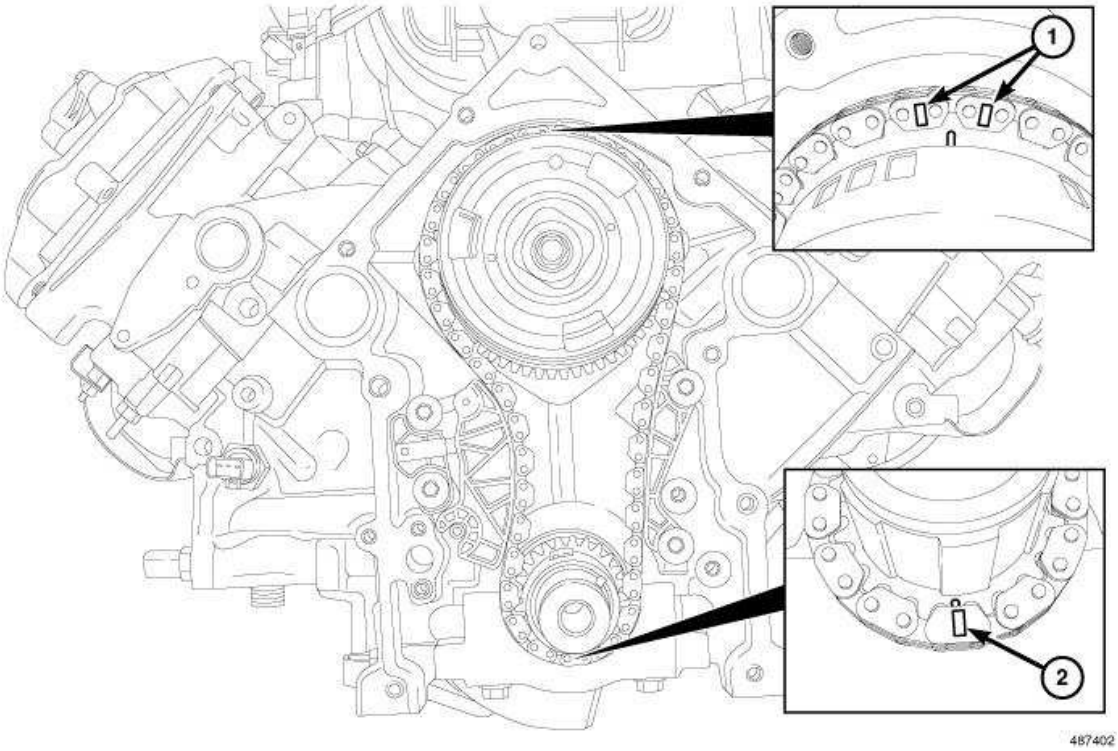

Fig. 319: Aligning Timing Marks With Timing Chain Sprockets
Courtesy of CHRYSLER LLC

6. Install the vibration damper bolt finger tight. Using a suitable socket and breaker bar, rotate the crankshaft to align the timing marks with the timing chain sprockets (1, 2).

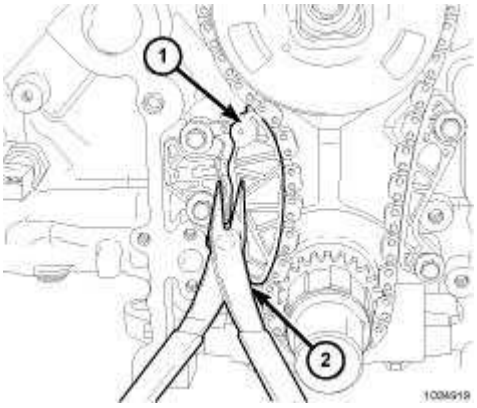

Fig. 320: Chain Tensioner Arm
Courtesy of CHRYSLER LLC

7. Retract the chain tensioner arm (1) until the hole in the arm lines up with the hole in the bracket.

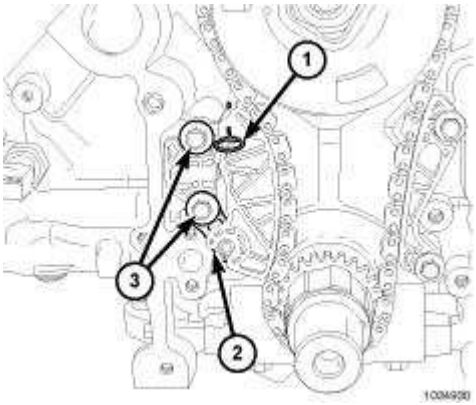

Fig. 321: Timing Chain Tensioner Pin
Courtesy of CHRYSLER LLC

8. Install the Tensioner Pin 8514 (1) into the chain tensioner holes.

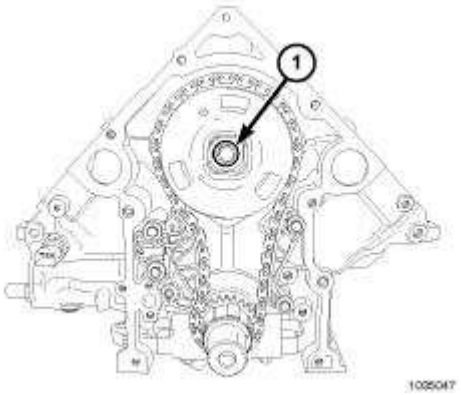

Fig. 322: Camshaft Phaser Retaining Bolt
Courtesy of CHRYSLER LLC

CAUTION: Never attempt to disassemble the camshaft phaser, severe engine damage could result.

9. Remove the camshaft phaser retaining bolt (1) and remove the timing chain with the camshaft phaser and crankshaft sprocket.

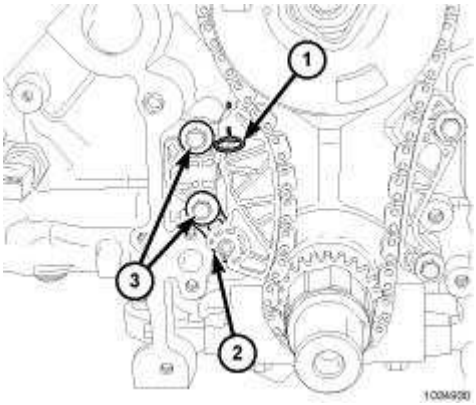

Fig. 323: Timing Chain Tensioner Pin
Courtesy of CHRYSLER LLC

NOTE: Inspect the timing chain tensioner and timing chain guide shoes for wear and replace as necessary.

10. If the timing chain tensioner is being replaced, remove the retaining bolts (3) and remove the timing chain tensioner (2).

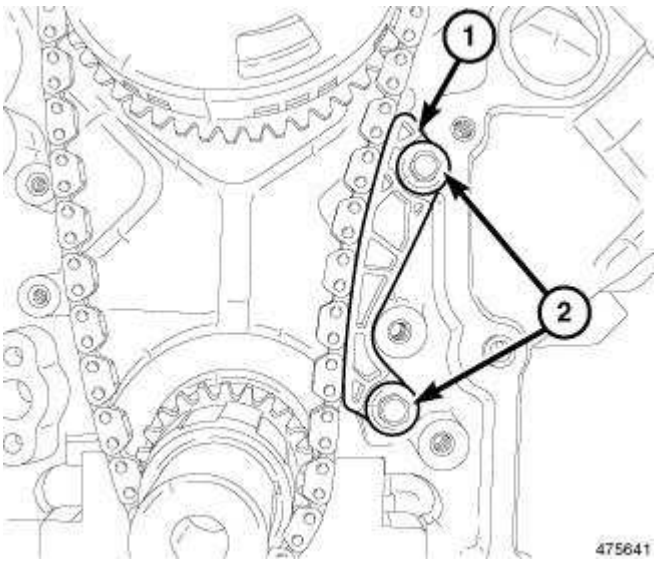

Fig. 324: Timing Chain Guide
Courtesy of CHRYSLER LLC

11. If the timing chain guide (1) is being replaced, remove the retaining bolts (2) and remove the timing chain guide.

Installation

INSTALLATION

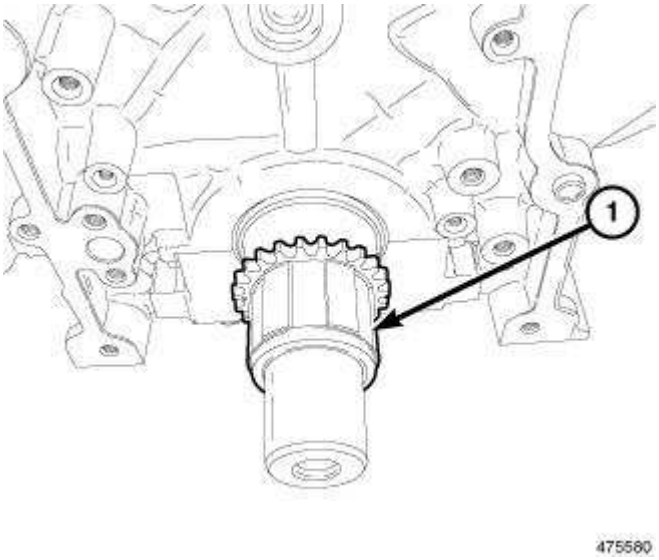

Fig. 325: Crankshaft Sprocket
Courtesy of CHRYSLER LLC

1. Install the crankshaft sprocket (1) and position halfway onto the crankshaft.

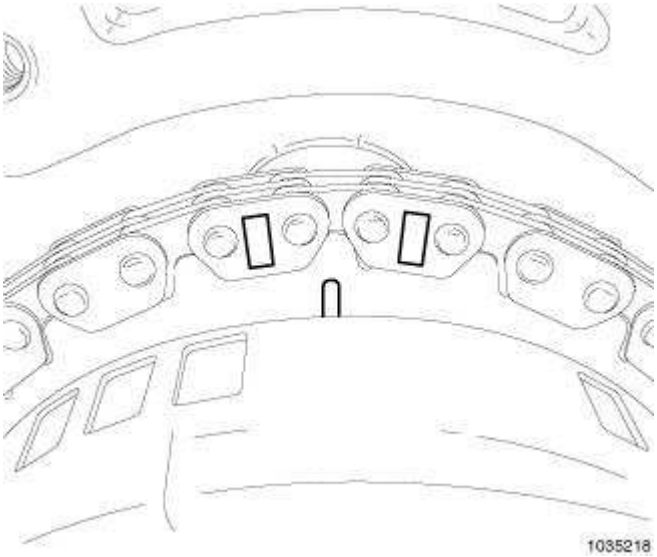

Fig. 326: Aligning Timing Chain & Camshaft Phaser Marks
Courtesy of CHRYSLER LLC

2. While holding the camshaft phaser in hand, position the timing chain on the camshaft phaser and align the timing marks as shown in illustration.

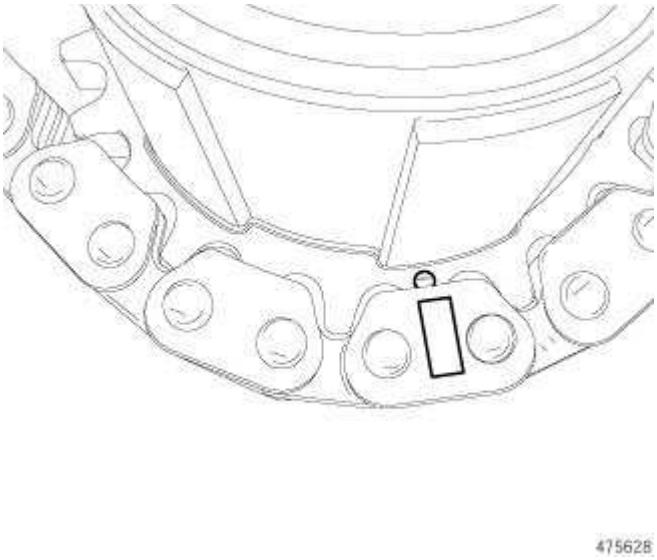

Fig. 327: Aligning Timing Chain & Crankshaft Sprocket Marks
Courtesy of CHRYSLER LLC

3. While holding the camshaft phaser and timing chain in hand, position the timing chain on the crankshaft sprocket and align the timing mark as shown in illustration.

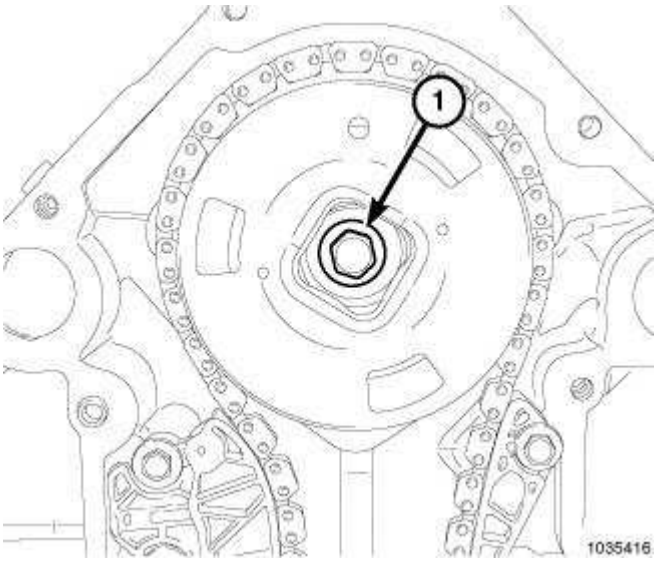

Fig. 328: Camshaft Phaser Retaining Bolt
Courtesy of CHRYSLER LLC

4. Align the slot in the camshaft phaser with the dowel on the camshaft and position the camshaft phaser on the camshaft while sliding the crankshaft sprocket into position.
5. Install the camshaft phaser retaining bolt (1) finger tight.

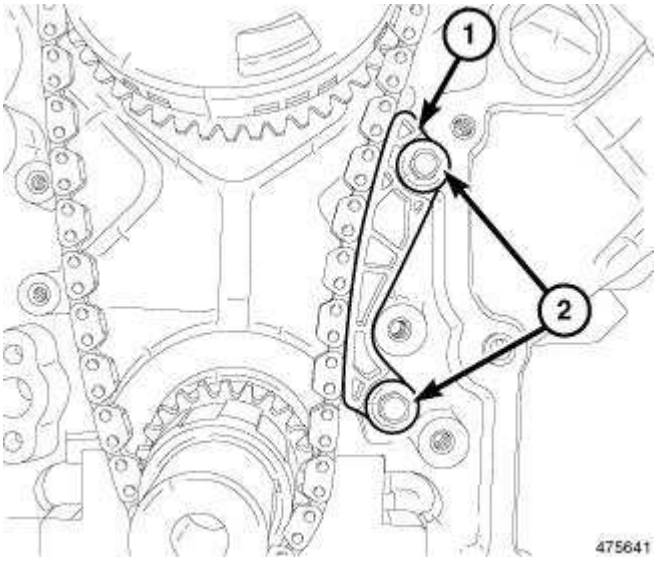

Fig. 329: Timing Chain Guide
Courtesy of CHRYSLER LLC

6. If removed, install the timing chain guide (1) and tighten the bolts (2) to 11 N.m (8 ft. lbs.).

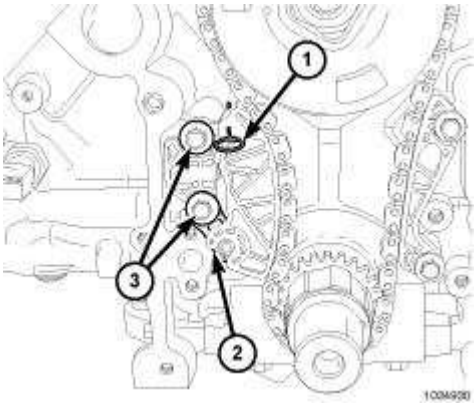

Fig. 330: Timing Chain Tensioner Pin
Courtesy of CHRYSLER LLC

7. If removed, install the timing chain tensioner (2) and tighten the bolts (3) to 11 N.m (8 ft. lbs.).
8. Remove the tensioner pin 8514 (1).

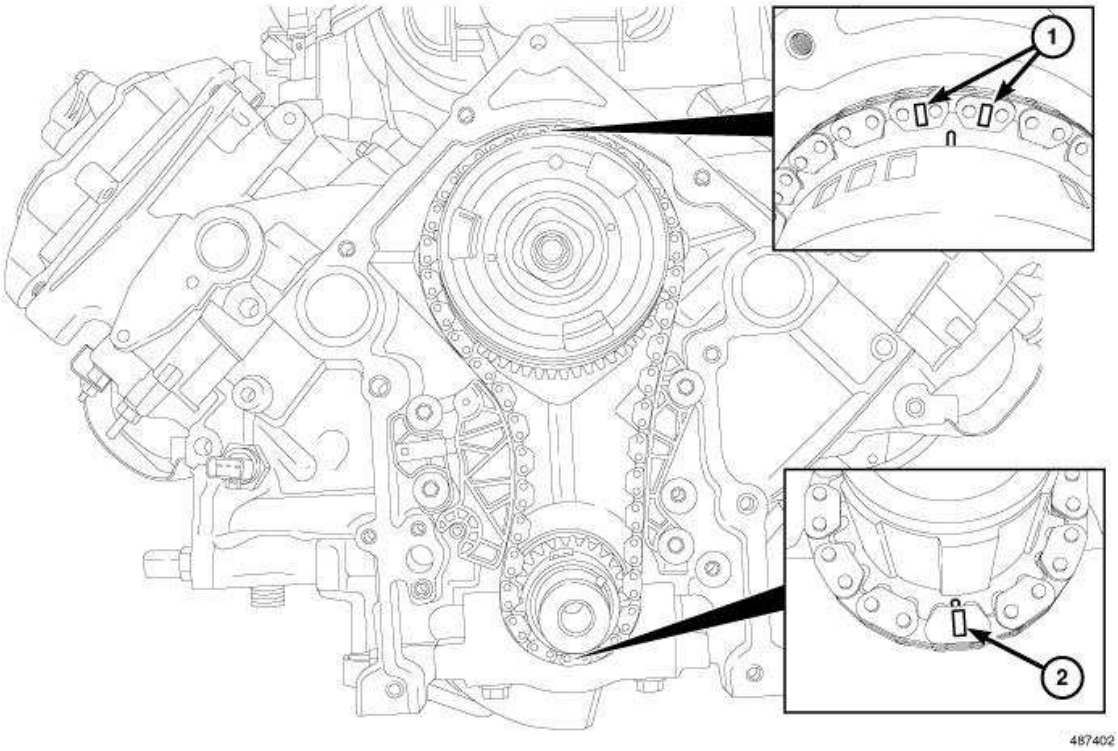

Fig. 331: Aligning Timing Marks With Timing Chain Sprockets
Courtesy of CHRYSLER LLC

9. Rotate the crankshaft two revolutions and verify the alignment of the timing marks (1, 2). If the timing marks do not line up, remove the camshaft sprocket and realign.

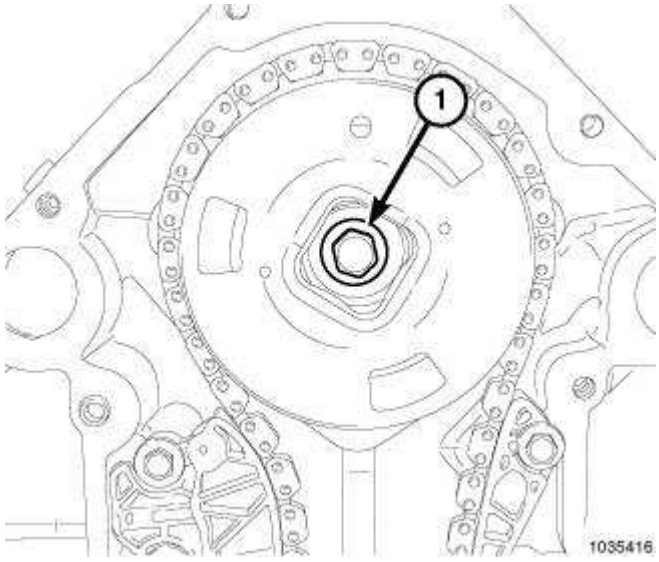

Fig. 332: Camshaft Phaser Retaining Bolt
Courtesy of CHRYSLER LLC

10. Tighten the camshaft phaser bolt (1) to 85 N.m (63 ft. lbs.).

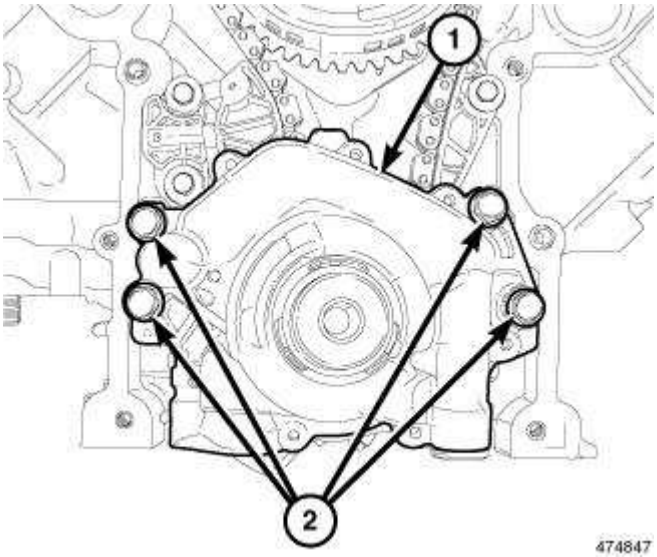

Fig. 333: Oil Pump Retaining Bolts
Courtesy of CHRYSLER LLC

11. Position the oil pump (1) onto the crankshaft and install the oil pump retaining bolts (2) finger tight.

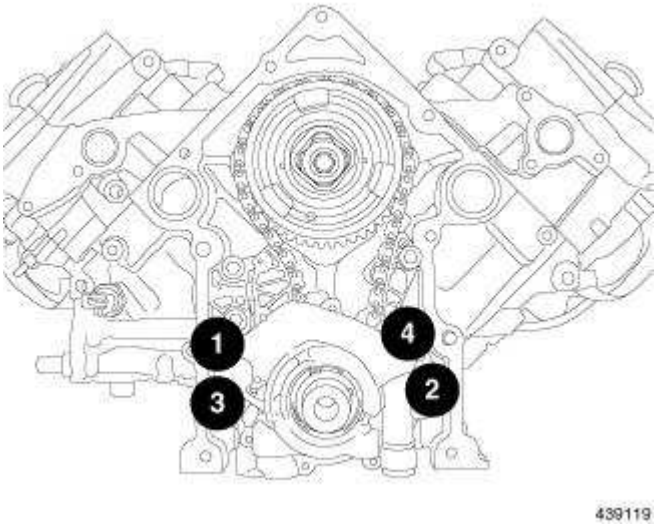

Fig. 334: Oil Pump Retaining Bolt Tightening Sequence
Courtesy of CHRYSLER LLC

12. Using the sequence shown in illustration, tighten the oil pump retaining bolts to 28 N.m (21 ft. lbs.).

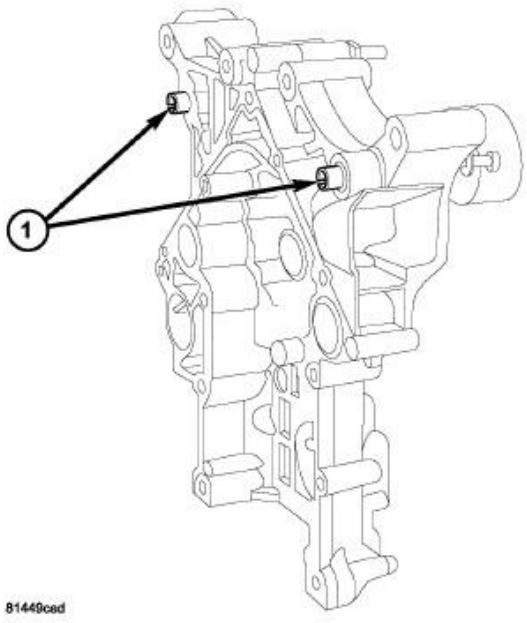

Fig. 335: FRONT COVER SLIDE BUSHINGS
Courtesy of CHRYSLER LLC

13. Verify the slide bushings (1) are installed in the timing chain cover.
14. Install the timing chain cover. See **Engine/Valve Timing/COVER(S), Engine Timing - Installation**.
15. Fill the engine with oil.
16. Fill the cooling system. Refer to **Cooling - Standard Procedure** .
17. Connect the negative battery cable.
18. Start the engine and check for leaks.

COVER(S), ENGINE TIMING

Removal

REMOVAL

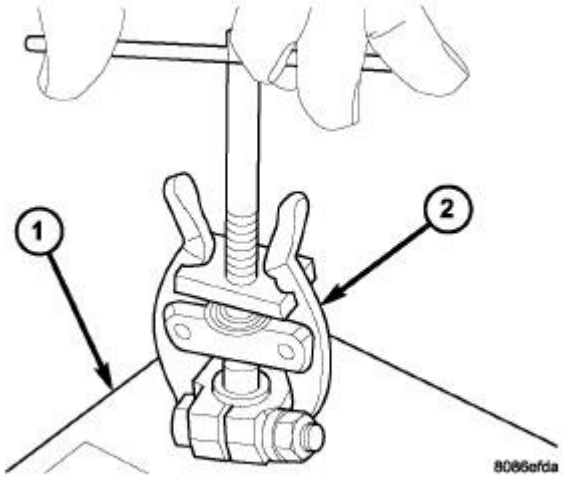

Fig. 336: Removing Battery Terminal Using Puller
Courtesy of CHRYSLER LLC

NOTE: It may be necessary to use a battery terminal puller (2) if the battery cable terminal clamps are seized on to the battery posts.

1. Disconnect and isolate the negative battery cable.

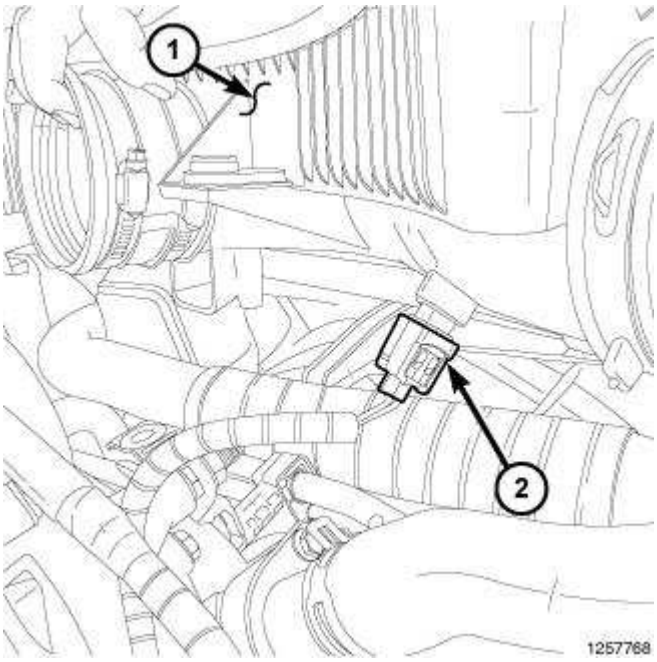

Fig. 337: IAT Sensor Electrical Connector
Courtesy of CHRYSLER LLC

2. Disconnect IAT sensor electrical connector (2).

3. Remove the air cleaner resonator and duct work as an assembly (1).

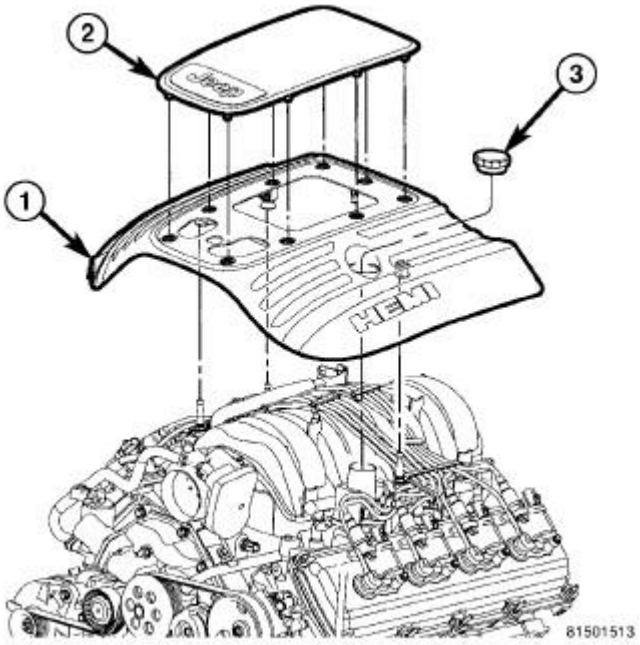

Fig. 338: Engine Cover
Courtesy of CHRYSLER LLC

4. Remove the engine cover (1).

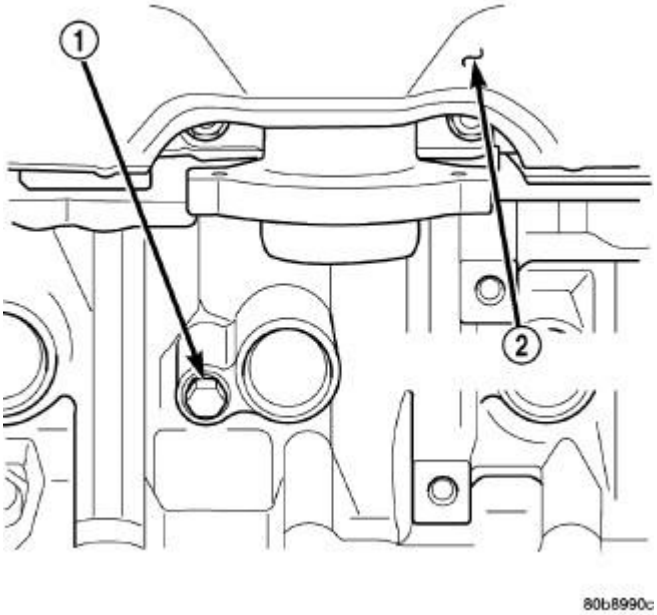

Fig. 339: Drain Plug
Courtesy of CHRYSLER LLC

WARNING: Do not remove the radiator pressure cap, cylinder block drain plugs or loosen the radiator draincock with the system hot and under pressure. Serious burns from coolant can occur.

NOTE: Radiator draincock is located on the right/lower side of radiator facing to rear of vehicle.

5. With the engine cold, raise the vehicle on a hoist and locate the radiator draincock.
6. Attach one end of a hose to the draincock. Put the other end into a clean container. Open draincock and drain coolant from radiator.
7. Drain the engine oil.
8. Remove the lower radiator hose.

NOTE: The lower fan shroud mounting bolts can only be accessed from under the vehicle.

9. Remove the two lower mounting bolts from the fan shroud.

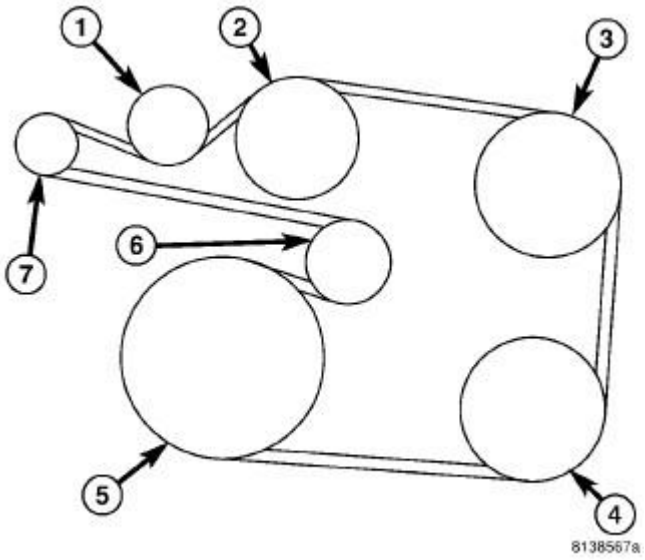

Fig. 340: 5.7L ENGINE ACCESSORY DRIVE BELT ROUTING
Courtesy of CHRYSLER LLC

CAUTION: Do not let the tensioner arm snap back to the freearm position, sever damage may occur to the tensioner.

10. Lower the vehicle and rotate the accessory drive belt tensioner (6) counterclockwise until it contacts it's stop. Remove the accessory drive belt, then slowly rotate the tensioner into the freearm position. Refer to **Cooling/Accessory Drive/BELT, Serpentine - Removal** .

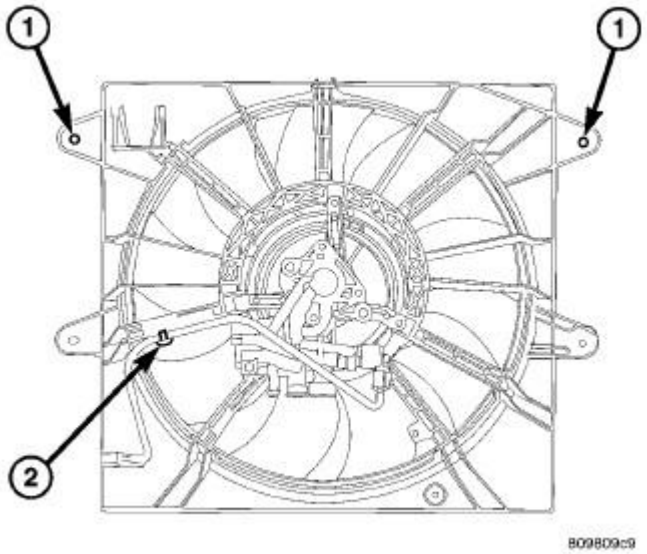

Fig. 341: FAN SHROUD MOUNTING BOLT LOCATIONS
Courtesy of CHRYSLER LLC

11. Remove the two upper mounting bolts (1) and the wire harness retainer (2) from the shroud and remove the fan and fan drive assembly. Refer to **Cooling/Engine/FAN, Cooling - Removal** .

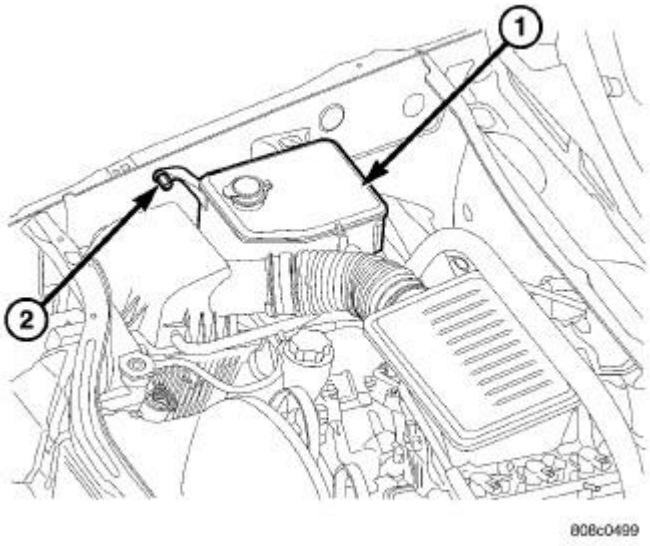

Fig. 342: Coolant Reservoir/Overflow Tank - Gas
Courtesy of CHRYSLER LLC

12. Disconnect the coolant bottle overflow hose.
13. Remove the two mounting bolts (2).
14. Remove the coolant bottle reservoir/overflow tank (1).

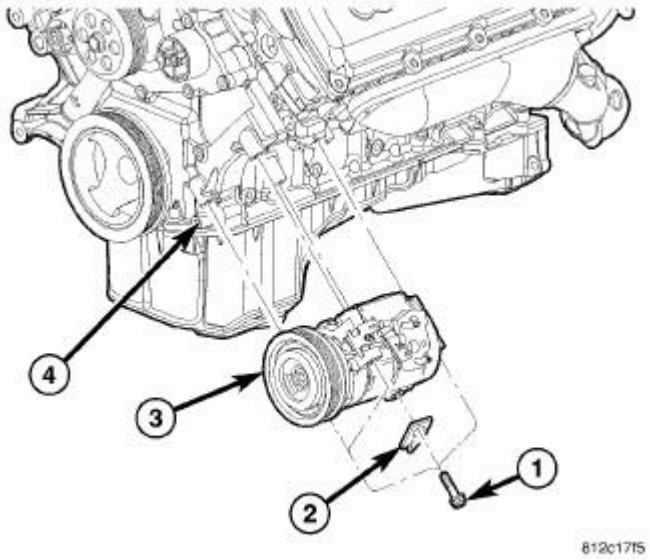

Fig. 343: COMPRESSOR-A/C 5.7L REMOVAL/INSTALLATION
Courtesy of CHRYSLER LLC

NOTE: It is not necessary to disconnect the A/C lines or discharge refrigerant.

15. Remove the A/C compressor (3) with the lines attached and secure compressor out of the way.

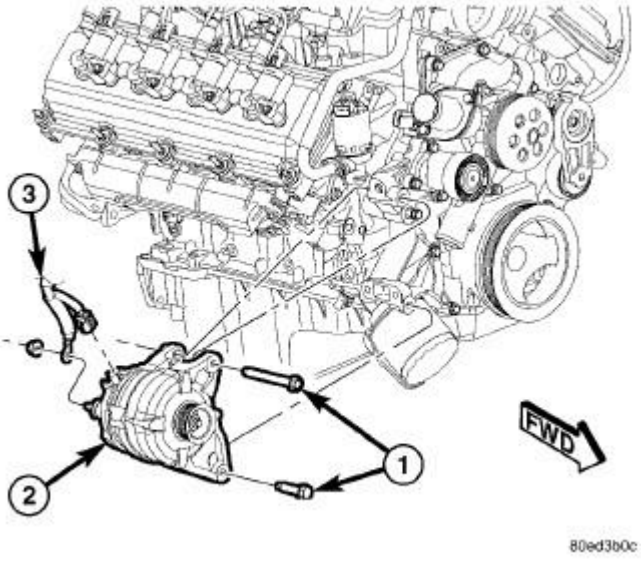

Fig. 344: Removing / Installing Generator - 5.7L
Courtesy of CHRYSLER LLC

WARNING: Disconnect the negative cable from the battery before removing the battery output wire (B+ wire) from the generator. Failure to do so can result in injury or damage to the electrical system.

16. Unsnap the plastic insulator cap from B+ output terminal.
17. Remove the B+ terminal mounting nut at rear of generator and disconnect the terminal from the generator.
18. Disconnect the field wire connector (3) at rear of the generator by pushing on the connector tab.
19. Remove the both generator mounting bolts (1).
20. Remove the generator (2) from vehicle.

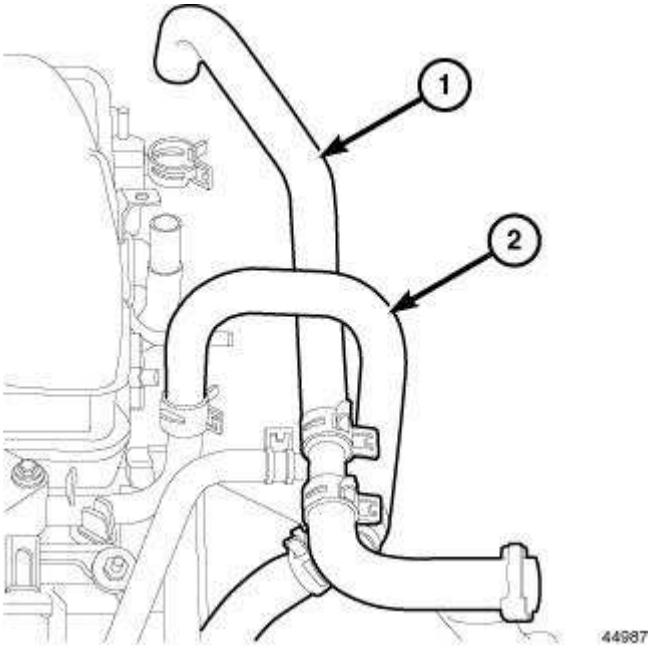

Fig. 345: HEATER HOSE SUPPLY
Courtesy of CHRYSLER LLC

21. Remove the upper radiator hose.
22. Disconnect both heater hoses (1,2).

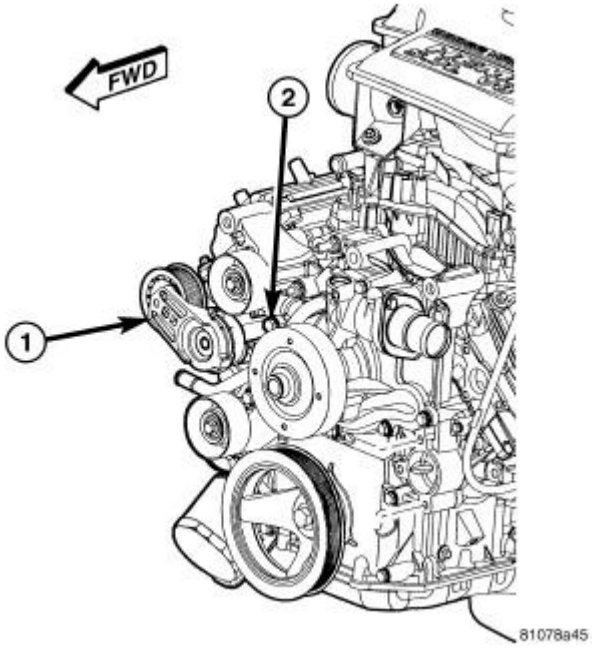

Fig. 346: Automatic Belt Tensioner
Courtesy of CHRYSLER LLC

23. Remove the bolt (2) and accessory drive belt tensioner (1).
24. Remove both idler pulley bolts and remove the pulleys.

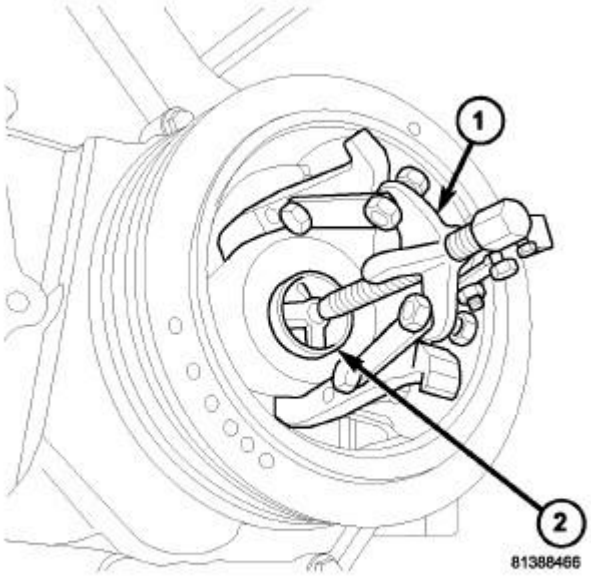

Fig. 347: CRANKSHAFT DAMPER REMOVAL
Courtesy of CHRYSLER LLC

25. Remove the crankshaft damper using crankshaft insert 8513A and three jaw puller 1023. See **Engine/Engine Block/DAMPER, Vibration - Removal**.

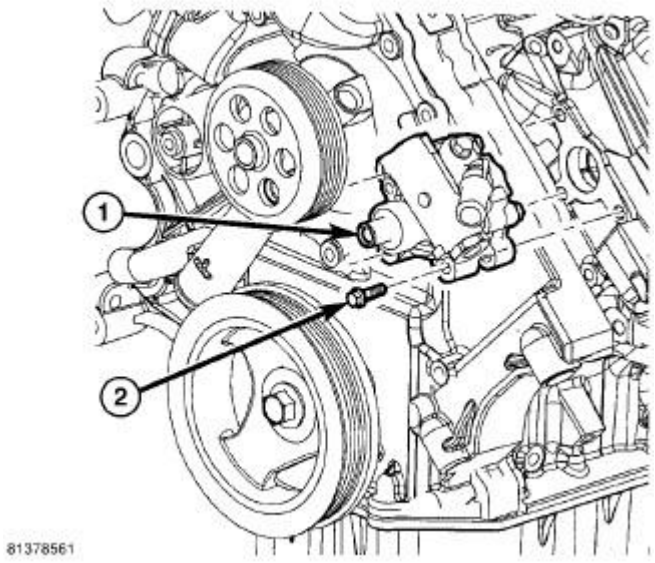

Fig. 348: POWER STEERING PUMP - 5.7L
Courtesy of CHRYSLER LLC

NOTE: It is not necessary to disconnect the power steering pump hoses from the power steering pump for power steering pump removal.

26. Remove the three power steering pump retainer bolts (2) through the access holes in the pulley and secure power steering pump out of the way.
27. Remove the dipstick support bolt.
28. Remove the oil pan and pick up tube. See **Engine/Lubrication/PAN, Oil - Removal**.

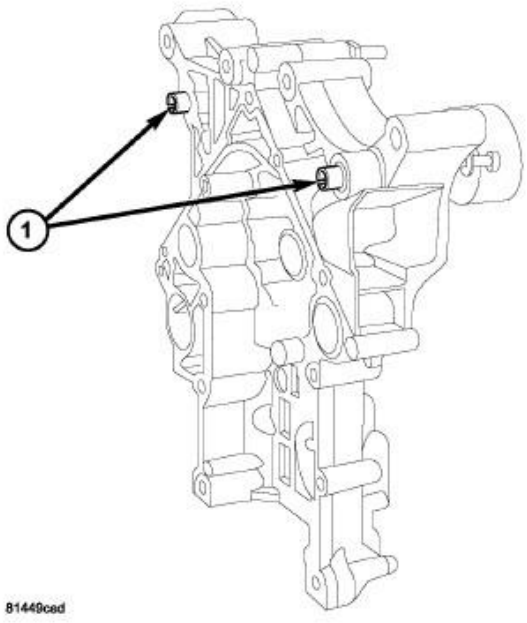

Fig. 349: FRONT COVER SLIDE BUSHINGS
Courtesy of CHRYSLER LLC

NOTE: It is not necessary to remove water pump for timing cover removal.

29. Remove the timing cover bolts and remove cover.
30. Verify that the timing cover slide bushings (1) are located in timing cover.

Installation

INSTALLATION

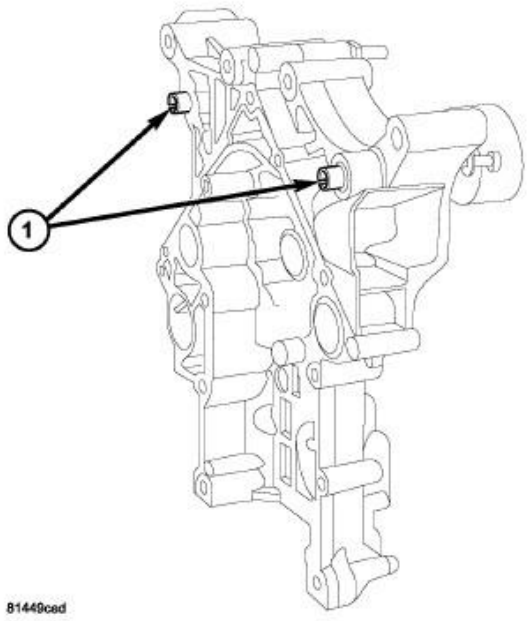

Fig. 350: FRONT COVER SLIDE BUSHINGS
Courtesy of CHRYSLER LLC

1. Clean timing chain cover and block surface.

NOTE: Always install a new gasket on timing cover.

2. Verify that the slide bushings (1) are installed in timing cover.
3. Install cover and new gasket. Tighten fasteners to 28 N.m (250 in. lbs.).

NOTE: The large lifting stud is tightened to 55 N.m (40 ft. lbs.).

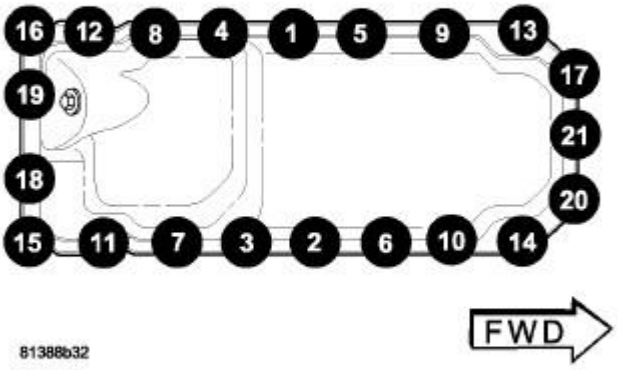

Fig. 351: OIL PAN TORQUE SEQUENCE
Courtesy of CHRYSLER LLC

4. Install the oil pan and pick up tube. See **Engine/Lubrication/PAN, Oil - Installation**.
5. Install the A/C compressor.
6. Install the generator.
7. Install power steering pump.
8. Install the dipstick support bolt.
9. Install the thermostat housing.
10. Install crankshaft damper. See **Engine/Engine Block/DAMPER, Vibration - Installation**.
11. Install accessory drive belt tensioner assembly and both idler pulleys.
12. Install radiator lower hose.
13. Install both heater hoses.
14. Install the cooling module.
15. Install the accessory drive belt.
16. Install the coolant bottle and washer bottle.
17. Install the upper radiator hose.
18. Install the air cleaner assembly.
19. Fill cooling system.
20. Refill engine oil.
21. Connect the battery negative cable.

TENSIONER, ENGINE TIMING

Standard Procedure

RESETTING TENSIONER

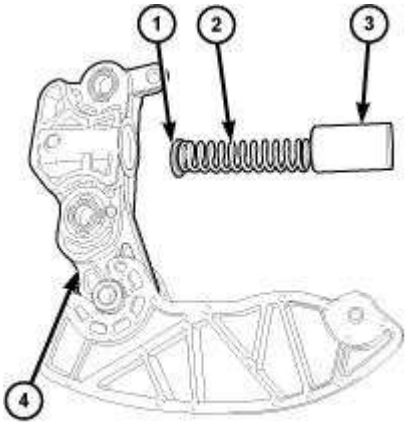

Fig. 352: Tensioner Body, Washer, Spring & Plunger
Courtesy of CHRYSLER LLC

NOTE: Verify that the tensioner is assembled correctly.

1. Install the washer (1), spring (2), and plunger (3) inside the tensioner body (4).

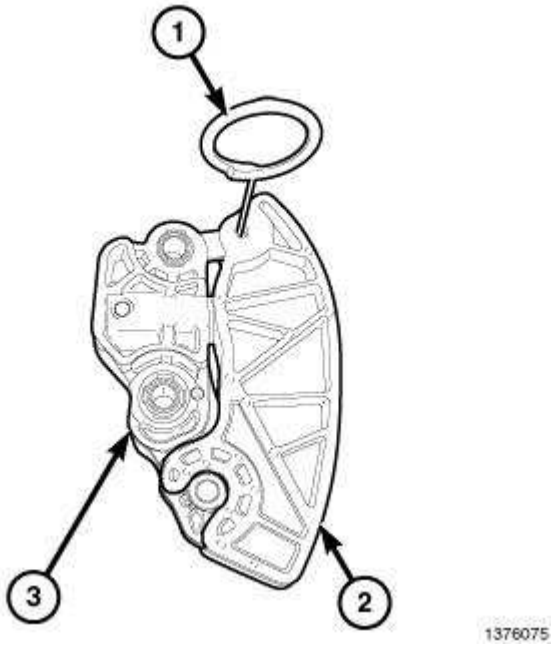

Fig. 353: Installing Tensioner Pin
Courtesy of CHRYSLER LLC

2. Squeeze the tensioner body (3) and movable guide shoe (2) together and install Tensioner Pin 8514 (1).

Description

DESCRIPTION

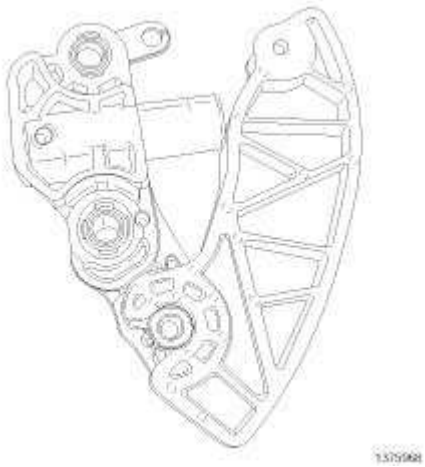

Fig. 354: Timing Chain Tensioner Arm
Courtesy of CHRYSLER LLC

The timing chain tensioner is a spring loaded design. It consists of two chain guide shoes. One shoe is fixed in place and the other is spring loaded to keep tension on the chain.

Operation

OPERATION

The timing chain tension is maintained by routing the timing chain through the tensioner assembly. A nylon shoe presses on the timing chain maintaining the correct chain tension.

ENGINE

6.1L - Service Information - Challenger

DESCRIPTION

DESCRIPTION

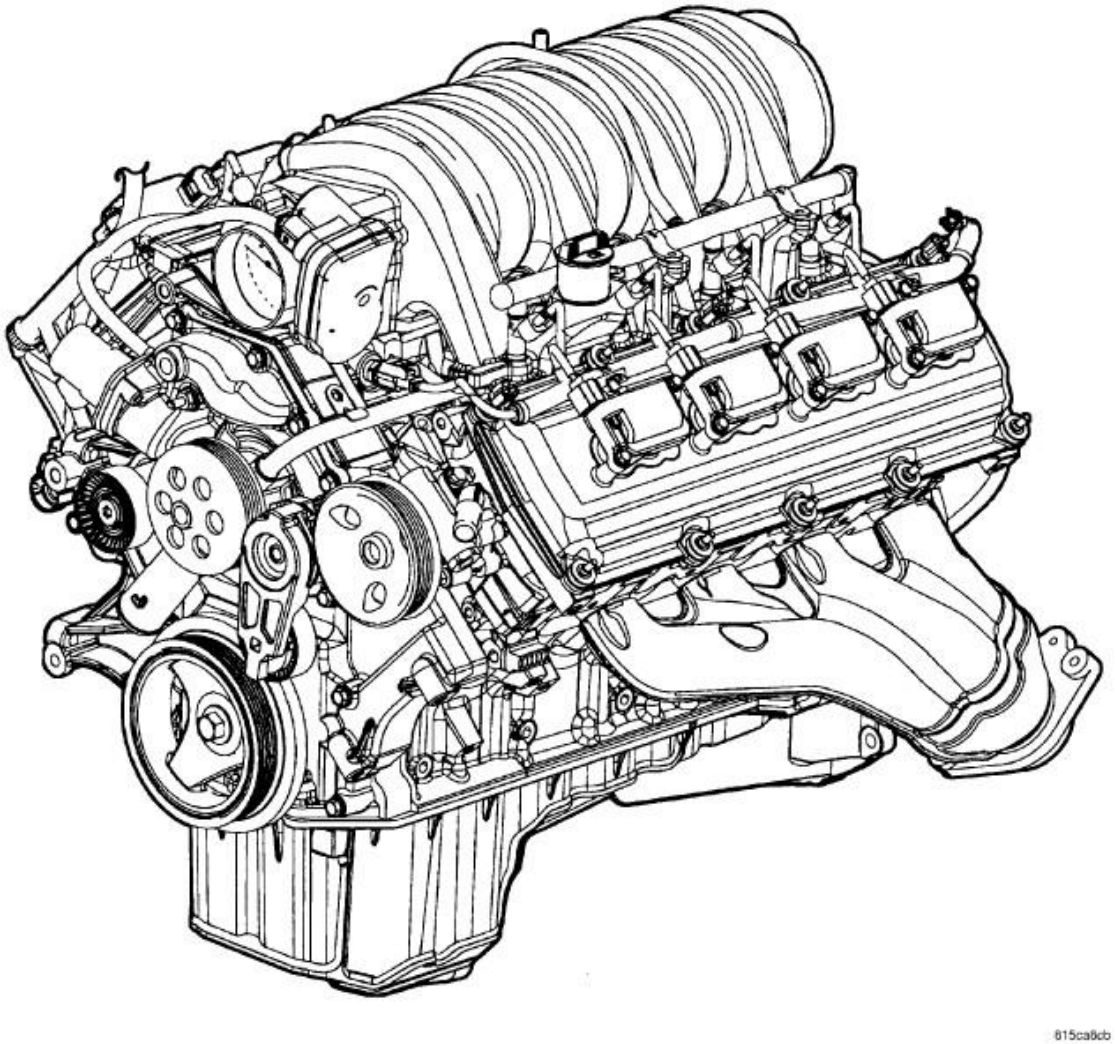

Fig. 1: 6.1L ENGINE
Courtesy of CHRYSLER LLC

The 6.1L (370 CID) eight-cylinder engine is a 90° V-Type, deep skirt, lightweight cast iron block with aluminum heads, single cam, overhead valves, and hydraulic roller tappets. The heads incorporate splayed valves with a hemispherical style combustion chamber and dual spark plugs. The cylinders are numbered from front to rear; 1, 3, 5, 7 on the left bank and 2, 4, 6, 8 on the right bank. The firing order is 1-8-4-3-6-5-7-2.

DIAGNOSIS AND TESTING

ENGINE DIAGNOSIS - INTRODUCTION

Engine diagnosis is helpful in determining the causes of malfunctions not detected and remedied by routine maintenance.

These malfunctions may be classified as either performance (e.g., engine idles rough and stalls) or mechanical (e.g., a strange noise).

See **ENGINE PERFORMANCE DIAGNOSTIC TABLE** and **ENGINE DIAGNOSIS - MECHANICAL** for possible causes and corrections of malfunctions.

Additional tests and diagnostic procedures may be necessary for specific engine malfunctions that can not be isolated with the Service Diagnosis charts. Information concerning additional tests and diagnosis is provided within the following diagnosis:

- Cylinder Compression Pressure Test. See **CYLINDER COMPRESSION PRESSURE LEAKAGE**.
- Cylinder Combustion Pressure Leakage Test. See **CYLINDER COMBUSTION PRESSURE LEAKAGE**.
- Engine Cylinder Head Gasket Failure Diagnosis. See **Engine/Cylinder Head - Diagnosis and Testing**.
- Intake Manifold Leakage Diagnosis. See **Engine/Manifolds/MANIFOLD, Intake - Diagnosis and Testing**.

ENGINE DIAGNOSIS - MECHANICAL

ENGINE MECHANICAL DIAGNOSIS CHART

CONDITION	POSSIBLE CAUSES	CORRECTION
NOISY VALVES/LIFTERS	1. High or low oil level in crankcase.	1. Check for correct oil level. Adjust oil level by draining or adding as needed.
	2. Thin or diluted oil.	2. Change oil. See **Engine/Lubrication/OIL - Standard Procedure**.
	3. Low oil pressure.	3. Check engine oil level. If OK, Perform oil pressure test. See **Engine/Lubrication - Diagnosis and Testing**.
	4. Dirt in tappets/lash adjusters.	4. Clean/replace hydraulic tappets/lash adjusters.
	5. Bent push rod(s).	5. Install new push rods.
	6. Worn rocker arms.	6. Inspect oil supply to rocker arms and replace worn arms as needed.

	7. Worn tappets/lash adjusters.	7. Install new hydraulic tappets/lash adjusters.
	8. Worn valve guides.	8. Inspect all valve guides and replace as necessary.
	9. Excessive runout of valve seats or valve faces.	9. Grind valves and seats.
CONNECTING ROD NOISE	1. Insufficient oil supply.	1. Check engine oil level.
	2. Low oil pressure.	2. Check engine oil level. If OK, Perform oil pressure test. See **Engine/Lubrication - Diagnosis and Testing**.
	3. Thin or diluted oil.	3. Change oil to correct viscosity. See **Engine/Lubrication/OIL - Standard Procedure**.
	4. Excessive connecting rod bearing clearance.	4. Measure bearings for correct clearance with plasti-gage. Repair as necessary.
	5. Connecting rod journal out of round.	5. Replace crankshaft or grind journals.
	6. Misaligned connecting rods.	6. Replace bent connecting rods.
MAIN BEARING NOISE	1. Insufficient oil supply.	1. Check engine oil level.
	2. Low oil pressure.	2. Check engine oil level. If OK, Perform oil pressure test. See **Engine/Lubrication - Diagnosis and Testing**.
	3. Thin or diluted oil.	3. Change oil to correct viscosity.
	4. Excessive main bearing clearance.	4. Measure bearings for correct clearance. Repair as necessary.
	5. Excessive end play.	5. Check crankshaft thrust bearing for excessive wear on flanges.
	6. Crankshaft main journal out of round or worn.	6. Grind journals or replace crankshaft.
	7. Loose flywheel or torque converter.	7. Inspect crankshaft, flexplate/flywheel and bolts for damage. Tighten to correct torque.
LOW OIL PRESSURE	1. Low oil level.	1. Check oil level and fill if necessary.
	2. Faulty oil pressure sending unit.	2. Install new sending unit.
	3. Clogged oil filter.	3. Install new oil filter.
	4. Worn oil pump.	4. Replace oil pump assembly.
	5. Thin or diluted oil.	5. Change oil to correct viscosity.
	6. Excessive bearing clearance.	6. Measure bearings for correct clearance.
	7. Oil pump relief valve	7. Remove valve to inspect, clean

	stuck. 8. Oil pickup tube loose, broken, bent or clogged. 9. Oil pump cover warped or cracked. 10. Faulty or missing piston cooling jets.	and reinstall. 8. Inspect oil pickup tube and pump, and clean or replace if necessary. 9. Install new oil pump. 10. Replace piston cooling jets.
OIL LEAKS	1. Misaligned or deteriorated gaskets. 2. Loose fastener or broken or porous metal part. 3. Front or rear crankshaft oil seal leaking. 4. Leaking oil gallery plug or cup plug.	1. Replace gasket. 2. Tighten, repair or replace the part. 3. Replace seal. 4. Remove and reseal threaded plug. Replace cup style plug.
EXCESSIVE OIL CONSUMPTION OR SPARK PLUGS OIL FOULED	1. CCV System malfunction. 2. Defective valve stem seal (s). 3. Worn or broken piston rings. 4. Scuffed pistons/cylinder walls. 5. Carbon in oil control ring groove. 6. Worn valve guides. 7. Piston rings fitted too tightly in grooves.	1. Refer to **EVAPORATIVE EMISSIONS** . 2. Repair or replace seal(s). 3. Hone cylinder bores. Install new rings. 4. Hone cylinder bores and replace pistons as required. 5. Remove rings and de-carbon piston. 6. Inspect/replace valve guides as necessary. 7. Remove rings and check ring end gap and side clearance. Replace if necessary.

ENGINE LUBRICATION DIAGNOSTIC TABLE

CONDITION	POSSIBLE CAUSES	CORRECTION
OIL LEAKS	1. Gaskets and O-Rings. (a) Misaligned or damaged. (b) Loose fasteners, broken or porous metal parts. 2. Crankshaft rear seal. 3. Crankshaft seal flange scratched, nicked or grooved. 4. Oil pan flange cracked. 5. Front cover seal, damaged or misaligned. 6. Scratched or damaged vibration	1. (a) Replace as necessary. (b) Tighten fasteners, Repair or replace metal parts. 2. Replace as necessary. 3. Polish or replace crankshaft. 4. Replace oil pan. 5. Replace seal. 6. Polish or replace damper.

	damper hub.	
-	7. Crankshaft rear flange microporosity.	7. Replace crankshaft.
OIL PRESSURE DROP	1. Low oil level.	1. Check and correct oil level.
	2. Faulty oil pressure sending unit.	2. Replace sending unit.
	3. Low oil pressure.	3. Check pump and bearing clearance.
	4. Clogged oil filter.	4. Replace oil filter.
	5. Worn oil pump.	5. Replace as necessary.
	6. Thin or diluted oil.	6. Change oil and filter.
	7. Excessive bearing clearance.	7. Replace as necessary.
	8. Oil pump relief valve stuck.	8. Replace oil pump.
	9. Oil pickup tube loose or damaged.	9. Replace as necessary.
	10. Faulty or missing piston cooling jets.	10. Replace piston cooling jets.
OIL PUMPING AT RINGS; SPARK PLUGS FOULING	1. Worn or damaged rings.	1. Hone cylinder bores and replace rings.
	2. Carbon in oil ring slots.	2. Replace rings.
	3. Incorrect ring size installed.	3. Replace rings.
	4. Worn valve guides.	4. Ream guides and replace valves.
	5. Leaking intake gasket.	5. Replace intake gaskets.
	6. Leaking valve guide seals.	6. Replace valve guide seals.

CYLINDER COMPRESSION PRESSURE LEAKAGE

NOTE: The results of a cylinder compression pressure test can be utilized to diagnose several engine malfunctions.

NOTE: Ensure the battery is completely charged and the engine starter motor is in good operating condition. Otherwise the indicated compression pressures may not be valid for diagnosis purposes.

1. Clean the spark plug recesses with compressed air.
2. Remove the spark plugs and record the cylinder number of each spark plug for future reference.
3. Inspect the spark plug electrodes for abnormal firing indicators such as fouled, hot, oily, etc.
4. Disable the fuel system. Refer to **Fuel System/Fuel Delivery - Standard Procedure** and perform the fuel system pressure release procedure.
5. Insert a compression pressure gauge and rotate the engine with the engine starter motor for three revolutions.
6. Record the compression pressure on the 3rd revolution. Continue the test for the remaining cylinders.

NOTE: **The recommended compression pressures are to be used only as a guide to diagnosing engine problems. An engine should not be disassembled to determine the cause of low compression unless some malfunction is present.**

7. Compression should not be less than 689 kPa (100 psi) and not vary more than 25 percent from cylinder to cylinder.
8. If one or more cylinders have abnormally low compression pressures, repeat the compression test.

NOTE: **If the same cylinder or cylinders repeat an abnormally low reading on the second compression test, it could indicate the existence of a problem in the cylinder in question.**

9. If one or more cylinders continue to have abnormally low compression pressures, perform the cylinder combustion pressure leakage test. See CYLINDER COMBUSTION PRESSURE LEAKAGE.

CYLINDER COMBUSTION PRESSURE LEAKAGE

The combustion pressure leakage test provides an accurate means for determining engine condition.

Combustion pressure leakage testing will detect:

- Exhaust and intake valve leaks (improper seating)
- Leaks between adjacent cylinders or into water jacket
- Any causes for combustion/compression pressure loss

1. Check the coolant level and fill as required. DO NOT install the radiator cap.
2. Start and operate the engine until it attains normal operating temperature, then turn the engine OFF.
3. Remove the spark plugs.
4. Remove the oil filler cap.
5. Remove the air cleaner hose.
6. Calibrate the tester according to the manufacturer's instructions. The shop air source for testing should maintain 483 kPa (70 psi) minimum, 1,379 kPa (200 psi) maximum and 552 kPa (80 psi) recommended.
7. Perform the test procedures on each cylinder according to the tester manufacturer's instructions. Position the piston of cylinder to be tested at TDC compression. While testing, listen for pressurized air escaping through the throttle body, tailpipe, and oil filler cap opening. Check for bubbles in the radiator coolant.

All gauge pressure indications should be equal, with no more than 25% leakage.

FOR EXAMPLE: At 552 kPa (80 psi) input pressure, a minimum of 414 kPa (60 psi) should be maintained in the cylinder.

Refer to **CYLINDER COMBUSTION PRESSURE LEAKAGE DIAGNOSIS CHART**.

CYLINDER COMBUSTION PRESSURE LEAKAGE DIAGNOSIS CHART

CONDITION	POSSIBLE CAUSE	CORRECTION
AIR ESCAPES THROUGH THROTTLE BODY	Intake valve bent, burnt, or not seated properly.	Inspect valve and valve seat. Reface or replace, as necessary. Inspect valve springs. Replace as necessary.
AIR ESCAPES THROUGH TAILPIPE	Exhaust valve bent, burnt, or not seated properly.	Inspect valve and valve seat. Reface or replace, as necessary. Inspect valve springs. Replace as necessary.
AIR ESCAPES THROUGH RADIATOR	Head gasket leaking or cracked cylinder head or block.	Remove cylinder head and inspect. Replace defective part.
MORE THAN 50% LEAKAGE FROM ADJACENT CYLINDERS	Head gasket leaking or crack in cylinder head or block between adjacent cylinders.	Remove cylinder head and inspect. Replace gasket, head, or block as necessary.
MORE THAN 25% LEAKAGE AND AIR ESCAPES THROUGH OIL FILLER CAP OPENING ONLY	Stuck or broken piston rings; cracked piston; worn rings and/or cylinder wall.	Inspect for broken rings or piston. Measure ring gap and cylinder diameter, taper and out-of-round. Replace defective part as necessary.

ENGINE PERFORMANCE DIAGNOSTIC TABLE

CONDITION	POSSIBLE CAUSE	CORRECTION
ENGINE WILL NOT START	1. Weak battery.	1. Charge or replace as necessary.
	2. Corroded or loose battery connections.	2. Clean and tighten battery connections. Apply a coat of light mineral grease to the terminals.
	3. Faulty starter.	3. Refer to **Electrical/Starting - Diagnosis and Testing** .
	4. Incorrect spark plug gap.	4. Refer to **Electrical/Ignition Control - Specifications** .
	5. Dirt or water in fuel system.	5. Clean system and replace fuel filter.
	6. Faulty fuel pump, relay or wiring.	6. See **Engine - Diagnosis and Testing**
ENGINE STALLS OR ROUGH IDLE	1. Idle speed set to low.	1. See **Engine - Diagnosis and Testing**

	2. Vacuum leak.	2. Inspect intake manifold and vacuum hoses, repair or replace as necessary.
	3. Incorrect engine timing.	3. Correct engine timing.
ENGINE LOSS OF POWER	1. Dirty or incorrectly gapped spark plugs.	1. Replace spark plugs.
	2. Dirt or water in fuel system.	2. Clean system and replace fuel filter.
	3. Blown cylinder head gasket.	3. Replace cylinder head gasket.
	4. Low compression.	4. See **CYLINDER COMPRESSION PRESSURE LEAKAGE**.
	5. Burned, warped or pitted valves.	5. Replace as necessary.
	6. Plugged or restricted exhaust system.	6. Inspect and replace as necessary.

STANDARD PROCEDURE

REPAIR DAMAGED OR WORN THREADS

CAUTION: Be sure that the tapped holes maintain the original center line.

Damaged or worn threads can be repaired. Essentially, this repair consists of:

- Drilling out worn or damaged threads
- Tapping the hole with a special Heli-Coil Tap, or equivalent
- Installing an insert into the tapped hole to bring the hole back to its original thread size

HYDROSTATIC LOCK

CAUTION: DO NOT use the starter motor to rotate the crankshaft. Severe damage could occur.

When an engine is suspected of hydrostatic lock (regardless of what caused the problem), follow the steps below.

1. Perform the Fuel Pressure Release Procedure. Refer to **Fuel System/Fuel Delivery - Standard Procedure** .
2. Disconnect the negative cable(s) from the battery.
3. Inspect air cleaner, induction system, and intake manifold to ensure system is dry and clear of

foreign material.

4. Place a shop towel around the spark plugs to catch any fluid that may possibly be under pressure in the cylinder head. Remove the spark plugs.
5. With all spark plugs removed, rotate the crankshaft using a breaker bar and socket.
6. Identify the fluid in the cylinders (coolant, fuel, oil, etc.).
7. Be sure all fluid has been removed from the cylinders.
8. Repair engine or components as necessary to prevent this problem from occurring again.
9. Squirt a small amount of engine oil into the cylinders to lubricate the walls. This will prevent damage on restart.
10. Install new spark plugs. Tighten the spark plugs to 41 N.m (30 ft. lbs.).
11. Drain engine oil. Remove and discard the oil filter.
12. Install the drain plug. Tighten the plug to 34 N.m (25 ft. lbs.).
13. Install a new oil filter.
14. Fill engine crankcase with the specified amount and grade of oil. Refer to **Vehicle Quick Reference/Capacities and Recommended Fluids - Specifications** .
15. Connect the negative cable(s) to the battery.
16. Start the engine and check for any leaks.

REMOVAL

REMOVAL

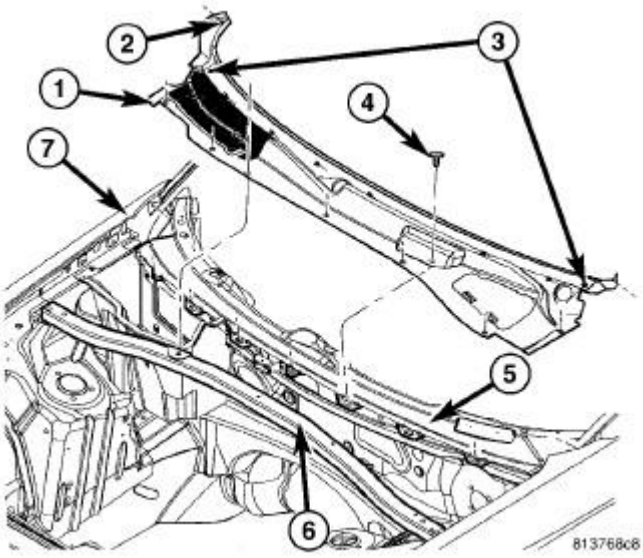

Fig. 2: Removing/Installing Cowl Panel
Courtesy of CHRYSLER LLC

1. Remove the hood. Refer to **Body/Hood/HOOD - Removal** .
2. Remove the cowl top panel (2). Refer to **Body/Exterior/COVER, Cowl Panel - Removal** .

3. Remove the strut tower support (6).

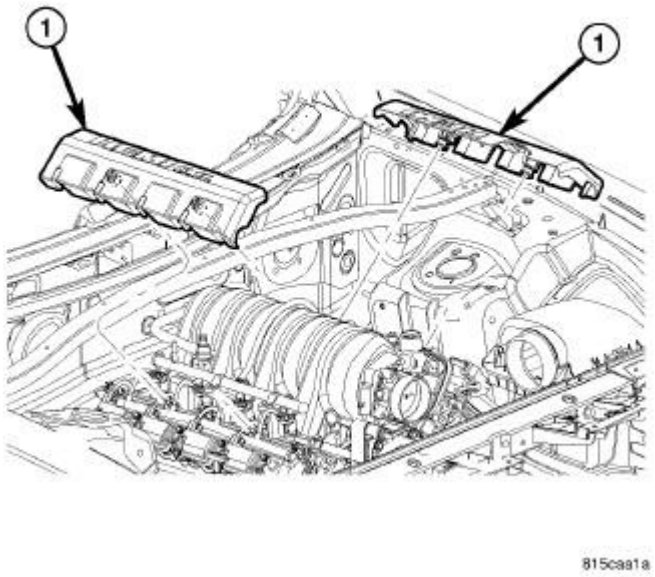

Fig. 3: Engine Covers
Courtesy of CHRYSLER LLC

4. Remove the engine covers (1).
5. Perform the fuel system pressure release procedure. Refer to **Fuel System/Fuel Delivery - Standard Procedure** .

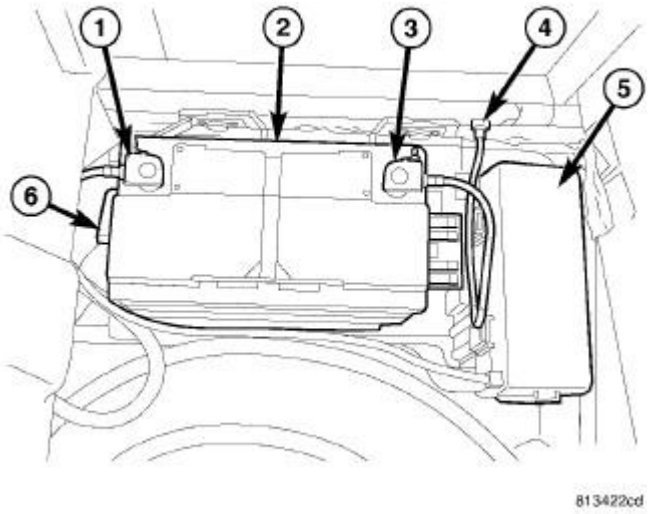

Fig. 4: Battery System Components And PDC Cover
Courtesy of CHRYSLER LLC

6. Disconnect and isolate the negative battery cable (3).

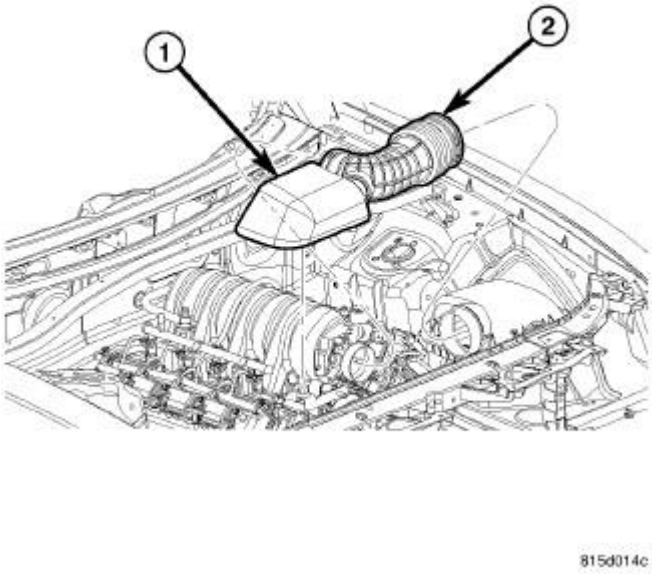

Fig. 5: Air Cleaner Duct
Courtesy of CHRYSLER LLC

7. Disconnect the make up air hose.
8. Disconnect the intake air temperature (IAT) sensor electrical connector.
9. Remove the air cleaner housing (1) and clean air tube (2).

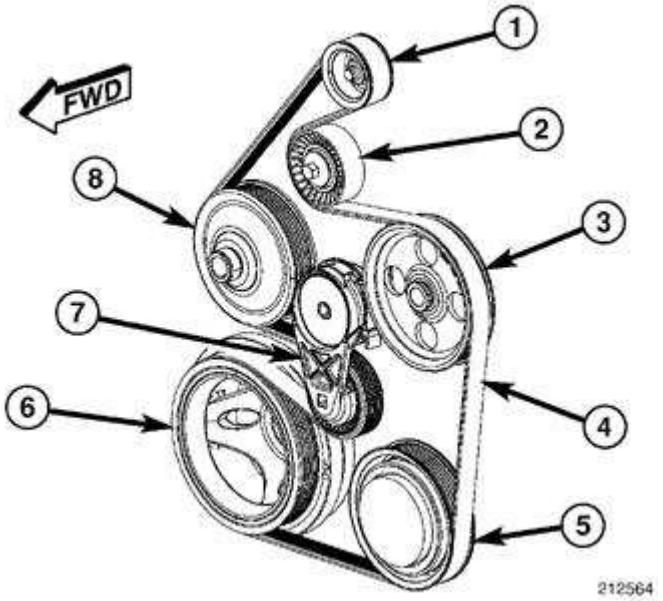

Fig. 6: Identifying Accessory Drive Belt Routing

Courtesy of CHRYSLER LLC

CAUTION: Do not let the tensioner arm snap back to the freearm position, sever damage may occur to the tensioner.

10. Rotate the accessory drive belt tensioner (7) counterclockwise until it contacts it's stop and remove the accessory drive belt (4), then slowly rotate the tensioner into the freearm position.
11. Remove the cooling fan. Refer to **Cooling/Engine/FAN, Cooling - Removal** .

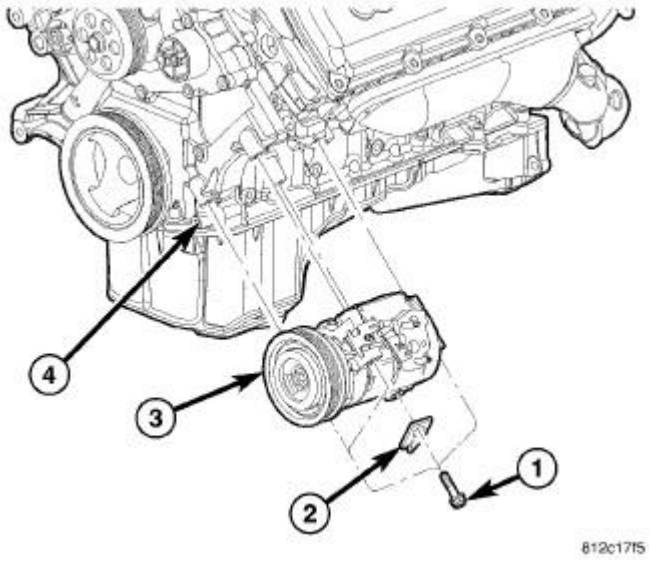

Fig. 7: Removing/Installing A/C Compressor
Courtesy of CHRYSLER LLC

12. Remove the A/C compressor (3). Refer to **Heating and Air Conditioning/Plumbing/COMPRESSOR, A/C - Removal** .

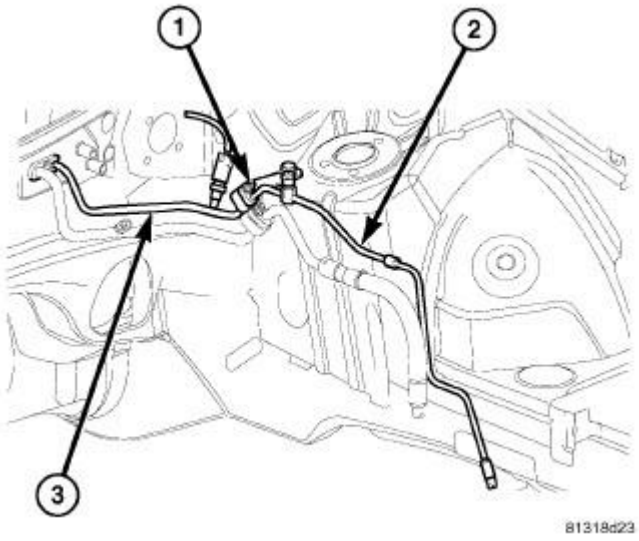

Fig. 8: Removing/Installing Front Liquid A/C Line
Courtesy of CHRYSLER LLC

13. Remove the nut (1) from the front section of the A/C liquid line (2) to the rear section of the liquid line (3), separate the lines, remove and discard the dual plane seal.
14. Install plugs or tape over the opened liquid line fittings.
15. Remove the front section of the A/C liquid line from the engine compartment.

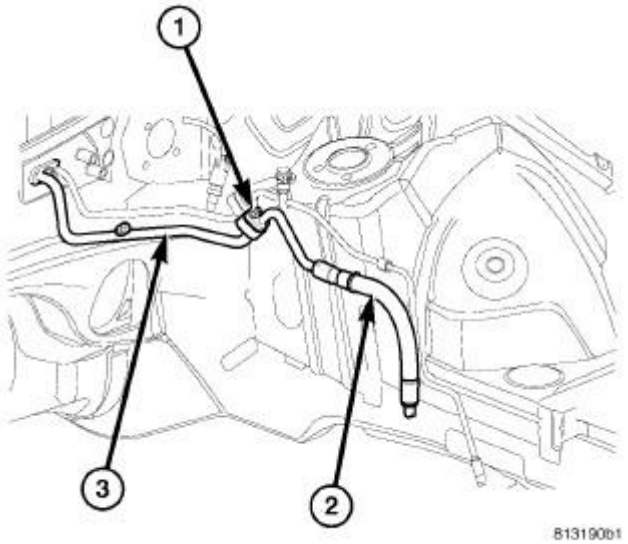

Fig. 9: Removing/Installing Front Suction A/C Line
Courtesy of CHRYSLER LLC

16. Remove the nut (1) from the front section of the A/C suction line (2) to the rear section of the suction line (3), separate the lines, remove and discard the dual plane seal.

17. Install plugs or tape over the opened suction line fittings.
18. Remove the front section of the A/C suction line from the engine compartment.

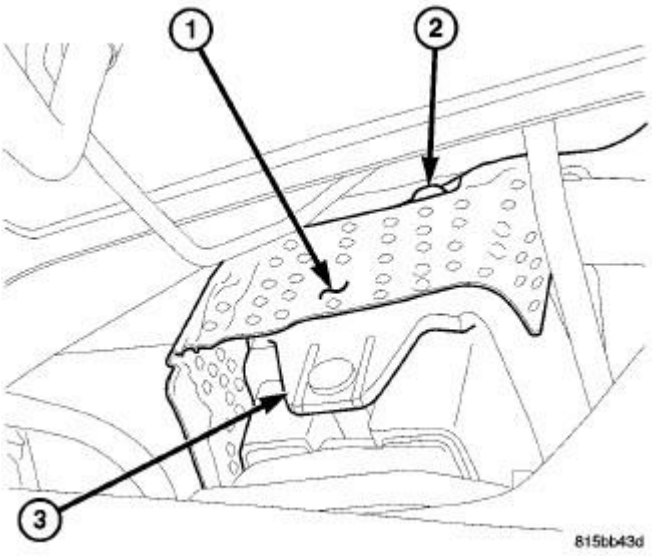

Fig. 10: Engine Mount Heat Shield
Courtesy of CHRYSLER LLC

19. Remove the engine mount heat shield retaining bolt (2) and heat shield (1).

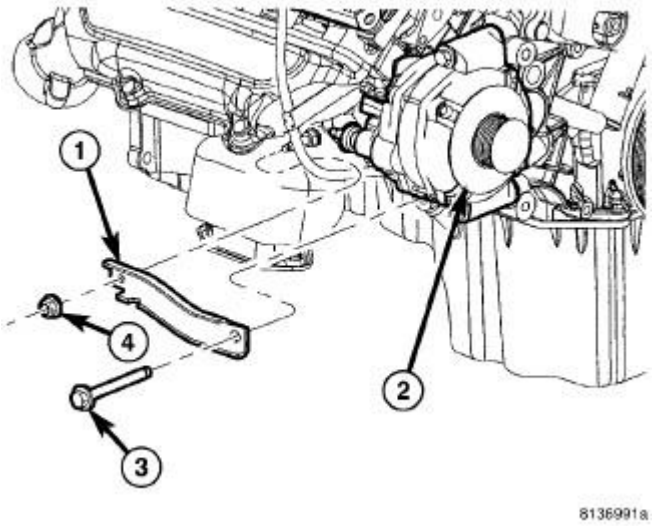

Fig. 11: GENERATOR SUPPORT BRACKET
Courtesy of CHRYSLER LLC

20. Remove the generator (2) and support bracket (1). Refer to **Electrical/Charging/GENERATOR - Removal** .

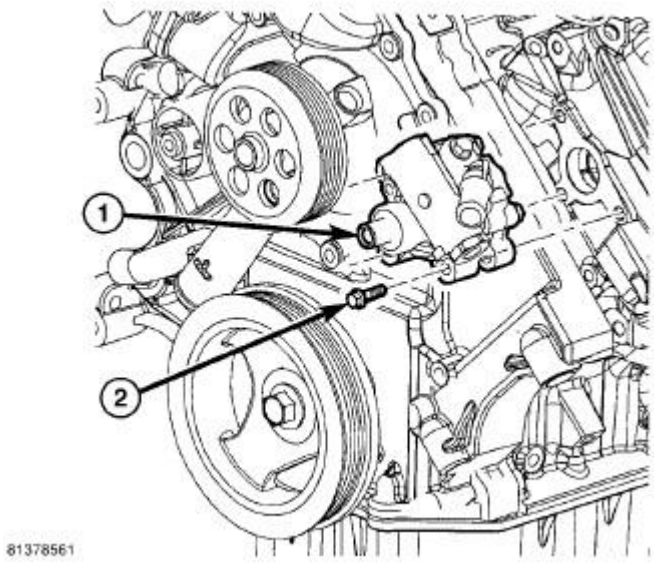

Fig. 12: Power Steering Pump
Courtesy of CHRYSLER LLC

NOTE: It is not necessary to disconnect power steering pump hoses from power steering pump for power steering pump removal.

21. Remove the three power steering pump (1) mounting bolts (2) through the access holes in the pulley and position the pump aside.

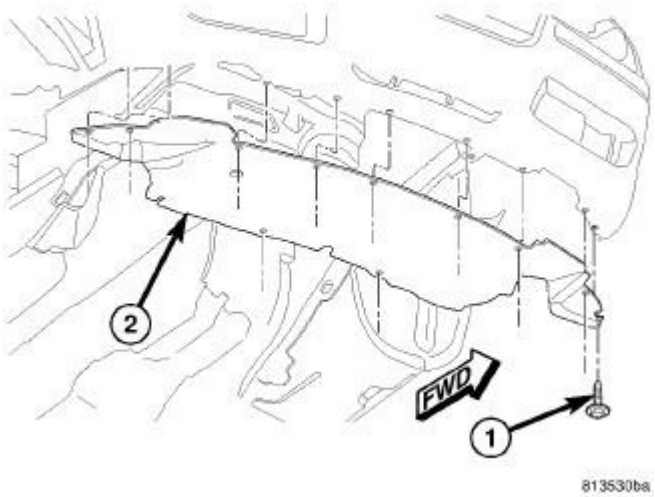

Fig. 13: FRONT BELLY PAN
Courtesy of CHRYSLER LLC

22. Raise and support the vehicle.

23. Remove the belly pan (2).
24. Drain the engine oil.
25. Drain the cooling system. Refer to **Cooling - Standard Procedure** .

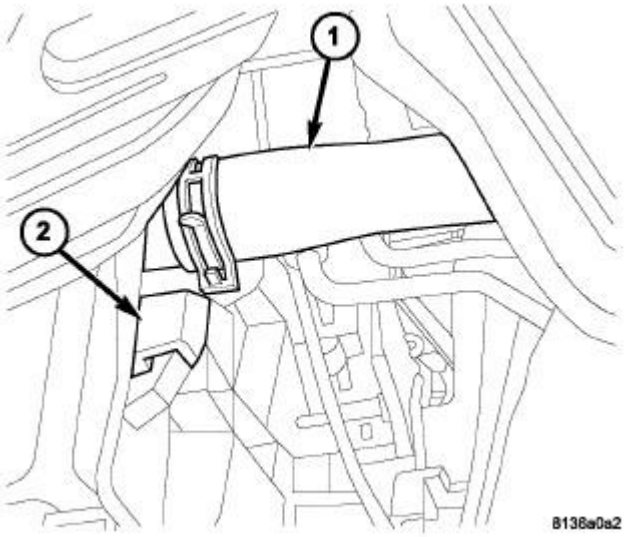

Fig. 14: Lower Radiator Hose
Courtesy of CHRYSLER LLC

1 - LOWER RADIATOR HOSE
2 - RADIATOR FAN ASSEMBLY

26. Remove lower radiator hose (1).

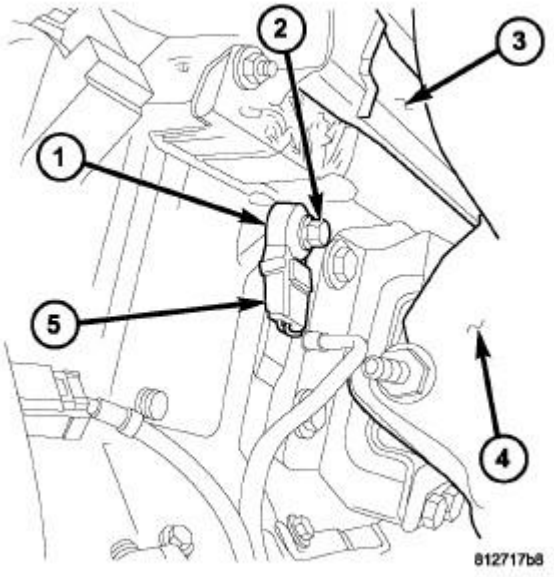

Fig. 15: 5.7L/6.1L KNOCK SENSOR
Courtesy of CHRYSLER LLC

NOTE: Two knock sensors are used. Each sensor is bolted to the outside of cylinder block below the exhaust manifold.

27. Remove the right and left knock sensor electrical connectors.

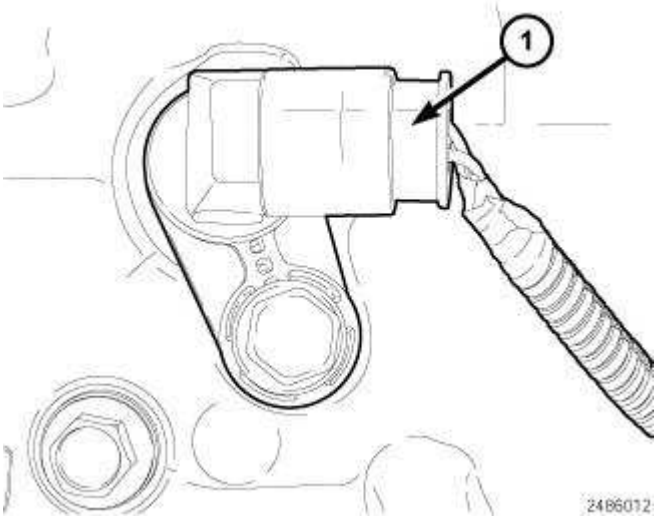

Fig. 16: Crankshaft Position Sensor Electrical Connector
Courtesy of CHRYSLER LLC

NOTE: The Crankshaft Position (CKP) sensor is located at the right-rear side of

the engine block.

28. Remove the CKP sensor electrical connector (1).
29. Remove the oil temperature sensor electrical connector.
30. Remove the oil pressure sensor electrical connector.
31. Lower the vehicle.

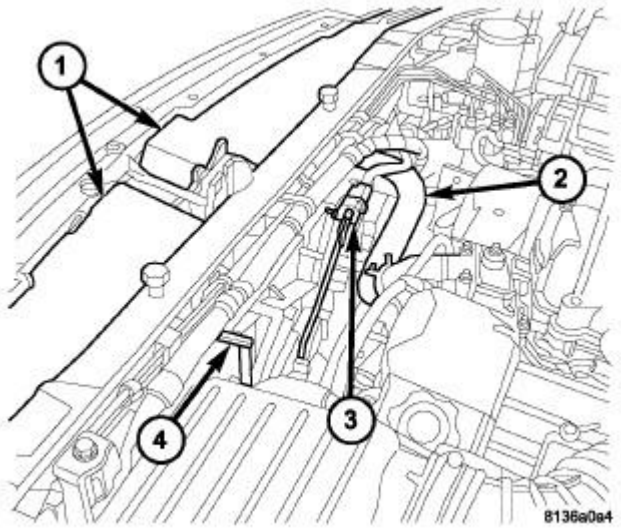

Fig. 17: Radiator Fan Assembly
Courtesy of CHRYSLER LLC

1 - UPPER RADIATOR CLOSURE PANELS
2 - UPPER RADIATOR HOSE
3 - RADIATOR FAN ELECTRICAL CONNECTOR
4 - RADIATOR FAN ASSEMBLY

32. Remove upper radiator hose (2).

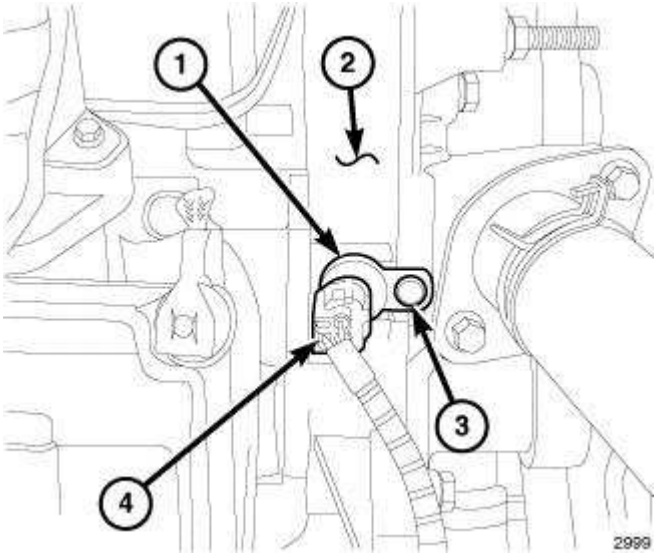

Fig. 18: Camshaft Position Sensor
Courtesy of CHRYSLER LLC

33. Disconnect the camshaft position (CMP) sensor electrical connector (4).

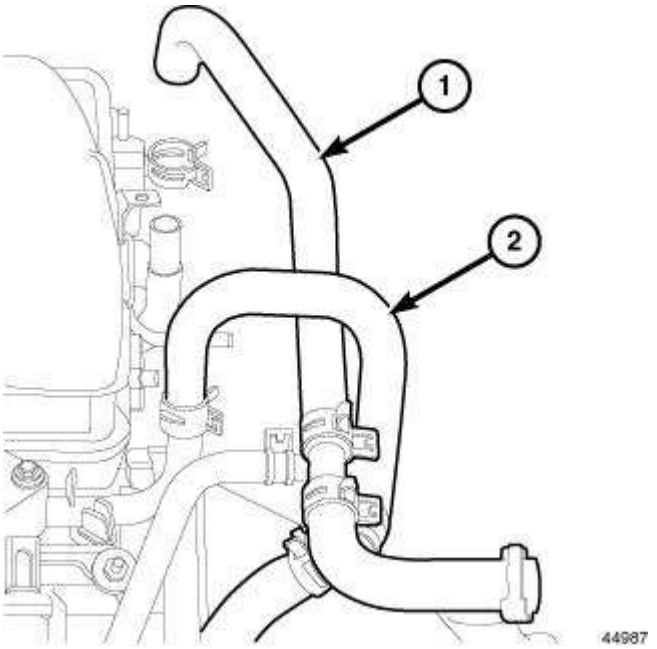

Fig. 19: Heater Hose Supply
Courtesy of CHRYSLER LLC

34. Remove the heater hoses (1,2).

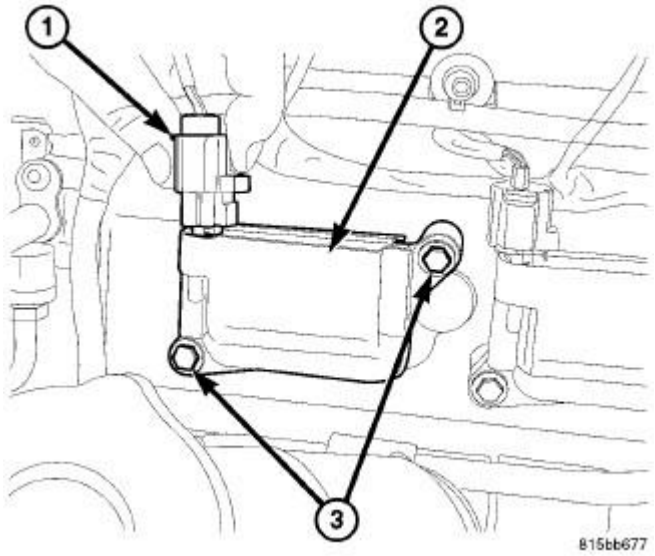

Fig. 20: Ignition Coil Mounting Bolts
Courtesy of CHRYSLER LLC

35. Remove all ignition coil electrical connectors (1).
36. Remove all fuel injector electrical connectors.

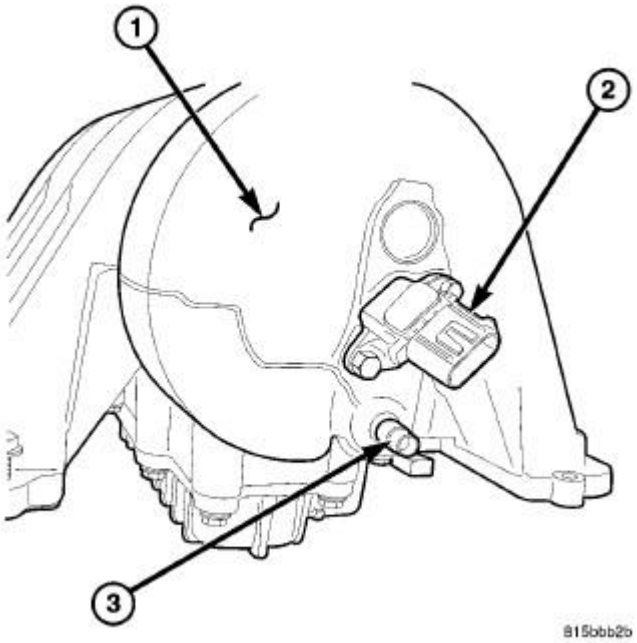

Fig. 21: Locating Manifold Air Pressure MAP Sensor - 6.1L
Courtesy of CHRYSLER LLC

NOTE: The Manifold Absolute Pressure (MAP) sensor (2) is located at the rear of

the intake manifold (1).

37. Disconnect the MAP sensor electrical connector by sliding release lock out and pressing down on the lock tab.

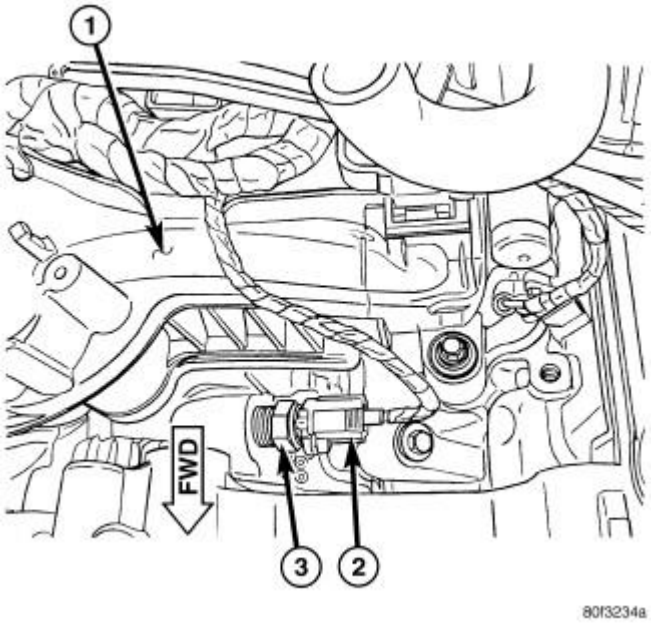

Fig. 22: Removing/Installing ECT
Courtesy of CHRYSLER LLC

38. Remove the coolant temperature sensor (3) electrical connector (2).

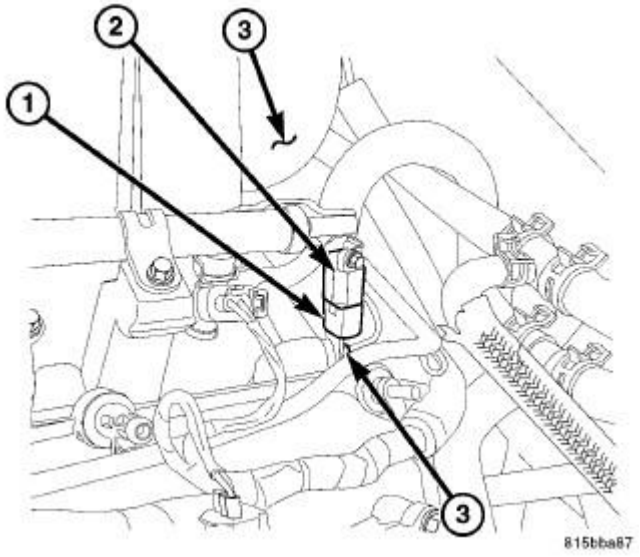

Fig. 23: Ignition Capacitor
Courtesy of CHRYSLER LLC

NOTE: The ignition capacitor (2) is attached to the left rear corner of the intake manifold (3).

39. Remove the ignition capacitor (2) electrical connector (1).

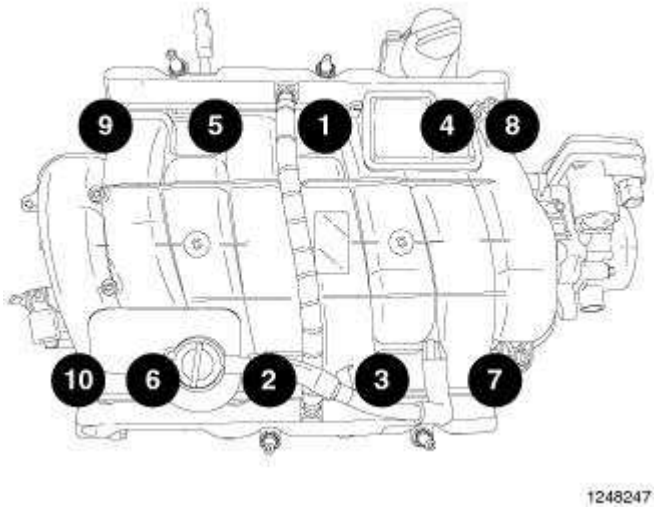

Fig. 24: Intake Manifold Removal & Tightening Sequence
Courtesy of CHRYSLER LLC

NOTE: Remove the intake manifold and throttle body as an assembly.

40. Remove the intake manifold. See **Engine/Manifolds/MANIFOLD, Intake - Removal**.
41. Remove the ground wires from the rear of each cylinder head.
42. Remove the right and left side engine wiring harness and position aside.

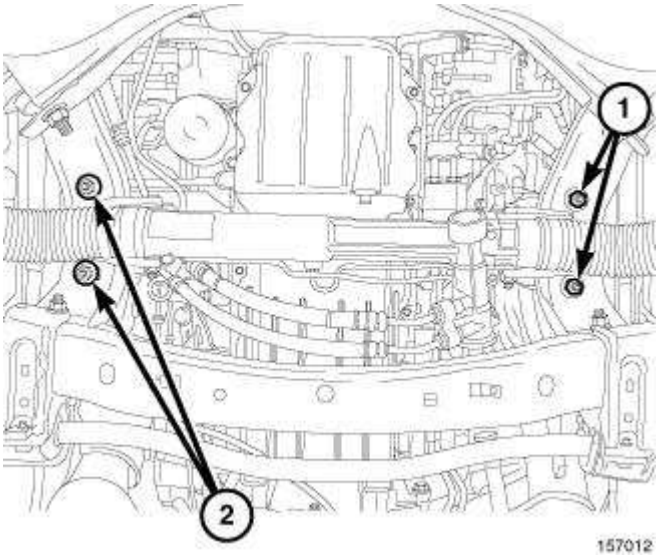

Fig. 25: Engine Mount Nuts
Courtesy of CHRYSLER LLC

43. Raise and support the vehicle.
44. Remove the front engine mount nuts (1,2).
45. Disconnect the transmission oil cooler lines from their retainers at the oil pan.

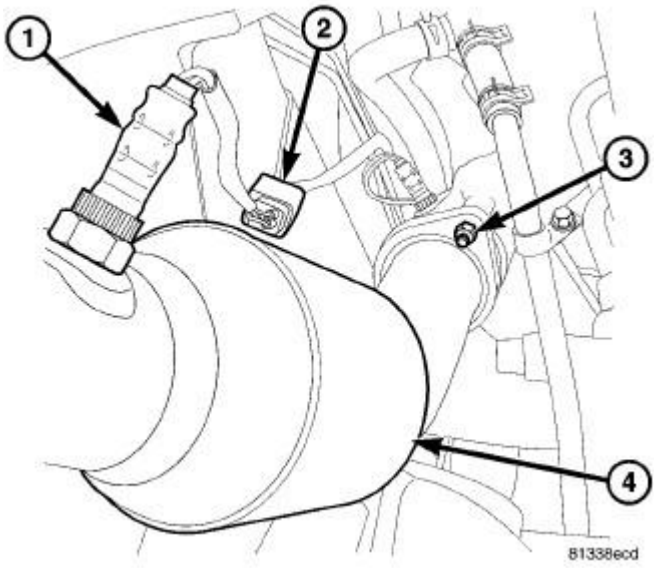

Fig. 26: Oxygen Sensor & Catalytic Converter
Courtesy of CHRYSLER LLC

CAUTION: When separating the exhaust pipes from the manifolds, disconnect the oxygen sensor connector(s). Allowing the exhaust pipes hanging from the oxygen sensor wires damages the harness and/or sensor.

46. Disconnect the oxygen sensor electrical connectors (2).

47. Saturate all exhaust bolts and nuts with Mopar® Rust Penetrant. Allow five minutes for penetration.
48. Remove the exhaust pipe to the manifold bolts (3) and separate the exhaust pipes (4) from the exhaust manifolds.

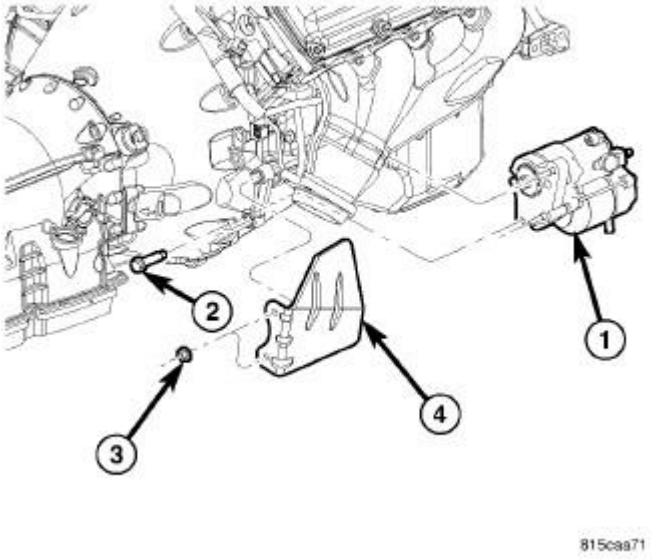

Fig. 27: Removing/Installing Starter
Courtesy of CHRYSLER LLC

49. Remove the starter motor (1) heat shield (4).
50. Disconnect the starter wires, remove the starter motor retaining bolts (2) and remove the starter (1). Refer to **Electrical/Starting/STARTER - Removal** .

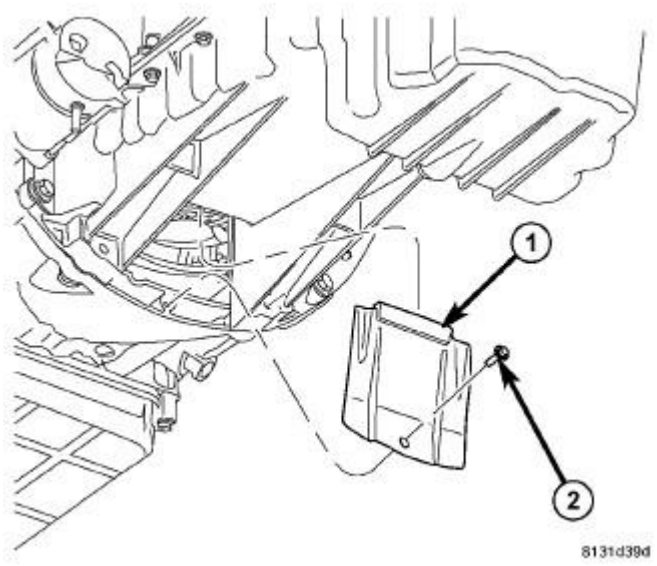

Fig. 28: Remove/Install Torque Converter Access Cover
Courtesy of CHRYSLER LLC

51. Remove the inspection cover (1).

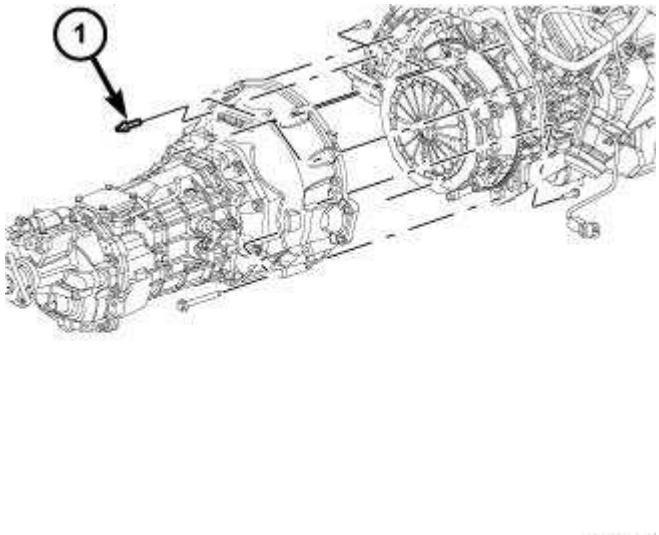

Fig. 29: Removing/Installing Transmission
Courtesy of CHRYSLER LLC

52. Manual transmission equipped vehicles, remove the transmission (Refer to **REMOVAL** .

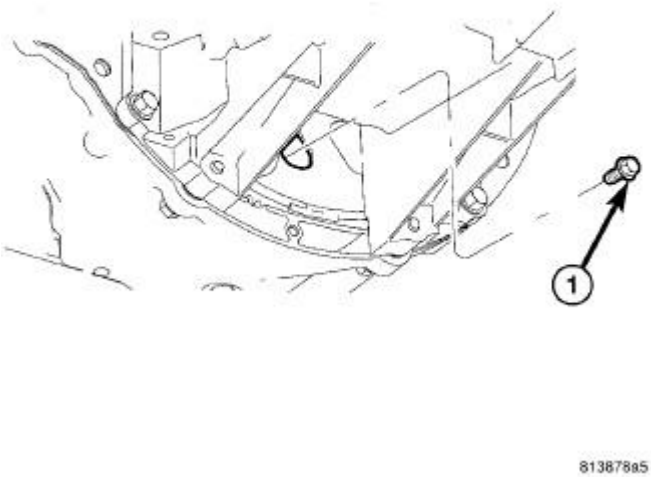

Fig. 30: Torque Converter Bolts
Courtesy of CHRYSLER LLC

53. Automatic transmission equipped vehicles, rotate the crankshaft in clockwise direction until converter bolts (1) are accessible and remove the flexplate to converter bolts (1).

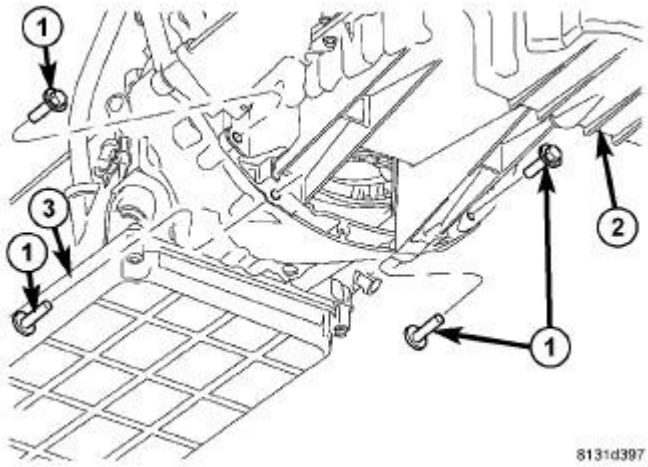

Fig. 31: Remove/Install Transmission To Oil Pan Bolts
Courtesy of CHRYSLER LLC

54. Remove the oil pan to transmission bolts (1).

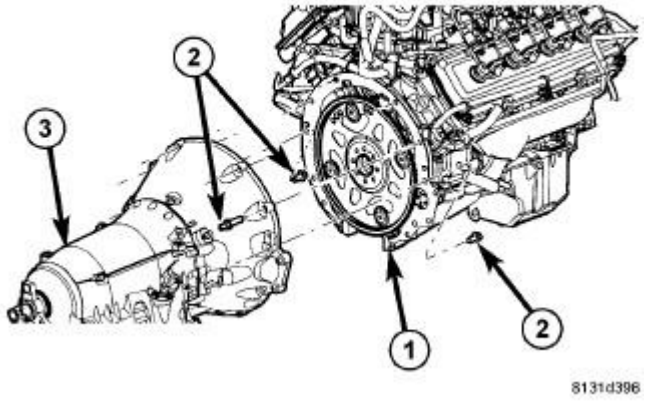

Fig. 32: Remove/Install Transmission to Engine Bolts
Courtesy of CHRYSLER LLC

55. Remove the transmission bell housing to engine block bolts (2).

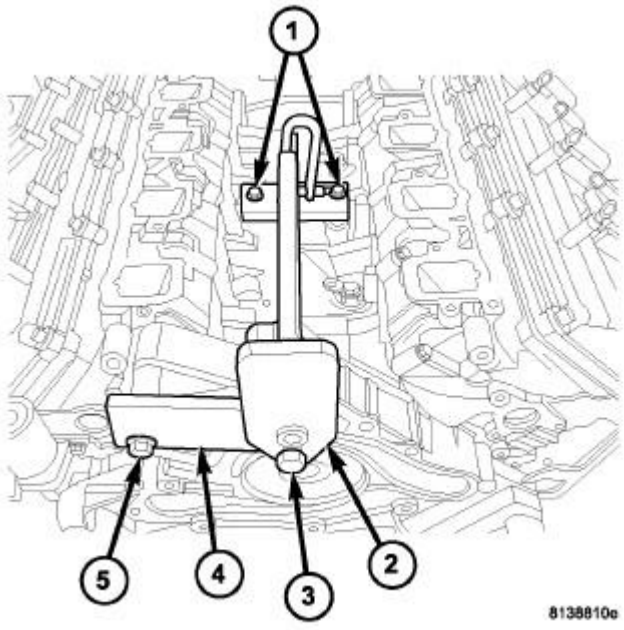

Fig. 33: Engine Lift Fixture & Adapter
Courtesy of CHRYSLER LLC

56. Lower the vehicle.
57. Remove the left coolant tube.

NOTE: Do not use air tools to install engine lift fixture.

58. Install the engine lift fixture 8984A (2) and adapter 8984-UPD (4).
59. Using a suitable engine hoist, separate the engine from the transmission and remove the engine from the vehicle.
60. Install the engine assembly on a suitable repair stand.

INSTALLATION

INSTALLATION

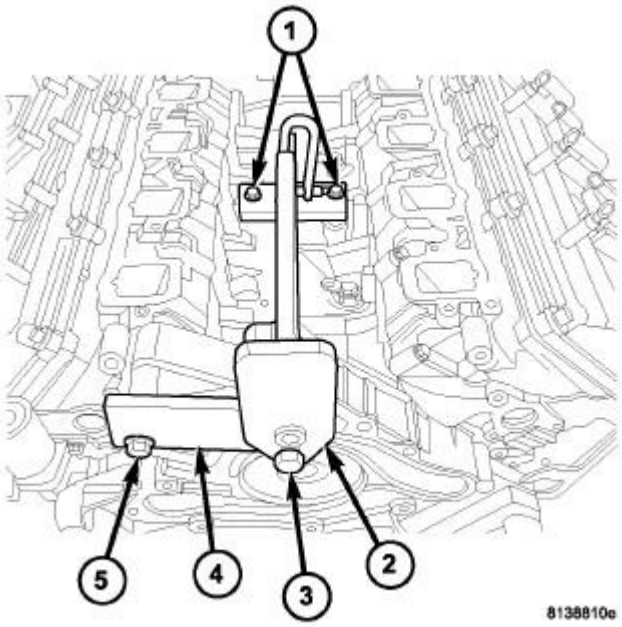

Fig. 34: Engine Lift Fixture & Adapter
Courtesy of CHRYSLER LLC

1. Install the engine lift fixture (2) 8984A and adapter 8984-UPD (4).
2. Using a suitable engine hoist, lower the engine into in the engine compartment.
3. Automatic transmission equipped vehicles, align the engine with the transmission.
4. Install two transmission to engine block mounting bolts finger tight.
5. Lower the engine assembly until the engine mount studs rest in the frame brackets and remove the engine hoist.

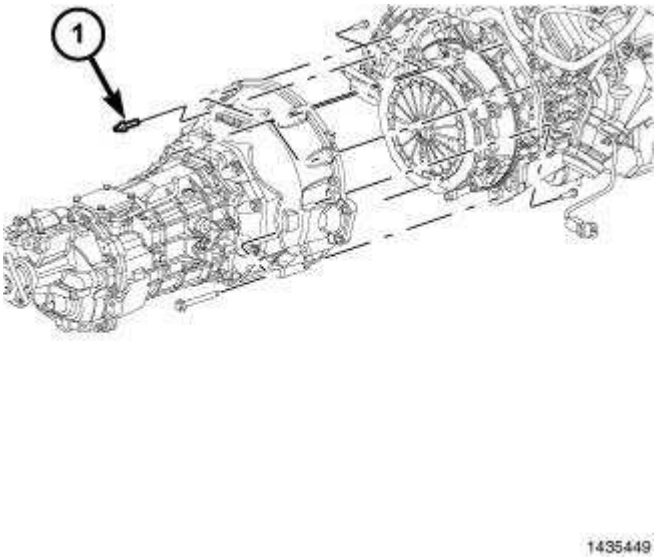

Fig. 35: Removing/Installing Transmission
Courtesy of CHRYSLER LLC

6. Manual transmission equipped vehicles, install the transmission (Refer to **INSTALLATION** .
7. Raise and support the vehicle.

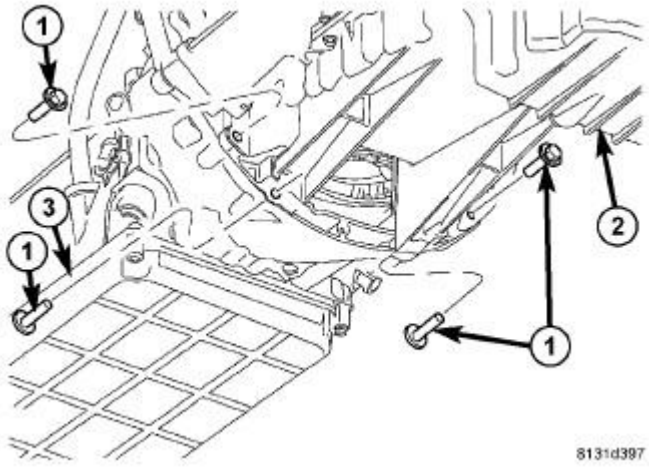

Fig. 36: Remove/Install Transmission To Oil Pan Bolts
Courtesy of CHRYSLER LLC

8. Install the transmission (3) to oil pan (2) bolts (1) and tighten to 39 N.m (29 ft. lbs.).

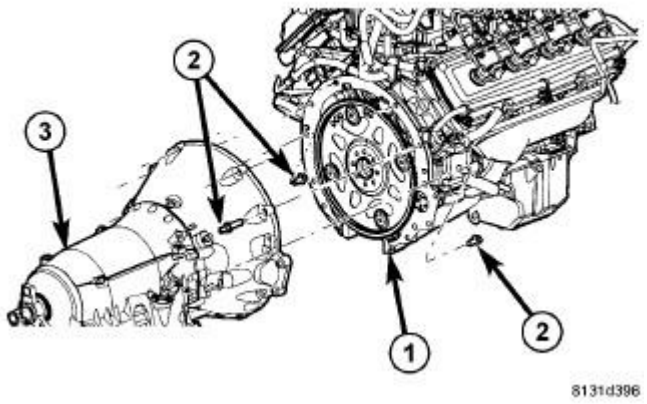

Fig. 37: Remove/Install Transmission to Engine Bolts
Courtesy of CHRYSLER LLC

9. Install the remaining transmission (3) to engine block (1) mounting bolts (2) and tighten to 68 N.m (50 ft. lbs.).

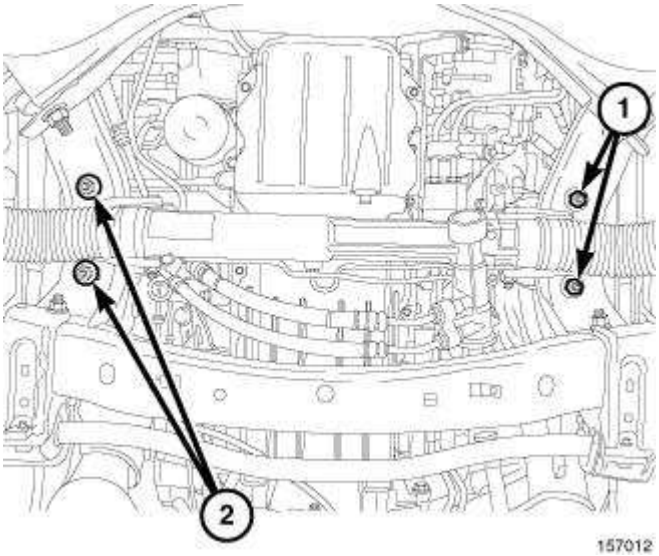

Fig. 38: Engine Mount Nuts
Courtesy of CHRYSLER LLC

10. Install and tighten the front engine mount retaining nuts to 95 N.m (70 ft. lbs.).

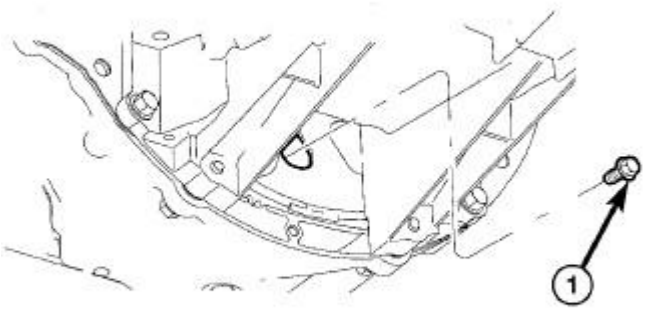

Fig. 39: TORQUE CONVERTER BOLTS
Courtesy of CHRYSLER LLC

CAUTION: It is essential that the correct length bolts are used to attach the converter to the flexplate. Bolts that are too long will damage the clutch surface inside the torque converter.

11. Rotate the crankshaft in clockwise direction and install all torque converter to flexplate bolts (1) finger tight.
12. Verify that the torque converter is pulled flush to the flexplate and tighten bolts to 88 N.m (65 ft. lbs.).

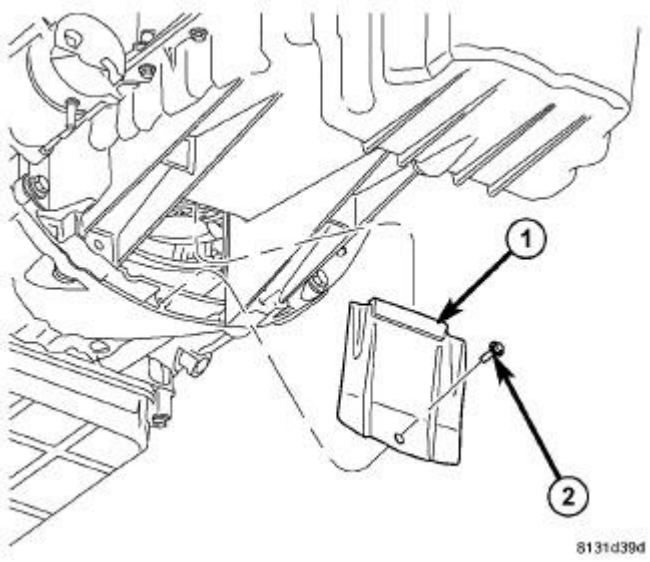

Fig. 40: Remove/Install Torque Converter Access Cover
Courtesy of CHRYSLER LLC

13. Install the inspection cover (1) and tighten bolt (2) to 11 N.m (8 ft. lbs.).

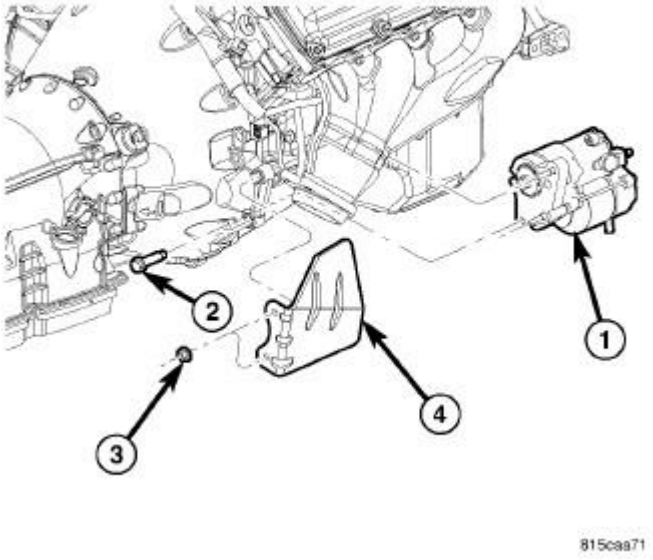

Fig. 41: Removing/Installing Starter
Courtesy of CHRYSLER LLC

14. Position the starter into the transmission.
15. Connect the solenoid wire to the starter motor (snaps on).
16. Position the battery cable to the solenoid stud, install the battery cable eyelet nut and tighten to

11 N.m (8 ft. lbs.).

17. Install the three starter mounting bolts (2) and tighten to 54 N.m (40 ft. lbs.).
18. Install the starter (1) heat shield (4) and securely tighten nuts (3).

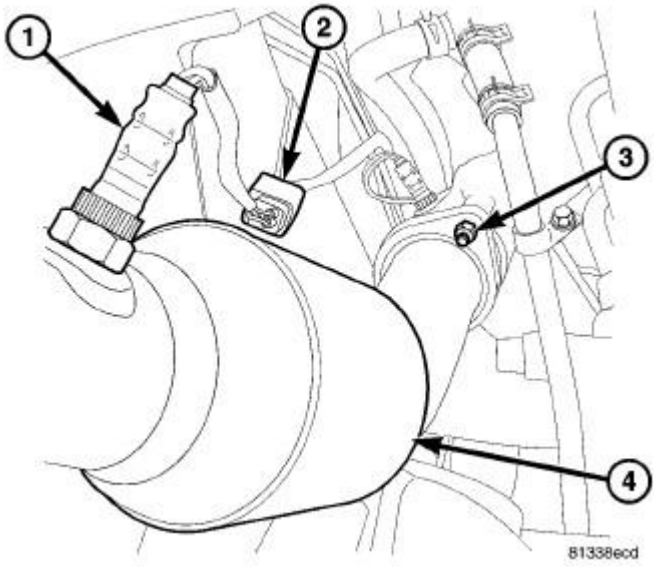

Fig. 42: Oxygen Sensor & Catalytic Converter
Courtesy of CHRYSLER LLC

19. Install the exhaust pipes (4) to the manifolds and connect the oxygen sensor electrical connectors (2). Refer to **Exhaust System/CONVERTER, Catalytic - Installation** .

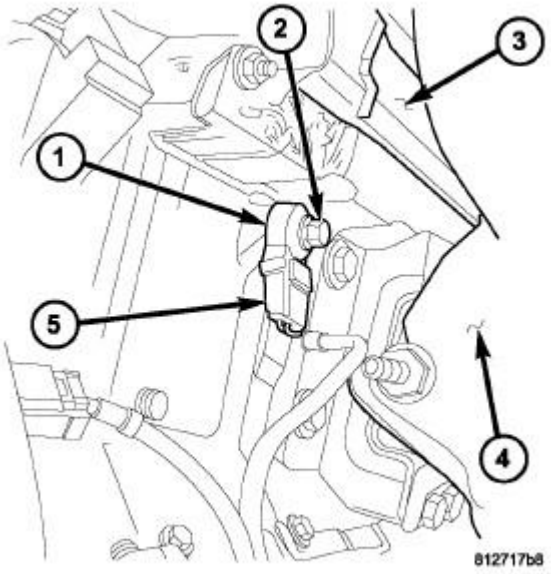

Fig. 43: 5.7L/6.1L KNOCK SENSOR

Courtesy of CHRYSLER LLC

20. Connect the right and left knock sensor (1) electrical connectors (5).

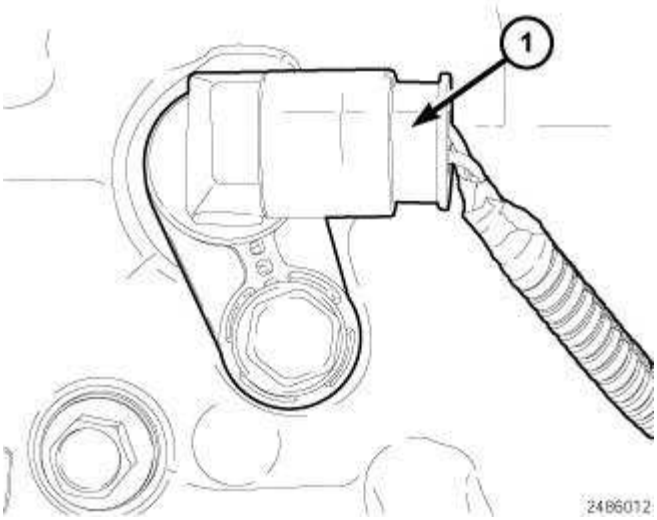

Fig. 44: Crankshaft Position Sensor Electrical Connector
Courtesy of CHRYSLER LLC

NOTE: The Crankshaft Position (CKP) sensor is located at the right-rear side of the engine block.

21. Connect the CKP sensor electrical connector (1).
22. Connect the oil temperature sensor electrical connector.
23. Connect the oil pressure sensor electrical connector.
24. Connect the transmission oil cooler lines to their retainers at the oil pan.

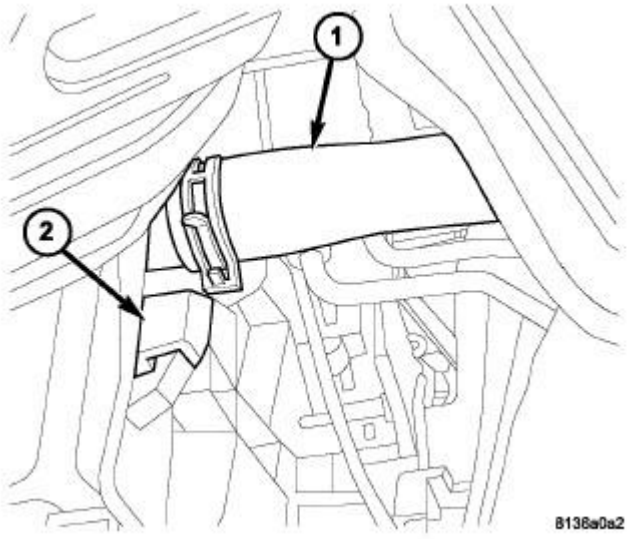

Fig. 45: Lower Radiator Hose
Courtesy of CHRYSLER LLC

1 - LOWER RADIATOR HOSE 2 - RADIATOR FAN ASSEMBLY

25. Install the lower radiator hose (1).

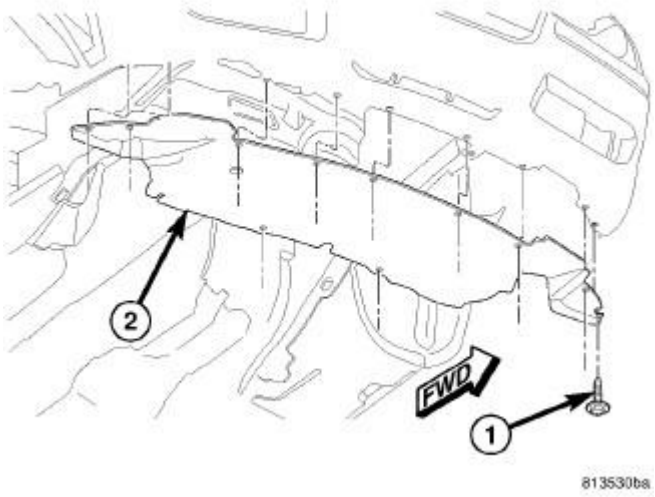

Fig. 46: Front Belly Pan
Courtesy of CHRYSLER LLC

26. Install the belly pan (2).
27. Lower the vehicle.

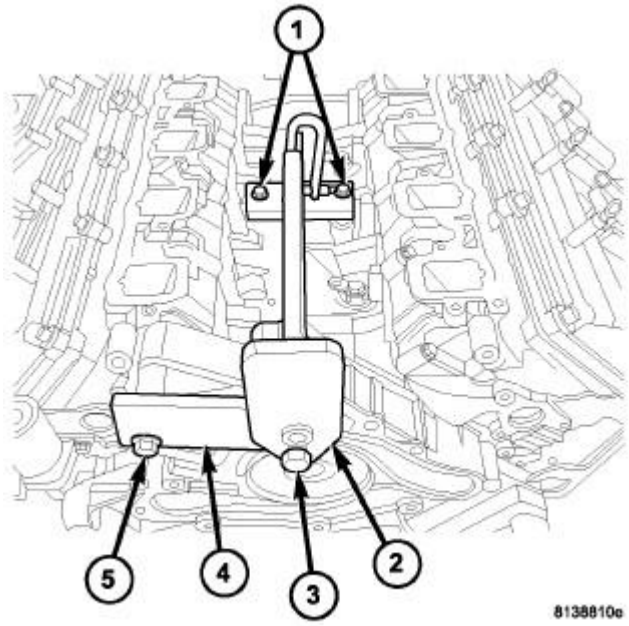

Fig. 47: Engine Lift Fixture & Adapter
Courtesy of CHRYSLER LLC

28. Remove the engine lift fixture 8984A (2) and adapter 8984-UPD (4).
29. Install the left coolant tube.
30. Install the left and right side wiring harness.

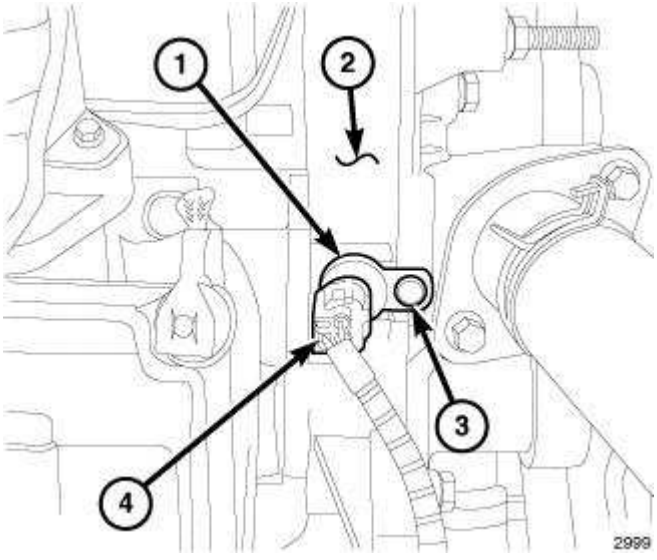

Fig. 48: Camshaft Position Sensor
Courtesy of CHRYSLER LLC

31. Connect the camshaft position sensor electrical connector (4).

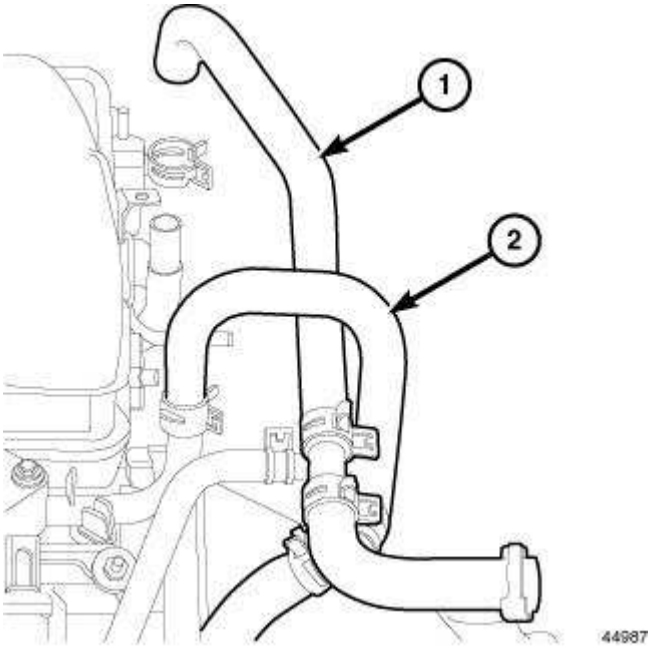

Fig. 49: Heater Hose Supply
Courtesy of CHRYSLER LLC

32. Connect the heater hoses (1,2).
33. Connect the ground wires to the rear of each cylinder head.

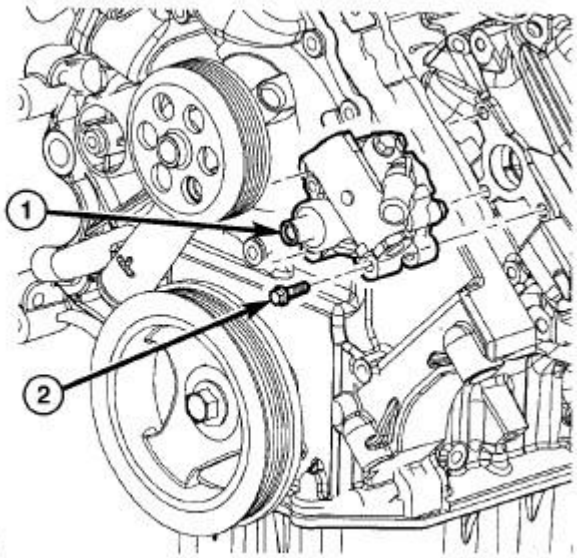

Fig. 50: Power Steering Pump
Courtesy of CHRYSLER LLC

34. Install the three power steering pump (1) mounting bolts (2) through the access holes in the pulley and tighten the bolts to 28 N.m (21 ft. lbs.).

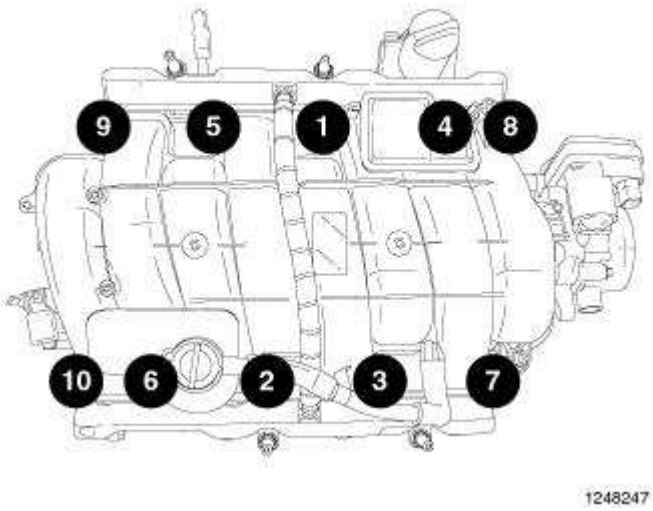

Fig. 51: Intake Manifold Removal & Tightening Sequence
Courtesy of CHRYSLER LLC

35. Install the intake manifold. See **Engine/Manifolds/MANIFOLD, Intake - Installation**.

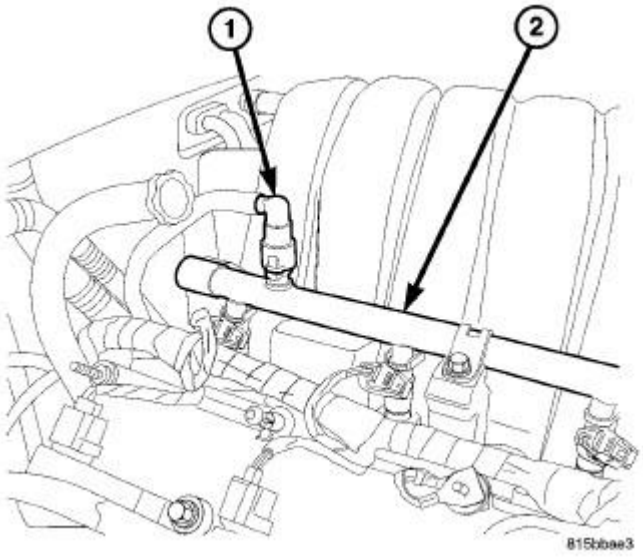

Fig. 52: Fuel Line At Fuel Rail Fitting- 6.1L
Courtesy of CHRYSLER LLC

36. Connect fuel line (1) to fuel rail. Refer to **Fuel System/Fuel Delivery/FITTING, Quick Connect - Standard Procedure** .

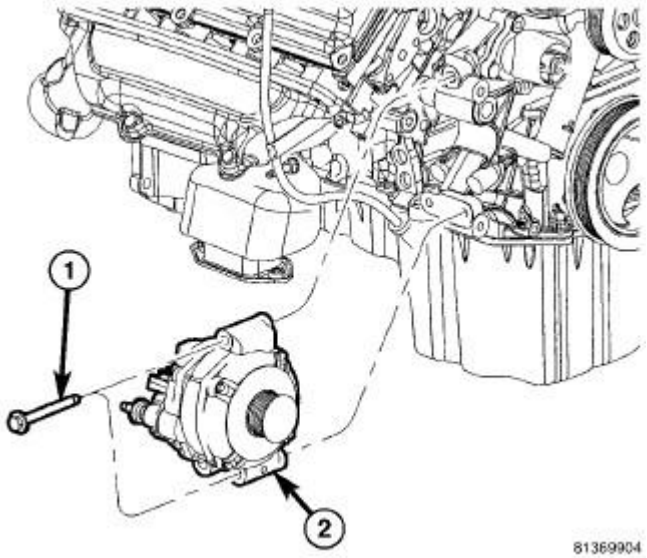

Fig. 53: Generator
Courtesy of CHRYSLER LLC

37. Install the generator (2) and connect the electrical connectors. Refer to **Electrical/Charging/GENERATOR - Installation** .

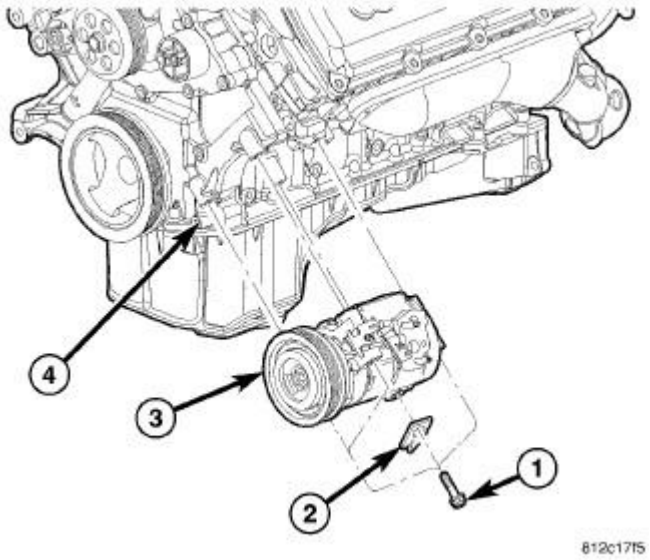

Fig. 54: Removing/Installing A/C Compressor
Courtesy of CHRYSLER LLC

38. Install the A/C compressor (3). Refer to **Heating and Air Conditioning/Plumbing/COMPRESSOR, A/C - Removal** .

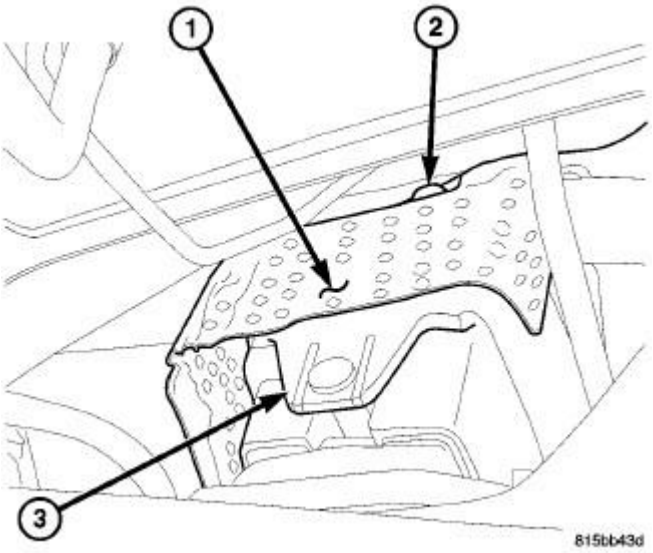

Fig. 55: Engine Mount Heat Shield
Courtesy of CHRYSLER LLC

39. Install the engine mount heat shield (1) and tighten fastener (2).

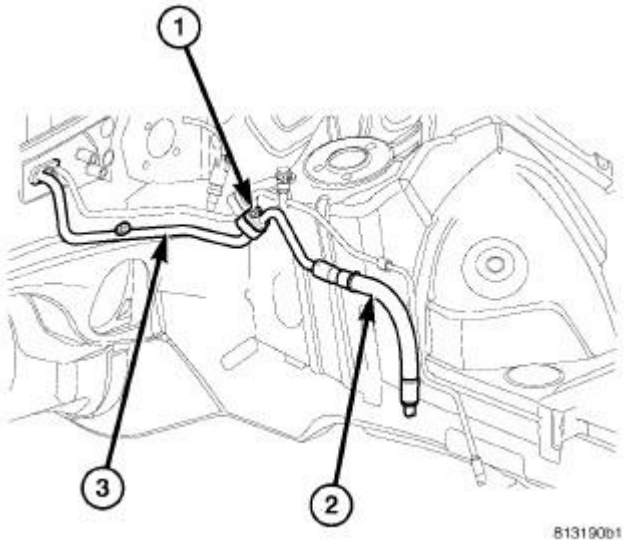

Fig. 56: Removing/Installing Front Suction A/C Line
Courtesy of CHRYSLER LLC

40. Position the front section of the A/C suction line (2) into the engine compartment.
41. Remove the tape or plugs from the fittings that connect the front section of the A/C suction line to the rear section of the A/C suction line (3).
42. Lubricate a new dual plane seal with clean refrigerant oil and install it onto the suction line fitting. Use only the specified seal as it is made of a special material for the R-134a system. Use

only refrigerant oil of the type recommended for the A/C compressor in the vehicle.

43. Connect the front section of the A/C suction line to the rear section of the A/C suction line.
44. Install the nut (1) that secures the front section of the A/C suction line to the rear section of the A/C suction line and tighten the nut to 22 N.m (16 ft. lbs.).

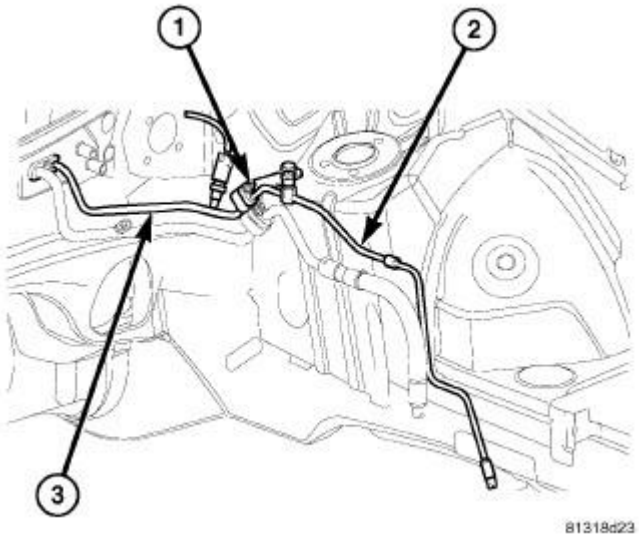

Fig. 57: Removing/Installing Front Liquid A/C Line
Courtesy of CHRYSLER LLC

45. Position the front section of the A/C liquid line into the engine compartment.
46. Remove the tape or plugs from the fittings that connect the front section of the A/C liquid line to the rear section of the A/C liquid line (3).
47. Lubricate a new dual plane seal with clean refrigerant oil and install it onto the liquid line fitting. Use only the specified seal as it is made of a special material for the R-134a system. Use only refrigerant oil of the type recommended for the A/C compressor in the vehicle.
48. Connect the front section of the A/C liquid line to the rear section of the A/C liquid line.
49. Install the nut (1) that secures the front section of the A/C liquid line to the rear section of the A/C liquid line and tighten the nut to 22 N.m (16 ft. lbs.).

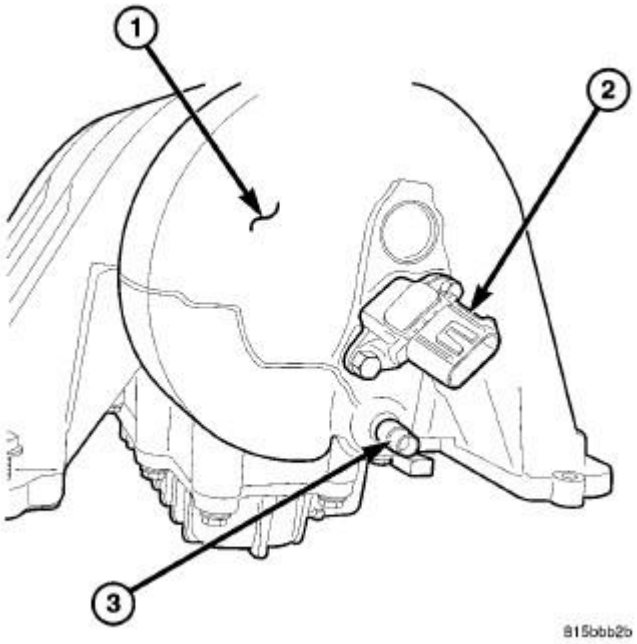

Fig. 58: Locating Manifold Air Pressure MAP Sensor - 6.1L
Courtesy of CHRYSLER LLC

NOTE: The Manifold Absolute Pressure (MAP) sensor (2) is located at the rear of the intake manifold (1).

50. Connect the MAP sensor (2) electrical connector.

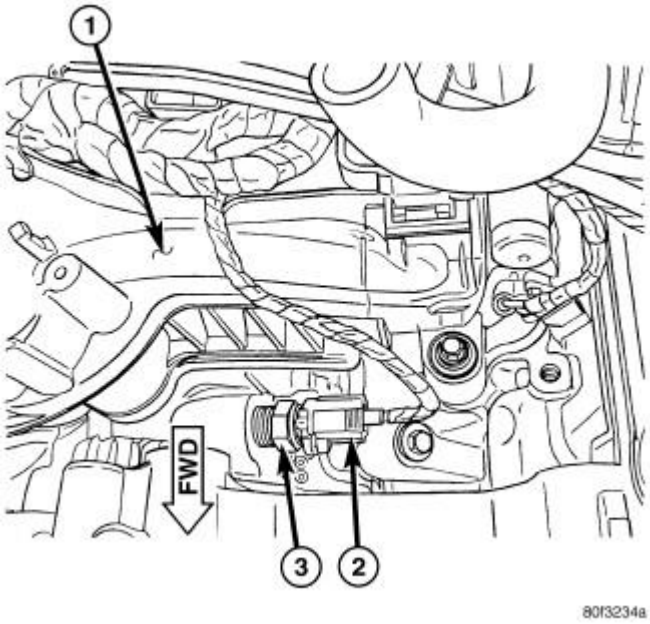

Fig. 59: Removing/Installing ECT
Courtesy of CHRYSLER LLC

51. Connect the coolant temperature sensor (3) electrical connector (2).

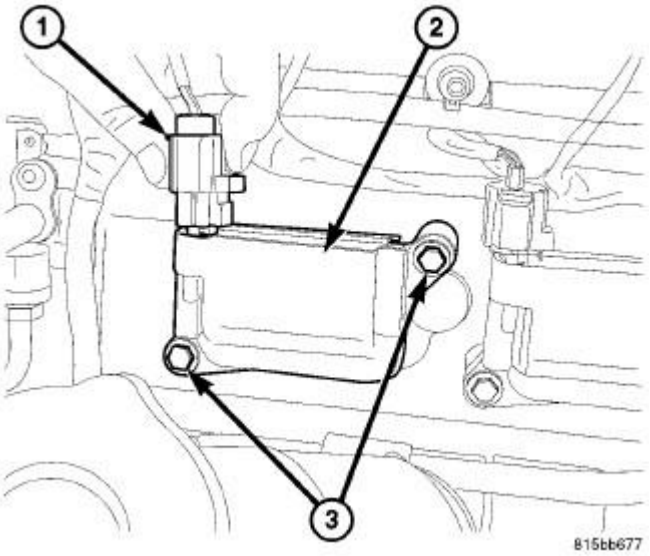

Fig. 60: Ignition Coil Mounting Bolts
Courtesy of CHRYSLER LLC

52. Connect all ignition coil electrical connectors (1).
53. Connect all fuel injector electrical connectors.

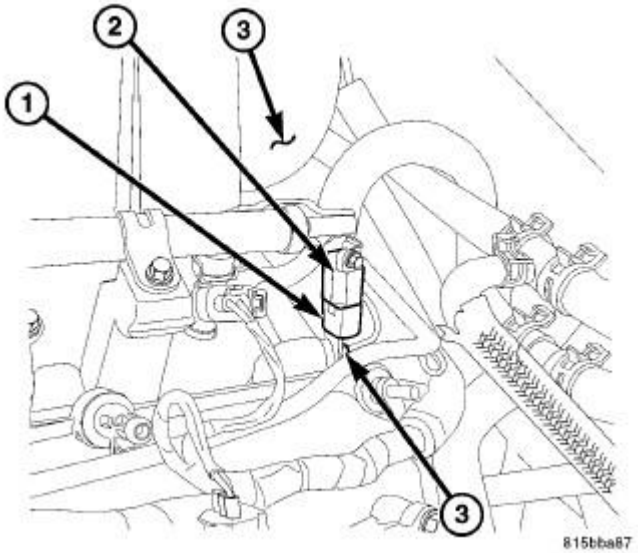

Fig. 61: Ignition Capacitor
Courtesy of CHRYSLER LLC

NOTE: The ignition capacitor (2) is attached to the left rear corner of the intake manifold (3).

54. Connect the ignition capacitor (2) electrical connector (1).

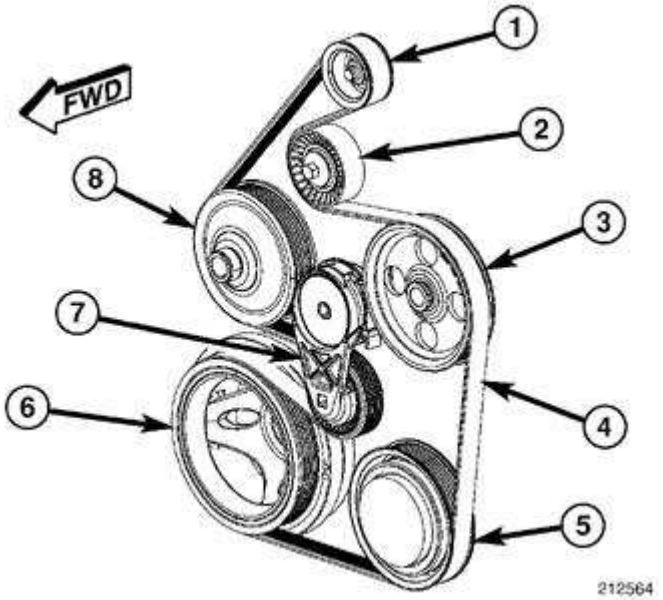

Fig. 62: Identifying Accessory Drive Belt Routing
Courtesy of CHRYSLER LLC

CAUTION: Do not let the tensioner arm snap back to the freearm position, sever damage may occur to the tensioner.

55. Rotate the accessory drive belt tensioner (7) counterclockwise until it contacts it's stop and install the accessory drive belt (4) onto the pulleys, then slowly release the tensioner.
56. Install the cooling fan. Refer to **Cooling/Engine/FAN, Cooling - Installation** .

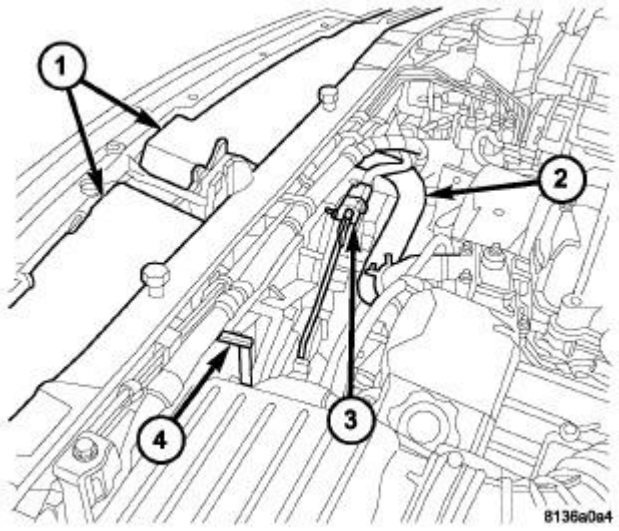

Fig. 63: Radiator Fan Assembly
Courtesy of CHRYSLER LLC

1 - UPPER RADIATOR CLOSURE PANELS
2 - UPPER RADIATOR HOSE
3 - RADIATOR FAN ELECTRICAL CONNECTOR
4 - RADIATOR FAN ASSEMBLY

57. Install the upper radiator hose (2).

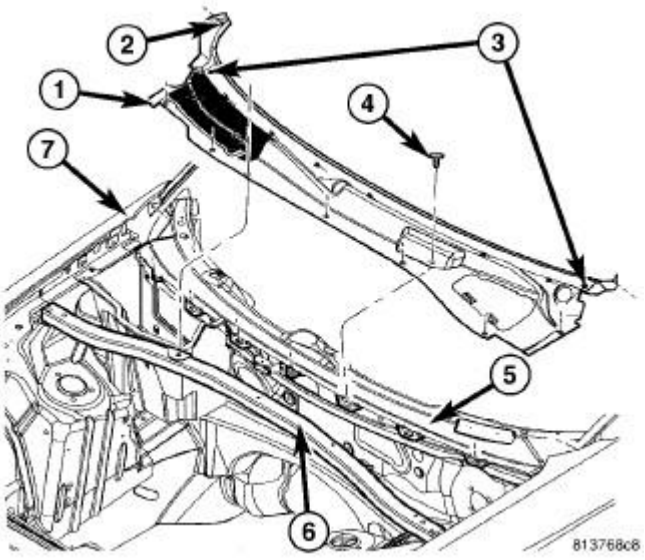

Fig. 64: Removing/Installing Cowl Panel
Courtesy of CHRYSLER LLC

58. Install the strut tower support (6) and tighten bolts to 38 N.m (28 ft. lbs.).
59. Install the cowl top panel. Refer to **Body/Exterior/COVER, Cowl Panel - Installation** .

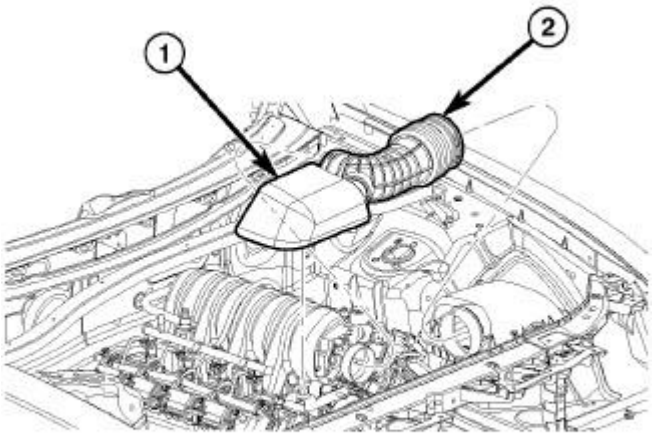

Fig. 65: Air Cleaner Duct
Courtesy of CHRYSLER LLC

60. Install the air cleaner housing (1) and clean air tube (2). See **Engine/Air Intake System/BODY, Air Cleaner - Installation**.
61. Install the make up air hose.
62. Connect the intake air temperature (IAT) sensor connector.
63. Fill the engine with oil. Refer to **Vehicle Quick Reference/Capacities and Recommended Fluids - Specifications** .
64. Fill the cooling system. Refer to **Cooling - Standard Procedure** .

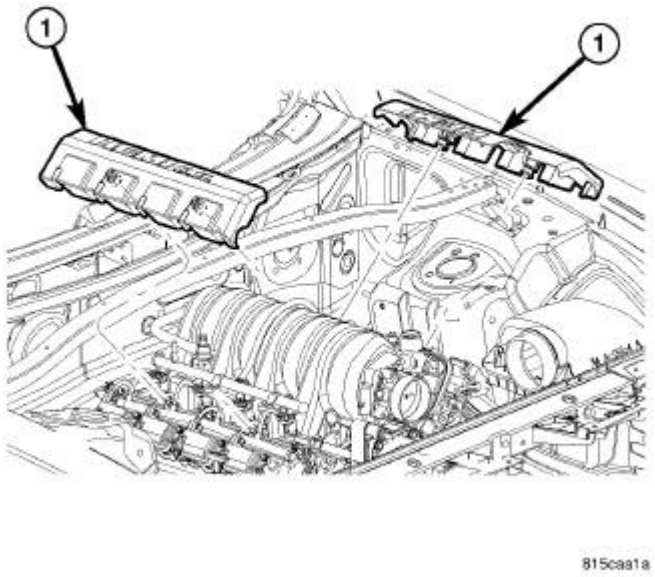

Fig. 66: Engine Covers
Courtesy of CHRYSLER LLC

65. Snap the engine covers (1) onto the fuel rails.

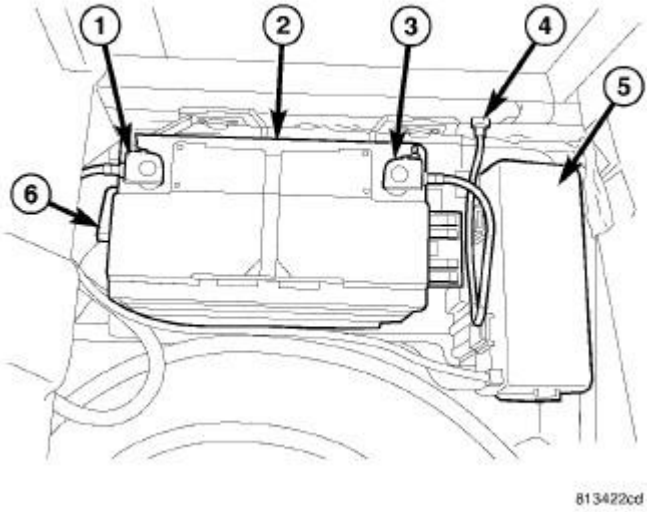

Fig. 67: Battery System Components And PDC Cover
Courtesy of CHRYSLER LLC

66. Connect the negative battery cable (3).
67. Charge the A/C system. Refer to **Heating and Air Conditioning/Plumbing - Standard Procedure** .

68. Start the engine and inspect for leaks.
69. Road test the vehicle.

SPECIFICATIONS

SPECIFICATIONS

GENERAL DESCRIPTION

DESCRIPTION	SPECIFICATION
Engine Type	90° V-8 OHV
Displacement	6.1 Liters 370 (Cubic Inches)
Bore	103 mm (4.055 in.)
Stroke	90.9 mm (3.58 in.)
Compression Ratio	10.3:1
Firing Order	1-8-4-3-6-5-7-2
Lubrication	Pressure Feed - Full Flow Filtration
Cooling System	Liquid Cooled - Forced Circulation
Cylinder Block	Cast Iron
Cylinder Head	Aluminum
Crankshaft	Forged Steel
Camshaft	Cast Iron
Pistons	Aluminum Alloy
Connecting Rods	Powdered Metal

CYLINDER BLOCK

DESCRIPTION	SPECIFICATION	
-	**Metric**	**Standard**
Cylinder Bore Diameter	103 mm	4.055 in.
Out of Round (MAX)	0.008 mm	0.0003 in.
Taper (MAX)	0.0127 mm	0.0005 in.
Lifter Bore Diameter	21.45 - 21.425 mm	0.8444 - 0.8435 in.

PISTONS

DESCRIPTION	SPECIFICATION	
-	**Metric**	**Standard**
Clearance Measured at 38.0 mm (1.5 in.) Below Deck	0.0245 - 0.0515 mm	0.00096 - 0.0020 in.
Ring Groove Diameter	-	-
Groove #1	93.1 - 93.4 mm	3.665 - 3.677 in.
Groove #2	91.6 - 91.8 mm	3.606 - 3.614 in.
Weight	435 grams	15.34 oz.

Piston Length	54.70 - 55.30 mm	2.153 - 2.177 in.
Ring Groove Width	-	-
No. 1	1.51 - 1.54 mm	0.0594 - 0.0606 in
No. 2	1.51 - 1.53 mm	0.0594 - 0.0602 in.
No. 3	3.030 - 3.055 mm	0.1192 - 0.1202 in.

PISTON PINS

DESCRIPTION	SPECIFICATION	
-	Metric	Standard
Clearance In Piston	0.006 - 0.015 mm	0.00023 - 0.00059 in.
Diameter	25.0 - 25.003 mm	0.9843 - 0.9844 in.
Length	64.785 - 65.215 mm	2.551 - 2.568 in.

PISTON RINGS

DESCRIPTION	SPECIFICATION	
-	Metric	Standard
Ring Gap	-	-
Top Compression Ring	0.30 - 0.40 mm	0.0118 - 0.0157 in.
Second Compression Ring	0.35 - 0.60 mm	0.0137 - 0.0236 in.
Oil Control (Steel Rails)	0.20 - 0.71 mm	0.0079 - 0.028 in.
Side Clearance	-	-
Top Compression Ring	0.02 - 0.068 mm	0.0007 - 0.0026 in.
Second Compression Ring	0.02 - 0.058 mm	0.0007 - 0.0022 in.
Oil Ring (Steel Ring)	0.019 - 0.229 mm	0.0007 - 0.0091 in.
Ring Width	-	-
Top Compression Ring	1.472 - 1.490 mm	0.0579 - 0.0586 in.
Second Compression Ring	1.472 - 1.490 mm	0.0579 - 0.0586 in.
Oil Ring (Steel Rails)	0.447 - 0.473 mm	0.0175 - 0.0186 in.

CONNECTING RODS

DESCRIPTION	SPECIFICATION	
-	Metric	Standard
Piston Pin Bore Diameter	23.955 - 23.975 mm	0.9431 - 0.9438 in.
Side Clearance	0.10 - 0.35 mm	0.003 - 0.0137 in.

CRANKSHAFT

DESCRIPTION	SPECIFICATION	
-	Metric	Standard
Main Bearing Journal Diameter	64.988 - 65.012 mm	2.5585 - 2.5595 in.
Bearing Clearance	0.023 - 0.051 mm	0.0009 - 0.002 in.
Out of Round (MAX)	0.005 mm	0.0002 in.

Taper (MAX)	0.003 mm	0.0001 in.
End Play	0.052 - 0.282 mm	0.002 - 0.011 in.
End Play (MAX)	0.282 mm	0.011 in.
Connecting Rod Journal Diameter	53.992 - 54.008 mm	2.125 - 2.126 in.
Bearing Clearance	0.020 - 0.074 mm	0.0007 - 0.0029 in.
Out of Round (MAX)	0.005 mm	0.0002 in.
Taper (MAX)	0.003 mm	0.0001 in.

CAMSHAFT

DESCRIPTION	SPECIFICATION	
-	Metric	Standard
Bearing Journal Diameter	-	-
No. 1	58.2 mm	2.29 in.
No. 2	57.8 mm	2.27 in.
No. 3	57.4 mm	2.26 in.
No. 4	57.0 mm	2.24 in.
No. 5	43.633 mm	1.72 in.
Bearing To Journal Clearance Standard	-	-
No. 1	0.040 - 0.080 mm	0.0015 - 0.003 in.
No. 2	0.050 -0.090 mm	0.0019 - 0.0035 in.
No. 3	0.040 - 0.080 mm	0.0015 - 0.003 in.
No. 4	0.050 - 0.090 mm	0.0019 - 0.0035 in.
No. 5	0.040 - 0.080 mm	0.0015 - 0.003 in.
Camshaft End Play	080 - 0.290 mm	0.0031 - 0.0114 in.

VALVE TIMING

DESCRIPTION	SPECIFICATION
Intake	-
Opens (BTDC)	15.0°
Closes (ATDC)	268.0°
Duration	283.0°
Exhaust	-
Opens (BTDC)	251°
Closes (ATDC)	35°
Duration	286.0°
Valve Overlap	50°

CYLINDER HEAD

DESCRIPTION	SPECIFICATION	
-	Metric	Standard

Valve Seat Angle	44.5° - 45.0°	
Valve Seat Runout (MAX)	0.05 mm	0.0019 in.
Valve Seat Width	-	-
Intake	1.18 - 1.62 mm	0.0464 - 0.0637 in.
Exhaust	1.48 - 1.92 mm	0.0582 - 0.0755 in.
Guide Bore Diameter	7.975 - 8.00 mm	0.313 - 0.314 in.

HYDRAULIC TAPPETS

DESCRIPTION	SPECIFICATION	
-	**Metric**	**Standard**
Body Diameter	21.387 - 21.405 mm	0.8420 - 0.8427 in.
Clearance (To Bore)	0.020 - 0.063 mm	0.0007 - 0.0024 in.
Dry Lash (at the valve)	3.0 mm	0.1181 in.

VALVES

DESCRIPTION	SPECIFICATION	
-	**Metric**	**Standard**
Face Angle	-	
Intake	45.5° - 46.0°	
Exhaust	45.0° - 45.5°	
Head Diameter	-	-
Intake	52.67 - 52.93 mm	2.07 - 2.08 in.
Exhaust	40.37 - 40.63 mm	1.57 - 1.60 in.
Length (Overall From Gage Line)	-	-
Intake	124.38 - 124.76 mm	4.897 - 4.912 in.
Exhaust	122.47 - 122.85 mm	4.822 - 4.837 in.
Stem Diameter	-	-
Intake	7.734 - 7.954 mm	0.312 - 0.313 in.
Exhaust	7.930 - 7.950 mm	0.312 - 0.313 in.
Stem - to - Guide Clearance	-	-
Intake	0.021 - 0.066 mm	0.0008 - 0.0025 in.
Exhaust	0.025 - 0.070 mm	0.0010 - 0.0028 in.
Valve Lift (@ Zero Lash)	-	-
Intake	14.5 mm	0.571 in.
Exhaust	14.0 mm	0.551 in.

VALVE SPRING

DESCRIPTION	SPECIFICATION	
-	**Metric**	**Standard**
Spring Force (Valve Closed)	-	-
Intake	445.0 N +/- 22.0 N @ 47.5 mm	99.0 lbs +/- 4.0 - 9.0 lbs. @

		1.870 in.
Exhaust	445.0 N +/- 22.0 N @ 45 mm	99.0 lbs +/- 4.0 - 9.0 lbs. @ 1.772 in.
Spring Force (Valve Open)	-	-
Intake	1450.0 N +/- 68.0 N @ 33.0 mm	325.5 lbs. +/- 15.3 lbs. @ 1.3 in.
Exhaust	1450.0 N +/- 68.0 N @ 31.0 mm	325.5 lbs. +/- 15.3 lbs. @ 1.22 in.
Free Length (approx)	-	-
Intake	54.2 mm	2.133 in.
Exhaust	51.4 mm	2.023 in.
Number of Coils	-	
Intake	7.35	
Exhaust	7.0	
Wire Diameter	-	-
Intake and Exhaust	5.65 x 4.51 mm	0.222 - 0.178 in.
Installed Height (Spring Seat to Bottom of Retainer)	-	-
Intake	47.5 mm	1.870 in.
Exhaust	45.0 mm	1.772 in.

OIL PUMP

DESCRIPTION	SPECIFICATION	
-	**Metric**	**Standard**
Clearance Over Rotors (MAX)	0.095 mm	0.0038 in.
Outer Rotor to Pump Body Clearance (MAX)	0.235 mm	0.009 in.
Tip Clearance Between Rotors (MAX)	0.150 mm	0.006 in.

OIL PRESSURE

SPECIFICATION	SPECIFICATION
At Curb Idle Speed (MIN)*	25 kPa (4 psi)
@ 3000 RPM	170 - 758 kPa (25 - 110 psi)
*** CAUTION: If pressure is zero at curb idle, DO NOT run engine**	

TORQUE

6.1L ENGINE

DESCRIPTION	N.m	Ft. Lbs.	In. Lbs.
Block Pipe Plugs		-	
(1/4 NPT)	20	15	-

(3/8 NPT)	27	20	-
Camshaft Sprocket - Bolt	122	90	-
Camshaft Tensioner Plate - Bolts	28	21	-
Timing Chain Case Cover - Bolts	28	21	-
Lifting Stud	55	40	-
Connecting Rod Cap - Bolts	45 plus 60° Turn	33 plus 60° Turn	-
Main Bearing Cap - Bolts		-	
M-12 Bolts	28 plus 90° Turn	21 plus 90° Turn	-
Crossbolts M-8 Bolts	22	16	-
Cylinder Head - Bolts **NOTE:** **Follow Installation sequence. See Engine/Cylinder Head - Installation.**		-	
M-12 Bolts			
Step 1 - Tighten bolts 1-10 Step 1 - Tighten bolts 11-15	34 20	25 15	-
Step 2 - Tighten bolts 1-1 0 Step 2 - Tighten bolts 11-1 5 verify	54 20	40 15	-
Step 3 - Rotate bolts 1-10	90°	-	-
Step 4 - Tighten bolts 11-15	34	25	-
Cylinder Head Cover - Bolts	8	-	70
Exhaust Manifold to Cylinder Head - Bolts	31	23	-
Flexplate to Crankshaft - Bolts	95	70	-
Flywheel to Crankshaft - Bolts	75	55	-
Front Insulator - Through bolt/nut	95	70	-
Front Insulator to Block - Bolts	95	70	-
Generator - Mounting Bolt	55	40	-
Intake Manifold - Bolts **NOTE:** **Follow Installation sequence. See Engine/Manifolds/MANIFOLD, Intake - Installation**	12	9	106
Lifter Guide Holder	12	9	106
Piston Oil Cooler Jet - Bolts	13	10	115
Oil Pan - Bolts	12	9	105
Oil Dipstick Tube	31	23	-
Oil Pan - Drain Plug	27	20	-

Oil Pump - Attaching Bolts	28	21	-
Oil Pump Pickup Tube - Bolt and Nut	28	21	-
Rear Seal Retainer Attaching Bolts	15	11	-
Rear Insulator to Bracket	68	50	-
Rear Insulator to Crossmember	41	30	-
Rear Insulator to Transmission	68	50	-
Rear Insulator Bracket - Bolts	68	50	-
Rocker Arm - Bolts	22	16	-
Thermostat Housing - Bolts	28	21	-
Throttle Body - Bolts	12	9	105
Vibration Damper - Bolt	176	129	-
Water Pump to Timing Chain Case Cover - Bolts	28	21	-

SPECIAL TOOLS

SPECIAL TOOLS

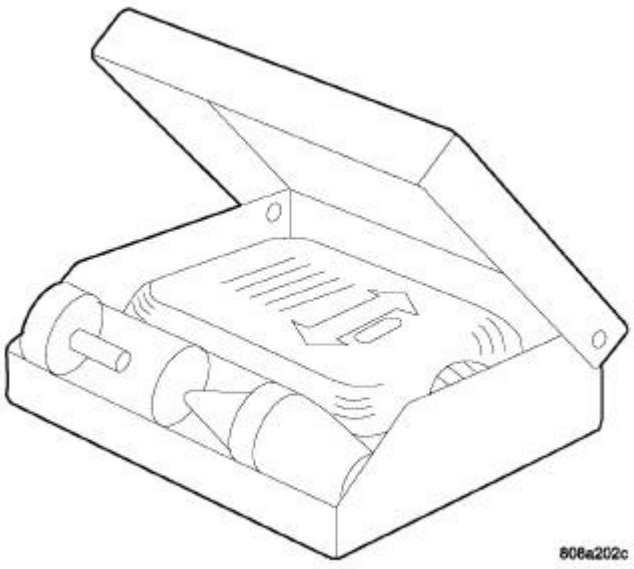

Fig. 68: BLOC-CHEK-KIT - C-3685-A
Courtesy of CHRYSLER LLC

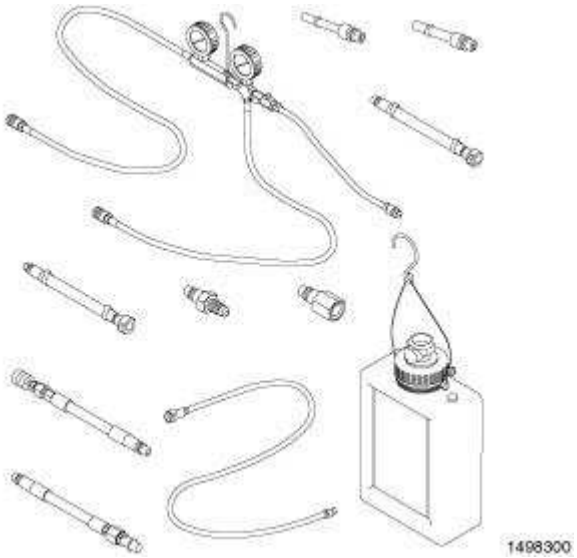

Fig. 69: DECAY TOOL, FUEL - 8978A
Courtesy of CHRYSLER LLC

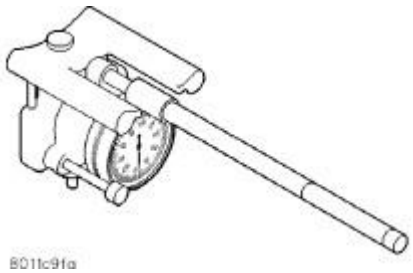

Fig. 70: CYLINDER INDICATOR - C-119
Courtesy of CHRYSLER LLC

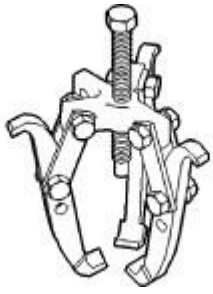

Fig. 71: PULLER - 1023
Courtesy of CHRYSLER LLC

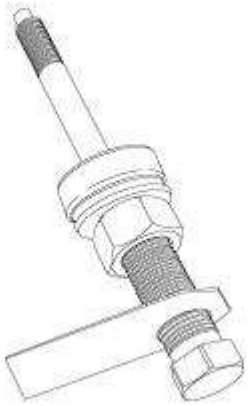

Fig. 72: INSTALLER, DAMPER - 8512A
Courtesy of CHRYSLER LLC

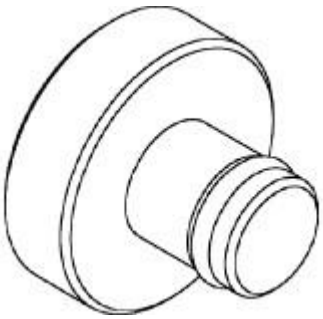

Fig. 73: INSERT, CRANKSHAFT - 8513A
Courtesy of CHRYSLER LLC

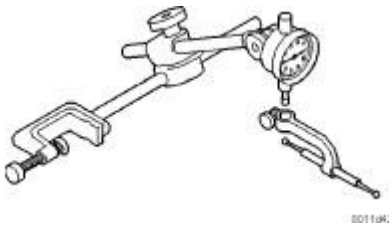

Fig. 74: SET, DIAL INDICATOR - C-3339A
Courtesy of CHRYSLER LLC

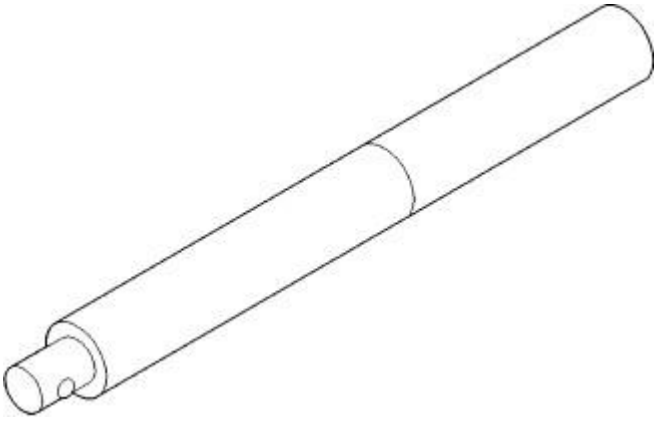

Fig. 75: DRIVER HANDLE, UNIVERSAL - C-4171
Courtesy of CHRYSLER LLC

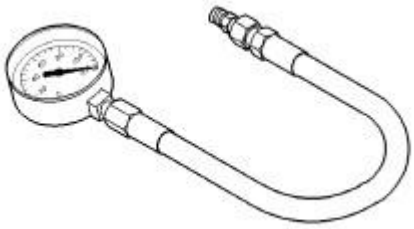

Fig. 76: GAUGE, PRESSURE - C-3292A
Courtesy of CHRYSLER LLC

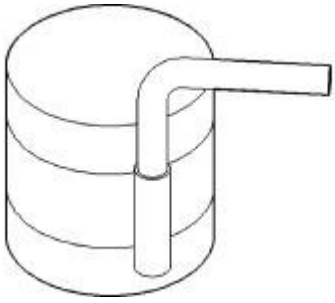

Fig. 77: COMPRESSOR, PISTON - C-385
Courtesy of CHRYSLER LLC

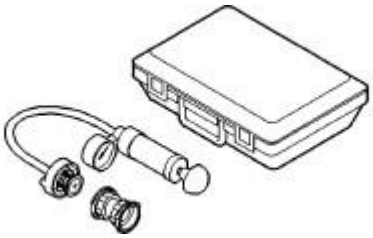

Fig. 78: TESTER, COOLING SYSTEM - 7700
Courtesy of CHRYSLER LLC

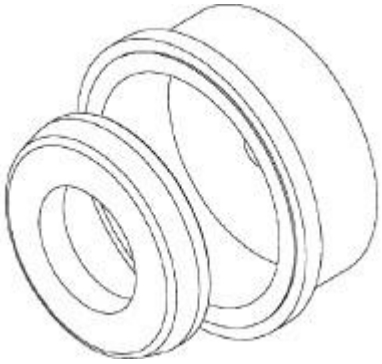

Fig. 79: INSTALLER, SEAL - 8349
Courtesy of CHRYSLER LLC

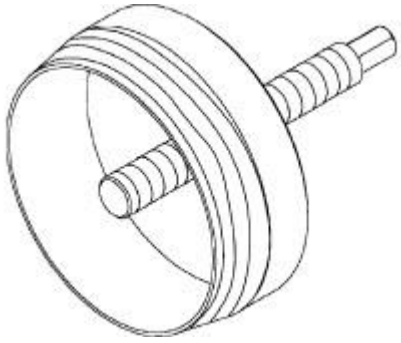

Fig. 80: REMOVER, SEAL - 8506
Courtesy of CHRYSLER LLC

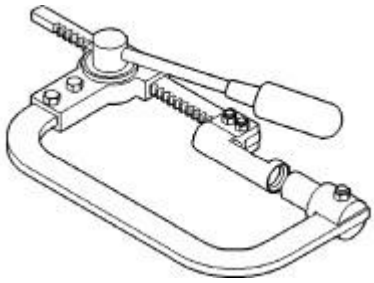

Fig. 81: COMPRESSOR, VALVE SPRING - C-3422-D
Courtesy of CHRYSLER LLC

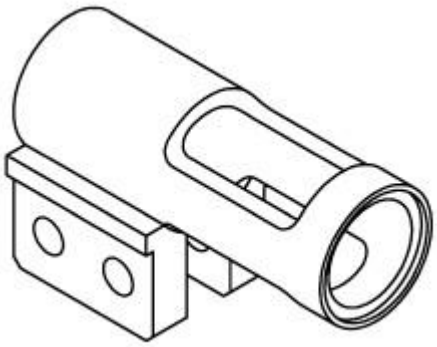

Fig. 82: ADAPTER, VALVE SPRING - 8464
Courtesy of CHRYSLER LLC

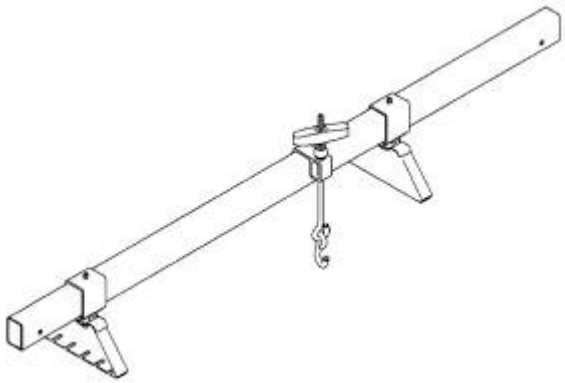

Fig. 83: SUPPORT FIXTURE, ENGINE - 8534B
Courtesy of CHRYSLER LLC

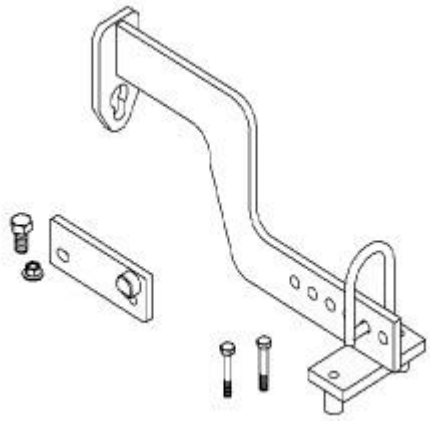

Fig. 84: ENGINE LIFT FIXTURE - 8984A
Courtesy of CHRYSLER LLC

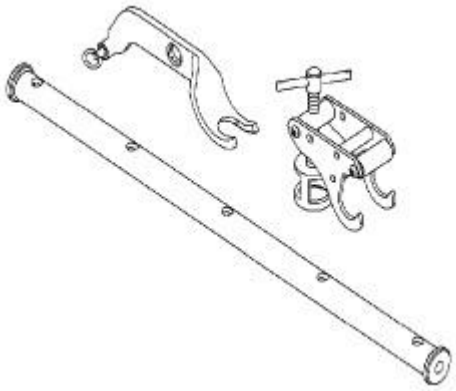

Fig. 85: COMPRESSOR, VALVE SPRING - 9065A
Courtesy of CHRYSLER LLC

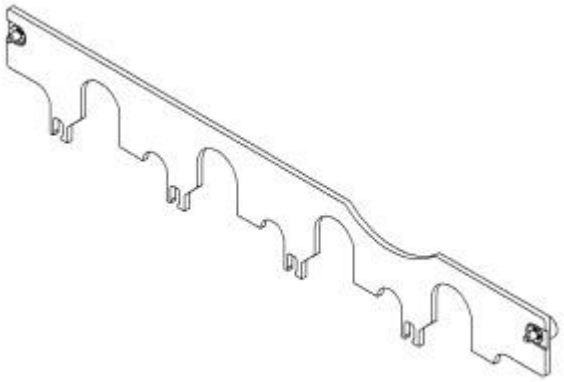

Fig. 86: RETAINER, PUSH ROD - 9070
Courtesy of CHRYSLER LLC

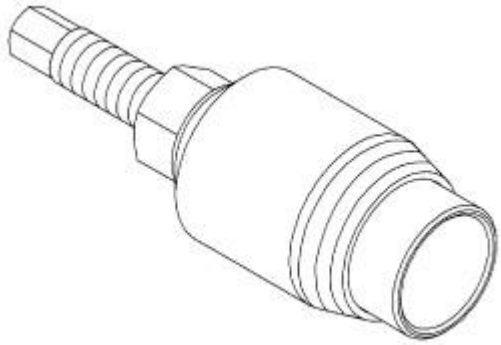

Fig. 87: REMOVER, SEAL - 9071
Courtesy of CHRYSLER LLC



Fig. 88: INSTALLER, SEAL - 9072
Courtesy of CHRYSLER LLC

AIR INTAKE SYSTEM

AIR CLEANER

Removal

REMOVAL

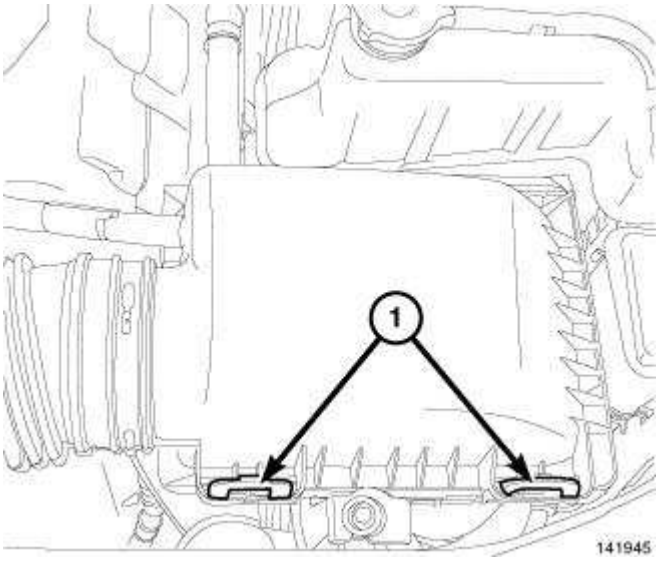

Fig. 89: Tabs From Housing Cover
Courtesy of CHRYSLER LLC

1. Release tabs (1) from housing cover.

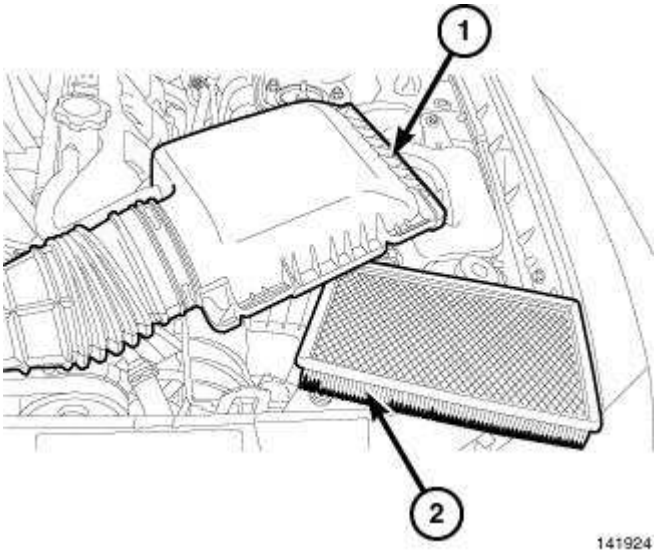

Fig. 90: Air Cleaner Element
Courtesy of CHRYSLER LLC

2. Reposition cover (1).
3. Remove air cleaner element (2) from housing.
4. Clean inside of housing before replacing element.

Installation

INSTALLATION

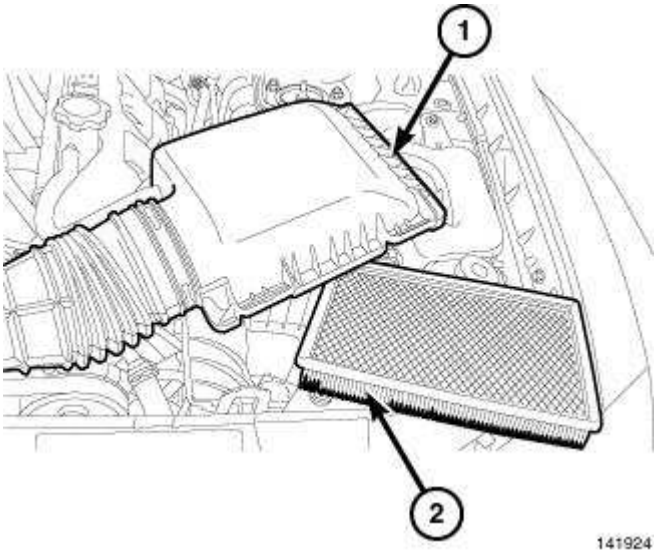

Fig. 91: Air Cleaner Element
Courtesy of CHRYSLER LLC

1. Install the filter element (2) into the housing.

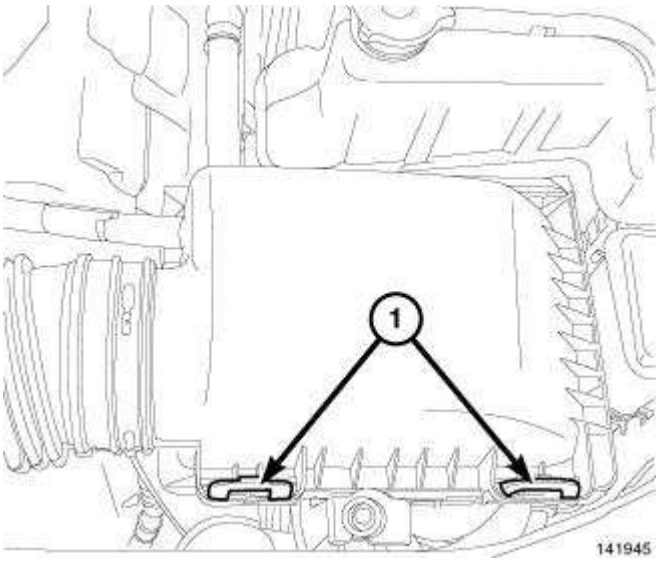

Fig. 92: Tabs From Housing Cover
Courtesy of CHRYSLER LLC

2. Position the housing cover into the housing locating tabs.
3. Push the cover in place and verify that the retaining clips (1) are fully seated.

BODY, AIR CLEANER

Removal

REMOVAL

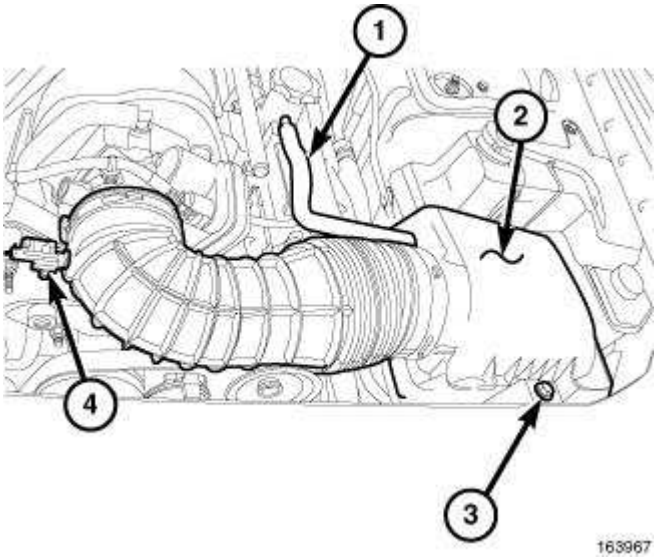

Fig. 93: Air Duct To Throttle Body
Courtesy of CHRYSLER LLC

1. Loosen clamp and disconnect air duct at throttle body.
2. Disconnect intake air temperature sensor (4) electrical connector.
3. Remove makeup air hose (1).
4. Remove air cleaner housing retaining bolt (3) and remove air cleaner housing (2).

Installation

INSTALLATION

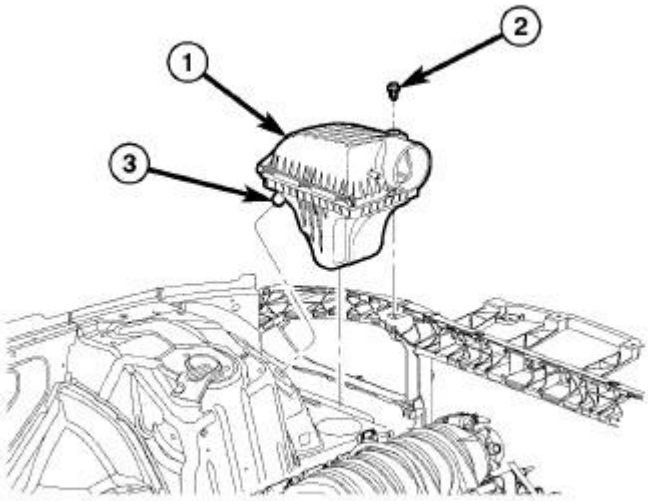

Fig. 94: Air Cleaner Housing
Courtesy of CHRYSLER LLC

1. Install the air filter housing (1) into locating pin (3).
2. Install the hold down bolt (2) into the air filter housing (1).

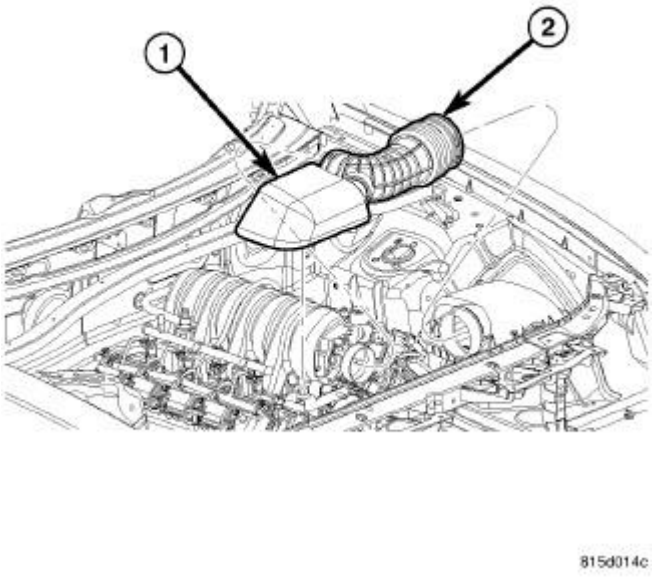

Fig. 95: Air Cleaner Duct
Courtesy of CHRYSLER LLC

3. Install air duct (2) to air cleaner cover and tighten hose clamp to 3 N.m (30 in. lbs.).
4. If any other hose clamps were removed from air intake system, tighten them to 3.4 N.m (30 in. lbs.).

CYLINDER HEAD

OPERATION

OPERATION

The cylinder head closes the combustion chamber allowing the pistons to compress the air fuel mixture to the correct ratio for ignition. The valves located in the cylinder head open and close to either allow clean air into the combustion chamber or to allow the exhaust gases out, depending on the stroke of the engine.

DIAGNOSIS AND TESTING

CYLINDER HEAD GASKET FAILURE

A cylinder head gasket leak can be located between adjacent cylinders or between a cylinder and the adjacent water jacket.

- Possible indications of the cylinder head gasket leaking between adjacent cylinders are:
  - Loss of engine power
  - Engine misfiring
  - Poor fuel economy
- Possible indications of the cylinder head gasket leaking between a cylinder and an adjacent water jacket are:
  - Engine overheating
  - Loss of coolant
  - Excessive steam (white smoke) emitting from exhaust
  - Coolant foaming

CYLINDER-TO-CYLINDER LEAKAGE TEST

To determine if an engine cylinder head gasket is leaking between adjacent cylinders, follow the procedures in Cylinder Compression Pressure Test in this service information. An engine cylinder head gasket leaking between adjacent cylinders will result in approximately a 50-70% reduction in compression pressure.

CYLINDER-TO-WATER JACKET LEAKAGE TEST

WARNING: Use extreme caution when the engine is operating with coolant pressure cap removed. Failure to follow this warning may result in serious or fatal injury.

VISUAL TEST METHOD

With the engine cool, remove the coolant pressure cap. Start the engine and allow it to warm up until thermostat opens.

If a large combustion/compression pressure leak exists, bubbles will be visible in the coolant.

COOLING SYSTEM TESTER METHOD

> **WARNING: With cooling system tester in place, pressure will build up fast. Excessive pressure built up, by continuous engine operation, must be released to a safe pressure level. Never permit pressure to exceed 138 kPa (20 psi). Failure to follow this warning may result in serious or fatal injury.**

Install Cooling System Tester 7700 or equivalent to pressure cap neck. Start the engine and observe the tester's pressure gauge. If gauge pulsates with every power stroke of a cylinder a combustion pressure leak is evident.

CHEMICAL TEST METHOD

Combustion leaks into the cooling system can also be checked by using Bloc-Chek Kit C-3685-A or equivalent. Perform test following the procedures supplied with the tool kit.

REMOVAL

REMOVAL

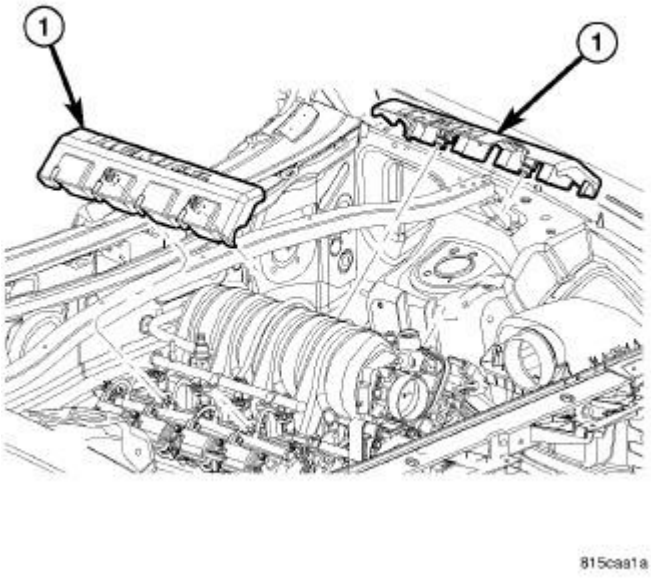

Fig. 96: Engine Covers

Courtesy of CHRYSLER LLC

1. Remove the engine covers (1), they snap off of the fuel rail.
2. Disconnect the manifold absolute pressure (MAP) sensor harness connector, located at the back of the intake manifold.
3. Disconnect the short runner valve (SRV), located at the back of the intake manifold.
4. Disconnect the intake air temperature (IAT) sensor harness connector.

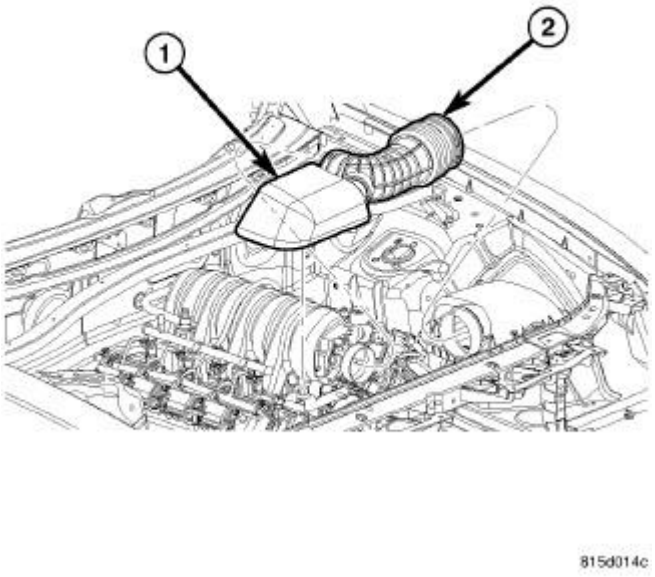

Fig. 97: Air Cleaner Duct
Courtesy of CHRYSLER LLC

5. Remove the air cleaner housing (1) and clean air tube (2).
6. Disconnect the electronic throttle body harness connector.
7. Disconnect the brake booster vacuum hose (it may be easier to disconnect the vacuum hose at the booster).
8. Disconnect the evaporative purge vacuum hose, and the make-up air (MUA) hose from the intake manifold.
9. Perform the fuel system pressure release procedure. Refer to **Fuel System/Fuel Delivery - Standard Procedure** .
10. Disconnect the fuel injector harness connectors.
11. Disconnect the fuel supply line. Refer to **Fuel System/Fuel Delivery/FITTING, Quick Connect - Standard Procedure** .

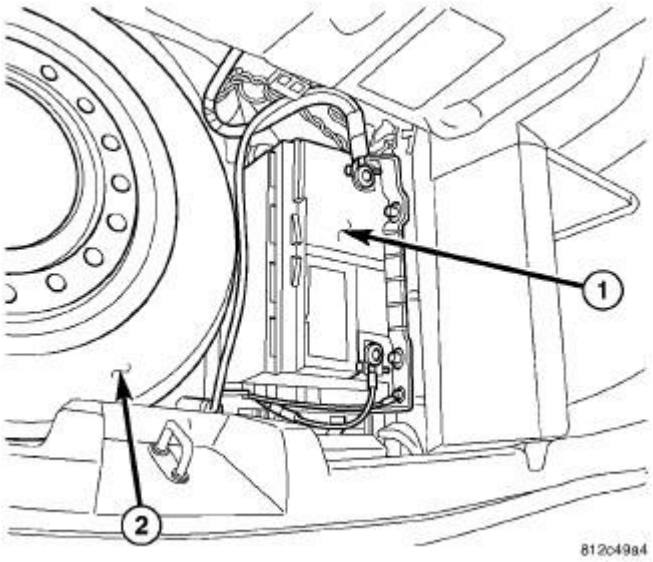

Fig. 98: Locating Battery
Courtesy of CHRYSLER LLC

12. Disconnect the negative battery cable.
13. Drain the cooling system. Refer to **Cooling - Standard Procedure** .

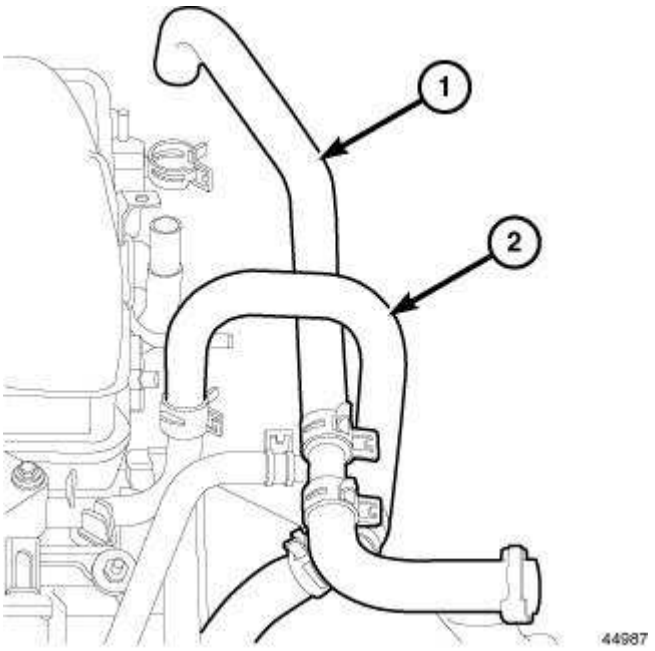

Fig. 99: Heater Hose Supply
Courtesy of CHRYSLER LLC

14. Disconnect the heater hoses (1,2).

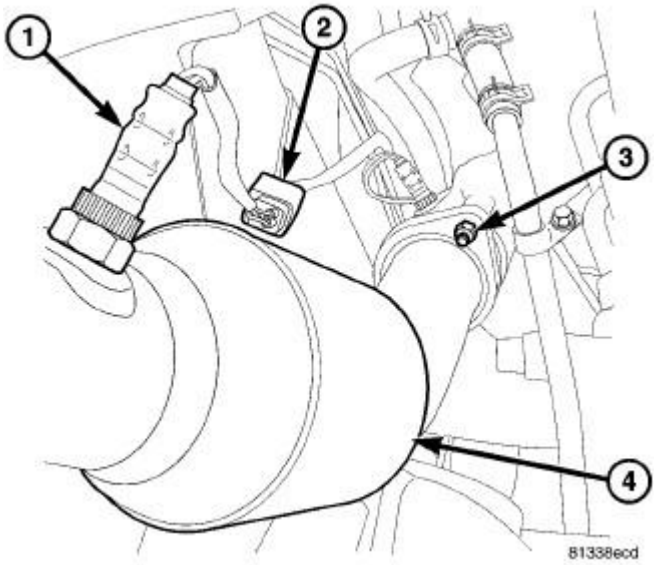

Fig. 100: Oxygen Sensor & Catalytic Converter
Courtesy of CHRYSLER LLC

CAUTION: When separating the exhaust pipes from the manifolds, disconnect the oxygen sensor connector(s). Allowing the exhaust pipes hanging from the oxygen sensor wires damages the harness and/or sensor.

15. Disconnect the oxygen sensor electrical connectors (2).
16. Saturate all exhaust bolts and nuts with Mopar® Rust Penetrant. Allow five minutes for penetration.
17. Remove the exhaust pipe to the manifold bolts (3) and separate the exhaust pipes (4) from the exhaust manifolds.

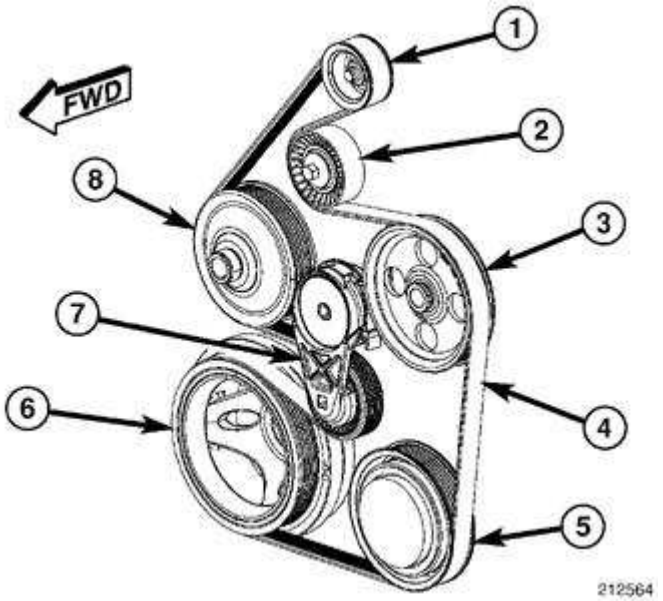

Fig. 101: Identifying Accessory Drive Belt Routing
Courtesy of CHRYSLER LLC

CAUTION: Do not let the tensioner arm snap back to the freearm position, sever damage may occur to the tensioner.

18. Rotate the accessory drive belt tensioner (7) counterclockwise until it contacts it's stop. Remove the accessory drive belt, then slowly rotate the tensioner into the freearm position. Refer to **Cooling/Accessory Drive/BELT, Serpentine - Removal** .

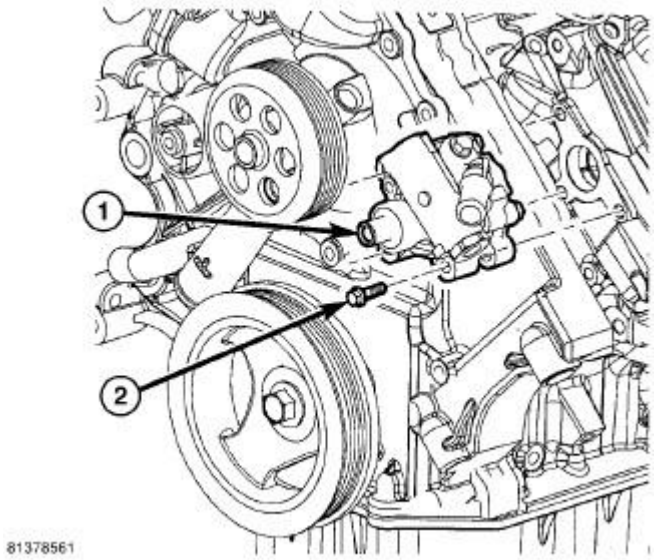

Fig. 102: Power Steering Pump
Courtesy of CHRYSLER LLC

NOTE: It is not necessary to disconnect the power steering pump hoses from the pump, for power steering pump removal.

19. Remove the three power steering pump (1) mounting bolts (2) through the access holes in the pulley. Refer to **Steering/Pump - Removal** .
20. Remove the power steering pump (1) and secure out of the way.

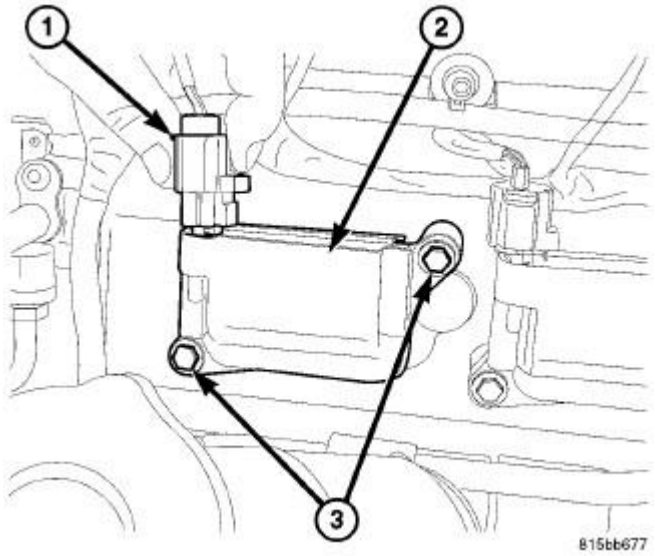

Fig. 103: Ignition Coil Mounting Bolts
Courtesy of CHRYSLER LLC

21. Disconnect the ignition coil electrical connectors (1).
22. Remove ignition coil mounting bolts (3).

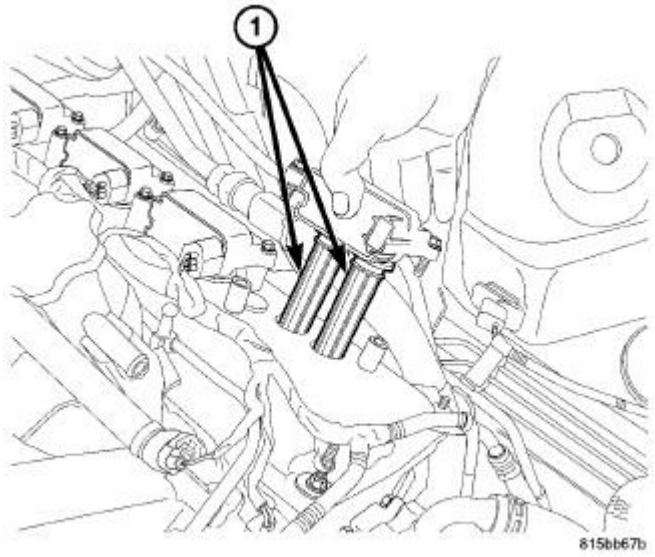

Fig. 104: Removing/Installing Ignition Coil
Courtesy of CHRYSLER LLC

23. Remove the ignition coils (1).

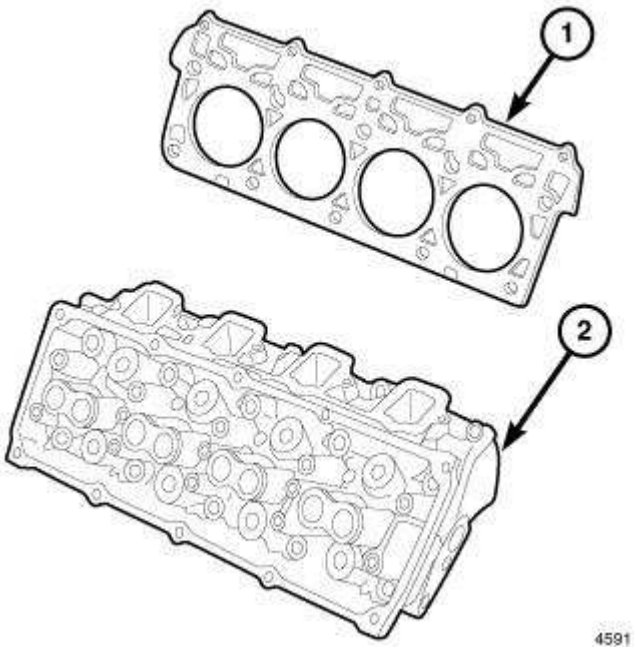

Fig. 105: Cylinder Head Components
Courtesy of CHRYSLER LLC

24. Remove the cylinder head cover (1). See **Engine/Cylinder Head/COVER(S), Cylinder Head - Removal**.

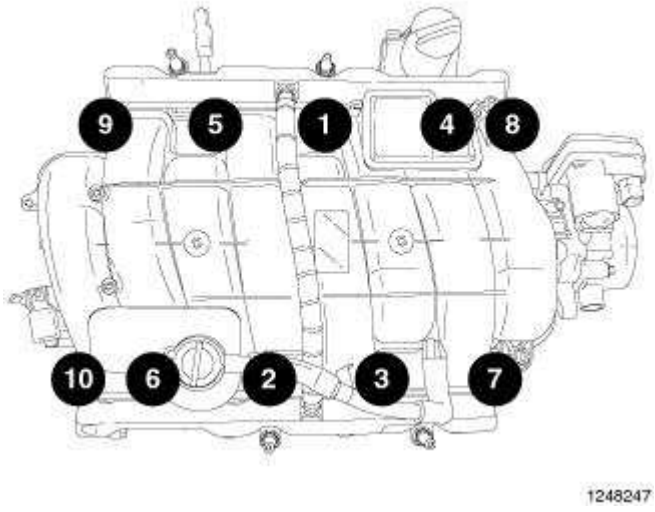

Fig. 106: Intake Manifold Removal & Tightening Sequence
Courtesy of CHRYSLER LLC

NOTE: Remove the intake manifold and throttle body as an assembly.

25. Using the sequence shown in illustration, remove the intake manifold retaining fasteners
26. Remove the intake manifold and throttle body as an assembly. See

Engine/Manifolds/MANIFOLD, Intake - Removal.

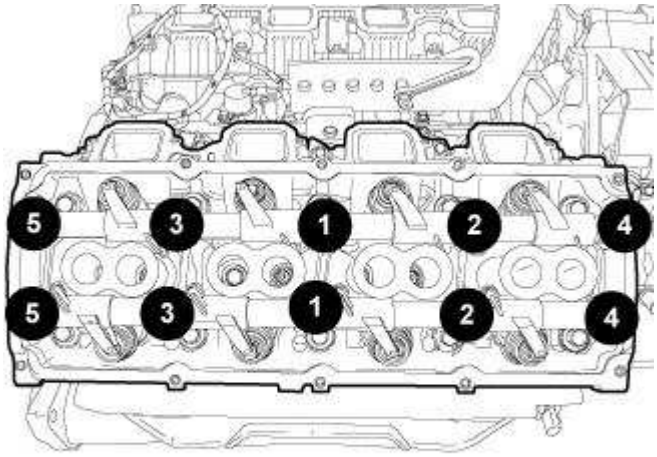

921225

Fig. 107: Rocker Shafts Retaining Bolt Removal & Tightening Sequence
Courtesy of CHRYSLER LLC

NOTE: Make sure to identify the original location of the rocker arms and push rods for correct assembly.

27. Using the sequence shown in illustration, remove the rocker arm assemblies. See **Engine/Cylinder Head/ROCKER ARM, Valve - Removal**.
28. Remove the push rods.

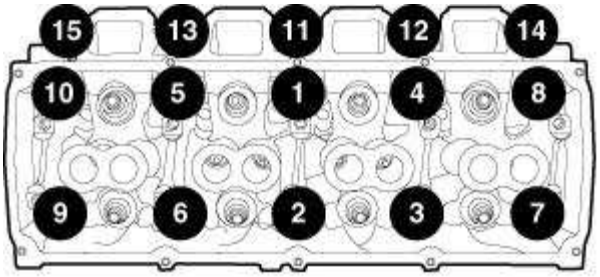

88745

Fig. 108: Cylinder Head Bolt Removal & Tightening Sequence
Courtesy of CHRYSLER LLC

29. Using the sequence shown in illustration, remove the head bolts from each cylinder head and remove the cylinder heads. Discard the cylinder head gaskets.

CLEANING

CLEANING

Clean all surfaces of cylinder block and cylinder heads.

Clean cylinder block front and rear gasket surfaces using a suitable solvent.

INSPECTION

INSPECTION

1. Inspect the cylinder head for out-of-flatness, using a straightedge and a feeler gauge. If tolerances exceed 0.0508 mm (0.002 in.) replace the cylinder head.
2. Inspect the valve seats for damage. Service the valve seats as necessary.
3. Inspect the valve guides for wear, cracks or looseness. If either condition exist, replace the cylinder head.
4. Inspect push rods. Replace worn or bent push rods.

INSTALLATION

INSTALLATION

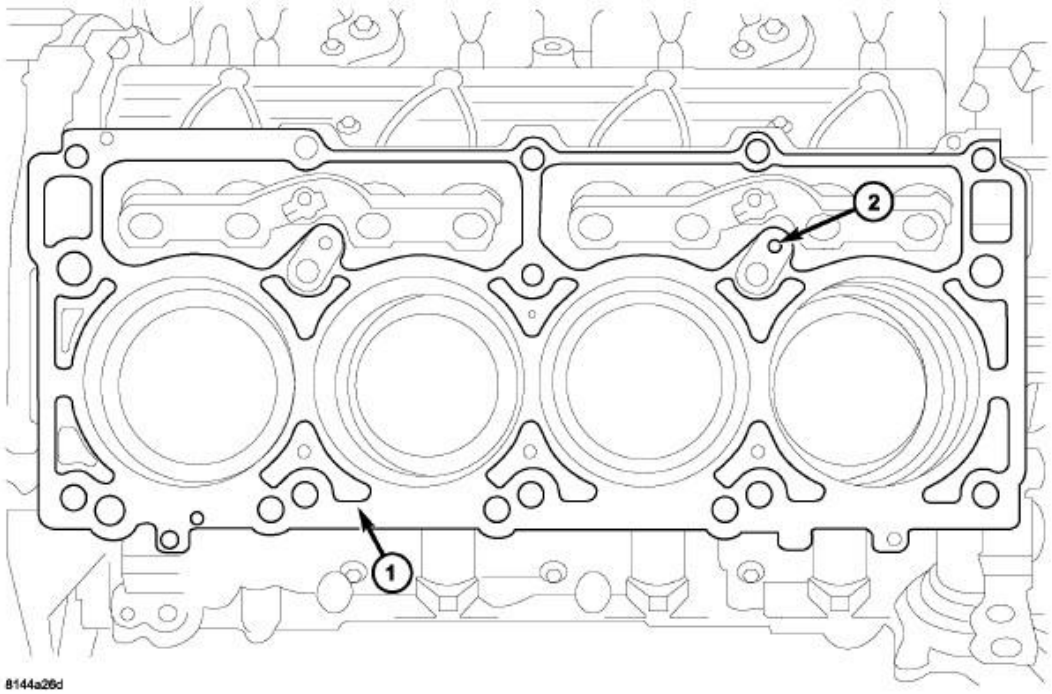

Fig. 109: HEAD GASKET INSTALLATION
Courtesy of CHRYSLER LLC

1. Clean all surfaces of cylinder block and cylinder heads.

2. Clean cylinder block front and rear gasket surfaces using a suitable solvent.

CAUTION: The head gaskets (1) are interchangeable between left and right sides. They are marked "UP" to indicate direction to face up.

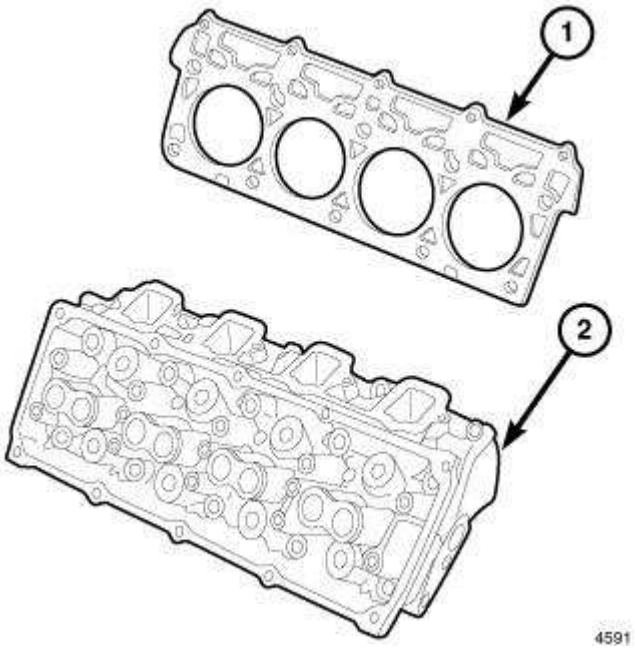

Fig. 110: Cylinder Head Components
Courtesy of CHRYSLER LLC

NOTE: Rotate crankshaft 45°, so that all pistons are 1/2 the way down the cylinder bore to avoid piston to valve contact.

3. Position new cylinder head gaskets (5) onto the cylinder block.
4. Position cylinder heads (4) in place.

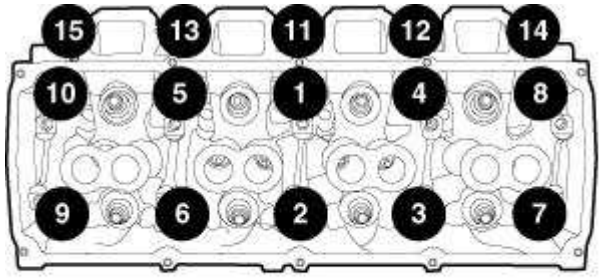

Fig. 111: Cylinder Head Bolt Removal & Tightening Sequence
Courtesy of CHRYSLER LLC

5. Install head bolts.
6. Tighten the cylinder head bolts in four steps using the sequence shown in illustration:

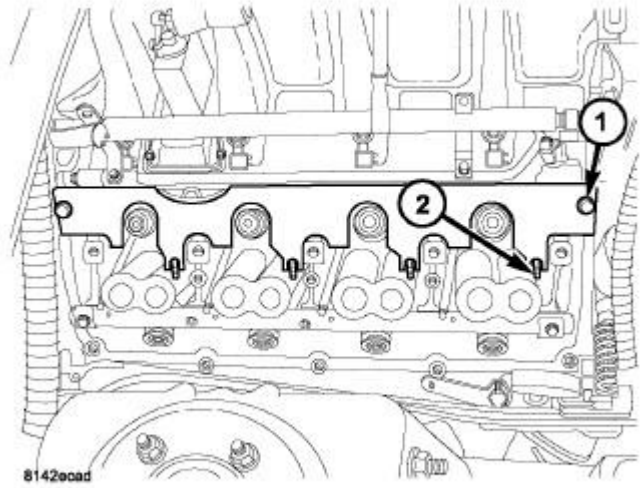

Fig. 112: PUSHROD RETAINING PLATE
Courtesy of CHRYSLER LLC

CAUTION: Pushrods and rocker arm assemblies must be installed in their original locations or engine damage could result.

- Step 1 - Tighten bolts 1-10 to 34 N.m (25 ft. lbs.) and bolts 11-15 to 20 N.m (15 ft. lbs.) in the sequence shown in illustration.
- Step 2 - Tighten bolts 1-1 0 to 54 N.m (40 ft. lbs.) and verify bolts 11-15 are 20 N.m (15 ft. lbs.) in the sequence shown in illustration.
- Step 3 - Rotate bolts 1-10 an additional 90 degrees in the sequence shown in illustration.
- Step 4 - Tighten bolts 11-15 to 34 N.m (25 ft. lbs.) in the sequence shown in illustration.

7. Install Pushrod retainer 9070 (1) on cylinder head.
8. Install intake pushrods in their original position and snap push rods into Pushrod Retainer 9070 (1). See **Engine/Cylinder Head/ROCKER ARM, Valve - Installation**.
9. Install intake rocker shaft and remove Pushrod Retainer 9070 (1).
10. Install exhaust pushrods and rocker shaft.
11. Install the intake manifold and throttle body assembly. See **Engine/Manifolds/MANIFOLD, Intake - Installation**.
12. Install the spark plugs.
13. Connect the heater hoses.

14. Install the fuel supply line.
15. Install the power steering pump.
16. Install the accessory drive belt. Refer to **Cooling/Accessory Drive/BELT, Serpentine - Installation** .

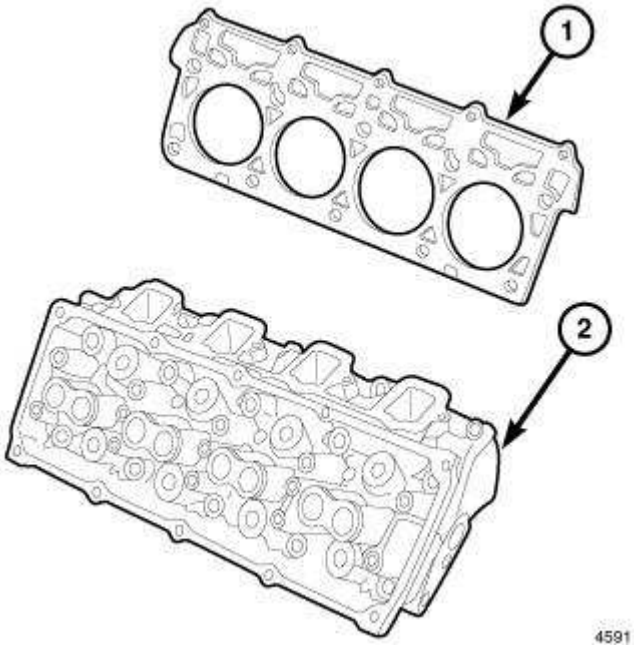

Fig. 113: Cylinder Head Components
Courtesy of CHRYSLER LLC

17. Install cylinder head covers (1). See **Engine/Cylinder Head/COVER(S), Cylinder Head - Installation**.

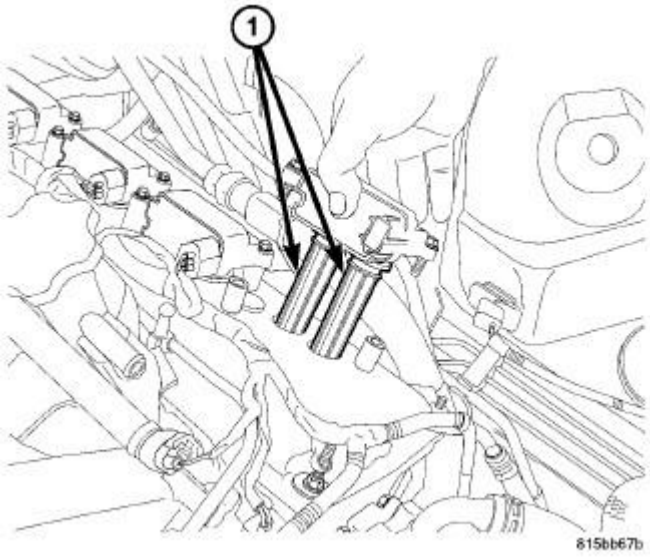

Fig. 114: Removing/Installing Ignition Coil

Courtesy of CHRYSLER LLC

18. Install the ignition coils (1). Refer to **Electrical/Ignition Control/COIL, Ignition - Installation** .

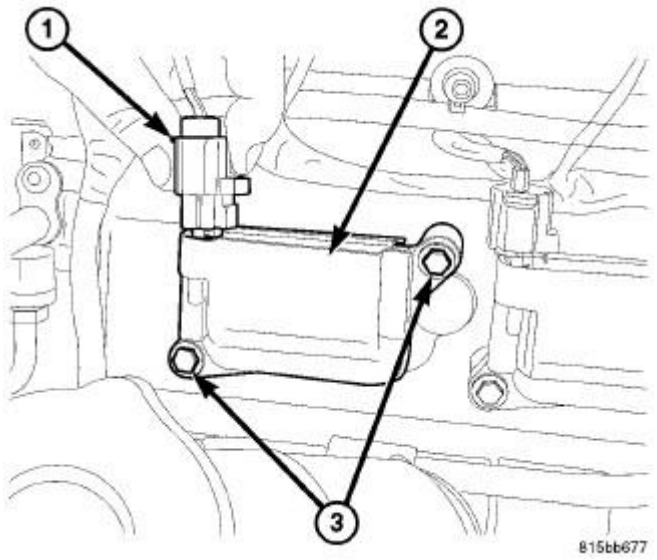

Fig. 115: Ignition Coil Mounting Bolts
Courtesy of CHRYSLER LLC

19. Connect the ignition coil electrical connectors (1) and injector electrical connectors.

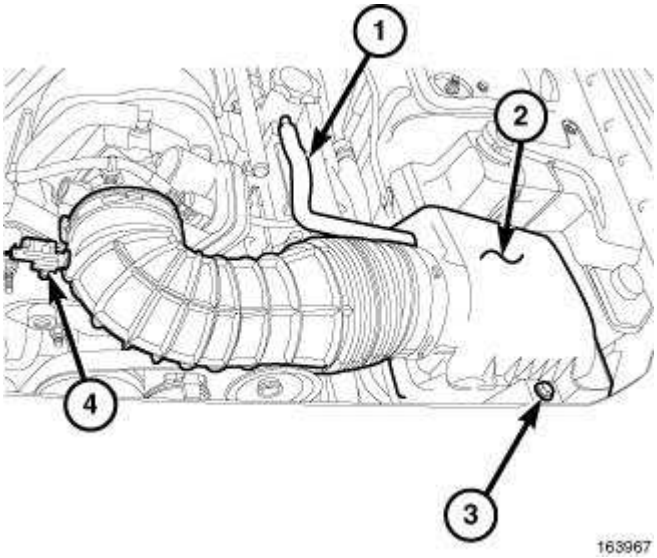

Fig. 116: Air Duct To Throttle Body
Courtesy of CHRYSLER LLC

20. Connect the evaporation control system.
21. Install the air cleaner housing and connect to throttle body.

22. Connect make-up air hose (1), and vacuum lines.
23. Connect intake air temperature sensor (4) electrical connector.

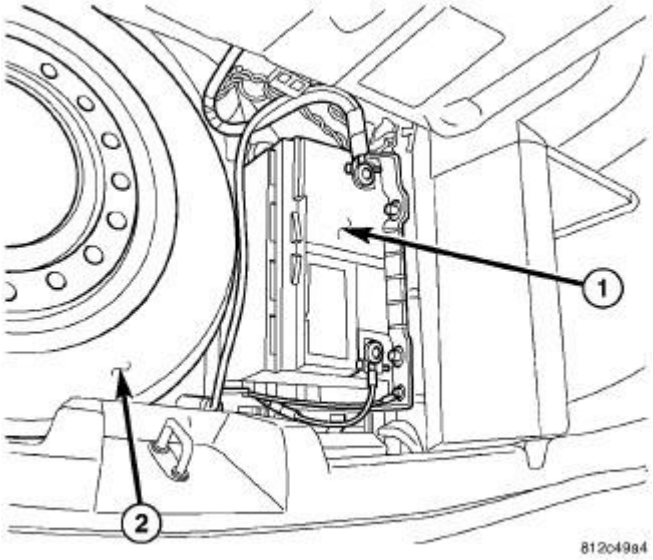

Fig. 117: Locating Battery
Courtesy of CHRYSLER LLC

24. Fill cooling system. Refer to **Cooling - Standard Procedure** .
25. Connect the negative cable to the battery (1).

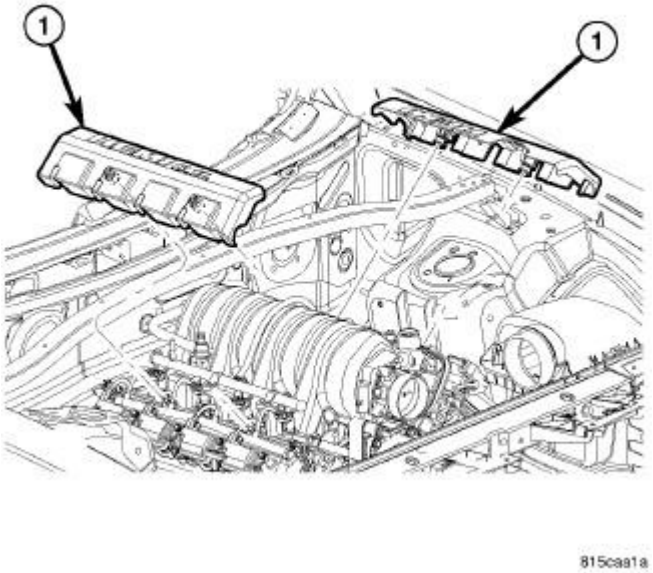

Fig. 118: Engine Covers

Courtesy of CHRYSLER LLC

26. Install engine covers (1).
27. Start engine check for leaks.

COVER(S), CYLINDER HEAD

Removal

REMOVAL

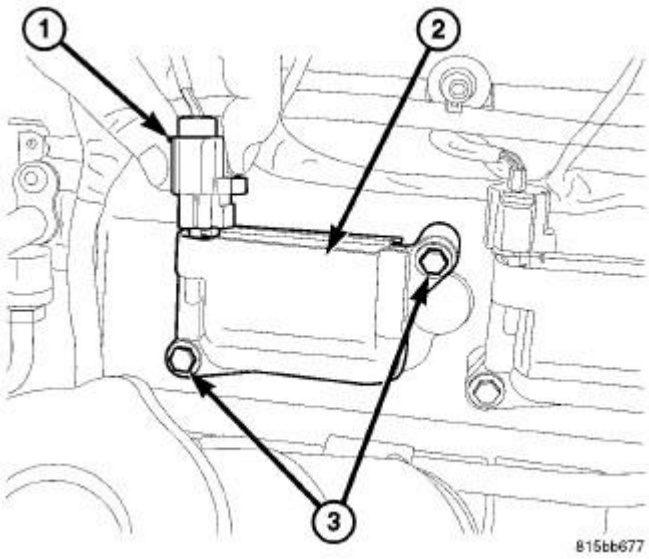

Fig. 119: Ignition Coil Mounting Bolts
Courtesy of CHRYSLER LLC

1. Disconnect negative battery cable.
2. Disconnect ignition coil connector (1).
3. Remove ignition coil retaining bolts (3).

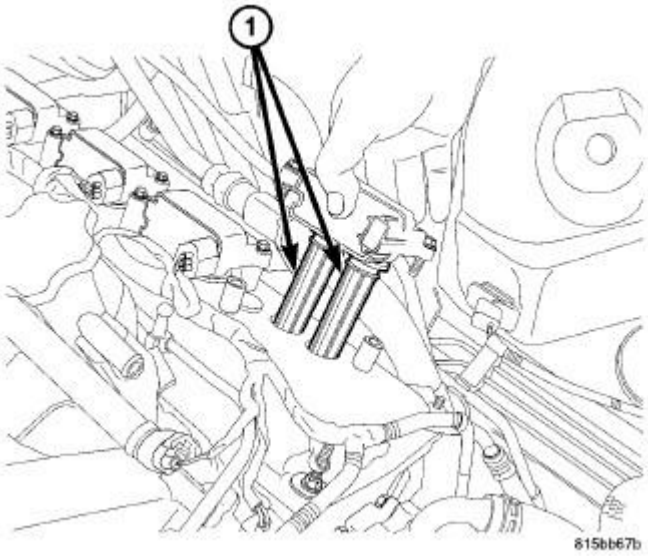

Fig. 120: Removing/Installing Ignition Coil
Courtesy of CHRYSLER LLC

4. Remove ignition coil (1).

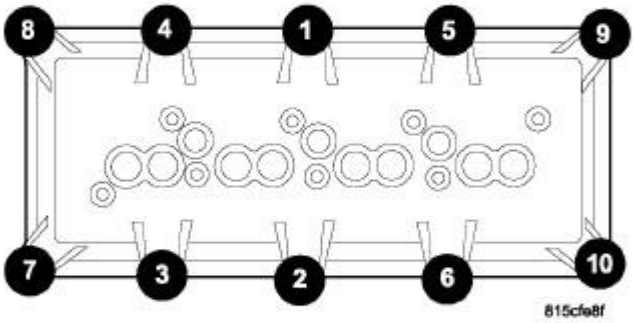

Fig. 121: Cylinder Head Cover Torque Sequence
Courtesy of CHRYSLER LLC

5. Remove cylinder head cover retaining bolts.

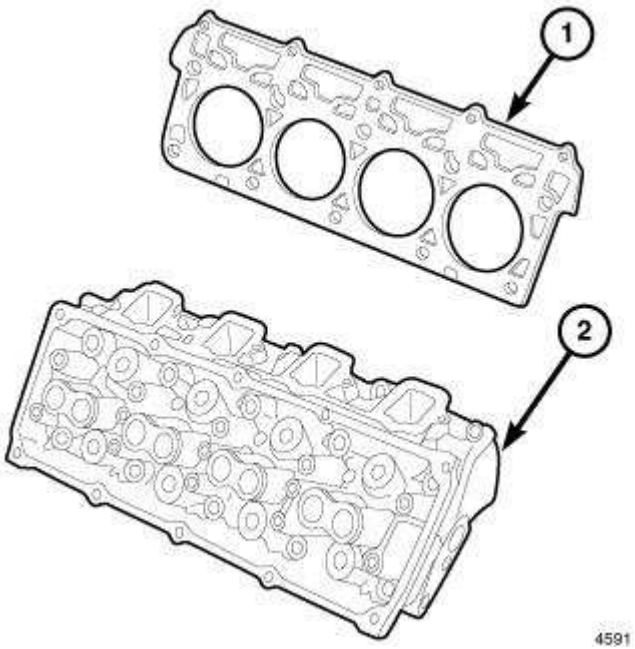

Fig. 122: Cylinder Head Components
Courtesy of CHRYSLER LLC

6. Remove cylinder head cover (1).

NOTE: The gasket (2) may be used again, provided no cuts, tears, or deformation have occurred.

Installation

INSTALLATION

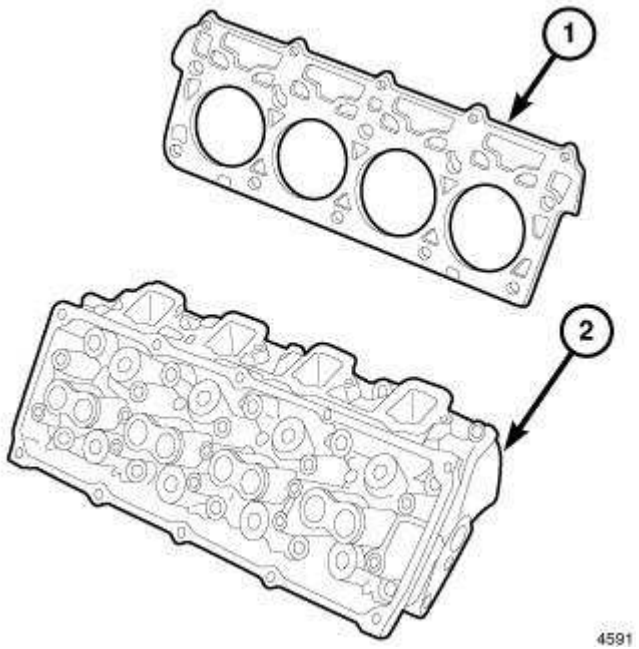

Fig. 123: Cylinder Head Components
Courtesy of CHRYSLER LLC

CAUTION: Do not use harsh cleaners to clean the cylinder head covers. Severe damage to covers may occur.

CAUTION: DO NOT allow other components including the wire harness to rest on or against the engine cylinder head cover. Prolonged contact with other objects may wear a hole in the cylinder head cover.

1. Clean the cylinder head cover (1) and both sealing surfaces (1,4,). Inspect and replace gasket (2) as necessary.
2. Install the cylinder head cover and hand start all fasteners. Verify that all double ended studs (3) are in the correct location.

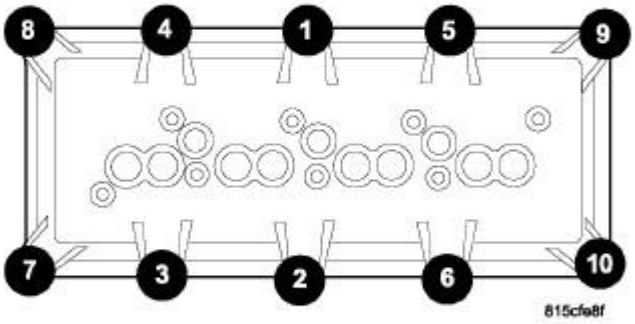

Fig. 124: Cylinder Head Cover Torque Sequence
Courtesy of CHRYSLER LLC

3. Using the sequence shown in illustration, tighten the cylinder head cover bolts and double ended studs to 8 N.m (70 lbs in.).

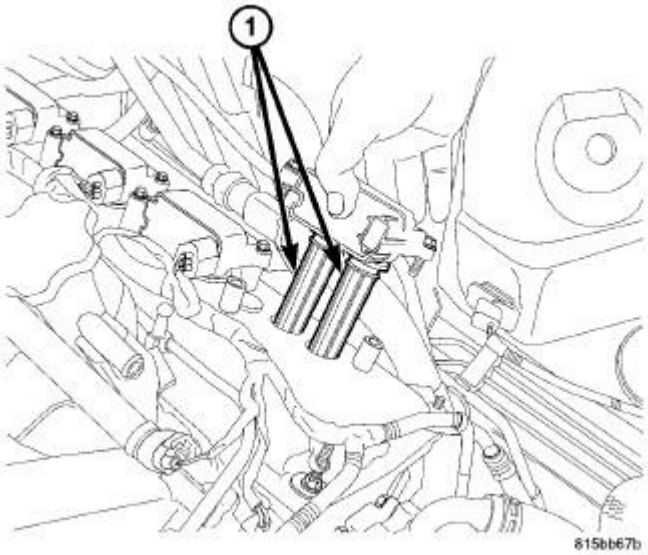

Fig. 125: Removing/Installing Ignition Coil
Courtesy of CHRYSLER LLC

4. Before installing the coil(s), apply dielectric grease to the inside of the spark plug boots (1).
5. Install the ignition coils.

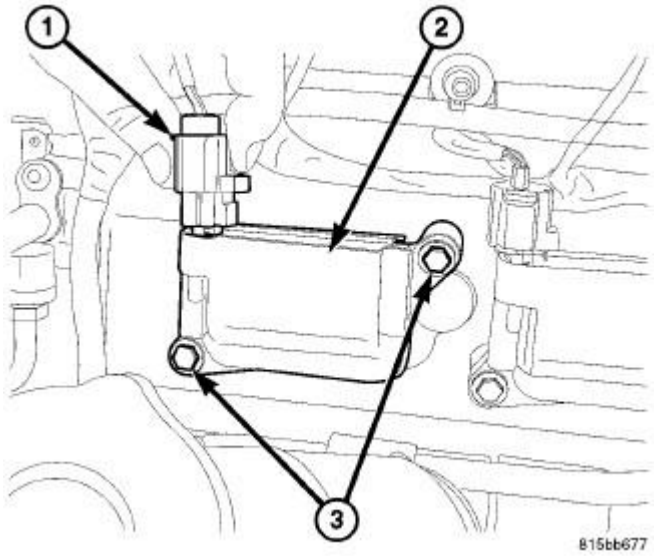

Fig. 126: Ignition Coil Mounting Bolts
Courtesy of CHRYSLER LLC

6. Tighten the fasteners (3) to 7 N.m (62 in. lbs.).
7. Connect the ignition coil electrical connectors (1).
8. Install the PCV hose.
9. Connect the negative battery cable.

ROCKER ARM, VALVE

Removal

REMOVAL

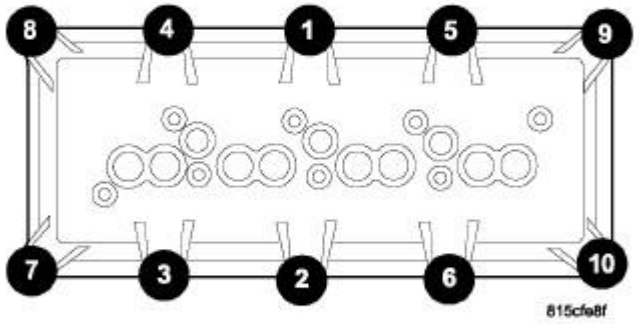

Fig. 127: Cylinder Head Cover Torque Sequence
Courtesy of CHRYSLER LLC

1. Remove cylinder head cover. See **Engine/Cylinder Head/COVER(S), Cylinder Head - Removal**.

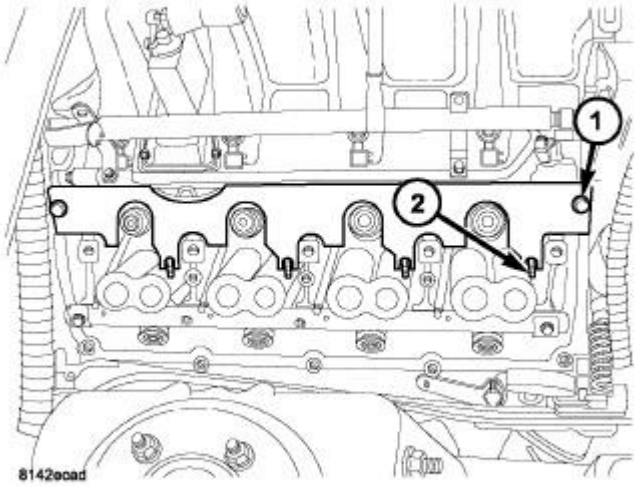

Fig. 128: PUSHROD RETAINING PLATE
Courtesy of CHRYSLER LLC

2. Install Pushrod Retainer 9070 (1).

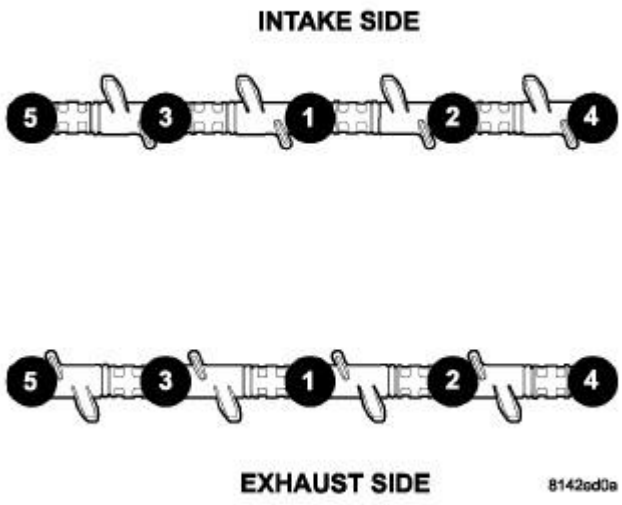

Fig. 129: ROCKER SHAFT TORQUE SEQUENCE
Courtesy of CHRYSLER LLC

3. Loosen the rocker shafts using the sequence provided.

CAUTION: The rocker shaft assemblies are not interchangeable between intake and exhaust. The intake rocker arms are marked with an "I".

4. Remove the rocker shafts. Note location for reassembly.

CAUTION: The longer pushrods are for the exhaust side, and the shorter pushrods are for intake side.

5. Remove the pushrods. Note pushrod location for reassembly.

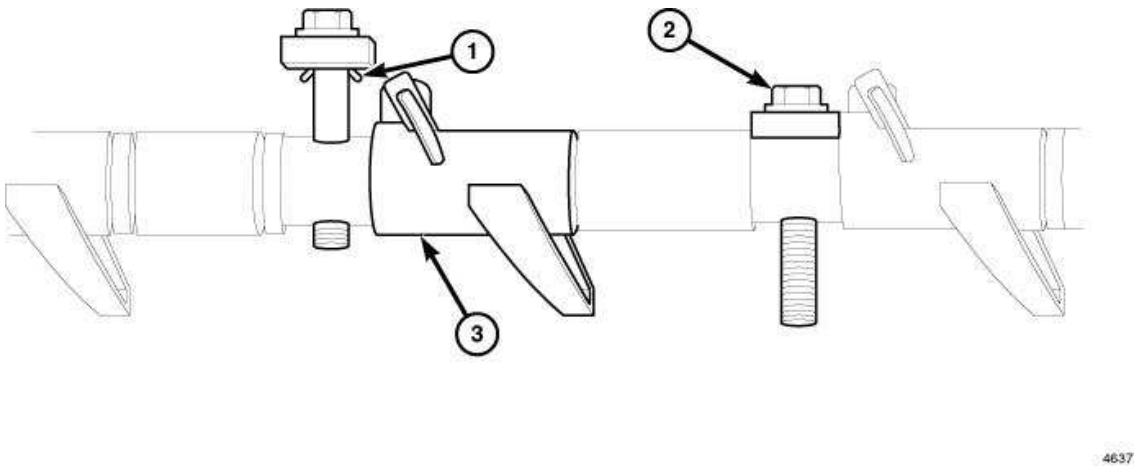

Fig. 130: ROCKER ARM RETAINER REMOVAL/INSTALLATION
Courtesy of CHRYSLER LLC

CAUTION: Do not remove the retainers from the rocker shaft. The assembly tangs (1) at the bottom of the retainers can be damaged, causing the assembly tangs to break off, and get into the engine.

Installation

INSTALLATION

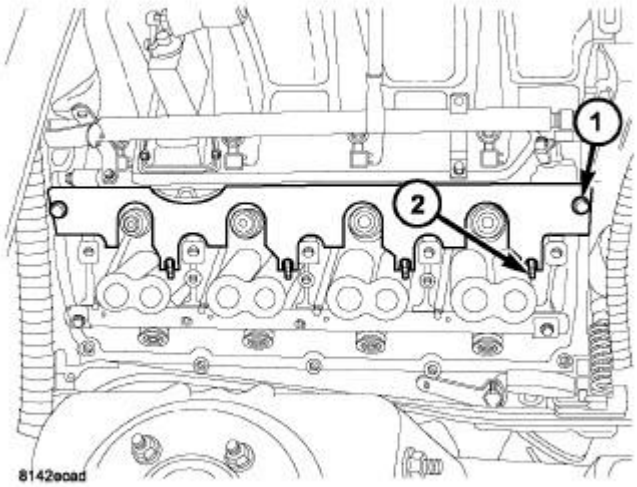

Fig. 131: PUSHROD RETAINING PLATE
Courtesy of CHRYSLER LLC

CAUTION: The longer pushrods are for the exhaust side, and the shorter pushrods are for intake side.

1. Install the pushrods in the same order as removed.
2. Install the Pushrod Retainer 9070 (1).

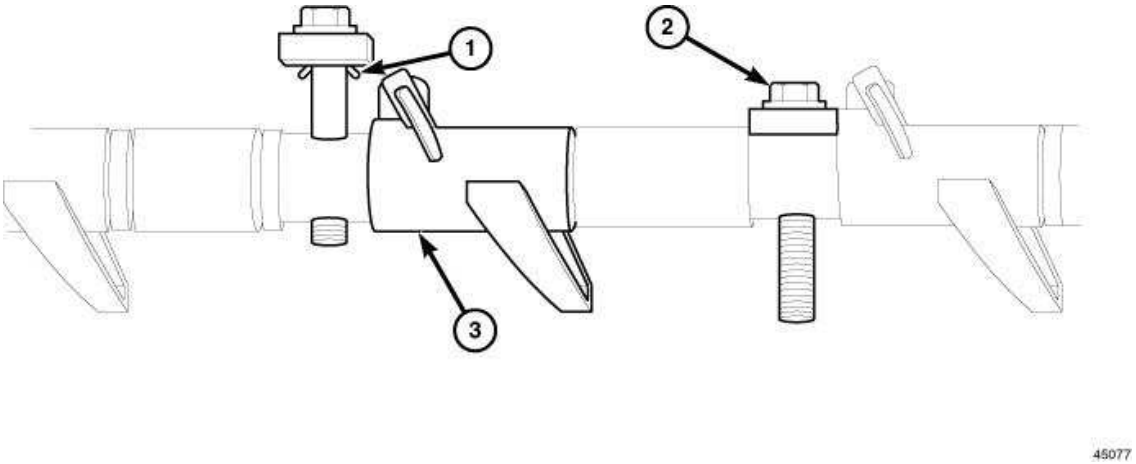

Fig. 132: ROCKER ARM RETAINER REMOVAL/INSTALLATION
Courtesy of CHRYSLER LLC

CAUTION: Ensure that retainers (2) and rocker arms (4) are not overlapped when torquing bolts.

CAUTION: Verify that push rod is installed into rocker arm (4) and tappet correctly while installing rocker shaft assembly. Recheck after rocker shaft has been torqued to specification.

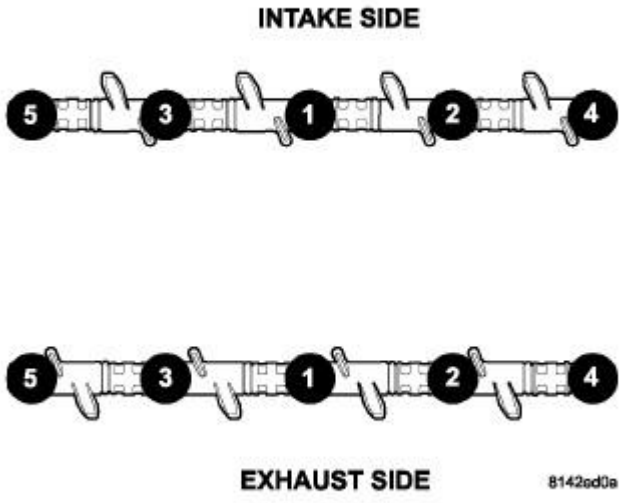

Fig. 133: ROCKER SHAFT TORQUE SEQUENCE
Courtesy of CHRYSLER LLC

CAUTION: The rocker shaft assemblies are not interchangeable between intake and exhaust. The intake rocker arms are marked with the letter "I".

3. Install rocker shaft assemblies in the same order as removed.
4. Tighten the rocker shaft bolts to 22 N.m (195 in. lbs.) using the sequence shown in illustration.

CAUTION: DO NOT rotate or crank the engine during or immediately after rocker arm installation. Allow the hydraulic roller tappets adequate time to bleed down (about 5 minutes).

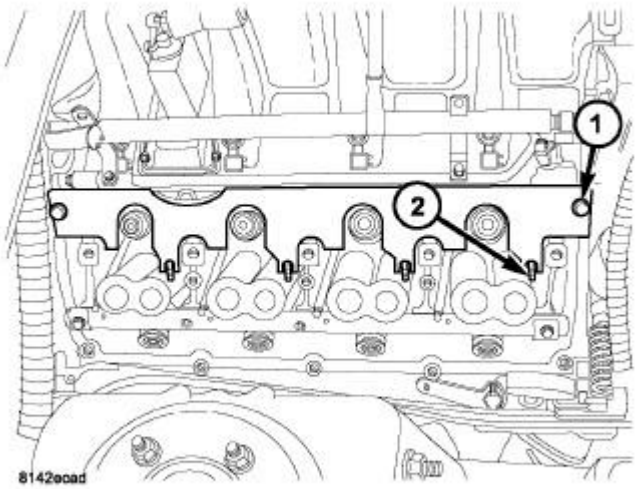

Fig. 134: PUSHROD RETAINING PLATE
Courtesy of CHRYSLER LLC

5. Remove Pushrod Retainer 9070 (1).

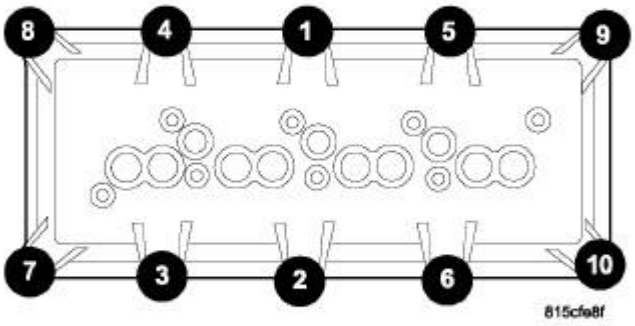

Fig. 135: Cylinder Head Cover Torque Sequence
Courtesy of CHRYSLER LLC

6. Install cylinder head cover. See **Engine/Cylinder Head/COVER(S), Cylinder Head - Installation**.

SEAL(S), VALVE GUIDE

Description

DESCRIPTION

The valve guide seals are made of rubber and incorporate an integral steel valve spring seat. The integral garter spring maintains consistent lubrication control to the valve stems. The intake valve stem seal has a smaller valve spring seat compared to the exhaust valve stem seal. The intake and exhaust valve stem seals are identified by different colors.

SPRING(S), VALVE

Removal

REMOVAL

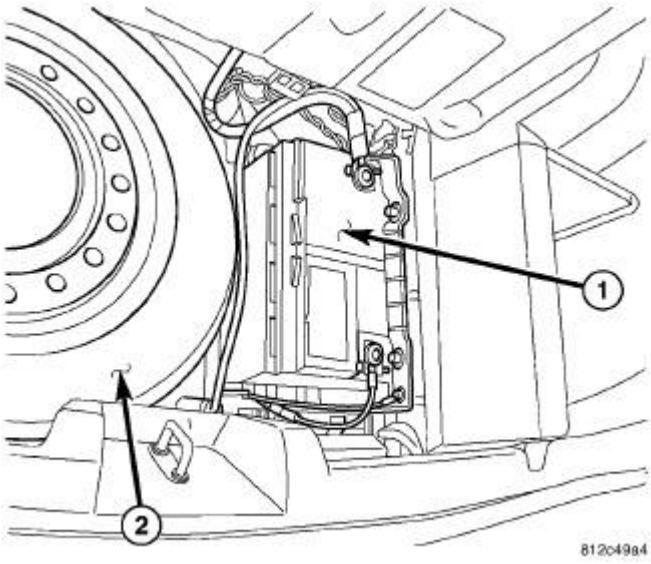

Fig. 136: Locating Battery
Courtesy of CHRYSLER LLC

1. Disconnect the negative battery cable.

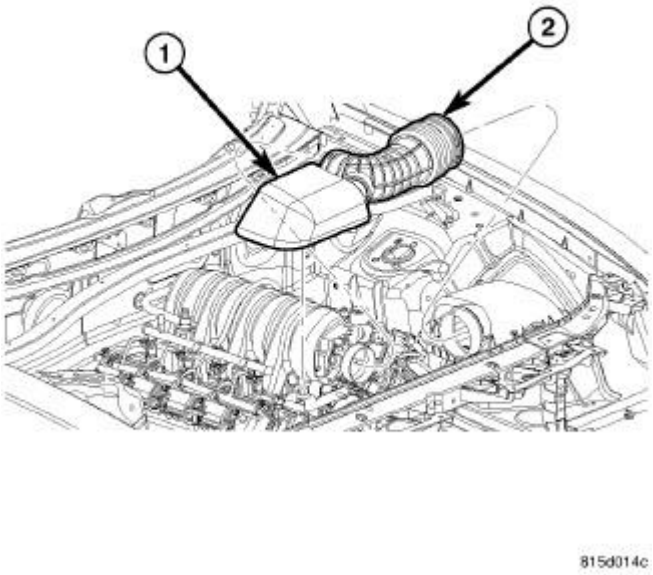

Fig. 137: Air Cleaner Duct
Courtesy of CHRYSLER LLC

2. Remove the air cleaner housing (1) and clean air tube (2). See **Engine/Air Intake System/BODY, Air Cleaner - Installation**.

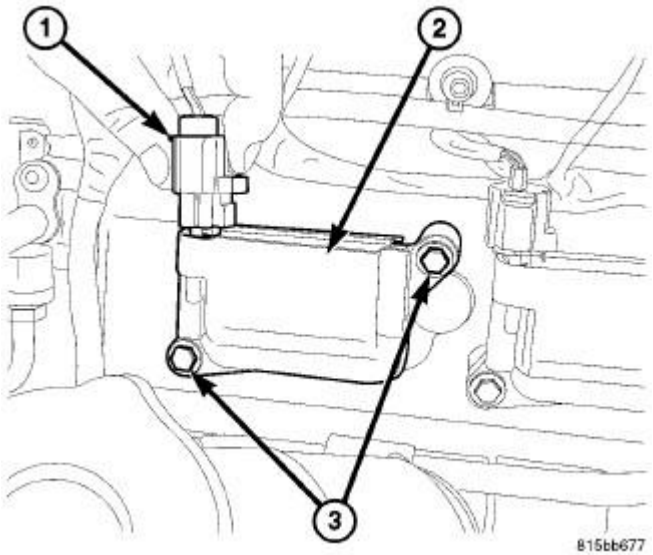

Fig. 138: IGNITION COIL MOUNTING BOLTS - 6.1L
Courtesy of CHRYSLER LLC

3. Remove the ignition coil electrical connectors (1).
4. Remove the ignition coils (2).

5. Remove the spark plugs.

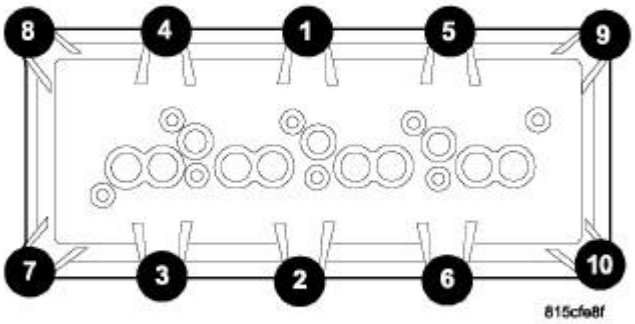

Fig. 139: Cylinder Head Cover Torque Sequence
Courtesy of CHRYSLER LLC

6. Using the sequence shown in illustration, remove the cylinder head cover bolts and remove the cylinder head covers. See **Engine/Cylinder Head/COVER(S), Cylinder Head - Removal**.

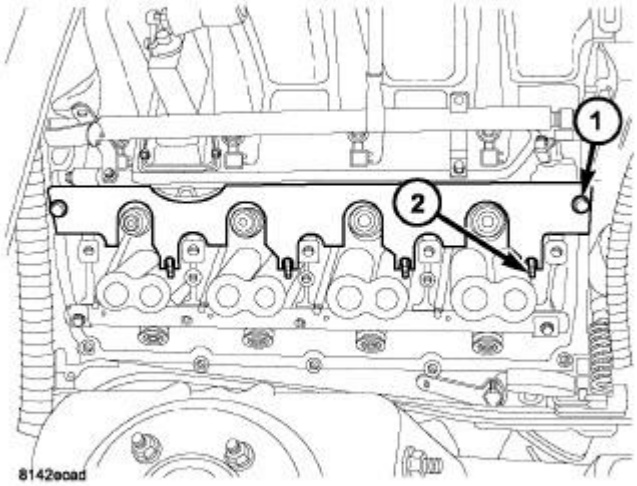

Fig. 140: PUSHROD RETAINING PLATE
Courtesy of CHRYSLER LLC

CAUTION: The piston must be at TDC, and both valves closed on the cylinder to be serviced.

NOTE: The intake push rods can fall into the engine and become lodged in the oil pan, if removing intake rocker arm shaft, install the pushrod retainer 9070 (1) to retain the intake push rods (2).

7. Install the pushrod retainer 9070 (1) onto the cylinder head.
8. Clip the pushrods (2) into pushrod retainer (1).

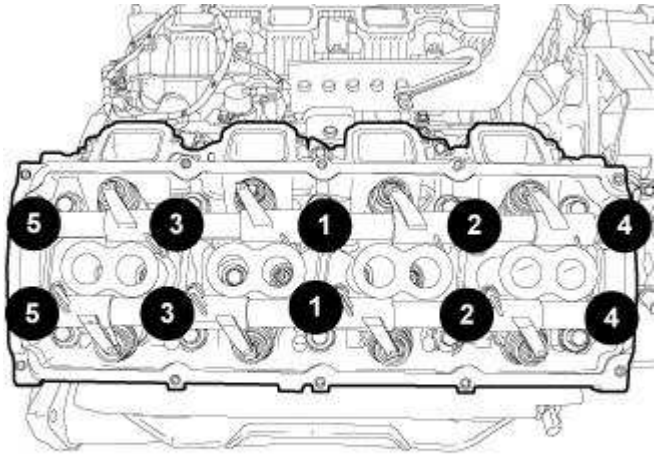

Fig. 141: Rocker Shafts Retaining Bolt Removal & Tightening Sequence
Courtesy of CHRYSLER LLC

9. Using the sequence shown in illustration, remove the rocker arm shaft bolts and remove the rocker arm shaft.

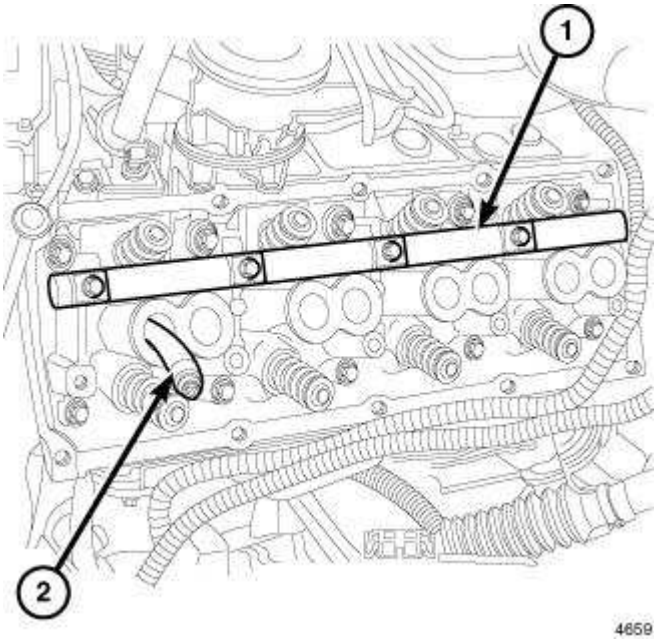

Fig. 142: ROCKER SHAFT
Courtesy of CHRYSLER LLC

10. Install the rocker arm shaft adapter 9065A (1).
11. Insert an air hose (2) into the spark plug hole and charge the cylinder with air.

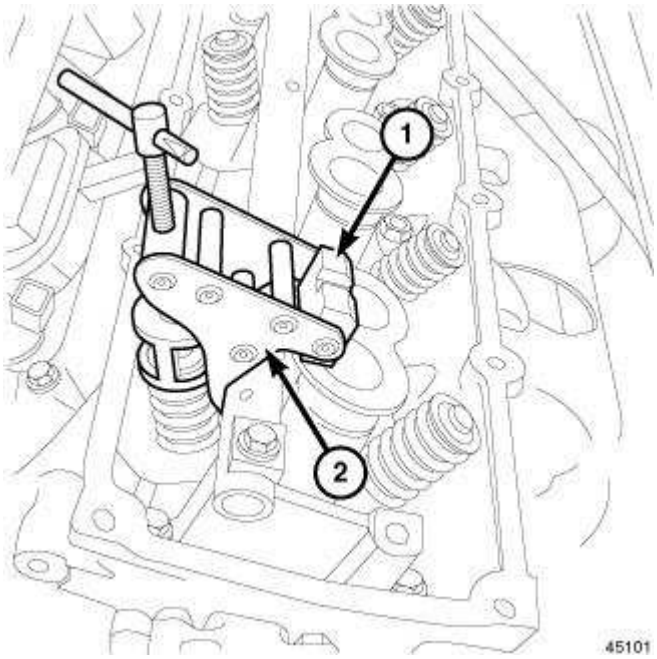

Fig. 143: VALVE SPRING REMOVAL/INSTALLATION INTAKE
Courtesy of CHRYSLER LLC

NOTE: All valve springs and seals are removed in the same manner.

NOTE: Tap the top of the valve spring retainer to loosen the spring retainers locks.

12. Install the valve spring compressor 9065A (1) and remove the intake valve retainer locks.
13. Release the valve spring compressor and remove the valve springs.

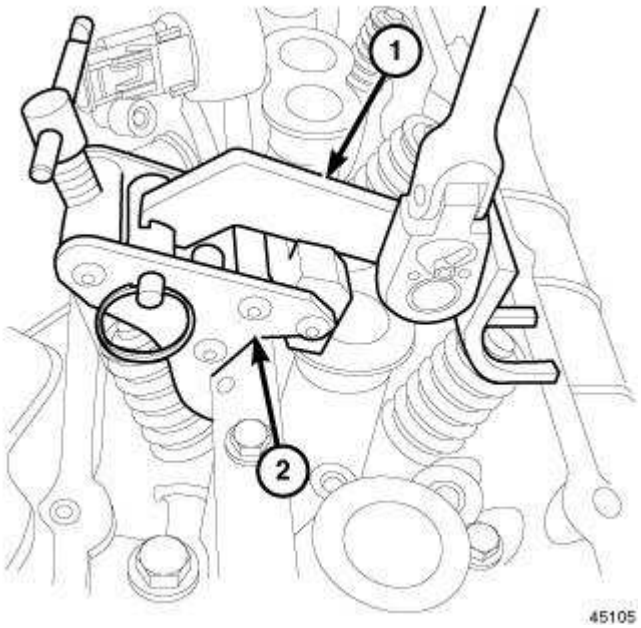

Fig. 144: VALVE SPRING TOOL ADAPTER
Courtesy of CHRYSLER LLC

14. Install the valve spring compressor 9065A (2) and the rocker arm adapter 9065A (1) and remove the exhaust valve retainer locks.
15. Release the valve spring compressor and remove valve spring.

NOTE: The valve springs are interchangeable between intake and exhaust.

16. Remove the valve seal.

Installation

INSTALLATION

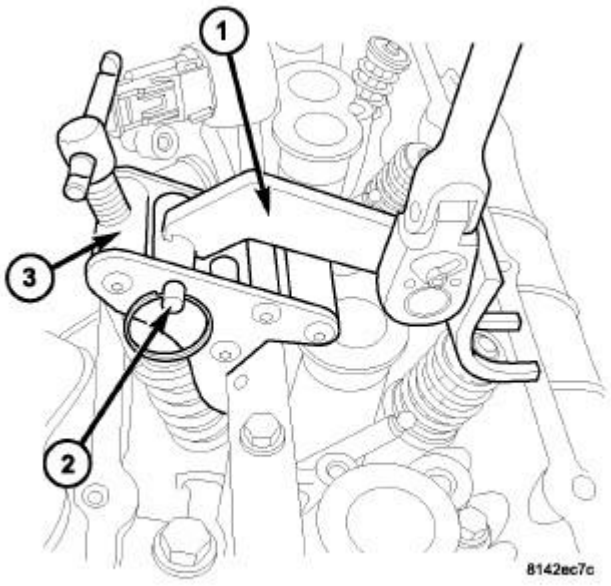

Fig. 145: VALVE SPRING TOOL ADAPTER
Courtesy of CHRYSLER LLC

NOTE: The intake seal has a smaller spring seat diameter compared to the exhaust seal.

1. Install the valve seal.

   NOTE: The intake spring damper has a longer free length compared to the exhaust spring damper.

2. Install the valve spring.
3. Using the valve spring compressor 9065A (1,3), compress the valve spring and install the valve spring retainer locks.

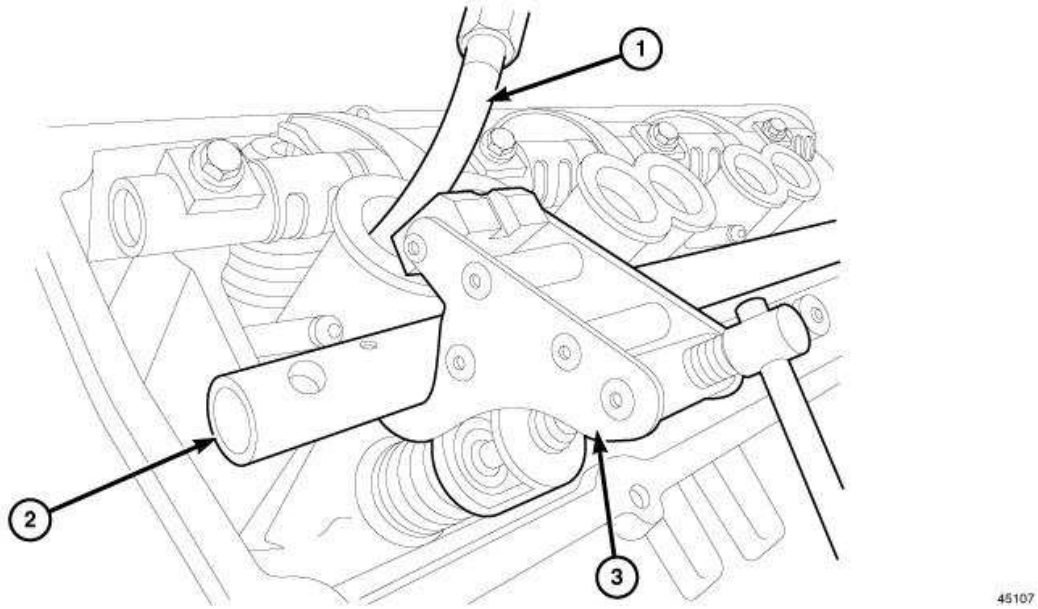

Fig. 146: Valve Spring Removal Tools
Courtesy of CHRYSLER LLC

4. Release the air charge (1) in the cylinder.
5. Remove the valve spring compressor 9065A (3).

CAUTION: Verify that the pushrods are fully seated into the lifters and the rocker arms. Recheck after rocker arm shaft has been torqued to specification.

6. Install the rocker arm shaft and push rods. See **Engine/Cylinder Head/ROCKER ARM, Valve - Installation**.

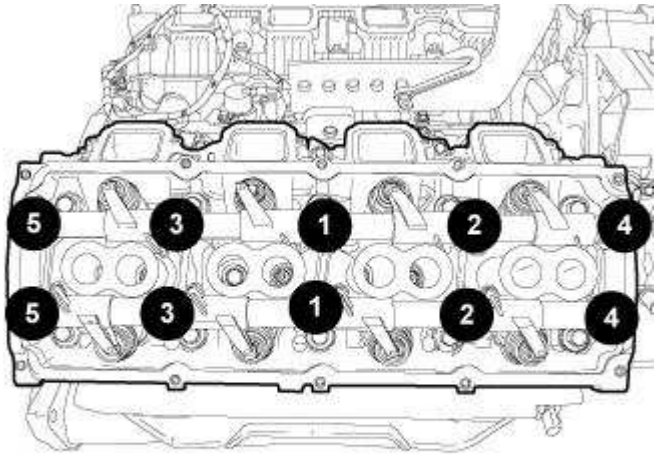

Fig. 147: Rocker Shafts Retaining Bolt Removal & Tightening Sequence

Courtesy of CHRYSLER LLC

7. Using the sequence shown in illustration, tighten the rocker arm shaft bolts to 22 N.m (16 ft. lbs.).

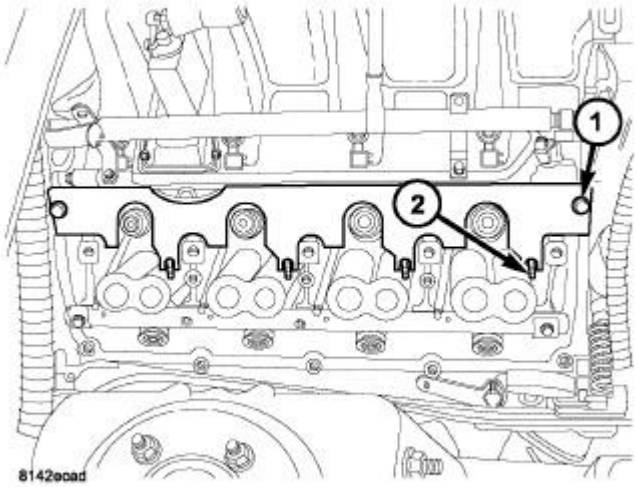

Fig. 148: PUSHROD RETAINING PLATE
Courtesy of CHRYSLER LLC

8. Remove the pushrod retainer 9070 (1).

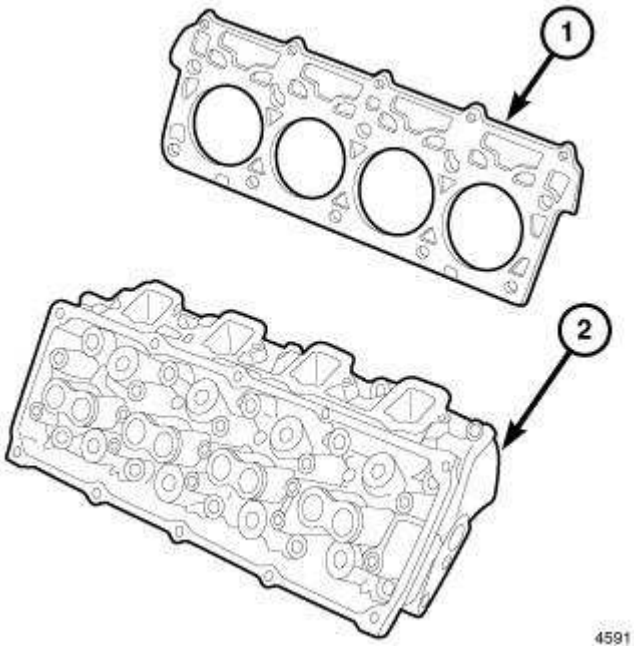

Fig. 149: Cylinder Head Components
Courtesy of CHRYSLER LLC

9. Install the cylinder head cover (1).

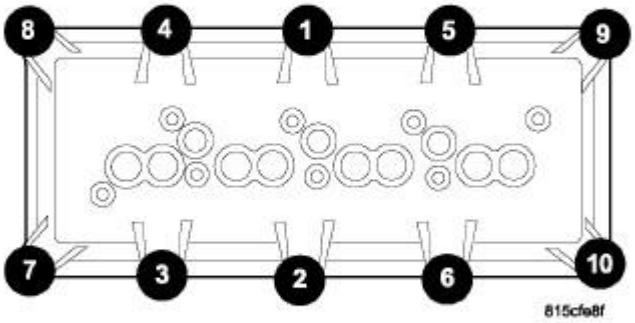

Fig. 150: Cylinder Head Cover Torque Sequence
Courtesy of CHRYSLER LLC

10. Using the sequence shown in illustration, tighten the cylinder head cover bolts to 8 N.m (6 ft. lbs.). See **Engine/Cylinder Head/COVER(S), Cylinder Head - Installation**.
11. Install the spark plugs.

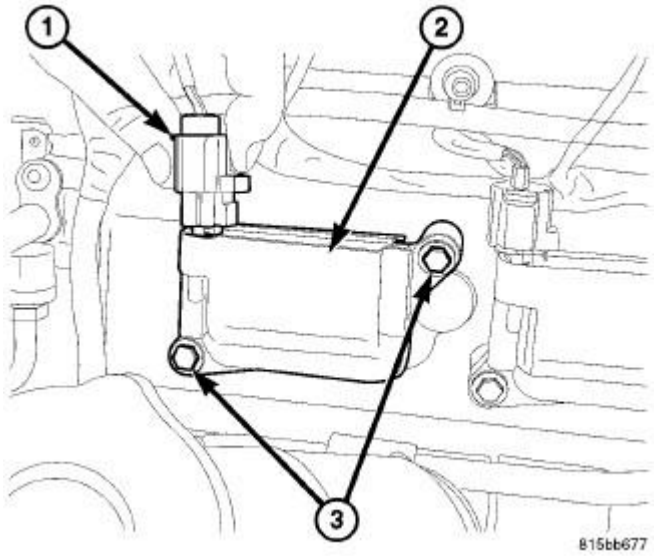

Fig. 151: IGNITION COIL MOUNTING BOLTS - 6.1L
Courtesy of CHRYSLER LLC

12. Install the ignition coil (2) and tighten fasteners (3) to 12 N.m (9 ft. lbs.).
13. Connect the ignition coil electrical connectors (1).

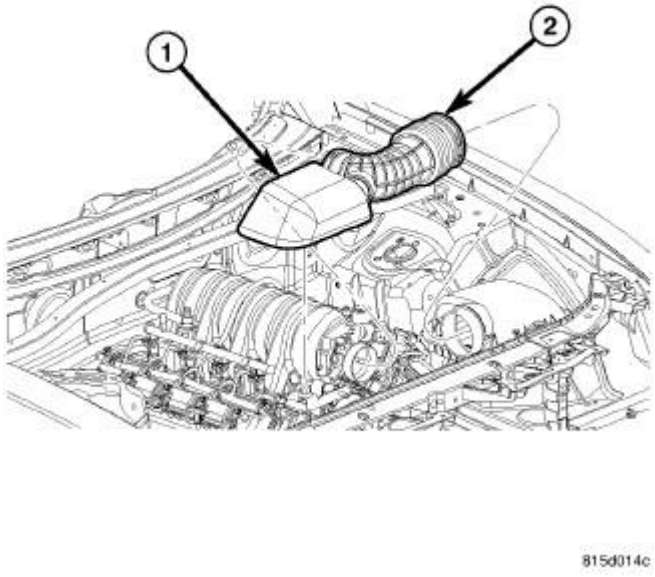

Fig. 152: Air Cleaner Duct
Courtesy of CHRYSLER LLC

14. Install the air cleaner housing (1) and clean air tube (2). See **Engine/Air Intake System/BODY, Air Cleaner - Installation**.

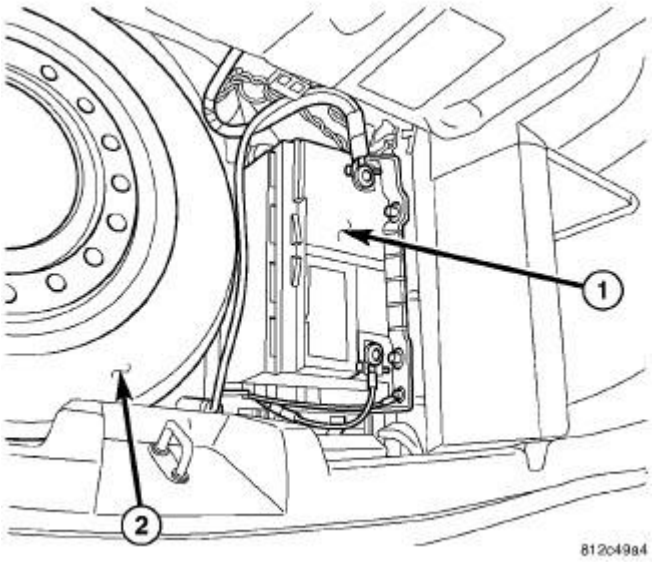

Fig. 153: Locating Battery
Courtesy of CHRYSLER LLC

15. Connect the negative battery cable.

VALVES, INTAKE AND EXHAUST

Description

VALVES

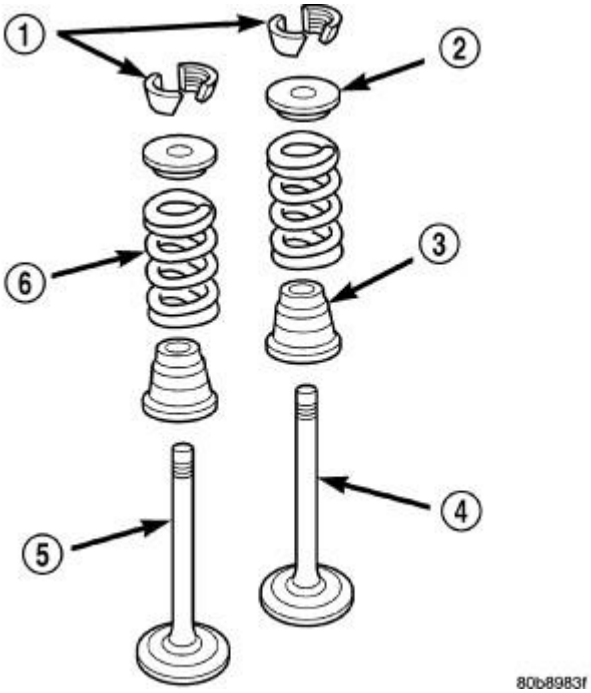

Fig. 154: Valve Assembly Configuration

Courtesy of CHRYSLER LLC

Both the intake (4) and exhaust (5) valves are made of steel. The intake valve is 52.8 mm (2.08 inches) in diameter and the exhaust valve is 40.5 mm (1.59 inches) in diameter. All valves use three bead lock keepers (1) and retainers (2) to retain the springs (6) and promote valve rotation.

VALVE GUIDES

The valve guides are made of powdered metal and are pressed into the cylinder head. The guides are not replaceable or serviceable, and valve guide reaming is not recommended. If the guides are worn beyond acceptable limits, replace the cylinder heads.

Standard Procedure

REFACING

NOTE: Valve seats that are worn or burned can be reworked, provided that the correct angle and seat width are maintained. Otherwise the cylinder head must be replaced.

NOTE: When refacing valves and valve seats, it is important that the correct size valve guide pilot be used for reseating stones. A true and complete surface must be obtained.

1. Using a suitable dial indicator measure the center of the valve seat. Total run out must not exceed 0.051 mm (0.002 in).
2. Apply a small amount of Prussian blue to the valve seat, insert the valve into the cylinder head. While applying light pressure on the valve, rotate the valve. Remove the valve and examine the valve face. If the blue is transferred below the top edge of the valve face, lower the valve seat using a 15 degree stone. If the blue is transferred to the bottom edge of the valve face, raise the valve seat using a 65 degree stone.
3. When the seat is properly positioned the width of the intake seat must be 1.018 - 1.62 mm (0.0464 - 0.0637 in.) and the exhaust seat must be 1.48 - 1.92 mm (0.058 - 0.075 in.).
4. Check the valve spring installed height after refacing the valve and seat. The installed height for both intake and exhaust valve springs must not exceed 46.0 mm (1.81 in.).

VALVE FACE AND VALVE SEAT ANGLE CHART

DESCRIPTION	SPECIFICATION	
SEAT WIDTH	-	
INTAKE	1.018 - 1.62 mm	0.0464 - 0.0637 in.
EXHAUST	1.48 - 1.92 mm	0.058 - 0.075 in.
FACE ANGLE	-	
INTAKE	45 1/2° - 46°	
EXHAUST	45° - 451/2°	
SEAT ANGLE	-	

(INT. AND EXT.)	441/2° - 45°

5. The valve seat must maintain an angle of 44.5° - 45.0°.
6. The valve face must maintain a face angle of 45.5° - 46.0° degrees for the Intake, and 45° - 45.5° for the exhaust.

Removal

REMOVAL

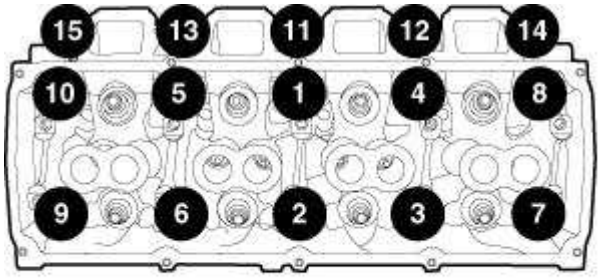

88745

Fig. 155: Cylinder Head Bolt Removal & Tightening Sequence
Courtesy of CHRYSLER LLC

1. Remove the cylinder head. See **Engine/Cylinder Head - Removal**.

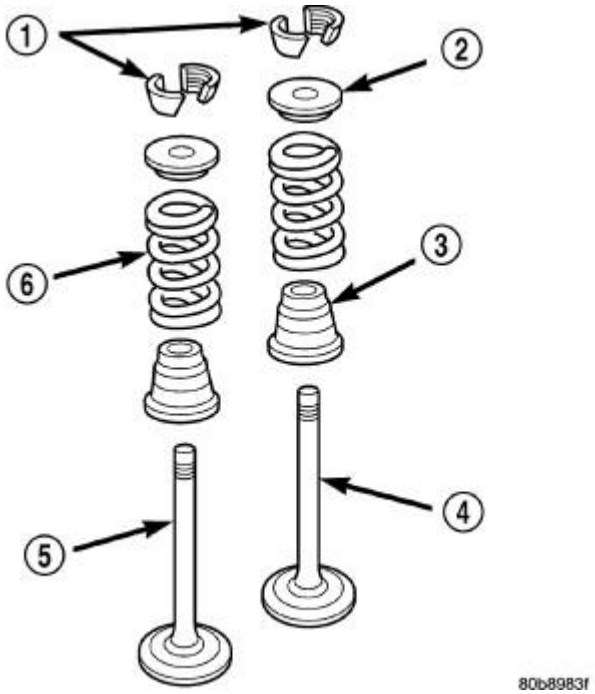

80b8983f

Fig. 156: Valve Assembly Configuration
Courtesy of CHRYSLER LLC

2. Compress the valve springs using the valve spring compressor C-3422-D and adapter 8464.
3. Remove the valve retaining locks (1), valve spring retainers (2), valve stem seals (3) and valve springs (6).
4. Before removing the valves, remove any burrs from the valve stem lock grooves to prevent damage to the valve guides. Identify the valves to ensure installation in original location.

Installation

INSTALLATION

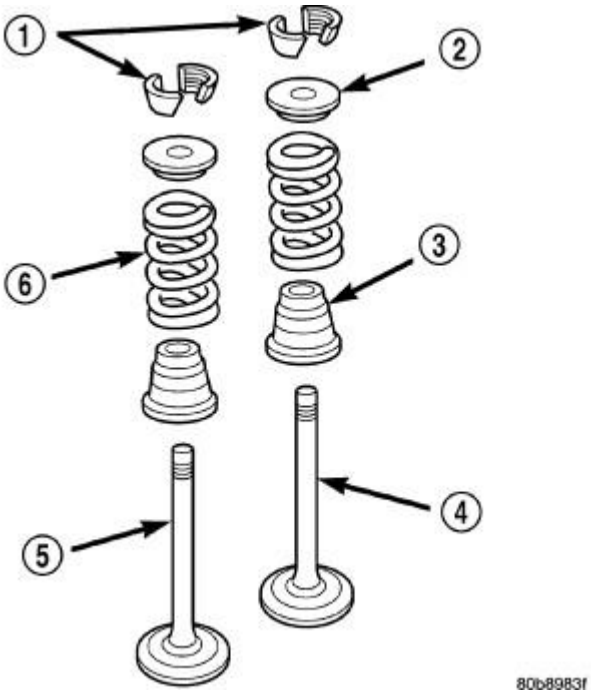

Fig. 157: Valve Assembly Configuration
Courtesy of CHRYSLER LLC

1. Clean the valves thoroughly. Discard burned, warped, and cracked valves.
2. Remove carbon and varnish deposits from inside the valve guides with a reliable guide cleaner.
3. Measure the valve stems for wear. If wear exceeds 0.051 mm (0.002 inch), replace the valve.
4. Coat the valve stems with clean engine oil and insert them into the cylinder head.
5. If the valves or seats are reground, check valve stem height. If the valve is too long, replace the cylinder head.
6. Install new seals (3) on all valve guides. Install the valve springs (6) and valve retainers (2).

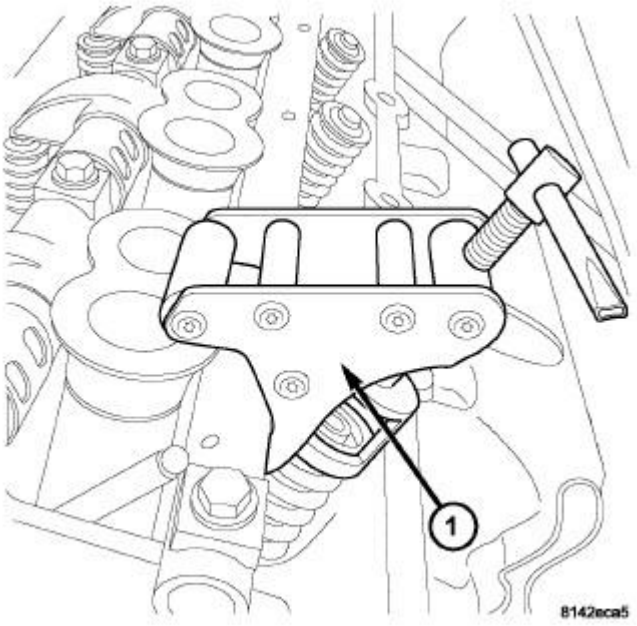

Fig. 158: VALVE SPRING REMOVAL/INSTALLATION EXHAUST
Courtesy of CHRYSLER LLC

7. Compress the valve springs with the valve spring compressor C-3422-D (1) and adapter 8464, install the locks and release the tool. If the valves and/or seats are ground, measure the installed height of the springs. Make sure the measurement is taken from the bottom of spring seat in the cylinder head to the bottom surface of spring retainer.

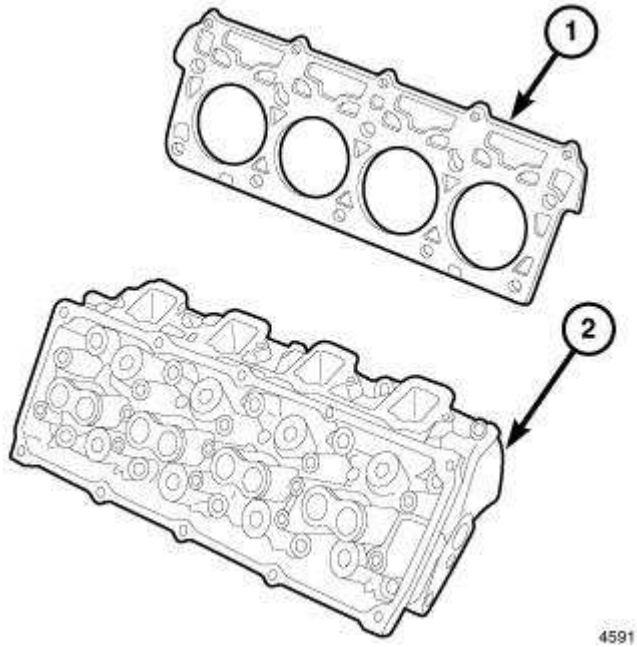

Fig. 159: Cylinder Head Components
Courtesy of CHRYSLER LLC

8. Install the cylinder head. See **Engine/Cylinder Head - Installation**.

ENGINE BLOCK

CLEANING

CLEANING

Thoroughly clean the oil pan and engine block gasket surfaces.

Use compressed air to clean out:

- the galley at the oil filter adaptor hole.
- the front and rear oil galley holes.
- the feed holes for the crankshaft main bearings.

Once the block has been completely cleaned, apply Loctite PST pipe sealant with Teflon 592 to the threads of the front and rear oil galley plugs. Tighten the 1/4 inch NPT plugs to 20 N.m (177 in. lbs.). Tighten the 3/8 inch NPT plugs to 27 N.m (240 in. lbs.).

INSPECTION

INSPECTION

ENGINE BLOCK

1. Clean cylinder block thoroughly and check all core hole plugs for evidence of leaking. Repair as necessary.
2. Examine block and cylinder bores for cracks or fractures.
3. Check block deck surfaces for flatness.

CYLINDER BORE

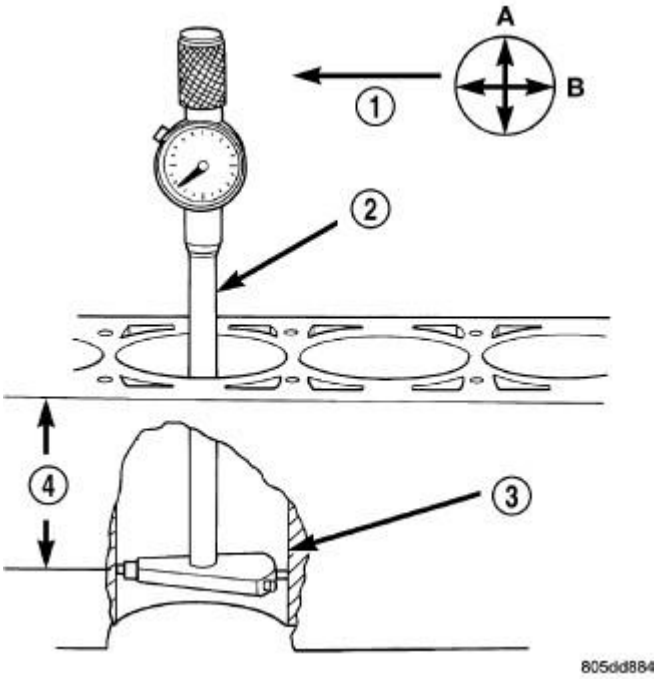

Fig. 160: Using Bore Gauge To Measure Cylinder Bore Diameter
Courtesy of CHRYSLER LLC

1. It is mandatory to use a dial bore gauge to measure each cylinder bore diameter. To correctly select the proper size piston, a cylinder bore gauge, capable of reading in 0.003 mm (.0001 in.) increments is required. If a bore gauge is not available, do not use an inside micrometer.
2. Measure the inside diameter of the cylinder bore at three levels below top of bore. Start perpendicular (across or at 90°) to the axis of the crankshaft and then take two additional reading.
3. Measure the cylinder bore diameter crosswise to the cylinder block near the top of the bore. Repeat the measurement near the middle of the bore, then repeat the measurement near the bottom of the bore.
4. Determine taper by subtracting the smaller diameter from the larger diameter.
5. Rotate measuring device 90° and repeat steps above.
6. Determine out-of-roundness by comparing the difference between each measurement.
7. If cylinder bore taper does not exceed 0.025 mm (0.001 inch) and out-of-roundness does not exceed 0.025 mm (0.001 inch), the cylinder bore can be honed. If the cylinder bore taper or out-of-round condition exceeds these maximum limits, the cylinder block must be replaced. A slight amount of taper always exists in the cylinder bore after the engine has been in use for a period of time.

BEARING(S), CRANKSHAFT, MAIN

Standard Procedure

CRANKSHAFT MAIN BEARING - FITTING

MAIN BEARING JOURNAL DIAMETER (CRANKSHAFT REMOVED)

Crankshaft removed from the cylinder block.

Clean the oil off the main bearing journal.

Determine the maximum diameter of the journal with a micrometer. Measure at two locations 90° apart at each end of the journal.

The maximum allowable taper is 0.008 mm (0.0004 inch.) and maximum out-of-round is 0.005 mm (0.0002 inch). Compare the measured diameter with the journal diameter specification (Main Bearing Fitting Chart). Select inserts required to obtain the specified bearing-to-journal clearance.

CRANKSHAFT MAIN BEARING SELECTION

The main bearings are "select fit" to achieve proper oil clearances. For main bearing selection, the crankshaft counterweight has grade identification marks stamped into it. These marks are read from left to right, corresponding with journal number 1, 2, 3, 4 and 5.

NOTE: Service main bearings are coded. These codes identify what size (color) the bearing is.

MAIN BEARING SELECTION CHART - 6.1L

GRADE	COLOR	mm	in	FOR USE WITH JOURNAL SIZE
-	**LOWER**	-	-	64.988-64.995 mm
A	**ORANGE**	0.008 mm U/S	(0.0004 in.) U/S	(2.5585- 2.5588 in.)
-	**LOWER**	-	-	64.996-65.004 mm
B	**BLACK**	NOMINAL	NOMINAL	(2.5588-2.5592 in.)
-	**LOWER**	-	-	65.005-65.012 mm
C	**GREEN**	0.008 mm O/S	(0.0004 in.) O/S	(2.5592-2.5595 in.)

Inspection

INSPECTION

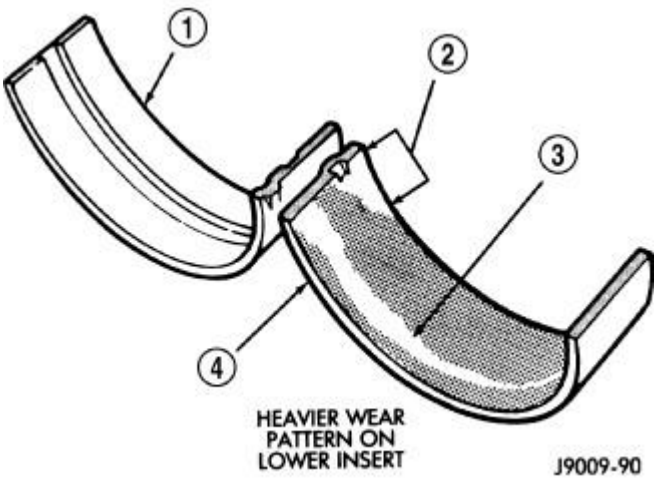

Fig. 161: Main Bearing Wear Patterns
Courtesy of CHRYSLER LLC

Wipe the inserts clean and inspect for abnormal wear patterns and for metal or other foreign material imbedded in the lining. Normal main bearing insert wear patterns are illustrated.

NOTE: If any of the crankshaft journals are scored, the crankshaft must be repaired or replaced.

Inspect the back of the inserts for fractures, scrapings or irregular wear patterns.

Inspect the upper insert locking tabs for damage.

Replace all damaged or worn bearing inserts.

CAMSHAFT, ENGINE

Removal

CAMSHAFT CORE HOLE PLUG

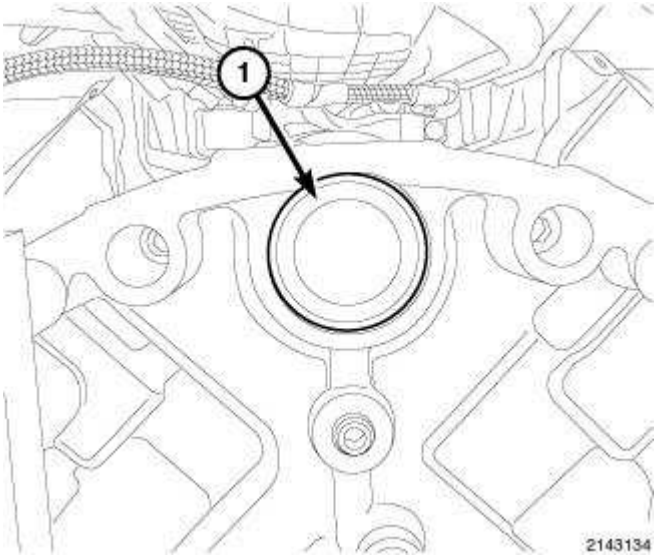

Fig. 162: Camshaft Core Hole Plug
Courtesy of CHRYSLER LLC

1. Perform the fuel system pressure release procedure. Refer to **Fuel System/Fuel Delivery - Standard Procedure** .
2. Remove the engine from the vehicle. See **Engine - Removal**.
3. Remove the flexplate. See **Engine/Engine Block/FLEXPLATE - Removal**.

CAUTION: Do not damage the rear surface of the camshaft or the core plug sealing surface, when removing the core plug.

4. Using a suitable sharp punch, punch a small hole in the camshaft core hole plug (1).
5. Insert a short sheet metal screw into the small hole in the camshaft core hole plug.
6. Using a suitable slide hammer puller, remove the rear camshaft core hole plug.

CAMSHAFT

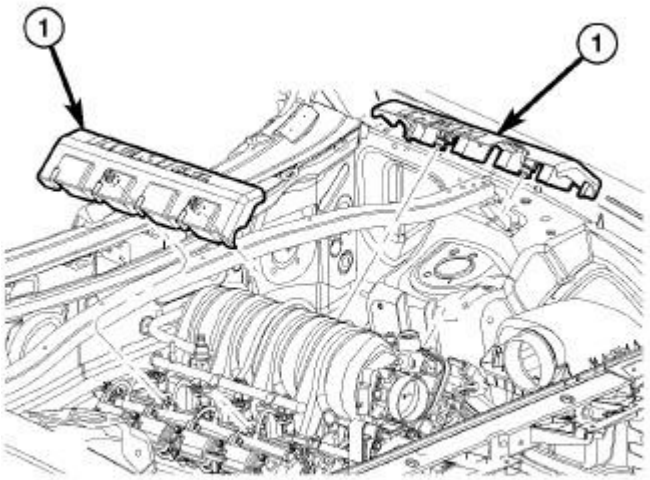

Fig. 163: Engine Covers
Courtesy of CHRYSLER LLC

1. Remove the engine covers (1), they snap off of the fuel rail.
2. Disconnect the manifold absolute pressure (MAP) sensor harness connector, located at the back of the Intake Manifold.
3. Disconnect the short runner valve (SRV), located at the back of the intake manifold.
4. Disconnect the intake air temperature (IAT) sensor harness connector.

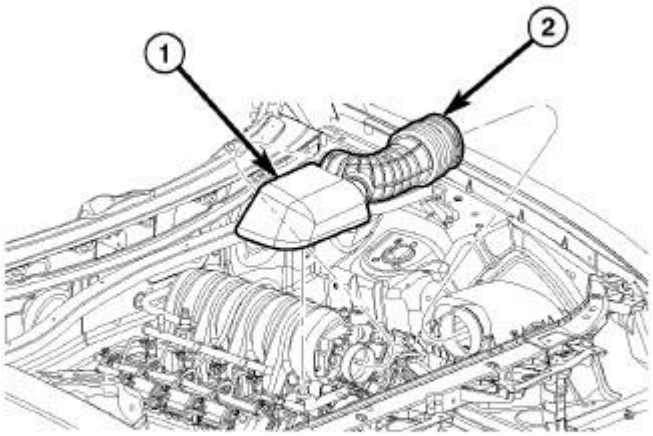

Fig. 164: Air Cleaner Duct
Courtesy of CHRYSLER LLC

5. Remove the air cleaner housing (1) and clean air tube (2).
6. Disconnect the electronic throttle body harness connector.
7. Disconnect the brake booster vacuum hose (it may be easier to disconnect the vacuum hose at the booster).
8. Disconnect the evaporative purge vacuum hose, and the make-up air (MUA) hose from the intake manifold.
9. Perform the fuel system pressure release procedure. Refer to **Fuel System/Fuel Delivery - Standard Procedure** .
10. Disconnect the fuel injector harness connectors.
11. Disconnect the fuel supply line. Refer to **Fuel System/Fuel Delivery/FITTING, Quick Connect - Standard Procedure** .

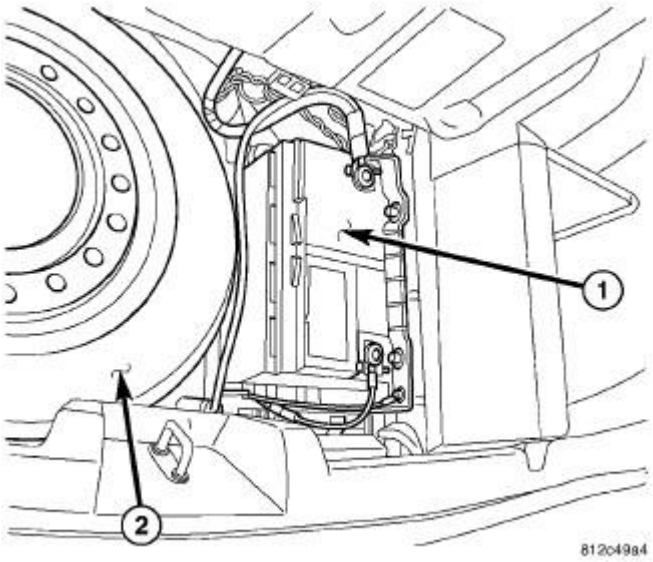

Fig. 165: Locating Battery
Courtesy of CHRYSLER LLC

12. Remove the negative battery cable.

WARNING: Do not remove the cylinder block drain plugs or loosen the radiator draincock with the system hot and under pressure. Serious burns from the coolant can occur.

13. Drain the cooling system. Refer to **Cooling - Standard Procedure** .

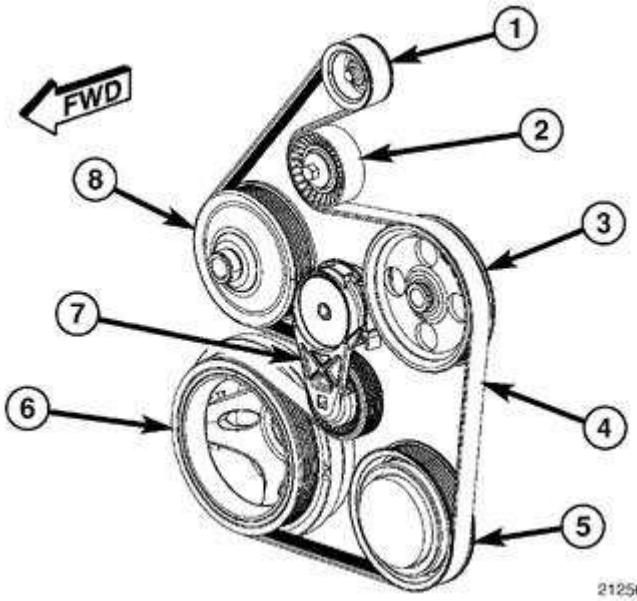

Fig. 166: Identifying Accessory Drive Belt Routing
Courtesy of CHRYSLER LLC

CAUTION: Do not let the tensioner arm snap back to the freearm position, sever damage may occur to the tensioner.

14. Rotate the accessory drive belt tensioner (7) counterclockwise until it contacts it's stop. Remove the accessory drive belt, then slowly rotate the tensioner into the freearm position. Refer to **Cooling/Accessory Drive/BELT, Serpentine - Removal** .

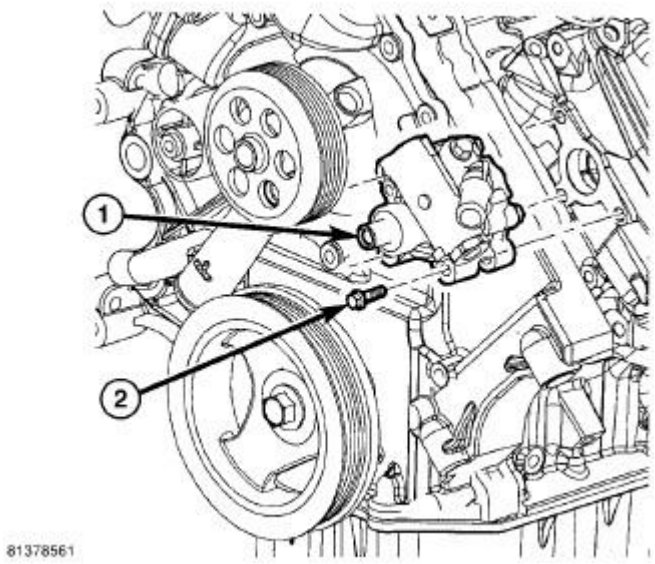

Fig. 167: Power Steering Pump
Courtesy of CHRYSLER LLC

NOTE: It is not necessary to disconnect the power steering pump hoses from the pump, for power steering pump removal.

15. Remove the three power steering pump (1) mounting bolts (2) through the access holes in the pulley. Refer to **Steering/Pump - Removal** .
16. Remove the power steering pump (1) and secure out of the way.

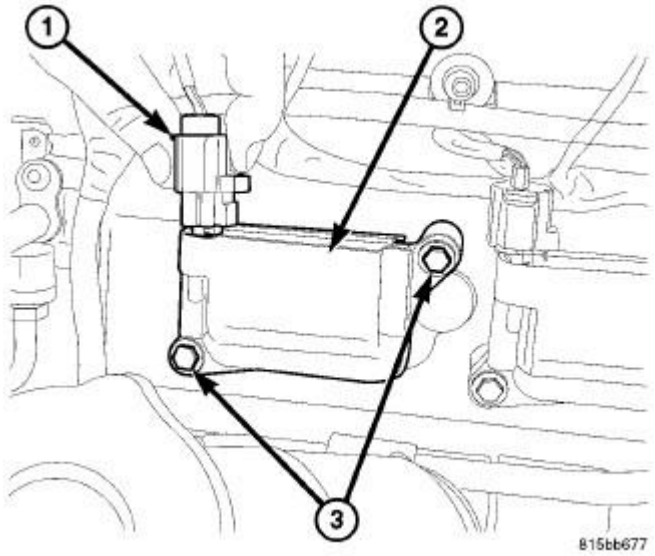

Fig. 168: Ignition Coil Mounting Bolts
Courtesy of CHRYSLER LLC

17. Disconnect the ignition coil electrical connectors (1).
18. Remove ignition coil mounting bolts (3).

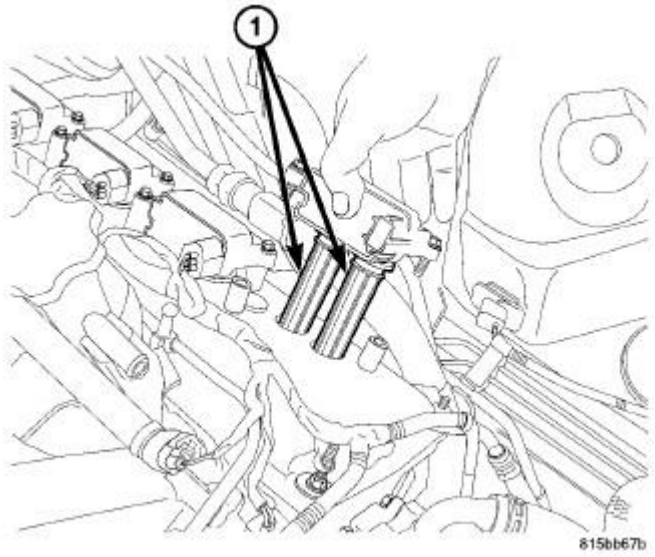

Fig. 169: Removing/Installing Ignition Coil
Courtesy of CHRYSLER LLC

19. Remove the ignition coils (1).

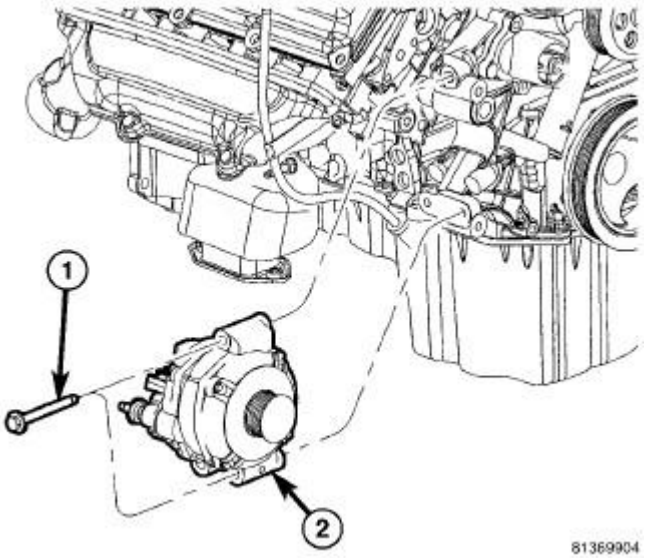

Fig. 170: Generator
Courtesy of CHRYSLER LLC

20. Remove the generator. Refer to **Electrical/Charging/GENERATOR - Removal** .
21. Remove the A/C compressor, and set aside. Refer to **Heating and Air Conditioning/Plumbing/COMPRESSOR, A/C - Removal** .
22. Remove the radiator. Refer to **Cooling/Engine/RADIATOR, Engine Cooling - Removal** .
23. Remove intake manifold. See **Engine/Manifolds/MANIFOLD, Intake - Removal**.

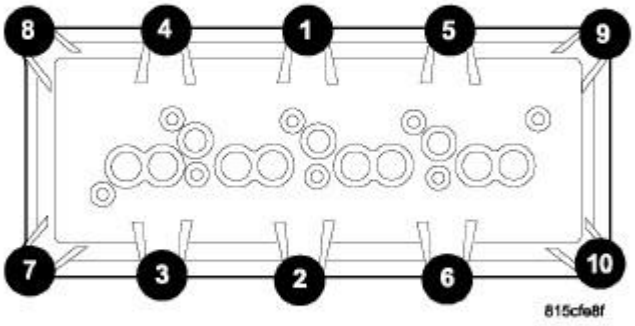

Fig. 171: Cylinder Head Cover Torque Sequence

Courtesy of CHRYSLER LLC

24. Remove the cylinder head covers. See **Engine/Cylinder Head/COVER(S), Cylinder Head - Removal**.

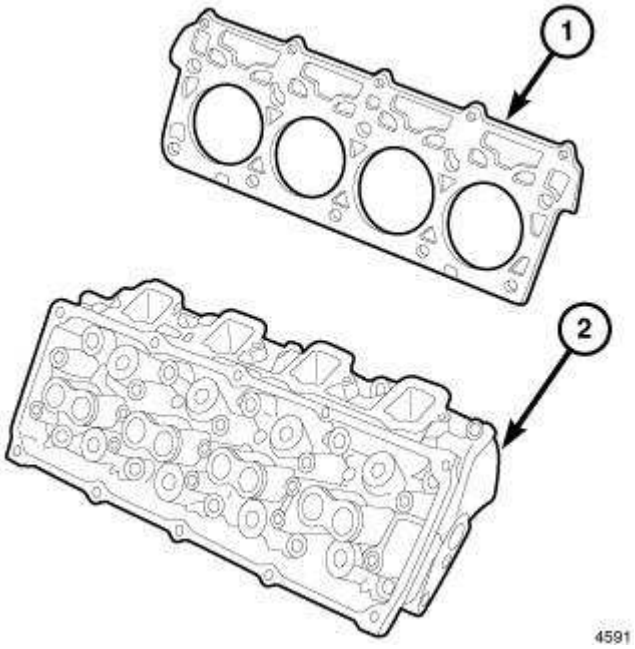

Fig. 172: Cylinder Head Components
Courtesy of CHRYSLER LLC

25. Remove both left and right cylinder heads (4). See **Engine/Cylinder Head - Removal**.
26. Remove the oil pan. See **Engine/Lubrication/PAN, Oil - Removal**.
27. Remove the oil pick up tube.
28. Remove the windage tray/oil pan gasket.

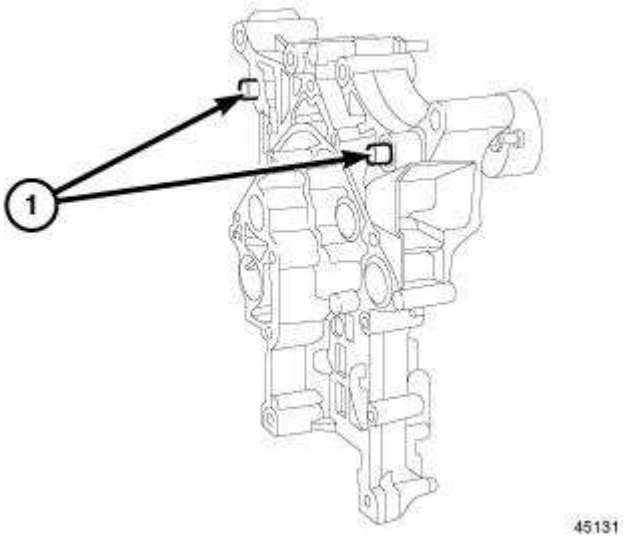

Fig. 173: FRONT COVER SLIDE BUSHINGS
Courtesy of CHRYSLER LLC

29. Remove the timing case cover (1). See **Engine/Valve Timing/COVER(S), Engine Timing - Removal**.

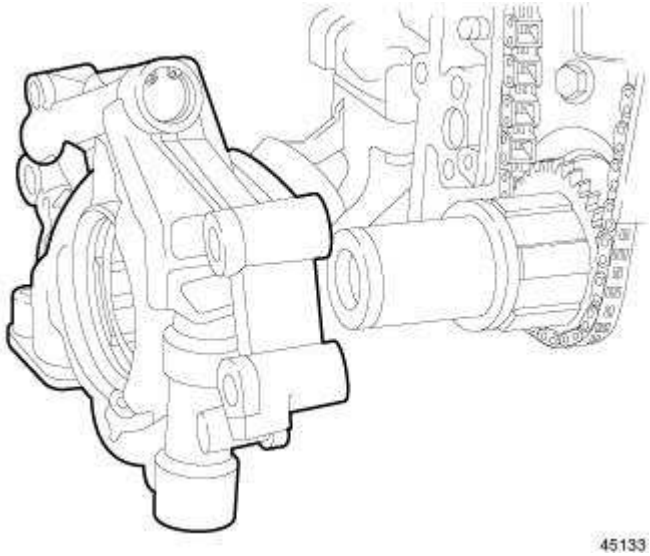

Fig. 174: OIL PUMP REMOVAL/INSTALLATION
Courtesy of CHRYSLER LLC

30. Remove the oil pump. See **Engine/Lubrication/PUMP, Engine Oil - Removal**.

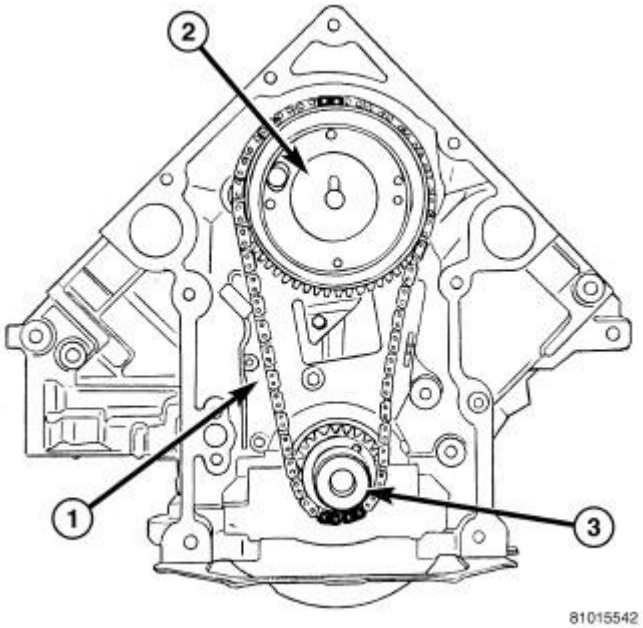

Fig. 175: TIMING MARK ALIGNMENT

Courtesy of CHRYSLER LLC

31. Remove the timing chain (1) and camshaft sprocket (2). See **Engine/Valve Timing/CHAIN and SPROCKETS, Timing - Removal**.
32. Remove the camshaft tensioner/thrust plate assembly.

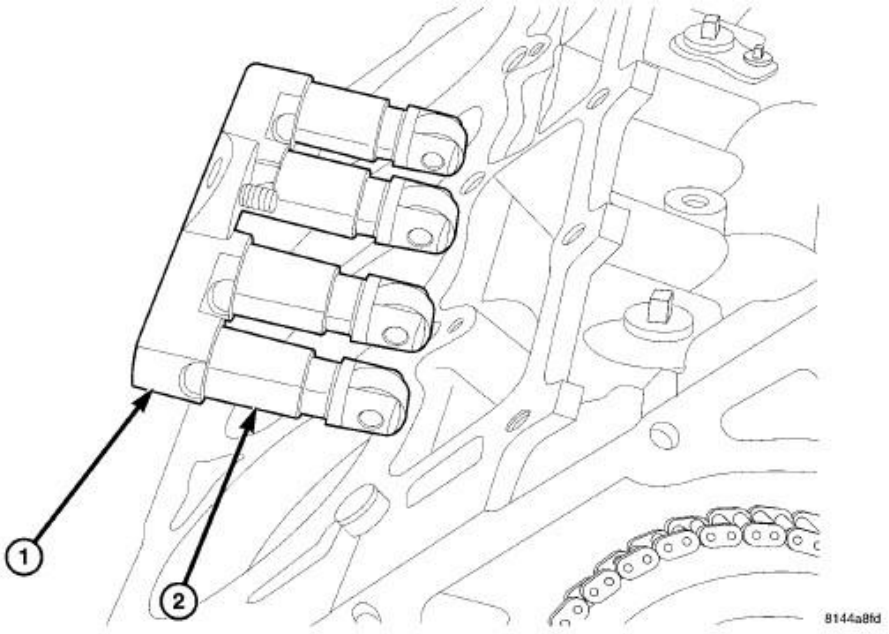

Fig. 176: HYDRAULIC ROLLER TAPPET REMOVAL/INSTALLATION
Courtesy of CHRYSLER LLC

NOTE: Identify lifters to ensure installation in original location.

33. Remove the tappets (2) and retainer (1) assembly.

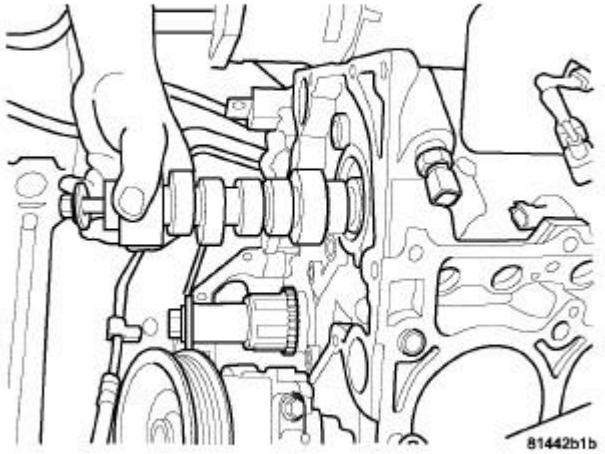

Fig. 177: CAMSHAFT REMOVAL/INSTALLATION
Courtesy of CHRYSLER LLC

34. Install a long bolt into the front of the camshaft to aid in removal of the camshaft. Remove camshaft, being careful not to damage cam bearings with the cam lobes.

Inspection

INSPECTION

1. The cam bearings are not serviceable. Do not attempt to replace cam bearings for any reason.

Installation

CAMSHAFT CORE HOLE PLUG

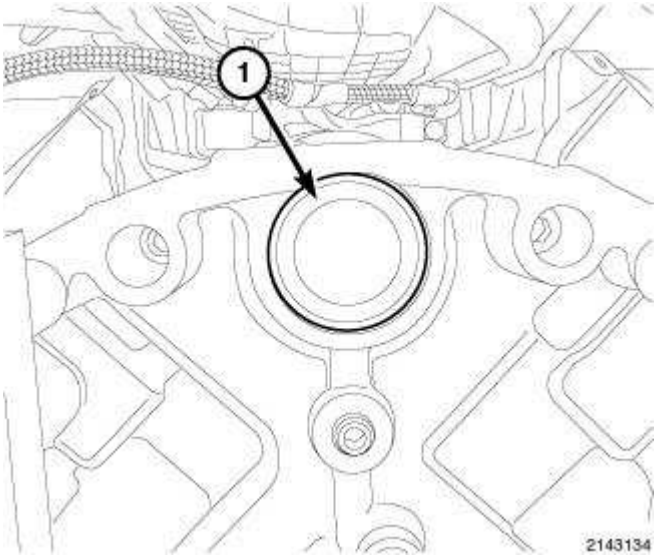

Fig. 178: Camshaft Core Hole Plug
Courtesy of CHRYSLER LLC

1. Clean the core hole in the cylinder block.

NOTE: Do not apply adhesive to the new camshaft core hole plug. A new plug has adhesive pre-applied.

2. Install a new camshaft core hole plug (1) located at the rear of cylinder block, using a suitable flat faced tool. The plug must be fully seated on the cylinder block shoulder.
3. Install the flexplate. See **Engine/Engine Block/FLEXPLATE - Installation**.
4. Install the engine. See **Engine - Installation**.

CAMSHAFT

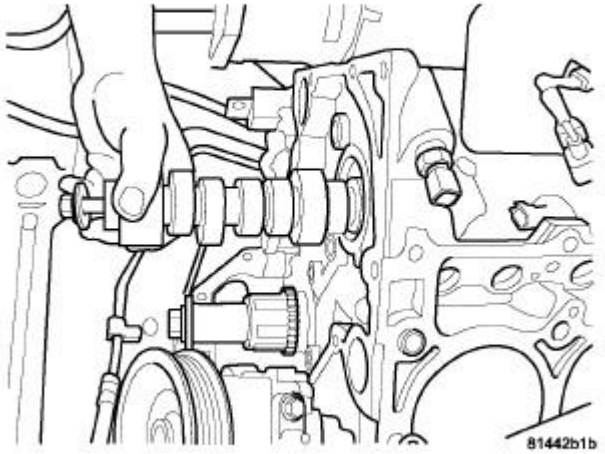

Fig. 179: CAMSHAFT REMOVAL/INSTALLATION
Courtesy of CHRYSLER LLC

1. Lubricate the camshaft lobes and camshaft bearing journals and carefully insert the camshaft.

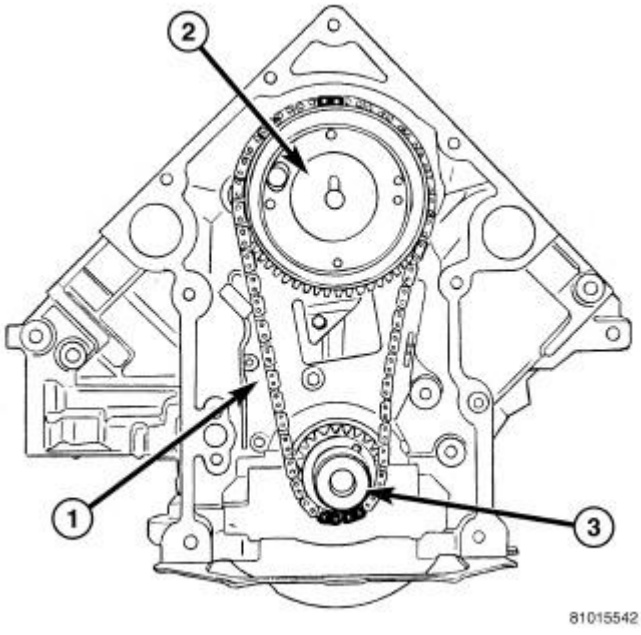

Fig. 180: TIMING MARK ALIGNMENT
Courtesy of CHRYSLER LLC

2. Install the camshaft tensioner plate assembly and tighten the bolts to 28 N.m (250 in. lbs.).
3. Install the timing chain and sprockets. See **Engine/Valve Timing/CHAIN and SPROCKETS, Timing - Installation**.
4. Measure camshaft end play. See **Engine - Specifications**. If not within limits install a new thrust plate.

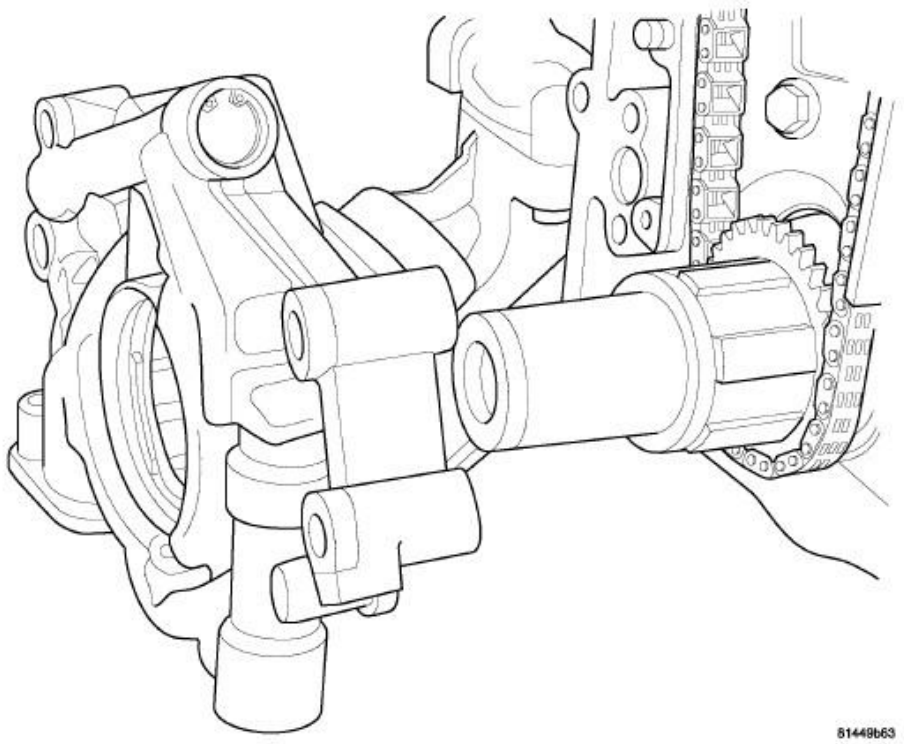

Fig. 181: OIL PUMP REMOVAL/INSTALLATION
Courtesy of CHRYSLER LLC

5. Install the oil pump. See **Engine/Lubrication/PUMP, Engine Oil - Installation**.

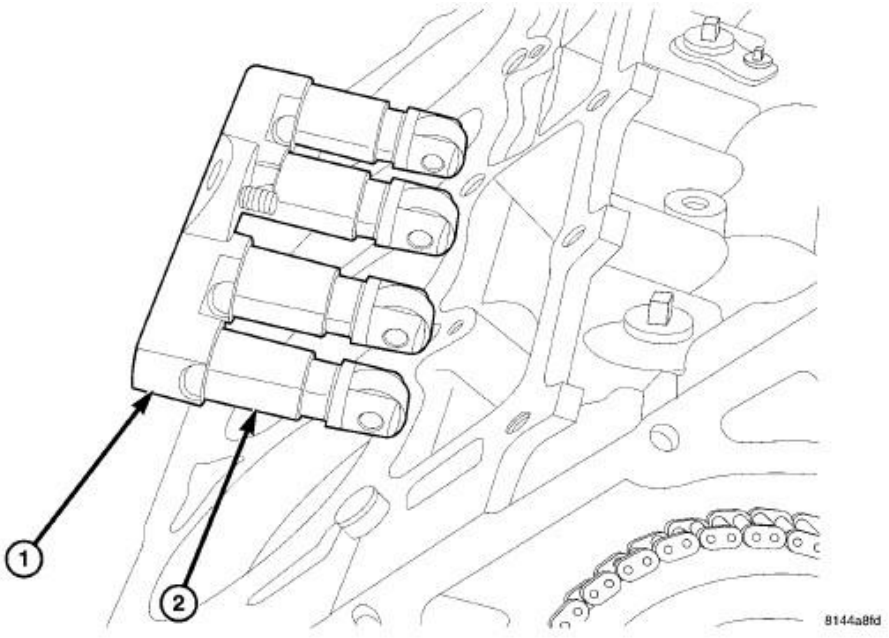

Fig. 182: HYDRAULIC ROLLER TAPPET REMOVAL/INSTALLATION
Courtesy of CHRYSLER LLC

NOTE: Each tappet must be installed in the same position from which it was removed.

NOTE: When the camshaft is replaced, all of the tappets must be replaced.

6. Install the tappets (2) and retainer assembly (1). See **Engine/Engine Block/LIFTER(S), Hydraulic - Installation**.

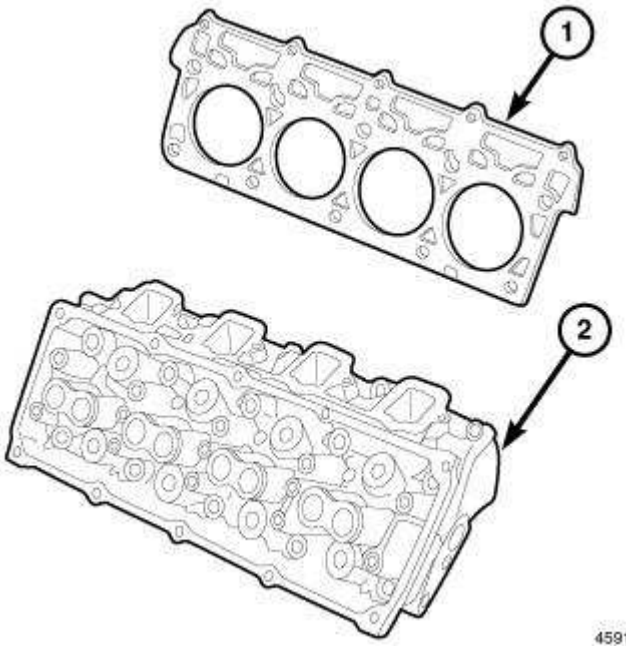

Fig. 183: Cylinder Head Components
Courtesy of CHRYSLER LLC

7. Install both left and right cylinder heads (4). See **Engine/Cylinder Head - Installation**.
8. Install the pushrods in the same position from which they were removed.

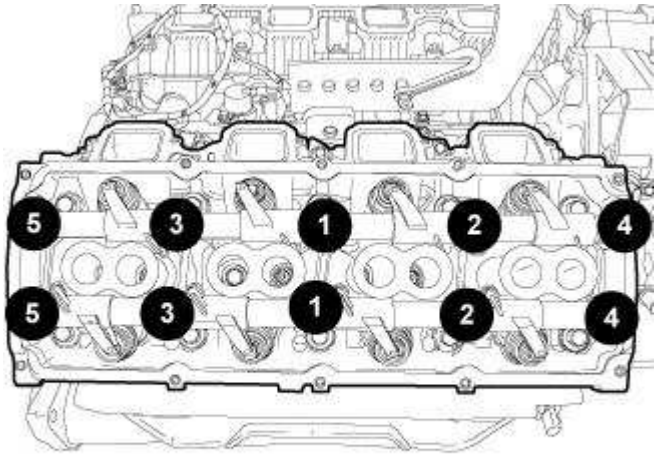

Fig. 184: Rocker Shafts Retaining Bolt Removal & Tightening Sequence
Courtesy of CHRYSLER LLC

9. Install the rocker arms and shaft assembly. See **Engine/Cylinder Head/ROCKER ARM, Valve - Installation**.
10. Using the sequence shown in illustration, install the rocker arm shaft bolts and tighten to 22 N.m (16 ft. lbs.).

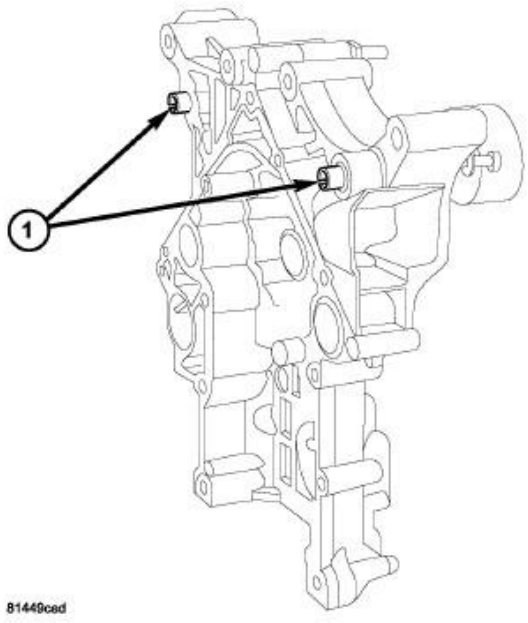

Fig. 185: FRONT COVER SLIDE BUSHINGS
Courtesy of CHRYSLER LLC

11. Install the timing chain cover. See **Engine/Valve Timing/COVER(S), Engine Timing - Installation**.
12. Install the oil pick up tube.
13. Install the oil pan. See **Engine/Lubrication/PAN, Oil - Installation**.

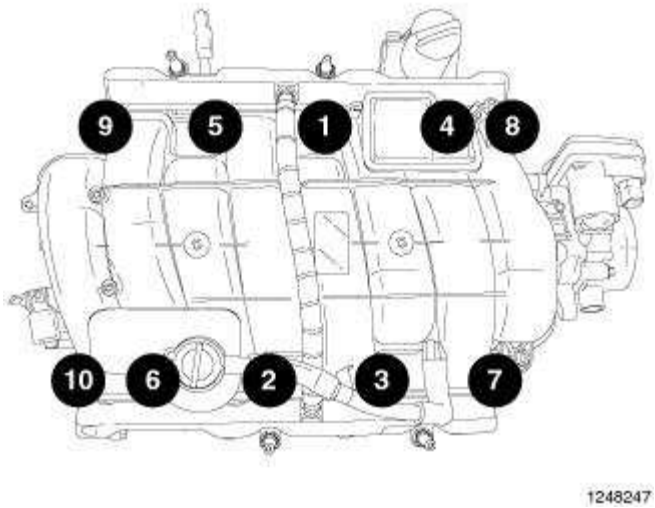

Fig. 186: Intake Manifold Removal & Tightening Sequence
Courtesy of CHRYSLER LLC

14. Using the sequence shown in illustration, install the intake manifold and tighten the bolts to 12 N.m (9 ft. lbs.). See **Engine/Manifolds/MANIFOLD, Intake - Installation**.

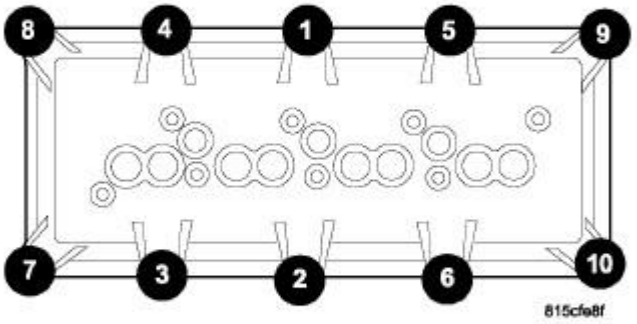

Fig. 187: Cylinder Head Cover Torque Sequence
Courtesy of CHRYSLER LLC

15. Install the cylinder head covers. See **Engine/Cylinder Head/COVER(S), Cylinder Head - Installation**.
16. Install the A/C compressor. See **Engine/Lubrication/PAN, Oil - Installation**.
17. Install the generator.

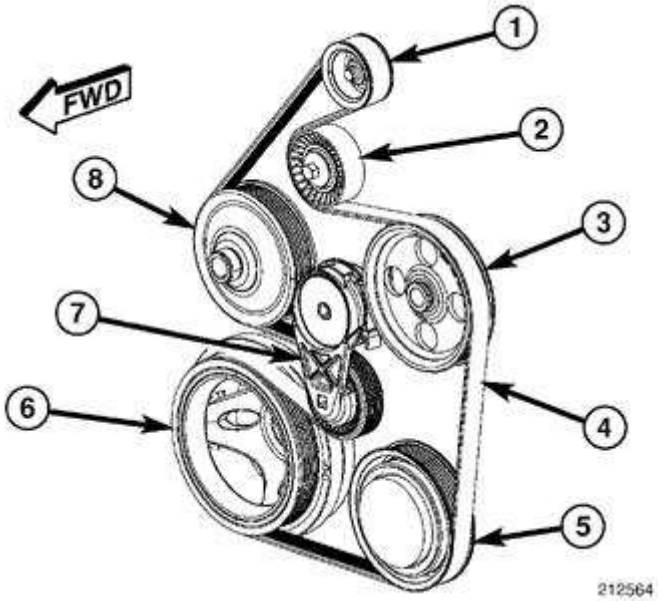

Fig. 188: Identifying Accessory Drive Belt Routing
Courtesy of CHRYSLER LLC

18. Install the accessory drive belt. Refer to **Cooling/Accessory Drive/BELT, Serpentine - Installation** .
19. Install the radiator. Refer to **Cooling/Engine/RADIATOR, Engine Cooling - Installation** .

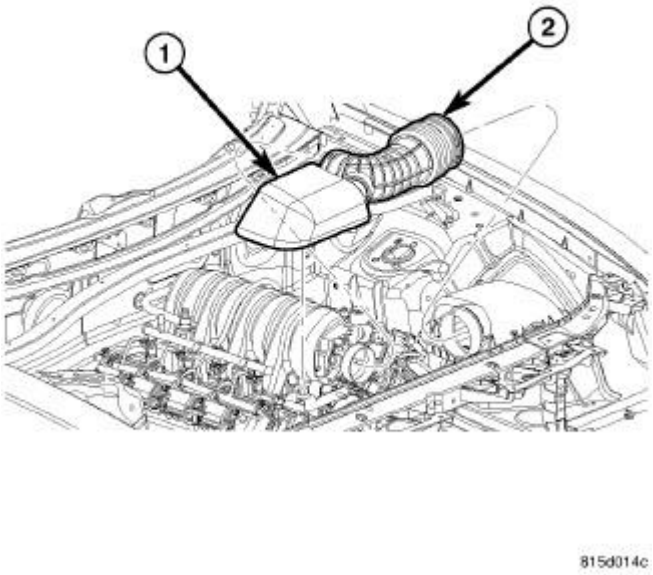

Fig. 189: Air Cleaner Duct
Courtesy of CHRYSLER LLC

20. Install the air cleaner housing (1) and clean air tube (2).

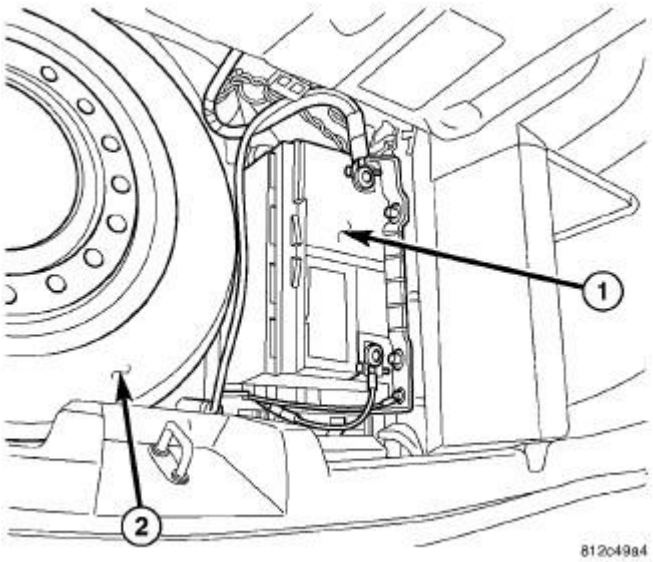

Fig. 190: Locating Battery
Courtesy of CHRYSLER LLC

21. Install the negative battery cable.
22. Fill the cooling system. Refer to **Cooling - Standard Procedure** .

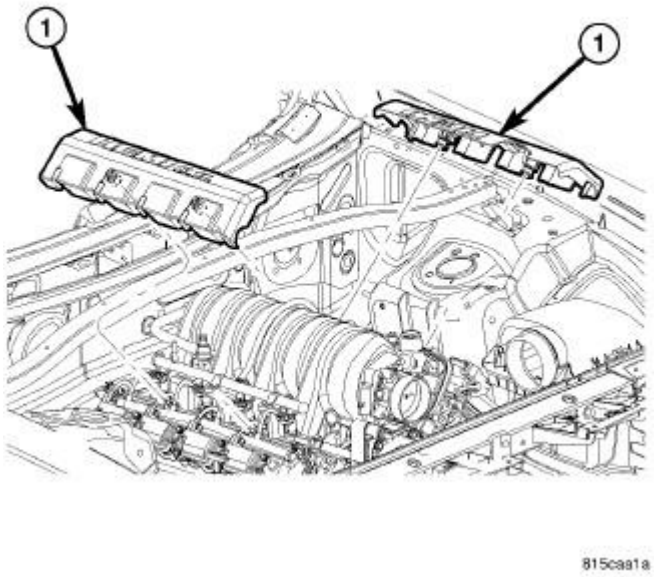

Fig. 191: Engine Covers
Courtesy of CHRYSLER LLC

23. Fill the engine with oil.
24. Install engine covers (1).
25. Start engine and check for leaks.

COVER, STRUCTURAL DUST

Description

DESCRIPTION

The structural dust cover is made of die cast aluminum and joins the lower half of the transmission bell housing to the engine. The structural cover is an integral one piece aluminum oil pan/structural cover.

Operation

OPERATION

The structural cover provides additional powertrain stiffness and reduces noise and vibration. The structural cover is integrated with the oil pan.

CRANKSHAFT

Removal

REMOVAL

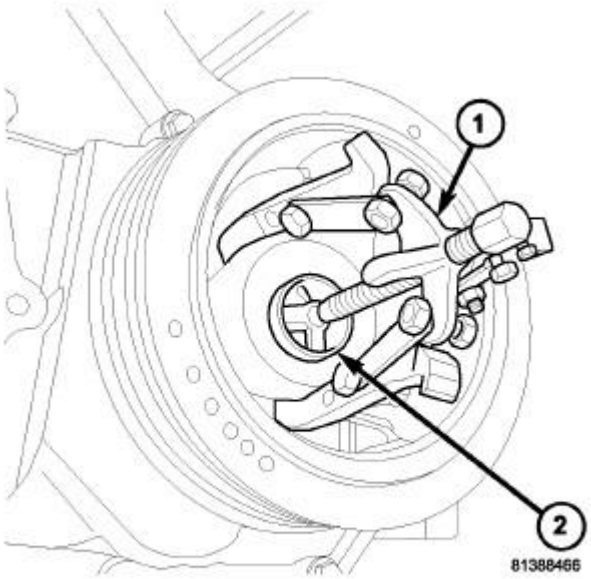

Fig. 192: CRANKSHAFT DAMPER REMOVAL
Courtesy of CHRYSLER LLC

1. Remove engine.
2. Remove the vibration damper with a puller (1). See **Engine/Engine Block/DAMPER, Vibration - Removal**.

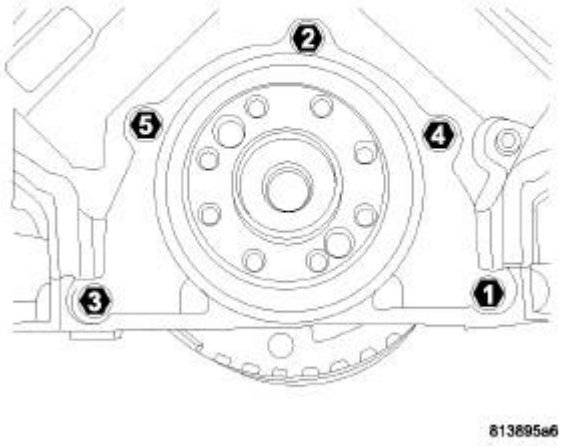

Fig. 193: REAR SEAL RETAINER TORQUE SEQUENCE
Courtesy of CHRYSLER LLC

3. Remove flywheel.
4. Remove the rear oil seal retainer. See **Engine/Engine Block/RETAINER, Crankshaft Rear Oil Seal - Removal**.
5. Remove the oil pan. See **Engine/Lubrication/PAN, Oil - Removal**.
6. Remove the oil pump pickup.
7. Remove the windage tray/oil pan gasket.

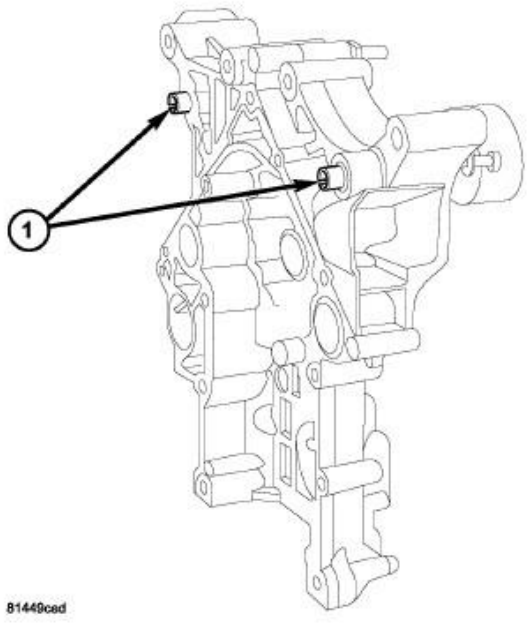

Fig. 194: FRONT COVER SLIDE BUSHINGS
Courtesy of CHRYSLER LLC

8. Remove the timing chain cover. See **Engine/Valve Timing/COVER(S), Engine Timing - Removal**.

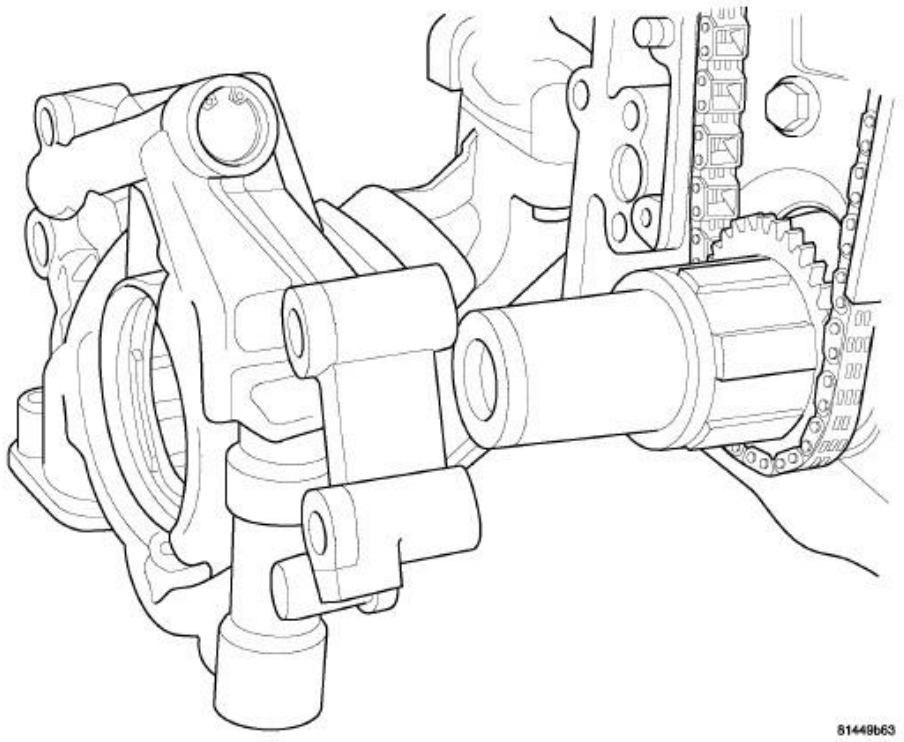

Fig. 195: OIL PUMP REMOVAL/INSTALLATION
Courtesy of CHRYSLER LLC

9. Remove the oil pump. See **Engine/Lubrication/PUMP, Engine Oil - Removal**.

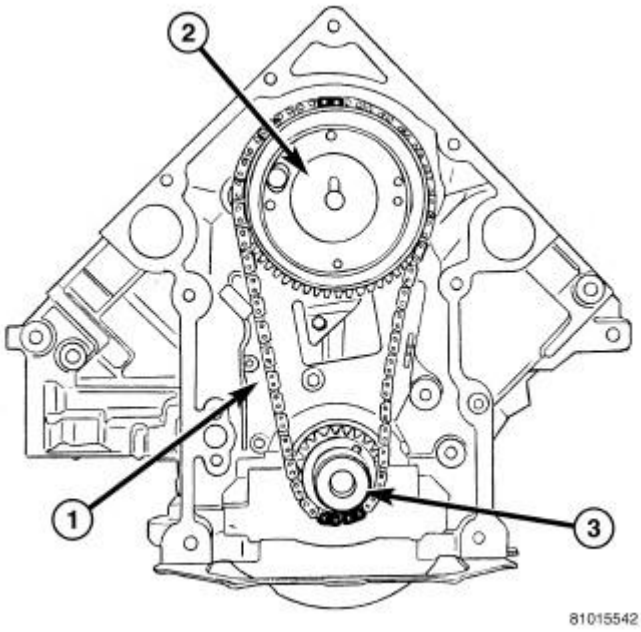

Fig. 196: TIMING MARK ALIGNMENT
Courtesy of CHRYSLER LLC

10. Remove the timing chain (1) and cam sprocket (2). See **Engine/Valve Timing/CHAIN and SPROCKETS, Timing - Removal**.

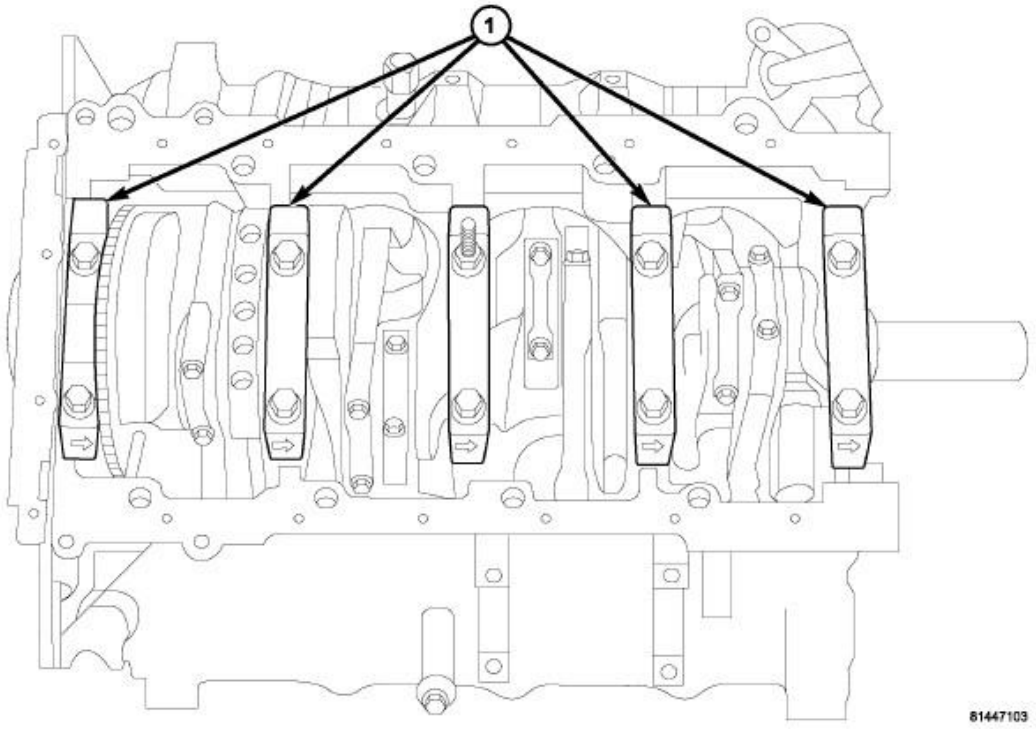

Fig. 197: MAIN BEARING CAPS
Courtesy of CHRYSLER LLC

11. Identify rod bearing caps and rods before removal. Remove rod bearing caps with bearings.

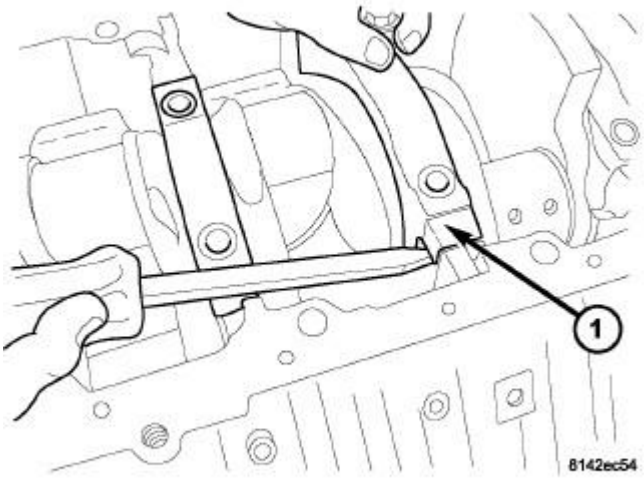

Fig. 198: MAIN CAP REMOVAL

Courtesy of CHRYSLER LLC

12. Identify main bearing caps (1) prior to removal.
13. Remove main bearing caps (1) and bearings one at a time.

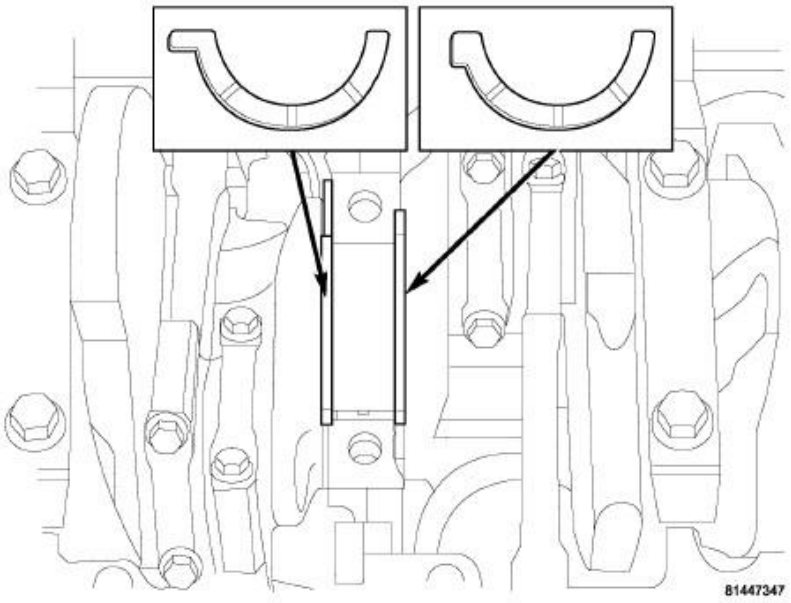

Fig. 199: THRUST WASHER LOCATION
Courtesy of CHRYSLER LLC

14. Remove the thrust bearings.
15. Remove the crankshaft out of the block.

Installation

INSTALLATION

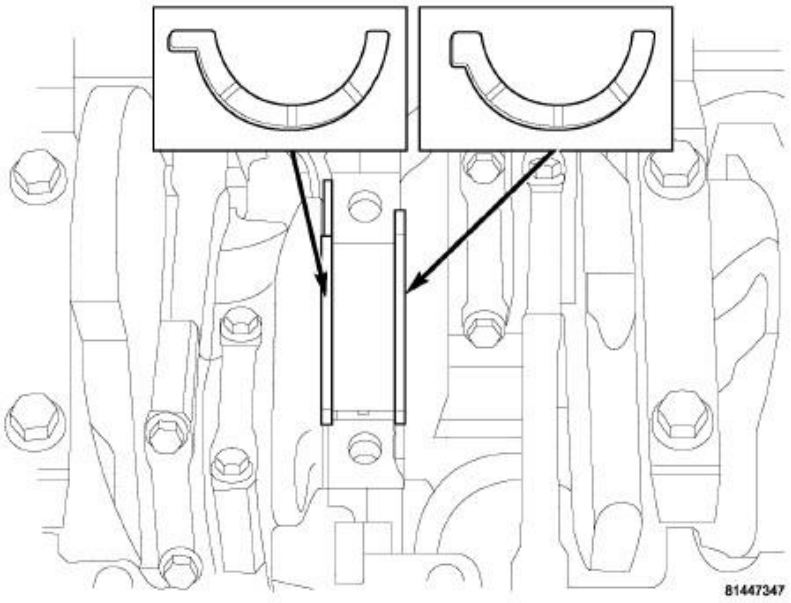

Fig. 200: THRUST WASHER LOCATION
Courtesy of CHRYSLER LLC

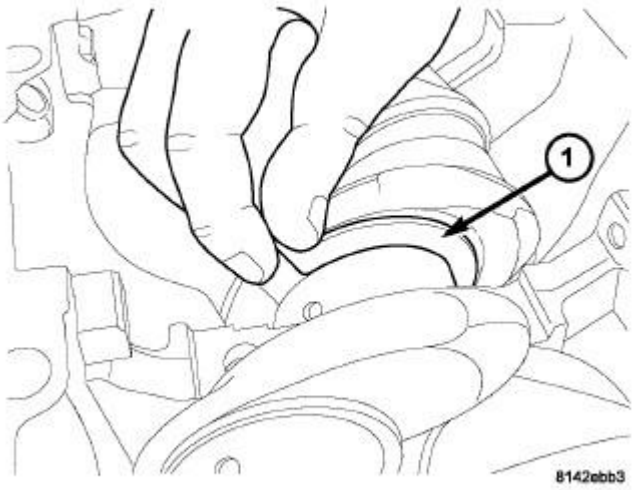

Fig. 201: THRUST WASHER REMOVAL/INSTALLATION
Courtesy of CHRYSLER LLC

1. Select the proper main bearings. See **Engine/Engine Block/BEARING(S), Crankshaft - Standard Procedure**.
2. Install main bearings in block and caps, and lubricate bearings.

3. Position the crankshaft into the cylinder block.
4. Install the thrust bearings (1).

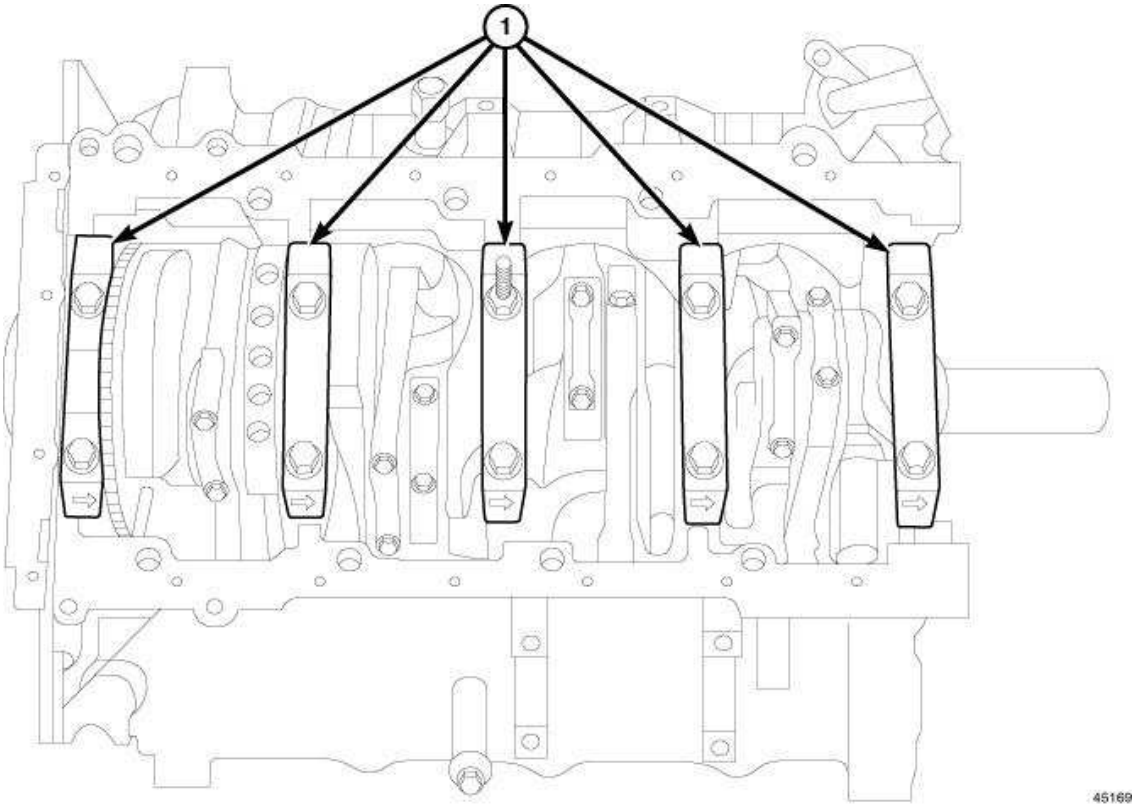

Fig. 202: MAIN BEARING CAPS
Courtesy of CHRYSLER LLC

5. Install all main bearing caps (1) with the arrows facing forward.
6. Clean and oil all main cap bolts and install.

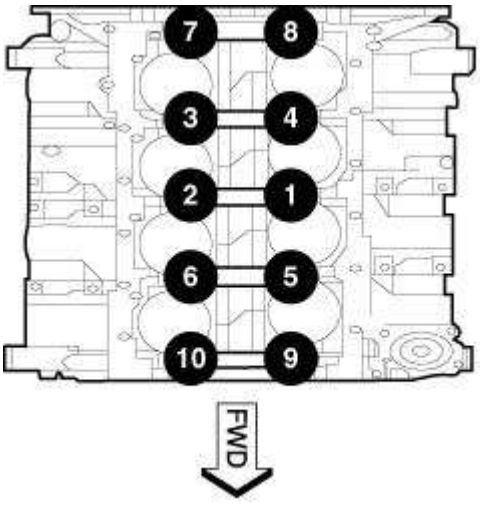

Fig. 203: Main Bearing Cap Bolt Tightening Sequence

Courtesy of CHRYSLER LLC

7. Tighten main bearing cap bolts to 10 N.m (15 ft. lbs.) in the sequence shown in illustration.
8. Tighten main bearing cap bolts to 27 N.m (20 ft. lbs.) in the sequence shown in illustration.
9. Rotate main bearing cap bolts an additional 90° in the sequence shown in illustration.

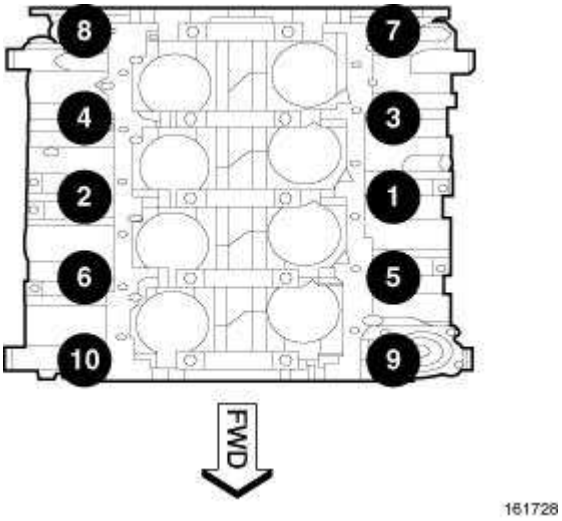

Fig. 204: Crossbolt Tightening Sequence
Courtesy of CHRYSLER LLC

10. Install the crossbolts with new seal washers.
11. Tighten main bearing cap cross bolts to 10 N.m (15 ft. lbs.) in the sequence shown in illustration.
12. Tighten main bearing cap cross bolts to 28 N.m (21 ft. lbs.) in the sequence shown in illustration.
13. Tighten main bearing cap cross bolts to 28 N.m (21 ft. lbs.) in the sequence shown in illustration again.
14. Measure crankshaft end play. See **Engine/Engine Block/BEARING(S), Crankshaft - Standard Procedure**.
15. Position the connecting rods onto the crankshaft and install the rod bearing caps. See **Engine/Engine Block/ROD, Piston and Connecting - Installation**.

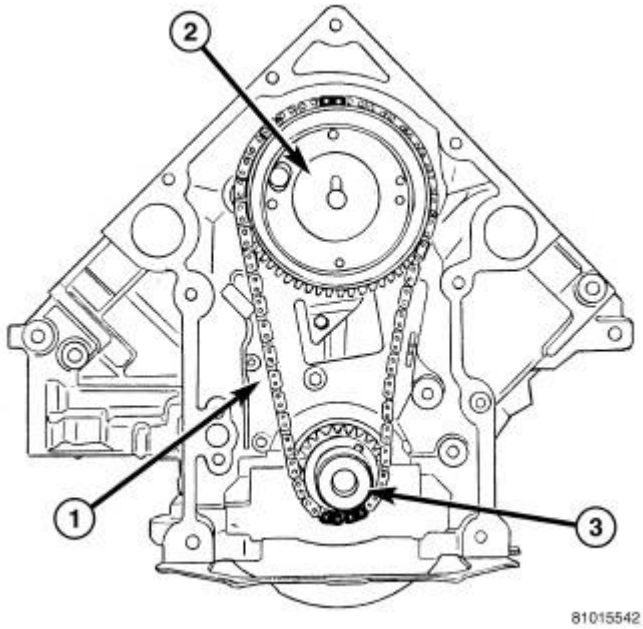

Fig. 205: TIMING MARK ALIGNMENT
Courtesy of CHRYSLER LLC

16. Install timing chain (1) and sprockets (2,3). See **Engine/Valve Timing/CHAIN and SPROCKETS, Timing - Installation**.

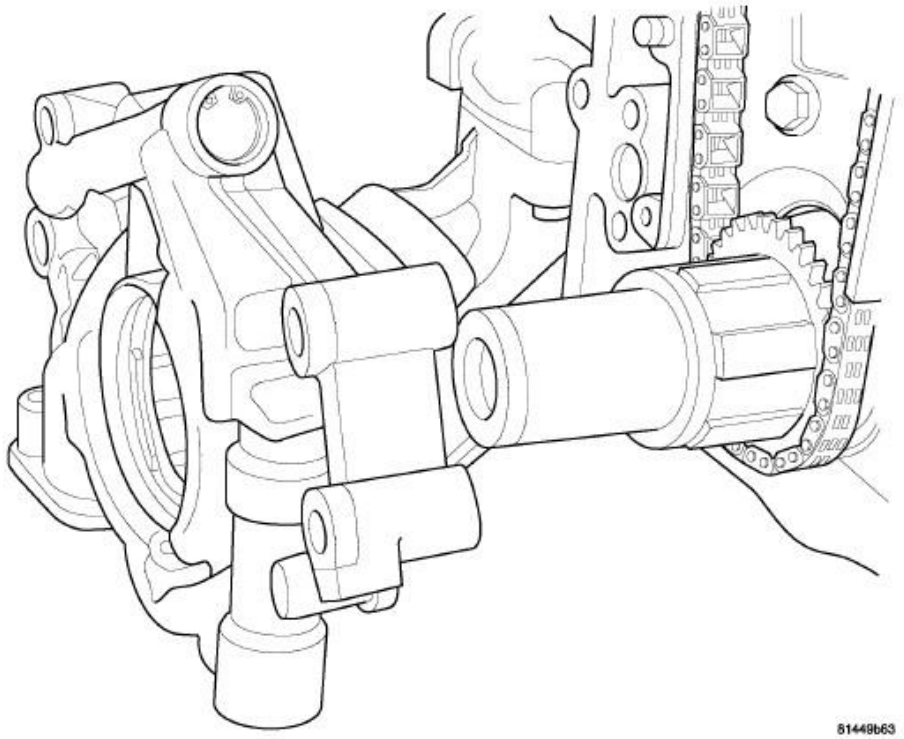

Fig. 206: OIL PUMP REMOVAL/INSTALLATION
Courtesy of CHRYSLER LLC

17. Install oil pump. See **Engine/Lubrication/PUMP, Engine Oil - Installation**.

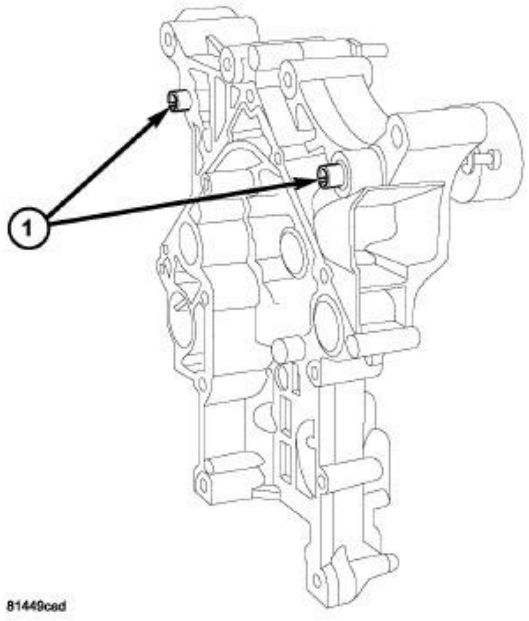

Fig. 207: FRONT COVER SLIDE BUSHINGS
Courtesy of CHRYSLER LLC

18. Install the timing chain cover (1). See **Engine/Valve Timing/COVER(S), Engine Timing - Installation**.

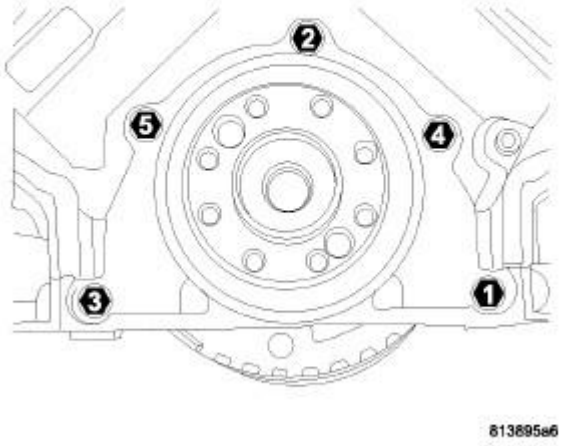

Fig. 208: REAR SEAL RETAINER TORQUE SEQUENCE
Courtesy of CHRYSLER LLC

19. Install the rear main seal and retainer. See **Engine/Engine Block/RETAINER, Crankshaft Rear Oil Seal - Installation**.
20. Install the windage tray/oil pan gasket.
21. Install the oil pick up tube.
22. Install the oil pan. See **Engine/Lubrication/PAN, Oil - Installation**.
23. Install the vibration damper. See **Engine/Engine Block/DAMPER, Vibration - Installation**.
24. Install the engine. See **Engine - Installation**.

DAMPER, VIBRATION

Removal

REMOVAL

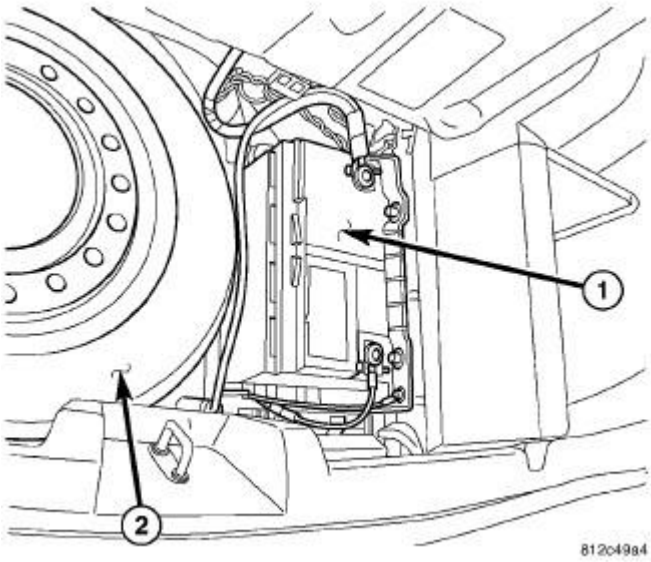

Fig. 209: Locating Battery
Courtesy of CHRYSLER LLC

1. Disconnect negative cable from battery (1).
2. Remove accessory drive belt. Refer to **Cooling/Accessory Drive/BELT, Serpentine - Removal** .
3. Drain cooling system. Refer to **Cooling - Standard Procedure** .
4. Remove radiator upper hose.
5. Remove fan shroud. Refer to **Cooling/Engine/FAN, Cooling - Removal** .

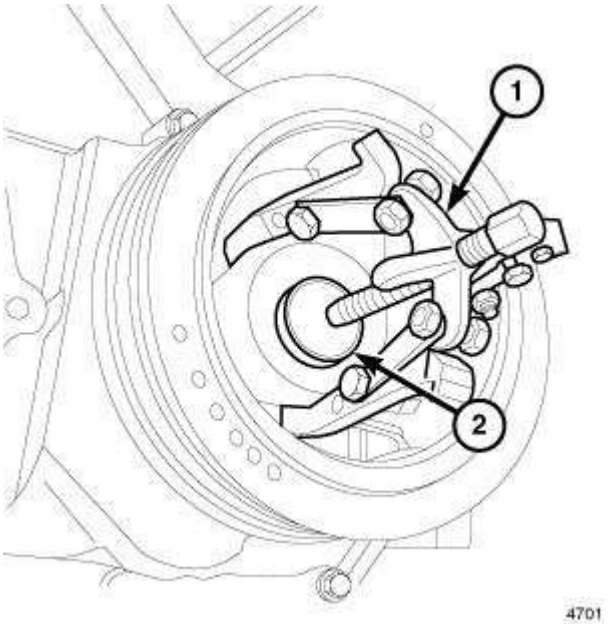

Fig. 210: Crankshaft Damper Removal
Courtesy of CHRYSLER LLC

6. Remove vibration damper bolt.
7. Insert Crankshaft Insert 8513A (2) in the end of the crankshaft.
8. Remove damper with puller 1023 (1).

Installation

INSTALLATION

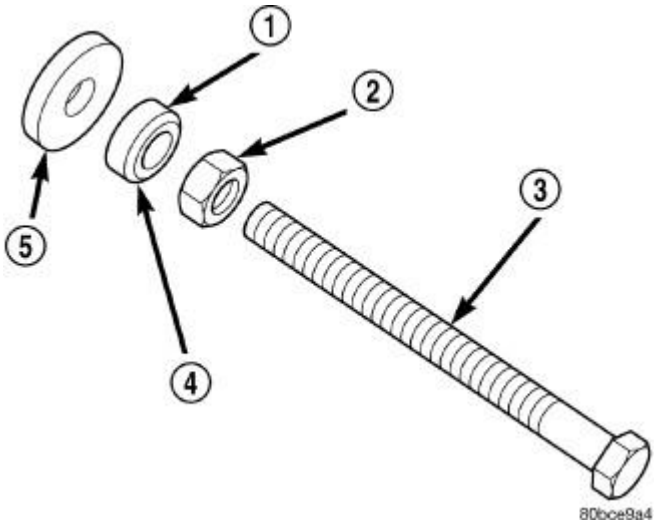

Fig. 211: Proper Assembly Method for Special Tool 8512
Courtesy of CHRYSLER LLC

1 - BEARING
2 - NUT
3 - THREADED ROD
4 - BEARING HARDENED SURFACE (FACING NUT)
5 - HARDENED WASHER

CAUTION: To prevent severe damage to the crankshaft, damper installer 8512A, thoroughly clean the damper bore and the crankshaft nose before installing damper.

1. Slide damper onto crankshaft slightly.

CAUTION: Damper installer 8512A, is assembled in a specific sequence. Failure to assemble this tool in this sequence may result in tool failure and severe damage to either the tool or the crankshaft.

2. Assemble damper installer 8512A as follows, The nut is threaded onto the shaft first (2). Then the roller bearing (1) is placed onto the threaded rod (3) The hardened bearing surface of the bearing (1) **MUST** face the nut (2). Then the hardened washer (5) slides onto the threaded rod (3). Once assembled coat the threaded rod's threads with MOPAR® Nickel Anti-Seize or

equivalent.

3. Using damper installer 8512A, press damper onto crankshaft.
4. Install vibration damper bolt and tighten to 176 N.m (129 ft. lbs.).
5. Install radiator upper hose.
6. Install accessory drive belt. Refer to **Cooling/Accessory Drive/BELT, Serpentine - Installation** .
7. Refill cooling system. Refer to **Cooling - Standard Procedure** .
8. Connect negative cable to battery.

FLEXPLATE

Removal

REMOVAL

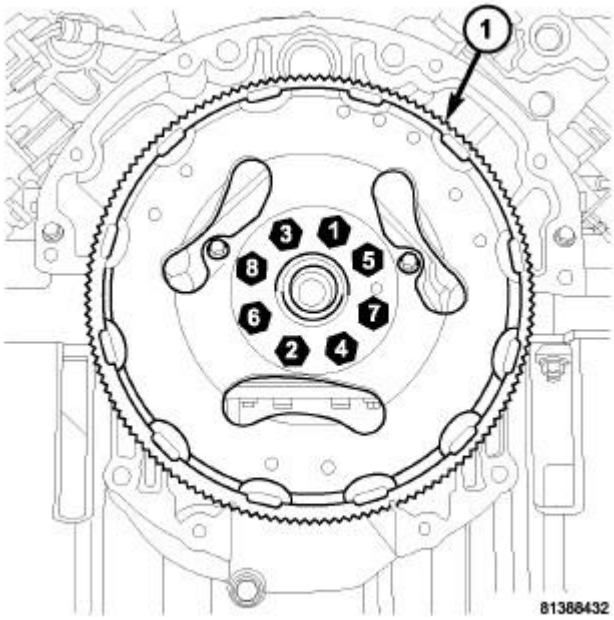

Fig. 212: FLEX PLATE TIGHTENING SEQUENCE
Courtesy of CHRYSLER LLC

1. Remove the transmission. Refer to **Transmission and Transfer Case/Automatic - NAG1 - Removal** .
2. Remove the bolts and flexplate (1).

Installation

INSTALLATION

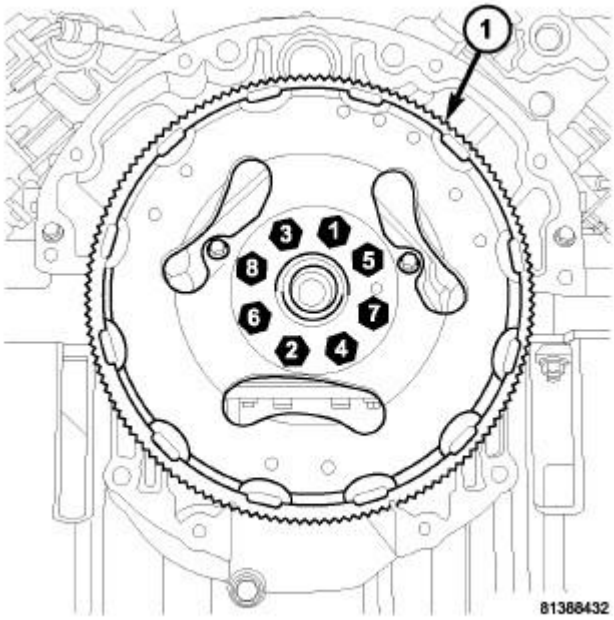

Fig. 213: FLEX PLATE TIGHTENING SEQUENCE
Courtesy of CHRYSLER LLC

1. Position the flexplate or flywheel onto the crankshaft and install the bolts hand tight.
2. Tighten the flexplate retaining bolts to 95 N.m (70 ft. lbs.).
3. Install the transmission. Refer to **Transmission and Transfer Case/Automatic - NAG1 - Installation** .

LIFTER(S), HYDRAULIC, ROLLER

Diagnosis and Testing

HYDRAULIC ROLLER TAPPETS

Before disassembling any part of the engine to correct tappet noise, check the oil pressure. If vehicle has no oil pressure gauge, install a reliable gauge at the pressure sending-unit. The pressure should be between 207-552 kPa (30-70 psi) at 3,000 RPM.

Check the oil level after the engine reaches normal operating temperature. Allow 5 minutes to stabilize oil level, check dipstick. The oil level in the pan should never be above the FULL mark or below the ADD OIL mark on dipstick. Either of these two conditions could be responsible for noisy tappets.

OIL LEVEL - HIGH

If oil level is above the FULL mark, it is possible for the connecting rods to dip into the oil. With the engine running, this condition could create foam in the oil pan. Foam in oil pan would be fed to the hydraulic tappets by the oil pump causing them to lose length and allow valves to seat noisily.

OIL LEVEL - LOW

Low oil level may allow oil pump to take in air. When air is fed to the tappets, they lose length, which allows valves to seat noisily. Any leaks on intake side of oil pump through which air can be drawn will create the same tappet action. Check the lubrication system from the intake strainer to the pump cover, including the relief valve retainer cap. When tappet noise is due to aeration, it may be intermittent or constant, and usually more than one tappet will be noisy. When oil level and leaks have been corrected, operate the engine at fast idle. Run engine for a sufficient time to allow all of the air inside the tappets to be bled out.

TAPPET NOISE DIAGNOSIS

1. To determine source of tappet noise, crank over engine with cylinder head covers removed.
2. Feel each valve spring or rocker arm to detect noisy tappet. The noisy tappet will cause the affected spring and/or rocker arm to vibrate or feel rough in operation.

   NOTE: Worn valve guides or cocked springs are sometimes mistaken for noisy tappets. If such is the case, noise may be dampened by applying side thrust on the valve spring. If noise is not appreciably reduced, it can be assumed the noise is in the tappet. Inspect the rocker arm push rod sockets and push rod ends for wear.

3. Valve tappet noise ranges from light noise to a heavy click. A light noise is usually caused by excessive leak-down around the unit plunger, or by the plunger partially sticking in the tappet body cylinder. The tappet should be replaced. A heavy click is caused by a tappet check valve not seating, or by foreign particles wedged between the plunger and the tappet body. This will cause the plunger to stick in the down position. This heavy click will be accompanied by excessive clearance between the valve stem and rocker arm as valve closes. In either case, tappet assembly should be removed for inspection and cleaning.
4. The valve train generates a noise very much like a light tappet noise during normal operation. Care must be taken to ensure that tappets are making the noise. If more than one tappet seems to be noisy, it is probably not the tappets.

Removal

REMOVAL

1. Disconnect and isolate the negative battery cable.
2. Remove the cylinder head. See **Engine/Cylinder Head - Removal**.

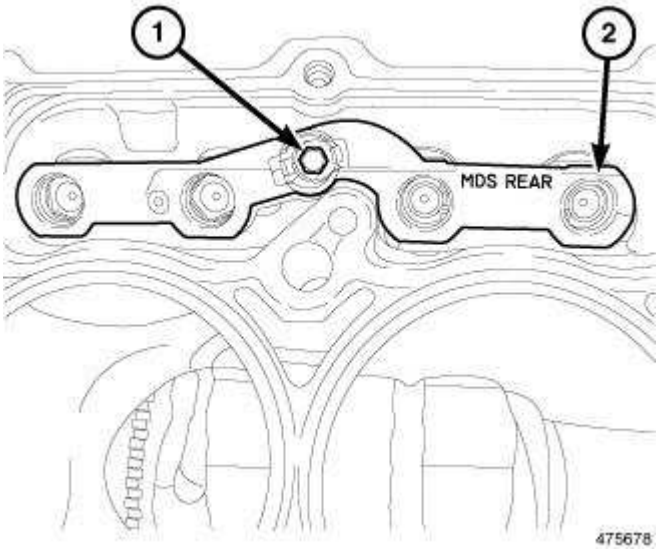

Fig. 214: Identifying MDS Rear Lifter Assemblies
Courtesy of CHRYSLER LLC

3. Remove the tappet guide holder retaining bolt (1) from the tappet guide holder assembly (2).

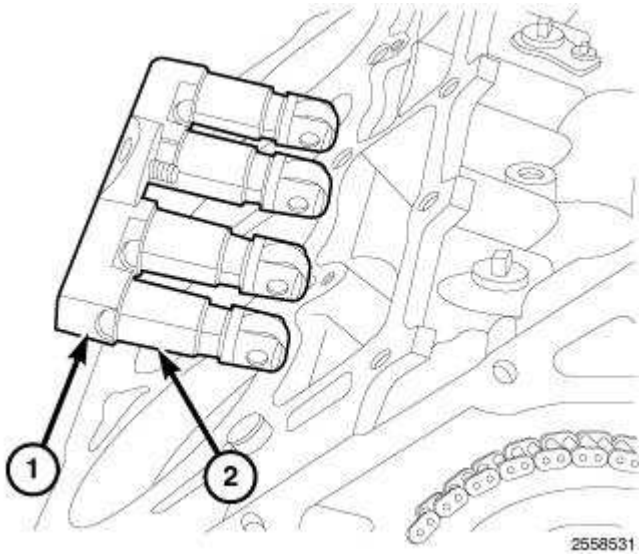

Fig. 215: Tappet Guide Holder Assembly
Courtesy of CHRYSLER LLC

CAUTION: The tappets and guide holder assembly must be installed as an assembly and in their original locations or engine damage could result.

CAUTION: If the tappets and guide holder assembly are to be reused, identify tappets to ensure installation in their original location.

4. Remove the tappet guide holder (1) and tappets (2) as an assembly.
5. Check the camshaft lobes for abnormal wear.

Installation

INSTALLATION

CAUTION: The tappets and guide holder assembly must be installed as an assembly and in their original locations or engine damage could result.

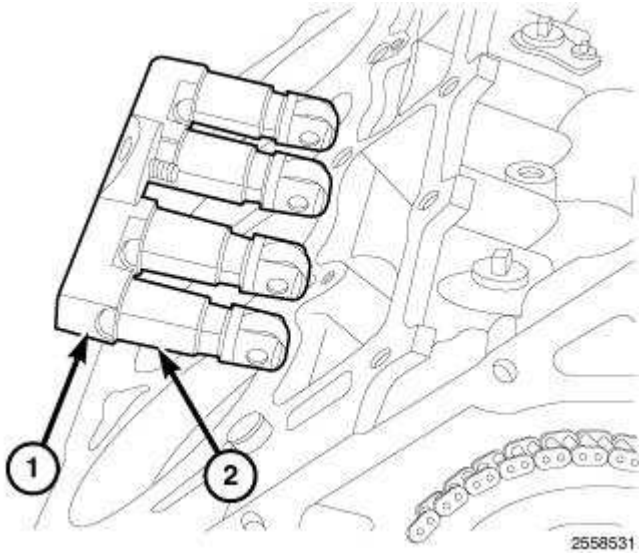

Fig. 216: Tappet Guide Holder Assembly
Courtesy of CHRYSLER LLC

1. Lubricate the tappet guide holder (1) and tappets (2).

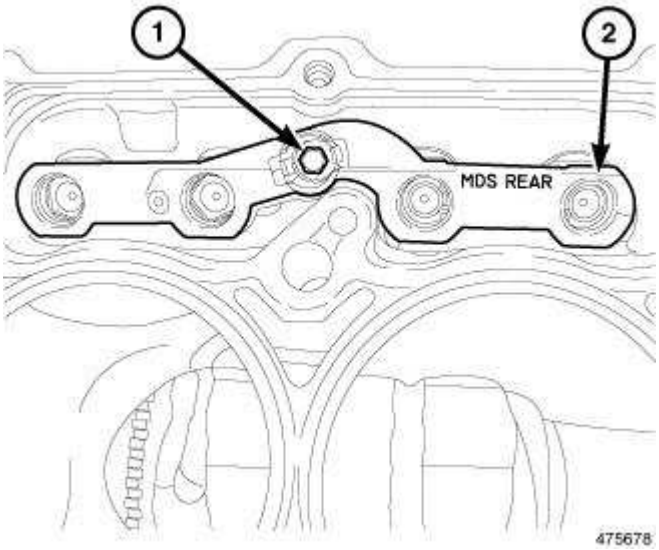

Fig. 217: Identifying MDS Rear Lifter Assemblies
Courtesy of CHRYSLER LLC

CAUTION: If the tappets and guide holder assembly are to be reused, they must me installed in their original location.

2. Install the tappet guide holder (2) and tappets.
3. Tighten the tappet retainer bolt (1) to 12 N.m (106 in. lbs.).
4. Install the cylinder head. See **Engine/Cylinder Head - Installation**.
5. Connect the negative battery.

CAUTION: To prevent damage to valve assemblies, do not run the engine above fast idle until all hydraulic tappets have filled with oil and have become quiet.

6. Start the engine and check for leaks.
7. Road test the vehicle.

RETAINER, CRANKSHAFT REAR OIL SEAL

Diagnosis and Testing

REAR SEAL AREA LEAKS

The crankshaft rear oil seal is integral to the crankshaft rear oil seal retainer and cannot be serviced separately.

Since it is sometimes difficult to determine the source of an oil leak in the rear seal area of the engine, a more involved inspection is necessary. The following steps should be followed to help pinpoint the source of the leak.

If the leakage occurs at the crankshaft rear oil seal area:

1. Raise and support the vehicle.
2. Remove the structural dust cover.
3. Inspect the rear of the cylinder block for evidence of oil leakage, note the following:
   - Circular spray pattern generally indicates seal leakage or crankshaft damage.
   - Where leakage tends to run straight down, possible causes are a porous block, camshaft bore cup plugs, oil galley pipe plugs, oil filter runoff, and main bearing cap to cylinder block mating surfaces.
4. If no leaks are detected, pressurize the crankcase as outlined in **AIR LEAK DETECTION TEST METHOD**.

CAUTION: Do not exceed 20.6 kPa (3 psi).

5. If the leak is not detected, very slowly turn the crankshaft and watch for leakage. If a leak is detected between the crankshaft and seal while slowly turning the crankshaft, it is possible the crankshaft seal surface is damaged. The seal area on the crankshaft could have minor nicks or scratches that can be polished out using an emery cloth.

   CAUTION: Use extreme caution when crankshaft polishing is necessary to remove minor nicks or scratches. The crankshaft seal flange is specially machined to complement the function of the rear oil seal.

6. For bubbles that remain steady with shaft rotation, no further inspection can be done. See **Engine/Engine Block/RETAINER, Crankshaft Rear Oil Seal - Removal**.

Removal

REMOVAL

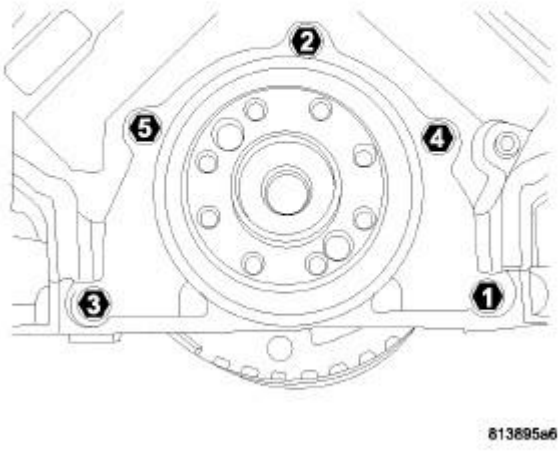

Fig. 218: Rear Seal Retainer Torque Sequence
Courtesy of CHRYSLER LLC

NOTE: The crankshaft rear oil seal is integral to the crankshaft rear oil seal retainer and must be replaced as an assembly.

NOTE: The crankshaft rear oil seal retainer can not be reused after removal.

NOTE: This procedure can be performed in vehicle.

1. Disconnect the negative battery cable.
2. Remove the transmission (Refer to **REMOVAL** .
3. Remove the flexplate. See **Engine/Engine Block/FLEXPLATE - Removal**.
4. Remove the oil pan. See **Engine/Lubrication/PAN, Oil - Removal**.
5. Using the sequence shown in illustration, remove the rear oil seal retainer mounting bolts.
6. Carefully remove the retainer from the engine block.

Installation

INSTALLATION

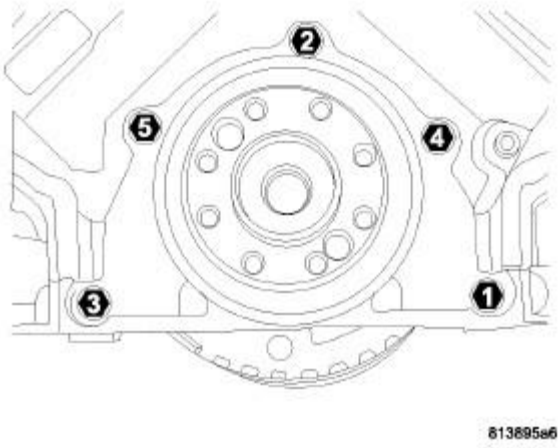

Fig. 219: Rear Seal Retainer Torque Sequence
Courtesy of CHRYSLER LLC

NOTE: The crankshaft rear oil seal is integral to the crankshaft rear oil seal retainer and must be replaced as an assembly.

NOTE: The crankshaft rear oil seal retainer can not be reused after removal.

1. Thoroughly clean all gasket residue from the engine block.
2. Position the gasket onto the new crankshaft rear oil seal retainer.
3. Position the crankshaft rear oil seal retainer onto the engine block.
4. Using the sequence shown in illustration, install the crankshaft rear oil seal retainer mounting

bolts and tighten to 15 N.m (11 ft. lbs.).

5. Install the oil pan. See **Engine/Lubrication/PAN, Oil - Installation**.
6. Install the flexplate. See **Engine/Engine Block/FLEXPLATE - Installation**.
7. Install the transmission (Refer to **INSTALLATION** .
8. Fill the engine with oil.
9. Start the engine and check for leaks.

RING(S), PISTON

Standard Procedure

PISTON RING FITTING

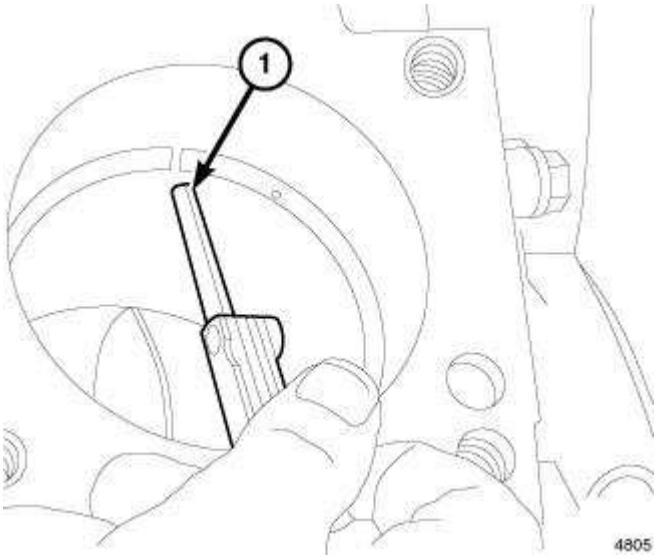

Fig. 220: Using Feeler Gauge To Check Ring End Gap
Courtesy of CHRYSLER LLC

CAUTION: Before reinstalling used rings or installing new rings, the ring clearances must be checked or engine damage may result.

1. Wipe the cylinder bore clean.
2. Insert the ring into the cylinder bore.

NOTE: The ring gap measurement must be made with the ring positioned at least 12 mm (0.50 inch) from bottom of cylinder bore.

3. Using a piston, make sure that the ring is squared in the cylinder bore. Slide the ring downward into the cylinder.
4. Using a feeler gauge (1), check the ring end gap. Replace any rings not within specification.

PISTON RING SIDE CLEARANCE

5. Measure the ring side clearance with a feeler gauge (1) as shown in illustration. Make sure the feeler gauge fits snugly between the ring land and the ring. Replace any ring not within specification.

NOTE: Make sure marks on compression rings face upward.

6. Rotate the ring around the piston. The ring must rotate in the groove with out binding.

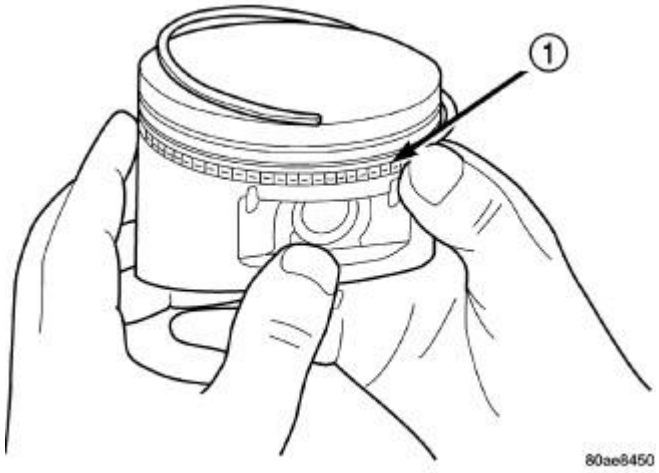

Fig. 221: SIDE RAIL - INSTALLATION
Courtesy of CHRYSLER LLC

7. Install the oil ring expander.
8. Install lower side rail by placing one end between the piston ring groove and the expander ring (1). Hold end firmly and press down the portion to be installed until side rail is in position. Repeat step for upper side rail.

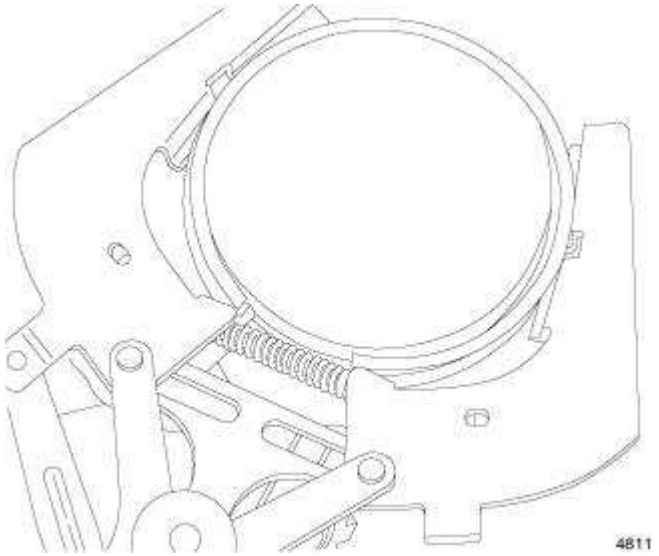

Fig. 222: UPPER AND INTERMEDIATE RINGS
Courtesy of CHRYSLER LLC

9. Install No. 2 intermediate piston ring using a piston ring installer.
10. Install No. 1 upper piston ring using a piston ring installer.

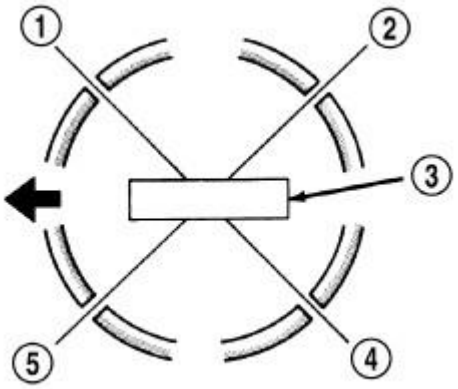

Fig. 223: PISTON RING END GAP POSITION
Courtesy of CHRYSLER LLC

11. Install the oil ring expander gap at the (5) position.
12. Install the oil ring lower side rail gap at the (4) position.
13. Install the oil ring upper side rail gap at the (1) position.
14. Install the second compression ring gap at the (5) position.
15. Install the top compression ring gap at the (2) position.

ROD, PISTON AND CONNECTING

Description

DESCRIPTION

CAUTION: Do not use a metal stamp to mark connecting rods as damage may result, instead use ink or a scratch awl.

The pistons are made of a high-strength aluminum alloy. Piston skirts are coated with a solid lubricant (Molykote) to reduce friction and provide scuff resistance. The piston top ring groove and land is anodized. The connecting rods are made of forged powdered metal, with a "fractured cap" design. A floating piston pin is used to attach the piston and connecting rod.

Standard Procedure

PISTON FITTING

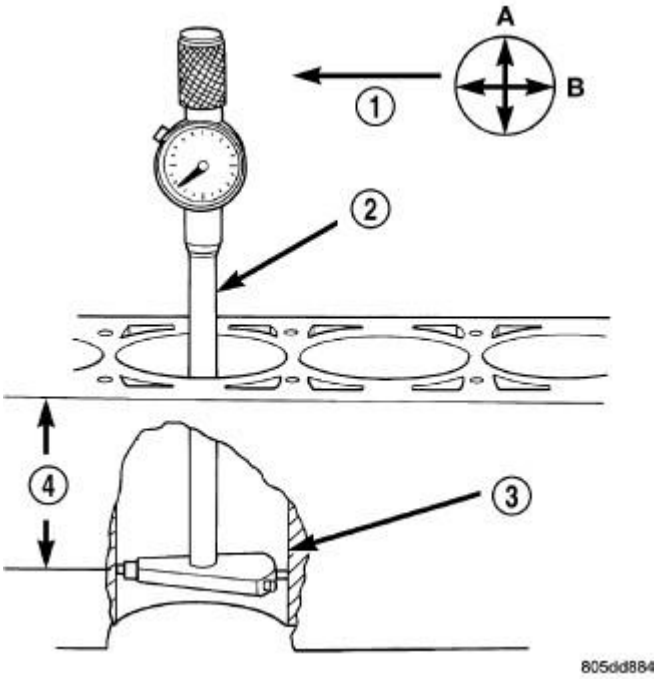

Fig. 224: Using Bore Gauge To Measure Cylinder Bore Diameter
Courtesy of CHRYSLER LLC

1. To correctly select the proper size piston, a cylinder bore gauge, capable of reading in 0.003 mm (0.0001 in.) increments is required. If a bore gauge is not available, do not use an inside micrometer.
2. Measure the inside diameter of the cylinder bore at a point 38.0 mm (1.5 inches) below top of bore (4). Start perpendicular (across or at 90°) to the axis of the crankshaft at point A and then take an additional bore reading 90° to that at point B.

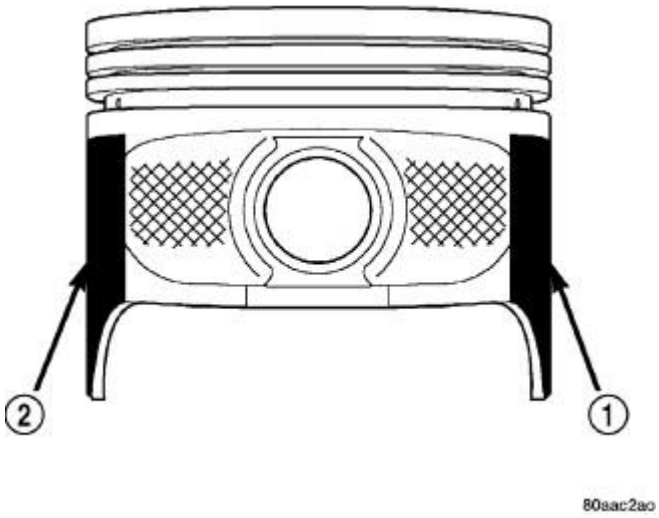

Fig. 225: MOLY COATED PISTON
Courtesy of CHRYSLER LLC

NOTE: **Always install new retaining clips for the piston pin. Never reuse the old clips.**

NOTE: **Use care not to distort the clip while installing.**

3. Once assembled, the piston-rod assembly is specific for the left cylinder bank (odd numbered) and the right cylinder bank (even numbered) and must not be interchanged.
4. The coating material (1,2) is applied to the piston after the final piston machining process. Measuring the outside diameter of a coated piston will not provide accurate results. Therefore measuring the inside diameter of the cylinder bore with a Dial Bore Gauge is **MANDATORY** . To correctly select the proper size piston, a cylinder bore gauge capable of reading in 0.003 mm (0.0001 in.) increments is required.
5. Piston installation into the cylinder bore requires slightly more pressure than that required for non-coated pistons. The bonded coating on the piston will give the appearance of a line-to-line fit with the cylinder bore.

Removal

REMOVAL

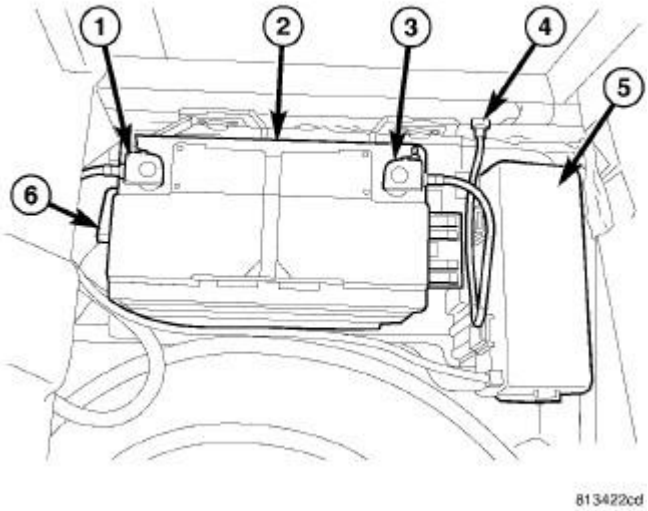

Fig. 226: Battery System Components And PDC Cover
Courtesy of CHRYSLER LLC

1. Perform the fuel system pressure release procedure. Refer to **Fuel System/Fuel Delivery - Standard Procedure** .
2. Disconnect and isolate the negative battery cable (3).

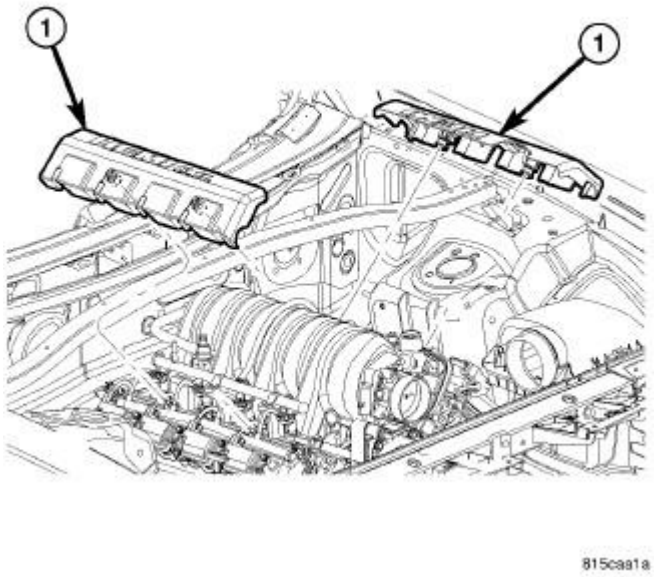

Fig. 227: Engine Covers
Courtesy of CHRYSLER LLC

3. Remove the engine covers (1).

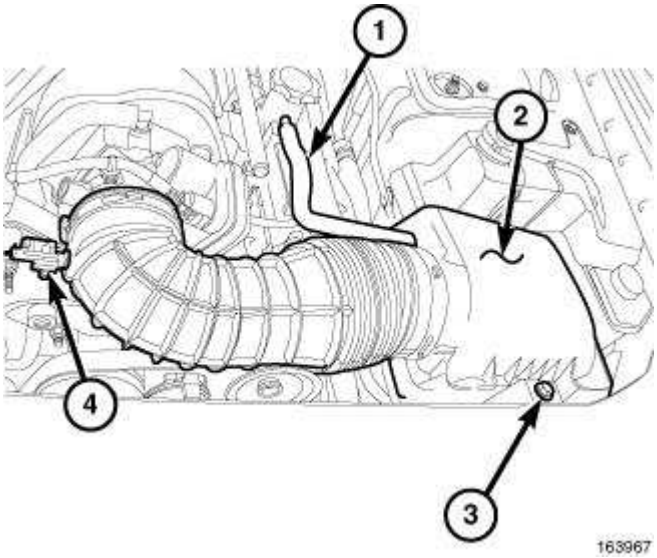

Fig. 228: Air Duct To Throttle Body
Courtesy of CHRYSLER LLC

4. Loosen clamp and disconnect air duct at throttle body.
5. Disconnect intake air temperature sensor (4) electrical connector.
6. Remove makeup air hose (1).
7. Remove air cleaner housing retaining bolt (3) and remove air cleaner housing (2).

8. Remove the cylinder head(s). See **Engine/Cylinder Head - Removal**.
9. Raise and support the vehicle.

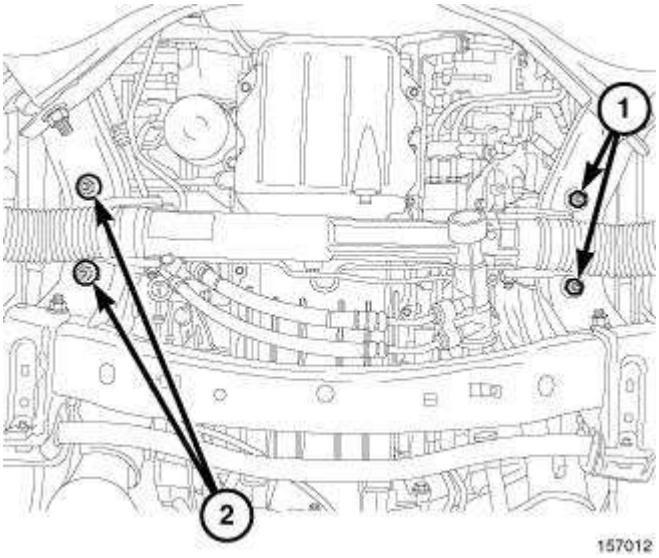

Fig. 229: Engine Mount Nuts
Courtesy of CHRYSLER LLC

10. Remove the engine mount nuts (1,2).

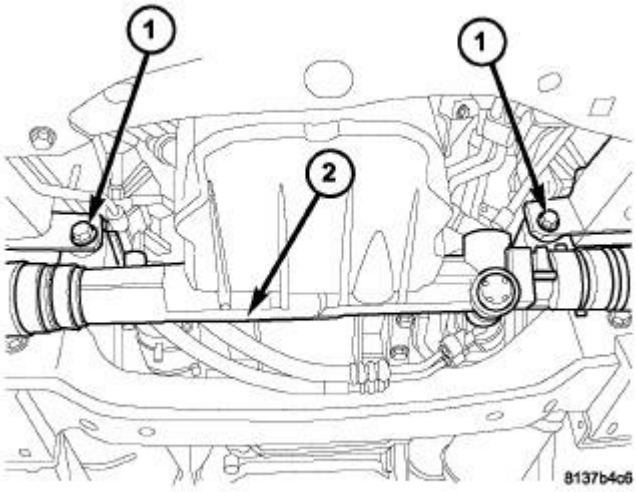

Fig. 230: Identifying Steering Gear & Mounting Bolts
Courtesy of CHRYSLER LLC

11. Remove the steering gear mounting bolts (1) and position the steering gear (2) aside.
12. Remove the engine oil dipstick and tube from the oil pan.
13. Lower the vehicle.

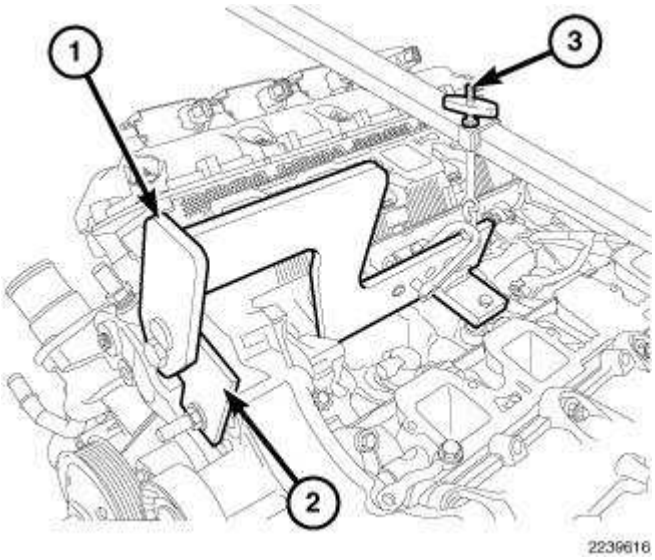

Fig. 231: Engine Lift Fixture & Adapter
Courtesy of CHRYSLER LLC

NOTE: Do not use air tools to install engine lift fixture.

14. Install the Engine Lift Fixture 8984A (1), Engine Lift Adapter 8984-UPD (2) and the Engine Support Fixture 8534B (3).
15. Raise the engine to provide clearance to remove the oil pan.
16. Raise and support the vehicle.
17. Remove the oil pan. See **Engine/Lubrication/PAN, Oil - Removal**.
18. Lower the vehicle.
19. Remove the timing chain cover. See **Engine/Valve Timing/COVER(S), Engine Timing - Removal**.
20. If necessary, remove the ridge on top of the cylinder bores with a reliable ridge reamer before removing pistons from cylinder block. **Be sure to keep tops of pistons covered during this operation.**

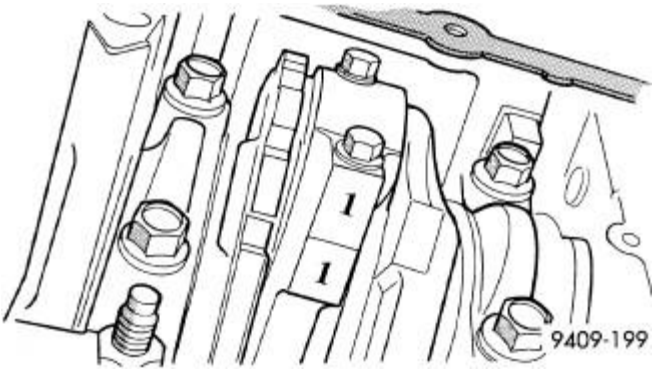

Fig. 232: IDENTIFY CONNECTION ROD TO CYLINDER
Courtesy of CHRYSLER LLC

CAUTION: Do Not use a number stamp or a punch to mark connecting rods or caps, as damage to connecting rods could occur.

NOTE: Connecting rods and bearing caps are not interchangeable and should be marked before removing to ensure correct reassembly.

21. Raise and support the vehicle.
22. Mark the connecting rod and bearing cap positions using a permanent ink marker or scribe tool.

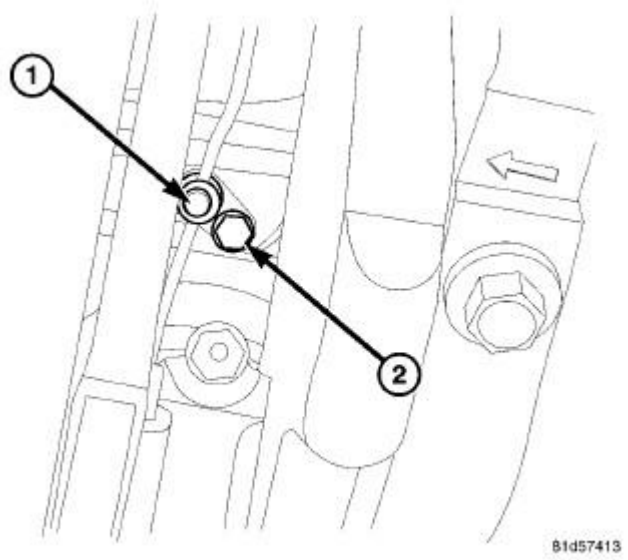

Fig. 233: OIL JET REMOVE/INSTALL
Courtesy of CHRYSLER LLC

CAUTION: When removing and installing the piston and connecting rod assembly, Do Not damage the piston oil cooler jets (1). If the jets are bent, engine damage may occur.

CAUTION: Care must be taken not to damage the fractured rod and cap joint face surfaces, as engine damage may occur.

CAUTION: Care must be taken not to nick crankshaft journals, as engine damage may occur.

NOTE: Pistons and connecting rods assemblies must be removed from the top of cylinder block. When removing the piston and connecting rod assemblies from the engine, rotate the crankshaft so each connecting rod is centered in the cylinder bore.

23. Remove the connecting rod cap and carefully remove the piston from the cylinder bore, repeat this procedure for each piston being removed.
24. Immediately after removing the piston and connecting rod, install the bearing cap on the mating connecting rod to prevent damage to the fractured cap and rod surfaces.
25. Carefully remove the piston rings from the piston(s), starting from the top ring down.

Cleaning

CLEANING

CAUTION: DO NOT use a wire wheel or other abrasive cleaning devise to clean the pistons or connecting rods. The pistons have a Moly coating, this coating must not be damaged.

1. Using a suitable cleaning solvent clean the pistons in warm water and towel dry.
2. Use a wood or plastic scraper to clean the ring land grooves.

Inspection

INSPECTION

Check the connecting rod journal for excessive wear, taper and scoring.

Check the connecting rod for signs of twist or bending.

Use the proper tool when removing the piston clip. If the clip is pried out, a burr may form on the groove that will inhibit pin removal and installation.

Check the piston for taper and elliptical shape before it is fitted into the cylinder bore. See **Engine/Engine Block/ROD, Piston and Connecting - Standard Procedure**.

Check the piston for scoring, or scraping marks in the piston skirts. Check the ring lands for cracks and/or deterioration.

Installation

INSTALLATION

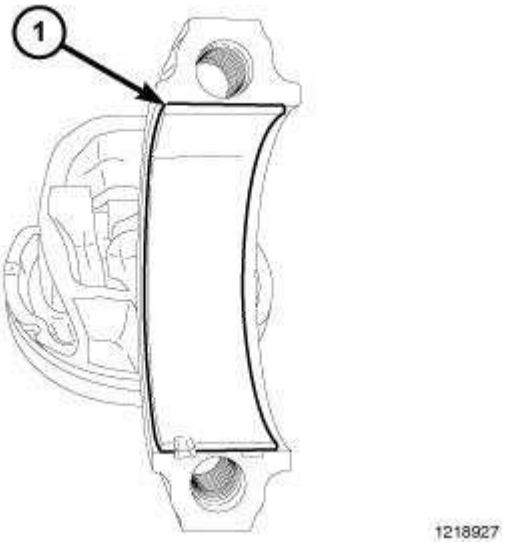

Fig. 234: Rod Bearing
Courtesy of CHRYSLER LLC

NOTE: Before reinstalling used rings or installing new rings, the ring clearances must be checked.

NOTE: Make sure the piston ring grooves are clean and free of nicks and burrs.

1. Check piston ring clearance. See **Engine/Engine Block/RING(S), Piston - Standard Procedure**.
2. Before installing piston and connecting rod assemblies into the bore, install the piston rings. See **Engine/Engine Block/RING(S), Piston - Standard Procedure**.
3. Immerse the piston head and rings in clean engine oil and position a ring compressor over the piston and rings and tighten the ring compressor. **Ensure the position of rings do not change during this operation.**
4. Position the rod bearing (1) onto the connecting rod and lubricate bearing surface with clean engine oil.

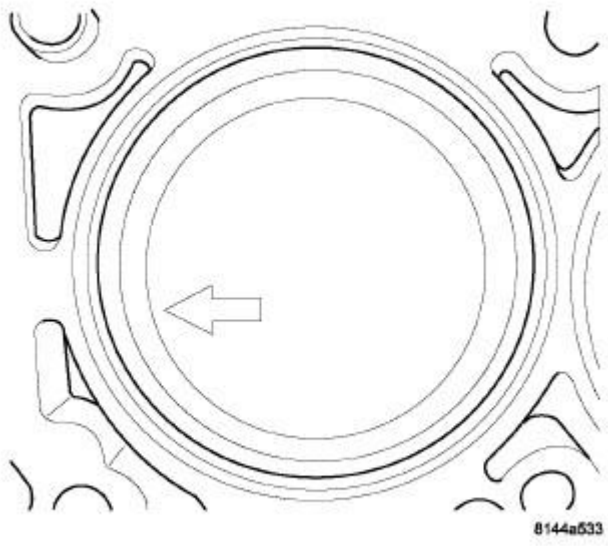

Fig. 235: Identifying Piston In Cylinder Bore
Courtesy of CHRYSLER LLC

5. The pistons are marked on the piston pin bore surface with an raised "F" or arrow on top of piston indicating installation position. This mark must be pointing toward the front of engine on both cylinder banks.
6. Wipe cylinder bore clean and lubricate with clean engine oil.
7. Rotate the crankshaft until the connecting rod journal is centered with the cylinder bore.
8. Insert the piston and rod assembly into the cylinder bore and carefully position the connecting rod over the crankshaft journal.
9. Tap piston down in cylinder bore using a hammer handle. While at the same time, guide connecting rod into position on rod journal.

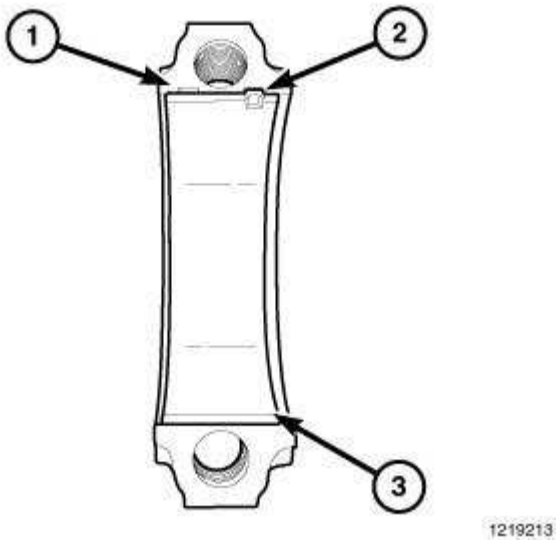

Fig. 236: Connecting Rod Cap
Courtesy of CHRYSLER LLC

10. Wipe the connecting rod cap (1) clean and lubricate with clean engine oil and install the bearing (3).

    NOTE: The connecting rods and bearing caps are not interchangeable, line up the previously marked bearing caps and connecting rods to ensure assembly to their original location.

11. Lubricate the bearing surfaces with clean engine oil and position the rod cap in place.

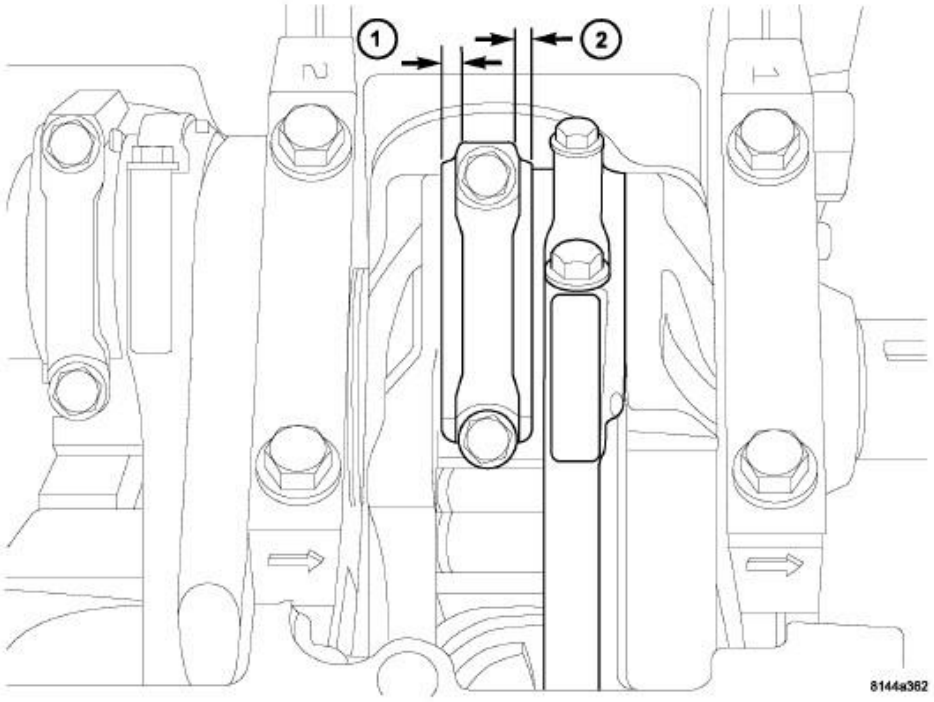

Fig. 237: Removing/Installing Connecting Rod
Courtesy of CHRYSLER LLC

CAUTION: When installing connecting rods, make sure the wide side (1) is towards the crankshaft and narrow sides (2) face each other.

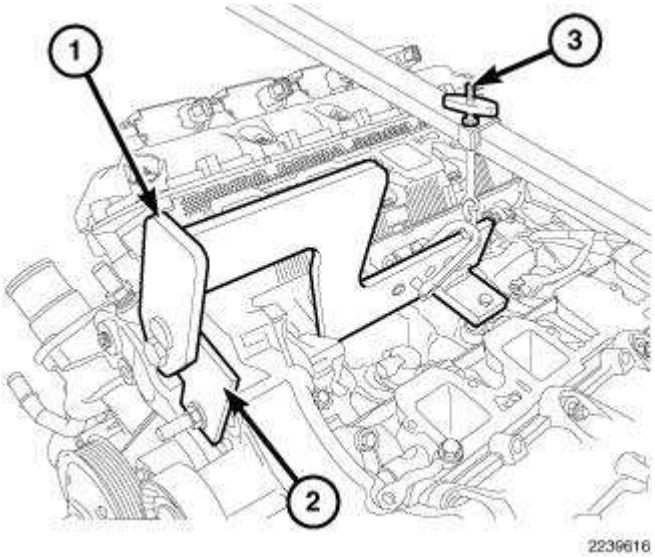

Fig. 238: Engine Lift Fixture & Adapter
Courtesy of CHRYSLER LLC

CAUTION: Always replace the Rod Bolts whenever they are loosened or removed.

12. Lubricate the new rod cap bolts with clean engine oil, install and tighten to 45 N.m (33 ft. lbs.) plus 60°.
13. Install the timing chain cover. See **Engine/Valve Timing/COVER(S), Engine Timing - Installation**.
14. Install the new oil pan gasket/windage tray and oil pan. See **Engine/Lubrication/PAN, Oil - Installation**.
15. Install the engine oil dipstick tube and dipstick.
16. Lower the vehicle.
17. Using the Engine Lift Fixture 8984A (1), Engine Lift Adapter 8984-UPD (2) and the Engine Support Fixture 8534B (3) lower the engine into position and remove.
18. Raise and support the vehicle.

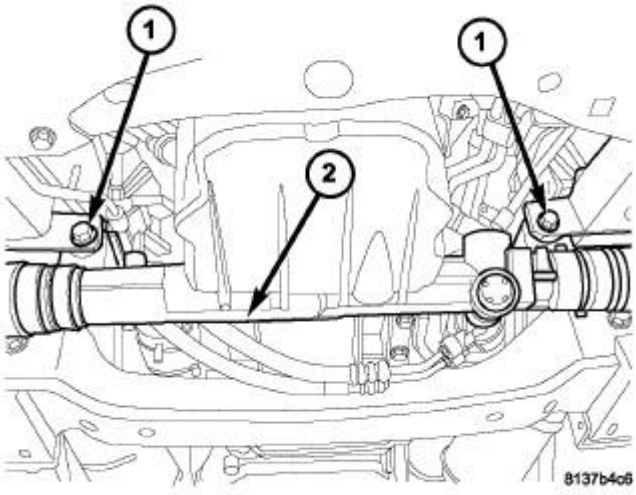

Fig. 239: Identifying Steering Gear & Mounting Bolts
Courtesy of CHRYSLER LLC

19. Position the steering gear (2), install mounting bolts (1) and tighten to 95 N.m (70 ft. lbs.).

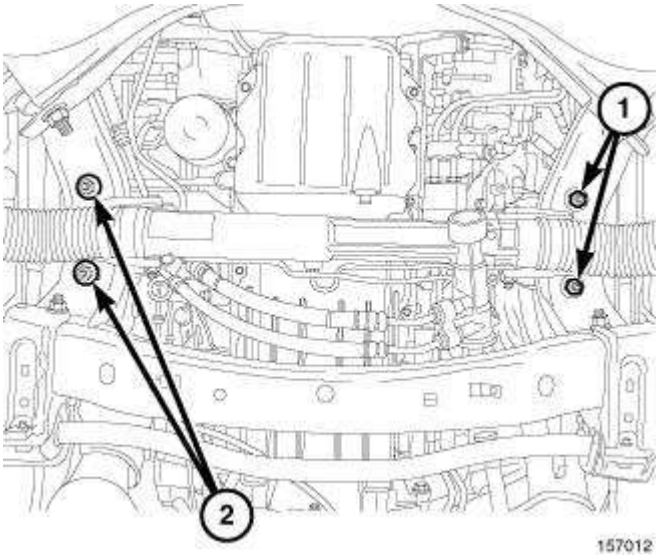

Fig. 240: Engine Mount Nuts
Courtesy of CHRYSLER LLC

20. Install the engine mount nuts (1,2) and tighten to 95 N.m (70 ft. lbs.).
21. Lower the vehicle.
22. Install the cylinder head(s). See **Engine/Cylinder Head - Installation**.
23. Install the intake manifold. See **Engine/Manifolds/MANIFOLD, Intake - Installation**.

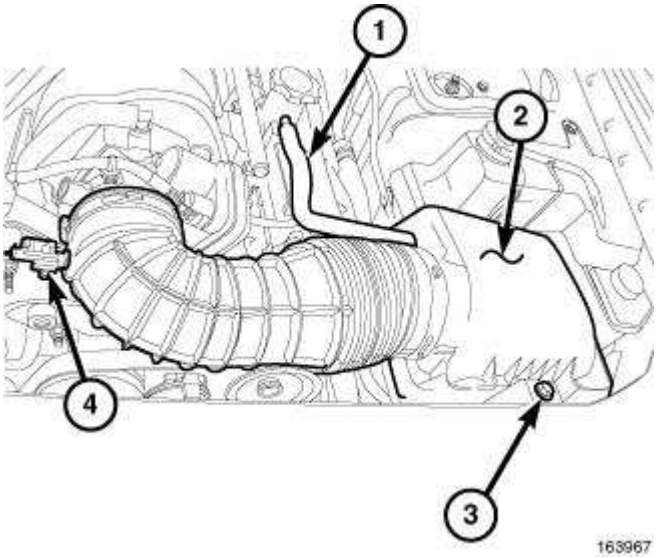

Fig. 241: Air Duct To Throttle Body
Courtesy of CHRYSLER LLC

24. Position the air cleaner housing (2), install the air cleaner housing retaining bolt (3) and securely tighten.
25. Connect the makeup air hose (1).
26. Connect the intake air temperature sensor (4) electrical connector.

27. Connect the air duct to the throttle body and tighten clamp to 3 N.m (30 in. lbs.).
28. Fill the engine with oil. See **Engine/Lubrication/OIL - Standard Procedure**.

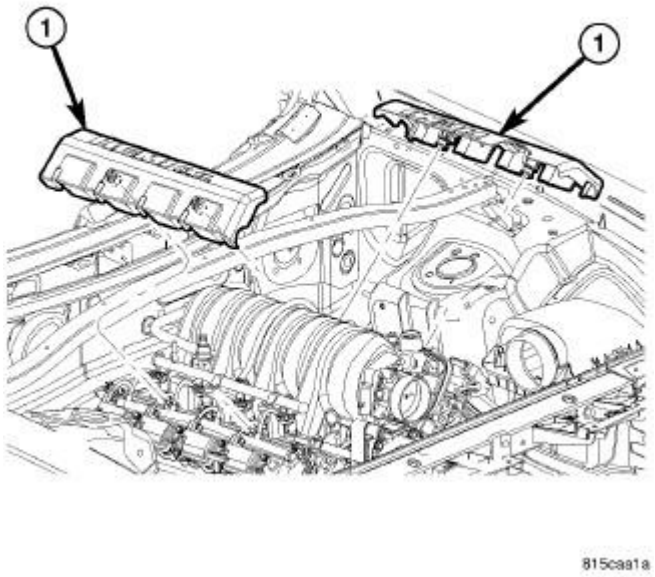

Fig. 242: Engine Covers
Courtesy of CHRYSLER LLC

29. Install the engine covers (1).

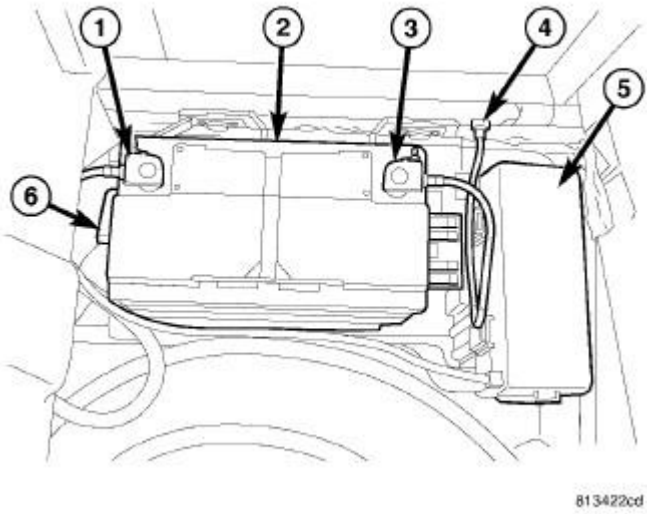

Fig. 243: Battery System Components And PDC Cover
Courtesy of CHRYSLER LLC

30. Connect the negative battery cable (3).

SEAL, CRANKSHAFT OIL, FRONT

Removal

REMOVAL

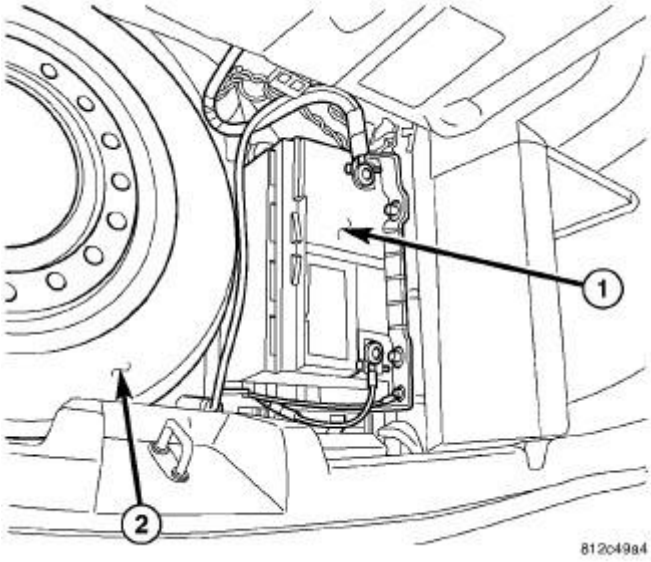

Fig. 244: Locating Battery
Courtesy of CHRYSLER LLC

1. Disconnect negative cable from battery (1).
2. Remove accessory drive belt. Refer to **Cooling/Accessory Drive/BELT, Serpentine - Removal** .
3. Drain cooling system. Refer to **Cooling - Standard Procedure** .
4. Remove upper radiator hose.
5. Remove radiator shroud attaching fasteners.
6. Remove radiator cooling fan and shroud. Refer to **Cooling/Engine/FAN, Cooling - Removal** .

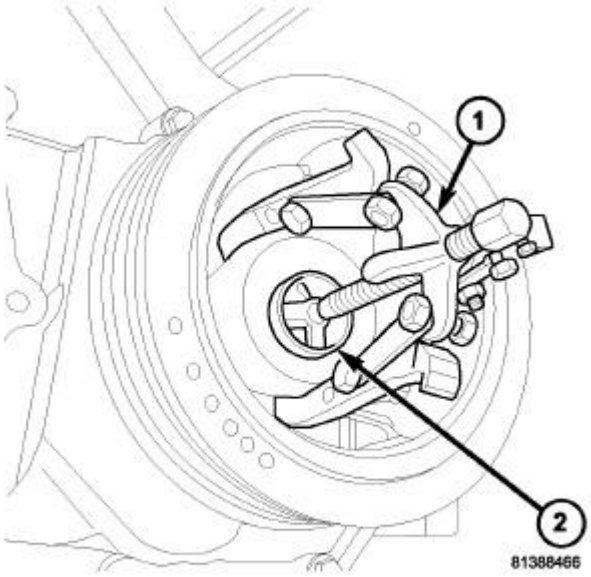

Fig. 245: CRANKSHAFT DAMPER REMOVAL
Courtesy of CHRYSLER LLC

7. Remove crankshaft damper bolt.
8. Remove damper using the Crankshaft Insert 8513A (2) and Three Jaw Puller 1023 (1). See **Engine/Engine Block/DAMPER, Vibration - Removal**.

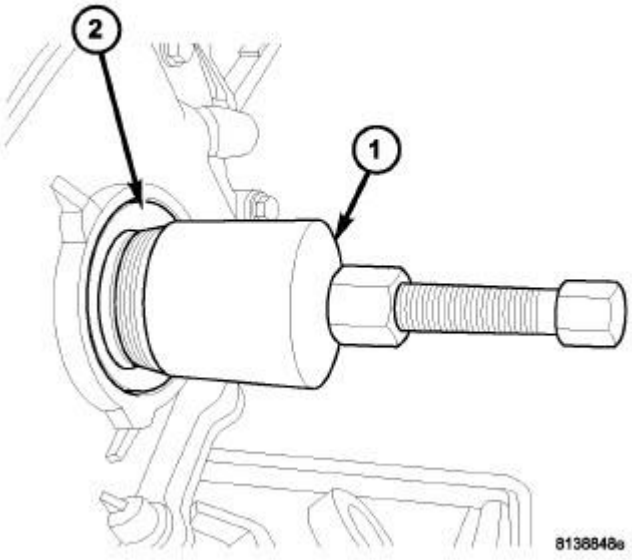

Fig. 246: FRONT CRANKSHAFT SEAL REMOVAL

Courtesy of CHRYSLER LLC

9. Use Seal Remover 9071 (1) to remove the crankshaft front seal (2).

Installation

INSTALLATION

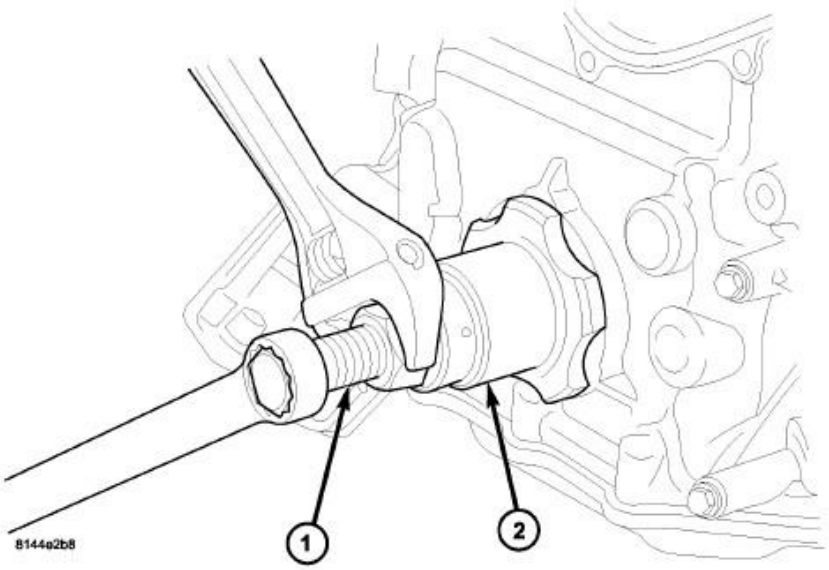

Fig. 247: FRONT SEAL INSTALLATION
Courtesy of CHRYSLER LLC

CAUTION: The front crankshaft seal must be installed dry. Do not apply lubricant to sealing lip or to outer edge.

1. Use Seal Installer 9072 and Damper Installer 8512A to install the crankshaft front oil seal.

CAUTION: To prevent severe damage to the Crankshaft or Damper, thoroughly clean the damper bore and the crankshaft nose before installing Damper.

2. Install vibration damper. See **Engine/Engine Block/DAMPER, Vibration - Installation**.
3. Install radiator cooling fan and shroud. Refer to **Cooling/Engine/FAN, Cooling - Installation** .
4. Install upper radiator hose.
5. Install accessory drive belt. Refer to **Cooling/Accessory Drive/BELT, Serpentine - Installation** .

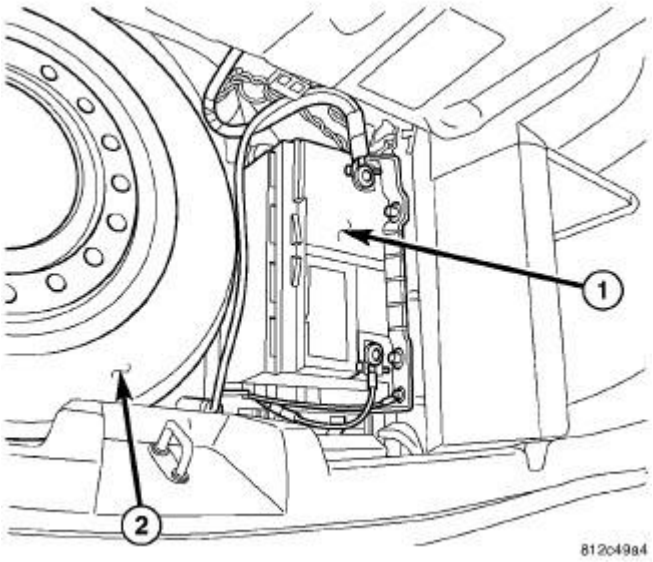

Fig. 248: Locating Battery
Courtesy of CHRYSLER LLC

6. Refill cooling system. Refer to **Cooling - Standard Procedure** .
7. Connect negative cable to battery (1).

SEAL, CRANKSHAFT OIL, REAR

Description

DESCRIPTION

The crankshaft rear oil seal is integral to the crankshaft rear oil seal retainer, for more information refer to the following;

- **Diagnosis and Testing** . See **Engine/Engine Block/RETAINER, Crankshaft Rear Oil Seal - Diagnosis and Testing**.
- **Removal** . See **Engine/Engine Block/RETAINER, Crankshaft Rear Oil Seal - Removal**.
- **Installation** . See **Engine/Engine Block/RETAINER, Crankshaft Rear Oil Seal - Installation**.

ENGINE MOUNTING

INSULATOR, ENGINE MOUNT, REAR

Removal

REMOVAL

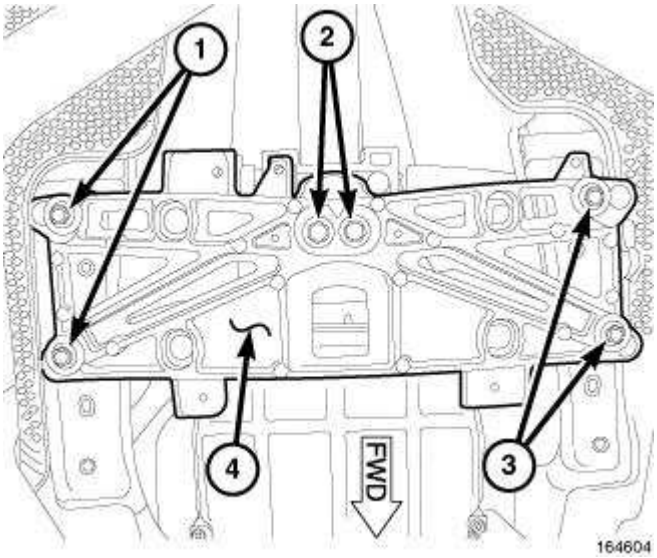

Fig. 249: Rear Cross Member Bolts
Courtesy of CHRYSLER LLC

1. Raise the vehicle on a hoist.
2. Using a suitable jack, support transmission.
3. Remove rear cross member bolts (1,3).
4. Remove rear mount bolts (2) and remove cross member (4).

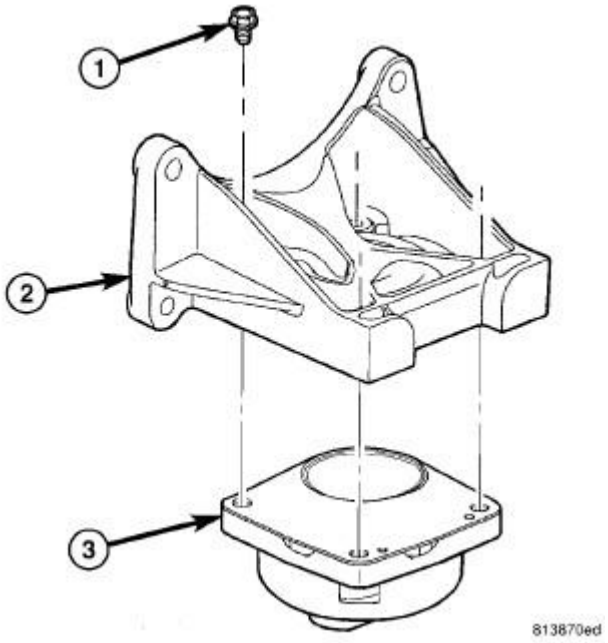

Fig. 250: TRANSMISSION MOUNT
Courtesy of CHRYSLER LLC

5. Remove the fasteners (1) from the rear mount (3).

6. Remove the mount isolator (3).

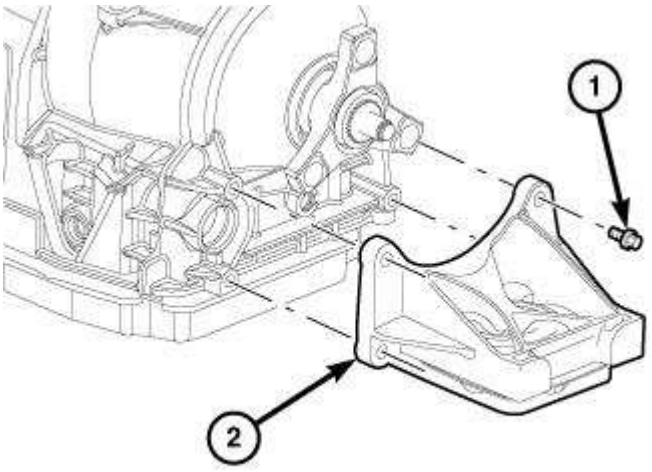

Fig. 251: TRANS MOUNT BRACKET
Courtesy of CHRYSLER LLC

7. Remove the rear mount bracket (2), if required.

Installation

INSTALLATION

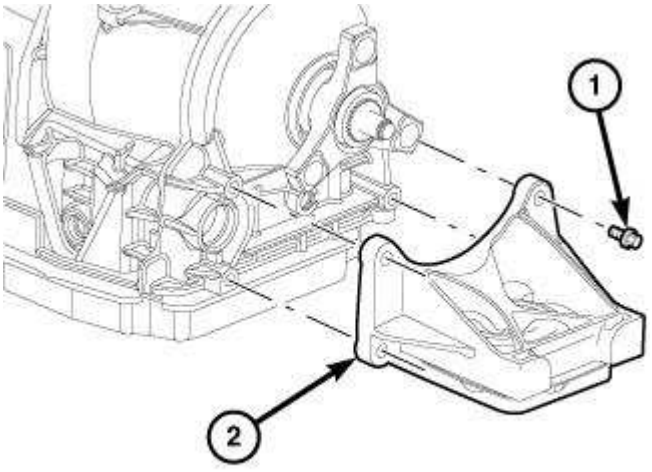

Fig. 252: TRANS MOUNT BRACKET
Courtesy of CHRYSLER LLC

1. Install the rear mount bracket (2) and tighten bolts (1) to 68 N.m (50 ft. lbs.).

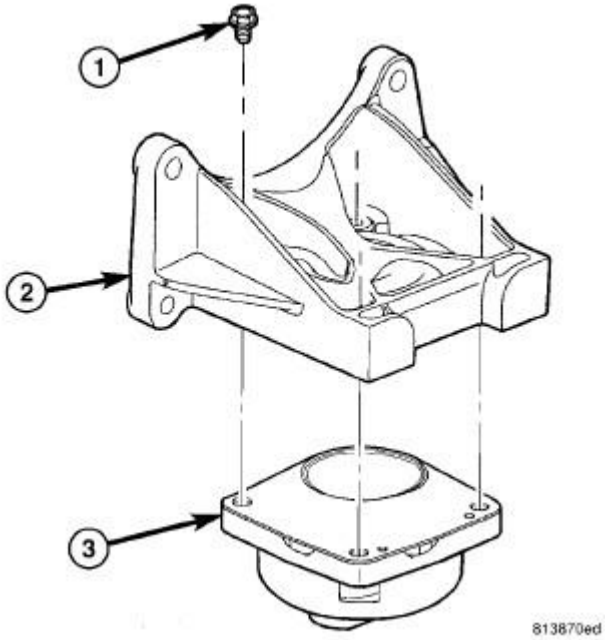

Fig. 253: TRANSMISSION MOUNT
Courtesy of CHRYSLER LLC

2. Position the rear mount isolator (3) on the rear mount bracket (2) and tighten the rear mount bolts (1) to 33 N.m (24 ft. lbs.).

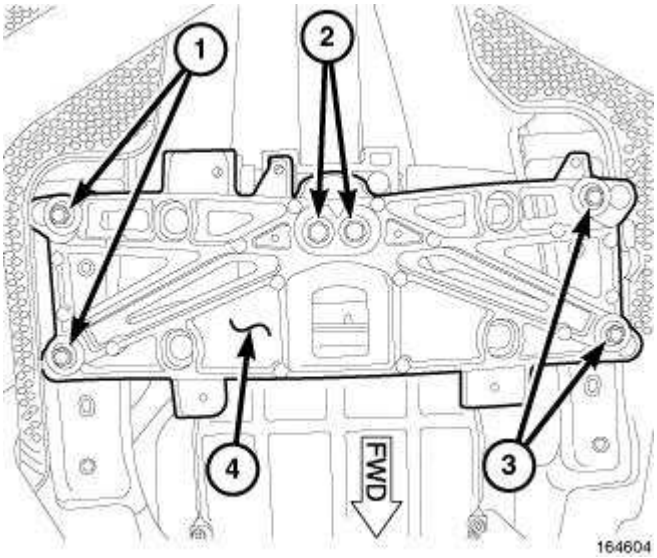

Fig. 254: Rear Cross Member Bolts
Courtesy of CHRYSLER LLC

3. Install the crossmember bolts (1,3) and tighten to 68 N.m (50 ft. lbs.).
4. Lower the transmission and remove jack.
5. Instal the rear mount isolator bolts (2) and tighten to 47 N.m (35 ft. lbs.).

INSULATOR, ENGINE MOUNT, FRONT

Removal

REMOVAL

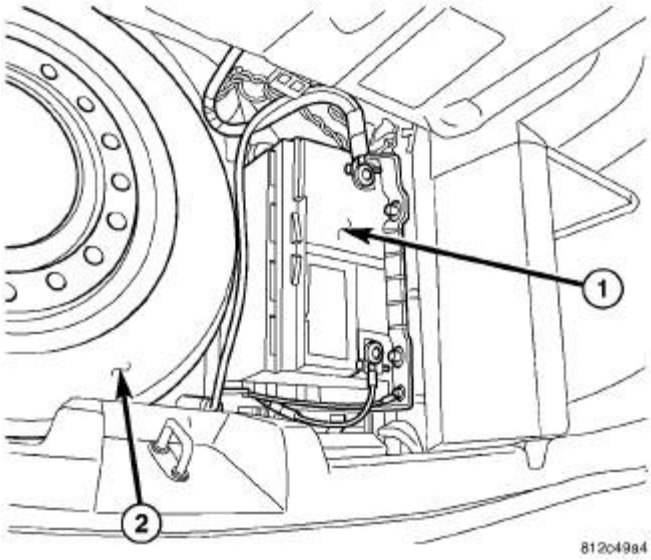

Fig. 255: Locating Battery
Courtesy of CHRYSLER LLC

1. Disconnect negative battery cable.
2. Raise vehicle.

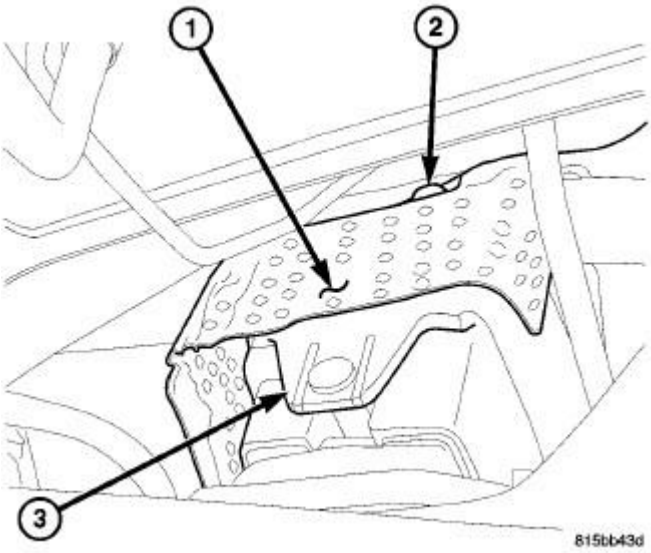

Fig. 256: Engine Mount Heat Shield
Courtesy of CHRYSLER LLC

3. Remove engine mount heat shield fastener (2) and heat shield (1).

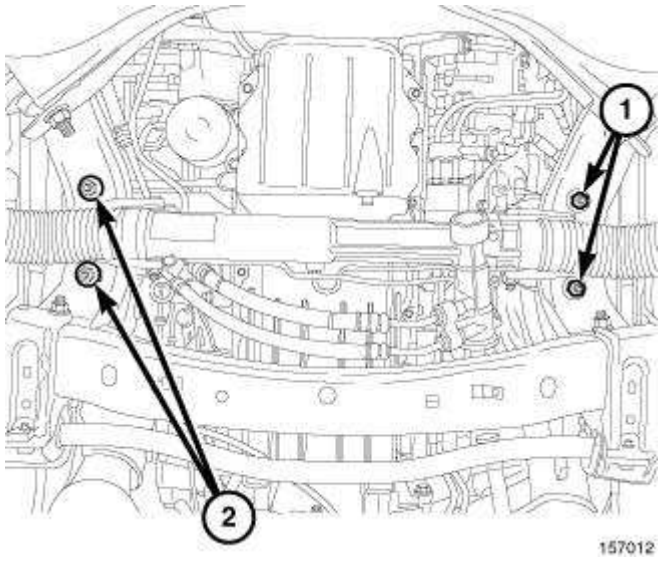

Fig. 257: Engine Mount Nuts
Courtesy of CHRYSLER LLC

4. Remove engine mount nuts (1,2).

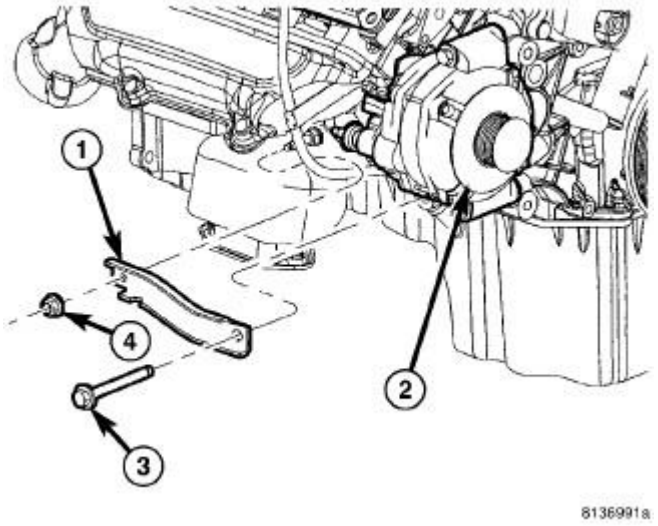

Fig. 258: Generator Support Bracket
Courtesy of CHRYSLER LLC

5. Remove the generator support bracket (1).

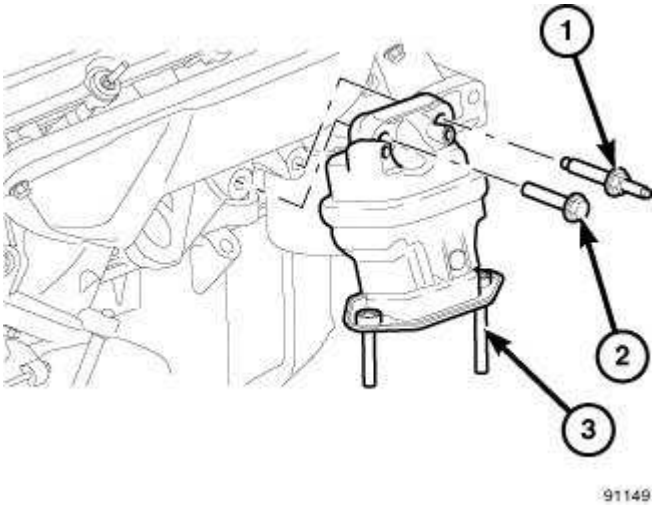

Fig. 259: Identifying Hydromount
Courtesy of CHRYSLER LLC

6. Raise engine using suitable jack.
7. Remove hydromount fasteners (1, 2).
8. Remove hydromount (3) from engine.

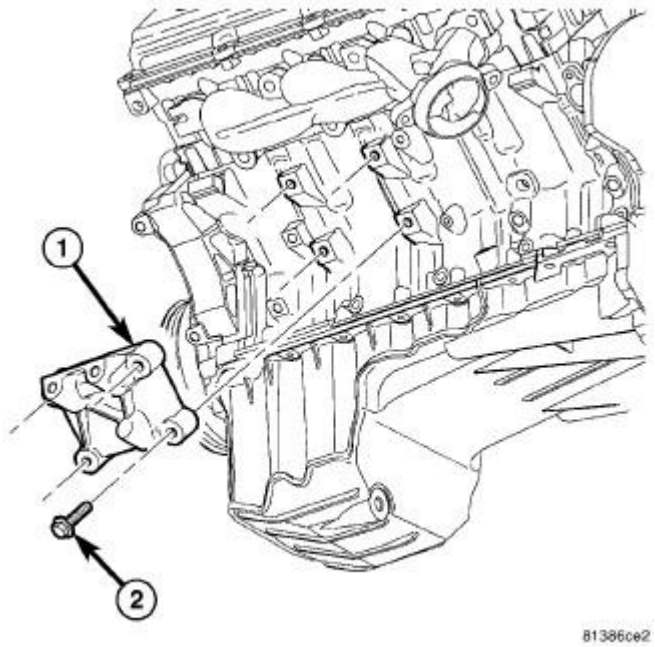

Fig. 260: ENGINE MOUNT BRACKET LH
Courtesy of CHRYSLER LLC

9. Remove left side engine mount bracket (1), if needed.

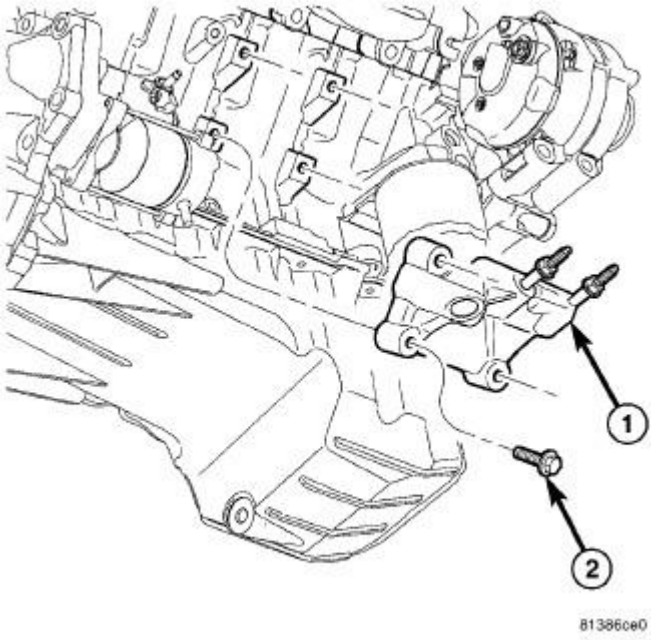

Fig. 261: ENGINE MOUNT BRACKET RH
Courtesy of CHRYSLER LLC

10. Remove right side engine mount bracket (1), if needed.

Installation

INSTALLATION

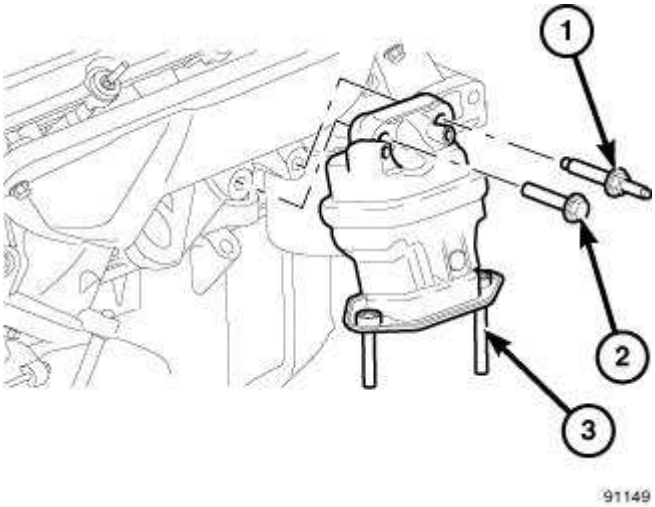

Fig. 262: Identifying Hydromount
Courtesy of CHRYSLER LLC

1. Install the engine mount brackets, if removed.
2. Position hydromount (3) on the engine. Install fasteners (1, 2) and tighten to 95 N.m (70 ft. lbs.).

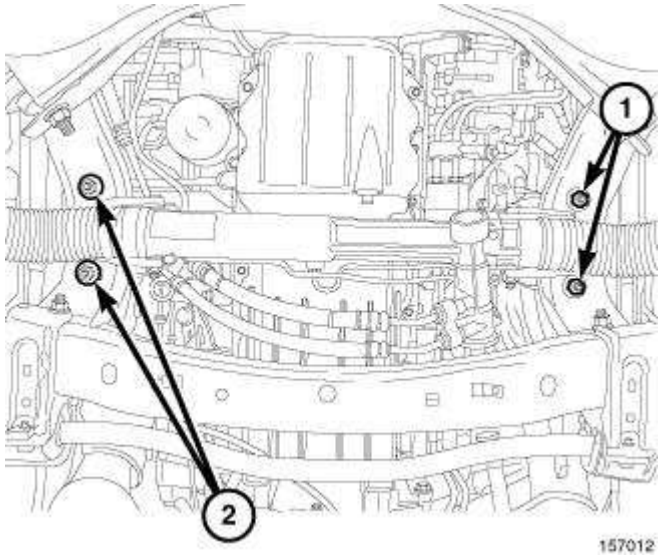

Fig. 263: Engine Mount Nuts
Courtesy of CHRYSLER LLC

3. Install engine mount nuts (1,2) and tighten to 95 N.m (70 ft. lbs.).

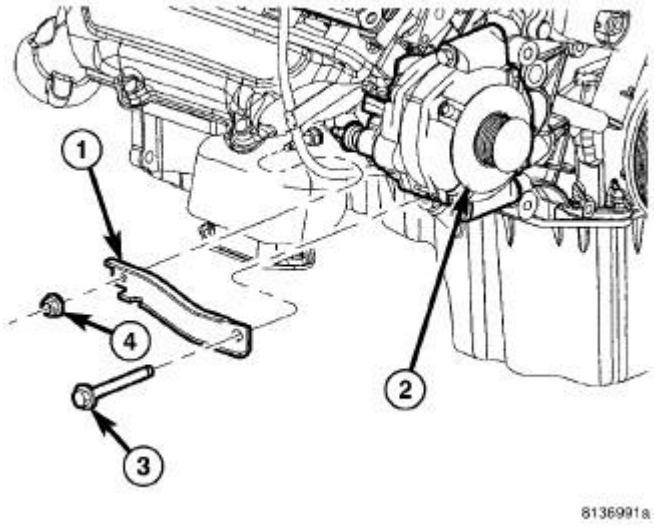

Fig. 264: Generator Support Bracket
Courtesy of CHRYSLER LLC

4. Install the generator support bracket (1).

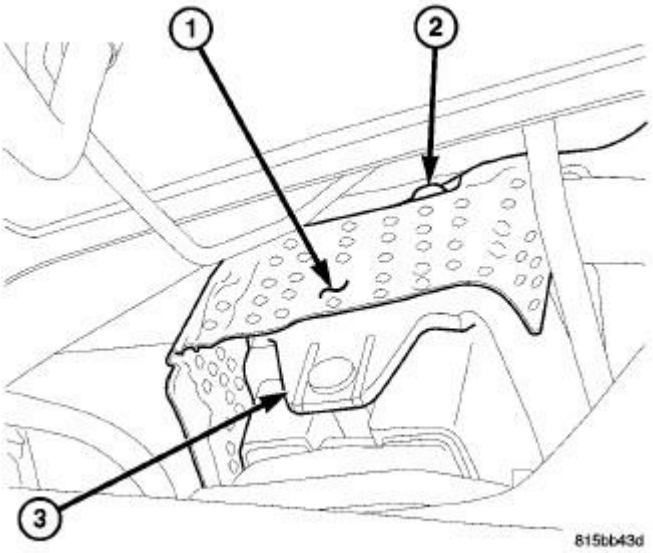

Fig. 265: Engine Mount Heat Shield
Courtesy of CHRYSLER LLC

5. Install the engine mount heat shield (1) and tighten fastener (2).

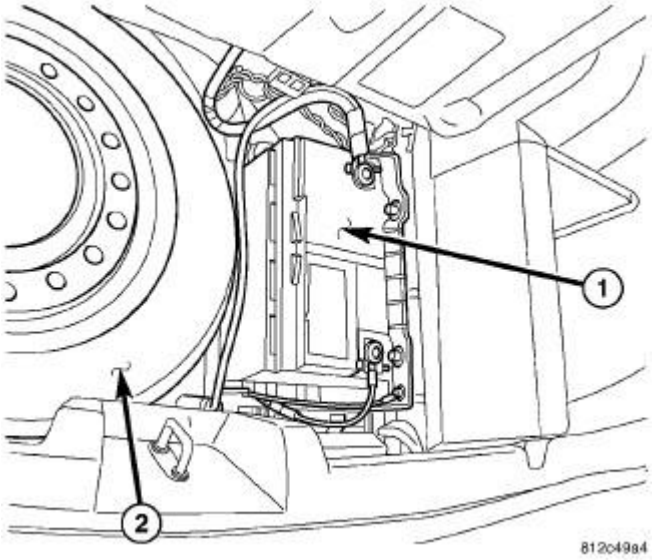

Fig. 266: Locating Battery
Courtesy of CHRYSLER LLC

6. Lower vehicle.
7. Connect negative battery cable to battery (1).

LUBRICATION

DESCRIPTION

DESCRIPTION

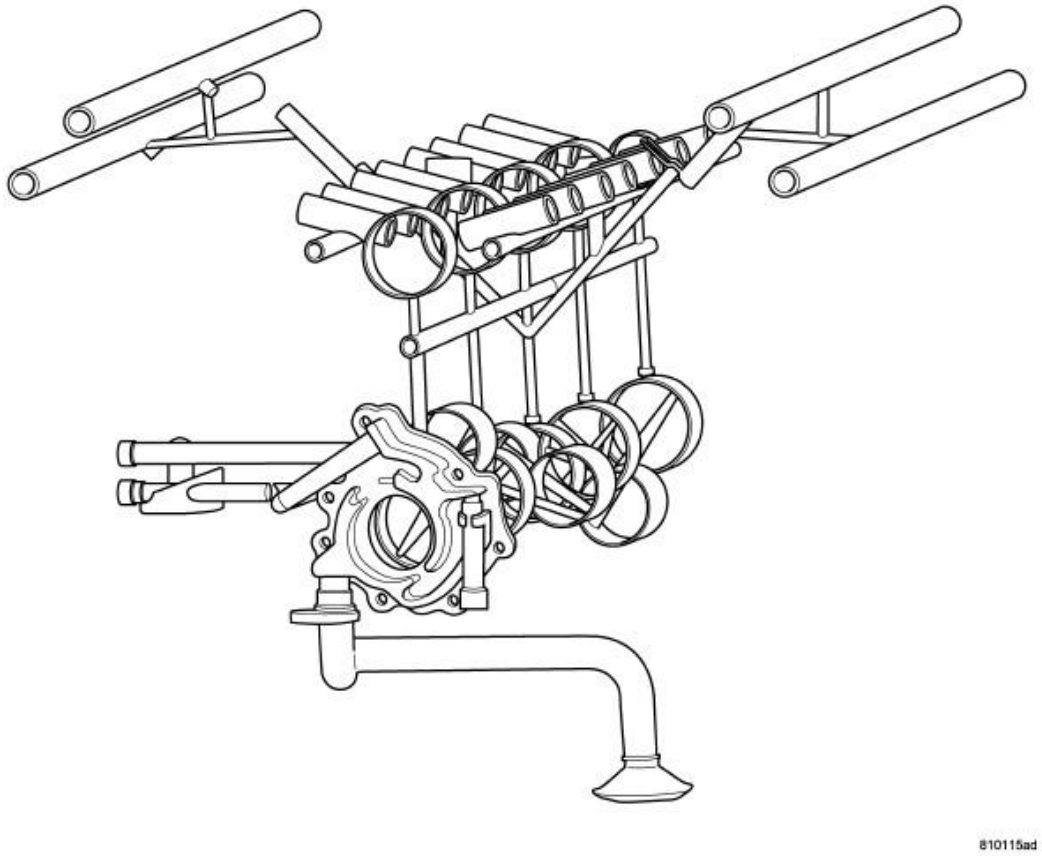

Fig. 267: Engine Oil Lubrication System
Courtesy of CHRYSLER LLC

The lubrication system is a full flow filtration pressure feed type.

DIAGNOSIS AND TESTING

CHECKING ENGINE OIL PRESSURE

1. Remove oil pressure sending unit and install gauge assembly C-3292A.
2. Run engine until thermostat opens.
3. Oil Pressure:
   - Curb Idle - 25 kPa (4 psi) minimum
   - 3000 RPM - 170 - 758 kPa (25 - 110 psi)
4. If oil pressure is 0 at idle, shut off engine. Check for a clogged oil pick-up screen or a pressure relief valve stuck open.

ENGINE OIL LEAK

Begin with a thorough visual inspection of the engine, particularly at the area of the suspected leak. If an oil leak source is not readily identifiable, the following steps should be followed:

1. Do not clean or degrease the engine at this time because some solvents may cause rubber to swell, temporarily stopping the leak.
2. Add an oil soluble dye (use as recommended by manufacturer). Start the engine and let idle for approximately 15 minutes. Check the oil dipstick to make sure the dye is thoroughly mixed as indicated with a bright yellow color under a black light.
3. Using a black light, inspect the entire engine for fluorescent dye, particularly at the suspected area of oil leak. If the oil leak is found and identified, repair per service information instructions.
4. If dye is not observed, drive the vehicle at various speeds for approximately 24 km (15 miles), and repeat inspection.

   If the oil leak source is not positively identified at this time , proceed with the AIR LEAK DETECTION TEST METHOD.

AIR LEAK DETECTION TEST METHOD

1. Remove the PCV valve from the IAFM. Cap or plug the PCV valve grommet.
2. Attach an air hose with pressure gauge and regulator to the dipstick tube.

   CAUTION: Do not subject the engine assembly to more than 20.6 kPa (3 PSI) of test pressure.

3. Gradually apply air pressure from 1 psi to 2.5 psi maximum while applying soapy water at the suspected source. Adjust the regulator to the suitable test pressure that provide the best bubbles which will pinpoint the leak source. If the oil leak is detected and identified, repair per service information procedures.
4. If the leakage occurs at the rear oil seal area, refer to **INSPECTION FOR REAR SEAL AREA LEAKS**.
5. If no leaks are detected, turn off the air supply and remove the air hose and all plugs and caps. Install the PCV valve.
6. Clean the oil off the suspect oil leak area using a suitable solvent. Drive the vehicle at various speeds approximately 24 km (15 miles). Inspect the engine for signs of an oil leak by using a black light.

INSPECTION FOR REAR SEAL AREA LEAKS

Since it is sometimes difficult to determine the source of an oil leak in the rear seal area of the engine, a more involved inspection is necessary. The following steps should be followed to help pinpoint the source of the leak.

If the leakage occurs at the crankshaft rear oil seal area:

1. Disconnect the battery.
2. Raise the vehicle.
3. Remove torque converter or clutch housing cover and inspect rear of block for evidence of oil. Use a black light to check for the oil leak:
   a. Circular spray pattern generally indicates seal leakage or crankshaft damage.
   b. Where leakage tends to run straight down, possible causes are a porous block, distributor seal, camshaft bore cup plugs oil galley pipe plugs, oil filter runoff, and main bearing cap to cylinder block mating surfaces.
4. If no leaks are detected, pressurize the crankcase as outlined in **AIR LEAK DETECTION TEST METHOD**.

   CAUTION: Do not exceed 20.6 kPa (3 psi).

5. If the leak is not detected, very slowly turn the crankshaft and watch for leakage. If a leak is detected between the crankshaft and seal while slowly turning the crankshaft, it is possible the crankshaft seal surface is damaged. The seal area on the crankshaft could have minor nicks or scratches that can be polished out with emery cloth.

   CAUTION: Use extreme caution when crankshaft polishing is necessary to remove minor nicks and scratches. The crankshaft seal flange is especially machined to complement the function of the rear oil seal.

6. For bubbles that remain steady with shaft rotation, no further inspection can be done until disassembled.

FILTER, ENGINE OIL

Removal

REMOVAL

All engines are equipped with a high quality full-flow, disposable type oil filter. Chrysler Corporation recommends a Mopar® or equivalent oil filter be used.

1. Remove belly pan. Refer to **Body/Exterior/BELLY PAN - Removal** .
2. Position a drain pan under the oil filter.
3. Using a suitable oil filter wrench loosen filter.
4. Rotate the oil filter counterclockwise to remove it from the cylinder block oil filter boss.
5. When filter separates from cylinder block oil filter boss, tip gasket end upward to minimize oil spill. Remove filter from vehicle.

NOTE: Make sure filter gasket was removed with filter.

6. With a wiping cloth, clean the gasket sealing surface of oil and grime.

Installation

INSTALLATION

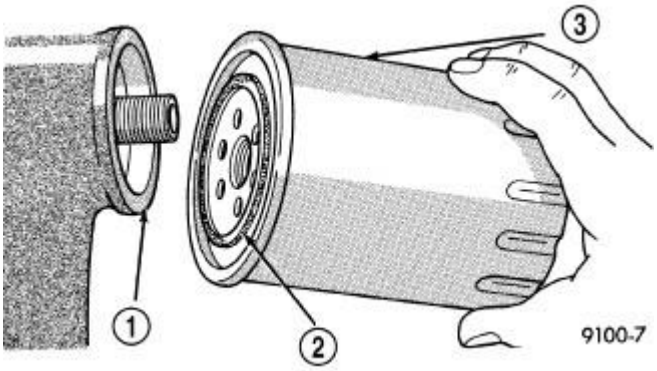

Fig. 268: Oil Filter Sealing Surface - Typical
Courtesy of CHRYSLER LLC

1 - SEALING SURFACE 2 - RUBBER GASKET 3 - OIL FILTER

1. Lightly lubricate oil filter gasket (2) with engine oil.
2. Thread filter onto adapter nipple. When gasket makes contact with sealing surface, hand tighten filter one half turn, or 180°, do not over tighten.
3. Add oil, verify crankcase oil level and start engine. Inspect for oil leaks.
4. Install belly pan. Refer to **Body/Exterior/BELLY PAN - Installation** .

JET, PISTON OIL COOLER

Description

DESCRIPTION

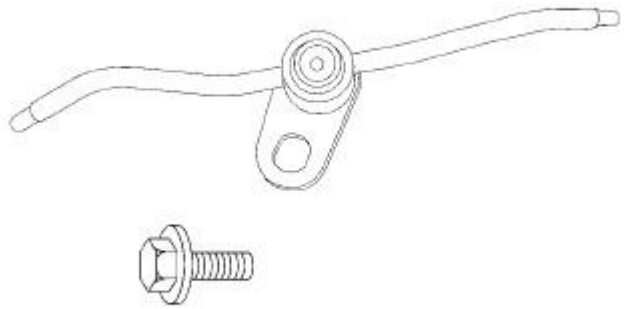

81d6111b

Fig. 269: ENGINE OIL JET DESCRIPTION
Courtesy of CHRYSLER LLC

Four dual-nozzle oil jets are bolted to the cylinder block underneath the main oil gallery. The jets connect with an oil-tight fit to the main gallery through lubrication passages. Each oil jet helps cool the two opposing pistons.

Removal

REMOVAL

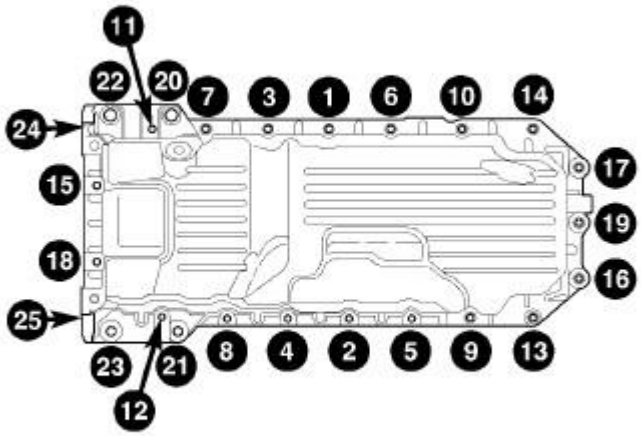

8150068b

Fig. 270: Oil Pan Bolt Removal/Installation Sequence
Courtesy of CHRYSLER LLC

1. Remove the oil pan and oil pick-up tube. See **Engine/Lubrication/PAN, Oil - Installation**.

NOTE: **When the oil pan is removed, a new oil pan gasket/windage tray assembly must be installed. The old gasket cannot be reused.**

2. Discard the integral windage tray and gasket.

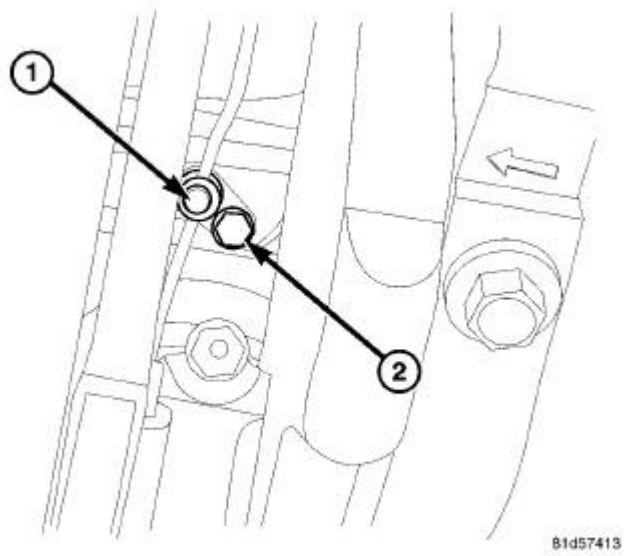

Fig. 271: OIL JET REMOVE/INSTALL
Courtesy of CHRYSLER LLC

NOTE: **It may be necessary to rotate the engine crankshaft to access the Piston Oil Cooler Jet retaining bolts.**

3. Remove the Piston Oil Cooler Jet retaining bolt (2).
4. Remove the Piston Oil Cooler Jet (1).

Installation

INSTALLATION

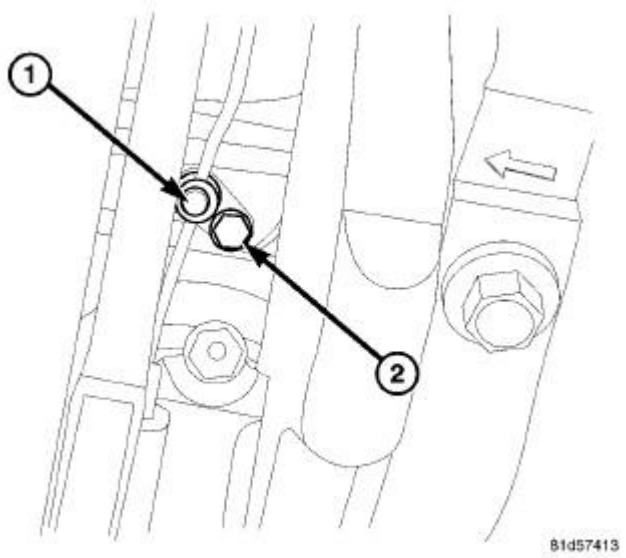

Fig. 272: OIL JET REMOVE/INSTALL
Courtesy of CHRYSLER LLC

1. Install the Piston Oil Cooler Jet. (1)
2. Tighten the bolt to 13 Nm (115 lbs. in.) (2)

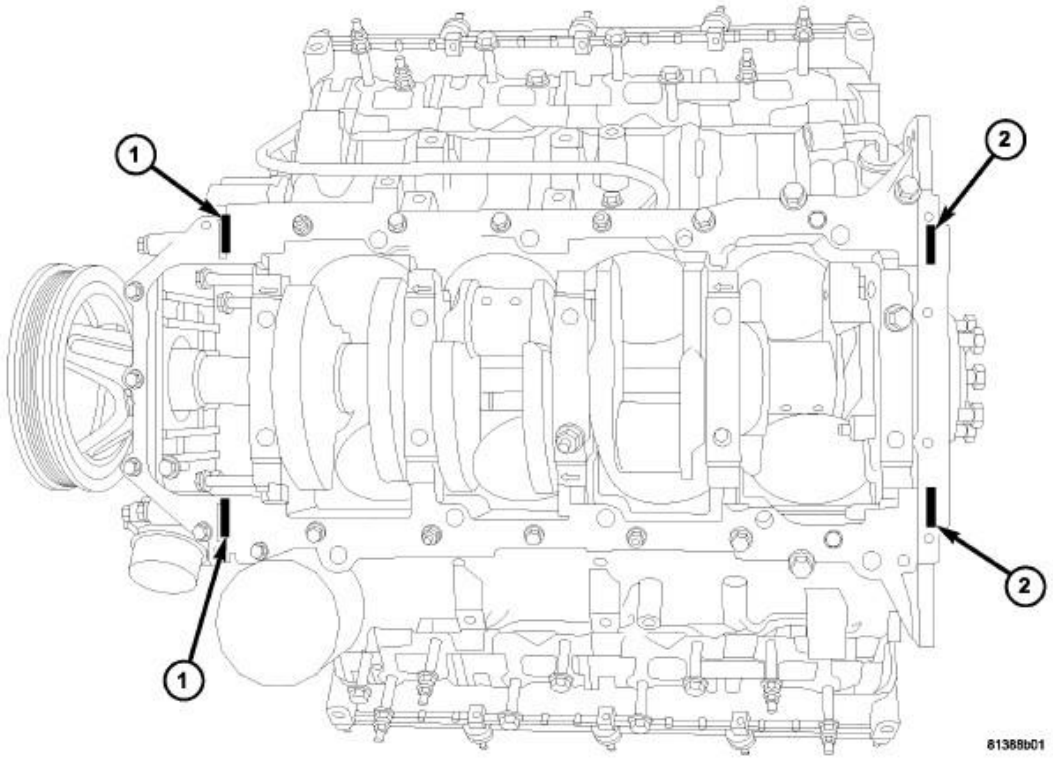

Fig. 273: T-JOINT RTV APPLICATION
Courtesy of CHRYSLER LLC

NOTE: **Mopar® Engine RTV must be applied to the 4 T-joints, (area where front cover, rear retainer, block, and oil pan gasket meet). The bead of RTV should cover the bottom of the gasket. This area is approximately 4.5 mm x 25 mm in each of the 4 T-joint locations.**

3. Clean the oil pan mating surfaces of the engine block and oil pan.
4. Apply Mopar® Engine RTV at the 4 T- joints. (1,2)
5. Install a new oil pan gasket/windage tray assembly.

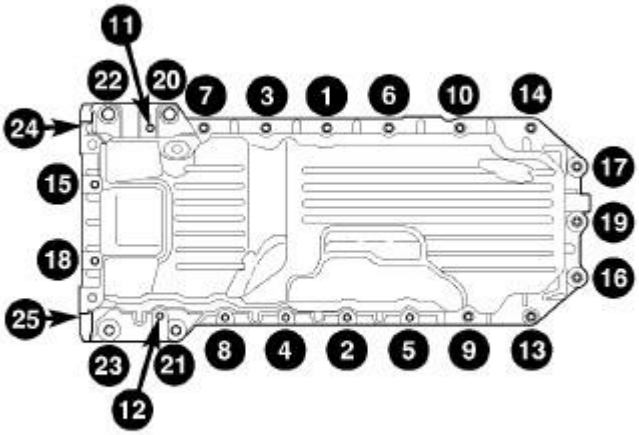

Fig. 274: Oil Pan Bolt Removal/Installation Sequence
Courtesy of CHRYSLER LLC

6. Install the engine oil pan. See **Engine/Lubrication/PAN, Oil - Installation**.

OIL

Standard Procedure

ENGINE OIL SERVICE

The engine oil level indicator is located at the right hand of the engine on the 6.1L engines.

CRANKCASE OIL LEVEL INSPECTION

CAUTION: **Do not overfill crankcase with engine oil, pressure loss or oil foaming can result.**

Inspect engine oil level approximately every 800 kilometers (500 miles). Unless the engine has exhibited loss of oil pressure, run the engine for about ten minutes before checking oil level. Checking engine oil level on a cold engine is not accurate.

To ensure proper lubrication of an engine, the engine oil must be maintained at an acceptable level. The acceptable levels are indicated between the ADD and SAFE marks on the engine oil dipstick.

1. Position vehicle on level surface.
2. With engine OFF, allow approximately five minutes for oil to settle to bottom of crankcase, remove engine oil dipstick.
3. Wipe dipstick clean.
4. Install dipstick and verify it is seated in the tube.
5. Remove dipstick, with handle held above the tip, take oil level reading.
6. Add oil only if level is below the ADD mark on dipstick.

ENGINE OIL CHANGE

Change engine oil at mileage and time intervals described in Maintenance Schedules. Refer to **Vehicle Quick Reference/Maintenance Schedules - Description** .

Run engine until achieving normal operating temperature.

1. Position the vehicle on a level surface and turn engine off.
2. Remove oil fill cap.
3. Hoist and support vehicle on safety stands.
4. Remove the belly pan. Refer to **Body/Exterior/BELLY PAN - Removal** .
5. Place a suitable drain pan under crankcase drain.
6. Remove drain plug from crankcase and allow oil to drain into pan. Inspect drain plug threads for stretching or other damage. Replace drain plug if damaged.
7. Install drain plug in crankcase. Torque to 27 N.m (20 ft. lbs.).
8. Lower vehicle and fill crankcase with specified type and amount of engine oil described in this service information.
9. Install oil fill cap.
10. Start engine and inspect for leaks.
11. Stop engine and inspect oil level.
12. Install the belly pan. Refer to **Body/Exterior/BELLY PAN - Installation** .

NOTE: Care should be exercised when disposing used engine oil after it has been drained from a vehicle engine. Refer to the WARNING at beginning of this service information.

PAN, OIL

Removal

REMOVAL

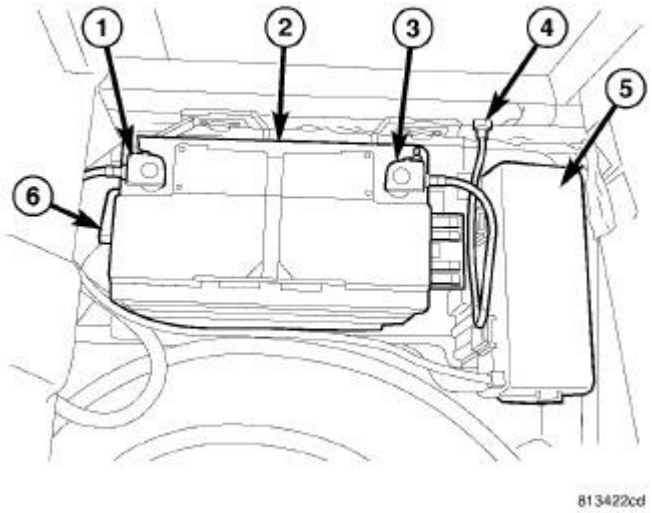

Fig. 275: Battery System Components And PDC Cover
Courtesy of CHRYSLER LLC

1. Disconnect and isolate the negative battery cable (3).
2. Remove the intake manifold. See **Engine/Manifolds/MANIFOLD, Intake - Removal**.
3. Raise and support the vehicle.

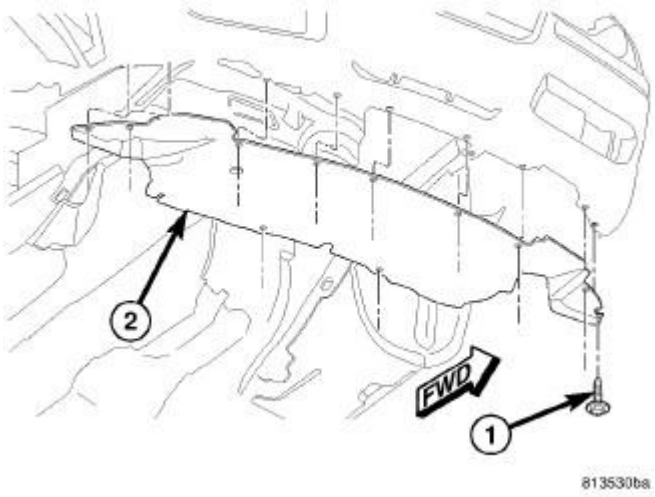

Fig. 276: Front Belly Pan
Courtesy of CHRYSLER LLC

4. Remove the belly pan (2).
5. Drain the engine oil and remove the oil filter.

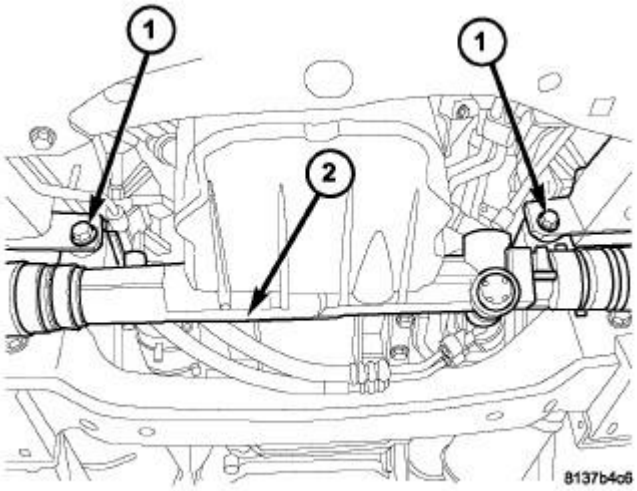

Fig. 277: Identifying Steering Gear & Mounting Bolts
Courtesy of CHRYSLER LLC

NOTE: Do not remove P/S hoses, tie rod ends or disconnect steering column coupler.

6. Remove the steering gear mounting bolts (1) and position the steering gear (2) aside.

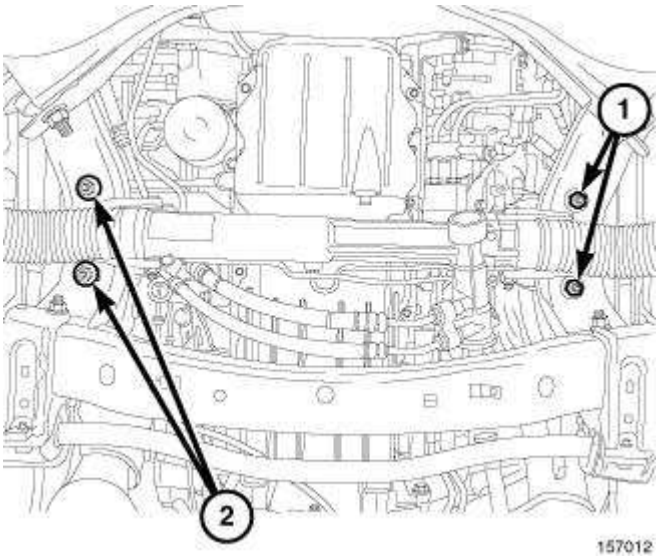

Fig. 278: Engine Mount Nuts
Courtesy of CHRYSLER LLC

7. Remove the engine mount nuts (1, 2).
8. Remove the engine oil dipstick and tube from the oil pan.
9. Lower the vehicle.

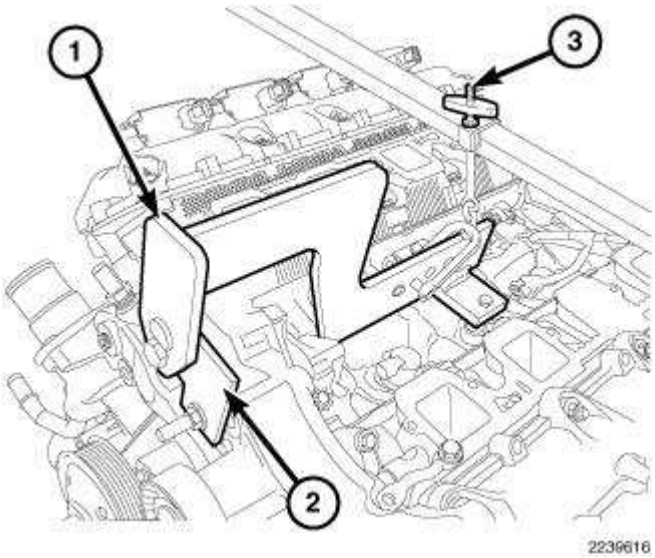

Fig. 279: Engine Lift Fixture & Adapter
Courtesy of CHRYSLER LLC

NOTE: Do not use air tools to install engine lift fixture.

10. Install the Engine Lift Fixture 8984A (1), Engine Lift Adapter 8984-UPD (2) and the Engine Support Fixture 8534B (3).
11. Raise the engine to provide clearance to remove the oil pan.

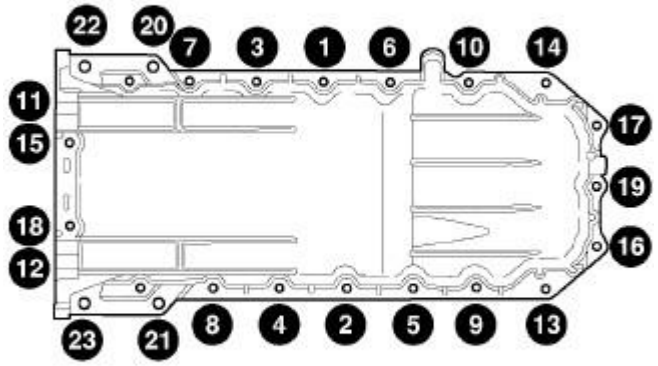

Fig. 280: Oil Pan Bolt Removal/Installation Sequence
Courtesy of CHRYSLER LLC

NOTE: Do not pry on oil pan or oil pan gasket. The gasket is integral to engine windage tray and does not come out with oil pan.

NOTE: The horizontal M10 fasteners are 5 mm longer in length, and must be reinstalled in original locations.

12. Remove the M10 fasteners (vertical and horizontal) from the rear of the oil pan to the transmission.
13. Using the sequence shown in illustration, the oil pan mounting bolts and remove the oil pan.

NOTE: When the oil pan is removed a new oil pan gasket/windage tray assembly must be installed, the old gasket cannot be reused.

14. Remove and discard the integral windage tray and gasket.

Installation

INSTALLATION

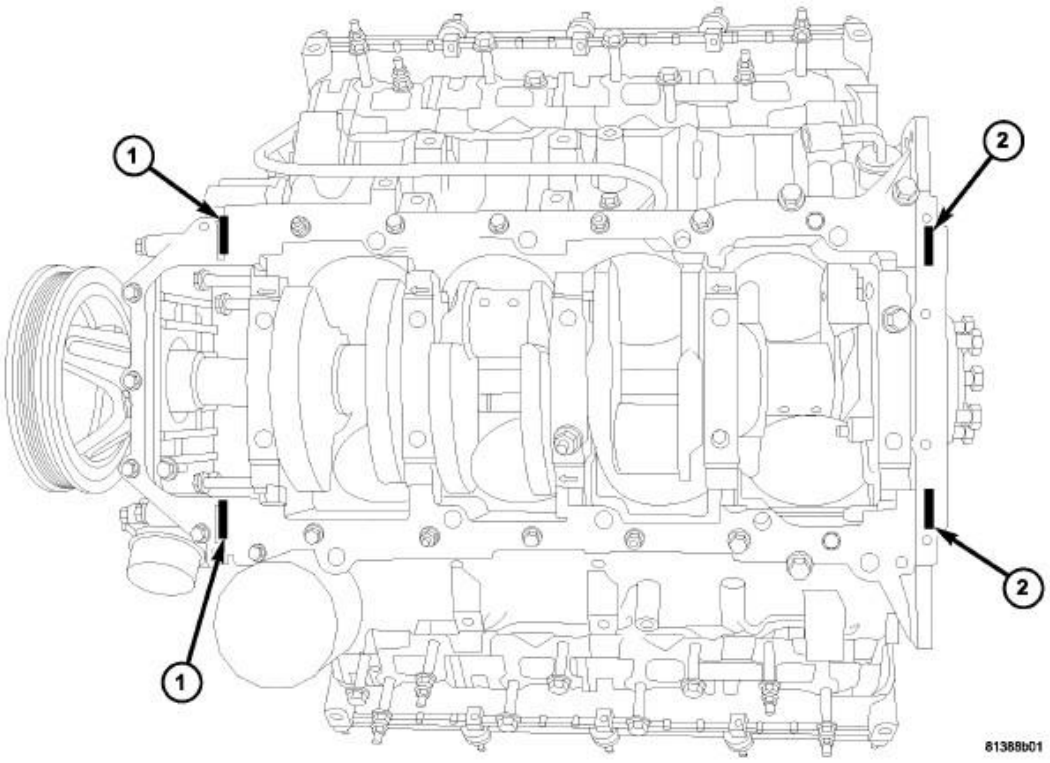

Fig. 281: T-Joint RTV Application
Courtesy of CHRYSLER LLC

1 - Front Cover T-Joints 2 - Rear Oil Retainer T-Joints

1. Clean the oil pan gasket mating surface of the engine block and oil pan.

NOTE: **Mopar® Engine RTV must be applied to the 4 T-joints, (area where the front cover, rear retainer and oil pan gasket meet). The bead of RTV should cover the bottom of the gasket. This area is approximately 4.5 mm x 25 mm in each of the 4 T-joint locations.**

2. Apply Mopar® Engine RTV at the 4 T- joints (1,2).

NOTE: **When the oil pan is removed, a new oil pan gasket/windage tray assembly must be installed, the old gasket cannot be reused.**

3. Install a new oil pan gasket/windage tray assembly.
4. If removed, reinstall the oil pump pickup tube with a new O-ring and tighten the pickup tube retainers to 28 N.m (21 ft. lbs.).

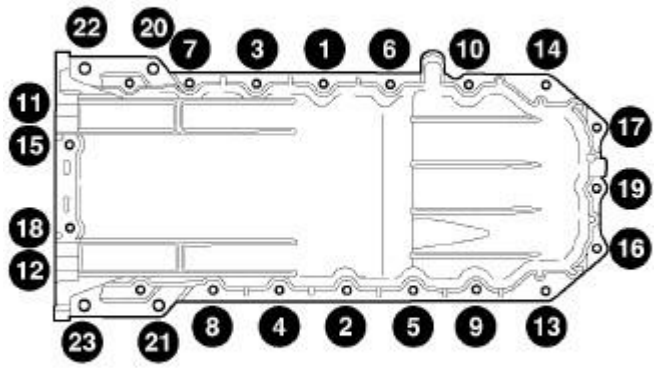

Fig. 282: Oil Pan Bolt Removal/Installation Sequence
Courtesy of CHRYSLER LLC

NOTE: The horizontal M10 fasteners are 5 mm longer in length, and must be reinstalled in original locations.

NOTE: New M6 fasteners must be used when reinstalling the oil pan. Do not reuse the old M6 fasteners.

5. Align the rear of the oil pan with the rear face of the engine block and install the M10 and M6 oil pan retainers finger tight.
6. Using the sequence shown in illustration, tighten the M6 bolts to 5 N.m (44 in. lbs.).
7. Using the sequence shown in illustration, tighten the M10 bolts to 54 N.m (39 ft. lbs.).
8. Using the sequence shown in illustration, tighten the M6 bolts to 12 N.m (9 ft. lbs.).
9. Lower the vehicle.

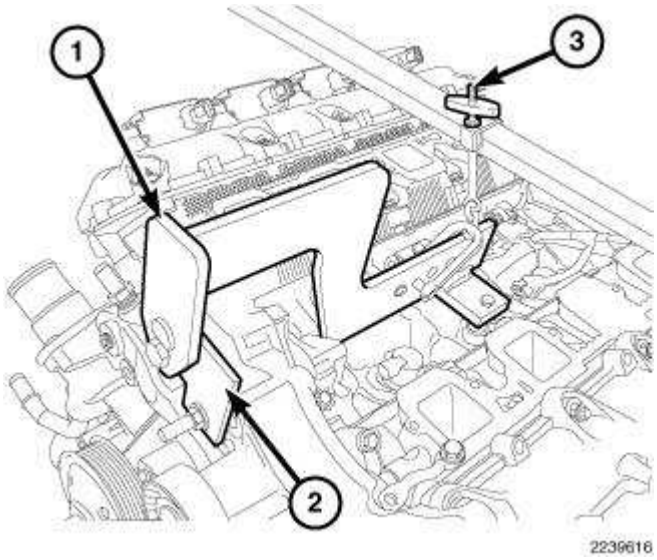

Fig. 283: Engine Lift Fixture & Adapter
Courtesy of CHRYSLER LLC

10. Using the Engine Lift Fixture 8984A (1), Engine Lift Adapter 8984-UPD (2) and the Engine Support Fixture 8534B (3) lower the engine into position and remove.

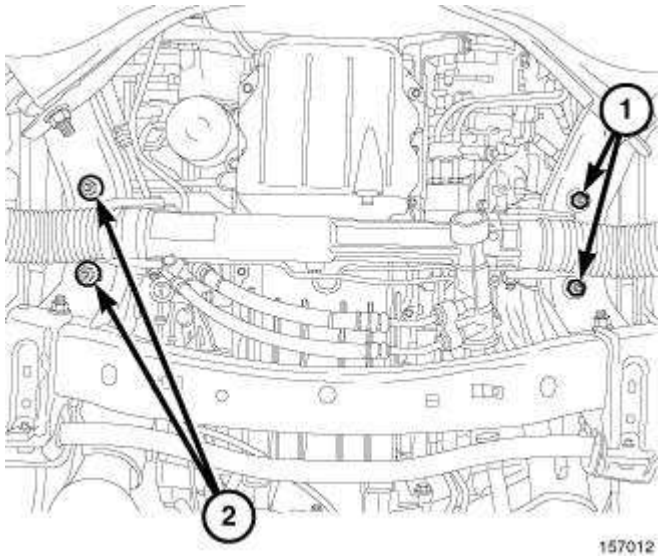

Fig. 284: Engine Mount Nuts
Courtesy of CHRYSLER LLC

11. Raise and support the vehicle.
12. Install the engine mount nuts (1,2) and tighten to 95 N.m (70 ft. lbs.).
13. Install the engine oil dipstick and tube.

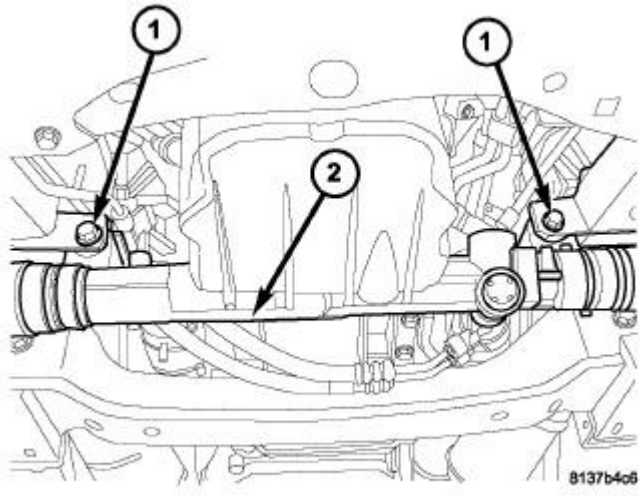

Fig. 285: Identifying Steering Gear & Mounting Bolts
Courtesy of CHRYSLER LLC

14. Position the steering gear (2), install mounting bolts (1) and tighten to 95 N.m (70 ft. lbs.).
15. Lower the vehicle.
16. Install the intake manifold. See **Engine/Manifolds/MANIFOLD, Intake - Installation**.
17. Fill the engine oil.
18. Install the oil filter.

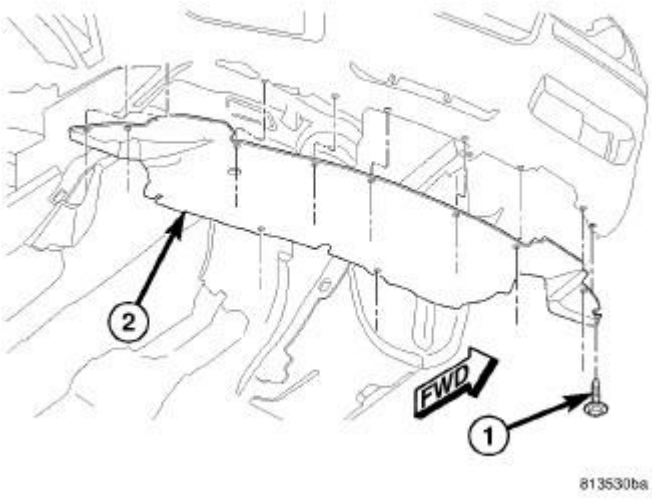

Fig. 286: FRONT BELLY PAN
Courtesy of CHRYSLER LLC

19. Install the belly pan (2).

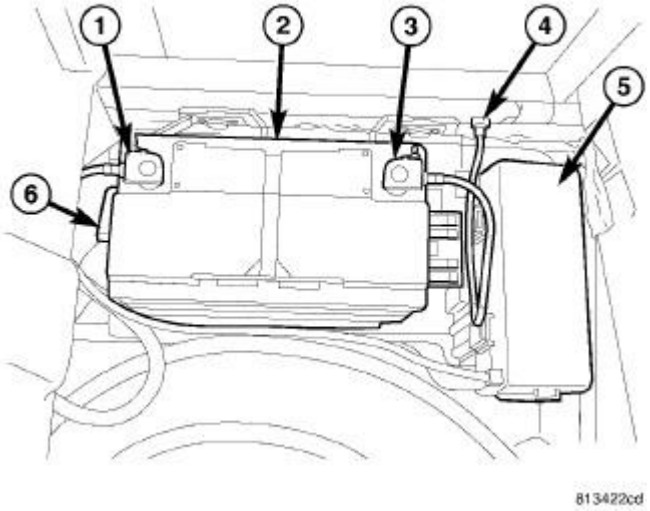

Fig. 287: Battery System Components And PDC Cover
Courtesy of CHRYSLER LLC

20. Connect the negative battery cable (3).
21. Start engine and check for leaks.

PUMP, ENGINE OIL

Removal

REMOVAL

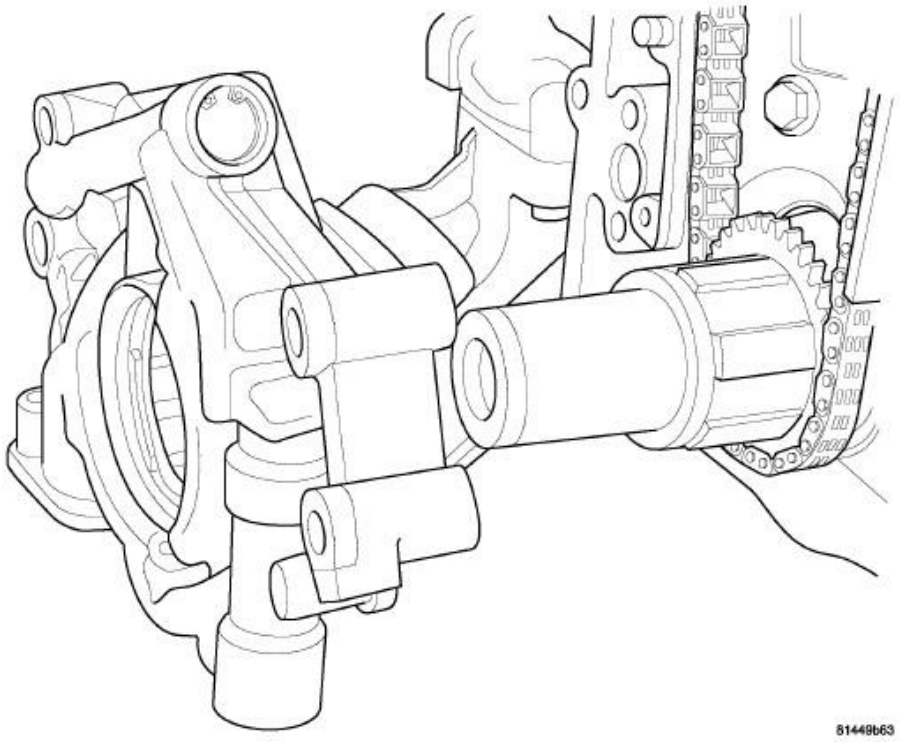

Fig. 288: OIL PUMP REMOVAL/INSTALLATION
Courtesy of CHRYSLER LLC

1. Remove the oil pan and pick-up tube. See **Engine/Lubrication/PAN, Oil - Removal**.
2. Remove the timing chain cover. See **Engine/Valve Timing/COVER(S), Engine Timing - Removal**.
3. Remove the four bolts, and the oil pump.

Cleaning

CLEANING

1. Wash all parts in a suitable solvent.

Inspection

INSPECTION

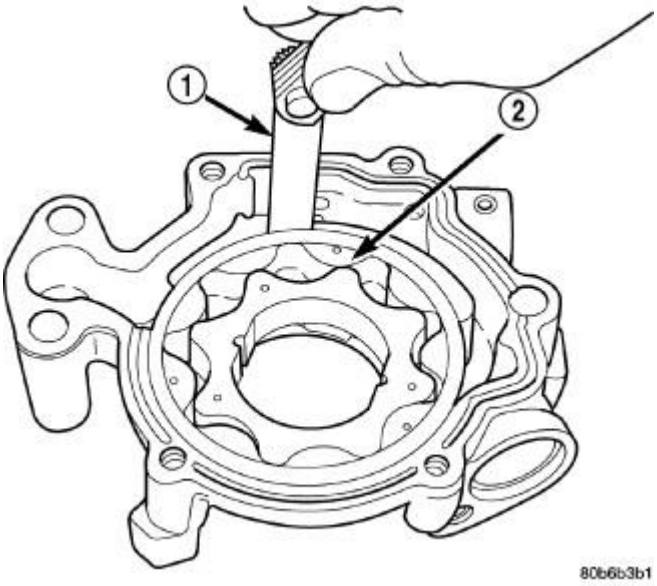

Fig. 289: Measuring Outer Rotor Clearance in Housing
Courtesy of CHRYSLER LLC

1 - FEELER GAUGE
2 - OUTER ROTOR

CAUTION: Oil pump pressure relief valve and spring should not be removed from the oil pump. If these components are disassembled and or removed from the pump the entire oil pump assembly must be replaced.

1. Remove the pump cover.
2. Clean all parts thoroughly. Mating surface of the oil pump housing should be smooth. If the pump cover is scratched or grooved the oil pump assembly should be replaced.
3. Slide outer rotor into the body of the oil pump. Press the outer rotor to one side of the oil pump body and measure clearance between the outer rotor (2) and the body. If the measurement is 0.235 mm (0.009 in.) or more the oil pump assembly must be replaced.

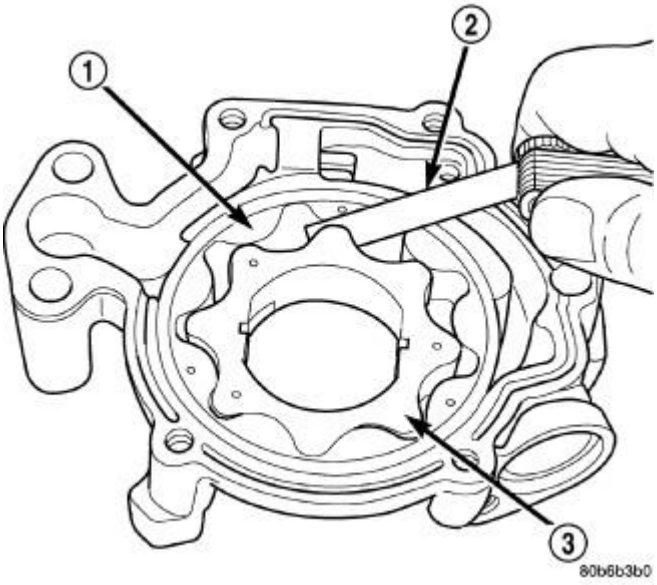

Fig. 290: Measuring Clearance Between Rotors
Courtesy of CHRYSLER LLC

1 - OUTER ROTOR
2 - FEELER GAUGE
3 - INNER ROTOR

4. Install the inner rotor in the into the oil pump body. Measure the clearance between the inner (3) and outer rotors (1). If the clearance between the rotors is .150 mm (0.006 in.) or more the oil pump assembly must be replaced.

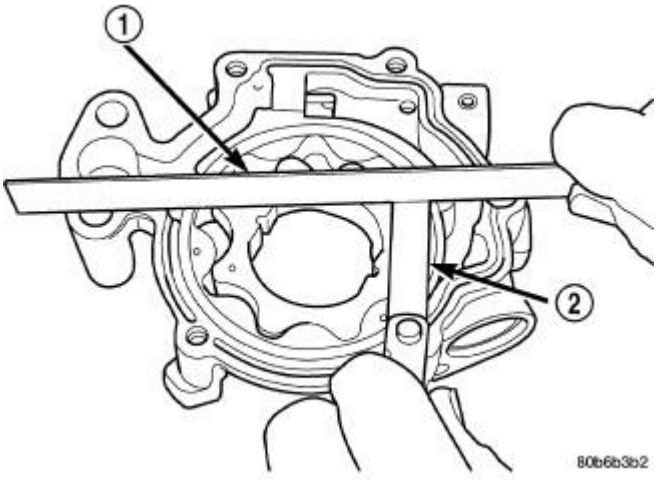

Fig. 291: Measuring Clearance Over Rotors
Courtesy of CHRYSLER LLC

1 - STRAIGHT EDGE
2 - FEELER GAUGE

5. Place a straight edge (1) across the body of the oil pump (between the bolt holes), if a feeler gauge (2) of .095 mm (0.0038 in.) or greater can be inserted between the straightedge and the rotors, the pump must be replaced .
6. Reinstall the pump cover. Tighten fasteners to 15 N.m (132 in. lbs.)

NOTE: The 6.1L Oil pump is released as an assembly. There are no Chrysler part numbers for Sub-Assembly components. In the event the oil pump is not functioning or out of specification it must be replaced as an assembly.

Installation

INSTALLATION

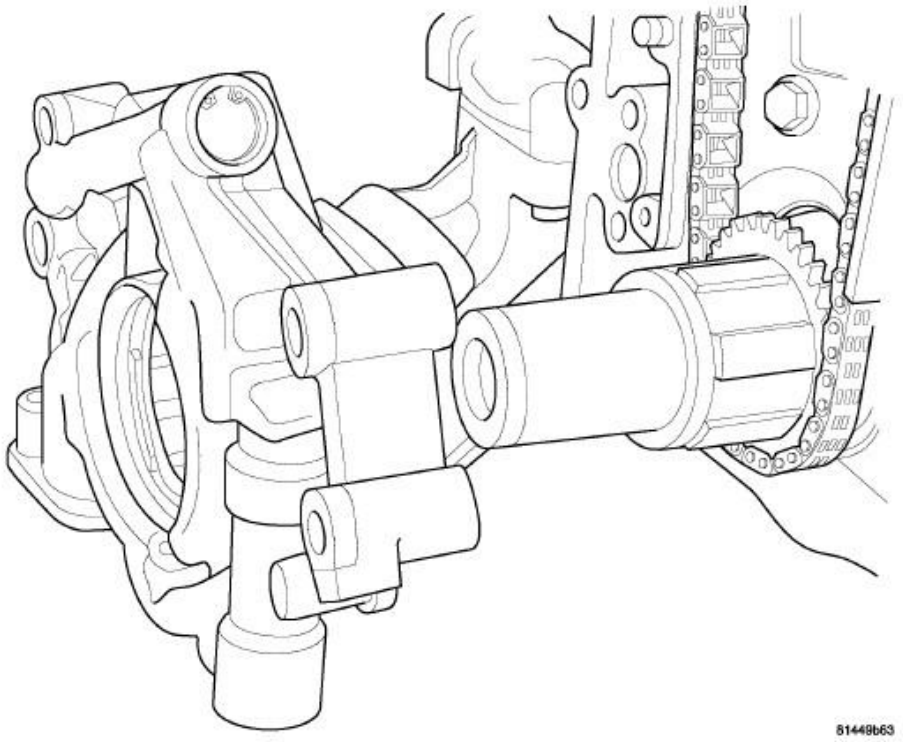

Fig. 292: OIL PUMP REMOVAL/INSTALLATION
Courtesy of CHRYSLER LLC

1. Position the oil pump onto the crankshaft and install the 4 oil pump retaining bolts.
2. Tighten the oil pump retaining bolts to 28 N.m (250 in. lbs.).
3. Install the timing chain cover. See **Engine/Valve Timing/COVER(S), Engine Timing - Installation**.
4. Install the pick-up tube and oil pan. See **Engine/Lubrication/PAN, Oil - Installation**.

SENSOR, OIL PRESSURE

Description

DESCRIPTION

The oil pressure sensor uses the following three circuits:

- Signal circuit to the PCM
- Sensor ground circuit through the PCM
- 5 volt reference circuit from the PCM

The oil pressure sensor returns a voltage signal back to the PCM with reference to oil pressure. Ground for the sensor is supplied by the PCM.

The oil pressure sensor is located on the right side of the engine block. The sensor screws into the engines main oil gallery.

Removal

REMOVAL

1. Disconnect and isolate the negative battery cable.
2. Remove the accessory drive belt. Refer to **Cooling/Accessory Drive/BELT, Serpentine - Removal** .
3. Remove the upper generator mounting bolt.
4. Raise and support the vehicle.

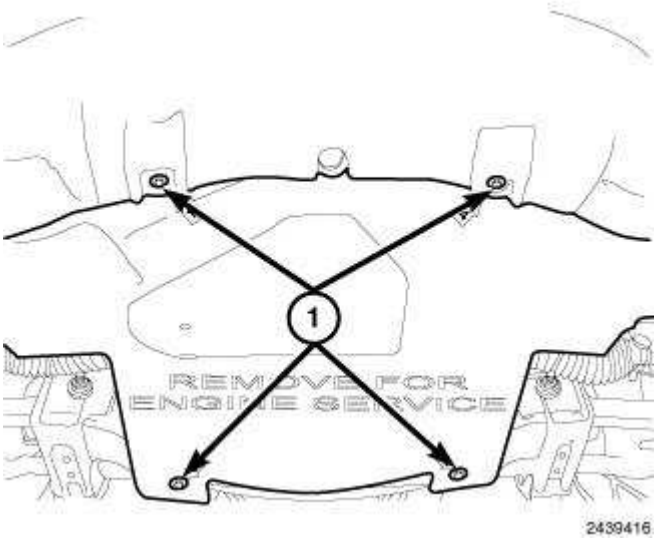

Fig. 293: Lower Splash Shield & Fasteners
Courtesy of CHRYSLER LLC

5. Remove the lower splash shield retaining bolts (1) and the splash shield.

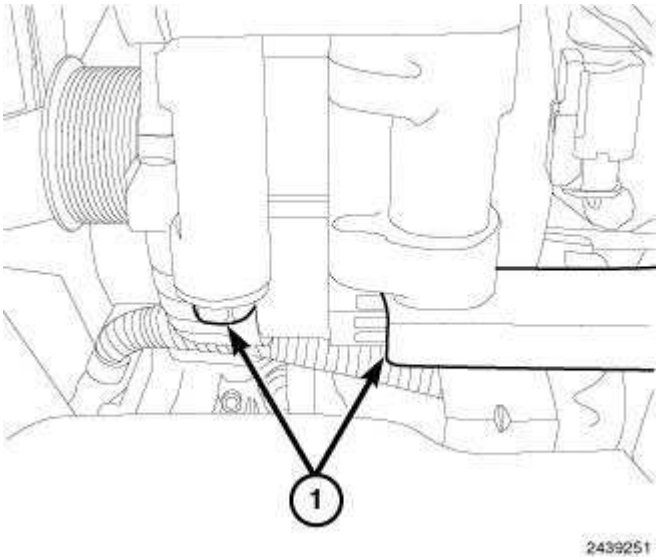

Fig. 294: Identifying Lower Generator Retaining Bolts
Courtesy of CHRYSLER LLC

6. Remove the lower generator retaining bolts (1).
7. Lower the vehicle.
8. Position the generator aside to gain access to the oil pressure sensor.

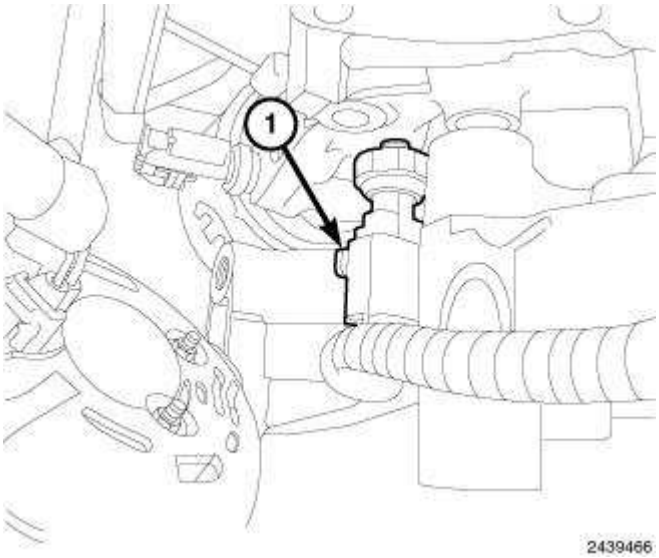

Fig. 295: Identifying Oil Pressure Sensor Electrical Connector
Courtesy of CHRYSLER LLC

9. Disconnect the oil pressure sensor electrical connector (1).

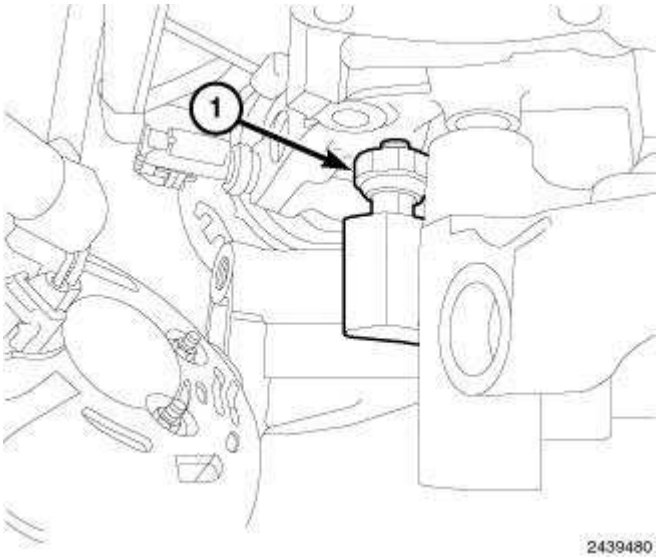

Fig. 296: Identifying Oil Pressure Sensor
Courtesy of CHRYSLER LLC

10. Remove the oil pressure sensor (1).

Installation

INSTALLATION

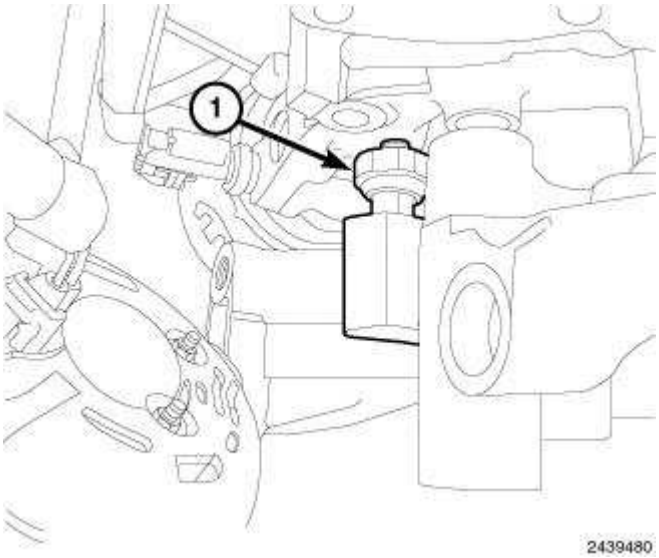

Fig. 297: Identifying Oil Pressure Sensor
Courtesy of CHRYSLER LLC

NOTE: Apply Mopar® Thread Sealant with PTFE to the sensor threads before installing into the engine block.

1. Install the oil pressure sensor (1).

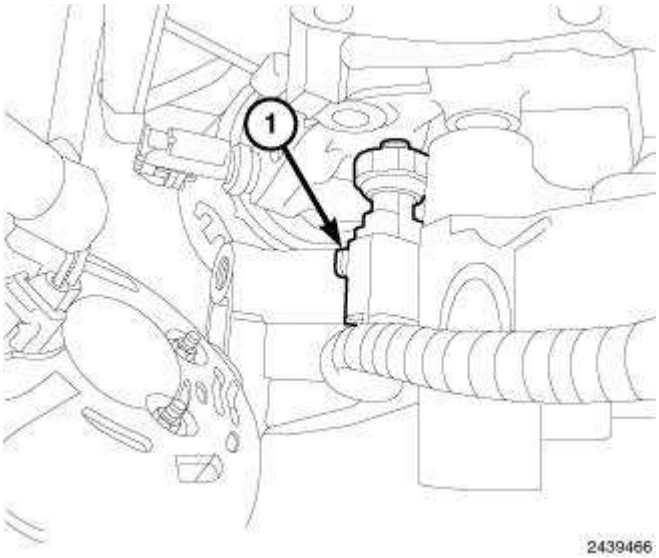

Fig. 298: Identifying Oil Pressure Sensor Electrical Connector
Courtesy of CHRYSLER LLC

2. Connect the oil pressure sensor electrical connector (1).
3. Position the generator and install the upper mounting bolt finger tight.
4. Raise and support the vehicle.

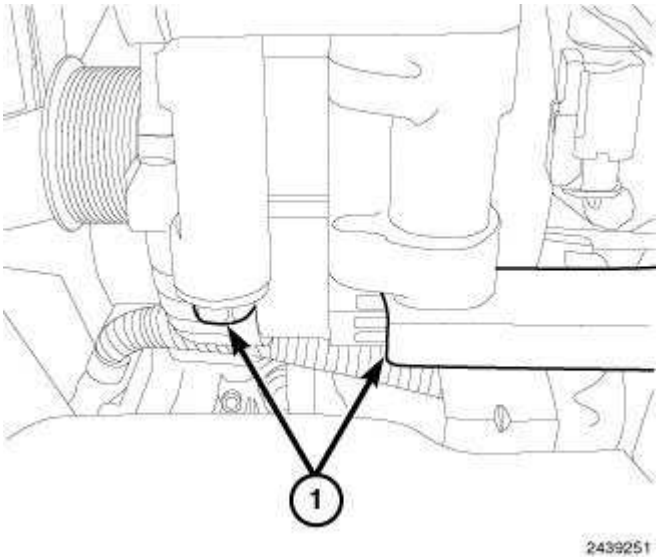

Fig. 299: Identifying Lower Generator Retaining Bolts
Courtesy of CHRYSLER LLC

5. Install the lower mounting bolts (1) and tighten to 55 N.m (41 ft. lbs).

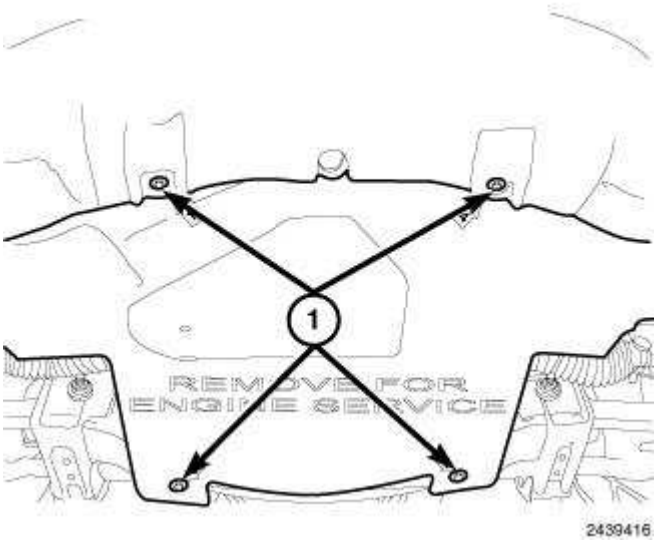

Fig. 300: Lower Splash Shield & Fasteners
Courtesy of CHRYSLER LLC

6. Position the lower splash shield and install the retaining bolts (1).
7. Lower the vehicle
8. Tighten the upper generator mounting bolt to 55 N.m (41 ft. lbs).

CAUTION: When installing a serpentine accessory drive belt, the belt MUST be routed correctly. The water pump may be rotating in the wrong direction if the belt is installed incorrectly, causing the engine to overheat.

9. Install the accessory drive belt. Refer to **Cooling/Accessory Drive/BELT, Serpentine - Installation** .
10. Connect the negative battery cable.

SENSOR, OIL TEMPERATURE

Description

DESCRIPTION

The oil temperature sensor uses the following two circuits:

- Signal circuit to the PCM
- Ground circuit from the PCM

The oil temperature sensor is a Negative Thermal Coefficient sensor. The resistance of the sensor changes as oil temperature changes. This results in different output voltages back to the PCM.

The oil temperature sensor is located on the right side of the engine block.

Removal

REMOVAL

1. Disconnect and isolate the negative battery cable.
2. Remove the accessory drive belt. Refer to **Cooling/Accessory Drive/BELT, Serpentine - Removal** .
3. Remove the generator upper mounting bolt.
4. Raise and support the vehicle.

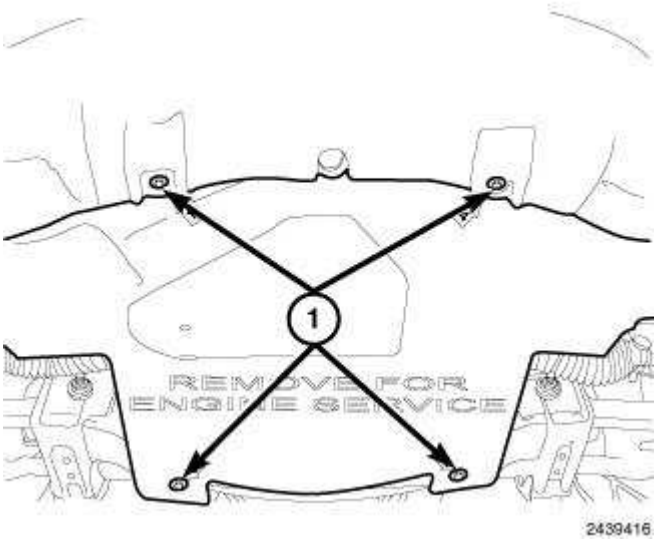

Fig. 301: Lower Splash Shield & Fasteners
Courtesy of CHRYSLER LLC

5. Remove the lower splash shield retaining bolts (1) and the splash shield.

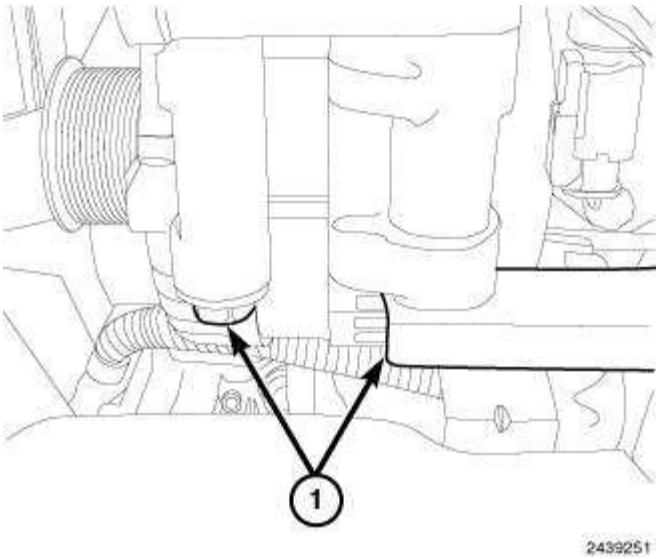

Fig. 302: Identifying Lower Generator Retaining Bolts

Courtesy of CHRYSLER LLC

6. Remove the generator lower mounting bolts (1).
7. Lower the vehicle.
8. Position the generator aside to gain access to the oil temperature sensor.

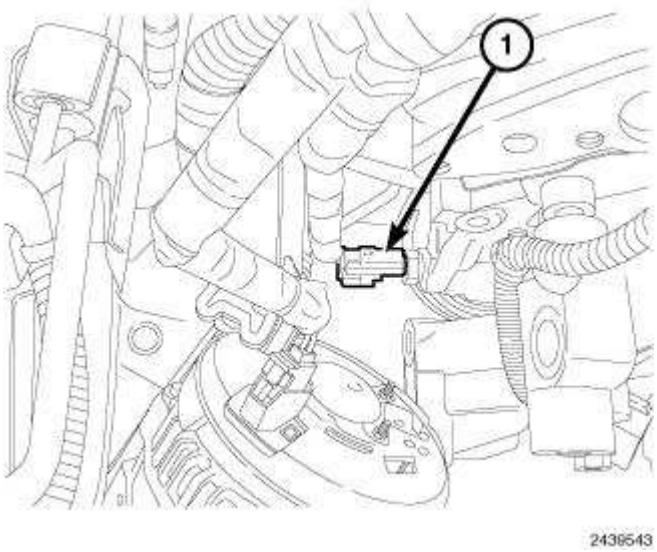

Fig. 303: Identifying Oil Temperature Sensor Electrical Connector
Courtesy of CHRYSLER LLC

9. Disconnect the oil temperature sensor electrical connector (1).

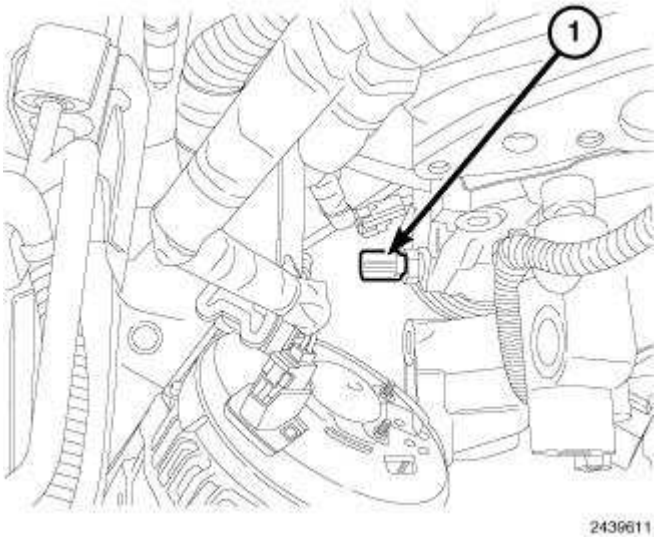

Fig. 304: Identifying Oil Temperature Sensor
Courtesy of CHRYSLER LLC

10. Remove the oil temperature sensor (1).

Installation

INSTALLATION

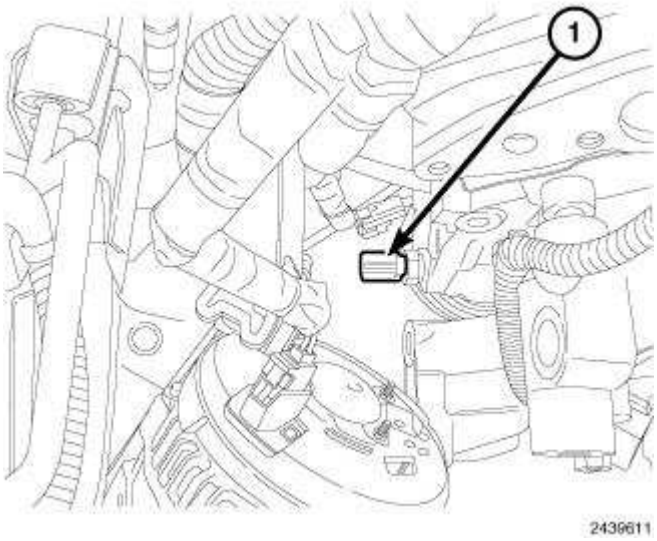

Fig. 305: Identifying Oil Temperature Sensor
Courtesy of CHRYSLER LLC

NOTE: Apply Mopar® Thread Sealant with PTFE to the sensor threads before installing into the engine block.

1. Install the oil temperature sensor (1).

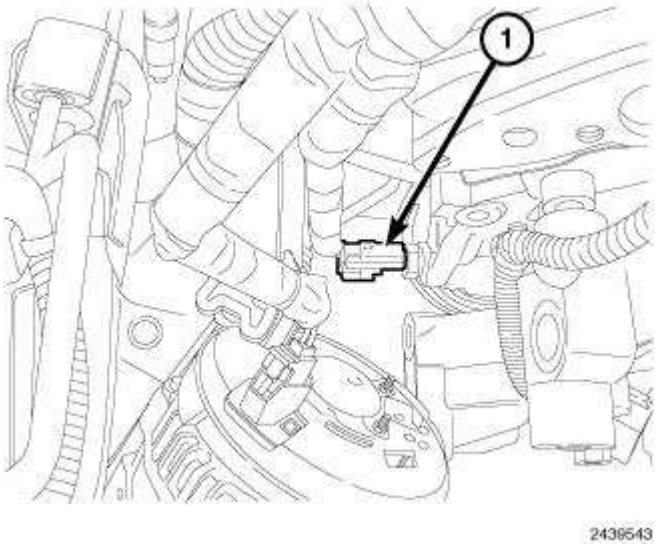

Fig. 306: Identifying Oil Temperature Sensor Electrical Connector
Courtesy of CHRYSLER LLC

2. Connect the oil temperature sensor electrical connector (1).

3. Position the generator and install the upper mounting bolt finger tight.
4. Raise and support the vehicle.

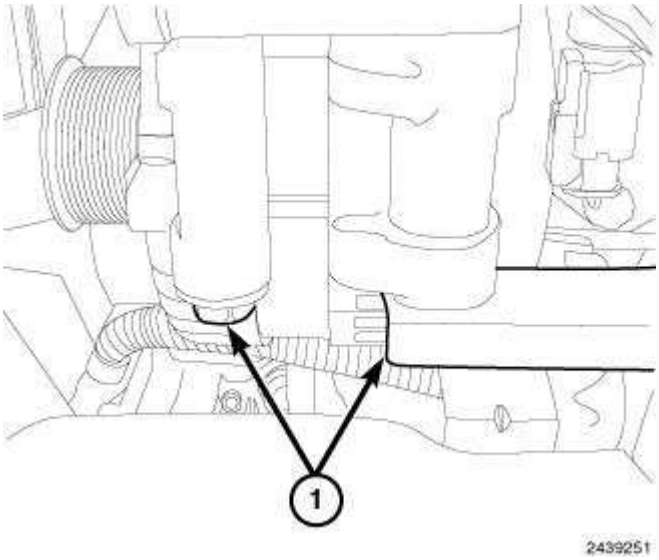

Fig. 307: Identifying Lower Generator Retaining Bolts
Courtesy of CHRYSLER LLC

5. Install the generator lower mounting bolts (1) and tighten to 55 N.m (41 ft. lbs.).

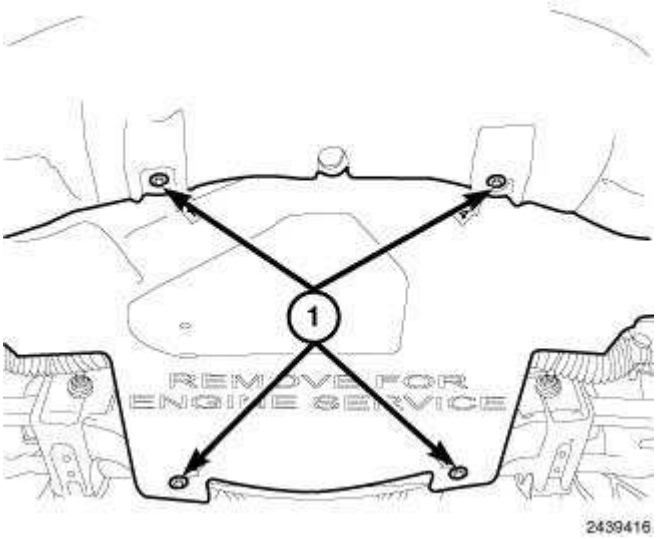

Fig. 308: Lower Splash Shield & Fasteners
Courtesy of CHRYSLER LLC

6. Position the lower splash shield and install the splash shield retaining bolts (1).
7. Lower the vehicle.
8. Tighten the generator upper mounting bolt to 55 N.m (41 ft. lbs.).

CAUTION: When installing a serpentine accessory drive belt, the belt MUST be routed correctly. The water pump may be rotating in the wrong direction if the belt is installed incorrectly, causing the engine to overheat.

9. Install the accessory drive belt. Refer to **Cooling/Accessory Drive/BELT, Serpentine - Removal** .
10. Connect the negative battery cable.

MANIFOLDS

MANIFOLD, EXHAUST

Description

DESCRIPTION

The exhaust manifolds are tube in shell air gap design to maximize durability and performance. The exhaust manifolds are made of stainless steel stamped shells and stainless steel tubes with a powdered metal outlet. A layered graphite over perforated steel manifold gasket is used to provide sealing to the cylinder head.

Operation

OPERATION

The exhaust manifolds collect the engine exhaust exiting the combustion chambers, then channels the exhaust gases to the exhaust pipes attached to the manifolds.

Removal

REMOVAL

EXHAUST MANIFOLD - LEFT SIDE

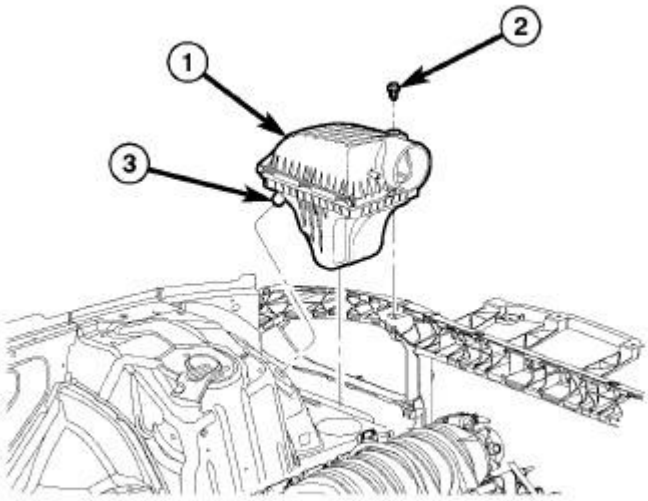

Fig. 309: Air Cleaner Housing
Courtesy of CHRYSLER LLC

1. Disconnect negative battery cable.
2. Remove air cleaner housing (1).
3. Remove coolant bottle, and set aside without removing hoses. Refer to **Cooling/Engine/BOTTLE, Coolant Recovery - Removal** .
4. Remove the top row of bolts from manifold from under the hood.
5. Support and raise the vehicle on a hoist.
6. Remove the lower splash shield.
7. Remove the exhaust pipe as an assembly.
8. Remove the knock sensor.
9. Remove the bottom row of bolts from manifold from under vehicle.
10. Remove manifold from under vehicle.

EXHAUST MANIFOLD - RIGHT SIDE

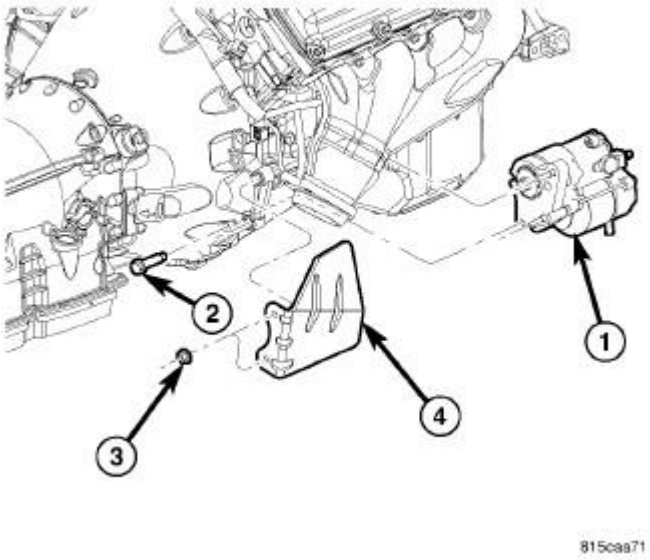

Fig. 310: Removing/Installing Starter
Courtesy of CHRYSLER LLC

1 - STARTER
2 - BOLT
3 - NUT
4 - HEAT SHIELD

1. Disconnect negative battery cable.
2. Remove power distribution box.
3. Loosen the power distribution box mounting bracket.
4. Unfasten, and relocate the wire harness mounted on the right hand inner fender panel.
5. Remove the bottom row of bolts from manifold from under vehicle.
6. Support and raise the vehicle on a hoist.
7. Remove the exhaust pipe as an assembly.
8. Remove the lower splash shield.
9. Remove starter (1) and heat shield (4).
10. Remove knock sensor.
11. Remove the top row of bolts from manifold from under the hood.
12. Remove the manifold from under vehicle.

Cleaning

CLEANING

Clean mating surfaces on cylinder head and manifold. Wash with solvent and blow dry with compressed air.

Inspection

INSPECTION

Inspect manifold for cracks.

Inspect mating surfaces of manifold for flatness with a straight edge. Gasket surfaces must be flat within 0.375 mm (0.0147 in.) around each port opening, and 0.75 mm (0.0295 in.) overall.

Installation

INSTALLATION

EXHAUST MANIFOLD - LEFT SIDE

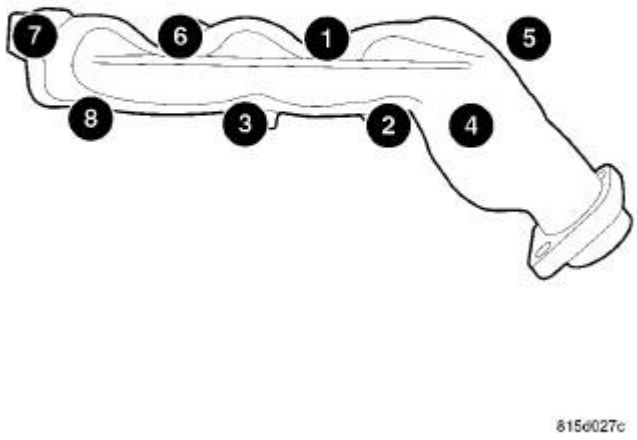

Fig. 311: EXHAUST MANIFOLD TORQUE LEFT
Courtesy of CHRYSLER LLC

1. Install the exhaust manifold gasket and the exhaust manifold.
2. Using the sequence shown in illustration, install the exhaust manifold bolts and tighten to 31 N.m (23 ft. lbs.).
3. Install the coolant bottle.

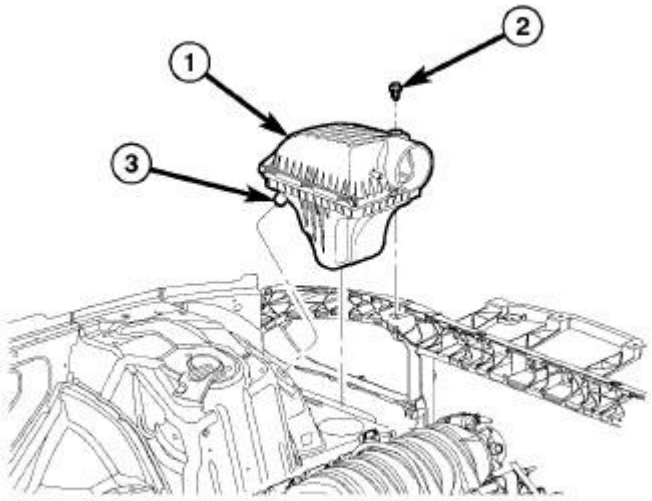

Fig. 312: Air Cleaner Housing
Courtesy of CHRYSLER LLC

4. Install the air cleaner housing (1).
5. Install the knock sensor.
6. Install the exhaust pipe to manifold bolts.
7. Connect negative battery cable.

EXHAUST MANIFOLD - RIGHT SIDE

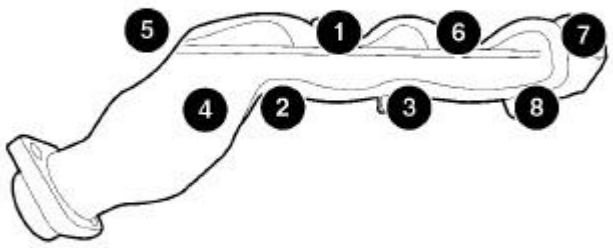

Fig. 313: 6.1L EXH MANIFOLD TORQUE RIGHT
Courtesy of CHRYSLER LLC

1. Install the exhaust manifold gasket and the exhaust manifold.
2. Using the sequence shown in illustration, install the exhaust manifold bolts and tighten to 31 N.m (23 ft. lbs.).
3. Connect the wire harness mounted on the right hand inner fender panel.
4. Install the power distribution box mounting bracket.
5. Install the power distribution box.

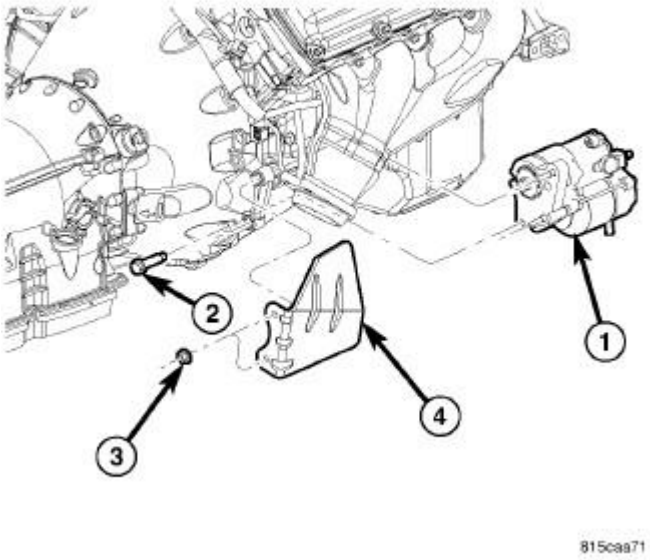

Fig. 314: Removing/Installing Starter
Courtesy of CHRYSLER LLC

6. Install the starter (1) and heat shield (4).
7. Install the knock sensor.
8. Install the exhaust pipe to manifold bolts.
9. Connect the negative battery cable.

MANIFOLD, INTAKE

Description

DESCRIPTION

The intake manifold is made of aluminum, and features runners to maximize power. The intake manifold uses single plane sealing which consist of two edge molded gaskets to prevent leaks.

Diagnosis and Testing

INTAKE MANIFOLD LEAKAGE

An intake manifold air leak is characterized by lower than normal manifold vacuum. Also, one or more cylinders may not be functioning.

WARNING: Use extreme caution when the engine is operating. Do not stand in a direct line with the fan. Do not put your hands near the pulleys, belts or the fan. Do not wear loose clothing. Failure to follow this warning may

result in serious or fatal injury.

1. Start the engine.
2. Spray a small stream of water at the suspected leak area.
3. If a change in RPM is observed the area of the suspected leak has been found.
4. Repair as required.

Removal

REMOVAL

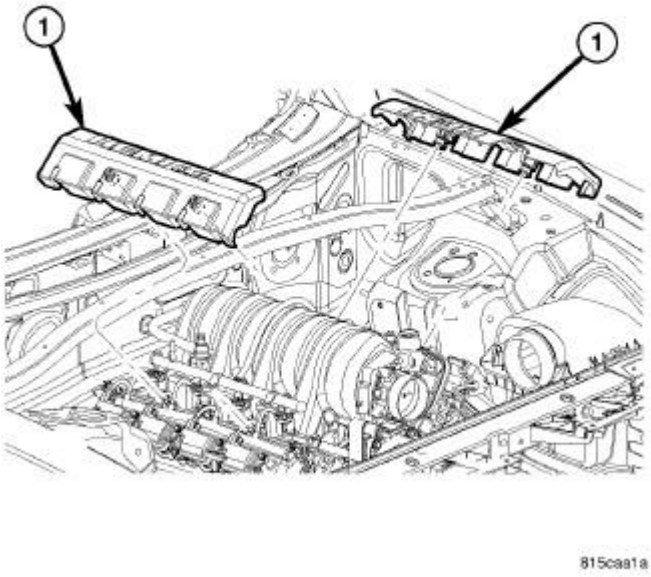

Fig. 315: Engine Covers
Courtesy of CHRYSLER LLC

1. Remove the engine covers (1).
2. Perform the fuel system pressure release procedure. Refer to **Fuel System/Fuel Delivery - Standard Procedure** .
3. Disconnect the fuel supply line. Refer to **Fuel System/Fuel Delivery/FITTING, Quick Connect - Standard Procedure** .

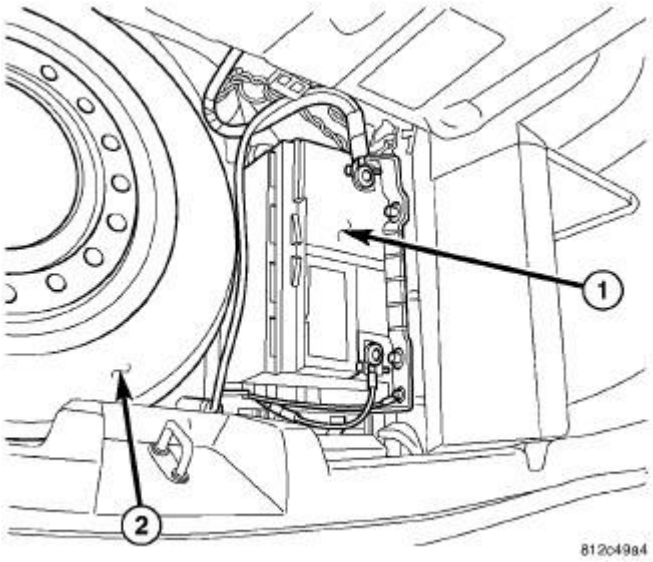

Fig. 316: Locating Battery
Courtesy of CHRYSLER LLC

4. Disconnect the negative battery cable.

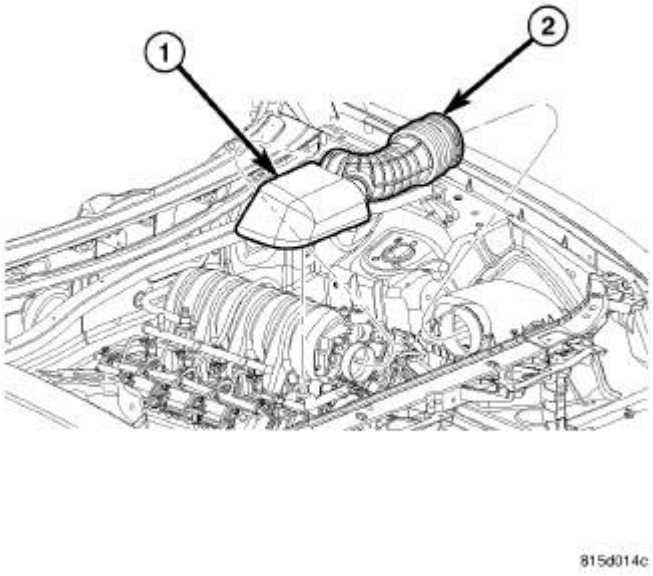

Fig. 317: Air Cleaner Duct
Courtesy of CHRYSLER LLC

5. Remove the air cleaner housing (1) and clean air tube (2).
6. Disconnect electrical connectors for the following components:
    - Manifold Absolute Pressure (MAP) Sensor

- Short runner valve (SRV)
- Fuel Injectors
- Electric Throttle Control (ETC)

7. Disconnect the brake booster hose, purge hose, and Make Up Air Hose (MUA).

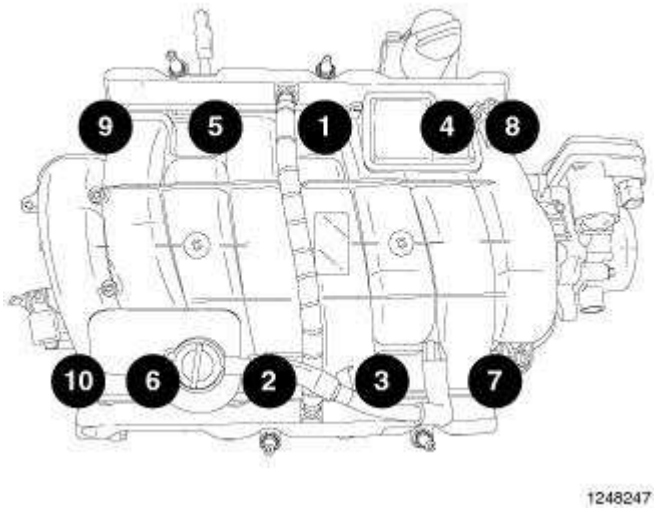

Fig. 318: Intake Manifold Removal & Tightening Sequence
Courtesy of CHRYSLER LLC

NOTE: Remove the intake manifold and throttle body as an assembly.

8. Using the sequence shown in illustration, remove the intake manifold retaining fasteners
9. Remove intake manifold as an assembly.

Cleaning

CLEANING

NOTE: There is NO approved repair procedure for the intake manifold. If severe damage is found during inspection, the intake manifold must be replaced.

Before installing the intake manifold thoroughly clean the mating surfaces. Use a suitable cleaning solvent, then air dry.

Inspection

INSPECTION

1. Inspect the intake sealing surface for cracks, nicks and distortion.
2. Inspect the intake manifold vacuum hose fittings for looseness or blockage.

Installation

INSTALLATION

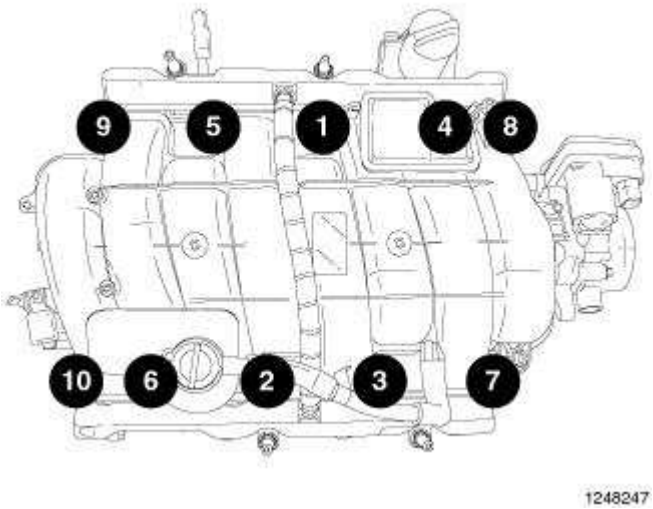

Fig. 319: Intake Manifold Removal & Tightening Sequence
Courtesy of CHRYSLER LLC

1. Position the intake manifold.
2. Using the sequence shown in illustration, install the intake manifold retaining bolts and tighten the fasteners to 12 N.m (9 ft. lbs.).
3. Connect the electrical connectors for the following components:
    - Manifold Absolute Pressure (MAP) Sensor
    - Short runner valve (SRV)
    - Fuel Injector electrical connectors
    - ETC (Electronic Throttle Control)
4. Connect the brake booster hose, purge hose, and make-up air hose (MUA).

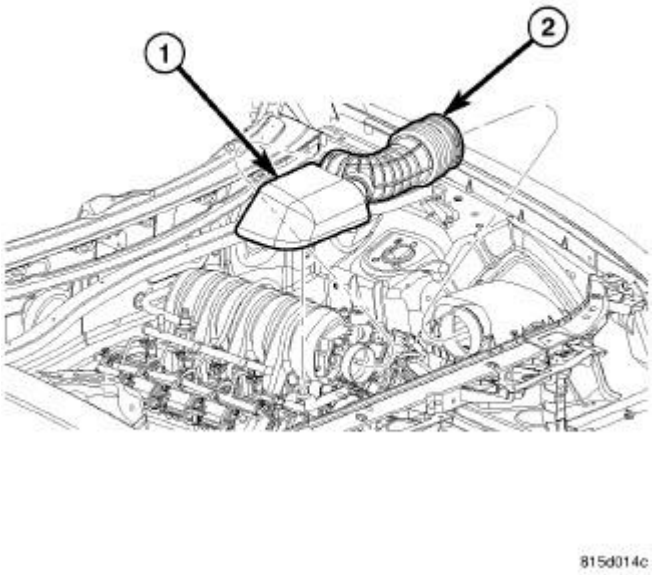

Fig. 320: Air Cleaner Duct
Courtesy of CHRYSLER LLC

5. Install the air cleaner housing (1) and clean air tube (2).

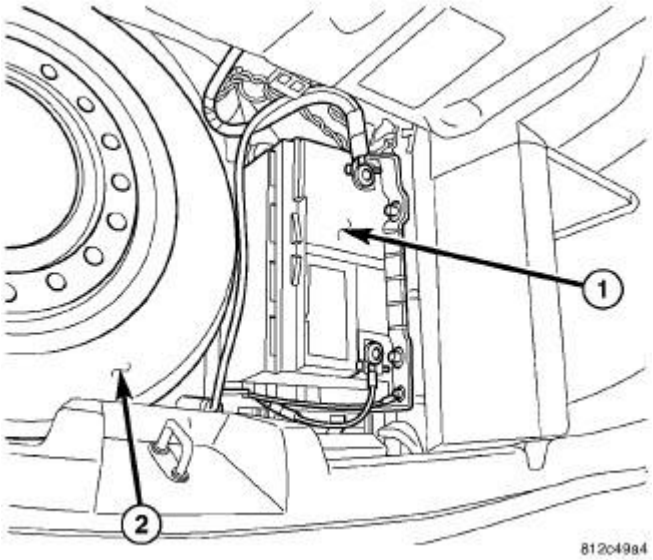

Fig. 321: Locating Battery
Courtesy of CHRYSLER LLC

6. Connect the negative battery cable.

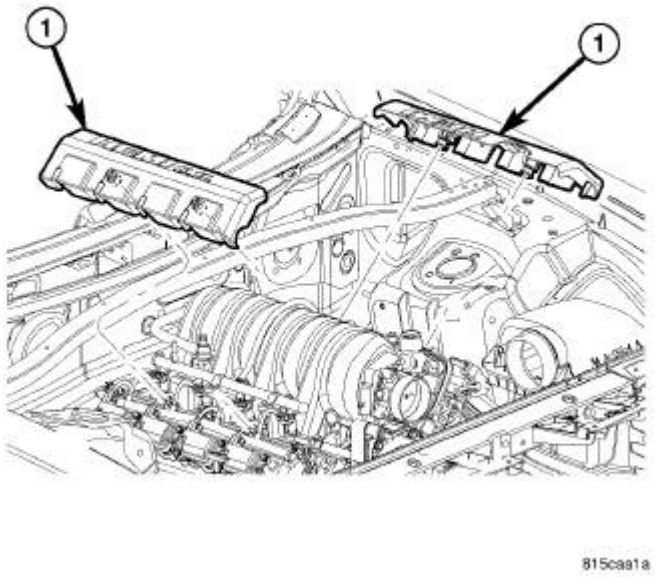

Fig. 322: Engine Covers
Courtesy of CHRYSLER LLC

7. Position the engine covers (1) and snap onto the fuel rails.

VALVE TIMING

CHAIN AND SPROCKETS, TIMING

Removal

REMOVAL

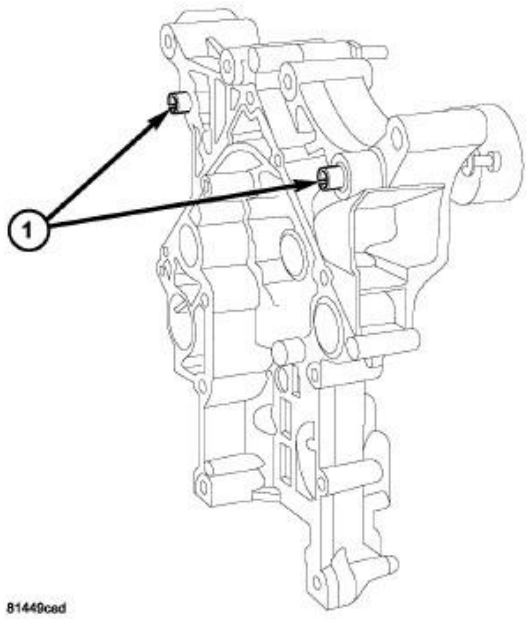

Fig. 323: Front Cover Slide Bushings
Courtesy of CHRYSLER LLC

1. Disconnect the negative battery cable.
2. Drain the cooling system.
3. Remove the timing chain cover. See **Engine/Valve Timing/COVER(S), Engine Timing - Removal**.
4. Verify the slide bushings (1) remain installed in the timing chain cover during removal.

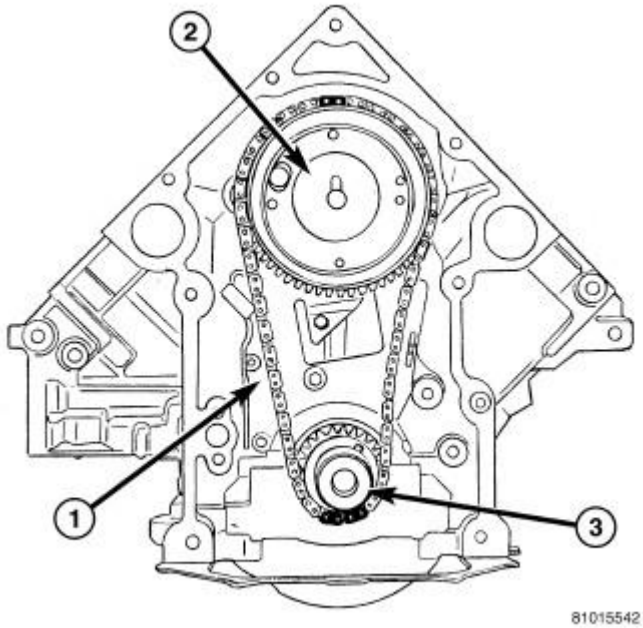

Fig. 324: Timing Mark Alignment
Courtesy of CHRYSLER LLC

5. Install the vibration damper bolt finger tight. Using a suitable socket and breaker bar, rotate the crankshaft to align the timing chain plated links with the timing marks on the sprockets as shown in illustration.

CAUTION: The camshaft pin and the slot in the cam sprocket must be clocked at 12:00 (2). The crankshaft keyway must be clocked at 2:00 (3). The crankshaft sprocket must be installed so that the dots and or paint marking is at 6:00.

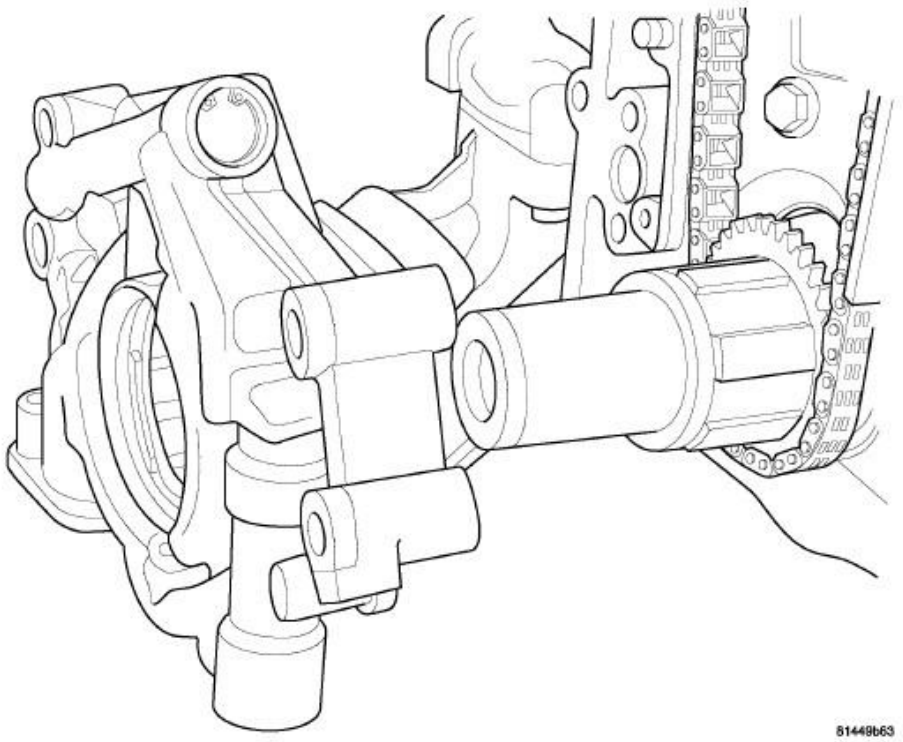

Fig. 325: Removing/Installing Oil Pump
Courtesy of CHRYSLER LLC

6. Remove the oil pump. See **Engine/Lubrication/PUMP, Engine Oil - Removal**.

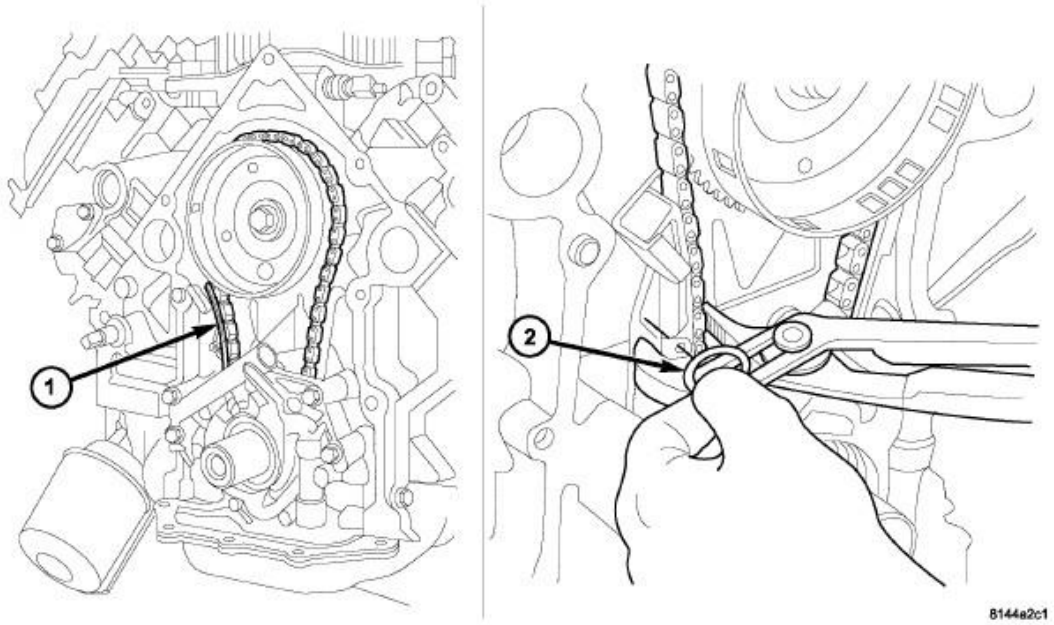

Fig. 326: RETRACTING TENSIONER
Courtesy of CHRYSLER LLC

7. Retract the chain tensioner arm (1) until the hole in the arm lines up with the hole in the bracket (2).

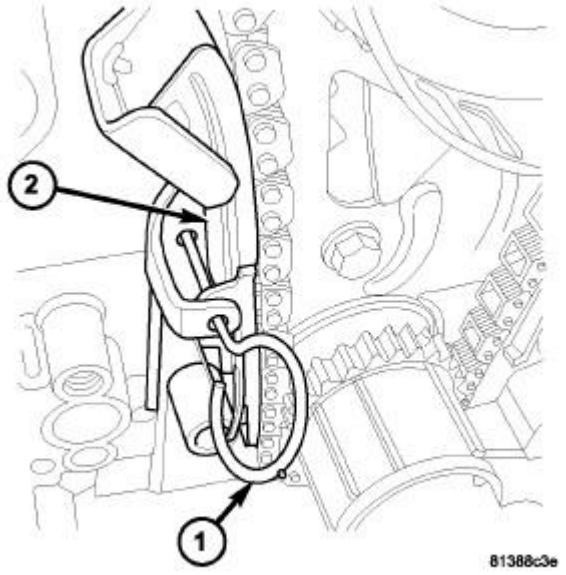

Fig. 327: TENSIONER PIN
Courtesy of CHRYSLER LLC

8. Install the Tensioner Pin 8514 (1) into the holes in the chain tensioner (2).

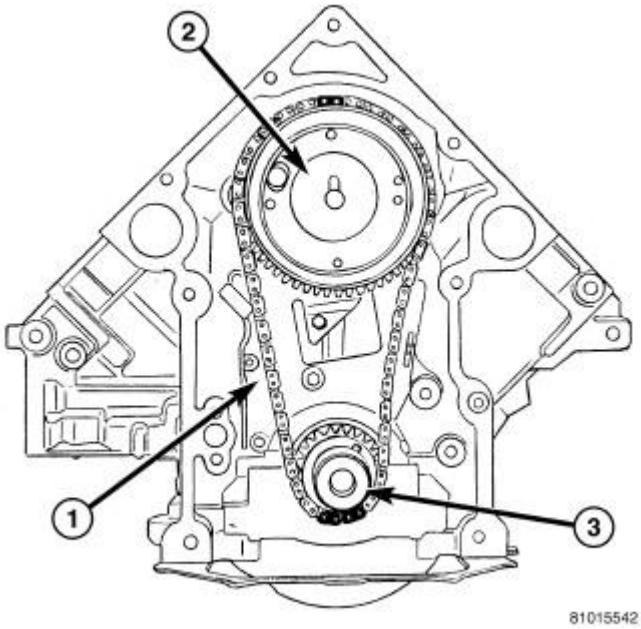

Fig. 328: Timing Mark Alignment
Courtesy of CHRYSLER LLC

9. Remove the camshaft sprocket retaining bolt and remove the timing chain with the camshaft and crankshaft sprockets (2, 3).

NOTE: Inspect the timing chain tensioner and timing chain guide shoes for wear and replace as necessary.

10. If the timing chain tensioner (1) is being replaced, remove the retaining bolts and remove the chain tensioner.
11. If the timing chain guide is being replaced, remove the retaining bolts and remove the timing chain guide.

Installation

INSTALLATION

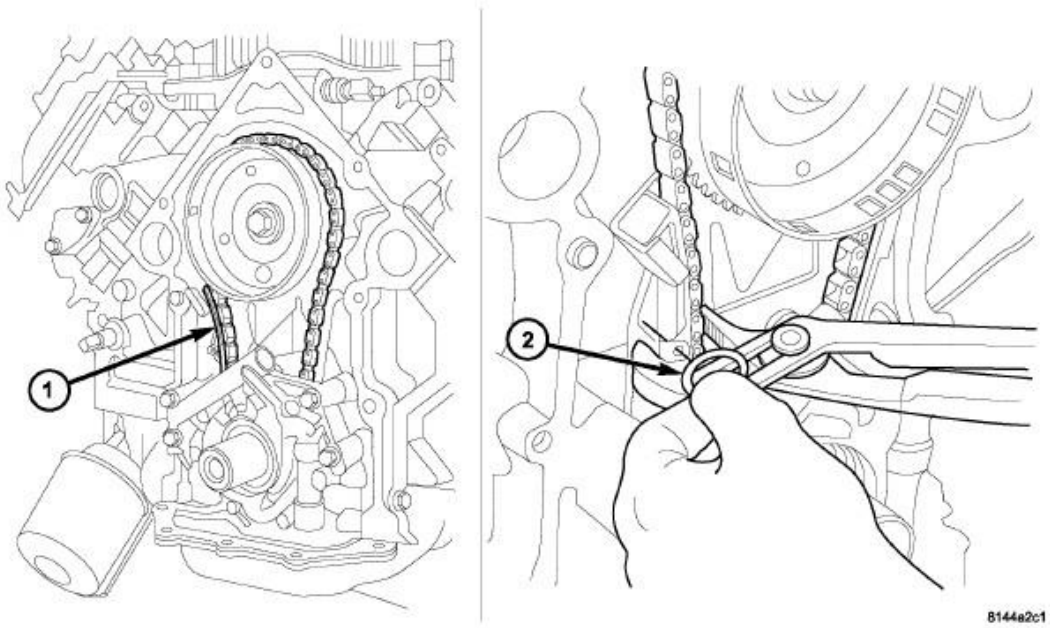

Fig. 329: RETRACTING TENSIONER
Courtesy of CHRYSLER LLC

1. If removed, install the timing chain guide and tighten bolts to 28 N.m (21 ft. lbs.).
2. If removed, install the timing chain tensioner (1) and tighten bolts to 28 N.m (21 ft. lbs.).
3. If required, retract the chain tensioner arm and install the Tensioner Pin 8514 (2) into the holes of the chain tensioner.

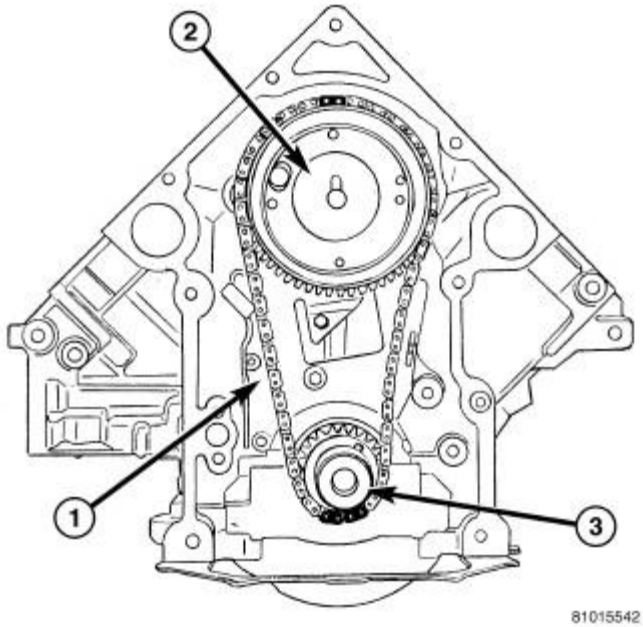

Fig. 330: TIMING MARK ALIGNMENT

Courtesy of CHRYSLER LLC

CAUTION: The timing chain must be installed with the single plated link aligned with the dot and or paint marking on the camshaft sprocket. The crankshaft sprocket is aligned with the dot and or paint marking on the sprocket between two plated timing chain links.

CAUTION: The camshaft pin and the slot in the cam sprocket must be clocked at 12:00. The crankshaft keyway must be clocked at 2:00. The crankshaft sprocket must be installed so that the dots and or paint marking is at 6:00.

4. Place both camshaft sprocket and crankshaft sprocket on the bench with timing marks on exact imaginary center line through both camshaft and crankshaft bores.
5. Place timing chain around both sprockets with timing marks aligned with the plated links.
6. Lift the sprockets and chain keeping sprockets tight against the chain in the position as shown in illustration).
7. Position both sprockets (2, 3) onto their respective shafts and verify alignment of timing marks.
8. Install the camshaft sprocket retaining bolt and tighten to 122 N.m (90 ft. lbs.).

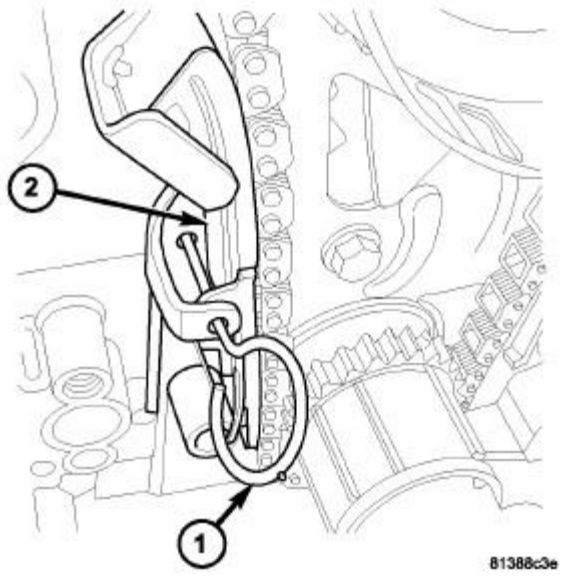

Fig. 331: TENSIONER PIN
Courtesy of CHRYSLER LLC

9. Remove the Tensioner Pin 8514 (1).
10. Rotate the crankshaft two revolutions and verify the alignment of the timing marks. If the timing marks do not line up, remove the camshaft sprocket and realign.

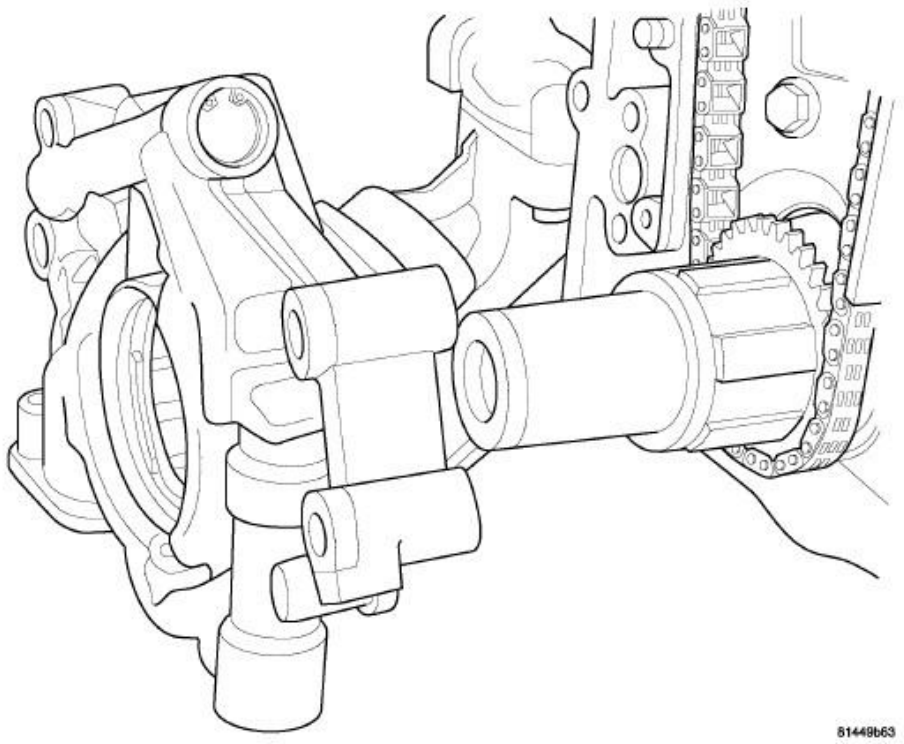

Fig. 332: Removing/Installing Oil Pump
Courtesy of CHRYSLER LLC

11. Install the oil pump. See **Engine/Lubrication/PUMP, Engine Oil - Installation**.

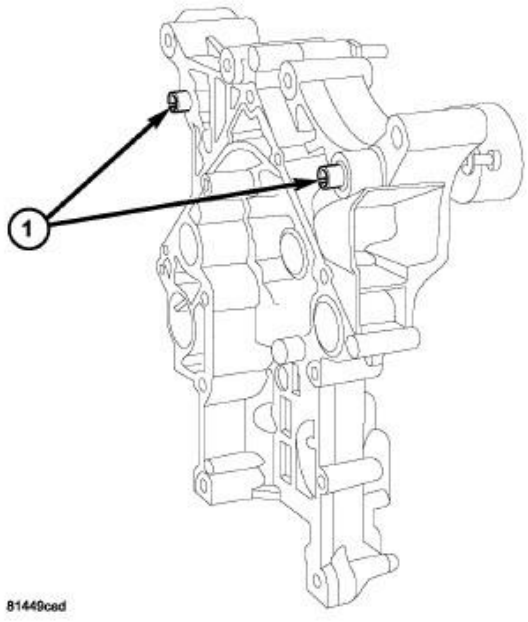

Fig. 333: Front Cover Slide Bushings
Courtesy of CHRYSLER LLC

12. Verify the slide bushings (1) are installed in the timing chain cover.
13. Install the timing chain cover. See **Engine/Valve Timing/COVER(S), Engine Timing - Installation**.
14. Fill the engine with oil.
15. Fill the cooling system. Refer to **Cooling - Standard Procedure** .
16. Connect the negative battery cable.
17. Start the engine and check for leaks.

COVER(S), ENGINE TIMING

Removal

REMOVAL

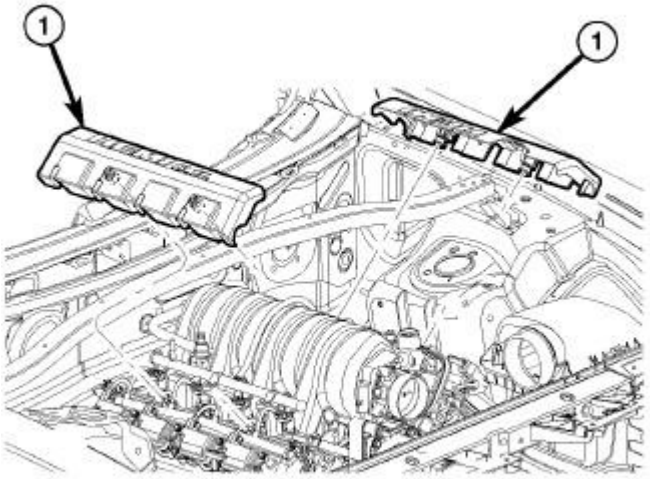

Fig. 334: Engine Covers
Courtesy of CHRYSLER LLC

1. Remove engine covers (1).

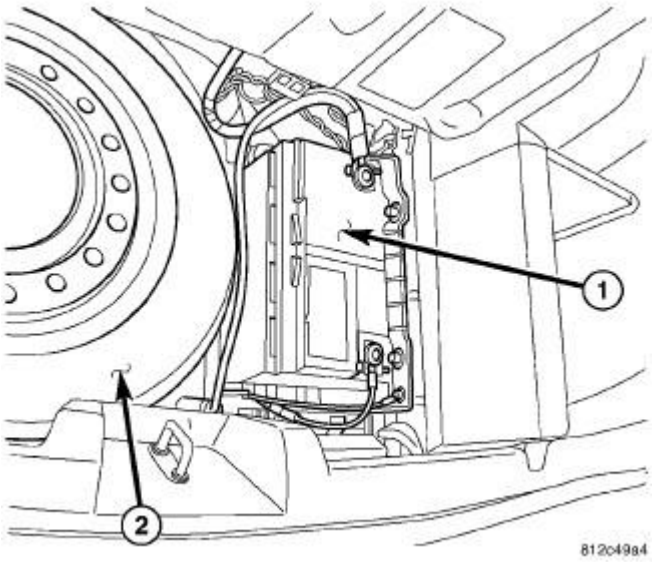

Fig. 335: Locating Battery
Courtesy of CHRYSLER LLC

2. Disconnect the battery negative cable from battery (1).

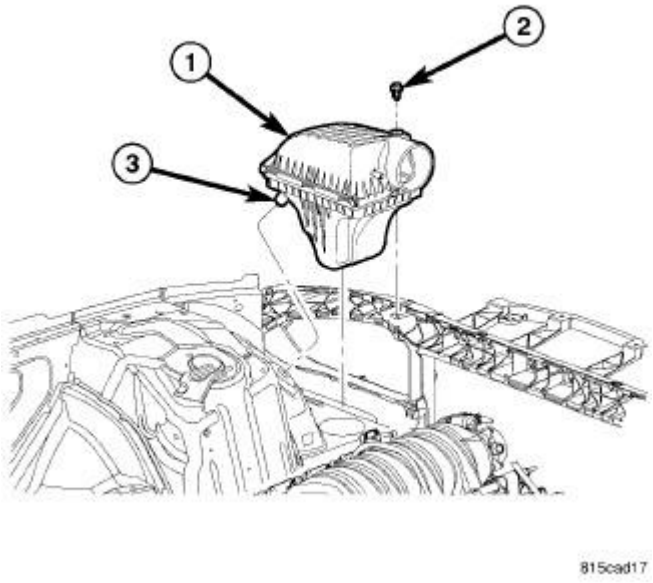

Fig. 336: Air Cleaner Housing
Courtesy of CHRYSLER LLC

3. Remove clean air hose from throttle body.
4. Remove retaining bolt (2) and remove air cleaner housing (1).
5. Drain the cooling system.

6. Remove the accessory drive belt. Refer to **Cooling/Accessory Drive/BELT, Serpentine - Removal** .
7. Remove the cooling fan.
8. Remove the fan shroud.

NOTE: It is not necessary to disconnect A/C lines or discharge freon.

9. Remove A/C compressor and set aside. Refer to **Heating and Air Conditioning/Plumbing/COMPRESSOR, A/C - Removal** .

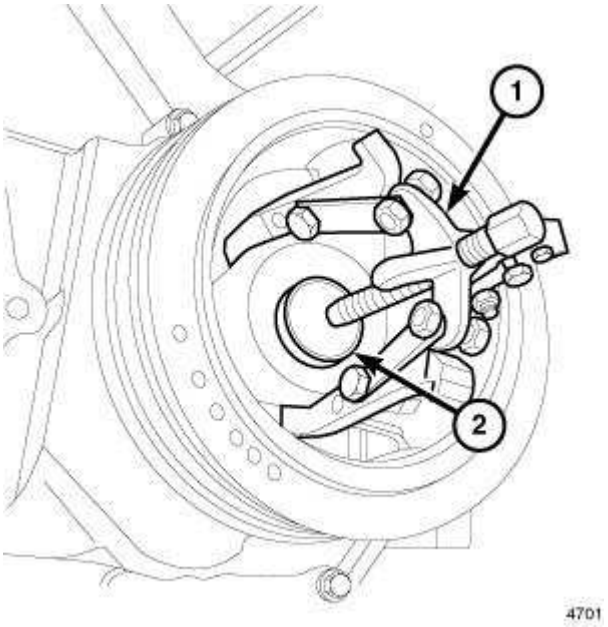

Fig. 337: CRANKSHAFT DAMPER REMOVAL
Courtesy of CHRYSLER LLC

10. Remove the generator.
11. Remove the upper radiator hose.
12. Disconnect both heater hoses at the timing cover.
13. Disconnect the lower radiator hose at engine.
14. Remove accessory drive belt tensioner and both idler pulleys.
15. Remove the crankshaft damper. See **Engine/Engine Block/DAMPER, Vibration - Removal**.

NOTE: Do not remove the hoses from the power steering pump.

16. Remove power steering pump and set aside.

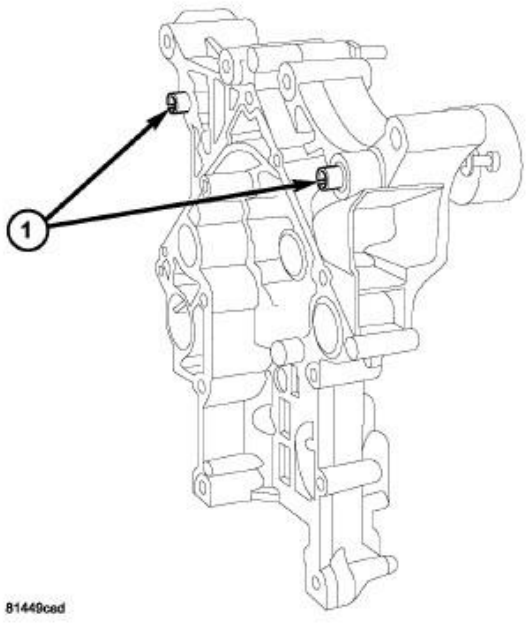

Fig. 338: FRONT COVER SLIDE BUSHINGS
Courtesy of CHRYSLER LLC

17. Remove the dipstick support bolt.
18. Drain the engine oil.
19. Remove the oil pan and pick up tube. See **Engine/Lubrication/PAN, Oil - Removal**.

NOTE: It is not necessary to remove water pump for timing cover removal.

20. Remove the timing cover bolts and remove cover.
21. Verify that the timing cover slide bushings (1) are located in timing cover.

Installation

INSTALLATION

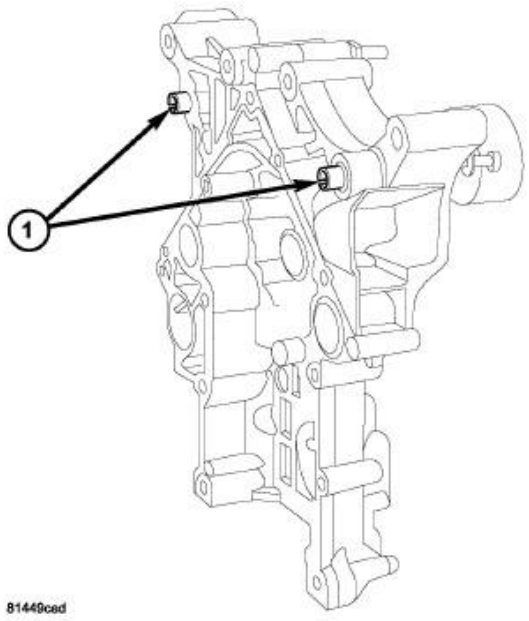

Fig. 339: FRONT COVER SLIDE BUSHINGS
Courtesy of CHRYSLER LLC

1. Clean timing chain cover and block surface.

NOTE: Always install a new gasket on timing cover.

2. Verify that the slide bushings (1) are installed in timing cover.
3. Install cover and new gasket. Tighten fasteners to 28 N.m (250 in. lbs.).

NOTE: The large lifting stud is torqued to 55 N.m (40 ft. lbs.).

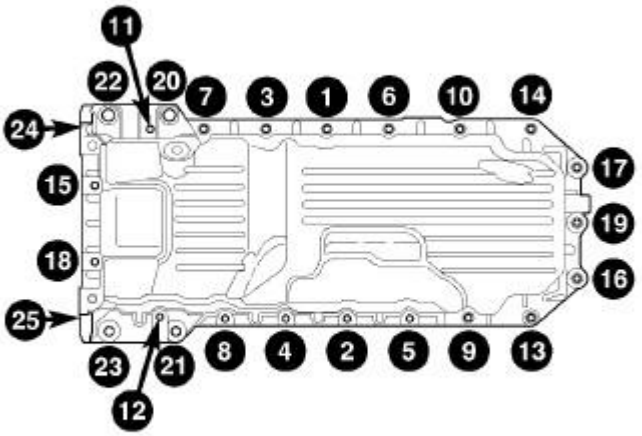

Fig. 340: Oil Pan Bolt Removal/Installation Sequence
Courtesy of CHRYSLER LLC

4. Install the oil pan and pick up tube. See **Engine/Lubrication/PAN, Oil - Installation**.
5. Install the A/C compressor. Refer to **Heating and Air Conditioning/Plumbing/COMPRESSOR, A/C - Installation** .
6. Install the generator. Refer to **Electrical/Charging/GENERATOR - Installation** .
7. Install power steering pump. Refer to **Steering/Pump - Installation** .
8. Install the dipstick support bolt.
9. Install the thermostat housing.
10. Install crankshaft damper. See **Engine/Engine Block/DAMPER, Vibration - Installation**.

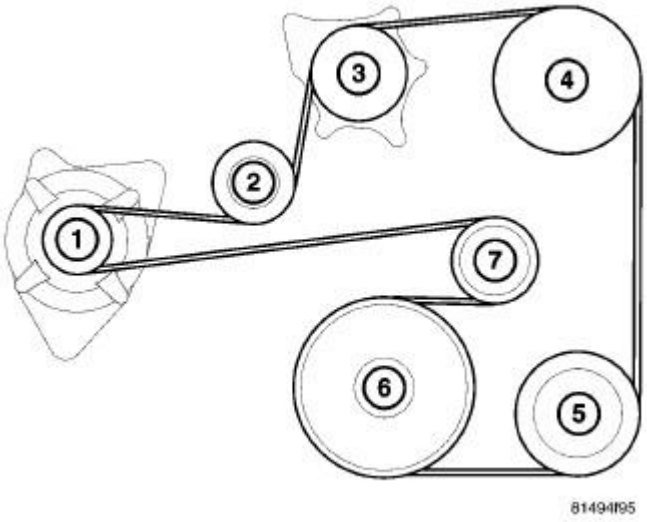

Fig. 341: Accessory Drive Belt Routing
Courtesy of CHRYSLER LLC

11. Install accessory drive belt tensioner assembly and both idler pulleys.

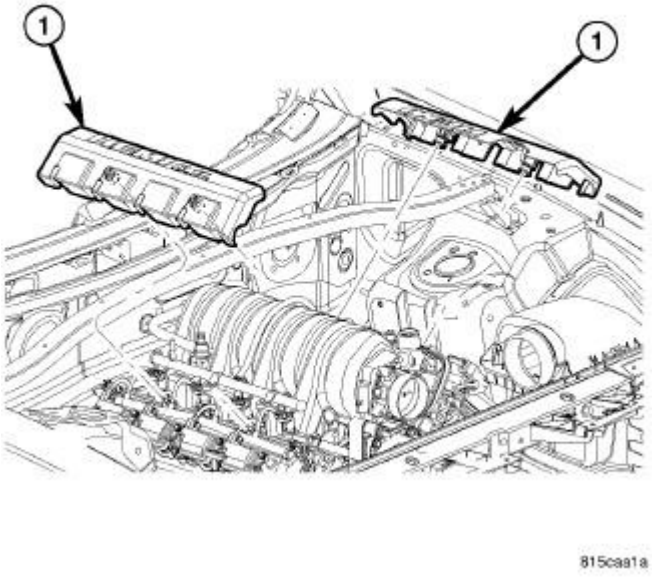

Fig. 342: Engine Covers
Courtesy of CHRYSLER LLC

12. Install the radiator lower hose.
13. Install both heater hoses at the timing cover.
14. Install radiator fan shroud.

15. Install the cooling fan.
16. Install the accessory drive belt.
17. Install the coolant bottle and washer bottle.
18. Install the upper radiator hose.
19. Install the air cleaner assembly.
20. Fill cooling system.
21. Refill engine oil.
22. Connect the battery negative cable.
23. Install the engine covers (1).

TENSIONER, ENGINE TIMING

Description

DESCRIPTION

The timing chain tensioner is a stamped steel constant tension mechanical design. It is mounted to the front of the engine, behind the timing chain drive.

Operation

OPERATION

The timing chain tension is maintained by routing the timing chain through the tensioner assembly. A nylon covered spring steel arm presses on the timing chain maintaining the correct chain tension.

ENGINE

6.4L - Service Information - Challenger

DESCRIPTION

DESCRIPTION

CAUTION: If the engine has experienced a catastrophic failure, THE INTAKE MANIFOLD MUST BE REPLACED!

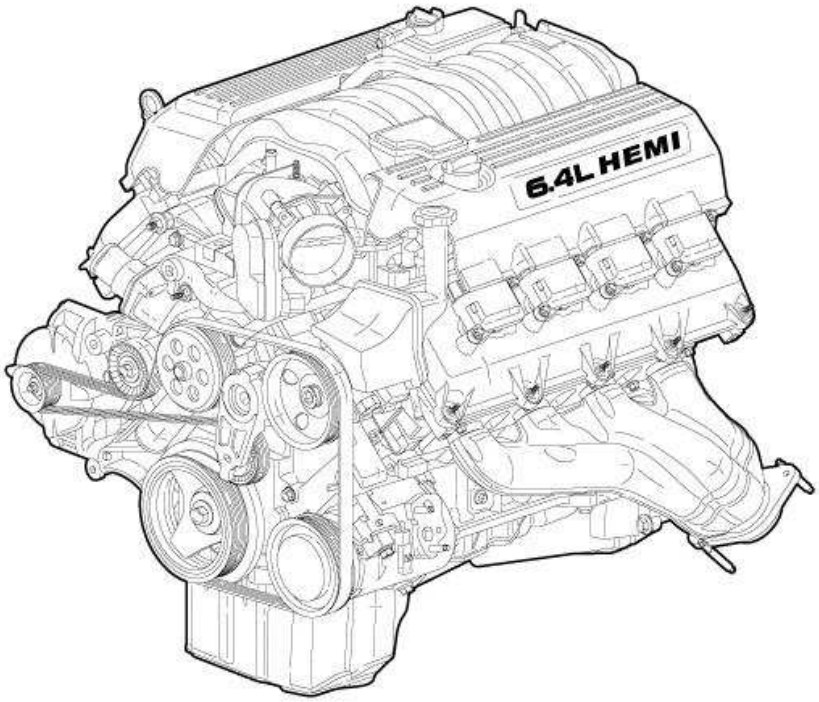

Fig. 1: 6.4L HEMI V-8 Engine
Courtesy of CHRYSLER GROUP, LLC

The 6.4L HEMI eight-cylinder SRT high performance engine is a 90° V-Type, deep skirt, lightweight cast iron block with aluminum heads, single cam, overhead valves, and hydraulic roller lifters. The heads incorporate splayed valves with a hemispherical style combustion chamber and dual spark plugs. The cylinders are numbered from front to rear; 1, 3, 5, 7 on the left bank and 2, 4, 6, 8 on the right bank. The firing order is 1-8-4-3-6-5-7-2. The 6.4L HEMI engine is a bored and stroked version of the 5.7L HEMI engine developed for SRT high performance vehicles. This engine shares the same architecture as the 2009 5.7L HEMI with the following Performance Upgrades:

- Increased Bore
- Increased Stoke

- Increased Valve Sizing

The 6.4L HEMI engine also has improved horsepower, torque and fuel economy as compared with the 6.1L HEMI engine. This is achieved with the larger displacement and the following Technical Improvements:

- Variable Cam Timing (VCT) Cam Phasing System
- Multi-Displacement System (MDS)
- High Flow Ports
- Increased Maximum RPM
- Combustion Chamber Shape
- Higher Compression Ratio

DIAGNOSIS AND TESTING

ENGINE DIAGNOSIS - INTRODUCTION

Engine diagnosis is helpful in determining the causes of malfunctions not detected and remedied by routine maintenance.

These malfunctions may be classified as either performance e.g., (engine idles rough and stalls) or mechanical e.g., (a strange noise). for possible causes and corrections of malfunctions. Refer to **ENGINE MECHANICAL DIAGNOSIS CHART** .

Additional tests and diagnostic procedures may be necessary for specific engine malfunctions that can not be isolated with the Service Diagnosis charts. For additional Information on diagnosis and testing. Refer to the following tests:

- Cylinder Compression Pressure Leakage. Refer to **CYLINDER COMPRESSION PRESSURE LEAKAGE** .
- Cylinder Combustion Pressure Leakage. Refer to **CYLINDER COMBUSTION PRESSURE LEAKAGE** .
- Checking Engine Oil Pressure. Refer to **CHECKING ENGINE OIL PRESSURE** .
- Cylinder Head Gasket Failure. Refer to **DIAGNOSIS AND TESTING - CYLINDER HEAD GASKET FAILURE** .
- Intake Manifold Leakage. Refer to **DIAGNOSIS AND TESTING - INTAKE MANIFOLD LEAKAGE** .

CYLINDER COMBUSTION PRESSURE LEAKAGE

The combustion pressure leakage test provides an accurate means for determining engine condition.

Combustion pressure leakage testing will detect:

- Exhaust and intake valve leaks (improper seating)
- Leaks between adjacent cylinders or into water jacket
- Any causes for combustion and/or compression pressure loss

1. Check the coolant level and fill as required. DO NOT install the radiator cap.
2. Start and operate the engine until it attains normal operating temperature.
3. Turn the engine OFF.
4. Remove the spark plugs.
5. Remove the oil filler cap.
6. Remove the air cleaner hose.
7. **Calibrate the tester according to the manufacturer's instructions.** The shop air source for testing should maintain a regulated air pressure at 552 kPa (80 psi).
8. Perform the test procedures on each cylinder according to the tester manufacturer's instructions. Set the piston of the cylinder to be tested at TDC compression.
9. During the testing, listen for pressurized air escaping through the throttle body, tailpipe and oil filler cap opening. Check for bubbles in the radiator coolant.

All gauge pressure indications should be equal, with **no more** than 25% leakage.

FOR EXAMPLE: Input air at 552 kPa (80 psi), the primary gauge factory set at 207 kPa (30 psi) input pressure. The secondary gauge should have no more than 176 kPa (25.5 psi) loss, when connected to the cylinder.

Refer to **CYLINDER COMBUSTION PRESSURE LEAKAGE DIAGNOSIS CHART**.

CYLINDER COMBUSTION PRESSURE LEAKAGE DIAGNOSIS CHART

CONDITION	POSSIBLE CAUSE	CORRECTION
Air escapes through the throttle body	Intake valve bent, burnt, or not seated properly.	Inspect valve and valve seat. Reface or replace, as necessary. Inspect valve springs. Replace as necessary.
Air escapes through the tailpipe	Exhaust valve bent, burnt, or not seated properly.	Inspect valve and valve seat. Reface or replace, as necessary. Inspect valve springs. Replace as necessary.
Air escapes through the radiator	Cylinder head gasket leaking or cracked in cylinder head or engine block.	Remove cylinder head and inspect. Replace cylinder head gasket, cylinder head or engine block as necessary.
More than 50% leakage from adjacent cylinders	Cylinder head gasket leaking or crack in cylinder head or engine block between adjacent cylinders.	Remove cylinder head and inspect. Replace cylinder head gasket, cylinder head or engine block as necessary.

More than 25% leakage and air escapes through the oil filler cap opening only	Stuck or broken piston rings; cracked piston; worn rings and/or cylinder wall.	Remove cylinder head and inspect for broken rings or piston. Measure ring gap and cylinder diameter, taper and out-of-round. Replace defective part as necessary.

CYLINDER COMPRESSION PRESSURE LEAKAGE

NOTE: The results of a cylinder compression pressure test can be utilized to diagnose several engine malfunctions.

NOTE: Ensure the battery is completely charged and the engine starter motor is in good operating condition. Otherwise the indicated compression pressures may not be valid for diagnosis purposes.

1. Clean the spark plug recesses with compressed air.
2. Remove the spark plugs and record the cylinder number of each spark plug for future reference.
3. Inspect the spark plug electrodes for abnormal firing indicators such as fouled, hot, oily, etc.
4. Perform the fuel system pressure release procedure. Refer to **FUEL DELIVERY, GAS, STANDARD PROCEDURE** .
5. Insert a compression pressure gauge and rotate the engine with the engine starter motor for three revolutions.
6. Record the compression pressure on the 3rd revolution. Continue the test for the remaining cylinders.

   NOTE: The recommended compression pressures are to be used only as a guide to diagnosing engine problems. An engine should not be disassembled to determine the cause of low compression unless some malfunction is present.

7. Compression should not be less than 689 kPa (100 psi) and not vary more than 25 percent from cylinder to cylinder.
8. If one or more cylinders have abnormally low compression pressures, repeat the compression test.

   NOTE: If the same cylinder or cylinders repeat an abnormally low reading on the second compression test, it could indicate the existence of a problem in the cylinder in question.

9. If one or more cylinders continue to have abnormally low compression pressures, perform the cylinder combustion pressure leakage test. Refer to **CYLINDER COMBUSTION PRESSURE LEAKAGE** .

ENGINE MECHANICAL DIAGNOSIS CHART

CONDITION	POSSIBLE CAUSES	CORRECTION
ENGINE NOISE	1. Worn accessory drive belt	1. Check for damage and/or alignment. Refer to **BELT, SERPENTINE, DIAGNOSIS AND TESTING** .
	2. Worn coolant pump	2. Check for possible coolant leak. If ok, check the pulley and input shaft for wear. Replace as necessary.
	3. Worn generator	3. Check the pulley for wear. Spin the armature. Replace as necessary.
	4. Idler/Tensioner pulley	4. Check pulleys. Verify bearing noise. Replace as necessary.
	5. Power steering pump	5. Check the pulley and input shaft for wear. Replace as necessary.
	6. Flywheel/Flexplate	6. Check for wear or possible cracking. Check bolts. repair as necessary.
NOISY VALVES/LIFTERS	1. High or low oil level in crankcase.	1. Check for correct oil level. Adjust oil level by draining or adding as needed.
	2. Thin or diluted oil.	2. Change oil. Refer to **STANDARD PROCEDURE** .
	3. Low oil pressure.	3. Check engine oil level. If OK, perform oil pressure test. Refer to **DIAGNOSIS AND TESTING** .
	4. Dirt in hydraulic lifters.	4. Clean/replace hydraulic lifters.
	5. Bent push rod(s).	5. Install new push rods.
	6. Worn rocker arms.	6. Inspect oil supply to rocker arms and replace worn arms as needed.
	7. Worn hydraulic lifters.	7. Install new hydraulic lifters.

	8. Worn valve guides.	8. Inspect all valve guides and replace as necessary.
	9. Excessive runout of valve seats or valve faces.	9. Grind valves and seats.
CONNECTING ROD NOISE	1. Insufficient oil supply.	1. Check engine oil level.
	2. Low oil pressure.	2. Check engine oil level. If OK, perform oil pressure test. Refer to **DIAGNOSIS AND TESTING** .
	3. Thin or diluted oil.	3. Change oil to correct viscosity. Refer to **STANDARD PROCEDURE** .
	4. Excessive connecting rod bearing clearance.	4. Measure bearings for correct clearance with plasti-gage. Repair as necessary.
	5. Connecting rod journal out of round.	5. Replace crankshaft or grind journals.
	6. Misaligned connecting rods.	6. Replace bent connecting rods.
MAIN BEARING NOISE	1. Insufficient oil supply.	1. Check engine oil level.
	2. Low oil pressure.	2. Check engine oil level. If OK, perform oil pressure test. Refer to **DIAGNOSIS AND TESTING** .
	3. Thin or diluted oil.	3. Change oil to correct viscosity. Refer to **STANDARD PROCEDURE** .
	4. Excessive main bearing clearance.	4. Measure bearings for correct clearance. Repair as necessary.
	5. Excessive end play.	5. Check crankshaft thrust bearing for excessive wear on flanges.
	6. Crankshaft main journal out of round or worn.	6. Grind journals or replace crankshaft.
	7. Loose flexplate, flywheel or torque converter.	7. Inspect crankshaft, flexplate, flywheel and bolts for damage. Tighten to correct torque.
LOW OIL PRESSURE	1. Low oil level.	1. Check oil level and fill if necessary.
	2. Faulty oil pressure sending	2. Install new sending unit.

	unit.	
	3. Clogged oil filter.	3. Install new oil filter.
	4. Worn oil pump.	4. Replace oil pump assembly.
	5. Thin or diluted oil.	5. Change oil to correct viscosity. Refer to **STANDARD PROCEDURE** .
	6. Excessive bearing clearance.	6. Measure bearings for correct clearance.
	7. Oil pump relief valve stuck.	7. Remove valve to inspect, clean and reinstall.
	8. Oil pickup tube loose, broken, bent or clogged.	8. Inspect oil pickup tube and pump, and clean or replace if necessary.
	9. Oil pump cover warped or cracked.	9. Install new oil pump.
	10. Faulty or missing piston cooling jets.	10. Replace piston cooling jets.
OIL LEAKS	1. Misaligned or deteriorated gaskets.	1. Replace gasket.
	2. Loose fastener or broken or porous metal part.	2. Tighten, repair or replace the part.
	3. Front or rear crankshaft oil seal leaking.	3. Replace seal.
	4. Leaking oil gallery plug or cup plug.	4. Remove and reseal threaded plug. Replace cup style plug.
EXCESSIVE OIL CONSUMPTION OR SPARK PLUGS OIL FOULED	1. PCV System malfunction.	1. Refer to **VALVE, POSITIVE CRANKCASE VENTILATION (PCV), REMOVAL** .
	2. Defective valve stem seal(s).	2. Repair or replace seal(s).
	3. Worn or broken piston rings.	3. Hone cylinder bores. Install new rings.
	4. Scuffed pistons/cylinder walls.	4. Hone cylinder bores and replace pistons as required.
	5. Carbon in oil control ring groove.	5. Remove rings and de-carbon piston.
	6. Worn valve guides.	6. Inspect/replace valve guides as necessary.
	7. Piston rings fitted too tightly in grooves.	7. Remove rings and check ring end gap and side clearance. Replace if

		necessary.

Lifter Purge Guideline

1. Warm engine to standard idle conditions.

   NOTE: Engine noise may be in the form of a clicking, chatter, or clattering noise.

2. Listen to the engine for 30 to 60 seconds with the hood up and the engine cover removed.
3. If noise is present, de-aeration of the lifters is required.
4. Run the engine between 2000 and 3000 RPM for three to five minutes.
5. Return the engine to standard idle speed for 30 to 60 seconds.
6. Evaluate noise. If noise is present, repeat the run an additional 4 cycles.

   NOTE: The standard drive cycle will be about 10 - 15 miles of non- stop, combined highway and city driving.

7. If noise is present, take the vehicle on a standard drive cycle.

   NOTE: Use a feeler gauge to verify clearance is present between the lifter and cam base circle.

8. Evaluate the noise. If noise is present, follow standard service procedure for lifter repairs or noise conditions. Refer to **DIAGNOSIS AND TESTING - HYDRAULIC ROLLER LIFTERS**.
9. Evaluate lifters for sponginess, check valve defects, and clearance.

ENGINE LUBRICATION DIAGNOSTIC TABLE

CONDITION	POSSIBLE CAUSES	CORRECTION
OIL LEAKS	1. Gaskets and O-rings 2. • Misaligned or damaged • Loose fasteners, broken or porous metal parts 3. Crankshaft rear seal 4. Crankshaft seal flange damaged 5. Oil pan flange cracked 6. Front cover seal damaged/misaligned 7. Damaged vibration damper 8. Crankshaft rear flange	1. Verify condition 2. • Replace as necessary • Tighten fasteners, repair or replace metal parts 3. Replace as necessary 4. Polish or replace crankshaft 5. Replace oil pan 6. Replace seal 7. Polish or replace damper 8. Replace crankshaft

	microporosity	
OIL PRESSURE DROP	1. Low oil level 2. Faulty oil pressure sending unit 3. Low oil pressure 4. Clogged oil filter 5. Worn oil pump 6. Thin or diluted oil 7. Excessive bearing clearance 8. Oil pump relief valve stuck 9. Oil pickup tube loose or damaged 10. Faulty or missing piston cooling jets	1. Check and correct oil level 2. Replace sending unit 3. Check pump and bearing clearance 4. Replace oil filter 5. Replace as necessary 6. Change oil and filter 7. Replace as necessary 8. Replace oil pump 9. Replace as necessary 10. Replace piston cooling jets
OIL PUMPING AT RINGS; SPARK PLUGS FOULING	1. Worn or damaged rings 2. Carbon in oil ring slots 3. Incorrect ring size installed 4. Worn valve guides 5. Leaking intake gasket 6. Leaking valve guide seals	1. Hone cylinder bores and replace rings 2. Replace rings 3. Replace rings 4. Ream guides and replace valves 5. Replace intake gaskets 6. Replace valve guide seals

LUBRICATION

CONDITION	POSSIBLE CAUSES	CORRECTION
OIL LEAKS	1. Gaskets and O-rings.	1. Replace as necessary.
	a. Misaligned or damaged.	a. Replace as necessary.
	b. Loose fasteners, broken or porous metal parts.	b. Tighten fasteners, Repair or replace metal parts.
	2. Crankshaft rear seal.	2. Replace as necessary.
	3. Crankshaft seal flange. Scratched, nicked or grooved.	3. Polish or replace crankshaft.
	4. Oil pan flange cracked.	4. Replace oil pan.
	5. Front cover seal, damaged or misaligned.	5. Replace seal.
	6. Scratched or damaged vibration damper hub.	6. Polish or replace damper.
	7. Crankshaft Rear Flange Microporosity.	7. Replace Crankshaft.
OIL PRESSURE DROP	1. Low oil level.	1. Check and correct oil level.

	2. Faulty oil pressure sending unit.	2. Replace sending unit.
	3. Low oil pressure.	3. Check pump and bearing clearance.
	4. Clogged oil filter.	4. Replace oil filter.
	5. Worn oil pump.	5. Replace as necessary.
	6. Thin or diluted oil.	6. Change oil and filter.
	7. Excessive bearing clearance.	7. Replace as necessary.
	8. Oil pump relief valve stuck.	8. Replace oil pump.
	9. Oil pickup tube loose or damaged.	9. Replace as necessary.
OIL PUMPING AT RINGS; SPARK PLUGS FOULING	1. Worn or damaged rings.	1. Hone cylinder bores and replace rings.
	2. Carbon in oil ring slots.	2. Replace rings.
	3. Incorrect ring size installed.	3. Replace rings.
	4. Worn valve guides.	4. Ream guides and replace valves.
	5. Leaking intake gasket(s).	5. Replace intake gasket(s).
	6. Leaking valve guide seals.	6. Replace valve guide seals.

OIL CONSUMPTION TEST AND DIAGNOSIS

DIAGNOSTIC PROCEDURES

The following diagnostic procedures are used to determine the source of excessive internal oil Consumption, these procedures and tests apply to vehicles with 50, 000 miles or less.

NOTE: Engine oil consumption may be greater than normal during engine break-in. Repairs should be delayed until vehicle has been driven at least 7, 500 miles.

Severe service (high ambient temperature, short trips, heavy loading, trailer towing, taxi, off-road, or law enforcement use) may result in greater oil consumption than normal.

Sustained high speed driving and high engine RPM operation may result in increased oil consumption.

Failure to comply with the recommended oil type and viscosity rating, as outlined in the Owner's Manual, may impact oil economy as well as fuel economy.

Oil consumption may increase with vehicle age and mileage due to normal engine wear.

NOTE: Because a few drops of external oil leakage per mile can quickly account for the loss of one quart of oil in a few hundred miles, ensure no external engine oil leaks are present.

- **Oil leakage is not the same as oil consumption and all external leakage must be eliminated before any action can be taken to verify and/or correct oil consumption complaints.**
- **Verify that the engine has the correct oil level dipstick and dipstick tube installed.**
- **Verify that the engine is not being run in an overfilled condition. Check the oil level 15 minutes after a hot shutdown with the vehicle parked on a level surface. In no case should the level be above MAX or the FULL mark on the dipstick.**

OIL CONSUMPTION TEST

1. Check the oil level at least 15 minutes after a hot shutdown.
2. If the oil level is low, top off with the proper viscosity and API service level engine oil. Add one bottle of MOPAR® 4-In-1 Leak Detection Dye into the engine oil.
3. Tamper proof the oil pan drain plug, oil filter, dipstick and oil fill cap.
4. Record the vehicle mileage.
5. Instruct the customer to drive the vehicle as usual.
6. Ask the customer to return to the servicing dealer after accumulating 500 miles, Check the oil level at least 15 minutes after a hot shutdown. If the oil level is half way between the "FULL" and "ADD" mark continue with the next step.
7. Using a black light, re-check for any external engine oil leaks, repair as necessary, if no external engine oil leaks are present, continue with **OIL CONSUMPTION DIAGNOSIS**.

OIL CONSUMPTION DIAGNOSIS

1. Check the Positive Crankcase Ventilation (PCV) system. Make sure the system is not restricted and the PCV valve has the correct part number and correct vacuum source (18-20 in. Hg at idle below 3000 ft. above sea level is considered normal).
2. Perform a cylinder compression test and cylinder leak down test using the standard leak down gauge following manufacturers suggested best practices.

   NOTE: Verify the spark plugs are not oil saturated. If the spark plugs are oil saturated and compression is good it can be assumed the valve seals or valve guides are at fault.

3. If one or more cylinders have more than 15% leak down further engine tear down and inspection will be required.

TOP 19 REASONS THAT MAY LEAD TO ENGINE OIL CONSUMPTION

1. **Tapered and Out-of-Round Cylinders**

   The increased piston clearances permit the pistons to rock in the worn cylinders. While tilted momentarily, an abnormally large volume of oil is permitted to enter on one side of the piston. The rings, also tilted in the cylinder, permit oil to enter on one side. Upon reversal of the piston on each stroke, some of this oil is passed into the combustion chamber.

2. **Distorted Cylinders**

   This may be caused by unequal heat distribution or unequal tightening of cylinder head bolts. This condition presents a surface which the rings may not be able to follow completely. In this case, there may be areas where the rings will not remove all of the excess oil. When combustion takes place, this oil will be burned and cause high oil consumption.

3. **Improper operation of "PCV "system**

   The main purpose of the Positive Crankcase Ventilation (PCV) valve is to recirculate blow-by gases back from the crankcase area through the engine to consume unburned hydrocarbons. The PCV system usually has a one way check valve and a make up air source. The system uses rubber hoses that route crankcase blow by gases to the intake manifold. Vacuum within the engine intake manifold pulls the blow by gases out of the crankcase into the combustion chamber along with the regular intake air and fuel mixture.

   The PCV system can become clogged with sludge and varnish deposits and trap blow by gases in the crankcase. This degrades the oil, promoting additional formation of deposit material. If left uncorrected, the result is plugged oil rings, oil consumption, rapid ring wear due to sludge buildup, ruptured gaskets and seals due to crankcase pressurization.

4. **Worn Piston Ring Grooves**

   For piston rings to form a good seal, the sides of the ring grooves must be true and flat - not flared or shouldered. Piston rings in tapered or irregular grooves will not seal properly and, consequently, oil will pass around behind the rings into the combustion chamber.

5. **Worn, Broken or Stuck Piston Rings**

   When piston rings are broken, worn or stuck to such an extent that the correct tension and clearances are not maintained, this will allow oil to be drawn into the combustion chamber on the intake stroke and hot gases of combustion to be blown down the cylinder past the piston on the power stroke. All of these conditions will result in burning and carbon build up of the oil on the cylinders, pistons and rings.

6. **Cracked or Broken Ring Lands**

   Cracked or broken ring lands prevent the rings from seating completely on their sides and cause oil pumping. This condition will lead to serious damage to the cylinders as well as complete destruction of the pistons and rings. Cracked or broken ring lands cannot be corrected by any means other than piston replacement.

7. **Worn Valve Stems and Guides**

   When wear has taken place on valve stems and valve guides, the vacuum in the intake manifold will draw oil and oil vapor between the intake valve stems and guides into the intake manifold and then into the cylinder where it will be burned.

8. **Bent or Misaligned Connecting Rods**

   Bent or misaligned connecting rods will not allow the pistons to ride straight in the cylinders. This will prevent the pistons and rings from forming a proper seal with the cylinder walls and promote oil consumption. In addition, it is possible that a bearing in a bent connect rod will not have uniform clearance on the connecting rod wrist pin. Under these conditions, the bearing will wear rapidly and throw off an excessive amount of oil into the cylinder.

9. **Fuel Dilution**

   If raw fuel is allowed to enter the lubrication system, the oil will become thinner and more volatile and will result in higher oil consumption. The following conditions will lead to higher oil consumption;

   - Excess fuel can enter and mix with the oil via a leaking fuel injector
   - Gasoline contaminated with diesel fuel
   - Restricted air intake
   - Excessive idling

10. **Contaminated Cooling Systems**

    Corrosion, rust, scale, sediment or other formations in the water jacket and radiator will prevent a cooling system from extracting heat efficiently. This is likely to cause cylinder distortion thus leading to higher oil consumption.

11. **Oil Viscosity**

    The use of oil with a viscosity that is too light may result in high oil consumption. Refer to the vehicle Owner's Manual for the proper oil viscosity to be used under specific driving conditions and/or ambient temperatures.

12. **Dirty Engine Oil**

    Failure to change the oil and filter at proper intervals may cause the oil to be so dirty that it will promote accumulation of sludge and varnish and restrict oil passages in the piston rings and pistons. This will increase oil consumption; dirty oil by nature is also consumed at a higher rate than clean oil.

13. **Crankcase Overfull**

    Due to an error in inserting the oil dip stick so that it does not come to a seat on its shoulder, a low reading may be obtained. Additional oil may be added to make the reading appear normal with the stick in this incorrect position which will actually make the oil level too high. If the oil level is so high that the lower ends of the connecting rods touch the oil in the oil pan excessive quantities of oil will be thrown on the cylinder walls and some of it will work its way up into the combustion chamber.

14. **Excessively High Oil Pressure**

    A faulty oil pressure relief valve may cause the oil pressure to be too high. The result will be that the engine will be flooded with an abnormally large amount of oil in a manner similar to that which occurs with worn bearings. This condition may also cause the oil filter to burst.

15. **Aftermarket Performance Chips and Modification**

    Increasing performance through the use of performance/power enhancement products to a stock or factory engine will increase the chance of excessive oil consumption.

16. **Lugging Engine**

    Lugging is running the engine at a lower RPM in a condition where a higher RPM (more power/torque) should be implemented. Especially susceptible on vehicles equipped with a manual transmission. This driving habit causes more stress loading on the piston and can lead to increases in engine oil consumption.

17. **Turbocharged Engines**

    There is a possibility for PCV "push-over" due to higher crankcase pressure (as compared to naturally aspirated engines) which is normal for turbocharged engines. This condition causes varying amounts of engine oil to enter the intake manifold, charge air cooler and associated plumbing to and from the charge air cooler, also a leaking turbocharger seal will draw oil into the combustion chamber where it will burn (blue smoke from tail pipe may be present) and form carbon deposits which contribute to further oil consumption as they interfere with proper engine function.

18. **Restricted Air Intake**

    Excessive restriction in the air intake system will increase engine vacuum and can increase oil consumption, an extremely dirty air filter would be one example of this situation.

STANDARD PROCEDURE

DUST COVERS AND CAPS

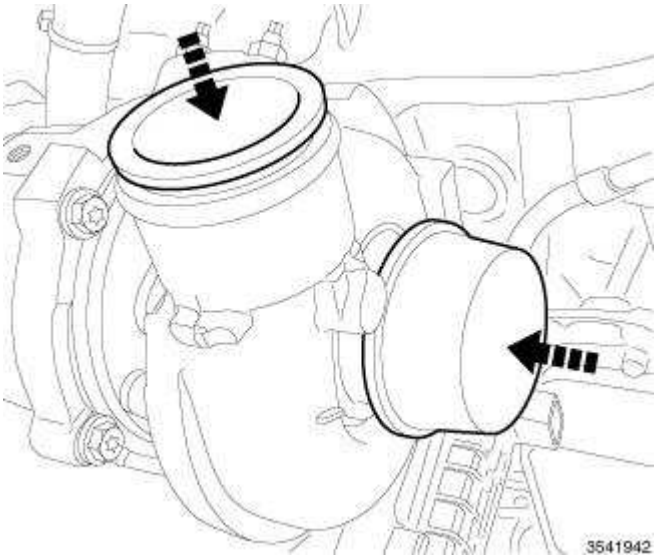

Fig. 2: Covers/Caps
Courtesy of CHRYSLER GROUP, LLC

Due to the high amounts of failures caused by dust, dirt, moisture and other foreign debris being introduced to the engine during service. Covers or caps are needed to reduce the possible damage that can be caused or created.

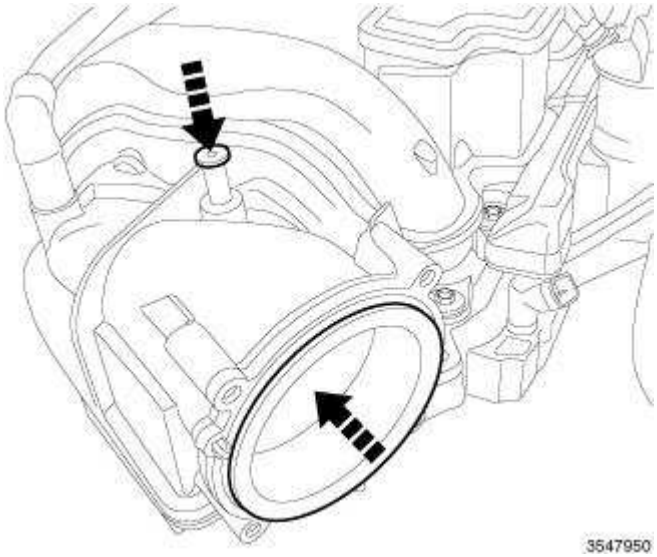

Fig. 3: Opening Cover
Courtesy of CHRYSLER GROUP, LLC

Covers over openings will reduce any possibilities for foreign materials to enter the engine systems. Using miller tool (special tool #10368, Set, Universal Protective Cap), Select the appropriated cover needed to the procedure.

ENGINE GASKET SURFACE PREPARATION



Fig. 4: Proper Tool Usage For Surface Preparation
Courtesy of CHRYSLER GROUP, LLC

To ensure engine gasket sealing, proper surface preparation must be performed, especially with the use of aluminum engine components and multi-layer steel cylinder head gaskets.

Never use the following to clean gasket surfaces:

- Metal scraper (1).
- Abrasive pad or paper to clean cylinder block and head.
- High speed power tool with an abrasive pad or a wire brush (2).



Fig. 5: Proper Tool Usage For Surface Preparation
Courtesy of CHRYSLER GROUP, LLC

NOTE: Multi-Layer Steel (MLS) head gaskets require a scratch free sealing surface.

Only use the following for cleaning gasket surfaces:

- Solvent or a commercially available gasket remover
- Plastic or wood scraper (4).
- High speed power tool with a plastic bristle brush style disc (3).

Sealing surfaces must be free of grease or oil residue. Clean surfaces with Mopar® brake parts cleaner (or equivalent).

DUST COVERS AND CAPS

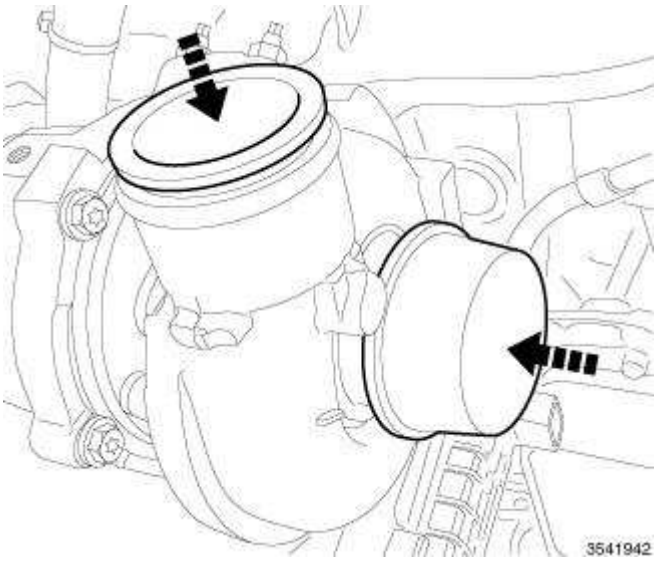

Fig. 6: Covers/Caps
Courtesy of CHRYSLER GROUP, LLC

Due to the high amounts of failures caused by dust, dirt, moisture and other foreign debris being introduced to the engine during service. Covers or caps are needed to reduce the possible damage that can be caused or created.

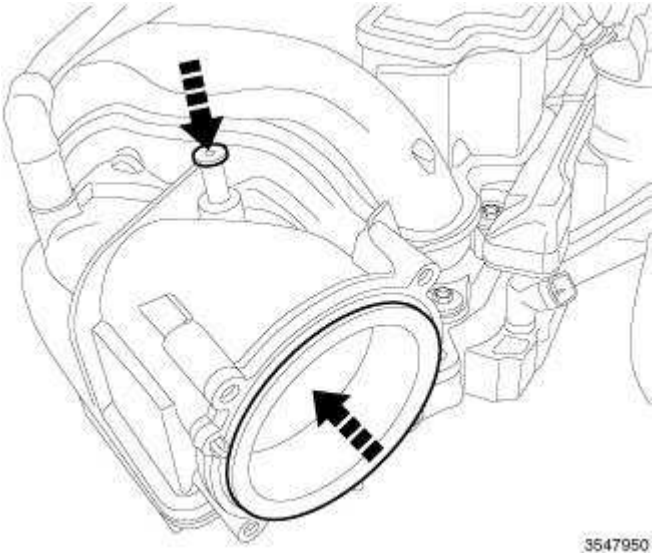

Fig. 7: Opening Cover
Courtesy of CHRYSLER GROUP, LLC

Covers over openings will reduce any possibilities for foreign materials to enter the engine systems. Using miller tool (special tool #10368, Set, Universal Protective Cap), Select the appropriated cover needed to the procedure.

REPAIR DAMAGED OR WORN THREADS

CAUTION: Always maintain the original center line when drilling and/or tapping holes.

Damaged or worn threads can be repaired. Essentially, this repair consists of:

- Drilling out worn or damaged threads
- Tapping the hole with a special Heli-Coil Tap or equivalent
- Installing a Heli-Coil insert into the tapped hole to bring the hole back to its original thread size

HYDROSTATIC LOCK

CAUTION: Do not attempt to run engine. Severe damage could occur.

When an engine is suspected of hydrostatic lock (regardless of what caused the problem), follow the steps below.

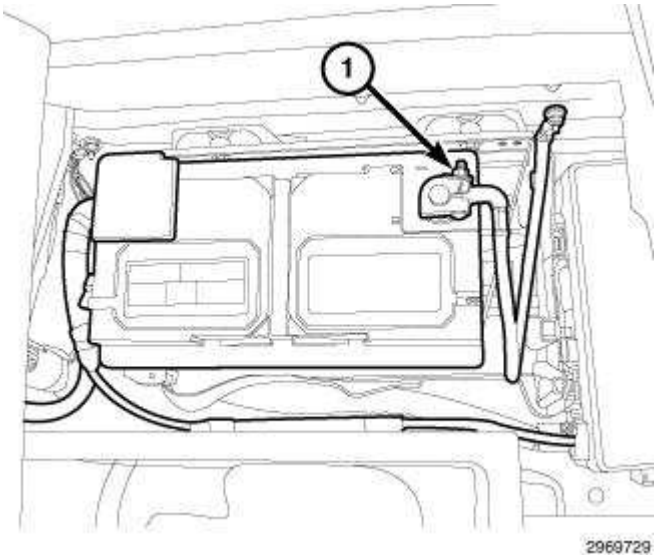

Fig. 8: Negative Battery Cable
Courtesy of CHRYSLER GROUP, LLC

1. Disconnect and isolate the negative battery cable (1).

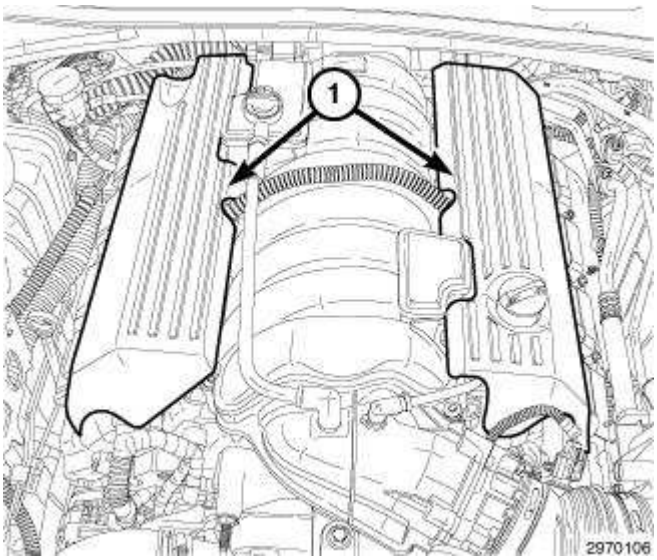

Fig. 9: Engine Covers
Courtesy of CHRYSLER GROUP, LLC

2. Lift the engine cover retaining grommets off the ball studs and remove the engine cover (2).
3. Place a shop towel around the fuel supply line Quick Connect Fitting to catch any fuel that may be under pressure and disconnect the fuel supply line. Refer to **FITTING, QUICK CONNECT, STANDARD PROCEDURE** .

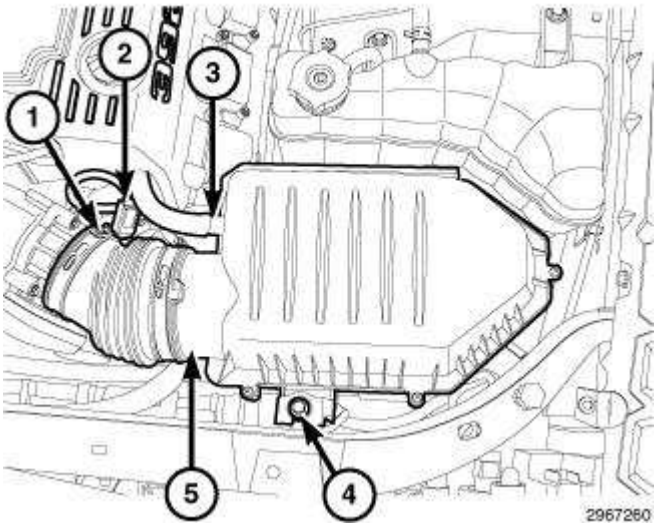

Fig. 10: Air Duct Retaining Clamp, Intake Air Temperature Sensor Electrical Connector, Makeup Air Hose, Bolt & Air Cleaner Housing
Courtesy of CHRYSLER GROUP, LLC

4. Loosen the air duct retaining clamp (1) at the throttle body.
5. Disconnect the intake air temperature sensor electrical connector (2).
6. Remove the makeup air hose (3) at the air cleaner housing.
7. Remove the air cleaner housing retaining bolt (4).
8. While lifting up the air cleaner housing (5), slide the air duct off the throttle body and remove the air cleaner housing from the vehicle.
9. Inspect the air duct, air cleaner housing and the intake manifold to make sure the system is dry and clear of any foreign material.
10. Place a shop towel around the spark plugs to catch any fluid that may possibly be under pressure in the cylinder head.
11. Remove the spark plugs. Refer to **SPARK PLUG, REMOVAL** .
12. With the spark plugs removed, rotate the crankshaft using a breaker bar and socket.
13. Identify the fluid in the cylinders (coolant, fuel, oil, etc.).
14. Make sure all fluid has been removed from the cylinders.
15. Repair engine or components as necessary to prevent this problem from occurring again.
16. Squirt a small amount of engine oil into the cylinders to lubricate the walls. This will help prevent engine damage on restart.
17. Install new spark plugs. Refer to **SPARK PLUG, INSTALLATION** .
18. Perform the Engine Oil Service procedure. Refer to **STANDARD PROCEDURE** .
19. Connect negative battery cable and tighten nut to 5 N.m (45 in. lbs.).
20. Start the engine and check for leaks.

SPECIFICATIONS

SPECIFICATIONS

GENERAL DESCRIPTION

DESCRIPTION	SPECIFICATION
Engine Type	90° V-8 OHV
Displacement	6.4 Liters 392 (Cubic Inches)
Bore	103.9 mm (4.09 in.)
Stroke	94.6 mm (3.72 in.)
Compression Ratio	10.9:1
Firing Order	1-8-4-3-6-5-7-2
Lubrication	Pressure Feed - Full Flow Filtration
Cooling System	Liquid Cooled - Forced Circulation
Cylinder Block	Cast Iron
Cylinder Head	Aluminum
Crankshaft	Forged Steel
Camshaft	Cast Iron
Pistons	Aluminum Alloy
Connecting Rods	Powdered Metal

CYLINDER BLOCK

DESCRIPTION	SPECIFICATION	
	Metric	Standard
Cam Bore Diameter	65.52 mm	2.5795 in.
Cylinder Bore Diameter	103.9 mm	4.09 in.
Out of Round (MAX)	0.008 mm	0.0003 in.
Taper (MAX)	0.0127 mm	0.0005 in.
Lifter Bore Diameter	21.45 - 21.425 mm	0.8444 - 0.8435 in.

PISTONS

DESCRIPTION	SPECIFICATION	
	Metric	Standard
Clearance Measured at 38.0 mm (1.5 in.) Below Deck	0.0245 - 0.0515 mm	0.00096 - 0.0020 in.
Ring Groove Diameter		
Groove #1	93.1 - 93.4 mm	3.665 - 3.677 in.
Groove #2	91.6 - 91.8 mm	3.606 - 3.614 in.
Weight	437 grams	15.41 oz.
Piston Length	54.70 - 55.30 mm	2.153 - 2.177 in.
Ring Groove Width		
No. 1	1.2 mm	0.0472 in
No. 2	1.2 mm	0.0472 in

No. 3	2.0 mm	0.0787 in.

PISTON RINGS

DESCRIPTION	SPECIFICATION	
	Metric	Standard
Ring Gap		
Top Compression Ring	0.30 - 0.40 mm	0.0118 - 0.0157 in.
Second Compression Ring	0.35 - 0.60 mm	0.0137 - 0.0236 in.
Oil Control (Steel Rails)	0.20 - 0.71 mm	0.0079 - 0.028 in.
Side Clearance		
Top Compression Ring	0.02 - 0.068 mm	0.0007 - 0.0026 in.
Second Compression Ring	0.02 - 0.058 mm	0.0007 - 0.0022 in.
Oil Ring (Steel Ring)	0.019 - 0.229 mm	0.0007 - 0.0091 in.
Ring Width		
Top Compression Ring	1.472 - 1.490 mm	0.0579 - 0.0586 in.
Second Compression Ring	1.472 - 1.490 mm	0.0579 - 0.0586 in.
Oil Ring (Steel Rails)	0.447 - 0.473 mm	0.0175 - 0.0186 in.

CONNECTING RODS

DESCRIPTION	SPECIFICATION	
	Metric	Standard
Side Clearance	0.10 - 0.35 mm	0.003 - 0.0137 in.

CRANKSHAFT

DESCRIPTION	SPECIFICATION	
	Metric	Standard
Main Bearing Journal Diameter	65 mm	2.6 in.
Bearing Clearance	0.023 - 0.051 mm	0.0009 - 0.002 in.
Out of Round (MAX)	0.005 mm	0.0002 in.
Taper (MAX)	0.003 mm	0.0001 in.
End Play	0.052 - 0.282 mm	0.002 - 0.011 in.
End Play (MAX)	0.282 mm	0.011 in.
Connecting Rod Journal Diameter	54.00 mm	2.126 in.
Bearing Clearance	0.020 - 0.074 mm	0.0007 - 0.0029 in.
Out of Round (MAX)	0.005 mm	0.0002 in.
Taper (MAX)	0.003 mm	0.0001 in.

CAMSHAFT

DESCRIPTION	SPECIFICATION	
	Metric	Standard

Bearing Journal Diameter		
No. 1	67.72 mm	2.67 in.
No. 2	57.8 mm	2.27 in.
No. 3	57.4 mm	2.26 in.
No. 4	57.0 mm	2.24 in.
No. 5	43.633 mm	1.72 in.
Bearing To Journal Clearance Standard		
No. 1	0.040 - 0.080 mm	0.0015 - 0.003 in.
No. 2	0.050 -0.090 mm	0.0019 - 0.0035 in.
No. 3	0.040 - 0.080 mm	0.0015 - 0.003 in.
No. 4	0.050 - 0.090 mm	0.0019 - 0.0035 in.
No. 5	0.040 - 0.080 mm	0.0015 - 0.003 in.
Camshaft End Play	.080 - 0.290 mm	0.0031 - 0.0114 in.

VALVE TIMING

DESCRIPTION	SPECIFICATION
Intake	
Opens (BTDC)	36.0°
Closes (ATDC)	250.0°
Duration	286.0°
Exhaust	
Opens (BTDC)	278°
Closes (ATDC)	10°
Duration	288.0°
Valve Overlap	46°

CYLINDER HEAD

DESCRIPTION	SPECIFICATION	
	Metric	Standard
Valve Seat Angle	44.5° - 45.0°	
Valve Seat Runout (MAX)	0.04 mm	0.0016 in.
Valve Seat Width		
Intake	0.94 - 1.04 mm	0.037 - 0.041 in.
Exhaust	1.16 - 1.26 mm	0.046 - 0.050 in.
Guide Bore Diameter		
Intake	7.975 - 7.997 mm	0.314 - 0.315 in.
Exhaust	7.975 - 7.990 mm	0.314 - 0.315 in.

HYDRAULIC TAPPETS

DESCRIPTION	SPECIFICATION	
	Metric	Standard

Body Diameter	21.387 - 21.405 mm	0.8420 - 0.8427 in.
Clearance (To Bore)	0.020 - 0.063 mm	0.0007 - 0.0024 in.
Dry Lash (at the valve)	3.0 mm	0.1181 in.

VALVES

DESCRIPTION	SPECIFICATION	
	Metric	**Standard**
Face Angle		
Intake	45.5° - 46.0°	
Exhaust	45.0° - 45.5°	
Head Diameter		
Intake	54.3 mm	2.138
Exhaust	42.0 mm	1.654
Length (Overall From Gage Line)		
Intake	130.19	5.126
Exhaust	129.545	5.100
Stem Diameter		
Intake	7.934 - 7.954 mm	0.312 - 0.313 in.
Exhaust	7.930 - 7.950 mm	0.312 - 0.313 in.
Stem - to - Guide Clearance		
Intake	0.021 - 0.066 mm	0.0008 - 0.0025 in.
Exhaust	0.025 - 0.070 mm	0.0010 - 0.0028 in.
Valve Lift (@ Zero Lash)		
Intake	15.0 mm	0.591 in.
Exhaust	14.2 mm	0.559 in.

VALVE SPRING

DESCRIPTION	SPECIFICATION	
	Metric	**Standard**
Spring Force (Valve Closed)		
Intake	510.0 N ± 26.0 N @ 52.1 mm	114.7 lbs. ± 5.8 lbs. @ 2.051 in.
Exhaust	571.0 N ± 26.0 N @ 51.2 mm	114.7 lbs. ± 5.8 lbs. @ 2.051 in.
Spring Force (Valve Open)		
Intake	1500.0 N ± 70.0 N @ 37.6 mm	337.2 lbs. ± 15.7 lbs. @ 1.480 in.
Exhaust	1500.0 N ± 70.0 N @ 37.6 mm	337.2 lbs. ± 15.7 lbs. @ 1.480 in.
Free Length Approx.)		
Intake	63.9 mm	2.516 in.
Exhaust	63.9 mm	2.516 in.

Number of Coils		
Intake	8.55	
Exhaust	8.55	
Wire Diameter		
Intake and Exhaust	5.65 X 4.51 mm	0.222 - 0.178 in.
Installed Height (Spring Seat to Bottom of Retainer)		
Intake	52.1 mm	2.051 in.
Exhaust	51.2 mm	2.016 in.

OIL PUMP

DESCRIPTION	SPECIFICATION	
	Metric	**Standard**
Clearance Over Rotors (MAX)	0.095 mm	0.0038 in.
Outer Rotor to Pump Body Clearance (MAX)	0.235 mm	0.009 in.
Tip Clearance Between Rotors (MAX)	0.150 mm	0.006 in.

OIL PRESSURE

SPECIFICATION	SPECIFICATION
At Curb Idle Speed (min.)*	25 kPa (4 psi)
@ 3000 RPM	170 - 758 kPa (25 - 110 psi)
*** CAUTION: If pressure is zero at curb idle, DO NOT run engine**	

TORQUE

6.4L ENGINE

DESCRIPTION	N.m	Ft. Lbs.	In. Lbs.
Air Cleaner Housing - Bolt	5	-	44
Block Pipe Plugs			
(1/4 NPT)	20	15	-
(3/8 NPT)	27	20	-
Water Drain Plugs	34	25	-
Camshaft Sprocket - Bolt	122	90	-
Camshaft Thrust Plate - Bolts	12	-	106
Lifting Stud	55	40	-
Connecting Rod Cap - Bolts	45 Plus 60° Turn	33 Plus 60° Turn	-
Main Bearing Cap - Bolts			
M-12 Bolts	28 Plus 90° Turn	21 Plus 90° Turn	-
M-8 Bolts (Crossbolts)	31	23	-

Cylinder Head - Bolts (M-12)	Specific torque and fastener pattern required; follow installation sequence. Refer to **CYLINDER HEAD, INSTALLATION**.		
Cylinder Head Cover - Bolts	8	-	70
Engine Mount Bracket to Engine Block - Bolts	61	45	-
Engine Mount Heat Shield - Nuts	25	18	-
Engine Timing Cover - Bolts	28	21	-
Flexplate to Crankshaft - Bolts	95	70	-
Flywheel to Crankshaft - Bolts	75	55	-
Front Isolator to Engine Mount Bracket- Bolts	60	44	-
Front Isolator to Engine Cradle Crossmember - Bolts	61	45	-
Generator to Engine Block - Bolts	54	40	-
Generator Support Bracket-to-Engine Mount Nut	25	18	-
Heater Tube - Bolt	18	13	-
Intake Manifold - Bolts	Specific torque and fastener pattern required; follow installation sequence. Refer to **MANIFOLD, INTAKE, INSTALLATION**.		
Lifter Guide Holder - Bolts	12	9	-
MDS Solenoid - Bolts	11	8	-
Oil Control Valve - Bolt	11	8	-
Piston Oil Cooler Jet - Bolts	13	10	-
Power Steering Pump to Engine Block - Bolts	28	21	-
Oil Dipstick Tube - Nut	31	23	-
Oil Pan - Drain Plug	27	20	-
Oil Pan - Bolts	Specific torque and fastener pattern required; follow installation sequence. Refer to **PAN, OIL, INSTALLATION**.		
Oil Pump - Bolts	28	21	-
Oil Pump Pickup Tube - Bolt and Nut	28	21	-
Rear Seal Retainer - Bolts	15	11	-
Rear Isolator Bracket to Transmission - Bolts (Automatic)	33	24	-
Rear Isolator to Bracket - Bolts (Automatic)	54	40	-
Rear Isolator to Crossmember - Bolts (Automatic)	61	45	-
Rear Isolator to Transmission - Bolts (Manual)	56	41	-

Rear Isolator to Crossmember - Bolts (Manual)	54	40	-
Rocker Arm - Bolts	22	16	-
Strut Tower Support - Bolts	32	28	-
Thermostat Housing - Bolts	28	21	-
Throttle Body - Bolts	12	9	-
Torque Converter to Flexplate - Bolts	68	50	-
Transmission to Engine Block - Bolts	68	50	-
Vibration Damper - Bolt	330	243	-
Water Pump to Engine Timing Cover - Bolts	28	21	-

REMOVAL

REMOVAL

CAUTION: If the engine encounters a catastrophic failure, the engine oil cooler must be replaced or damage to the new engine and/or components could result.

CAUTION: If the original engine has experienced a catastrophic failure or an individual failure with the piston, cylinder bore, engine block, valve or valve seat, the intake manifold MUST be replaced with a new manifold.

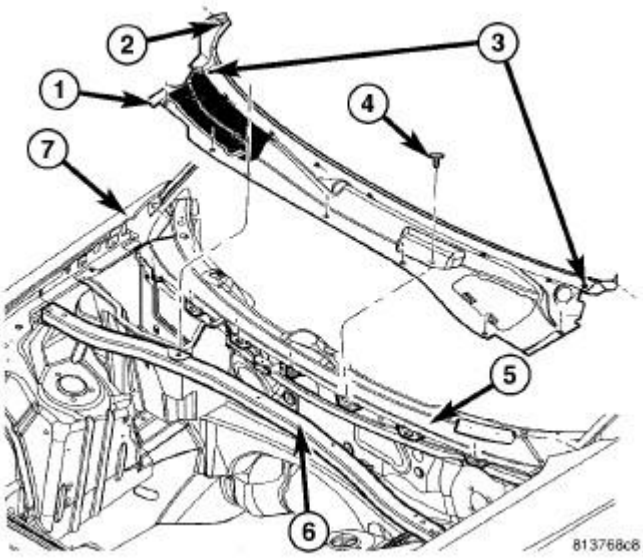

Fig. 11: Cowl Panel, Push-Pins & Fasteners
Courtesy of CHRYSLER GROUP, LLC

1. Remove the hood. Refer to **HOOD, REMOVAL** .
2. Remove the cowl panel cover (1). Refer to **COVER, COWL PANEL, REMOVAL** .

3. Remove the strut tower support (6).

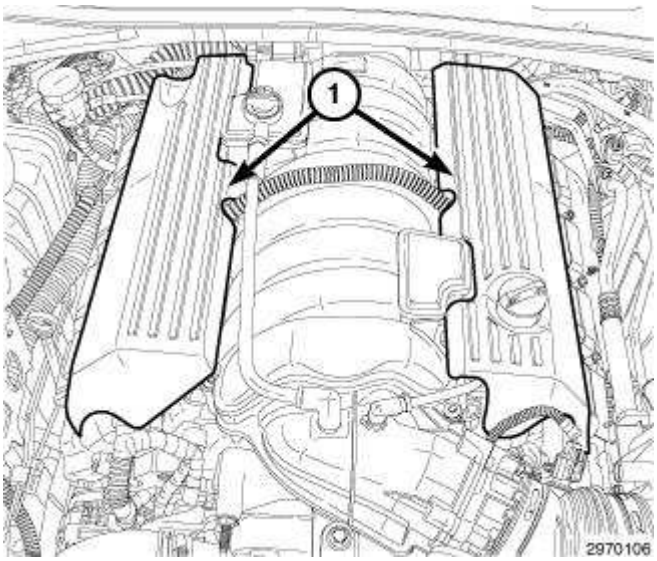

Fig. 12: Engine Covers
Courtesy of CHRYSLER GROUP, LLC

4. Lift the engine cover retaining grommets off the ball studs and remove the engine covers (1).
5. Perform the fuel system pressure release procedure. Refer to **FUEL DELIVERY, GAS, STANDARD PROCEDURE** .

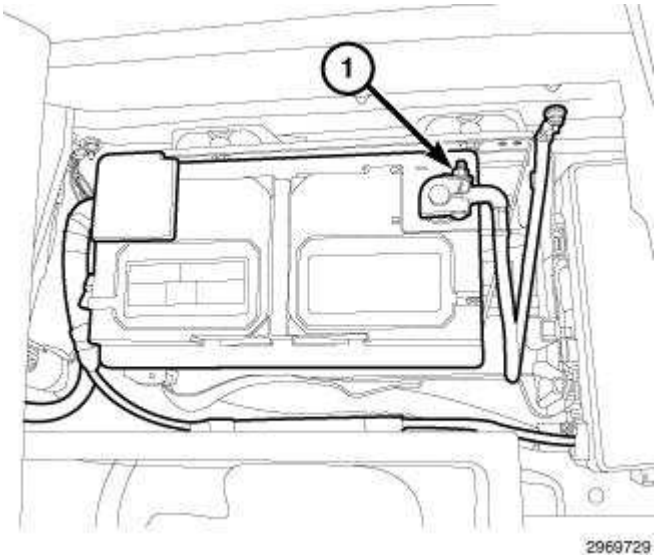

Fig. 13: Negative Battery Cable
Courtesy of CHRYSLER GROUP, LLC

6. Disconnect and isolate the negative battery cable (1).

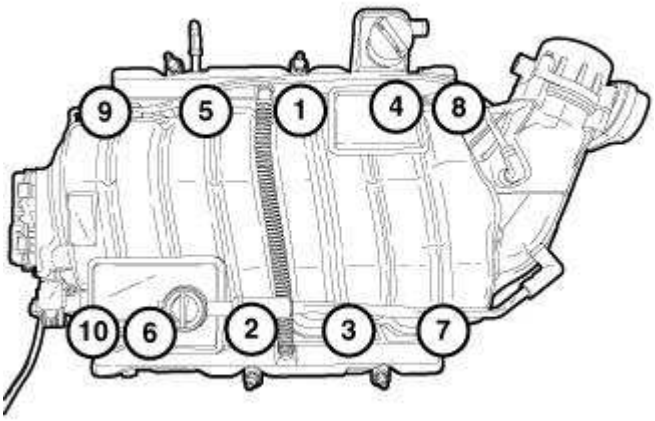

Fig. 14: Intake Manifold Removal/Tightening Sequence
Courtesy of CHRYSLER GROUP, LLC

NOTE: Remove the intake manifold and throttle body as an assembly.

7. Remove the intake manifold. Refer to **MANIFOLD, INTAKE, REMOVAL**.

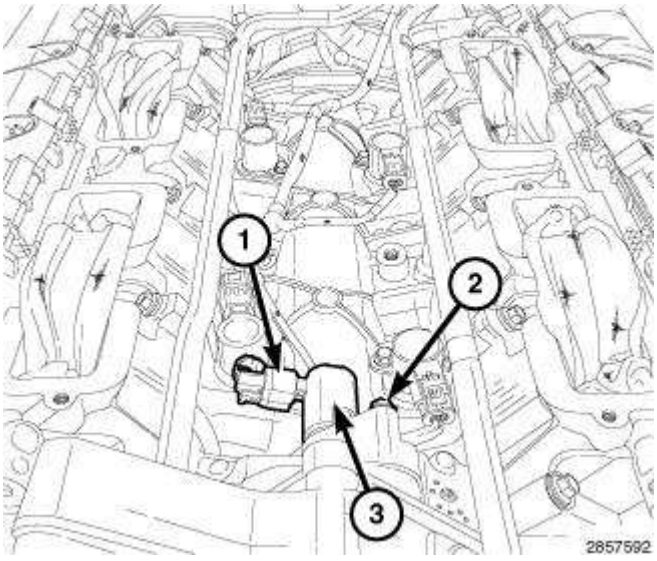

Fig. 15: Oil Control Valve, Electrical Connector & Retaining Bolt
Courtesy of CHRYSLER GROUP, LLC

NOTE: The engine must be at room temperature before removing the Oil Control Valve.

8. Disconnect the Oil Control Valve electrical connector (1).
9. Remove the Oil Control Valve retaining bolt (2).

10. Rotate the Oil Control Valve (3) to break the seal then pull the Oil Control Valve straight out.

CAUTION: Do not let the tensioner arm snap back to the freearm position, sever damage may occur to the tensioner.

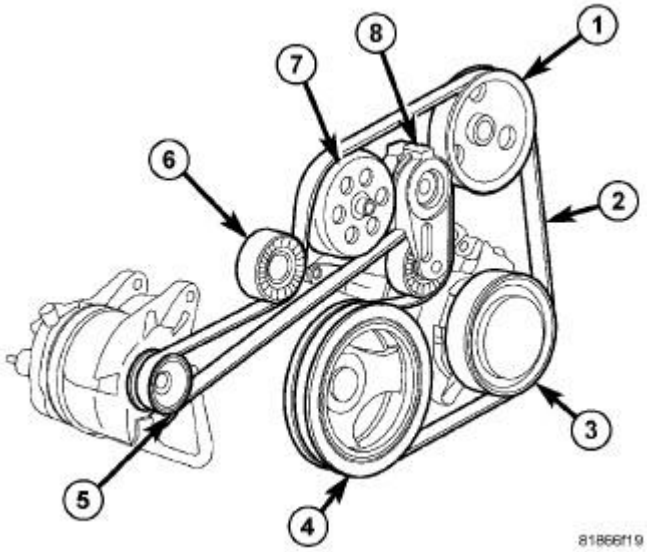

Fig. 16: Accessory Drive Belt Routing, Tensioner & Pulleys
Courtesy of CHRYSLER GROUP, LLC

11. Rotate the accessory drive belt tensioner (8) clockwise until it contacts the stop and remove the accessory drive belt (2), then slowly rotate the tensioner into the freearm position.

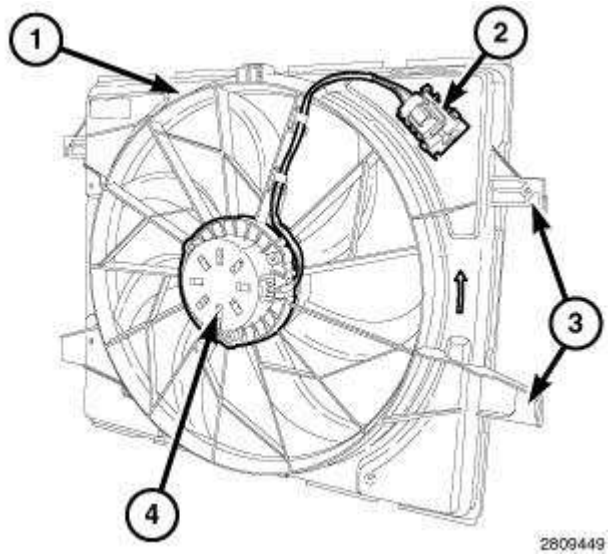

Fig. 17: Cooling Fan Module Components
Courtesy of CHRYSLER GROUP, LLC

12. Remove the cooling fan (1). Refer to **FAN, COOLING, REMOVAL** .

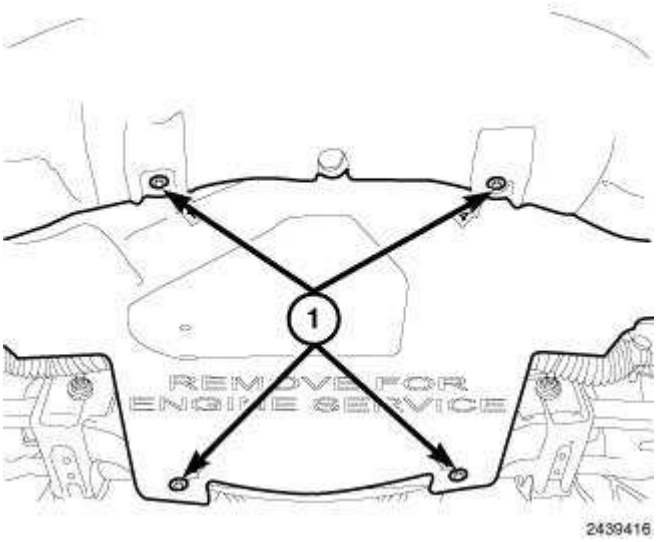

Fig. 18: Lower Splash Shield & Fasteners
Courtesy of CHRYSLER GROUP, LLC

13. Raise and support the vehicle. Refer to **HOISTING, STANDARD PROCEDURE** .
14. Remove the belly pan retainers (1) and remove the belly pan.
15. Drain the cooling system. Refer to **STANDARD PROCEDURE** .
16. Drain the engine oil. Refer to **STANDARD PROCEDURE** .

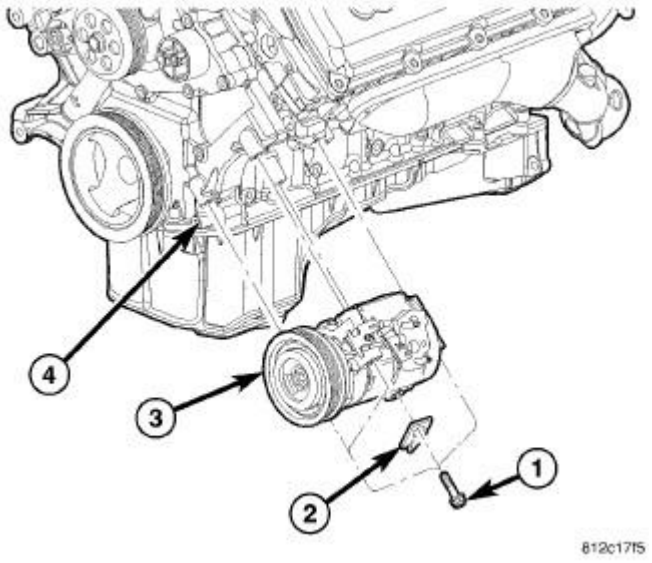

Fig. 19: Removing/Installing A/C Compressor
Courtesy of CHRYSLER GROUP, LLC

17. Remove the A/C compressor (3). Refer to **COMPRESSOR, A/C, REMOVAL** .

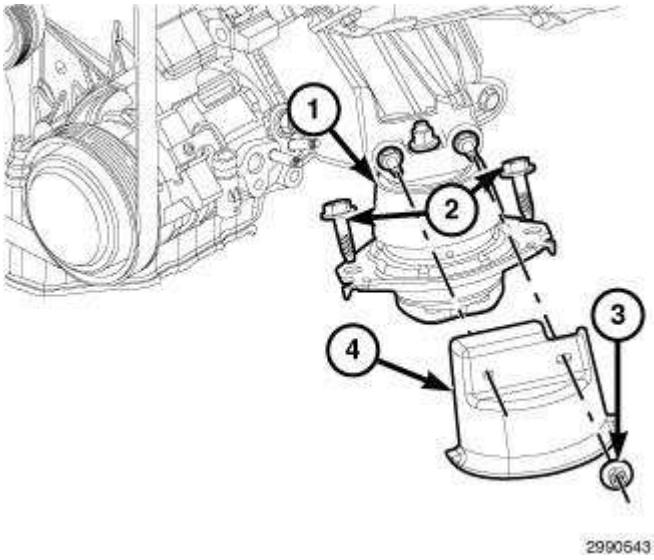

Fig. 20: Engine Mount Heat Shield Retaining Nuts, Lower Mount Retaining Bolts & Heat Shields
Courtesy of CHRYSLER GROUP, LLC

NOTE: Left side shown in illustration, right side similar.

18. Remove both left/right engine mount heat shield (4) retaining nuts (3) and remove the heat shields.
19. Remove both left/right engine mount to frame retaining bolts (2).
20. Disconnect the transmission oil cooler lines from their retainers at the oil pan.

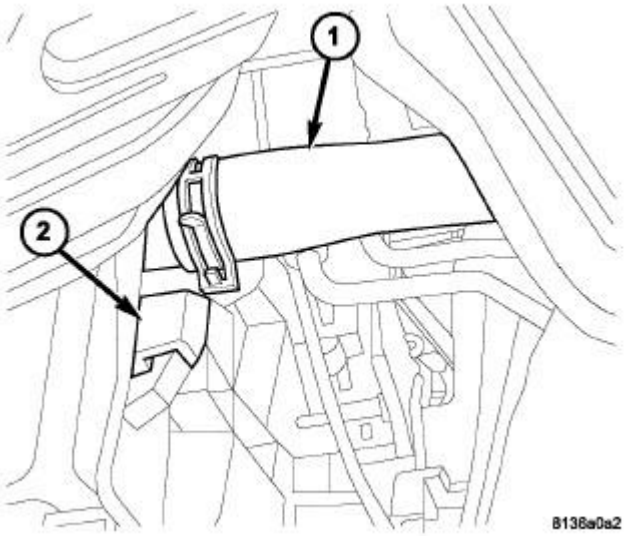

Fig. 21: Lower Radiator Hose & Radiator Fan Assembly
Courtesy of CHRYSLER GROUP, LLC

1 - LOWER RADIATOR HOSE 2 - RADIATOR FAN ASSEMBLY

21. Remove the lower radiator hose (1).

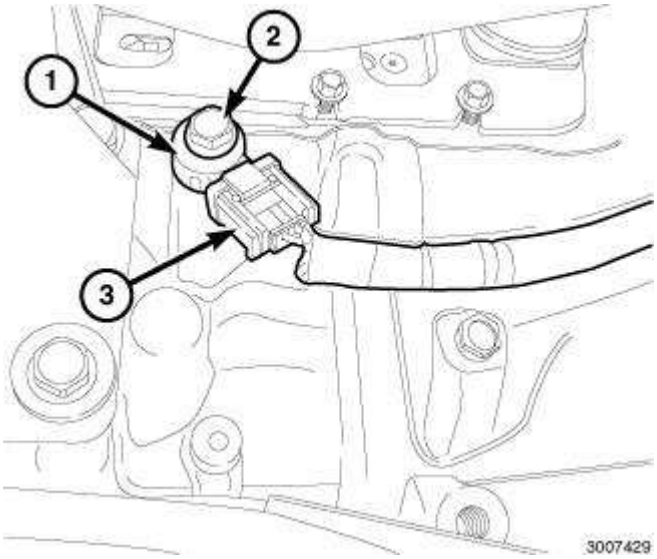

Fig. 22: Knock Sensor, Electrical Connector & Bolt
Courtesy of CHRYSLER GROUP, LLC

NOTE: Two knock sensors are used. Each sensor is bolted to the outside of the engine block below the exhaust manifold.

NOTE: Left side shown in illustration, right side similar.

22. Remove the heat shields from both knock sensors (shield snaps on/off sensor).
23. Disconnect the knock sensor electrical connectors (3).

CAUTION: When separating the catalytic converters from the manifolds, disconnect the oxygen sensor connectors. Allowing the catalytic converters hanging from the oxygen sensor wires damages the harness and/or sensors.

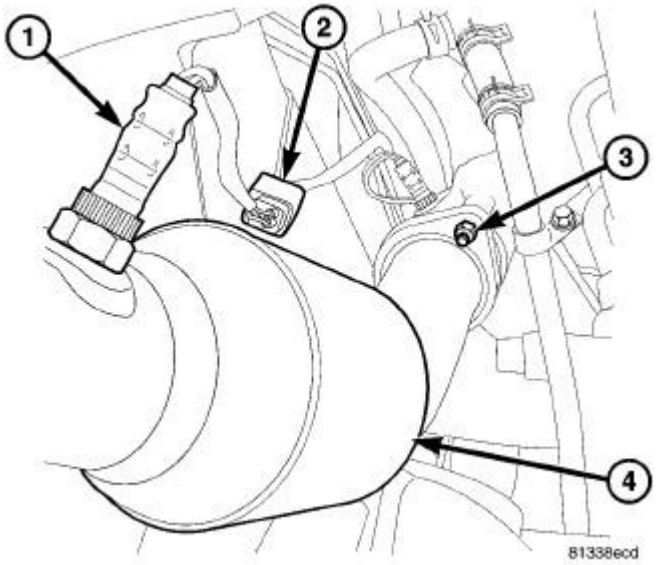

Fig. 23: Oxygen Sensor, Oxygen Sensor Connector, Ball Flange Nut & LH Catalytic Converter
Courtesy of CHRYSLER GROUP, LLC

NOTE: Left side shown in illustration, right side similar.

24. Disconnect all oxygen sensor electrical connectors (2).
25. Saturate all exhaust bolts and nuts (3) with Mopar® Rust Penetrant. Allow five minutes for penetration.
26. Remove the both catalytic converter to manifold flange nuts (3) and separate the catalytic converters (4) from the exhaust manifolds.

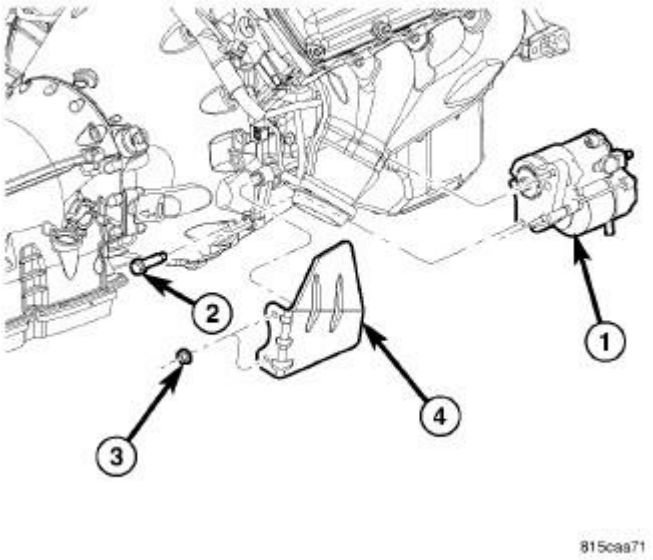

Fig. 24: Removing/Installing Starter
Courtesy of CHRYSLER GROUP, LLC

27. Remove the starter motor (1) heat shield (4).
28. Disconnect the starter wires, remove the starter motor retaining bolts (2) and remove the starter (1). Refer to **STARTER, REMOVAL** .

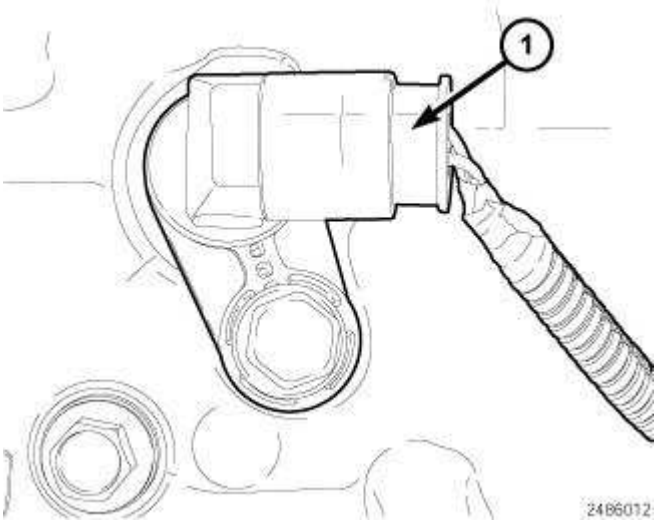

Fig. 25: Crankshaft Position Sensor Electrical Connector
Courtesy of CHRYSLER GROUP, LLC

NOTE: The Crankshaft Position (CKP) sensor is located at the right-rear side of the engine block.

29. Remove the CKP sensor electrical connector (1).

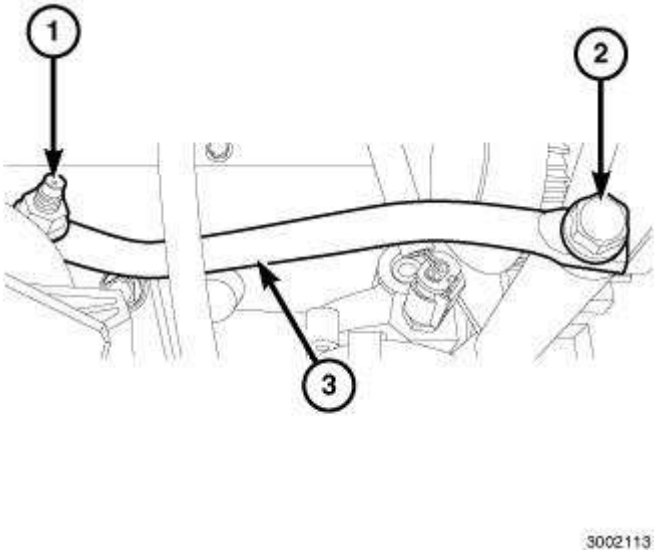

Fig. 26: Support Bracket, Bolt & Nut
Courtesy of CHRYSLER GROUP, LLC

30. Remove the generator support bracket to engine mount retaining nut (1).
31. Remove the generator support bracket retaining bolt (2) and remove the support bracket (3).
32. Lower the vehicle.

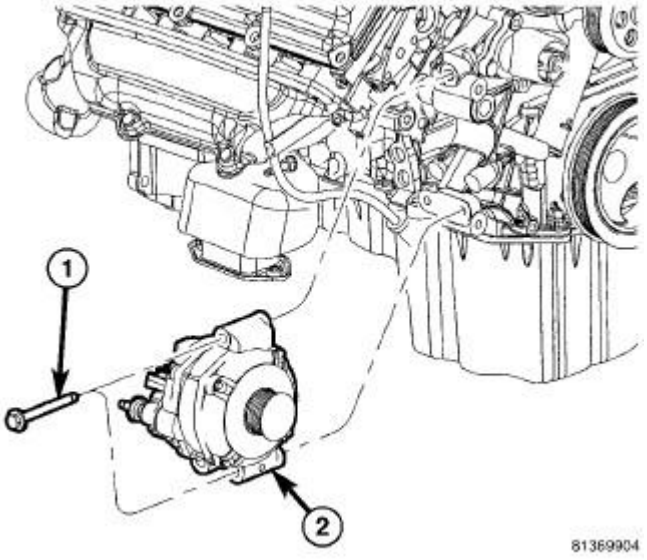

Fig. 27: Generator & Mounting Bolts
Courtesy of CHRYSLER GROUP, LLC

33. Unsnap the plastic insulator cap from the B+ output terminal.
34. Remove the B+ terminal mounting nut at the rear of the generator and remove the B+ terminal.

35. Depress the field wire connector tab at the rear of the generator and disconnect the field wire connector.
36. Remove the two generator retaining bolts (1) and remove the generator (2).

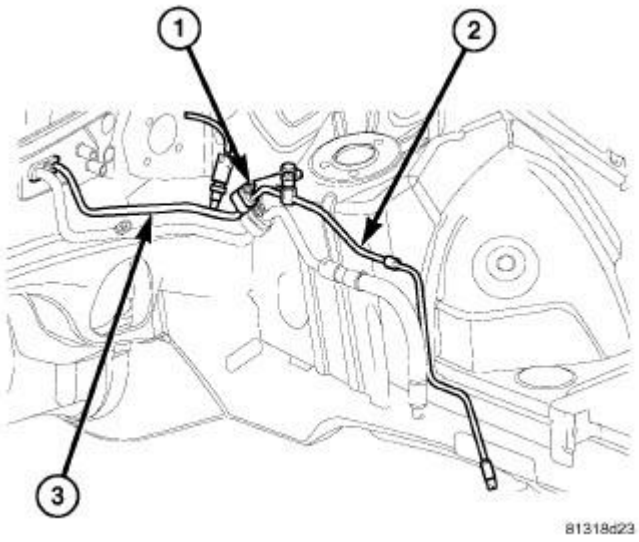

Fig. 28: Removing/Installing A/C Liquid Lines
Courtesy of CHRYSLER GROUP, LLC

37. Remove the nut (1) from the front section of the A/C liquid line (2) to the rear section of the liquid line (3), separate the lines, remove and discard the dual plane seal.
38. Install plugs or tape over the opened liquid line fittings.
39. Remove the front section of the A/C liquid line (2) from the engine compartment.

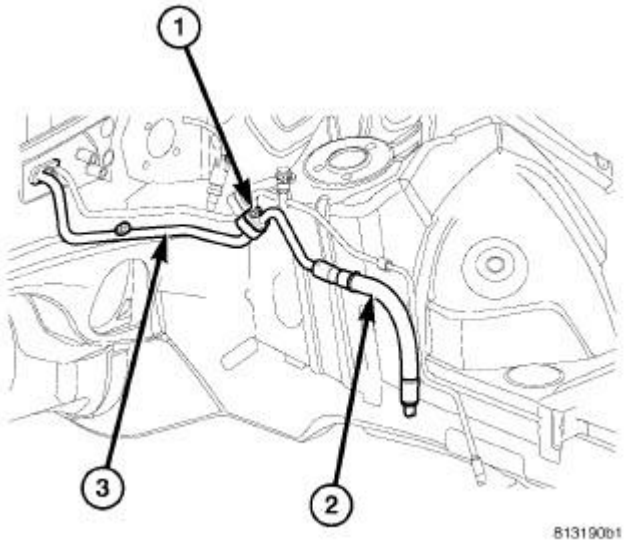

Fig. 29: Removing/Installing A/C Suction Lines

Courtesy of CHRYSLER GROUP, LLC

40. Remove the nut (1) from the front section of the A/C suction line (2) to the rear section of the suction line (3), separate the lines, remove and discard the dual plane seal.
41. Install plugs or tape over the opened suction line fittings.
42. Remove the front section of the A/C suction line (2) from the engine compartment.

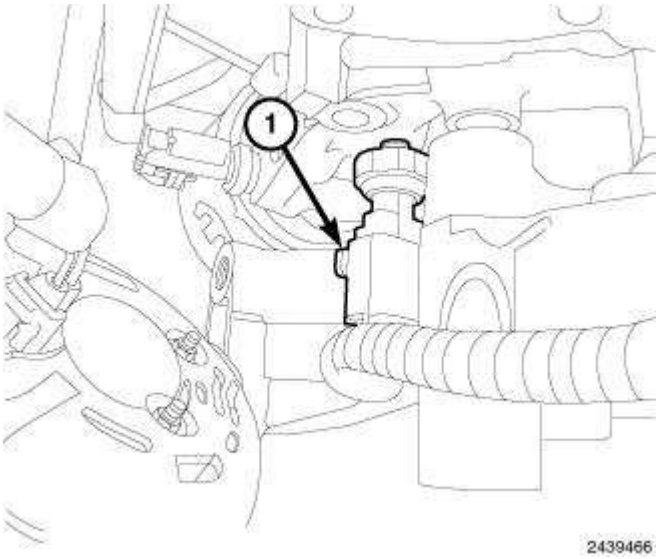

Fig. 30: Oil Pressure Sensor Electrical Connector
Courtesy of CHRYSLER GROUP, LLC

43. Remove the oil pressure sensor electrical connector (1).
44. Remove the oil temperature sensor electrical connector.

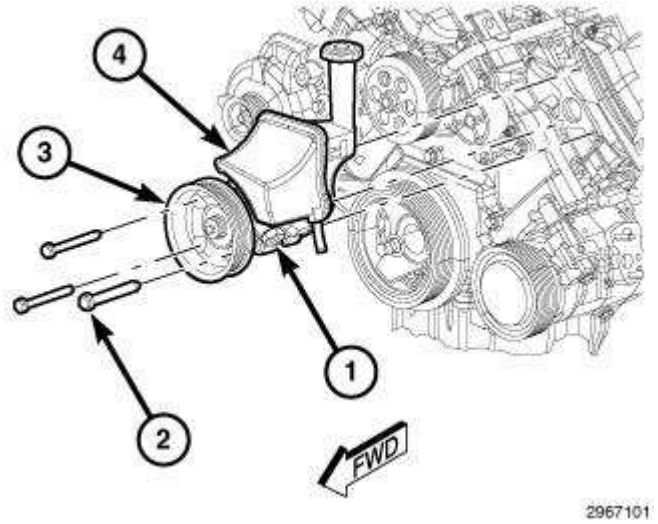

Fig. 31: Power Steering Reservoir, Pump, Pulley & Bolts
Courtesy of CHRYSLER GROUP, LLC

NOTE: **It is not necessary to disconnect power steering pump hoses from power steering pump for power steering pump removal.**

45. Remove the three power steering pump (4) mounting bolts (2) through the access holes in the pulley (3) and position the pump aside.

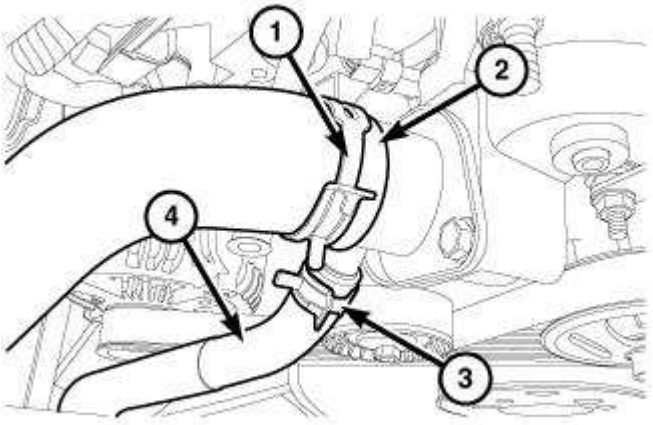

Fig. 32: Upper Radiator Hose, Clamp, Oil Cooler Return Line Hose & Clamp
Courtesy of CHRYSLER GROUP, LLC

46. Remove the upper radiator hose clamp (1) and remove the upper radiator hose (2).
47. Remove the oil cooler hose clamp (3) and remove the oil cooler hose (4).

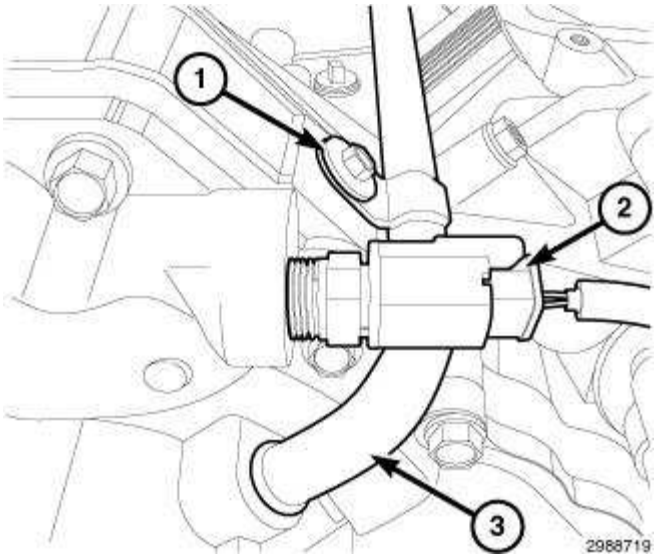

Fig. 33: Coolant Temperature (ECT) Sensor Electrical Connector, Heater Tube & Retaining Bolt
Courtesy of CHRYSLER GROUP, LLC

48. Remove the heater tube retaining bolt (1).
49. Remove the coolant temperature sensor electrical connector (2).
50. Lift the heater tube (3) out of the water pump.

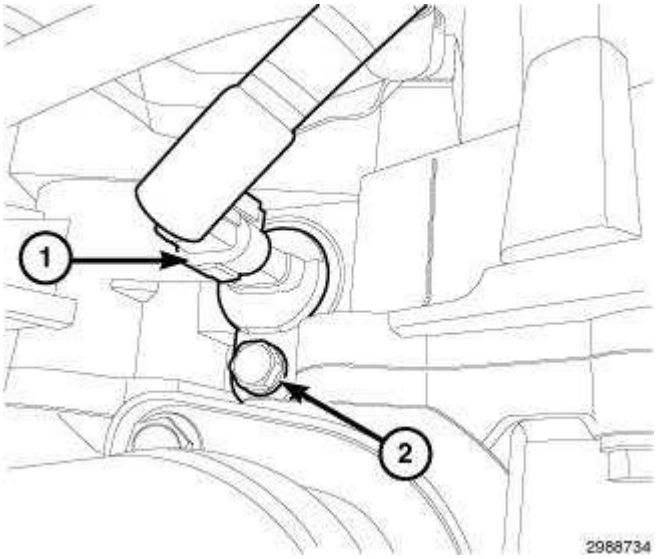

Fig. 34: Camshaft Position Sensor Electrical Connector & Bolt
Courtesy of CHRYSLER GROUP, LLC

51. Disconnect the camshaft position sensor electrical connector (1).

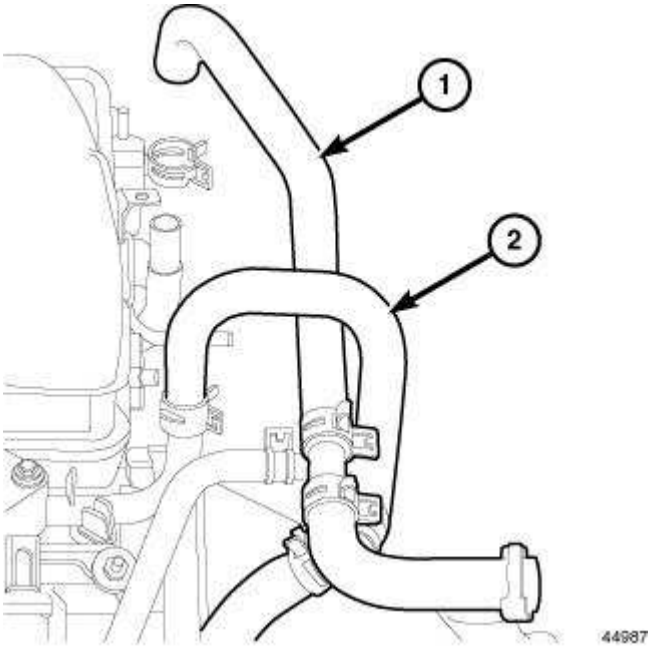

Fig. 35: Heater Hose Supply
Courtesy of CHRYSLER GROUP, LLC

52. Remove the heater hoses (1, 2).

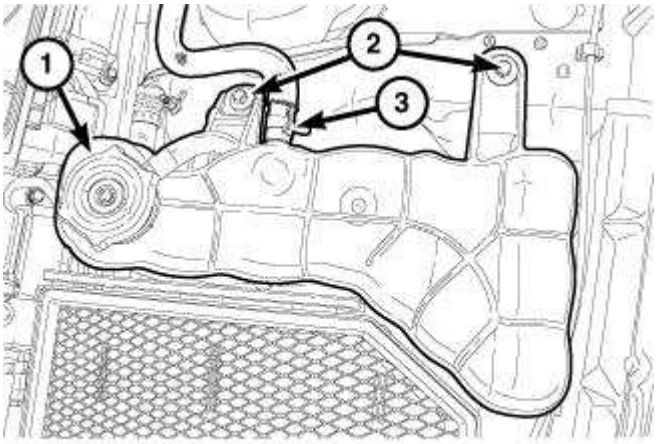

Fig. 36: Coolant Recovery Container Pressure Cap, Tube & Screws
Courtesy of CHRYSLER GROUP, LLC

NOTE: It is not necessary to remove the hoses from the coolant bottle for coolant bottle removal.

53. Remove the coolant bottle retaining bolts (2) and position the coolant bottle (1) aside.

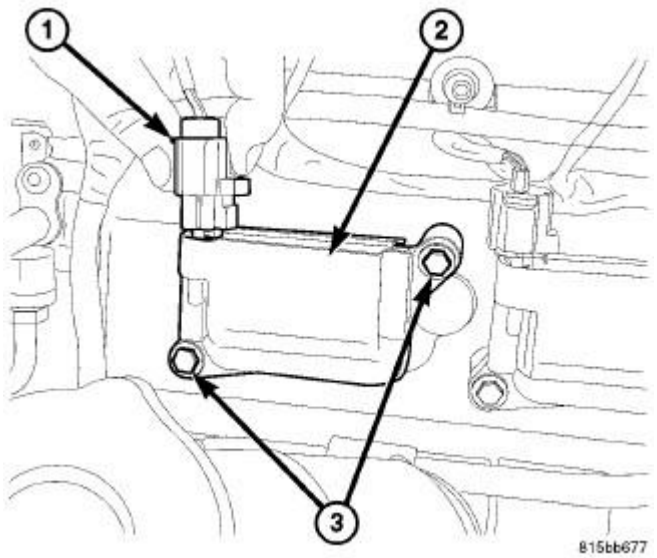

Fig. 37: Ignition Coil Connector, Ignition Coil & Mounting Bolts
Courtesy of CHRYSLER GROUP, LLC

54. Remove all ignition coil electrical connectors (1) and position the harness aside.

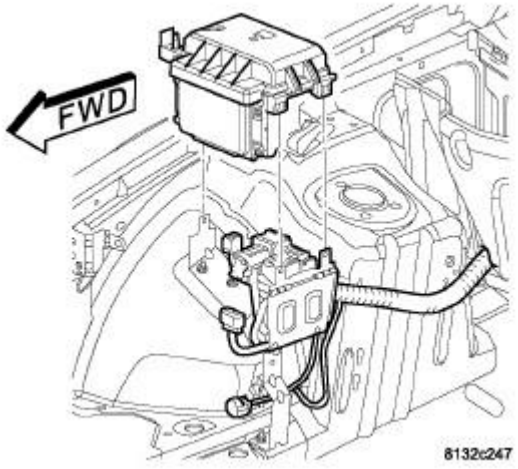

Fig. 38: TIPM/PDC Mounting Bracket
Courtesy of CHRYSLER GROUP, LLC

55. Remove the Totally Integrated Power Module (TIPM) and mounting bracket. Refer to **MODULE, TOTALLY INTEGRATED POWER (TIPM), REMOVAL** .
56. Unfasten the wire harness mounted on the right hand inner fender panel and position aside.

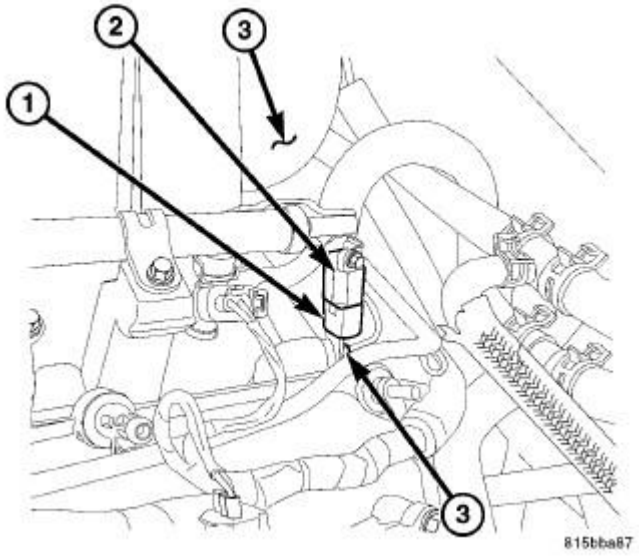

Fig. 39: Ignition Capacitor, Electrical Connector & Intake Manifold
Courtesy of CHRYSLER GROUP, LLC

NOTE: The ignition capacitor (2) is located near the left rear corner of the intake manifold (3).

57. Remove the ignition capacitor (1) electrical connector (2).
58. Remove the ground wires from the rear of each cylinder head.

59. Raise and support the vehicle. Refer to **HOISTING, STANDARD PROCEDURE** .

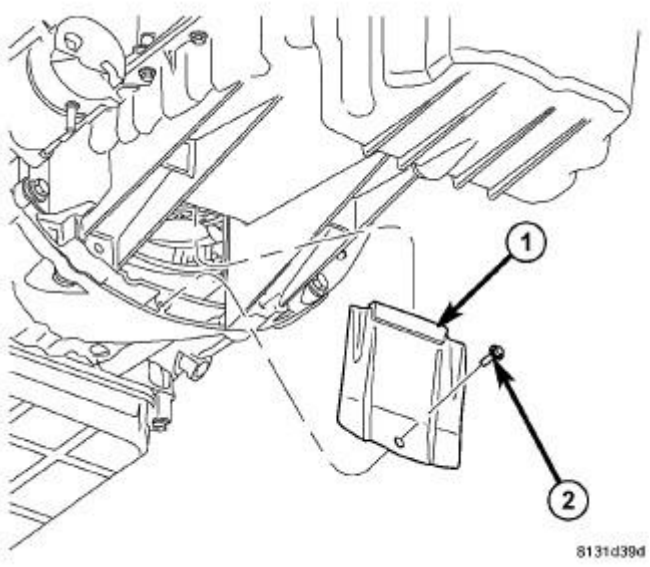

Fig. 40: Remove/Install Torque Converter Access Cover
Courtesy of CHRYSLER GROUP, LLC

60. Remove the transmission inspection cover retaining bolt (2) and remove the inspection cover (1).

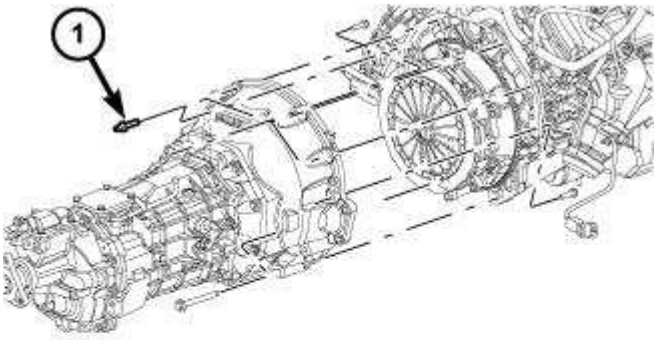

Fig. 41: Removing/Installing Transmission
Courtesy of CHRYSLER GROUP, LLC

61. Manual transmission equipped vehicles, remove the transmission. Refer to **REMOVAL** .

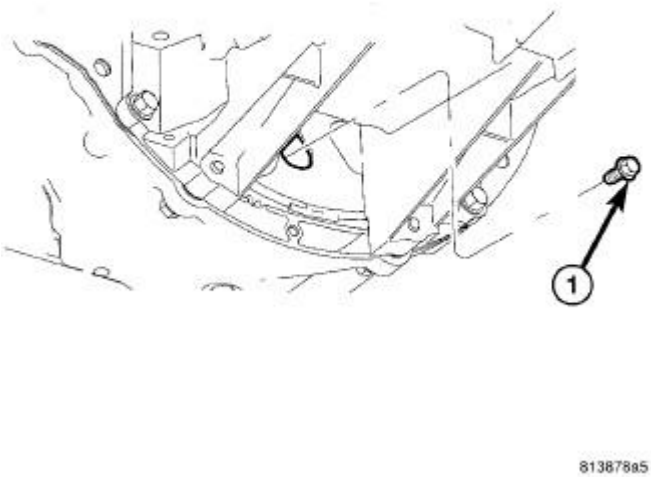

Fig. 42: Torque Converter Bolts
Courtesy of CHRYSLER GROUP, LLC

62. Automatic transmission equipped vehicles, rotate the crankshaft in clockwise direction until the torque converter bolts (1) are accessible and remove the flexplate to torque converter bolts (1).

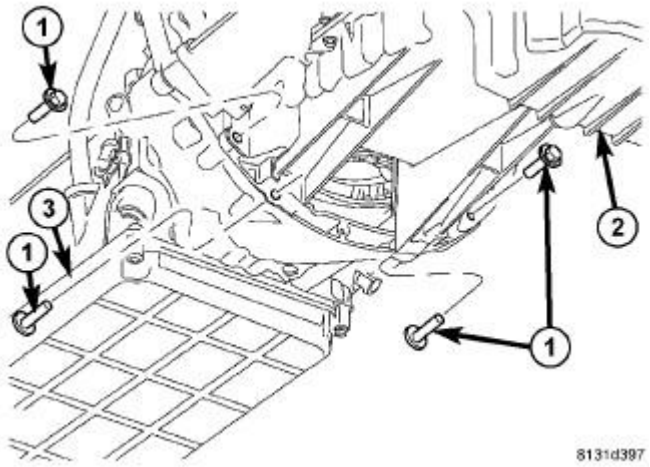

Fig. 43: Remove/Install Transmission To Oil Pan Bolts
Courtesy of CHRYSLER GROUP, LLC

63. Remove the oil pan to transmission bolts (1).

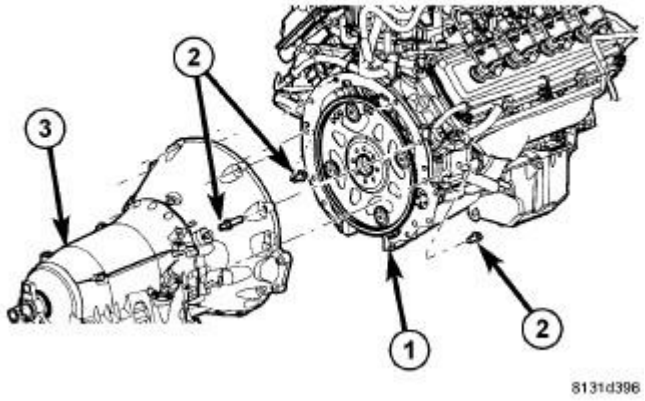

Fig. 44: Remove/Install Transmission To Engine Bolts
Courtesy of CHRYSLER GROUP, LLC

64. Remove the transmission bell housing to engine block bolts (2).

CAUTION: While carefully separating the engine from the transmission and removing the engine from the vehicle, constant checks must be made to ensure no damage to other components or wiring harnesses occur throughout the removal procedure.

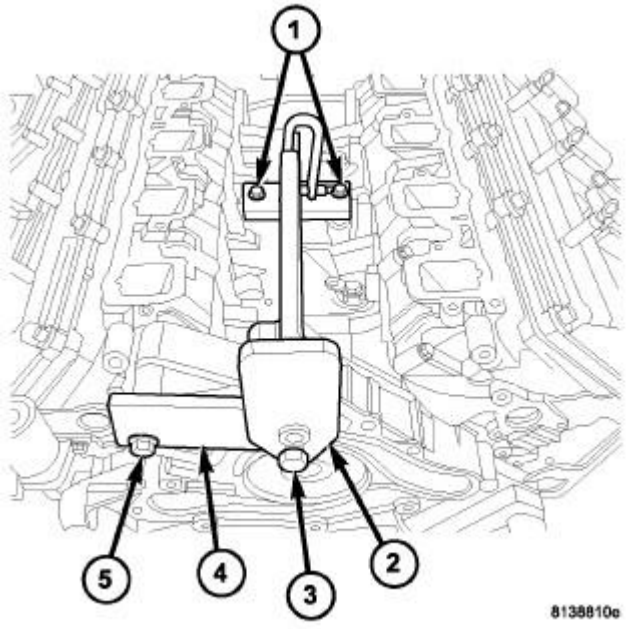

Fig. 45: Engine Lift Fixture & Adapter
Courtesy of CHRYSLER GROUP, LLC

65. Lower the vehicle.
66. Using a suitable jack, support the transmission.

NOTE: Do not use air tools to install engine lift fixture.

67. Install the (special tool #8984B, Fixture, Engine Lifting) (2) and (special tool #8984-UPD, Adapter, Engine Lift) (4).
68. Using a suitable engine hoist, separate the engine from the transmission and remove the engine from the engine compartment.
69. Secure the engine onto a suitable engine stand.

INSTALLATION

INSTALLATION

CAUTION: If the engine encounters a catastrophic failure, the engine oil cooler must be replaced or damage to the new engine and/or components could result.

CAUTION: If the original engine has experienced a catastrophic failure or an individual failure with the piston, cylinder bore, engine block, valve or valve seat, the intake manifold MUST be replaced with a new manifold.

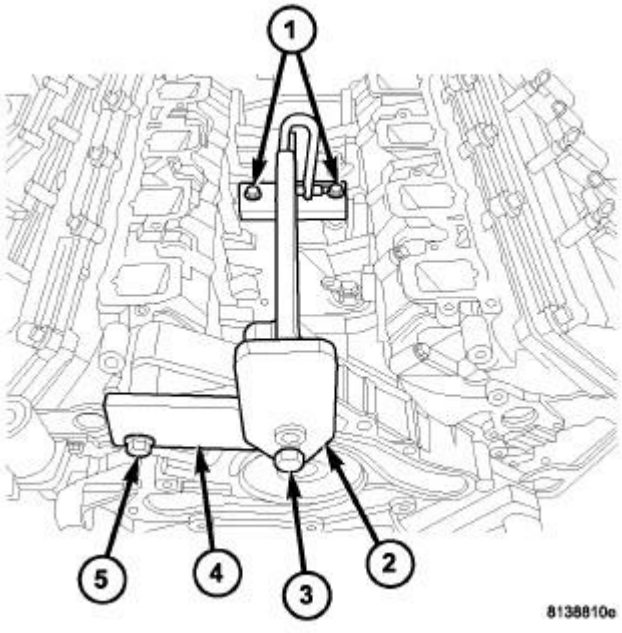

Fig. 46: Engine Lift Fixture & Adapter
Courtesy of CHRYSLER GROUP, LLC

NOTE: Do not use air tools to install (special tool #8984B, Fixture, Engine Lifting) (2, 3).

1. Install the engine lift fixture (2) (special tool #8984B, Fixture, Engine Lifting) and adapter (special tool #8984-UPD, Adapter, Engine Lift) (4).
2. Using a suitable engine hoist, lower the engine into the engine compartment.
3. Automatic transmission equipped vehicles, align the engine with the transmission.
4. Install two transmission bell housing to engine block bolts finger tight.
5. Lower the engine assembly until the engine mounts rest in the engine cradle crossmember.

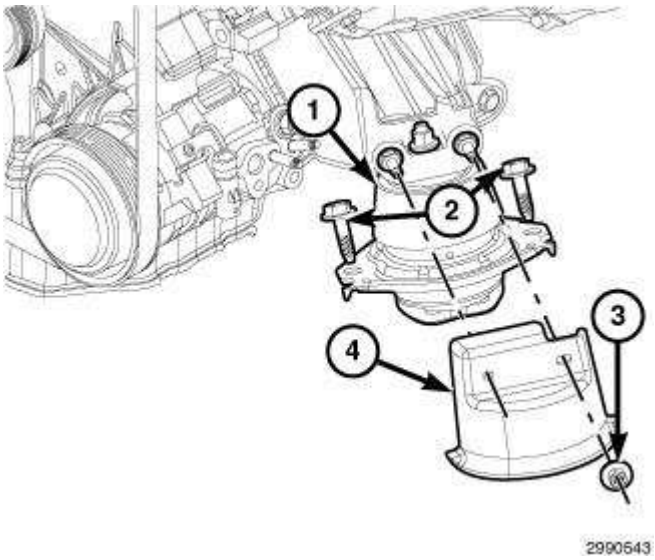

Fig. 47: Engine Mount Heat Shield Retaining Nuts, Lower Mount Retaining Bolts & Heat Shields
Courtesy of CHRYSLER GROUP, LLC

NOTE: Left side shown in illustration, right side similar.

6. Align the engine mounts, install both left/right engine mount to frame retaining bolts (2) and tighten to 68 N.m (50 ft. lbs.).
7. Position both left and right engine mount heat shields (4), install the retaining nuts (3) and tighten to 27 N.m (20 ft. lbs.).
8. Remove the engine hoist and the jack supporting the transmission.
9. Raise and support the vehicle.

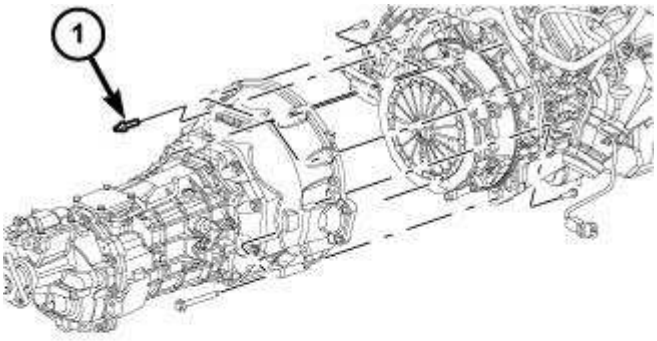

Fig. 48: Removing/Installing Transmission
Courtesy of CHRYSLER GROUP, LLC

10. Manual transmission equipped vehicles, install the transmission. Refer to **INSTALLATION** .

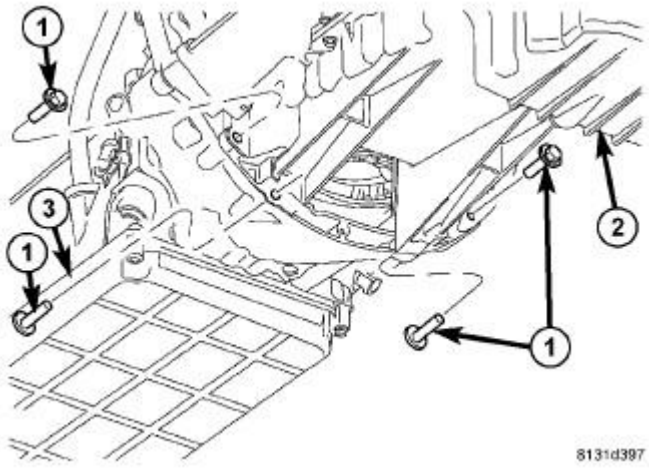

Fig. 49: Remove/Install Transmission To Oil Pan Bolts
Courtesy of CHRYSLER GROUP, LLC

11. Automatic transmission equipped vehicles, install the oil pan to transmission bolts (1) and tighten to 54 N.m (40 ft. lbs.).

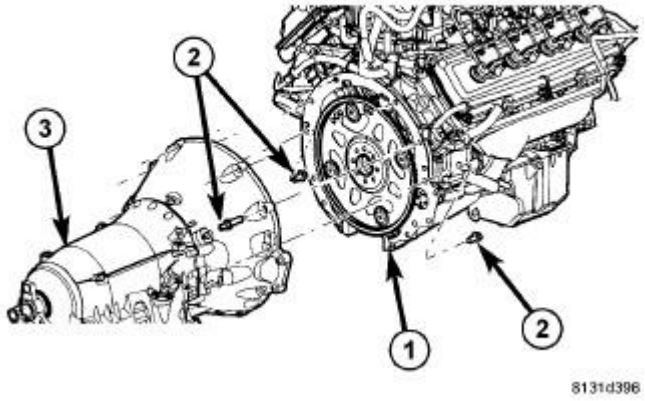

Fig. 50: Remove/Install Transmission To Engine Bolts
Courtesy of CHRYSLER GROUP, LLC

12. Install the remaining transmission bell housing to engine block bolts (2) and tighten to 68 N.m (50 ft. lbs.).

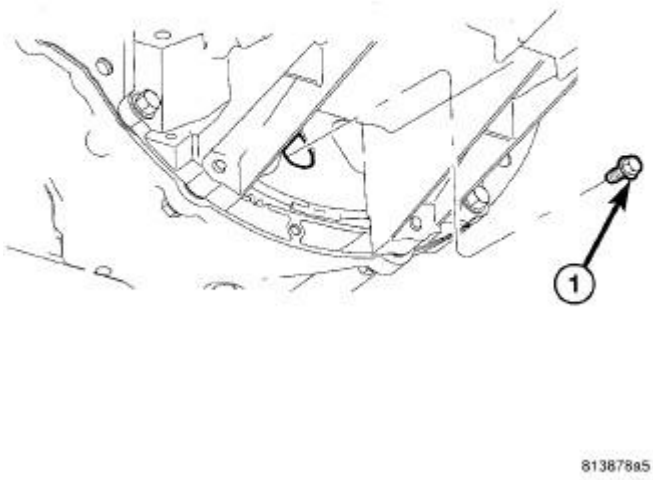

Fig. 51: Torque Converter Bolts
Courtesy of CHRYSLER GROUP, LLC

CAUTION: It is essential that the correct length bolts are used to attach the converter to the flexplate. Bolts that are too long will damage the clutch surface inside the torque converter.

13. Rotate the crankshaft in clockwise direction and install all torque converter to flexplate bolts (1) finger tight.
14. Verify that the torque converter is pulled flush to the flexplate and tighten bolts to 88 N.m (65 ft. lbs.).

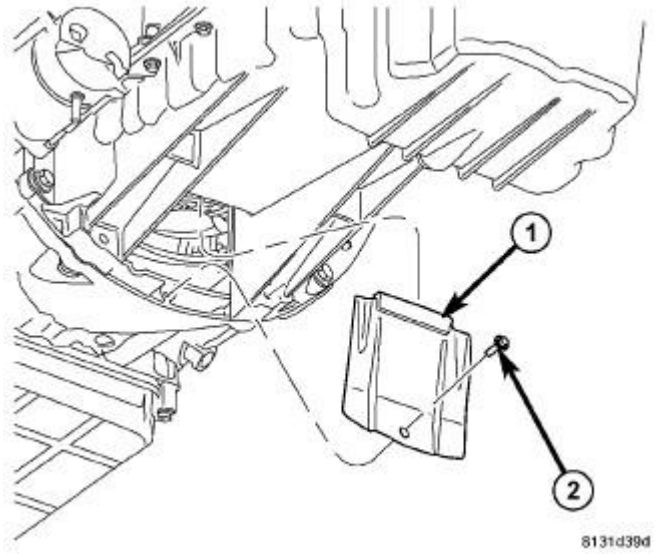

Fig. 52: Remove/Install Torque Converter Access Cover
Courtesy of CHRYSLER GROUP, LLC

15. Install the inspection cover (1) and tighten the retaining bolt (2) to 11 N.m (8 ft. lbs.).

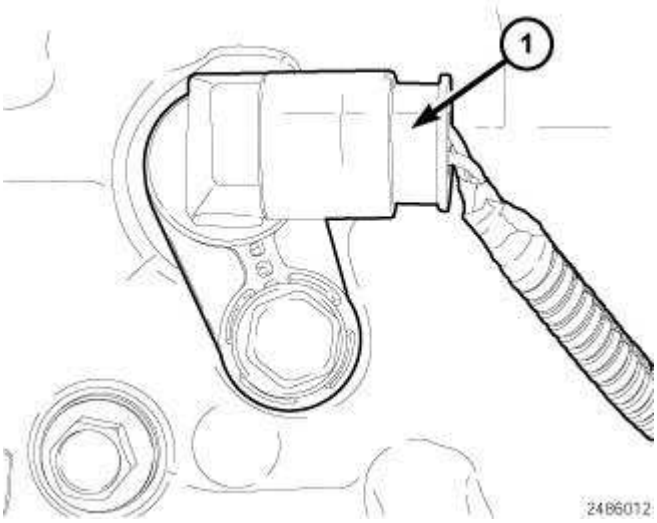

Fig. 53: Crankshaft Position Sensor Electrical Connector
Courtesy of CHRYSLER GROUP, LLC

NOTE: The Crankshaft Position (CKP) sensor is located at the right rear side of

the engine block.

16. Connect the CKP sensor electrical connector (1).

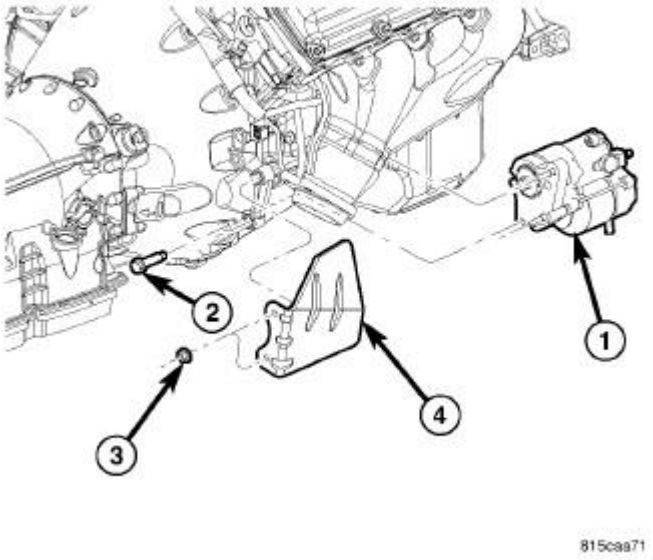

Fig. 54: Removing/Installing Starter
Courtesy of CHRYSLER GROUP, LLC

17. Position the starter motor (1) into the transmission.
18. Install the three starter motor retaining bolts (2) and tighten to 54 N.m (40 ft. lbs.).
19. Connect the solenoid wire to the starter motor (snaps in place).
20. Position the battery cable to the solenoid stud, install the battery cable eyelet nut and tighten to 11 N.m (8 ft. lbs.).
21. Position the starter heat shield (4) and install the retaining nuts (3).

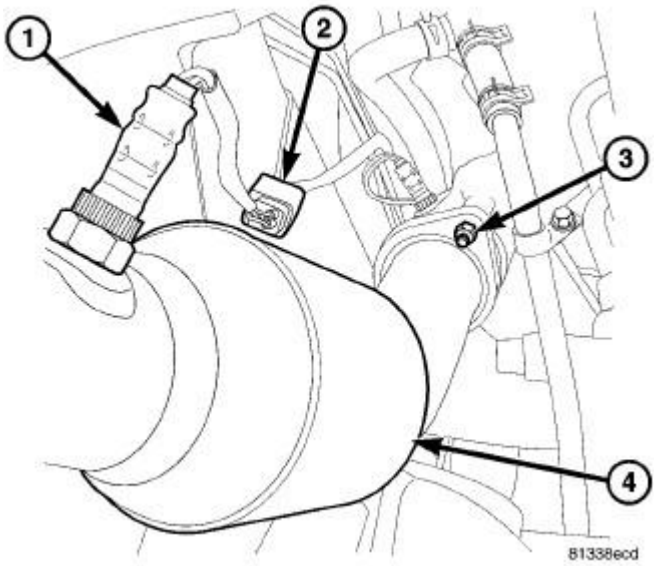

Fig. 55: Oxygen Sensor, Oxygen Sensor Connector, Ball Flange Nut & LH Catalytic Converter
Courtesy of CHRYSLER GROUP, LLC

22. Position the catalytic converters (4) onto the exhaust manifold flanges, install the flange nuts (3) and tighten to 41 N.m (30 ft. lbs.).
23. Connect the oxygen sensor electrical connectors (2).

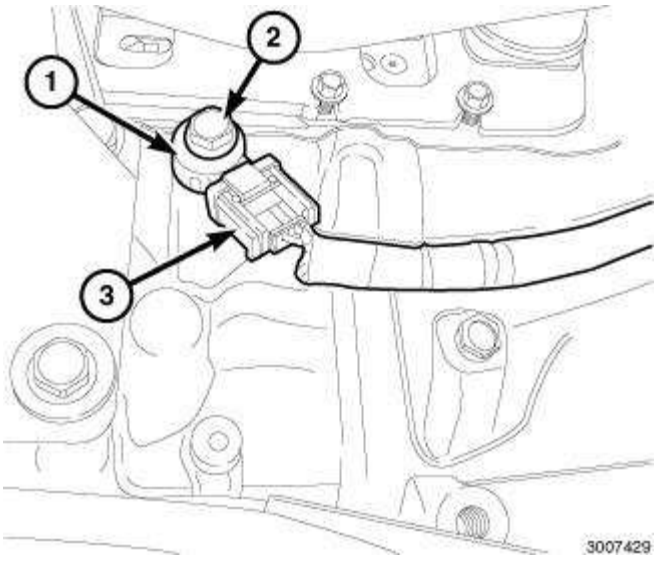

Fig. 56: Knock Sensor, Electrical Connector & Bolt
Courtesy of CHRYSLER GROUP, LLC

NOTE: Left side shown in illustration, right side similar.

24. Connect the right and left knock sensor (1) electrical connectors (5).
25. Install the heat shields onto both knock sensors (shield snaps on/off sensor).

26. Connect the transmission oil cooler lines to their retainers at the oil pan.

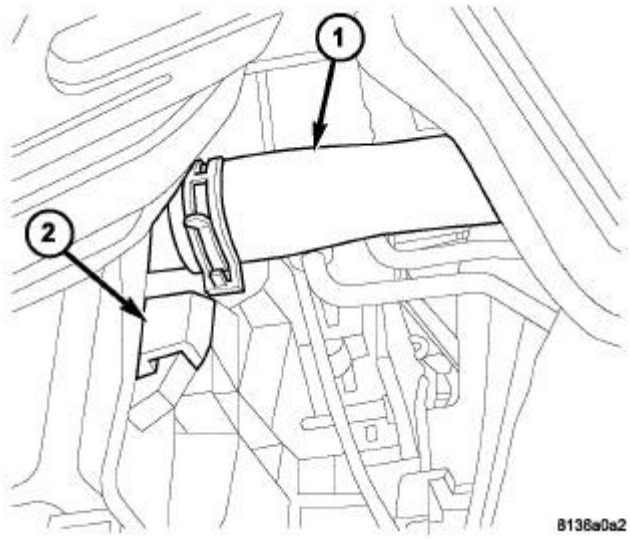

Fig. 57: Lower Radiator Hose & Radiator Fan Assembly
Courtesy of CHRYSLER GROUP, LLC

1 - LOWER RADIATOR HOSE
2 - RADIATOR FAN ASSEMBLY

27. Install the lower radiator hose (1).
28. Lower the vehicle.

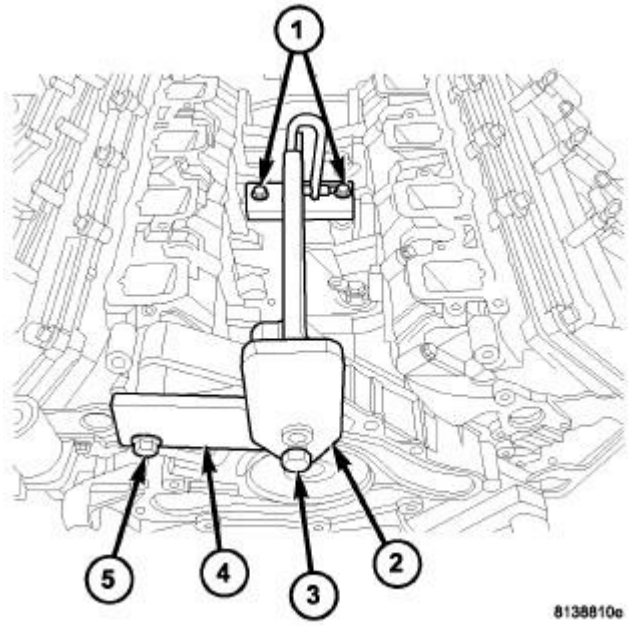

Fig. 58: Engine Lift Fixture & Adapter
Courtesy of CHRYSLER GROUP, LLC

29. Remove the engine lift fixture (special tool #8984B, Fixture, Engine Lifting) (2) and adapter (special tool #8984-UPD, Adapter, Engine Lift) (4).
30. Position the left and right side wiring harness.

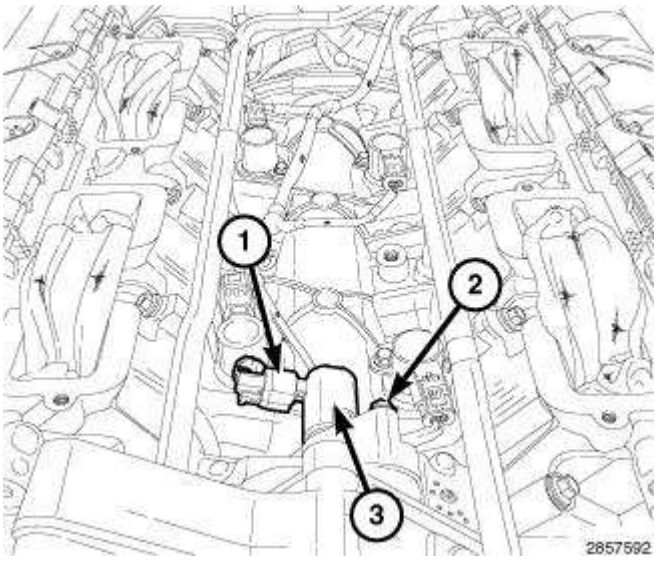

Fig. 59: Oil Control Valve, Electrical Connector & Retaining Bolt
Courtesy of CHRYSLER GROUP, LLC

31. Lubricate the Oil Control Valve (OCV) rubber O-ring seal with clean engine oil.
32. Install the OCV (3) and rotate into position.

33. Install the OCV retaining bolt (2) and tighten to 11 N.m (8 ft. lbs.).
34. Connect the OCV electrical connector (1).

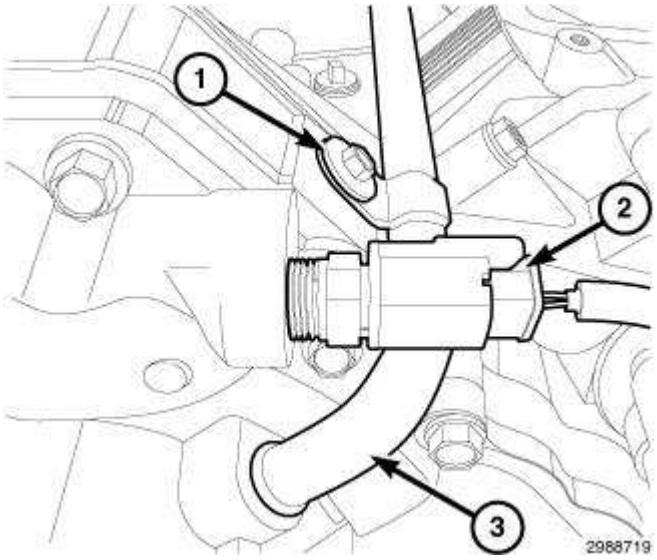

Fig. 60: Coolant Temperature (ECT) Sensor Electrical Connector, Heater Tube & Retaining Bolt
Courtesy of CHRYSLER GROUP, LLC

35. Position the heater core tube (3) into the water pump.
36. Install the heater core tube retaining bolt (1) and tighten to 11 N.m (8 ft. lbs.).
37. Connect the electrical connector to the coolant temperature (ECT) sensor (2).

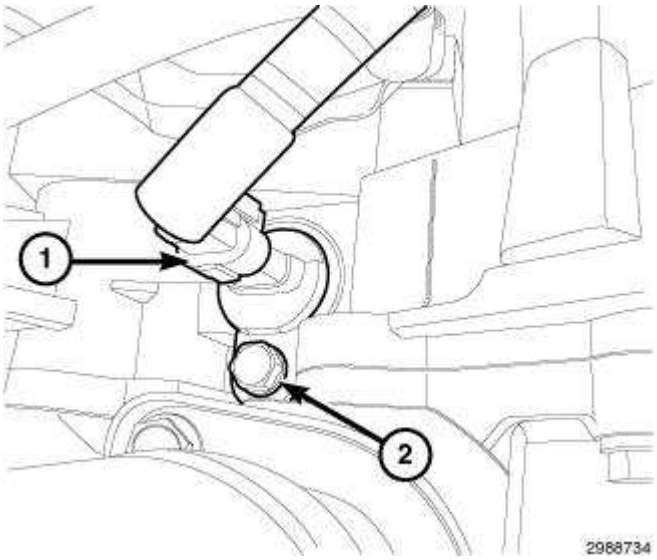

Fig. 61: Camshaft Position Sensor Electrical Connector & Bolt
Courtesy of CHRYSLER GROUP, LLC

38. Connect the camshaft position sensor electrical connector (1).

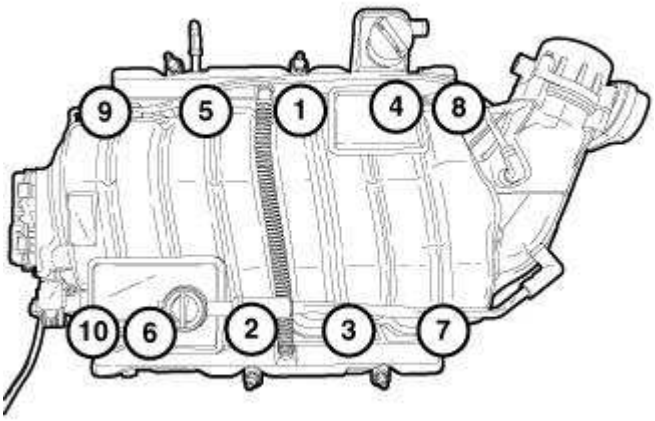

Fig. 62: Intake Manifold Removal/Tightening Sequence
Courtesy of CHRYSLER GROUP, LLC

NOTE: Install the intake manifold and throttle body as an assembly.

39. Install the intake manifold. Refer to **MANIFOLD, INTAKE, INSTALLATION**.

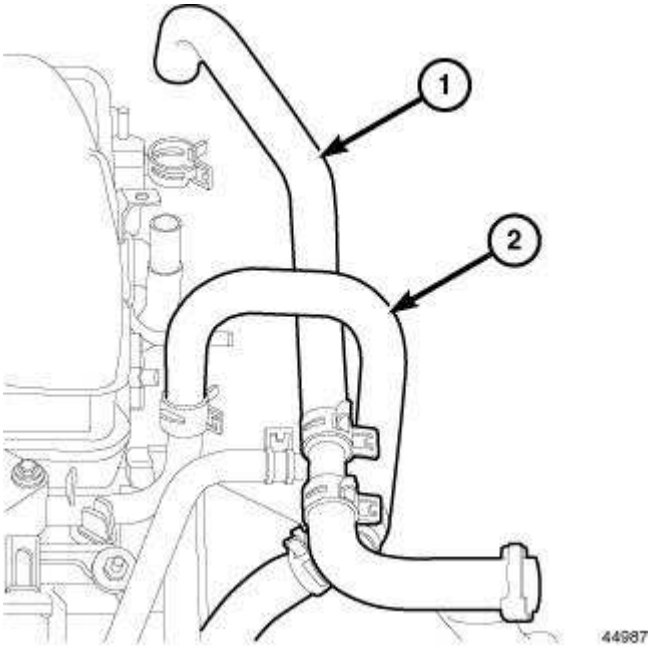

Fig. 63: Heater Hose Supply
Courtesy of CHRYSLER GROUP, LLC

40. Connect the heater hoses (1, 2).
41. Connect the ground wires to the rear of each cylinder head.

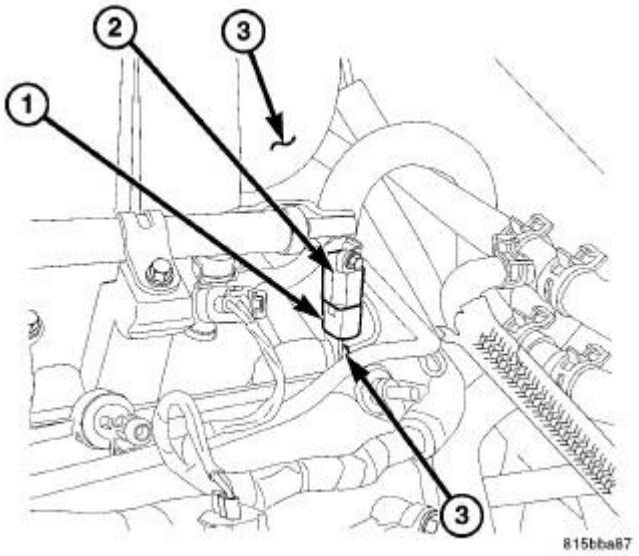

Fig. 64: Ignition Capacitor, Electrical Connector & Intake Manifold
Courtesy of CHRYSLER GROUP, LLC

NOTE: The ignition capacitor (2) is attached to the rear of the left cylinder head.

42. Connect the ignition capacitor (2) electrical connector (1).

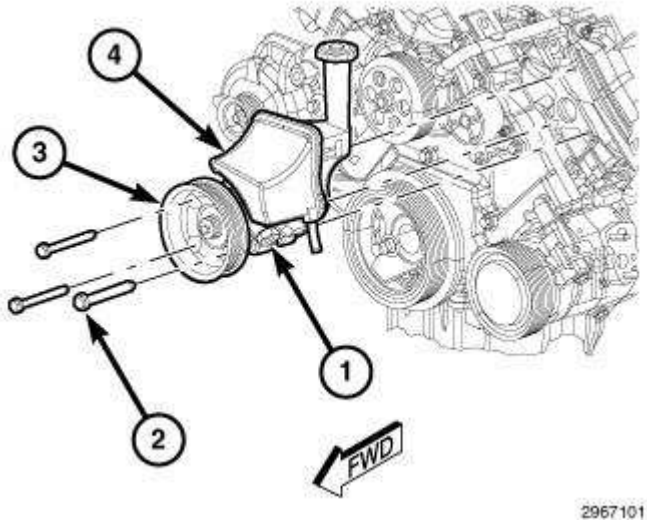

Fig. 65: Power Steering Reservoir, Pump, Pulley & Bolts
Courtesy of CHRYSLER GROUP, LLC

43. Position the power steering pump (4).
44. Install the three power steering pump (4) mounting bolts (2) through the access holes in the pulley and tighten the bolts to 28 N.m (21 ft. lbs.).

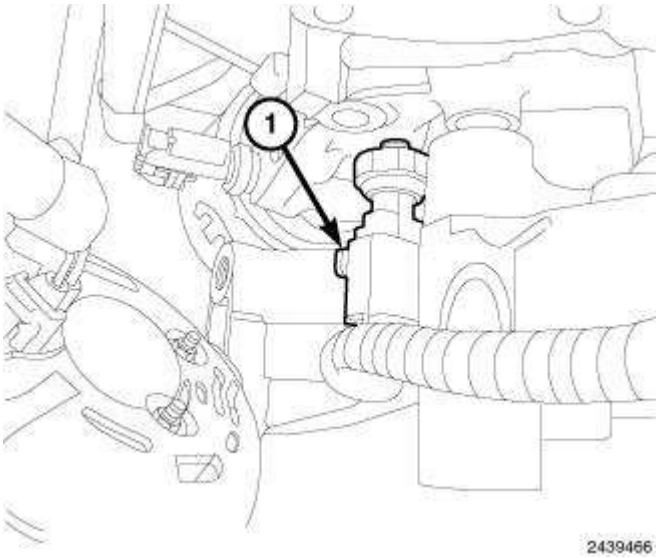

Fig. 66: Oil Pressure Sensor Electrical Connector
Courtesy of CHRYSLER GROUP, LLC

45. Connect the oil pressure sensor electrical connector (1).
46. Connect the oil temperature sensor electrical connector.

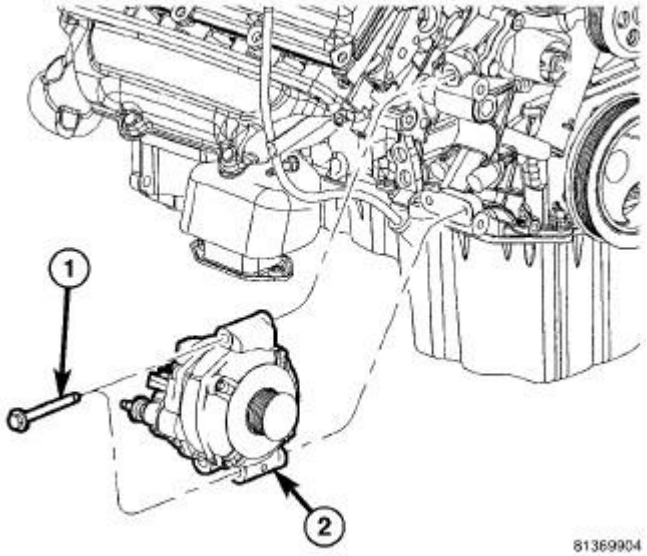

Fig. 67: Generator & Mounting Bolts
Courtesy of CHRYSLER GROUP, LLC

47. Position the generator (2) and install two generator mounting bolts (1) finger tight.
48. Raise and support the vehicle.

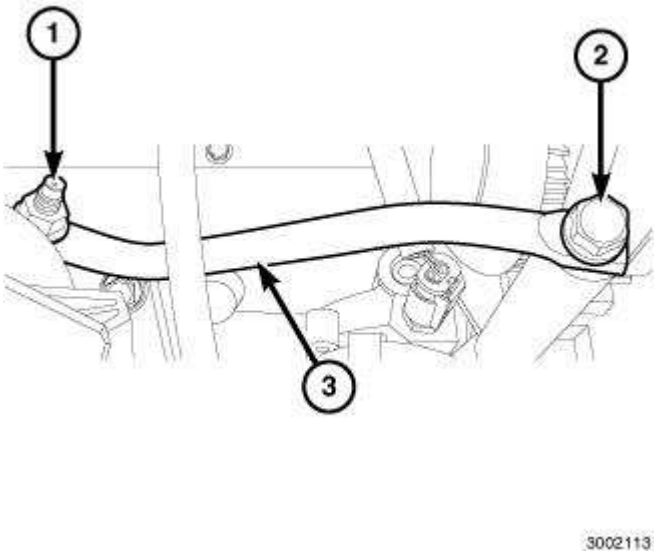

Fig. 68: Support Bracket, Bolt & Nut
Courtesy of CHRYSLER GROUP, LLC

49. Position the generator support bracket (3) to the engine mount, install the retaining nut (1) finger tight.
50. Position the generator support bracket (3) to the generator, install the retaining bolt (2) and tighten to 65 N.m (48 ft. lbs.).
51. Tighten the generator support bracket (3) to engine mount retaining nut (1) to 28 N.m (21 ft. lbs.).

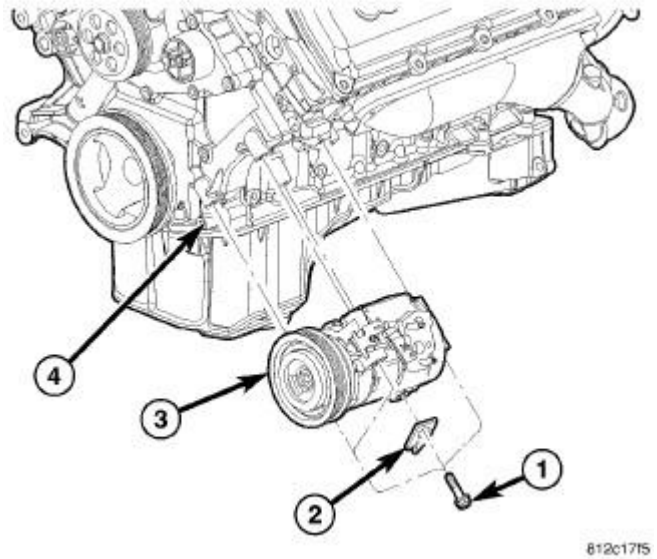

Fig. 69: Removing/Installing A/C Compressor
Courtesy of CHRYSLER GROUP, LLC

52. Install the A/C compressor (3). Refer to **COMPRESSOR, A/C, REMOVAL** .

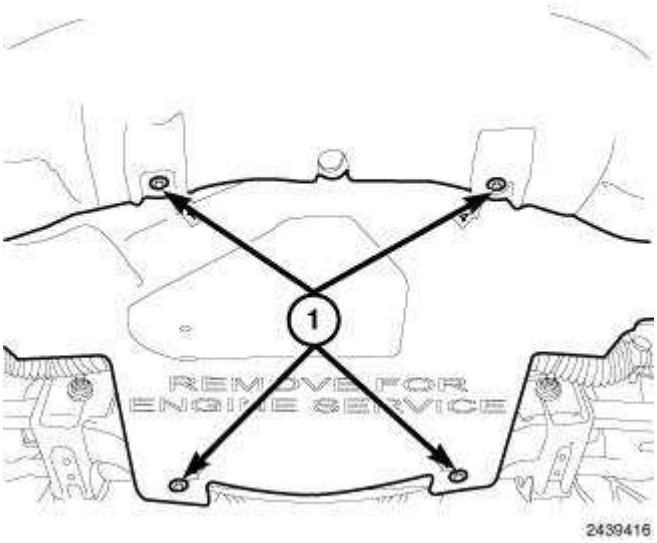

Fig. 70: Lower Splash Shield & Fasteners
Courtesy of CHRYSLER GROUP, LLC

53. Position the belly pan and install the belly pan retainers (1).
54. Lower the vehicle.

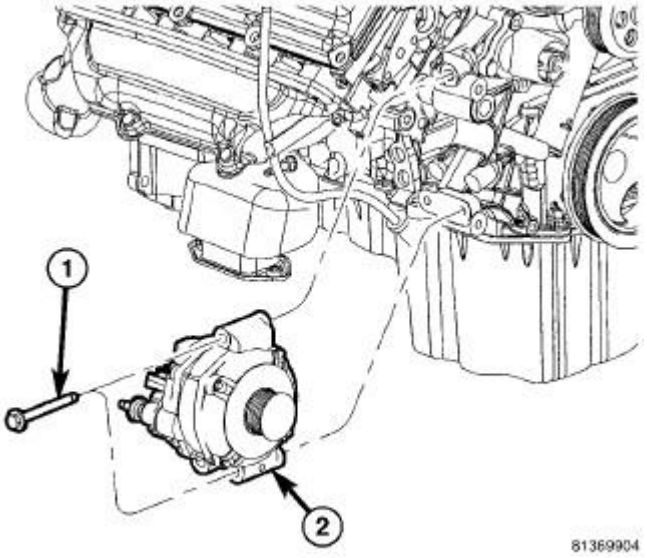

Fig. 71: Generator & Mounting Bolts
Courtesy of CHRYSLER GROUP, LLC

55. Tighten two generator mounting bolts (1) to 65 N.m (48 ft. lbs.).
56. Snap the field wire connector into the rear of the generator.
57. Position the generator B+ terminal eyelet to the generator output stud, install the retaining nut and tighten to 13 N.m (10 ft. lbs.).
58. Snap the plastic insulator cap onto the B+ output terminal.

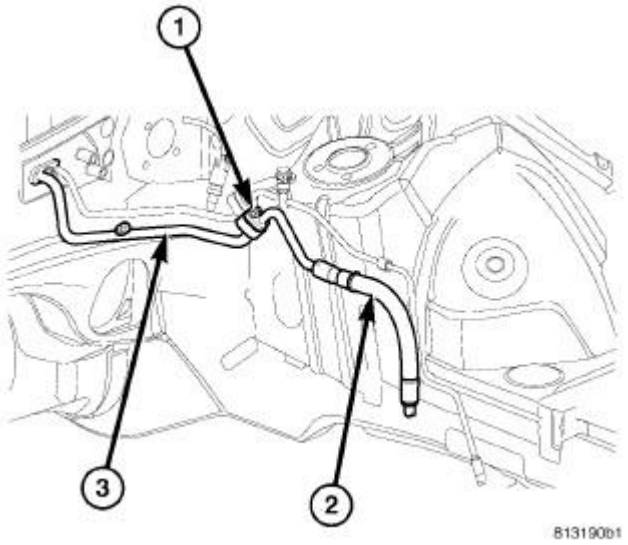

Fig. 72: Removing/Installing A/C Suction Lines
Courtesy of CHRYSLER GROUP, LLC

59. Position the front section of the A/C suction line (2) into the engine compartment.
60. Remove the tape or plugs from the fittings that connect the front section of the A/C suction line to the rear section of the A/C suction line (3).

NOTE: Use only the specified seal as it is made of a special material for the R-134a system. Use only refrigerant oil of the type recommended for the A/C compressor in the vehicle.

61. Lubricate the new dual plane seal with clean refrigerant oil and position the seal onto the suction line fitting.
62. Connect the front section of the A/C suction line to the rear section of the A/C suction line.
63. Install the nut (1) that secures the front section of the A/C suction line to the rear section of the A/C suction line and tighten the nut to 22 N.m (16 ft. lbs.).

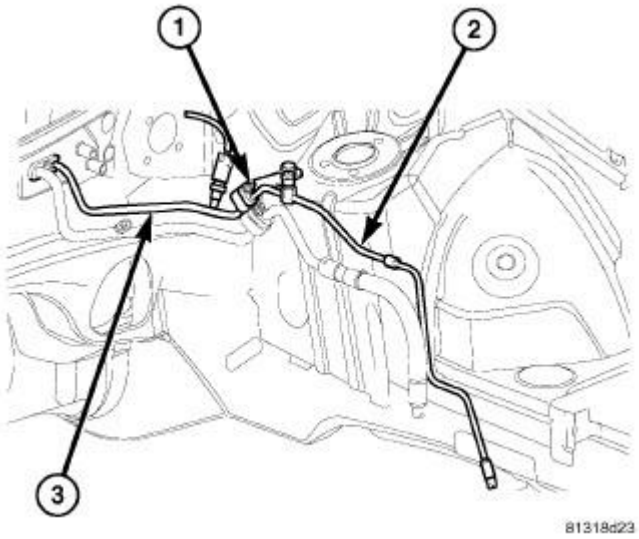

Fig. 73: Removing/Installing A/C Liquid Lines
Courtesy of CHRYSLER GROUP, LLC

64. Position the front section of the A/C liquid line into the engine compartment.
65. Remove the tape or plugs from the fittings that connect the front section of the A/C liquid line to the rear section of the A/C liquid line (3).

NOTE: Use only the specified seal as it is made of a special material for the R-134a system. Use only refrigerant oil of the type recommended for the A/C compressor in the vehicle.

66. Lubricate the new dual plane seal with clean refrigerant oil and position the seal onto the liquid line fitting.
67. Connect the front section of the A/C liquid line to the rear section of the A/C liquid line.
68. Install the nut (1) that secures the front section of the A/C liquid line to the rear section of the A/C liquid line and tighten the nut to 22 N.m (16 ft. lbs.).

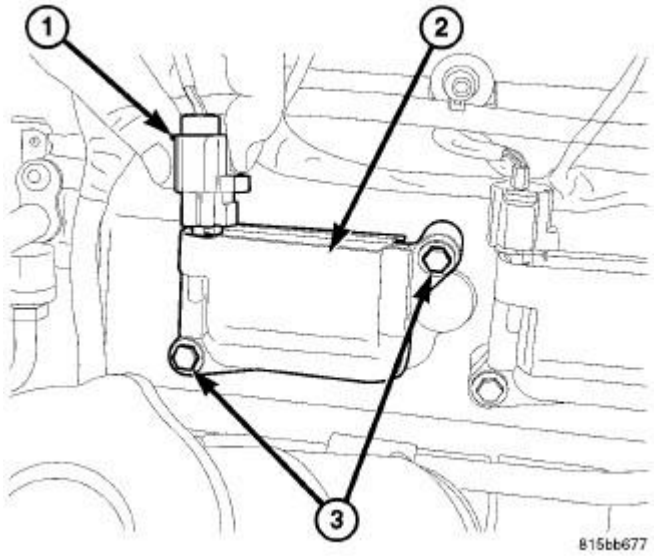

Fig. 74: Ignition Coil Connector, Ignition Coil & Mounting Bolts
Courtesy of CHRYSLER GROUP, LLC

69. Position the ignition coil electrical harness and connect all ignition coil electrical connectors (1).

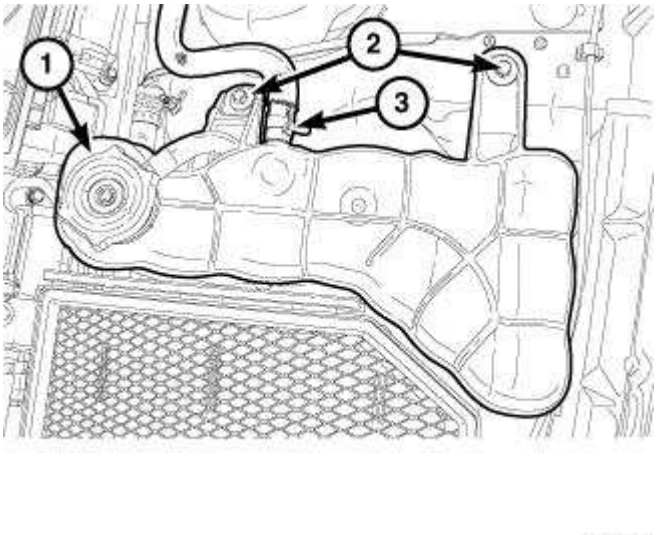

Fig. 75: Coolant Recovery Container Pressure Cap, Tube & Screws
Courtesy of CHRYSLER GROUP, LLC

70. Position the coolant bottle (1) and install the coolant bottle retaining bolts (2).

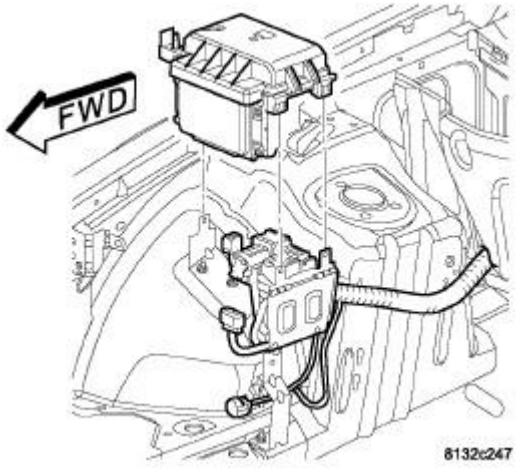

Fig. 76: TIPM/PDC Mounting Bracket
Courtesy of CHRYSLER GROUP, LLC

71. Install the Totally Integrated Power Module (TIPM) mounting bracket.
72. Install the TIPM. Refer to **MODULE, TOTALLY INTEGRATED POWER (TIPM), REMOVAL** .
73. Position the wire harness and secure to the right hand inner fender panel.

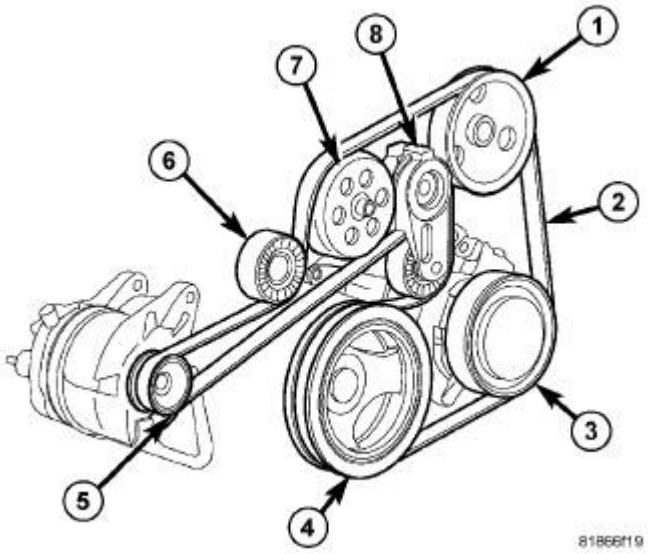

Fig. 77: Accessory Drive Belt Routing, Tensioner & Pulleys
Courtesy of CHRYSLER GROUP, LLC

CAUTION: Do not let the tensioner arm snap back to the freearm position, sever damage may occur to the tensioner.

74. Rotate the accessory drive belt tensioner (8) clockwise until it contacts the stop and install the accessory drive belt (2) onto the pulleys, then slowly release the tensioner.

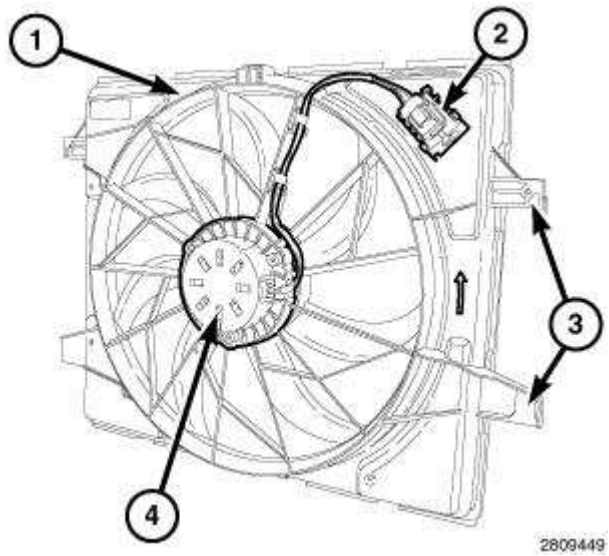

Fig. 78: Cooling Fan Module Components
Courtesy of CHRYSLER GROUP, LLC

75. Install the cooling fan. Refer to **FAN, COOLING, INSTALLATION** .

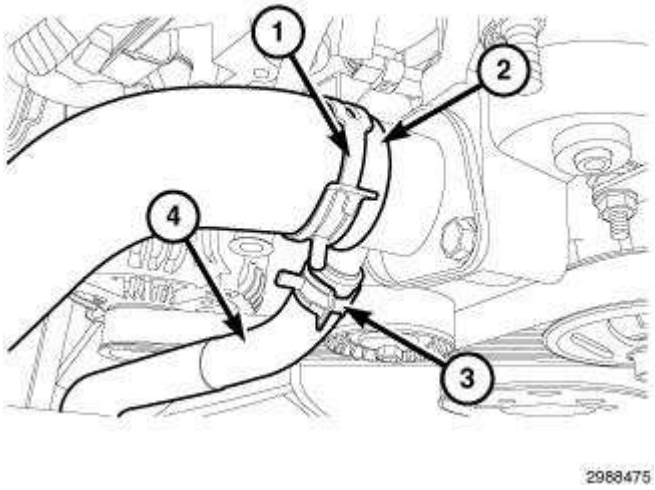

Fig. 79: Upper Radiator Hose, Clamp, Oil Cooler Return Line Hose & Clamp
Courtesy of CHRYSLER GROUP, LLC

76. Position the oil cooler hose (4) and Install oil cooler hose clamp (3).
77. Position the upper radiator hose (2) and Install the upper radiator hose clamp (1).

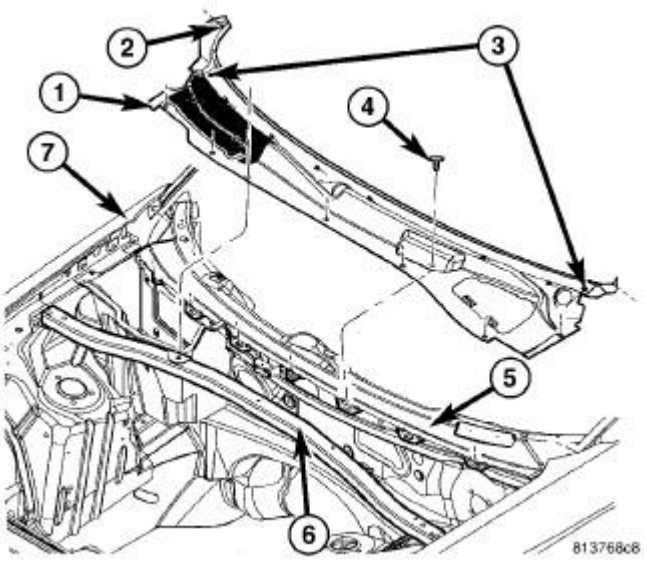

Fig. 80: Cowl Panel, Push-Pins & Fasteners
Courtesy of CHRYSLER GROUP, LLC

78. Install the strut tower support (6) and tighten bolts to 38 N.m (28 ft. lbs.).
79. Install the cowl panel cover (1). Refer to **COVER, COWL PANEL, INSTALLATION** .
80. Fill the crankcase with the specified type and amount of engine oil. Refer to **CAPACITIES AND RECOMMENDED FLUIDS, SPECIFICATIONS** .
81. Fill the cooling system with the specified type and amount of engine coolant. Refer to **STANDARD PROCEDURE** .

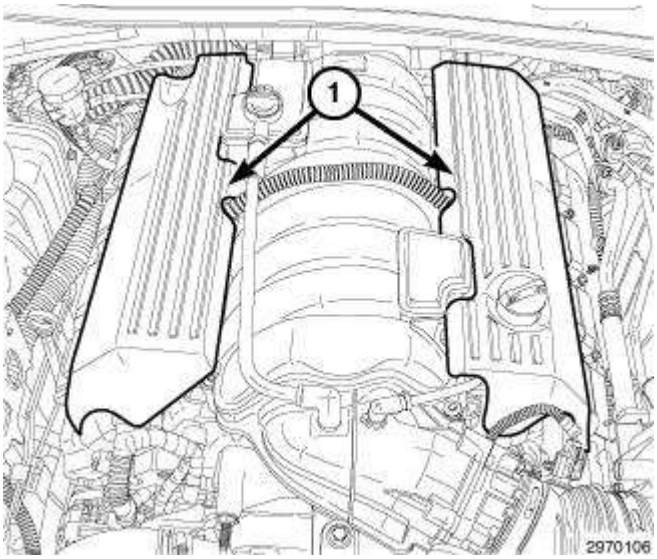

Fig. 81: Engine Covers
Courtesy of CHRYSLER GROUP, LLC

82. Install the engine covers (1) onto the ball studs.

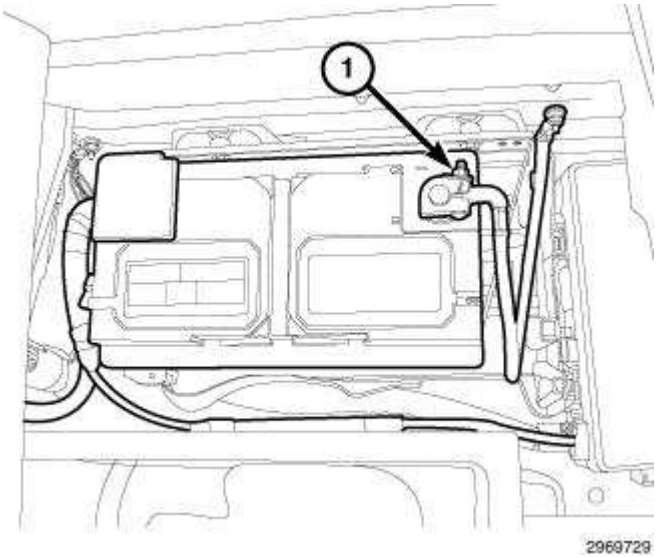

Fig. 82: Negative Battery Cable
Courtesy of CHRYSLER GROUP, LLC

83. Connect the negative battery cable (3).
84. Perform the Refrigerant System Charge procedure. Refer to **PLUMBING, STANDARD PROCEDURE** .
85. Start the engine and inspect for leaks.

SPECIAL TOOLS

SPECIAL TOOLS

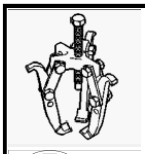	1023 - Puller (Originally Shipped In Kit Number(s) 8678.)
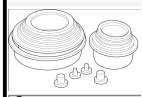	10368 - Set, Universal Protective Cap
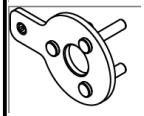	10386 - Holder, Vibration Damper
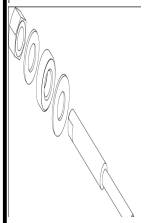	10387 - Installer, Vibration Damper
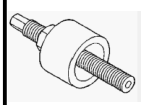	6871 - Installer, A/C Hub (Originally Shipped In Kit Number(s) 6896.)



7700 - Tester, Cooling System
(Originally Shipped In Kit Number(s) 7700-A.)

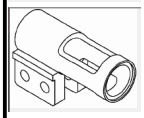

8464 - Adapter, Valve Spring
(Originally Shipped In Kit Number(s) 8664, 8665, 8665CC, 8702, 9577.)

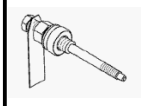

8512A - Installer, Damper
(Originally Shipped In Kit Number(s) 8283, 8527, 8575, 8575CC, 8660, 8661.)



8514 - Pins, Tensioner
(Originally Shipped In Kit Number(s) 8283, 8283CC, 8527, 8527CC, 8575, 8575CC, 9975.)

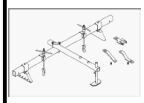

8534B - Fixture, Driveline Support
(Originally Shipped In Kit Number(s) 8534, 8534B, 8849, 9565.)



8984-UPD - Adapter, Engine Lift
(Originally Shipped In Kit Number(s) 9516, 9516-CAN, 9517, 9517-CAN, 9518, 9519.)

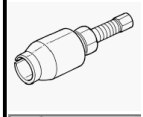

8984B - Fixture, Engine Lifting
(Originally Shipped In Kit Number(s) 8849CC, 9329, 9515, 9516, 9518, 9519, 9540, 9541, 9577.)

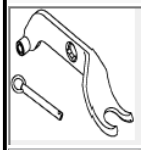

9065-3 - Adapter, Valve Spring Compressor
(Originally Shipped In Kit Number(s) 9516-CAN, 9517-CAN.)



9065C - Compressor, Valve Spring

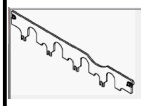

9070 - Retainer, Push Rod
(Originally Shipped In Kit Number(s) 8999, 8999CC, 9329, 9515, 9540, 9541, 9577.)

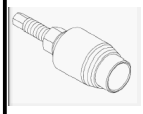

9071 - Remover, Seal
(Originally Shipped In Kit Number(s) 8999, 8999CC, 9329, 9515, 9540, 9541, 9577.)

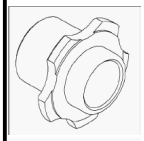

9072 - Installer, Seal
(Originally Shipped In Kit Number(s) 8999, 8999CC, 9329, 9515, 9540, 9541, 9577, 9975, 9976.)

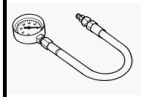

C-119 - Cylinder Indicator



C-3292A - Gauge, Pressure

C-3422-D - Compressor, Valve Spring

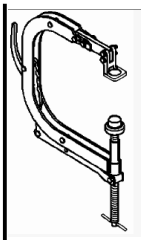 	C-3685-A - Bloc-Chek Kit

MDS SYSTEM

DESCRIPTION

DESCRIPTION

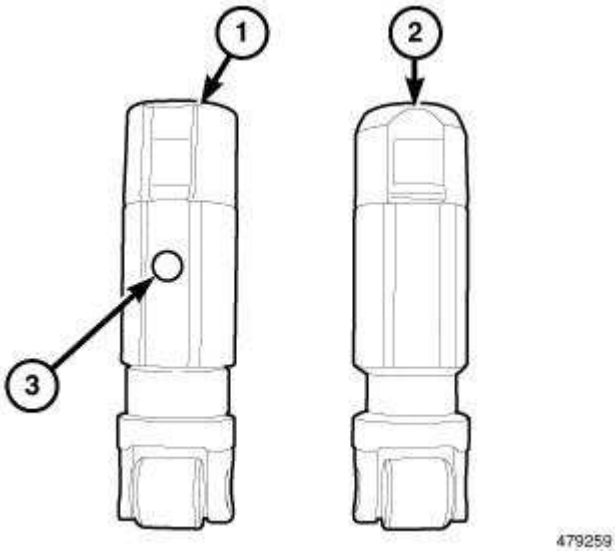

Fig. 83: MDS Lifter
Courtesy of CHRYSLER GROUP, LLC

The Multiple Displacement System (MDS) selectively deactivates cylinders 1, 4, 6 and 7 during steady speed, low acceleration and shallow grade climbing conditions to increase fuel economy.

The MDS can provide a 5 to 20% fuel economy benefit when operating in four-cylinder mode. Depending on driving habits and vehicle usage. For EPA rating purposes the fuel economy is 8 to 15% higher than if the engine was operating on eight-cylinders at all times.

The MDS deactivating lifter (1) can be distinguished from the non-MDS lifter (2) by the disconnecting pin (3) on the side of the MDS lifter.

MDS is integrated into the basic engine architecture requiring these additional components:

- Unique MDS camshaft
- 8 deactivating roller lifters
- 4 MDS control valve solenoids
- MDS control valve solenoid wiring harness
- Oil temperature sensor

OPERATION

OPERATION

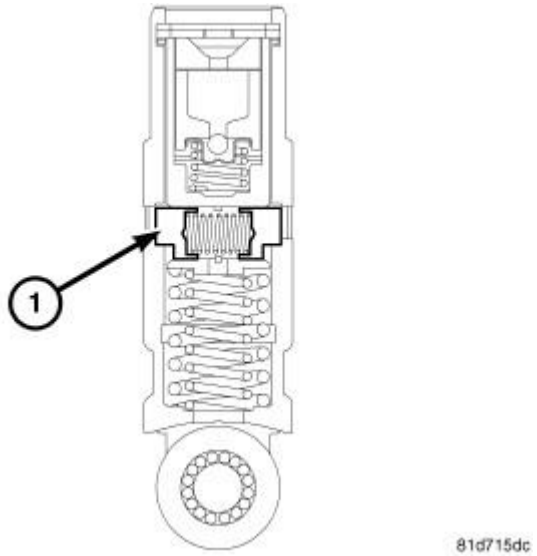

Fig. 84: MDS Lifter Cross-Section
Courtesy of CHRYSLER GROUP, LLC

The Multiple Displacement System (MDS) provides cylinder deactivation during steady speed, low acceleration and shallow grade climbing conditions to increase fuel economy. Both four and eight cylinder configurations have even firing intervals to provide smooth operation. The MDS selectively deactivates cylinders 1, 4, 6, and 7, to improve fuel economy. All deactivated cylinders have unique hydraulic lifters that collapse when deactivated to prevent the valves from opening. Engine oil pressure is used to activate and deactivate the valves. Oil is delivered through special oil passages drilled into the cylinder block. The MDS solenoid valves control the flow. When activated, pressurized oil pushes a latching pin on each MDS lifter which becomes a lost motion link. The base of the MDS lifter follows the camshaft while the top remains stationary. The MDS lifter is held in place against the pushrod by light spring pressure but unable to move because of the much higher force of the valve spring.

NOTE: It is critical to use the recommended oil viscosity in engines that use MDS.

Deactivation occurs during the compression stroke of each cylinder, after air and fuel enter the cylinder. Ignition occurs, but the combustion products remain trapped in the cylinder under high pressure, because the valves no longer open. No fuel/air enters or leaves during subsequent piston

strokes, this high pressure gas is repeatedly compressed and expanded like an air spring.

AIR INTAKE SYSTEM

AIR CLEANER

REMOVAL

REMOVAL

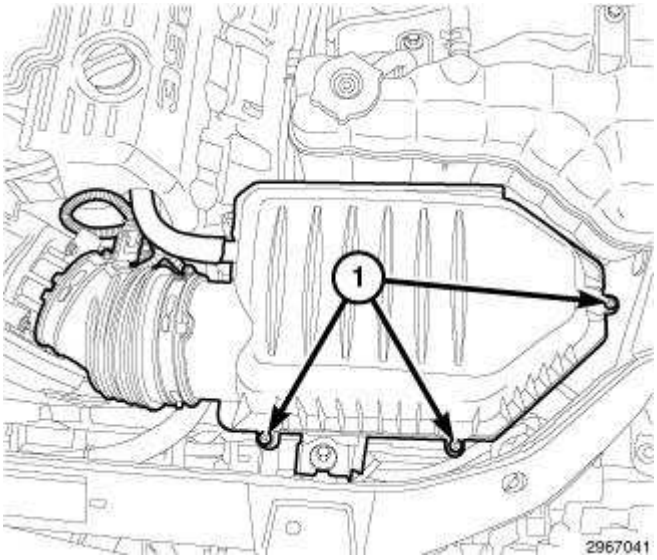

Fig. 85: Air Cleaner Housing Cover Retaining Screws
Courtesy of CHRYSLER GROUP, LLC

1. Remove the air cleaner housing cover retaining screws (1).

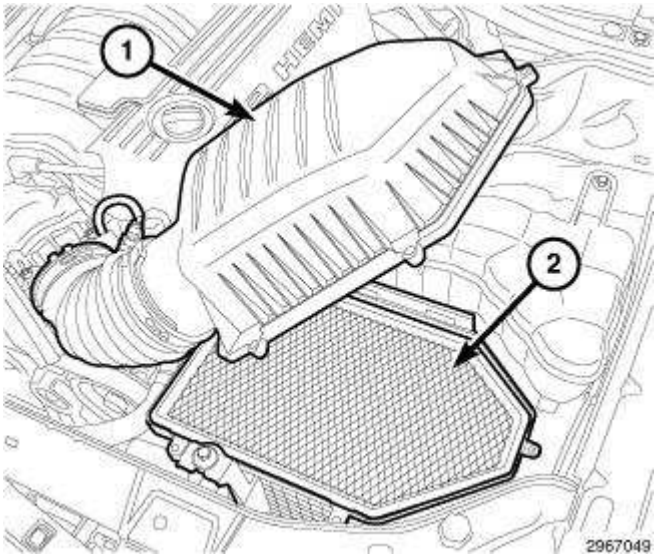

Fig. 86: Air Cleaner Housing Cover & Air Cleaner Element

Courtesy of CHRYSLER GROUP, LLC

2. Lift the air cleaner housing cover (1) while separating the locating tabs from the housing.
3. Remove air cleaner element (2) from the housing.
4. Clean the inside of air cleaner housing before replacing element.

INSTALLATION

INSTALLATION

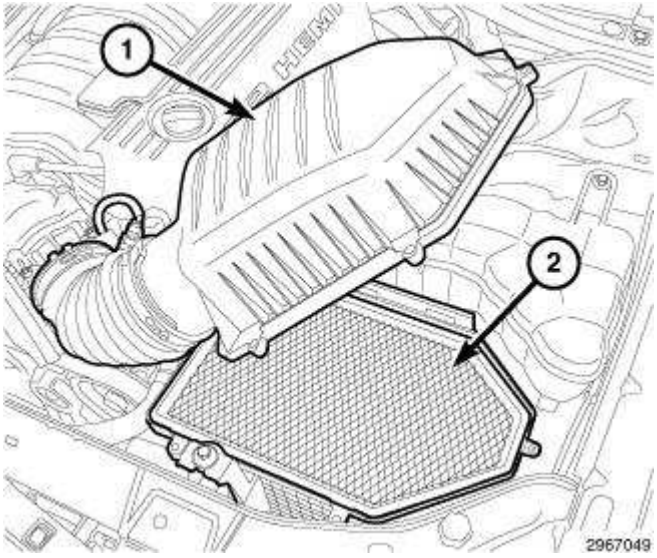

Fig. 87: Air Cleaner Housing Cover & Air Cleaner Element
Courtesy of CHRYSLER GROUP, LLC

1. Install the air cleaner element (2) into the housing.
2. Align the air cleaner housing cover (1) locating tabs into the housing while lowering the cover into position.

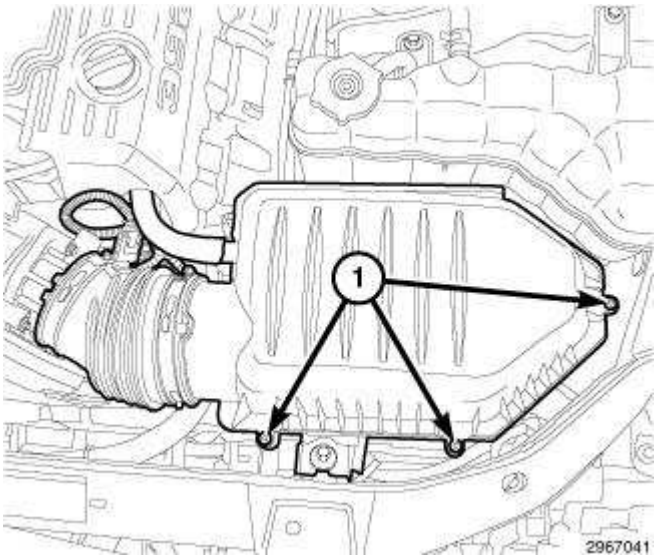

Fig. 88: Air Cleaner Housing Cover Retaining Screws
Courtesy of CHRYSLER GROUP, LLC

3. Install the air cleaner housing cover retaining screws (1) and tighten to 3 N.m (30 in. lbs.).

BODY, AIR CLEANER

REMOVAL

REMOVAL

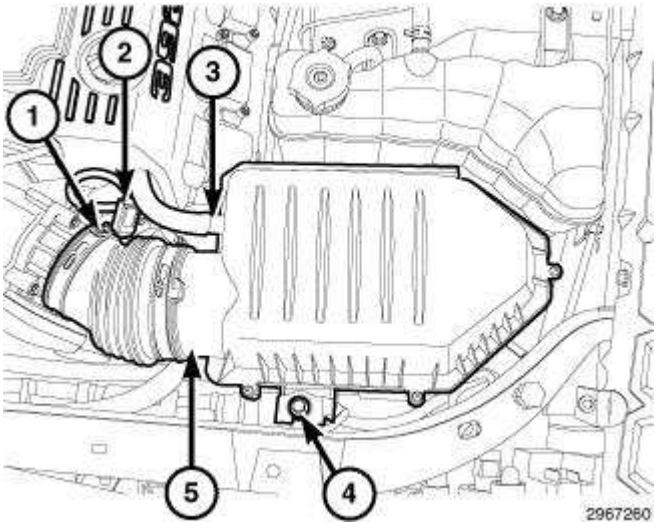

Fig. 89: Air Duct Retaining Clamp, Intake Air Temperature Sensor Electrical Connector, Makeup Air Hose, Bolt & Air Cleaner Housing
Courtesy of CHRYSLER GROUP, LLC

1. Loosen the air duct retaining clamp (1) at the throttle body.

2. Disconnect the intake air temperature sensor electrical connector (2).
3. Remove the makeup air hose (3) at the air cleaner housing.
4. Remove the air cleaner housing retaining bolt (4).
5. While lifting up the air cleaner housing (5), slide the air duct off the throttle body and remove the air cleaner housing from the vehicle.

INSTALLATION

INSTALLATION

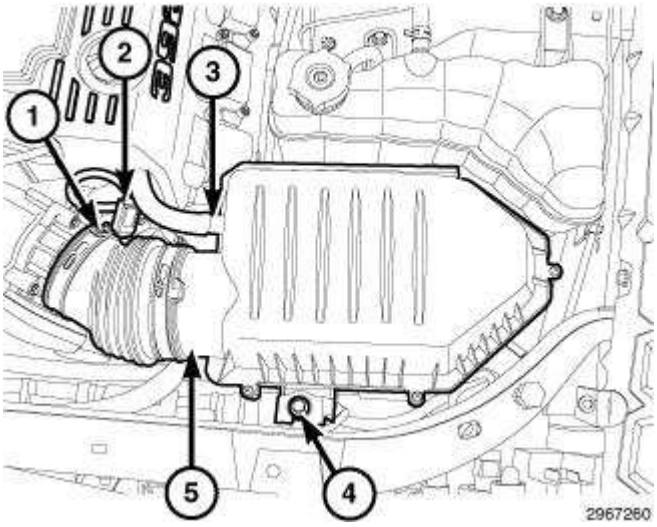

Fig. 90: Air Duct Retaining Clamp, Intake Air Temperature Sensor Electrical Connector, Makeup Air Hose, Bolt & Air Cleaner Housing
Courtesy of CHRYSLER GROUP, LLC

1. While sliding the air duct onto the throttle body, lower the air cleaner housing (5) into position and align the locating pin on the bottom of the housing.
2. Install the air cleaner housing retaining bolt (4) and tighten to 5 N.m (44 in. lbs.).
3. Install the makeup air hose (3) at the air cleaner housing.
4. Connect the intake air temperature sensor electrical connector (2).
5. Position the air duct retaining clamp (1) at the throttle body and tighten to 3 N.m (30 in. lbs.).

CYLINDER HEAD

OPERATION

OPERATION

The cylinder head closes the combustion chamber allowing the pistons to compress the air fuel mixture to the correct ratio for ignition. The valves located in the cylinder head open and close to either allow clean air into the combustion chamber or to allow the exhaust gases out, depending on

the stroke of the engine.

DIAGNOSIS AND TESTING

DIAGNOSIS AND TESTING - CYLINDER HEAD GASKET FAILURE

A cylinder head gasket leak can be located between adjacent cylinders or between a cylinder and the adjacent water jacket.

- Possible indications of the cylinder head gasket leaking between adjacent cylinders are:
-
    - Loss of engine power
    - Engine misfiring
    - Poor fuel economy
- Possible indications of the cylinder head gasket leaking between a cylinder and an adjacent water jacket are:
-
    - Engine overheating
    - Loss of coolant
    - Excessive steam (white smoke) emitting from exhaust
    - Coolant foaming

CYLINDER-TO-CYLINDER LEAKAGE TEST

To determine if an engine cylinder head gasket is leaking between adjacent cylinders, follow the procedures in **CYLINDER COMPRESSION PRESSURE LEAKAGE** . An engine cylinder head gasket leaking between adjacent cylinders will result in approximately a 50-70% reduction in compression pressure.

CYLINDER-TO-WATER JACKET LEAKAGE TEST

> **WARNING: Use extreme caution when the engine is operating with coolant pressure cap removed. Failure to follow this warning may result in serious or fatal injury.**

VISUAL TEST METHOD

With the engine cool, remove the coolant pressure cap. Start the engine and allow it to warm up until thermostat opens.

If a large combustion/compression pressure leak exists, bubbles will be visible in the coolant.

COOLING SYSTEM TESTER METHOD

> **WARNING: With cooling system tester in place, pressure will build up fast. Excessive**

pressure built up, by continuous engine operation, must be released to a safe pressure level. Never permit pressure to exceed 138 kPa (20 psi). Failure to follow this warning may result in serious or fatal injury.

Install Cooling System Tester (special tool #7700, Tester, Cooling System) or equivalent to pressure cap neck. Start the engine and observe the tester's pressure gauge. If gauge pulsates with every power stroke of a cylinder a combustion pressure leak is evident.

CHEMICAL TEST METHOD

Combustion leaks into the cooling system can also be checked by using Bloc-Chek Kit (special tool #C-3685-A, Bloc-Chek Kit) or equivalent. Perform test following the procedures supplied with the tool kit.

REMOVAL

REMOVAL

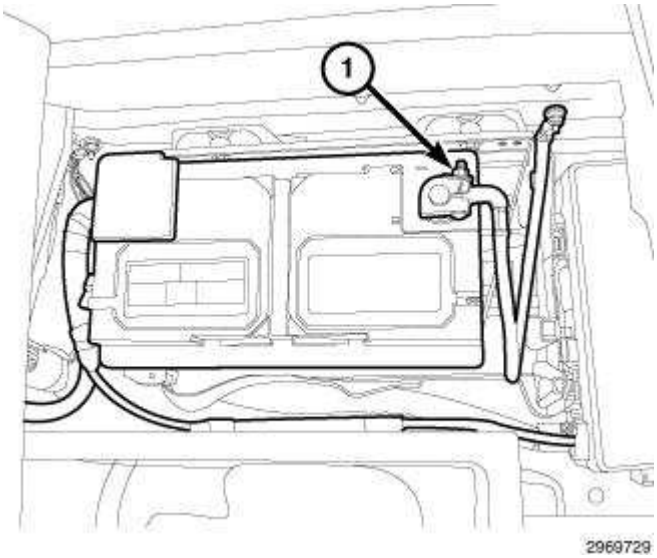

Fig. 91: Negative Battery Cable
Courtesy of CHRYSLER GROUP, LLC

1. Perform the fuel system pressure release procedure. Refer to **FUEL DELIVERY, GAS, STANDARD PROCEDURE** .
2. Disconnect the negative battery cable (1).

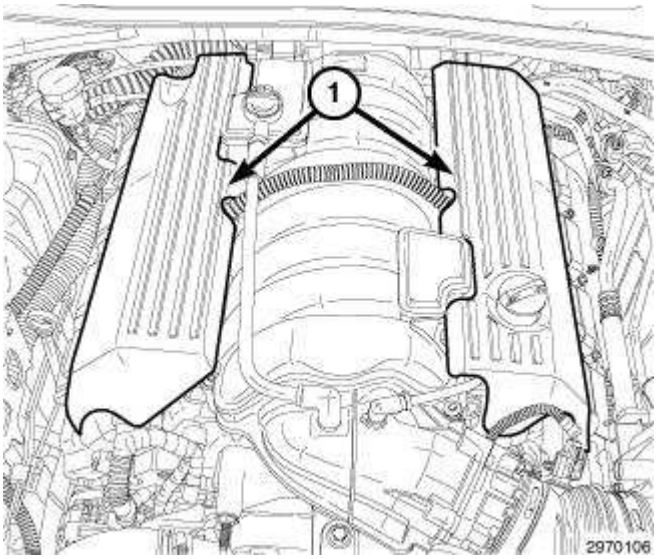

Fig. 92: Engine Covers
Courtesy of CHRYSLER GROUP, LLC

3. Remove the engine covers (1).
4. Remove the intake manifold. Refer to **MANIFOLD, INTAKE, REMOVAL**.
5. Drain the cooling system. Refer to **STANDARD PROCEDURE** .

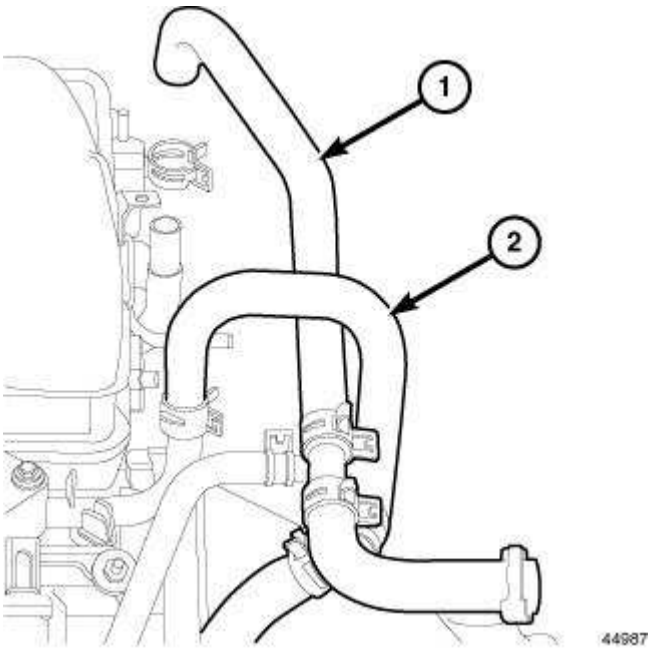

Fig. 93: Heater Hose Supply
Courtesy of CHRYSLER GROUP, LLC

6. Disconnect the heater hoses (1, 2).

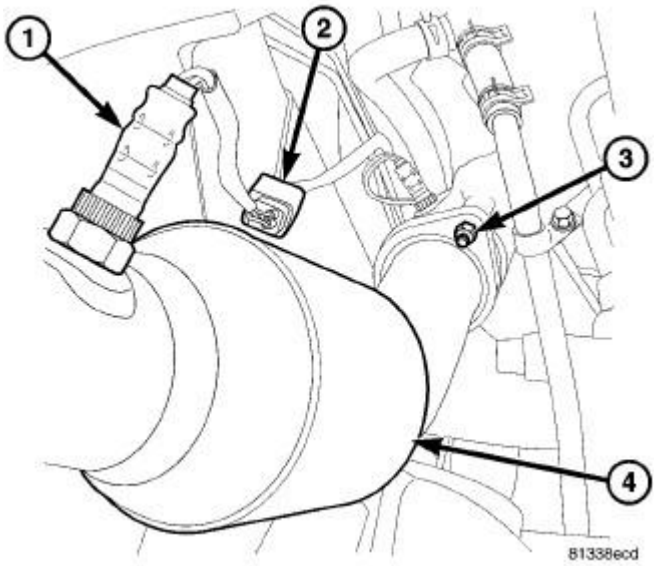

Fig. 94: Oxygen Sensor, Oxygen Sensor Connector, Ball Flange Nut & LH Catalytic Converter
Courtesy of CHRYSLER GROUP, LLC

NOTE: Left side shown in illustration, right side similar.

7. Remove the catalytic converters. Refer to **CONVERTER, CATALYTIC, REMOVAL** .
8. Lower the vehicle.

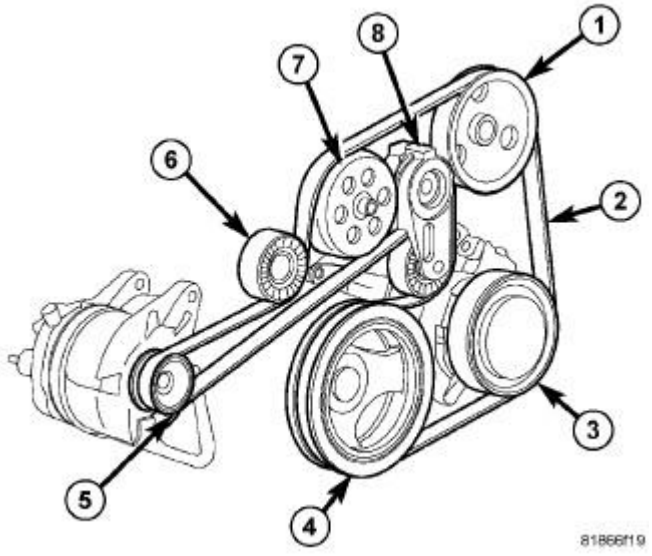

Fig. 95: Accessory Drive Belt Routing, Tensioner & Pulleys
Courtesy of CHRYSLER GROUP, LLC

CAUTION: Do not let the tensioner arm snap back to the freearm position, sever

damage may occur to the tensioner.

9. Rotate the accessory drive belt tensioner (8) clockwise until it contacts it's stop. Remove the accessory drive belt (2), then slowly rotate the tensioner into the freearm position. Refer to **BELT, SERPENTINE, REMOVAL** .

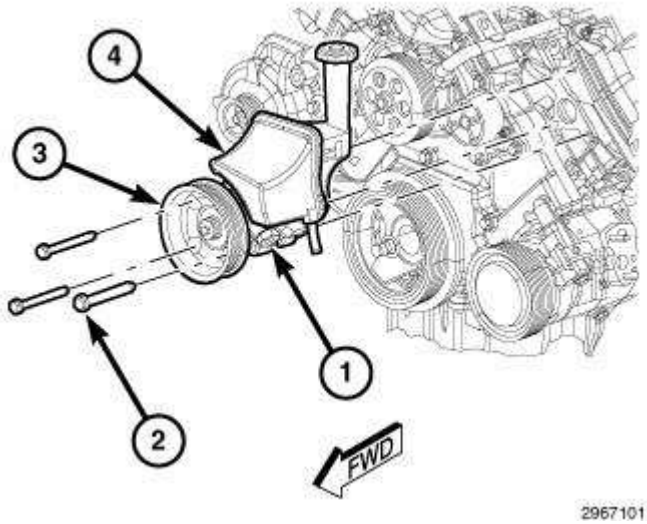

Fig. 96: Power Steering Reservoir, Pump, Pulley & Bolts
Courtesy of CHRYSLER GROUP, LLC

NOTE: It is not necessary to disconnect the power steering pump hoses from the pump, for power steering pump removal.

10. Remove the three power steering pump (1) retaining bolts (2) through the access holes in the pulley (3).
11. Remove the power steering pump (1) and secure out of the way.

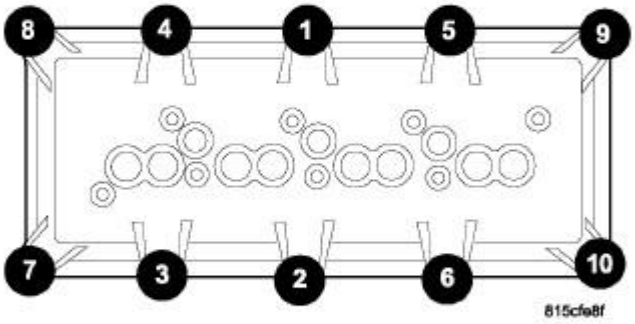

Fig. 97: Cylinder Head Cover Removal/Tightening Sequence
Courtesy of CHRYSLER GROUP, LLC

12. Using the sequence shown in illustration, remove the cylinder head cover retaining bolts and remove cover. Refer to **COVER(S), CYLINDER HEAD, REMOVAL**.
13. If removing the right cylinder head, remove the engine oil dip stick tube retaining nut at the exhaust manifold and remove the oil dip stick tube.

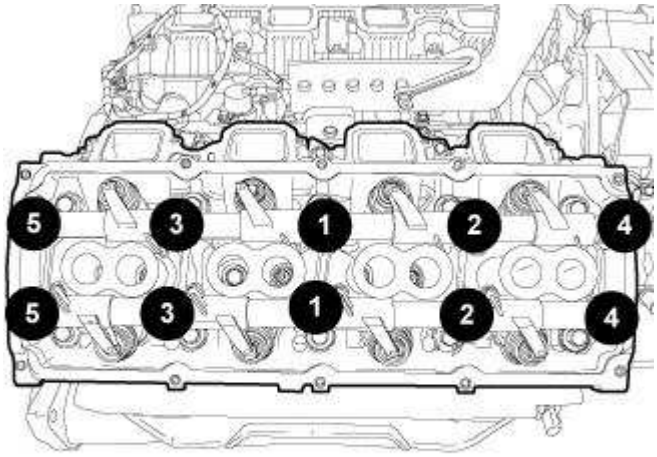

Fig. 98: Rocker Shafts Retaining Bolt Removal & Tightening Sequence
Courtesy of CHRYSLER GROUP, LLC

CAUTION: Pushrods and rocker arm assemblies must be installed in their

original locations or engine damage could result.

NOTE: **Make sure to identify the original location of the rocker arms and push rods for correct assembly.**

14. Remove the rocker arms and pushrods. Refer to **ROCKER ARM, VALVE, REMOVAL**.

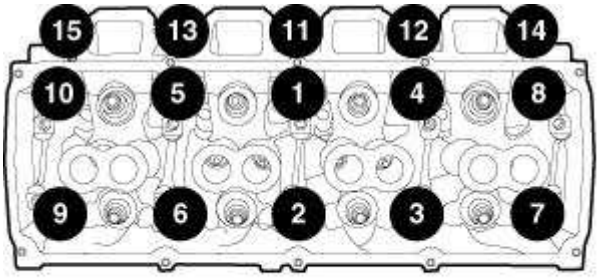

Fig. 99: Cylinder Head Bolt Removal & Tightening Sequence
Courtesy of CHRYSLER GROUP, LLC

NOTE: **Left side shown in illustration, right side similar.**

NOTE: **It is not necessary to remove the exhaust manifolds to remove the cylinder heads.**

15. Using the sequence shown in illustration, remove the cylinder head bolts and remove the cylinder head(s).

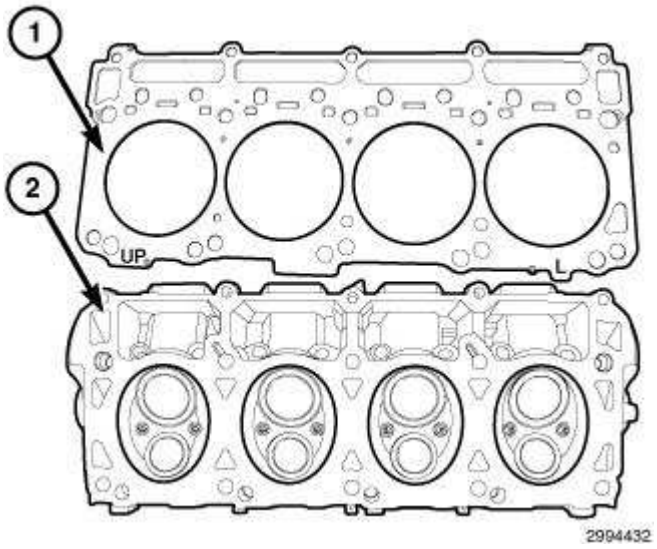

Fig. 100: Cylinder Head Gasket & Cylinder Head

Courtesy of CHRYSLER GROUP, LLC

NOTE: Left side shown in illustration, right side similar.

16. Discard the cylinder head gasket (1).
17. Inspect and clean the cylinder head (2) mating surface.

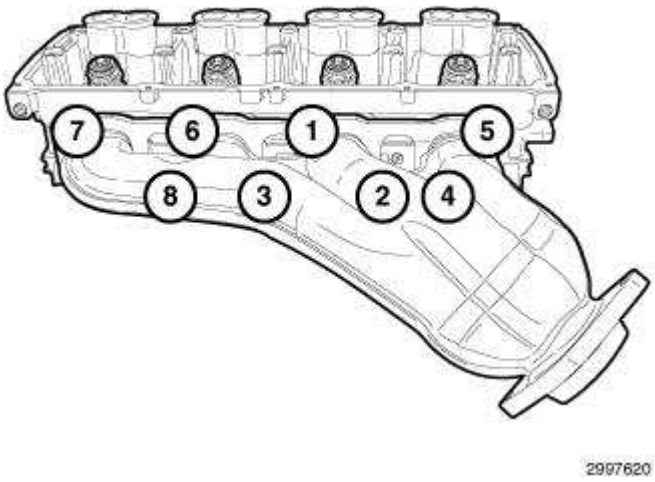

Fig. 101: Exhaust Manifold Removal/Tightening Sequence
Courtesy of CHRYSLER GROUP, LLC

NOTE: Left side shown in illustration, right side similar.

18. If necessary, using the sequence shown in illustration, remove the exhaust manifold bolts and remove the manifold.

CLEANING

CLEANING

Clean all surfaces of the cylinder block and cylinder heads.

Clean the cylinder block front and rear gasket surfaces using a suitable solvent.

INSPECTION

INSPECTION

1. Inspect the cylinder head for flatness using a straightedge and a feeler gauge. If tolerances exceed 0.0508 mm (0.002 in.) replace the cylinder head.
2. Inspect the valve seats for damage. Service the valve seats as necessary.

3. Inspect the valve guides for wear, cracks or looseness. If any of these conditions exist, replace the cylinder head.
4. Inspect push rods. Replace worn or bent push rods.

INSTALLATION

INSTALLATION

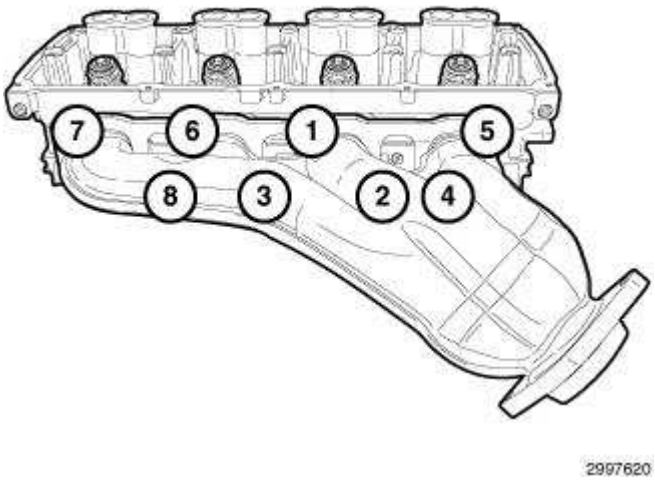

Fig. 102: Exhaust Manifold Removal/Tightening Sequence
Courtesy of CHRYSLER GROUP, LLC

NOTE: Left side shown in illustration, right side similar.

1. If removed, using a new exhaust manifold gasket, position the exhaust manifold and install the retaining bolts finger tight.
2. Using the sequence shown in illustration, tighten the retaining bolts to 31 N.m (23 ft. lbs.).

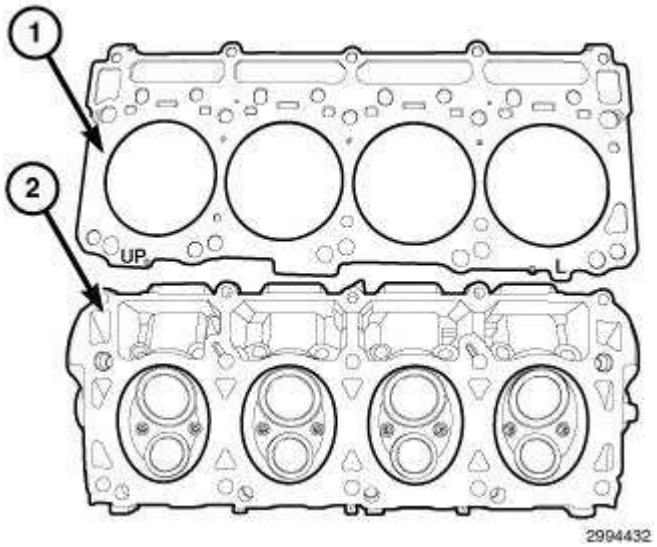

Fig. 103: Cylinder Head Gasket & Cylinder Head
Courtesy of CHRYSLER GROUP, LLC

CAUTION: The cylinder head gaskets (1) are not interchangeable between left and right sides. They are marked "UP" to indicate direction to face up and "L" or "R" to indicate left side or right side of engine block.

NOTE: Left side shown in illustration, right side similar.

3. Clean all sealing surfaces of the engine block and the cylinder head(s) (2).

NOTE: Rotate crankshaft 45° so that all pistons are 1/2 the way down the cylinder bore to avoid piston to valve contact.

4. Position the new cylinder head gasket(s) (1) onto the engine block.
5. Position the cylinder head(s) (2) onto the engine block.
6. Install the cylinder head bolts finger tight.

CAUTION: The 6.4L engine uses a unique 4 layer steel head gasket that must be compressed evenly and completely across the deck surface for proper sealing. The tightening sequence shown in the following illustration must be followed to ensure all layers are compressed before applying the additional 90 degree turn.

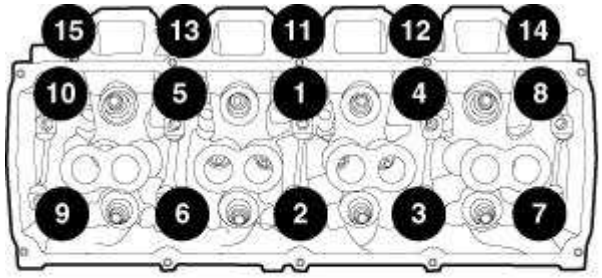

88745

Fig. 104: Cylinder Head Bolt Removal & Tightening Sequence
Courtesy of CHRYSLER GROUP, LLC

7. Using the sequence below, tighten the retaining bolts.
   a. Using the sequence shown in illustration, tighten bolts 1-10 to 34 N.m (25 ft. lbs.).
   b. Using the sequence shown in illustration, tighten bolts 11-15 to 20 N.m (15 ft. lbs.).
   c. Using the sequence shown in illustration, tighten bolts 1-10 to 54 N.m (40 ft. lbs.).
   d. Using the sequence shown in illustration, verify bolts 11-15 are 20 N.m (15 ft. lbs.).
   e. Using the sequence shown in illustration, tighten bolts 1-10 to 61 N.m (45 ft. lbs.).
   f. Using the sequence shown in illustration, rotate bolts 1-10 an additional 90 degrees.
   g. Using the sequence shown in illustration, tighten bolts 11-15 to 34 N.m (25 ft. lbs.).

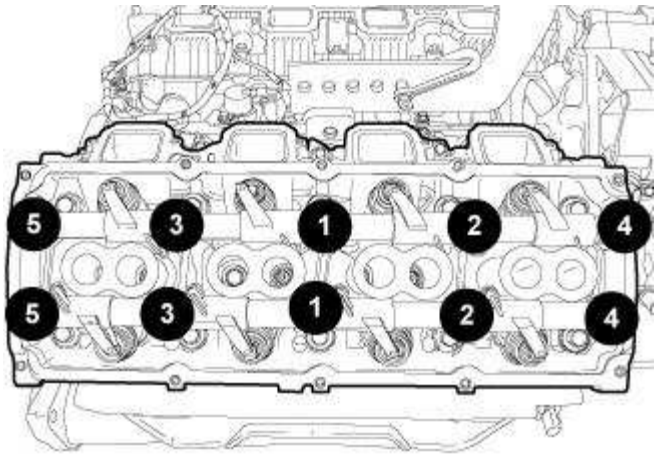

921225

Fig. 105: Rocker Shafts Retaining Bolt Removal & Tightening Sequence
Courtesy of CHRYSLER GROUP, LLC

CAUTION: Pushrods and rocker arm assemblies must be installed in their original locations or engine damage could result.

8. Install the pushrods and rocker arms. Refer to **ROCKER ARM, VALVE, INSTALLATION**.
9. If removed, install the oil dip stick tube and tighten the retaining nut at the exhaust manifold.

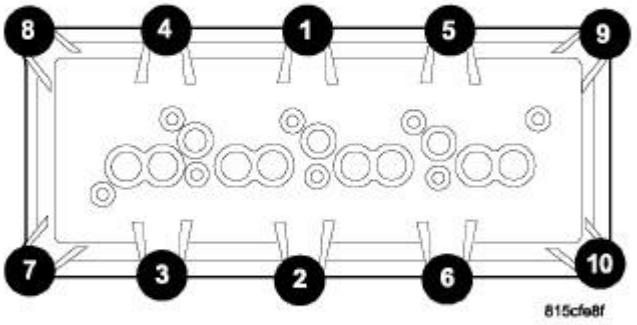

Fig. 106: Cylinder Head Cover Removal/Tightening Sequence
Courtesy of CHRYSLER GROUP, LLC

10. Position the cylinder head covers, using the sequence shown in illustration, tighten the cylinder head cover bolts to 8 N.m (70 lbs in.). Refer to **COVER(S), CYLINDER HEAD, INSTALLATION**.

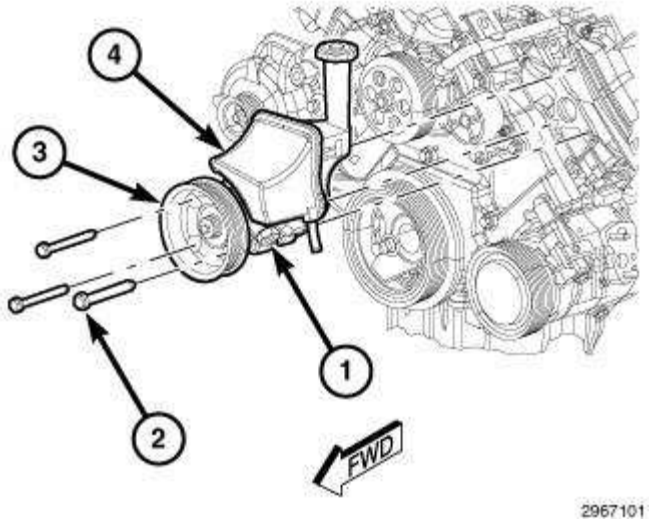

Fig. 107: Power Steering Reservoir, Pump, Pulley & Bolts
Courtesy of CHRYSLER GROUP, LLC

11. Install the power steering pump. Refer to **PUMP, INSTALLATION** .

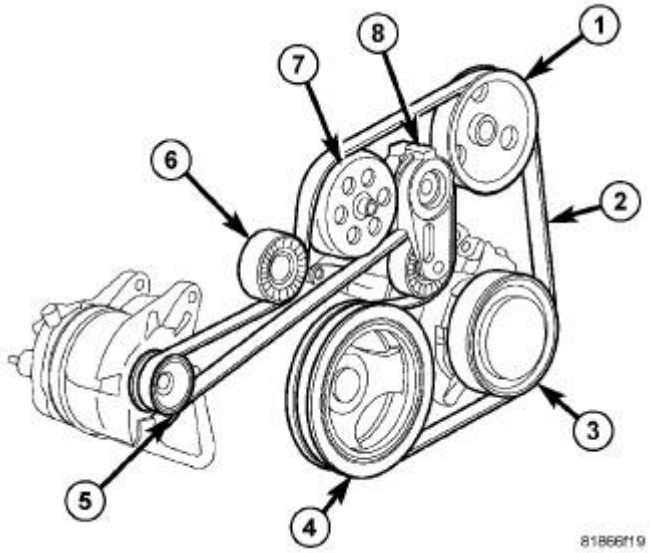

Fig. 108: Accessory Drive Belt Routing, Tensioner & Pulleys
Courtesy of CHRYSLER GROUP, LLC

CAUTION: Do not let the tensioner arm snap back to the freearm position, sever damage may occur to the tensioner.

12. Rotate the accessory drive belt tensioner (8) clockwise until it contacts it's stop, install the accessory drive belt (2), then slowly release the tensioner into position. Refer to **BELT, SERPENTINE, INSTALLATION** .

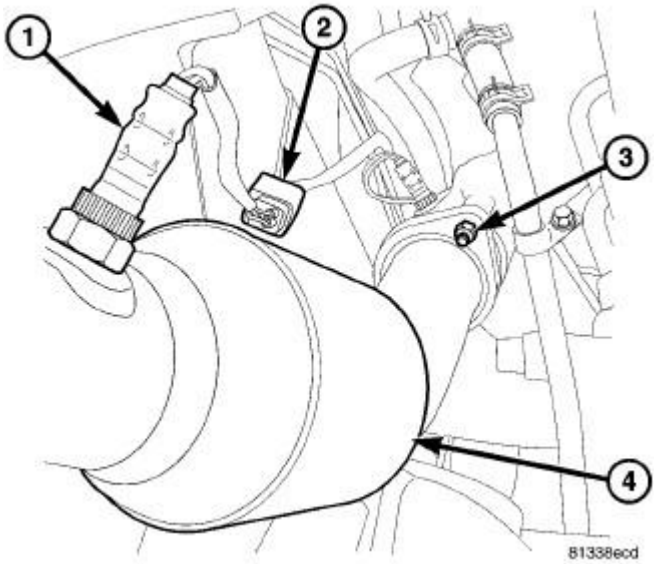

Fig. 109: Oxygen Sensor, Oxygen Sensor Connector, Ball Flange Nut & LH Catalytic

Converter
Courtesy of CHRYSLER GROUP, LLC

NOTE: Left side shown in illustration, right side similar.

13. Raise and support the vehicle.
14. Install the catalytic converters. Refer to **CONVERTER, CATALYTIC, INSTALLATION** .

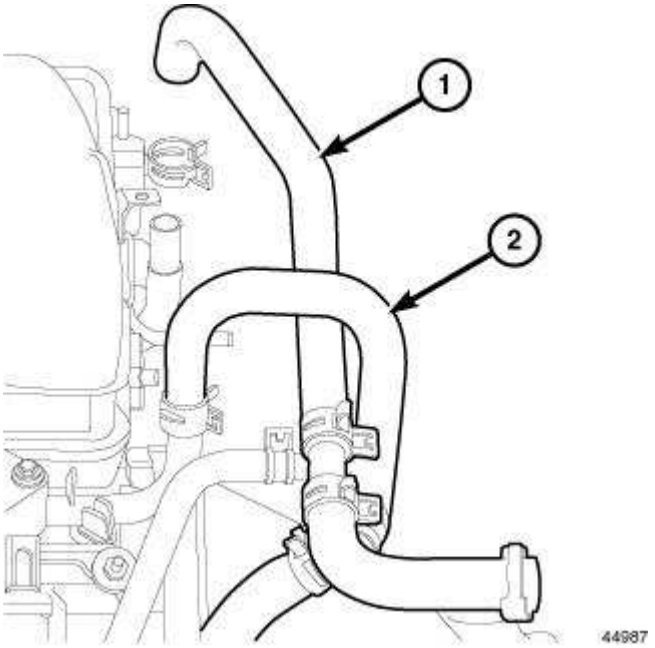

Fig. 110: Heater Hose Supply
Courtesy of CHRYSLER GROUP, LLC

15. Lower the vehicle.
16. Connect the heater hoses (1, 2).
17. Install the intake manifold and throttle body as an assembly. Refer to **MANIFOLD, INTAKE, INSTALLATION**.
18. Connect the fuel supply line.

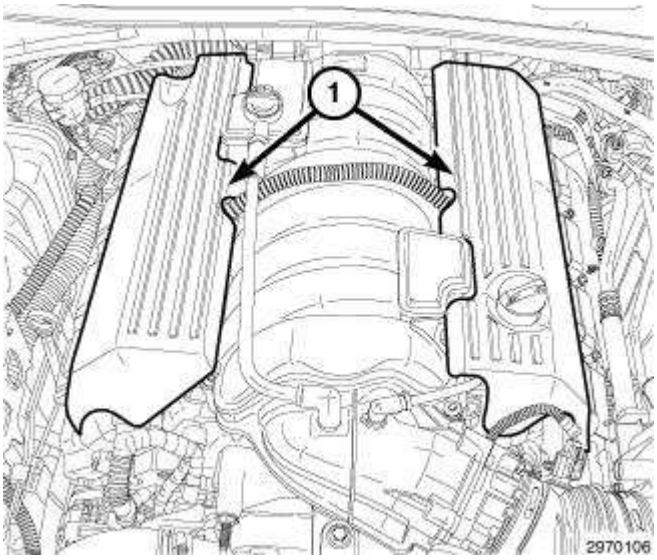

Fig. 111: Engine Covers
Courtesy of CHRYSLER GROUP, LLC

19. Install the engine covers (1).

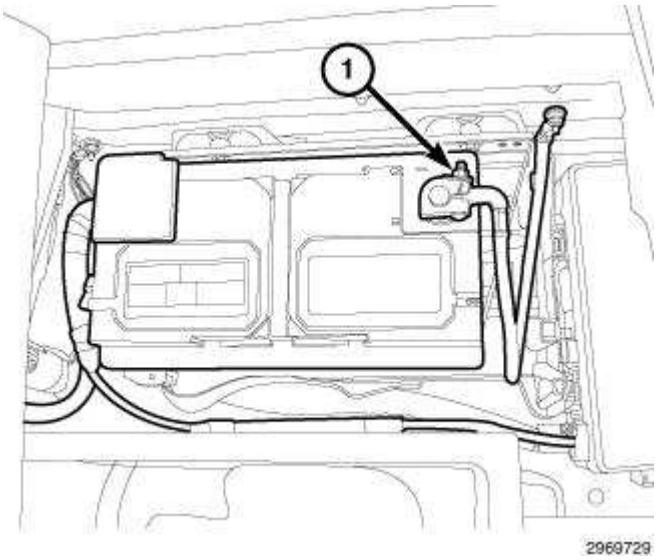

Fig. 112: Negative Battery Cable
Courtesy of CHRYSLER GROUP, LLC

20. Fill cooling system. Refer to **STANDARD PROCEDURE** .
21. Connect the negative battery cable (1).
22. Start engine check for leaks.

COVER(S), CYLINDER HEAD

REMOVAL

REMOVAL

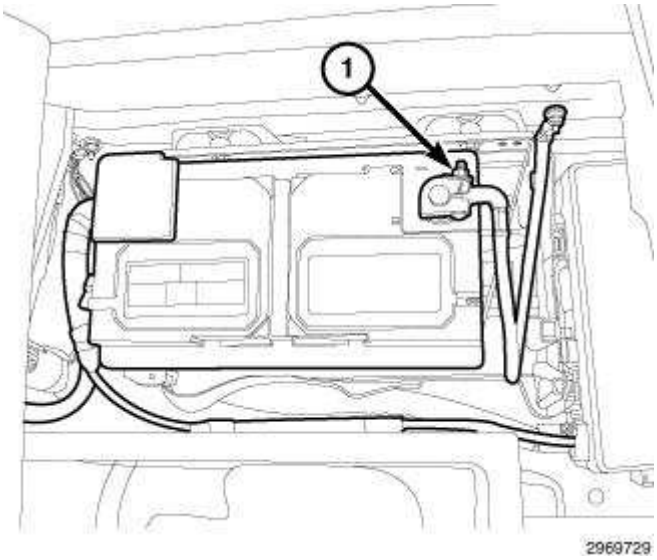

Fig. 113: Negative Battery Cable
Courtesy of CHRYSLER GROUP, LLC

1. Disconnect the negative battery cable (1).

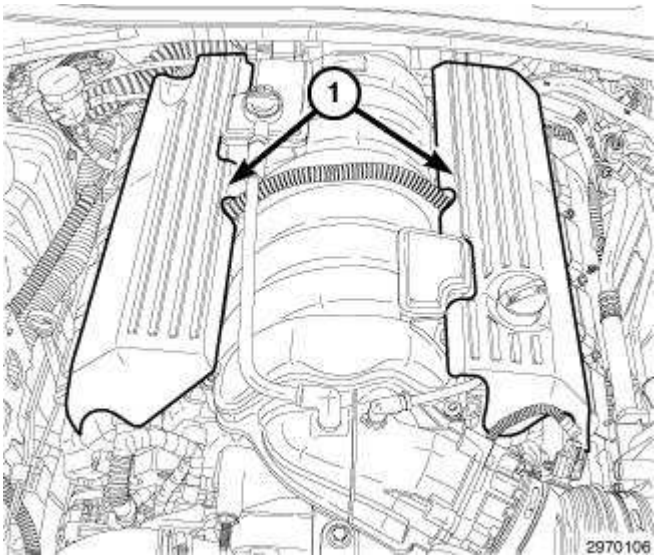

Fig. 114: Engine Covers
Courtesy of CHRYSLER GROUP, LLC

2. Remove the engine covers (1).

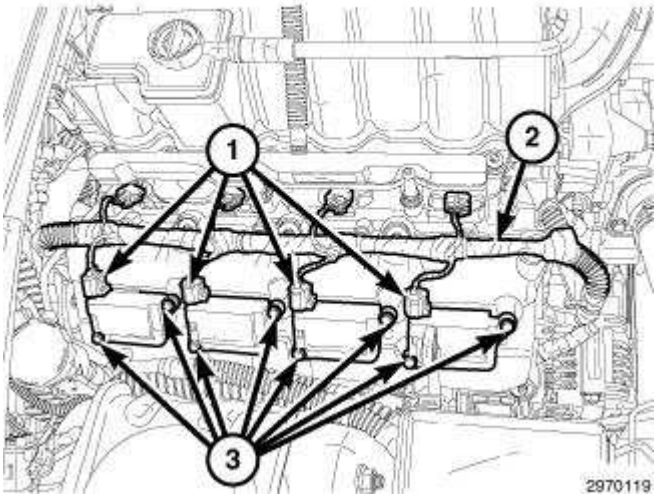

Fig. 115: Ignition Coil Electrical Connectors, Harness & Bolts
Courtesy of CHRYSLER GROUP, LLC

NOTE: Right side shown in illustration, left side similar.

3. Disconnect the ignition coil electrical connectors (1).
4. Position the electrical harness (2) aside.
5. Remove the ignition coil retaining bolts (3).

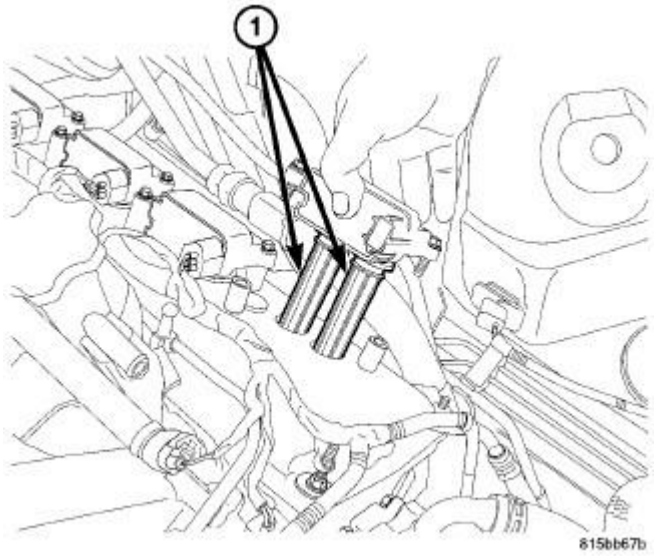

Fig. 116: Removing/Installing Ignition Coil
Courtesy of CHRYSLER GROUP, LLC

6. Remove the ignition coils (1).

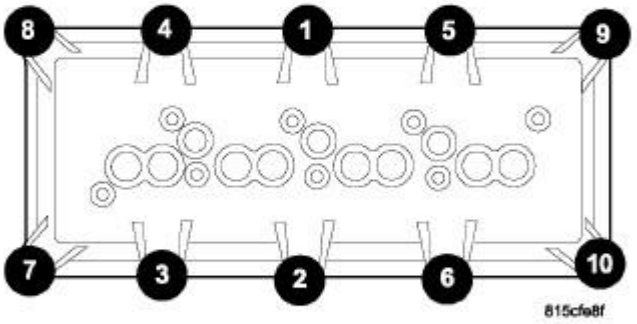

Fig. 117: Cylinder Head Cover Removal/Tightening Sequence
Courtesy of CHRYSLER GROUP, LLC

7. Using the sequence shown in illustration, remove the cylinder head cover retaining bolts.

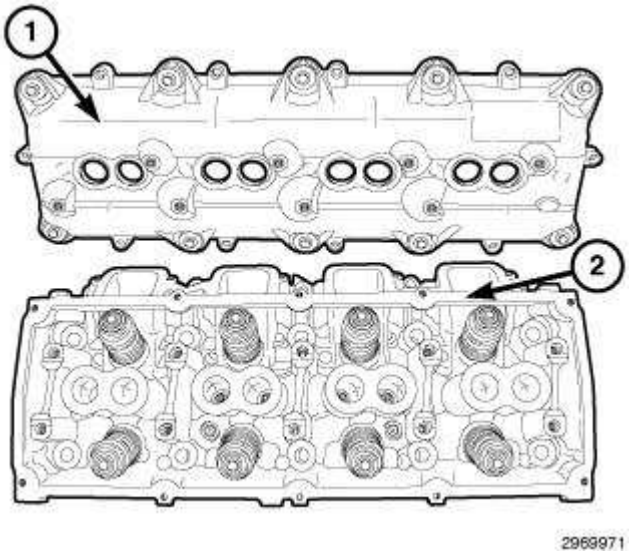

Fig. 118: Cylinder Head & Cover
Courtesy of CHRYSLER GROUP, LLC

8. Remove the cylinder head cover (1).
9. Clean the sealing surface of the cylinder head (2).

NOTE: The cylinder head cover gasket may be used again, provided no cuts, tears, or

deformation have occurred.

INSTALLATION

INSTALLATION

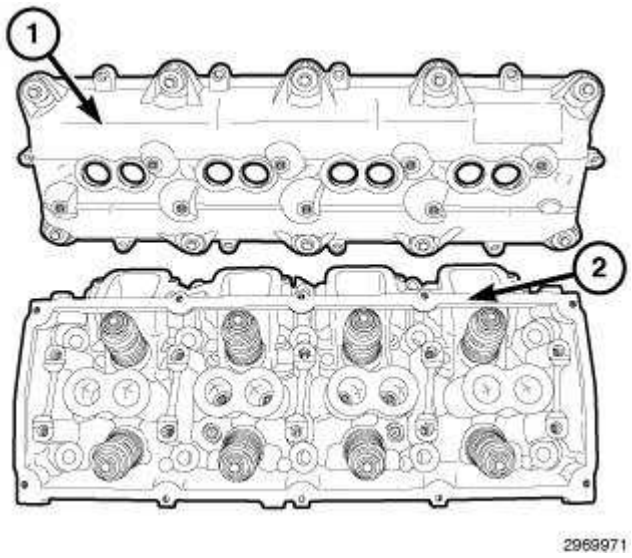

Fig. 119: Cylinder Head & Cover
Courtesy of CHRYSLER GROUP, LLC

CAUTION: Do not use harsh cleaners to clean the cylinder head covers. Severe damage to covers may occur.

CAUTION: Do not allow other components including the wire harness to rest on or against the engine cylinder head cover. Prolonged contact with other objects may wear a hole in the cylinder head cover.

NOTE: The cylinder head cover gasket may be used again, provided no cuts, tears, or deformation have occurred.

1. Clean the cylinder head cover (1) and the sealing surface of the cylinder head (2). Inspect and replace gasket if necessary.
2. Install the cylinder head cover and hand start all fasteners.

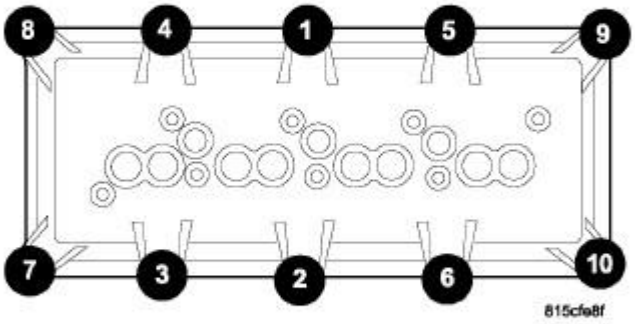

Fig. 120: Cylinder Head Cover Removal/Tightening Sequence
Courtesy of CHRYSLER GROUP, LLC

3. Using the sequence shown in illustration, tighten the cylinder head cover bolts to 8 N.m (70 lbs in.).

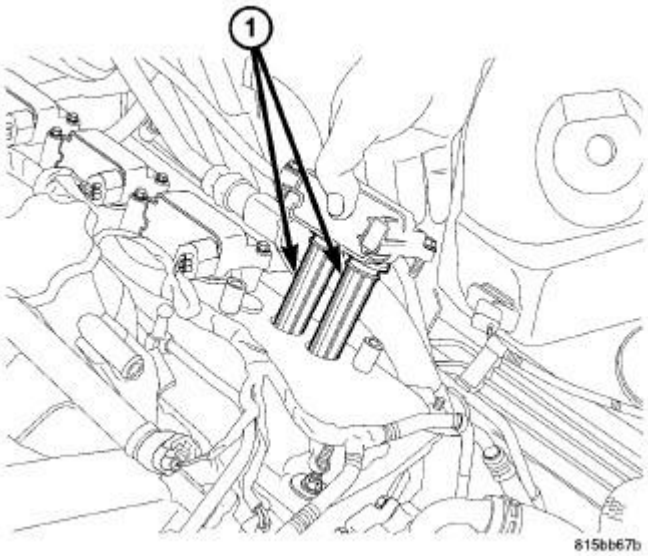

Fig. 121: Removing/Installing Ignition Coil
Courtesy of CHRYSLER GROUP, LLC

4. Before installing the ignition coils, apply dielectric grease to the inside of the spark plug boots (1).

5. Install the ignition coils.

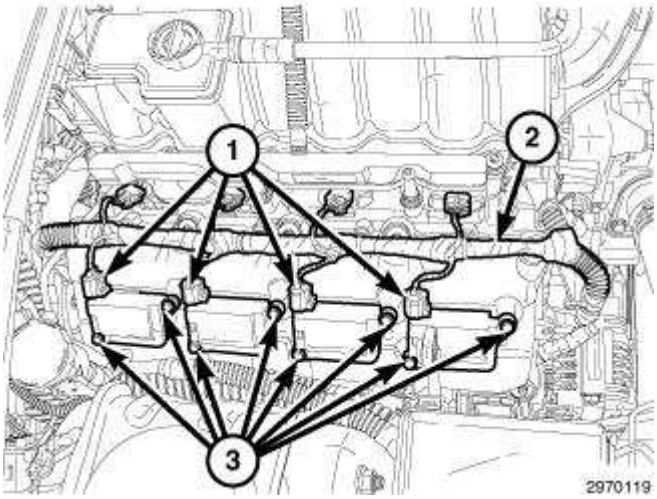

Fig. 122: Ignition Coil Electrical Connectors, Harness & Bolts
Courtesy of CHRYSLER GROUP, LLC

NOTE: Right side shown in illustration, left side similar.

6. Tighten the ignition coil retaining bolts (3) to 7 N.m (62 in. lbs.).
7. Position the electrical harness (2).
8. Connect the ignition coil electrical connectors (1).

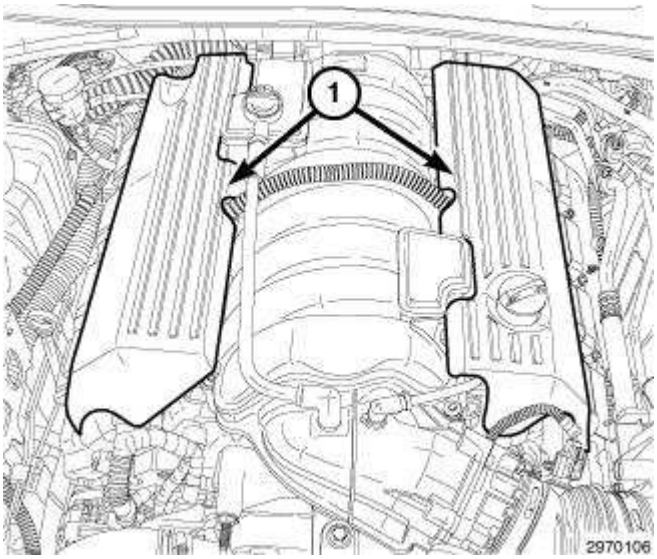

Fig. 123: Engine Covers
Courtesy of CHRYSLER GROUP, LLC

9. Install the engine covers (1).

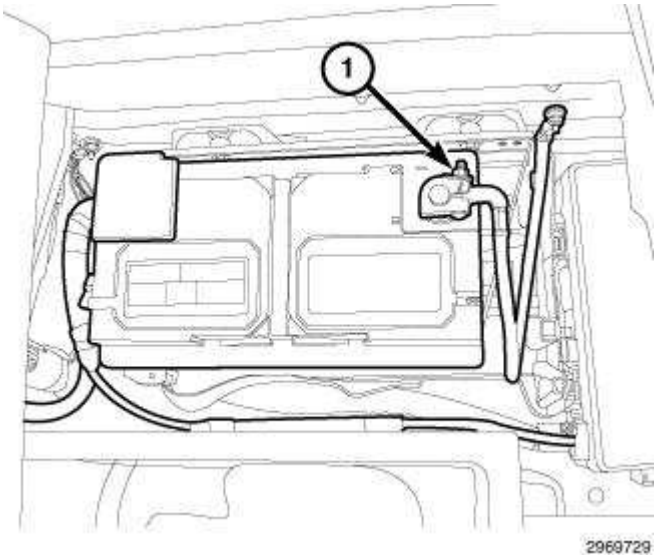

Fig. 124: Negative Battery Cable
Courtesy of CHRYSLER GROUP, LLC

10. Connect the negative battery cable.

ROCKER ARM, VALVE

REMOVAL

REMOVAL

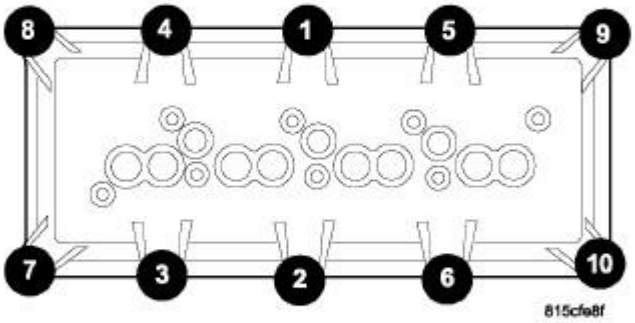

Fig. 125: Cylinder Head Cover Removal/Tightening Sequence
Courtesy of CHRYSLER GROUP, LLC

1. Remove the cylinder head cover. Refer to **COVER(S), CYLINDER HEAD, REMOVAL**.

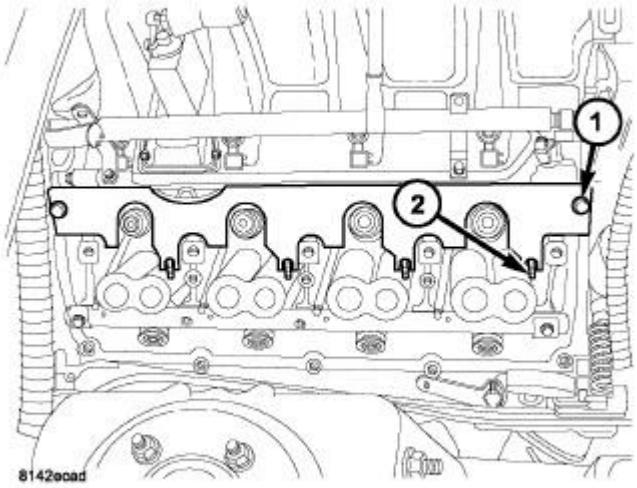

Fig. 126: Pushrod Retaining Plate
Courtesy of CHRYSLER GROUP, LLC

2. Install Push Rod Retainer (special tool #9070, Retainer, Push Rod) (1).

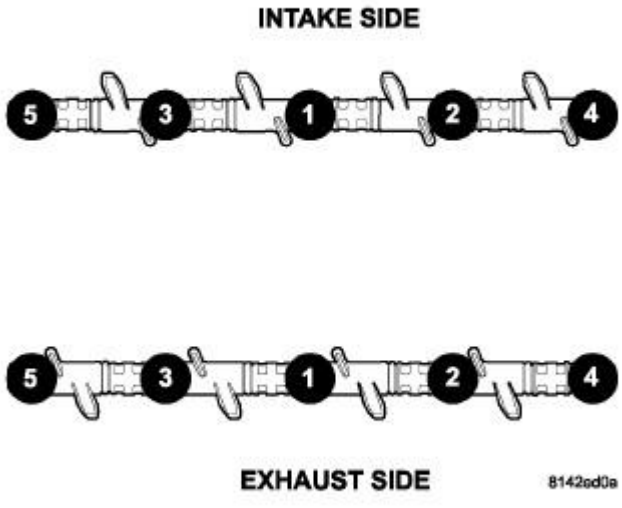

Fig. 127: Rocker Shaft Removal/Tightening Sequence

Courtesy of CHRYSLER GROUP, LLC

3. Using the sequence shown in illustration, loosen the rocker shaft assemblies.

CAUTION: The rocker shaft assemblies are not interchangeable between intake and exhaust. The intake rocker arms are marked with an "I".

4. Remove the rocker shaft assemblies. Note the location for reassembly.

CAUTION: The longer pushrods are for the exhaust side, and the shorter pushrods are for intake side.

5. Remove the pushrods. Note the pushrod location for reassembly.

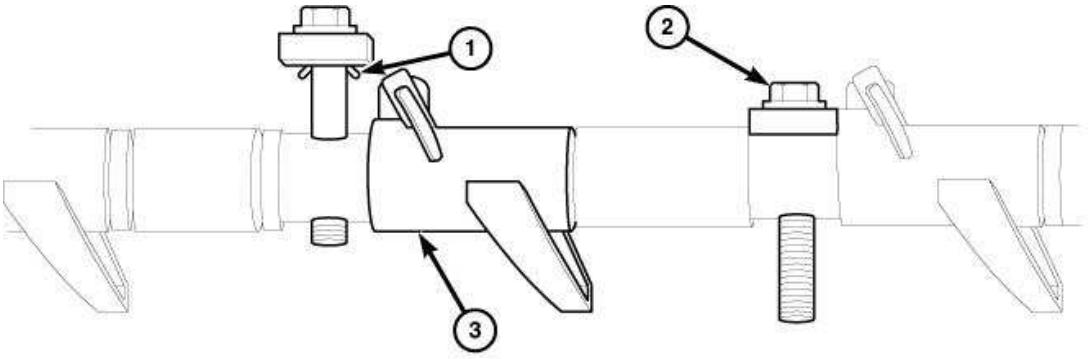

Fig. 128: Rocker Arm Retainers
Courtesy of CHRYSLER GROUP, LLC

CAUTION: Do not remove the retainers from the rocker shaft assemblies. The assembly tangs (1) at the bottom of the retainers can be damaged, causing the assembly tangs to break off and get into the engine.

INSTALLATION

INSTALLATION

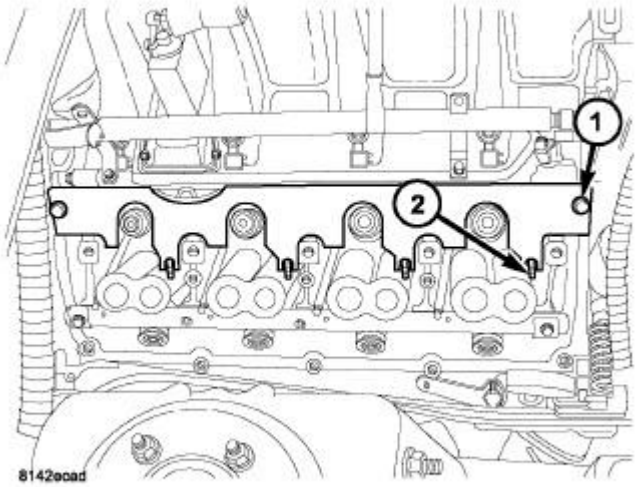

Fig. 129: Pushrod Retaining Plate
Courtesy of CHRYSLER GROUP, LLC

CAUTION: The longer pushrods are for the exhaust side, and the shorter pushrods are for intake side.

1. Install the pushrods in the same order as removed.
2. Install the Push Rod Retainer (special tool #9070, Retainer, Push Rod) (1).

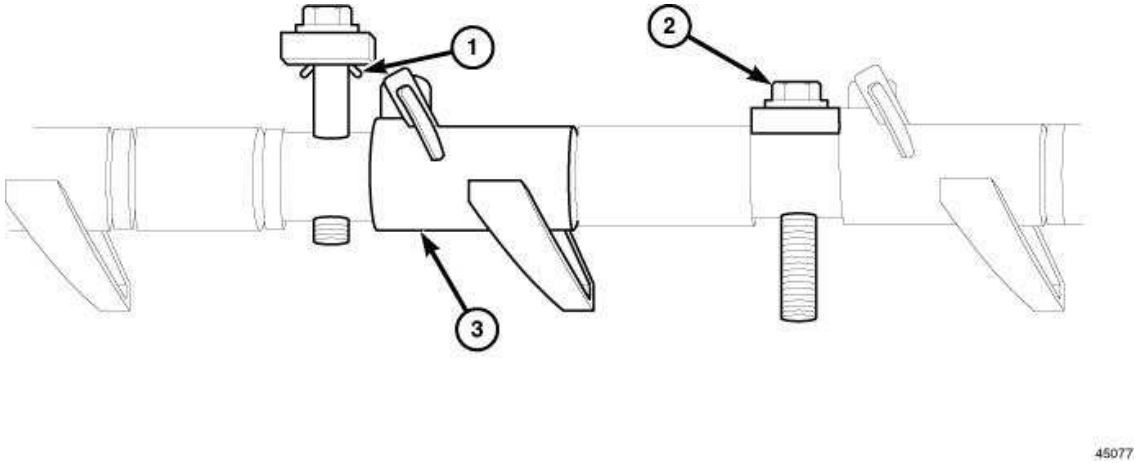

Fig. 130: Rocker Arm Retainers
Courtesy of CHRYSLER GROUP, LLC

CAUTION: Ensure the retainers (1) and rocker arms (3) are not overlapped when torquing bolts.

CAUTION: Verify the push rods are installed into the rocker arms (3) and lifters correctly while installing the rocker shaft assembly. Recheck after the rocker shaft assembly has been torqued to specification.

3. Install the rocker shaft assemblies in the same order as removed.

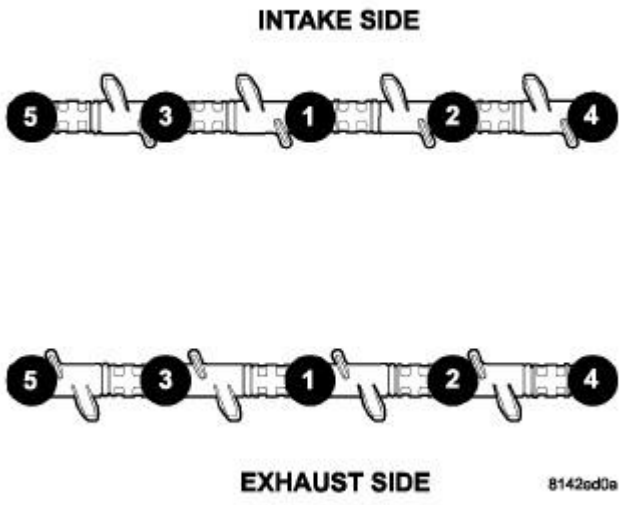

Fig. 131: Rocker Shaft Removal/Tightening Sequence
Courtesy of CHRYSLER GROUP, LLC

CAUTION: The rocker shaft assemblies are not interchangeable between intake and exhaust. The intake rocker arms are marked with the letter "I".

4. Verify the rocker arms are installed in the correct location.

NOTE: Repeat torque sequence several times to ensure rocker shaft assembly is firmly seated.

5. Using the sequence shown in illustration, tighten the rocker shaft bolts to 22 N.m (16 ft. lbs.).

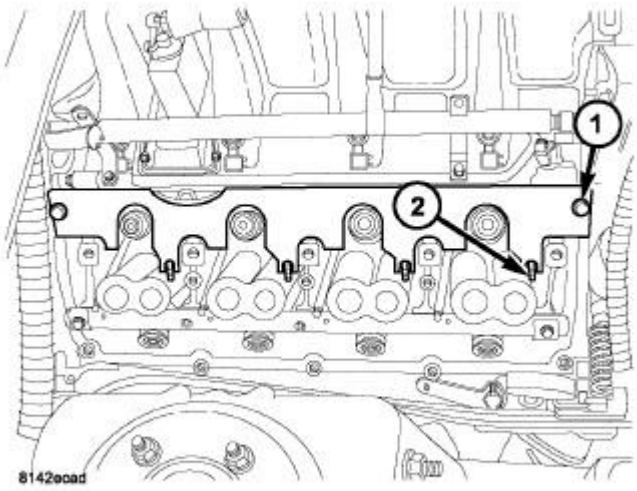

Fig. 132: Pushrod Retaining Plate
Courtesy of CHRYSLER GROUP, LLC

CAUTION: Do not rotate or crank the engine during or immediately after rocker arm installation. Allow the hydraulic roller lifters adequate time to bleed down (about 5 minutes).

6. Remove the Push Rod Retainer (special tool #9070, Retainer, Push Rod) (1).

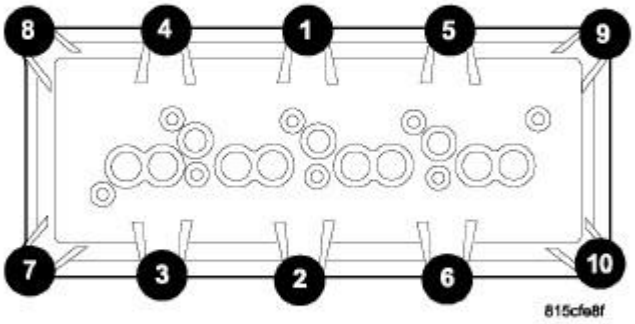

Fig. 133: Cylinder Head Cover Removal/Tightening Sequence
Courtesy of CHRYSLER GROUP, LLC

7. Install the cylinder head cover. Refer to **COVER(S), CYLINDER HEAD, INSTALLATION**.

SEAL(S), VALVE GUIDE

DESCRIPTION

DESCRIPTION

The valve guide seals are made of rubber and incorporate an integral steel valve spring seat. The integral garter spring maintains consistent lubrication control to the valve stems. The intake valve stem seal has a smaller valve spring seat compared to the exhaust valve stem seal. The intake and exhaust valve stem seals are identified by different colors.

SPRING(S), VALVE

REMOVAL

REMOVAL

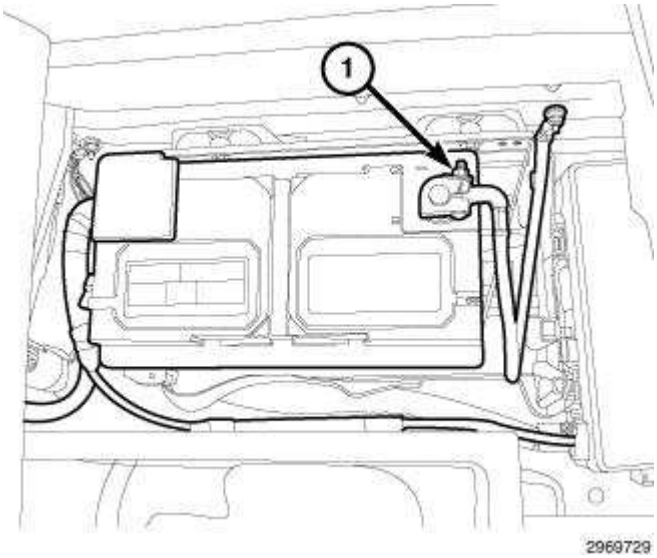

Fig. 134: Negative Battery Cable
Courtesy of CHRYSLER GROUP, LLC

1. Disconnect and isolate the negative battery cable (1).

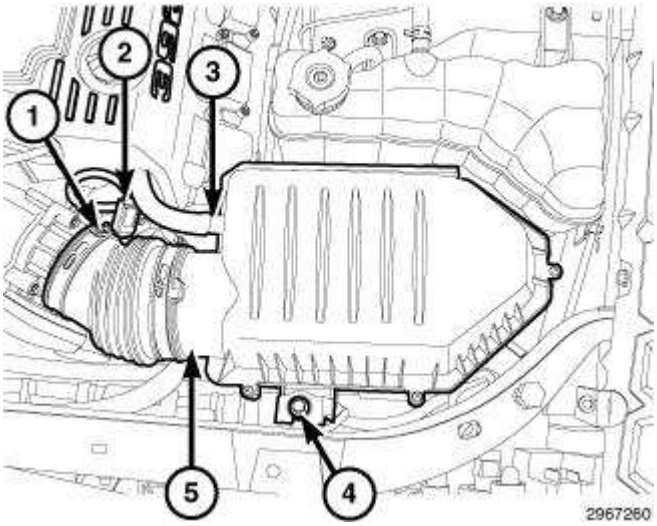

Fig. 135: Air Duct Retaining Clamp, Intake Air Temperature Sensor Electrical Connector, Makeup Air Hose, Bolt & Air Cleaner Housing
Courtesy of CHRYSLER GROUP, LLC

2. Remove the air cleaner housing (5) and clean air tube (1). Refer to **BODY, AIR CLEANER, INSTALLATION**.

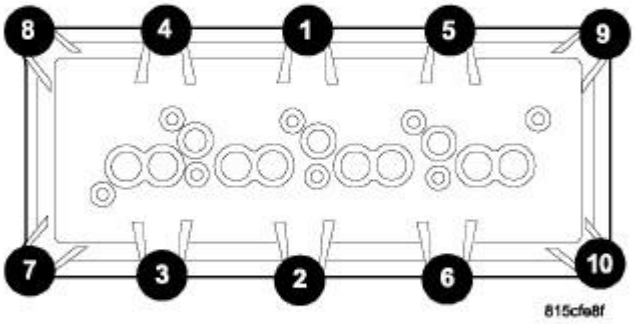

Fig. 136: Cylinder Head Cover Removal/Tightening Sequence
Courtesy of CHRYSLER GROUP, LLC

3. Remove the cylinder head covers. Refer to **COVER(S), CYLINDER HEAD, REMOVAL**.

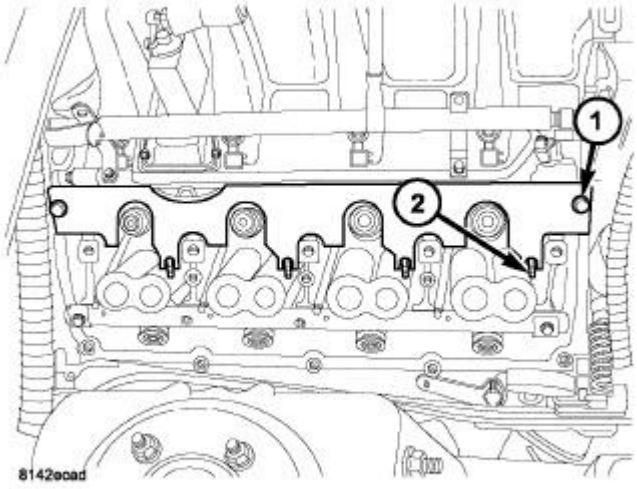

Fig. 137: Pushrod Retaining Plate
Courtesy of CHRYSLER GROUP, LLC

CAUTION: The piston must be at TDC, and both valves closed on the cylinder to be serviced.

NOTE: The intake push rods can fall into the engine and become lodged in the oil pan, if removing intake rocker arm shaft, install the pushrod retainer (special tool #9070, Retainer, Push Rod) (1) to retain the intake push rods (2).

4. Install the pushrod retainer (special tool #9070, Retainer, Push Rod) (1) onto the cylinder head.
5. Clip the pushrods (2) into the pushrod retainer (1).

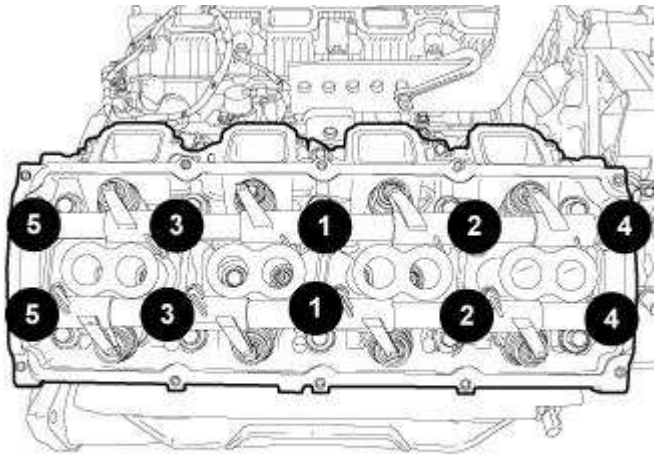

Fig. 138: Rocker Shafts Retaining Bolt Removal & Tightening Sequence
Courtesy of CHRYSLER GROUP, LLC

CAUTION: The rocker shaft assemblies are not interchangeable between intake and exhaust. The intake rocker arms are marked with an "I".

6. Using the sequence shown in illustration, remove the rocker arm shaft bolts and remove the rocker arm shaft.

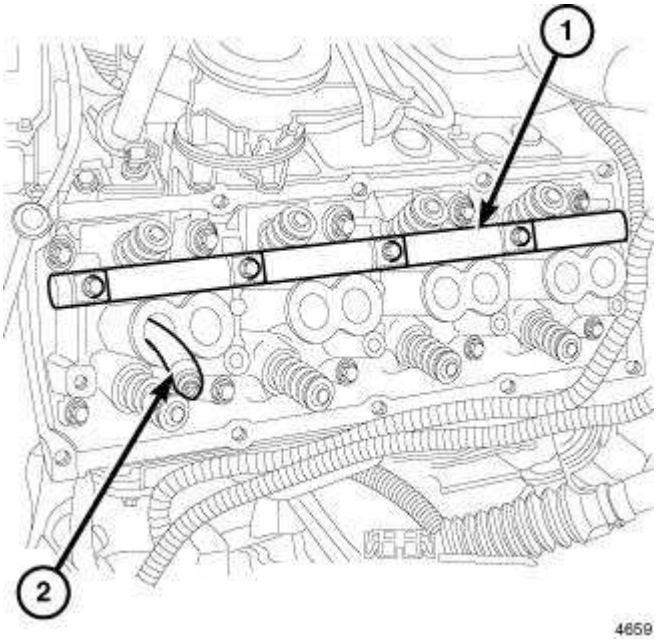

Fig. 139: Rocker Arm Shaft Adapter & Air Hose
Courtesy of CHRYSLER GROUP, LLC

7. Install the rocker arm shaft adapter (special tool #9065C, Compressor, Valve Spring) (1).
8. Insert an air hose (2) into the spark plug hole and charge the cylinder with air.

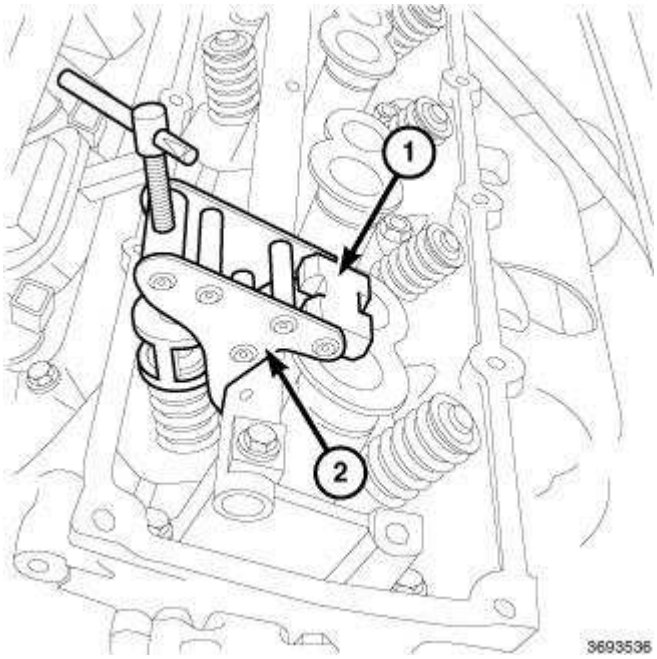

Fig. 140: Intake Valve Spring Removal/Installation
Courtesy of CHRYSLER GROUP, LLC

NOTE: A fulcrum assembly (1) must be rotated to the appropriate setting as marked on the tool for proper valve spring alignment.

NOTE: All valve springs and seals are removed in the same manner.

NOTE: Tap the top of the valve spring retainer to loosen the spring retainer locks.

9. Install the valve spring compressor (special tool #9065C, Compressor, Valve Spring) (1) and remove the intake valve retainer locks.
10. Release the valve spring compressor and remove the valve springs.

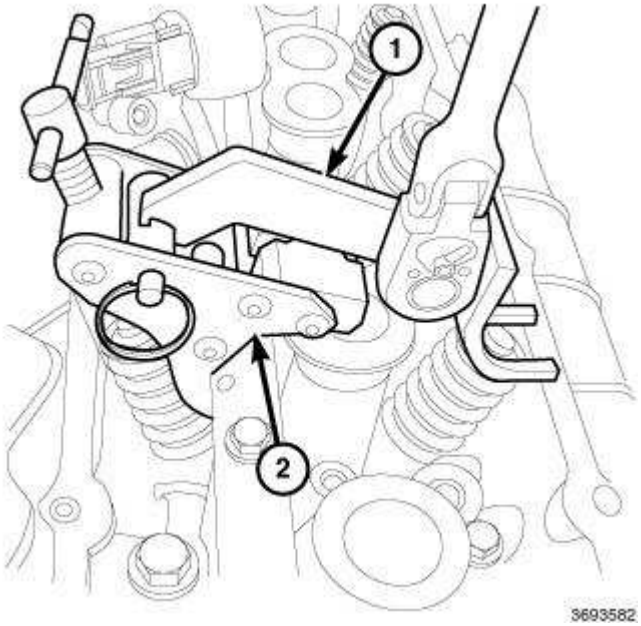

Fig. 141: Valve Spring Compressor & Adapter
Courtesy of CHRYSLER GROUP, LLC

11. Install the valve spring compressor (special tool #9065C, Compressor, Valve Spring) (2) and the rocker arm adapter (special tool #9065-3, Adapter, Valve Spring Compressor) (1) and remove the exhaust valve retainer locks.
12. Release the valve spring compressor and remove the valve spring.

NOTE: The valve springs are interchangeable between intake and exhaust.

13. Remove and discard the valve guide seal.

INSTALLATION

INSTALLATION

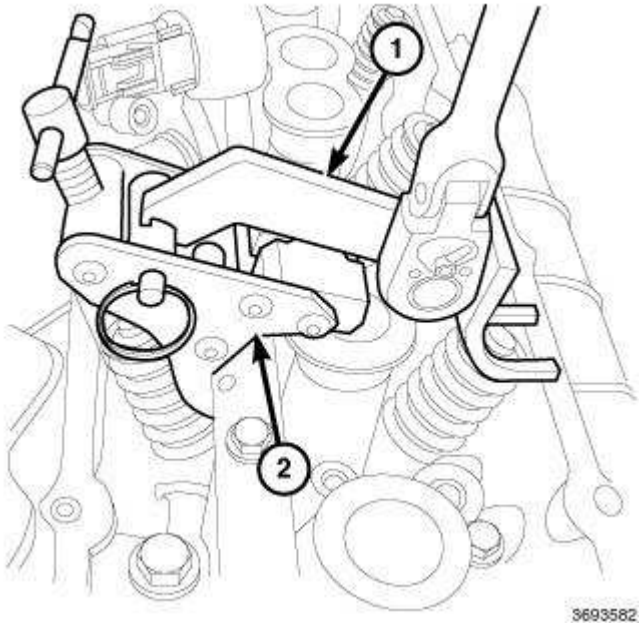

Fig. 142: Valve Spring Compressor & Adapter
Courtesy of CHRYSLER GROUP, LLC

NOTE: All valve springs and seals are installed in the same manner.

NOTE: The intake seal has a smaller spring seat diameter compared to the exhaust seal.

1. Install a new valve guide seal.

   NOTE: The intake spring retainer has a longer free length compared to the exhaust spring retainer.

2. Install the valve spring.
3. Install the valve spring retainer.
4. Using the valve spring compressor (special tool #9065C, Compressor, Valve Spring) (3) and the rocker arm adapter (special tool #9065-3, Adapter, Valve Spring Compressor) (1), compress the valve spring and install the valve spring retainer locks.

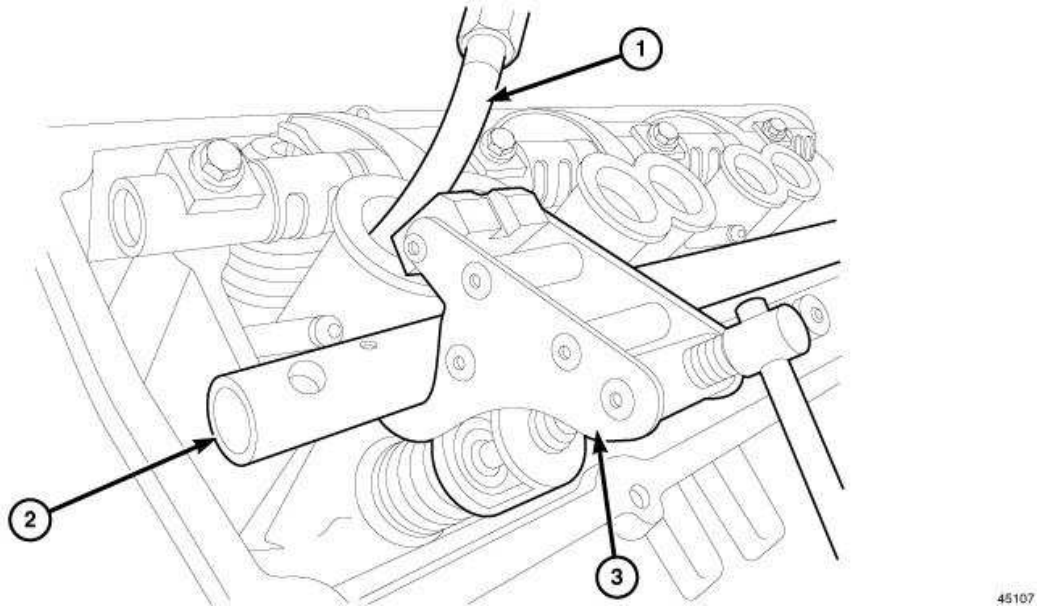

Fig. 143: Air Charge, Valve Spring Compressor & Adapter
Courtesy of CHRYSLER GROUP, LLC

5. Remove the valve spring compressor (special tool #9065C, Compressor, Valve Spring) (3) and the rocker arm adapter (special tool #9065-3, Adapter, Valve Spring Compressor).
6. Release the air charge (1) in the cylinder.

CAUTION: Verify that the pushrods are fully seated into the lifters and the rocker arms. Recheck after rocker arm shaft has been torqued to specification.

7. Install the rocker arm shaft and push rods. Refer to **ROCKER ARM, VALVE, INSTALLATION**.

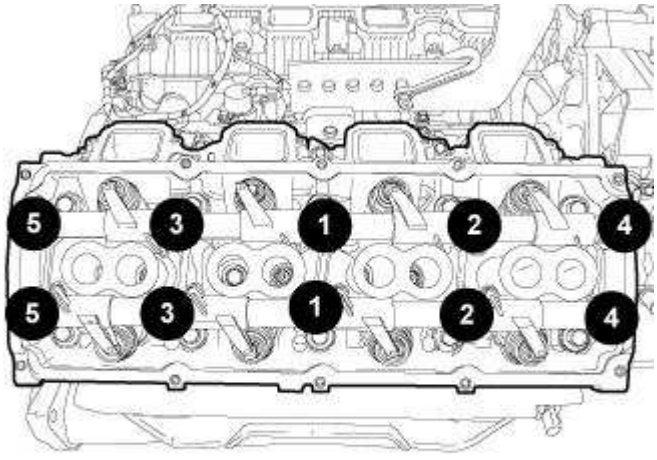

Fig. 144: Rocker Shafts Retaining Bolt Removal & Tightening Sequence

Courtesy of CHRYSLER GROUP, LLC

NOTE: Repeat torque sequence several times to ensure rocker shaft assembly is firmly seated.

8. Using the sequence shown in illustration, tighten the rocker arm shaft bolts to 22 N.m (16 ft. lbs.).

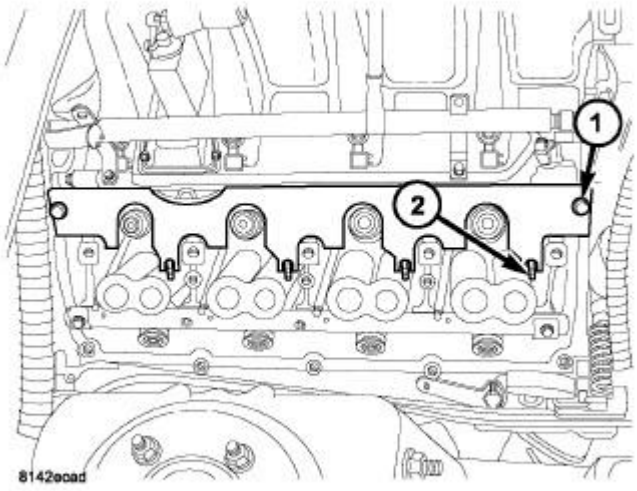

Fig. 145: Pushrod Retaining Plate
Courtesy of CHRYSLER GROUP, LLC

9. Remove the pushrod retainer (special tool #9070, Retainer, Push Rod) (1).

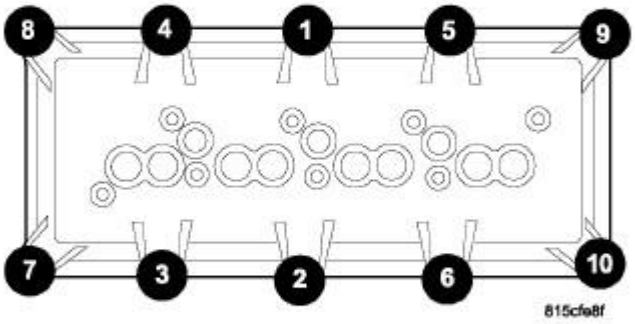

Fig. 146: Cylinder Head Cover Removal/Tightening Sequence
Courtesy of CHRYSLER GROUP, LLC

10. Position the cylinder head cover onto the cylinder head.
11. Using the sequence shown in illustration, tighten the cylinder head cover bolts to 8 N.m (6 ft. lbs.). Refer to **COVER(S), CYLINDER HEAD, INSTALLATION**.

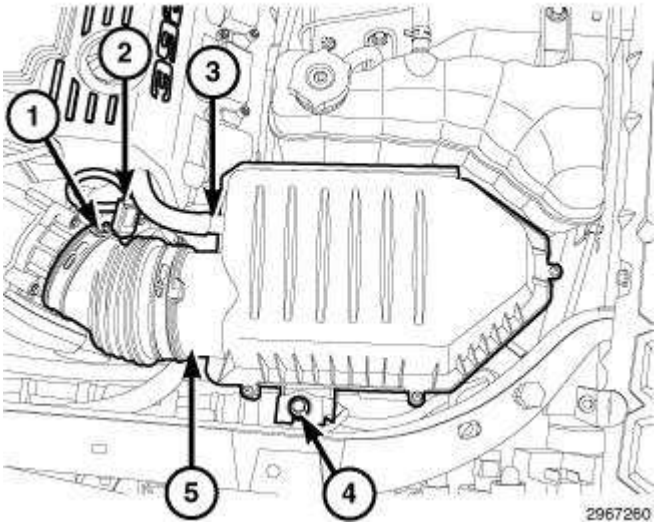

Fig. 147: Air Duct Retaining Clamp, Intake Air Temperature Sensor Electrical Connector, Makeup Air Hose, Bolt & Air Cleaner Housing
Courtesy of CHRYSLER GROUP, LLC

12. Install the air cleaner housing (5) and clean air tube (1). Refer to **BODY, AIR CLEANER,**

INSTALLATION.

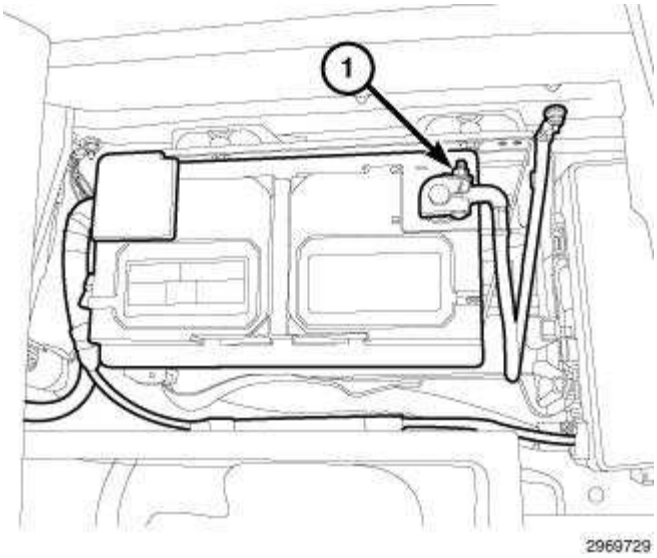

Fig. 148: Negative Battery Cable
Courtesy of CHRYSLER GROUP, LLC

13. Connect the negative battery cable.
14. Road test the vehicle.

VALVES, INTAKE AND EXHAUST

DESCRIPTION

VALVES

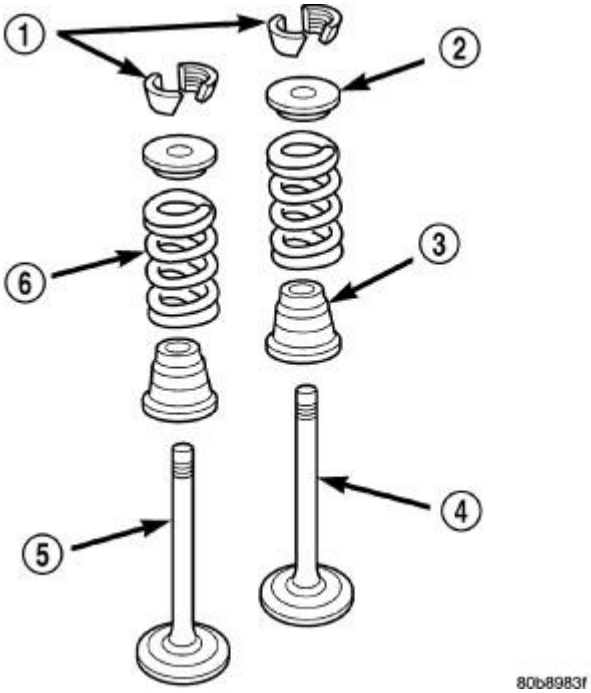

Fig. 149: Valve Assembly Configuration
Courtesy of CHRYSLER GROUP, LLC

Both the intake (4) and exhaust (5) valves are made of steel with full chrome plate on valve stems. The intake valve is 54.3 mm (2.14 in.) diameter and the exhaust valve is 42.0 mm (1.65 in.) diameter. All valves use three bead lock keepers (1) and retainers (2) to retain the springs (6) and promote valve rotation.

VALVE GUIDES

The valve guides are made of powdered metal and are pressed into the cylinder head. The guides are not replaceable or serviceable, and valve guide reaming is not recommended. If the guides are worn beyond acceptable limits, replace the cylinder heads.

STANDARD PROCEDURE

STANDARD PROCEDURE - REFACING

NOTE: Valve seats that are worn or burned can be reworked, provided that the correct angle and seat width are maintained. Otherwise the cylinder head must be replaced.

NOTE: When refacing valves and valve seats, it is important that the correct size valve guide pilot be used for reseating stones. A true and complete surface must be obtained.

1. Measure the concentricity of the valve seat using a dial indicator. Total runout should not exceed 0.051 mm (0.002 inch.) total indicator reading.

2. Inspect the valve seat with Prussian blue to determine where the valve contacts the seat. To do this, coat the valve seat with Prussian blue then set the valve in place. Rotate the valve using light pressure. If the blue is transferred to the center of the valve face, contact is satisfactory. If the blue is transferred to the top edge of the valve face, lower the valve seat with a 15 degree stone. If the blue is transferred to the bottom edge of the valve face, raise the valve seat with a 65 degree stone.
3. Refer to the chart below for the proper valve seat width, valve seat angle, valve face angle and valve spring height.

VALVE SEAT, VALVE FACE AND SPRING HEIGHT CHART

DESCRIPTION	SPECIFICATION	
SEAT WIDTH		
INTAKE	0.94 - 1.04 mm	0.037 - 0.041 in.
EXHAUST	1.16 - 1.26 mm	0.046 - 0.050 in.
SEAT ANGLE		
(INT. AND EXT.)	44.5° - 45°	
FACE ANGLE		
INTAKE	45.5° - 46°	
EXHAUST	45° - 45.5°	
SPRING HEIGHT		
INTAKE	52.1 mm	2.051 in.
EXHAUST	51.2 mm	2.016 in.

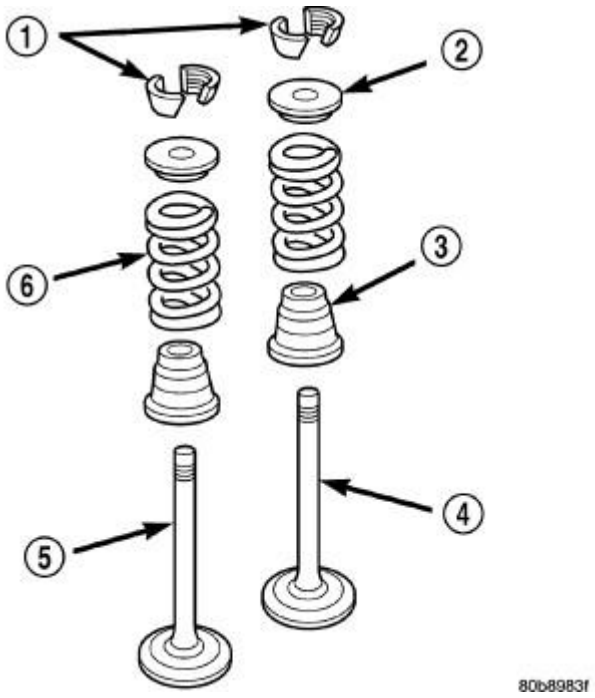

Fig. 150: Valve Assembly Configuration
Courtesy of CHRYSLER GROUP, LLC

4. The valve seat must maintain an angle of 44.5° - 45.0°.
5. The valve face must maintain an angle of 45.5° - 46.0° for the Intake and 45° - 45.5° for the exhaust.

REMOVAL

REMOVAL

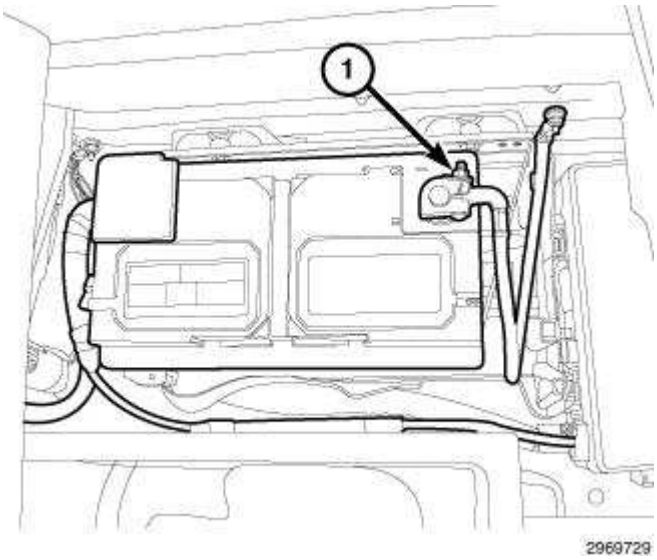

Fig. 151: Negative Battery Cable
Courtesy of CHRYSLER GROUP, LLC

1. Disconnect and isolate the negative battery cable (1).

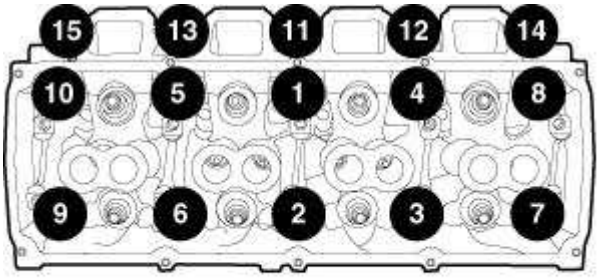

Fig. 152: Cylinder Head Bolt Removal & Tightening Sequence
Courtesy of CHRYSLER GROUP, LLC

2. Remove the cylinder head. Refer to **CYLINDER HEAD, REMOVAL**.

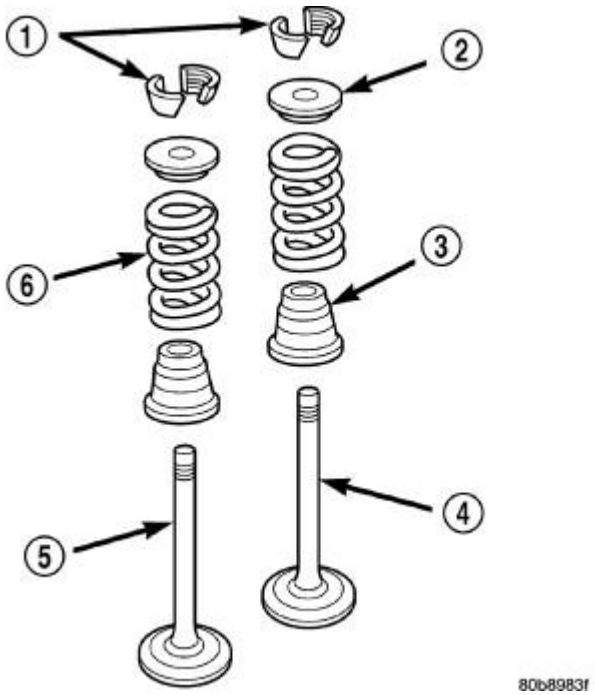

Fig. 153: Valve Assembly Configuration
Courtesy of CHRYSLER GROUP, LLC

3. Compress the valve springs using the valve spring compressor (special tool #C-3422-D, Compressor, Valve Spring) and adapter (special tool #8464, Adapter, Valve Spring).
4. Remove the valve spring retainer locks (1), valve spring retainers (2), valve stem seals (3) and valve springs (6).
5. Before removing the valves, remove any burrs from the valve spring retainer lock grooves in the valve stems (4) to prevent damage to the valve guides. Identify the valves to ensure installation in their original location.
6. Remove the valves (4, 5).

INSTALLATION

INSTALLATION

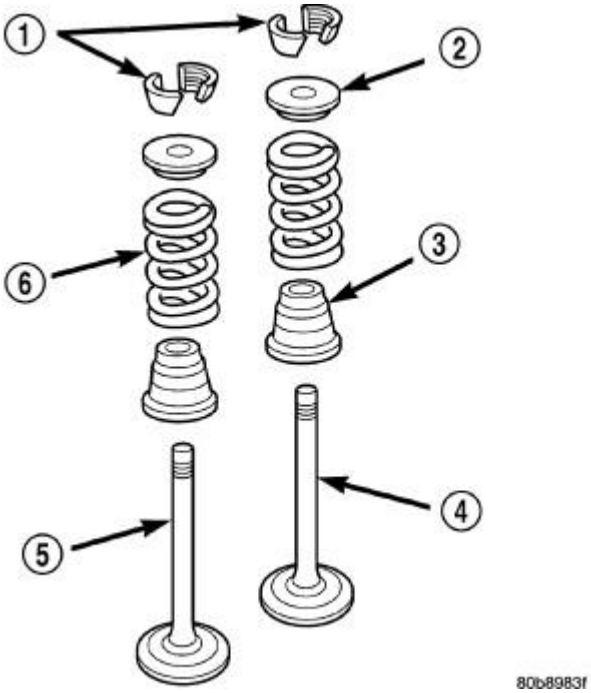

Fig. 154: Valve Assembly Configuration
Courtesy of CHRYSLER GROUP, LLC

1. Clean the valves thoroughly. Discard burned, warped, and cracked valves.
2. Remove carbon and varnish deposits from inside the valve guides with a reliable guide cleaner.
3. Measure the valve stems for wear. If wear exceeds 0.051 mm (0.002 inch), replace the valve.
4. Coat the valve stems (4, 5) with clean engine oil and insert them into the cylinder head.
5. If the valves or seats have been reground, check valve stem height. If the valve is too long, replace the cylinder head.
6. Install new seals (3) on all valve guides. Install the valve springs (6) and valve spring retainers (2).

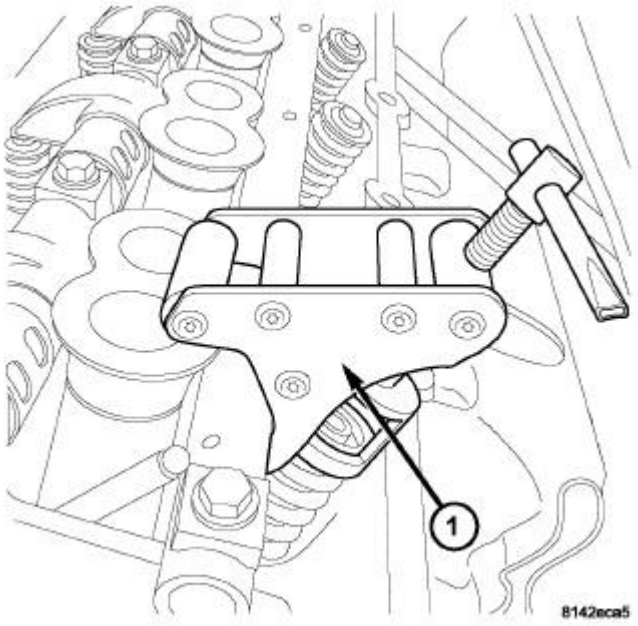

Fig. 155: Exhaust Valve Spring Removal/Installation
Courtesy of CHRYSLER GROUP, LLC

7. Compress the valve springs with the valve spring compressor (special tool #C-3422-D, Compressor, Valve Spring) (1) and adapter (special tool #8464, Adapter, Valve Spring), install the valve spring retainer locks and release the tool. If the valves and/or seats have been ground, measure the installed height of the springs. Make sure the measurement is taken from the bottom of spring seat in the cylinder head to the bottom surface of valve spring retainer.

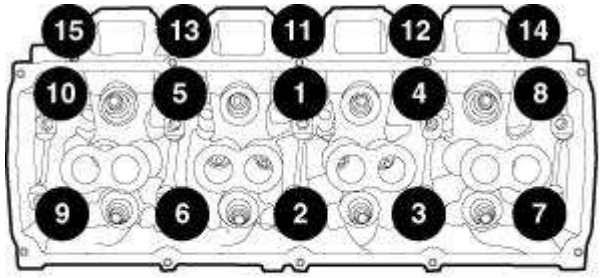

Fig. 156: Cylinder Head Bolt Removal & Tightening Sequence
Courtesy of CHRYSLER GROUP, LLC

8. Install the cylinder head (2). Refer to **CYLINDER HEAD, INSTALLATION**.

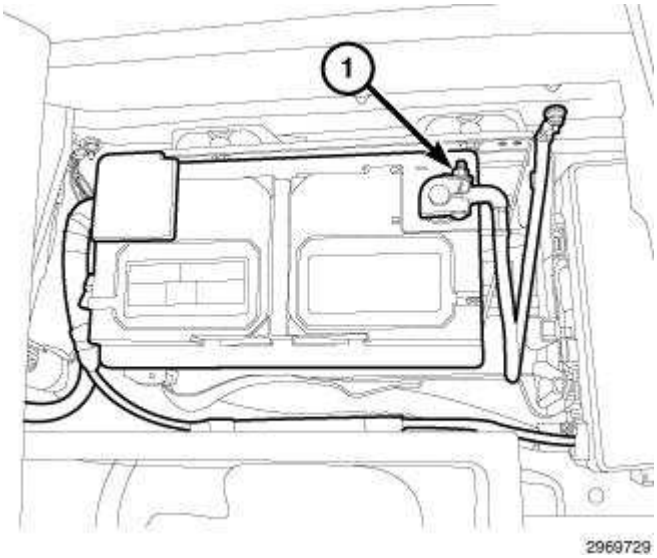

Fig. 157: Negative Battery Cable
Courtesy of CHRYSLER GROUP, LLC

9. Connect the negative battery cable (1).

ENGINE BLOCK

CLEANING

CLEANING

Thoroughly clean the oil pan and engine block gasket surfaces.

Use compressed air to clean the following:

- Gallery at the oil filter adaptor hole.
- Front and rear oil gallery holes.
- Feed holes for the crankshaft main bearings.

Once the block has been completely cleaned, apply Loctite PST pipe sealant with Teflon 592 to the threads of the front and rear oil gallery plugs. Tighten the 1/4 inch NPT plugs to 20 N.m (15 ft. lbs.). Tighten the 3/8 inch NPT plugs to 27 N.m (20 ft. lbs.) and the coolant drain plugs to 34 N.m (25 ft. lbs.).

INSPECTION

INSPECTION

ENGINE BLOCK

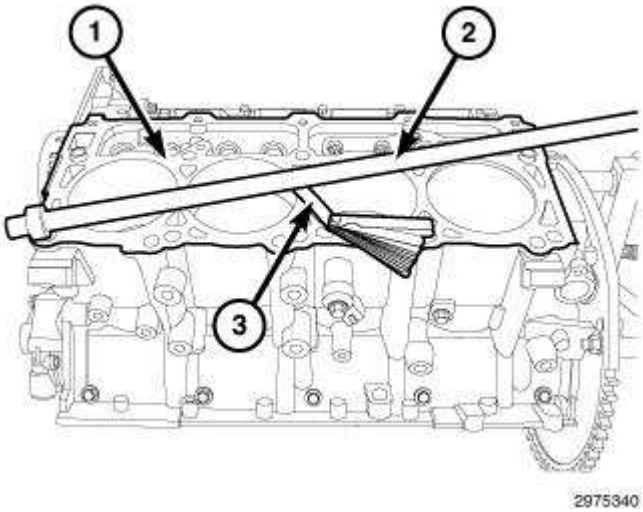

Fig. 158: Checking Engine Block Deck Surface With Precision Straightedge & Feeler Gauge
Courtesy of CHRYSLER GROUP, LLC

1. Clean the engine block thoroughly and check all core hole plugs for evidence of leaking and repair if necessary.
2. Examine the engine block and cylinder bores for cracks or fractures.

NOTE: Check the engine block deck surface with a precision straightedge and feeler gauge. The surface irregularities should not exceed 0.09 mm (0.0035 in.). Check the deck surface from one end to the other with the precision straightedge positioned across corners and parallel to the block centerline up and down the deck.

3. Check the engine block deck (1) surfaces for flatness using a precision straightedge (2) and feeler gauge (3).

CYLINDER BORE

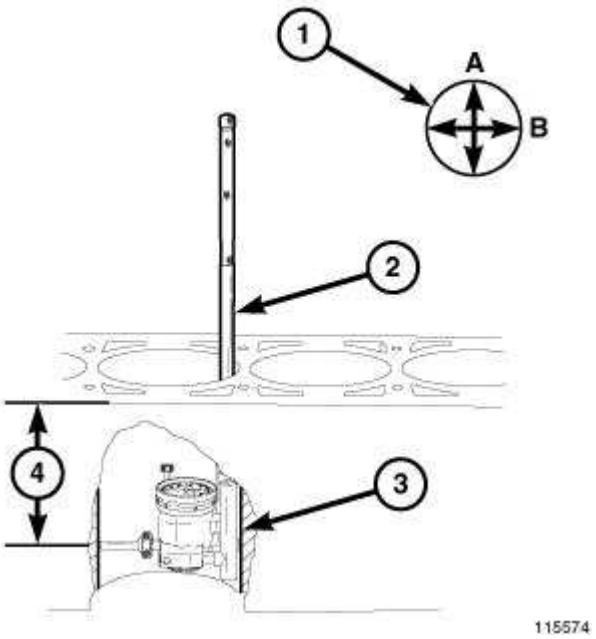

Fig. 159: Measuring Cylinder Bore Diameter
Courtesy of CHRYSLER GROUP, LLC

1. Use Cylinder Indicator (special tool #C-119, Cylinder Indicator) (2) to correctly measure the inside diameter of the cylinder bore (3). A cylinder bore gauge capable of reading in 0.003 mm (0.0001 in.) increments is required. If a bore gauge is not available, do not use an inside micrometer.
2. Measure the inside diameter of the cylinder bore at three levels below the top of the bore (4). Start at the top of the bore, perpendicular (across or at 90°) to the axis of the crankshaft at point A (1).
3. Repeat the measurement near the middle of the bore then repeat the measurement near the bottom of the bore.
4. Determine the taper by subtracting the smaller diameter from the larger diameter.
5. Rotate the measuring device 90° to point B (1) and repeat the three measurements. Verify that the maximum taper is within specifications.
6. Determine out-of-roundness by comparing the difference between each measurement.
7. If the cylinder bore taper does not exceed 0.0127 mm (0.0005 inch) and out-of-roundness does not exceed 0.008 mm (0.0003 inch) then the cylinder bore can be honed. If the cylinder bore taper or out- of-round condition exceeds the maximum limits, replace the engine block.

NOTE: A slight amount of taper always exists in the cylinder bore after the engine has been in use for a period of time.

MAIN BEARINGS

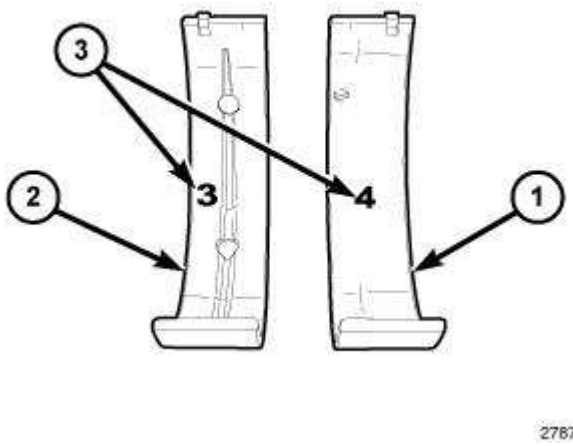

Fig. 160: Main Bearing Inserts
Courtesy of CHRYSLER GROUP, LLC

1. Wipe the main bearing inserts (1, 2) clean.
2. Inspect the inserts for abnormal wear patterns, scoring, grooving, fatigue, pitting and for metal or other foreign material imbedded in the lining.
3. Inspect the back of the inserts for fractures, scrapes or irregular wear patterns.
4. Inspect the insert locking tabs for damage.
5. Inspect the crankshaft thrust washers for scoring, scratches, wear or blueing.
6. Replace any bearing that shows abnormal wear.
7. Inspect the main bearing bores for signs of scoring, nicks and burrs.
8. If the engine block main bearing bores show damage, replace the engine block.

BEARING(S), CRANKSHAFT, MAIN

STANDARD PROCEDURE

STANDARD PROCEDURE - CRANKSHAFT MAIN BEARING - FITTING

MAIN BEARING JOURNAL DIAMETER (CRANKSHAFT REMOVED)

CAUTION: If the engine encounters a catastrophic failure, the engine oil cooler must be replaced or damage to the new engine and/or components could result.

Crankshaft removed from the cylinder block.

Clean the oil off the main bearing journal.

Determine the maximum diameter of the journal with a micrometer. Measure at two locations 90° apart at each end of the journal.

The maximum allowable taper is 0.008 mm (0.0004 inch). The maximum out-of-round is 0.005 mm (0.0002 inch). Compare the measured diameter with the journal diameter specification (Main Bearing Fitting Chart). Select inserts required to obtain the specified bearing-to-journal clearance.

CRANKSHAFT MAIN BEARING SELECTION

The main bearings are "select fit" to achieve proper oil clearances. For main bearing selection, the crankshaft counterweight has grade identification marks stamped into it. These marks are read from left to right, corresponding with journal number 1, 2, 3, 4 and 5.

NOTE: Service main bearings are coded. These codes identify what size (color) the bearing is.

MAIN BEARING SELECTION CHART - 6.4L

GRADE	COLOR	mm	In	FOR USE WITH JOURNAL SIZE
	LOWER			64.988-64.995 mm
A	**ORANGE**	0.008 mm U/S	(0.0004 in.) U/S	(2.5585- 2.5588 in.)
	LOWER			64.996-65.004 mm
B	**BLACK**	NOMINAL	NOMINAL	(2.5588-2.5592 in.)
	LOWER			65.005-65.012 mm
C	**GREEN**	0.008 mm O/S	(0.0004 in.) O/S	(2.5592-2.5595 in.)

INSPECTION

INSPECTION

CAUTION: If the engine encounters a catastrophic failure, the engine oil cooler must be replaced or damage to the new engine and/or components could result.

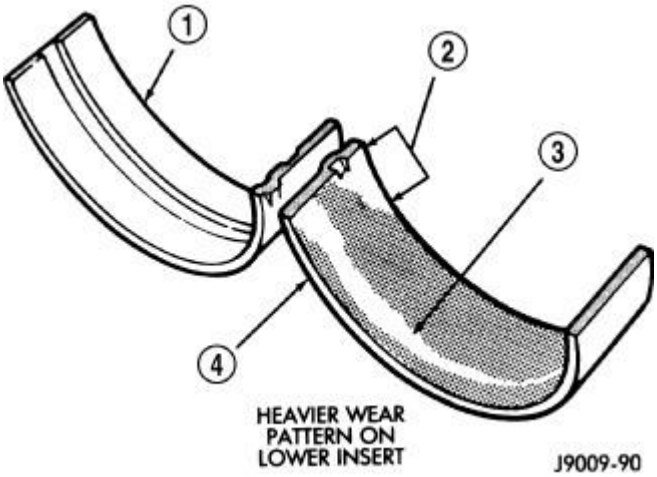

Fig. 161: Main Bearing Wear Patterns
Courtesy of CHRYSLER GROUP, LLC

Wipe the inserts clean and inspect for abnormal wear patterns and for metal or other foreign material imbedded in the lining. Normal main bearing insert wear patterns are illustrated.

NOTE: If any of the crankshaft journals are scored, the crankshaft must be repaired or replaced.

Inspect the back of the inserts for fractures, scoring or irregular wear patterns.

Inspect the upper insert locking tabs for damage.

Replace all damaged or worn bearing inserts.

CAMSHAFT, ENGINE

REMOVAL

5.7L/6.4L - CAMSHAFT CORE HOLE PLUG

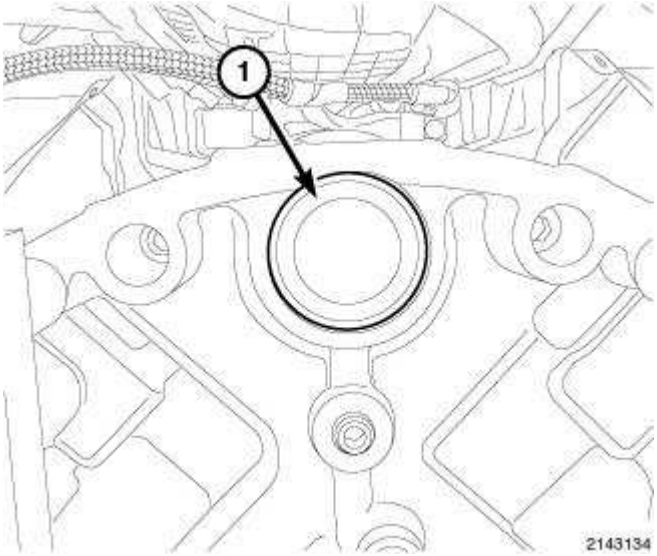

Fig. 162: Camshaft Core Hole Plug
Courtesy of CHRYSLER GROUP, LLC

1. Perform the fuel system pressure release procedure. Refer to **FUEL DELIVERY, GAS, STANDARD PROCEDURE** .
2. Remove the engine from the vehicle. Refer to **REMOVAL**.
3. Remove the flexplate. Refer to **FLEXPLATE, REMOVAL**.

CAUTION: Do not damage the rear surface of the camshaft or the core plug sealing surface, when removing the core plug.

4. Using a suitable sharp punch, punch a small hole in the camshaft core hole plug (1).

5. Insert a short sheet metal screw into the small hole in the camshaft core hole plug.
6. Using a suitable slide hammer puller, remove the rear camshaft core hole plug.

CAMSHAFT

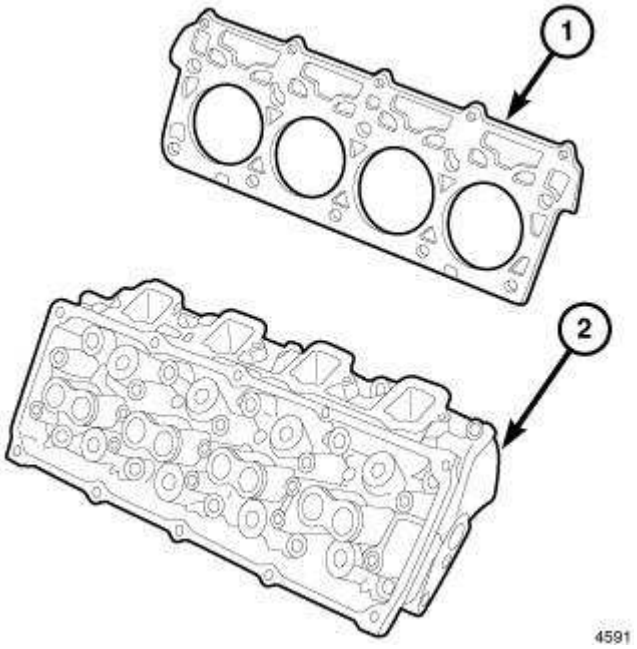

Fig. 163: Cylinder Head & Gasket
Courtesy of CHRYSLER GROUP, LLC

1. Remove both cylinder heads (2). Refer to **CYLINDER HEAD, REMOVAL**.

CAUTION: The 6.4L Multi Displacement System (MDS) engine uses both standard roller lifters and deactivating roller lifters. The deactivating roller lifters must be used in cylinders 1, 4, 6, 7. The deactivating lifters can be identified by the two holes in the side of the lifter body, for the latching pins.

CAUTION: Whenever the camshaft is replaced, all lifters must be replaced. If the lifter and retainer assemblies are to be reused, identify the lifters to ensure installation in their original location or engine damage could result.

CAUTION: The lifter and retainer assembly must be installed as a unit.

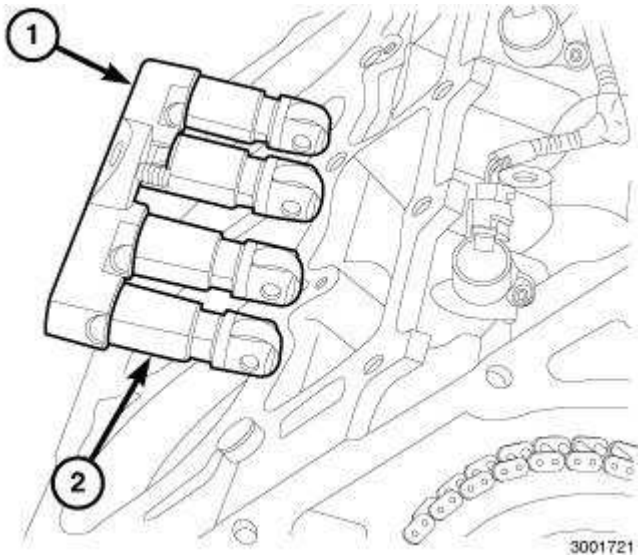

Fig. 164: Hydraulic Lifters/Tappets & Retainer/Guide Holder
Courtesy of CHRYSLER GROUP, LLC

2. Remove the lifters (2) and retainer (1) as an assembly. Refer to **LIFTER(S), HYDRAULIC, ROLLER, REMOVAL**.

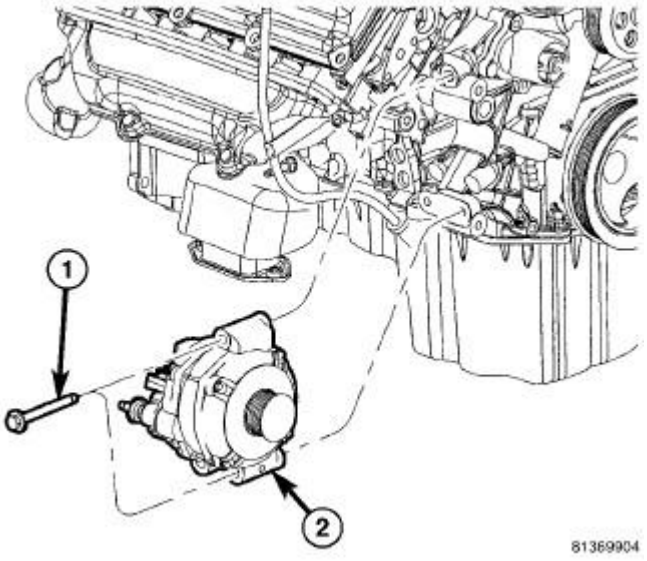

Fig. 165: Generator & Mounting Bolts
Courtesy of CHRYSLER GROUP, LLC

3. Remove the generator. Refer to **GENERATOR, REMOVAL** .

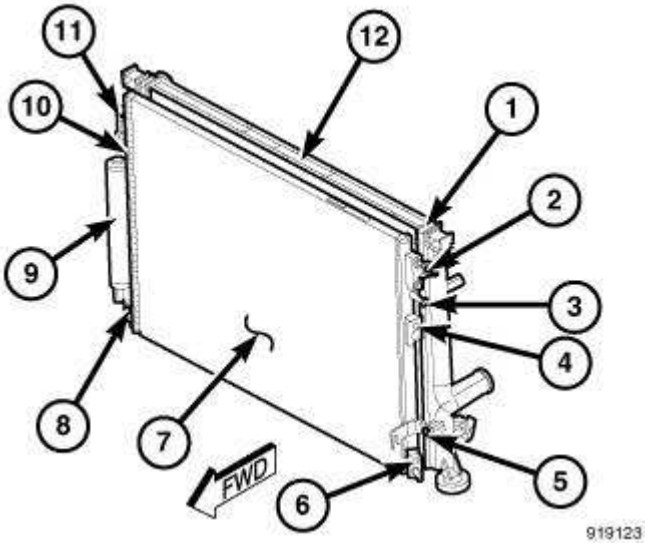

Fig. 166: A/C Condenser & Radiator
Courtesy of CHRYSLER GROUP, LLC

4. Remove the A/C compressor. Refer to **COMPRESSOR, A/C, REMOVAL** .
5. Remove the radiator (12). Refer to **RADIATOR, ENGINE COOLING, REMOVAL** .
6. Remove the A/C condenser (7). Refer to **CONDENSER, A/C, REMOVAL** .
7. Raise and support vehicle.

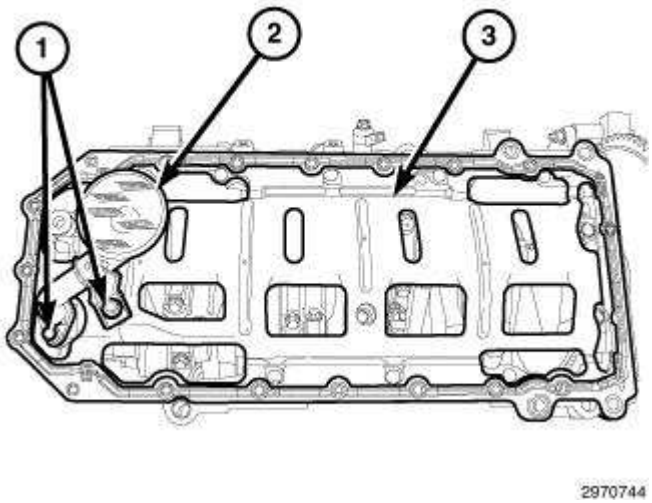

Fig. 167: Integral Windage Tray, Oil Pump Pickup Tube & Bolts
Courtesy of CHRYSLER GROUP, LLC

8. Remove the oil pan and oil pump pickup tube (2). Refer to **PAN, OIL, REMOVAL**.

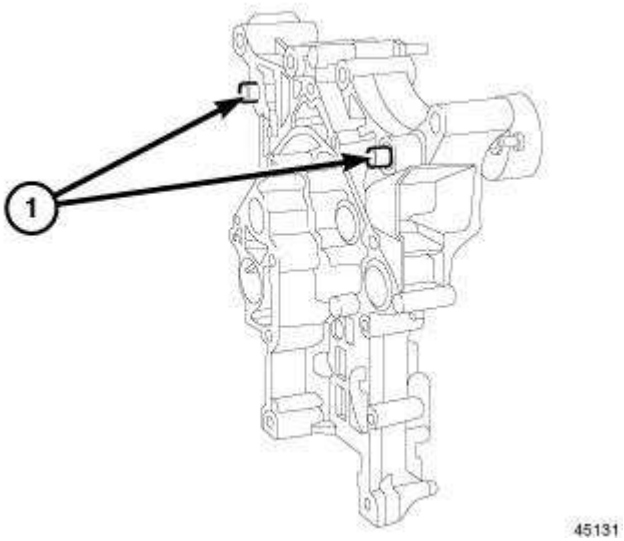

Fig. 168: Front Cover Slide Bushings
Courtesy of CHRYSLER GROUP, LLC

NOTE: It is not necessary to remove the water pump for timing cover removal.

9. Remove the engine timing cover. Refer to **COVER(S), ENGINE TIMING, REMOVAL**.

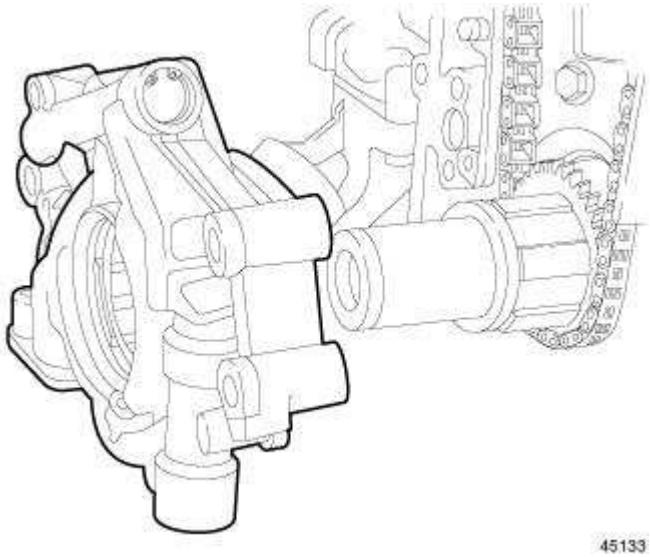

Fig. 169: Remove/Install Oil Pump
Courtesy of CHRYSLER GROUP, LLC

10. Remove the oil pump. Refer to **PUMP, ENGINE OIL, REMOVAL**.

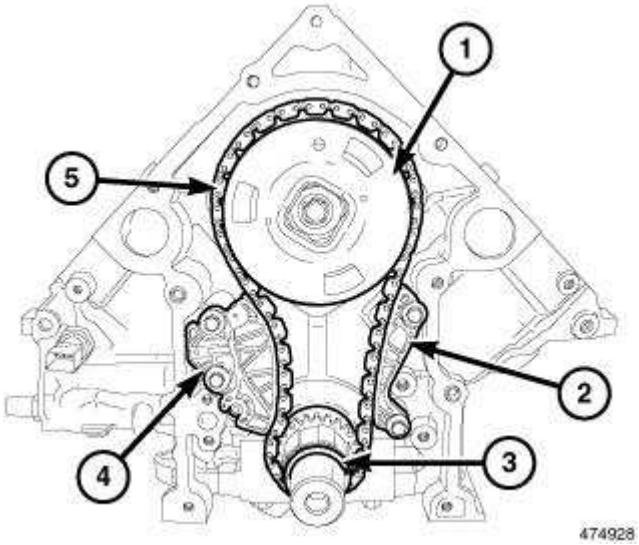

Fig. 170: Timing Chain, Sprockets, Timing Chain Tensioner & Guide
Courtesy of CHRYSLER GROUP, LLC

11. Remove the timing chain (5) and camshaft phaser (1). Refer to **CHAIN AND SPROCKETS, TIMING, REMOVAL**.

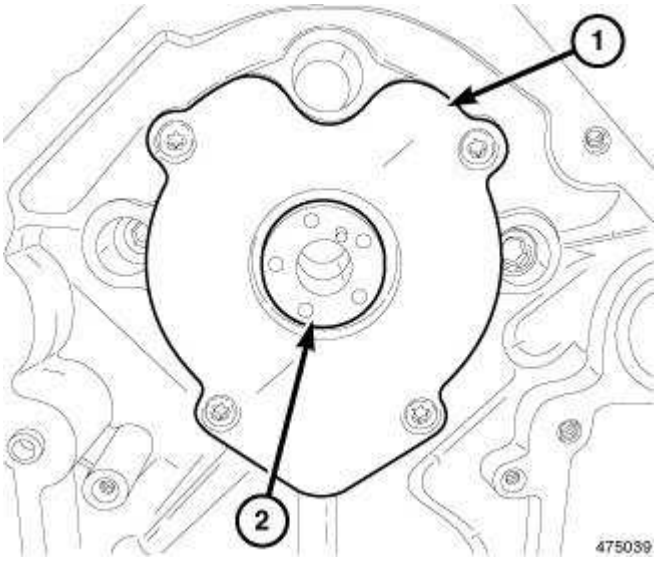

Fig. 171: Camshaft Thrust Plate
Courtesy of CHRYSLER GROUP, LLC

12. Remove the camshaft thrust plate (1).

CAUTION: Use care when removing the camshaft, do not damage the camshaft bearings with the camshaft lobes.

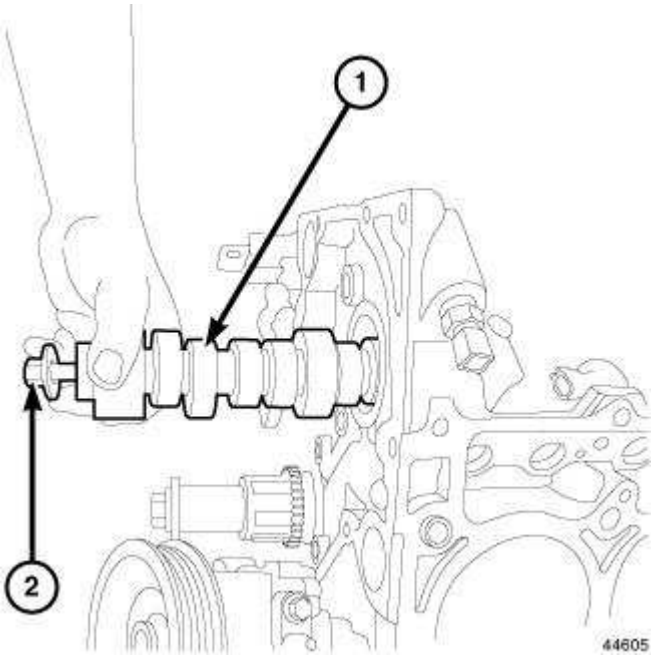

Fig. 172: Removing/Installing Camshaft
Courtesy of CHRYSLER GROUP, LLC

13. Install a long bolt (2) into the front of the camshaft to aid in removal.
14. Remove the camshaft using care not to damage the camshaft bearings with the camshaft lobes (1).

INSPECTION

INSPECTION

1. The cam bearings are not serviceable. Do not attempt to replace cam bearings for any reason.

INSTALLATION

5.7L/6.4L - CAMSHAFT CORE HOLE PLUG

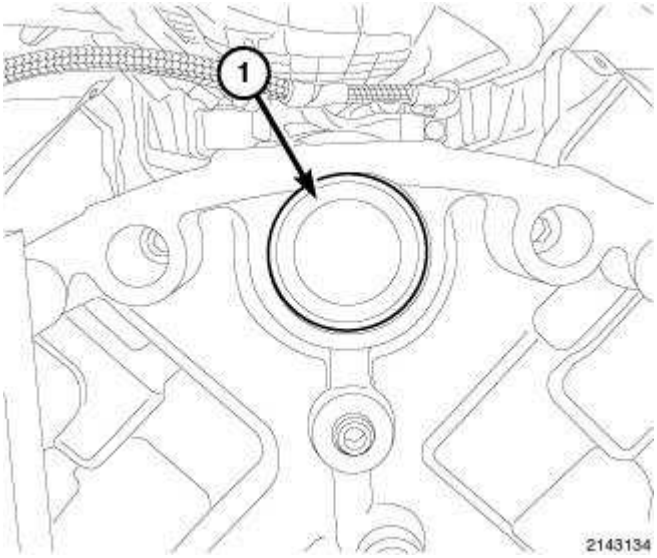

Fig. 173: Camshaft Core Hole Plug
Courtesy of CHRYSLER GROUP, LLC

1. Clean the core hole in the cylinder block.

NOTE: Do not apply adhesive to the new camshaft core hole plug. A new plug has adhesive pre-applied.

2. Install a new camshaft core hole plug (1) located at the rear of cylinder block, using a suitable flat faced tool. The plug must be fully seated on the cylinder block shoulder.
3. Install the flexplate. Refer to **FLEXPLATE, INSTALLATION**.
4. Install the engine. Refer to **INSTALLATION**.

CAMSHAFT

CAUTION: The 6.4L engine uses a unique camshaft for use with the Multi Displacement System (MDS). When installing a new camshaft, the replacement camshaft must be compatible with MDS.

CAUTION: Use care when installing the camshaft into the engine block, do not damage the camshaft bearings with the camshaft lobes.

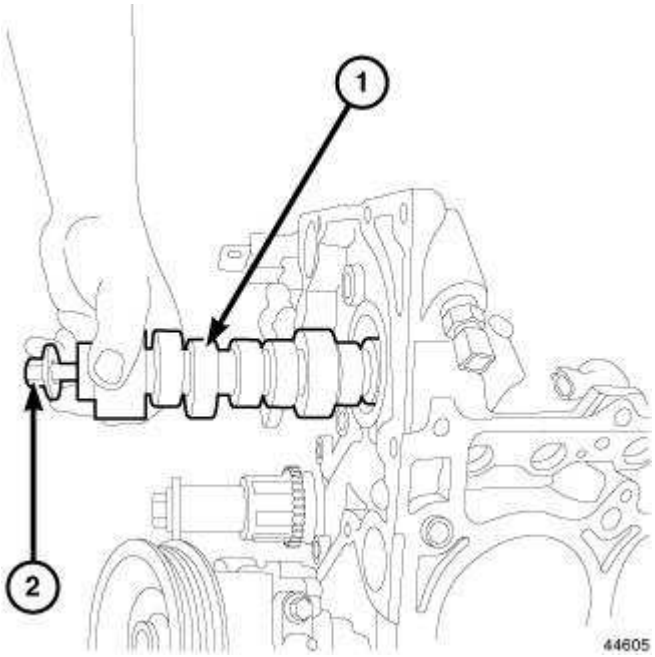

Fig. 174: Removing/Installing Camshaft
Courtesy of CHRYSLER GROUP, LLC

1. Lubricate the camshaft lobes (1) and the camshaft bearing journals with clean engine oil.
2. Install a long bolt (2) into the front of the camshaft to aid in the installation, carefully install the camshaft into the engine block.

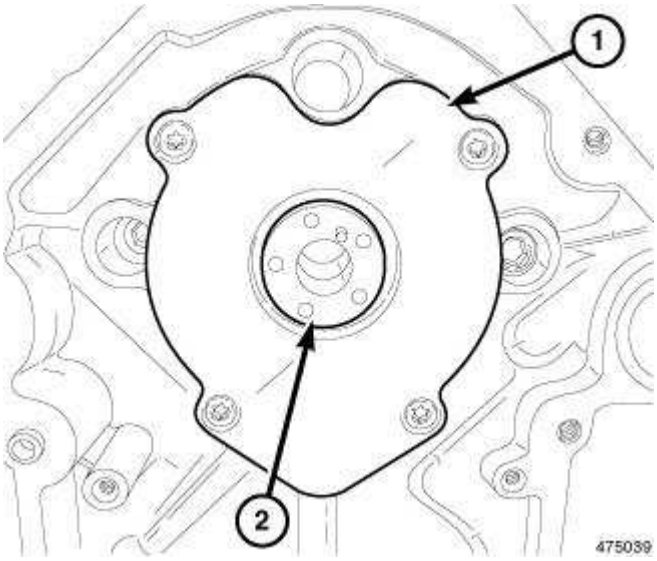

Fig. 175: Camshaft Thrust Plate
Courtesy of CHRYSLER GROUP, LLC

3. Install the camshaft thrust plate (1) and tighten retaining bolts to 12 N.m (106 in. lbs.).

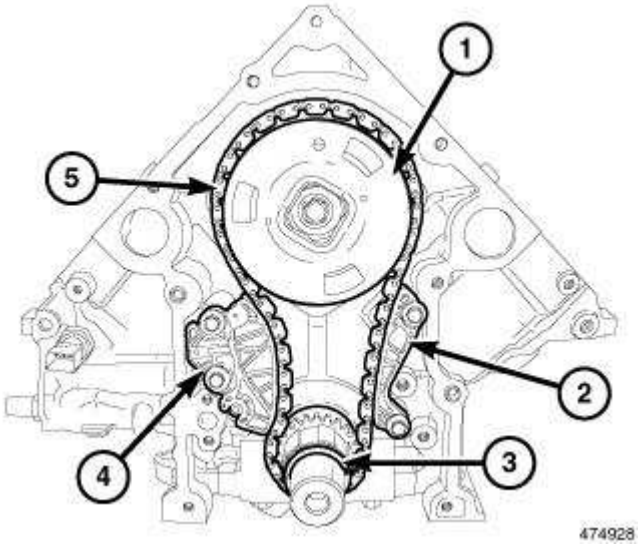

Fig. 176: Timing Chain, Sprockets, Timing Chain Tensioner & Guide
Courtesy of CHRYSLER GROUP, LLC

4. Install the timing chain and camshaft phaser. Refer to **CHAIN AND SPROCKETS, TIMING, INSTALLATION**.
5. Using a suitable dial indicator, measure the camshaft end play. Refer to **SPECIFICATIONS** . If not within specification, install a new thrust plate.

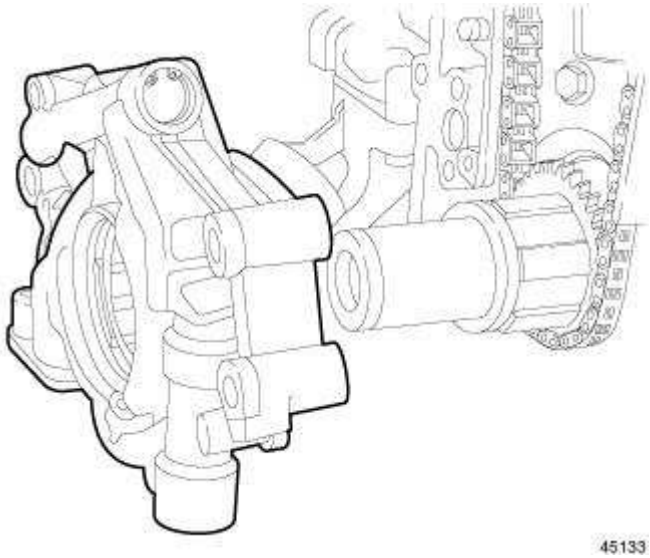

Fig. 177: Remove/Install Oil Pump
Courtesy of CHRYSLER GROUP, LLC

6. Install the oil pump. Refer to **PUMP, ENGINE OIL, INSTALLATION**.

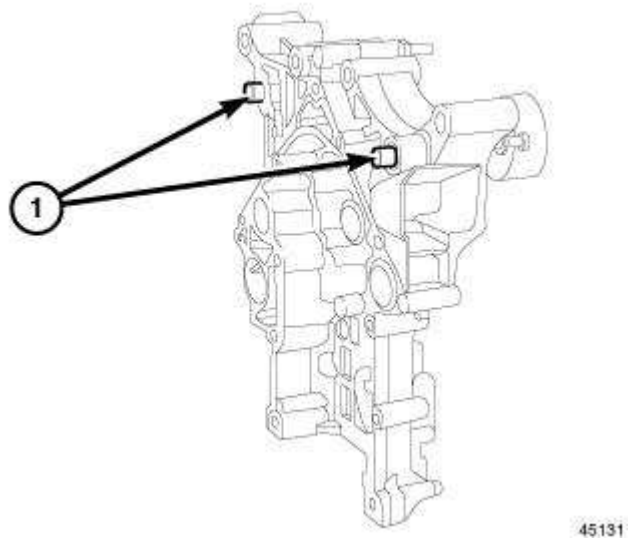

Fig. 178: Front Cover Slide Bushings
Courtesy of CHRYSLER GROUP, LLC

7. Install the engine timing cover. Refer to **COVER(S), ENGINE TIMING, INSTALLATION**.
8. Raise and support vehicle.

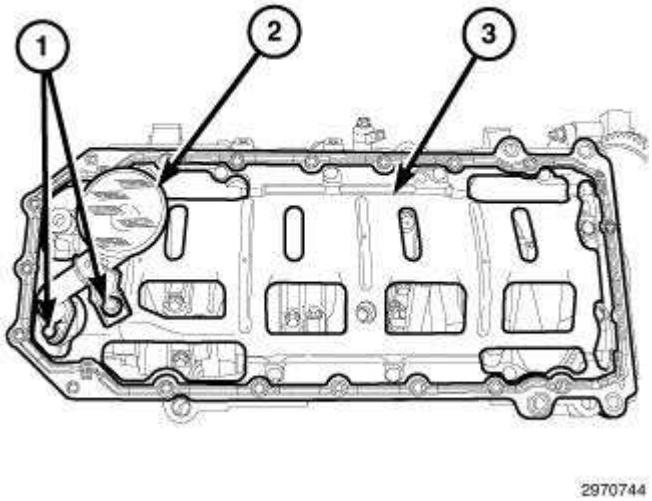

Fig. 179: Integral Windage Tray, Oil Pump Pickup Tube & Bolts
Courtesy of CHRYSLER GROUP, LLC

9. Install the oil pump pickup tube (2) and oil pan. Refer to **PAN, OIL, INSTALLATION**.

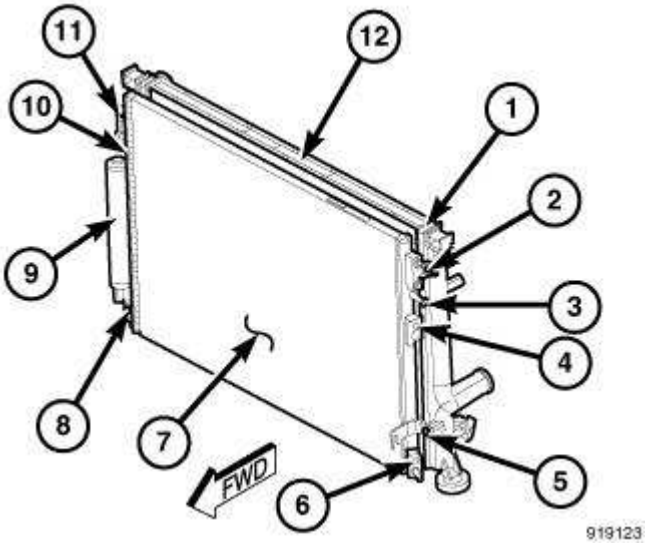

Fig. 180: A/C Condenser & Radiator
Courtesy of CHRYSLER GROUP, LLC

10. Install the A/C condenser (7). Refer to **CONDENSER, A/C, INSTALLATION** .
11. Install the radiator (12). Refer to **RADIATOR, ENGINE COOLING, INSTALLATION** .
12. Install the A/C compressor. Refer to **COMPRESSOR, A/C, INSTALLATION** .

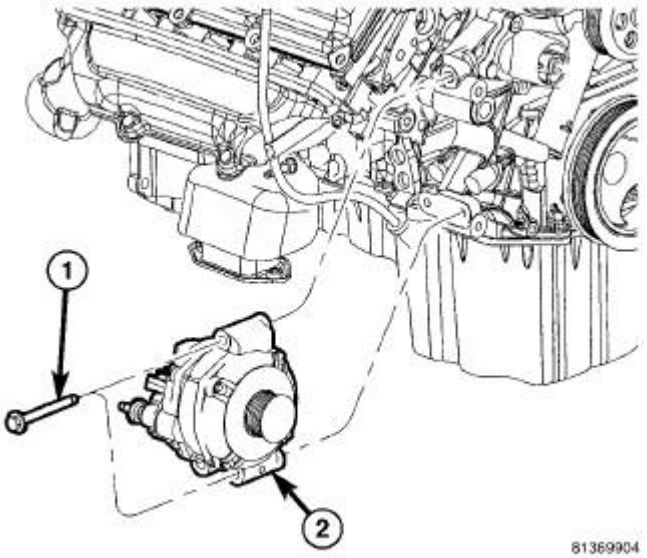

Fig. 181: Generator & Mounting Bolts
Courtesy of CHRYSLER GROUP, LLC

13. Install the generator. Refer to **GENERATOR, INSTALLATION** .

CAUTION: The 6.4L Multi Displacement System (MDS) engine uses both standard roller lifters and deactivating roller lifters. The deactivating

roller lifters must be used in cylinders 1, 4, 6, 7. The deactivating lifters can be identified by the two holes in the side of the lifter body, for the latching pins.

CAUTION: Whenever the camshaft is replaced, all lifters must be replaced. If the lifter and retainer assemblies are to be reused, identify the lifters to ensure installation in their original location or engine damage could result.

CAUTION: The lifter and retainer assembly must be installed as a unit.

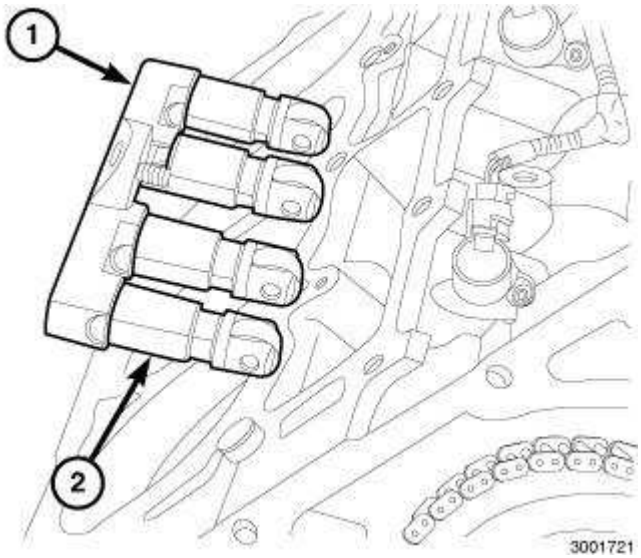

Fig. 182: Hydraulic Lifters/Tappets & Retainer/Guide Holder
Courtesy of CHRYSLER GROUP, LLC

14. Install the lifters (2) and retainer (1) as an assembly into their original location. Refer to **LIFTER (S), HYDRAULIC, ROLLER, INSTALLATION**.

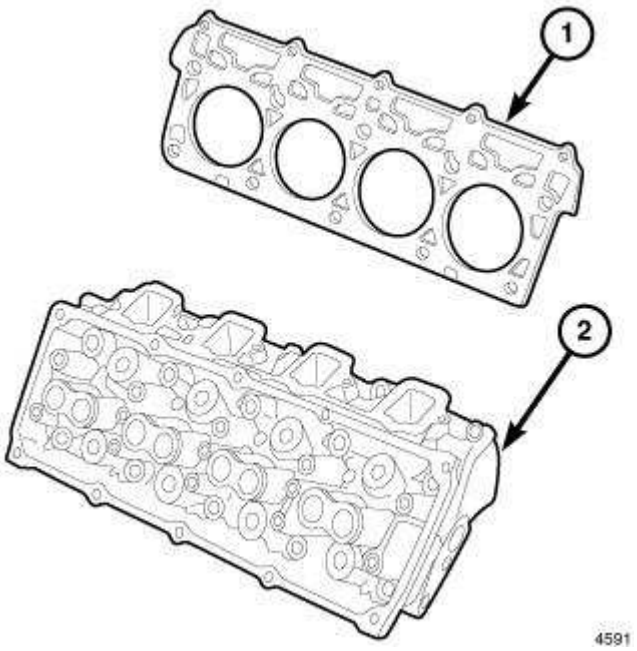

Fig. 183: Cylinder Head & Gasket
Courtesy of CHRYSLER GROUP, LLC

15. Install both cylinder heads (2). Refer to L **CYLINDER HEAD, INSTALLATION**.
16. Install the pushrods in the same location as removed.
17. Install the rocker arms. Refer to **ROCKER ARM, VALVE, INSTALLATION**.

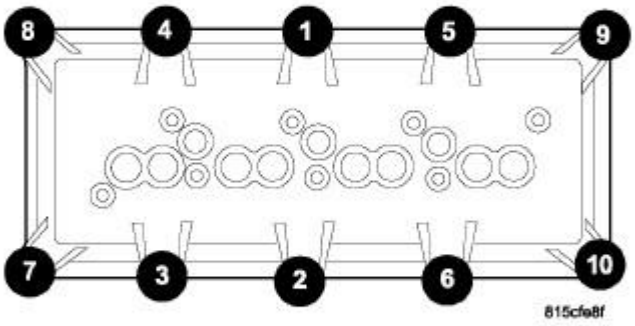

Fig. 184: Cylinder Head Cover Removal/Tightening Sequence
Courtesy of CHRYSLER GROUP, LLC

18. Install the cylinder head covers. Refer to **COVER(S), CYLINDER HEAD, INSTALLATION**.

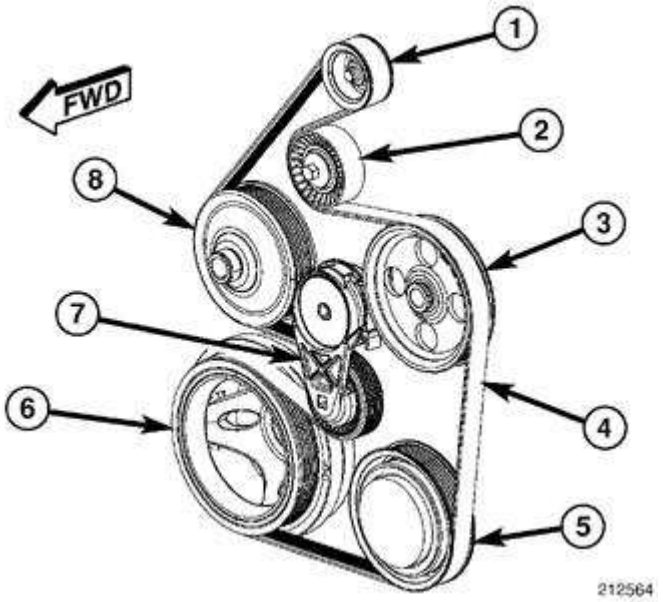

Fig. 185: Identifying Accessory Drive Belt Routing - 5.7L
Courtesy of CHRYSLER GROUP, LLC

19. Install the accessory drive belt. Refer to **BELT, SERPENTINE, INSTALLATION** .

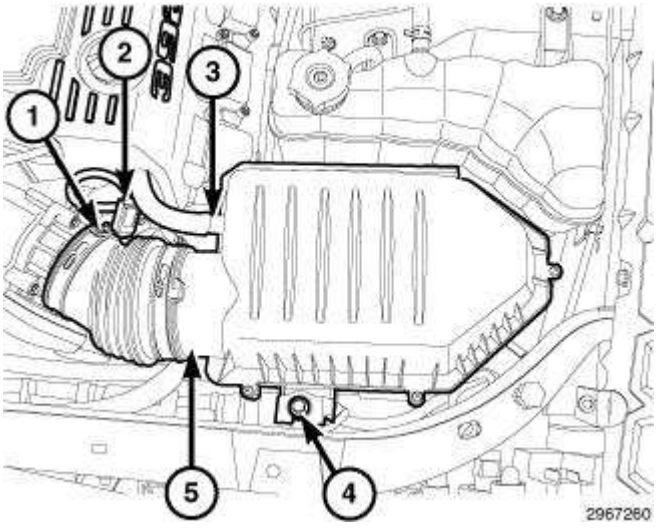

Fig. 186: Air Duct Retaining Clamp, Intake Air Temperature Sensor Electrical Connector, Makeup Air Hose, Bolt & Air Cleaner Housing
Courtesy of CHRYSLER GROUP, LLC

20. Install the air cleaner housing (5) and clean air tube (1).

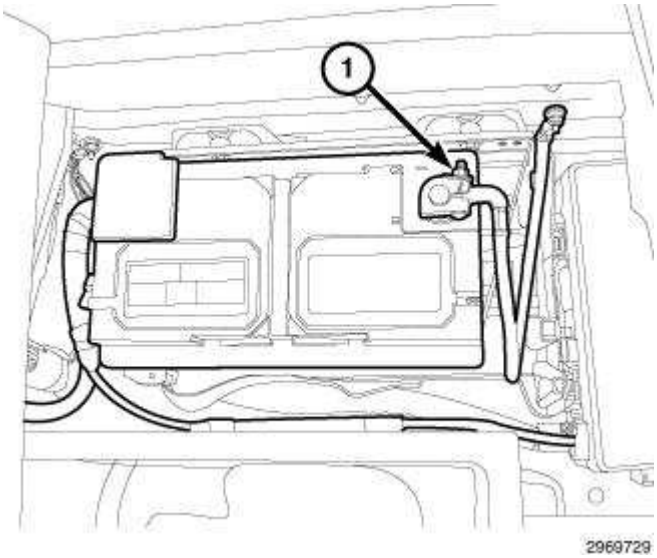

Fig. 187: Negative Battery Cable
Courtesy of CHRYSLER GROUP, LLC

21. Install the negative battery cable.
22. Fill the cooling system with the specified type and amount of engine coolant. Refer to **STANDARD PROCEDURE** .

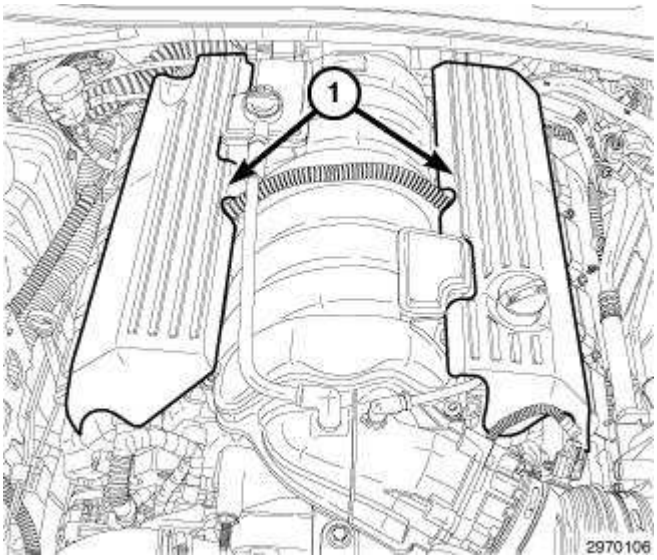

Fig. 188: Engine Covers
Courtesy of CHRYSLER GROUP, LLC

23. Fill the crankcase with the specified type and amount of engine oil. Refer to **STANDARD PROCEDURE** .
24. Install engine covers (1).
25. Start the engine and check for leaks.

CRANKSHAFT

REMOVAL

REMOVAL

CAUTION: If the engine encounters a catastrophic failure, the engine oil cooler must be replaced or damage to the new engine and/or components could result.

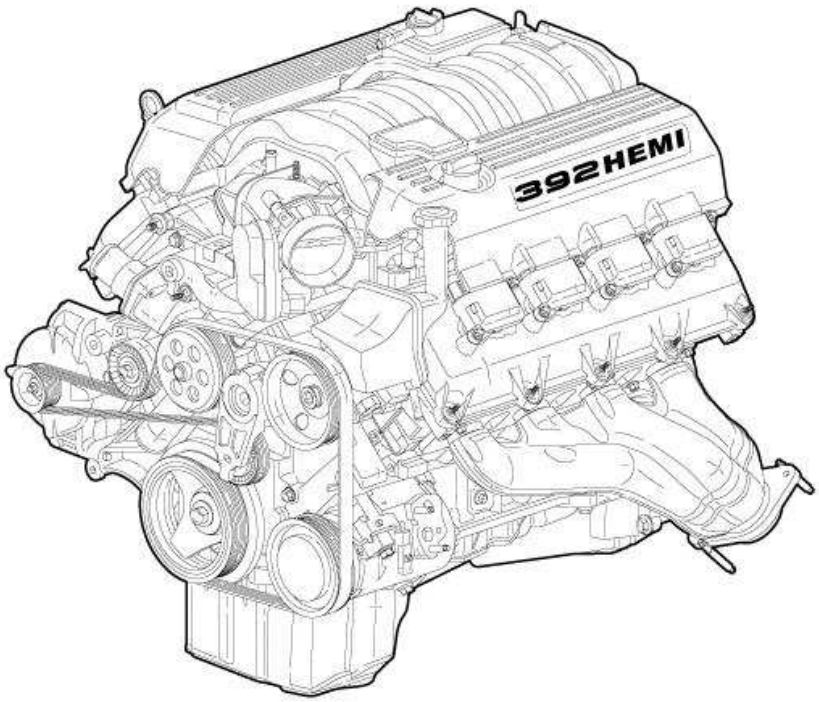

Fig. 189: 6.4L HEMI® V-8 Engine
Courtesy of CHRYSLER GROUP, LLC

1. Remove the engine. Refer to **REMOVAL**.
2. Secure the engine onto a suitable engine stand.

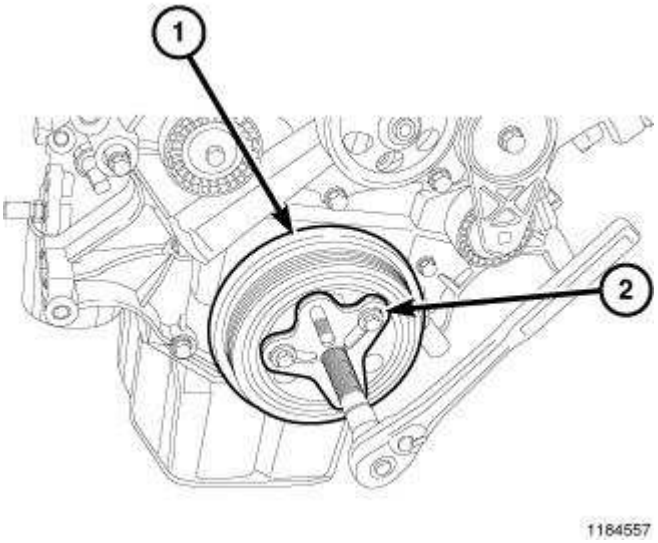

Fig. 190: Vibration Damper & Bolt Grip Puller
Courtesy of CHRYSLER GROUP, LLC

NOTE: When installing the puller tool, ensure the bolts are fully threaded through the entire crankshaft damper.

3. Remove the crankshaft damper retaining bolt.
4. Install the puller tool (2) making sure the bolts are fully threaded through the entire crankshaft damper.
5. Remove the crankshaft damper (1).

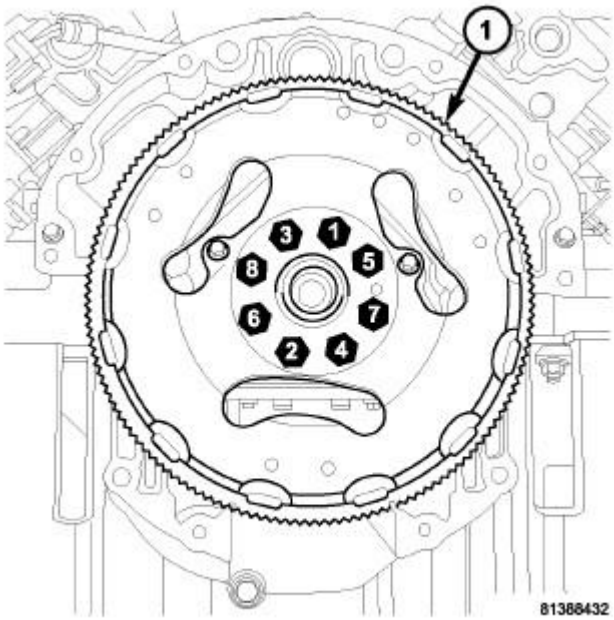

Fig. 191: Flex Plate Bolt Removal/Tightening Sequence
Courtesy of CHRYSLER GROUP, LLC

6. Remove the flexplate (1) or flywheel. Refer to **FLEXPLATE, REMOVAL**.

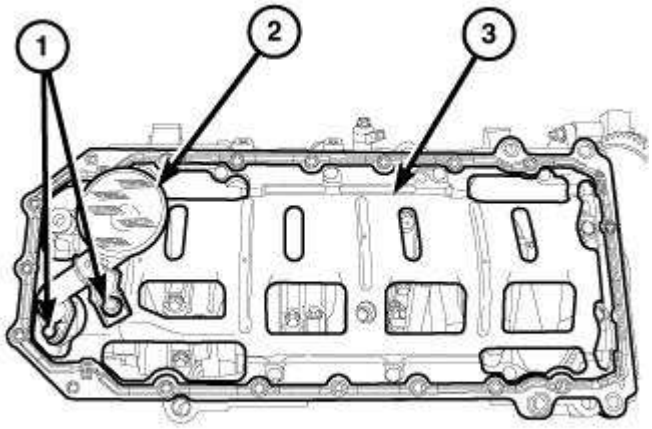

Fig. 192: Integral Windage Tray, Oil Pump Pickup Tube & Bolts
Courtesy of CHRYSLER GROUP, LLC

NOTE: When the oil pan is removed, a new oil pan gasket and the integral windage tray assembly must be installed, the old gasket cannot be reused.

7. Remove the oil pan and the oil pump pickup tube (2). Refer to **PAN, OIL, REMOVAL**.
8. Remove and discard the oil pan gasket/windage tray (3).

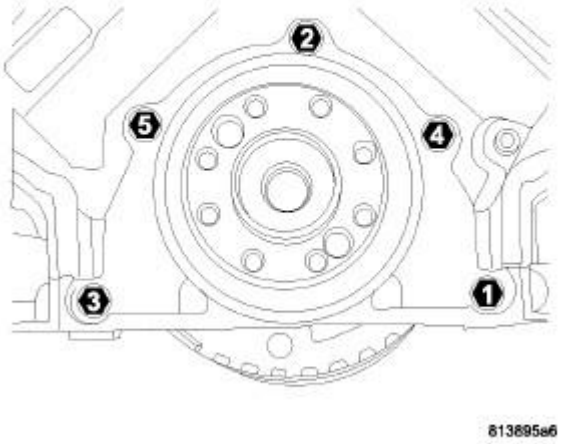

Fig. 193: Rear Seal Retainer Removal/Tightening Sequence
Courtesy of CHRYSLER GROUP, LLC

9. Remove the crankshaft rear oil seal retainer. Refer to **RETAINER, CRANKSHAFT REAR OIL SEAL, REMOVAL**.

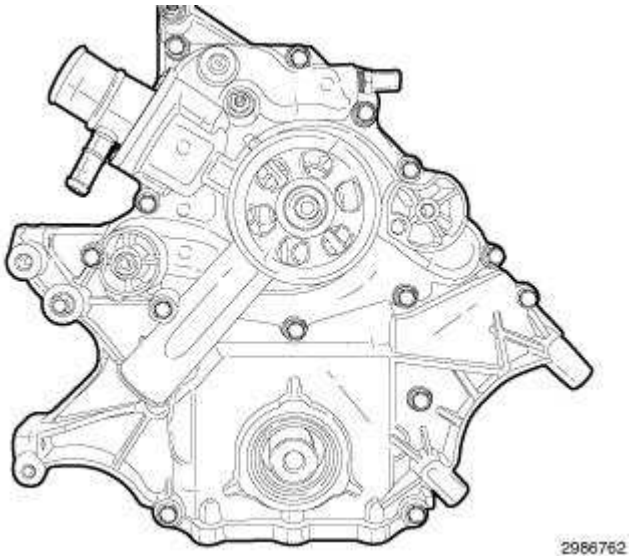

Fig. 194: Engine Timing Cover
Courtesy of CHRYSLER GROUP, LLC

10. Remove the engine timing cover. Refer to **COVER(S), ENGINE TIMING, REMOVAL**.

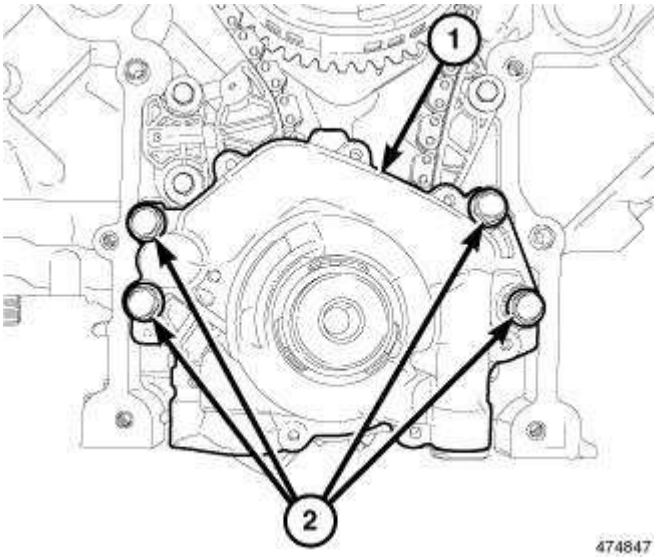

Fig. 195: Oil Pump & Retaining Bolts
Courtesy of CHRYSLER GROUP, LLC

11. Remove the oil pump retaining bolts (2) and remove the oil pump (1).

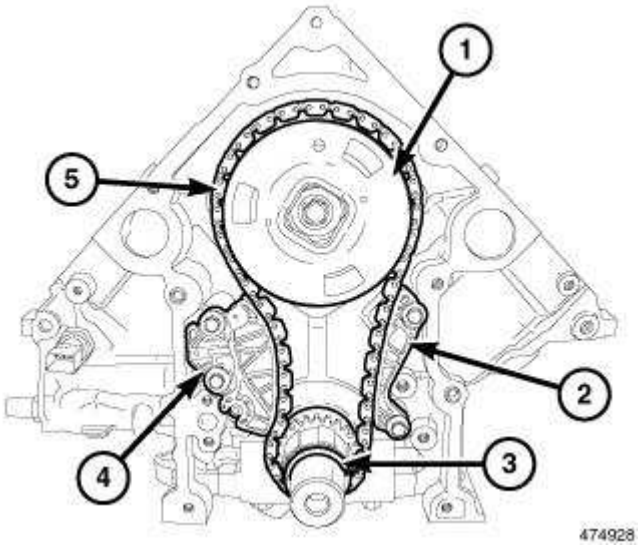

Fig. 196: Timing Chain, Sprockets, Timing Chain Tensioner & Guide
Courtesy of CHRYSLER GROUP, LLC

12. Remove the timing chain (5), camshaft phaser (1) and crankshaft sprocket (3). Refer to **CHAIN AND SPROCKETS, TIMING, REMOVAL**.

CAUTION: Do not use a number stamp or a punch to mark connecting rods or caps, as damage to connecting rods could occur.

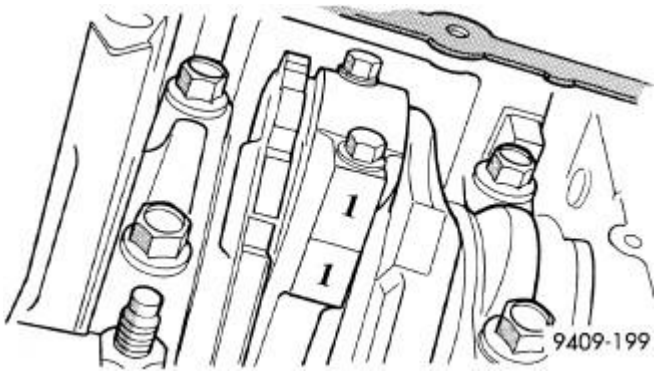

Fig. 197: Mark On Connecting Rod & Bearing Cap
Courtesy of CHRYSLER GROUP, LLC

NOTE: Connecting rods and bearing caps are not interchangeable and should be marked before removal to ensure correct reassembly.

13. Mark the connecting rod and bearing cap location using a permanent ink marker or scribe tool.
14. Remove the rod bearing caps and bearings.

CAUTION: Do not use a number stamp or a punch to mark main bearing caps as damage to bearing caps and/or bearings could occur.

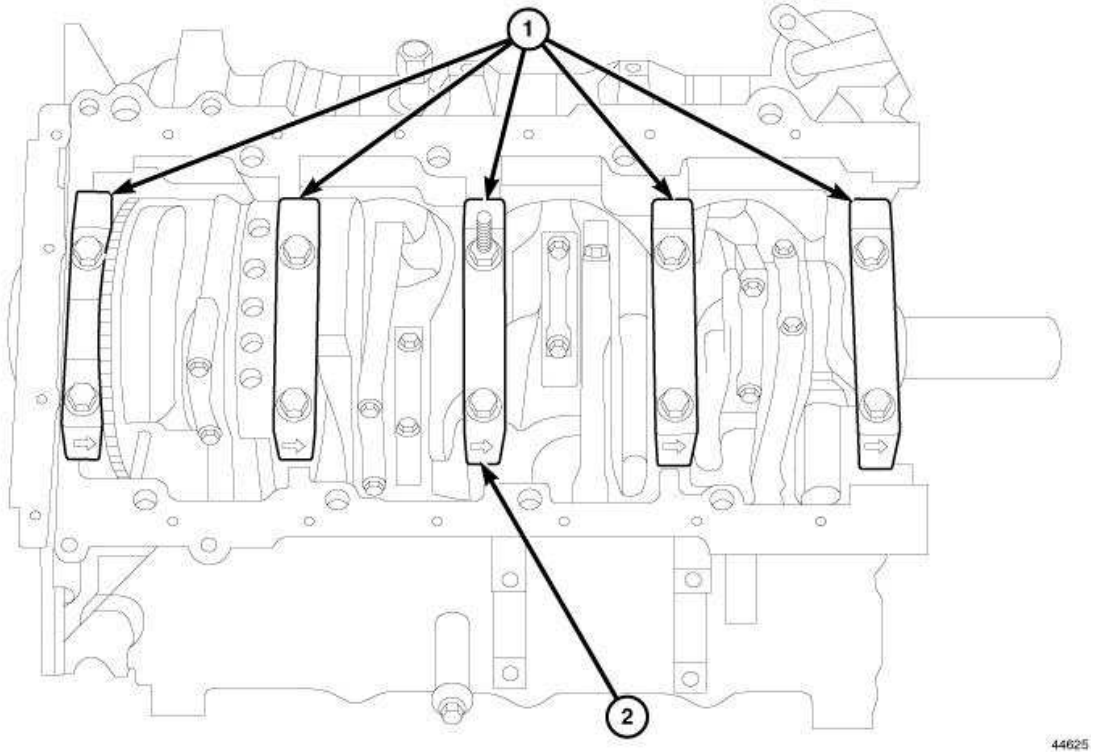

Fig. 198: Main Bearing Caps & Arrows
Courtesy of CHRYSLER GROUP, LLC

NOTE: Main bearing caps are not interchangeable and should be marked before removal to ensure correct reassembly.

15. Mark the main bearing caps (1) using a permanent ink marker or scribe tool.

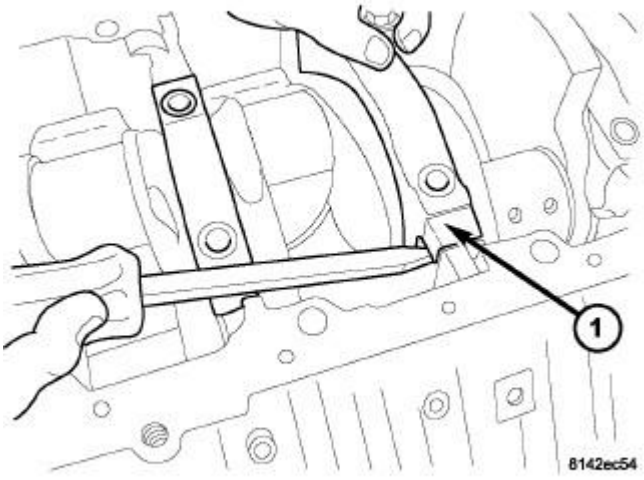

Fig. 199: Main Bearing Cap Removal
Courtesy of CHRYSLER GROUP, LLC

16. Remove the main bearing cap bolts.
17. Remove the main bearing cap crossbolts.
18. Remove main bearing caps (1) and bearings one at a time.

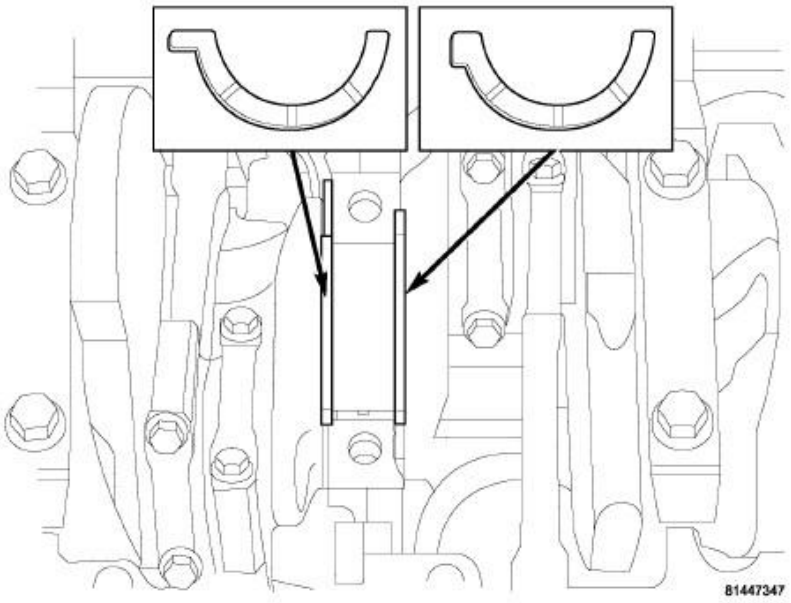

Fig. 200: Thrust Washer Locations
Courtesy of CHRYSLER GROUP, LLC

19. Remove the thrust bearings.

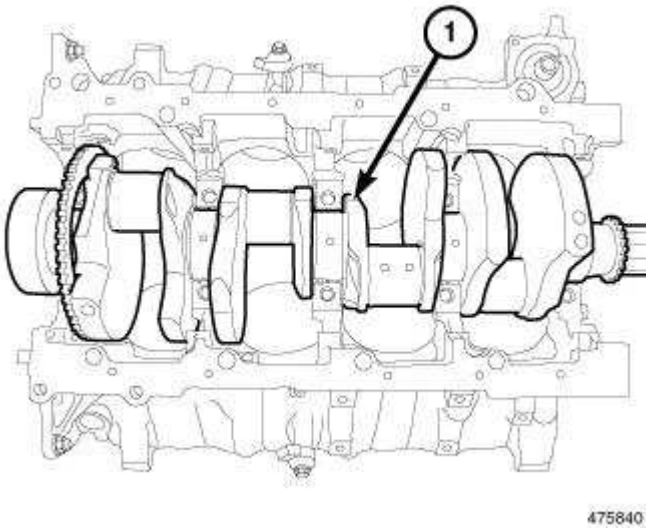

Fig. 201: Crankshaft
Courtesy of CHRYSLER GROUP, LLC

20. Remove the crankshaft (1) out of the engine block.

INSTALLATION

INSTALLATION

CAUTION: If the engine encounters a catastrophic failure, the engine oil cooler must be replaced or damage to the new engine and/or components could result.

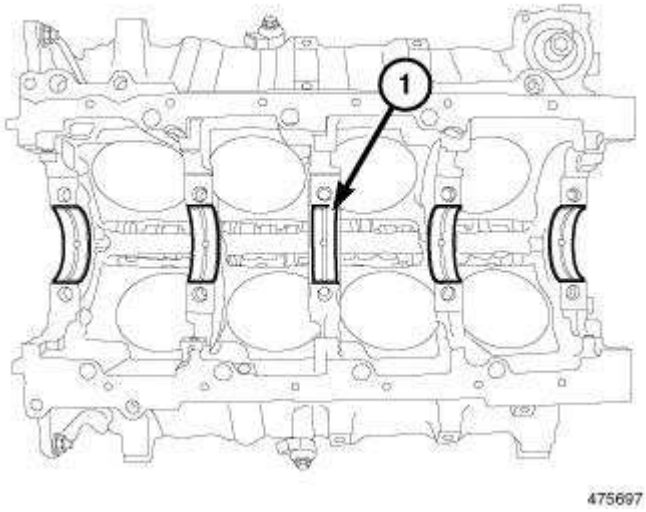

Fig. 202: Main Bearings
Courtesy of CHRYSLER GROUP, LLC

1. Select the proper main bearings (1). Refer to **STANDARD PROCEDURE** .
2. Lubricate the main bearing shells with clean engine oil.
3. Install the main bearings into the engine block.

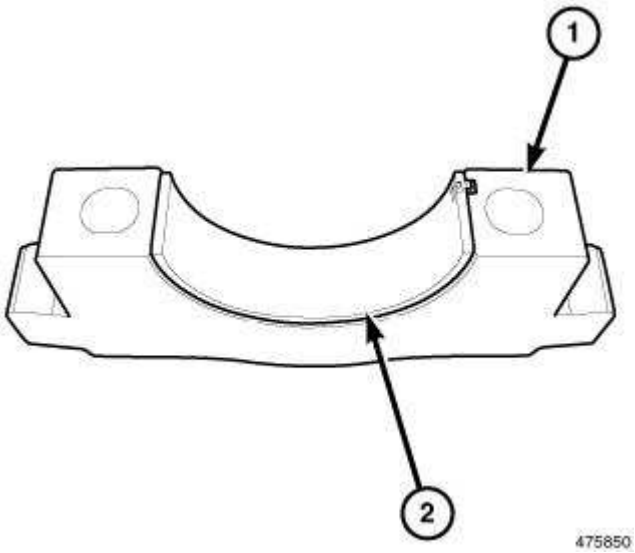

Fig. 203: Main Bearing Shells In The Bearing Caps
Courtesy of CHRYSLER GROUP, LLC

4. Install the main bearing shells (2) into the bearing caps (1).

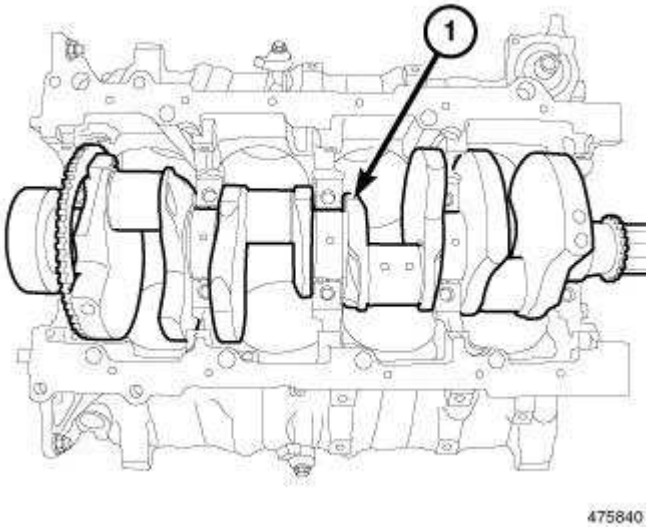

Fig. 204: Crankshaft
Courtesy of CHRYSLER GROUP, LLC

5. Position the crankshaft (1) into the engine block.

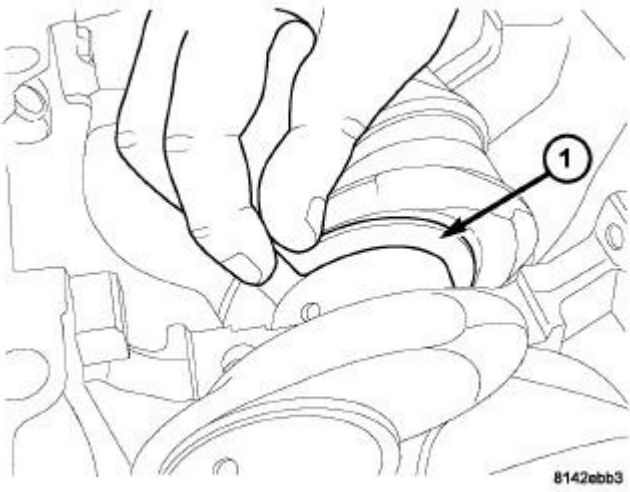

Fig. 205: Thrust Washer Installation
Courtesy of CHRYSLER GROUP, LLC

6. Lubricate and install the thrust bearings (1).

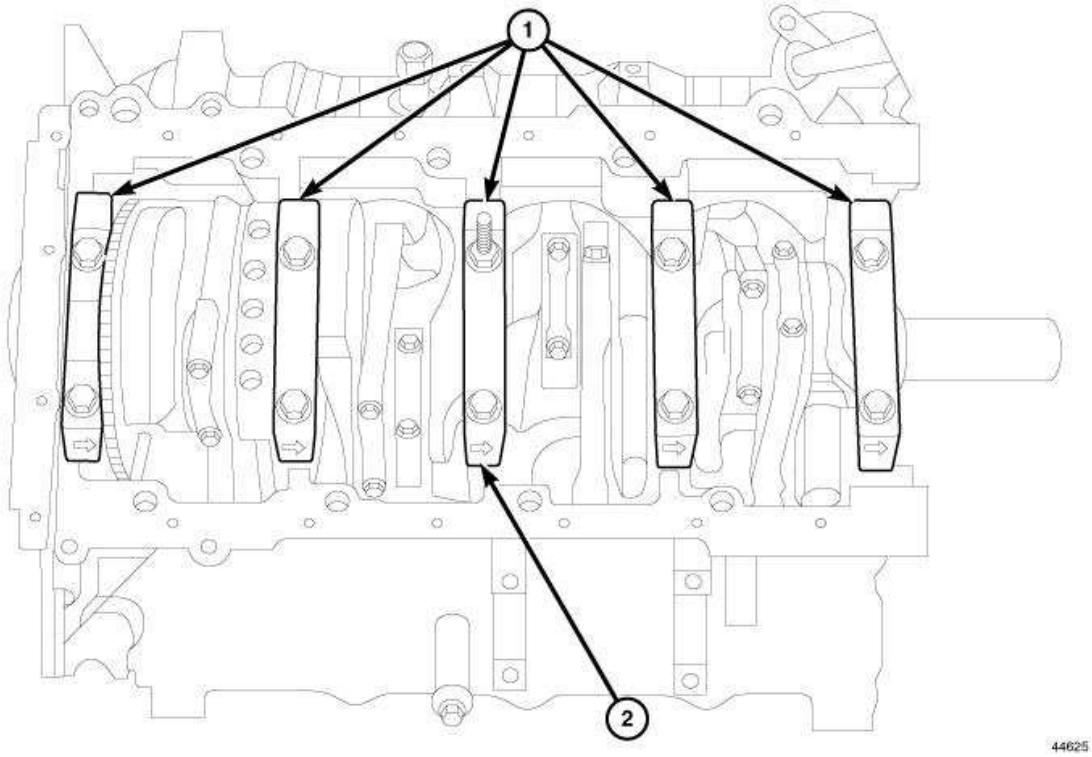

Fig. 206: Main Bearing Caps & Arrows
Courtesy of CHRYSLER GROUP, LLC

7. Install all main bearing caps (1) in the location as noted during removal making sure the arrow (2) faces forward.

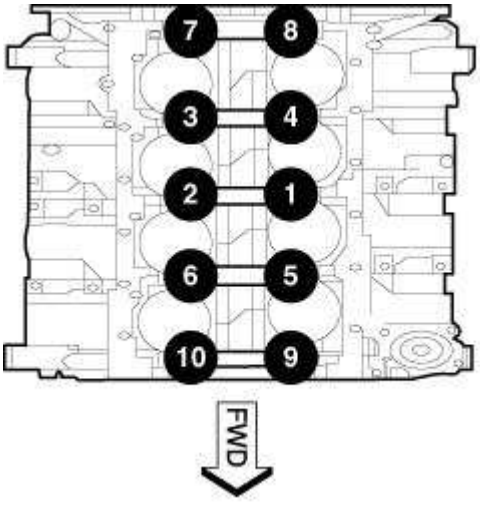

Fig. 207: Main Bearing Cap Bolt Tightening Sequence
Courtesy of CHRYSLER GROUP, LLC

8. Clean and oil all main cap bolts and install finger tight.
9. Using the sequence shown in illustration, tighten the main bearing cap bolts to 13 N.m (10 ft.

lbs.).

10. Again, using the sequence shown in illustration, tighten the main bearing cap bolts to 28 N.m (21 ft. lbs.).
11. Using the sequence shown in illustration, rotate the main bearing cap bolts an additional 90°.

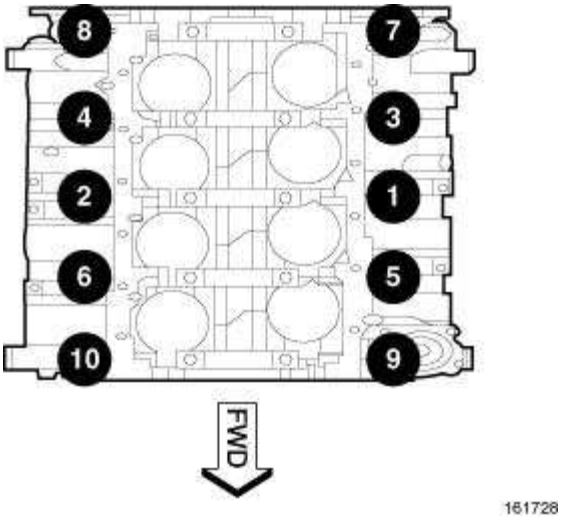

Fig. 208: Crossbolt Tightening Sequence
Courtesy of CHRYSLER GROUP, LLC

NOTE: The main bearing cap crossbolts are torqued after the final torque of the main cap bolts. Always use a new seal washers on crossbolts.

12. Install the crossbolts with new seal washers finger tight.
13. Using the sequence shown in illustration, tighten the crossbolts to 31 N.m (23 ft. lbs.).
14. Again, using the sequence shown in illustration, repeat the crossbolt tightening procedure.
15. Measure the crankshaft end play. Refer to **STANDARD PROCEDURE** .

CAUTION: The connecting rod bolts must not be reused. Always replace the connecting rod bolts whenever they are loosened or removed.

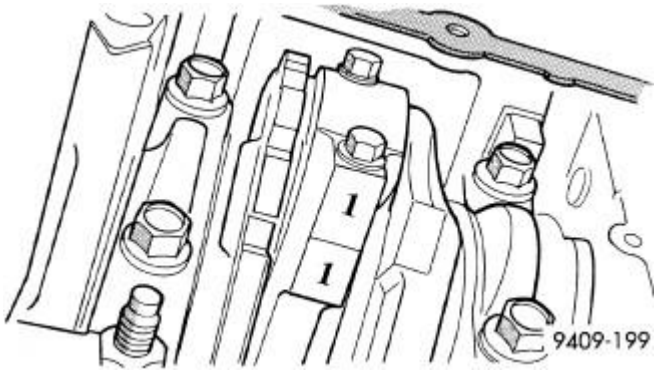

Fig. 209: Mark On Connecting Rod & Bearing Cap

Courtesy of CHRYSLER GROUP, LLC

16. Wipe the connecting rod caps clean and install the rod bearings.
17. Lubricate the bearing surfaces with clean engine oil and install the bearings and connecting rod caps onto the connecting rod journals in the same location as noted during removal.
18. Lubricate the new connecting rod bolts with clean engine oil and install the bolts finger tight.
19. Tighten the connecting rod bolts to 21 N.m (15 ft. lbs.) plus an additional 90° turn.

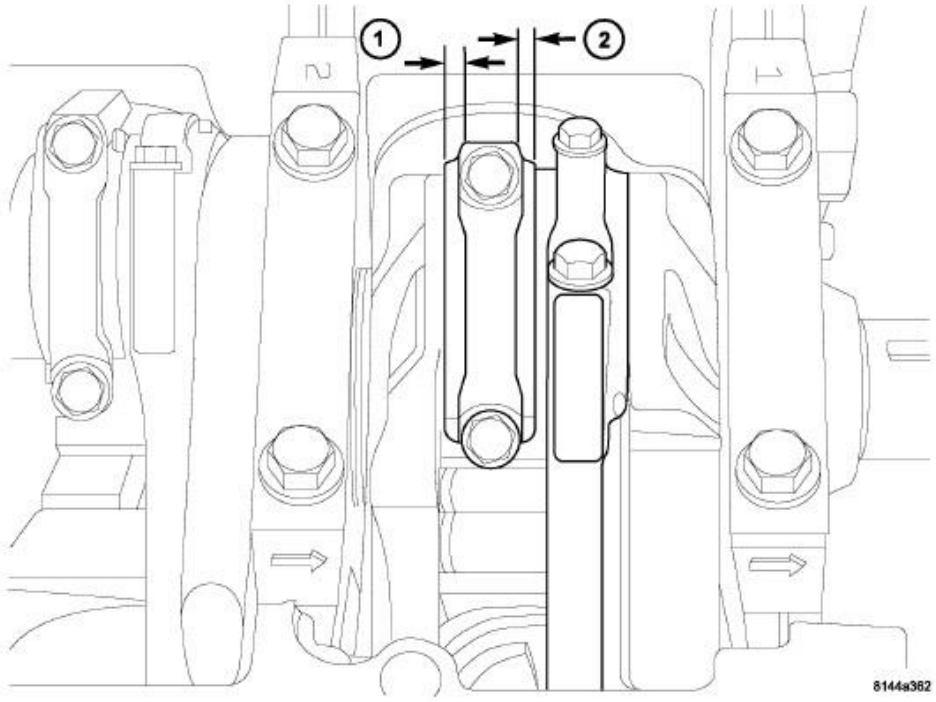

Fig. 210: Identifying Connecting Rod Proper Installation
Courtesy of CHRYSLER GROUP, LLC

20. If required, measure the connecting rod side clearance (1, 2). Refer to **SPECIFICATIONS** .

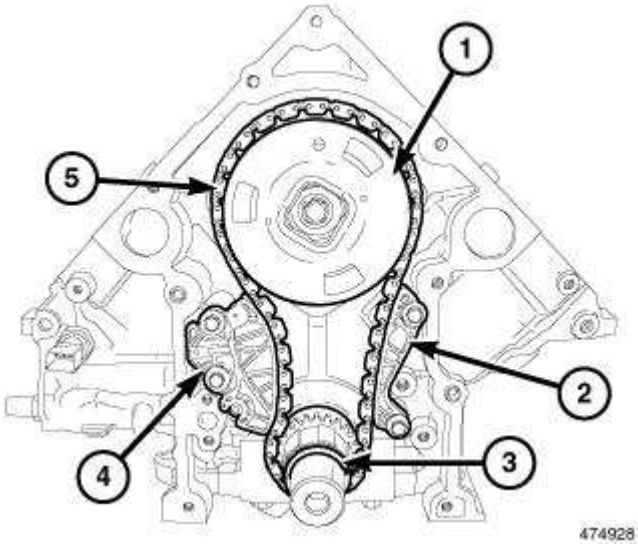

Fig. 211: Timing Chain, Sprockets, Timing Chain Tensioner & Guide
Courtesy of CHRYSLER GROUP, LLC

21. Install the timing chain (5), camshaft phaser (1) and crankshaft sprocket (3). Refer to **CHAIN AND SPROCKETS, TIMING, INSTALLATION**.

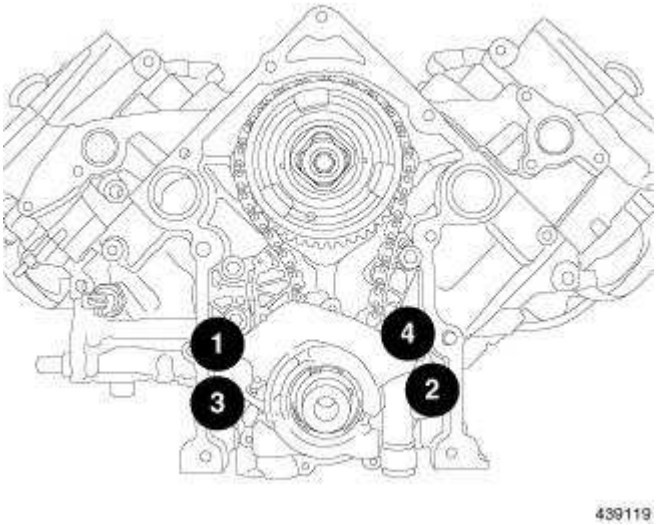

Fig. 212: Oil Pump Retaining Bolt Tightening Sequence
Courtesy of CHRYSLER GROUP, LLC

22. Position the oil pump on the crankshaft and install the oil pump retaining bolts finger tight.
23. Using the sequence shown in illustration, tighten the oil pump retaining bolts to 28 N.m (21 ft. lbs.).

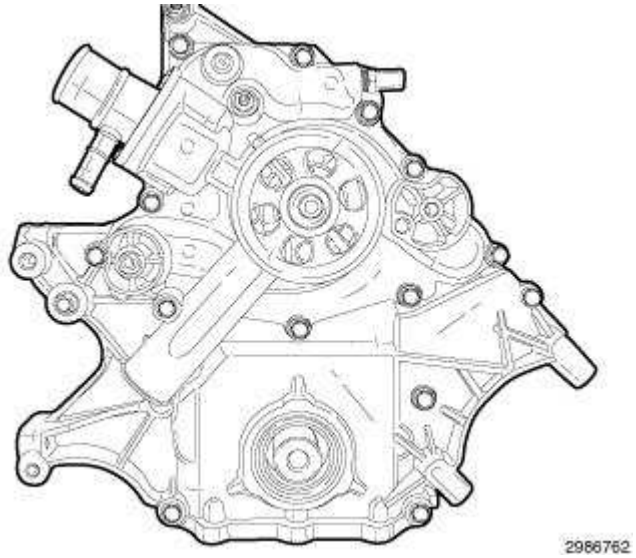

Fig. 213: Engine Timing Cover
Courtesy of CHRYSLER GROUP, LLC

24. Install the engine timing cover (1). Refer to **COVER(S), ENGINE TIMING, INSTALLATION**.

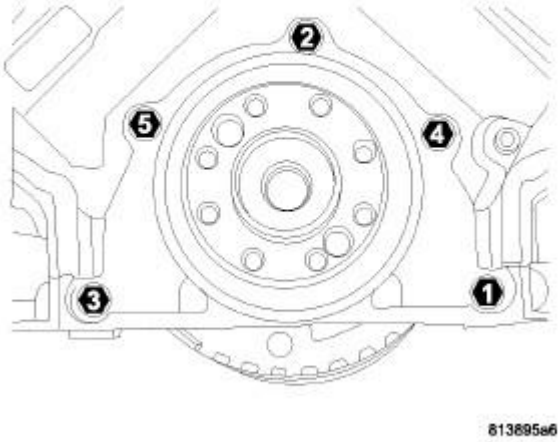

Fig. 214: Rear Seal Retainer Removal/Tightening Sequence
Courtesy of CHRYSLER GROUP, LLC

NOTE: The crankshaft rear oil seal is integral to the crankshaft rear oil seal retainer and must be replaced as an assembly.

NOTE: The crankshaft rear oil seal retainer can not be reused after removal.

25. Thoroughly clean all gasket residue from the engine block.
26. Position the gasket onto the new crankshaft rear oil seal retainer.
27. Position the crankshaft rear oil seal retainer onto the engine block.
28. Using the sequence shown in illustration, install the crankshaft rear oil seal retainer mounting bolts and tighten to 15 N.m (11 ft. lbs.).

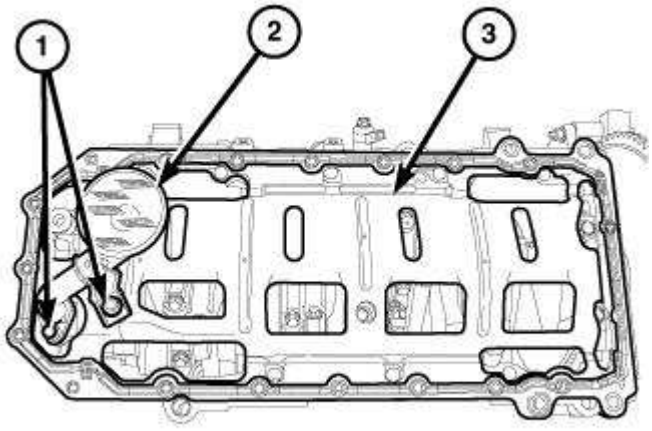

Fig. 215: Integral Windage Tray, Oil Pump Pickup Tube & Bolts
Courtesy of CHRYSLER GROUP, LLC

29. Install the oil pump pickup tube (2) and oil pan. Refer to **PAN, OIL, INSTALLATION**.

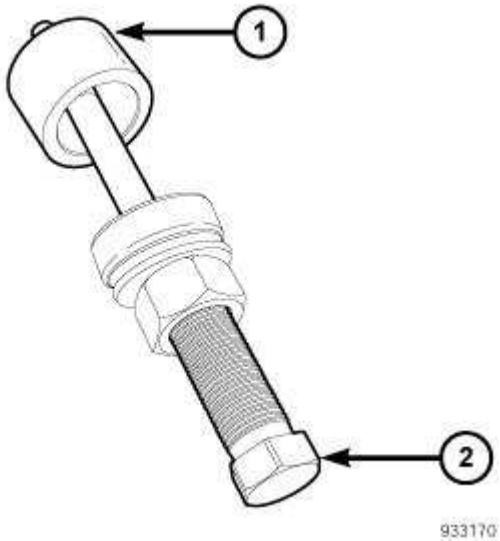

Fig. 216: Pressing Cup & Damper Installer
Courtesy of CHRYSLER GROUP, LLC

CAUTION: To prevent severe damage to the crankshaft Damper Installer,

thoroughly clean the damper bore and the crankshaft nose before installing damper.

30. Position the damper on the crankshaft.

CAUTION: The Damper Installer is assembled in a specific sequence. Failure to assemble this tool in this sequence may result in tool failure and severe damage to either the tool or the crankshaft.

31. Assemble the Damper Installer (special tool #8512A, Installer, Damper) (2) as follows:
    1. Install the nut onto the threaded shaft.
    2. Install the roller bearing onto the threaded shaft making sure the hardened bearing surface is facing the nut.
    3. Install the pressing cup (2) from the A/C Hub Installer (special tool #6871, Installer, A/C Hub) onto the threaded shaft.
    4. Coat the threaded shaft with MOPAR® Nickel Anti-Seize or equivalent.

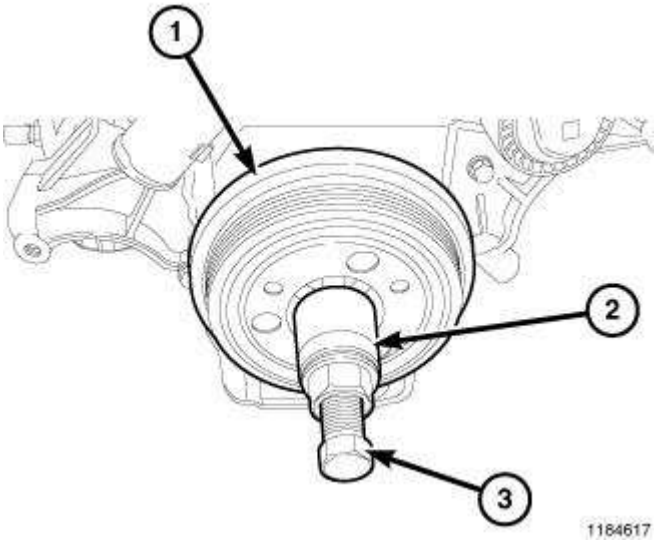

Fig. 217: Pressing Damper Onto Crankshaft
Courtesy of CHRYSLER GROUP, LLC

32. Using the Damper Installer (special tool #8512A, Installer, Damper) (3) and the pressing cup (2) from A/C Hub Installer (special tool #6871, Installer, A/C Hub), press the crankshaft damper (1) onto the crankshaft.
33. Install the crankshaft damper bolt and tighten to 176 N.m (129 ft. lbs.).

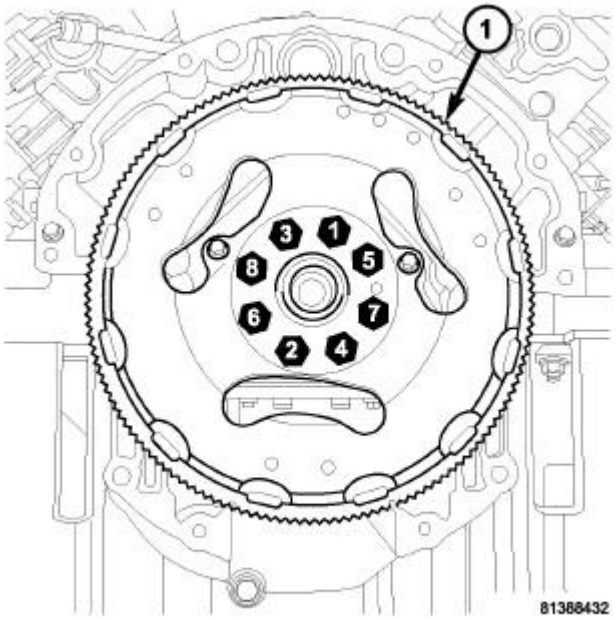

Fig. 218: Flex Plate Bolt Removal/Tightening Sequence
Courtesy of CHRYSLER GROUP, LLC

34. Install the flexplate (1) or flywheel. Refer to **FLEXPLATE, INSTALLATION**.

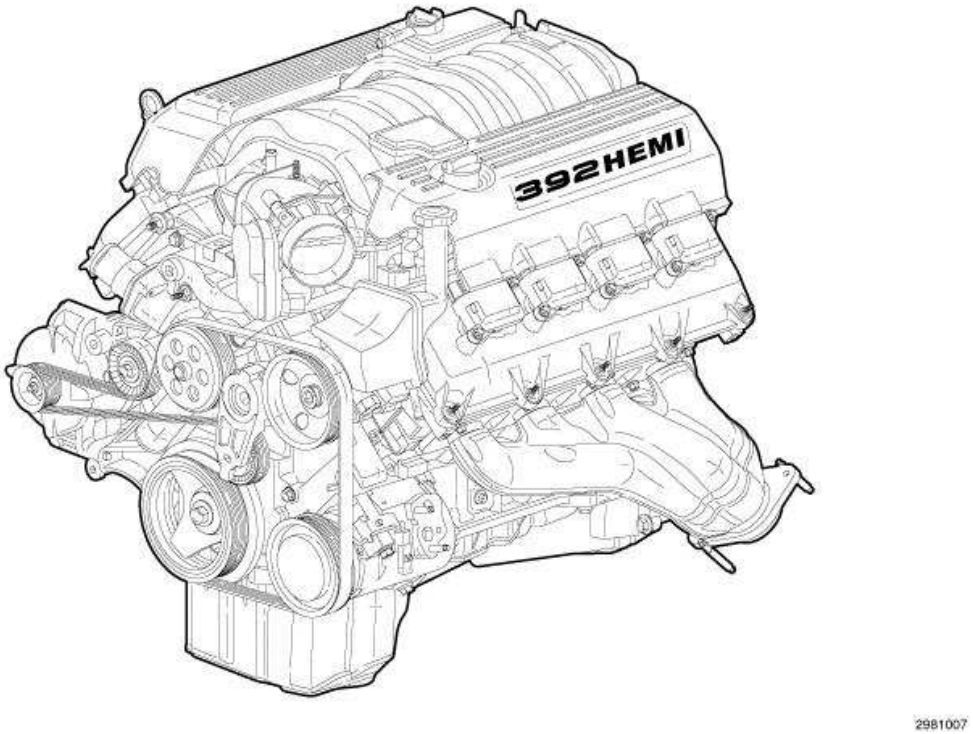

Fig. 219: 6.4L HEMI® V-8 Engine

Courtesy of CHRYSLER GROUP, LLC

35. Install the engine. Refer to **INSTALLATION**.
36. Start the engine and check for leaks.

DAMPER, VIBRATION

DESCRIPTION

DESCRIPTION

The crankshaft damper is used to control the resonance that is produced by the engine. The Noise, Vibration, and Harshness (NVH) created from the crankshaft can be controlled by dissipating the torque energy through the damper.

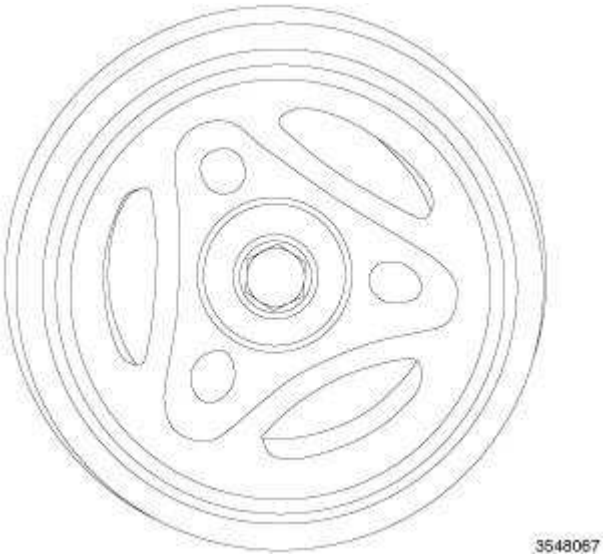

Fig. 220: Crankshaft Damper & Harden Steel Bolt
Courtesy of CHRYSLER GROUP, LLC

The crankshaft damper on the engines is held to the crankshaft by means of a harden steel bolt. The damper is pressed onto a specific machined surface of the crankshaft.

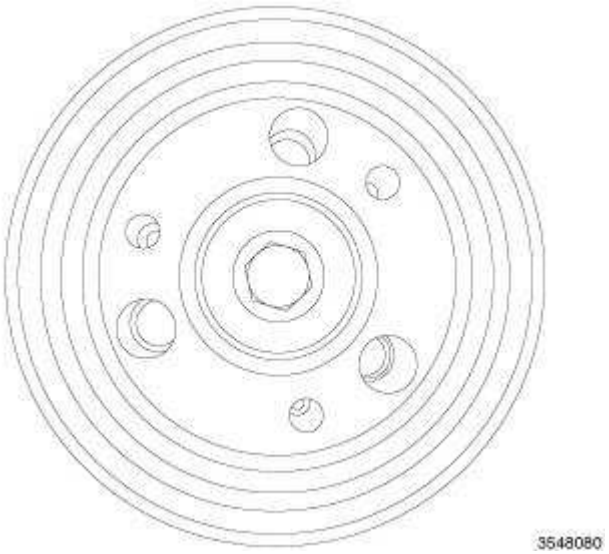

Fig. 221: HEMI® Engine Crankshaft Damper
Courtesy of CHRYSLER GROUP, LLC

The HEMI® Engines incorporate various crankshaft vibration dampers depending on the engine application. And can be removed depending on the application used.

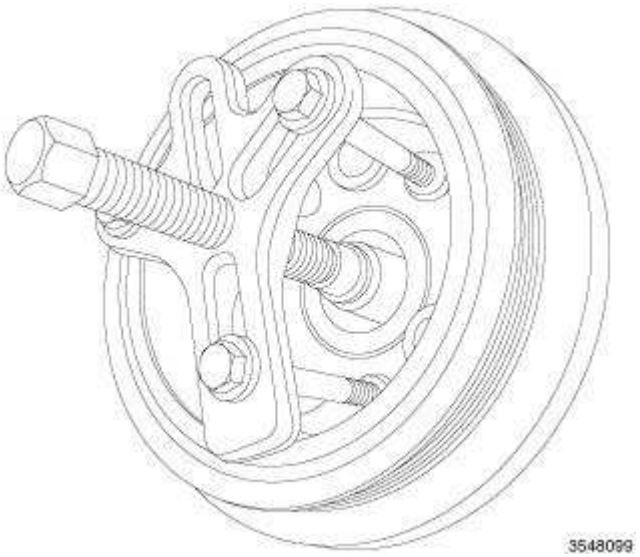

Fig. 222: Removing Vibration Damper
Courtesy of CHRYSLER GROUP, LLC

Finding the proper puller for the application will ensure no damage will come to the damper. The flange puller is used by installing 3 bolts into the pre-tapped holes in the damper.

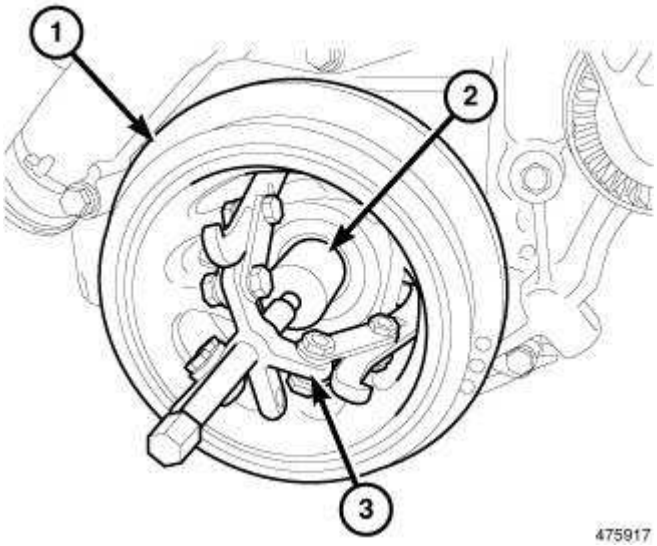

Fig. 223: Removing Vibration Damper
Courtesy of CHRYSLER GROUP, LLC

Some pulleys that do not have bolt holes can be removed with a three jaw style (special tool #1023, Puller).

REMOVAL

REMOVAL

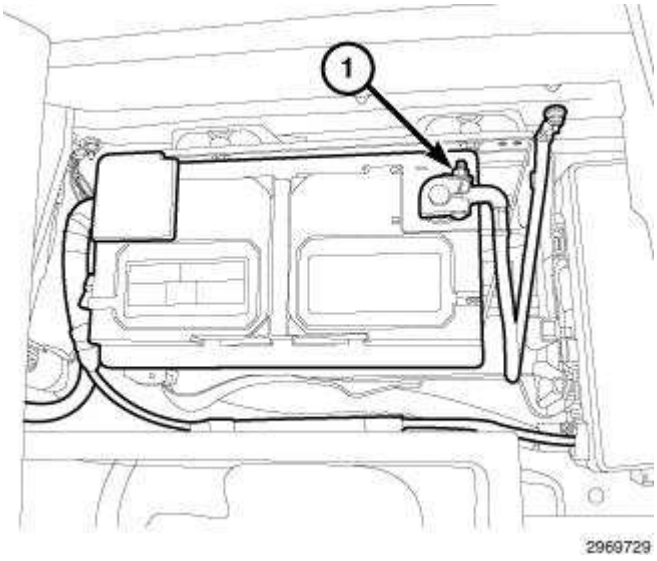

Fig. 224: Negative Battery Cable
Courtesy of CHRYSLER GROUP, LLC

1. Disconnect the negative battery cable (1).
2. Drain the cooling system. Refer to **STANDARD PROCEDURE** .

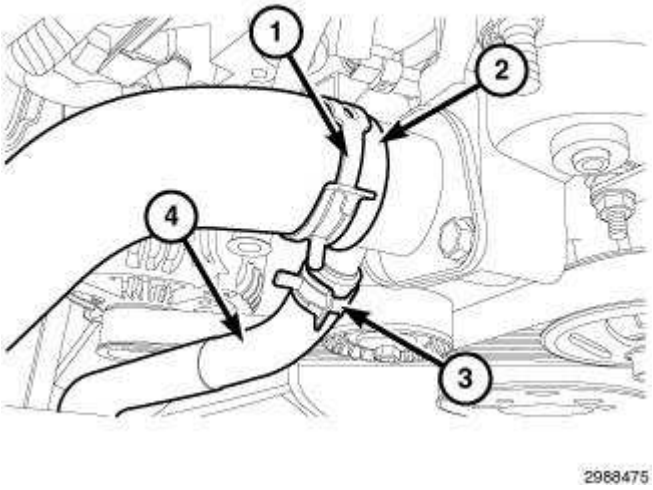

Fig. 225: Upper Radiator Hose, Clamp, Oil Cooler Return Line Hose & Clamp
Courtesy of CHRYSLER GROUP, LLC

3. Remove the upper radiator hose clamps (1) and remove the upper radiator hose (2).
4. Remove the oil cooler hose clamp (3) and remove oil cooler hose (4) and position aside.

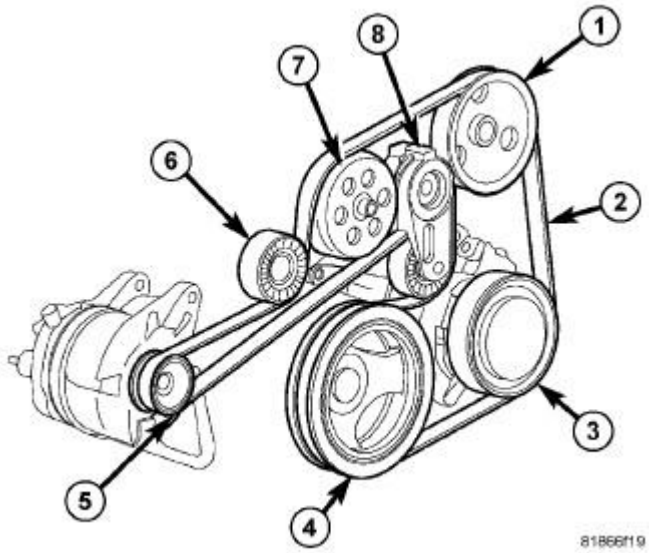

Fig. 226: Accessory Drive Belt Routing, Tensioner & Pulleys
Courtesy of CHRYSLER GROUP, LLC

5. Remove the accessory drive belt. Refer to **BELT, SERPENTINE, REMOVAL** .

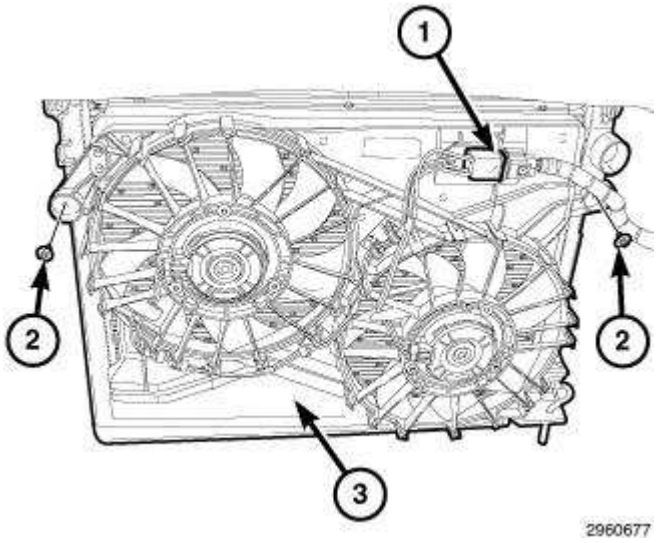

Fig. 227: Cooling Fan Electrical Connector, Cooling Fan Mounting Bolts & Radiator Cooling Fan Assembly
Courtesy of CHRYSLER GROUP, LLC

6. Remove the cooling fan assembly. Refer to **FAN, COOLING, REMOVAL** .

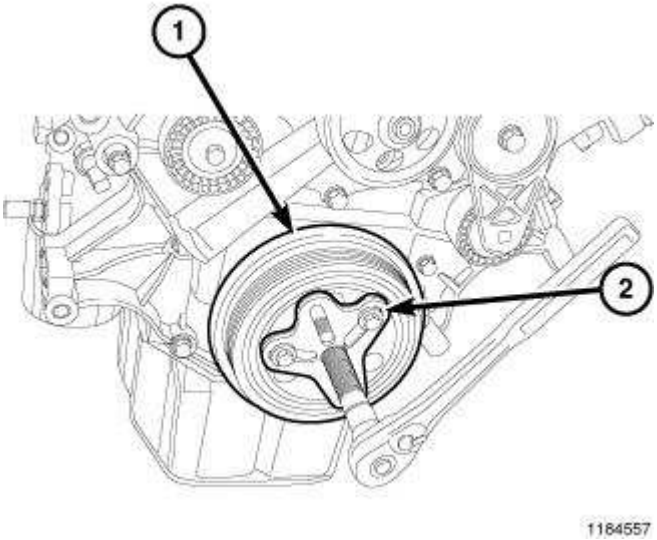

Fig. 228: Vibration Damper & Bolt Grip Puller
Courtesy of CHRYSLER GROUP, LLC

NOTE: When installing the puller tool, ensure the bolts are fully threaded through the entire crankshaft damper.

7. Remove the vibration damper bolt.
8. Install the puller tool (2) making sure the bolts are fully threaded through the entire crankshaft damper.

9. Remove the crankshaft damper (1).

INSTALLATION

INSTALLATION

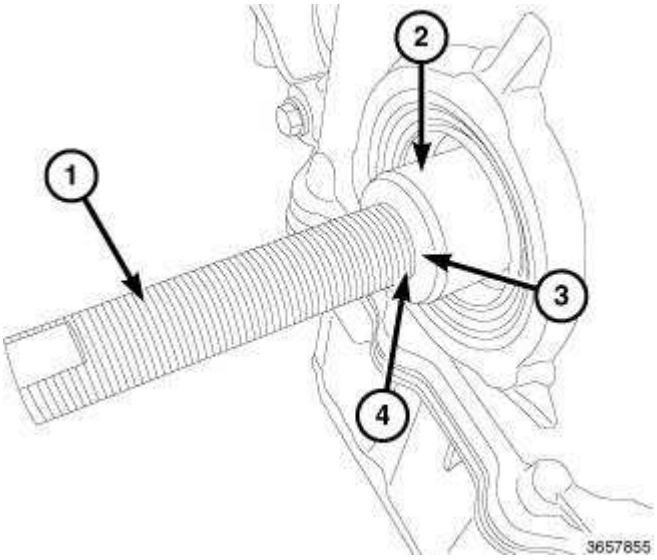

Fig. 229: Installing Vibration Damper Onto Crankshaft Using Special Tool
Courtesy of CHRYSLER GROUP, LLC

1. Using (special tool #10387, Installer, Vibration Damper), install the threaded rod (1) onto the crankshaft (2).
2. Tighten the threaded rod (4) until it is seated to the face (3) of the crankshaft.

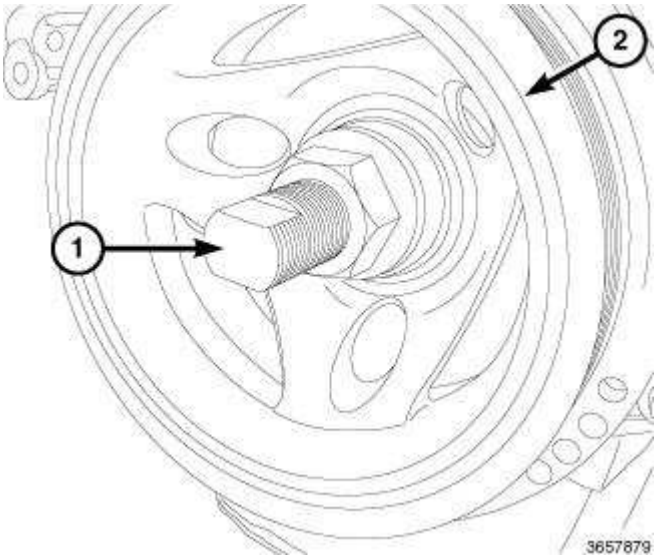

Fig. 230: Installing Vibration Damper
Courtesy of CHRYSLER GROUP, LLC

3. Position the damper (2) on the crankshaft.
4. Install the press washer, bearing, washer, and the press nut onto the threaded rod.
5. Using Damper Installer (1) and a deep well socket, press the damper onto the crankshaft till seated.

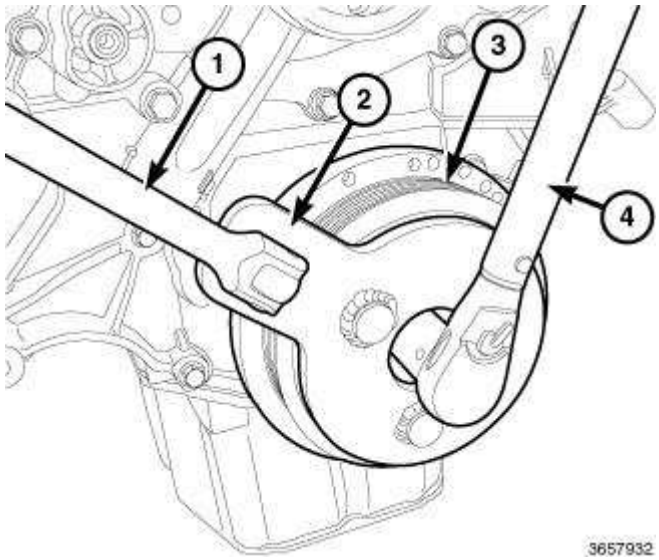

Fig. 231: Installing Vibration Damper
Courtesy of CHRYSLER GROUP, LLC

6. Install the vibration damper bolt.
7. Position the (special tool #10386, Holder, Vibration Damper) (2), onto the vibration pulley (3).
8. Tighten the bolt to 250 N.m (184 ft. lbs.).

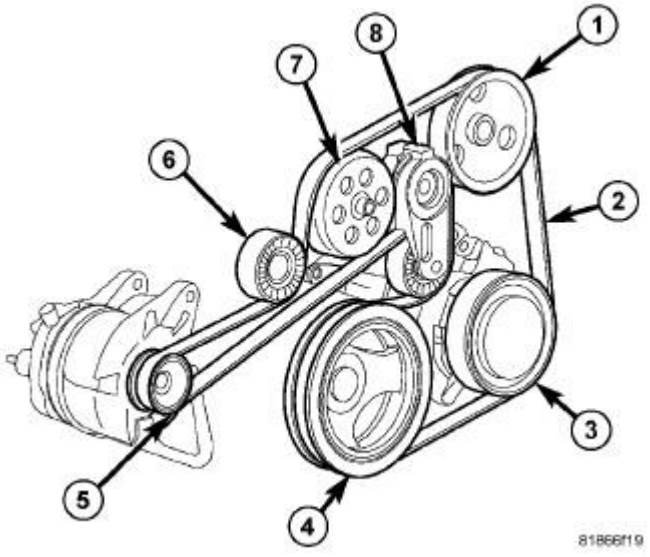

Fig. 232: Accessory Drive Belt Routing, Tensioner & Pulleys
Courtesy of CHRYSLER GROUP, LLC

9. Install the accessory drive belt. Refer to **BELT, SERPENTINE, INSTALLATION** .

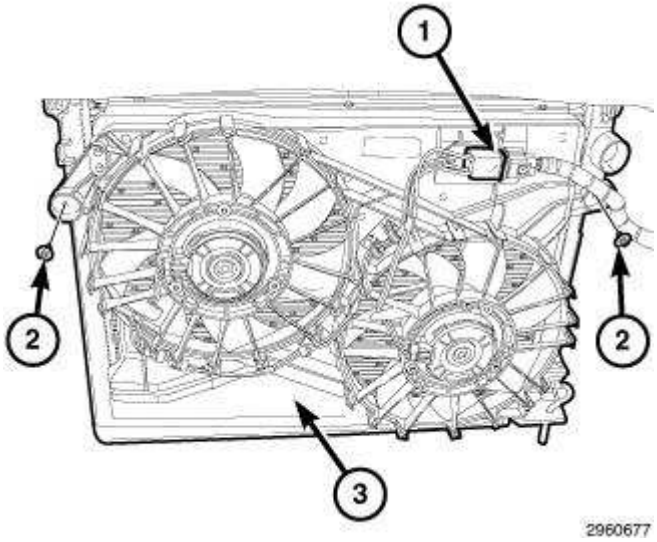

Fig. 233: Cooling Fan Electrical Connector, Cooling Fan Mounting Bolts & Radiator Cooling Fan Assembly
Courtesy of CHRYSLER GROUP, LLC

10. Install the cooling fan. Refer to **FAN, COOLING, INSTALLATION** .

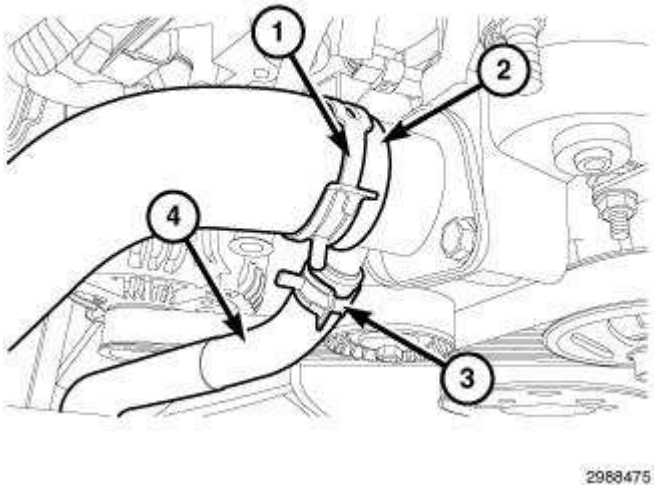

Fig. 234: Upper Radiator Hose, Clamp, Oil Cooler Return Line Hose & Clamp
Courtesy of CHRYSLER GROUP, LLC

11. Install the oil cooler hose (4) and clamp (3).
12. Install the upper radiator hose (2) and clamp (1).
13. Refill the cooling system. Refer to **STANDARD PROCEDURE** .

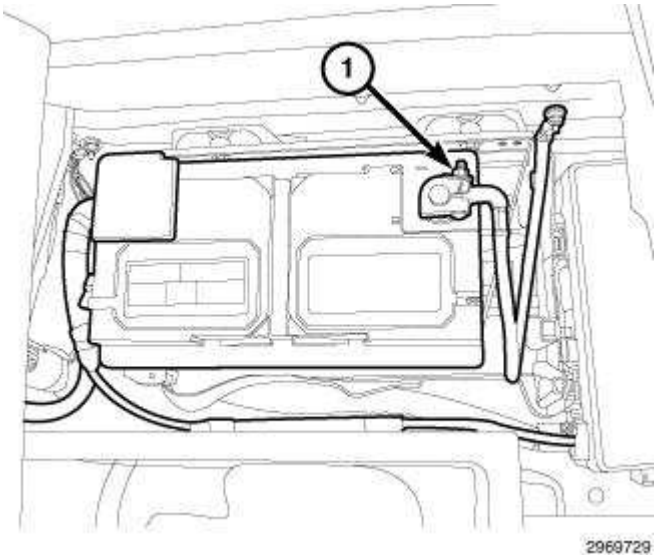

Fig. 235: Negative Battery Cable
Courtesy of CHRYSLER GROUP, LLC

14. Connect the negative battery cable (1).

FLEXPLATE

REMOVAL

REMOVAL

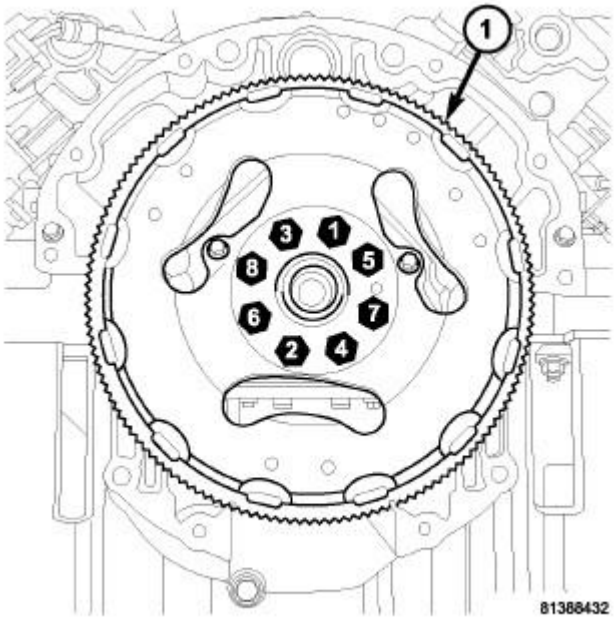

Fig. 236: Flex Plate Bolt Removal/Tightening Sequence
Courtesy of CHRYSLER GROUP, LLC

1. Remove the transmission. Refer to **REMOVAL** .
2. Using the sequence shown in illustration, remove the flexplate (1) retaining bolts.
3. Remove the flexplate.

INSTALLATION

INSTALLATION

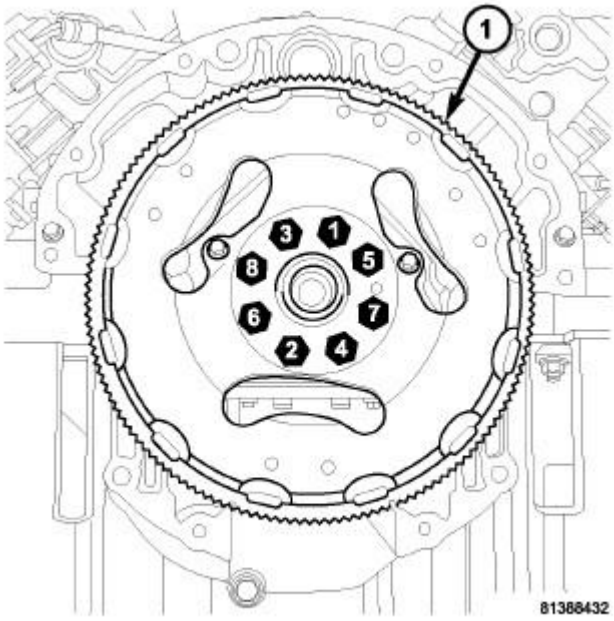

Fig. 237: Flex Plate Bolt Removal/Tightening Sequence
Courtesy of CHRYSLER GROUP, LLC

1. Position the flexplate (1) onto the crankshaft and install the bolts finger tight.
2. Using the sequence shown in illustration, tighten the flexplate retaining bolts to 95 N.m (70 ft. lbs.).
3. Install the transmission. Refer to **INSTALLATION** .

LIFTER(S), HYDRAULIC, ROLLER

DIAGNOSIS AND TESTING

DIAGNOSIS AND TESTING - HYDRAULIC ROLLER LIFTERS

Before disassembling any part of the engine to correct lifter noise, check the oil pressure. If the vehicle has no oil pressure gauge, install a reliable gauge at the pressure sending-unit. The pressure should be between 207-552 kPa (30-70 psi) at 3, 000 RPM.

Check the oil level after the engine reaches normal operating temperature. Allow 5 minutes to

stabilize oil level, check dipstick. The oil level in the pan should never be above the FULL mark or below the ADD OIL mark on the dipstick. Either of these two conditions could be responsible for noisy lifters.

HIGH

If oil level is above the FULL mark, it is possible for the connecting rods to dip into the oil. With the engine running, this condition could create foam in the oil pan. Foam in oil pan would be fed to the hydraulic lifters by the oil pump causing them to lose length and allow valves to seat noisily.

LOW

Low oil level may allow oil pump to take in air. When air is fed to the lifters, they lose length, which allows valves to seat noisily. Any leaks on intake side of oil pump through which air can be drawn will create the same lifter action. Check the lubrication system from the intake strainer to the pump cover, including the relief valve retainer cap. When lifter noise is due to aeration, it may be intermittent or constant, and usually more than one lifter will be noisy. When oil level and leaks have been corrected, operate the engine at fast idle. Run engine for a sufficient time to allow all of the air inside the lifters to be bled out.

LIFTER NOISE DIAGNOSIS

1. To determine source of lifter noise, crank the engine with cylinder head covers removed.
2. Feel each valve spring or rocker arm to detect noisy lifter. The noisy lifter will cause the affected spring and/or rocker arm to vibrate or feel rough in operation.

   NOTE: Worn valve guides or cocked springs are sometimes mistaken for noisy lifters. If such is the case, noise may be dampened by applying side thrust on the valve spring. If noise is not noticeably reduced, it can be assumed the noise is in the lifter. Inspect the rocker arm push rod sockets and push rod ends for wear.

3. Valve lifter noise ranges from light noise to a heavy click. A light noise is usually caused by excessive leak-down around the unit plunger or by the plunger partially sticking in the lifter body cylinder. The lifter should be replaced. A heavy click is caused by a lifter check valve not seating or by foreign particles wedged between the plunger and the lifter body. This will cause the plunger to stick in the down position. This heavy click will be accompanied by excessive clearance between the valve stem and rocker arm as the valve closes. In either case, lifter assembly should be removed for inspection and cleaning.
4. The valve train generates a noise very much like a light lifter noise during normal operation. Care must be taken to ensure that lifters are making the noise. If more than one lifter seems to be noisy, it's probably not the lifters.

REMOVAL

REMOVAL

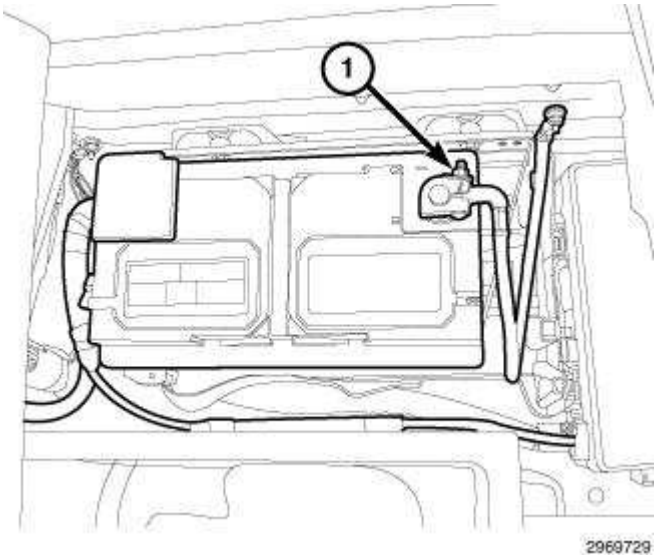

Fig. 238: Negative Battery Cable
Courtesy of CHRYSLER GROUP, LLC

1. Disconnect and isolate the negative battery cable.
2. Remove the cylinder head. Refer to **CYLINDER HEAD, REMOVAL**.

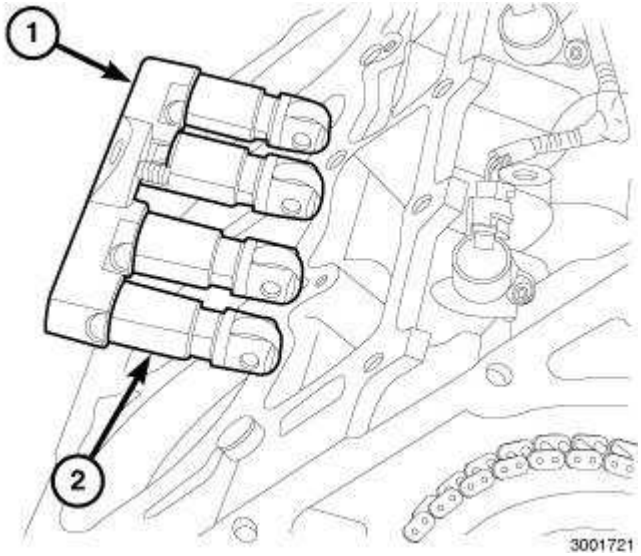

Fig. 239: Hydraulic Lifters/Tappets & Retainer/Guide Holder
Courtesy of CHRYSLER GROUP, LLC

CAUTION: If the lifter and retainer assembly are to be reused, identify the lifters to ensure installation in their original location or engine damage could result.

CAUTION: The lifter and retainer assembly must be installed as a unit.

3. Remove the lifters (2) and retainer (1) as an assembly.
4. Check the camshaft lobes for abnormal wear.

INSTALLATION

INSTALLATION

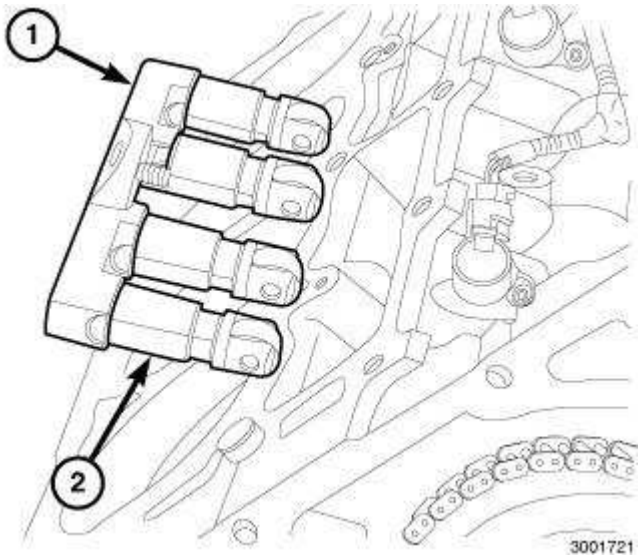

Fig. 240: Hydraulic Lifters/Tappets & Retainer/Guide Holder
Courtesy of CHRYSLER GROUP, LLC

1. Lubricate the lifters (2) and retainer (1) assembly with clean engine oil.

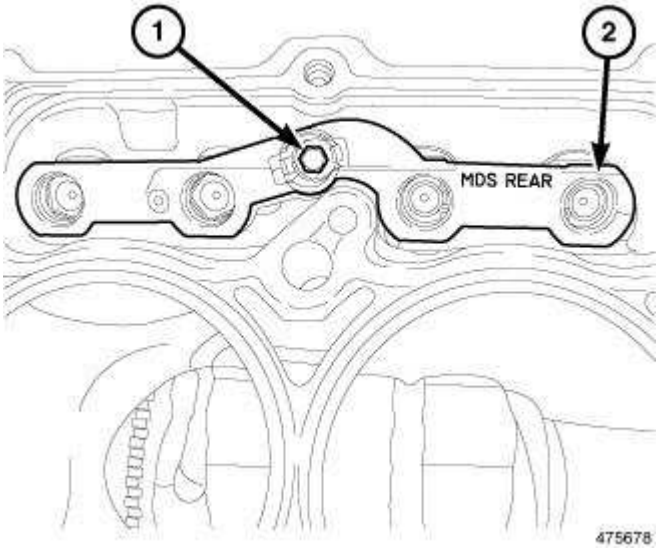

Fig. 241: Rear MDS Lifter Assembly
Courtesy of CHRYSLER GROUP, LLC

CAUTION: The 6.4L Multi Displacement System (MDS) engine uses both

standard roller lifters and deactivating roller lifters. The deactivating roller lifters must be used in cylinders 1, 4, 6, 7. The deactivating lifters can be identified by the two holes in the side of the lifter body, for the latching pins.

CAUTION: If the lifter and retainer assembly are to be reused, identify the lifters to ensure installation in their original location or engine damage could result.

CAUTION: The lifter and retainer must be installed as an assembly.

2. Install the lifters (2) and retainer (1) as an assembly into their original location.
3. Tighten the lifter retainer bolt (1) to 12 N.m (9 ft. lbs.).
4. Install the cylinder head. Refer to **CYLINDER HEAD, INSTALLATION**.

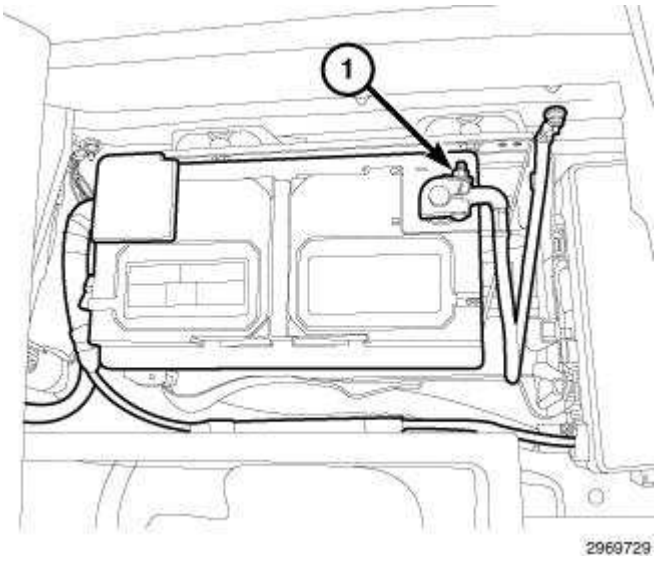

Fig. 242: Negative Battery Cable
Courtesy of CHRYSLER GROUP, LLC

5. Connect the negative battery cable.

CAUTION: To prevent damage to valve assemblies, do not run the engine above fast idle until all hydraulic lifters have filled with oil and have become quiet.

6. Start the engine and check for leaks.
7. Road test the vehicle.

RETAINER, CRANKSHAFT REAR OIL SEAL

DIAGNOSIS AND TESTING

DIAGNOSIS AND TESTING - REAR SEAL AREA LEAKS

The crankshaft rear oil seal is integral to the crankshaft rear oil seal retainer and is serviced as an assembly.

Since it is sometimes difficult to determine the source of an oil leak in the rear seal area of the engine, a more involved inspection is necessary. The following steps should be followed to help pinpoint the source of the leak.

If the leakage occurs at the crankshaft rear oil seal area:

1. Raise and support the vehicle.
2. Remove the transmission inspection/torque converter access cover.
3. Inspect the rear of the cylinder block for evidence of oil leakage and note the following:
   - Circular spray pattern generally indicates seal leakage or crankshaft damage.
   - Where leakage tends to run straight down, possible causes are a porous block, camshaft bore cup plugs, oil gallery pipe plugs, oil filter runoff and main bearing cap to cylinder block mating surfaces. See appropriate Engine information, for proper repair procedures of these items.
4. If no leaks are detected, pressurize the crankcase. Refer to **DIAGNOSIS AND TESTING** .

   CAUTION: Do not exceed 20.6 kPa (3 psi).

5. If the leak is not detected, very slowly turn the crankshaft and watch for leakage. If a leak is detected between the crankshaft and seal while slowly turning the crankshaft, it is possible the crankshaft seal surface is damaged. The seal area on the crankshaft could have minor nicks or scratches that can be polished out using an emery cloth.

   CAUTION: Use extreme caution when crankshaft polishing is necessary to remove minor nicks or scratches. The crankshaft seal flange is specially machined to complement the function of the rear oil seal.

6. For bubbles that remain steady with shaft rotation, no further inspection can be done. Refer to **RETAINER, CRANKSHAFT REAR OIL SEAL, REMOVAL**.

REMOVAL

REMOVAL

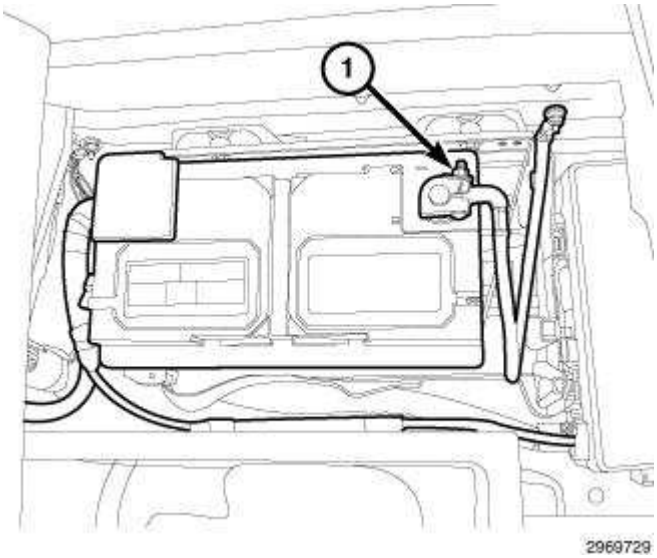

Fig. 243: Negative Battery Cable
Courtesy of CHRYSLER GROUP, LLC

NOTE: The crankshaft rear oil seal is integral to the crankshaft rear oil seal retainer and must be replaced as an assembly.

NOTE: The crankshaft rear oil seal retainer can not be reused after removal.

NOTE: This procedure can be performed in vehicle.

1. Disconnect the negative battery cable (1).
2. Remove the automatic transmission. Refer to **REMOVAL** . If equipped, remove the manual transmission. Refer to **REMOVAL** .

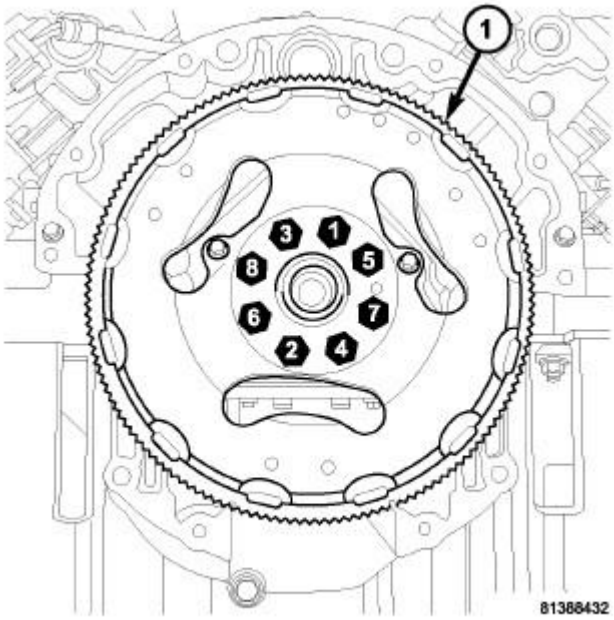

Fig. 244: Flex Plate Bolt Removal/Tightening Sequence
Courtesy of CHRYSLER GROUP, LLC

3. Remove the flexplate (1) or flywheel. Refer to **FLEXPLATE, REMOVAL**.
4. Remove the oil pan. Refer to **PAN, OIL, REMOVAL**.

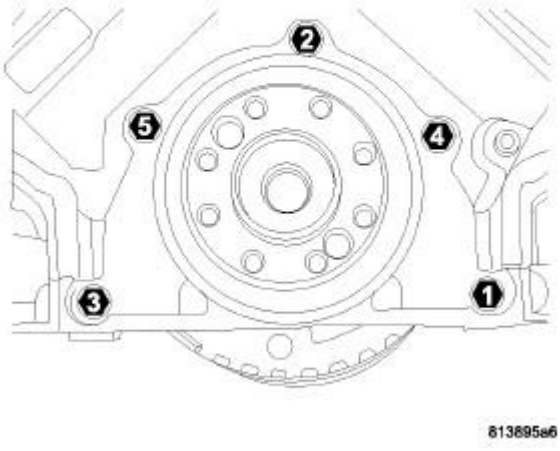

Fig. 245: Rear Seal Retainer Removal/Tightening Sequence
Courtesy of CHRYSLER GROUP, LLC

5. Using the sequence shown in illustration, remove the rear oil seal retainer mounting bolts.
6. Remove and discard the rear oil seal retainer.

INSTALLATION

INSTALLATION

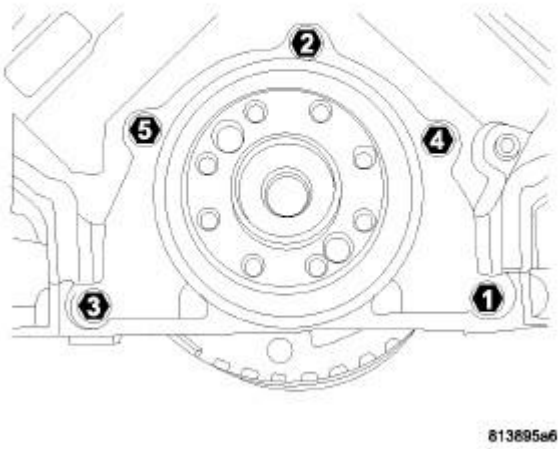

Fig. 246: Rear Seal Retainer Removal/Tightening Sequence
Courtesy of CHRYSLER GROUP, LLC

NOTE: The crankshaft rear oil seal is integral to the crankshaft rear oil seal retainer and must be replaced as an assembly.

NOTE: The crankshaft rear oil seal retainer can not be reused after removal.

1. Thoroughly clean all gasket residue from the engine block.
2. Position the gasket onto the new crankshaft rear oil seal retainer.
3. Position the crankshaft rear oil seal retainer onto the engine block.
4. Using the sequence shown in illustration, install the crankshaft rear oil seal retainer mounting bolts and tighten to 15 N.m (11 ft. lbs.).
5. Install the oil pan. Refer to **PAN, OIL, INSTALLATION**.

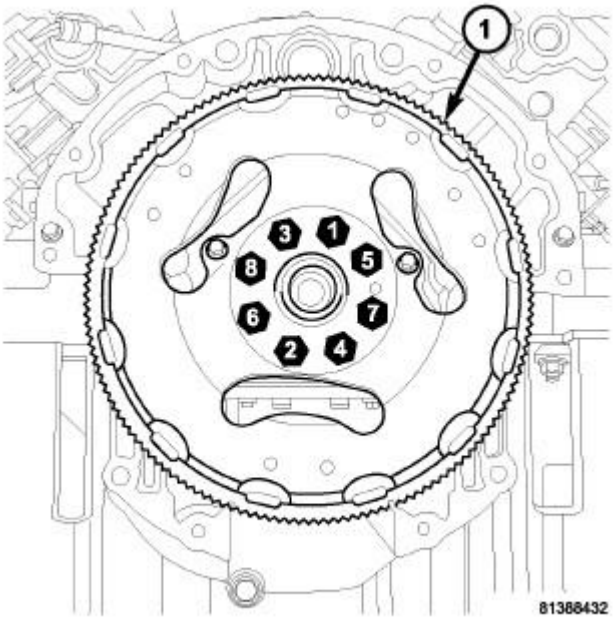

Fig. 247: Flex Plate Bolt Removal/Tightening Sequence
Courtesy of CHRYSLER GROUP, LLC

6. Install the flexplate (1) or flywheel. Refer to **FLEXPLATE, INSTALLATION**.
7. Install the transmission (Refer to **NAG1 AUTOMATIC TRANSMISSION - SERVICE INFORMATION** or **TR6060 MANUAL TRANSMISSION - SERVICE INFORMATION**).
8. Fill the crankcase with the specified type and amount of engine oil. Refer to **STANDARD PROCEDURE** .

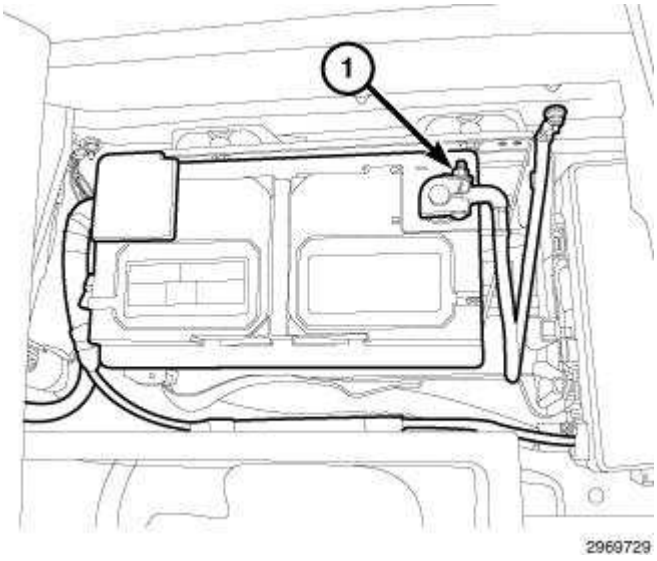

Fig. 248: Negative Battery Cable
Courtesy of CHRYSLER GROUP, LLC

9. Connect the negative battery cable (1).
10. Start the engine and check for leaks.

RING(S), PISTON

STANDARD PROCEDURE

STANDARD PROCEDURE - PISTON RING FITTING

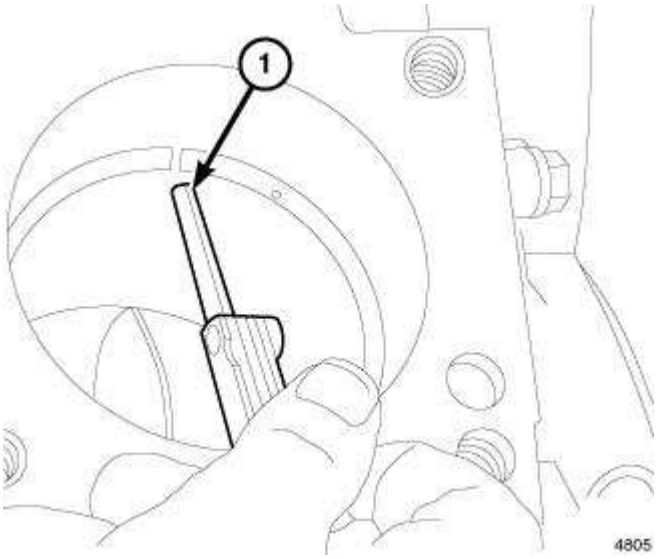

Fig. 249: Using Feeler Gauge To Check Ring End Gap
Courtesy of CHRYSLER GROUP, LLC

CAUTION: Before reinstalling used piston rings or installing new piston rings, the piston ring clearances must be checked or engine damage may result.

1. Wipe the cylinder bore clean.
2. Insert the piston ring into the cylinder bore.

NOTE: The piston ring gap measurement must be made with the piston ring positioned at least 12 mm (0.50 inch) from bottom of cylinder bore.

3. Using a piston, make sure that the piston ring is squared in the cylinder bore. Slide the piston ring downward into the cylinder.
4. Using a feeler gauge (1), check the piston ring end gap, replace any rings not within specification.

PISTON RING SIDE CLEARANCE

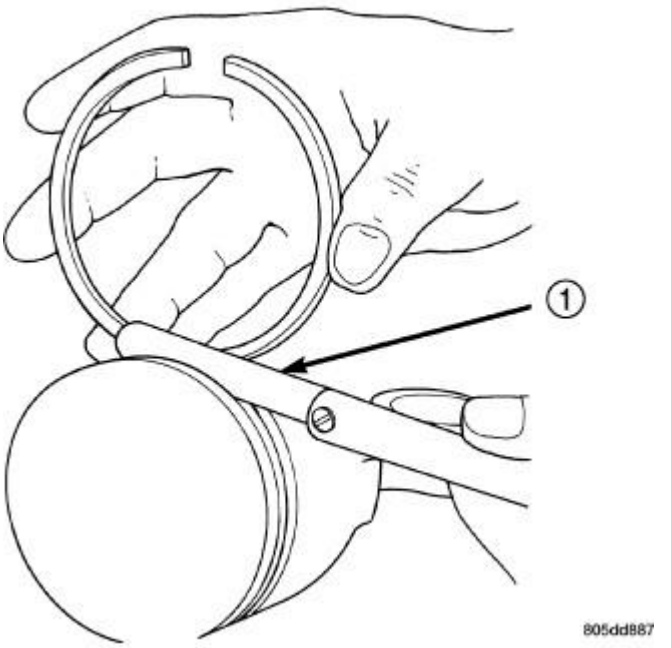

Fig. 250: Measuring Piston Ring Side Clearance
Courtesy of CHRYSLER GROUP, LLC

NOTE: Make sure the piston ring grooves are clean and free of nicks and burrs.

1. Measure the piston ring side clearance with a feeler gauge (1) as shown in illustration. Make sure the feeler gauge fits snugly between the piston ring land and the piston ring, replace any ring not within specification.

   NOTE: Make sure the marks on the compression rings face upward.

2. Rotate the ring around the piston. The ring must rotate in the groove with out binding.

PISTON RING INSTALLATION



Fig. 251: Installing Piston Ring Side Rail
Courtesy of CHRYSLER GROUP, LLC

1. Install the oil ring expander.
2. Install the lower side rail by placing one end between the piston ring groove and the expander ring (1). Hold the lower side rail end firmly and press down the portion to be installed until the side rail is in position. Repeat this step for the upper side rail.

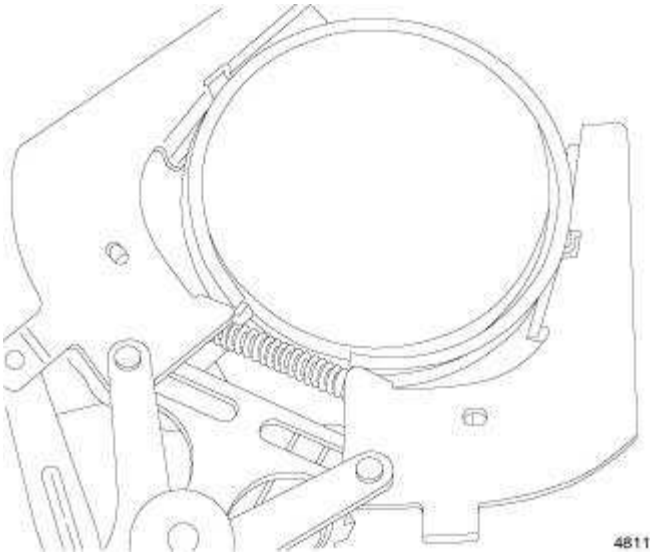

Fig. 252: Installing Upper & Intermediate Rings
Courtesy of CHRYSLER GROUP, LLC

3. Using a piston ring installer, install the No. 2 intermediate piston ring.
4. Using a piston ring installer, install the No. 1 upper piston ring.

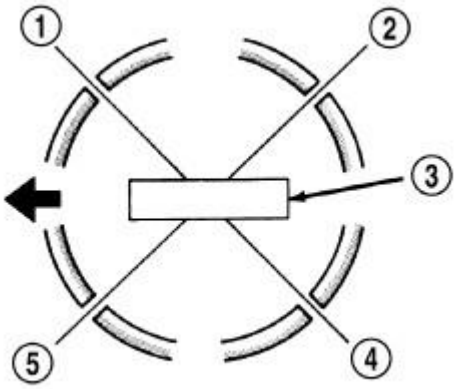

Fig. 253: Piston Ring End Gap Position
Courtesy of CHRYSLER GROUP, LLC

5. Install the oil ring expander gap at the (5) position.
6. Install the oil ring lower side rail gap at the (4) position.
7. Install the oil ring upper side rail gap at the (1) position.
8. Install the second compression ring gap at the (5) position.
9. Install the top compression ring gap at the (2) position.

ROD, PISTON AND CONNECTING

DESCRIPTION

DESCRIPTION

CAUTION: Do not use a metal stamp to mark connecting rods as damage may result, instead use ink or a scratch awl.

The pistons are made of a high-strength aluminum alloy. Piston skirts are coated with a solid lubricant (Molykote) to reduce friction and provide scuff resistance. The piston top ring groove and land is anodized. The connecting rods are made of forged powdered metal with a "fractured cap" design. A floating piston pin is used to attach the piston and connecting rod.

STANDARD PROCEDURE

STANDARD PROCEDURE - PISTON FITTING

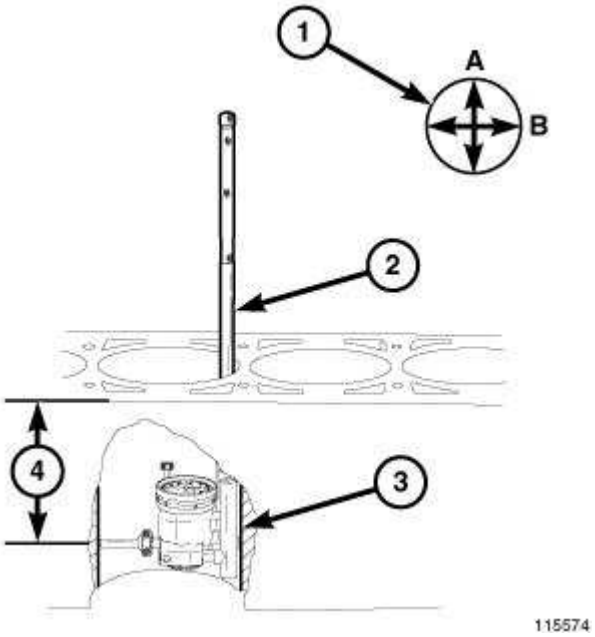

Fig. 254: Measuring Cylinder Bore Diameter
Courtesy of CHRYSLER GROUP, LLC

1. Use Cylinder Indicator (special tool #C-119, Cylinder Indicator) (2) to correctly measure the inside diameter of the cylinder bore (3). A cylinder indicator capable of reading in 0.003 mm (0.0001 in.) increments is required. If a cylinder indicator is not available, do not use an inside micrometer.
2. Measure the inside diameter of the cylinder bore at a point 38.0 mm (1.5 inches) below top of bore (4). Start perpendicular (across or at 90°) to the axis of the crankshaft at point A and then take an additional bore reading 90° to that at point B.

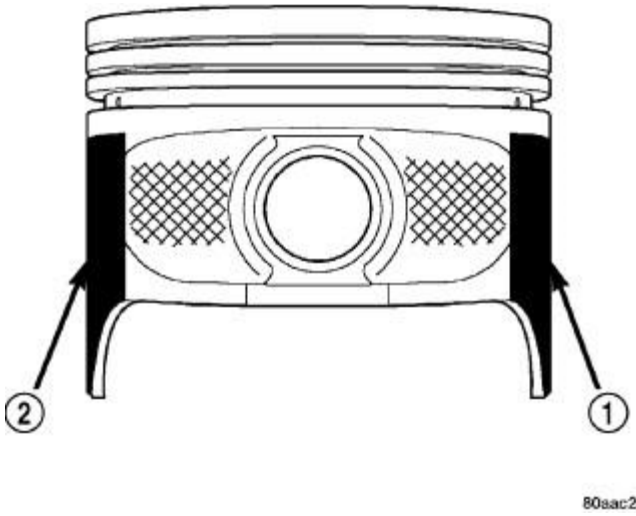

Fig. 255: Moly Coated Piston
Courtesy of CHRYSLER GROUP, LLC

NOTE: The coated pistons, piston pins and connecting rods are pre-assembled

and serviced as an assembly.

3. The piston and rod assembly is specific for the left cylinder bank (odd numbered) and the right cylinder bank (even numbered) and must not be interchanged.
4. The coating material (1, 2) is applied to the piston after the final piston machining process. Measuring the outside diameter of a coated piston will not provide accurate results. Therefore measuring the inside diameter of the cylinder bore with a cylinder indicator is **MANDATORY** . To correctly select the proper size piston, a cylinder indicator capable of reading in 0.003 mm (0.0001 in.) increments is required.
5. Piston installation into the cylinder bore requires slightly more pressure than that required for non-coated pistons. The bonded coating on the piston will give the appearance of a line-to-line fit with the cylinder bore.

REMOVAL

REMOVAL

CAUTION: If the engine encounters a catastrophic failure, the engine oil cooler must be replaced or damage to the new engine and/or components could result.

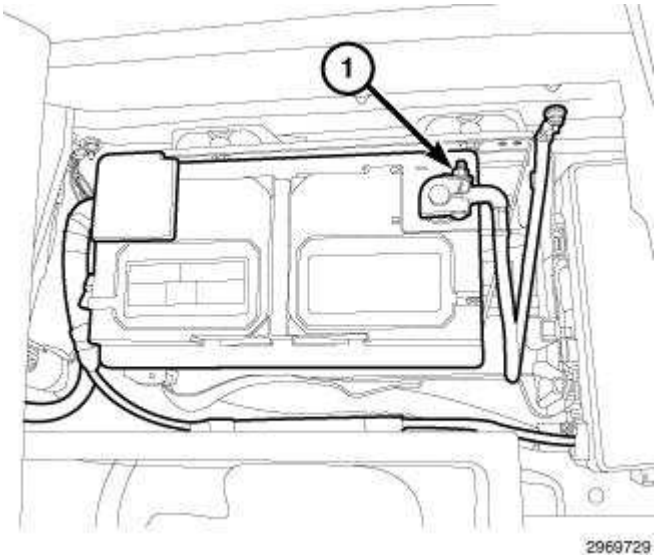

Fig. 256: Negative Battery Cable
Courtesy of CHRYSLER GROUP, LLC

1. Perform the fuel system pressure release procedure. Refer to **FUEL DELIVERY, GAS, STANDARD PROCEDURE** .
2. Disconnect and isolate the negative battery cable (1).

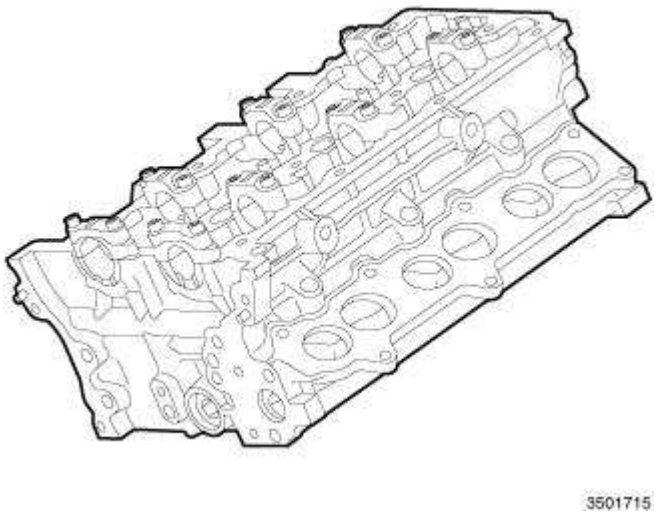

Fig. 257: Cylinder Head
Courtesy of CHRYSLER GROUP, LLC

3. Remove the cylinder head(s). Refer to **CYLINDER HEAD, REMOVAL**.

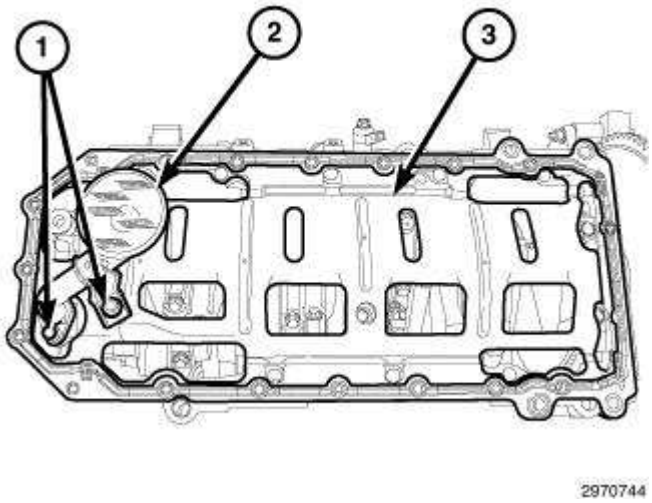

Fig. 258: Integral Windage Tray, Oil Pump Pickup Tube & Bolts
Courtesy of CHRYSLER GROUP, LLC

NOTE: When the oil pan is removed, a new oil pan gasket and the integral windage tray assembly must be installed, the old gasket cannot be reused.

4. Remove the oil pan. Refer to **PAN, OIL, REMOVAL**.
5. Remove and discard the oil pan gasket/windage tray (3).
6. If necessary, remove the ridge on top of the cylinder bores with a reliable ridge reamer before removing pistons from engine block. **Be sure to keep the tops of the pistons covered during this operation.**

CAUTION: When removing and installing the pistons and connecting rods, do not damage the piston oil cooler jets. If the jets are bent, engine damage may occur.

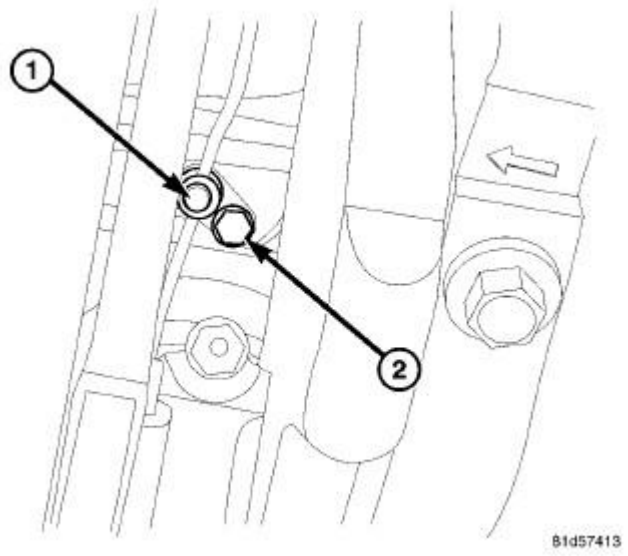

Fig. 259: Piston Oil Jet & Bolt
Courtesy of CHRYSLER GROUP, LLC

7. Remove the piston oil cooler jet(s) retaining bolt(s) (2) and remove the piston oil cooler jet(s) (1).

CAUTION: Do not use a number stamp or a punch to mark connecting rods or caps, as damage to connecting rods could occur.

CAUTION: Care must be taken not to damage the fractured rod and cap joint face surfaces as engine damage may occur.

CAUTION: Care must be taken not to nick crankshaft journals as engine damage may occur.

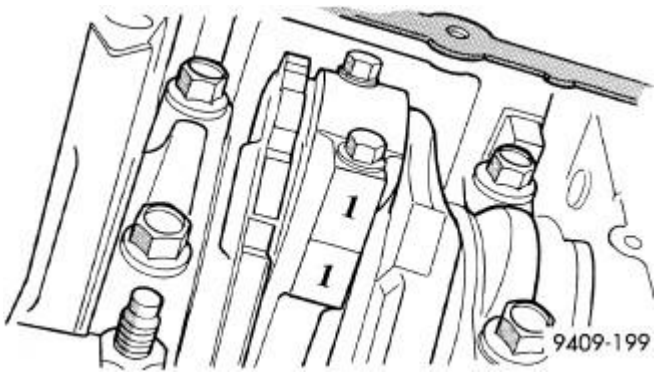

Fig. 260: Mark On Connecting Rod & Bearing Cap
Courtesy of CHRYSLER GROUP, LLC

NOTE: Connecting rods and bearing caps are not interchangeable and should be marked before removing to ensure correct reassembly.

8. Mark the connecting rod and bearing cap position using a permanent ink marker or scribe tool.

NOTE: Pistons and connecting rod assemblies must be removed from the top of the engine block. When removing the piston and connecting rod assemblies from the engine, rotate the crankshaft so each connecting rod is centered in the cylinder bore.

9. Remove the connecting rod cap and carefully remove the piston from the cylinder bore, repeat this procedure for each piston being removed.
10. Immediately after removing the piston and connecting rod, install the bearing cap on the mating connecting rod to prevent damage to the fractured cap and rod surfaces.
11. Carefully remove the piston rings from the piston(s), starting from the top ring down.

CLEANING

CLEANING

CAUTION: DO NOT use a wire wheel or other abrasive cleaning devise to clean the pistons or connecting rods. The pistons have a Moly coating, this coating must not be damaged.

1. Using a suitable cleaning solvent clean the pistons in warm water and towel dry.
2. Use a wood or plastic scraper to clean the ring land grooves.

INSPECTION

INSPECTION

Check the connecting rod journal for excessive wear, taper and scoring.

Check the connecting rod for signs of twist or bending.

Check the piston for taper and elliptical shape before it is fitted into the cylinder bore. Refer to **STANDARD PROCEDURE** .

Check the piston for scoring, or scraping marks on the piston skirts. Check the ring lands for cracks and/or deterioration.

INSTALLATION

INSTALLATION

CAUTION: If the engine encounters a catastrophic failure, the engine oil cooler must be replaced or damage to the new engine and/or components could result.

NOTE: Before reinstalling used rings or installing new rings, the ring clearances must be checked.

NOTE: Make sure the piston ring grooves are clean and free of nicks and burrs.

1. Check piston ring clearance. Refer to **STANDARD PROCEDURE** .
2. Before installing piston and connecting rod assemblies into the bore, install the piston rings. Refer to **STANDARD PROCEDURE** .
3. Immerse the piston head and rings in clean engine oil and position a ring compressor over the piston and rings and tighten the ring compressor. **Make sure the position of rings do not change during this operation.**

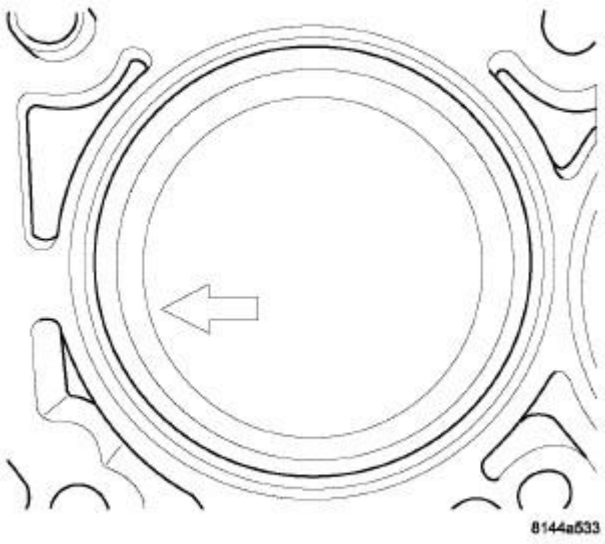

Fig. 261: Piston Direction Arrow
Courtesy of CHRYSLER GROUP, LLC

4. The pistons are marked on the piston pin bore surface with an raised "F" or arrow on top of piston indicating installation position. This mark must be pointing toward the front of the engine on both cylinder banks.
5. Wipe the cylinder bore clean and lubricate with clean engine oil.
6. Rotate the crankshaft until the connecting rod journal is centered with the cylinder bore.

7. Insert the piston and rod assembly into the cylinder bore and carefully position the connecting rod over the crankshaft journal.
8. Tap the piston down in cylinder bore using a hammer handle. While at the same time, guide the connecting rod into position on crankshaft rod journal.
9. Perform the measure bearing clearance procedure. Refer to **ENGINE BLOCK, STANDARD PROCEDURE** .

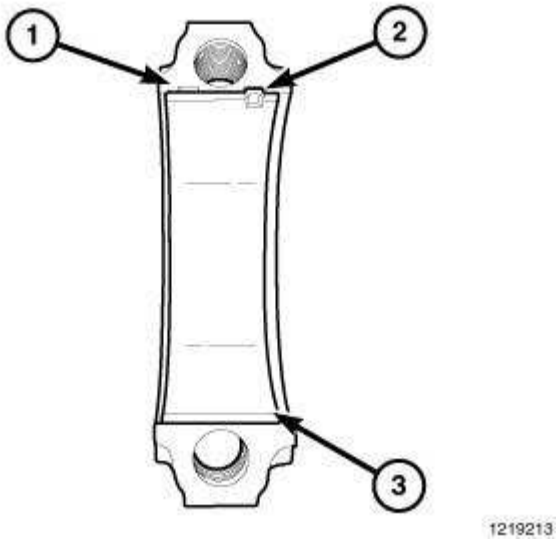

Fig. 262: Connecting Rod Cap & Bearing
Courtesy of CHRYSLER GROUP, LLC

10. Wipe the connecting rod cap (1) clean and lubricate with clean engine oil and install the bearing (3).

NOTE: The connecting rods and bearing caps are not interchangeable, line up the previously marked bearing caps and connecting rods to ensure assembly to their original location.

11. Lubricate the bearing surfaces with clean engine oil and position the rod cap onto the connecting rod.

CAUTION: When installing the connecting rods, make sure the wide side of the connecting rod faces the crankshaft and the narrow sides face each other.

CAUTION: Always replace the connecting rod bolts whenever they are loosened or removed.

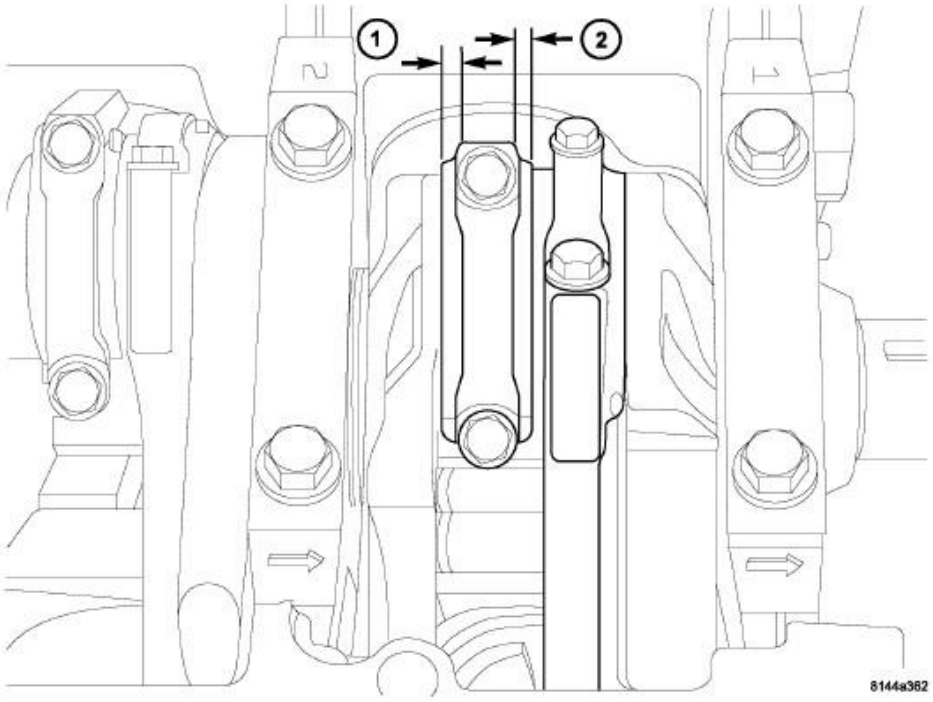

Fig. 263: Connecting Rod Proper Installation
Courtesy of CHRYSLER GROUP, LLC

12. Verify the connecting rods are properly installed, the wide side (1) of the connecting rod is facing towards the crankshaft and the narrow sides (2) of the connecting rods face each other.
13. Lubricate the new rod cap bolts with clean engine oil, install and tighten to 45 N.m (33 ft. lbs.) plus an additional 60° turn.

CAUTION: When removing and installing the pistons and connecting rods, do not damage the piston oil cooler jets. If the jets are bent, engine damage may occur.

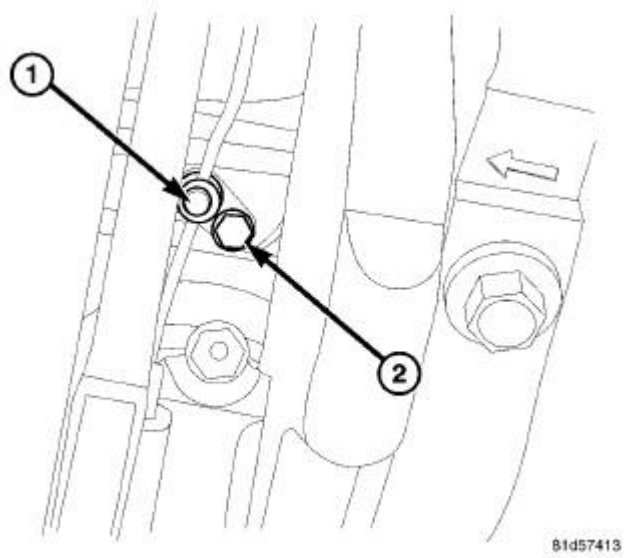

Fig. 264: Piston Oil Jet & Bolt
Courtesy of CHRYSLER GROUP, LLC

14. Position the piston oil cooler jet(s) (1).
15. Install the piston oil cooler jet retaining bolt(s) (2) and tighten to 13 N.m (10 ft. lbs.).

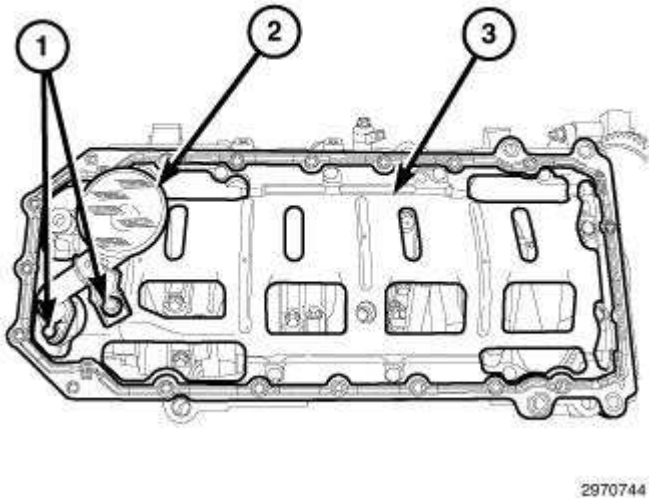

Fig. 265: Integral Windage Tray, Oil Pump Pickup Tube & Bolts
Courtesy of CHRYSLER GROUP, LLC

16. Install the new oil pan gasket/windage tray (3), oil pump pickup tube (2) and oil pan. Refer to **PAN, OIL, INSTALLATION**.
17. Install the engine oil dipstick tube and dipstick.
18. Lower the vehicle.

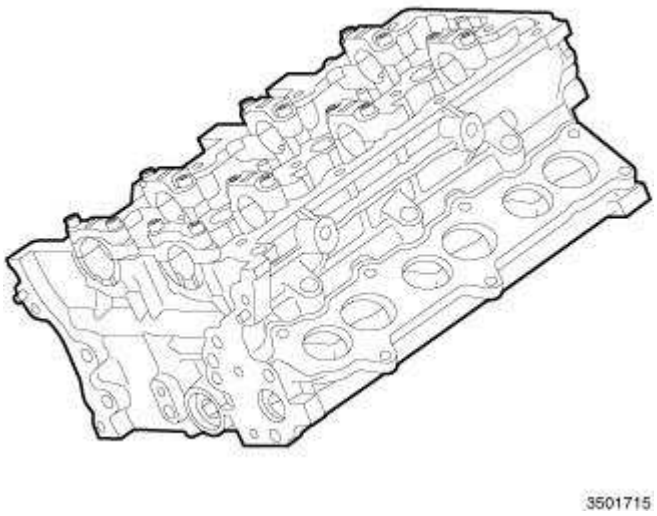

Fig. 266: Cylinder Head
Courtesy of CHRYSLER GROUP, LLC

19. Install the cylinder head(s). Refer to **CYLINDER HEAD, INSTALLATION**.

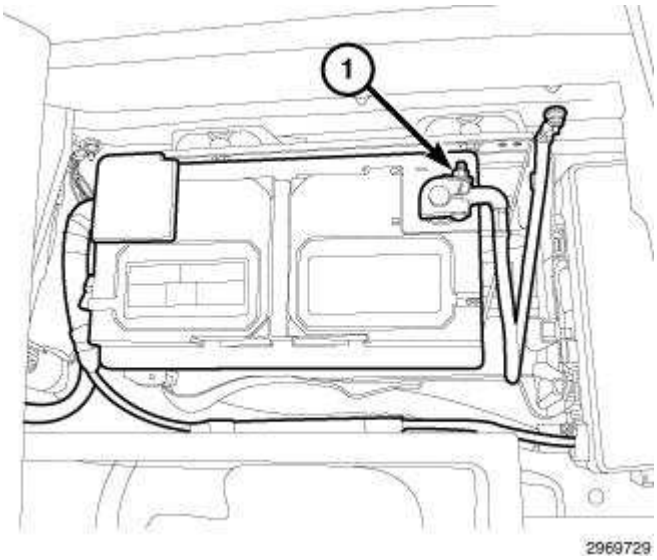

Fig. 267: Negative Battery Cable
Courtesy of CHRYSLER GROUP, LLC

20. Connect the negative battery cable (3).
21. Start the engine and check for leaks.

SEAL, CRANKSHAFT OIL, FRONT

REMOVAL

REMOVAL

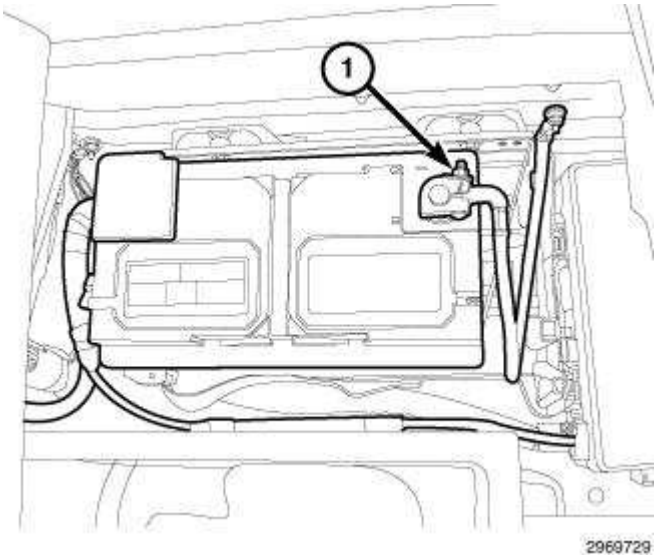

Fig. 268: Negative Battery Cable
Courtesy of CHRYSLER GROUP, LLC

1. Disconnect the negative battery cable (1).
2. Drain the cooling system. Refer to **STANDARD PROCEDURE** .

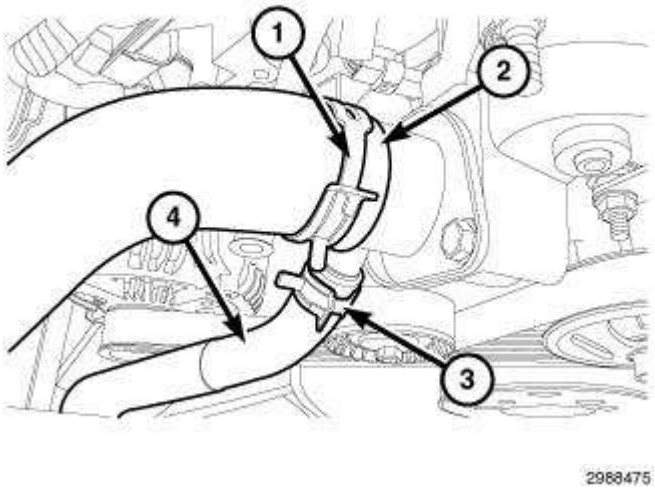

Fig. 269: Upper Radiator Hose, Clamp, Oil Cooler Return Line Hose & Clamp
Courtesy of CHRYSLER GROUP, LLC

3. Remove the upper radiator hose clamp (1) and remove the upper radiator hose (2).
4. Remove the oil cooler hose clamp (3) and remove oil cooler hose (4).

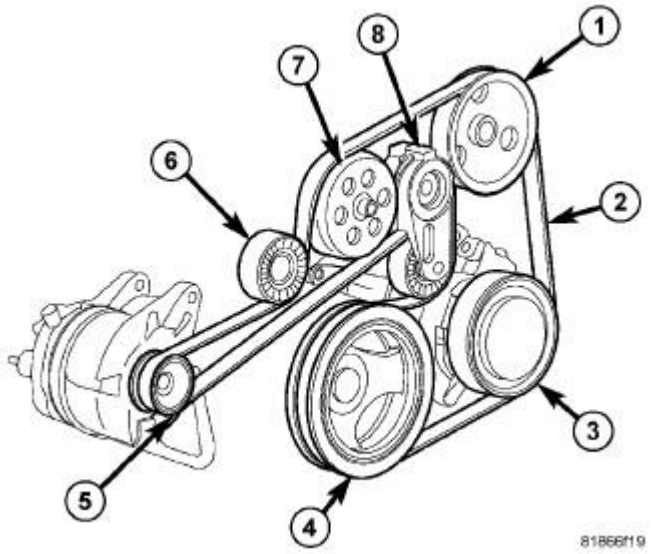

Fig. 270: Accessory Drive Belt Routing, Tensioner & Pulleys
Courtesy of CHRYSLER GROUP, LLC

5. Remove the accessory drive belt. Refer to **BELT, SERPENTINE, REMOVAL** .

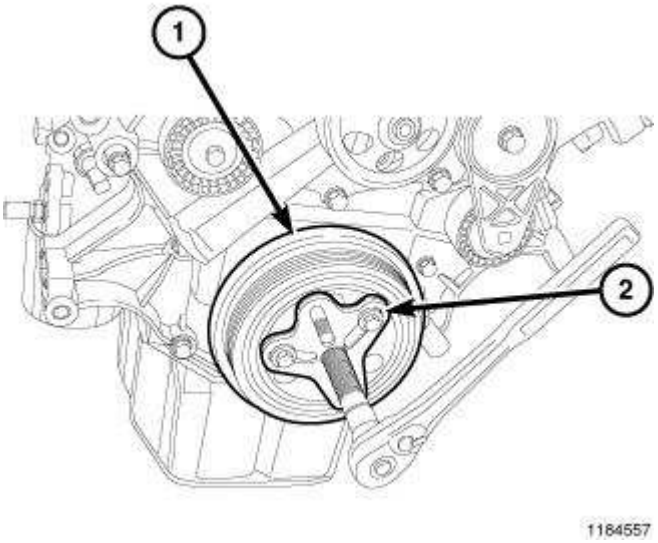

Fig. 271: Vibration Damper & Bolt Grip Puller
Courtesy of CHRYSLER GROUP, LLC

NOTE: When installing the puller tool, ensure the bolts are fully threaded through the entire crankshaft damper.

6. Remove the crankshaft damper retaining bolt.
7. Install the puller tool (2) making sure the bolts are fully threaded through the entire crankshaft damper.

8. Remove the crankshaft damper (1).

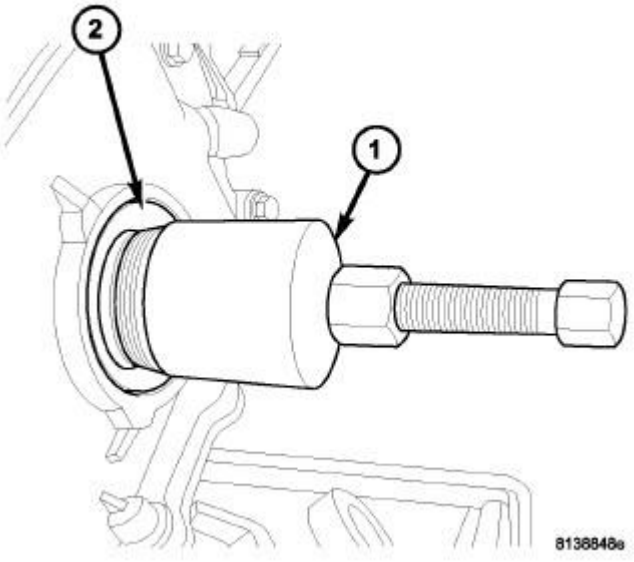

Fig. 272: Front Crankshaft Seal Removal
Courtesy of CHRYSLER GROUP, LLC

9. Using Seal Remover (special tool #9071, Remover, Seal) (1), remove the crankshaft front seal (2).

INSTALLATION

INSTALLATION

CAUTION: The front crankshaft seal must be installed dry. Do not apply lubricant to sealing lip or to outer edge.

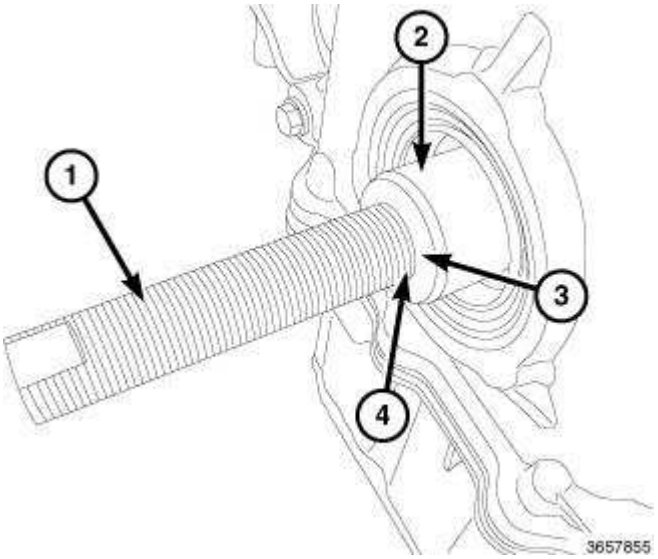

Fig. 273: Installing Vibration Damper Onto Crankshaft Using Special Tool
Courtesy of CHRYSLER GROUP, LLC

1. Install the threaded rod (1) from the (special tool #10387, Installer, Vibration Damper) into the crankshaft (2) till seated.

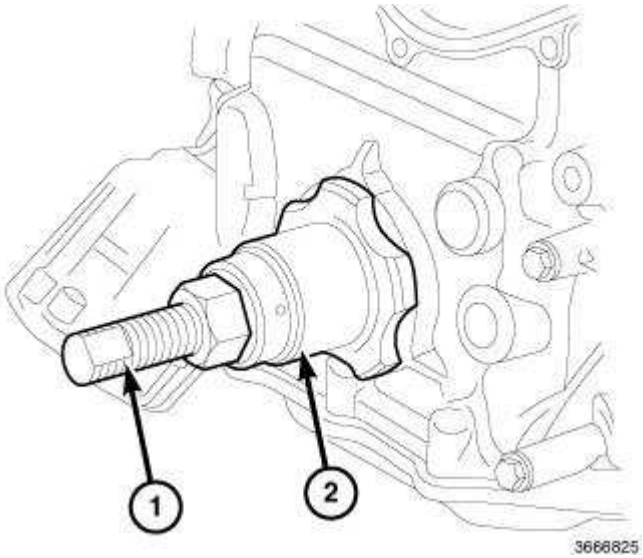

Fig. 274: Front Seal Installation
Courtesy of CHRYSLER GROUP, LLC

2. Using Seal Installer (special tool #9072, Installer, Seal) and (special tool #10387, Installer, Vibration Damper) (2), install the crankshaft front oil seal.

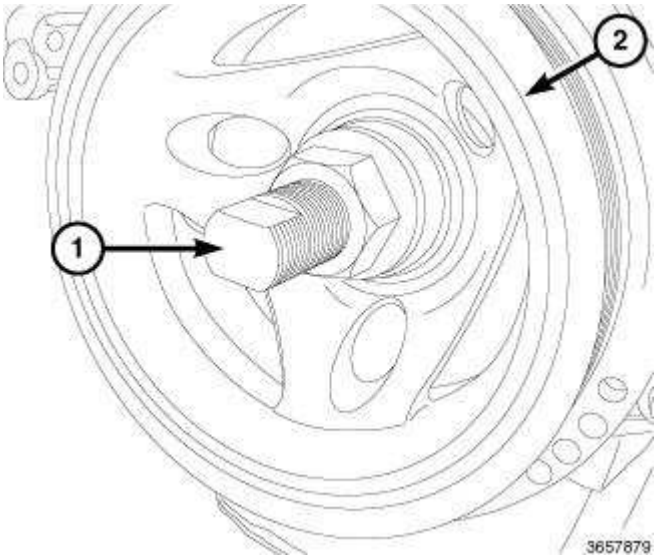

Fig. 275: Installing Vibration Damper
Courtesy of CHRYSLER GROUP, LLC

3. Position the damper (2) on the crankshaft.
4. Install the press washer, bearing, washer, and the press nut onto the threaded rod.
5. Using Damper Installer (1) and a deep well socket, press the damper onto the crankshaft till seated.

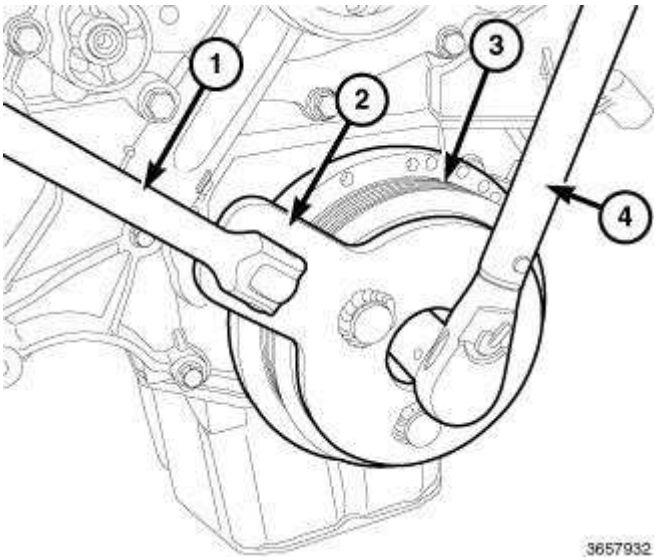

Fig. 276: Installing Vibration Damper
Courtesy of CHRYSLER GROUP, LLC

6. Install the vibration damper bolt.
7. Position the (special tool #10386, Holder, Vibration Damper) (2), onto the vibration pulley (3).
8. Tighten the bolt to 250 N.m (184 ft. lbs.).

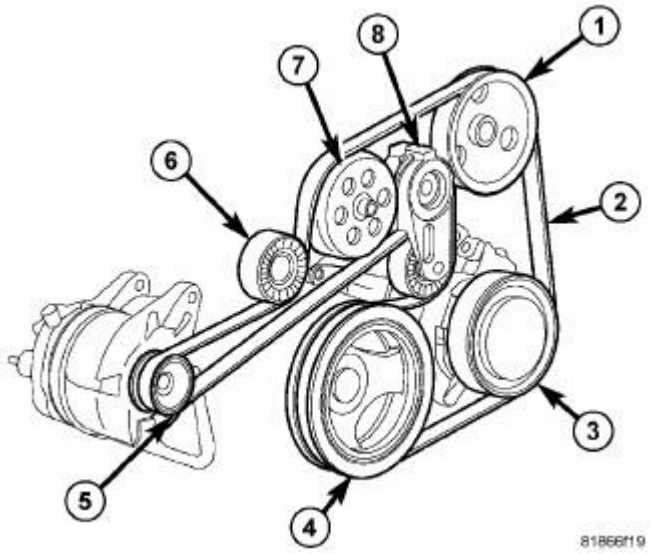

Fig. 277: Accessory Drive Belt Routing, Tensioner & Pulleys
Courtesy of CHRYSLER GROUP, LLC

9. Install the accessory drive belt. Refer to **BELT, SERPENTINE, INSTALLATION** .

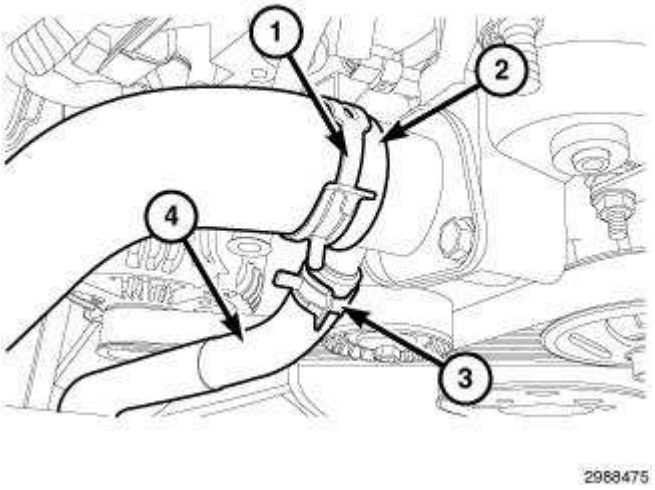

Fig. 278: Upper Radiator Hose, Clamp, Oil Cooler Return Line Hose & Clamp
Courtesy of CHRYSLER GROUP, LLC

10. Install the upper radiator hose (2) and clamp (1).
11. Install the oil cooler hose (4) and clamp (3).

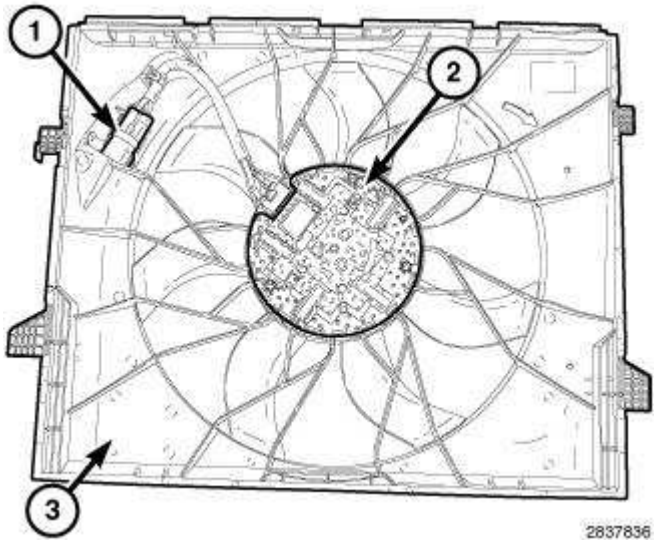

Fig. 279: Cooling Fan Motor Assembly
Courtesy of CHRYSLER GROUP, LLC

12. Install the cooling fan. Refer to **FAN, COOLING, INSTALLATION** .
13. Refill the cooling system. Refer to **STANDARD PROCEDURE** .

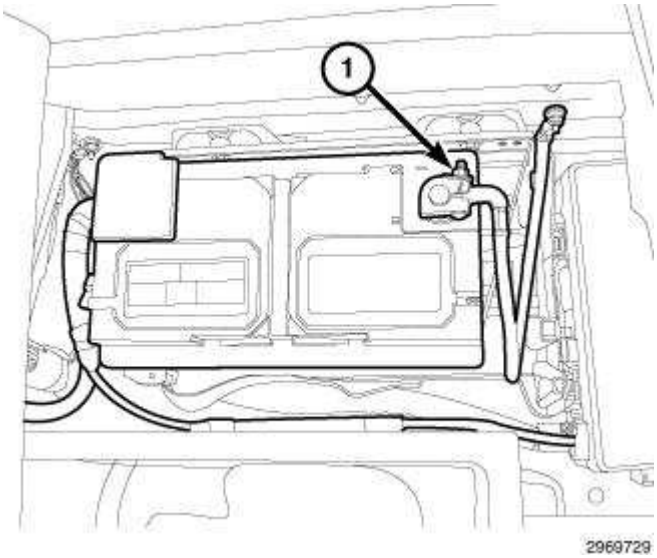

Fig. 280: Negative Battery Cable
Courtesy of CHRYSLER GROUP, LLC

14. Connect the negative battery cable (1).

SEAL, CRANKSHAFT OIL, REAR

DESCRIPTION

DESCRIPTION

The crankshaft rear oil seal is integral to the crankshaft rear oil seal retainer, for more information. Refer to the following;

- **Diagnosis and Testing** . Refer to **DIAGNOSIS AND TESTING** .
- **Removal** . Refer to **RETAINER, CRANKSHAFT REAR OIL SEAL, REMOVAL**.
- **Installation** . Refer to **RETAINER, CRANKSHAFT REAR OIL SEAL, INSTALLATION**.

SOLENOID, MULTIPLE DISPLACEMENT

DESCRIPTION

DESCRIPTION

The Multi Displacement System (MDS) selectively deactivates cylinders 1, 4, 6, and 7 to improve fuel economy. It has two modes of operation:

- 8 cylinders for acceleration and heavy loads
- 4 cylinders for cruising and city traffic

The main components of the Multi Displacement System are:

- Unique MDS camshaft
- Deactivating roller lifters
- 4 control valve solenoids
- Control valve solenoid wiring harness
- Oil temperature sensor

OPERATION

OPERATION

Cylinder Deactivation

- Trap an exhaust charge from a normal combustion event
- Normal combustion event
- Deactivate the exhaust valve
- Deactivate the intake valve
- Piston is an air spring
- Cylinders deactivated in firing sequence

Cylinder Reactivation

- Normal combustion event
- Activate the exhaust valve

- Activate the intake valve
- Empty the cylinder
- Cylinders reactivated in firing sequence

DIAGNOSIS AND TESTING

DIAGNOSIS AND TESTING - 6.4L - MDS SOLENOID

The Multi-Displacement System (MDS) has the following detectable issues:

- Solenoid circuit
- Fail to deactivate a cylinder(s)
- Fail to reactivate a cylinder(s)
- Low oil pressure

CONDITION	POSSIBLE CAUSES	CORRECTION
MDS does not activate	1. Low oil pressure	1. Check for proper oil pressure
	2. Bad oil temperature sensor	2. Replace the oil temperature sensor
	3. Malfunctioning MDS solenoid	3. Replace the MDS solenoid
	4. Malfunctioning MDS lifter	4. Replace lifter(s)
MDS does not deactivate	1. Low oil pressure	1. Check or proper oil pressure
	2. Bad oil temperature sensor	2. Replace the oil temp sensor
	3. Malfunctioning MDS solenoid	3. Replace the MDS solenoid
	4. Malfunctioning MDS lifter(s)	4. Replace lifter(s)

REMOVAL

REMOVAL

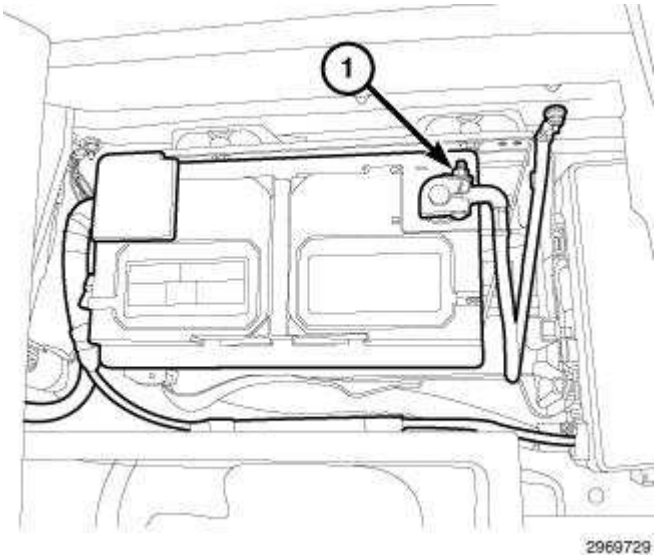

Fig. 281: Negative Battery Cable
Courtesy of CHRYSLER GROUP, LLC

1. Disconnect and isolate the negative battery cable (1).

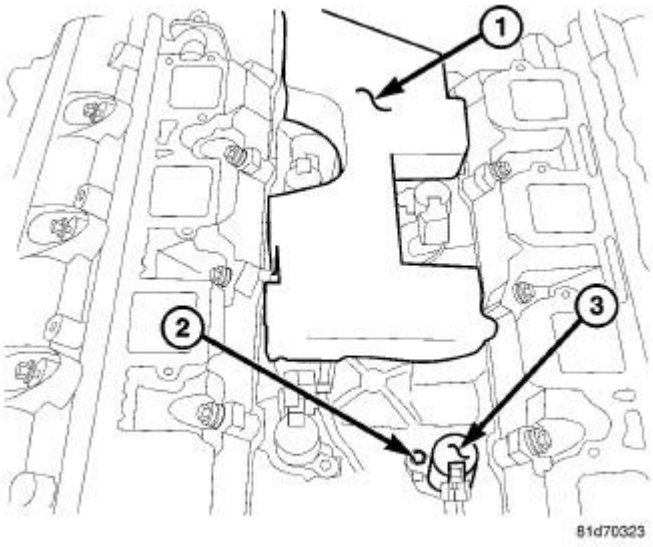

Fig. 282: Intake Manifold Foam Insulator Pad, MDS Solenoids & Bolts
Courtesy of CHRYSLER GROUP, LLC

2. Remove the intake manifold. Refer to **MANIFOLD, INTAKE, REMOVAL**.
3. Remove foam insulator pad (1).

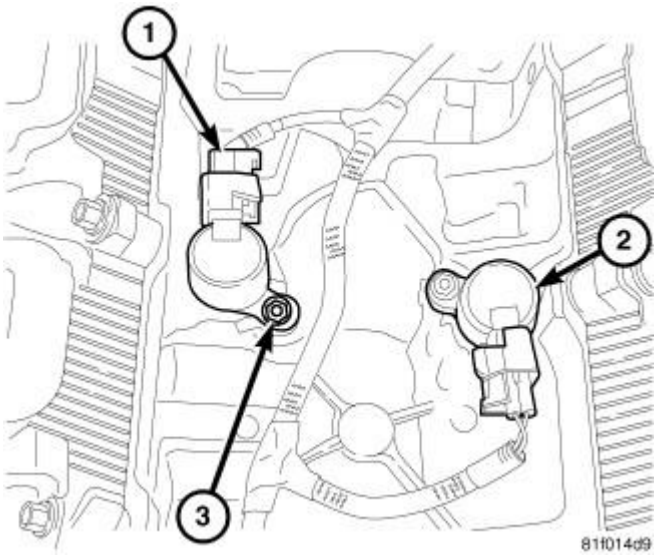

Fig. 283: MDS Solenoids, Electrical Connectors & Retaining Bolts
Courtesy of CHRYSLER GROUP, LLC

4. Remove the Multiple Displacement Solenoid (MDS) (2) electrical connector(s) (1).
5. Remove the MDS solenoid (2) retaining bolt(s) (3).

CAUTION: Do not try to pry the solenoid out. This could lead to breakage and contamination of the lubrication system.

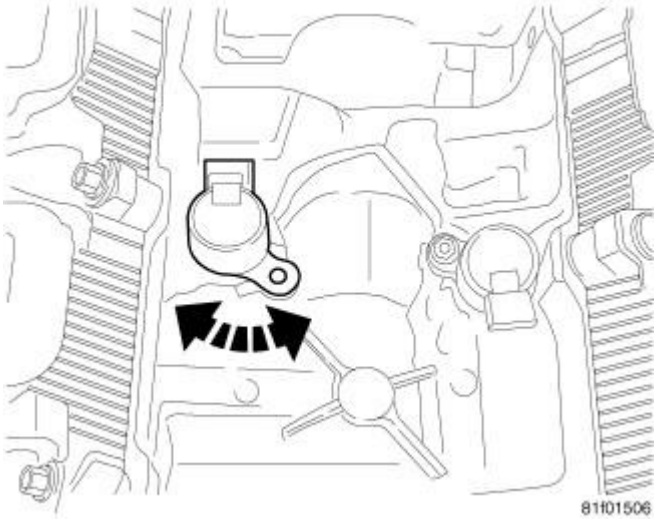

Fig. 284: Removing/Installing MDS Solenoid
Courtesy of CHRYSLER GROUP, LLC

6. Lightly tap on the MDS solenoid(s) with a rubber mallet. Rotate the MDS solenoid(s) from side to side to break the seal.
7. Remove the MDS solenoid(s).

INSTALLATION

INSTALLATION

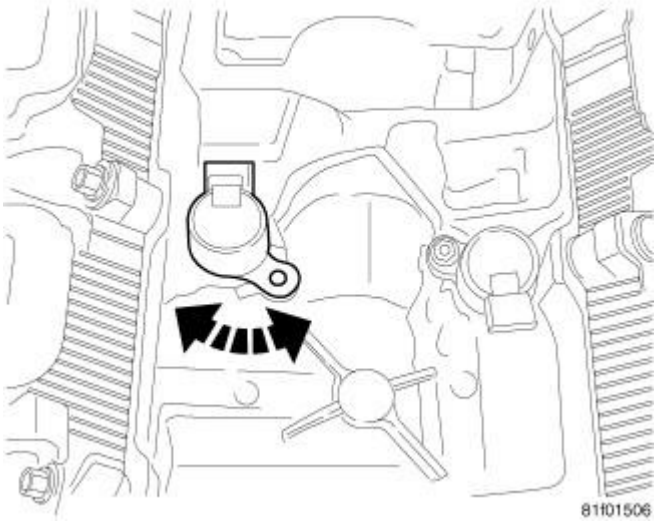

Fig. 285: Removing/Installing MDS Solenoid
Courtesy of CHRYSLER GROUP, LLC

1. Verify the MDS solenoid bores are free of debris before installing the MDS solenoid into the engine block.
2. Install the MDS solenoid(s) (3), ensure the seal is fully seated into the engine block.

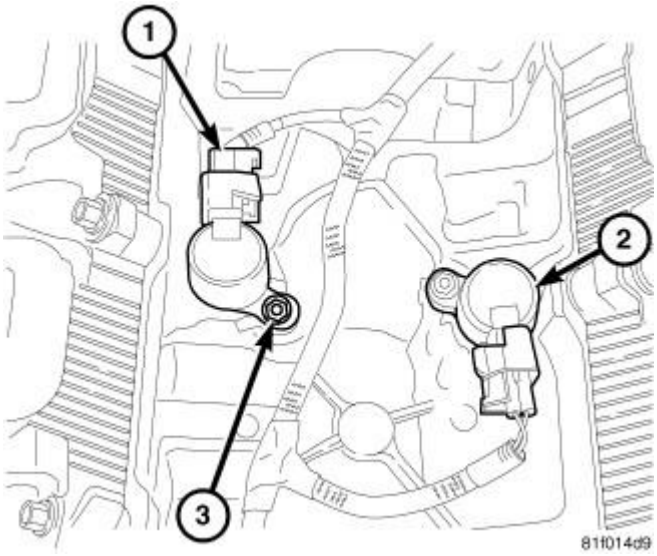

Fig. 286: MDS Solenoids, Electrical Connectors & Retaining Bolts
Courtesy of CHRYSLER GROUP, LLC

3. Install the retaining bolt(s) (3) and tighten to 11 N.m (8 ft. lbs.).
4. Connect the MDS electrical connector to the solenoid(s) (1).

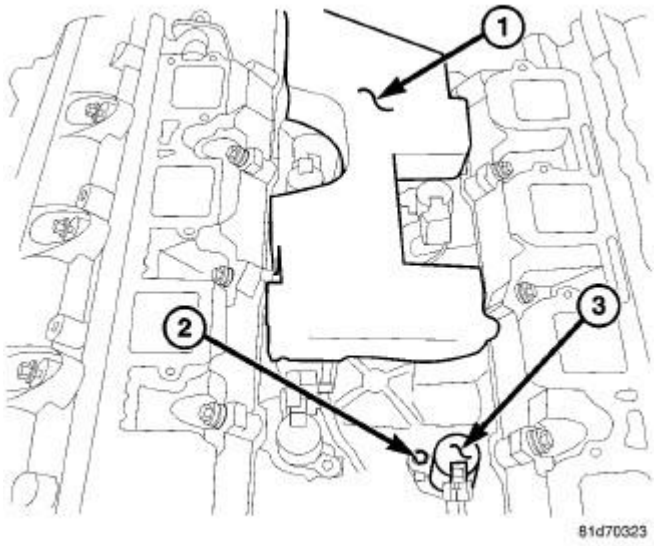

Fig. 287: Intake Manifold Foam Insulator Pad, MDS Solenoids & Bolts
Courtesy of CHRYSLER GROUP, LLC

5. Install the foam insulator pad (1).
6. Install the intake manifold. Refer to **MANIFOLD, INTAKE, INSTALLATION**.

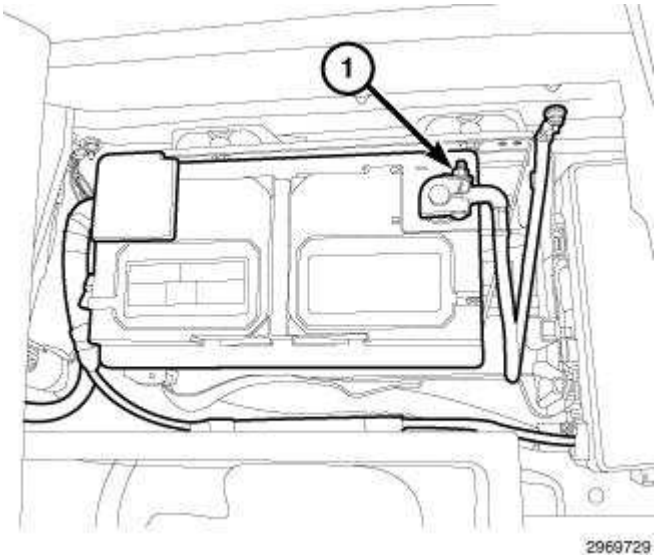

Fig. 288: Negative Battery Cable
Courtesy of CHRYSLER GROUP, LLC

7. Connect the negative battery cable (1).

ENGINE MOUNTING

INSULATOR, ENGINE MOUNT, REAR

REMOVAL

REMOVAL

AUTOMATIC TRANSMISSION

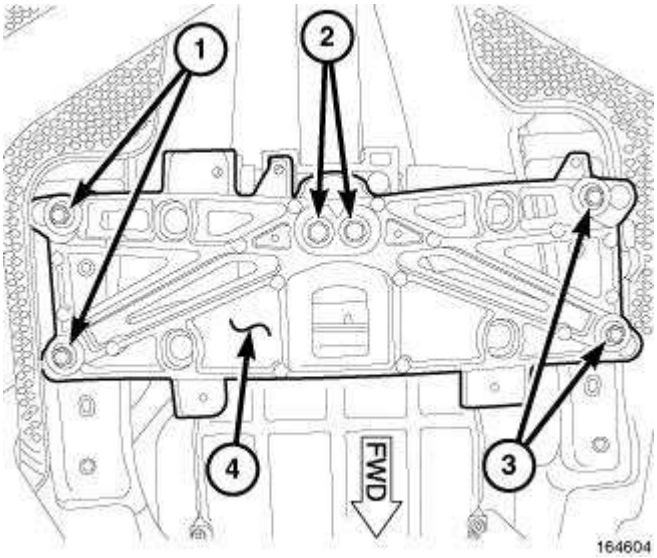

Fig. 289: Rear Cross Member & Bolts
Courtesy of CHRYSLER GROUP, LLC

1. Raise and support the vehicle.
2. Using a suitable jack, support the transmission.
3. Remove the rear transmission mount isolator bolts (2).
4. Remove the rear cross member retaining bolts (1, 3) and remove the cross member (4).

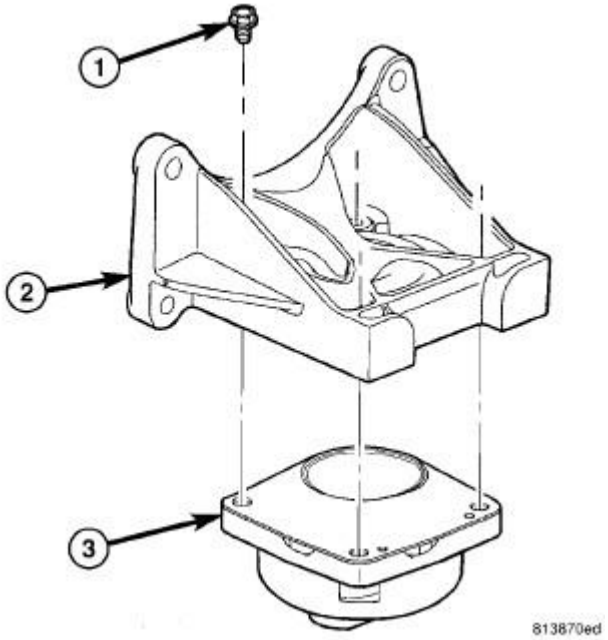

Fig. 290: Rear Transmission Mount Isolator
Courtesy of CHRYSLER GROUP, LLC

5. Remove the rear transmission mount isolator (3) retaining bolts (1) and remove the isolator.

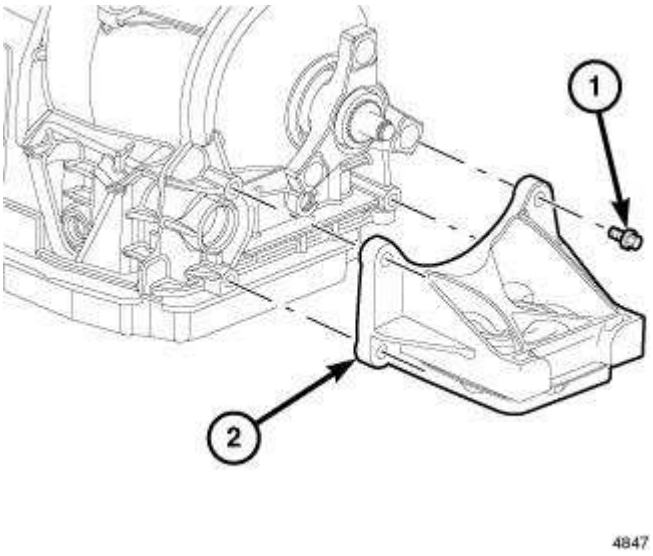

Fig. 291: Rear Transmission Mount Bracket
Courtesy of CHRYSLER GROUP, LLC

6. If required, remove the rear transmission mount bracket (2) retaining bolts (1) and remove the bracket.

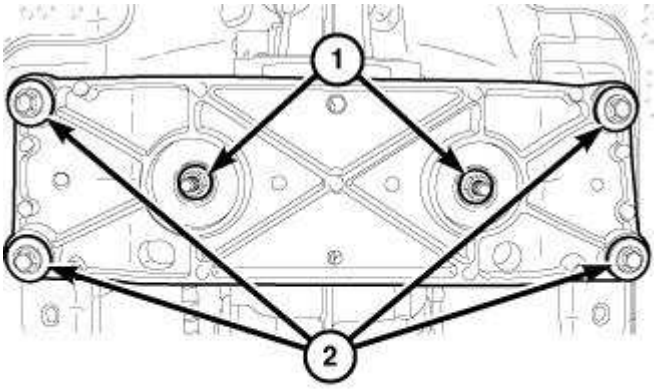

2991684

Fig. 292: Rear Cross Member & Retaining Bolts
Courtesy of CHRYSLER GROUP, LLC

1. Raise and support the vehicle.
2. Using a suitable jack, support the transmission.
3. Remove the rear transmission mount isolator nuts (1).
4. Remove the rear cross member retaining bolts (2) and remove the cross member.

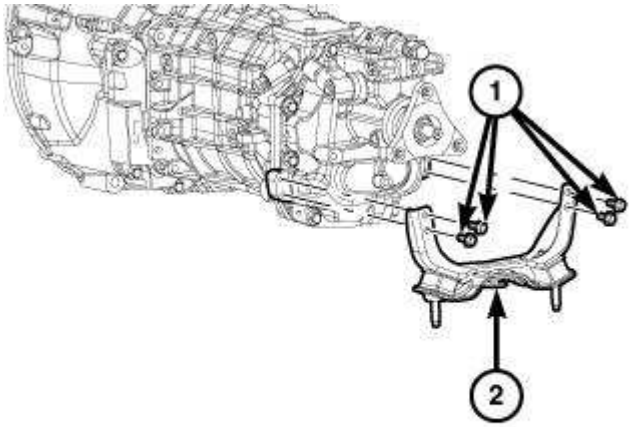

2992304

Fig. 293: Rear Transmission Mount Isolator & Retaining Bolts
Courtesy of CHRYSLER GROUP, LLC

5. Remove the rear transmission mount isolator (2) retaining bolts (1) and remove the isolator.

INSTALLATION

INSTALLATION

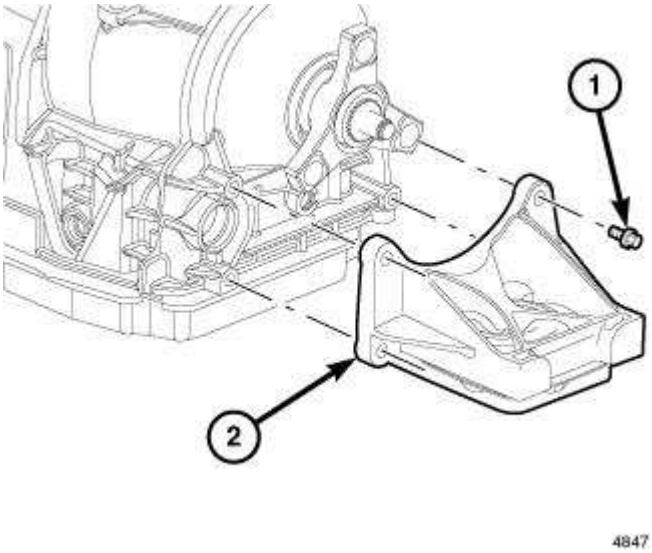

Fig. 294: Rear Transmission Mount Bracket
Courtesy of CHRYSLER GROUP, LLC

1. If removed, position the rear transmission mount bracket (2), install the retaining bolts (1) and tighten to 68 N.m (50 ft. lbs.).

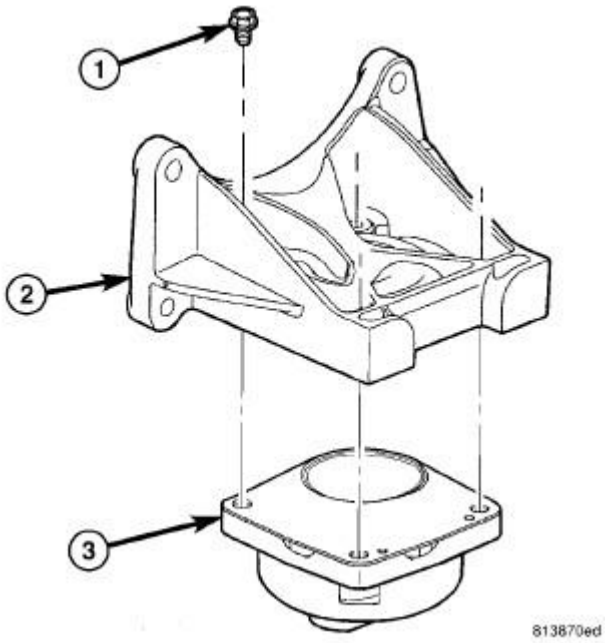

Fig. 295: Rear Transmission Mount Isolator
Courtesy of CHRYSLER GROUP, LLC

2. Position the rear transmission mount isolator (3) to the rear transmission mount bracket (2), install the retaining bolts (1) and tighten to 33 N.m (24 ft. lbs.).

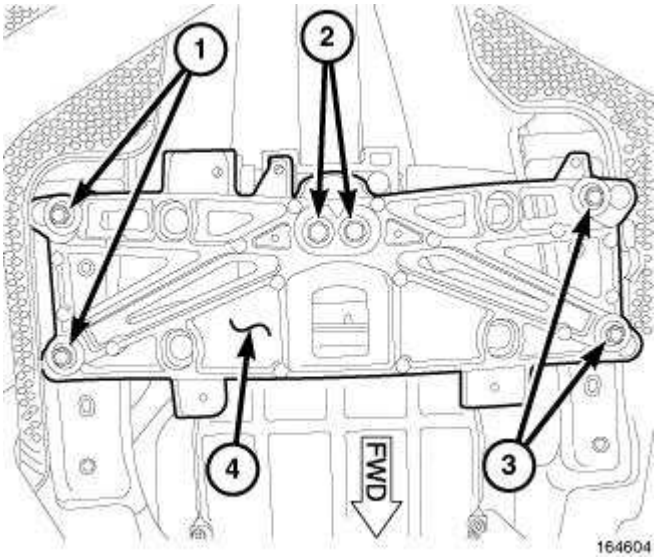

Fig. 296: Rear Cross Member & Bolts
Courtesy of CHRYSLER GROUP, LLC

3. Position the transmission crossmember (4), install the retaining bolts (1, 3) finger tight.
4. Install the rear transmission mount isolator retaining bolts (2) finger tight.
5. Tighten the transmission crossmember retaining bolts (1, 3) to 68 N.m (50 ft. lbs.).
6. Lower the transmission and remove the jack.
7. Tighten the rear transmission mount isolator retaining bolts (2) to 47 N.m (35 ft. lbs.).

MANUAL TRANSMISSION

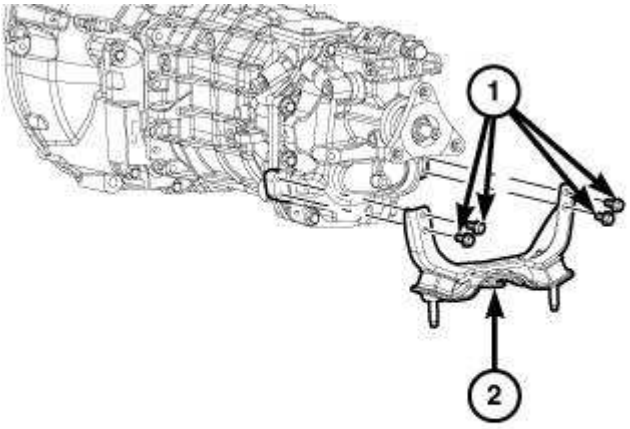

Fig. 297: Rear Transmission Mount Isolator & Retaining Bolts
Courtesy of CHRYSLER GROUP, LLC

1. Position the rear transmission mount isolator (2), install the retaining bolts (1) and tighten to 68

N.m (50 ft. lbs.).

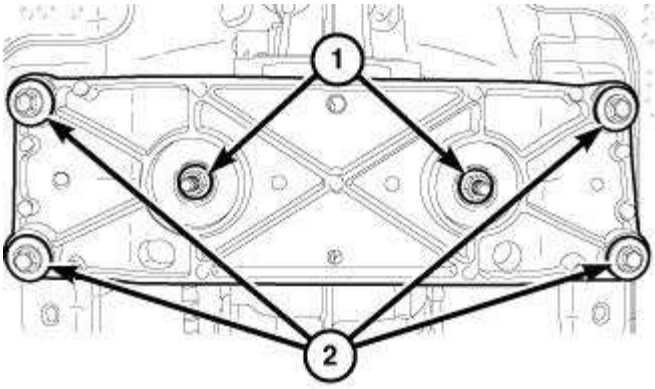

Fig. 298: Rear Cross Member & Retaining Bolts
Courtesy of CHRYSLER GROUP, LLC

2. Position the rear cross member, install the retaining bolts (2) finger tight.
3. Install the rear transmission mount isolator nuts (1) finger tight.
4. Tighten the transmission crossmember retaining bolts (2) to 68 N.m (50 ft. lbs.).
5. Lower the transmission and remove the jack.
6. Tighten the rear transmission mount isolator retaining nuts (1) to 47 N.m (35 ft. lbs.).

INSULATOR, ENGINE MOUNT, FRONT

REMOVAL

REMOVAL

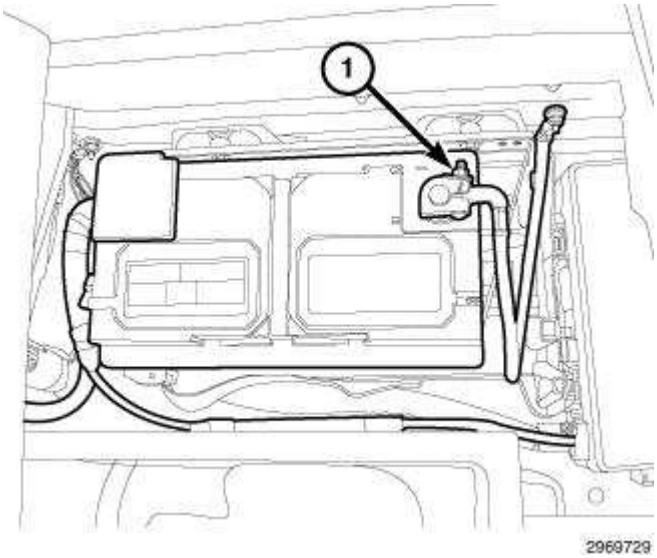

Fig. 299: Negative Battery Cable
Courtesy of CHRYSLER GROUP, LLC

1. Disconnect the negative battery cable (1).
2. Remove the intake manifold. Refer to **MANIFOLD, INTAKE, REMOVAL**.
3. Remove the engine oil dipstick tube retaining nut at the right exhaust manifold.
4. Raise and support the vehicle.

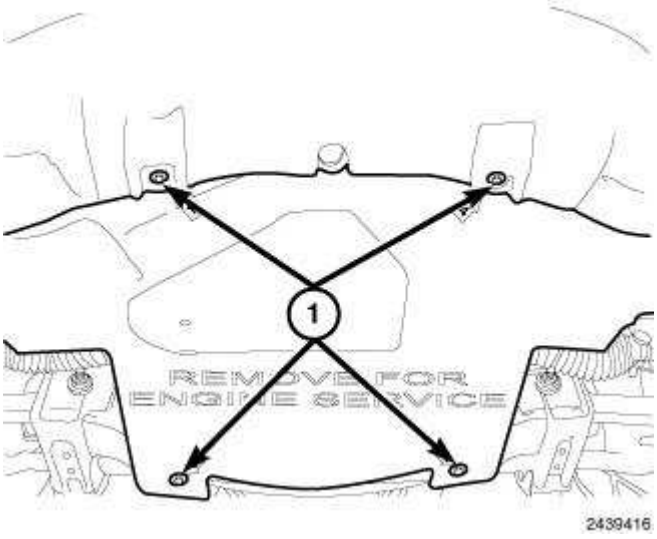

Fig. 300: Lower Splash Shield & Fasteners
Courtesy of CHRYSLER GROUP, LLC

5. Remove the belly pan retainers (1) and remove the belly pan.

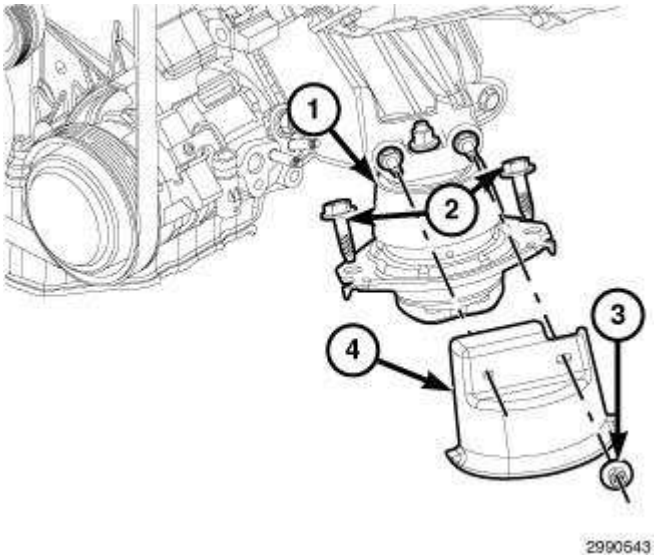

Fig. 301: Engine Mount Heat Shield Retaining Nuts, Lower Mount Retaining Bolts & Heat Shields
Courtesy of CHRYSLER GROUP, LLC

NOTE: Left side shown in illustration, right side similar.

6. Remove both left/right engine mount heat shield (4) retaining nuts (3) and remove the heat shields
7. Remove both left/right engine mount lower retaining bolts (2).
8. Lower the vehicle.

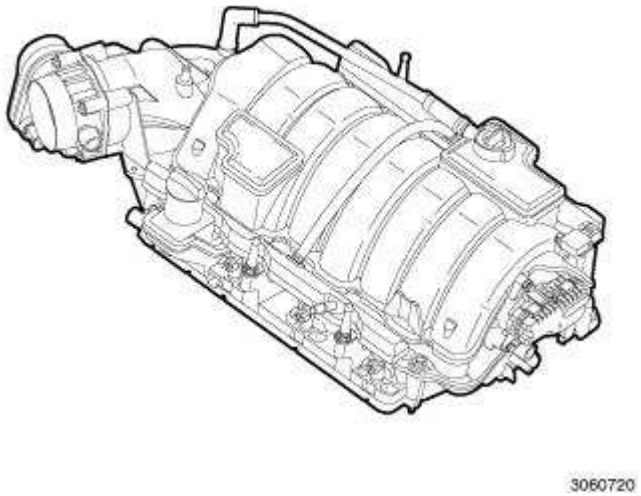

Fig. 302: Intake Manifold
Courtesy of CHRYSLER GROUP, LLC

9. Remove the intake manifold. Refer to **MANIFOLD, INTAKE, REMOVAL**.

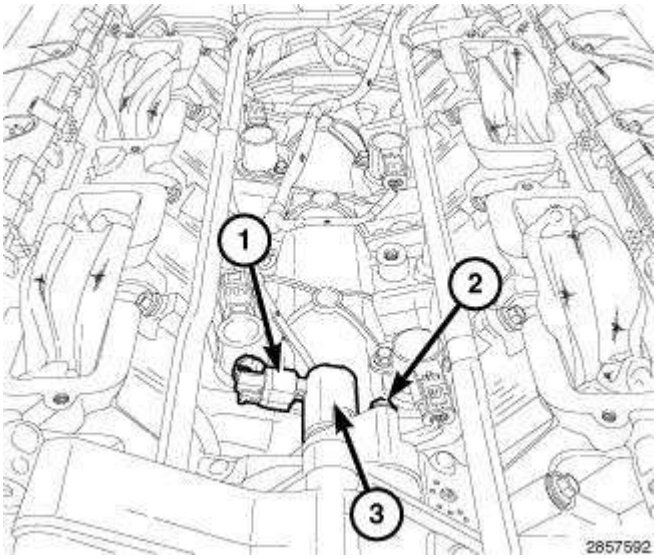

Fig. 303: Oil Control Valve, Electrical Connector & Retaining Bolt
Courtesy of CHRYSLER GROUP, LLC

10. Remove the VVCS (3)

    Refer to **SOLENOID, VARIABLE VALVE TIMING (VVTS), EXHAUST, REMOVAL**.

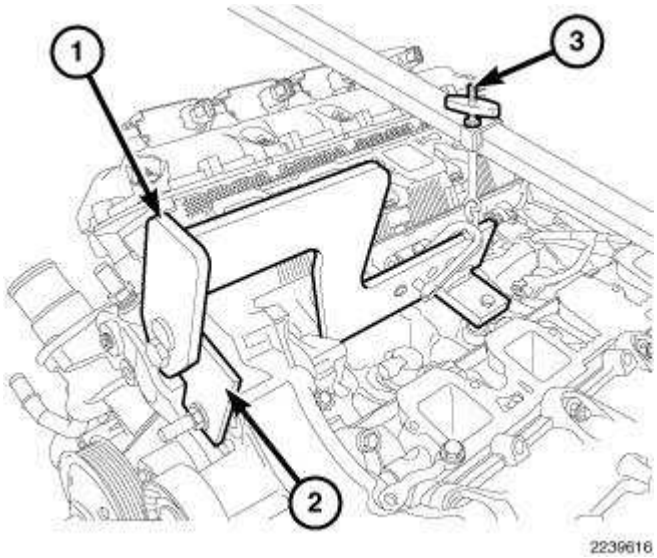

Fig. 304: Engine Lift Fixture & Adapter
Courtesy of CHRYSLER GROUP, LLC

NOTE: Do not use air tools to install the engine lift fixture.

11. Install the Engine Lift Fixture (special tool #8984B, Fixture, Engine Lifting) (1), Engine Lift Adapter (special tool #8984-UPD, Adapter, Engine Lift) (2) and the Engine Support Fixture (special tool #8534B, Fixture, Driveline Support) (3).
12. Raise the engine to provide clearance to remove the engine mounts.

13. Raise and support the vehicle.

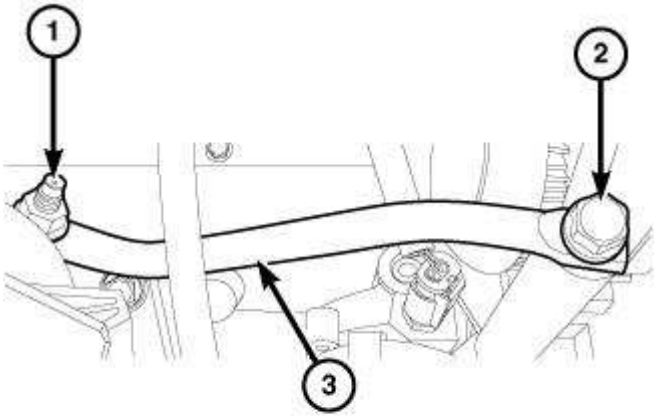

3002113

Fig. 305: Support Bracket, Bolt & Nut
Courtesy of CHRYSLER GROUP, LLC

14. Remove the generator support bracket to engine mount retaining nut (1).
15. Remove the generator support bracket retaining bolt (2) and remove the support bracket (3).

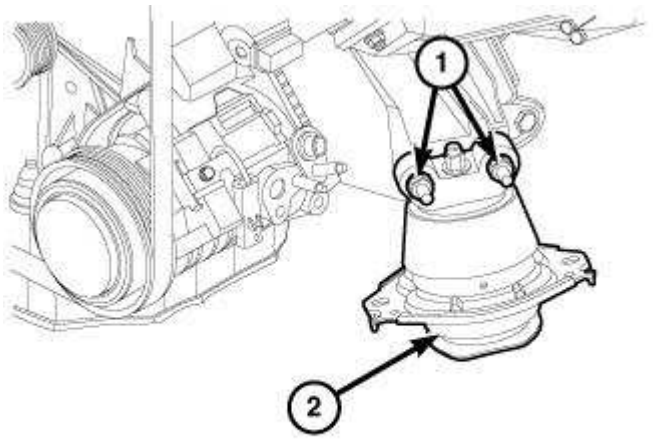

3002151

Fig. 306: Engine Mount & Retaining Bolts
Courtesy of CHRYSLER GROUP, LLC

NOTE: Left side shown in illustration, right side similar.

16. Remove both left/right engine mount retaining bolts (1) and remove the engine mounts (2).

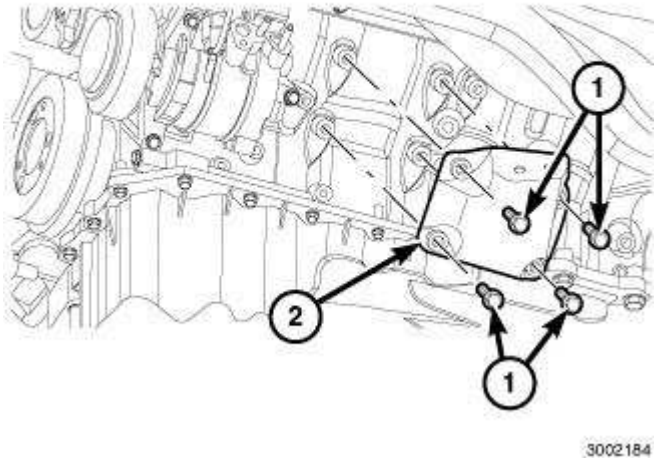

Fig. 307: Engine Mount-To-Engine Block Mounting Brackets & Retaining Bolts
Courtesy of CHRYSLER GROUP, LLC

NOTE: Left side shown in illustration, right side similar.

17. If necessary, remove both engine mount to engine block mounting bracket retaining bolts (1) and remove the mounting brackets (2).

INSTALLATION

INSTALLATION

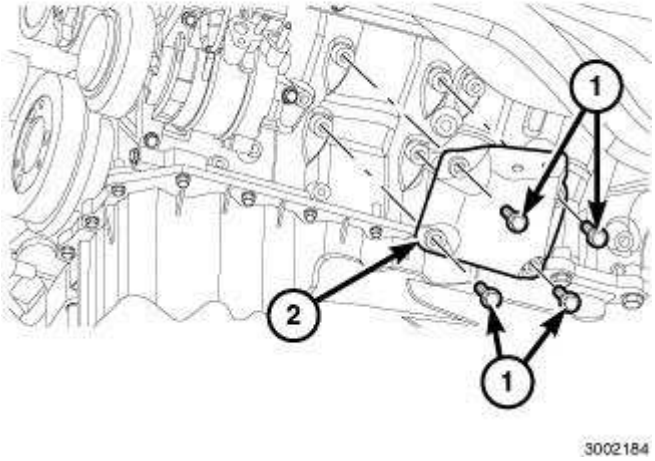

Fig. 308: Engine Mount-To-Engine Block Mounting Brackets & Retaining Bolts
Courtesy of CHRYSLER GROUP, LLC

NOTE: Left side shown in illustration, right side similar.

1. If removed, position the engine mount to engine block mounting brackets, install the retaining bolts and tighten to 61 N.m (45 ft. lbs.).

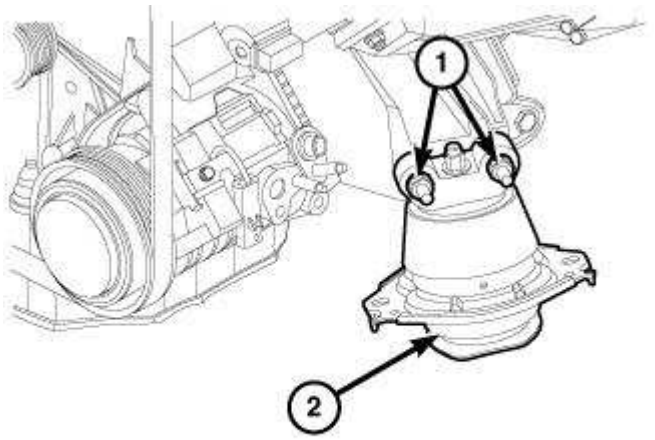

Fig. 309: Engine Mount & Retaining Bolts
Courtesy of CHRYSLER GROUP, LLC

NOTE: Left side shown in illustration, right side similar.

2. Position the engine mounts (2), Install the retainers (1) and tighten to 61 N.m (45 ft. lbs.).

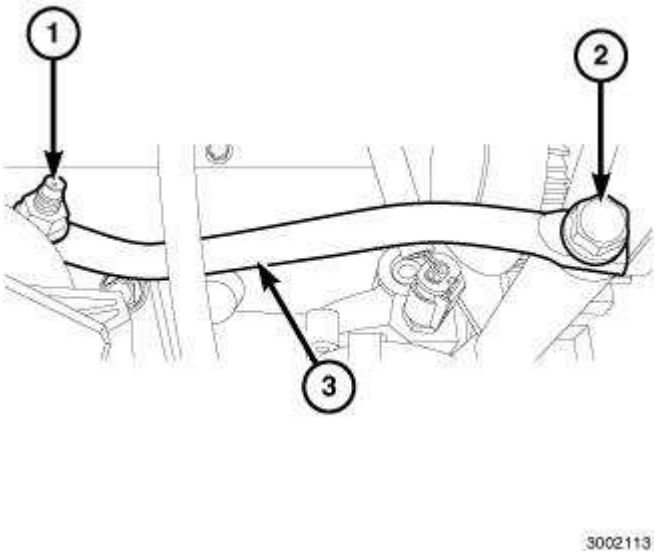

Fig. 310: Support Bracket, Bolt & Nut
Courtesy of CHRYSLER GROUP, LLC

3. Position the generator support bracket (3) to the engine mount, install the retaining nut (1) and tighten finger tight.
4. Position the generator support bracket (3) to the generator, install the retaining bolt (2) and

tighten to 65 N.m (48 ft. lbs.).

5. Tighten the generator support bracket (3) to engine mount retaining nut (1) to 28 N.m (21 ft. lbs.).
6. Lower the vehicle.

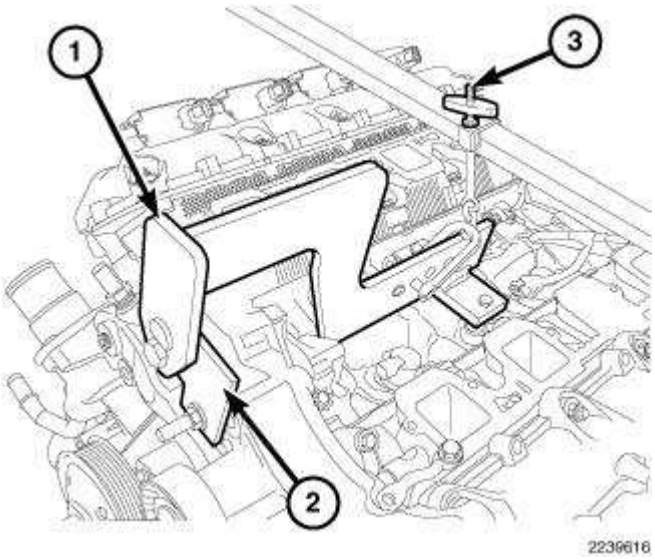

Fig. 311: Engine Lift Fixture & Adapter
Courtesy of CHRYSLER GROUP, LLC

7. Lower the Engine Support Fixture (special tool #8534B, Fixture, Driveline Support) (3) until the engine mounts are seated in the engine cradle.
8. Remove the Engine Lift Fixture (special tool #8984B, Fixture, Engine Lifting) (1), Engine Lift Adapter (special tool #8984-UPD, Adapter, Engine Lift) (2) and the Engine Support Fixture (special tool #8534B, Fixture, Driveline Support) (3).

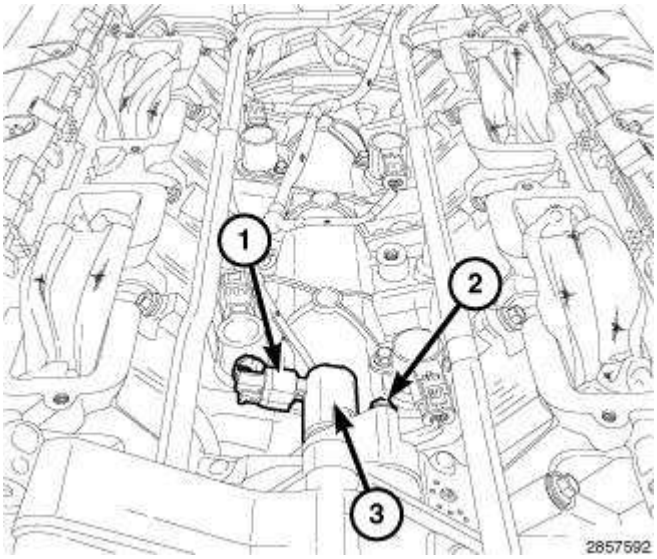

Fig. 312: Oil Control Valve, Electrical Connector & Retaining Bolt
Courtesy of CHRYSLER GROUP, LLC

9. Install the VVCS (3). Refer to **SOLENOID, VARIABLE VALVE TIMING (VVTS), EXHAUST, INSTALLATION**.
10. Raise and support the vehicle.

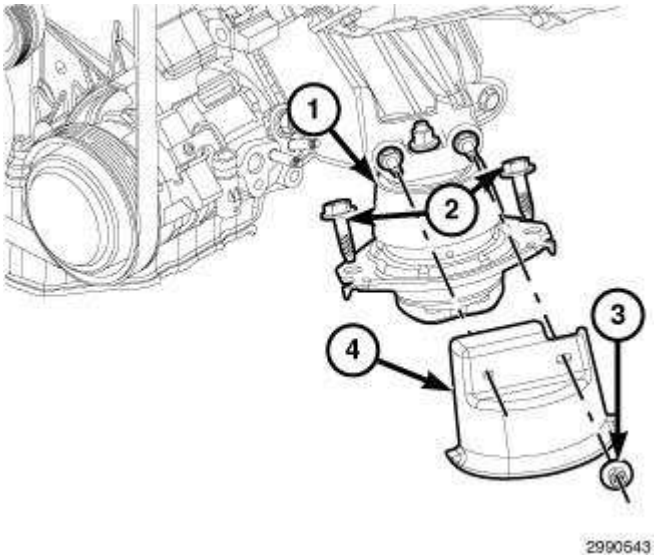

Fig. 313: Engine Mount Heat Shield Retaining Nuts, Lower Mount Retaining Bolts & Heat Shields
Courtesy of CHRYSLER GROUP, LLC

NOTE: Left side shown in illustration, right side similar.

11. Install both left/right engine mount lower retaining bolts (2) and tighten to 61 N.m (45 ft. lbs.).
12. Position both left/right engine mount heat shields (4), install the retaining nuts (3) and tighten to 27 N.m (20 ft. lbs.).

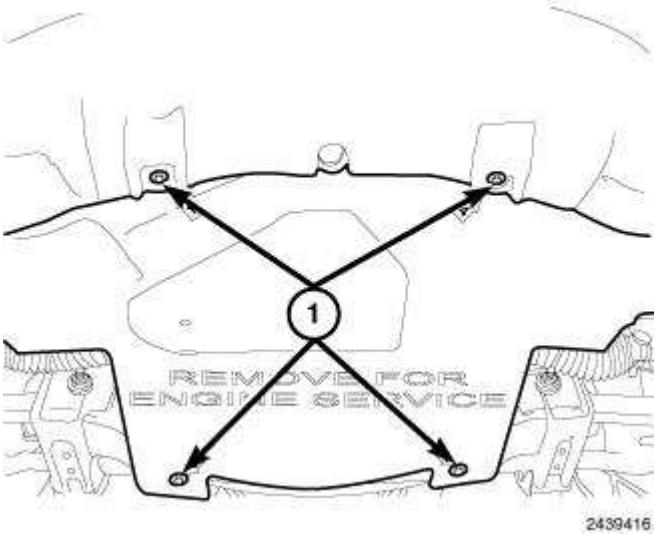

Fig. 314: Lower Splash Shield & Fasteners

Courtesy of CHRYSLER GROUP, LLC

13. Position the belly pan and install the belly pan retainers (1).
14. Lower the vehicle.

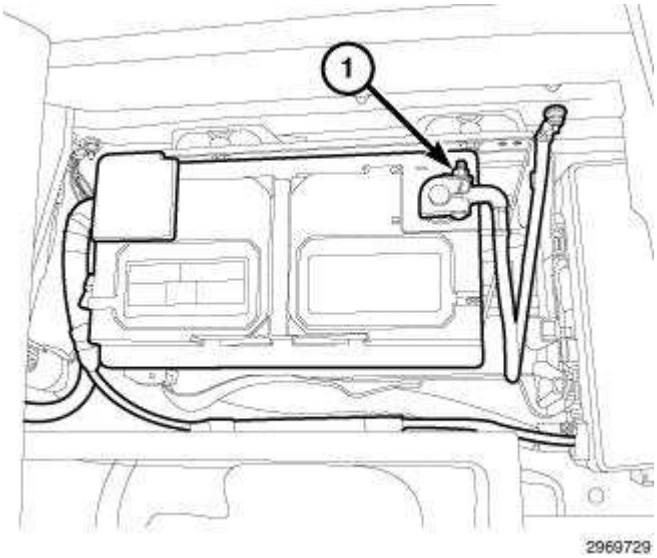

Fig. 315: Negative Battery Cable
Courtesy of CHRYSLER GROUP, LLC

15. Position the engine oil dipstick tube, install the retaining nut at the right exhaust manifold.
16. Install the intake manifold. Refer to **MANIFOLD, INTAKE, INSTALLATION**.
17. Connect the negative battery cable (1).

LUBRICATION

DESCRIPTION

DESCRIPTION

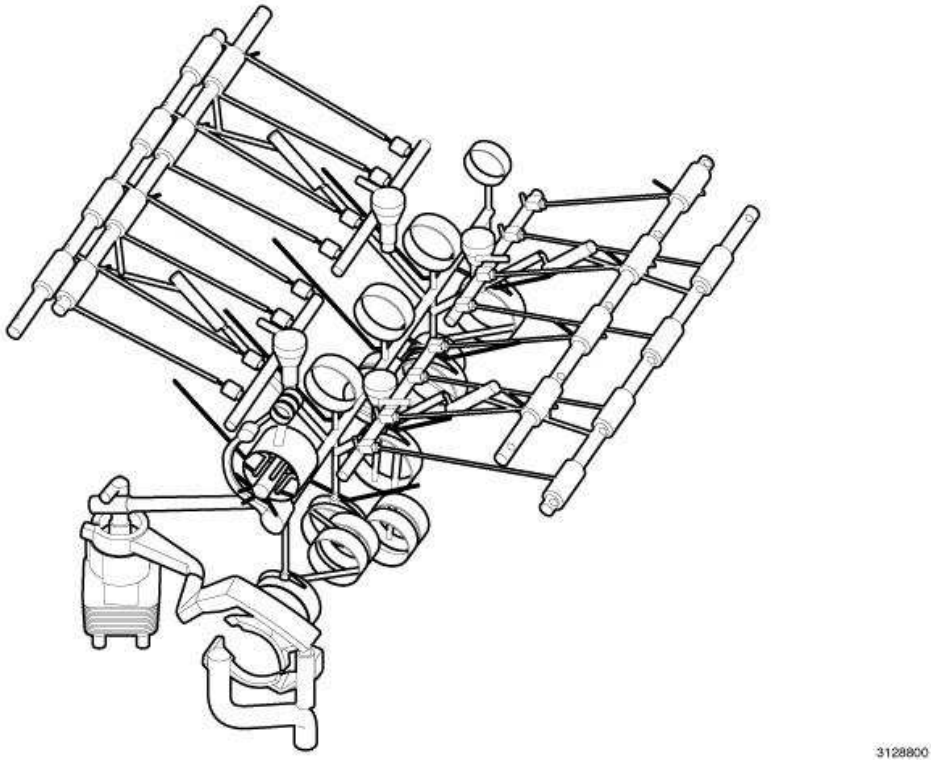

Fig. 316: 6.4L Lubrication System
Courtesy of CHRYSLER GROUP, LLC

The lubrication system is a full flow filtration pressure feed type system.

DIAGNOSIS AND TESTING

CHECKING ENGINE OIL PRESSURE

1. Remove oil pressure sending unit and install gauge assembly (special tool #C-3292A, Gauge, Pressure).
2. Run engine until thermostat opens.
3. Check oil pressure gauge:
   - Curb Idle - 25 kPa (4 psi) minimum
   - 3000 RPM - 170 - 758 kPa (25 - 110 psi)
4. If oil pressure is 0 at idle, shut off engine. Check for a clogged oil pick-up screen or a pressure relief valve stuck open.

ENGINE OIL LEAK

Begin with a thorough visual inspection of the engine, particularly at the area of the suspected leak. If an oil leak source is not readily identifiable, the following steps should be followed:

1. Do not clean or degrease the engine at this time because some solvents may cause rubber to swell thus temporarily stopping the leak.

2. Add an oil soluble dye (use as recommended by manufacturer). Start the engine and let idle for approximately 15 minutes. Check the oil dipstick to make sure the dye is thoroughly mixed as indicated with a bright yellow color under a black light.
3. Using a black light, inspect the entire engine for fluorescent dye, particularly at the suspected area of oil leak. If the oil leak is found and identified, repair per Service Information procedures.
4. If dye is not observed, drive the vehicle at various speeds for approximately 24 km (15 miles), and repeat inspection.

   If the oil leak source is not positively identified at this time, proceed with the **AIR LEAK DETECTION TEST METHOD**.

AIR LEAK DETECTION TEST METHOD

1. Remove the PCV valve, cap or plug the PCV valve port at the intake manifold.
2. Attach an air hose with a pressure gauge and regulator onto the dipstick tube.

   CAUTION: Do not subject the engine assembly to more than 20.6 kPa (3 PSI) of test pressure.

3. Gradually apply air pressure from 1 psi to 2.5 psi maximum while applying soapy water at the suspected source. Adjust the regulator to the suitable test pressure that provide the best bubbles which will pinpoint the leak source. If the oil leak is detected and identified, repair per Service Information procedures.
4. If the leakage occurs at the rear oil seal area, proceed with the **INSPECTION FOR REAR SEAL AREA LEAKS**.
5. If no leaks are detected, turn off the air supply and remove the air hose from the dipstick tube.
6. Remove the PCV port plug or cap at the intake manifold and install the PCV valve.
7. Clean the oil off the suspect oil leak area using a suitable solvent. Drive the vehicle at various speeds approximately 24 km (15 miles). Inspect the engine for signs of an oil leak by using a black light. If the oil leak is found and identified, repair per Service Information procedures.

INSPECTION FOR REAR SEAL AREA LEAKS

Since it is sometimes difficult to determine the source of an oil leak in the rear seal area of the engine, a more involved inspection is necessary. The following steps should be followed to help pinpoint the source of the leak.

If the leakage occurs at the crankshaft rear oil seal area:

1. Disconnect the battery.
2. Raise and support the vehicle.
3. Remove torque converter or clutch housing inspection cover.
4. Using a black light and inspect the rear of the engine block for evidence of oil.

Circular spray pattern on the rear of the engine block generally indicates:

- Rear crankshaft oil seal
- Damaged crankshaft

Oil running straight down the back of the engine block generally indicates:

- Porous engine block
- Camshaft core hole plug
- Oil gallery pipe plug
- Oil pan gasket

5. If no leaks are detected, pressurize the crankcase as outlined in the **AIR LEAK DETECTION TEST METHOD**.

   CAUTION: Do not subject the engine assembly to more than 20.6 kPa (3 PSI) of test pressure.

6. If the leak is not detected, very slowly turn the crankshaft and watch for leakage. If a leak is detected between the crankshaft and crankshaft oil seal while slowly turning the crankshaft, it is possible the crankshaft seal surface is damaged. The seal area on the crankshaft could have minor nicks or scratches that can be polished out with emery cloth.

   CAUTION: Use extreme caution when crankshaft polishing is necessary to remove minor nicks and scratches. The crankshaft seal flange is machined specifically to complement the function of the rear oil seal.

7. For bubbles that remain steady with shaft rotation, no further inspection can be done until disassembled.

SOLENOID, VARIABLE VALVE TIMING (VVTS), EXHAUST

DESCRIPTION

DESCRIPTION

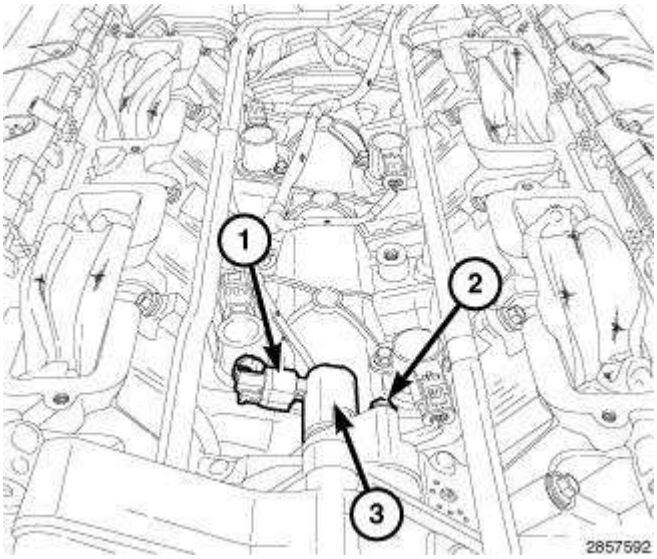

Fig. 317: Oil Control Valve, Electrical Connector & Retaining Bolt
Courtesy of CHRYSLER GROUP, LLC

The 6.4L engine is equipped with Variable Valve Timing (VVT). This system uses a Variable Valve Timing Solenoid (VVTs) to control the oil pressure to direct oil pressure to the camshaft phaser assembly. The camshaft phaser assembly advances and/or retards camshaft timing to improve engine performance, mid-range torque, idle quality, fuel economy and reduce emissions. The VVTS (3) is located under the intake manifold.

OPERATION

OPERATION

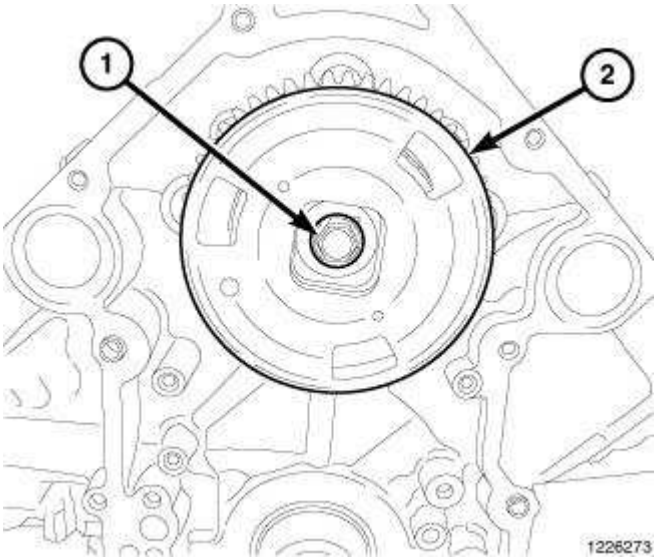

Fig. 318: Camshaft Phaser & Bolt
Courtesy of CHRYSLER GROUP, LLC

The Variable Cam Timing (VCT) assembly is actuated with engine oil pressure. The oil flow to the

VCT assembly is controlled by an Variable Valve Timing Solenoid (VVTS). The VVTS consists of a Pulse Width Modulated (PWM) solenoid and a spool valve. The PCM actuates the VVTS to control oil flow through the spool valve into the VCT assembly. The VCT assembly consists of a rotor and a stator/sprocket. The stator/sprocket is connected to the timing chain. The rotor is connected to the camshaft. Oil flow into the VCT assembly rotates the rotor with respect to the stator, thus rotating the camshaft with respect to the stator/sprocket. This will rotate both the intake and exhaust lobes on the camshaft by the same amount. The intake and exhaust lobes can not be individually controlled with this VCT system. An infinitely variable valve timing position can be achieved within the limits of the hardware. The camshaft position sensor monitors the position of the camshaft with respect to the crankshaft and provides feedback to the PCM.

REMOVAL

REMOVAL

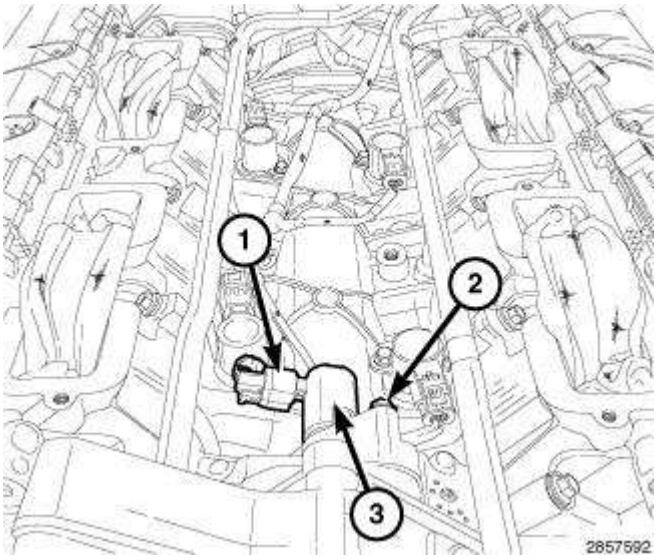

Fig. 319: Oil Control Valve, Electrical Connector & Retaining Bolt
Courtesy of CHRYSLER GROUP, LLC

NOTE: The Variable Valve Timing Solenoid (VVTS) (3) is located under the intake manifold.

1. Remove intake manifold. Refer to **MANIFOLD, INTAKE, REMOVAL**.
2. Disconnect VVTS electrical connector (1).
3. Remove VVTS retaining bolt (2).

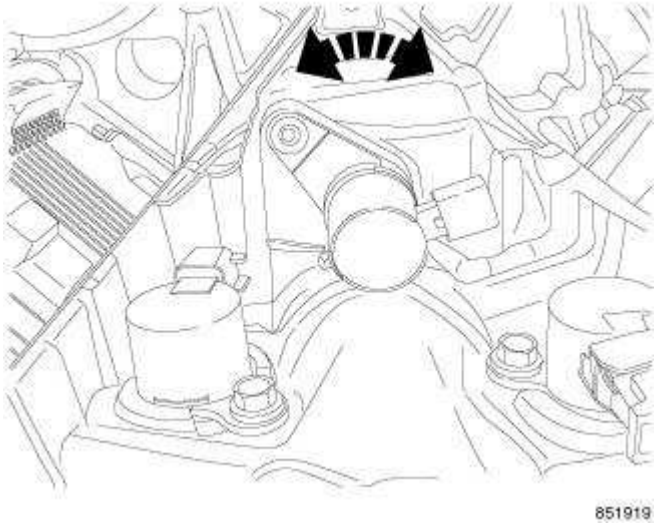

Fig. 320: Removing/Installing OCV
Courtesy of CHRYSLER GROUP, LLC

NOTE: To remove the VVTS, the engine must be at room temperature.

4. Rotate the VVTS to break the seal and remove.

INSTALLATION

INSTALLATION

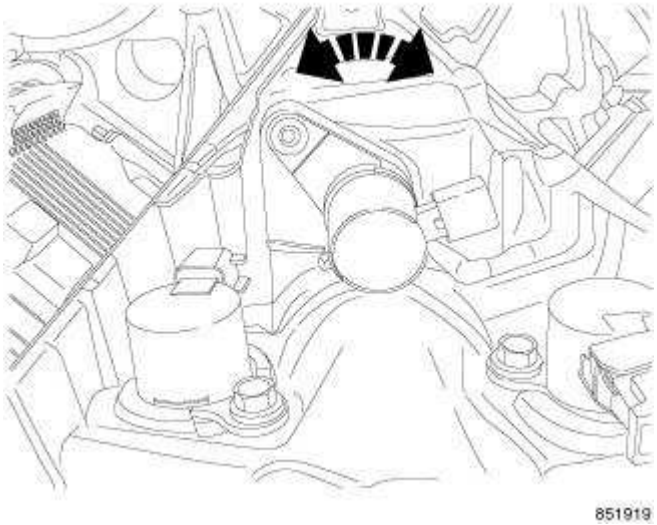

Fig. 321: Removing/Installing OCV
Courtesy of CHRYSLER GROUP, LLC

1. Lubricate the Variable Valve Timing Solenoid (VVTS) rubber O-ring seal with clean engine oil.
2. Install the VVTS and rotate into position.

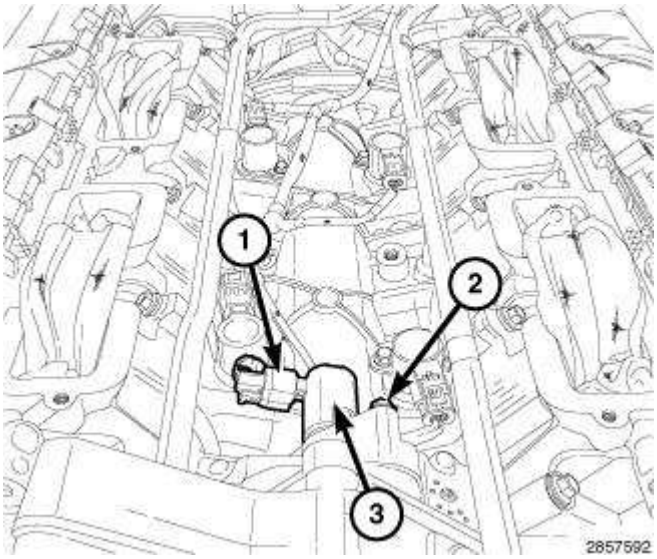

Fig. 322: Oil Control Valve, Electrical Connector & Retaining Bolt
Courtesy of CHRYSLER GROUP, LLC

3. Install the VVTS (3) retaining bolt (2) and tighten to 11 N.m (8 ft. lbs.).
4. Connect VVTS electrical connector (1).
5. Install intake manifold. Refer to **MANIFOLD, INTAKE, REMOVAL**.

COOLER, OIL

DESCRIPTION

DESCRIPTION

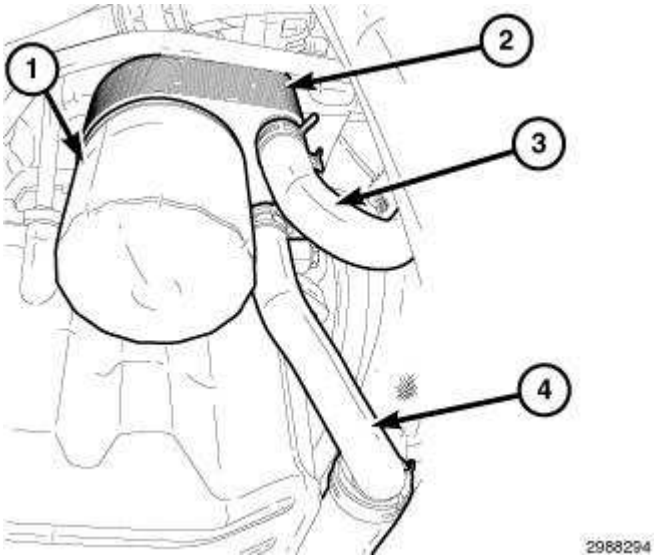

Fig. 323: Oil Filter, Oil Cooler & Hoses
Courtesy of CHRYSLER GROUP, LLC

The engine oil cooler (2) is engineered for maximum cooling efficiency with no restriction in oil flow. The oil cooler is a stack plate design coolant-to-oil heat exchanger.

The oil cooler (2) is mounted between the oil filter (1) and the engine block. The oil cooler uses the radiator coolant system; coolant is circulated through two coolant hoses to maintain a consistent engine oil temperature.

REMOVAL

REMOVAL

CAUTION: If the engine encounters a catastrophic failure, the engine oil cooler must be replaced or damage to the new engine and/or components could result.

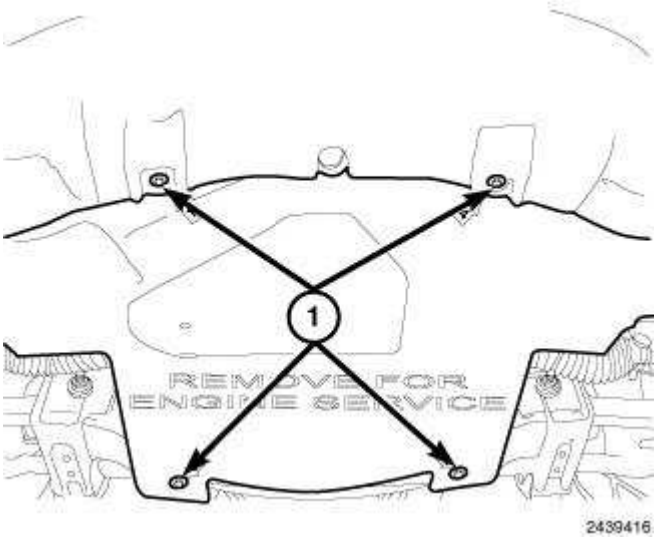

Fig. 324: Lower Splash Shield & Fasteners
Courtesy of CHRYSLER GROUP, LLC

1. Raise and support the vehicle.
2. Remove the belly pan retainers (1) and remove the belly pan.
3. Drain the cooling system. Refer to **STANDARD PROCEDURE** .

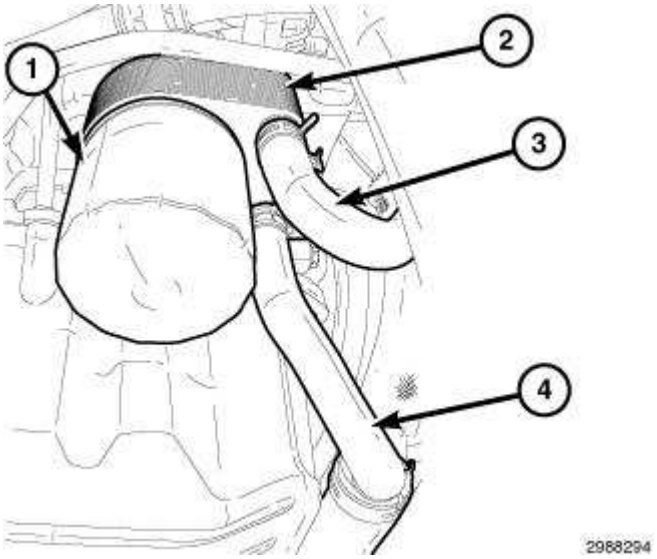

Fig. 325: Oil Filter, Oil Cooler & Hoses
Courtesy of CHRYSLER GROUP, LLC

4. Remove the oil filter (1) from the oil cooler (2).

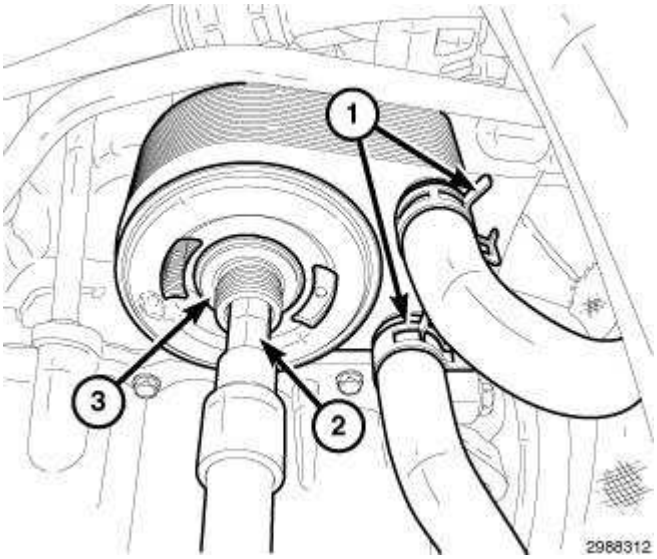

Fig. 326: Clamps, Allen Wrench Socket & Oil Cooler Retaining Bolt
Courtesy of CHRYSLER GROUP, LLC

5. Remove the clamps (1) from the cooling hoses at the oil cooler and remove hoses.
6. Using a 12 mm Allen Wrench socket (2), remove the oil cooler retaining bolt (3).

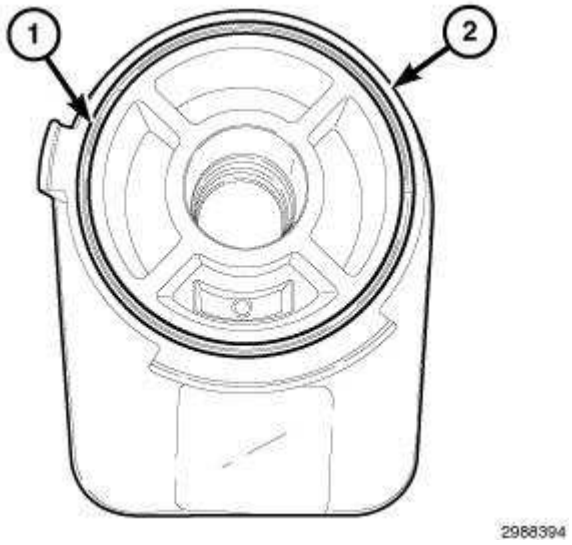

Fig. 327: O-Ring Seal & Oil Cooler
Courtesy of CHRYSLER GROUP, LLC

NOTE: Whenever the oil cooler is serviced, the rubber O-ring seal must be replaced.

7. Remove and discard the oil cooler (2) rubber O-ring seal (1).

INSTALLATION

INSTALLATION

CAUTION: If the engine encounters a catastrophic failure, the engine oil cooler must be replaced or damage to the new engine and/or components could result.

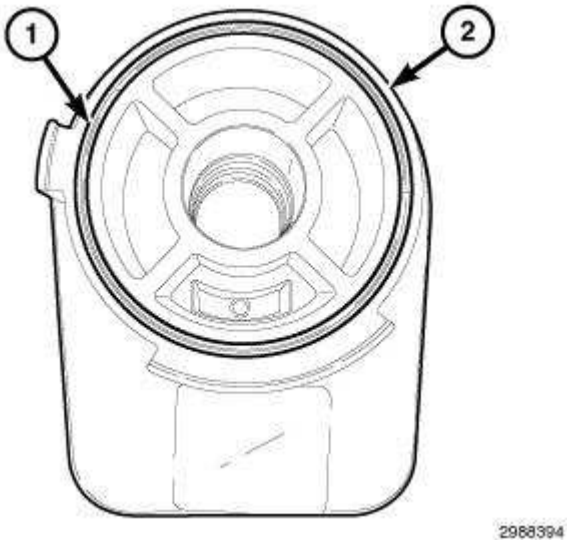

Fig. 328: O-Ring Seal & Oil Cooler

Courtesy of CHRYSLER GROUP, LLC

NOTE: Whenever the oil cooler is serviced, the rubber O-ring seal must be replaced.

1. Clean the sealing surface of the oil cooler (2) and install a new rubber O-ring seal (1).
2. Lightly lubricate the oil cooler rubber O-ring seal (1) with clean engine oil.

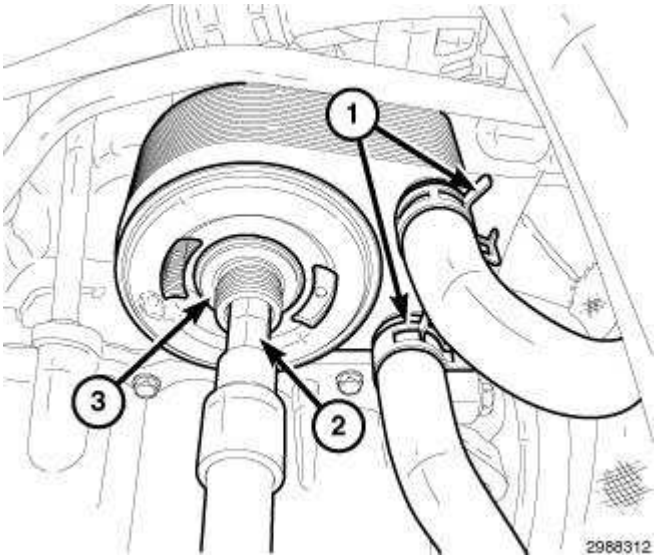

Fig. 329: Clamps, Allen Wrench Socket & Oil Cooler Retaining Bolt
Courtesy of CHRYSLER GROUP, LLC

3. Using a 12 mm Allen Wrench socket (2), install the oil cooler retaining bolt (3) and tighten to 28 N.m (21 ft. lbs.).
4. Position the cooling hoses and install the clamps (1).

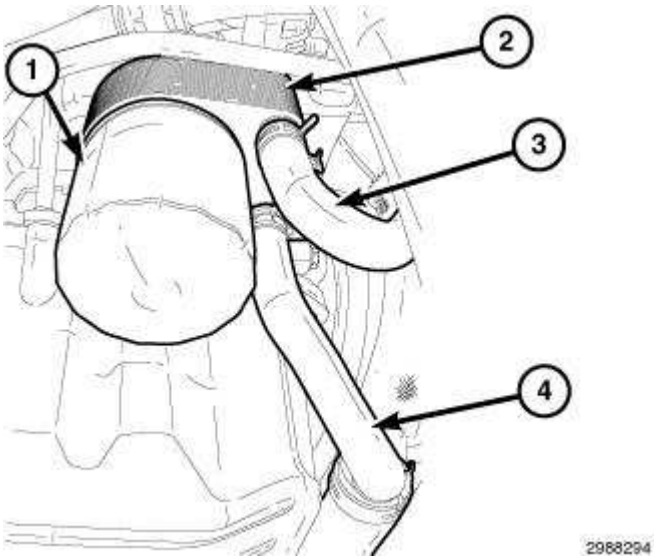

Fig. 330: Oil Filter, Oil Cooler & Hoses
Courtesy of CHRYSLER GROUP, LLC

5. Lightly lubricate the oil filter gasket with clean engine oil.

NOTE: Do not over tighten the oil filter.

6. Thread the oil filter (1) onto the oil cooler (2) oil filter boss.
7. When the oil filter gasket makes contact with the oil cooler sealing surface, hand tighten the oil filter one half turn, or 180°.

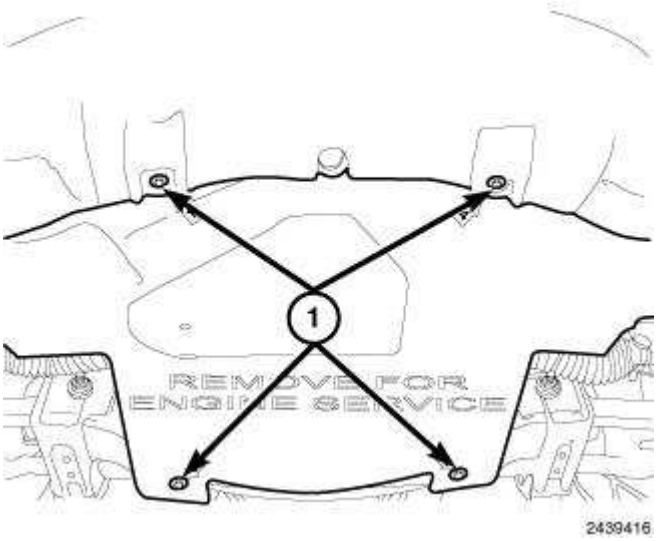

Fig. 331: Lower Splash Shield & Fasteners
Courtesy of CHRYSLER GROUP, LLC

8. Position the belly pan to the under side of the vehicle and install the retainers (1).
9. Lower the vehicle.
10. Fill the cooling system. Refer to **STANDARD PROCEDURE** .
11. Start the engine and check for leaks.
12. Turn the engine off and check the oil level.

FILTER, ENGINE OIL

REMOVAL

REMOVAL

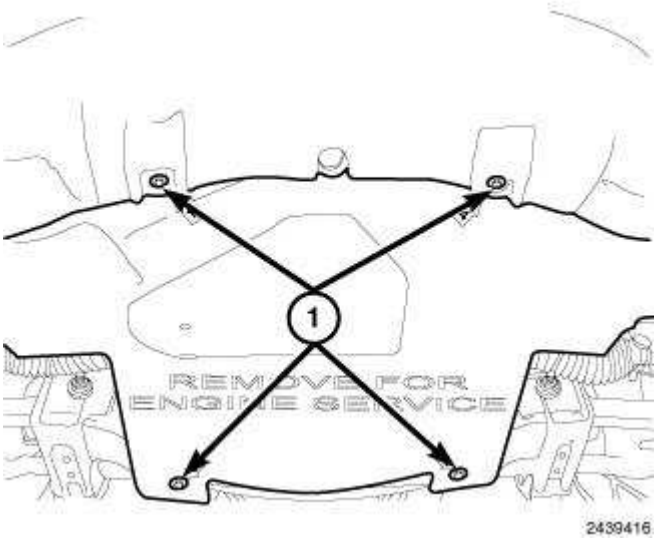

Fig. 332: Lower Splash Shield & Fasteners
Courtesy of CHRYSLER GROUP, LLC

All engines are equipped with a high quality full-flow, disposable type oil filter.

1. Raise and support the vehicle.
2. Remove the belly pan retainers (1) and remove the belly pan.

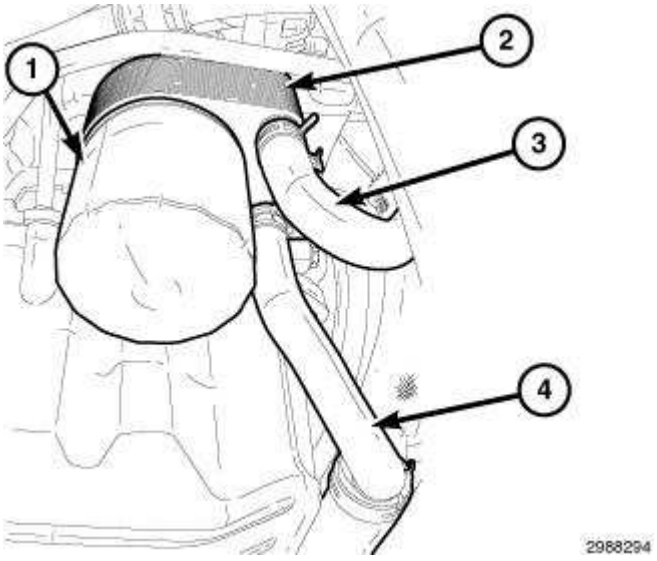

Fig. 333: Oil Filter, Oil Cooler & Hoses
Courtesy of CHRYSLER GROUP, LLC

3. Position a drain pan under the oil filter.
4. Using a suitable oil filter wrench, rotate the oil filter (1) counterclockwise to remove it from the oil cooler (2).
5. When the oil filter separates from the oil cooler, keep the gasket end upward to minimize oil spill and remove the oil filter from vehicle.

NOTE: Make sure the oil filter gasket was removed with the oil filter.

6. Using a wiping cloth, clean the oil cooler gasket sealing surface of oil and grime.

INSTALLATION

INSTALLATION

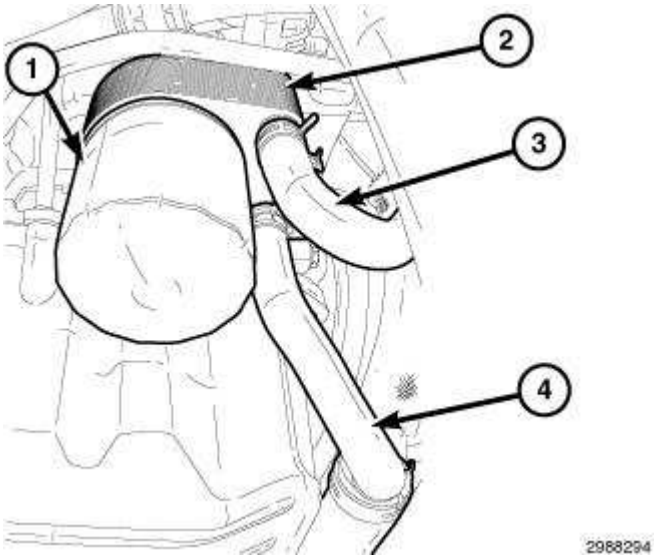

Fig. 334: Oil Filter, Oil Cooler & Hoses
Courtesy of CHRYSLER GROUP, LLC

1. Lightly lubricate the oil filter gasket with clean engine oil.

NOTE: Do not over tighten the oil filter.

2. Thread the oil filter (1) onto the oil cooler (2) oil filter boss.
3. When the oil filter gasket makes contact with the oil cooler sealing surface, hand tighten the oil filter one half turn, or 180°.

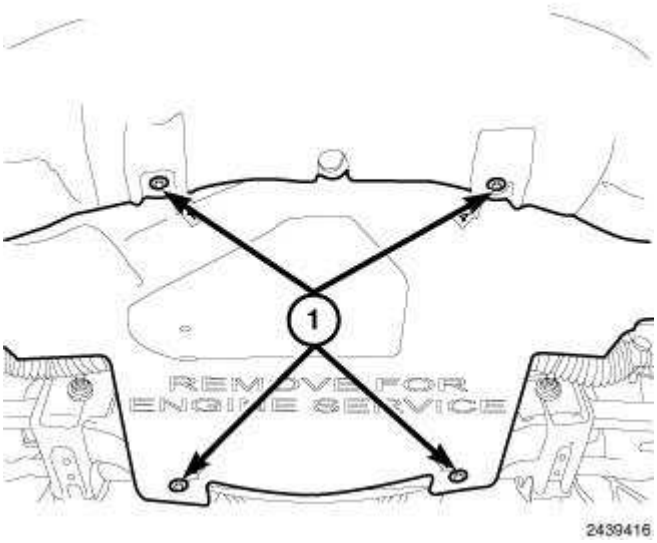

Fig. 335: Lower Splash Shield & Fasteners
Courtesy of CHRYSLER GROUP, LLC

4. Position the belly pan to the under side of the vehicle and install the retainers (1).
5. Lower the vehicle.
6. Fill the crankcase with the specified type and amount of engine oil as described in **STANDARD PROCEDURE**.
7. Install the oil fill cap.
8. Start the engine and check for leaks.
9. Turn the engine off and check the oil level.

JET, PISTON OIL COOLER

DESCRIPTION

DESCRIPTION

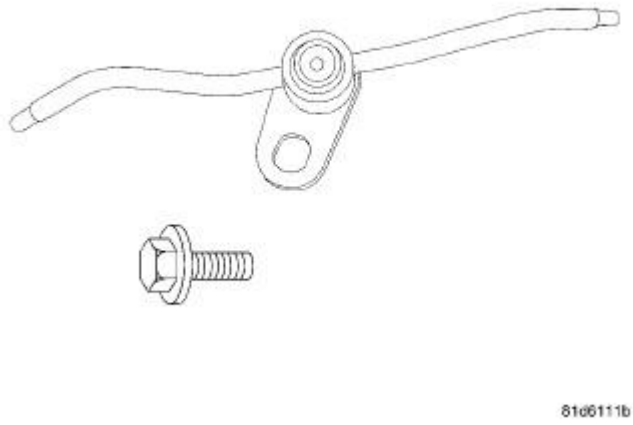

Fig. 336: Engine Oil Jet & Bolt
Courtesy of CHRYSLER GROUP, LLC

Four dual-nozzle oil jets are bolted to the cylinder block underneath the main oil gallery. The jets connect with an oil-tight fit to the main gallery through lubrication passages. Each oil jet helps cool the two opposing pistons.

REMOVAL

REMOVAL

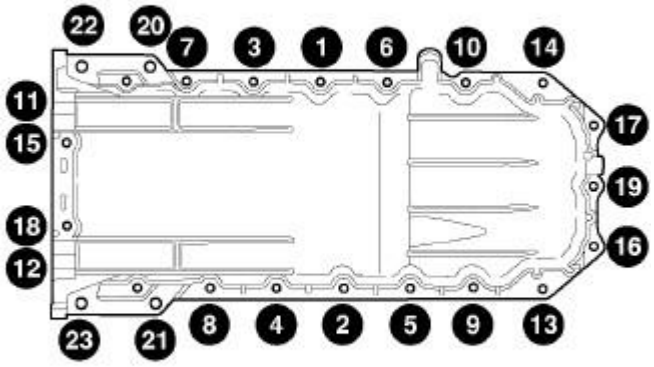

Fig. 337: Oil Pan Bolt Removal/Installation Sequence
Courtesy of CHRYSLER GROUP, LLC

1. Remove the oil pan and oil pump pickup tube. Refer to **PAN, OIL, REMOVAL**.

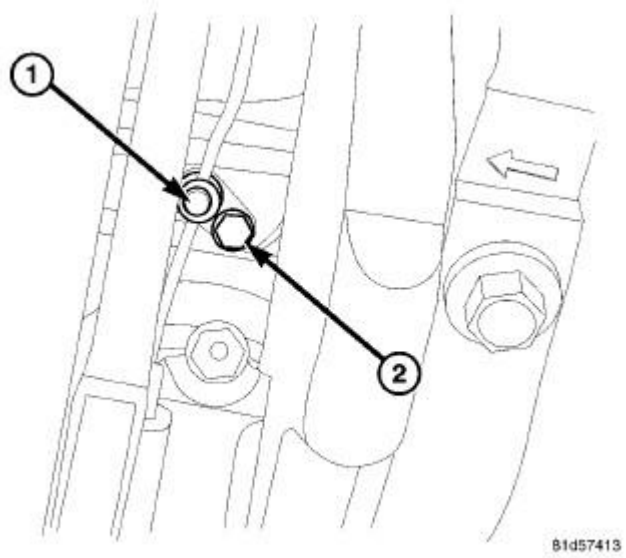

Fig. 338: Piston Oil Jet & Bolt
Courtesy of CHRYSLER GROUP, LLC

NOTE: It may be necessary to rotate the engine crankshaft to access the piston oil cooler jet retaining bolts.

2. Remove the piston oil cooler jet retaining bolt (2).
3. Remove the piston oil cooler jet (1).

INSTALLATION

INSTALLATION

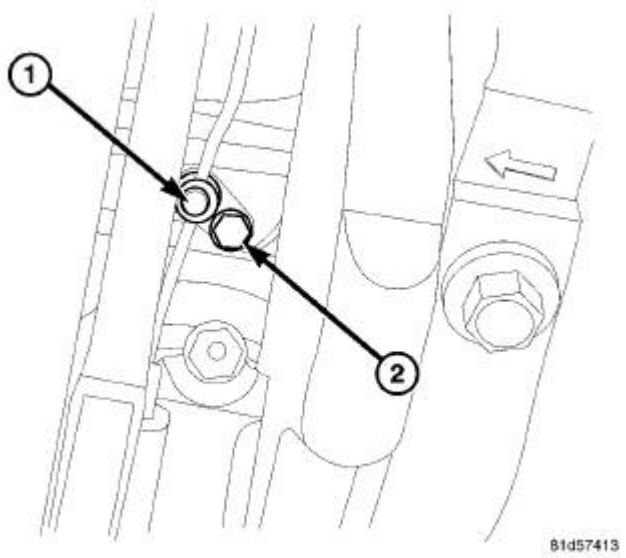

Fig. 339: Piston Oil Jet & Bolt
Courtesy of CHRYSLER GROUP, LLC

1. Position the piston oil cooler jet (1).
2. Install the piston oil cooler jet retaining bolt and tighten to 13 N.m (10 ft. lbs.) (2).

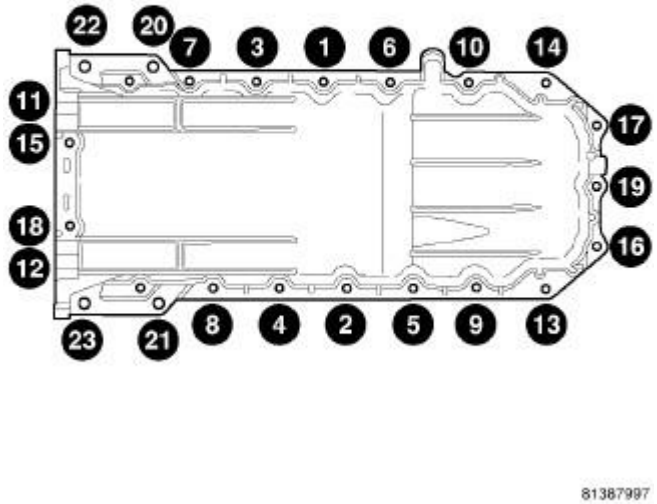

Fig. 340: Oil Pan Bolt Removal/Installation Sequence
Courtesy of CHRYSLER GROUP, LLC

3. Install the engine oil pump pickup tube and oil pan. Refer to **PAN, OIL, INSTALLATION**.

OIL

STANDARD PROCEDURE

STANDARD PROCEDURE - ENGINE OIL SERVICE

CRANKCASE OIL LEVEL INSPECTION

On the 6.4L engine, the oil level indicator is located on the right side of the engine.

CAUTION: Do not overfill crankcase with engine oil, pressure loss or oil foaming can result.

Inspect the engine oil level approximately every 800 kilometers (500 miles). Unless the engine has exhibited loss of oil pressure, run the engine for about ten minutes before checking the oil level. Checking the engine oil level on a cold engine is not accurate.

To ensure proper lubrication of an engine, the engine oil must be maintained at an acceptable level. The acceptable levels are indicated between the ADD and SAFE marks on the engine oil level indicator.

1. Position the vehicle on the level surface.
2. With the engine off, allow approximately five minutes for the oil to settle to the bottom of the crankcase and then remove the engine oil level indicator.
3. Wipe the oil level indicator clean.
4. Install the oil level indicator and verify it is seated in the tube.
5. Remove the oil level indicator, with the handle held above the tip, observe the oil level reading.
6. Add oil only if the level is below the ADD mark on the oil level indicator.

ENGINE OIL CHANGE

Change the engine oil at the mileage and time intervals described in the Maintenance Schedules. Refer to **MAINTENANCE SCHEDULES, DESCRIPTION** .

Run the engine until it reaches normal operating temperature.

1. Remove the oil fill cap.
2. Raise and support the vehicle.
3. Remove the belly pan. Refer to **BELLY PAN, REMOVAL** .
4. Place a suitable drain pan under the oil pan drain.
5. Remove the drain plug from the oil pan and allow the oil to drain.
6. Inspect the drain plug threads for stretching or other damage and replace if necessary.
7. Install the drain plug and tighten to 27 N.m (20 ft. lbs.).
8. Install the belly pan. Refer to **BELLY PAN, INSTALLATION** .

9. Lower the vehicle and fill the crankcase with the specified type and amount of engine oil described in **STANDARD PROCEDURE**.
10. Install the oil fill cap.
11. Start the engine and check for leaks.
12. Stop the engine and check the oil level.

NOTE: Care should be exercised when disposing of used engine oil.

PAN, OIL

REMOVAL

REMOVAL

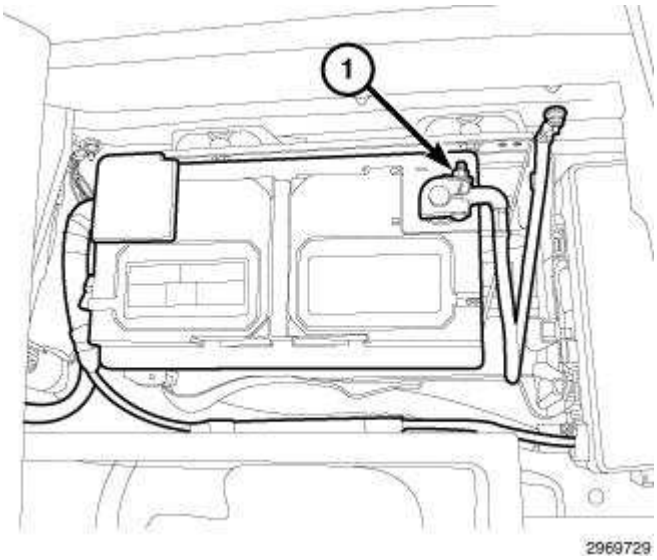

Fig. 341: Negative Battery Cable
Courtesy of CHRYSLER GROUP, LLC

1. Disconnect the negative battery cable (1).
2. Remove the intake manifold. Refer to **MANIFOLD, INTAKE, REMOVAL**.
3. Remove the engine oil dipstick and tube from the oil pan.
4. Raise and support the vehicle.

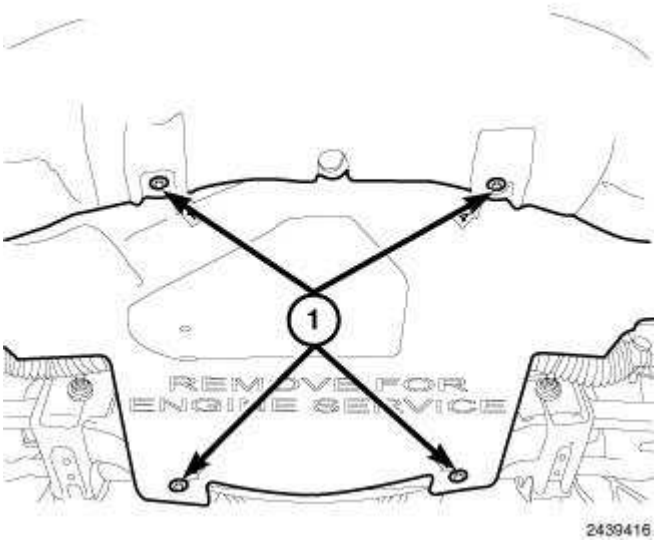

Fig. 342: Lower Splash Shield & Fasteners
Courtesy of CHRYSLER GROUP, LLC

5. Remove the belly pan retainers (1) and remove the belly pan.
6. Drain the engine oil and remove the oil filter.

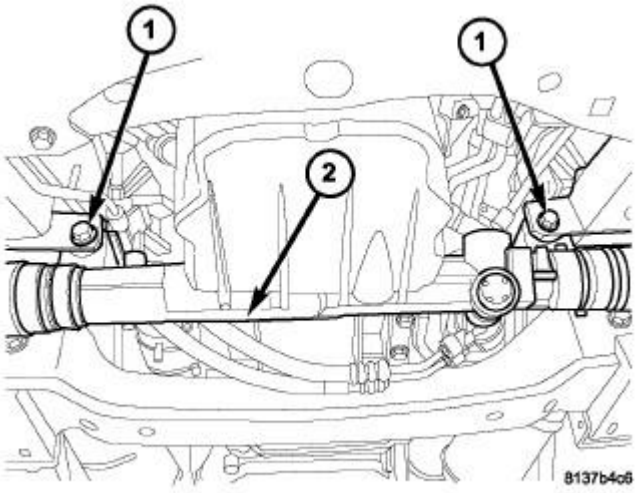

Fig. 343: Gear Mounting Bolts & Steering Gear
Courtesy of CHRYSLER GROUP, LLC

NOTE: Do not remove P/S hoses, tie rod ends or disconnect the steering column coupler.

7. Remove the steering gear mounting bolts (1) and lower the steering gear (2) to provide clearance to remove the oil pan.

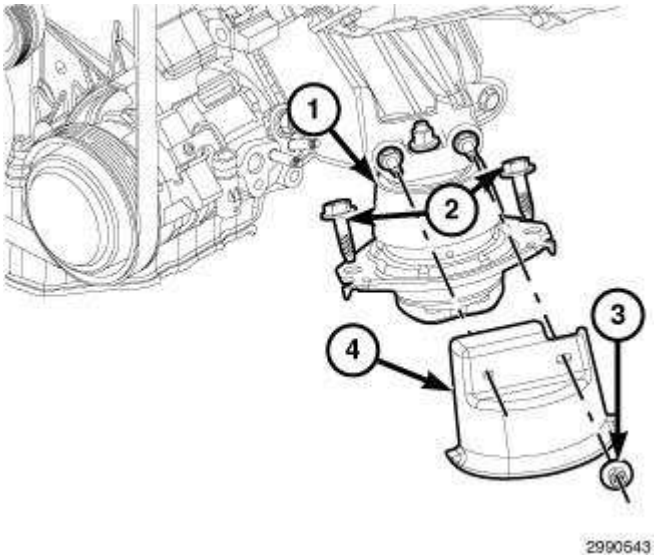

Fig. 344: Engine Mount Heat Shield Retaining Nuts, Lower Mount Retaining Bolts & Heat Shields
Courtesy of CHRYSLER GROUP, LLC

NOTE: Left side shown in illustration, right side similar.

8. Remove both left/right front engine mount heat shield retaining nuts (3) and remove the heat shields (4).
9. Remove both left/right front engine mount lower retaining bolts (2).
10. Lower the vehicle.

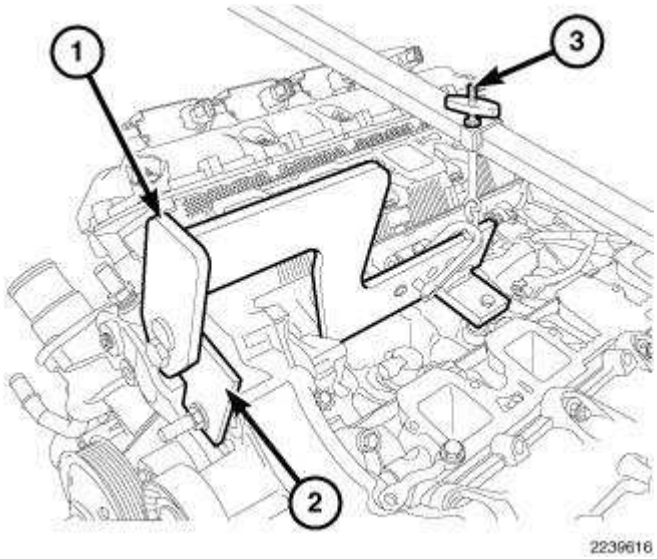

Fig. 345: Engine Lift Fixture & Adapter
Courtesy of CHRYSLER GROUP, LLC

NOTE: Do not use air tools to install engine lift fixture.

11. Install the Engine Lift Fixture (special tool #8984B, Fixture, Engine Lifting) (1), Engine Lift Adapter (special tool #8984-UPD, Adapter, Engine Lift) (2) and the Engine Support Fixture (special tool #8534B, Fixture, Driveline Support) (3).
12. Raise the engine to provide clearance to remove the oil pan.

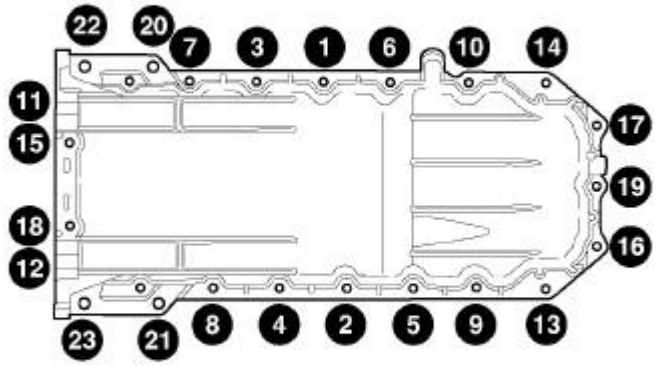

Fig. 346: Oil Pan Bolt Removal/Installation Sequence
Courtesy of CHRYSLER GROUP, LLC

NOTE: Do not pry on the oil pan or oil pan gasket. The oil pan gasket is integral to the engine windage tray and does not come out with the oil pan.

NOTE: The horizontal M10 retaining bolts (11, 12, 15, 18) are 5 mm longer in length then the vertical M10 retaining bolts (20, 21, 22, 23) and must be reinstalled in their original locations.

13. Raise and support the vehicle.
14. Remove the M10 retaining bolts (horizontal 11, 12, 15, 18 and vertical 20, 21, 22, 23) from the rear of the oil pan to the transmission.
15. Remove the M6 retaining bolts and remove the oil pan.

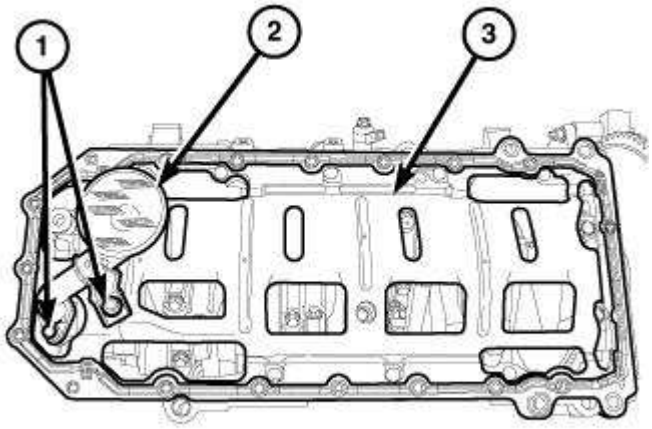

Fig. 347: Integral Windage Tray, Oil Pump Pickup Tube & Bolts
Courtesy of CHRYSLER GROUP, LLC

NOTE: When the oil pan is removed, a new oil pan gasket and the integral windage tray assembly must be installed, the old gasket cannot be reused.

16. Remove the oil pump pickup tube retaining bolt and nut (1).
17. Remove the oil pump pickup tube (2).
18. Remove and discard the oil pan gasket/windage tray (3).

INSTALLATION

INSTALLATION

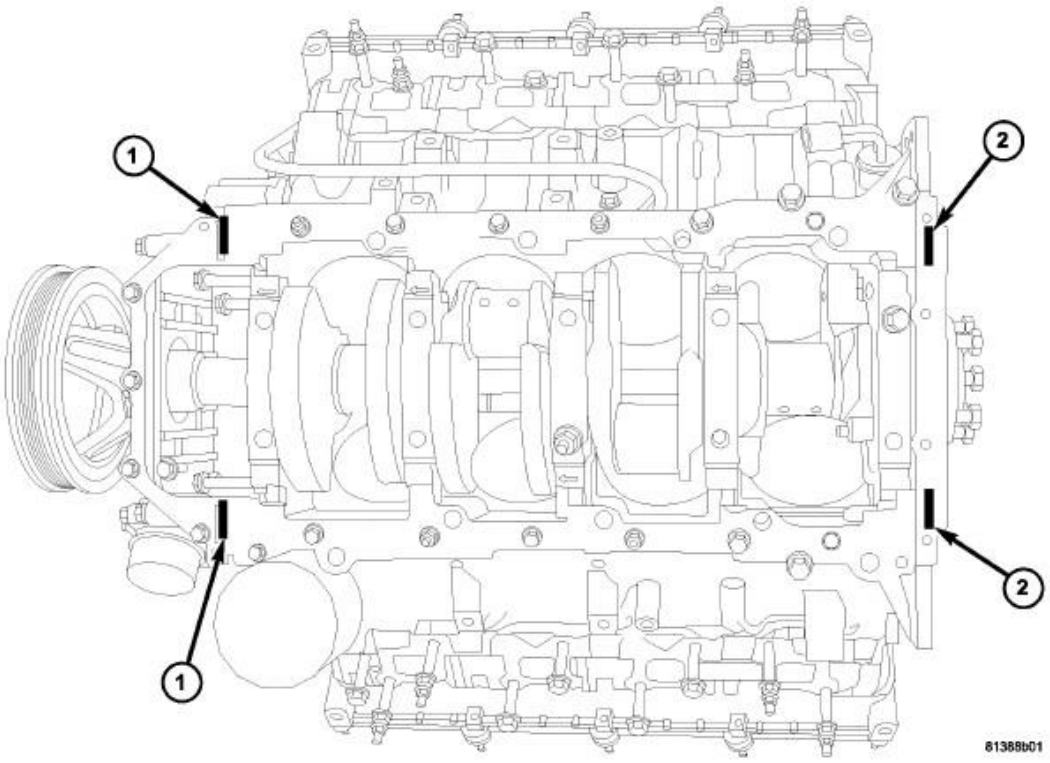

Fig. 348: T-Joint RTV Sealant Application Locations
Courtesy of CHRYSLER GROUP, LLC

1 - Front Cover T-Joints 2 - Rear Oil Retainer T-Joints

NOTE: Mopar® Engine RTV must be applied to the 4 T-joints, the area where the front cover, rear retainer and oil pan gasket meet. The bead of RTV should cover the bottom of the gasket. This area is approximately 4.5 mm x 25 mm in each of the 4 T-joint locations.

1. Clean the oil pan gasket mating surface of the engine block and oil pan.
2. Apply Mopar® Engine RTV at the 4 T- joints (1, 2).

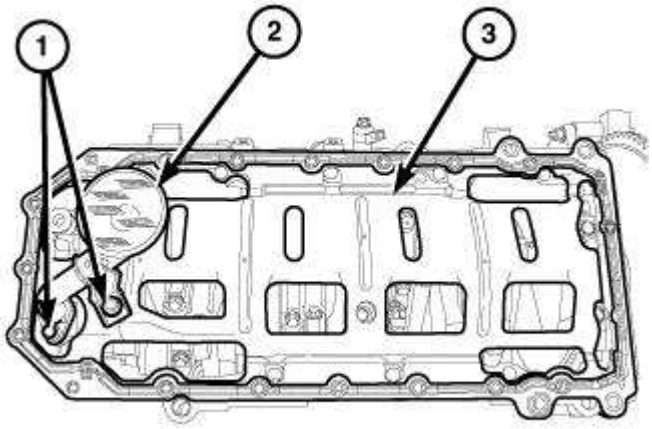

Fig. 349: Integral Windage Tray, Oil Pump Pickup Tube & Bolts
Courtesy of CHRYSLER GROUP, LLC

NOTE: When the oil pan is removed a new oil pan gasket and the integral windage tray assembly must be installed, the old gasket cannot be reused.

3. Install a new oil pan gasket/windage tray (3).
4. Using a new O-ring, position the oil pump pickup tube (2) into the oil pump.
5. Install the oil pump pickup tube retaining bolt and nut (1) and tighten to 28 N.m (21 ft. lbs.).

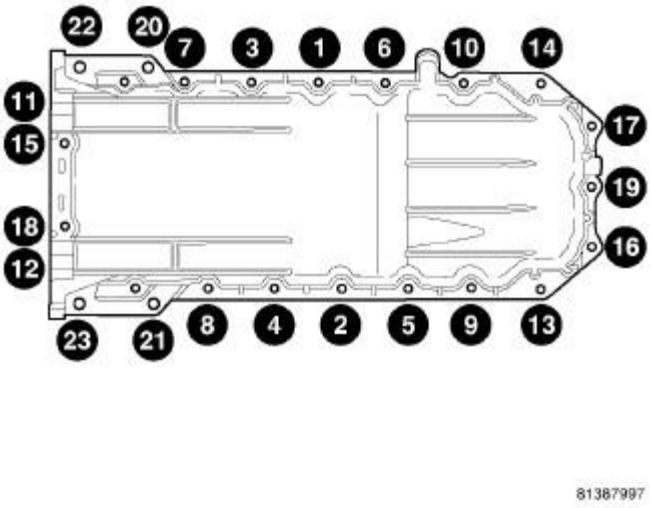

Fig. 350: Oil Pan Bolt Removal/Installation Sequence
Courtesy of CHRYSLER GROUP, LLC

NOTE: **The horizontal M10 retaining bolts (11, 12, 15, 18) are 5 mm longer in length then the vertical M10 retaining bolts (20, 21, 22, 23) and must be reinstalled in their original locations.**

NOTE: **New M6 retaining bolts must be used when reinstalling the oil pan. Do not reuse the old M6 retaining bolts.**

6. Align the rear of the oil pan with the rear face of the engine block and install the M10 and M6 retaining bolts finger tight.
7. Using the sequence shown in illustration, tighten the M6 retaining bolts to 5 N.m (44 in. lbs.).
8. Using the sequence shown in illustration, tighten the M10 retaining bolts to 54 N.m (40 ft. lbs.).
9. Using the sequence shown in illustration, tighten the M6 retaining bolts to 12 N.m (9 ft. lbs.).
10. Lower the vehicle.

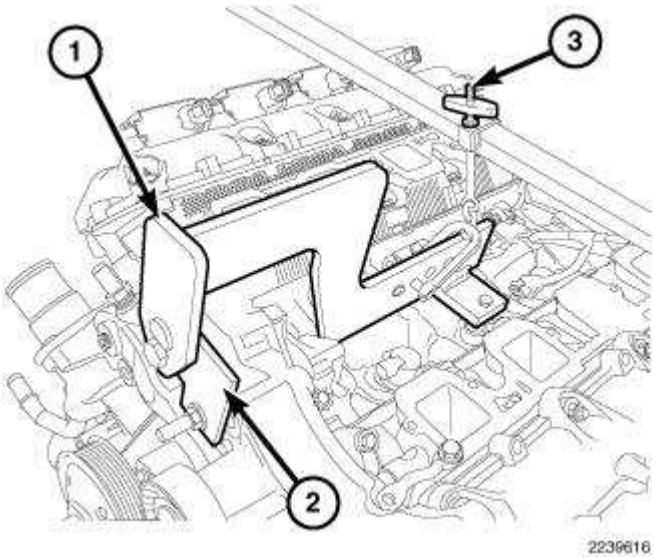

Fig. 351: Engine Lift Fixture & Adapter
Courtesy of CHRYSLER GROUP, LLC

11. Using the Engine Lift Fixture (special tool #8984B, Fixture, Engine Lifting) (1), Engine Lift Adapter (special tool #8984-UPD, Adapter, Engine Lift) (2) and the Engine Support Fixture (special tool #8534B, Fixture, Driveline Support) (3) lower the engine into position and remove.
12. Install the engine oil dipstick tube and dipstick.
13. Raise and support the vehicle.

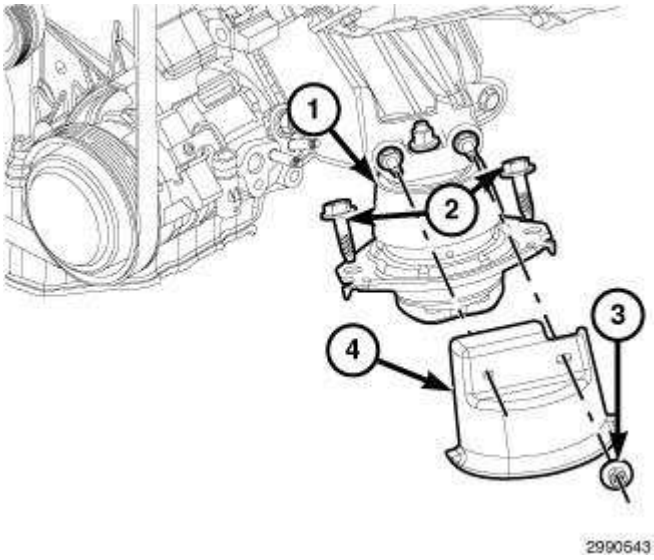

Fig. 352: Engine Mount Heat Shield Retaining Nuts, Lower Mount Retaining Bolts & Heat Shields
Courtesy of CHRYSLER GROUP, LLC

NOTE: Left side shown in illustration, right side similar.

14. Install both engine mount lower retaining bolts (2) and tighten to 61 N.m (45 ft. lbs.).
15. Position both engine mount heat shields (4) and install retaining nuts (3).

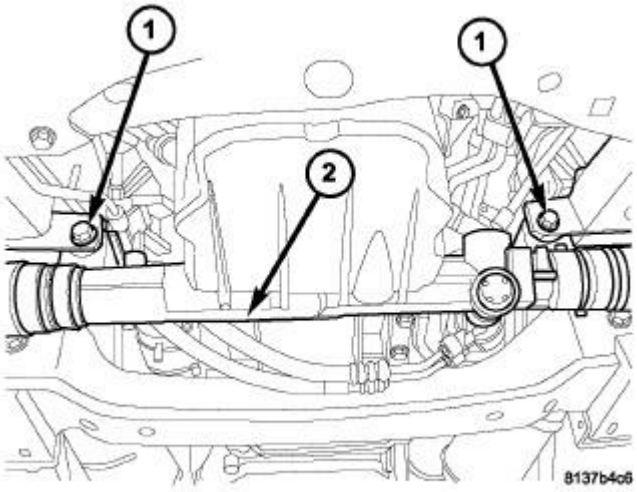

Fig. 353: Gear Mounting Bolts & Steering Gear
Courtesy of CHRYSLER GROUP, LLC

16. Position the steering gear (2), install mounting bolts (1) and tighten to 95 N.m (70 ft. lbs.).

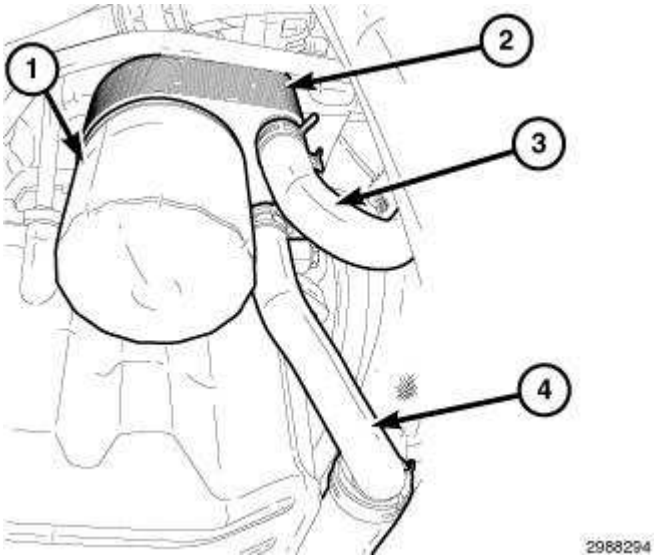

Fig. 354: Oil Filter, Oil Cooler & Hoses
Courtesy of CHRYSLER GROUP, LLC

17. Lightly lubricate the oil filter gasket with clean engine oil.

NOTE: Do not over tighten the oil filter.

18. Thread the oil filter (1) onto the oil cooler (2) oil filter boss.
19. When the oil filter gasket makes contact with the oil cooler sealing surface, hand tighten the oil filter one half turn, or 180°.

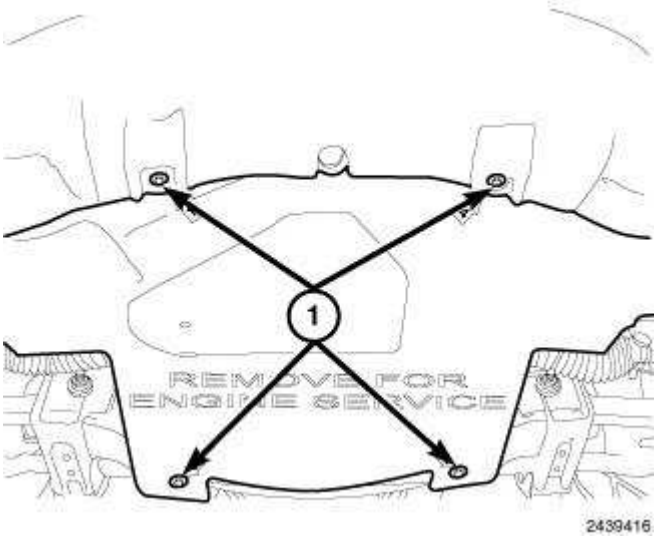

Fig. 355: Lower Splash Shield & Fasteners
Courtesy of CHRYSLER GROUP, LLC

20. Position the belly pan to the under side of vehicle and install belly pan retainers (1).

21. Lower the vehicle.
22. Install the intake manifold. Refer to **MANIFOLD, INTAKE, INSTALLATION**.
23. Fill the engine with oil. Refer to **STANDARD PROCEDURE** .

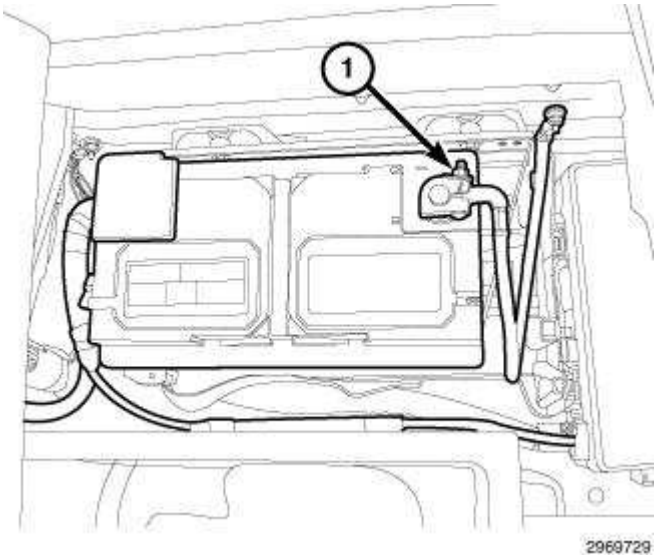

Fig. 356: Negative Battery Cable
Courtesy of CHRYSLER GROUP, LLC

24. Connect the negative battery cable (1).
25. Start the engine and check for leaks.

PUMP, ENGINE OIL

REMOVAL

REMOVAL

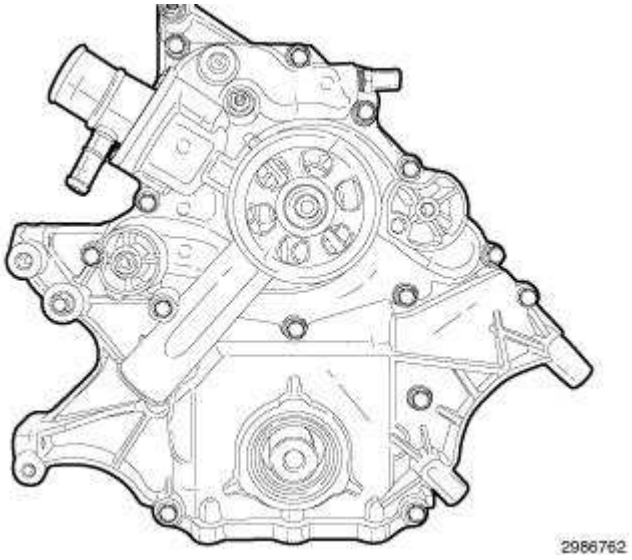

Fig. 357: Engine Timing Cover
Courtesy of CHRYSLER GROUP, LLC

NOTE: It is not necessary to remove water pump for timing cover removal.

1. Remove the engine timing cover. Refer to **COVER(S), ENGINE TIMING, REMOVAL**.

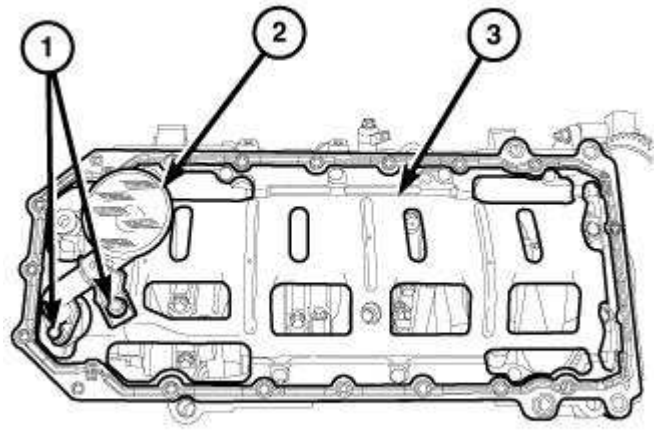

2970744

Fig. 358: Integral Windage Tray, Oil Pump Pickup Tube & Bolts
Courtesy of CHRYSLER GROUP, LLC

NOTE: When the oil pan is removed, a new oil pan gasket and the integral windage tray (3) assembly must be installed, the old gasket cannot be reused.

2. Remove the oil pan and oil pump pickup tube (2). Refer to **PAN, OIL, REMOVAL**.

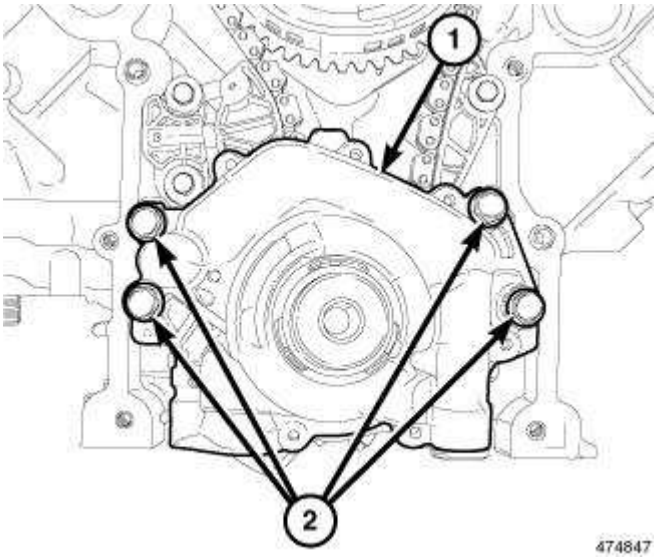

474847

Fig. 359: Oil Pump & Retaining Bolts
Courtesy of CHRYSLER GROUP, LLC

3. Remove the oil pump retaining bolts (2) and remove the oil pump (1).

CLEANING

CLEANING

1. Wash all parts in a suitable solvent.
2. Using compressed air, carefully dry parts.

INSPECTION

INSPECTION

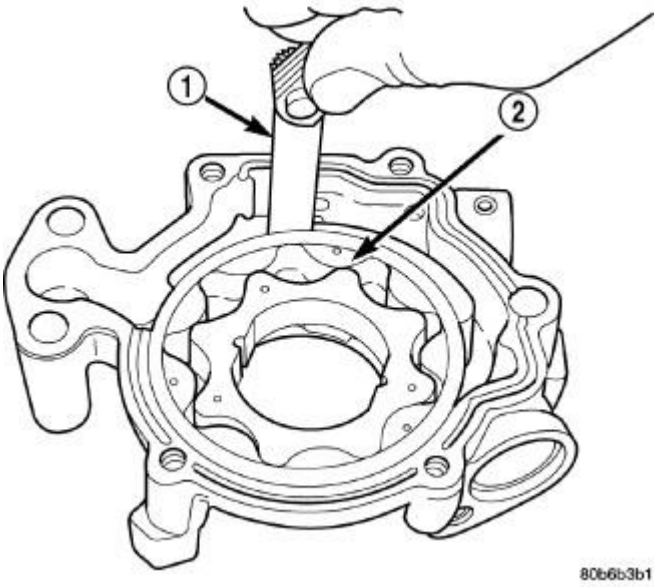

Fig. 360: Measuring Outer Rotor Clearance In Housing
Courtesy of CHRYSLER GROUP, LLC

1 - FEELER GAUGE 2 - OUTER ROTOR

CAUTION: Oil pump pressure relief valve and spring should not be removed from the oil pump. If these components are disassembled and or removed from the pump the entire oil pump assembly must be replaced.

1. Remove the pump cover.
2. Clean all parts thoroughly. The mating surface of the oil pump housing should be smooth. If the oil pump cover is scratched or grooved the oil pump assembly should be replaced.
3. Slide the outer rotor into the body of the oil pump. Press the outer rotor to one side of the oil

pump body and measure the clearance between the outer rotor (2) and the body. If the measurement is 0.235 mm (0.009 in.) or greater the oil pump assembly must be replaced.

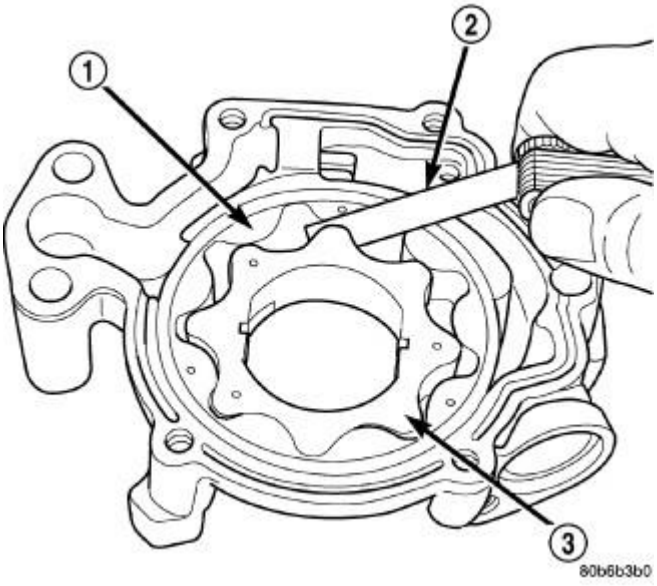

Fig. 361: Measuring Clearance Between Inner & Outer Rotors
Courtesy of CHRYSLER GROUP, LLC

1 - OUTER ROTOR
2 - FEELER GAUGE
3 - INNER ROTOR

4. Install the inner rotor into the oil pump body. Measure the clearance between the inner (3) and outer (1) rotors. If the clearance between the rotors is.150 mm (0.006 in.) or greater the oil pump assembly must be replaced.

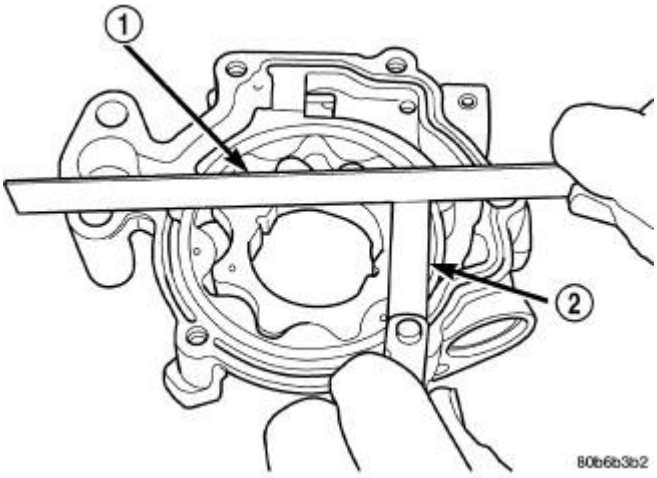

Fig. 362: Measuring Clearance Over Rotors
Courtesy of CHRYSLER GROUP, LLC

1 - STRAIGHT EDGE 2 - FEELER GAUGE

5. Place a straight edge (1) across the body of the oil pump (between the bolt holes), using a feeler gauge (2), measure the clearance between the straightedge and the rotors. If the clearance is.095 mm (0.0038 in.) or greater the oil pump must be replaced.
6. Install the pump cover and tighten retainers to 15 N.m (11 ft. lbs.)

NOTE: The 6.4L oil pump is serviced as an assembly. There are no Chrysler part numbers for sub-assembly components. In the event the oil pump is not functioning or out of specification it must be replaced as an assembly.

INSTALLATION

INSTALLATION

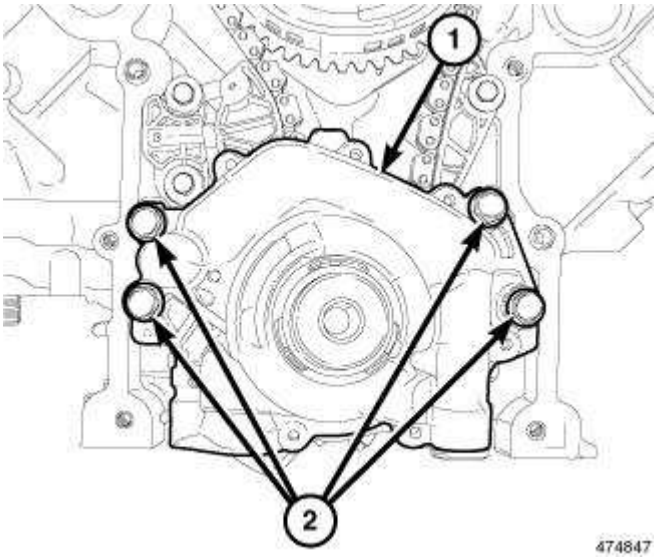

Fig. 363: Oil Pump & Retaining Bolts
Courtesy of CHRYSLER GROUP, LLC

1. Position the oil pump (1) onto the crankshaft, install the retaining bolts (2) and tighten to 28 N.m (21 ft. lbs.).

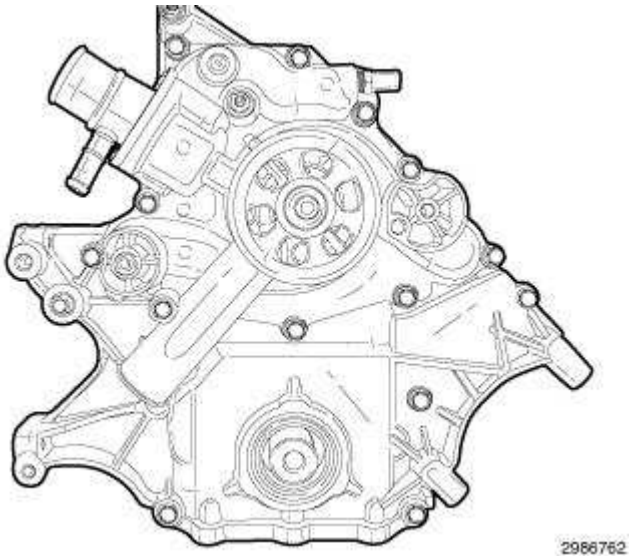

Fig. 364: Engine Timing Cover
Courtesy of CHRYSLER GROUP, LLC

2. Install the timing chain cover. Refer to **COVER(S), ENGINE TIMING, INSTALLATION**.

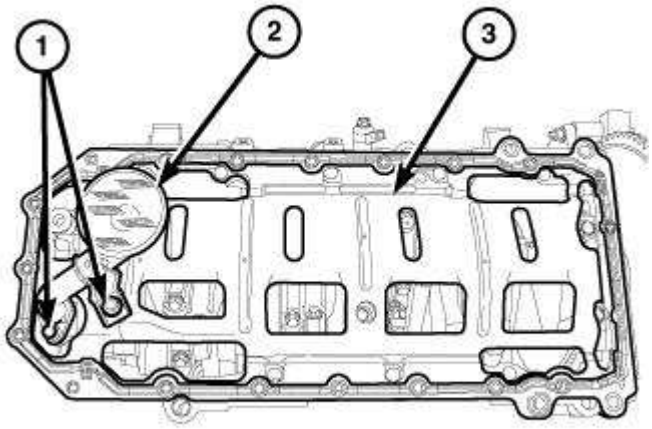

Fig. 365: Integral Windage Tray, Oil Pump Pickup Tube & Bolts
Courtesy of CHRYSLER GROUP, LLC

3. Install the oil pump pickup tube (2) and oil pan. Refer to **PAN, OIL, INSTALLATION**.

SENSOR, OIL PRESSURE

DESCRIPTION

DESCRIPTION

The oil pressure sensor uses the following three circuits:

- Signal circuit to the PCM
- Sensor ground circuit through the PCM
- 5 volt reference circuit from the PCM

The oil pressure sensor returns a voltage signal back to the PCM with reference to oil pressure. Ground for the sensor is supplied by the PCM.

The oil pressure sensor is located on the right side of the engine block. The sensor screws into the engines main oil gallery.

REMOVAL

REMOVAL

1. Disconnect and isolate the negative battery cable.
2. Remove the accessory drive belt. Refer to **BELT, SERPENTINE, REMOVAL** .
3. Remove the upper generator mounting bolt.
4. Raise and support the vehicle.

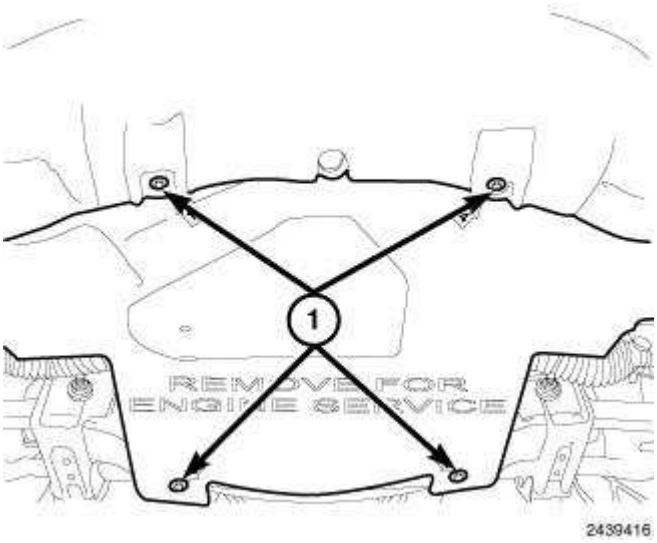

Fig. 366: Lower Splash Shield & Fasteners
Courtesy of CHRYSLER GROUP, LLC

5. Remove the belly pan retainers (1) and remove the belly pan.

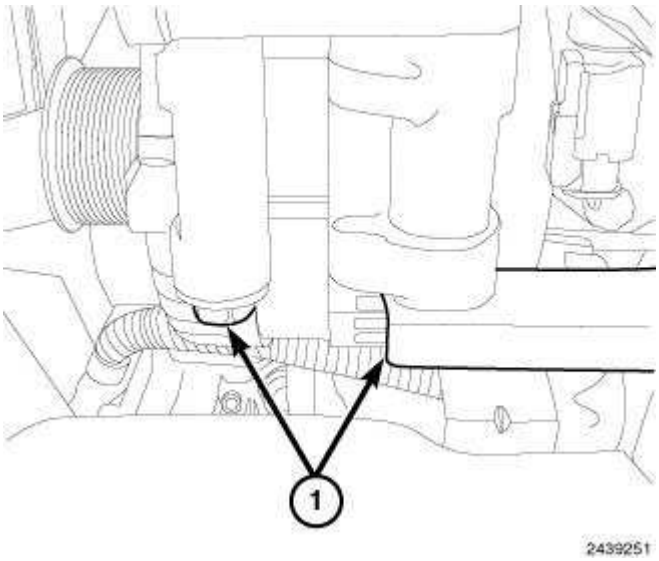

Fig. 367: Lower Generator Retaining Bolts
Courtesy of CHRYSLER GROUP, LLC

6. Remove the lower generator retaining bolts (1).
7. Lower the vehicle.
8. Position the generator aside to gain access to the oil pressure sensor.

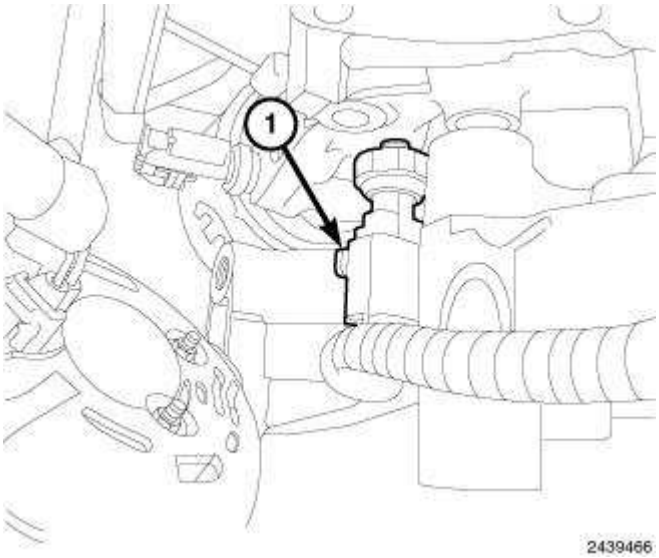

Fig. 368: Oil Pressure Sensor Electrical Connector
Courtesy of CHRYSLER GROUP, LLC

9. Disconnect the oil pressure sensor electrical connector (1).

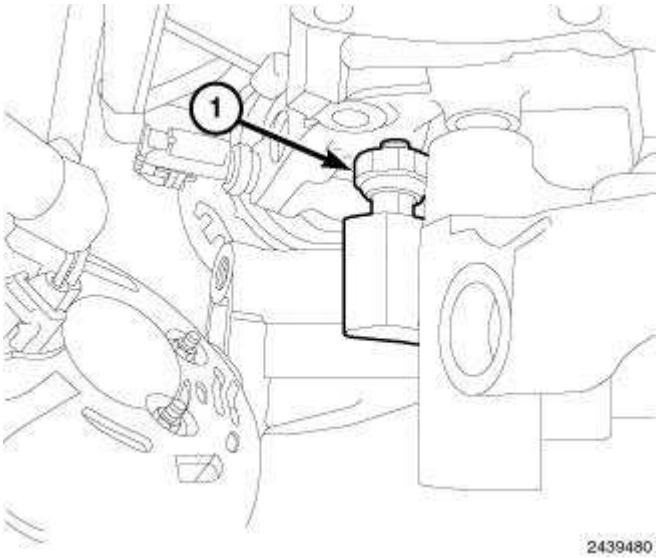

Fig. 369: Oil Pressure Sensor
Courtesy of CHRYSLER GROUP, LLC

10. Remove the oil pressure sensor (1).

INSTALLATION

INSTALLATION

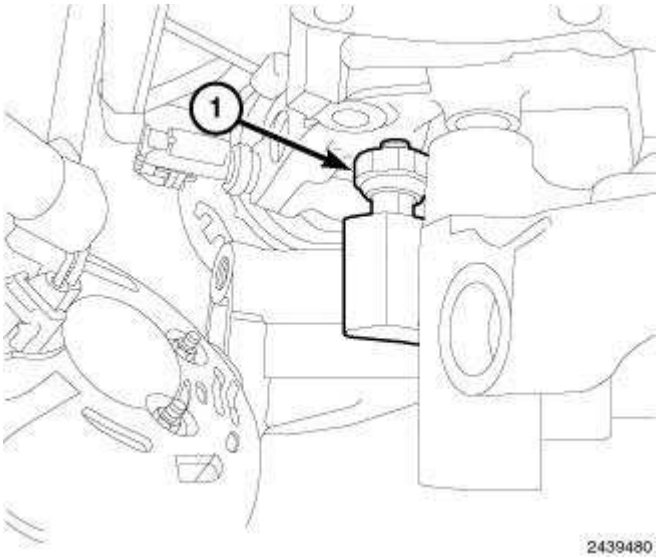

Fig. 370: Oil Pressure Sensor
Courtesy of CHRYSLER GROUP, LLC

NOTE: Apply Mopar® Thread Sealant with PTFE to the sensor threads before installing into the engine block.

1. Install the oil pressure sensor (1).

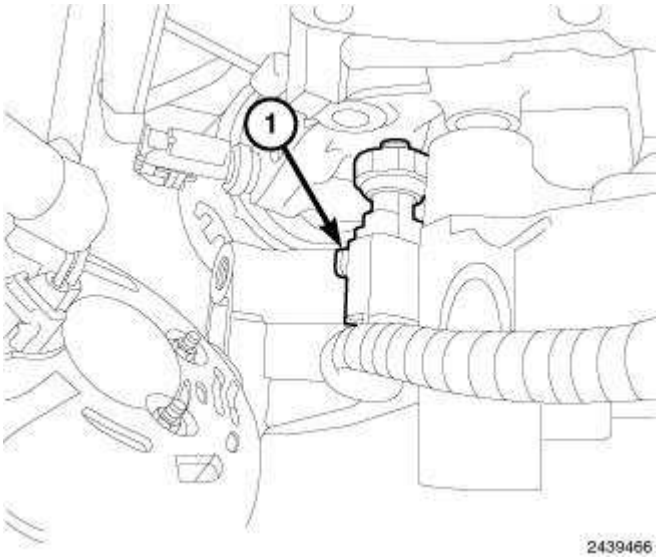

Fig. 371: Oil Pressure Sensor Electrical Connector
Courtesy of CHRYSLER GROUP, LLC

2. Connect the oil pressure sensor electrical connector (1).
3. Position the generator and install the upper mounting bolt finger tight.
4. Raise and support the vehicle.

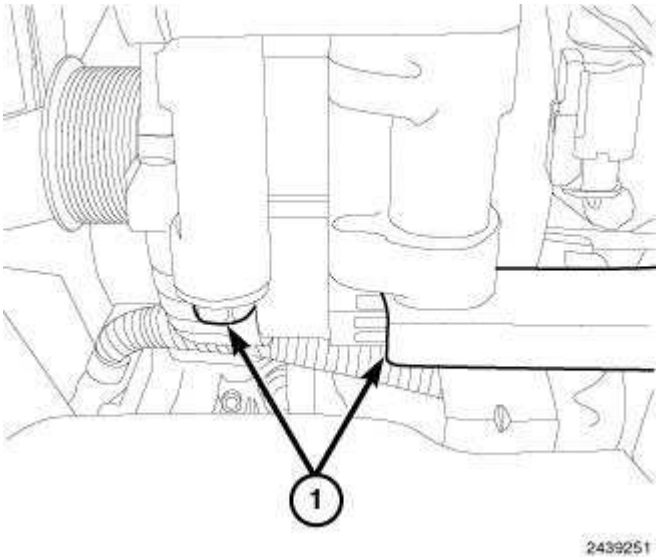

Fig. 372: Lower Generator Retaining Bolts
Courtesy of CHRYSLER GROUP, LLC

5. Install the lower mounting bolts (1) and tighten to 55 N.m (41 ft. lbs).

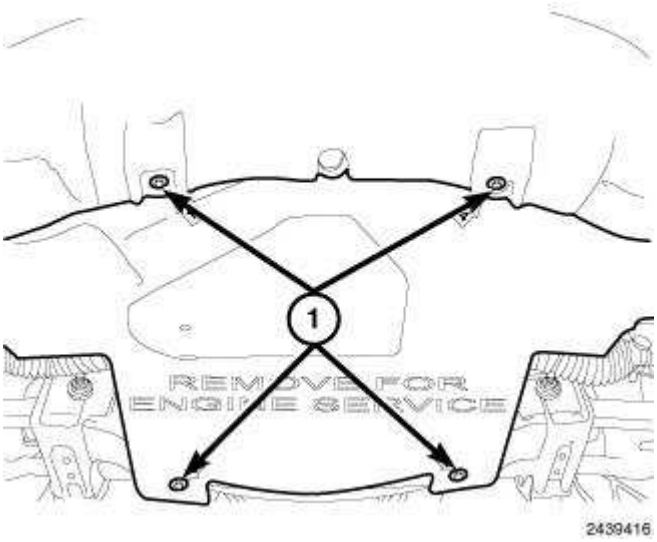

Fig. 373: Lower Splash Shield & Fasteners
Courtesy of CHRYSLER GROUP, LLC

6. Position the lower splash shield and install the retainers (1).
7. Lower the vehicle
8. Tighten the upper generator mounting bolt to 55 N.m (41 ft. lbs).

CAUTION: When installing a serpentine accessory drive belt, the belt MUST be routed correctly. The water pump may be rotating in the wrong direction if the belt is installed incorrectly, causing the engine to

overheat.

9. Install the accessory drive belt. Refer to **BELT, SERPENTINE, INSTALLATION** .
10. Connect the negative battery cable.

SENSOR, OIL TEMPERATURE

DESCRIPTION

DESCRIPTION

The oil temperature sensor uses the following two circuits:

- Signal circuit to the PCM
- Ground circuit from the PCM

The oil temperature sensor is a Negative Thermal Coefficient sensor. The resistance of the sensor changes as oil temperature changes. This results in different output voltages back to the PCM.

The oil temperature sensor is located on the right side of the engine block.

REMOVAL

REMOVAL

1. Disconnect and isolate the negative battery cable.
2. Remove the accessory drive belt. Refer to **BELT, SERPENTINE, REMOVAL** .
3. Remove the generator upper mounting bolt.
4. Raise and support the vehicle.

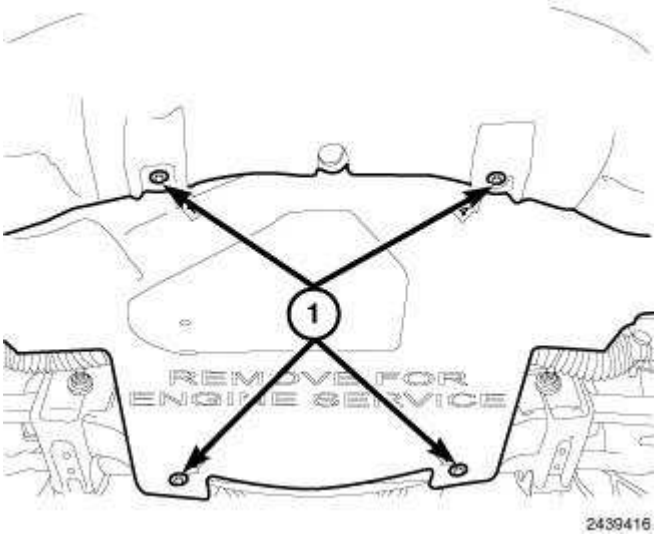

Fig. 374: Lower Splash Shield & Fasteners

Courtesy of CHRYSLER GROUP, LLC

5. Remove the belly pan retainers (1) and remove the belly pan.

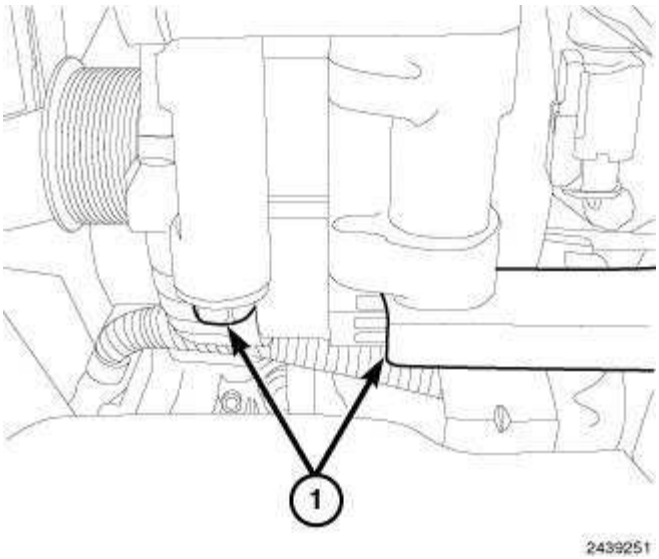

Fig. 375: Lower Generator Retaining Bolts
Courtesy of CHRYSLER GROUP, LLC

6. Remove the generator lower mounting bolts (1).
7. Lower the vehicle.
8. Position the generator aside to gain access to the oil temperature sensor.

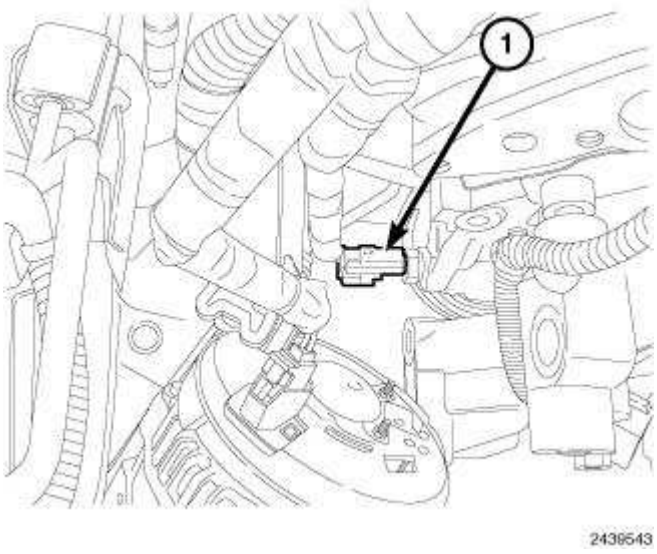

Fig. 376: Oil Temperature Sensor Electrical Connector
Courtesy of CHRYSLER GROUP, LLC

9. Disconnect the oil temperature sensor electrical connector (1).

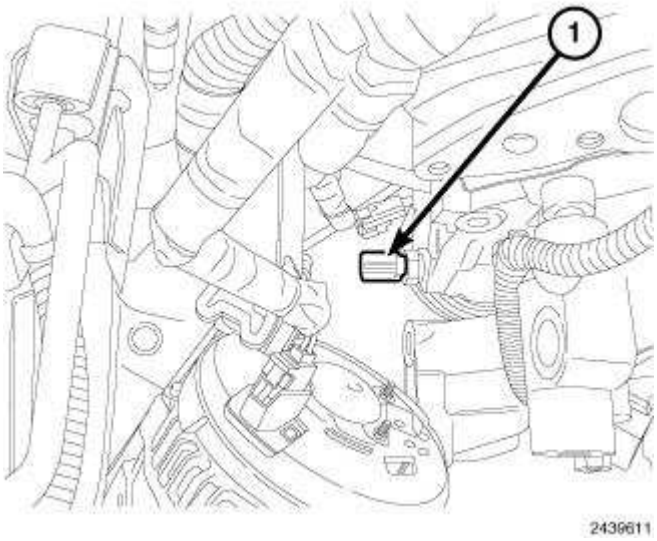

Fig. 377: Oil Temperature Sensor
Courtesy of CHRYSLER GROUP, LLC

10. Remove the oil temperature sensor (1).

INSTALLATION

INSTALLATION

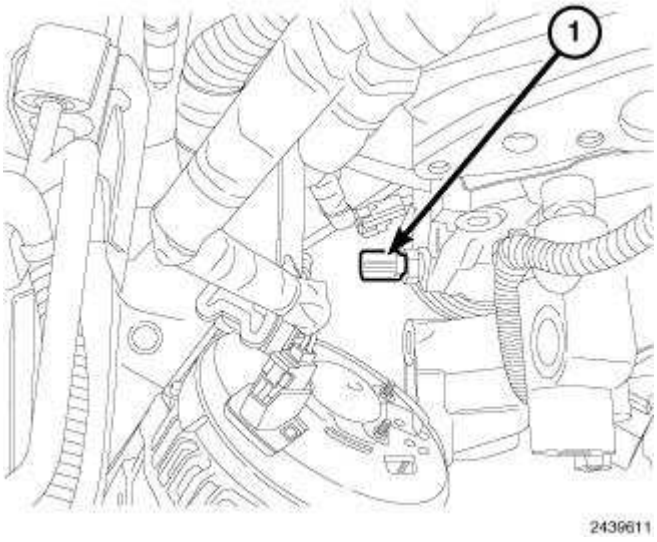

Fig. 378: Oil Temperature Sensor
Courtesy of CHRYSLER GROUP, LLC

NOTE: Apply Mopar® Thread Sealant with PTFE to the sensor threads before installing into the engine block.

1. Install the oil temperature sensor (1).

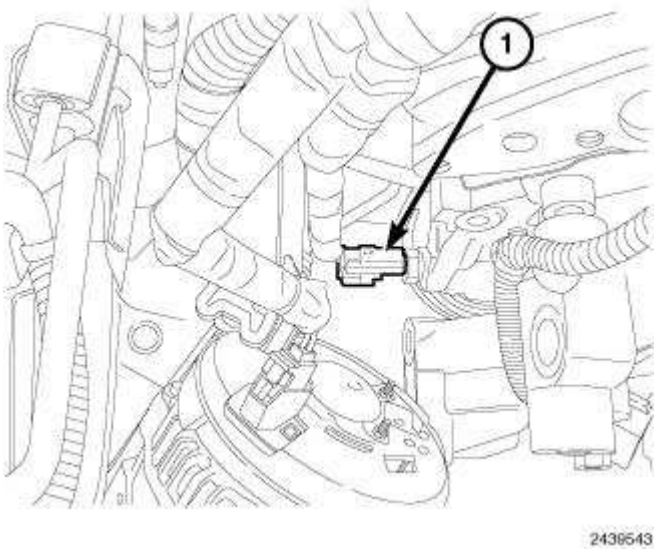

Fig. 379: Oil Temperature Sensor Electrical Connector
Courtesy of CHRYSLER GROUP, LLC

2. Connect the oil temperature sensor electrical connector (1).
3. Position the generator and install the upper mounting bolt finger tight.
4. Raise and support the vehicle.

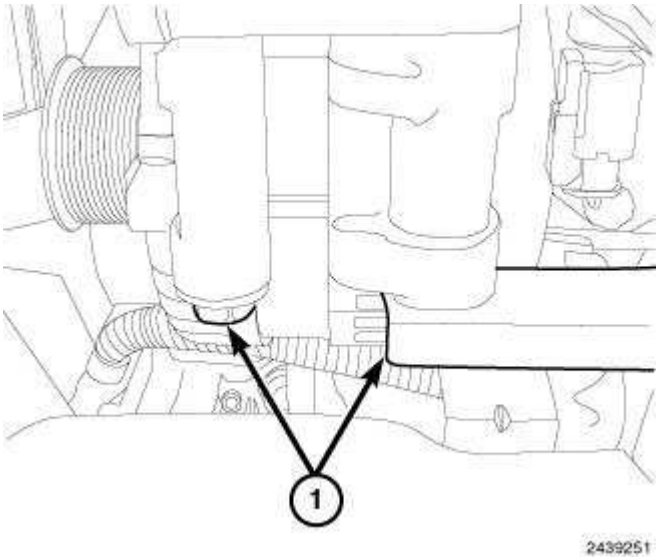

Fig. 380: Lower Generator Retaining Bolts
Courtesy of CHRYSLER GROUP, LLC

5. Install the generator lower mounting bolts (1) and tighten to 55 N.m (41 ft. lbs.).

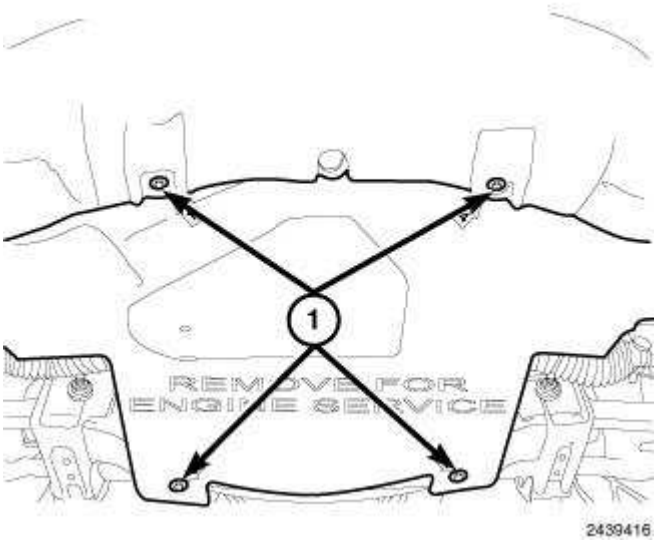

Fig. 381: Lower Splash Shield & Fasteners
Courtesy of CHRYSLER GROUP, LLC

6. Position the belly pan to the under side of the vehicle and install the retainers (1).
7. Lower the vehicle.
8. Tighten the generator upper mounting bolt to 55 N.m (41 ft. lbs.).

CAUTION: When installing a serpentine accessory drive belt, the belt MUST be routed correctly. The water pump may be rotating in the wrong direction if the belt is installed incorrectly, causing the engine to overheat.

9. Install the accessory drive belt. Refer to **BELT, SERPENTINE, REMOVAL** .
10. Connect the negative battery cable.

MANIFOLDS

MANIFOLD, EXHAUST

DESCRIPTION

DESCRIPTION

The exhaust manifolds are tube in shell air gap design to maximize durability and performance. The exhaust manifolds are made of stainless steel stamped shells and stainless steel tubes with a powdered metal outlet. A layered graphite over perforated steel manifold gasket is used to provide sealing to the cylinder head.

OPERATION

OPERATION

The exhaust manifolds collect the engine exhaust gases exiting the combustion chambers and then channels the exhaust gases to the exhaust pipes/catalytic converters.

REMOVAL

REMOVAL

EXHAUST MANIFOLDS

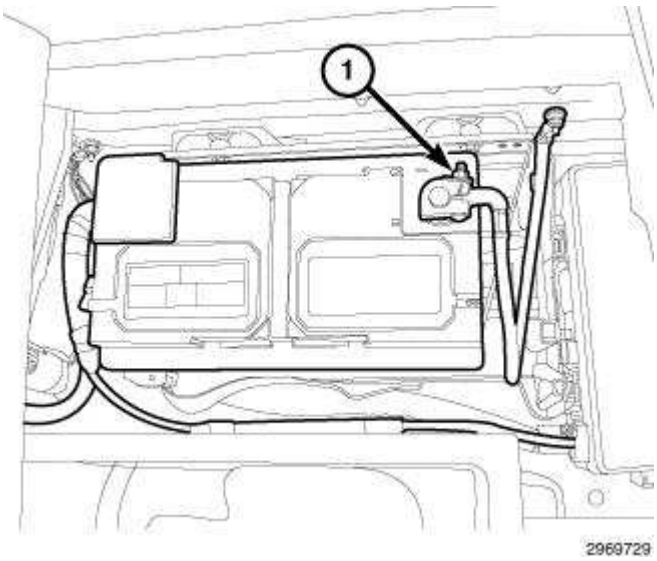

Fig. 382: Negative Battery Cable
Courtesy of CHRYSLER GROUP, LLC

NOTE: The left side shown in illustration. Right side similar.

1. Disconnect the negative battery cable (1).

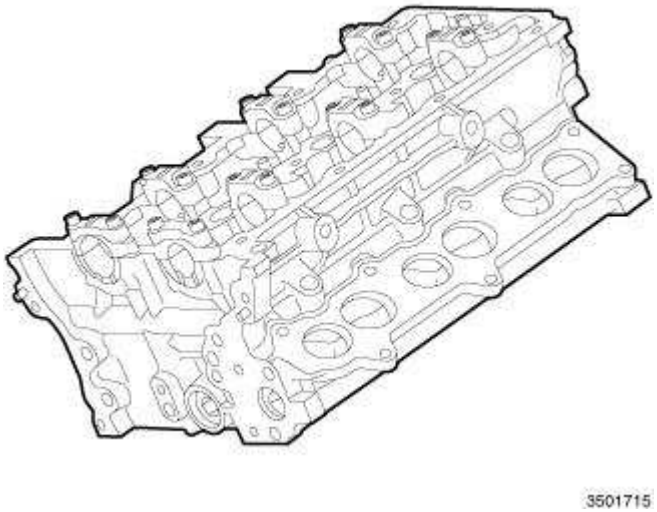

Fig. 383: Cylinder Head

Courtesy of CHRYSLER GROUP, LLC

2. Remove cylinder head. Refer to **CYLINDER HEAD, REMOVAL**.

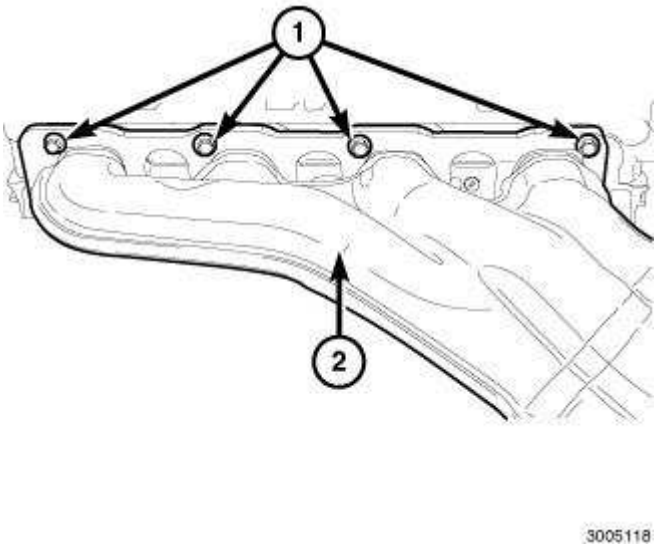

Fig. 384: Exhaust Manifold & Bolts
Courtesy of CHRYSLER GROUP, LLC

3. Remove the exhaust manifold (2) top row of bolts (1).

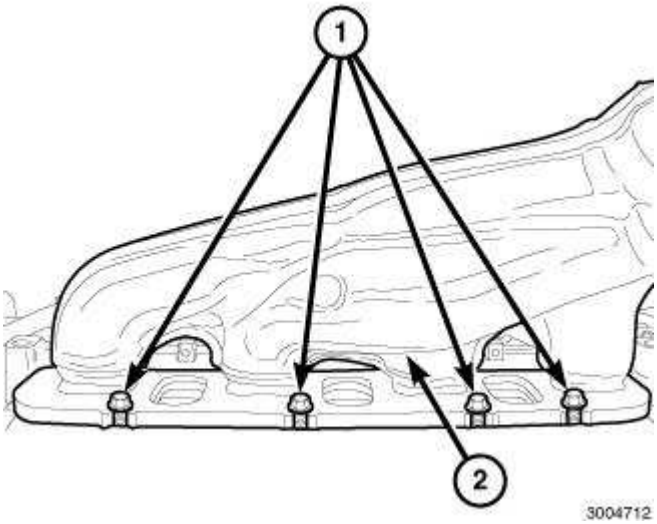

Fig. 385: Exhaust Manifold Heat Shield & Bolts
Courtesy of CHRYSLER GROUP, LLC

4. Remove the exhaust manifold heat shield.
5. Remove the exhaust manifold bottom row of bolts (1).

CLEANING

CLEANING

Clean the mating surfaces on cylinder head and manifold. Wash with solvent and blow dry with compressed air.

INSPECTION

INSPECTION

Inspect the exhaust manifold for cracks.

Inspect the mating surface of the exhaust manifold for flatness with a straight edge. The exhaust manifold gasket surface must be flat and within 0.67 mm (0.0264 in.) overall.

INSTALLATION

INSTALLATION

EXHAUST MANIFOLDS

NOTE: Left side shown in illustration. Right side similar.

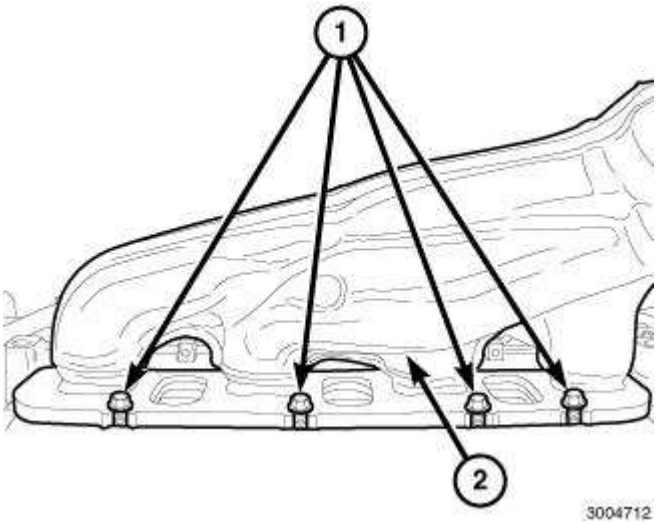

Fig. 386: Exhaust Manifold Heat Shield & Bolts
Courtesy of CHRYSLER GROUP, LLC

1. Clean the sealing surfaces of the exhaust manifold and cylinder head.
2. Using a new exhaust manifold gasket, position the exhaust manifold (2).
3. Install the exhaust manifold bottom row of bolts (1) finger tight.

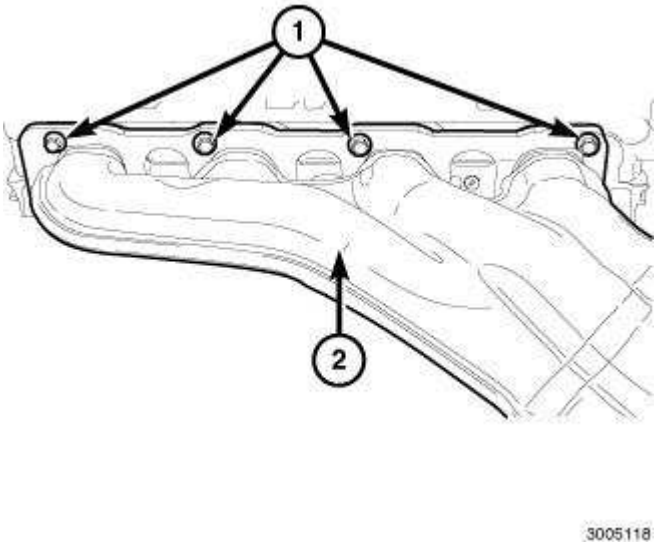

Fig. 387: Exhaust Manifold & Bolts
Courtesy of CHRYSLER GROUP, LLC

4. Install the exhaust manifold (2) top row of bolts (1) and tighten to 31 N.m (23 ft. lbs.).
5. Position the coolant bottle (1) and install the retaining bolts (2).
6. Raise and support the vehicle.

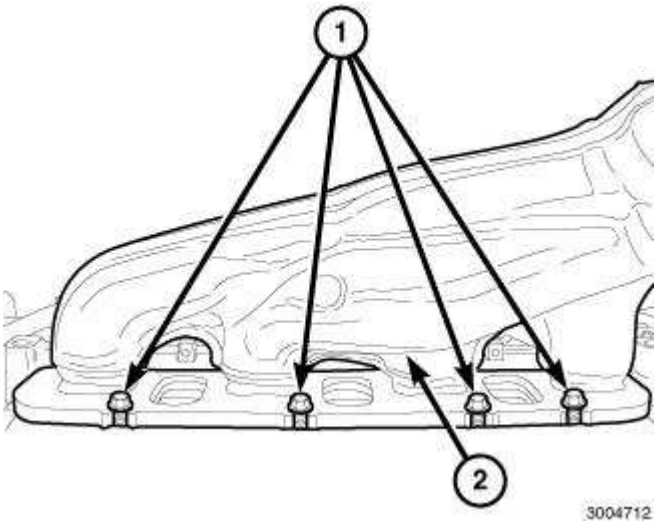

Fig. 388: Exhaust Manifold Heat Shield & Bolts
Courtesy of CHRYSLER GROUP, LLC

7. Tighten the exhaust manifold bottom row of bolts to 31 N.m (23 ft. lbs.).
8. Install the exhaust manifold heat shield.

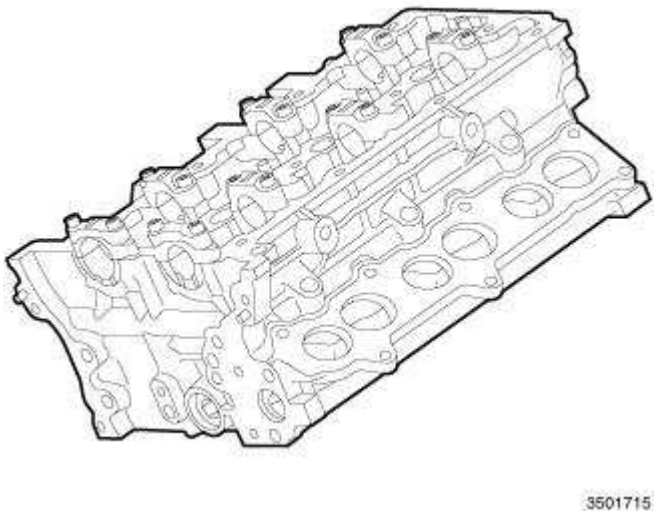

Fig. 389: Cylinder Head
Courtesy of CHRYSLER GROUP, LLC

9. Install the cylinder head. Refer to **CYLINDER HEAD, INSTALLATION**.

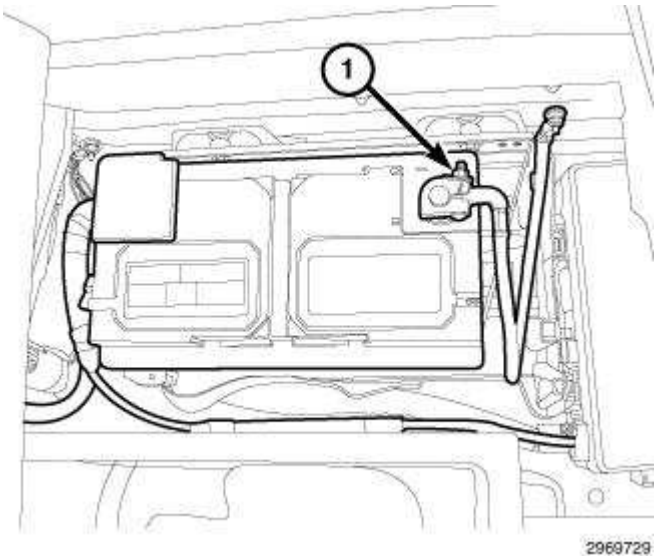

Fig. 390: Negative Battery Cable
Courtesy of CHRYSLER GROUP, LLC

10. Connect the negative battery cable (1).
11. Start the engine and check for leaks.

MANIFOLD, INTAKE

DESCRIPTION

DESCRIPTION

CAUTION: If the engine has experienced a catastrophic failure, THE INTAKE MANIFOLD MUST BE REPLACED!

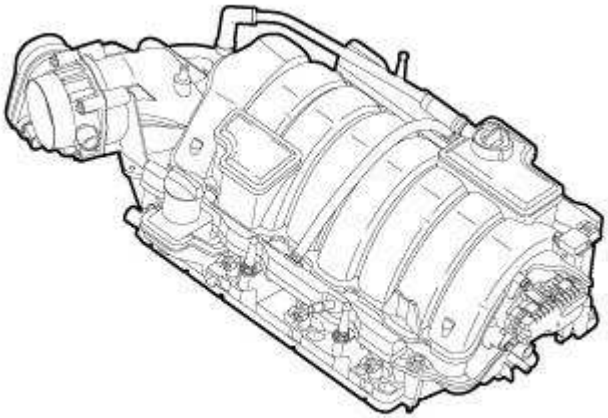

Fig. 391: Intake Manifold
Courtesy of CHRYSLER GROUP, LLC

The intake manifold is made of a composite material and features a dual shaft Short Runner Valve (SRV) system to maximize both low end torque and peak power. The SRV is bolted to the rear of the intake manifold and can be service separately from the manifold. The manifold uses a single plane sealing system with individual port seals and a separate PCV port seal to prevent leaks.

DIAGNOSIS AND TESTING

DIAGNOSIS AND TESTING - INTAKE MANIFOLD LEAKAGE

An intake manifold air leak is characterized by lower than normal manifold vacuum. Also, one or more cylinders may not be functioning.

WARNING: Use extreme caution when the engine is operating. Do not stand in a direct line with the fan. Do not put your hands near the pulleys, belts or the fan. Do not wear loose clothing. Failure to follow this warning may result in serious or fatal injury.

1. Start the engine.
2. Spray a small stream of water at the suspected leak area.
3. If a change in RPM is observed the area of the suspected leak has been found.
4. Repair as required.

REMOVAL

REMOVAL

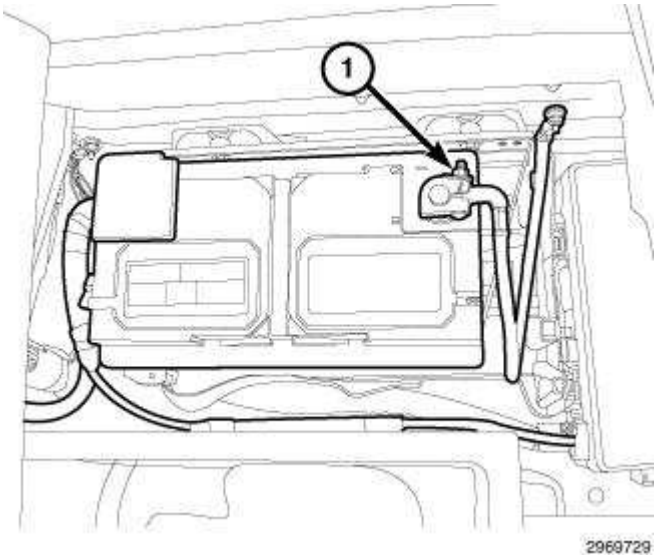

Fig. 392: Negative Battery Cable
Courtesy of CHRYSLER GROUP, LLC

1. Perform the fuel system pressure release procedure. Refer to **FUEL DELIVERY, GAS, STANDARD PROCEDURE** .
2. Disconnect the negative battery cable (1).

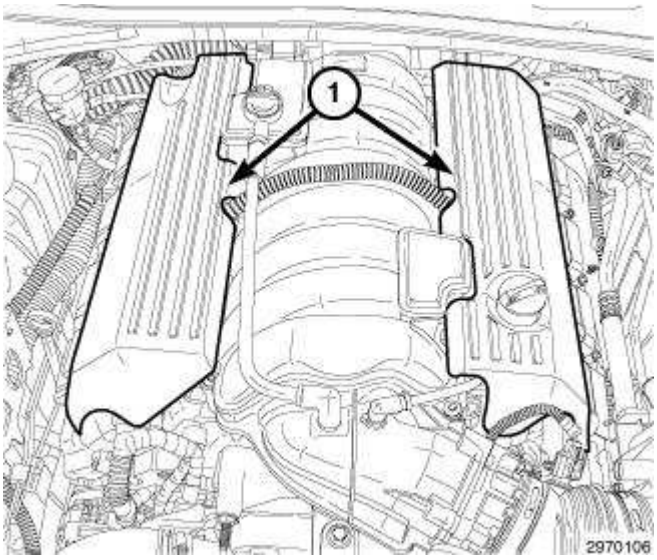

Fig. 393: Engine Covers
Courtesy of CHRYSLER GROUP, LLC

3. Remove the engine covers (1).
4. Disconnect the fuel supply line. Refer to **FITTING, QUICK CONNECT, STANDARD PROCEDURE** .

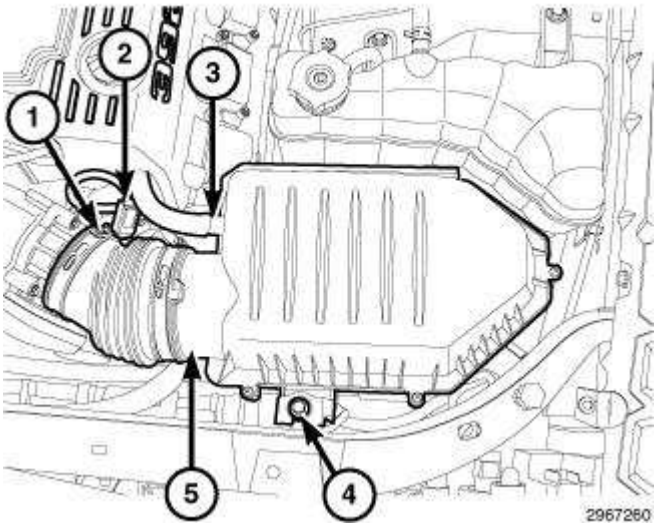

Fig. 394: Air Duct Retaining Clamp, Intake Air Temperature Sensor Electrical Connector, Makeup Air Hose, Bolt & Air Cleaner Housing
Courtesy of CHRYSLER GROUP, LLC

5. Remove the air cleaner housing (5). Refer to **BODY, AIR CLEANER, REMOVAL**.
6. Disconnect the brake booster hose and the EVAP purge hose.

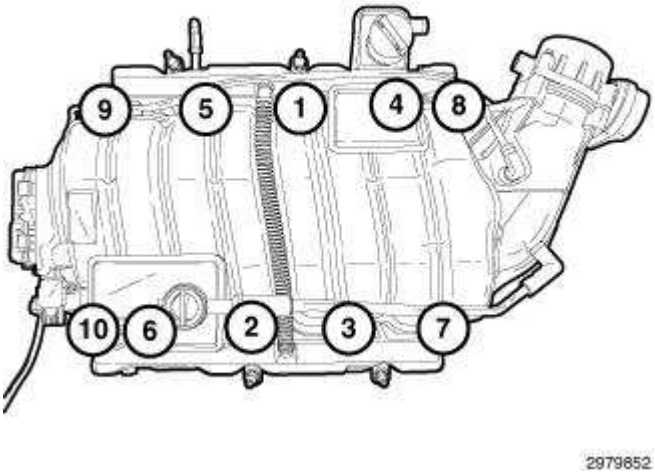

Fig. 395: Intake Manifold Removal/Tightening Sequence
Courtesy of CHRYSLER GROUP, LLC

7. Disconnect the electrical connectors from the following components:
    - Manifold Absolute Pressure (MAP) Sensor
    - Short Runner Valve (SRV)
    - Fuel Injectors
    - Electronic Throttle Control (ETC)

NOTE: Remove the intake manifold and throttle body as an assembly.

8. Using the sequence shown in illustration, remove the intake manifold retaining bolts.
9. Remove the intake manifold and throttle body as an assembly from the vehicle.

CLEANING

CLEANING

NOTE: There is NO approved repair procedure for the intake manifold. If severe damage is found during inspection, the intake manifold must be replaced.

Before installing the intake manifold thoroughly clean the mating surfaces. Use a suitable cleaning solvent, then air dry.

INSPECTION

INSPECTION

1. Inspect the intake manifold sealing surface for cracks, nicks and distortion.
2. Inspect the intake manifold vacuum hose fittings for looseness or blockage.

INSTALLATION

INSTALLATION

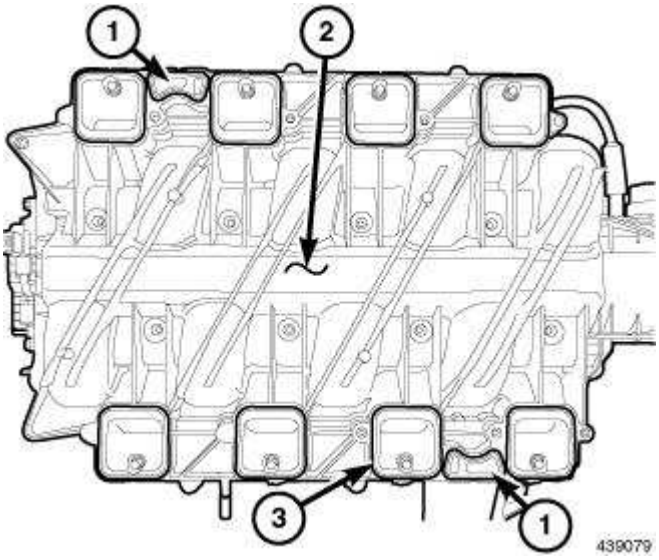

Fig. 396: Intake Manifold & PCV Seals
Courtesy of CHRYSLER GROUP, LLC

NOTE: The intake manifold seals (1, 3) may be used again, provided no cuts, tears, or deformation have occurred.

1. Inspect the intake manifold seals and replace if necessary.

NOTE: If reinstalling the original manifold, apply Mopar® Lock & Seal Adhesive to the intake manifold bolts. Not required when installing a new manifold.

2. If required, apply Mopar® Lock & Seal Adhesive to the intake manifold bolts.
3. Position the intake manifold (2).

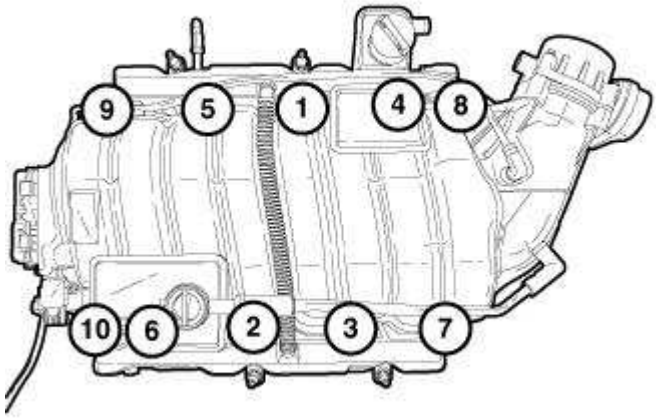

Fig. 397: Intake Manifold Removal/Tightening Sequence
Courtesy of CHRYSLER GROUP, LLC

4. Using the sequence shown in illustration, install the intake manifold retaining bolts and tighten to 12 N.m (9 ft. lbs.).
5. Connect the fuel supply line. Refer to **FITTING, QUICK CONNECT, STANDARD PROCEDURE** .
6. Connect the brake booster hose and the EVAP purge hose.
7. Connect the electrical connectors to the following components:
   - Manifold Absolute Pressure (MAP) Sensor
   - Short Runner Valve (SRV)
   - Fuel Injectors
   - Electronic Throttle Control (ETC)

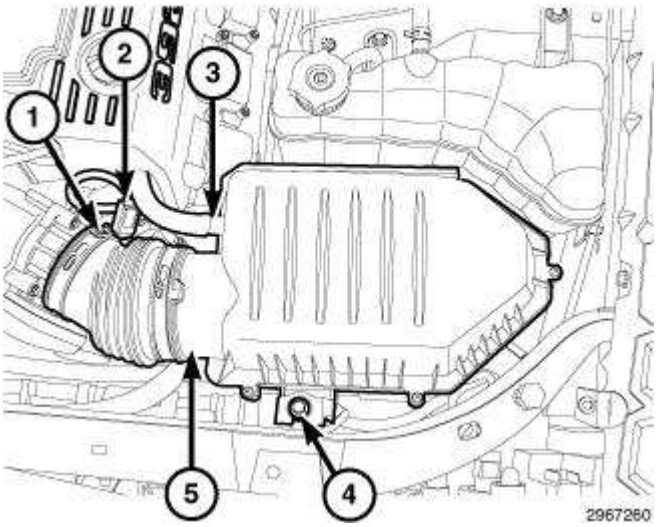

Fig. 398: Air Duct Retaining Clamp, Intake Air Temperature Sensor Electrical Connector, Makeup Air Hose, Bolt & Air Cleaner Housing
Courtesy of CHRYSLER GROUP, LLC

8. While sliding the air duct onto the throttle body, lower the air cleaner housing (5) into position and align the locating pin on the bottom of the housing.
9. Install the air cleaner housing retaining bolt (4) and tighten to 5 N.m (44 in. lbs.).
10. Install the makeup air hose (3) at the air cleaner housing.
11. Connect the intake air temperature sensor electrical connector (2).
12. Position the air duct retaining clamp (1) at the throttle body and tighten to 3 N.m (30 in. lbs.).

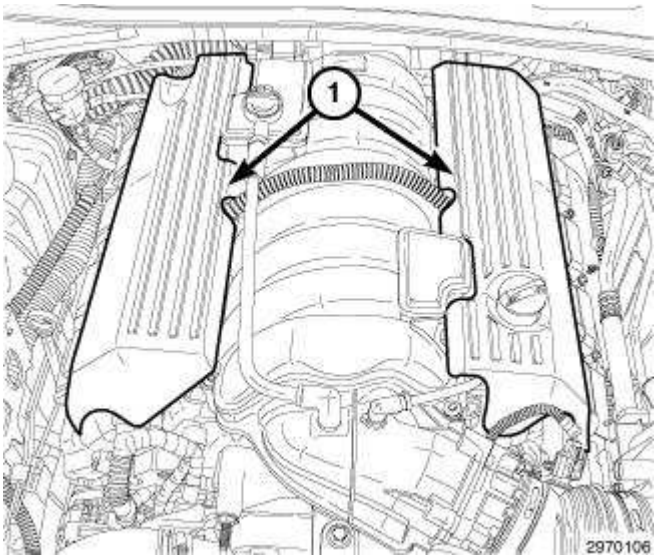

Fig. 399: Engine Covers
Courtesy of CHRYSLER GROUP, LLC

13. Install the engine covers (1) on to the ball studs.

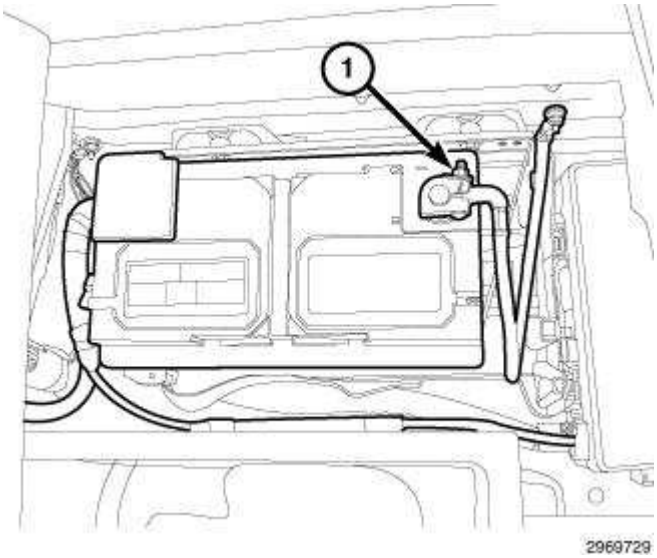

Fig. 400: Negative Battery Cable
Courtesy of CHRYSLER GROUP, LLC

14. Connect the negative battery cable (1).

VALVE TIMING

CHAIN AND SPROCKETS, TIMING

REMOVAL

REMOVAL

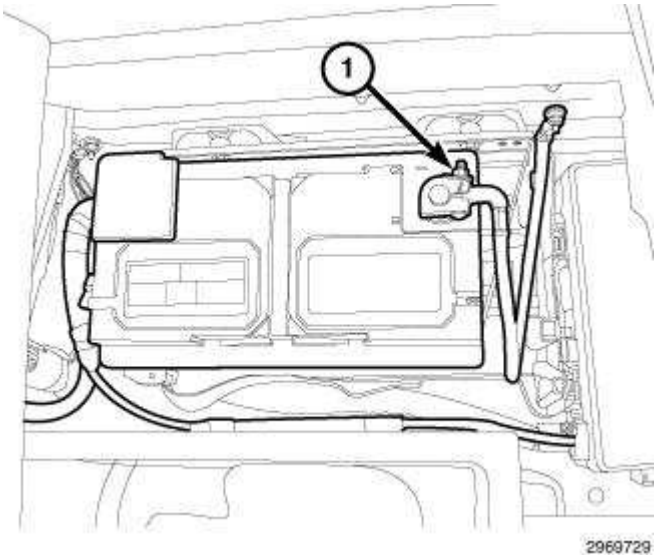

Fig. 401: Negative Battery Cable
Courtesy of CHRYSLER GROUP, LLC

1. Disconnect the negative battery cable.
2. Raise and support the vehicle.
3. Drain the cooling system.

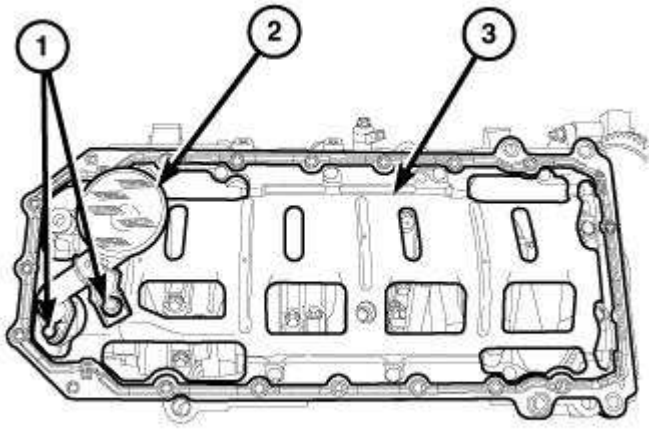

Fig. 402: Integral Windage Tray, Oil Pump Pickup Tube & Bolts
Courtesy of CHRYSLER GROUP, LLC

4. Remove the oil pan and oil pump pick up tube (2). Refer to **PAN, OIL, REMOVAL**.

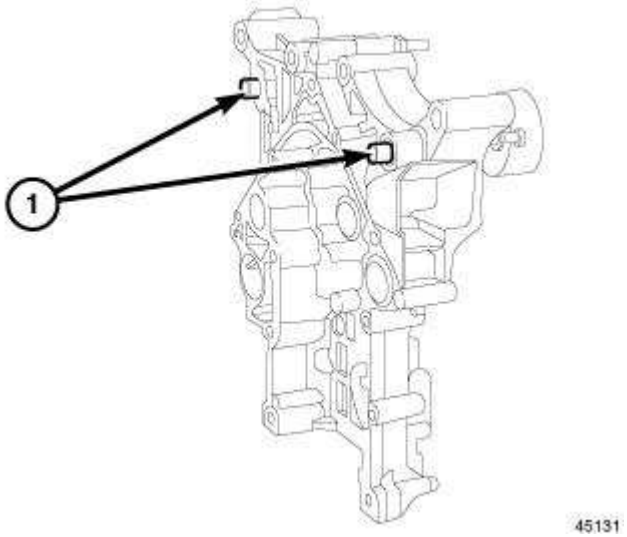

Fig. 403: Front Cover Slide Bushings
Courtesy of CHRYSLER GROUP, LLC

5. Remove the engine timing cover. Refer to **COVER(S), ENGINE TIMING, REMOVAL**.
6. Verify the slide bushings (1) remain located in the engine timing cover during removal.

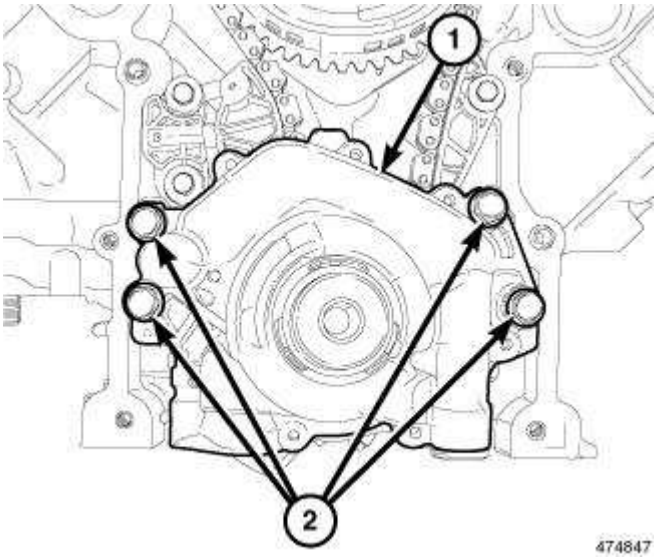

Fig. 404: Oil Pump & Retaining Bolts
Courtesy of CHRYSLER GROUP, LLC

7. Remove the oil pump retaining bolts (2) and remove the oil pump (1).

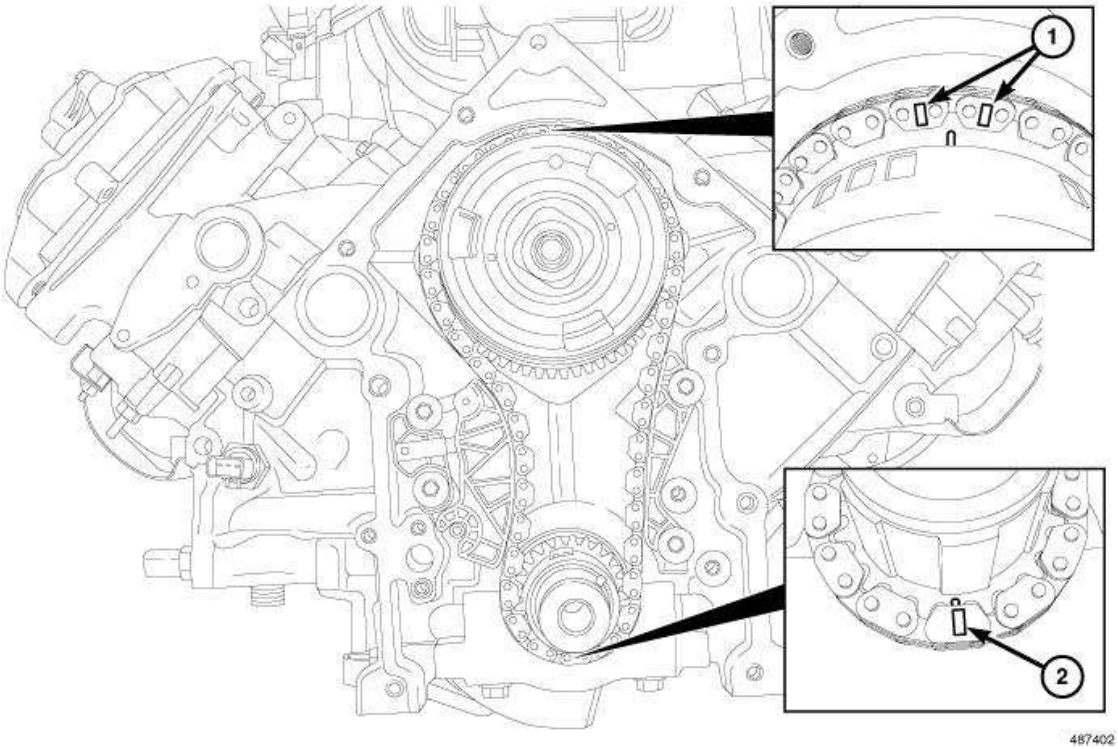

Fig. 405: Aligning Timing Marks With Timing Chain Sprockets
Courtesy of CHRYSLER GROUP, LLC

8. Install the vibration damper bolt finger tight. Using a suitable socket and breaker bar, rotate the crankshaft to align the timing marks with the timing chain sprockets (1, 2).

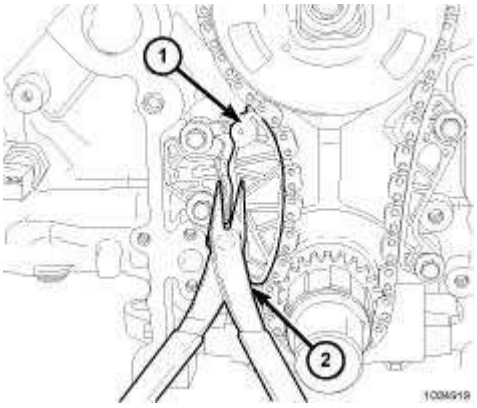

Fig. 406: Retracting Tensioner Shoe Using Pliers
Courtesy of CHRYSLER GROUP, LLC

9. Retract the chain tensioner arm (1) until the hole in the arm lines up with the hole in the bracket.

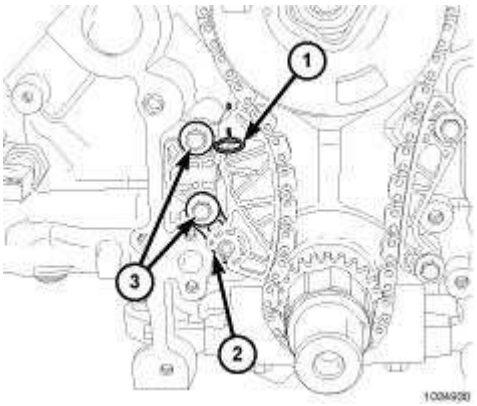

Fig. 407: Timing Chain Tensioner, Pin & Bolts
Courtesy of CHRYSLER GROUP, LLC

10. Install the Tensioner Pin (special tool #8514, Pins, Tensioner) (1) into the chain tensioner holes.

CAUTION: Never attempt to disassemble the camshaft phaser, severe engine damage could result.

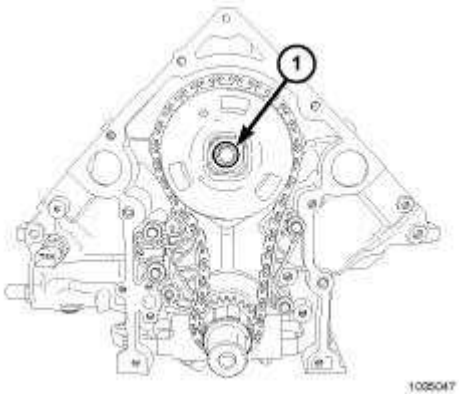

Fig. 408: Camshaft Phaser Retaining Bolt
Courtesy of CHRYSLER GROUP, LLC

11. Remove the camshaft phaser retaining bolt (1) and remove the timing chain with the camshaft phaser and crankshaft sprocket.

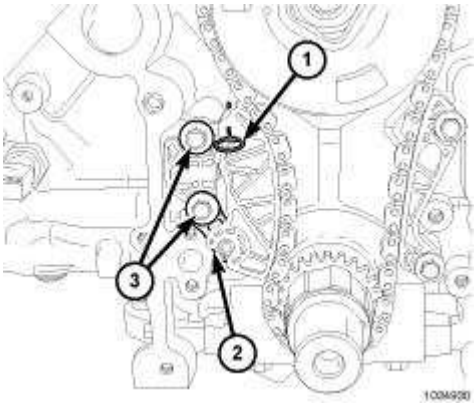

Fig. 409: Timing Chain Tensioner, Pin & Bolts
Courtesy of CHRYSLER GROUP, LLC

NOTE: Inspect the timing chain tensioner and timing chain guide shoes for wear and replace as necessary.

12. If the timing chain tensioner is to be replaced, remove the retaining bolts (3) and remove the timing chain tensioner (2).

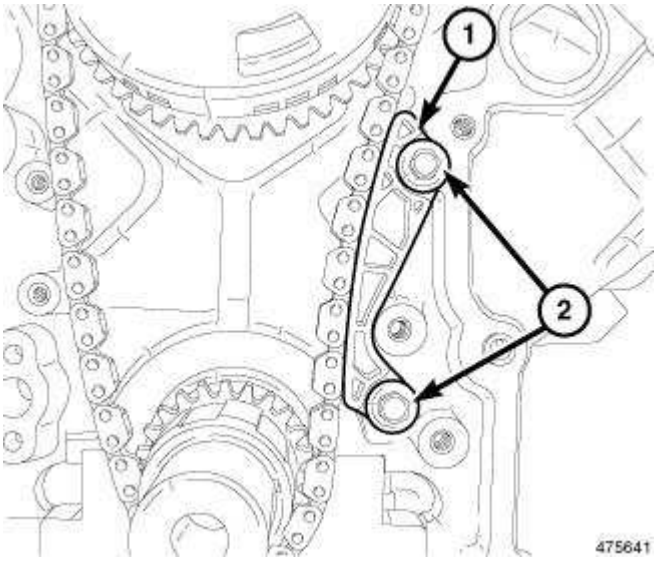

Fig. 410: Timing Chain Guide & Bolts
Courtesy of CHRYSLER GROUP, LLC

13. If the timing chain guide (1) is to be replaced, remove the retaining bolts (2) and remove the timing chain guide (1).

INSTALLATION

INSTALLATION

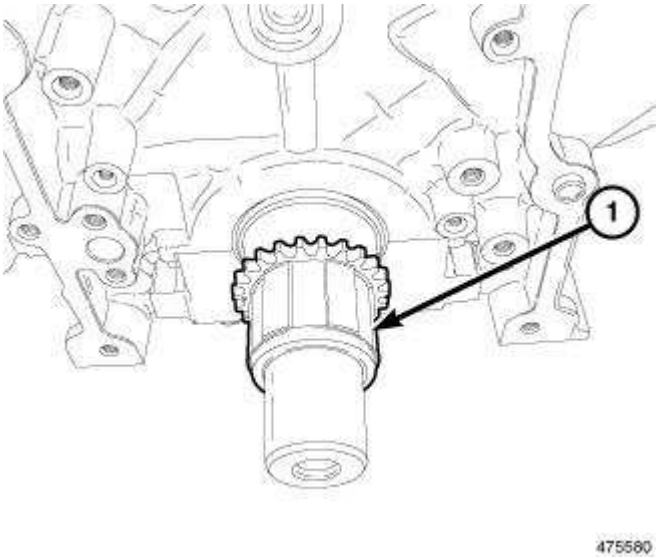

Fig. 411: Crankshaft Sprocket
Courtesy of CHRYSLER GROUP, LLC

1. Install the crankshaft sprocket (1) and position halfway onto the crankshaft.

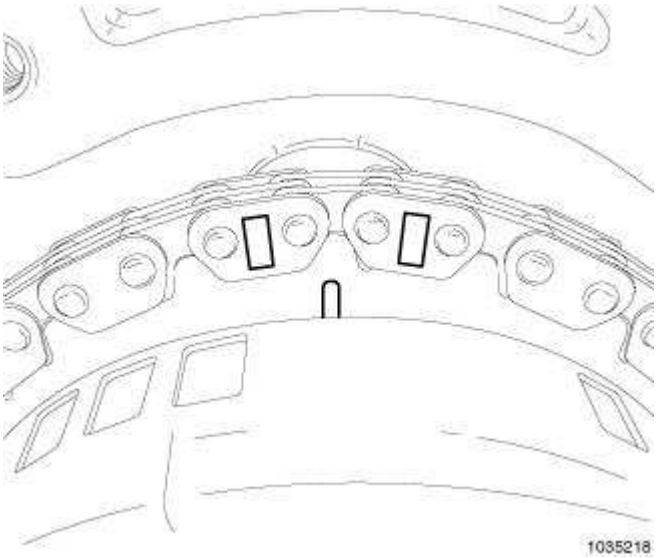

Fig. 412: Aligning Timing Chain & Camshaft Phaser Marks
Courtesy of CHRYSLER GROUP, LLC

2. While holding the camshaft phaser in hand, position the timing chain on the camshaft phaser and align the timing marks as shown in illustration.

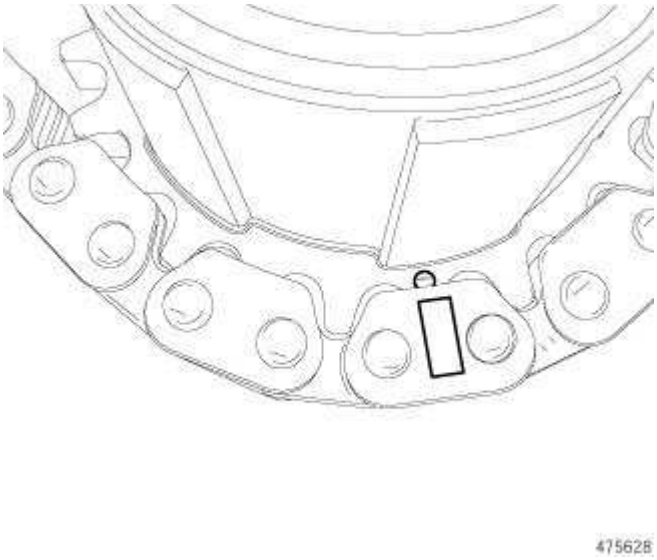

Fig. 413: Aligning Timing Chain & Crankshaft Sprocket Marks
Courtesy of CHRYSLER GROUP, LLC

3. While holding the camshaft phaser and timing chain in hand, position the timing chain on the crankshaft sprocket and align the timing mark as shown in illustration.

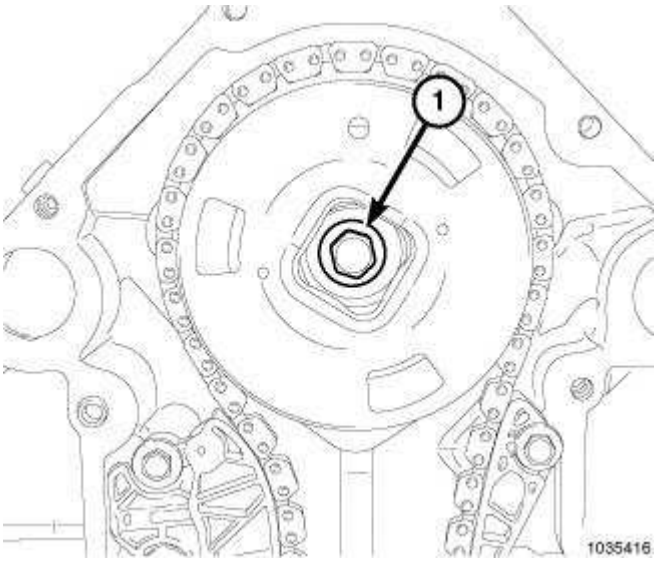

Fig. 414: Camshaft Phaser Retaining Bolt
Courtesy of CHRYSLER GROUP, LLC

4. Align the slot in the camshaft phaser with the dowel on the camshaft and position the camshaft phaser on the camshaft while sliding the crankshaft sprocket into position.
5. Install the camshaft phaser retaining bolt (1) finger tight.

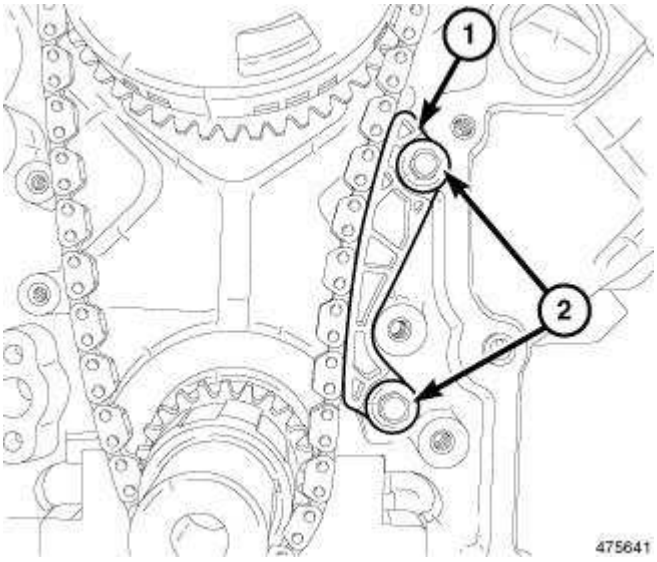

Fig. 415: Timing Chain Guide & Bolts
Courtesy of CHRYSLER GROUP, LLC

6. If removed, install the timing chain guide (1) and tighten the bolts (2) to 11 N.m (8 ft. lbs.).

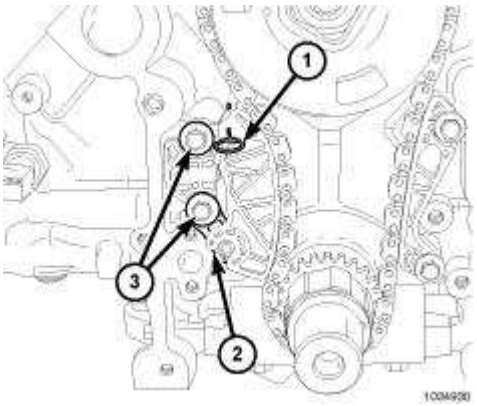

Fig. 416: Timing Chain Tensioner, Pin & Bolts
Courtesy of CHRYSLER GROUP, LLC

7. If removed, install the timing chain tensioner (2) and tighten the bolts (3) to 11 N.m (8 ft. lbs.).
8. If required, retract the chain tensioner arm and install the Tensioner Pin (special tool #8514, Pins, Tensioner) (1) into the holes of the chain tensioner arm.

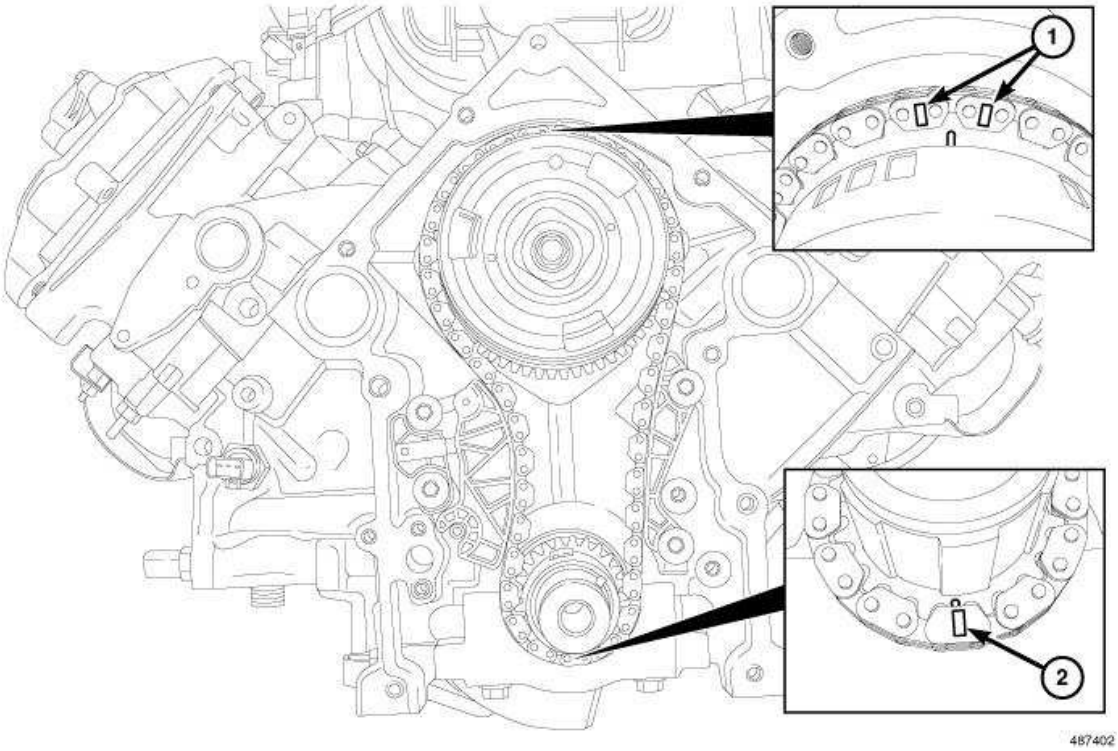

Fig. 417: Aligning Timing Marks With Timing Chain Sprockets
Courtesy of CHRYSLER GROUP, LLC

9. Using care, rotate the crankshaft to verify the alignment of the timing marks (1, 2). If the timing marks do not line up, remove the camshaft sprocket and realign.

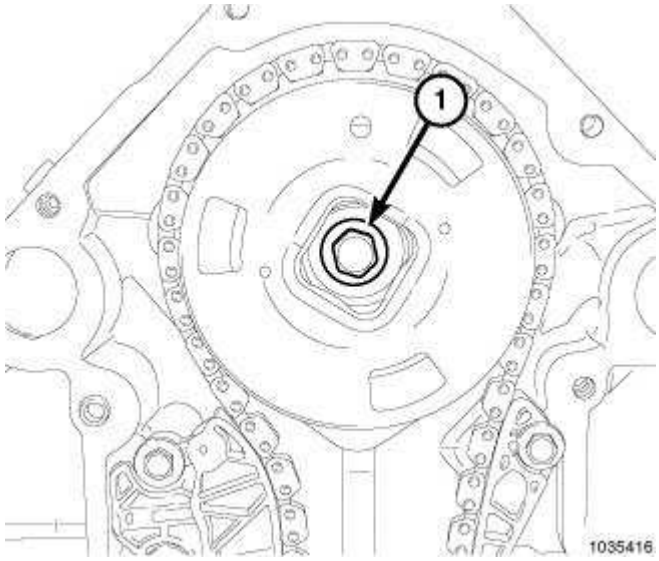

Fig. 418: Camshaft Phaser Retaining Bolt
Courtesy of CHRYSLER GROUP, LLC

10. Tighten the camshaft phaser bolt (1) to 85 N.m (63 ft. lbs.).

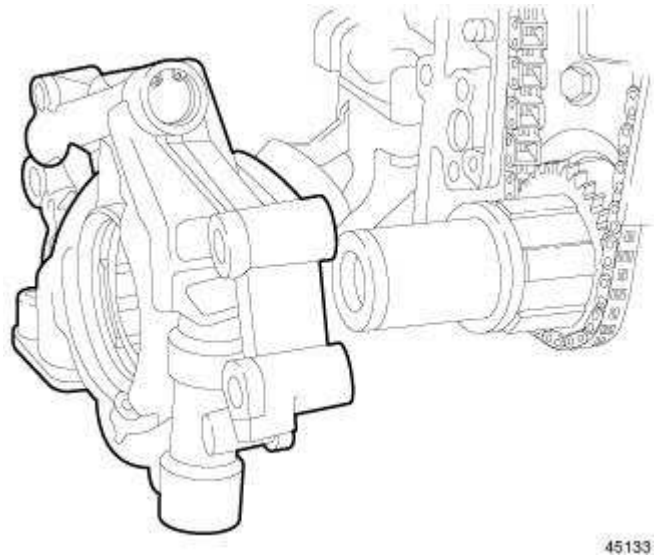

Fig. 419: Remove/Install Oil Pump
Courtesy of CHRYSLER GROUP, LLC

11. Position the oil pump onto the crankshaft and install the oil pump retaining bolts finger tight.

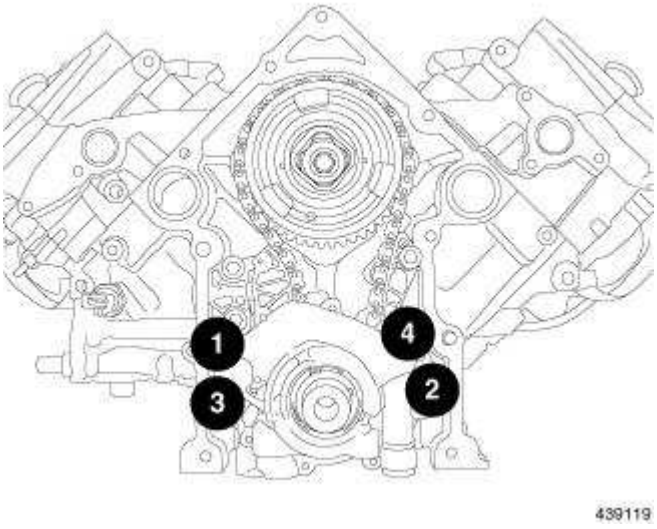

Fig. 420: Oil Pump Retaining Bolt Tightening Sequence
Courtesy of CHRYSLER GROUP, LLC

12. Using the sequence shown in illustration, tighten the oil pump retaining bolts to 28 N.m (21 ft. lbs.).

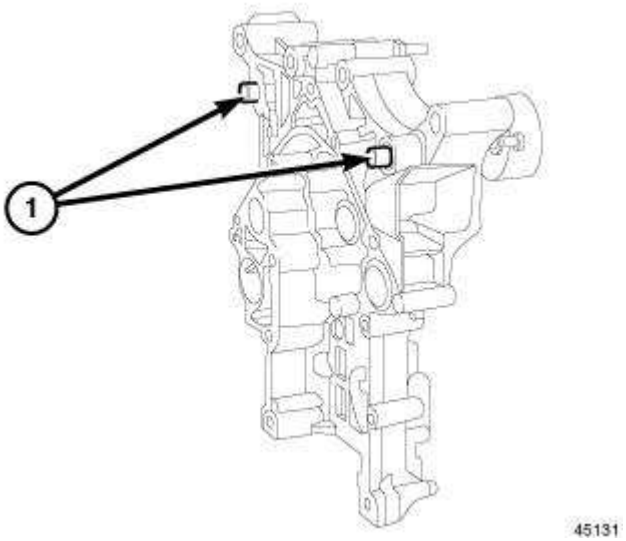

Fig. 421: Front Cover Slide Bushings
Courtesy of CHRYSLER GROUP, LLC

13. Verify the slide bushings (1) remain located in the engine timing cover.

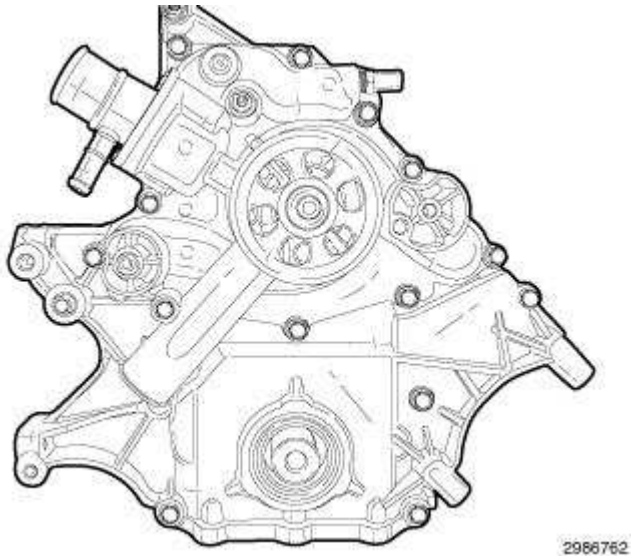

Fig. 422: Engine Timing Cover
Courtesy of CHRYSLER GROUP, LLC

14. Using a new gasket, install the engine timing cover and tighten the retaining bolts to 28 N.m (21 ft. lbs.).

NOTE: The large lifting stud is torqued to 55 N.m (40 ft. lbs.).

15. Tighten the large lifting stud to 55 N.m (40 ft. lbs.).

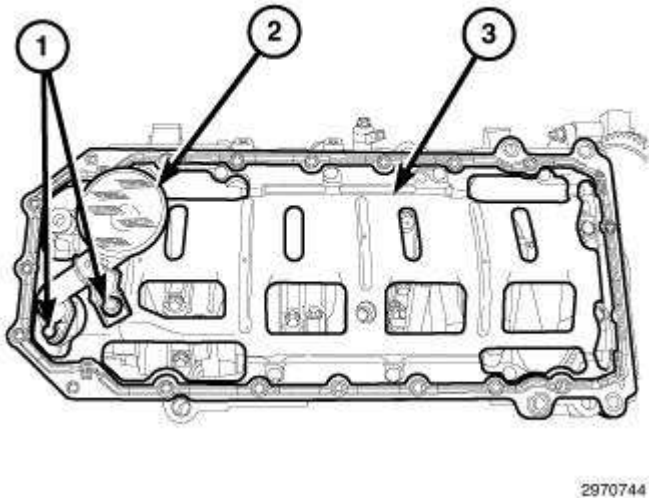

Fig. 423: Integral Windage Tray, Oil Pump Pickup Tube & Bolts
Courtesy of CHRYSLER GROUP, LLC

16. Raise and support the vehicle.
17. Install the oil pump pickup tube (2) and the oil pan. Refer to **PAN, OIL, INSTALLATION**.

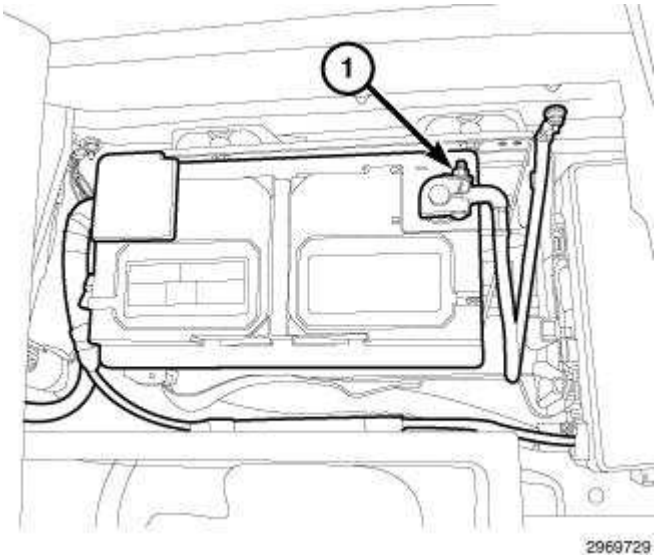

Fig. 424: Negative Battery Cable
Courtesy of CHRYSLER GROUP, LLC

18. Install the negative battery cable.
19. Fill the cooling system with the specified type and amount of engine coolant. Refer to **STANDARD PROCEDURE** .

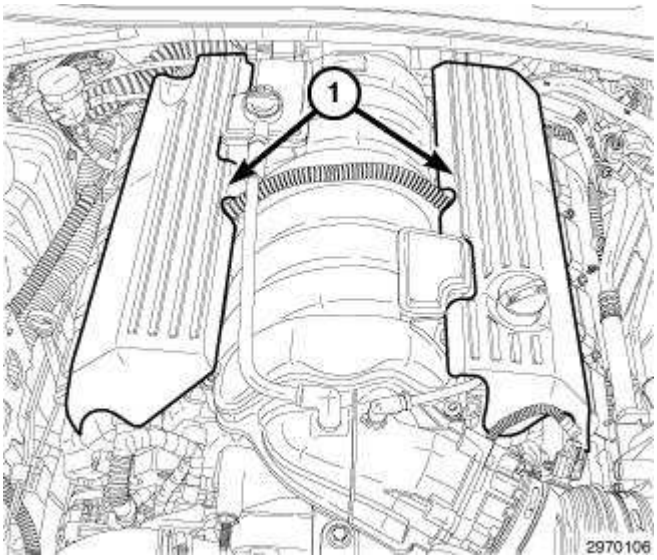

Fig. 425: Engine Covers
Courtesy of CHRYSLER GROUP, LLC

20. Fill the crankcase with the specified type and amount of engine oil. Refer to **STANDARD PROCEDURE** .
21. Install the engine covers (1).
22. Start the engine and check for leaks.

COVER(S), ENGINE TIMING

REMOVAL

REMOVAL

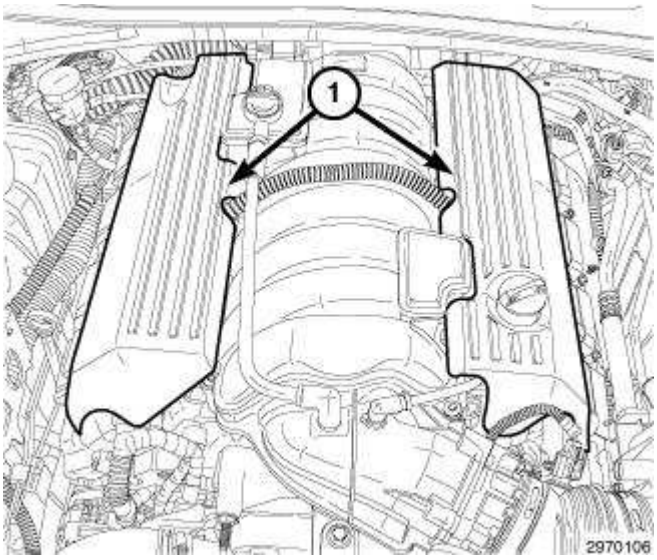

Fig. 426: Engine Covers
Courtesy of CHRYSLER GROUP, LLC

1. Remove the engine covers (1).
2. Perform the fuel pressure release procedure. Refer to **FUEL DELIVERY, GAS, STANDARD PROCEDURE** .

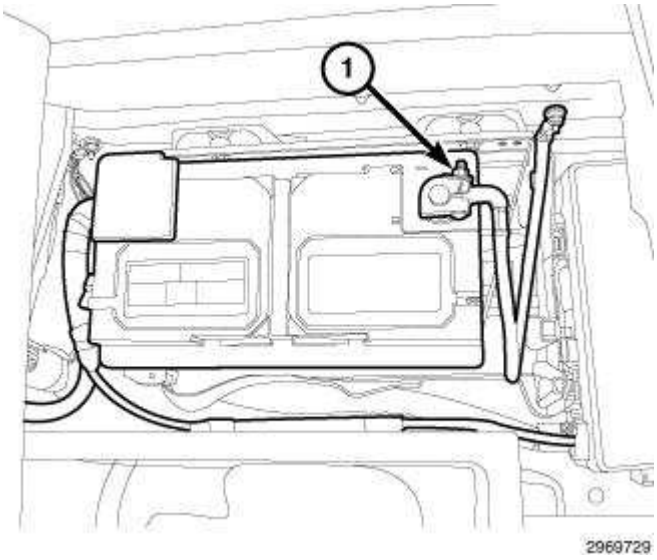

Fig. 427: Negative Battery Cable
Courtesy of CHRYSLER GROUP, LLC

3. Disconnect the negative battery cable (1).

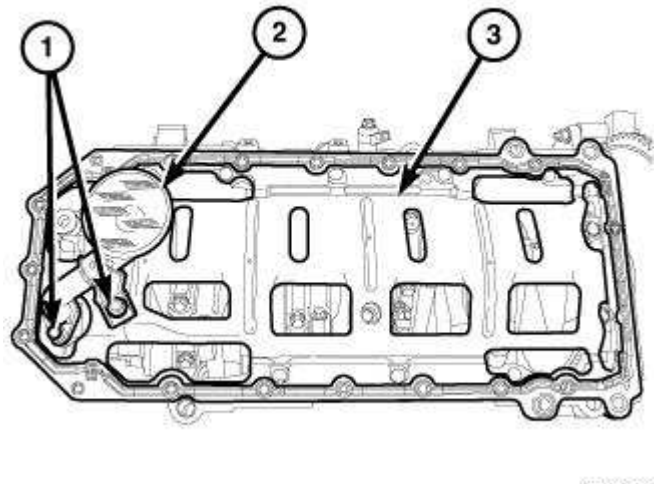

Fig. 428: Integral Windage Tray, Oil Pump Pickup Tube & Bolts
Courtesy of CHRYSLER GROUP, LLC

NOTE: When the oil pan is removed, a new oil pan gasket and the integral windage tray assembly must be installed, the old gasket cannot be reused.

4. Remove the oil pan. Refer to **PAN, OIL, REMOVAL**.

5. Remove the oil pump pickup tube retaining bolt and nut (1).
6. Remove the oil pump pickup tube (2).
7. Remove and discard the oil pan gasket/windage tray (3).
8. Lower the vehicle.

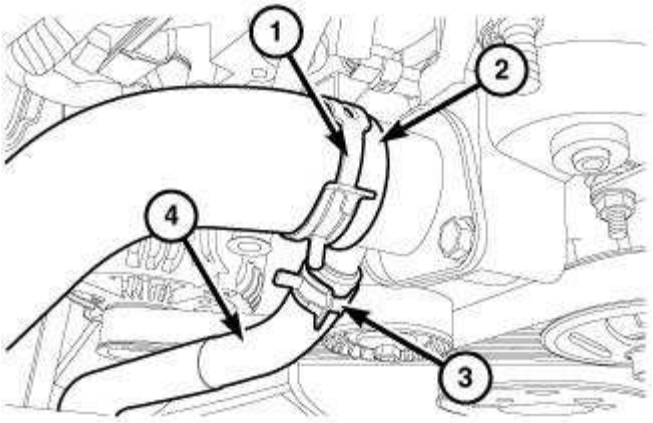

Fig. 429: Upper Radiator Hose, Clamp, Oil Cooler Return Line Hose & Clamp
Courtesy of CHRYSLER GROUP, LLC

9. Remove the upper radiator hose clamp (1) and remove the upper radiator hose (2).
10. Remove the oil cooler hose clamp (3) and remove oil cooler hose (4).

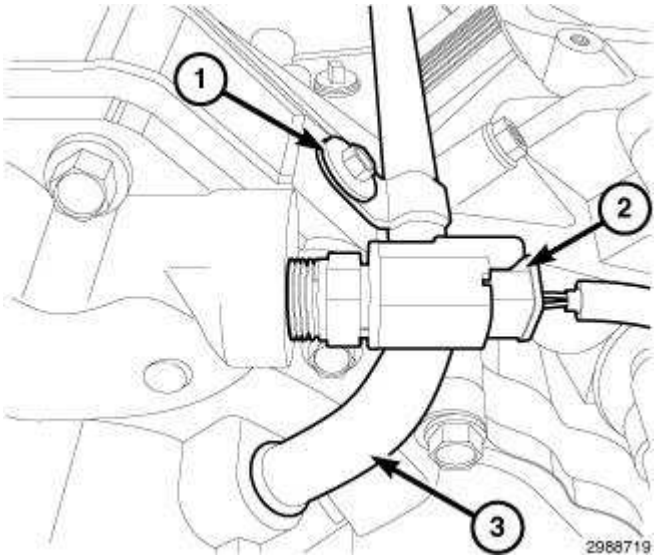

Fig. 430: Coolant Temperature (ECT) Sensor Electrical Connector, Heater Tube & Retaining Bolt
Courtesy of CHRYSLER GROUP, LLC

11. Remove the coolant temperature sensor electrical connector (2).
12. Remove the heater tube retaining bolt (1).
13. Lift the heater tube (3) out of the water pump.

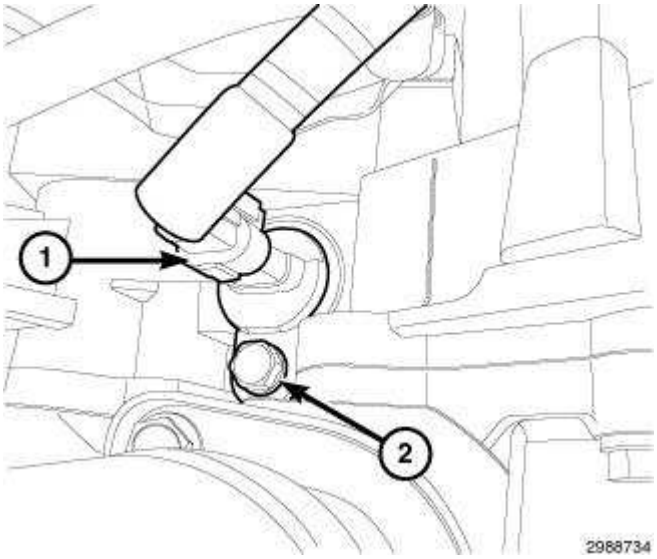

Fig. 431: Camshaft Position Sensor Electrical Connector & Bolt
Courtesy of CHRYSLER GROUP, LLC

14. Disconnect the camshaft position sensor electrical connector (1).

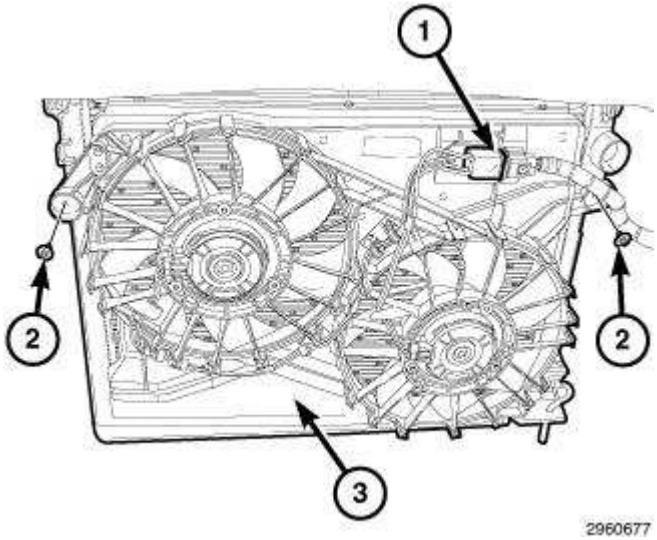

Fig. 432: Cooling Fan Electrical Connector, Cooling Fan Mounting Bolts & Radiator Cooling Fan Assembly
Courtesy of CHRYSLER GROUP, LLC

15. Remove the cooling fan. Refer to **FAN, COOLING, REMOVAL** .

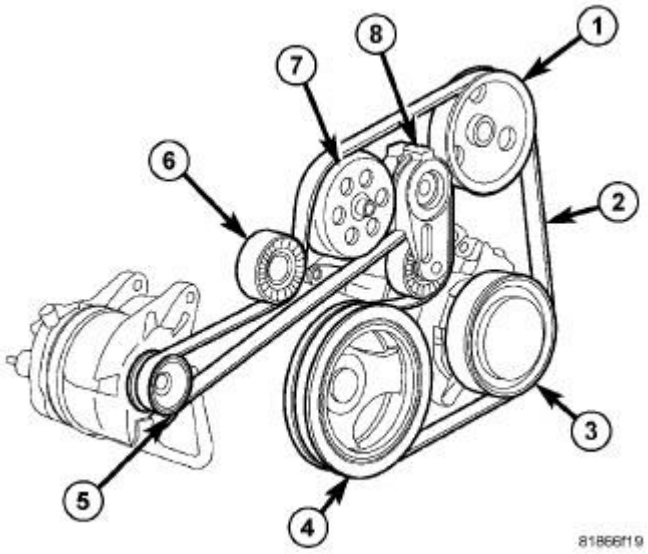

Fig. 433: Accessory Drive Belt Routing, Tensioner & Pulleys
Courtesy of CHRYSLER GROUP, LLC

16. Remove the accessory drive belt (2). Refer to **BELT, SERPENTINE, REMOVAL** .
17. Remove the lower radiator hose clamp and remove the lower radiator hose.
18. Remove the idler pulley (6).
19. Remove the belt tensioner (8).

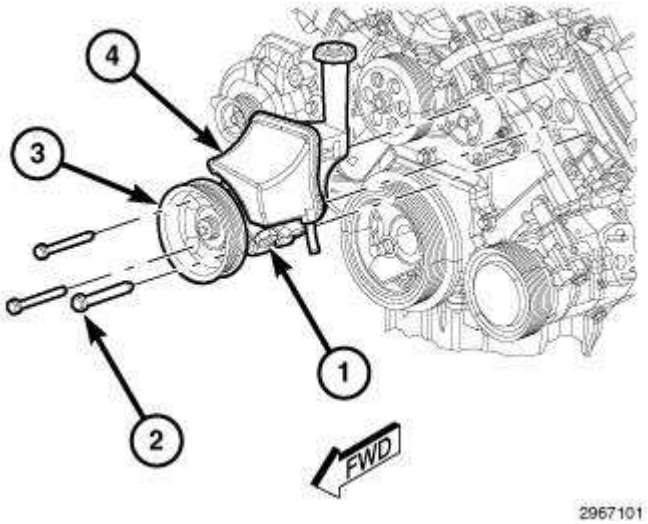

Fig. 434: Power Steering Reservoir, Pump, Pulley & Bolts
Courtesy of CHRYSLER GROUP, LLC

NOTE: It is not necessary to remove the power steering pump hoses for power steering pump removal.

20. Remove the three power steering pump mounting bolts (2) through the access holes in the pulley (3).
21. Remove the power steering pump (1) from the engine and position aside.

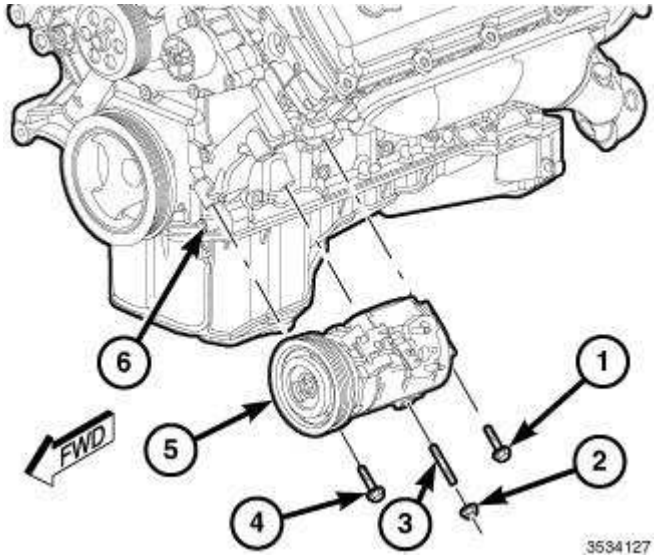

Fig. 435: Removing/Installing A/C Compressor
Courtesy of CHRYSLER GROUP, LLC

22. Remove A/C compressor from the front timing chain cover and position aside. Refer to **COMPRESSOR, A/C, REMOVAL** .

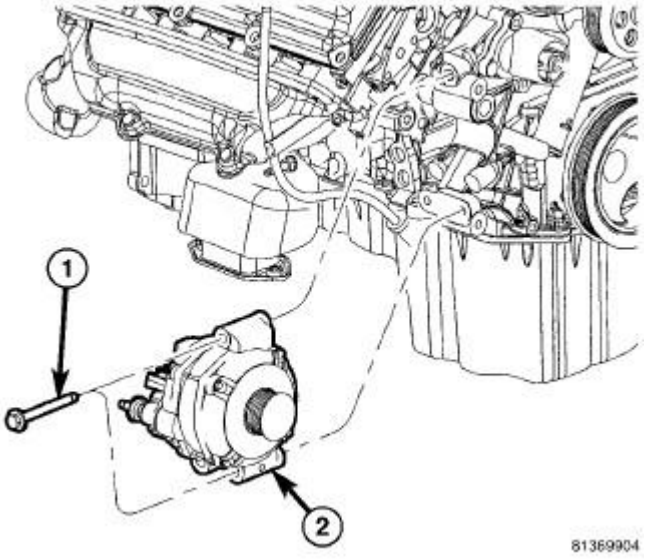

Fig. 436: Generator & Mounting Bolts
Courtesy of CHRYSLER GROUP, LLC

23. Remove the generator from the front timing chain cover and position aside. Refer to **GENERATOR, REMOVAL** .

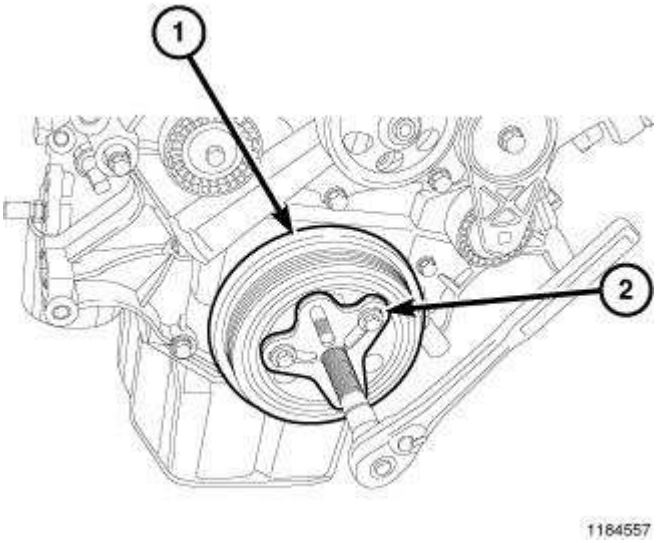

Fig. 437: Vibration Damper & Bolt Grip Puller
Courtesy of CHRYSLER GROUP, LLC

NOTE: When installing the puller tool, ensure the bolts are fully threaded through the entire crankshaft damper.

24. Remove the vibration damper. Refer to **DAMPER, VIBRATION, REMOVAL**.
25. Install the puller tool (2) making sure the bolts are fully threaded through the entire crankshaft damper and remove the crankshaft damper (1).

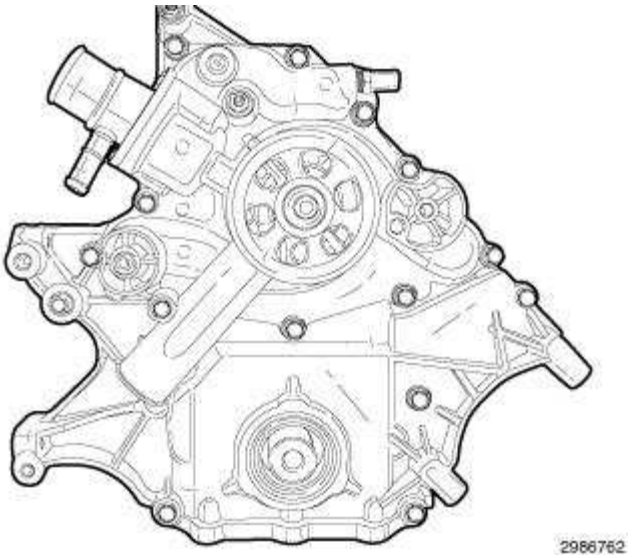

Fig. 438: Engine Timing Cover
Courtesy of CHRYSLER GROUP, LLC

NOTE: It is not necessary to remove water pump for timing cover removal.

26. Remove the engine timing cover retaining bolts and remove the engine timing cover.

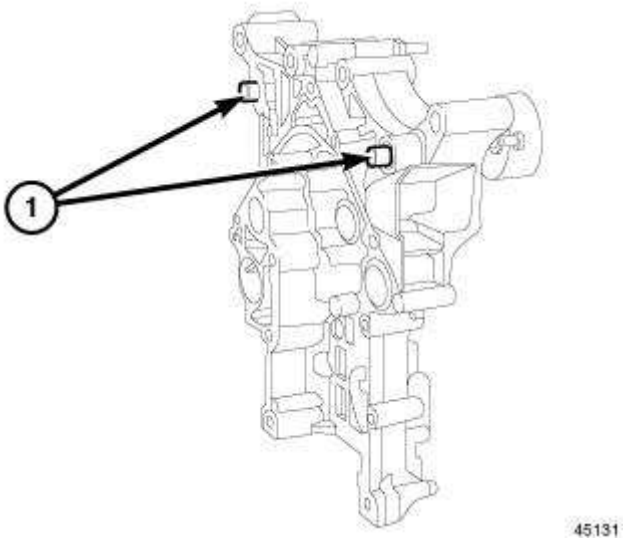

Fig. 439: Front Cover Slide Bushings
Courtesy of CHRYSLER GROUP, LLC

27. Verify that the engine timing cover slide bushings (1) remain located in the engine timing cover.

INSTALLATION

INSTALLATION

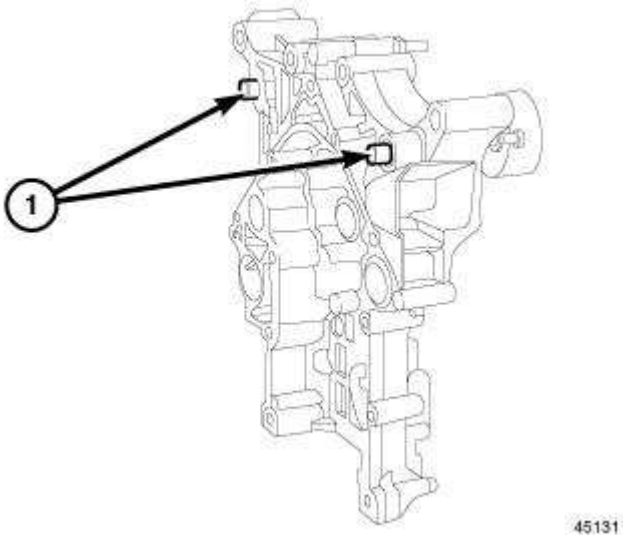

Fig. 440: Front Cover Slide Bushings
Courtesy of CHRYSLER GROUP, LLC

1. Clean the engine timing cover and engine block surface.

NOTE: Always install a new gasket when servicing the engine timing cover.

2. Verify that the engine timing cover slide bushings (1) remain located in the engine timing cover.

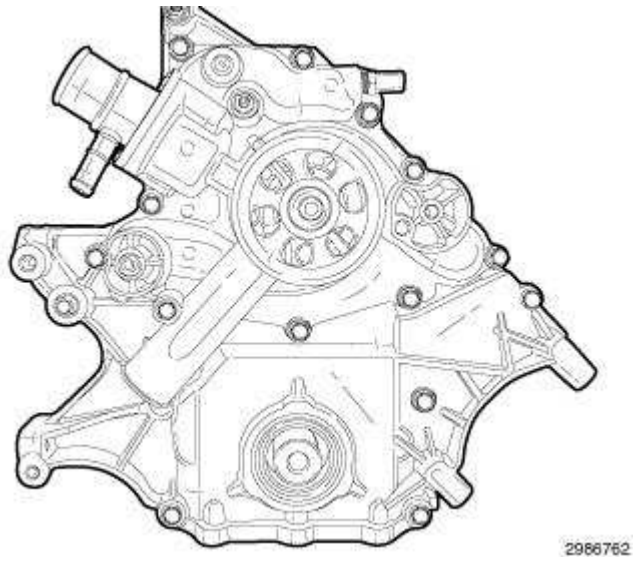

Fig. 441: Engine Timing Cover
Courtesy of CHRYSLER GROUP, LLC

3. Using a new gasket, install the engine timing cover and tighten the retaining bolts to 28 N.m (21 ft. lbs.).

NOTE: The large lifting stud is torqued to 55 N.m (40 ft. lbs.).

4. Tighten the large lifting stud to 55 N.m (40 ft. lbs.).

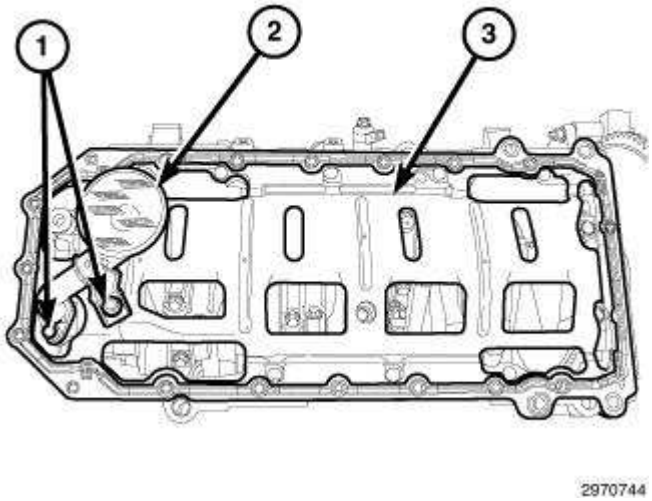

Fig. 442: Integral Windage Tray, Oil Pump Pickup Tube & Bolts
Courtesy of CHRYSLER GROUP, LLC

5. Raise and support the vehicle.
6. Install the oil pump pickup tube (2) and the oil pan. Refer to **PAN, OIL, INSTALLATION**.
7. Install the lower radiator hose and clamp.

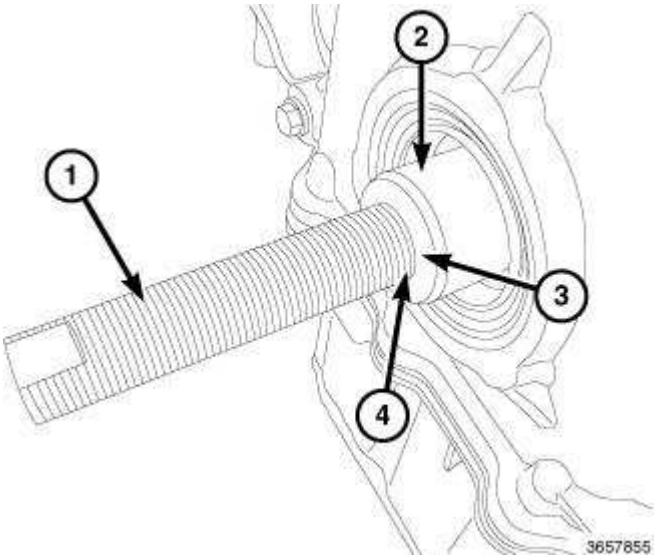

Fig. 443: Installing Vibration Damper Onto Crankshaft Using Special Tool
Courtesy of CHRYSLER GROUP, LLC

8. Assemble the (special tool #10387, Installer, Vibration Damper) as follows:
    1. Install the threaded shaft (1) onto the crankshaft (3) till its seated.
    2. Position the crankshaft damper onto the crankshaft.
    3. Install the thrust washer.
    4. Install the roller bearing onto the threaded shaft making sure the hardened bearing surface is facing away from the crankshaft.
    5. Install the washer.
    6. Install the nut onto the threaded shaft.

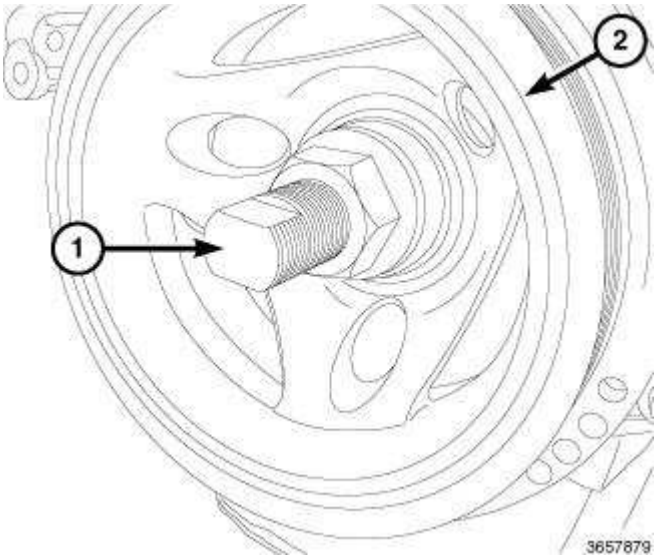

Fig. 444: Installing Vibration Damper
Courtesy of CHRYSLER GROUP, LLC

9. Using the crankshaft Damper Installer (1) press the vibration damper (2) onto the crankshaft. Refer to **DAMPER, VIBRATION, INSTALLATION**.
10. Install the crankshaft damper bolt and tighten to 176 N.m (129 ft. lbs.).

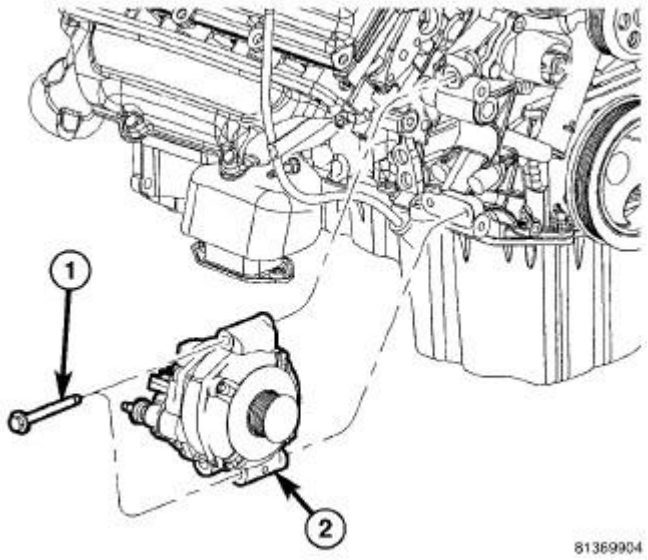

Fig. 445: Generator & Mounting Bolts
Courtesy of CHRYSLER GROUP, LLC

11. Install the generator. Refer to **GENERATOR, INSTALLATION** .

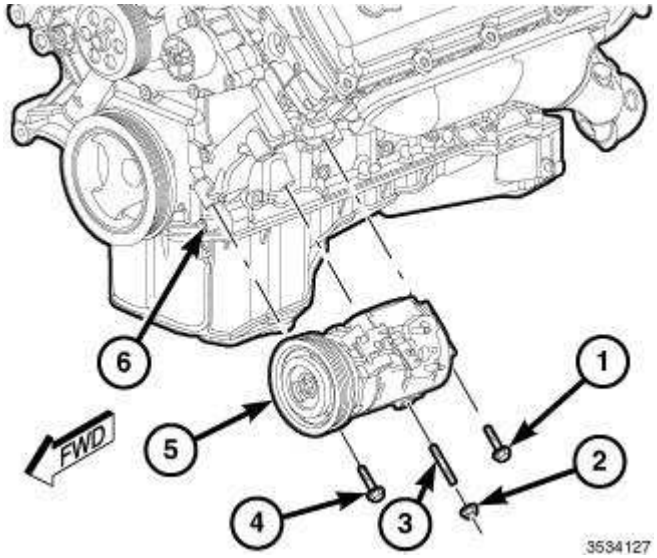

Fig. 446: Removing/Installing A/C Compressor
Courtesy of CHRYSLER GROUP, LLC

12. Install the A/C compressor. Refer to **COMPRESSOR, A/C, INSTALLATION** .

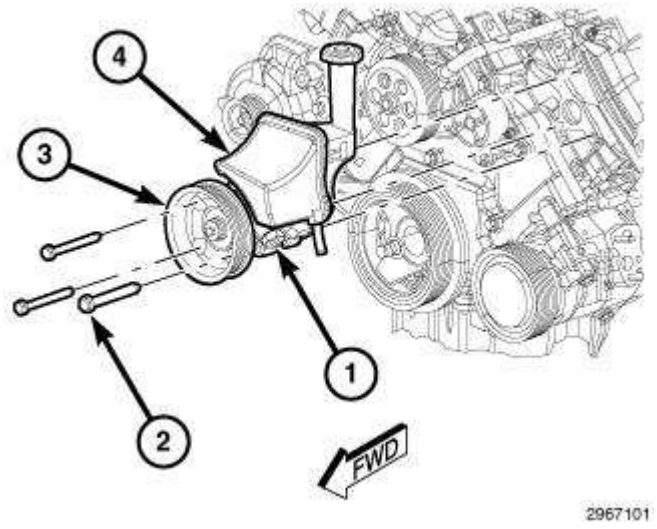

Fig. 447: Power Steering Reservoir, Pump, Pulley & Bolts
Courtesy of CHRYSLER GROUP, LLC

13. Position the power steering pump, align the pump (1) with the mounting holes on the engine.
14. Install the three power steering pump mounting bolts (2) through access holes in the pulley (3) and tighten to 28 N.m (21 ft. lbs.).

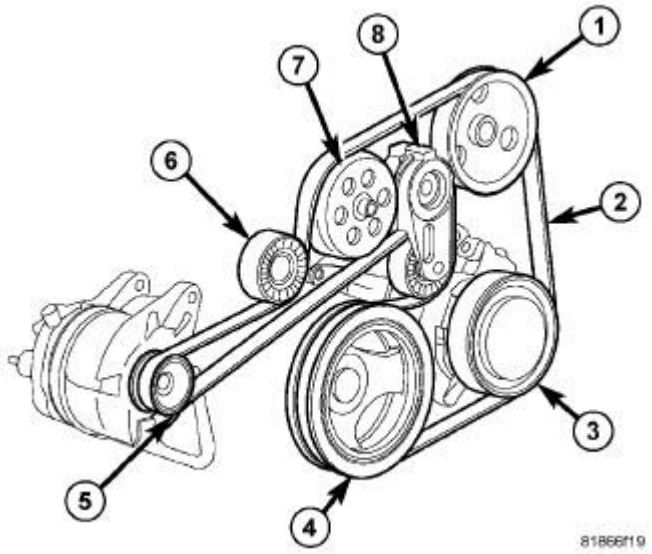

Fig. 448: Accessory Drive Belt Routing, Tensioner & Pulleys
Courtesy of CHRYSLER GROUP, LLC

15. Install the accessory drive belt tensioner assembly (8) and idler pulley (6).
16. Install the accessory drive belt (2). Refer to **BELT, SERPENTINE, INSTALLATION** .
17. Install the oil dipstick tube and retaining nut.

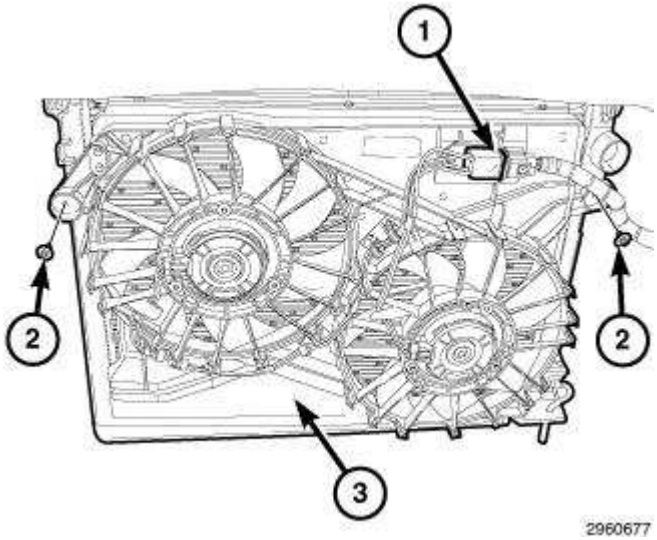

Fig. 449: Cooling Fan Electrical Connector, Cooling Fan Mounting Bolts & Radiator Cooling Fan Assembly
Courtesy of CHRYSLER GROUP, LLC

18. Install the cooling fan. Refer to **FAN, COOLING, INSTALLATION** .

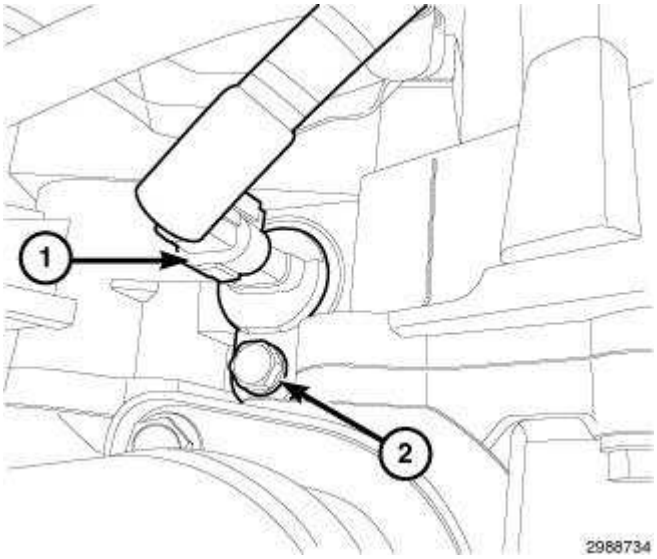

Fig. 450: Camshaft Position Sensor Electrical Connector & Bolt
Courtesy of CHRYSLER GROUP, LLC

19. Connect the camshaft position sensor electrical connector (1).

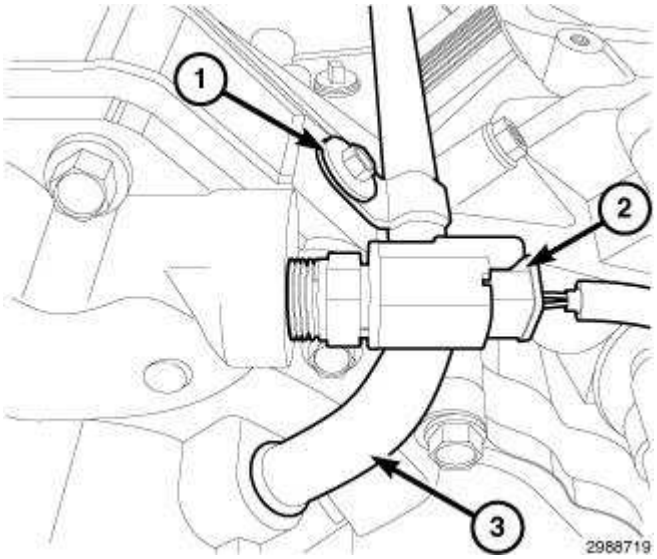

Fig. 451: Coolant Temperature (ECT) Sensor Electrical Connector, Heater Tube & Retaining Bolt
Courtesy of CHRYSLER GROUP, LLC

20. Install the heater tube (3) into of the water pump.
21. Install the heater tube retaining bolt (1) and tighten to 12 N.m (9 ft. lbs.).
22. Connect the coolant temperature sensor electrical connector (2).

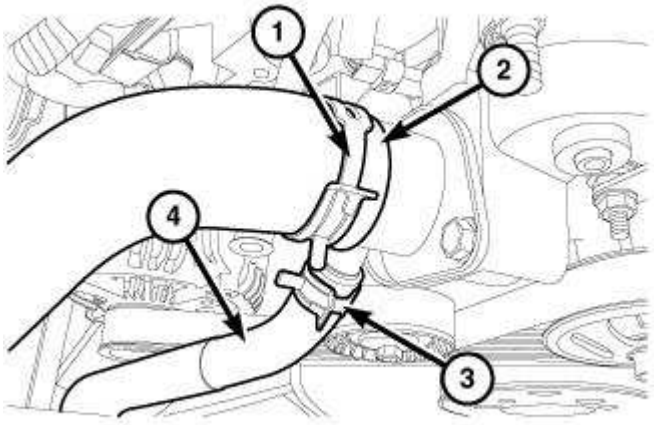

2988475

Fig. 452: Upper Radiator Hose, Clamp, Oil Cooler Return Line Hose & Clamp
Courtesy of CHRYSLER GROUP, LLC

23. Install the oil cooler hose (4) and clamp (3).
24. Install the upper radiator hose (2) and clamp (1).

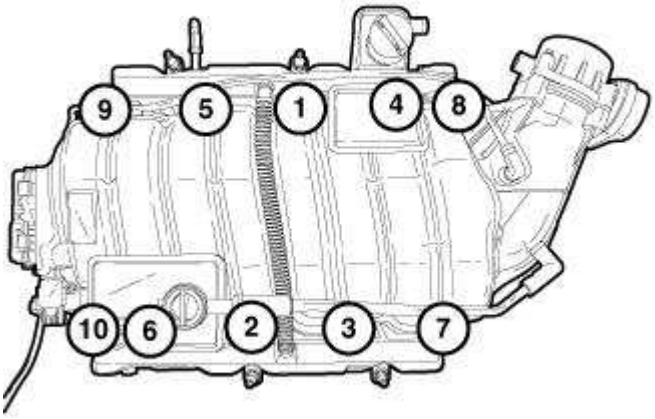

2979852

Fig. 453: Intake Manifold Removal/Tightening Sequence
Courtesy of CHRYSLER GROUP, LLC

25. Install the intake manifold. Refer to **MANIFOLD, INTAKE, INSTALLATION**.
26. Fill the cooling system with the specified type and amount of engine coolant. Refer to **STANDARD PROCEDURE** .
27. Fill the crankcase with the specified type and amount of engine oil. Refer to **STANDARD PROCEDURE** .

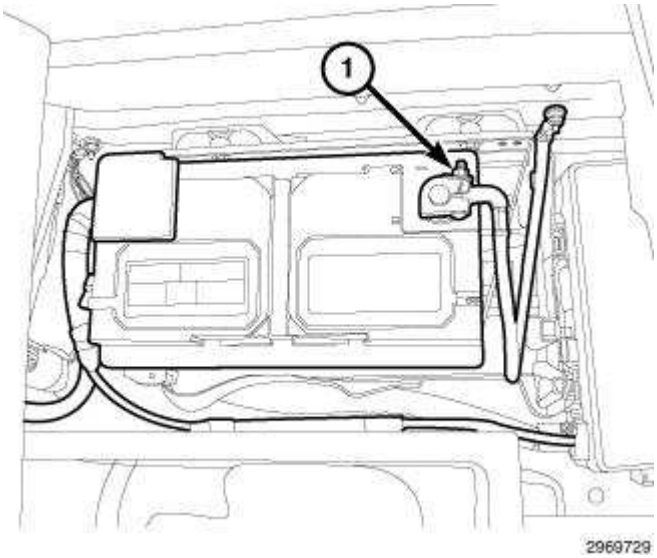

Fig. 454: Negative Battery Cable
Courtesy of CHRYSLER GROUP, LLC

28. Connect the negative battery cable (1).

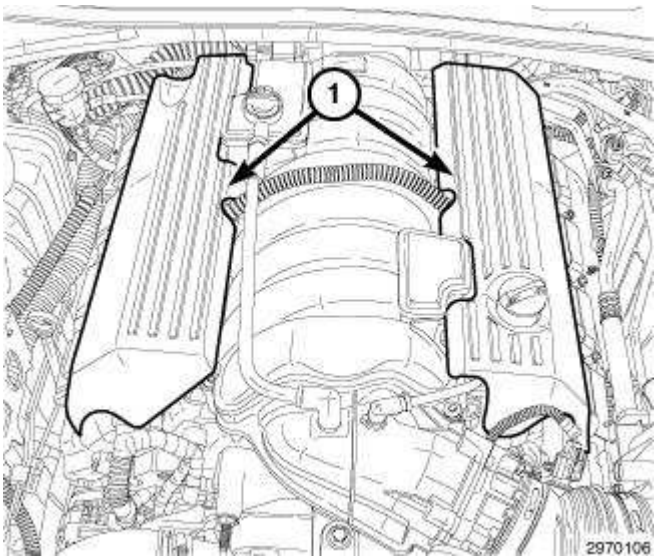

Fig. 455: Engine Covers
Courtesy of CHRYSLER GROUP, LLC

29. Install the engine covers (1).
30. Perform the Refrigerant System Charge procedure. Refer to **PLUMBING, STANDARD PROCEDURE** .
31. Start the engine and check for leaks.

TENSIONER, ENGINE TIMING

DESCRIPTION

DESCRIPTION

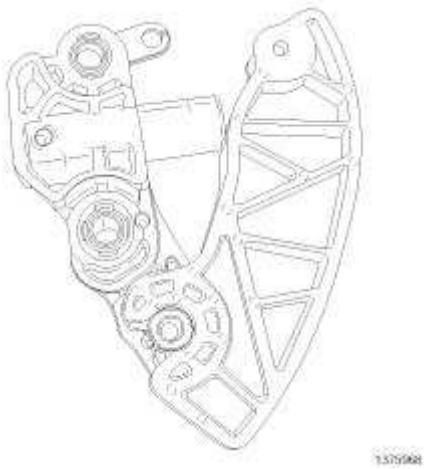

Fig. 456: Timing Chain Tensioner Arm
Courtesy of CHRYSLER GROUP, LLC

The timing chain tensioner is a spring loaded design. It consists of two chain guide shoes. One shoe is fixed in place and the other is spring loaded to keep tension on the chain.

OPERATION

OPERATION

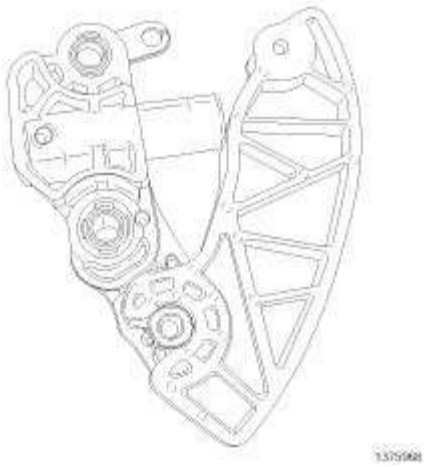

Fig. 457: Timing Chain Tensioner Arm
Courtesy of CHRYSLER GROUP, LLC

The timing chain tension is maintained by routing the timing chain through the tensioner assembly. The tensioner assembly consists of two chain guide shoes. One shoe is fixed in place and the other is spring loaded to maintain the correct timing chain tension.

GENERAL INFORMATION

Commonly Used Abbreviations

* PLEASE READ THIS FIRST *

NOTE: **This article is intended for general information purposes only. This information may not apply to all makes and models. Not all abbreviations are covered as manufacturers add new ones every day.**

"A"

A

Amperes

ABS

Anti-Lock Brakes

ABRS

Air Bag Restraint System

AC

Alternating Current

A/C

Air Conditioning

ACCS

A/C Cycling Switch

ACCUM

Accumulator

ACCY

Accessory

ACT

Air Charge Temperature Sensor

ADJ

Adjust or Adjustable

ADV

Advance

AFS

Airflow Sensor

AI

Air Injection

AIR or A.I.R.

Air Injection Reactor

AIS

Air Injection System

Alt.

Alternator or Altitude

Amp./amp/amps

Ampere

ASCS

Air Suction Control Solenoid

ASD

Auto Shutdown

ASDM

Air Bag System Diagnostic Module

ASV

Air Suction Valve

A/T

Automatic Transmission/Transaxle

ATC

Automatic Temperature Control

ATDC

After Top Dead Center

ATF

Automatic Transmission Fluid

ATS

Air Temperature Sensor

Aux.

Auxiliary

Avg.

Average

AXOD

Automatic Transaxle Overdrive (Ford Models Only)

"B"

BAC

By-Pass Air Control

BAP

Barometric Absolute Pressure Sensor

BARO

Barometric

Batt.

Battery

Bbl.

Barrel (Example: 4-Bbl.)

BCM

Body Control Module

BHP

Brake Horsepower

BMAP

Barometric and Manifold Absolute Pressure Sensor

BOO

Brake On-Off Switch

B/P

Backpressure

BPS

Barometric Pressure Sensor

BPT

Backpressure Transducer

BTDC

Before Top Dead Center

BTSI

Brake Transmission Shift Interlock

BTU

British Thermal Unit

BVSV

Bimetallic Vacuum Switching Valve

"C"

° C

Celsius (Degrees)

Calif.

California

CANP

Canister Purge

CARB

California Air Resources Board

CAT

Catalytic Converter

CB

Circuit Breaker

CBD

Closed Bowl Distributor

cc

cubic centimeter

CCC

Close Coupled Catalyst

CCC

Computer Command Control

CCD

Computer Controlled Dwell

CCOT

Cycling Clutch Orifice Tube

CCW

Counterclockwise

CDI

Capacitor Discharge Ignition

CEC

Computerized Engine Control

CID

Cubic Inch Displacement

cm

Centimeter

CMP

Camshaft Position Sensor

CO

Carbon Monoxide

CO_2

Carbon Dioxide

Cont.

Continued

CONV

Convertible

CP

Canister Purge

CKP

Crankshaft Position Sensor

CTS

Coolant Temperature Sensor

Cu. In.

Cubic Inch

CVC

Constant Vacuum Control

CV

Check Valve or Constant Velocity

CW

Clockwise

CYL or Cyl.

Cylinder

C^3 I

Computer Controlled Coil Ignition

C^4

Computer Controlled Catalytic Converter

"D"

"D"

Drive

DC

Direct Current Or Discharge

DDD

Dual Diaphragm Distributor

Def.

Defrost

Defog.

Defogger

DERM

Diagnostic Energy Reserve Module

DFI

Digital Fuel Injection

Diag.

Diagnostic

DTC

Diagnostic Trouble Code

DIC

Driver Information Center

DIS

Distributorless Ignition System

DIST

Distribution

DLC

Data Link Connector

DOC

Diesel Oxidation Catalyst

DOHC

Double Overhead Cam

DOT

Department of Transportation

DPF

Diesel Particulate Filter

DRB-II

Diagnostic Readout Box

DVOM

Digital Volt-Ohmmeter

"E"

EACV

Electric Air Control Valve

EATX

Electronic Automatic Transaxle

EBCM

Electronic Brake Control Module

EBL

Electronic Back Light

ECM

Engine Control Module

ECT

Engine Coolant Temperature Sensor

EDIS

Electronic Distributorless Ignition System

EEC

Electronic Engine Control

EECS

Evaporative Emission Control System

EEPROM

Electronically Erasable PROM

EFE

Early Fuel Evaporation

EGO

Exhaust Gas Oxygen Sensor

EGR

Exhaust Gas Recirculation

EOT

Engine Oil Temperature

ESA

Electronic Spark Advance

ESC

Electronic Spark Control

EST

Electronic Spark Timing

EVAP

Fuel Evaporative System

EVIC

Electronic Vehicle Information Center

EVP

EGR Valve Position Sensor

EWMA

Exponentially Weighted Moving Average (MODE 6)

Exc.

Except

"F"

° F

Fahrenheit (Degrees)

F/B

Fuse Block

Fed.

Federal

FI

Fuel Injection

FICU

Fuel Injection Control Unit

FIPL

Fuel Injector Pump Lever

FLI

Fuel Level Indicator

FPR-VSV

Fuel Pressure Regulator Vacuum Switching Valve

Ft. Lbs.

Foot Pounds

FWD

Front Wheel Drive

"G"

g

grams

Gals.

gallons

GND or GRND

Ground

"H"

HAC

High Altitude Compensation

HC

Hydrocarbons

H/D

Heavy Duty

HO2S

Heated Exhaust Gas Oxygen Sensor

Hg

Mercury

Hgt.

Height

HLDT

Headlight

HO

High Output

HO2S

Heated Oxygen Sensor

HP

High Performance

HSC

High Swirl Combustion

HSO

High Specific Output

HTR

Heater

Hz

Hertz (Cycles Per Second)

"I"

IAC

Idle Air Control

IACV

Idle Air Control Valve

IAT

Intake Air Temperature

IC

Integrated Circuit

ID

Identification

I.D.

Inside Diameter

IFS

Independant Front Suspension

IFS

Inertia Fuel Shutoff (Ford)

Ign.

Ignition

IMRC

Intake Manifold Runner Control

In.

Inches

INCH Lbs.

Inch Pounds

in. Hg

Inches of Mercury

Inj.

Injector

IP

Instrument Panel

IRS

Independant Rear Suspension

ISC

Idle Speed Control

IVD

Interactive Vehicle Dynamics (Ford)

IVSV

Idle Vacuum Switching Valve

"J"

J/B

Junction Block

"K"

KAPWR

Keep Alive Power

k/ohms

kilo-ohms (1000 ohms)

kg

Kilograms (weight)

kg/cm^2

Kilograms Per Square Centimeter

KM/H

Kilometers Per Hour

KOEO

Key On, Engine Off

KOER

Key On, Engine Running

KS

Knock Sensor

kW

Kilowatt

kV

Kilovolt

"L"

L

Liter

lbs. (Lbs. when used in table)

Pounds

LCD

Liquid Crystal Display

L/D

Light Duty

LDP

Leak Detection Pump (Part of EVAP system.)

LED

Light Emitting Diode

LH

Left Hand

"M"

mA

Milliamps

MA or MAF

Mass Airflow

MAFS

Mass Airflow Sensor

MAP

Manifold Absolute Pressure

MAT

Manifold Air Temperature

Mem.

Memory

MEM-CAL

Memory Calibration Chip

mfd.

Microfarads

MFI

Multiport Fuel Injection

MICU

Multiplex Integrated Control Unit (Acura/Honda)

MIL

Malfunction Indicator Light

MPI

Multi-Point (Fuel) Injection

mm

Millimeters

MPH

Miles Per Hour

mV

Millivolts

"N"

NA

Not Available

NAC

NOx Adsorber Catalyst

NCA

No Color Available (Wiring Diagrams)

NGS

New Generation Star

N.m

Newton Meter

No.

Number

Nos.

Numbers

NOx

Oxides of Nitrogen

"O"

O_2

Oxygen

OBD

On-Board Diagnostics

OC

Oxidation Catalyst

OD

Overdrive

O.D.

Outside Diameter

OHC

Overhead Camshaft

OSS

Output Speed Sensor

O/S

Oversize

oz.

Ounce

ozs.

Ounces

"P"

"P"

Park

P/C

Printed Circuit

PCM

Powertrain Control Module

PCS

Purge Control Solenoid

PC-SOL

Purge Control Solenoid

PCV

Positive Crankcase Ventilation

PFI

Port Fuel Injection

PGM-FI

Programmed Fuel Injection

PID

Parameter Identification

PIP

Profile Ignition Pick-up

PNP

Park Neutral Position Switch

P/N

Park/Neutral

PRNDL

Park Reverse Neutral Drive Low

PROM

Programmable Read-Only Memory

psi

Pounds Per Square Inch

P/S

Power Steering

PSPS

Power Steering Pressure Switch

PTC

Positive Temperature Coefficient

PTO

Power Take-Off

Pts.

Pints

Pwr.

Power

"Q"

Qts.

Quarts

"R"

RABS

Rear Anti-Lock Brake System

RECIRC

Recirculation

RH

Right Hand

RPM

Revolutions Per Minute

RWAL

Rear Wheel Anti-Lock Brake

RWD

Rear Wheel Drive

"S"

SAS

Steering Angle Sensor

SBC

Single Bed Converter

SBEC

Single Board Engine Controller

SDARS

Satellite Digital Audio Radio Service

SES

Service Engine Soon

SFI

Sequential (Port) Fuel Injection

SIL

Shift Indicator Light

SIR

Supplemental Inflatable Restraint

SOHC

Single Overhead Cam

SOL or Sol.

Solenoid

SPFI

Sequential Port Fuel Injection

SPK

Spark Control

SPOUT

Spark Output

SRI

Service Reminder Indicator

SRS

Supplemental Restraint System (Air Bag)

STAR

Self-Test Automatic Readout

STO

Self-Test Output

SUB-O_2

Sub Oxygen Sensor

Sw.

Switch

Sys.

System

"T"

TAB

Thermactor Air By-Pass

TAC

Throttle Actuator Module

TAD

Thermactor Air Diverter

TBC

Body Control Module (General Motors)

TBI

Throttle Body Injection

TCC

Torque Converter Clutch

TDC

Top Dead Center

Temp.

Temperature

TFI

Thick Film Ignition

THERMAC

Thermostatic Air Cleaner

TPM

Tire Pressure Monitor

TPMS

Tire Pressure Monitor System

TPS

Throttle Position Sensor/Switch

TS

Temperature Sensor

TV

Thermovalve

TWC

Three-Way Catalyst

"V"

V

Valve

Vac.

Vacuum

VAF

Vane Airflow

VAPS

Variable Assist Power Steering

VCC

Viscous Converter Clutch

VCRM

Variable Control Relay Module

VIN

Vehicle Identification Number

VM

Vacuum Modulator

Volt.

Voltage

VOM

Volt-Ohmmeter (Analog)

VRV

Vacuum Regulator Valve

VSS

Vehicle Speed Sensor

VSV

Vacuum Switching Valve

"W"

W/

With

W/O

Without

WAC

Wide Open Throttle A/C Switch

WOT

Wide Open Throttle

BRAKES

ABS - Service Information - Challenger

DESCRIPTION

DESCRIPTION

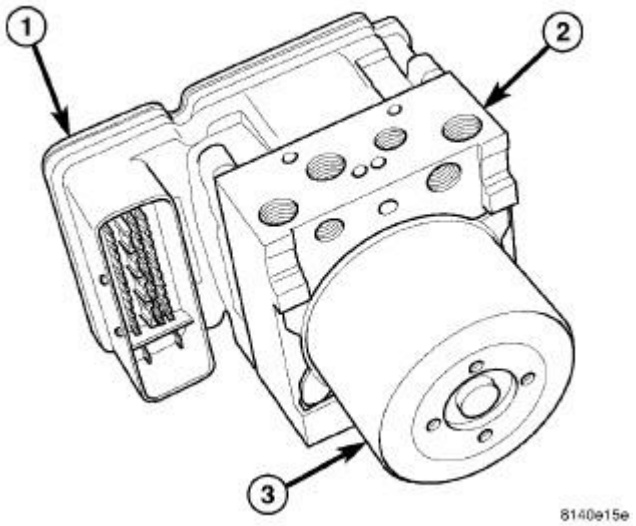

Fig. 1: Integrated Control Unit
Courtesy of CHRYSLER LLC

This vehicle uses an electronic brake control system designated MK25e. This system includes ABS (Antilock Brake System), TCS (Traction Control System), BAS (Brake Assist System), EVBP (Electronic Variable Brake Proportioning) and ESP® (Electronic Stability Program). All of these systems work together to enhance vehicle stability and control in various driving conditions and are commonly referred to as ESP.

This system uses components of the base brake system, but also features the following components:

- Integrated Control Unit (ICU) - Includes Hydraulic Control Unit (HCU) (2) and Antilock Brake Module (ABM) (1)
- Wheel Speed Sensors (WSS) - Four sensors (one at each wheel)
- Dynamics Sensor - Includes a yaw rate sensor and a lateral accelerometer.
- Steering Angle Sensor (SA) - The SAS is part of the Steering Column Control Module (SCCM).
- Brake Pressure Sensor - The brake pressure sensor is located in the HCU and is not serviceable separate from the HCU.

ABS

The purpose of the Antilock Brake System (ABS) is to prevent wheel lockup under braking conditions on virtually any type of road surface. Antilock braking is desirable because a vehicle that is stopped without locking the wheels retains directional stability and some steering capability. This allows the driver to retain greater control of the vehicle during braking.

ALL-SPEED TRACTION CONTROL

The traction control system (TCS) is an all-speed traction control. All-Speed Traction Control enhances mobility and prevents wheel slip when accelerating on slippery surfaces. It also provides a measure of directional stability control. Using the wheel-speed sensors, it can detect excessive yaw and help keep the car on the intended course, as for instance, when accelerating around a curve.

With rear-wheel drive, All-Speed Traction Control is effective up to 85 mph (137 km/h); with AWD, All-Speed Traction Control is effective up to 45 mph (72 km/h), which is common among competitive AWD vehicles with traction control.

ELECTRONIC STABILITY PROGRAM

The Electronic Stability Program (ESP) enhances control and stability of the vehicle under various driving conditions. ESP corrects for over/under steering of the vehicle by applying the brake of the appropriate wheel to assist in counteracting the over/under steer condition. Engine power may also be reduced to help the vehicle maintain the desired path. ESP uses sensors in the vehicle to determine the vehicle path intended by the driver and compares it to the actual path of the vehicle. When the actual path does not match the intended path, ESP applies the brake of the appropriate wheel to assist in counteracting the oversteer or understeer condition.

- Oversteer - When the vehicle is turning more that appropriate for the steering wheel position.
- Understeer - When the vehicle is turning less than appropriate for the steering wheel position.

The "ESP/TCS" indicator light located in the instrument cluster starts to flash as soon as the tires lose traction and the ESP system becomes active. The "ESP/TCS" indicator light also flashes when TCS is active.

The ESP can be turned off by using the ESP Off switch. When the ESP Off switch is depressed, it does not completely turn the system off. The ESP system shuts off engine management but retains brake activations for yaw control.

The SRT8 equipped vehicles have three-mode ESP functionality. When the ESP Off switch is depressed and quickly released, the system enters "partial" mode which has no engine management but retains brake activations for yaw control. If the switch is held down for a period of five seconds or longer before releasing, a chime will sound and the ESP system enters "full-off" mode which disables engine management as well as brake activations. The system can be returned to "normal" by briefly pressing and releasing the ESP Off switch. The system will default to full-on mode at the beginning of each ignition cycle.

BRAKE ASSIST SYSTEM

The Brake Assist System (BAS) is designed to optimize the vehicle's braking capability during emergency braking maneuvers. The system detects an emergency braking situation by sensing the rate and amount of brake application and then applies optimum pressure to the brakes. This can help reduce braking distances. The BAS complements the antilock brake system (ABS). Applying the brakes very quickly results in the best BAS assistance.

ELECTRONIC VARIABLE BRAKE PROPORTIONING

Electronic Variable Brake Proportioning (EVBP) is used to balance front-to-rear braking in place of a traditional rear proportioning valve. The EVBP system uses the ABS system to control the slip of the rear wheels in partial braking range. The braking force of the rear wheels is controlled electronically by using the inlet and outlet valves located in the integrated control unit (ICU).

EVBP activation is invisible to the customer since there is no pump motor noise or brake pedal feedback.

OPERATION

OPERATION

ABS

There are a few performance characteristics of the Antilock Brake System (ABS) that may at first seem abnormal, but in fact are normal. These characteristics are described below.

NORMAL BRAKING

Under normal braking conditions, the ABS functions the same as a standard base brake system with a front/rear split master cylinder and conventional vacuum assist.

ABS BRAKING

ABS operation is available at all vehicle speeds above 3-5 mph. If a wheel locking tendency is detected during a brake application, the brake system enters the ABS mode. During ABS braking, hydraulic pressure in the four wheel circuits is modulated to prevent any wheel from locking. Each wheel circuit is designed with a set of electric solenoids to allow modulation. Wheel lockup may be perceived at the very end of an ABS stop and is considered normal.

During an ABS event, the integrated control unit (ICU) regulates hydraulic pressure at all four of the vehicle's wheels.

The hydraulic pressure at each front wheel is controlled independently (relative to the amount of slip at each wheel) in order to maximize the braking force generated by the front brakes. The rear wheels are controlled such that the hydraulic pressure at either rear wheel does not exceed that of the highest slip rear wheel in order to maintain vehicle stability.

The system can build and release pressure at each wheel, depending on signals generated by the wheel speed sensors (WSS) at each wheel and received at the Antilock Brake Module (ABM).

NOISE AND BRAKE PEDAL FEEL

During ABS braking, some brake pedal movement may be felt. In addition, ABS braking will create ticking, popping, or groaning noises heard by the driver. This is normal and is due to pressurized fluid being transferred between the master cylinder and the brakes. If ABS operation occurs during hard braking, some pulsation may be felt in the vehicle body due to fore and aft movement of the suspension as brake pressures are modulated.

At the end of an ABS stop, ABS is turned off when the vehicle is slowed to a speed of 3-4 mph. There may be a slight brake pedal drop anytime that the ABS is deactivated, such as at the end of the stop when the vehicle speed is less than 3 mph or during an ABS stop where ABS is no longer required. These conditions exist when a vehicle is being stopped on a road surface with patches of ice, loose gravel, or sand on it. Also, stopping a vehicle on a bumpy road surface activates ABS because of the wheel hop caused by the bumps.

TIRE NOISE AND MARKS

Although the ABS system prevents complete wheel lockup, some wheel slip is desired in order to achieve optimum braking performance. Wheel slip is defined as follows: 0 percent slip means the wheel is rolling freely and 100 percent slip means the wheel is fully locked. During brake pressure modulation, wheel slip is allowed to reach up to 25-30 percent. This means that the wheel rolling velocity is 25-30 percent less than that of a free rolling wheel at a given vehicle speed. This slip may result in some tire chirping, depending on the road surface. This sound should not be interpreted as total wheel lockup.

Complete wheel lockup normally leaves black tire marks on dry pavement. The ABS will not leave dark black tire marks since the wheel never reaches a fully locked condition. However, tire marks may be noticeable as light patched marks.

START-UP AND DRIVE-OFF CYCLES

When the ignition is turned on, a popping sound and a slight brake pedal movement may be noticed. The ABS warning lamp will also be on for up to 5 seconds after the ignition is turned on.

When the vehicle is first driven off, a humming may be heard or felt by the driver at approximately 12-25 mph (20-40 km/h). All of these conditions are a normal function of ABS as the system is performing a diagnosis check.

PREMATURE ABS CYCLING

Symptoms of premature ABS cycling include: clicking sounds from the solenoid valves; pump/motor running; and pulsations in the brake pedal. Premature ABS cycling can occur at any braking rate of the vehicle and on any type of road surface. Neither the red BRAKE indicator lamp, nor the amber ABS indicator lamp, illuminate and no faults are stored in the ABM.

Premature ABS cycling is a condition that needs to be correctly assessed when diagnosing problems with the antilock brake system. It may be necessary to use a scan tool to detect and verify premature ABS cycling.

Check the following common causes when diagnosing premature ABS cycling: damaged wheel bearings (causing tone wheel issues); damaged wheel bearing housings where wheel speed sensors mount; and loose wheel speed sensor mounting bolts.

After diagnosing the defective component, repair or replace it as required. When the component repair or replacement is completed, test drive the vehicle to verify that premature ABS cycling has been corrected.

ALL-SPEED TRACTION CONTROL

Traction control systems sense impending wheel spin based on a model of the rate of change of wheel speed under normal traction conditions. The All-Speed Traction Control uses signals from the same wheel speed sensors as ABS to determine when to apply the brakes to one or more wheels and when to reduce engine torque output using the electronic throttle control (ETC) to prevent wheel slip during acceleration. Throttle control makes the vehicle less reliant on brake application alone to maintain traction, increasing the operating speed range and more closely modulates speed, resulting in smoother operation. With All-Speed Traction Control reducing engine torque as well as applying the brakes, it is possible to achieve almost seamless torque application at the wheels.

If the wheel slip is severe enough to require throttle intervention, All-Speed Traction Control will reduce engine torque and sometimes upshift the transmission to avoid the condition. In milliseconds, All-Speed Traction Control interrogates the engine control system to determine the current torque output, determines how much the torque output the current conditions will allow, and signals this requirement to the engine control system, which reduces the torque by partially closing the throttle. With execution of the torque reduction, the brake system reduces brake pressure to make the transition smooth, while maintaining forward progress. By reducing engine power, braking effectiveness is maintained and the system can operate throughout the normal vehicle speed range. That is why the system is identified as providing "all-speed" traction control.

With AWD, where front-wheel slip can occur, the degree of throttle intervention is relatively less than with rear-wheel drive. The difference in speed capability and the degree of throttle intervention between rear-wheel drive and all-wheel drive is due to the fact that non-driven front wheels on a rear-wheel drive vehicle give the system an accurate vehicle speed reference on which to base responses. With AWD, the possibility that the front wheels may also be slipping makes appropriate corrective action more difficult to determine, thus limiting the effective speed range. Offsetting this is the fact that loss of traction is less likely with AWD because torque is transmitted through all four wheels to begin with. In actual driving situations on snow or ice, the rear-wheel drive and AWD systems respond in essentially the same way up to the 45 mph (72 km/h) limit of the AWD system.

ELECTRONIC STABILITY PROGRAM

To determine whether the car is responding properly to cornering commands, ESP uses steering wheel angle, yaw (turning) rate and lateral acceleration sensors (combined into Dynamics Sensor). Using signals from these sensors, in addition to individual wheel speed sensor signals, the system determines appropriate brake and throttle actions. Once initiated, ESP operates much like All-Speed Traction Control, except that the goal is directional stability. If the vehicle yaw response, or rate of turning, is inconsistent with the steering angle and vehicle speed indications, the ESP system applies the brakes and, if necessary closes the throttle, to restore control. This occurs whether the vehicle is

turning too rapidly (oversteering) or not rapidly enough (understeering).

ELECTRONIC VARIABLE BRAKE PROPORTIONING

Upon entry into EVBP the inlet valve for the rear brake circuit is switched ON so that the fluid supply from the master cylinder is shut off. In order to decrease the rear brake pressure, the outlet valve for the rear brake circuit is pulsed. This allows fluid to enter the low pressure accumulator (LPA) in the Hydraulic Control Unit (HCU) resulting in a drop in fluid pressure to the rear brakes. In order to increase the rear brake pressure, the outlet valve is switched off and the inlet valve is pulsed. This increases the pressure to the rear brakes. This back-and-forth process will continue until the required slip difference is obtained. At the end of EVBP braking (brakes released) the fluid in the LPA drains back to the master cylinder by switching on the electronic shuttle valve.

The EVBP will remain functional during many ABS fault modes. If both the red BRAKE and amber ABS warning indicators are illuminated, the EVBP may not be functioning.

STANDARD PROCEDURE

ANTILOCK BRAKE SYSTEM BLEEDING

The base brake's hydraulic system must be bled anytime air enters the hydraulic system. The ABS must always be bled anytime it is suspected that the HCU has ingested air.

Brake systems with ABS must be bled as two independent braking systems. The non-ABS portion of the brake system with ABS is to be bled the same as any non-ABS system.

The ABS portion of the brake system must be bled separately. Use the following procedure to properly bleed the brake hydraulic system including the ABS.

NOTE: During the brake bleeding procedure, be sure the brake fluid level remains close to the FULL level in the master cylinder fluid reservoir. Check the fluid level periodically during the bleeding procedure and add Mopar® DOT 3 brake fluid as required.

BLEEDING

When bleeding the ABS system, the following bleeding sequence must be followed to insure complete and adequate bleeding.

1. Make sure all hydraulic fluid lines are installed and properly torqued.
2. Connect the scan tool to the diagnostics connector. The diagnostic connector is located under the lower steering column cover to the left of the steering column.
3. Using the scan tool, check to make sure the ABM does not have any fault codes stored. If it does, clear them.

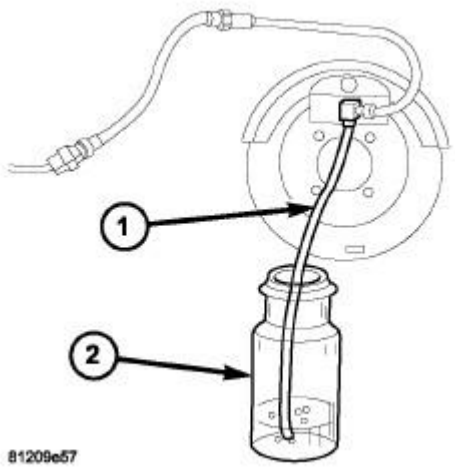

Fig. 2: BLEED HOSE SET UP
Courtesy of CHRYSLER LLC

WARNING: When bleeding the brake system wear safety glasses. A clear bleed tube (1) must be attached to the bleeder screws and submerged in a clear container filled part way with clean brake fluid (2). Direct the flow of brake fluid away from yourself and the painted surfaces of the vehicle. Brake fluid at high pressure may come out of the bleeder screws when opened.

NOTE: Pressure bleeding is recommended to bleed the base brake system to ensure all air is removed from system. Manual bleeding may also be used, but additional time is needed to remove all air from system.

4. Bleed the base brake system. See **STANDARD PROCEDURE** .
5. Using the scan tool, select ECU VIEW, followed by ABS MISCELLANEOUS FUNCTIONS to access bleeding. Follow the instructions displayed. When finished, disconnect the scan tool and proceed.
6. Bleed the base brake system a second time. See **STANDARD PROCEDURE** . Check brake fluid level in the reservoir periodically to prevent emptying, causing air to enter the hydraulic system.

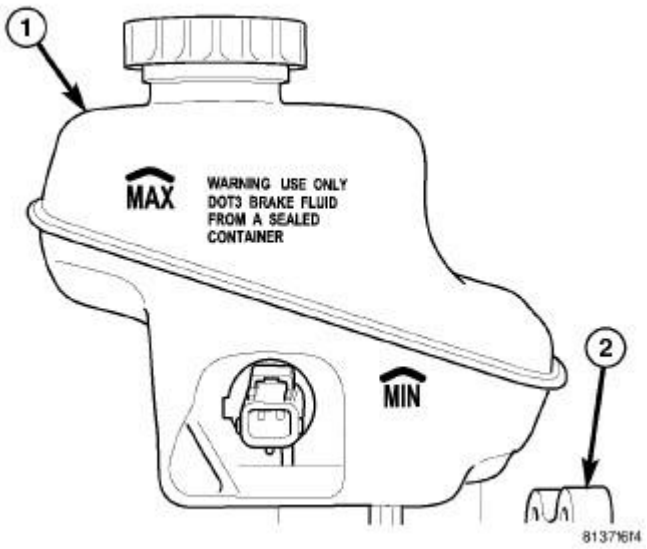

Fig. 3: RESERVOIR FLUID LEVEL MARKINGS
Courtesy of CHRYSLER LLC

7. Fill the master cylinder fluid reservoir (1) to the MAX level.
8. Test drive the vehicle to be sure the brakes are operating correctly and that the brake pedal does not feel spongy.

SPECIFICATIONS

TORQUE

TORQUE SPECIFICATIONS

DESCRIPTION	N.m	Ft. Lbs.	In. Lbs.
ABS ICU Mounting Bolts to Bracket	11	8	97
ABS ABM-to-HCU Mounting Screws	2	-	17
ABS Wheel Speed Sensor Head Mounting Screw - Front	11	8	97
ABS Wheel Speed Sensor Head Mounting Screw - Rear	11	8	97

ELECTRICAL

SENSOR, DYNAMICS

Description

DESCRIPTION

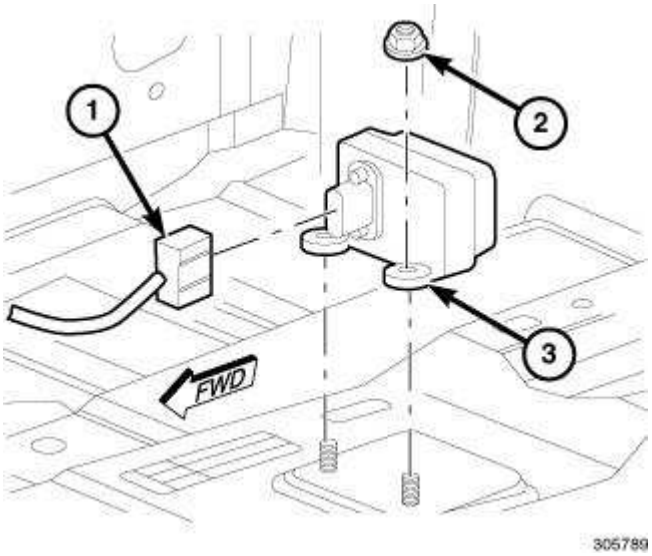

Fig. 4: DYNAMICS SENSOR MOUNTING
Courtesy of CHRYSLER LLC

The Yaw Rate and Lateral Acceleration Sensors are housed into one unit known as the Dynamics Sensor. The sensor is used to measure side-to-side (lateral) motion and vehicle rotational sensing (how fast the vehicle is turning - yaw).

Yaw and Lateral Acceleration Sensors cannot be serviced separately. The entire Dynamics Sensor must be replaced when necessary.

Removal

REMOVAL

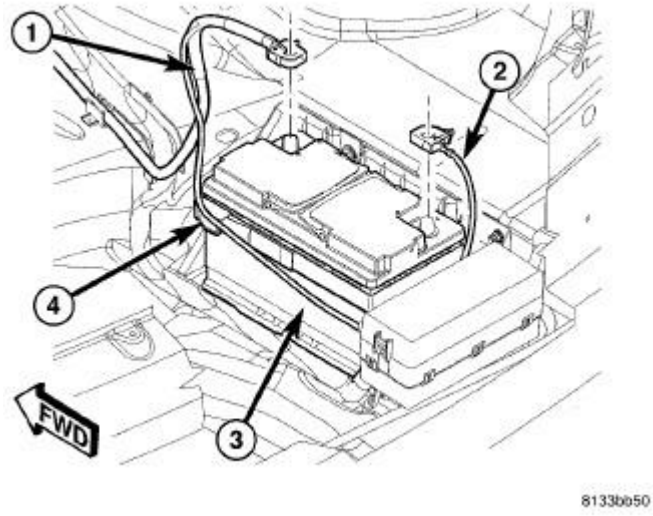

Fig. 5: BATTERY AND CABLES

Courtesy of CHRYSLER LLC

1. Disconnect and isolate negative battery cable (2) from battery post.
2. Remove floor console. Refer to **Body/Interior/CONSOLE, Floor - Removal**

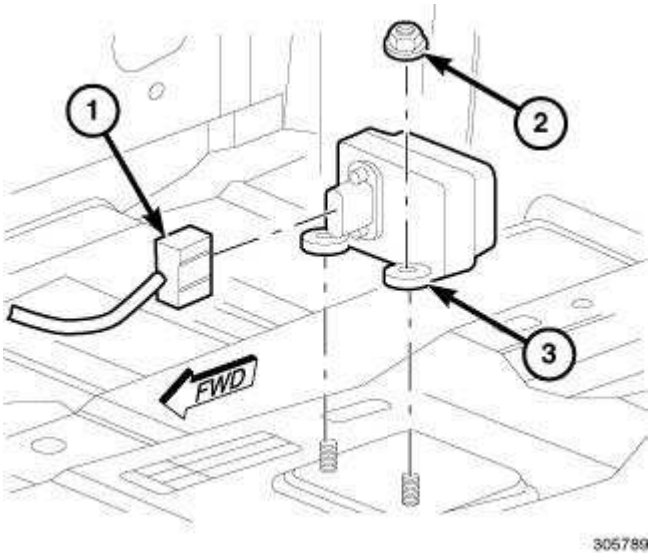

Fig. 6: DYNAMICS SENSOR MOUNTING
Courtesy of CHRYSLER LLC

3. Disconnect wiring harness (1) connector at sensor (3).
4. Remove nuts (2) mounting sensor (3) to floor pan tunnel (4).
5. Remove dynamics sensor (3) from vehicle.

Installation

INSTALLATION

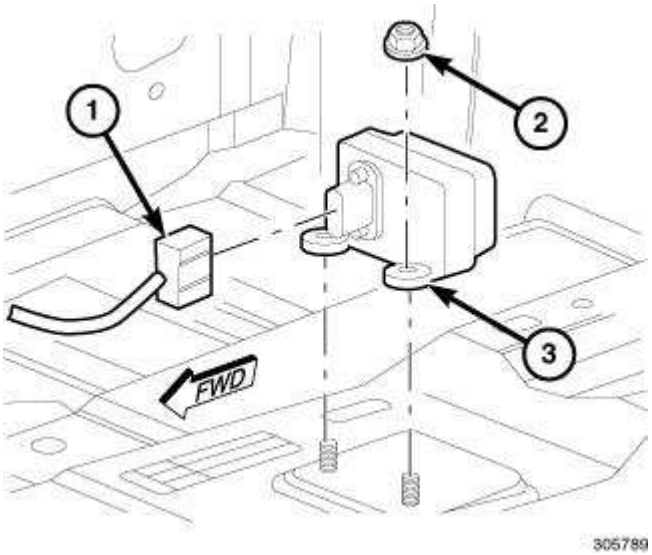

Fig. 7: DYNAMICS SENSOR MOUNTING
Courtesy of CHRYSLER LLC

1. Install dynamics sensor (3) over studs mounted to floor pan tunnel (4).
2. Install mounting nuts (2). Tighten nuts to 12 N.m (110 in. lbs.).
3. Connect wiring harness (1) connector to module (3).
4. Install floor console. Refer to **Body/Interior/CONSOLE, Floor - Installation**

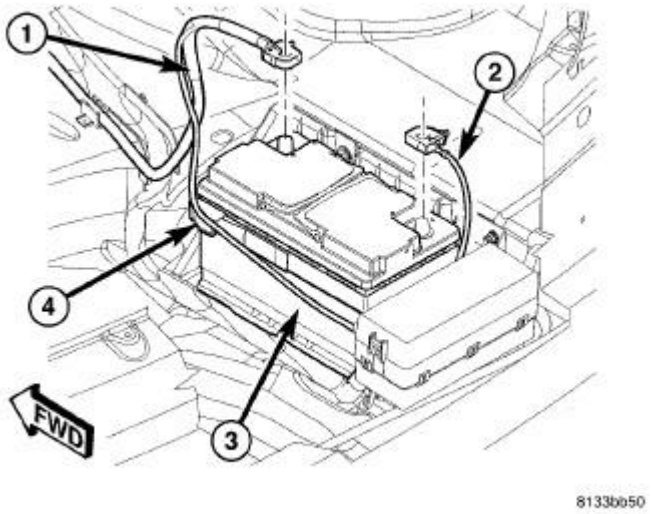

Fig. 8: BATTERY AND CABLES
Courtesy of CHRYSLER LLC

5. Connect negative battery cable (2) to battery post. It is important that this is performed properly. Refer to **Electrical - Engine Systems/Battery System - Standard Procedure**
6. Perform Verification Test and clear any faults. See **Brakes - Standard Procedure**.

SENSOR, STEERING WHEEL ANGLE

Removal

REMOVAL

To service the steering angle sensor, the steering column control module (SCCM) must be removed and disassembled. Refer to **Steering/Column/MODULE, Steering Column Control - Removal**

Installation

INSTALLATION

To service the steering angle sensor, the steering column control module (SCCM) must be assembled and installed on the column. Refer to **Steering/Column/MODULE, Steering Column**

Control - Assembly

SENSOR, WHEEL SPEED, FRONT

Description

DESCRIPTION

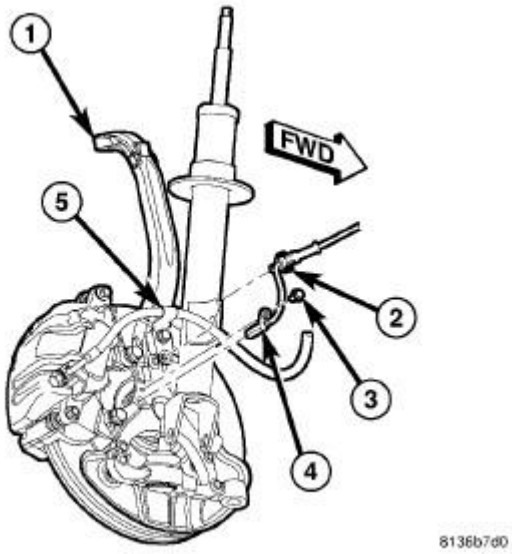

Fig. 9: WHEEL SPEED SENSOR AT FRONT KNUCKLE
Courtesy of CHRYSLER LLC

One wheel speed sensor is mounted to each knuckle. The wheel speed sensor, using a tone wheel attached to the hub and bearing as a trigger mechanism, communicates with the Antilock Brake Module, informing it of that wheel's speed.

The head of the front wheel speed sensor mounts to the inside of the knuckle.

Removal

REMOVAL

1. Raise and support the vehicle. Refer to **Vehicle Quick Reference/Hoisting - Standard Procedure** .

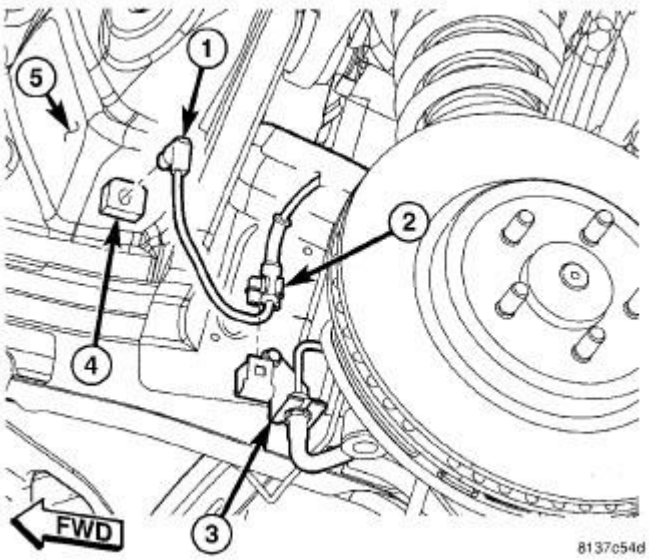

Fig. 10: WHEEL SPEED SENSOR AT BODY CONNECTOR
Courtesy of CHRYSLER LLC

2. Remove the sensor cable routing clip (2) from the brake hose bracket (3).

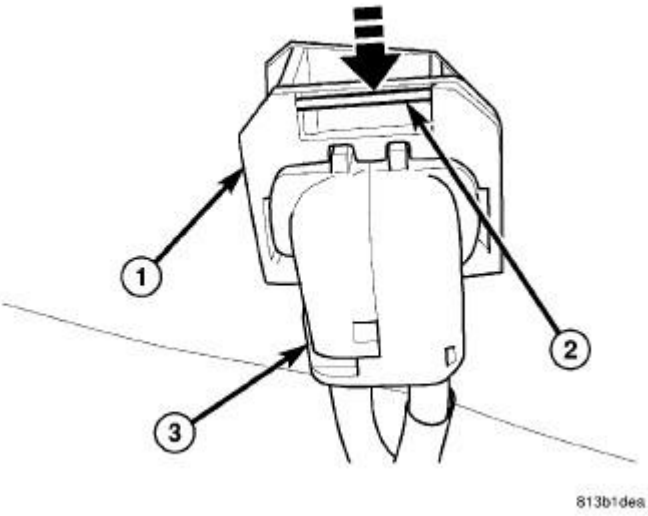

Fig. 11: RELEASE WHEEL SPEED SENSOR CONNECTOR
Courtesy of CHRYSLER LLC

NOTE: In the following step, to release the sensor connector (3) from the body wiring harness (1), move the retaining clip (2) as shown in illustration, then pull the sensor connector outward.

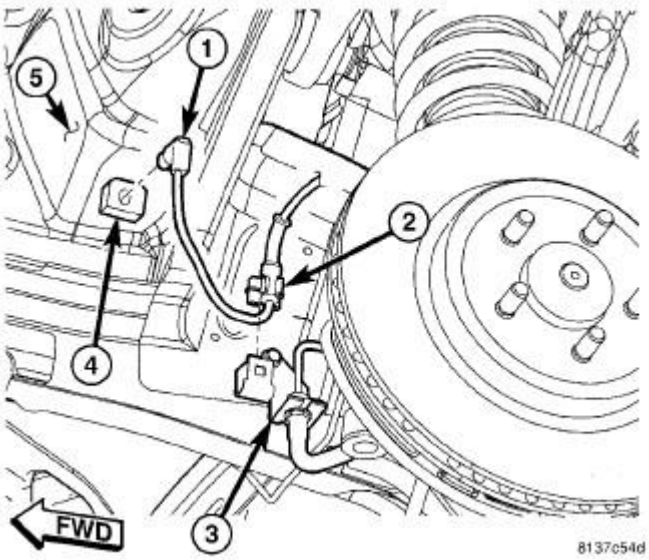

Fig. 12: WHEEL SPEED SENSOR AT BODY CONNECTOR
Courtesy of CHRYSLER LLC

3. Remove the sensor connector (1) from the body wiring harness connector (4).

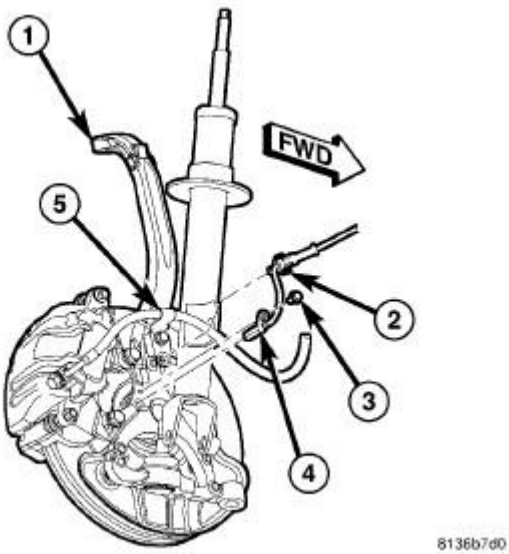

Fig. 13: WHEEL SPEED SENSOR AT FRONT KNUCKLE
Courtesy of CHRYSLER LLC

4. Remove the screw (3) fastening the wheel speed sensor to knuckle (1).
5. Pull the sensor head (4) out of the knuckle.
6. Remove the wheel speed sensor cable routing clip (2) from the brake hose routing bracket (5).

Installation

INSTALLATION

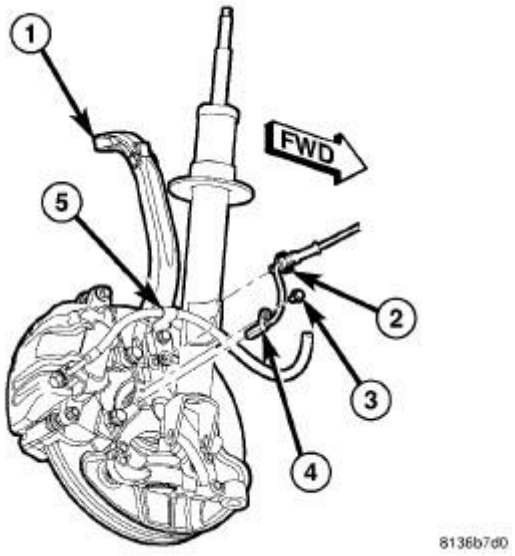

Fig. 14: WHEEL SPEED SENSOR AT FRONT KNUCKLE
Courtesy of CHRYSLER LLC

1. Install wheel speed sensor head (4) into knuckle and install mounting screw (3). Tighten screw to 11 N.m (97 in. lbs.).
2. Attach wheel speed sensor cable and routing clip (2) to brake hose routing bracket (5).

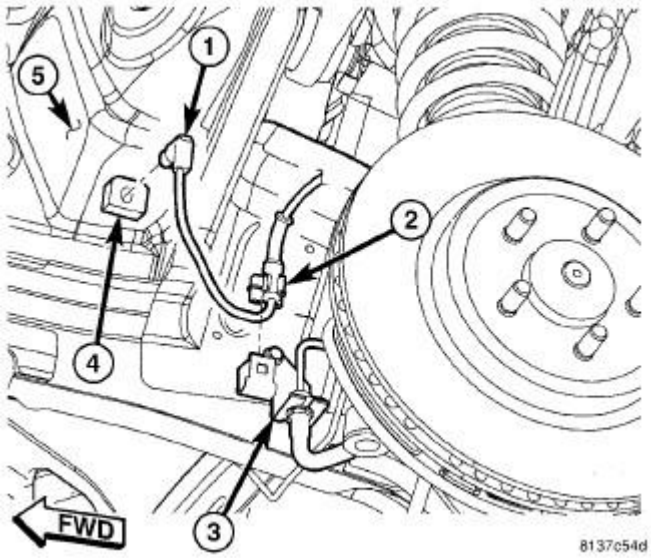

Fig. 15: WHEEL SPEED SENSOR AT BODY CONNECTOR
Courtesy of CHRYSLER LLC

3. Attach sensor cable routing clip (2) to brake hose bracket (3).

4. Connect sensor connector (1) to body wiring harness connector (4). When installing connector, make sure retaining clip on body connector is properly in place and sensor connector cannot be pulled out.
5. Lower vehicle.
6. Perform Verification Test and clear any faults. See **Brakes - Standard Procedure**.

SENSOR, WHEEL SPEED, REAR

Description

DESCRIPTION

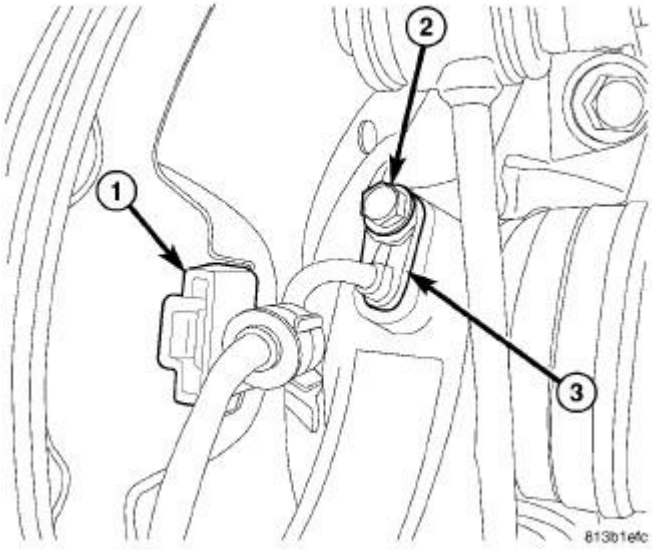

Fig. 16: WHEEL SPEED SENSOR AT REAR KNUCKLE
Courtesy of CHRYSLER LLC

One wheel speed sensor (3) is mounted to the rear of each rear knuckle. The wheel speed sensor, using a tone wheel attached to the rear axle half shaft as a trigger mechanism, communicates with the Antilock Brake Module, informing it of that wheel's speed.

Removal

REMOVAL

1. Raise and support vehicle. Refer to **Vehicle Quick Reference/Hoisting - Standard Procedure**

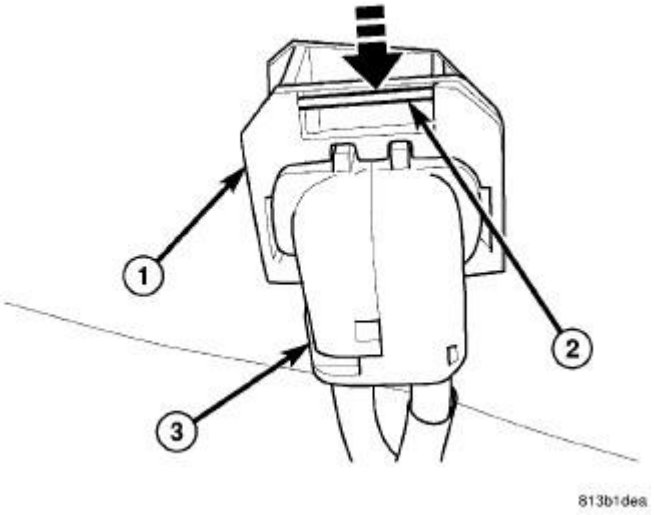

Fig. 17: RELEASE WHEEL SPEED SENSOR CONNECTOR
Courtesy of CHRYSLER LLC

NOTE: To release sensor connector from body wiring harness connector (1) in following step, move retaining clip (2) as indicated here, then pull sensor connector (3) outward.

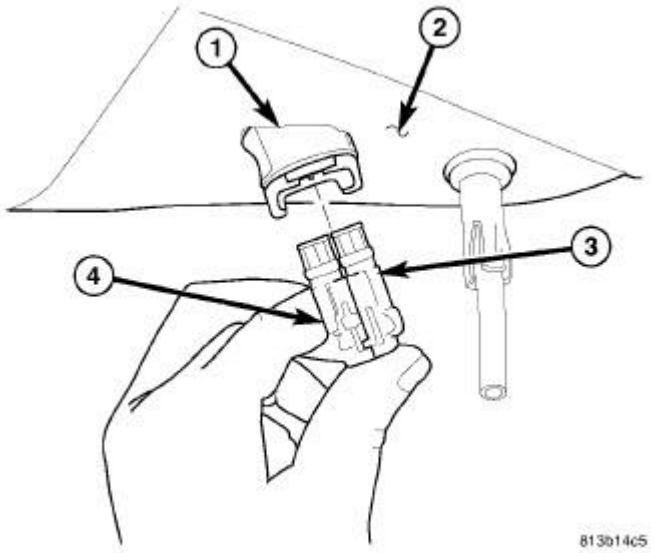

Fig. 18: SENSOR CONNECTION TO BODY CONNECTOR
Courtesy of CHRYSLER LLC

2. Remove sensor connectors (3 and 4) from body wiring harness connector (1) located in luggage compartment floor pan (2).
3. Separate left sensor connector (4) from right sensor connector (3).

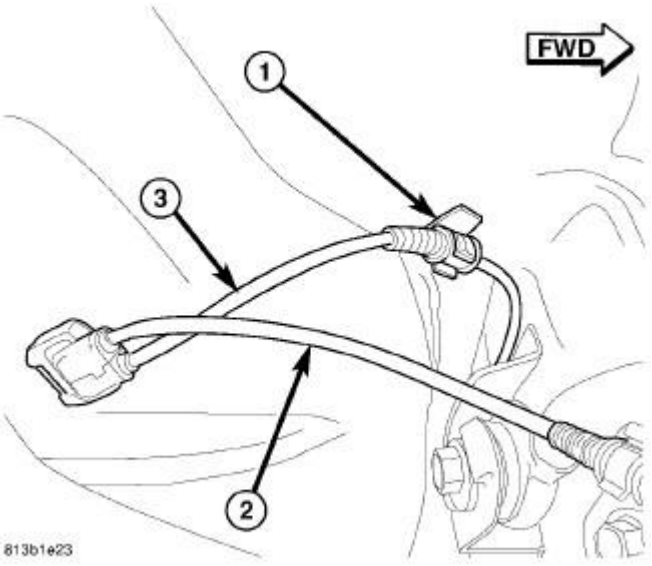

Fig. 19: LEFT/RIGHT REAR WHEEL SPEED SENSOR ROUTING
Courtesy of CHRYSLER LLC

4. If removing left sensor, unclip sensor cable (3) from routing clip near body connector (1).

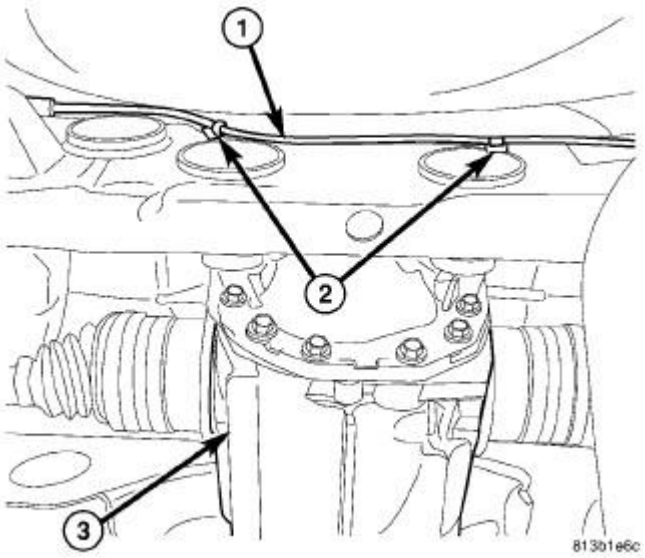

Fig. 20: LEFT WSS ROUTING OVER REAR DIFFERENTIAL
Courtesy of CHRYSLER LLC

5. If removing left sensor, unclip sensor cable (1) from routing clips (2) along rear of crossmember near rear differential (3).

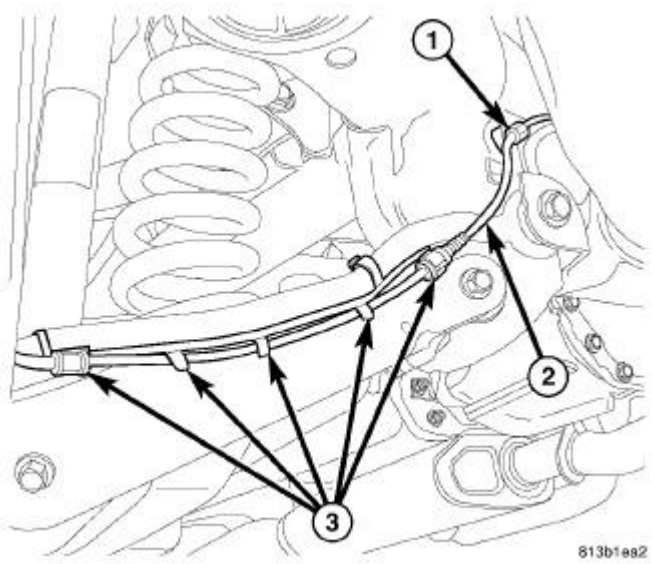

Fig. 21: WSS ROUTING ALONG LEFT TOE LINK
Courtesy of CHRYSLER LLC

6. If removing left sensor, unclip sensor cable (2) from routing clip (1) above toe link mount on rear crossmember.
7. Unclip sensor cable (2) from routing clips (3) along toe link.

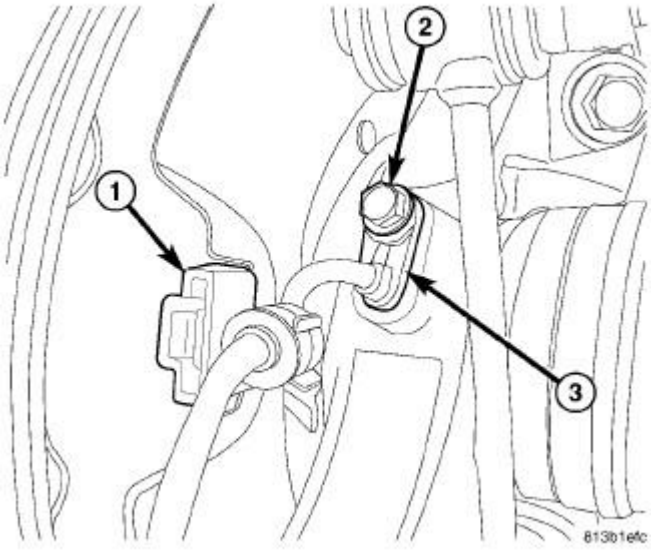

Fig. 22: WHEEL SPEED SENSOR AT REAR KNUCKLE
Courtesy of CHRYSLER LLC

8. Unclip sensor cable at rear brake rotor shield (1).
9. Remove screw (2) fastening sensor head (3) to rear knuckle.
10. Remove wheel speed sensor.

Installation

INSTALLATION

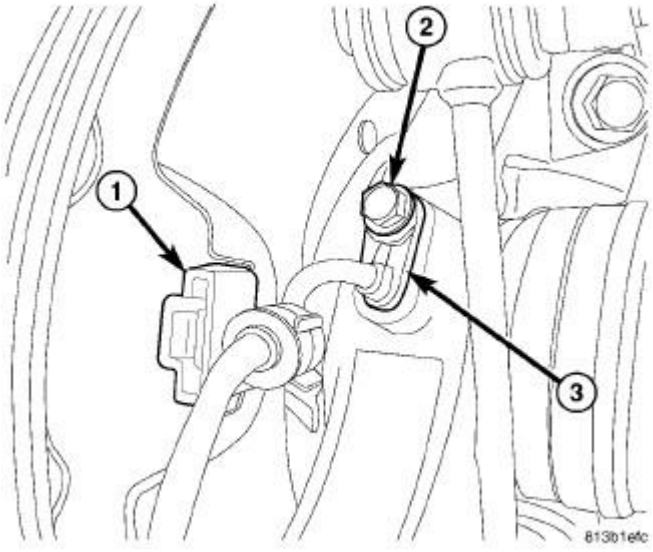

Fig. 23: WHEEL SPEED SENSOR AT REAR KNUCKLE
Courtesy of CHRYSLER LLC

1. Insert wheel speed sensor head (3) into mounting hole in rear of knuckle.
2. Install screw (2) fastening sensor head (3) to rear knuckle. Tighten Screw to 11 N.m (97 in. lbs.).
3. Install sensor cable at rear brake rotor shield (1).

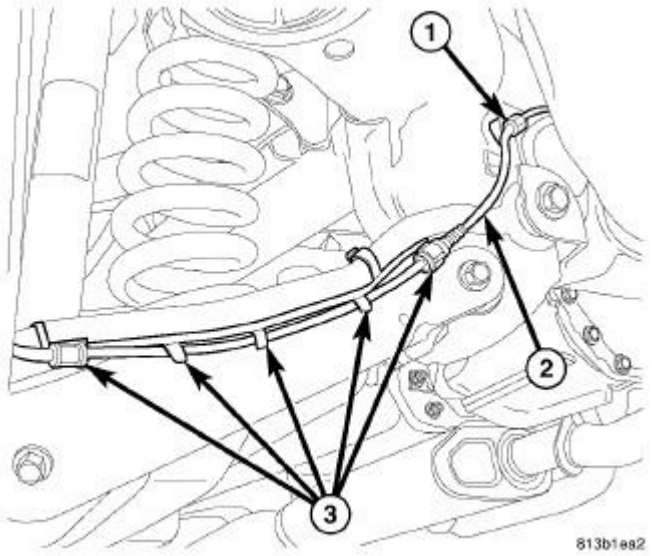

Fig. 24: WSS ROUTING ALONG LEFT TOE LINK
Courtesy of CHRYSLER LLC

4. Clip sensor cable (2) to routing clips (3) along toe link.
5. If installing left sensor, clip sensor cable (2) to routing clip (1) above toe link mount on rear crossmember.

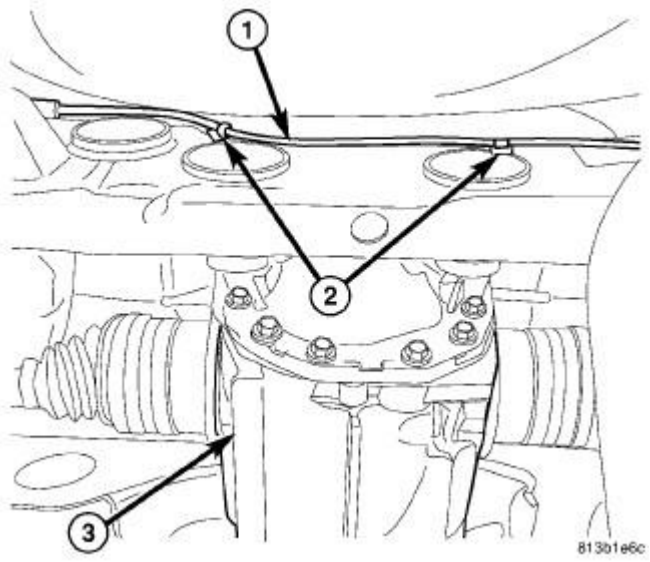

Fig. 25: LEFT WSS ROUTING OVER REAR DIFFERENTIAL
Courtesy of CHRYSLER LLC

6. If installing left sensor, clip sensor cable (1) to routing clips (2) along rear of crossmember near rear differential (3).

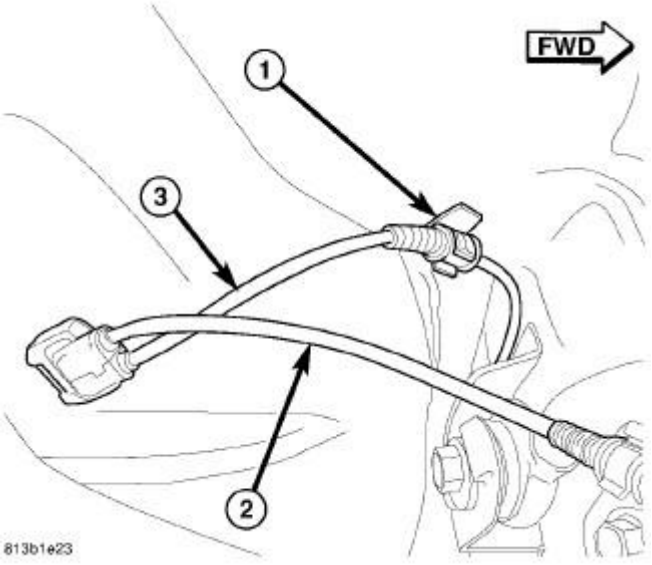

Fig. 26: LEFT/RIGHT REAR WHEEL SPEED SENSOR ROUTING
Courtesy of CHRYSLER LLC

7. If installing left sensor, clip sensor cable (3) to routing clip near body connector (1).

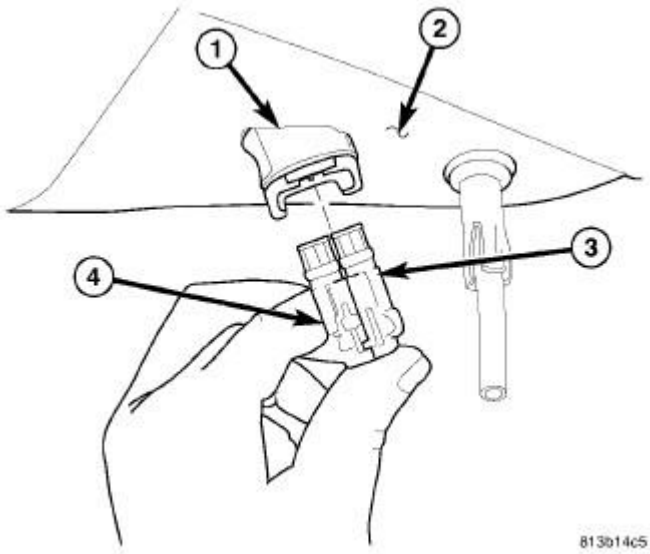

Fig. 27: SENSOR CONNECTION TO BODY CONNECTOR
Courtesy of CHRYSLER LLC

8. Match left sensor connector (4) to right sensor connector (3) to make one connector.
9. Insert sensor connectors (3 and 4) into body wiring harness connector (1) located in luggage compartment floor pan (2). When installing connector, make sure retaining clip on body connector is properly in place and sensor connector cannot be pulled out.
10. Lower vehicle.
11. Perform Verification Test and clear any faults. See **Brakes - Standard Procedure**.

SWITCH, ELECTRONIC STABILITY PROGRAM (ESP)

Description

DESCRIPTION

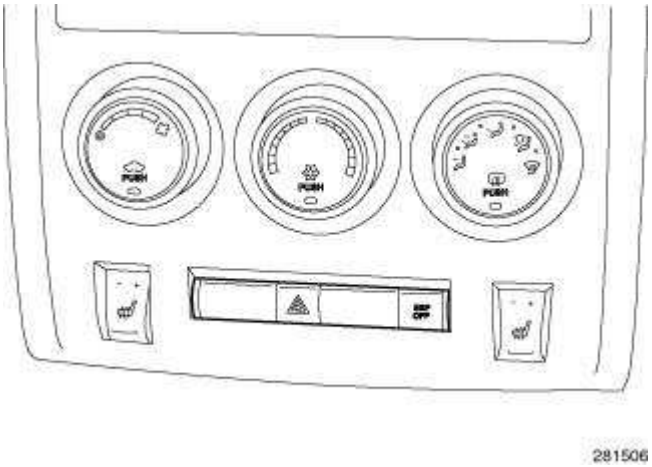

Fig. 28: Instrument Panel Switch Pod
Courtesy of CHRYSLER LLC

The ESP Off Switch is located in the Instrument Panel Switch Pod in the center of the instrument panel. The ESP Off switch turns the Electronic Stability Program off whenever the switch is depressed. Depressing the switch a second time turns the ESP back on. The switch resets itself each time the ignition is cycled.

When the ESP Off switch is depressed and released, turning ESP off, it does not completely turn the system off. The ESP system reduces torque management to a lesser amount, but ESP function can still occur if the system perceives the need.

This vehicle has what is known as three-mode ESP. When the ESP Off switch is depressed and quickly released, the system turns off ESP like any other model, but if the switch is held down for a period of five seconds or longer before releasing, the ESP system further reduces the amount of torque management provided. The system can be returned to "normal" by briefly pressing and releasing the ESP Off switch.

The ESP Off switch is serviced as part of the Instrument Panel Switch Pod.

Removal

REMOVAL

1. Using trim stick or equivalent remove the center bezel.
2. Disconnect the electrical connectors.
3. Remove the two mounting fastners.
4. Remove the switch pod.

Installation

INSTALLATION

1. Install the switch pod to the center bezel.

2. Install the two mounting fastners.
3. Connect the electrical connectors
4. Install the center bezel.

HYDRAULIC/MECHANICAL

HYDRAULIC CONTROL UNIT (HCU)

Removal

REMOVAL

To remove the HCU, the ICU must be removed and disassembled. See **Brakes/Hydraulic/Mechanical/INTEGRATED CONTROL UNIT (ICU) - Removal**. See **Brakes/Hydraulic/Mechanical/INTEGRATED CONTROL UNIT (ICU) - Disassembly**.

Installation

INSTALLATION

To install the HCU, assemble and install the ICU. See **Brakes/Hydraulic/Mechanical/INTEGRATED CONTROL UNIT (ICU) - Assembly**). See **Brakes/Hydraulic/Mechanical/INTEGRATED CONTROL UNIT (ICU) - Installation**)

INTEGRATED CONTROL UNIT (ICU)

Description

DESCRIPTION

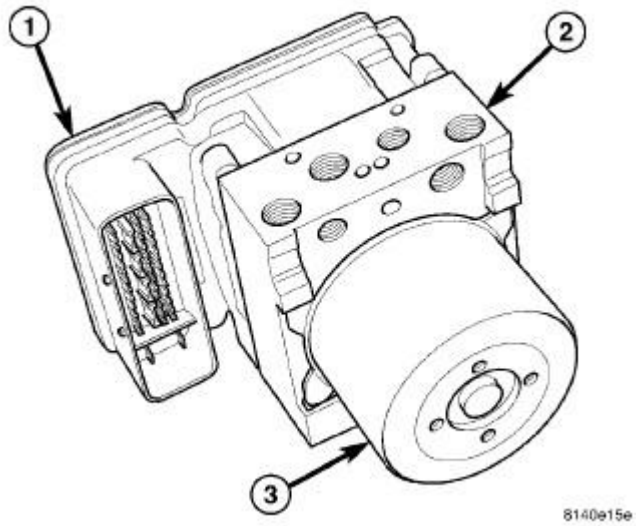

Fig. 29: Integrated Control Unit
Courtesy of CHRYSLER LLC

The Hydraulic Control Unit (HCU) (2) and the Antilock Brake Module (ABM) (1) used with this antilock brake system are combined (integrated) into one unit, which is called the Integrated Control Unit (ICU).

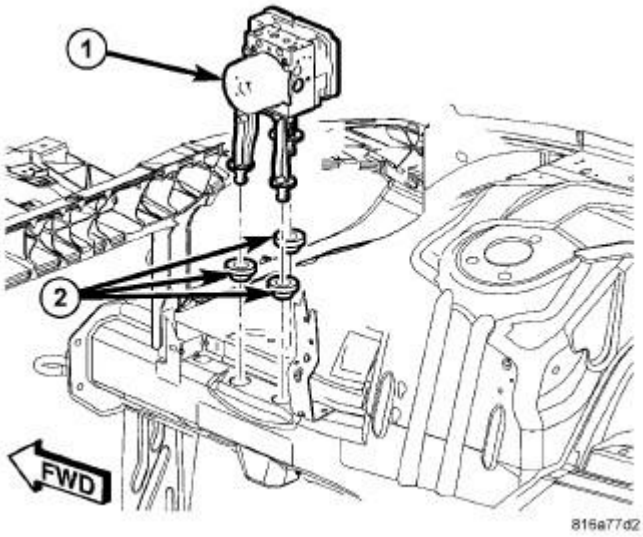

Fig. 30: ICU MOUNTING
Courtesy of CHRYSLER LLC

The ICU (1) is located in the engine compartment, mounted to a bracket that is attached to the right side rail through the use of isolation grommets (2).

The ABS with traction control ICU consists of the following components: the ABM, eight (build/decay) solenoid valves (four inlet valves and four outlet valves), two traction control solenoid valves, two hydraulic shuttle valves, valve block, fluid accumulators, a pump, and an electric pump/motor.

The replaceable components of the ICU are the HCU and the ABM. No attempt should be made to service any components of the HCU or ABM. For replacement of the ABM. Refer to **Electrical - Electronic Control Modules/Electronic Control Modules/MODULE, Anti-Lock Brake System - Removal** .

CAUTION: For Adaptive Cruise Control (ACC) equipped vehicles, the ABM and HCU are not separately serviceable. They must be replaced as an assembly.

For additional information on the ABM. Refer to **Electrical - Electronic Control Modules/Electronic Control Modules/MODULE, Anti-Lock Brake System - Description** .

Removal

REMOVAL

NOTE: Before proceeding. Refer to Brakes - Warning . Refer to Brakes - Caution .

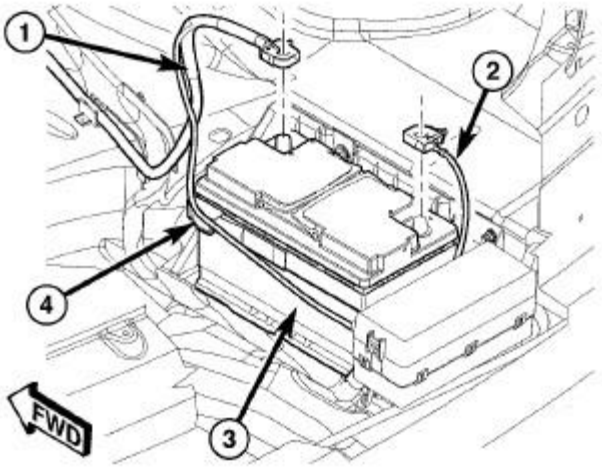

Fig. 31: BATTERY AND CABLES
Courtesy of CHRYSLER LLC

1. Disconnect and isolate battery negative cable (2) from battery post.
2. Using a brake pedal holding tool, depress brake pedal past its first inch of travel and hold it in this position. Holding pedal in this position will isolate master cylinder from hydraulic brake system and will not allow brake fluid to drain out of brake fluid reservoir while brake lines are open.

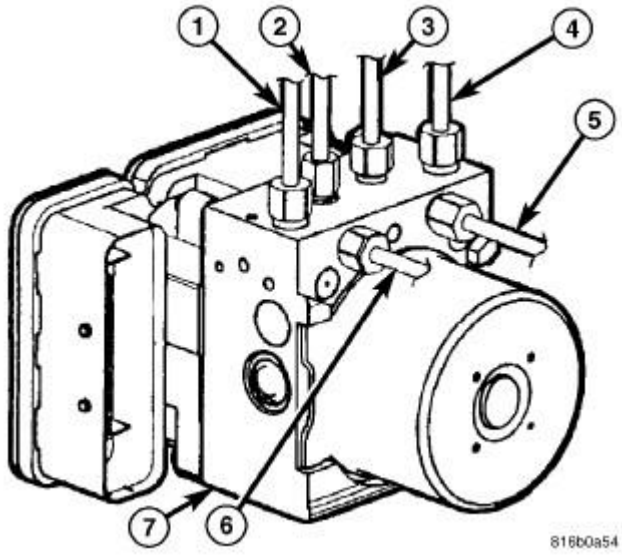

Fig. 32: Brake Tubes At ICU
Courtesy of CHRYSLER LLC

3. Remove primary (4) and secondary (1) brake tubes (from master cylinder) at hydraulic control unit (7).
4. Remove remaining brake tubes (2, 3, 5, 6) at hydraulic control unit (7).

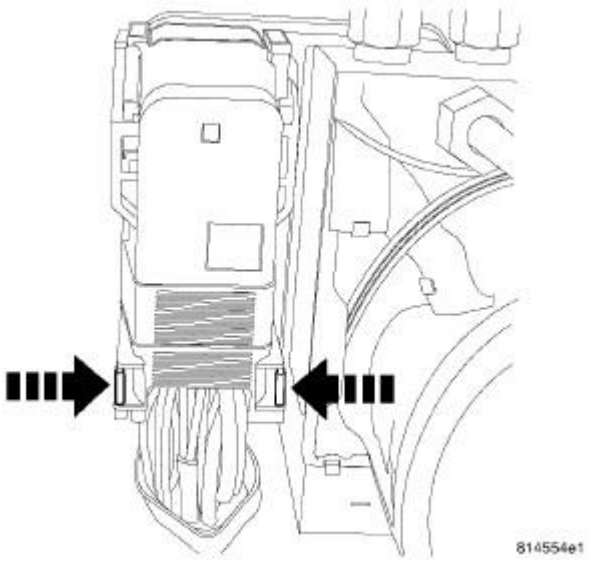

Fig. 33: ABM Connector Release Tabs
Courtesy of CHRYSLER LLC

NOTE: Use this figure in the following step to release the ABM harness connector cover. It shows the location of the release tabs.

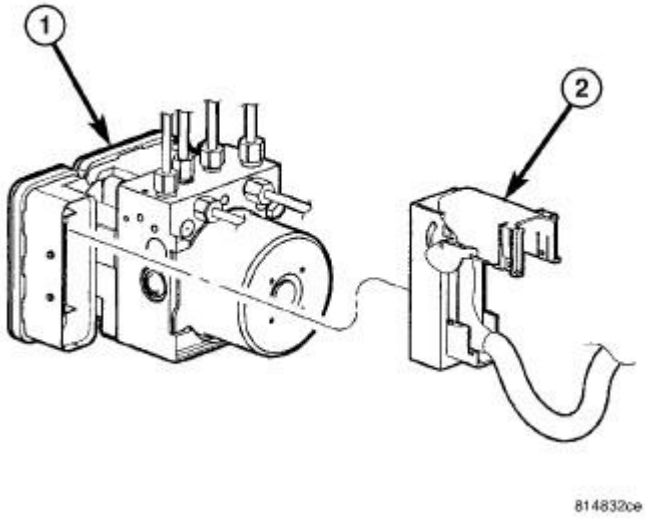

Fig. 34: Wiring Harness Connector At ABM
Courtesy of CHRYSLER LLC

5. Disconnect ABM harness connector from antilock brake module (ABM). To do so:
   a. Depress tabs on each side of connector cover, then
   b. Pull outward and upward on lower half of cover until it locks into position pointing straight outward (2). Connector can then be pulled straight outward off ABM (1).

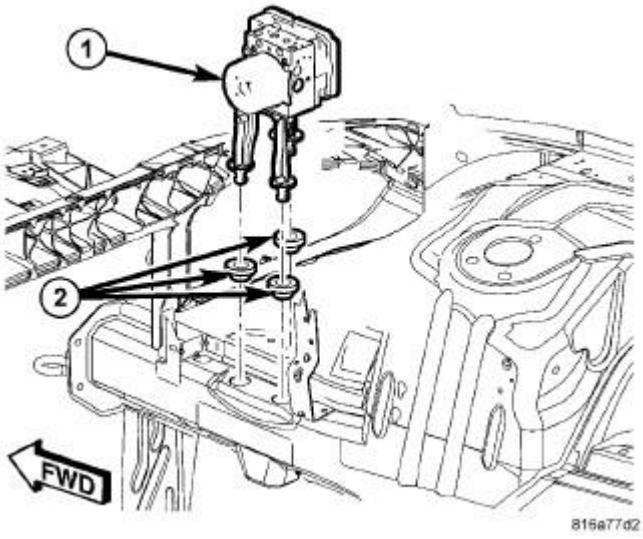

Fig. 35: ICU MOUNTING
Courtesy of CHRYSLER LLC

6. Pull up on unit (1) and remove from mounting grommets (2) in body side rail.

Disassembly

DISASSEMBLY

1. Remove two screws attaching the mounting bracket to the HCU. Remove the bracket.

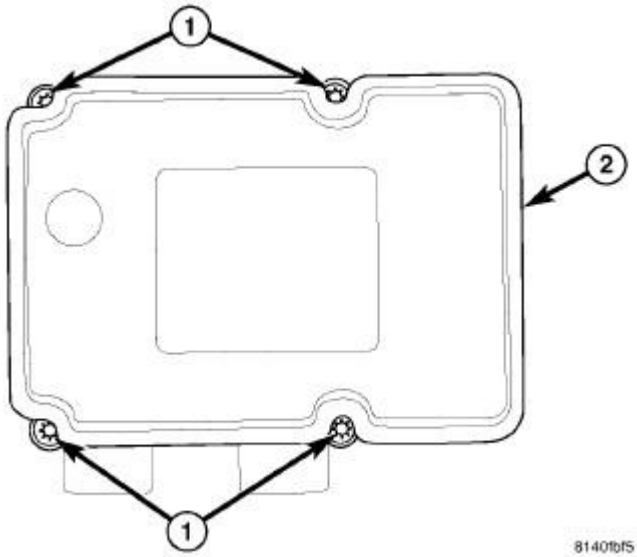

Fig. 36: ABM Mounting Screws - With Traction Control
Courtesy of CHRYSLER LLC

2. Remove four screws (1) attaching ABM (2) to HCU.

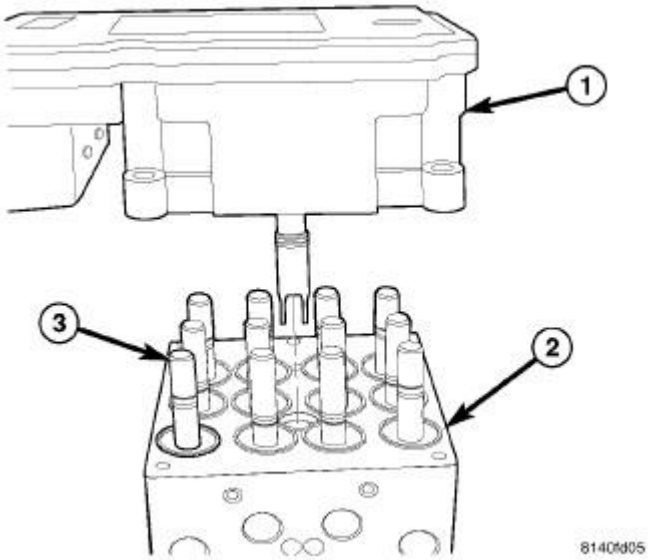

Fig. 37: ABM Assembly To HCU
Courtesy of CHRYSLER LLC

3. Separate ABM (1) from HCU (2).

Assembly

ASSEMBLY

1. Clean any debris off the mating surfaces of the HCU and ABM.

CAUTION: When installing new O-rings or solenoid valve stem seals, do not use any type of lubricant.

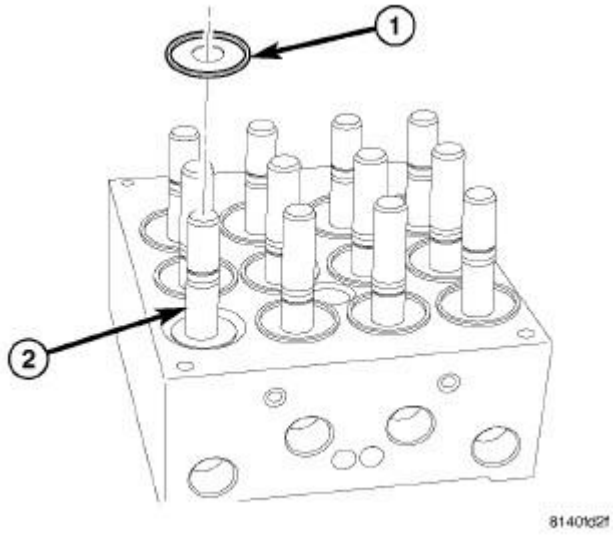

Fig. 38: Solenoid Valve Seal
Courtesy of CHRYSLER LLC

2. If the seals (1) on the solenoid valve stems (2) are not new, replace them all. Each of the solenoid valve stem seals must be new to keep out moisture and debris; **do not reuse solenoid valve stem seals** .

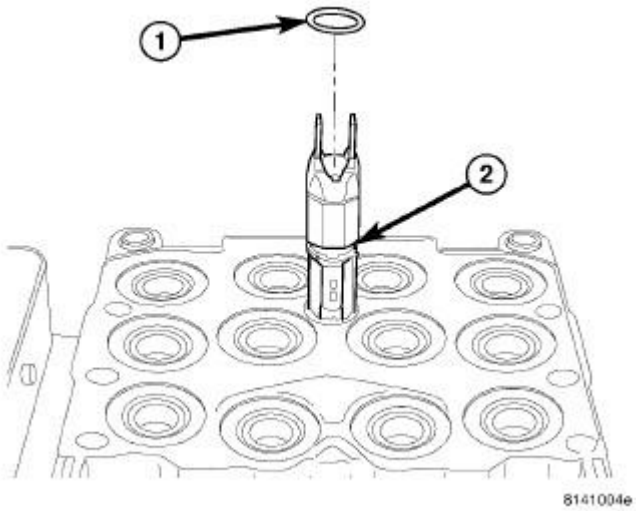

Fig. 39: Internal Pump Connector O-Ring

Courtesy of CHRYSLER LLC

3. Replace the pump/motor connector O-ring (1) if it is not new. Be sure the O-ring is properly seated in the mounting groove (2).

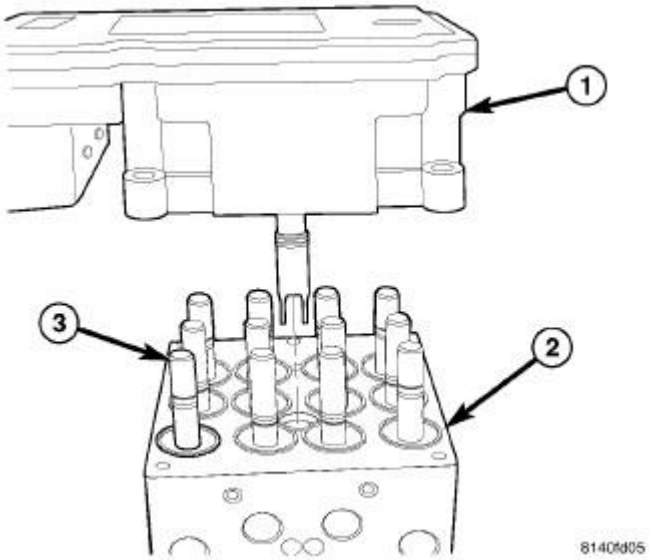

Fig. 40: ABM Assembly To HCU
Courtesy of CHRYSLER LLC

4. Align components and install the ABM (1) on the HCU (2).

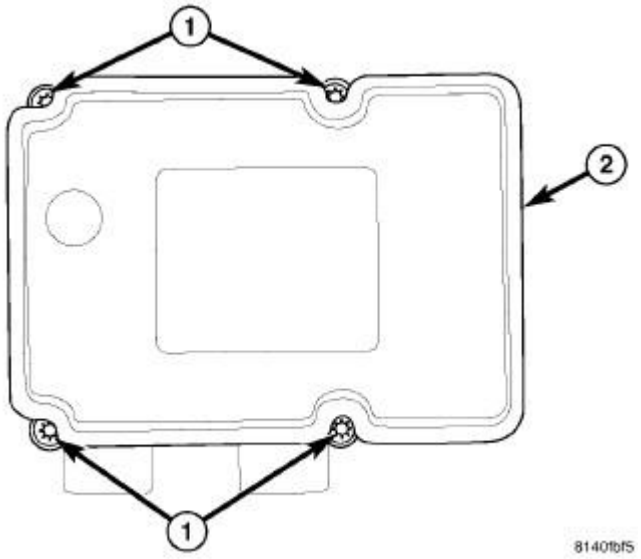

Fig. 41: ABM Mounting Screws - With Traction Control
Courtesy of CHRYSLER LLC

5. Install the four screws (1) attaching the ABM (2) to the HCU. Tighten the mounting screws to 2

N.m (17 in. lbs.).

6. Attach the mounting bracket to the HCU. Install two mounting bracket attaching screws and tighten to 11 N.m (97 in. lbs.).
7. Install the ICU in the vehicle. See **Brakes/Hydraulic/Mechanical/INTEGRATED CONTROL UNIT (ICU) - Installation**)

Installation

INSTALLATION

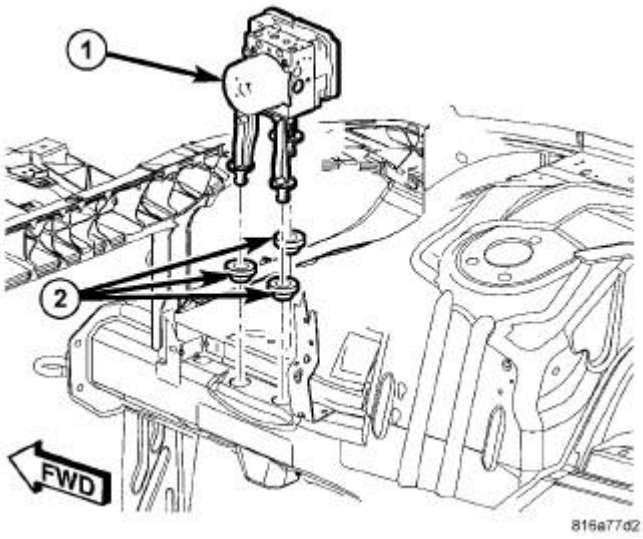

Fig. 42: ICU MOUNTING
Courtesy of CHRYSLER LLC

1. Install unit (1), pushing mounting bracket down into mounting grommets (2) located in body side rail.

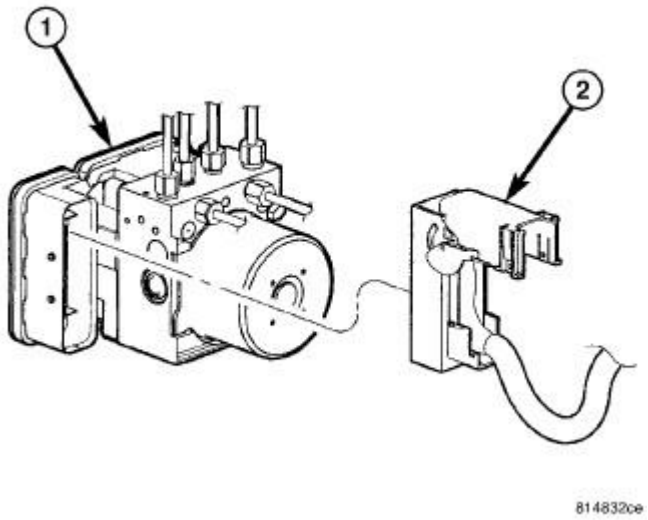

Fig. 43: Wiring Harness Connector At ABM
Courtesy of CHRYSLER LLC

CAUTION: Before installing the ABM harness connector (2) on the ABM (1), be sure the seal is properly installed in the connector.

2. Insert ABM harness connector (2) into socket of ABM (1) and close cover, locking connector in place.

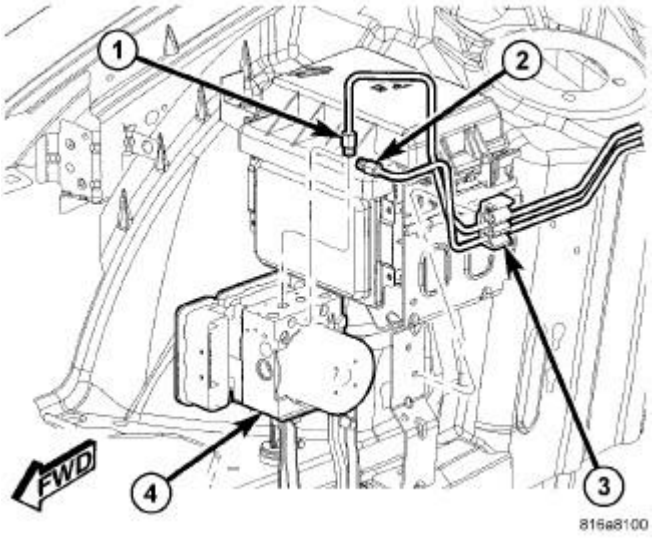

Fig. 44: LEFT REAR AND RIGHT REAR BRAKE TUBES AT ICU
Courtesy of CHRYSLER LLC

3. Install left (2) and right (1) rear brake tubes at hydraulic control unit (4). Tighten tube nuts to 20

N.m (177 in. lbs.) torque.

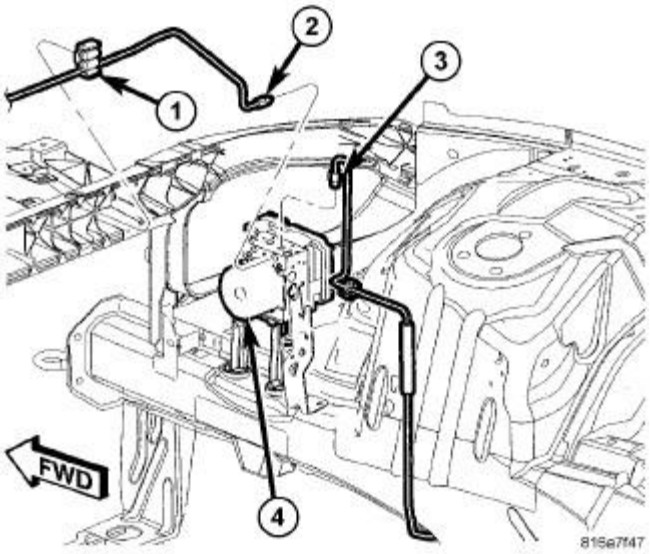

Fig. 45: LEFT FRONT AND RIGHT FRONT BRAKE TUBES AT ICU
Courtesy of CHRYSLER LLC

4. Install left (2) and right (3) brake tubes at hydraulic control unit (4). Tighten tube nuts to 20 N.m (177 in. lbs.) torque.

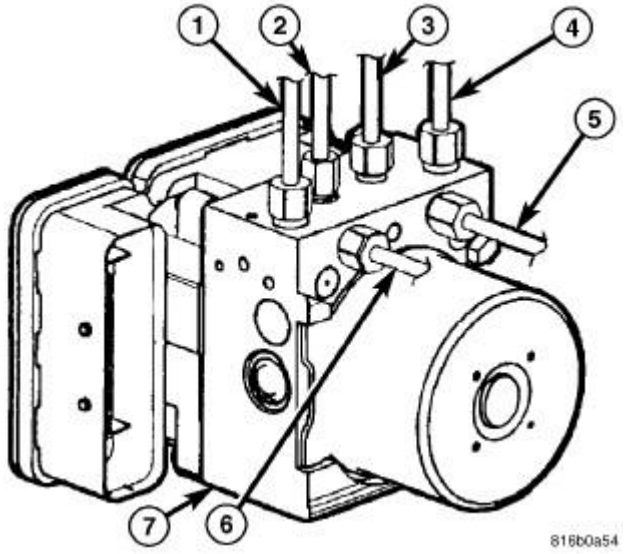

Fig. 46: Brake Tubes At ICU
Courtesy of CHRYSLER LLC

5. Install primary (4) and secondary (1) brake tubes at hydraulic control unit (7). Tighten tube nuts to 20 N.m (177 in. lbs.) torque.

6. Remove brake pedal holding tool.

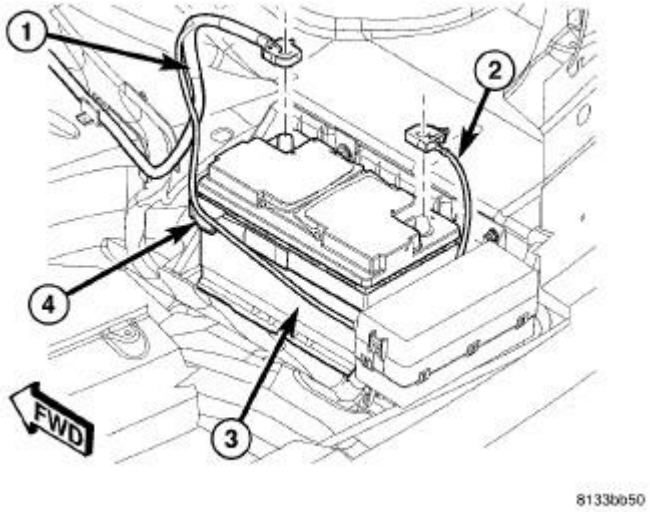

Fig. 47: BATTERY AND CABLES
Courtesy of CHRYSLER LLC

7. Connect battery negative cable (2) to battery post. It is important that this is performed properly. Refer to **Electrical - Engine Systems/Battery System - Standard Procedure**

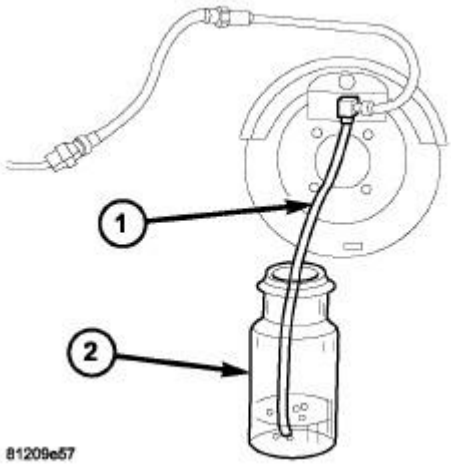

Fig. 48: BLEED HOSE SET UP
Courtesy of CHRYSLER LLC

8. Fill and bleed (1) base brake hydraulic system and ABS. See **STANDARD PROCEDURE** and **Brakes - Standard Procedure**.
9. Perform Diagnostic Verification Test and clear any faults. See **Brakes - Standard Procedure**.

ACCESSORIES AND EQUIPMENT

Audio & Video - Service Information - Challenger

DESCRIPTION

DESCRIPTION

Several radios are offered. The audio system uses a CAN B bus Ignition ON message so that the system will only operate when the ignition switch is in the RUN or ACCESSORY/ACCESSORY DELAY positions.

The audio system includes the following components:

- Amplifier
- Antenna (Radio, Navigation, Satellite)
- Radio noise suppression components
- Radio
- Speakers

Certain functions and features of the audio/video system rely upon resources shared with other electronic modules in the vehicle over the CAN bus network. For diagnosis of the CAN bus network, the use of a scan tool and the proper Diagnostic Procedures information is recommended.

For complete circuit diagrams, refer to the appropriate wiring information.

DIAGNOSIS AND TESTING

AUDIO

Any diagnosis of the Audio system should begin with the use of scan tool. For information on the use of the scan tool, refer to the appropriate Diagnostic Service information.

For complete circuit diagrams, refer to the appropriate wiring information.

> **WARNING: On vehicles equipped with airbags, refer to electrical, restraints before attempting any steering wheel, steering column, or instrument panel component diagnosis or service. Failure to take the proper precautions could result in accidental airbag deployment and possible personal injury.**

AUDIO SYSTEM DIAGNOSIS

CONDITION	POSSIBLE CAUSE	CORRECTION
NO AUDIO	1. Fuse inoperative.	1. Check radio fuses in integrated power module (IPM). Replace fuses, if required.

-	2. Radio connector damaged.	2. Check for loose or corroded radio connector. Repair, if required.
-	3. Wiring damaged.	3. Check for battery voltage at radio connector. Repair wiring, if required.
-	4. Ground damaged.	4. Check for continuity between radio chassis and a known good ground. There should be continuity. Repair ground, if required.
-	5. Radio inoperative.	5. Exchange or replace radio, if required.
-	6. Amplifier inoperative.	6. Perform diagnosis on amplifier. Replace as necessary.
NO DISPLAY	1. Fuse inoperative.	1. Check radio fuses. Replace fuses, if required.
-	2. Radio connector damaged.	2. Check for loose or corroded radio connector. Repair, if required.
-	3. Wiring damaged.	3. Check for battery voltage at radio connector. Repair wiring, if required.
-	4. Ground damaged.	4. Check for continuity between radio chassis and a known good ground. There should be continuity. Repair ground, if required.
-	5. Radio inoperative.	5. Exchange or replace radio, if required.
NO MEMORY	1. Fuse inoperative.	1. Check ignition-off draw fuse. Replace fuse, if required.
-	2. Radio connector damaged.	2. Check for loose or corroded radio connector. Repair, if required.
-	3. Wiring damaged.	3. Check for battery voltage at radio connector. Repair wiring, if required.
-	4. Ground damaged.	4. Check for continuity between radio chassis and a known good ground. There should be continuity. Repair ground, if required.
-	5. Radio inoperative.	5. Exchange or replace radio, if required.
POOR RADIO RECEPTION	1. Antenna or cable damaged or inoperative.	1. Refer to antenna diagnosis. Repair or replace antenna, if required.
	2. Ground damaged.	2. Check for continuity between radio chassis and a known good ground. There should be continuity. Repair ground, if required.
-	3. Radio inoperative.	3. Exchange or replace radio, if required.

-	4. Poor antenna connection at radio or in line.	4. Verify proper connection.
-	5. Faulty rear window defogger.	5. Verify that the rear defogger grid is functioning properly, repair as necessary. Refer to **Electrical - Heated/Cooled Systems/Heated Glass - Diagnosis and Testing** .
SOUND DISTORTION (VIBRATION FROM SPEAKER AREA, BUZZING - HUMMING	1. Door trim panel loose or missing fasteners.	1. Inspect door trim panel and correct as necessary. Replace any missing fasteners.
	2. Water shield loose or misaligned.	2. Inspect water shield and adjust as required.
	3. Items placed in door trim panel map pockets vibrating or moving from side to side.	3. Remove items from door trim panel. Ensure that vibration is no longer present.
NO COMPACT DISC OPERATION	1. CD damaged.	1. Insert known good CD and test operation. Avoid the use of "home maid" CD's with adhesive labels. The labels may cause disc to become jammed in the radio.
-	2. Foreign material on CD.	2. Clean CD and test operation.
-	3. Condensation on CD or optics.	3. Allow temperature of vehicle interior to stabilize and test operation.
-	4. Radio inoperative.	4. Exchange or replace radio, if required.

AMPLIFIER

DESCRIPTION

DESCRIPTION

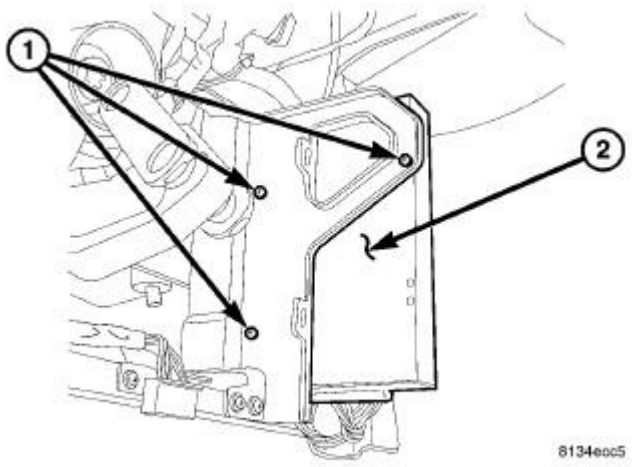

Fig. 1: Amplifier
Courtesy of CHRYSLER LLC

The amplifier (2) is available in three ratings: 276 watt, 322 watt, and 368 watt. The amplifier is mounted to the left of the steering column under the instrument panel.

OPERATION

OPERATION

The amplifier receives fused battery current from a fuse in the rear Power Distribution Center (PDC) at all times. The internal circuitry of the amplifier switches the amplifier ON based upon a CAN bus message that is received from the radio receiver whenever the radio is turned on. The amplifier receives the sound signal inputs from the left and right rear outputs of the radio, then sends the amplified speaker outputs for each of those channels to the speakers.

DIAGNOSIS AND TESTING

AMPLIFIER

Any diagnosis of the Audio system should begin with the use of a scan tool and the appropriate Diagnostic Service information.

Refer to the appropriate wiring information.

The amplifier unit should be checked if there is no sound output noted from the speakers. For diagnosis of the power amplifier. See **Electrical - Audio and Video/Audio and Video/SPEAKER - Diagnosis and Testing**.

REMOVAL

REMOVAL

INSTRUMENT PANEL AMPLIFIER	Refer to the **INSTRUMENT PANEL AMPLIFIER** removal procedure.
REAR SHELF AMPLIFIER (SRT ONLY)	Refer to the **REAR SHELF AMPLIFIER (RC7 sales code)** removal procedure.

INSTRUMENT PANEL AMPLIFIER

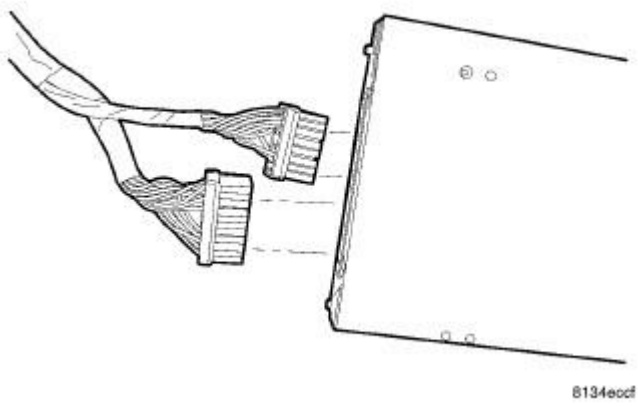

Fig. 2: Electrical Harness Connectors
Courtesy of CHRYSLER LLC

NOTE: Perform a battery reconnect procedure any time the battery has been disconnected. Refer to Electrical - Engine Systems/Battery System - Standard Procedure .

1. Disconnect and isolate battery negative cable.
2. Remove the steering column opening cover. Refer to **Body/Instrument Panel/COVER, Steering Column Opening - Removal**
3. Disconnect electrical connectors.

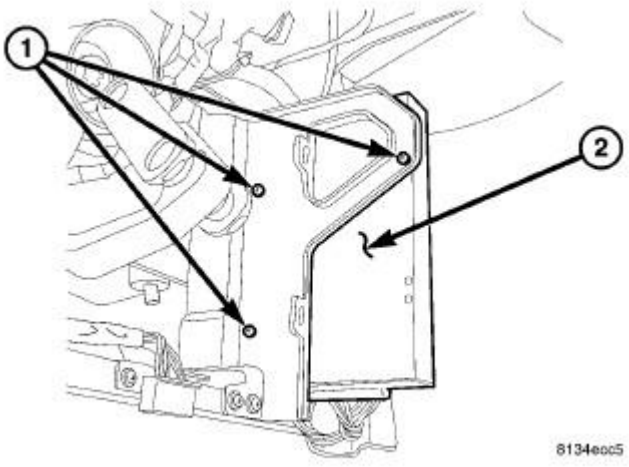

Fig. 3: Amplifier
Courtesy of CHRYSLER LLC

4. Remove the mounting fasteners (1).
5. Remove the amplifier (2).

REAR SHELF AMPLIFIER (RC7 sales code)

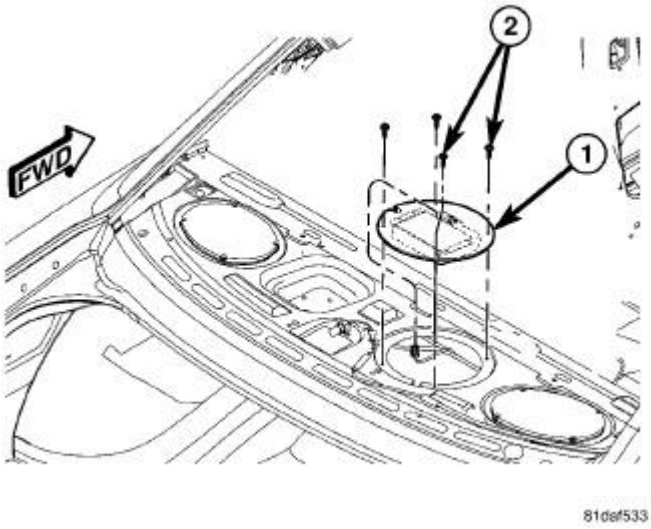

Fig. 4: Rear Shelf Amplifier
Courtesy of CHRYSLER LLC

1. Disconnect and isolate the battery negative cable.
2. Remove the rear shelf trim. Refer to **Body/Interior/PANEL, Rear Shelf - Removal** .
3. Remove the four mounting fasteners (2).
4. Disconnect the electrical connector.

5. Remove the amplifier from the mounting plate (1).

INSTALLATION

INSTALLATION

INSTRUMENT PANEL AMPLIFIER	Refer to the **INSTRUMENT PANEL AMPLIFIER** installation procedure.
REAR SHELF AMPLIFIER (RC7 sales code)	Refer to the **REAR SHELF AMPLIFIER (RC7 sales code)** installation procedure.

INSTRUMENT PANEL AMPLIFIER

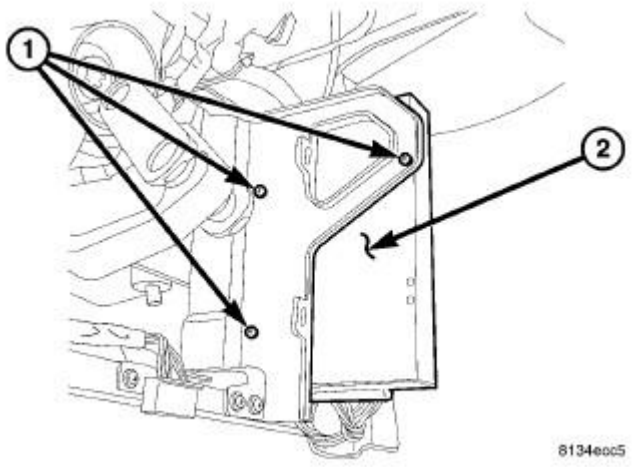

Fig. 5: Amplifier
Courtesy of CHRYSLER LLC

NOTE: Perform a battery reconnect procedure anytime the battery has been disconnected. Refer to Electrical - Engine Systems/Battery System - Standard Procedure .

1. Position the amplifier (2) and secure with the fasteners (1).

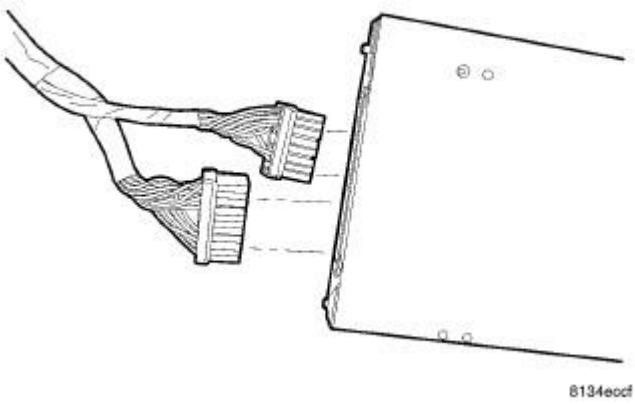

Fig. 6: Electrical Harness Connectors
Courtesy of CHRYSLER LLC

2. Connect the electrical connectors.
3. Install the steering column opening cover. Refer to **Body/Instrument Panel/COVER, Steering Column Opening - Installation** .
4. Connect the negative battery cable

REAR SHELF AMPLIFIER (RC7 sales code)

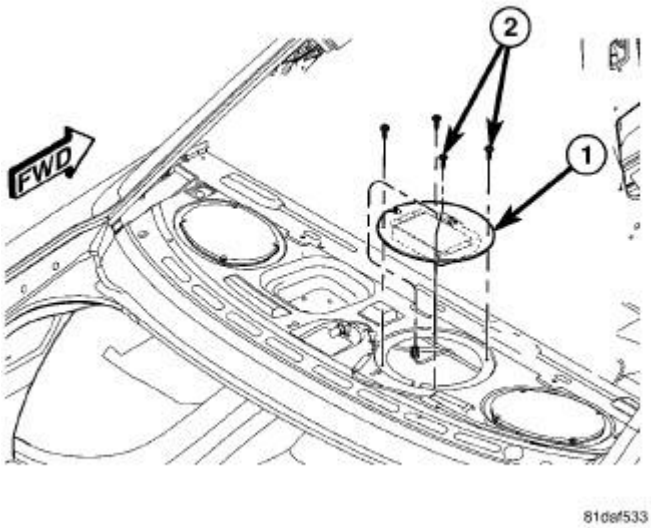

Fig. 7: Rear Shelf Amplifier
Courtesy of CHRYSLER LLC

NOTE: **Perform a battery reconnect procedure anytime the battery has been disconnected. Refer to Electrical - Engine Systems/Battery System - Standard Procedure .**

1. Install the amplifier to the mounting plate (1).
2. Connect the electrical connector.
3. Install the four mounting fasteners (2).
4. Install the rear shelf trim. Refer to **Body/Interior/PANEL, Rear Shelf - Installation** .
5. Connect the negative battery cable.

ANTENNA, SATELLITE

REMOVAL

REMOVAL

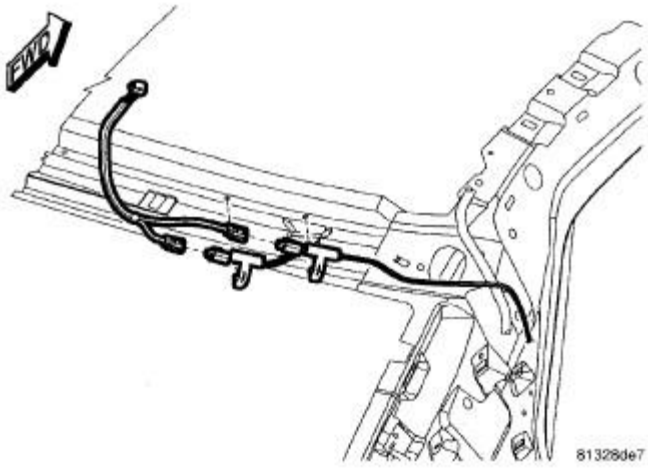

Fig. 8: Wire Harness Connectors
Courtesy of CHRYSLER LLC

NOTE: A battery reconnect procedure must be performed anytime the battery has been disconnected. Refer to Electrical - Engine Systems/Battery System - Standard Procedure .

1. Disconnect and isolate the battery negative cable.
2. Lower the rear portion of the headliner as necessary to access underside of antenna
3. Disconnect the wire harness connectors from the antenna.

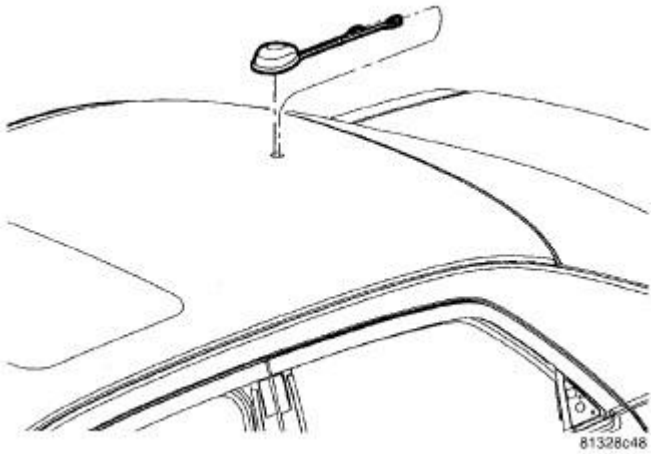

Fig. 9: Satellite Radio Antenna
Courtesy of CHRYSLER LLC

4. Remove the mounting fastener.
5. From inside the vehicle, and using a flat bladed tool, depress one of the retaining tabs on the antenna. Push up the one side of the antenna connector through the roof panel. Depress the other side of the connector and remove the antenna.

INSTALLATION

INSTALLATION

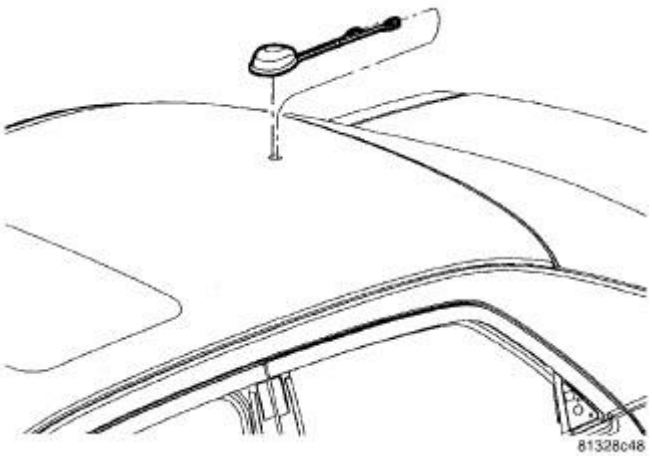

Fig. 10: Satellite Radio Antenna
Courtesy of CHRYSLER LLC

NOTE: **A battery reconnect procedure must be performed anytime the battery has been disconnected. Refer to Electrical - Engine Systems/Battery System - Standard Procedure .**

1. Insert wire harness through hole in roof panel. Press antenna into position until both retainers engage into position.
2. Install and tighten mounting fastener.

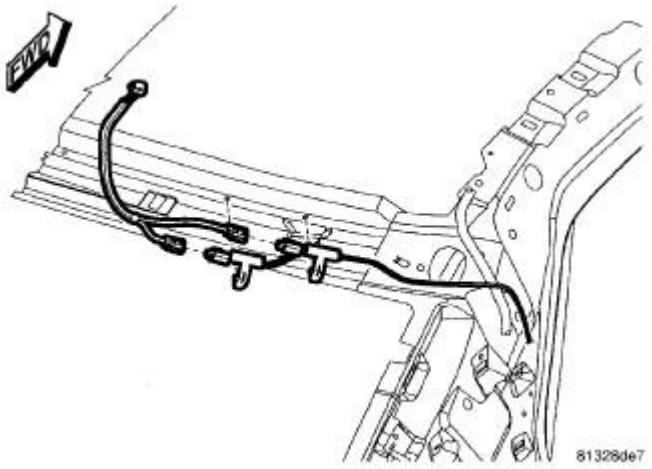

Fig. 11: Wire Harness Connectors
Courtesy of CHRYSLER LLC

3. Connect wire harness connectors to antenna.
4. Install headliner.
5. Connect battery negative cable.

BODY AND CABLE, ANTENNA

REMOVAL

REMOVAL

NOTE: A battery reconnect procedure must be performed anytime the battery has been disconnected. Refer to Electrical - Engine Systems/Battery System - Standard Procedure .

1. Disconnect and isolate the battery negative cable.
2. Remove the right side cowl trim panel. Refer to **Body/Interior/PANEL, Cowl Trim - Removal**
3. Disconnect the antenna cable from the instrument panel antenna cable.
4. Remove the right side quarter trim panel. Refer to **Body/Interior/PANEL, Quarter Trim - Removal** .
5. Disconnect the antenna cable from the antenna module.
6. Position the floor carpet aside.
7. Remove the antenna cable.

INSTALLATION

INSTALLATION

NOTE: A battery reconnect procedure must be performed anytime the battery has been disconnected. Refer to Electrical - Engine Systems/Battery System - Standard Procedure .

1. Position the antenna cable and secure it to the wire harness.
2. Connect the antenna cable to the antenna module.
3. Connect the antenna cable to the instrument panel antenna cable.
4. Install the right side quarter trim panel. Refer to **Body/Interior/PANEL, Quarter Trim - Installation** .
5. Install the right side cowl trim panel. Refer to **Body/Interior/PANEL, Cowl Trim - Installation** .
6. Connect the battery negative cable.

BODY AND CABLE, ANTENNA, NAVIGATION

REMOVAL

REMOVAL

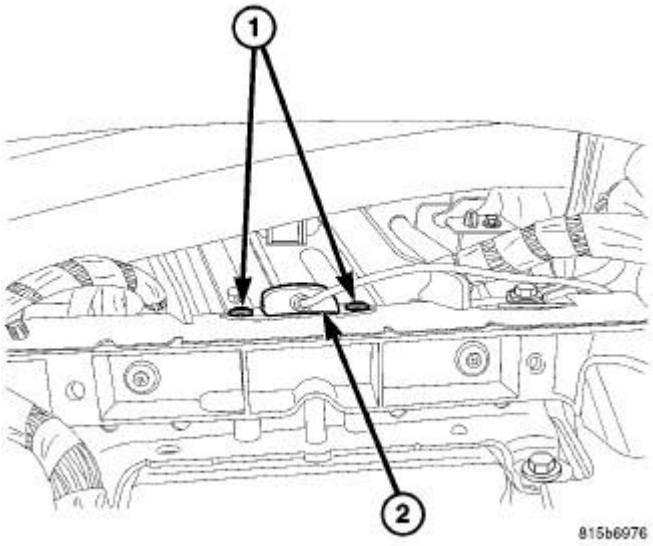

Fig. 12: Locating Navigation Antenna & Fasteners
Courtesy of CHRYSLER LLC

1. Disconnect and isolate the negative battery cable.
2. Remove the radio. See **Electrical - Audio and Video/Audio and Video/RADIO - Removal**.
3. Disconnect the navigation antenna from the back of the radio.

4. Remove the instrument cluster. Refer to **Body/Instrument Panel/BEZEL, Instrument Cluster - Removal** .
5. Install the navigation antenna fasteners (1).
6. Remove the navigation antenna.

INSTALLATION

INSTALLATION

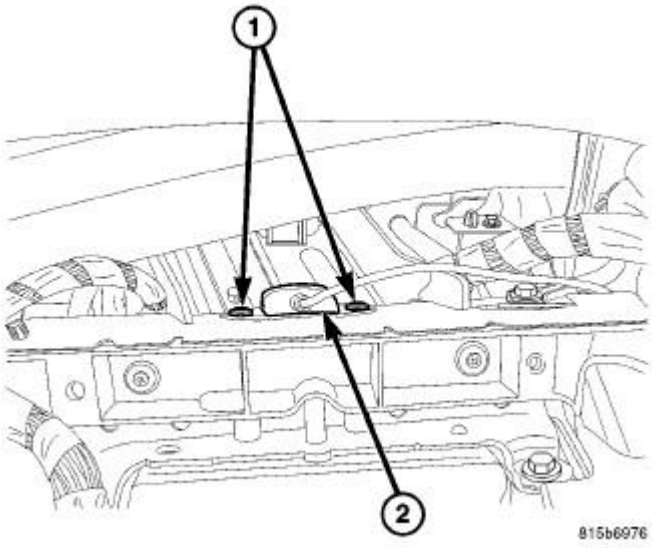

Fig. 13: Locating Navigation Antenna & Fasteners
Courtesy of CHRYSLER LLC

1. Install the navigation antenna (2) into the vehicle.
2. Install the navigation antenna fasteners (1).
3. Install the instrument cluster. Refer to **Electrical - Instrument Cluster/Instrument Cluster - Installation** .
4. Install the radio. See **Electrical - Audio and Video/Audio and Video/RADIO - Installation**.
5. Connect the negative battery cable.

CABLE, ANTENNA, INSTRUMENT PANEL

REMOVAL

REMOVAL

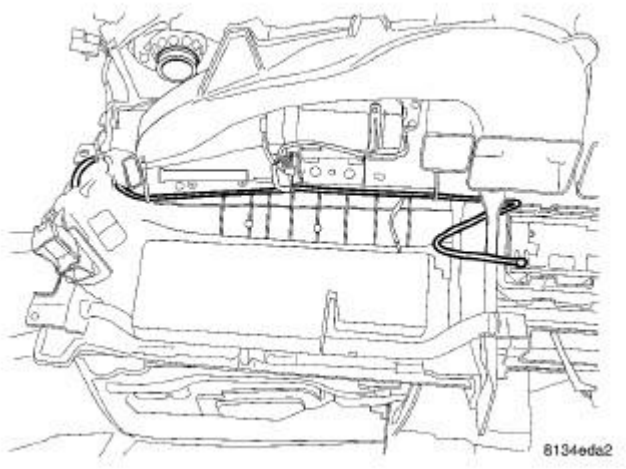

Fig. 14: Cable At Instrument Panel
Courtesy of CHRYSLER LLC

NOTE: A battery reconnect procedure must be performed anytime the battery has been disconnected. Refer to Electrical - Engine Systems/Battery System - Standard Procedure .

1. Disconnect and isolate the battery negative cable.
2. Remove the radio. See **Electrical - Audio and Video/Audio and Video/RADIO - Removal**.
3. Remove the glove box. Refer to **Body/Instrument Panel/GLOVE BOX, Instrument Panel - Removal** .
4. Remove the right side cowl trim. Refer to **Body/Interior/PANEL, Cowl Trim - Removal** .
5. Disconnect antenna cable at right side cowl area.
6. Remove cable from instrument panel.

INSTALLATION

INSTALLATION

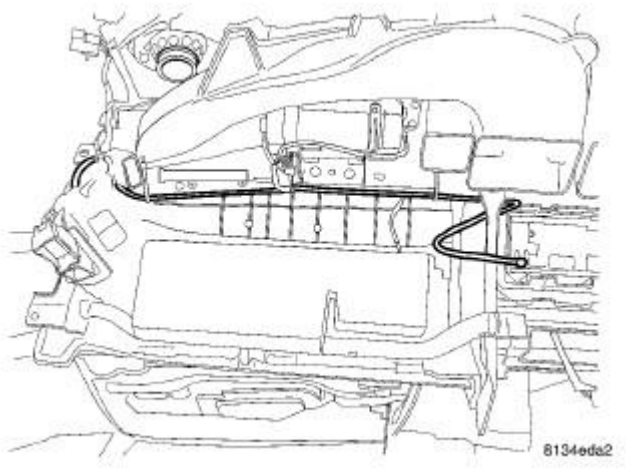

Fig. 15: Cable At Instrument Panel
Courtesy of CHRYSLER LLC

NOTE: A battery reconnect procedure must be performed anytime the battery has been disconnected. Refer to Electrical - Engine Systems/Battery System - Standard Procedure .

1. Install cable to instrument panel.
2. Connect antenna cable at right side cowl area.
3. Install the right side cowl trim. Refer to **Body/Interior/PANEL, Cowl Trim - Installation** .
4. Install the glove box. Refer to **Body/Instrument Panel/GLOVE BOX, Instrument Panel - Installation** .
5. Install the radio. See **Electrical - Audio and Video/Audio and Video/RADIO - Installation**.
6. Connect the battery negative cable.

COMPONENTS, RADIO NOISE SUPPRESSION

DESCRIPTION

DESCRIPTION

Radio noise suppression devices are installed on this vehicle. Radio Frequency Interference (RFI) and ElectroMagnetic Interference (EMI) can be produced by any on-board or external source of electromagnetic energy. These electromagnetic energy sources can radiate electromagnetic signals through the air, or conduct them through the vehicle electrical system.

When the audio system converts RFI or EMI to an audible acoustic wave form, it is referred to as radio noise. This undesirable radio noise is generally manifested in the form of "buzzing," "hissing," "popping," "clicking," "crackling," and/or "whirring" sounds. In most cases, RFI and EMI radio noise can be suppressed using a combination of vehicle and component grounding, filtering and shielding techniques. This vehicle is equipped with radio noise suppression devices that were designed to minimize exposure to typical sources of RFI and EMI; thereby, minimizing radio noise complaints.

Radio noise suppression is accomplished primarily through circuitry or devices that are integral to the radios, audio power amplifiers and other on-board electrical components such as generators, wiper motors, blower motors, and fuel pumps that have been found to be potential sources of RFI or EMI. External radio noise suppression devices that are used on this vehicle to control RFI or EMI, and can be serviced, include the following:

- **Engine-to-frame ground strap** - This length of braided ground strap has an eyelet terminal connector crimped to each end. One end is secured to the engine cylinder heads. The other is secured to the frame.
- **Resistor-type spark plugs** - This type of spark plug has an internal resistor connected in series between the spark plug terminal and the center electrode to help reduce the production of electromagnetic radiation that can result in radio noise.
- **Exhaust-to-frame ground strap** - This length of braided ground strap has an eyelet terminal connector crimped to each end. One end is secured to the exhaust pipe. The other is secured to the frame.

OPERATION

OPERATION

There are two common strategies that can be used to suppress Radio Frequency Interference (RFI) and ElectroMagnetic Interference (EMI) radio noise. The first suppression strategy involves preventing the production of RFI and EMI electromagnetic signals at their sources. The second suppression strategy involves preventing the reception of RFI and EMI electromagnetic signals by the audio system components.

The use of braided ground straps in key locations is part of the RFI and EMI prevention strategy. These ground straps ensure adequate ground paths, particularly for high current components such as many of those found in the starting, charging, ignition, engine control and transmission control systems. An insufficient ground path for any of these high current components may result in radio noise caused by induced voltages created as the high current seeks alternative ground paths through components or circuits intended for use by, or in close proximity to the audio system components or circuits.

Preventing the reception of RFI and EMI is accomplished by ensuring that the audio system components are correctly installed in the vehicle. Loose, corroded or improperly soldered wire harness connections, improperly routed wiring and inadequate audio system component grounding can all contribute to the reception of RFI and EMI. A properly grounded antenna body and radio chassis, as well as a shielded antenna coaxial cable with clean and tight connections will each help reduce the potential for reception of RFI and EMI.

MAST, ANTENNA, QUARTER GLASS

DESCRIPTION

DESCRIPTION

The integral antenna element is bonded to the rear glass and is replaced with the glass assembly only.

OPERATION

OPERATION

The integral antenna receives radio frequencies and sends them to the antenna module for amplification.

DIAGNOSIS AND TESTING

REAR GLASS INTEGRAL ANTENNA

The antenna grid pattern is located above the EBL grid.

For circuit descriptions and diagrams, refer to the appropriate wiring information. To detect breaks in the integral antenna elements, the following procedure is required:

1. Disconnect the antenna module connector from the antenna terminals on the glass.
2. Using an ohmmeter, place a lead on one of the terminals and check each end of the grid pattern connected to this terminal for continuity. If continuity is present, move one lead through the grid in progression starting at the terminal with the other lead on the terminal until continuity is lost. Repeat procedure for the other terminal. A break in the antenna grid can be repaired using a Mopar Rear Window Defogger Repair Kit or equivalent.

MODULE, RADIO ANTENNA

DESCRIPTION

DESCRIPTION

The antenna module is an electronic circuit component designed to capture and enhance RF (Radio Frequency) signals in both the AM and FM broadcast bands. The antenna module is mounted to the right quarter trim. The module is grounded through the mounting bracket and fastener. The module has a two wire electrical connector that connects to the integral radio antenna and EBL grid, located on the rear window. There is also an electrical connector for battery voltage and a coax cable connector.

OPERATION

OPERATION

The antenna module receives both AM and FM radio signals supplied by the rear window integral radio antenna and selectively amplifies them. The amplified signal is then sent through the body length coax cable to the radio input.

DIAGNOSIS AND TESTING

ANTENNA MODULE

CONDITION	POSSIBLE CAUSES	CORRECTION
NO AM RECEPTION, WEAK FM RECEPTION	1. Antenna module to antenna connector open or disconnected. 2. Cable open or disconnected. 3. No battery power at antenna module. 4. Antenna module disconnected from glass.	1. Repair open or reconnect antenna module connector to glass mounted antenna. 2. Replace antenna cable or, reconnect cable. 3. Check fuse. If okay, repair open in battery voltage circuit. 4. Connect module connector to glass.
NO AM OR FM RECEPTION	1. Coax disconnected at radio. 2. Coax shorted to ground.	1. Reconnect coax. 2. Repair or Replace coax
WEAK OR NO AM/FM RECEPTION	1. Antenna Module inoperative.	1. Replace antenna module.

REMOVAL

REMOVAL

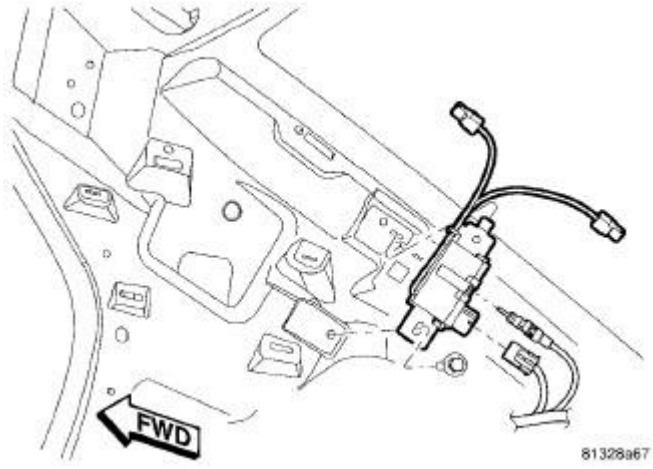

Fig. 16: Wire Harness Connectors & Antenna Cable
Courtesy of CHRYSLER LLC

1. Disconnect and isolate the battery negative cable.
2. Remove right quarter trim panel. Refer to **Body/Interior/PANEL, Quarter Trim - Removal** .
3. Disconnect the wire harness connectors and th antenna cable.
4. Remove the mounting fasteners and the antenna module.

INSTALLATION

INSTALLATION

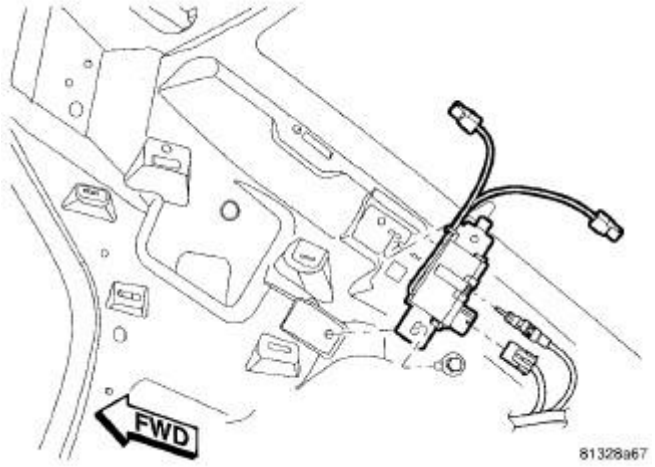

Fig. 17: Wire Harness Connectors & Antenna Cable
Courtesy of CHRYSLER LLC

NOTE: A battery reconnect procedure must be performed anytime the battery has been disconnected. Refer to Electrical - Engine Systems/Battery System - Standard Procedure .

1. Position the module into place.
2. Install and tighten the mounting fasteners.
3. Connect the wire connectors and the antenna cable to the antenna module.
4. Install the right quarter trim panel. Refer to **Body/Interior/PANEL, Quarter Trim - Installation** .
5. Connect the battery negative cable.

RADIO

DESCRIPTION

DESCRIPTION

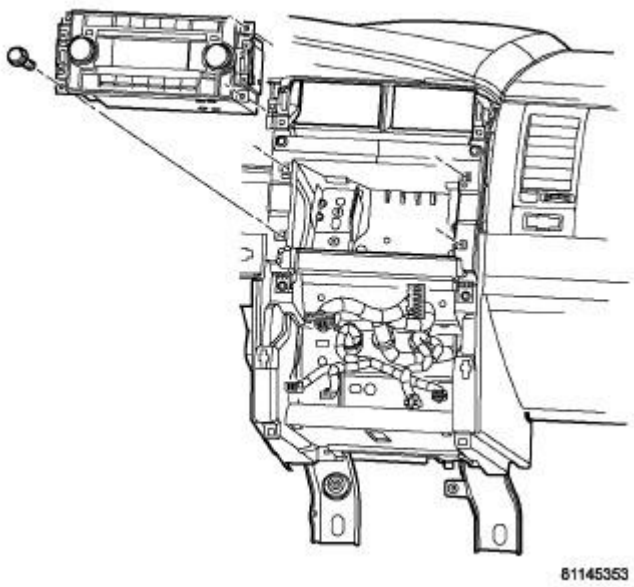

Fig. 18: Radio
Courtesy of CHRYSLER LLC

Available radios include:

- AM/FM Stereo Radio, Single Disc CD/DVD Player(CD/DVD/MP3/WMA Audio JEPSDVD Video/Audio) with Full Map Navigation with GPS Antenna and Real Time Traffic (RER)
- AM/FM Stereo Radio with CD/MP3/MWA and AUX jack (RES)
- AM/FM Stereo Radio, with 6-disc CD/MP3/WMA Changer (REQ)

NOTE: USB devices (e.g., camera memory USB adaptors, etc.) must comply with the MSD (Mass Storage Device) standard. This USB terminal can provide power to the inserted device. The devices current limitation must be less or equal to 500mA.

STANDARD PROCEDURE

STANDARD PROCEDURE - RADIO BACKUP

The radio hard drive (HDD) can be backed up to save customer data in the event that a radio replacement is required. This procedure can only be done with all radios with a hard disk drive. All other radios do not have a HDD.

1. Turn the ignition to RUN, engine OFF.
2. Power on the external HDD.
3. Connect the external HDD to the radio using the USB (Universal Serial Bus) cable. The radio

display will change to the "Manage My Files" screen.

4. Connect the scan tool and preform the following steps to place the radio into "Dealership Mode":
    - ECU View
    - Radio
    - Misc. Functions
    - Service Mode
    - Start
    - Next
5. Follow the on screen instructions on the radio to back up the radio HDD.

REMOVAL

REMOVAL

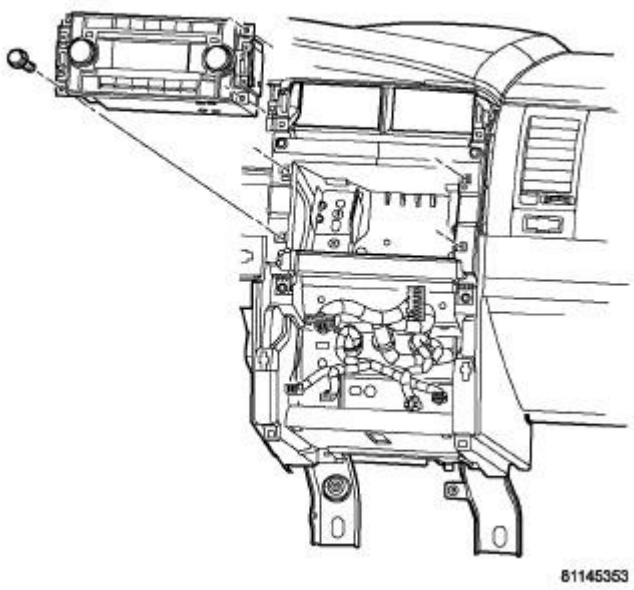

Fig. 19: Radio
Courtesy of CHRYSLER LLC

NOTE: REQ radios only must be put into "Transportation Mode" before removal. With Ignition in RUN or ACCESSORY, press SET and DISK simultaneously until the radio displays "TRANSPORTATION" on the display or for 5 seconds.

NOTE: A battery reconnect procedure must be performed anytime the battery has been disconnected. Refer to Electrical - Engine Systems/Battery System - Standard Procedure .

1. Disconnect and isolate the battery negative cable.
2. Remove the instrument panel center bezel. Refer to **Body/Instrument Panel/BEZEL, Instrument Panel - Removal** .
3. Remove the mounting fasteners.

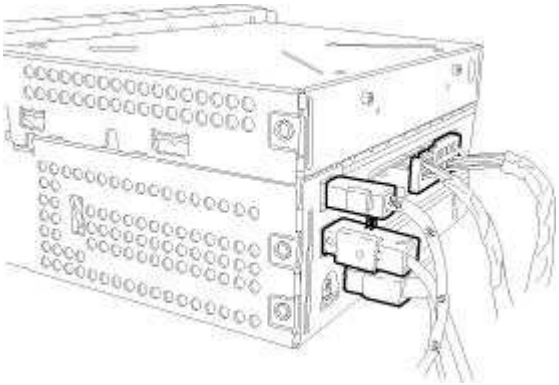

Fig. 20: Radio Electrical Harness Connectors - Typical
Courtesy of CHRYSLER LLC

CAUTION: Pulling the antenna cable straight out of the radio without pulling on the locking antenna connector could damage the cable or radio.

4. Disconnect the antenna cables by pulling the locking antenna connector away from the radio.
5. Disconnect the electrical connectors and remove the radio.

INSTALLATION

INSTALLATION

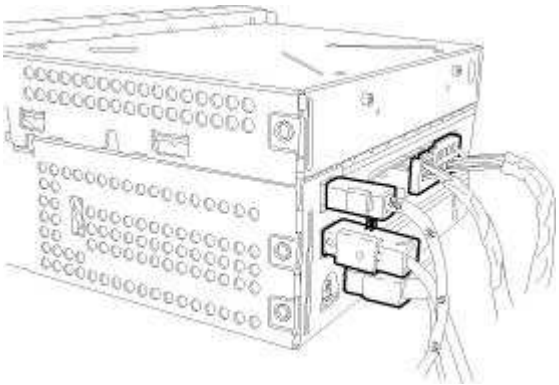

Fig. 21: Radio Electrical Harness Connectors - Typical
Courtesy of CHRYSLER LLC

NOTE: A battery reconnect procedure must be performed anytime the battery has been disconnected. Refer to Electrical - Engine Systems/Battery System - Standard Procedure .

NOTE: **REQ RADIO , After installation of the radio, remove the radio from "Transportation Mode" by pulling the IOD fuse or using the scan tool and perform a battery reset.**

1. Connect the electrical connectors and antenna cables to the radio.

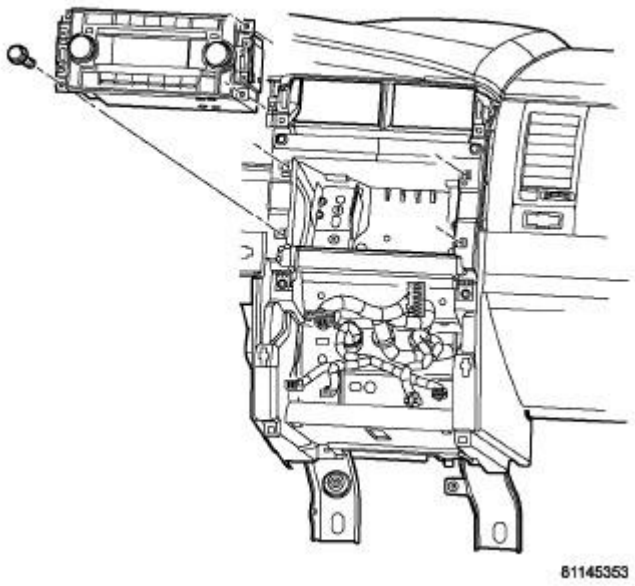

Fig. 22: Radio
Courtesy of CHRYSLER LLC

2. Position the radio and install the mounting fasteners.
3. Install the instrument panel center bezel. Refer to **Body/Instrument Panel/BEZEL, Instrument Panel - Installation** .
4. Connect the negative battery cable.

RECEIVER, SATELLITE

REMOVAL

REMOVAL

NOTE: **If the owner's satellite service was active before the satellite receiver was replaced the new satellite receiver will have to be activated. The existing satellite receiver will have to be deactivated before the replacement satellite receiver can be activated.**

To activate Sirius satellite radio service, call Sirius at their toll-free number.

Please have the following information available when activating a system:

- **Electronic Serial Number / Sirius Identification Number (ESN/SID) of the unit to be replaced**
- **ESN/SID of the replacement receiver**
- **Vehicle Owner's name and address**
- **VIN**

The ESN/SID number can be obtained through the radio display by following the steps in the satellite radio owners manual.

The vehicle must be outside with the audio system powered on, in the satellite radio mode, to receive the activation signal.

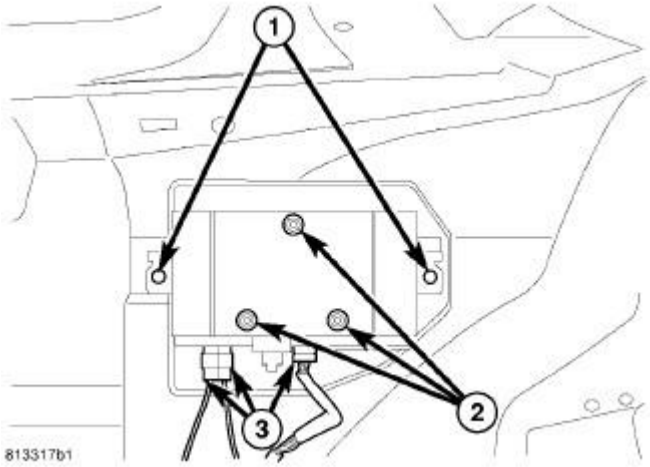

Fig. 23: Fasteners & Electrical Harness Connector
Courtesy of CHRYSLER LLC

NOTE: **A battery reconnect procedure must be performed anytime the battery has been disconnected. Refer to Electrical - Engine Systems/Battery System - Standard Procedure .**

1. Disconnect and the isolate the battery negative cable.
2. Remove the left side trunk trim.
3. Disconnect the electrical connector (3).
4. Disconnect the antenna connectors.
5. Remove the mounting bracket fasteners (1).
6. Remove the module to the mounting bracket fasteners (2).

INSTALLATION

INSTALLATION

NOTE: **If the owner's satellite service was active before the satellite receiver was replaced the new satellite receiver will have to be activated. The existing satellite receiver will have to be deactivated before the replacement satellite receiver can be activated.**

To activate Sirius satellite radio service, call Sirius at their toll-free number. Please have the following information available when activating a system:

- **Electronic Serial Number / Sirius Identification Number (ESN/SID) of the unit to be replaced**
- **ESN/SID of the replacement receiver**
- **Vehicle Owner's name and address**
- **VIN**

The ESN/SID number can be obtained through the radio display by following the steps in the satellite radio owners manual.

The vehicle must be outside with the audio system powered on, in the satellite radio mode, to receive the activation signal.

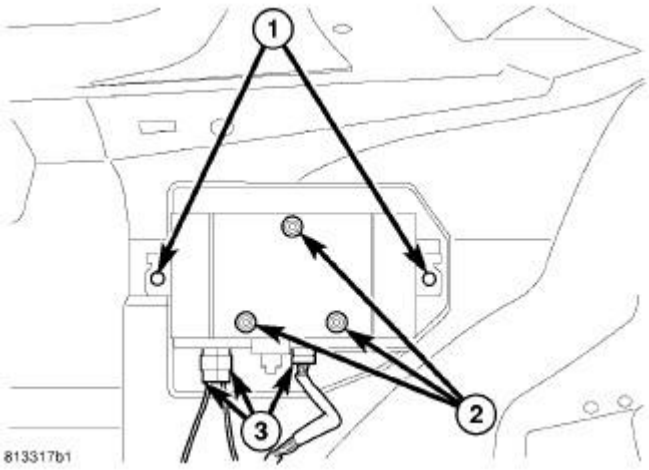

Fig. 24: Fasteners & Electrical Harness Connector
Courtesy of CHRYSLER LLC

NOTE: **A battery reconnect procedure must be performed anytime the battery has been disconnected. Refer to Electrical - Engine Systems/Battery System - Standard Procedure .**

1. Install and tighten the module to the mounting bracket fasteners (2).
2. Position the module into place.
3. Install and tighten the mounting bracket fasteners (1).
4. Connect the antenna connectors.

5. Connect the electrical connectors (3).
6. Install the left side trunk trim.
7. Connect the battery negative cable.

SPEAKER

DESCRIPTION

DESCRIPTION

Four Speakers (RCD sales code)

This system includes four speakers in four locations.

- One 15.2 x 22.9 cm. (6 x 9 in.) diameter speaker is located in each front door
- One 16.5 cm (6.5 in) diameter speaker located on each side of the rear shelf.

Boston Acoustics Six-Speaker System with 276 watts total (RC6 sales code)

This system features six speakers in six locations.

- One 15.2 x 22.9 cm. (6 x 9 in.) diameter speaker is located in each front door.
- One 16.5 cm. (6.5 in.) diameter speaker located on each side of the rear shelf.
- Two 8.9 cm. (3.5 in.) insturment panel tweeters are located on the outboard in the instrument panel top cover.

Boston Acoustics Six-Speaker System with 368 watts total (RC7 sales code)

This system features eight speakers in eight locations.

- One 15.2 x22.9 cm. (6 x9 in.) diameter speaker is located in each front door.
- One 16.5 centimeter (6.5 inch) diameter speaker located on each side of the rear package shelf.
- A 20.3 cm. (8 in.) diameter subwoofer is located in the rear package shelf.
- Three 8.9 cm.(3.5 in.) speakers located on the top portion of the instrument panel.
- 368 watts amplifier.

SRT High Performance Audio 8-Speaker System (RC5 sales code)

This system features eight speakers in eight locations.

- One 15.2 x22.9 cm. (6 x 9 in.) diameter speaker is located in each front door.
- One 16.5 cm. (6.5 in.) diameter speaker located on each side of the rear package shelf.
- A 25.4 cm (10 in.) square subwoofer mounted in the trunk.

- Three 8.9 cm. (3.5 in.) speakers located on the top portion of the instrument panel.
- A 322 watt amplifier.

DIAGNOSIS AND TESTING

SPEAKER

Any diagnosis of the Audio system should begin with the use of a scan tool and the appropriate Diagnostic Service information.

Refer to the appropriate wiring information.

WARNING: Disable the airbag system before attempting any steering wheel, steering column, seat belt tensioner, side airbag, or instrument panel component diagnosis or service. Disconnect and isolate the battery negative (ground) cable, then wait two minutes for the airbag system capacitor to discharge before performing further diagnosis or service. This is the only sure way to disable the airbag system. Failure to take the proper precautions could result in accidental airbag deployment and possible serious or fatal injury.

CAUTION: The speaker output of the radio is a "floating ground" system. Do not allow any speaker lead to short to ground, as damage to the radio may result.

1. If all speakers are inoperative, check the radio fuses in the junction block. If OK, go to Step 2. If not OK, repair the shorted circuit or component as required and replace the faulty fuse.
2. Check the amplifier fuse (if equipped) in the junction block. If OK, go to Step 3. If not OK, repair the shorted circuit or component as required and replace the faulty fuse.
3. Turn the ignition switch to the ON position. Turn the radio receiver ON. Adjust the balance and fader control controls to check the performance of each individual speaker. Note the speaker locations that are not performing correctly. Go to Step 4.
4. Turn the radio OFF. Turn the ignition OFF. Disconnect and isolate the battery negative cable. If vehicle is **not** equipped with a amplifier, remove the radio receiver. If the vehicle is equipped with an amplifier, disconnect the wire harness connectors. There are two connectors. The one on the body harness has body speakers only. The other on the instrument panel harness has the instrument panel speakers, battery, ground, and CAN. Go to Step 5.
5. Check both the speaker feed (+) circuit and return (-) circuit cavities for the inoperative speaker at the wire harness connector for continuity to ground. There should be no continuity. If OK, go to Step 6. If not OK, repair the shorted speaker feed (+) and/or return (-) circuits(s) to the speaker as required.
6. Disconnect wire harness connector at the inoperative speaker. Check for continuity between the speaker feed (+) circuit cavities of the radio receiver wire harness connector or if equipped, the amplifier wire harness connector and the speaker wire harness connector. Repeat the check between the speaker return (-) circuit cavities of the radio receiver wire harness connector and

the speaker wire harness connector. In each case, there should be continuity. If OK, replace the faulty speaker. If not OK, repair the open speaker feed (+) and/or return (-) circuits(s) as required.

REMOVAL

REMOVAL

Front Door Speaker	Refer to the **FRONT DOOR SPEAKER** removal procedure.
Instrument Panel Side Speaker	Refer to the **INSTRUMENT PANEL SIDE SPEAKER** removal procedure.
Instrument Panel Center Speaker	Refer to the **INSTRUMENT PANEL CENTER SPEAKER** removal procedure.
Rear Speaker	Refer to the **REAR SPEAKER** removal procedure.
Subwoofer - Rear Shelf	Refer to the **SUBWOOFER - REAR SHELF** removal procedure.
Subwoofer - Trunk Mount	Refer to the **SUBWOOFER - TRUNK MOUNT** removal procedure.

FRONT DOOR SPEAKER

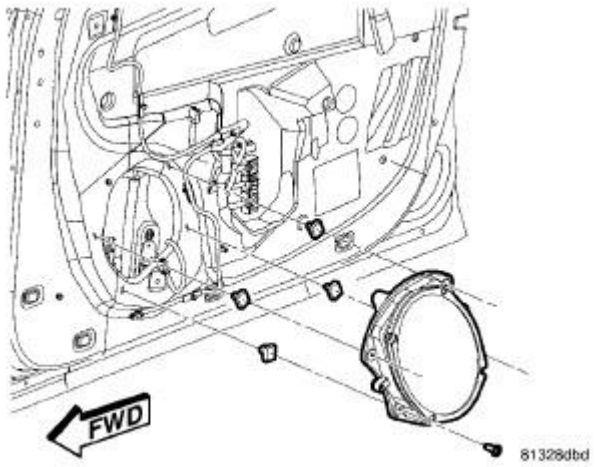

Fig. 25: Front Door Speaker
Courtesy of CHRYSLER LLC

NOTE: Perform a battery reconnect procedure anytime the battery has been disconnected. Refer to Electrical - Engine Systems/Battery System - Standard Procedure .

1. Disconnect and isolate the battery negative cable.
2. Remove the front door trim panel. Refer to **Body/Door - Front/PANEL, Door Trim - Removal** .
3. Remove the mounting fasteners.
4. Disconnect the electrical connector and remove the speaker.

INSTRUMENT PANEL SIDE SPEAKER

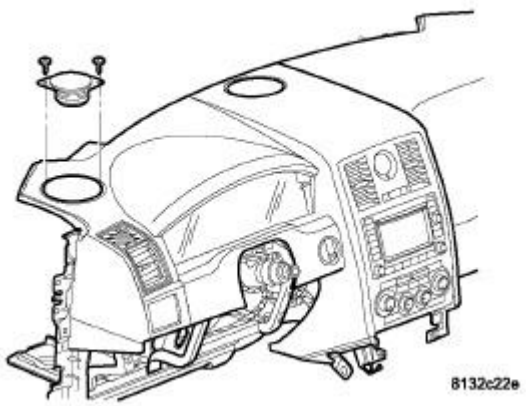

Fig. 26: Instrument Panel Side Speaker
Courtesy of CHRYSLER LLC

NOTE: Perform a battery reconnect procedure anytime the battery has been disconnected. Refer to Electrical - Engine Systems/Battery System - Standard Procedure .

1. Disconnect and isolate the battery negative cable.
2. Remove the speaker cover from the instrument panel.
3. Remove the mounting fasteners.
4. Disconnect the electrical connector and remove the speaker.

INSTRUMENT PANEL CENTER SPEAKER

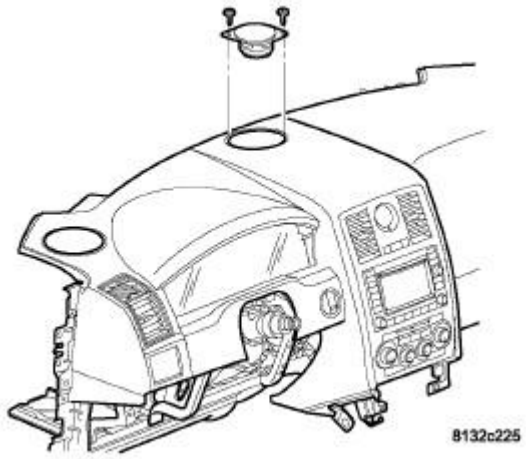

Fig. 27: Instrument Panel Center Speaker
Courtesy of CHRYSLER LLC

NOTE: **Perform a battery reconnect procedure anytime the battery has been disconnected. Refer to Electrical - Engine Systems/Battery System - Standard Procedure .**

1. Disconnect and isolate the battery negative cable.
2. Remove the speaker cover from the instrument panel.
3. Remove the mounting fasteners.
4. Disconnect the electrical connector and remove the speaker.

REAR SPEAKER

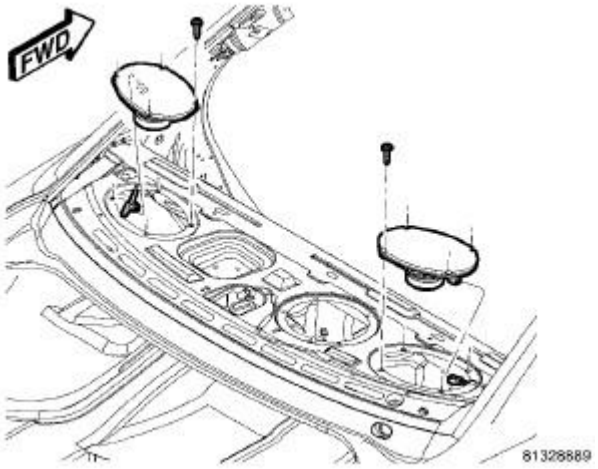

Fig. 28: Rear Speakers
Courtesy of CHRYSLER LLC

NOTE: **Perform a battery reconnect procedure anytime the battery has been disconnected. Refer to Electrical - Engine Systems/Battery System - Standard Procedure .**

1. Disconnect and isolate the battery negative cable.
2. Remove the quarter trim panels. Refer to **Body/Interior/PANEL, Quarter Trim - Removal** .
3. Remove the rear shelf trim. Refer to **Body/Interior/PANEL, Rear Shelf - Removal** .
4. Remove the mounting fasteners.
5. Disconnect the electrical connector and remove speaker.

SUBWOOFER - REAR SHELF

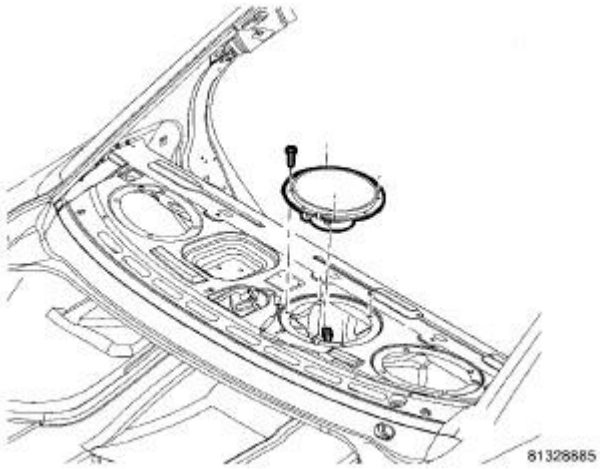

Fig. 29: Subwoofer
Courtesy of CHRYSLER LLC

NOTE: **Perform a battery reconnect procedure anytime the battery has been disconnected. Refer to Electrical - Engine Systems/Battery System - Standard Procedure .**

1. Disconnect and isolate the battery negative cable.
2. Remove the quarter trim panels. Refer to **Body/Interior/PANEL, Quarter Trim - Removal** .
3. Remove the rear shelf trim. Refer to **Body/Interior/PANEL, Rear Shelf - Removal** .
4. Remove the mounting fasteners.
5. Disconnect the electrical connector and remove the subwoofer.

SUBWOOFER - TRUNK MOUNT

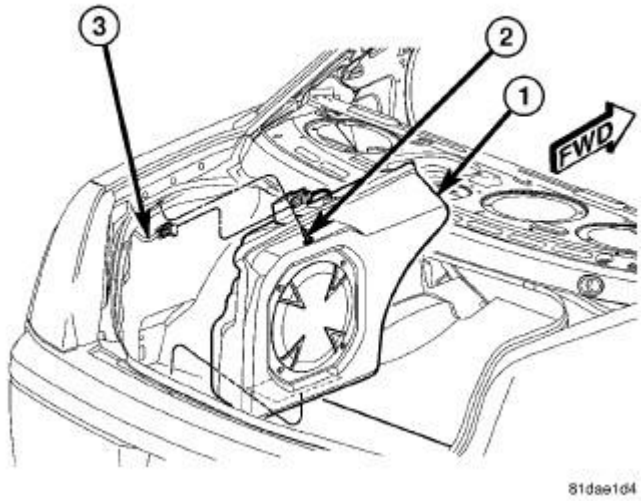

Fig. 30: Subwoofer - Sedan
Courtesy of CHRYSLER LLC

NOTE: **Perform a battery reconnect procedure anytime the battery has been disconnected. Refer to Electrical - Engine Systems/Battery System - Standard Procedure .**

1. Open the decklid.
2. Disconnect and isolate the battery negative cable.
3. Remove the top mounting fastener (2).
4. Disconnect the electrical connector (3).
5. Remove the subwoofer (1) from the vehicle.

INSTALLATION

INSTALLATION

Front Door Speaker	Refer to the **FRONT DOOR SPEAKER** installation procedure.
Instrument Panel Side Speaker	Refer to the **INSTRUMENT PANEL SIDE SPEAKER** installation procedure.
Instrument Panel Center Speaker	Refer to the **INSTRUMENT PANEL CENTER SPEAKER** installation procedure.
Rear Speaker	Refer to the **REAR SPEAKER** installation procedure.
Subwoofer - Rear Shelf	Refer to the **SUBWOOFER - REAR SHELF** installation procedure.
Subwoofer - Trunk Mount	Refer to the **SUBWOOFER - TRUNK MOUNT** installation procedure.

FRONT DOOR SPEAKER

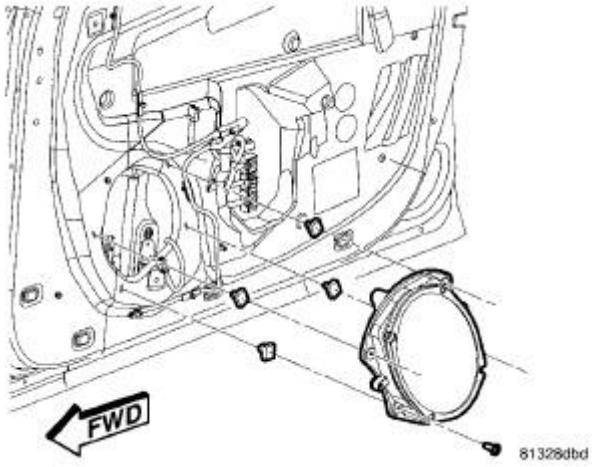

Fig. 31: Front Door Speaker

Courtesy of CHRYSLER LLC

NOTE: Perform a battery reconnect procedure anytime the battery has been disconnected. Refer to Electrical - Engine Systems/Battery System - Standard Procedure .

1. Position the speaker and connect the electrical connector.
2. Install and tighten the mounting fasteners.
3. Install the front door trim panel. Refer to **Body/Door - Front/PANEL, Door Trim - Installation** .
4. Connect the negative battery cable.

INSTRUMENT PANEL SIDE SPEAKER

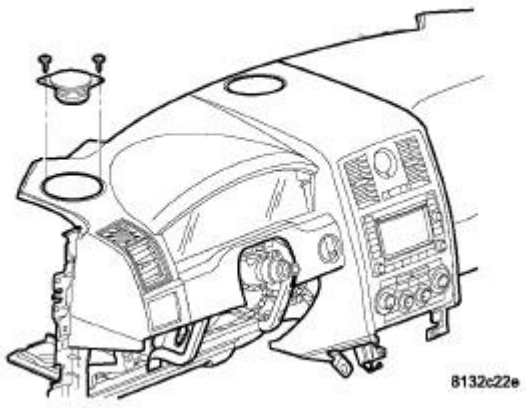

Fig. 32: Instrument Panel Side Speaker
Courtesy of CHRYSLER LLC

NOTE: Perform a battery reconnect procedure anytime the battery has been disconnected. Refer to Electrical - Engine Systems/Battery System - Standard Procedure .

1. Position the speaker and connect the electrical connector.
2. Install and tighten the mounting fasteners.
3. Install the speaker cover to instrument panel.
4. Connect the negative battery cable.

INSTRUMENT PANEL CENTER SPEAKER

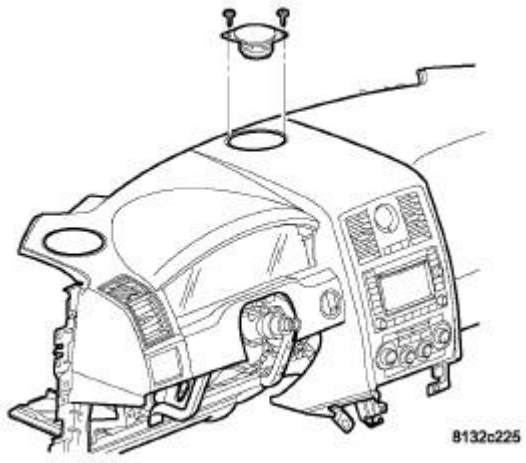

Fig. 33: Instrument Panel Center Speaker
Courtesy of CHRYSLER LLC

NOTE: Perform a battery reconnect procedure anytime the battery has been disconnected. Refer to Electrical - Engine Systems/Battery System - Standard Procedure .

1. Position the speaker and connect the electrical connector.
2. Install and tighten the mounting fasteners.
3. Install the speaker cover to the instrument panel.
4. Connect the negative battery cable

REAR SPEAKER

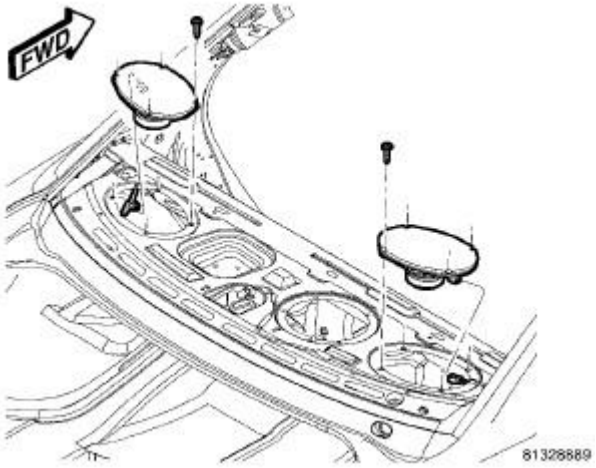

Fig. 34: Rear Speakers
Courtesy of CHRYSLER LLC

NOTE: Perform a battery reconnect procedure anytime the battery has been

disconnected. Refer to Electrical - Engine Systems/Battery System - Standard Procedure .

1. Position the speaker and connect the electrical connector.
2. Install and tighten the mounting fasteners.
3. Install the rear shelf trim. Refer to **Body/Interior/PANEL, Rear Shelf - Installation** .
4. Install the quarter trim panels. Refer to **Body/Interior/PANEL, Quarter Trim - Removal** .
5. Connect the negative battery cable.

SUBWOOFER - REAR SHELF

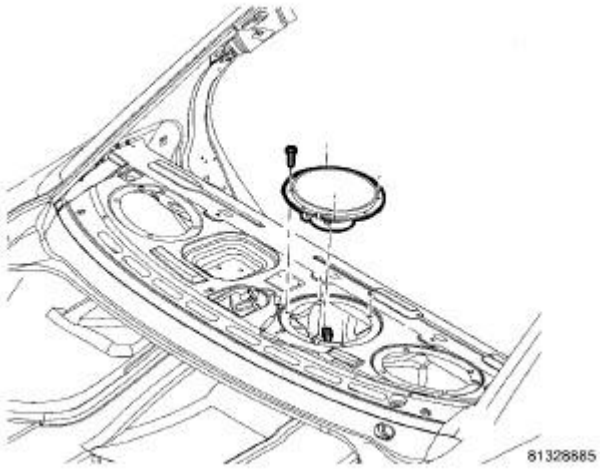

Fig. 35: Subwoofer
Courtesy of CHRYSLER LLC

NOTE: Perform a battery reconnect procedure anytime the battery has been disconnected. Refer to Electrical - Engine Systems/Battery System - Standard Procedure .

1. Position the subwoofer and connect the electrical connector.
2. Install and tighten the mounting fasteners.
3. Install the rear shelf trim. Refer to **Body/Interior/PANEL, Rear Shelf - Installation** .
4. Install the quarter trim panels. Refer to **Body/Interior/PANEL, Quarter Trim - Removal** .
5. Connect the negative battery cable.

SUBWOOFER - TRUNK MOUNT

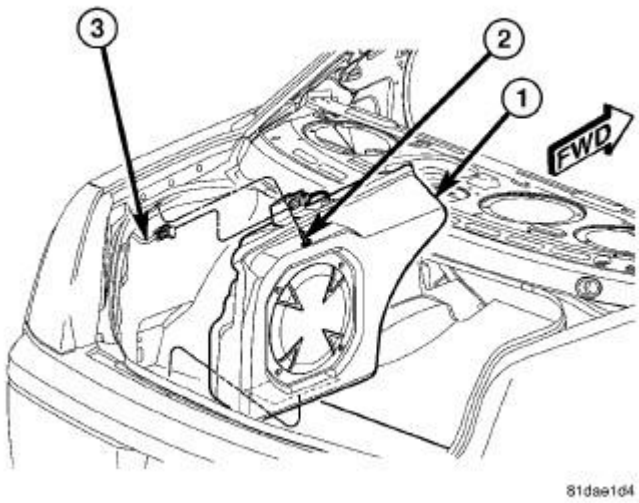

Fig. 36: Subwoofer - Sedan
Courtesy of CHRYSLER LLC

NOTE: Perform a battery reconnect procedure anytime the battery has been disconnected.

1. Install the subwoofer (1) to the vehicle.
2. Connect the electrical connector (3).
3. Install the top mounting fastener (2).
4. Connect the negative battery cable.
5. Close the decklid.

SWITCH, REMOTE RADIO

DESCRIPTION

DESCRIPTION

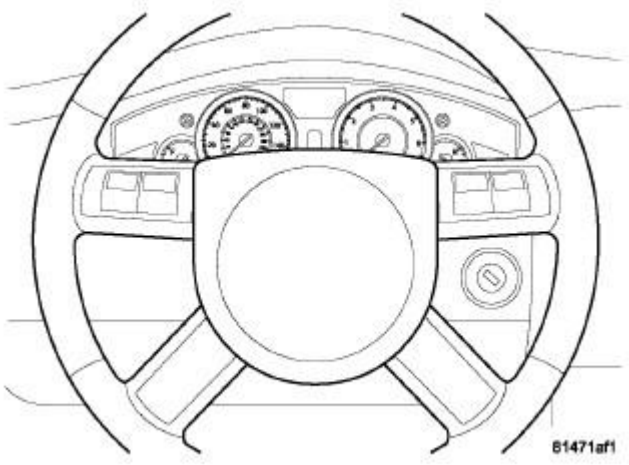

Fig. 37: Remote Radio Switches
Courtesy of CHRYSLER LLC

Four rocker-type switches are mounted on the front of the steering wheel spokes.

The left switches control the following functions:

- SCROLL - Controls the radio station seek up/down, CD change track, tape change side, satellite radio change channel, trip functions, navigation, system status messages, and personal settings
- FUNCTION SELECT - Controls the radio preset advance or disc change (in audio mode), reset or trip functions and scroll through warning messages, and personal feature selection (only when vehicle is in Park).
- AUDIO SYSTEM HOT KEY - Controls mode selection: AM, FM, Tape, CD, Satellite Radio

The right switches control the following:

- MENU - Controls trip functions, navigation, system status, personal settings, and telephone
- C/T - Compass/Temperature hot key
- AUDIO SYSTEM VOLUME - Controls the system volume level

REMOVAL

REMOVAL

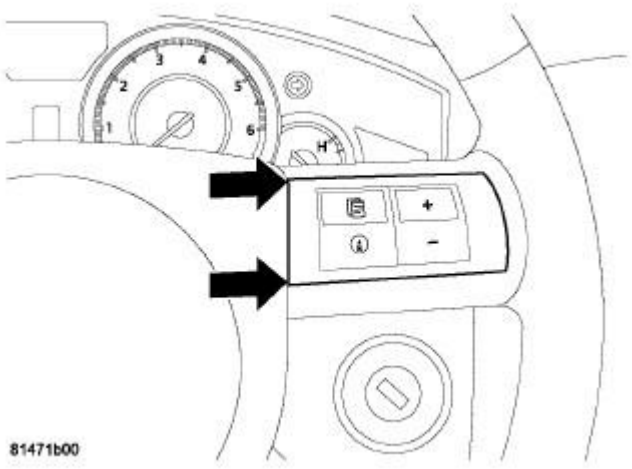

Fig. 38: Locating Remote Radio Switch Tabs
Courtesy of CHRYSLER LLC

NOTE: A battery reconnect procedure must be performed anytime the battery has been disconnected. Refer to Electrical - Engine Systems/Battery System - Standard Procedure .

1. Disconnect and isolate the battery negative cable.
2. Remove the driver airbag. Refer to **Restraints/AIR BAG, Driver - Removal** .
3. Using a trim stick, gently pry the switch from the steering wheel at locations shown in illustration.
4. Disconnect the electrical connector.
5. Remove the switch from the steering wheel.

INSTALLATION

INSTALLATION

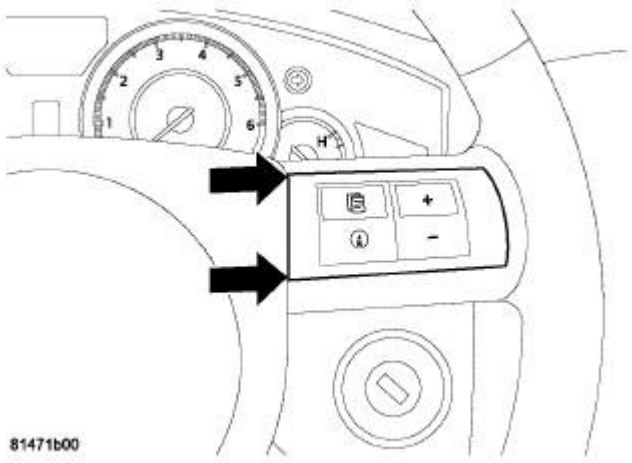

Fig. 39: Locating Remote Radio Switch Tabs

Courtesy of CHRYSLER LLC

NOTE: **A battery reconnect procedure must be performed anytime the battery has been disconnected. Refer to Electrical - Engine Systems/Battery System - Standard Procedure .**

1. Connect the electrical connector to the switch.
2. Position the switch and press it into place.
3. Install the driver airbag. Refer to **Restraints/AIR BAG, Driver - Installation** .
4. Connect the battery negative cable.

AUTOMATIC TRANSMISSION 42RLE -

Service Information - Challenger

DESCRIPTION

DESCRIPTION

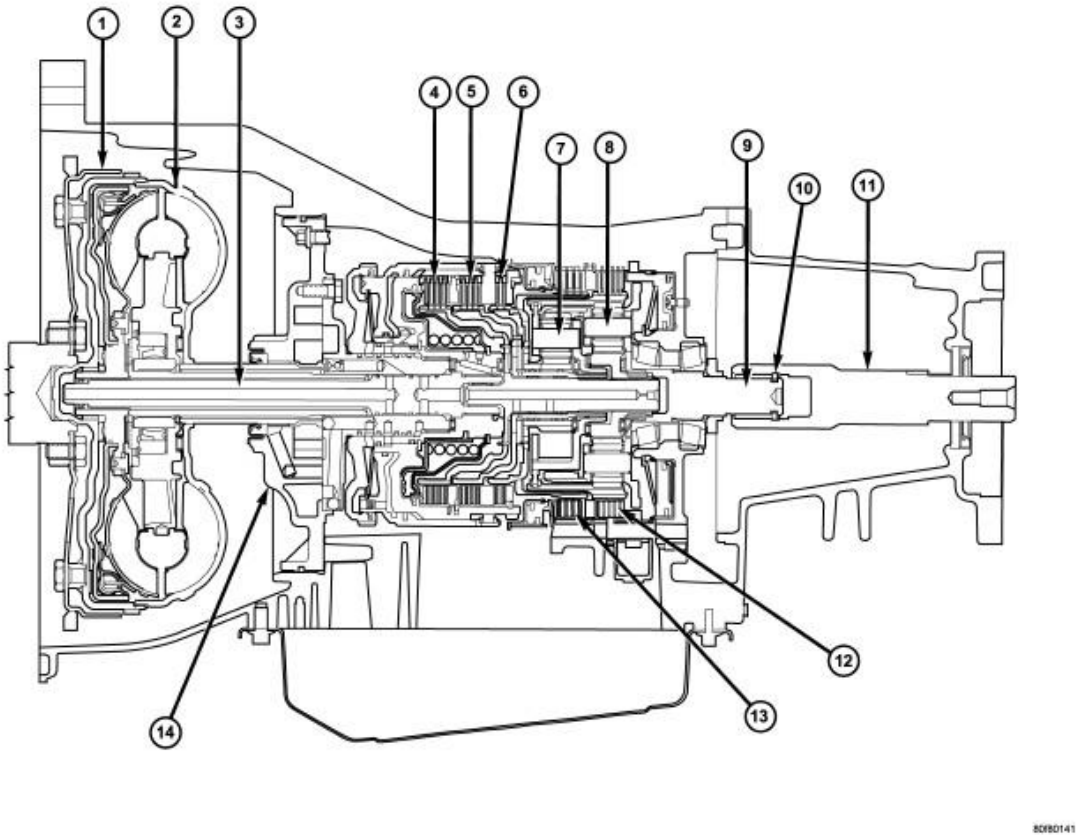

Fig. 1: 42RLE Automatic Transmission
Courtesy of CHRYSLER LLC

1 - DRIVEPLATE	6 - REVERSE CLUTCH	11 - STUB SHAFT
2 - TORQUE CONVERTER	7 - FRONT PLANET CARRIER	12 - LOW/REVERSE CLUTCH
3 - INPUT SHAFT	8 - REAR PLANET CARRIER	13 - 2/4 CLUTCH
4 - UNDERDRIVE CLUTCH	9 - OUTPUT SHAFT	14 - OIL PUMP
5 - OVERDRIVE CLUTCH	10 - SNAP RING	-

The 42RLE is a four-speed transmission that is a conventional hydraulic/mechanical assembly controlled with adaptive electronic controls and monitors. The hydraulic system of the transmission consists of the transmission fluid, fluid passages, hydraulic valves, and various line pressure control components. An input clutch assembly which houses the underdrive, overdrive, and reverse clutches is used. It also utilizes separate holding clutches: 2nd/4th gear and Low/Reverse. The primary

mechanical components of the transmission consist of the following:

- Three multiple disc input clutches
- Two multiple disc holding clutches
- Four hydraulic accumulators
- Two planetary gear sets
- Hydraulic oil pump
- Valve body
- Solenoid/Pressure switch assembly

Control of the transmission is accomplished by fully adaptive electronics. Optimum shift scheduling is accomplished through continuous real-time sensor feedback information provided to the Transmission Control Module (TCM) portion of the Powertrain Control Module (PCM).

The TCM is the heart of the electronic control system and relies on information from various direct and indirect inputs (sensors, switches, etc.) to determine driver demand and vehicle operating conditions. With this information, the TCM can calculate and perform timely and quality shifts through various output or control devices (solenoid pack, transmission control relay, etc.).

The TCM also performs certain self-diagnostic functions and provides comprehensive information (sensor data, DTC's, etc.) which is helpful in proper diagnosis and repair. This information can be viewed with the scan tool.

TRANSMISSION IDENTIFICATION

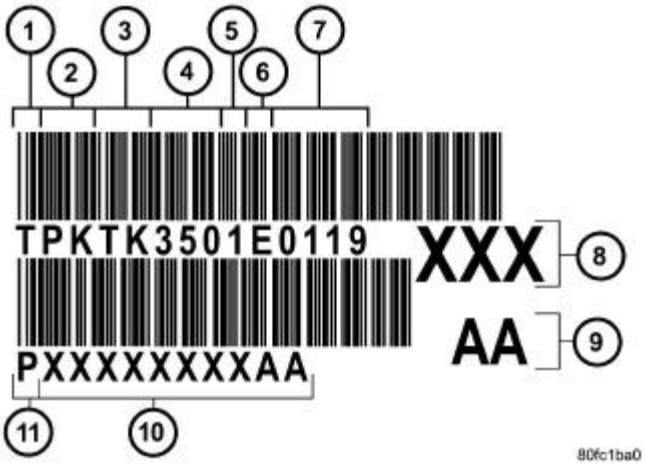

Fig. 2: Identification Label Breakdown
Courtesy of CHRYSLER LLC

1 - T=TRACEABILITY 2 - SUPPLIER CODE (PK=KOKOMO) 3 - COMPONENT CODE (TK=KOKOMO TRANSMISSION)

4 - BUILD DAY (350=DEC. 15)
5 - BUILD YEAR (1=2001)
6 - ASSEMBLY LINE CODE
7 - BUILD SEQUENCE NUMBER
8 - LAST THREE OF P/N
9 - CHANGE LEVEL
10 - TRANSMISSION PART NUMBER
11 - P=PART NUMBER

The 42RLE transmission can be identified by a barcode label that is affixed to the upper left area of the bellhousing.

The label contains a series of digits that can be translated into useful information such as transmission part number (10), date of manufacture (4, 5), manufacturing origin (2), assembly line identifier (6), build sequence number (7), etc. .

If the tag is not legible or is missing, the "PK" number, which is stamped into the left rear flange of the transmission case, can be referred to for identification. The entire part number, build code, and sequence number are stamped into the flange.

OPERATION

OPERATION

The 42RLE transmission ratios are:

GEAR	RATIO
First	2.84 : 1
Second	1.57 : 1
Third	1.00 : 1
Overdrive	0.69 : 1
Reverse	2.21 : 1

FIRST GEAR POWERFLOW

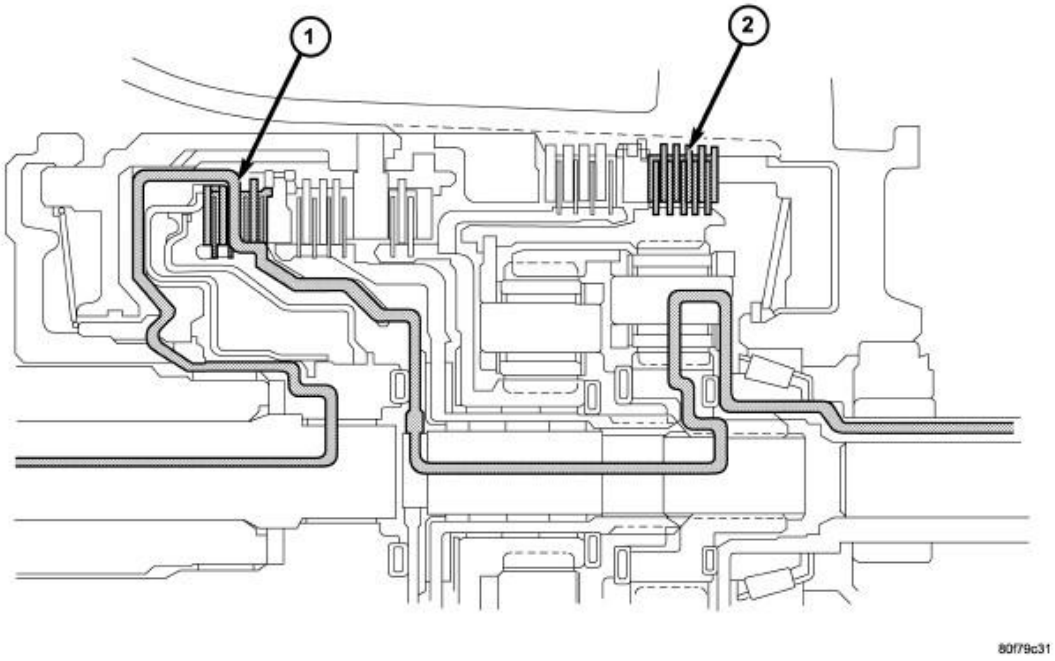

Fig. 3: First Gear Powerflow
Courtesy of CHRYSLER LLC

1 - UNDERDRIVE CLUTCH APPLIED (Turns Rear Sun) 2 - LOW-REVERSE CLUTCH APPLIED (Holds Rear Annulus/Front Carrier)

In first gear range, torque input is through the underdrive clutch (1) to the underdrive hub assembly. The underdrive hub is splined to the rear sun gear. When the underdrive clutch is applied, it rotates the underdrive hub and rear sun gear. The L/R clutch (2) is applied to hold the front carrier/rear annulus assembly. The rear sun gear drives the rear planetary pinion gears. The rear planetary pinion gears are forced to walk around the inside of the stationary rear annulus gear. The pinions are pinned to the rear carrier and cause the rear carrier assembly to rotate as they walk around the annulus gear. This provides the torque output for first gear. The other planetary gearset components are freewheeling. The first gear ratio is 2.84:1.

SECOND GEAR POWERFLOW

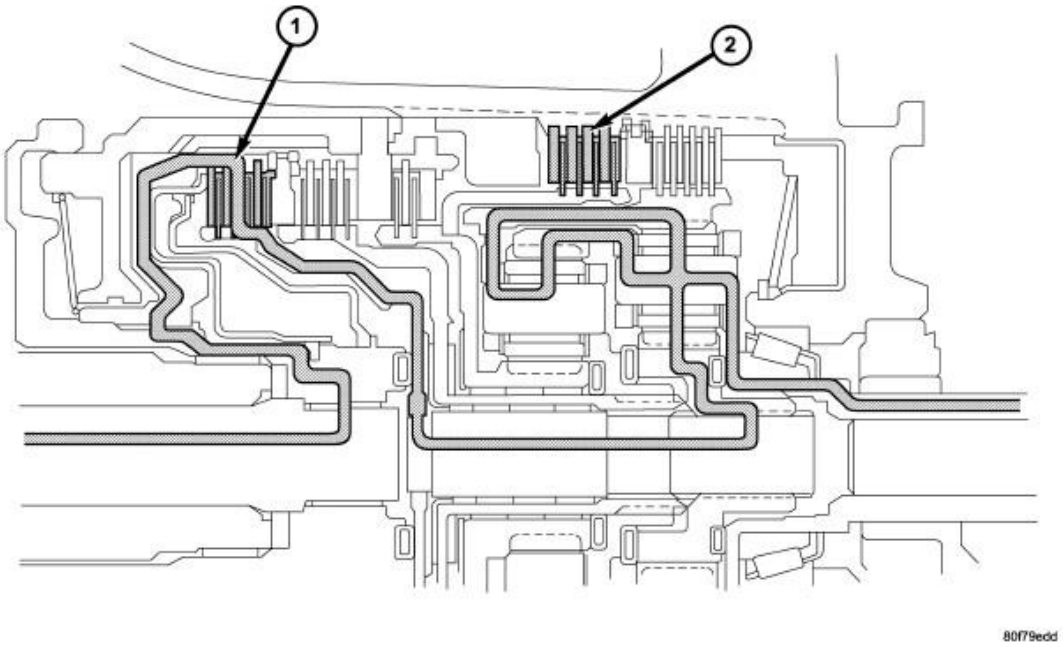

Fig. 4: Second Gear Powerflow
Courtesy of CHRYSLER LLC

1 - UNDERDRIVE CLUTCH APPLIED (Turns Rear Sun) 2 - 2-4 CLUTCH APPLIED (Holds Front Sun)

Second gear is achieved by having both planetary gear sets contribute to torque multiplication. As in first gear, torque input is through the underdrive clutch (1) to the rear sun gear. The 2/4 clutch (2) is applied to hold the front sun gear stationary. The rotating rear sun gear turns the rear planetary pinions. The rear pinions rotate the rear annulus/front carrier assembly. The pinions of the front carrier walk around the stationary front sun gear. This transmits torque to the front annulus/rear carrier assembly, which provides output torque and a gear ratio of 1.57:1.

THIRD GEAR POWERFLOW

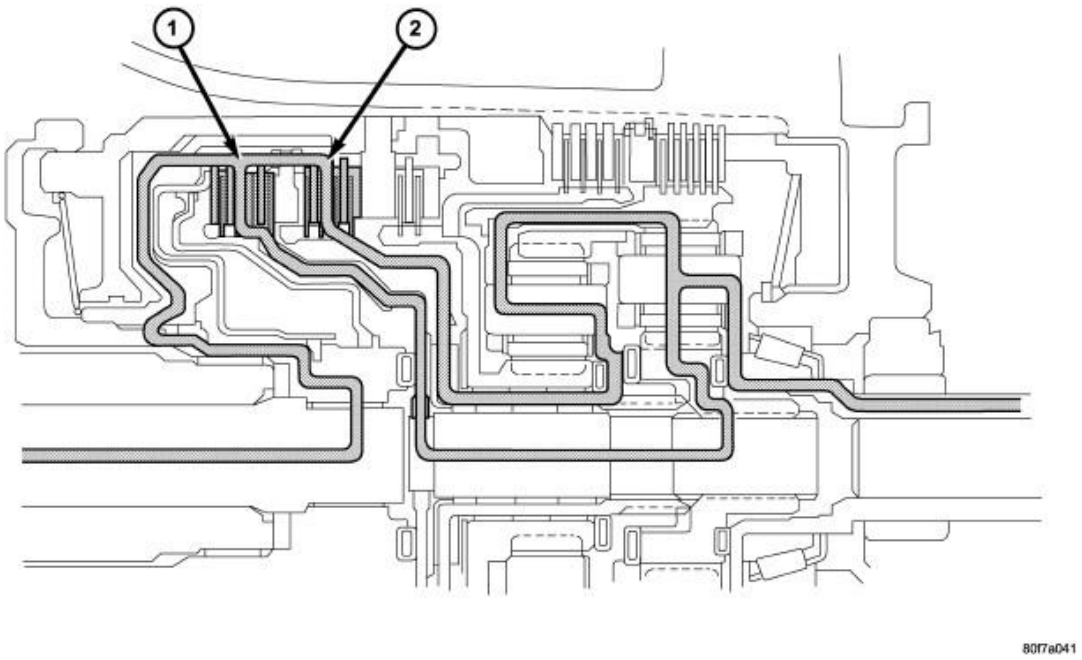

Fig. 5: Third Gear Powerflow
Courtesy of CHRYSLER LLC

1 - UNDERDRIVE CLUTCH APPLIED (Turns Rear Sun) 2 - OVERDRIVE CLUTCH APPLIED (Turns Front Carrier/Rear Annulus)

In third gear, two input clutches are applied to provide torque input: the underdrive clutch (1) and overdrive clutch (2). The underdrive clutch rotates the rear sun gear, while the overdrive clutch rotates the front carrier/rear annulus assembly. The result is two components (rear sun gear and rear annulus gear) rotating at the same speed and in the same direction. This effectively locks the entire planetary gearset together and is rotated as one unit. The gear ratio in third is 1:1.

FOURTH GEAR POWERFLOW

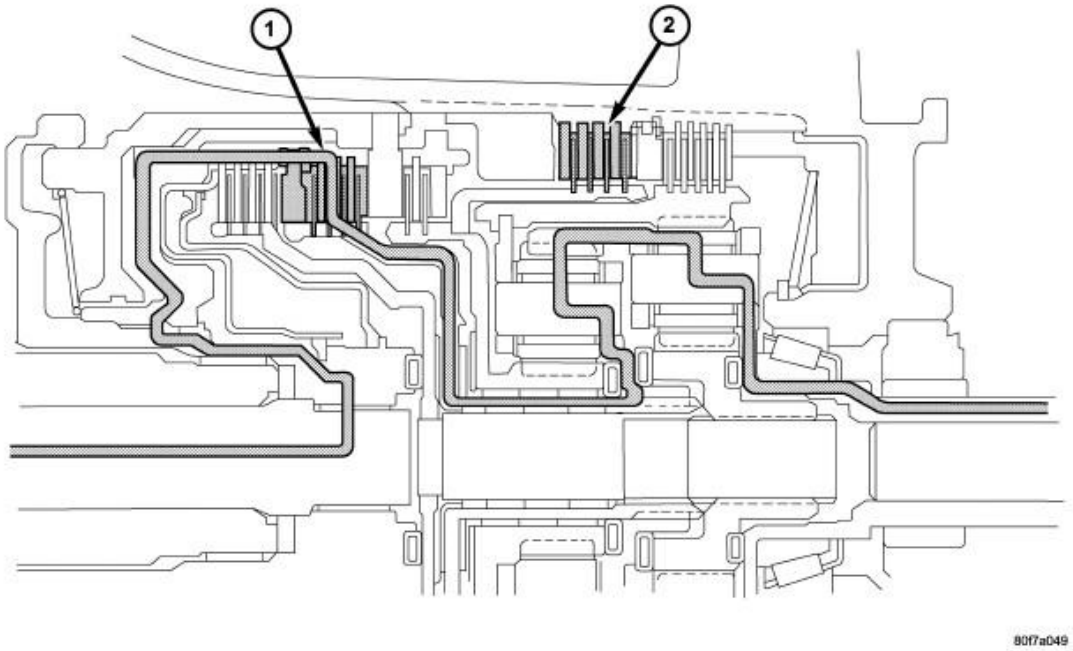

Fig. 6: Fourth Gear Powerflow
Courtesy of CHRYSLER LLC

1 - OVERDRIVE CLUTCH APPLIED (Turns Rear Sun) 2 - 2-4 CLUTCH APPLIED (Holds Front Sun)

In fourth gear input torque is through the overdrive clutch (1) which drives the front carrier. The 2/4 clutch (2) is applied to hold the front sun gear. As the overdrive clutch rotates the front carrier, it causes the pinions of the front carrier to walk around the stationary front sun gear. This causes the front carrier pinions to turn the front annulus/rear carrier assembly which provides output torque. In fourth gear, transmission output speed is more than engine input speed. This situation is called overdrive and the gear ratio is 0.69:1.

REVERSE GEAR POWERFLOW

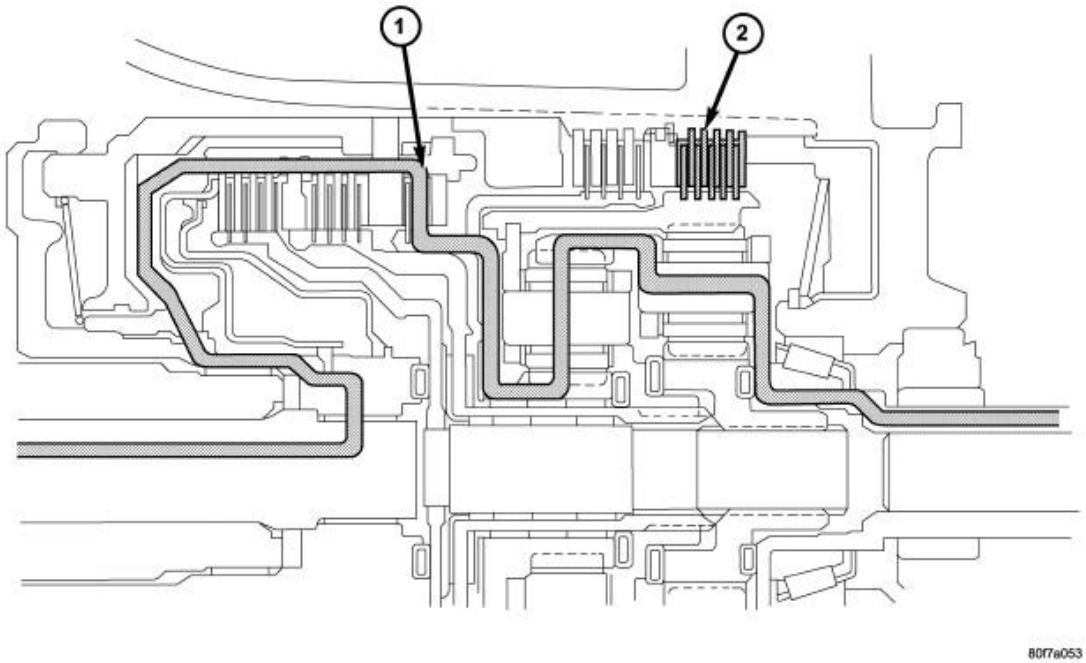

Fig. 7: Reverse Gear Powerflow
Courtesy of CHRYSLER LLC

1 - LOW-REVERSE CLUTCH APPLIED (Holds Rear Annulus Front Carrier) 2 - REVERSE CLUTCH APPLIED (Turns Front Sun)

In reverse, input power is through the reverse clutch (1). When applied, the reverse clutch drives the front sun gear through the overdrive hub and shaft. The L/R clutch (2) is applied to hold the front carrier/rear annulus assembly stationary. The front carrier is being held by the L/R clutch so the pinions are forced to rotate the front annulus/rear carrier assembly in the reverse direction. Output torque is provided, in reverse, with a gear ratio of 2.21:1.

DIAGNOSIS AND TESTING

AUTOMATIC TRANSMISSION

CAUTION: Before attempting any repair on the 42RLE Four Speed Automatic Transmission, always check for proper shift cable adjustment. Also check for diagnostic trouble codes with the scan tool and the 42RLE Transmission Diagnostic information.

42RLE automatic transmission malfunctions may be caused by these general conditions:

- Poor engine performance
- Improper adjustments
- Hydraulic malfunctions

- Mechanical malfunctions
- Electronic malfunctions

When diagnosing a problem always begin with recording the complaint. The complaint should be defined as specific as possible. Include the following checks:

- Temperature at occurrence (cold, hot, both)
- Dynamic conditions (acceleration, deceleration, upshift, cornering)
- Elements in use when condition occurs (what gear is transmission in during condition)
- Road and weather conditions
- Any other useful diagnostic information.

After noting all conditions, check the easily accessible variables:

- Fluid level and condition
- Shift cable adjustment
- Diagnostic trouble code inspection

Then perform a road test to determine if the problem has been corrected or that more diagnosis is necessary. If the problem exists after the preliminary tests and corrections are completed, hydraulic pressure checks should be performed.

ROAD TEST

Prior to performing a road test, verify that the fluid level, fluid condition, and linkage adjustment have been approved.

During the road test, the transmission should be operated in each position to check for slipping and any variation in shifting.

If the vehicle operates properly at highway speeds, but has poor acceleration, the converter stator overrunning clutch may be slipping. If acceleration is normal, but high throttle opening is needed to maintain highway speeds, the converter stator clutch may have seized. Both of these stator defects require replacement of the torque converter and thorough transmission cleaning.

Slipping clutches can be isolated by comparing the "Elements in Use" chart with clutch operation encountered on a road test. This chart identifies which clutches are applied at each position of the selector lever.

A slipping clutch may also set a DTC and can be determined by operating the transmission in all selector positions.

ELEMENTS IN USE AT EACH POSITION OF SELECTOR LEVER

Shift Lever Position	INPUT CLUTCHES			HOLDING CLUTCHES	
	Underdrive	Overdrive	Reverse	2/4	Low/Reverse

P - PARK	-	-	-	-	X
R - REVERSE	-	-	X	-	X
N - NEUTRAL	-	-	-	-	X
OD - OVERDRIVE	-	-	-	-	-
First	X	-	-	-	X
Second	X	-	-	X	-
Direct	X	X	-	-	-
Overdrive	-	X	-	X	-
D - DRIVE*	-	-	-	-	-
First	X	-	-	-	X
Second	X	-	-	X	-
Direct	X	X	-	-	-
L - LOW*	-	-	-	-	-
First	X	-	-	-	X
Second	X	-	-	X	-
Direct	X	X	-	-	-
* Vehicle upshift and downshift speeds are increased when in these selector positions.					

The process of elimination can be used to detect any unit which slips and to confirm proper operation of good units. Road test analysis can diagnose slipping units, but the cause of the malfunction cannot be determined. Practically any condition can be caused by leaking hydraulic circuits or sticking valves.

PRELIMINARY

Two basic procedures are required. One procedure for vehicles that are drivable and an alternate procedure for disabled vehicles (will not back up or move forward).

VEHICLE IS DRIVABLE

1. Record all DTCs and the accompanying DTC Event Data.
2. Check for an appropriate Technical Service Bulletin that applies to the customer complaint.
3. Check fluid level and condition.
4. Road test and note how transmission upshifts, downshifts, and engages.
5. If the complaint was related to shift quality, perform the Quick Learn procedure. Refer to **Electrical/Electronic Control Modules/MODULE, Transmission Control - Standard Procedure** , and the Drive Learn Procedure. Refer to **Electrical/Electronic Control Modules/MODULE, Transmission Control - Standard Procedure** .
6. If the shift complaint still exists, compare actual line pressure (sensor reading, using the scan tool) to the Desired Line Pressure reading, in Park, Drive, and Reverse at 1500 RPM. Check that the LP sensor reads 30 psi (the minimum it should ever display) with key on / engine off.
7. Perform air-pressure test to check clutch operation. See **Transmission and Transfer**

Case/Automatic - 42RLE - Diagnosis and Testing.

8. Replace the Transmission Solenoid/TRS Assembly and perform the Quick Learn and Drive Learn procedures again.
9. If the complaint still exists, remove, inspect, and repair the transmission as necessary.

VEHICLE IS DISABLED

1. Record all DTCs and the accompanying DTC Event Data.
2. With engine running, place transmission in gear and verify correct PRNDL reading. Observe the Input and Output speeds using the scan tool. If output RPM is greater than zero but vehicle does not move, check for transfer case in Neutral (or failed internally), failed propshaft, or failed / disconnected drive axle. If output RPM is zero and input RPM is greater than zero, internal transmission slippage is indicated. Run clutch slip tests using the scan tool, check oil pan for debris, and air check the various clutch circuits.
3. Shift the transmission into neutral, if both input and output speeds are zero, check flexplate bolts, torque converter, and transmission input shaft.
4. Compare actual line pressure (sensor reading, using the scan tool) to the Desired Line Pressure reading, in Park, Drive, and Reverse at 1500 RPM. Check that the LP sensor reads 30 psi (the minimum it should ever display) with key on / engine off. If line pressure is incorrect, check fluid level and condition.
5. Remove, inspect, and repair the transmission as necessary.

HYDRAULIC PRESSURE TESTS

NOTE: Before preforming the hydraulic pressure tests be certain to disconnect the Variable Line Pressure (VLP) electrical connector at the transmission. Check for and clear any codes that may have been set after preforming any hydraulic pressure test and connecting the Variable Line Pressure (VLP) electrical connector.

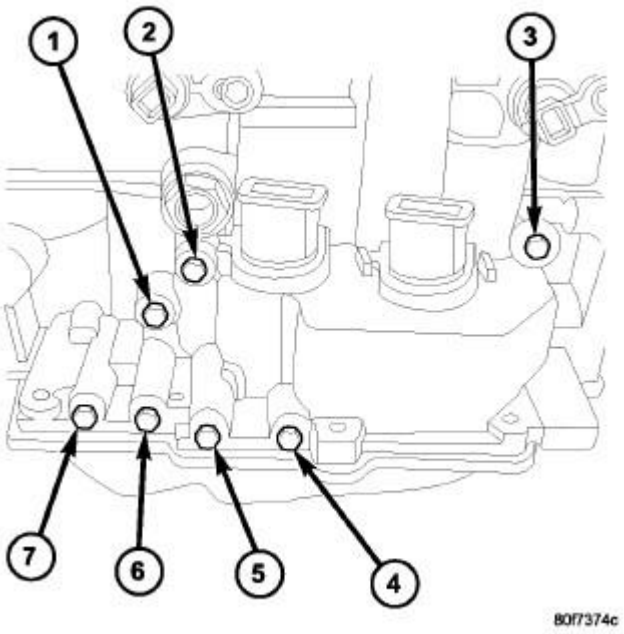

Fig. 8: Pressure Taps
Courtesy of CHRYSLER LLC

1 - TORQUE CONVERTER CLUTCH OFF
2 - REVERSE
3 - LOW/REVERSE
4 - 2/4
5 - UNDERDRIVE
6 - TORQUE CONVERTER CLUTCH ON
7 - OVERDRIVE

Pressure testing is a very important step in the diagnostic procedure. These tests usually reveal the cause of most transmission problems.

Before performing pressure tests, be certain that fluid level and condition, and shift cable adjustments have been checked and approved. Fluid must be at operating temperature (150 to 200 degrees F.).

Install an engine tachometer, raise vehicle on hoist which allows the wheels to turn, and position tachometer so it can be read.

Using special adapters L-4559, attach 300 psi gauge(s) C-3293SP to the port(s) required for test being conducted.

Test port locations are shown in the Pressure Taps graphic.

TEST ONE - SELECTOR IN MANUAL 1 (1st Gear)

NOTE: This test checks pump output, pressure regulation and condition of the low/reverse clutch hydraulic circuit and shift schedule.

1. Attach pressure gauge to the low/reverse clutch tap.
2. Move selector lever to the MANUAL 1 position.
3. Allow vehicle wheels to turn and increase throttle opening to achieve an indicated vehicle speed to 20 mph.
4. Low/reverse clutch pressure should read 115 to 145 psi.

TEST TWO - SELECTOR IN MANUAL 2 (Second Gear)

NOTE: This test checks the underdrive clutch hydraulic circuit as well as the shift schedule.

1. Attach gauge to the underdrive clutch tap.
2. Move selector lever to the MANUAL 2 position.
3. Allow vehicle wheels to turn and increase throttle opening to achieve an indicated vehicle speed of 30 mph.
4. In second gear the underdrive clutch pressure should read 110 to 145 psi.

TEST TWO A - SELECTOR IN DRIVE (OD ON - Fourth Gear)

NOTE: This test checks the underdrive clutch hydraulic circuit as well as the shift schedule.

1. Attach gauge to the underdrive clutch tap.
2. Move selector lever to the DRIVE position. Verify that the OD switch is ON.
3. Allow wheels to rotate freely and increase throttle opening to achieve an indicated speed of 40 mph.
4. Underdrive clutch pressure should read below 5 psi. If not, than either the solenoid assembly or controller is at fault.

TEST THREE - SELECTOR IN DRIVE (OD OFF - Third and Second Gear)

NOTE: This test checks the overdrive clutch hydraulic circuit as well as the shift schedule.

1. Attach gauge to the overdrive clutch tap.
2. Move selector lever to the DRIVE position.
3. Allow vehicle wheels to turn and increase throttle opening to achieve an indicated vehicle speed of 20 mph.
4. Overdrive clutch pressure should read 74 to 95 psi.
5. Move selector lever to the DRIVE position and increase indicated vehicle speed to 30 mph.

6. The vehicle should be in second gear and overdrive clutch pressure should be less than 5 psi.

TEST FOUR - SELECTOR IN DRIVE (OD ON - Fourth Gear)

NOTE: This test checks the 2/4 clutch hydraulic circuit.

1. Attach gauge to the 2/4 clutch tap.
2. Move selector lever to the DRIVE position.
3. Allow vehicle front wheels to turn and increase throttle opening to achieve an indicated vehicle speed of 30 mph. Vehicle should be in fourth gear.
4. The 2/4 clutch pressure should read 75 to 95 psi.

TEST FIVE-SELECTOR IN DRIVE (OD ON - Fourth Gear, CC on)

NOTE: These tests check the torque converter clutch hydraulic circuit.

1. Attach gauge to the torque converter clutch off pressure tap.
2. Move selector lever to the DRIVE position.
3. Allow vehicle wheels to turn and increase throttle opening to achieve an indicated vehicle speed of 50 mph. Vehicle should be in 4th gear, CC on.

CAUTION: Both wheels must turn at the same speed.

4. Torque converter clutch off pressure should be less than 5 psi.
5. Now attach the gauge to the torque converter clutch on pressure tap.
6. Move selector to the OD position.
7. Allow vehicle wheels to turn and increase throttle opening to achieve an indicated vehicle speed of 50 mph.
8. Verify the torque converter clutch is applied mode using the RPM display of the scan tool.
9. Torque converter clutch on pressure should be 60-90 psi.

TEST SIX-SELECTOR IN REVERSE

NOTE: This test checks the reverse clutch hydraulic circuit.

1. Attach gauge to the reverse and low/reverse clutch tap.
2. Move selector lever to the REVERSE position.
3. Read reverse clutch pressure with output stationary (foot on brake) and throttle opened to achieve 1500 RPM.
4. Reverse and low/reverse clutch pressure should read 165 to 235 psi.

TEST RESULT INDICATIONS

1. If proper line pressure is found in any one test, the pump and pressure regulator are working properly.
2. Low pressure in all positions indicates a defective pump, a clogged filter, or a stuck pressure regulator valve.
3. Clutch circuit leaks are indicated if pressures do not fall within the specified pressure range.
4. If the overdrive clutch pressure is greater than 5 psi in 6 of Test Three, a worn reaction shaft seal ring or a defective solenoid assembly is indicated.
5. If the underdrive clutch pressure is greater than 5 psi in 4 of Test Two-A, a defective solenoid/pressure switch assembly or controller is the cause.

ALL PRESSURE SPECIFICATIONS ARE PSI (on hoist, with wheels free to turn)

Gear Selector Position	Actual Gear	PRESSURE TAPS						
		Underdrive Clutch	Overdrive Clutch	Reverse Clutch	Torque Converter Clutch Off	Torque Converter Clutch On	2/4 Clutch	Low/Reverse Clutch
PARK - 0 mph *	PARK	0-2	0-5	0-2	60-110	45-100	0-2	115-145
REVERSE - 0 mph *	REVERSE	0-2	0-7	165-235	50-100	35-85	0-2	165-235
NEUTRAL - 0 mph *	NEUTRAL	0-2	0-5	0-2	60-110	45-100	0-2	115-145
Low - 20 mph #	FIRST	110-145	0-5	0-2	60-110	45-100	0-2	115-145
Third - 30 mph #	SECOND	110-145	0-5	0-2	60-110	45-100	115-145	0-2
Third - 45 mph #	DIRECT	75-95	75-95	0-2	60-90	45-80	0-2	0-2
OD - 30 mph #	OVERDRIVE	0-2	75-95	0-2	60-90	45-80	75-95	0-2
OD - 50 mph #	OVERDRIVE WITH TCC	0-2	75-95	0-2	0-5	60-95	75-95	0-2

*** Engine Speed at 1500 RPM**

 # CAUTION: Both wheels must be turning at same speed.

CLUTCH AIR PRESSURE TESTS

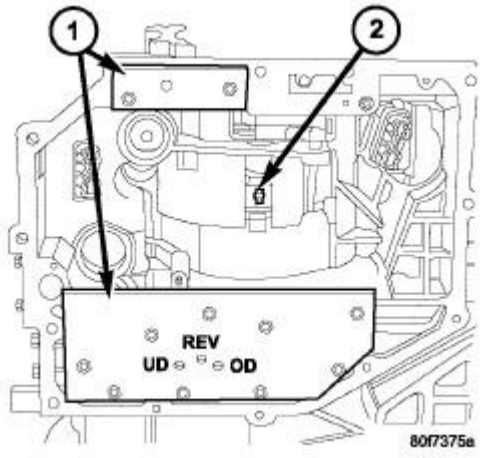

Fig. 9: Air Pressure Test Plate
Courtesy of CHRYSLER LLC

1 - AIR PRESSURE TEST PLATES 2 - 2/4 CLUTCH RETAINER HOLE

Inoperative clutches can be located by substituting air pressure for fluid pressure. The clutches may be tested by applying air pressure to their respective passages after the valve body has been removed. Use Plate Set 6599-1 (1) and 6599-2 (1) to perform test .

To make air pressure tests, proceed as follows:

NOTE: The compressed air supply must be free of all dirt and moisture. Use a pressure of 30psi.

1. Remove oil pan and valve body. See **Transmission and Transfer Case/Automatic - 42RLE/VALVE BODY - Removal**.
2. Apply air pressure to the holes in the plates (1), one at a time.
3. Listen for the clutch to apply. It will give a slight thud sound. If a large amount of air is heard escaping, the transmission must be removed from vehicle, disassembled and all seals inspected.

2/4 CLUTCH

Apply air pressure to the feed hole located on the 2/4 clutch retainer (2). Look in the area where the 2/4 piston contacts the first separator plate and watch carefully for the 2/4 piston to move rearward. The piston should return to its original position after the air pressure is removed.

OVERDRIVE CLUTCH

Apply air pressure to the overdrive clutch apply passage and watch for the push/pull piston to move forward. The piston should return to its starting position when the air pressure is removed.

REVERSE CLUTCH

Apply air pressure to the reverse clutch apply passage and watch for the push/pull piston to move rearward. The piston should return to its starting position when the air pressure is removed.

LOW/REVERSE CLUTCH

Apply air pressure to the low/reverse clutch feed hole passage. Look in the area where the low/reverse piston contacts the first separator plate. Watch carefully for the piston to move forward. The piston should return to its original position after the air pressure is removed.

UNDERDRIVE CLUTCH

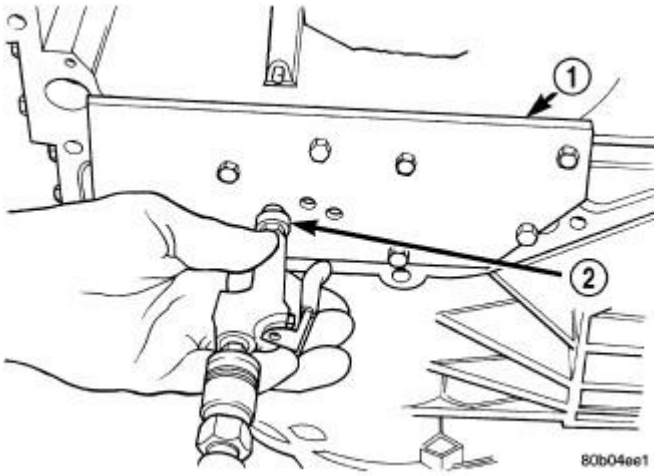

Fig. 10: Testing Underdrive Clutch
Courtesy of CHRYSLER LLC

1 - AIR PRESSURE TEST PLATE 6599-1 2 - AIR NOZZLE

Because this clutch piston cannot be seen, its operation is checked by function. Use an air nozzle (2) to apply air pressure is to the low/reverse or the 2/4 clutch opening in Test Plate 6599-1 (2). This locks the output shaft. Use a piece of rubber hose wrapped around the input shaft and a pair of clamp-on pliers to turn the input shaft. Next apply air pressure to the underdrive clutch. The input shaft should not rotate with hand torque. Release the air pressure and confirm that the input shaft will rotate.

FLUID LEAKAGE

TRANSMISSION OIL LEAK

Begin with a thorough inspection of the transmission, particularly at the area of the suspected leak. If an oil leak source is not readily identifiable, the following steps should be followed:

1. Clean or degrease the transmission with a water soluble solvent only.
2. Add an oil soluble dye (use as recommended by manufacturer) while the powertrain is at ambient temperature. Start the engine and let idle for approximately 15 minutes. Check the oil dip stick (if equipped) to make sure the dye is thoroughly mixed as indicated with a fluorescent color under a black light.
3. Using a black light, inspect the entire transmission for fluorescent dye, practically at the suspected area of oil leak. If the oil leak is found and identified, repair per service information instructions.
4. If dye is not observed, drive the vehicle at various speeds for approximately 24 km (15 miles) and repeat inspection.

TORQUE CONVERTER HOUSING AREA

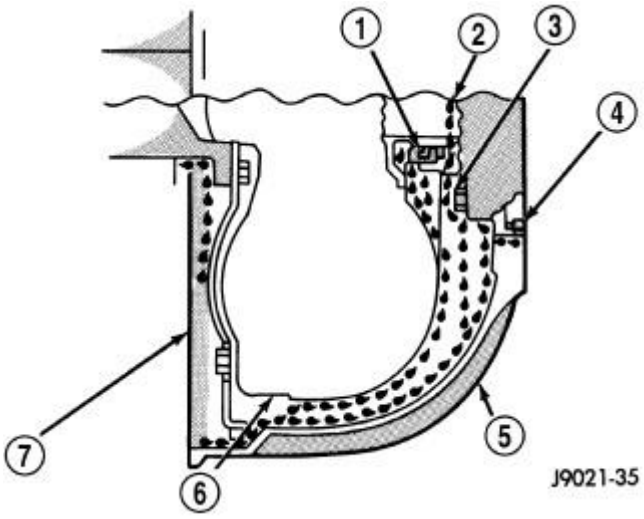

Fig. 11: Converter Housing Leak Paths
Courtesy of CHRYSLER LLC

1 - PUMP SEAL
2 - PUMP VENT
3 - PUMP BOLT
4 - PUMP GASKET
5 - CONVERTER HOUSING
6 - CONVERTER
7 - REAR MAIN SEAL LEAK

When diagnosing converter housing (5) fluid leaks, three actions must be taken before repair:

1. Verify proper transmission fluid level.
2. Verify that the leak originates from the converter housing area and is transmission fluid.
3. Determine the true source of the leak.

Fluid leakage at or around the torque converter area may originate from an engine oil leak (7). The area should be examined closely. Factory fill fluid is red and, therefore, can be distinguished from engine oil.

Some suspected converter housing fluid leaks may not be leaks at all. They may only be the result of residual fluid in the converter housing, or excess fluid spilled during factory fill, or fill after repair. Converter housing leaks have several potential sources. Through careful observation, a leak source can be identified before removing the transmission for repair.

Pump seal (1) leaks tend to move along the drive hub and onto the rear of the converter. Pump o-ring or pump body leaks follow the same path as a seal leak. Pump attaching bolt (3) leaks are generally deposited on the inside of the converter housing (5) and not on the converter itself. Pump seal (1) or gasket (4) leaks usually travel down the inside of the converter housing.

TORQUE CONVERTER LEAKAGE

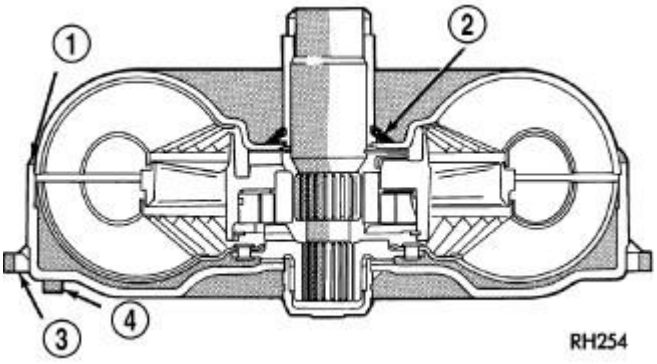

Fig. 12: Converter Leak Points - Typical
Courtesy of CHRYSLER LLC

1 - OUTSIDE DIAMETER WELD
2 - TORQUE CONVERTER HUB WELD
3 - STARTER RING GEAR
4 - LUG

Possible sources of torque converter leakage are:

- Torque converter weld leaks at the outside diameter weld (1).
- Torque converter hub weld (2).

STANDARD PROCEDURE

ALUMINUM THREAD REPAIR

Damaged or worn threads in the aluminum transmission case and valve body can be repaired by the use of Heli-Coils®, or equivalent. This repair consists of drilling out the worn-out damaged threads. Then tap the hole with a special Heli-Coil® tap, or equivalent, and installing a Heli-Coil® insert, or

equivalent, into the hole. This brings the hole back to its original thread size.

Heli-Coil®, or equivalent, tools, and inserts are readily available from most automotive parts suppliers.

REMOVAL

REMOVAL

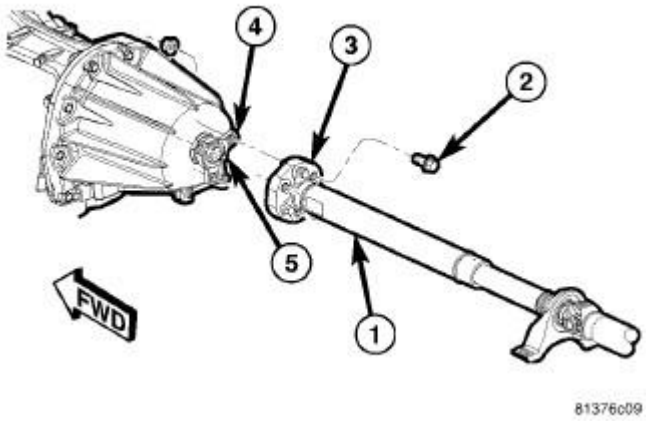

Fig. 13: Remove/Install Propeller Shaft
Courtesy of CHRYSLER LLC

1 - PROPELLER SHAFT
2 - BOLTS
3 - PROPELLER SHAFT COUPLER
4 - COMPANION FLANGE
5 - PROPELLER SHAFT PILOT

1. Disconnect the negative battery cable.
2. Raise and support the vehicle.
3. Mark propeller shaft (1) and the transmission flange (4) for assembly alignment.
4. Remove the bolts (2) holding the rear propeller shaft coupler (3) to the transmission flange (4).
5. Slide the propeller shaft (1) rearward until the coupler clears the propeller shaft pilot (5) on the transmission output shaft.

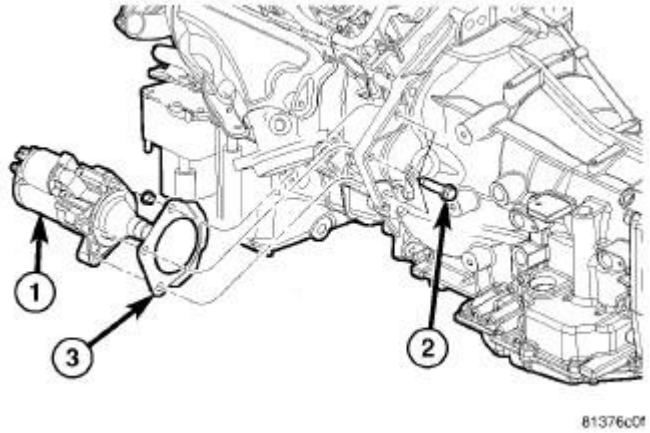

Fig. 14: Relocate Starter
Courtesy of CHRYSLER LLC

1 - STARTER 2 - BOLTS 3 - CLOSEOUT PLATE

6. Remove the bolts (2) holding the starter motor (1) to the transmission. Refer to **Electrical - Engine Systems/Starting/STARTER - Removal** .
7. Remove the starter (1) from the transmission starter pocket and safely relocate.

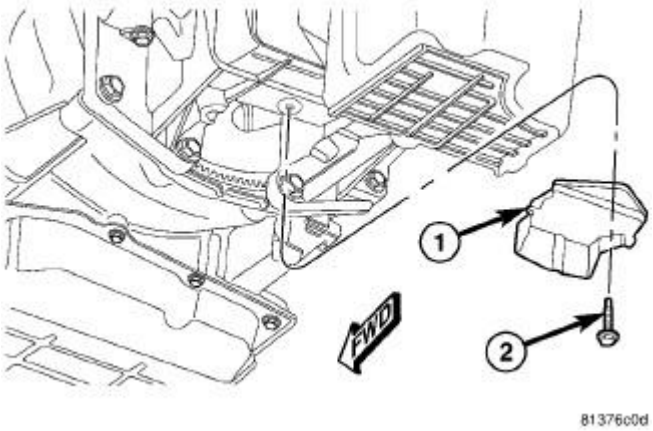

Fig. 15: Removing/Installing Torque Converter Access Cover - 3.5L
Courtesy of CHRYSLER LLC

1 - ACCESS COVER 2 - BOLT

8. Remove the bolt (2) holding the torque converter access cover (1) to the transmission, 3.5L

engines.

9. Remove the torque converter access cover (1) from the transmission.

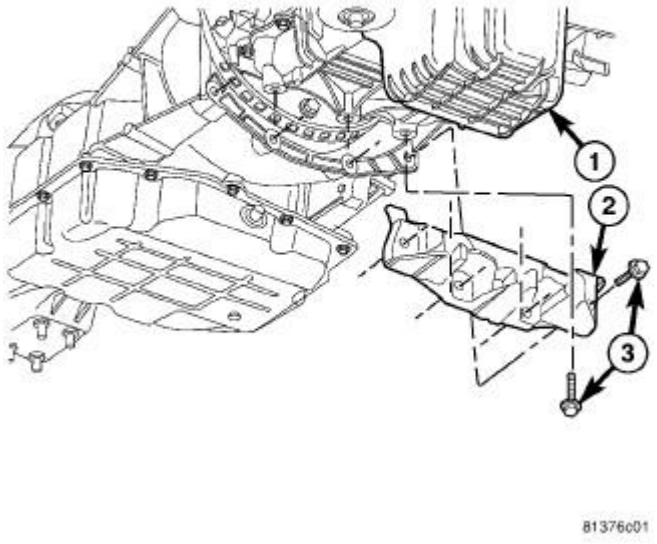

Fig. 16: Removing Structural Collar - 2.7L
Courtesy of CHRYSLER LLC

1 - ENGINE OIL PAN
2 - STRUCTURAL COVER
3 - HORIZONTAL BOLTS
4 - VERTICAL BOLTS

10. Remove the structural collar bolts (3, 4) and structural collar (2) on vehicles equipped with 2.7L engines. Refer to **Engine/Engine Block/COVER, Structural Dust - Removal** .

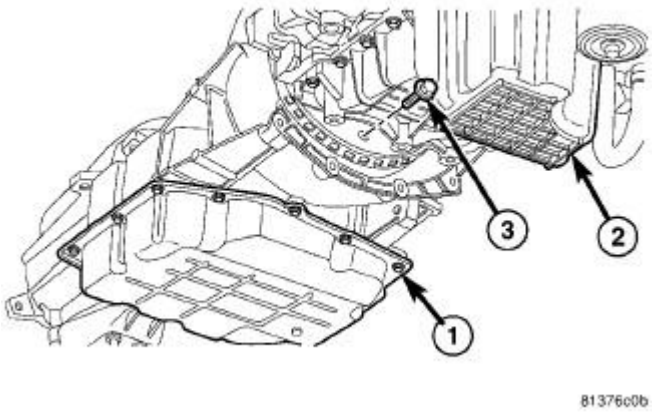

Fig. 17: Removing/Installing Torque Converter Bolts
Courtesy of CHRYSLER LLC

1 - TRANSMISSION 2 - ENGINE OIL PAN 3 - BOLTS

11. Rotate crankshaft in clockwise direction until converter bolts (1) are accessible. Then remove bolts (1) one at a time. Rotate crankshaft with socket wrench on dampener bolt.

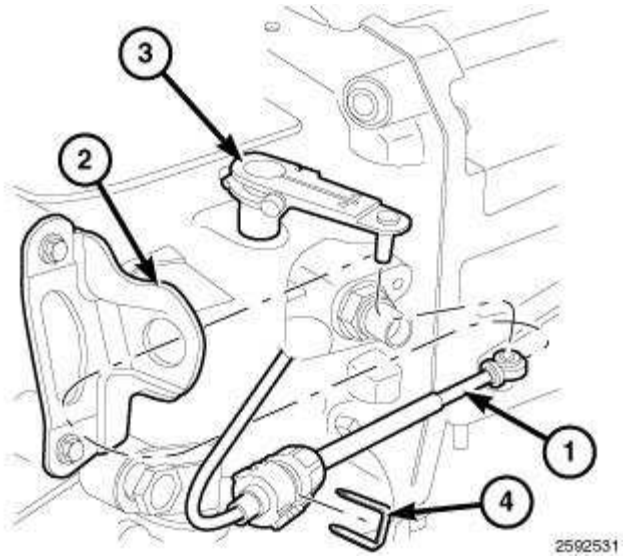

Fig. 18: Remove/Install Gearshift Cable
Courtesy of CHRYSLER LLC

12. Remove the gearshift cable retaining clip (4) (if equipped).
13. Disconnect the gearshift cable (1) from the transmission manual valve lever (3). and pull the cable out of the mounting bracket (2).

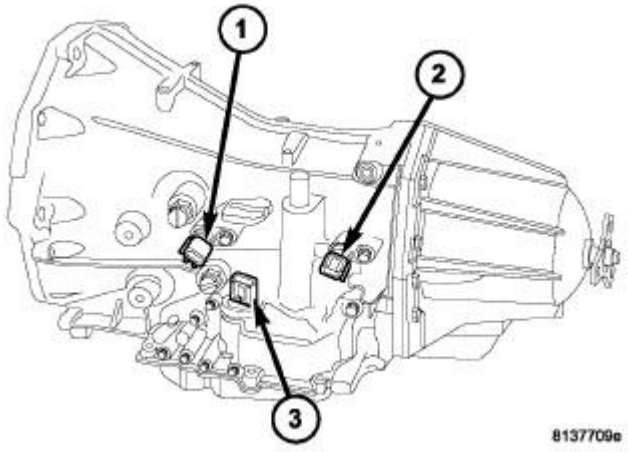

Fig. 19: Input And Output Speed Sensors & Transmission Range Sensor
Courtesy of CHRYSLER LLC

1 - INPUT SPEED SENSOR 2 - OUTPUT SPEED SENSOR 3 - TRANSMISSION RANGE SENSOR

14. Disconnect wires from the input (1) and output (2) speed sensors.
15. Disconnect wires from the transmission range sensor (3).

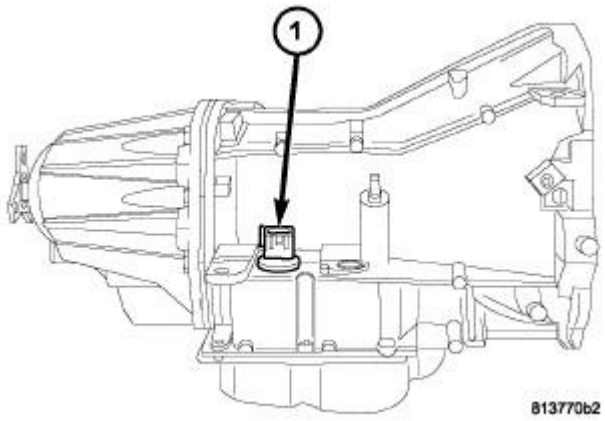

Fig. 20: Solenoid/Pressure Switch Assembly
Courtesy of CHRYSLER LLC

1 - SOLENOID/PRESSURE SWITCH ASSEMBLY CONNECTOR

16. Disconnect wires from the solenoid/pressure switch assembly (1).

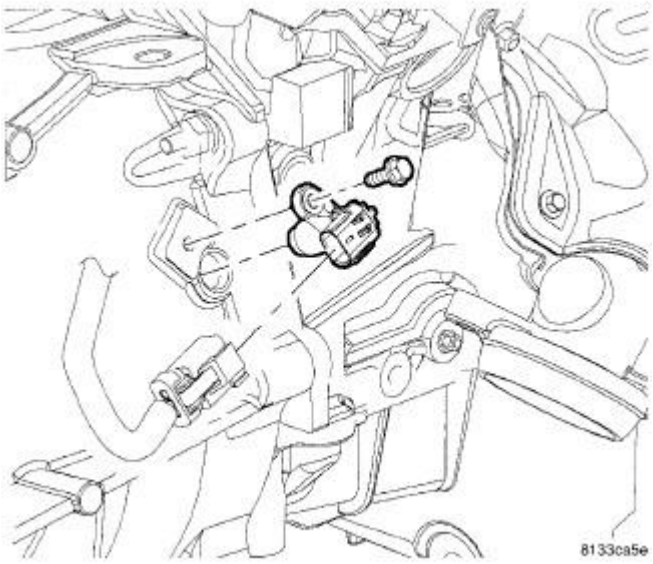

Fig. 21: Crankshaft Position Sensor
Courtesy of CHRYSLER LLC

17. Remove the crankshaft position sensor. Refer to **Fuel System/Fuel Injection/SENSOR, Crankshaft Position - Removal** .

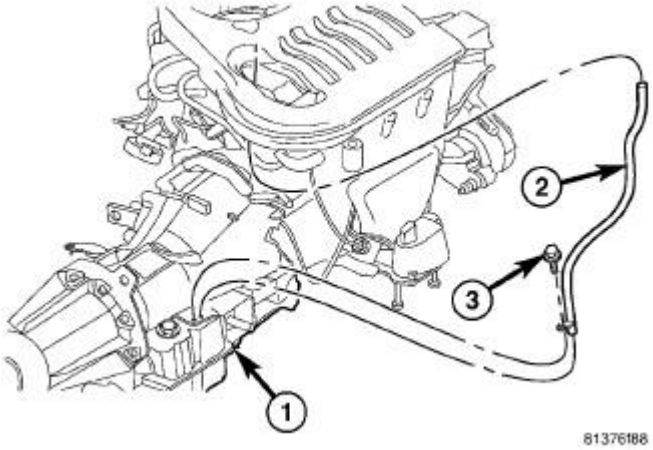

Fig. 22: Remove/Install Transmission Fill Tube
Courtesy of CHRYSLER LLC

1 - TRANSMISSION
2 - TRANSMISSION FILL TUBE
3 - BOLT

18. Remove the bolt (3) holding the transmission fill tube (2) to the transmission (1).
19. Remove the transmission fill tube (2).

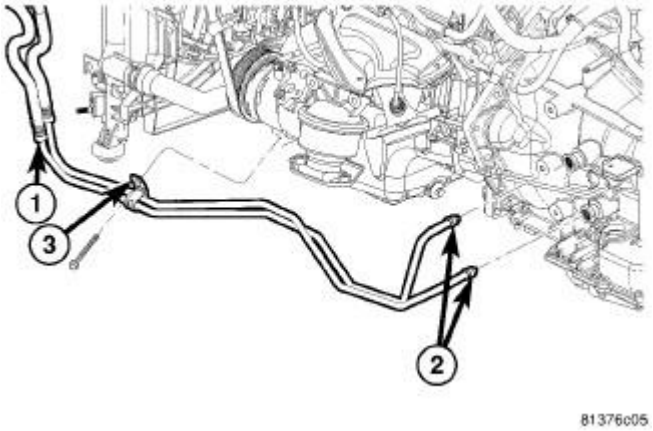

Fig. 23: Transmission Lines
Courtesy of CHRYSLER LLC

1 - TRANSMISSION OIL COOLER LINES 2 - COOLER LINE FITTINGS 3 - SUPPORT CLAMPS

20. Disconnect transmission fluid cooler lines (1) at transmission fittings (2) and clips (3).
21. Disconnect the transmission vent hose from the transmission.

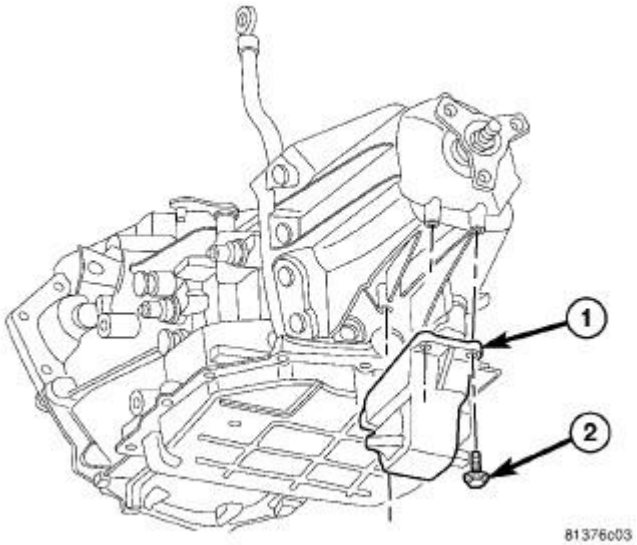

Fig. 24: Remove/Install Rear Support & Cushion
Courtesy of CHRYSLER LLC

22. Support rear of engine with safety stand or jack.
23. Raise transmission slightly with service jack to relieve load on crossmember and supports.

24. Remove bolts (2) securing rear support and cushion (3) to transmission crossmember (1).
25. Remove bolts attaching crossmember (1) to frame and remove crossmember.

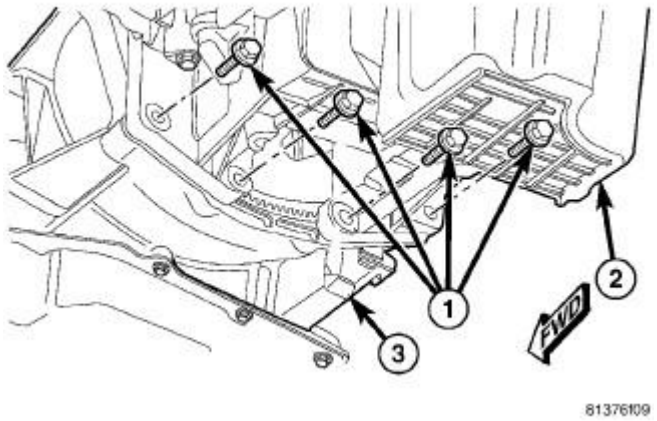

Fig. 25: Removing/Installing Engine Oil Pan To Transmission Bolts - 3.5L
Courtesy of CHRYSLER LLC

1 - BOLTS
2 - ENGINE OIL PAN
3 - TRANSMISSION

26. Remove the bolts (1) holding the engine oil pan (2) to the transmission (3).

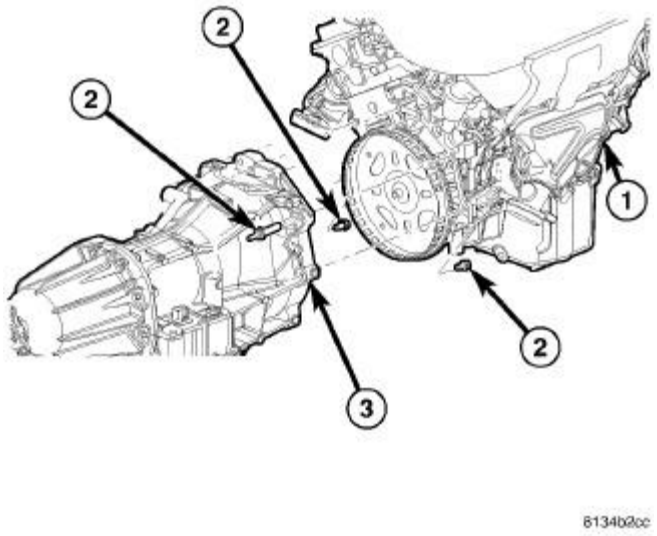

Fig. 26: Remove/Install Transmission

Courtesy of CHRYSLER LLC

1 - ENGINE 2 - BOLTS 3 - TRANSMISSION

27. Remove all remaining bolts (2) holding the engine (1) to the transmission (3).
28. Carefully work transmission and torque converter assembly rearward off engine block dowels.
29. Hold torque converter in place during transmission removal.
30. Lower transmission and remove assembly from under the vehicle.
31. To remove torque converter, carefully slide torque converter out of the transmission.

DISASSEMBLY

DISASSEMBLY

CAUTION: Do not intermix clutch discs or plates as the unit might then fail.

NOTE: If the transmission is being reconditioned (clutch/seal replacement) or replaced, it is necessary to perform the Quick Learn Procedure using the scan tool. Refer to Electrical - Electronic Control Modules/Electronic Control Modules/MODULE, Transmission Control - Standard Procedure .

NOTE: Tag all clutch pack assemblies, as they are removed, for reassembly identification.

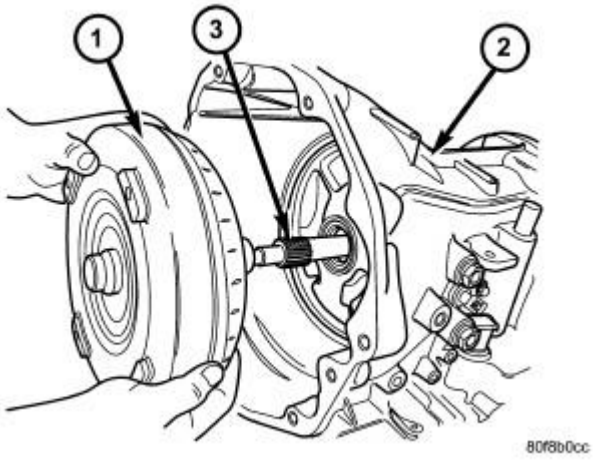

Fig. 27: Removing Torque Converter
Courtesy of CHRYSLER LLC

1. Move the shift lever clockwise as far as it will go and then remove the shift lever.
2. Remove the torque converter (1) from the transmission input shaft (3).

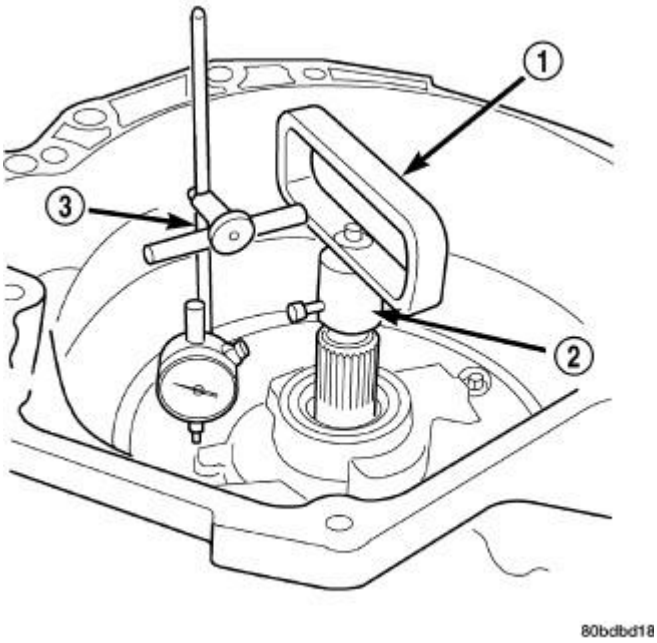

Fig. 28: Measure Input Shaft End Play Using End Play Set 8266A - Typical
Courtesy of CHRYSLER LLC

1 - TOOL 8266-8
2 - TOOL 8266-2
3 - TOOL C-3339A

3. Measure input shaft end play using End Play Set 8266A (1, 2). Set up End Play Set 8266A and a dial indicator as shown in illustration.
4. Move input shaft in and out to obtain end play reading. End play specifications are 0.13 to 0.64 mm (0.005 to 0.025 inch). Record indicator reading for reference when reassembling the transmission. If endplay exceeds the specified range, the #4 thrust plate needs to be inspected and changed if necessary.

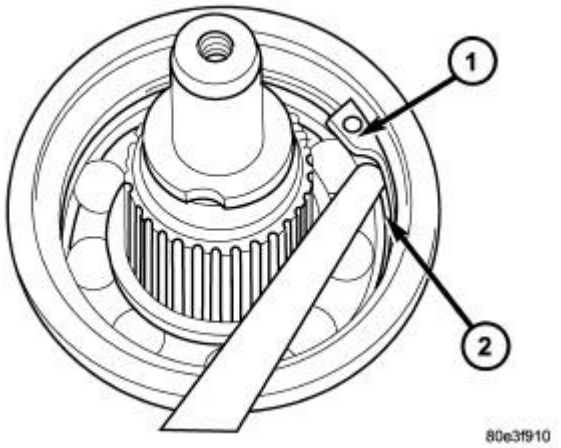

Fig. 29: Remove/Install Rear Output Shaft Retaining Ring
Courtesy of CHRYSLER LLC

1 - RETAINING RING 2 - OUTPUT SHAFT BEARING

NOTE: It is not necessary to remove the output shaft flange to disassemble the transmission. Perform the following steps only if it necessary to replace a component in the extension housing assembly.

5. Place the transmission in PARK to prepare for the removal of the output shaft nut.
6. Remove the nut holding the propeller shaft flange to the output shaft and remove the flange.
7. Remove the transmission rear oil seal with a suitable slide hammer and screw.
8. Remove the transmission output shaft washer.
9. Remove the transmission rear output shaft bearing retaining ring (1).

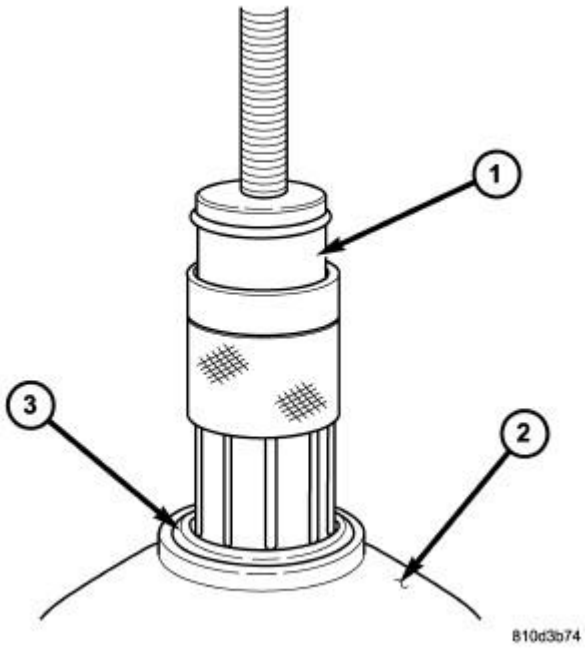

Fig. 30: Position Remover 9082A On Bearing
Courtesy of CHRYSLER LLC

1 - BEARING REMOVER 9082A
2 - TRANSMISSION CASE
3 - OUTPUT SHAFT BEARING

10. Position Bearing Remover 9082A (1) over the inner race of the output shaft bearing (3).

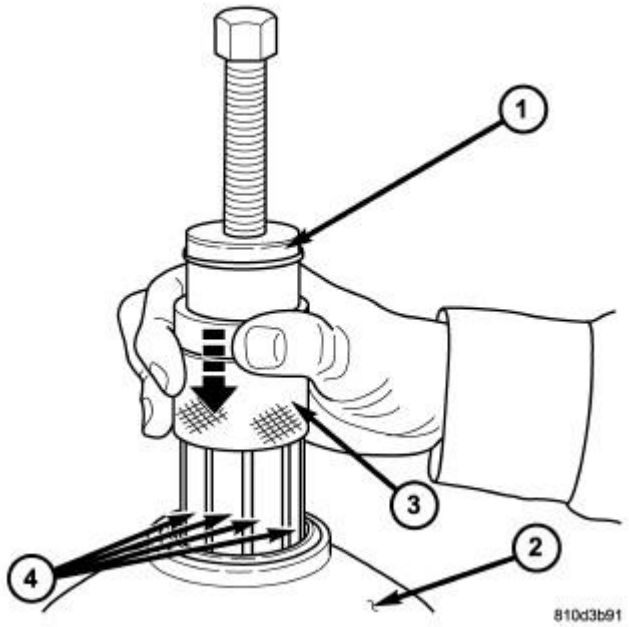

Fig. 31: Slide Remover 9082A Collar Downward
Courtesy of CHRYSLER LLC

1 - BEARING REMOVER 9082A
2 - TRANSMISSION CASE
3 - COLLAR
4 - FINGERS

NOTE: Due to production variations in the bearing, it may not be possible to slide the collar fully downward. It is only necessary to slide the collar down far enough that the fingers securely grasp the inner bearing race.

11. Slide the collar (3) on the Bearing Remover 9082A (1) downward over the fingers (4) of the tool.

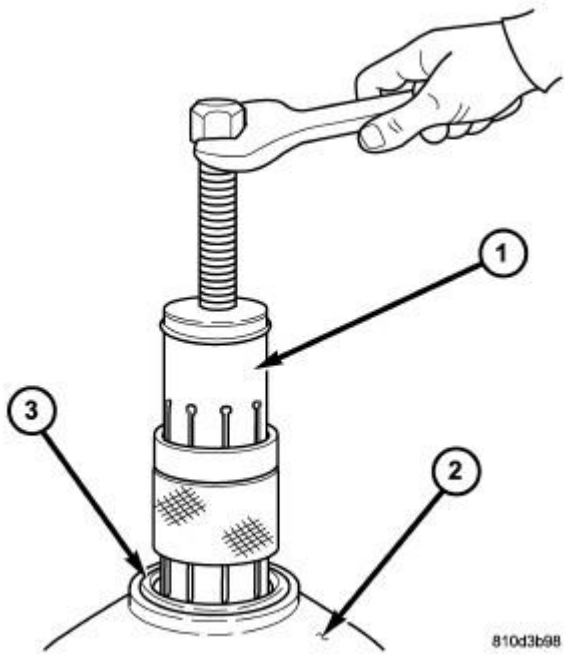

Fig. 32: Removing Output Shaft Bearing
Courtesy of CHRYSLER LLC

1 - BEARING REMOVER 9082A 2 - TRANSMISSION CASE 3 - OUTPUT SHAFT BEARING

12. Remove the output shaft bearing (3).
13. Remove the geartrain end-play shim from the output shaft. Be sure to tag the shim since it is very similar to the output shaft washer and they must not be interchanged.

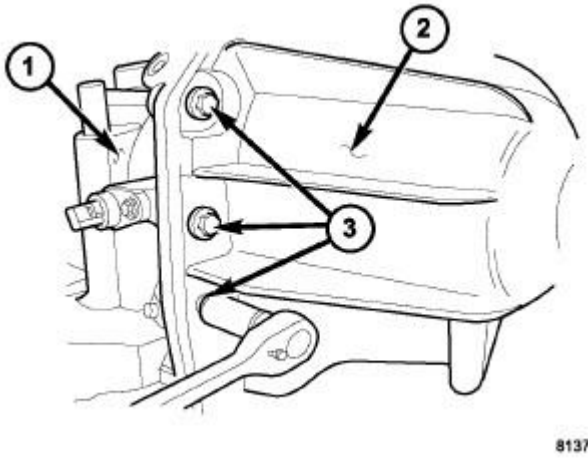

Fig. 33: Remove/Install Adapter/Extension Housing Bolts
Courtesy of CHRYSLER LLC

NOTE: **The four bolts (3) along the bottom of the extension housing (2) have a sealing patch applied from the factory. Note the locations of these bolts and separate these bolts for reuse.**

14. Remove the bolts that hold the extension housing (2) onto the transmission case.

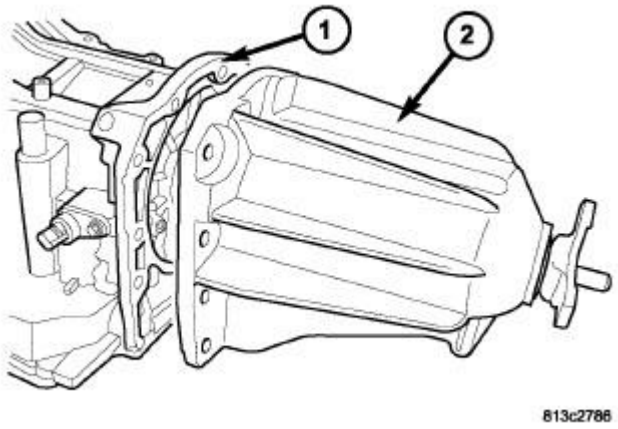

Fig. 34: Remove/Install Extension Housing
Courtesy of CHRYSLER LLC

15. Remove the extension (2) housing from the transmission case. There are two pry slots located near the bottom corners of the housing for separating the housing from the transmission case.

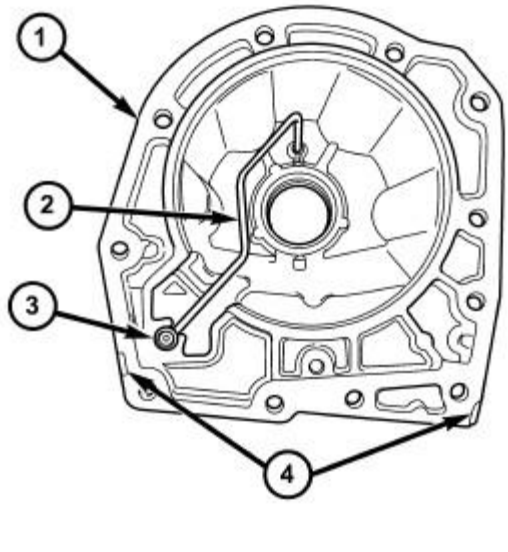

Fig. 35: Lube Tube Grommet

Courtesy of CHRYSLER LLC

1 - HOUSING 2 - LUBE TUBE 3 - GROMMET 4 - PRY SLOTS

16. Inspect the lube tube grommet (3) for damage. If the grommet lip is damaged, it will need to be replaced.

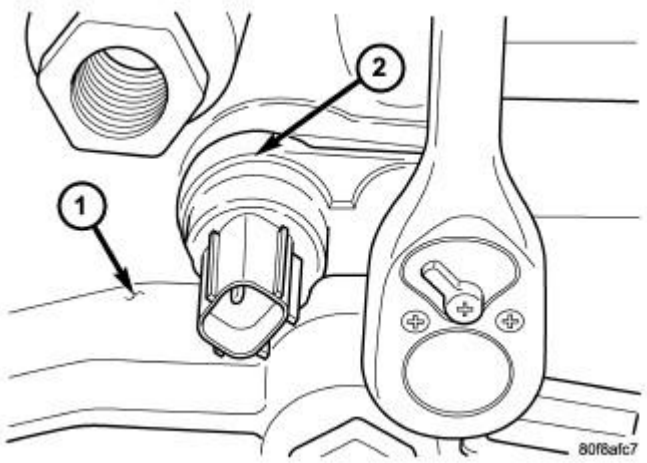

Fig. 36: Removing/Installing Input Speed Sensor Bolt
Courtesy of CHRYSLER LLC

1 - INPUT SPEED SENSOR 2 - TRANSMISSION CASE

NOTE: The speed sensor bolts have a sealing patch applied from the factory. Separate these bolts for reuse.

17. Remove the input speed sensor bolt.

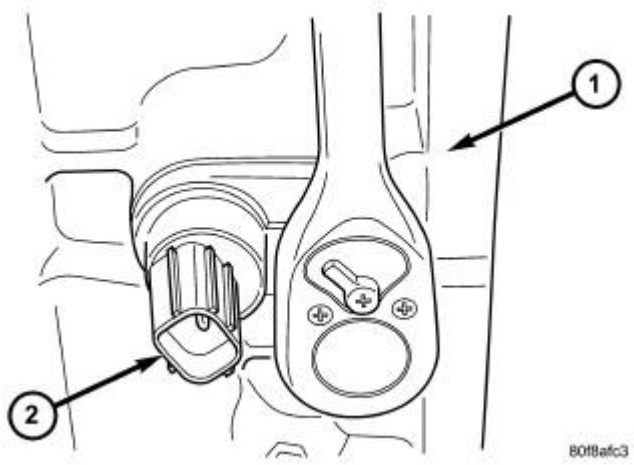

Fig. 37: Removing Output Speed Sensor Bolt
Courtesy of CHRYSLER LLC

1 - OUTPUT SPEED SENSOR 2 - TRANSMISSION CASE

NOTE: The speed sensor bolts have a sealing patch applied from the factory. Separate these bolts for reuse.

18. Remove the output speed sensor bolt.

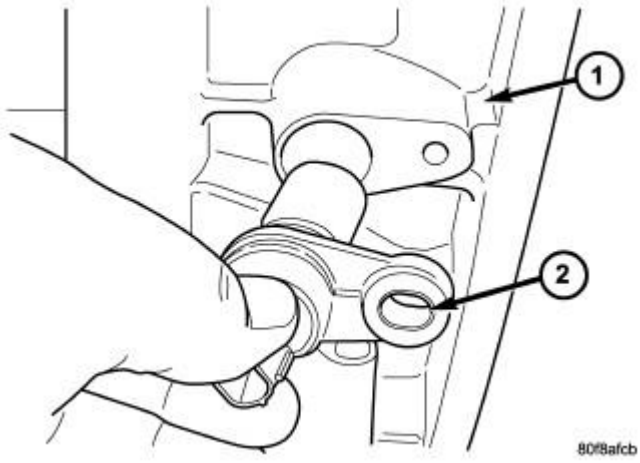

Fig. 38: Removing/Installing Output Speed Sensor
Courtesy of CHRYSLER LLC

1 - OUTPUT SPEED SENSOR 2 - TRANSMISSION CASE

19. Remove the input and output (2) speed sensors. Identify the speed sensors for reinstallation

since they are not interchangeable.

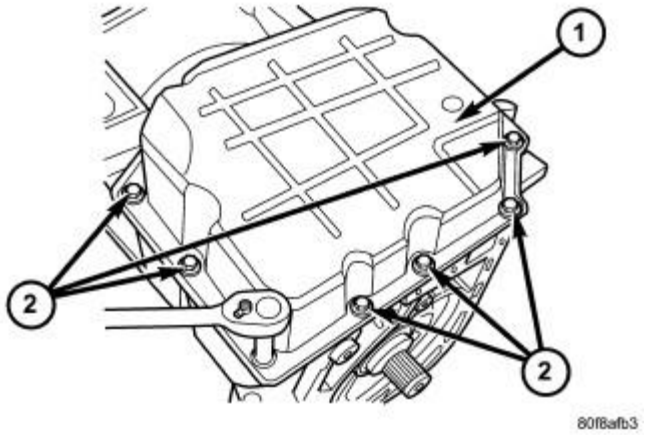

Fig. 39: Remove/Install Transmission Oil Pan Bolts
Courtesy of CHRYSLER LLC

1 - TRANSMISSION OIL PAN 2 - BOLTS

NOTE: One of the oil pan bolts has a sealing patch applied from the factory. Separate this bolt for reuse.

20. Remove the transmission oil pan bolts (2).

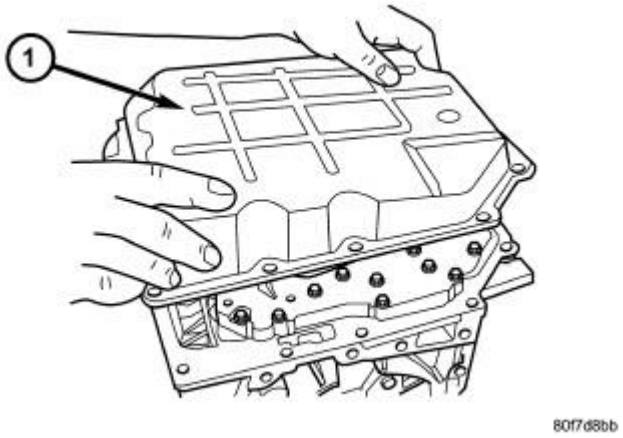

Fig. 40: Remove/Install Transmission Oil Pan
Courtesy of CHRYSLER LLC

1 - TRANSMISSION OIL PAN

21. Remove the transmission oil pan (1).

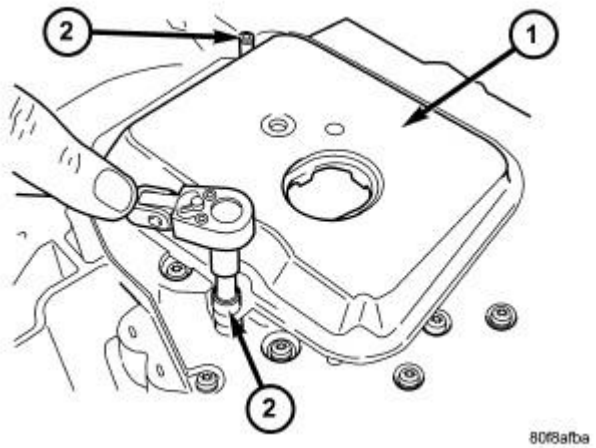

Fig. 41: Removing Oil Filter Screws
Courtesy of CHRYSLER LLC

1 - OIL FILTER 2 - SCREWS

22. Remove the transmission oil filter screws (2).

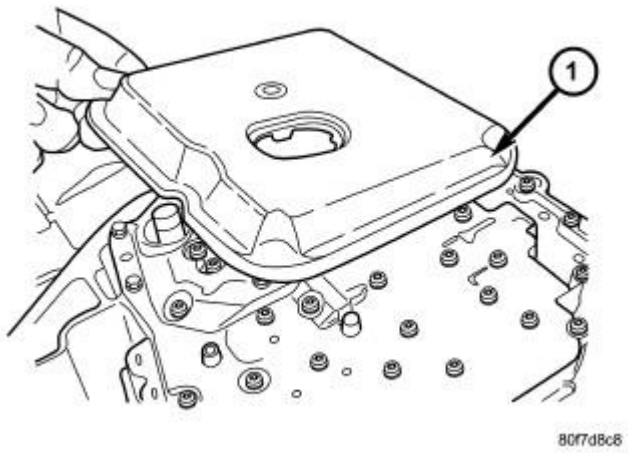

Fig. 42: Remove/Install Transmission Filter
Courtesy of CHRYSLER LLC

1 - TRANSMISSION FILTER

23. Remove transmission oil filter (1).

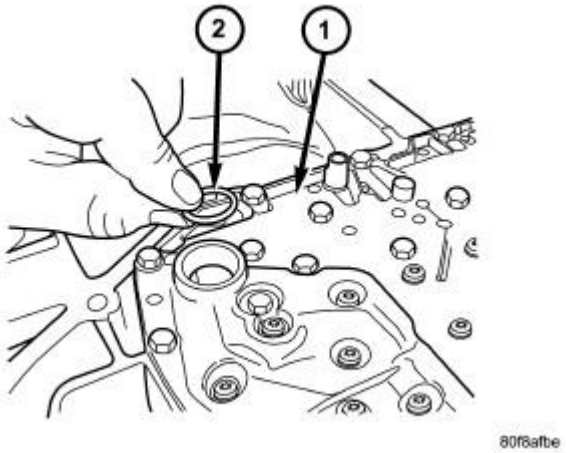

Fig. 43: Removing Oil Filter O-Ring
Courtesy of CHRYSLER LLC

1 - VALVE BODY 2 - O-RING

24. Remove the oil filter o-ring (2) from the valve body.
25. If necessary, use a suitable tool to push the transmission fill tube grommet and extension from the transmission case from the bottom.

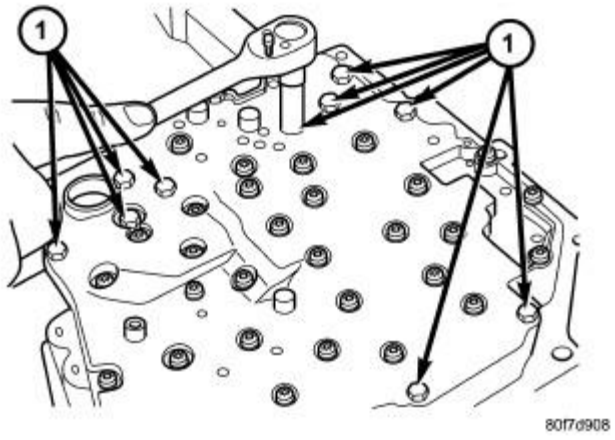

Fig. 44: Remove/Install Valve Body Fasteners
Courtesy of CHRYSLER LLC

1 - BOLTS

26. Remove valve body-to-case bolts (1).

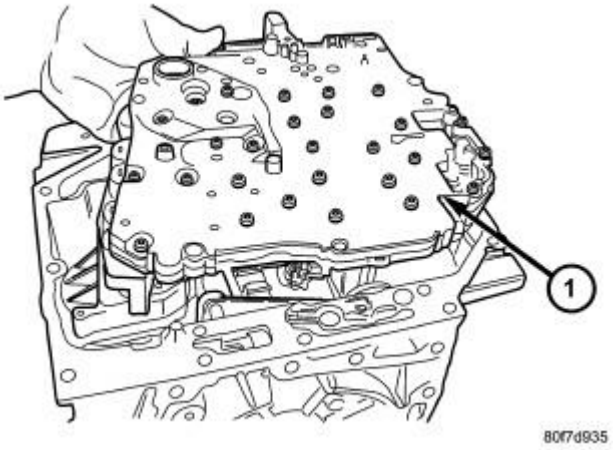

Fig. 45: Remove/Install Valve Body
Courtesy of CHRYSLER LLC

1 - VALVE BODY

CAUTION: Do not handle the valve body by the manual shaft. Damage could result.

27. Remove valve body (1) from transmission.

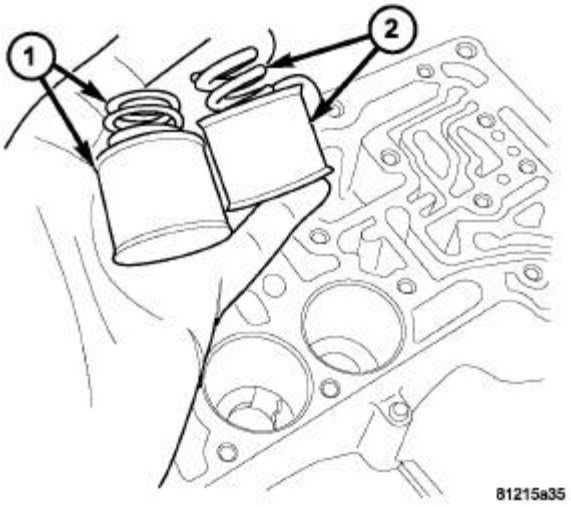

Fig. 46: Underdrive & Overdrive Accumulators
Courtesy of CHRYSLER LLC

1 - OVERDRIVE PISTON AND SPRING 2 - UNDERDRIVE PISTON AND SPRING

28. Remove underdrive and overdrive accumulators (1, 2).

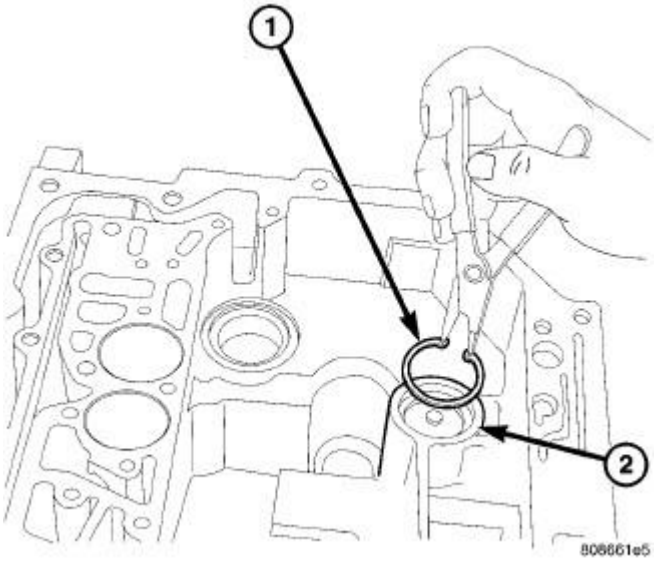

Fig. 47: Remove/Install Snap Ring
Courtesy of CHRYSLER LLC

1 - SNAP RING 2 - LOW/REVERSE ACCUMULATOR

29. Remove the low/reverse accumulator snap ring (1).

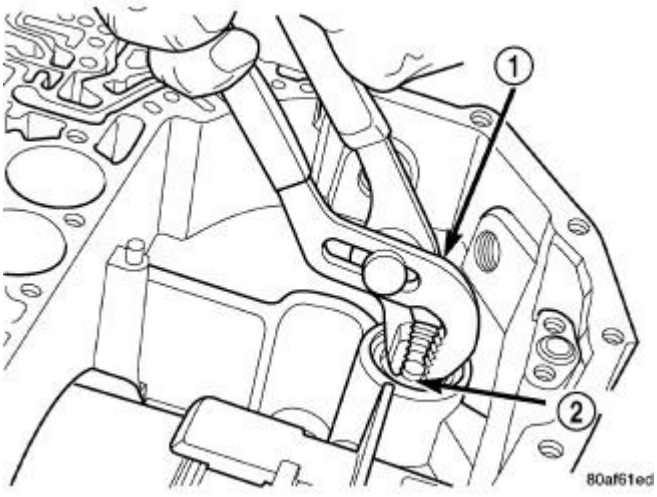

Fig. 48: Remove/Install Low/Reverse Accumulator Plug
Courtesy of CHRYSLER LLC

1 - ADJUSTABLE PLIERS 2 - PLUG

30. Remove the low/reverse accumulator plug (2).

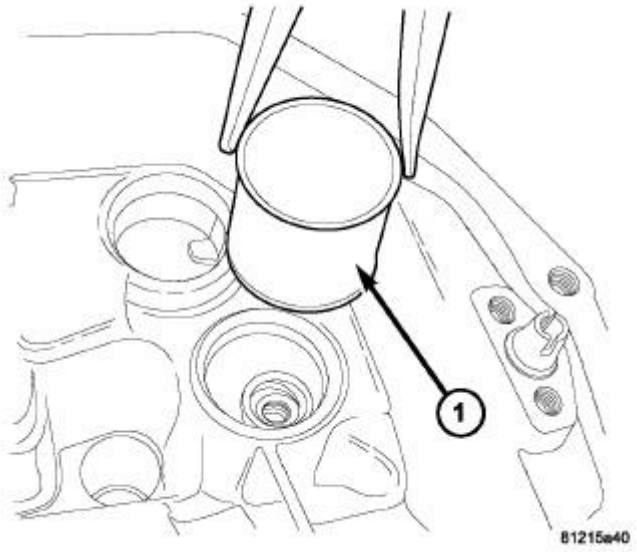

Fig. 49: Remove/Install Low/Reverse Accumulator Piston
Courtesy of CHRYSLER LLC

1 - ACCUMULATOR PISTON

31. Remove low/reverse accumulator piston (1) using suitable pliers.

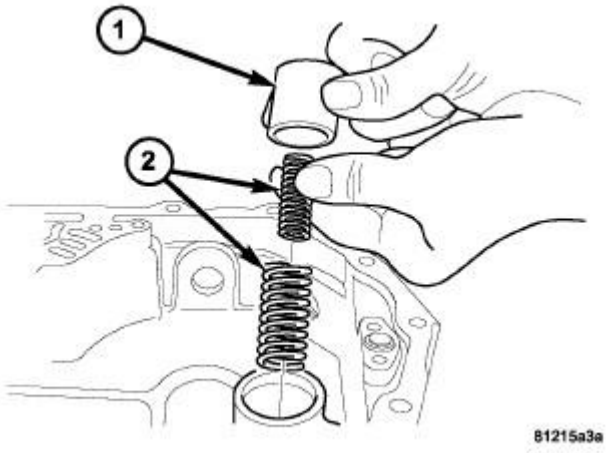

Fig. 50: Low/Reverse Accumulator
Courtesy of CHRYSLER LLC

1 - PISTON 2 - RETURN SPRINGS

32. Remove piston (1) and springs (2).

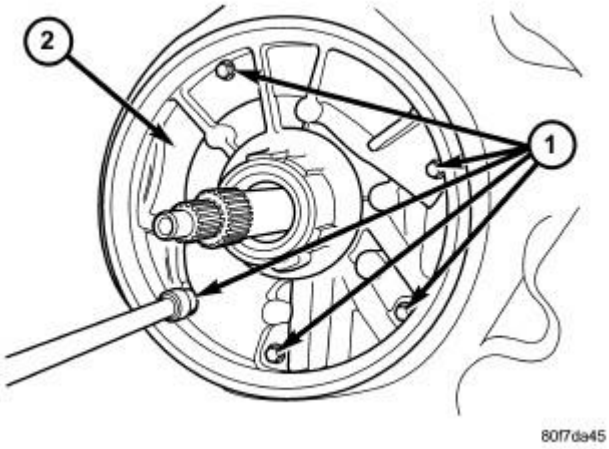

Fig. 51: Remove/Install Oil Pump Attaching Bolts
Courtesy of CHRYSLER LLC

1 - BOLTS 2 - OIL PUMP

33. Remove and discard the oil pump-to-case bolts (1). The oil pump bolts are not to be reused.

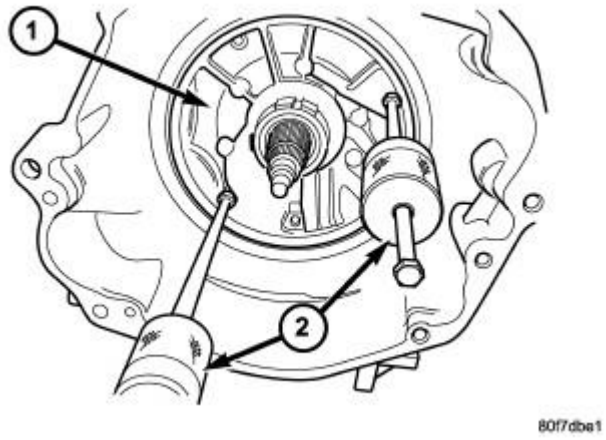

Fig. 52: Oil Pump Pullers
Courtesy of CHRYSLER LLC

1 - OIL PUMP 2 - PULLERS

34. Remove oil pump using C-3752 Pullers (2).

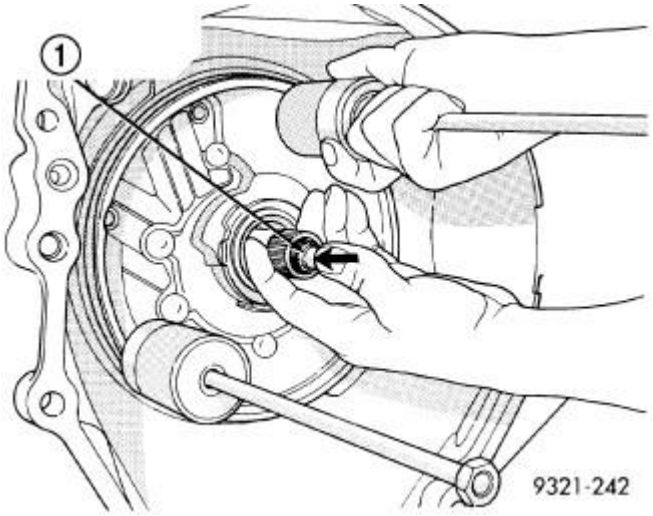

Fig. 53: Removing Oil Pump
Courtesy of CHRYSLER LLC

1 - "PUSH IN" ON INPUT SHAFT WHILE REMOVING PUMP

35. Remove oil pump while pushing in on input shaft (1).

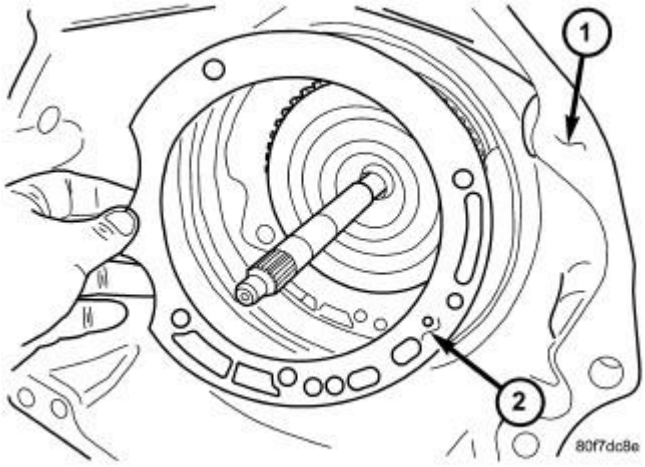

Fig. 54: Remove/Install Oil Pump Gasket
Courtesy of CHRYSLER LLC

1 - BELLHOUSING 2 - OIL PUMP GASKET

36. Remove oil pump gasket (2).

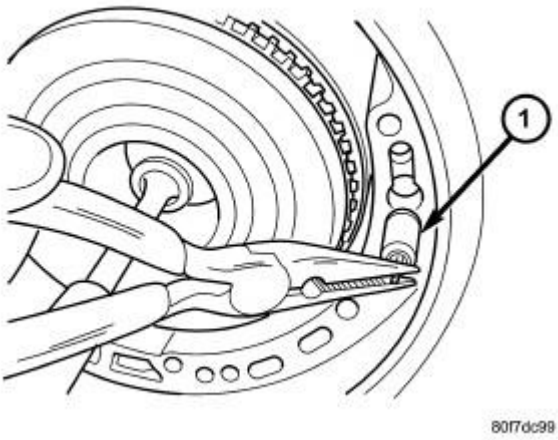

Fig. 55: Remove/Install By-Pass Valve
Courtesy of CHRYSLER LLC

1 - BYPASS VALVE

CAUTION: By-pass valve must be replaced if transmission failure occurs.

37. Remove the cooler by-pass valve (1).

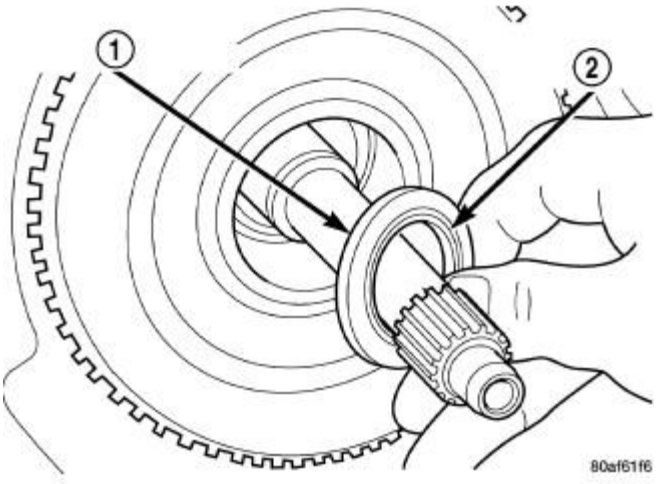

Fig. 56: Remove/Install No. 1 Caged Needle Bearing
Courtesy of CHRYSLER LLC

1 - #1 CAGED NEEDLE BEARING 2 - NOTE: TANGED SIDE OUT

38. Remove the #1 caged needle bearing (1).

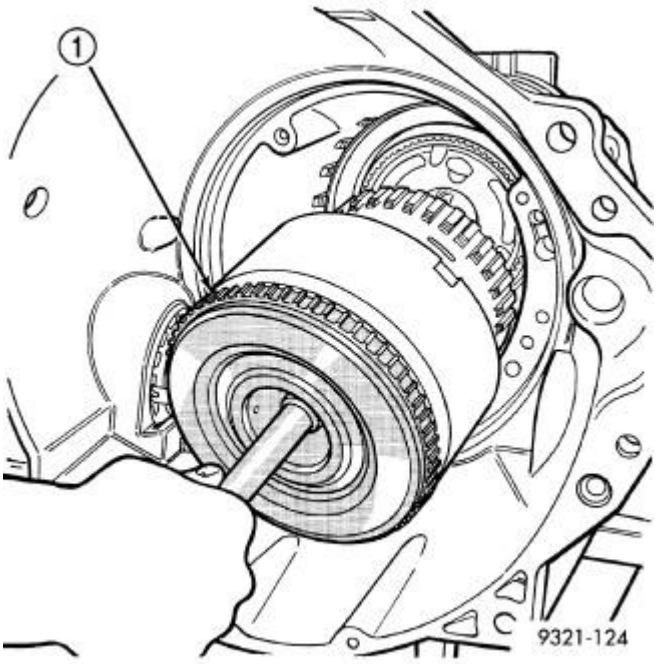

Fig. 57: Remove/Install Input Clutch Assembly
Courtesy of CHRYSLER LLC

1 - INPUT CLUTCH ASSEMBLY

39. Remove the input clutch assembly (1).

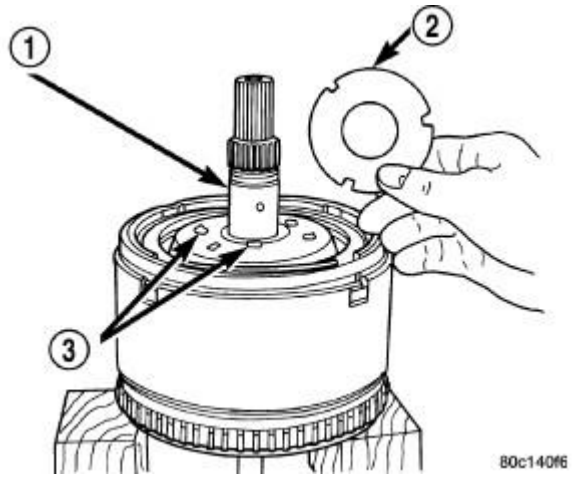

Fig. 58: Remove/Install #4 Thrust Plate
Courtesy of CHRYSLER LLC

1 - OVERDRIVE SHAFT ASSEMBLY 2 - #4 THRUST PLATE (SELECT) 3 - PETROLATUM FOR RETENTION

40. Remove the #4 thrust plate (2).

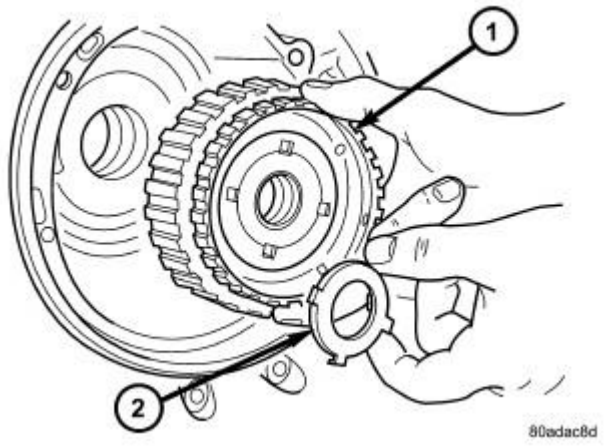

Fig. 59: Remove/Install Front Sun Gear Assembly
Courtesy of CHRYSLER LLC

1 - FRONT SUN GEAR ASSEMBLY 2 - #4 THRUST WASHER (FOUR TABS)

41. Remove the front sun gear assembly (1) and #4 thrust washer (if still in place).

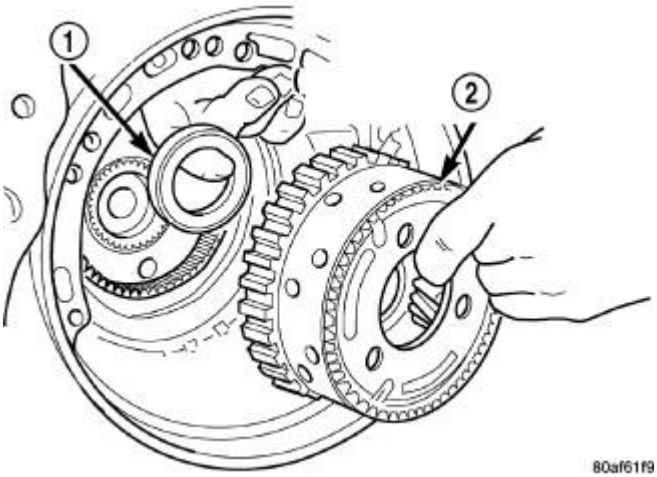

Fig. 60: Remove/Install Front Carrier/Rear Annulus
Courtesy of CHRYSLER LLC

1 - #6 NEEDLE BEARING 2 - FRONT CARRIER AND REAR ANNULUS ASSEMBLY (TWIST AND PULL OR PUSH TO REMOVE OR INSTALL).

42. Remove the front carrier/rear annulus (2) and #6 needle bearing (1).

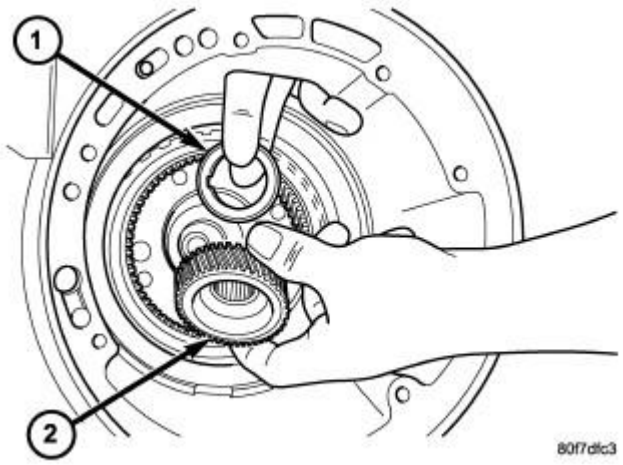

Fig. 61: Remove/Install Rear Sun Gear
Courtesy of CHRYSLER LLC

1 - #7 NEEDLE BEARING 2 - REAR SUN GEAR

43. Remove the rear sun gear (2) and #7 needle bearing (1).

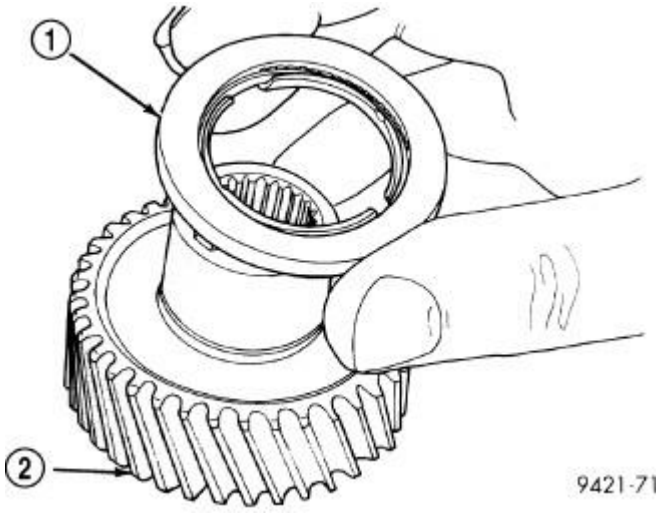

Fig. 62: Remove/Install Rear Sun Gear & No. 7 Bearing
Courtesy of CHRYSLER LLC

1 - #7 BEARING 2 - REAR SUN GEAR

NOTE: The number seven needle bearing has three anti-reversal tabs and is

common with the number five and number two position. The orientation should allow the bearing to seat flat against the rear sun gear. A small amount of petrolatum can be used to hold the bearing to the rear sun gear.

44. Install the number seven needle bearing (1) onto the rear sun gear (2).

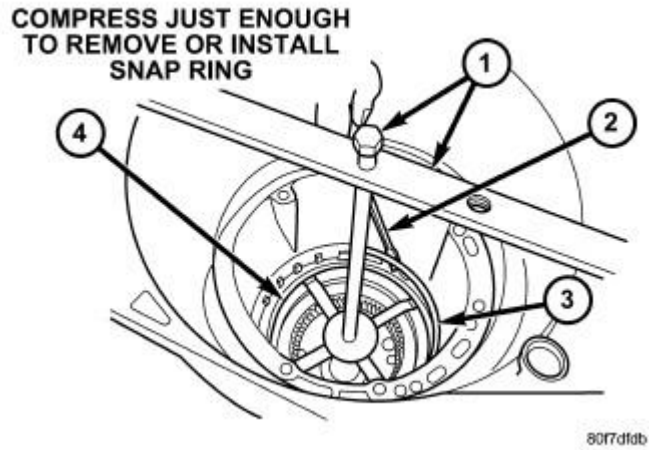

Fig. 63: Remove/Install 2/4 Clutch Retainer Snap Ring
Courtesy of CHRYSLER LLC

1 - TOOL 5058A
2 - SCREWDRIVER
3 - SNAP RING
4 - 2/4 CLUTCH RETAINER

NOTE: Verify that Compressor Tool 5058A (1) is centered properly over the 2/4 clutch retainer (4) before compressing. If necessary, fasten the Compressor Tool 5058A bar to the bellhousing flange with any combination of locking pliers and bolts to center the tool properly.

45. Install and load Tool 5058A to remove the 2/4 clutch retainer snap ring (3).

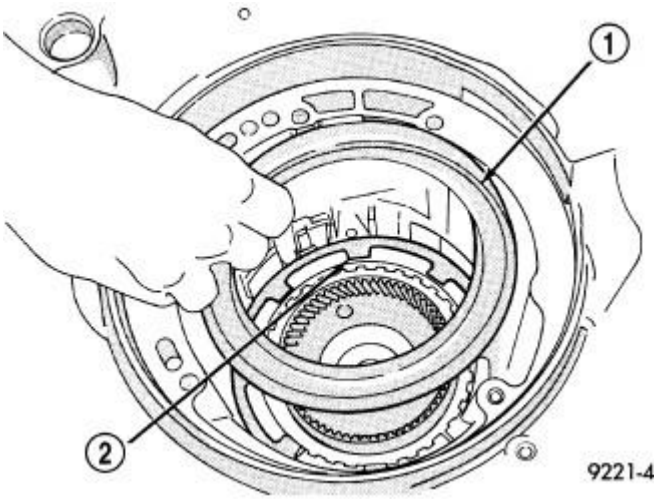

Fig. 64: 2/4 Clutch Retainer
Courtesy of CHRYSLER LLC

1 - 2/4 CLUTCH RETAINER 2 - 2/4 CLUTCH RETURN SPRING

NOTE: The 2/4 Clutch Piston has bonded seals which are not individually serviceable. Seal replacement requires replacement of the piston assembly.

46. Remove the 2/4 clutch retainer (1).

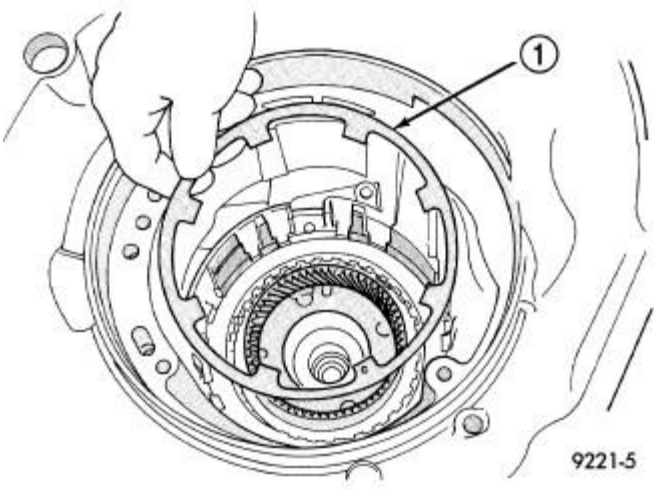

Fig. 65: Remove/Install 2/4 Clutch Return Spring
Courtesy of CHRYSLER LLC

1 - 2/4 CLUTCH RETURN SPRING

47. Remove the 2/4 clutch return spring (1).

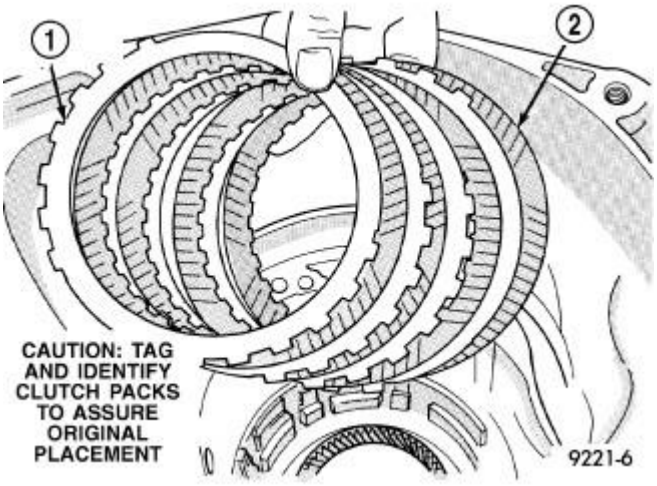

Fig. 66: Remove/Install 2/4 Clutch Pack
Courtesy of CHRYSLER LLC

1 - CLUTCH PLATE (4) 2 - CLUTCH DISC (4)

48. Remove the 2/4 clutch pack (1, 2).

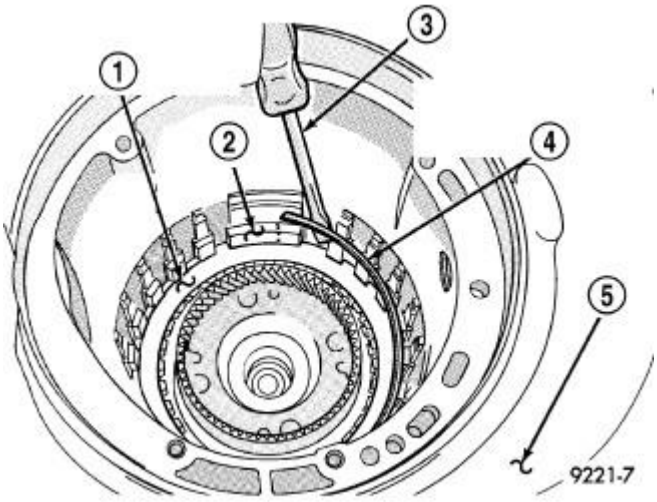

Fig. 67: Removing Tapered Snap Ring
Courtesy of CHRYSLER LLC

1 - LOW/REVERSE CLUTCH REACTION PLATE 2 - LONG TAB 3 - SCREWDRIVER 4 - LOW/REVERSE TAPERED SNAP RING (TAPERED SIDE UP) 5 - OIL PAN FACE

49. Remove the tapered snap ring (4).

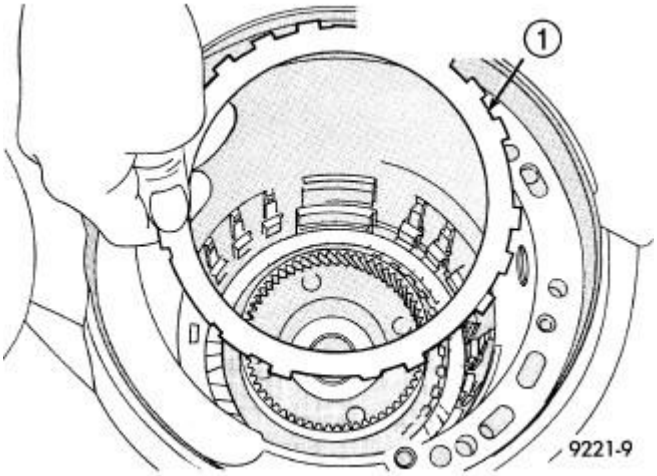

Fig. 68: Remove/Install Low/Reverse Reaction Plate
Courtesy of CHRYSLER LLC

1 - LOW/REVERSE REACTION PLATE (FLAT SIDE UP)

50. Remove the low/reverse reaction plate (1).

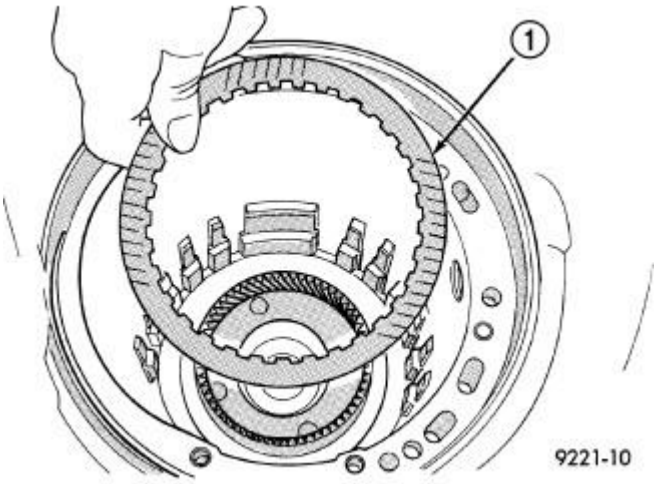

Fig. 69: Remove/Install One Disc
Courtesy of CHRYSLER LLC

1 - ONE DISC FROM LOW/REVERSE CLUTCH

51. Remove one (1) low/reverse clutch disc to facilitate snap ring removal.

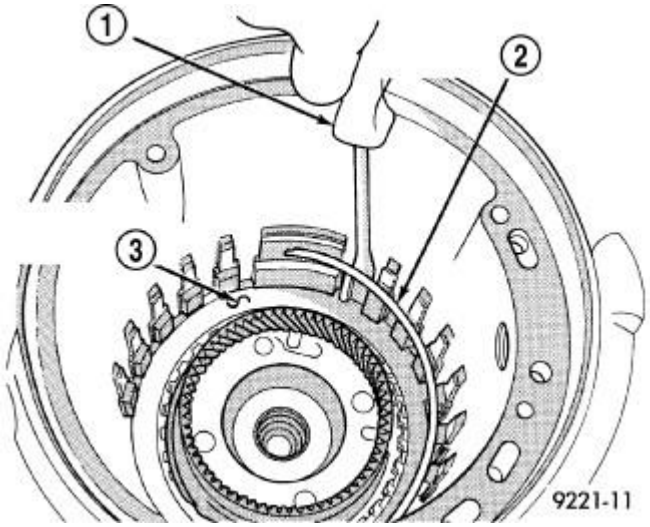

Fig. 70: Remove/Install Low/Reverse Reaction Plate Snap Ring
Courtesy of CHRYSLER LLC

1 - SCREWDRIVER 2 - LOW/REVERSE REACTION PLATE FLAT SNAP RING 3 - DO NOT SCRATCH CLUTCH PLATE

52. Remove the low/reverse reaction plate snap ring (2).

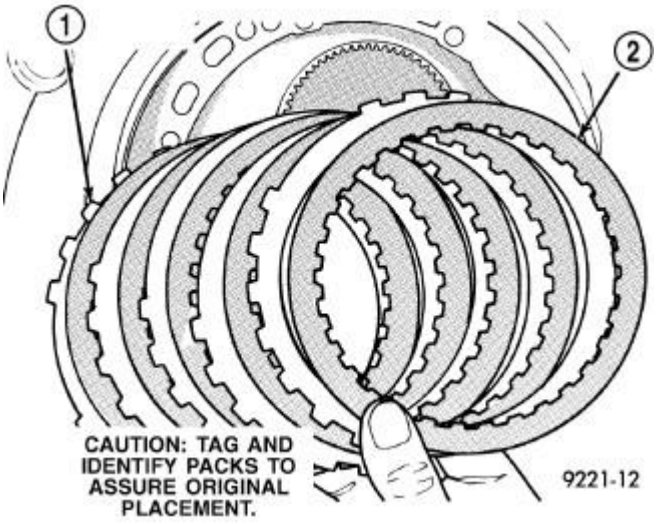

Fig. 71: Remove/Install Low/Reverse Clutch Pack
Courtesy of CHRYSLER LLC

1 - CLUTCH PLATES (5) 2 - CLUTCH DISCS (5)

53. Remove the low/reverse clutch pack (1, 2).

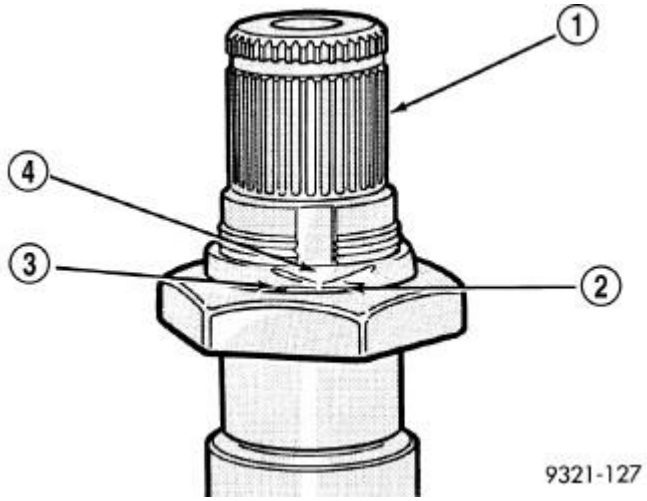

Fig. 72: Grinding Stakes
Courtesy of CHRYSLER LLC

WARNING: WEAR SAFETY GOGGLES WHILE GRINDING STAKE NUTS.

CAUTION: Failure to grind and open stakes (4) of the output shaft nut will result in thread damage to the shaft during nut removal.

54. Using a die grinder or equivalent, grind the stakes (4) in the shoulder of the shaft nut at locations (2 and 3). Do not grind all the way through the nut and into the output shaft (1). There are two stakes on each nut.

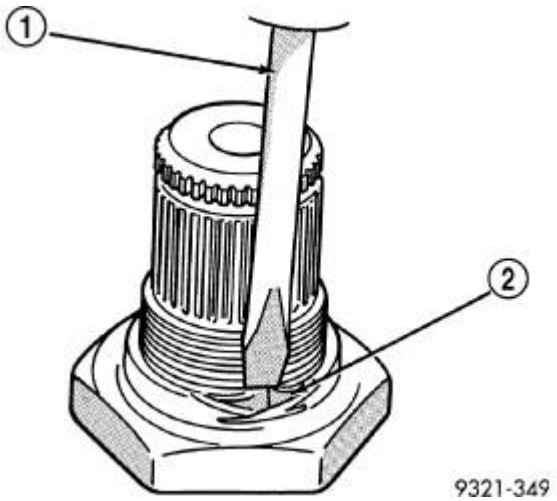

Fig. 73: Opening Nut Stakes
Courtesy of CHRYSLER LLC

55. Using a small chisel (1), carefully open the stakes on nut (2).

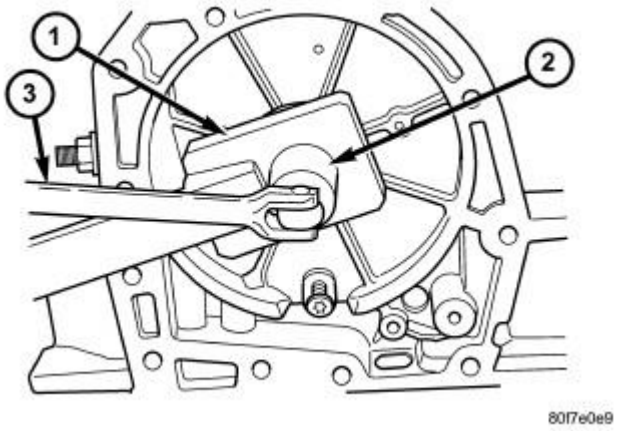

Fig. 74: Removing Output Shaft Nut
Courtesy of CHRYSLER LLC

1 - SPECIAL TOOL 6497 2 - SPECIAL TOOL 6498A 3 - BREAKER BAR

56. Remove snap ring from output shaft.
57. Use Wrench 6497 (1) and 6498A (2) to remove the output shaft nut.

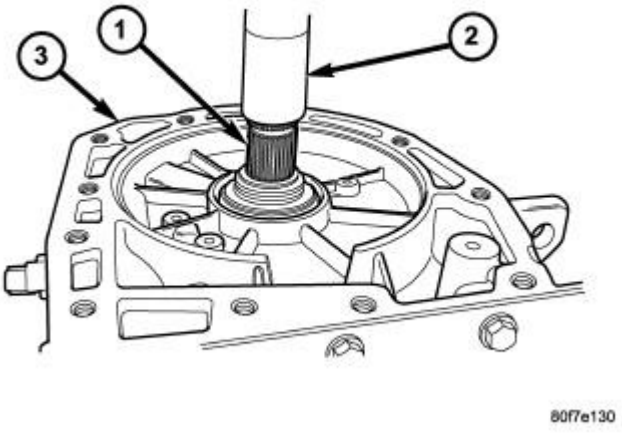

Fig. 75: Use Arbor Press to Remove Output Shaft from Case
Courtesy of CHRYSLER LLC

1 - OUTPUT SHAFT 2 - ARBOR PRESS 3 - TRANSMISSION CASE

58. Remove the output shaft (1) from case (3) using a shop press (2).

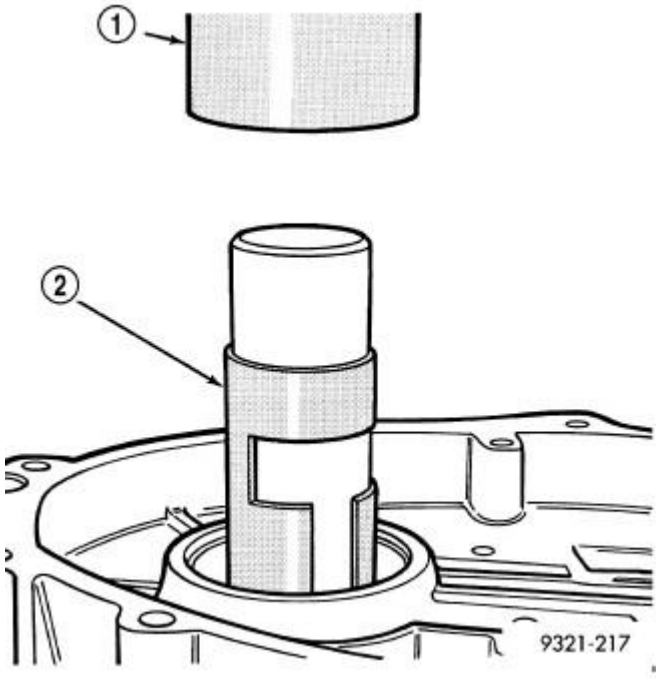

Fig. 76: Removing Front Bearing Cup - Typical
Courtesy of CHRYSLER LLC

1 - ARBOR PRESS 2 - SPECIAL TOOL 6596

59. Use Remover 6596 (2) with a shop press (1) to remove the front output shaft bearing cup.

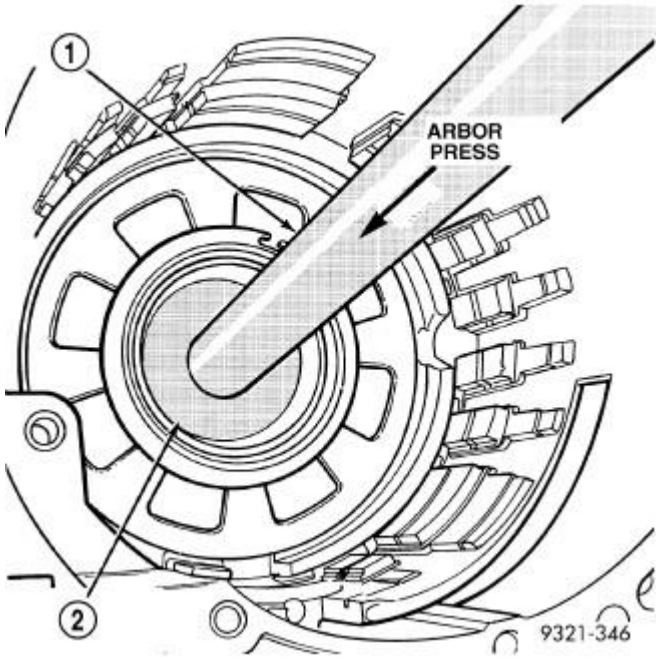

Fig. 77: Removing Rear Bearing Cup
Courtesy of CHRYSLER LLC

1 - SPECIAL TOOL 4171 AND 4171-2
2 - SPECIAL TOOL 6597

60. Use Wrench 6597 (2) and handle C-4171 (1) and C-4171-2 to press the rear output shaft bearing cup rearward.

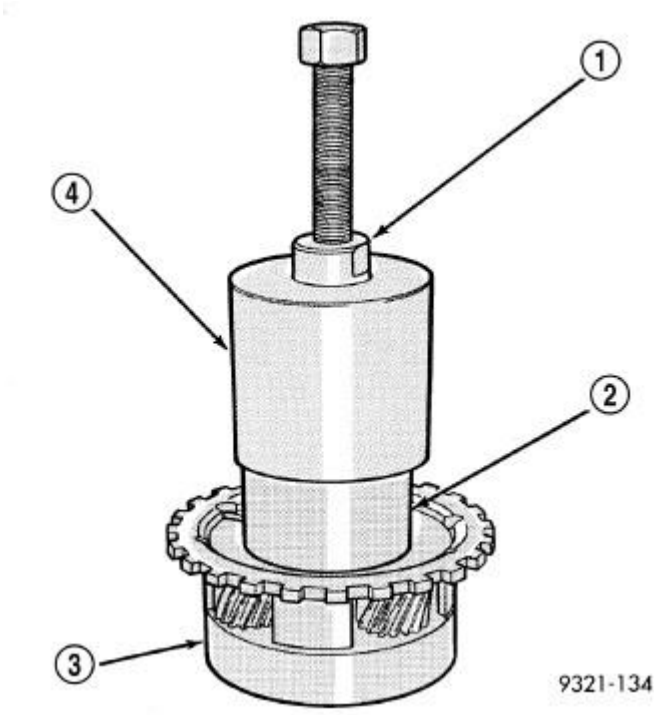

Fig. 78: Removing Rear Carrier Front Bearing Cone
Courtesy of CHRYSLER LLC

1 - SPECIAL TOOL 5048-1
2 - SPECIAL TOOL 6545
3 - REAR CARRIER
4 - SPECIAL TOOL 5048

61. Remove the rear carrier front bearing cone (3).

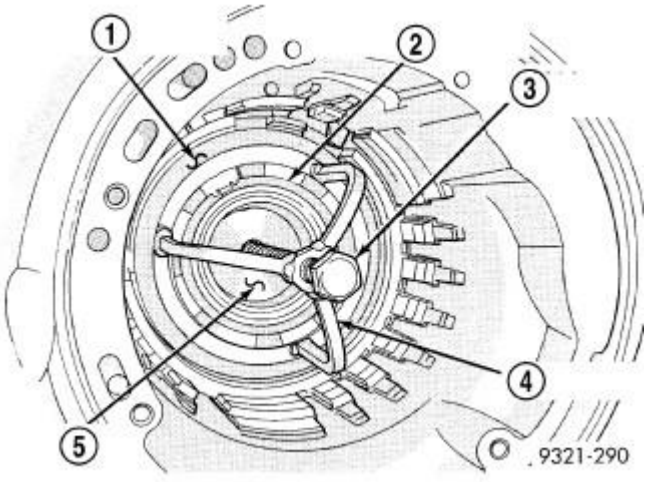

Fig. 79: Compressor Tool in Use
Courtesy of CHRYSLER LLC

1 - LOW/REVERSE CLUTCH RETURN SPRING 2 - SNAP RING (INSTALL AS SHOWN IN ILLUSTRATION) 3 - TOOL 5058A-3 4 - TOOL 5059-A 5 - SPECIAL TOOL 6057

62. Install and load compressor 5059-A (4) as shown in illustration.

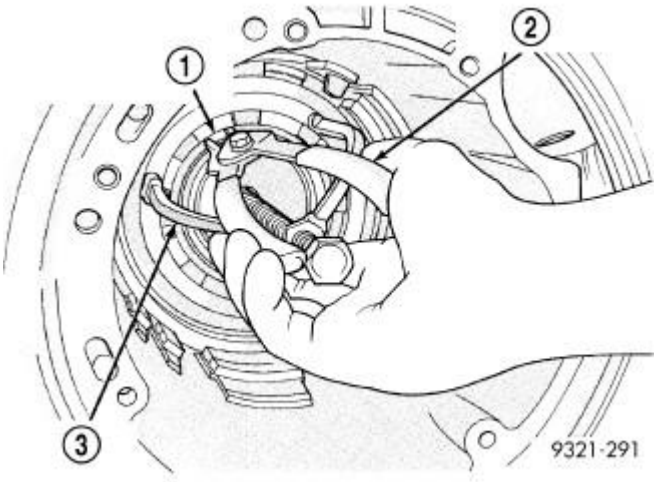

Fig. 80: Removing Snap Ring
Courtesy of CHRYSLER LLC

1 - SNAP RING OPENING MUST BE BETWEEN SPRING LEVERS (AS SHOWN IN ILLUSTRATION) 2 - SNAP RING PLIERS

3 - SPECIAL TOOL 5059-A

63. Remove the low/reverse Belleville spring snap ring (1).

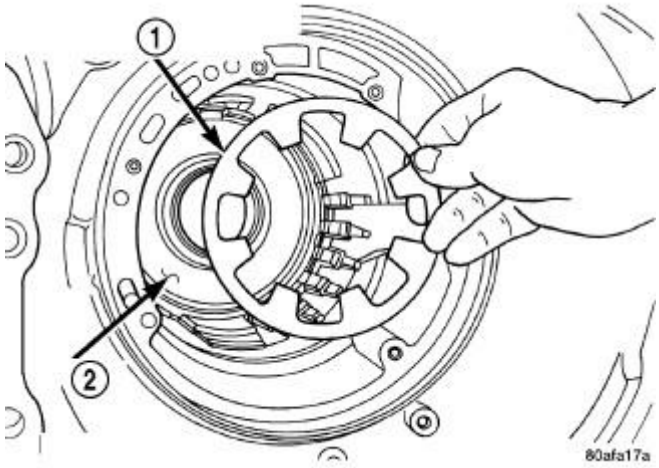

Fig. 81: Remove/Install Low/Reverse Piston Return Spring
Courtesy of CHRYSLER LLC

1 - LOW/REVERSE PISTON RETURN SPRING 2 - PISTON

64. Remove the low/reverse piston Belleville spring (1).

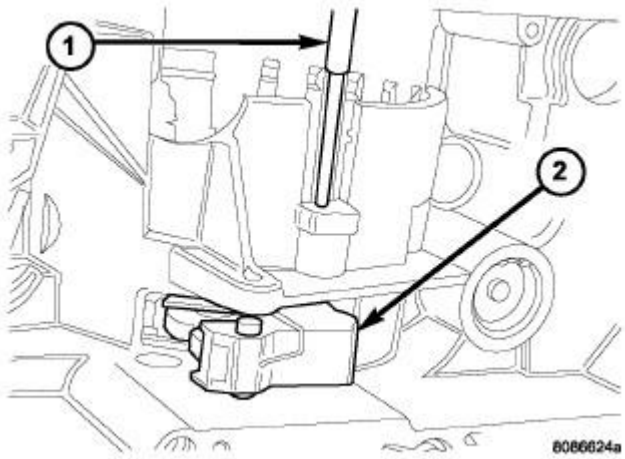

Fig. 82: Anchor Shaft Removal
Courtesy of CHRYSLER LLC

1 - PIN PUNCH 2 - GUIDE BRACKET ASSEMBLY

65. Remove the park sprag pivot retaining screw.
66. Drive out the anchor shaft using suitable punch (1).

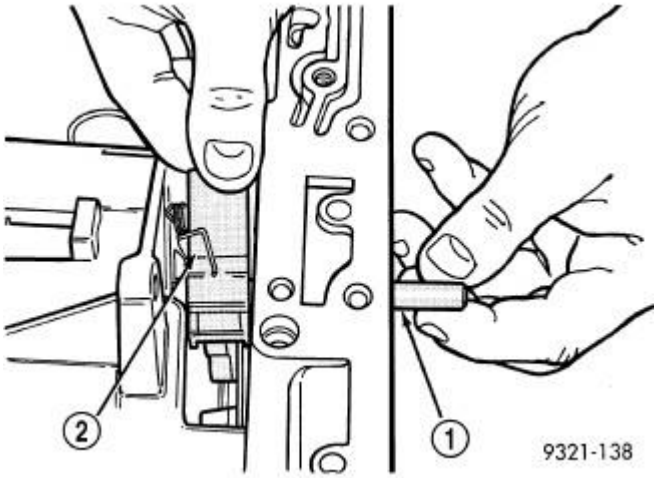

Fig. 83: Remove/Install Pivot Pin
Courtesy of CHRYSLER LLC

1 - PIVOT PIN 2 - GUIDE BRACKET ASSEMBLY

67. Remove the guide bracket pivot pin (1). Inspect all components for wear and replace if necessary.

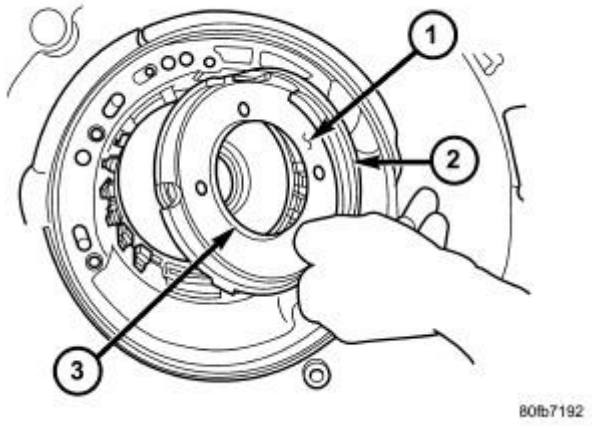

Fig. 84: Remove/Install Low/Reverse Clutch Piston
Courtesy of CHRYSLER LLC

1 - LOW/REVERSE CLUTCH PISTON 2 - D-RING SEAL

3 - D-RING SEAL

NOTE: **The Low/Reverse Clutch Piston has bonded seals which are not individually serviceable. Seal replacement requires replacement of the piston assembly.**

68. Remove the low/reverse clutch piston (1).
69. Remove the low/reverse piston retainer screws.

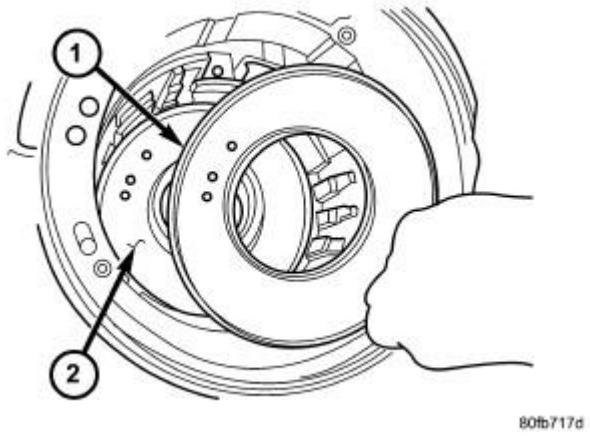

Fig. 85: Remove/Install Piston Retainer
Courtesy of CHRYSLER LLC

1 - LOW/REVERSE CLUTCH PISTON RETAINER
2 - GASKET

70. Remove low/reverse piston retainer (1)

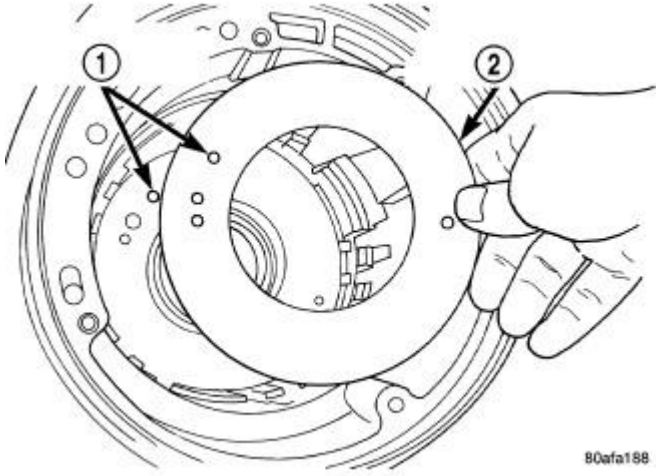

Fig. 86: Remove/Install Piston Retainer Gasket

Courtesy of CHRYSLER LLC

1 - GASKET HOLES MUST LINE UP 2 - LOW/REVERSE CLUTCH PISTON RETAINER GASKET

71. Remove the low/reverse piston retainer gasket (2).

ASSEMBLY

ASSEMBLY

NOTE: If the transmission assembly is being reconditioned (clutch/seal replacement) or replaced, it is necessary to perform the Quick Learn Procedure using the scan tool. Refer to Electrical - Electronic Control Modules/Electronic Control Modules/MODULE, Transmission Control - Standard Procedure .

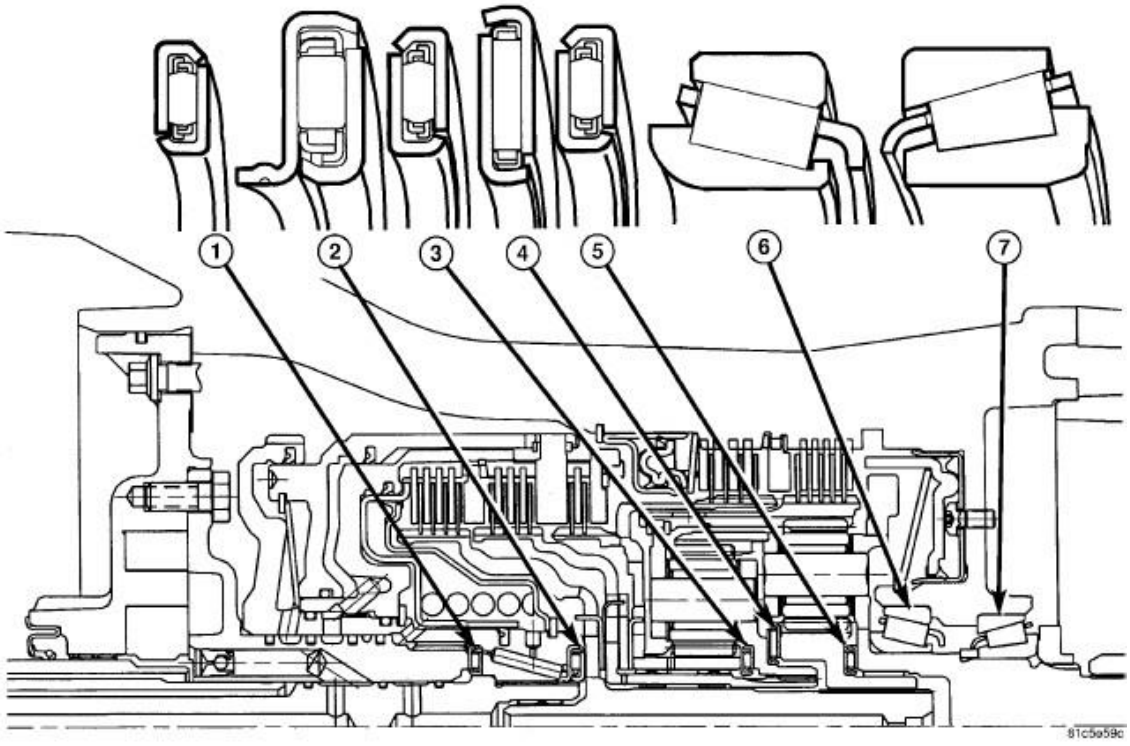

Fig. 87: 42RLE Bearing Orientation
Courtesy of CHRYSLER LLC

1 - THRUST BEARING NO. 1	5 - THRUST BEARING NO. 5

2 - THRUST BEARING NO. 2	6 - NEEDLE BEARING NO. 6
3 - THRUST BEARING NO. 3	7 - NEEDLE BEARING NO. 7
4 - THRUST BEARING NO. 4	-

1. During assembly, orientate the thrust and roller bearings as shown in illustration.

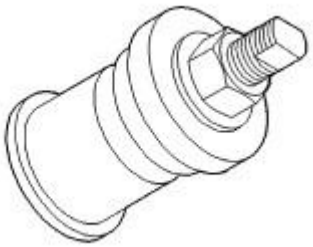

Fig. 88: Bearing Cup Installation - Installer - 5050A
Courtesy of CHRYSLER LLC

2. Install the output bearing cups using Special Tool - 5050A.

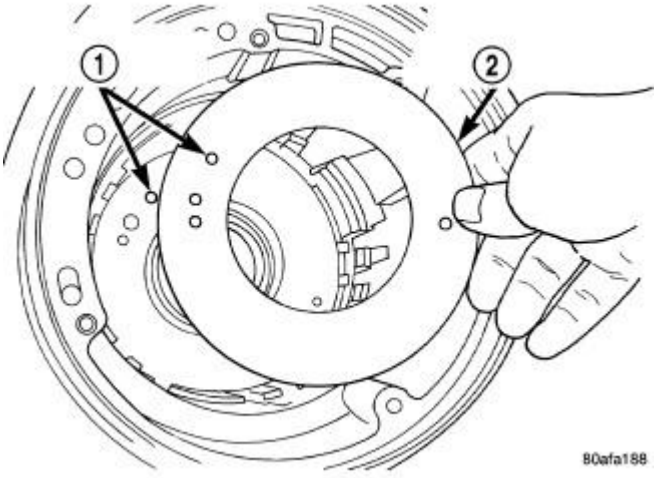

Fig. 89: Remove/Install Piston Retainer Gasket
Courtesy of CHRYSLER LLC

1 - GASKET HOLES MUST LINE UP 2 - LOW/REVERSE CLUTCH PISTON RETAINER GASKET

3. Install low/reverse piston retainer gasket (2).

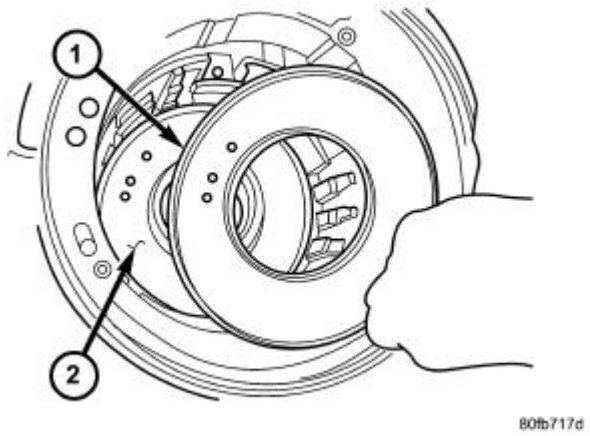

Fig. 90: Remove/Install Piston Retainer
Courtesy of CHRYSLER LLC

1 - LOW/REVERSE CLUTCH PISTON RETAINER
2 - GASKET

4. Install low/reverse piston retainer (1).

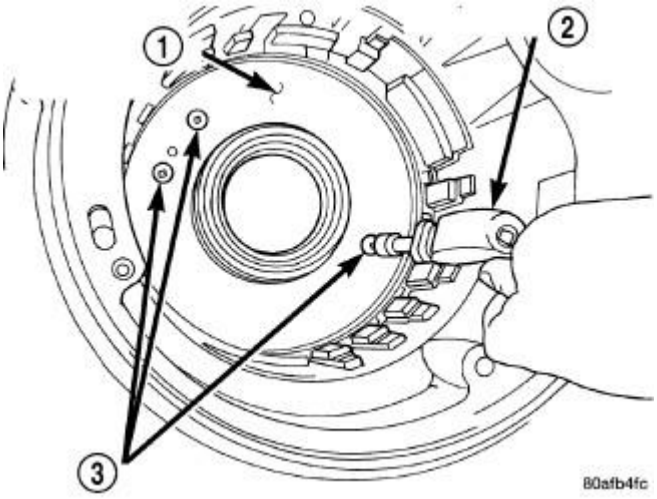

Fig. 91: Install Retainer Attaching Screws
Courtesy of CHRYSLER LLC

1 - LOW/REVERSE CLUTCH PISTON RETAINER
2 - SCREWDRIVER
3 - TORX-LOC SCREWS

5. Install low/reverse piston retainer-to-case screws (3) and torque to 5 N.m (45 in. lbs.).

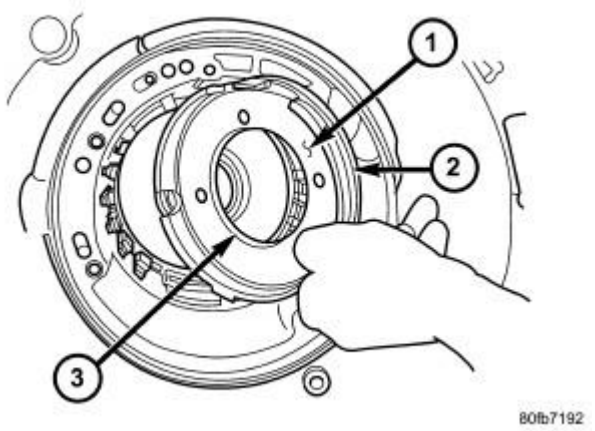

Fig. 92: Remove/Install Low/Reverse Clutch Piston
Courtesy of CHRYSLER LLC

1 - LOW/REVERSE CLUTCH PISTON 2 - D-RING SEAL 3 - D-RING SEAL

NOTE: The Low/Reverse Clutch Piston has bonded seals which are not individually serviceable. Seal replacement requires replacement of the piston assembly.

6. Install low/reverse clutch piston (1).

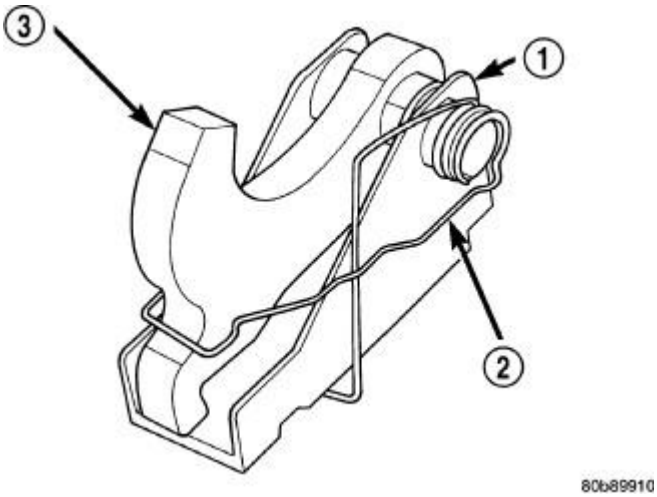

Fig. 93: Guide Bracket
Courtesy of CHRYSLER LLC

1 - GUIDE BRACKET 2 - ANTI-RATCHET SPRING (MUST BE ASSEMBLED

AS SHOWN IN ILLUSTRATION)
3 - PAWL

7. Assemble guide bracket (1) assembly as shown in illustration, if necessary.

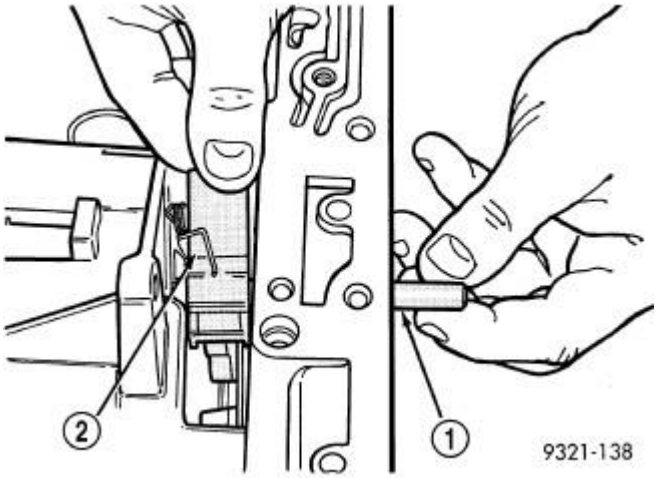

Fig. 94: Remove/Install Pivot Pin
Courtesy of CHRYSLER LLC

1 - PIVOT PIN
2 - GUIDE BRACKET ASSEMBLY

CAUTION: When installing, be sure guide bracket and split sleeve touch the rear of the transmission case.

8. Install guide bracket pivot pin (1).
9. Install park sprag pivot retaining screw and torque to 4.5 N.m (40 in. lbs.).

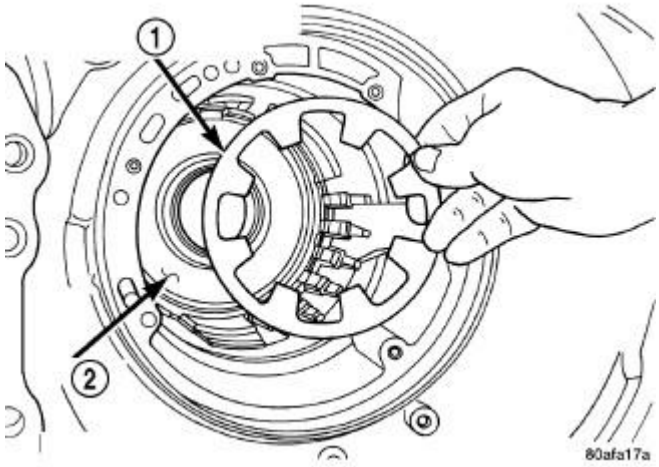

Fig. 95: Remove/Install Low/Reverse Piston Return Spring
Courtesy of CHRYSLER LLC

1 - LOW/REVERSE PISTON RETURN SPRING 2 - PISTON

10. Install low/reverse piston Belleville spring (1) into position.

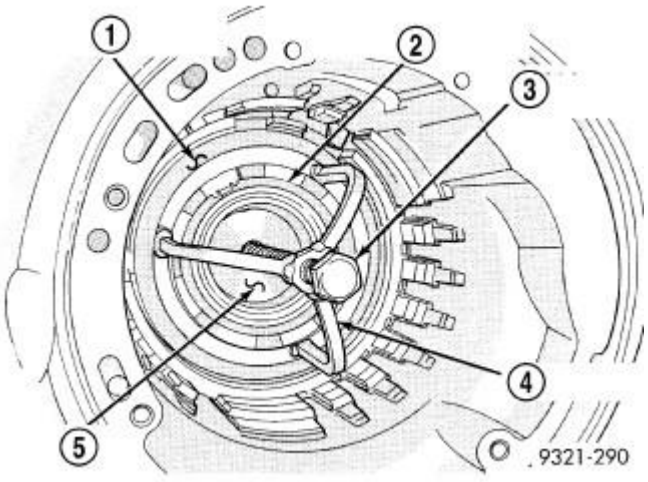

Fig. 96: Compressor Tool in Use
Courtesy of CHRYSLER LLC

1 - LOW/REVERSE CLUTCH RETURN SPRING 2 - SNAP RING (INSTALL AS SHOWN IN ILLUSTRATION) 3 - TOOL 5058A-3 4 - TOOL 5059-A 5 - SPECIAL TOOL 6057

11. Install and load low/reverse spring compressor tool (3, 4, 5) as shown in illustration to facilitate snap ring (2) installation.

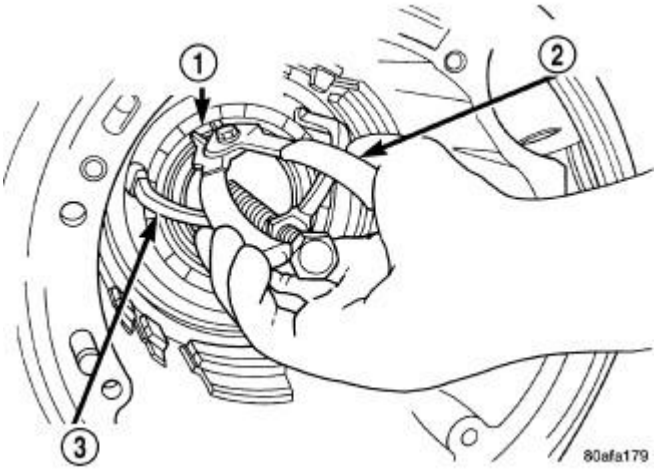

Fig. 97: Install Snap Ring
Courtesy of CHRYSLER LLC

1 - SNAP RING OPENING MUST BE BETWEEN SPRING LEVERS (AS SHOWN IN ILLUSTRATION)
2 - SNAP RING PLIERS
3 - TOOL 6057

12. Install snap ring (1) and remove compressor tool.

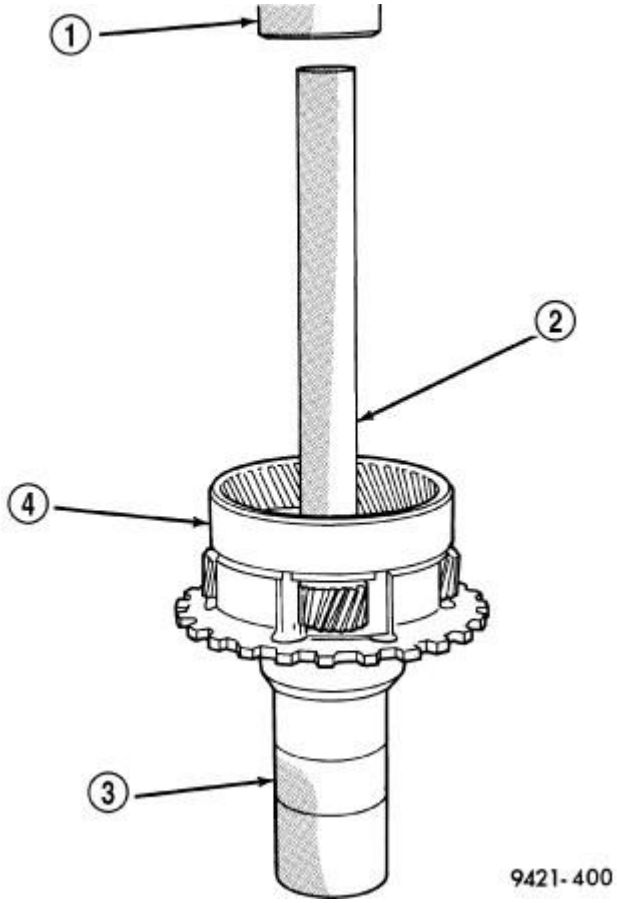

Fig. 98: Install Rear Carrier Front Bearing Cone
Courtesy of CHRYSLER LLC

1 - ARBOR PRESS
2 - SPECIAL TOOL C-4171
3 - SPECIAL TOOL 6052
4 - REAR CARRIER

13. Install rear carrier (4) front bearing cone.

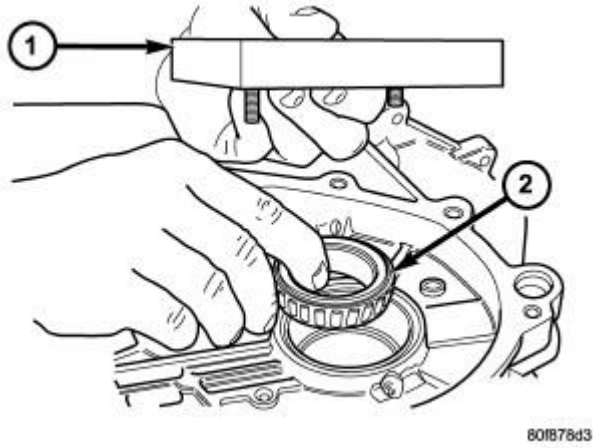

Fig. 99: Bearing Installation
Courtesy of CHRYSLER LLC

1 - SPECIAL TOOL 6618A 2 - REAR OUTPUT SHAFT BEARING

Check output bearing preload. **Output bearing preload must be checked and/or adjusted if any of the following items have been replaced:**

- Output shaft (rear carrier assembly)
- Output shaft bearings
- Transmission case

14. **PRELOAD CHECK/SHIM SELECTION:** Install rear output shaft bearing cone and Support Plate 6618A (1).

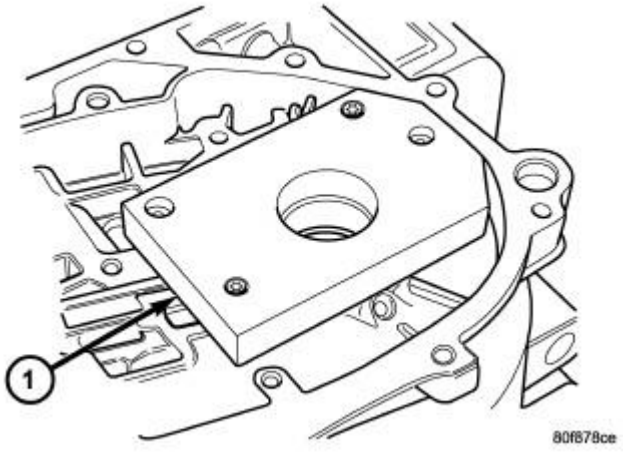

Fig. 100: Special Tool Installed
Courtesy of CHRYSLER LLC

1 - SPECIAL TOOL 6618A

15. Install Support Plate 6618A (1). Lightly tighten retaining screws. Screws should be below the plate surface, but do not snug screws.
16. Turn case over on arbor press so that the plate is resting on the press base. **CAUTION: The output shaft will extend through the hole of Support Plate 6618A. Ensure your press table has clearance for the output shaft.**

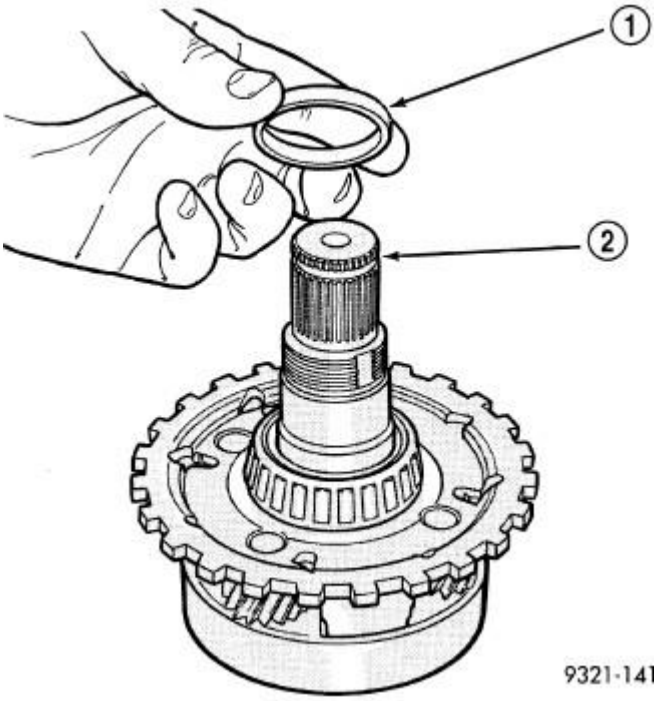

Fig. 101: Shim Installation
Courtesy of CHRYSLER LLC

1 - SHIM 2 - OUTPUT SHAFT

17. Install shim (1) on output shaft (2). Apply small amount of petrolatum onto the shim to hold it in place. Use the original shim as a starting point. If original shim is not available, use the thickest shim available.

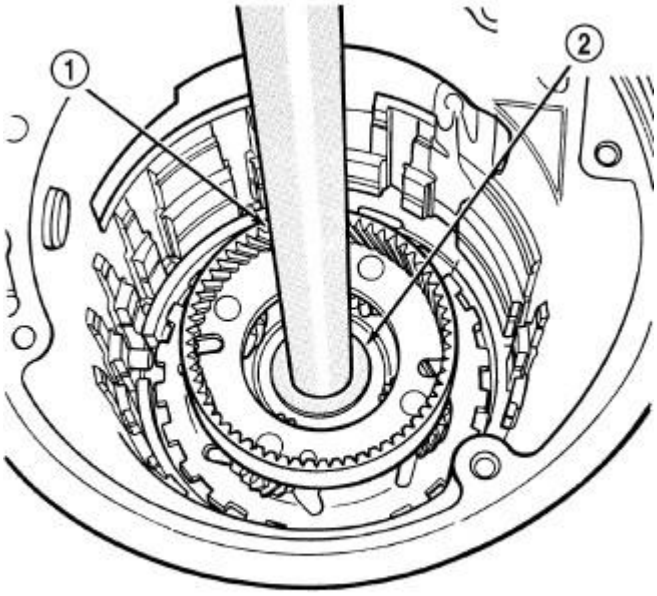

Fig. 102: Press Shaft Into Case
Courtesy of CHRYSLER LLC

1 - SPECIAL TOOL C-4171 AND C-4171-2
2 - SPECIAL TOOL MD-998911

18. Install output shaft/rear carrier into rear bearing. The shaft must be pressed into position. Use special tool MD-998911 (Disc) (2) and C-4171 and C-4171-2 (Handle) (1) to press shaft into rear bearing.

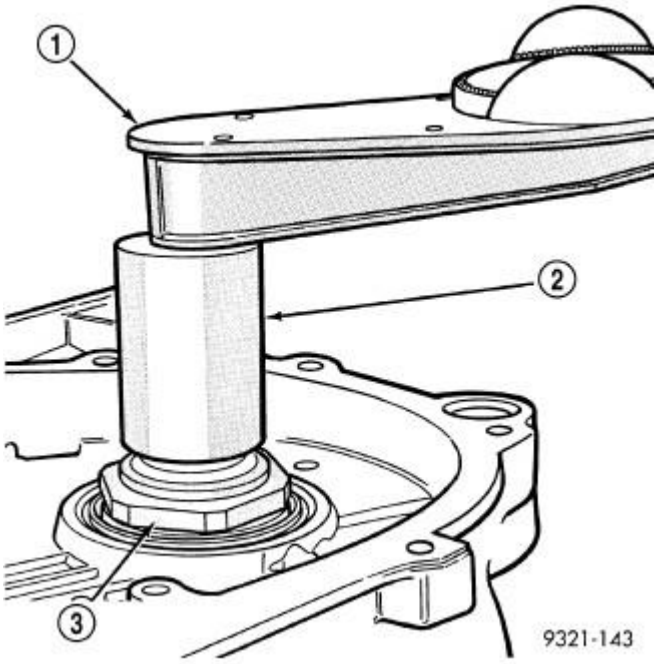

Fig. 103: Checking Turning Torque
Courtesy of CHRYSLER LLC

1 - TORQUE WRENCH
2 - SPECIAL TOOL 6498A
3 - OUTPUT SHAFT NUT

CAUTION: Do not re-use old output shaft nut because the removed stake weakens the nut flange. Using special tools 6497 and 6498A, install new output shaft nut. Tighten new output shaft nut to 200 N.m (147 ft. lbs.).

19. Check the turning torque (1) of the output shaft. The shaft should have 1 to 8 in. lbs. of turning torque. If the turning torque is **higher than** 8 in. lbs., install a thicker shim. If turning torque is **less than** 1 in. lb., install a thinner shim. Make sure there is no end play.

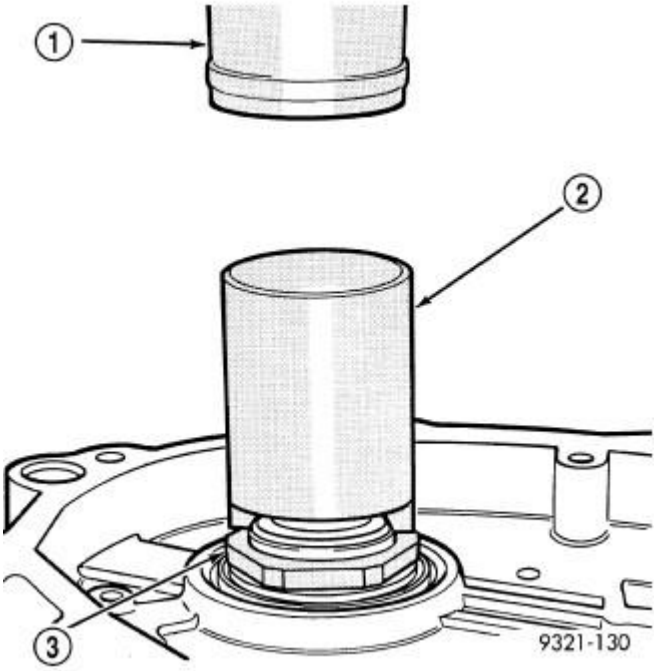

Fig. 104: Staking Output Shaft Nut - Typical
Courtesy of CHRYSLER LLC

1 - ARBOR PRESS 2 - STAKING TOOL - 6639 3 - NEW NUT

CAUTION: Failure to stake nut could allow the nut to back-off during use.

20. The new nut (3) must be staked after the correct turning torque is obtained. Use Staking Tool 6639 (2) to stake output shaft nut.

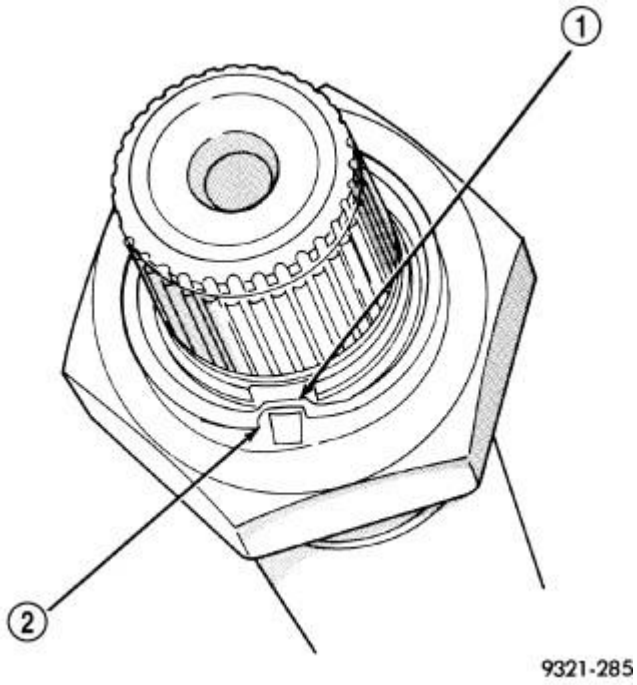

Fig. 105: Properly Staked Nut
Courtesy of CHRYSLER LLC

1 - BOTTOMED IN SLOT 2 - CORRECTLY STAKED NUT

21. Verify that the nut has been properly staked (2) to the output shaft.
22. Install the snap ring onto the output shaft

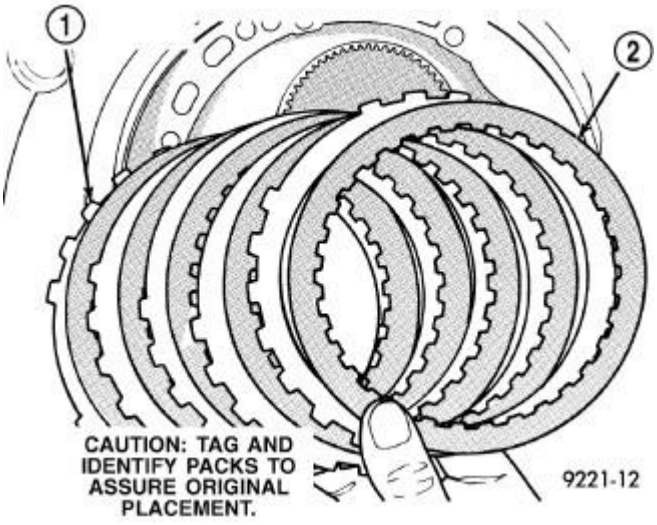

Fig. 106: Remove/Install Low/Reverse Clutch Pack
Courtesy of CHRYSLER LLC

1 - CLUTCH PLATES (5) 2 - CLUTCH DISCS (5)

23. Install low/reverse clutch pack (1, 2). Leave uppermost disc out to facilitate snap ring installation.

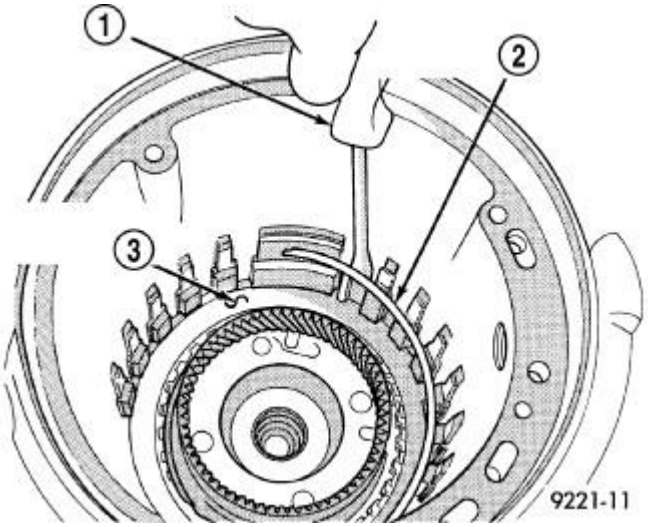

Fig. 107: Remove/Install Low/Reverse Reaction Plate Snap Ring
Courtesy of CHRYSLER LLC

1 - SCREWDRIVER 2 - LOW/REVERSE REACTION PLATE FLAT SNAP RING 3 - DO NOT SCRATCH CLUTCH PLATE

24. Install low/reverse reaction plate snap ring (2).

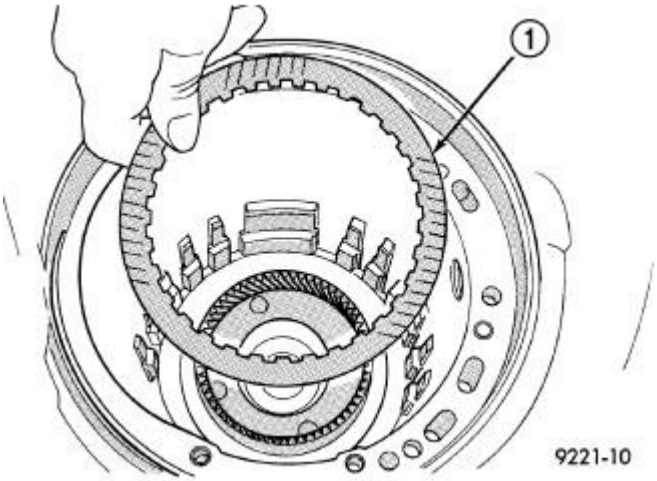

Fig. 108: Remove/Install One Disc

Courtesy of CHRYSLER LLC

1 - ONE DISC FROM LOW/REVERSE CLUTCH

25. Install one low/reverse clutch disc (1).

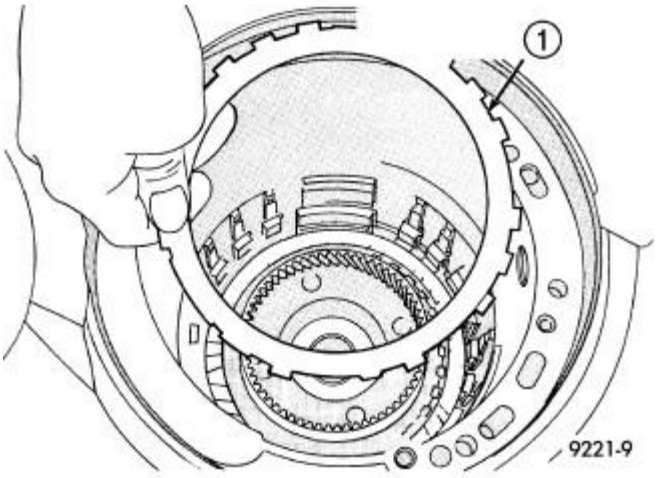

Fig. 109: Remove/Install Low/Reverse Reaction Plate
Courtesy of CHRYSLER LLC

1 - LOW/REVERSE REACTION PLATE (FLAT SIDE UP)

26. Install low/reverse reaction plate (1) with flat side up.

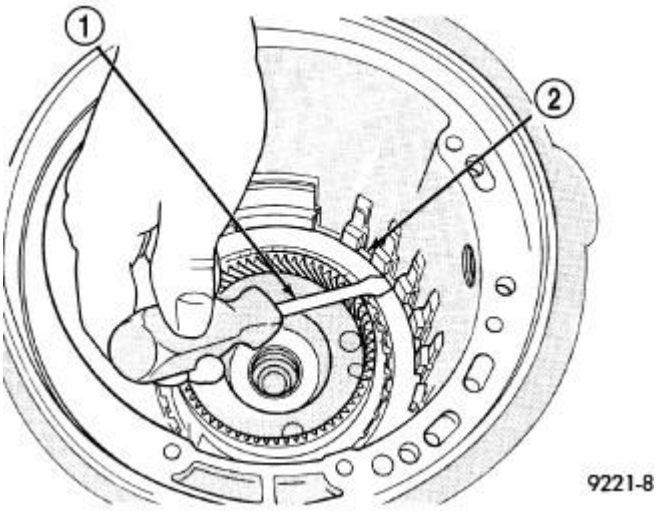

Fig. 110: Snap Ring Installed
Courtesy of CHRYSLER LLC

1 - SCREWDRIVER

2 - TAPERED SNAP RING (INSTALL AS SHOWN IN ILLUSTRATION)

27. Install a new tapered snap ring (2) (tapered side out).

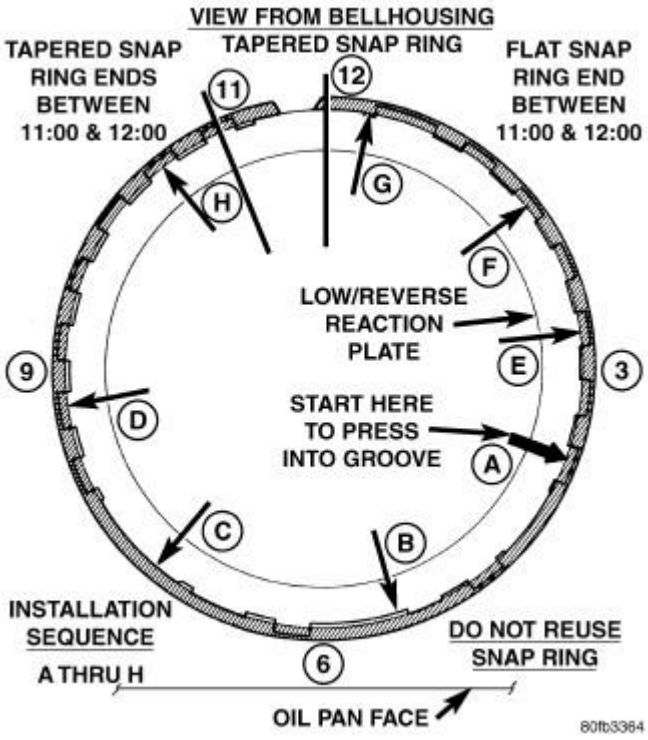

Fig. 111: Tapered Snap Ring Instructions
Courtesy of CHRYSLER LLC

28. Make sure that the snap ring ends are oriented as shown in illustration.

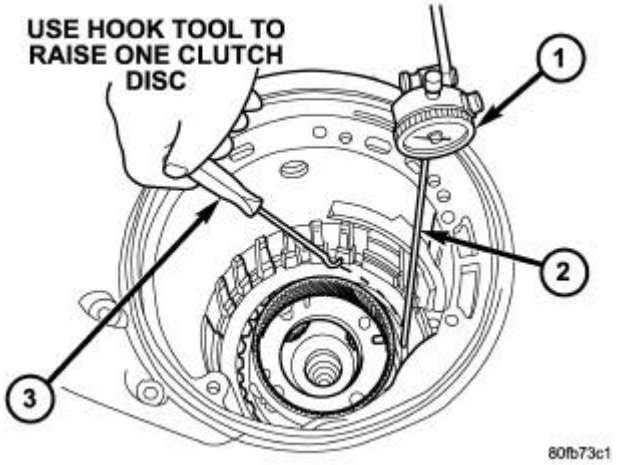

Fig. 112: Check Low/Reverse Clutch Clearance
Courtesy of CHRYSLER LLC

1 - DIAL INDICATOR 2 - DIAL INDICATOR TIP TOOL 6268 3 - HOOK TOOL

29. Measure low/reverse clutch pack. Set up dial indicator (1) as shown in illustration. Press down clutch pack with finger and zero dial indicator. Record measurement in four (4) places and take average reading. **Low/Reverse clutch pack clearance is 0.84 to 1.60 mm (0.033 to 0.063 inch).**
30. Select the proper low/reverse reaction plate to achieve specifications.

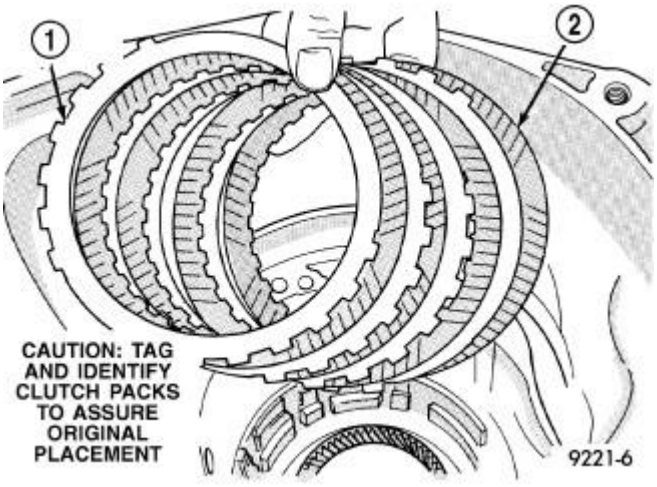

Fig. 113: Remove/Install 2/4 Clutch Pack
Courtesy of CHRYSLER LLC

1 - CLUTCH PLATE (4) 2 - CLUTCH DISC (4)

31. Install 2/4 clutch pack (1, 2).

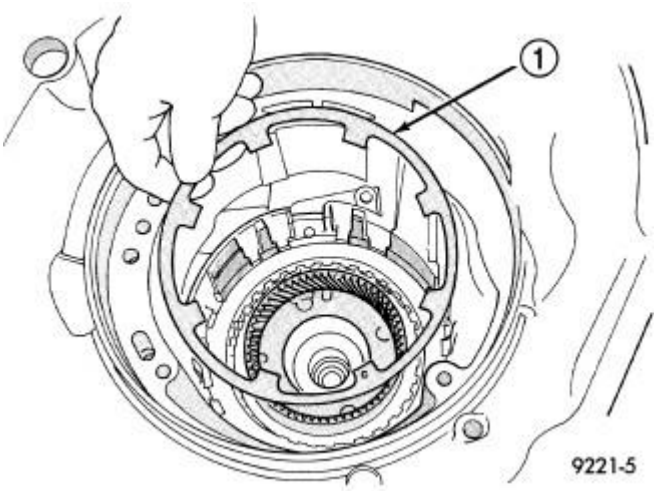

Fig. 114: Remove/Install 2/4 Clutch Return Spring
Courtesy of CHRYSLER LLC

1 - 2/4 CLUTCH RETURN SPRING

NOTE: **The 2/4 Clutch Piston has bonded seals which are not individually serviceable. Seal replacement requires replacement of the piston assembly.**

32. Install 2/4 clutch Belleville spring (1).

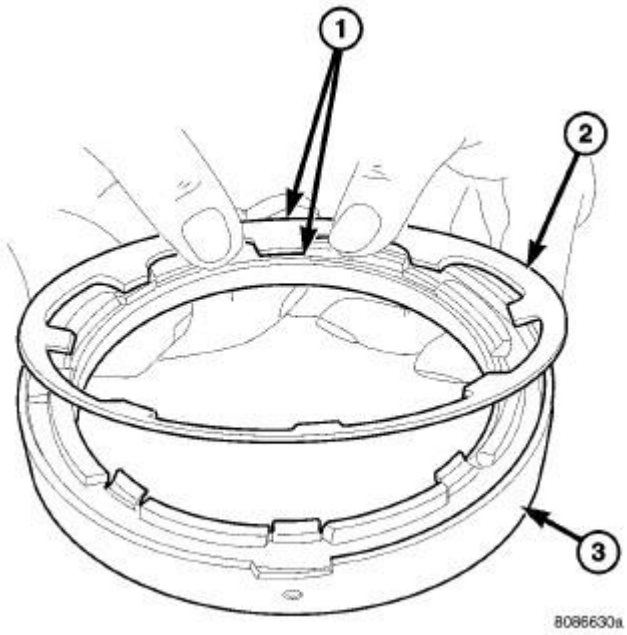

Fig. 115: Proper Orientation of 2/4 Clutch
Courtesy of CHRYSLER LLC

1 - NOTE POSITION 2 - RETURN SPRING 3 - 2/4 CLUTCH RETAINER

33. Verify the proper orientation of the return spring (2) to the 2/4 retainer (3).

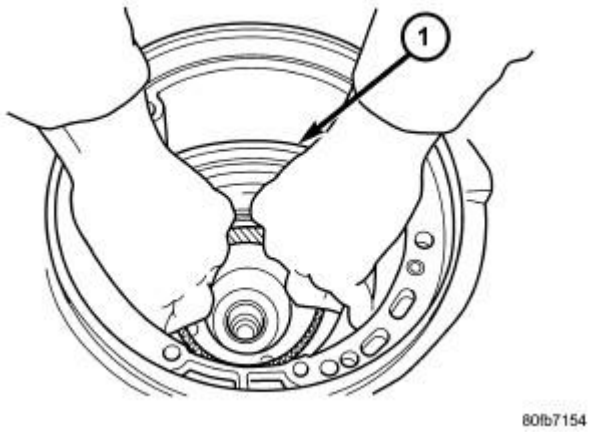

Fig. 116: Install 2/4 Clutch Retainer
Courtesy of CHRYSLER LLC

1 - 2/4 CLUTCH RETAINER

34. Install 2/4 clutch retainer (1).

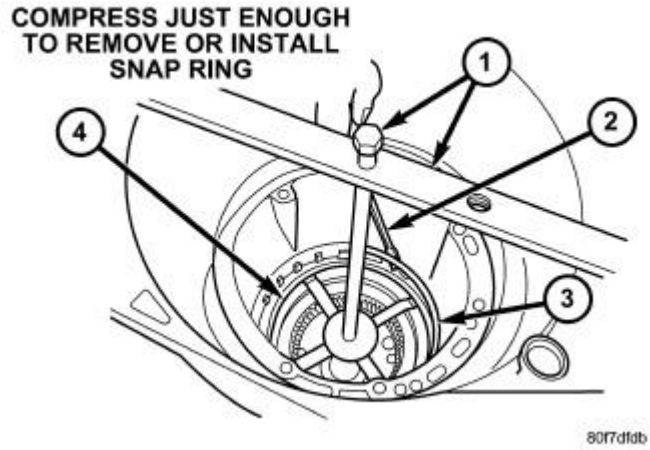

Fig. 117: Remove/Install 2/4 Clutch Retainer Snap Ring
Courtesy of CHRYSLER LLC

1 - TOOL 5058A 2 - SCREWDRIVER

3 - SNAP RING 4 - 2/4 CLUTCH RETAINER

NOTE: **Verify that Compressor Tool 5058A (1) is centered properly over the 2/4 clutch retainer (4) before compressing. If necessary, fasten the Compressor Tool 5058A bar to the bellhousing flange with any combination of locking pliers and bolts to center the tool properly.**

35. Set up Tool 5058A (1) as shown in illustration. Compress 2/4 clutch just enough to facilitate snap ring installation.

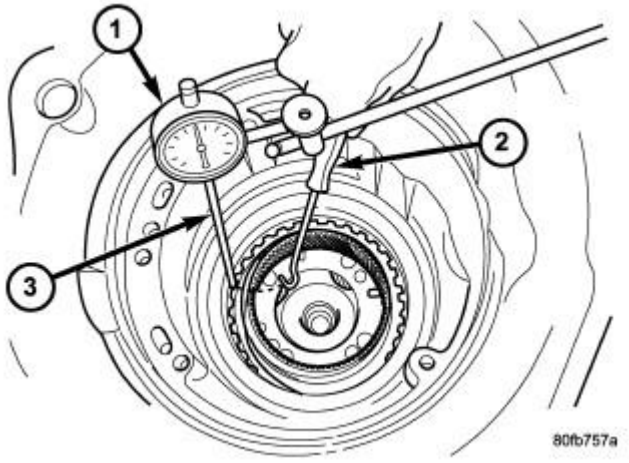

Fig. 118: Check 2/4 Clutch Clearance
Courtesy of CHRYSLER LLC

1 - DIAL INDICATOR 2 - HOOK TOOL 3 - DIAL INDICATOR TIP TOOL 6268

36. **Measure 2/4 clutch clearance:** Set up dial indicator (1) as shown in illustration. Press down clutch pack with finger and zero dial indicator. Record measurement in four (4) places and take average reading. **The 2/4 clutch pack clearance is 0.76 to 2.64 mm (0.030 to 0.104 inch).** If not within specifications, the clutch is not assembled properly or is excessively worn. **There is no adjustment for the 2/4 clutch clearance.**

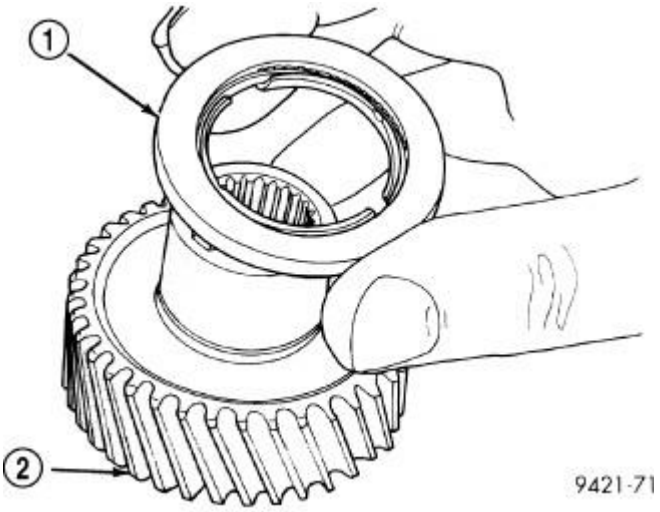

Fig. 119: Remove/Install Rear Sun Gear & No. 7 Bearing
Courtesy of CHRYSLER LLC

1 - #7 BEARING 2 - REAR SUN GEAR

37. Install the #7 needle bearing (1) to the rear sun gear (2).**The number 7 needle bearing has three anti-reversal tabs and is common with the number 5 and number 2 position. The orientation should allow the bearing to seat flat against the rear sun gear. A small amount of petrolatum can be used to hold the bearing to the rear sun gear.**

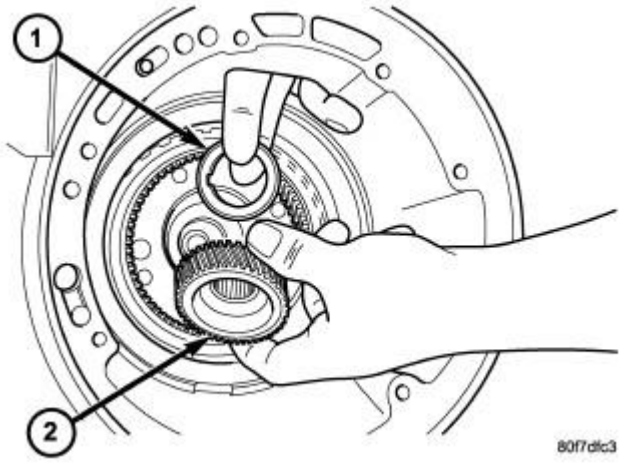

Fig. 120: Remove/Install Rear Sun Gear
Courtesy of CHRYSLER LLC

1 - #7 NEEDLE BEARING 2 - REAR SUN GEAR

38. Install rear sun gear (2) and #7 needle bearing (1).

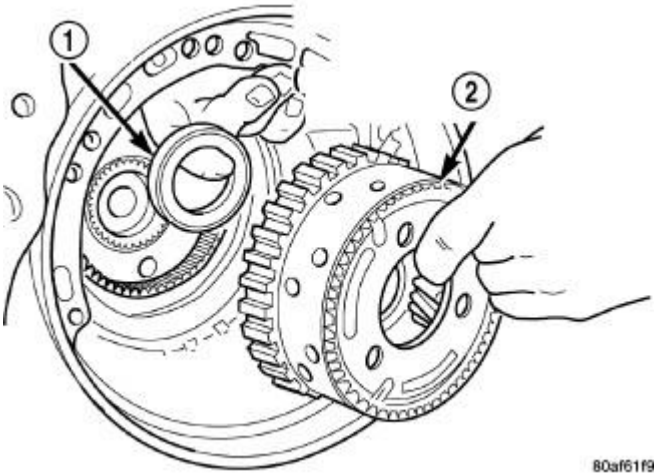

Fig. 121: Remove/Install Front Carrier/Rear Annulus
Courtesy of CHRYSLER LLC

1 - #6 NEEDLE BEARING 2 - FRONT CARRIER AND REAR ANNULUS ASSEMBLY (TWIST AND PULL OR PUSH TO REMOVE OR INSTALL).

39. Install front carrier/rear annulus assembly (2) and #6 needle bearing (1).

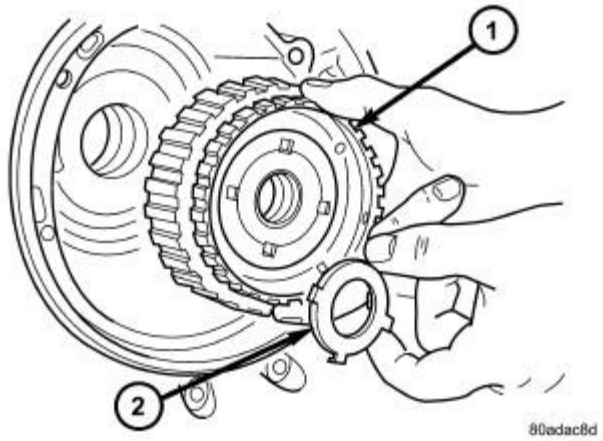

Fig. 122: Remove/Install Front Sun Gear Assembly
Courtesy of CHRYSLER LLC

1 - FRONT SUN GEAR ASSEMBLY 2 - #4 THRUST WASHER (FOUR TABS)

40. Install front sun gear assembly (1) and #4 thrust washer (2).

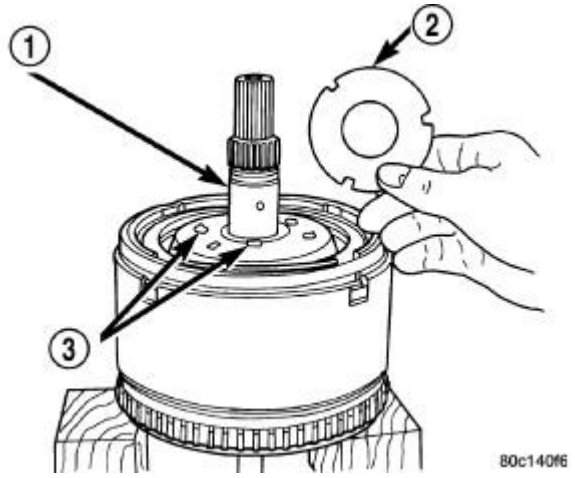

Fig. 123: Remove/Install #4 Thrust Plate
Courtesy of CHRYSLER LLC

1 - OVERDRIVE SHAFT ASSEMBLY 2 - #4 THRUST PLATE (SELECT) 3 - PETROLATUM FOR RETENTION

41. Determine proper #4 thrust plate thickness. Select the thinnest available #4 thrust plate.
42. Install #4 thrust plate (2) using petrolatum to hold into position.
43. Install input clutch assembly. Ensure the input clutch assembly is completely seated by viewing position through input speed sensor hole. **If the speed sensor tone wheel is not centered in the opening, the input clutches assembly is not seated properly.**

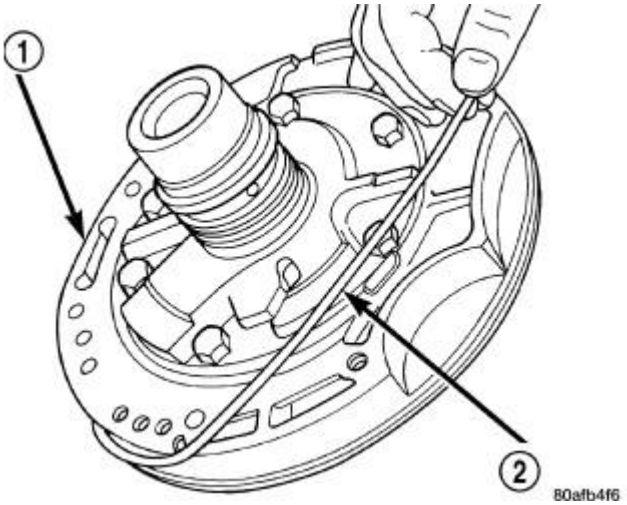

Fig. 124: Removing Oil Pump O-Ring
Courtesy of CHRYSLER LLC

1 - OIL PUMP ASSEMBLY 2 - O-RING

44. Remove the oil pump o-ring (2) and install oil pump and gasket to transmission. **Use screw-in dowels or Phillips head screwdrivers to align pump to case. Be sure to reinstall O-ring on oil pump after selecting the proper No. 4 thrust plate.**

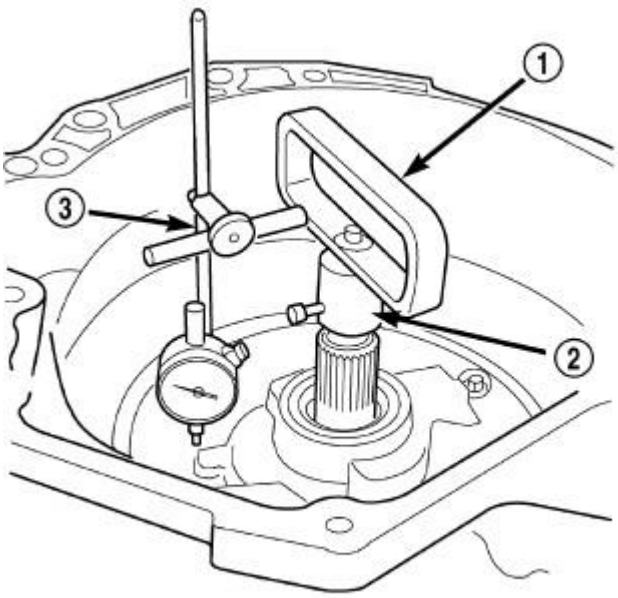

Fig. 125: Measure Input Shaft End Play Using Tool 8266A - Typical
Courtesy of CHRYSLER LLC

1 - TOOL 8266-8
2 - TOOL 8266-2
3 - TOOL C-3339A

45. Measure the input shaft end play with the transmission in the vertical position. This will ensure that the measurement will be accurate.
46. Set up and measure endplay using End Play Set 8266A (1, 2) and Dial Indicator Set C-3339A (3) as shown in illustration.
47. Measure input shaft end play. **Input shaft end play must be 0.127 to 0.635 mm (0.005 to 0.025 inch).** For example, if end play reading is 0.055 inch, select No. 4 Thrust Plate which is 0.071 to 0.074 thick. This should provide an input shaft end play reading of 0.020 inch, which is within specifications.

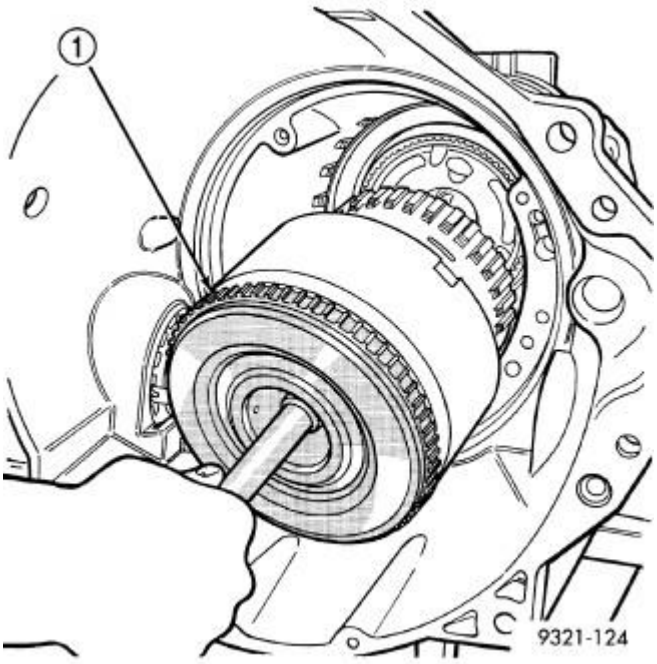

Fig. 126: Remove/Install Input Clutch Assembly
Courtesy of CHRYSLER LLC

1 - INPUT CLUTCH ASSEMBLY

48. Remove oil pump, gasket, and input clutch assembly to gain access to and install proper #4 thrust plate.
49. Install input clutch assembly (1) with proper thrust plate.

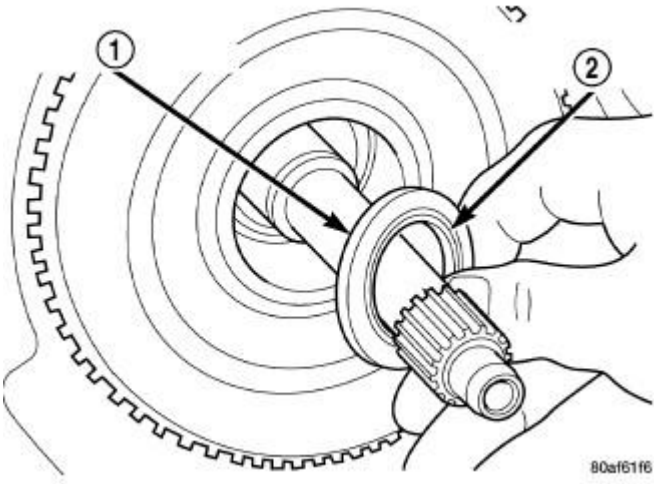

Fig. 127: Remove/Install No. 1 Caged Needle Bearing
Courtesy of CHRYSLER LLC

1 - #1 CAGED NEEDLE BEARING

2 - NOTE: TANGED SIDE OUT

50. Install #1 caged needle bearing (1).

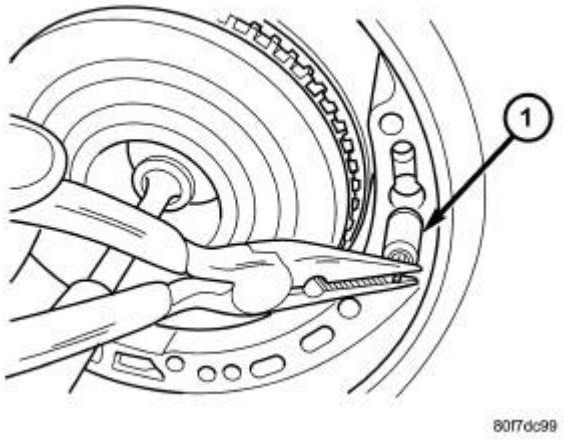

Fig. 128: Remove/Install By-Pass Valve
Courtesy of CHRYSLER LLC

1 - BYPASS VALVE

CAUTION: By-pass valve MUST be replaced if transmission failure occurs.

51. Replace cooler by-pass valve (1) if transmission failure has occurred.

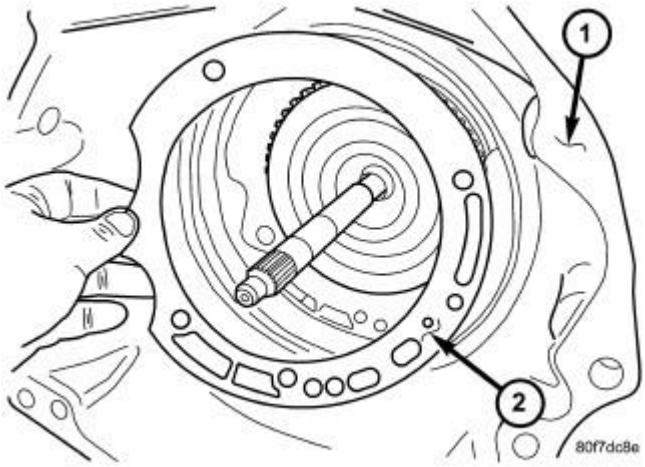

Fig. 129: Remove/Install Oil Pump Gasket
Courtesy of CHRYSLER LLC

1 - BELLHOUSING 2 - OIL PUMP GASKET

52. Install oil pump gasket (2).

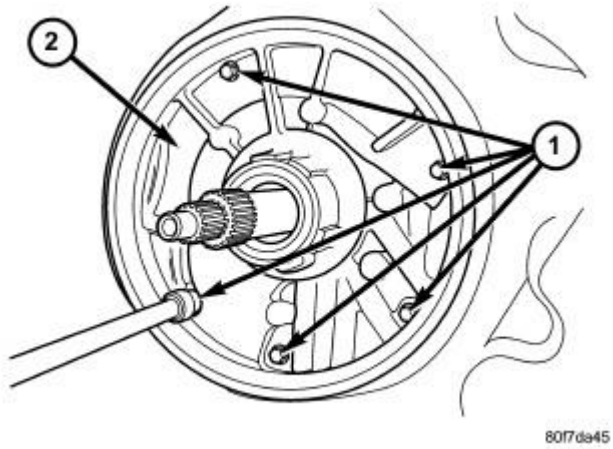

Fig. 130: Remove/Install Oil Pump Attaching Bolts
Courtesy of CHRYSLER LLC

1 - BOLTS 2 - OIL PUMP

NOTE: To align oil pump, gasket, and case during installation, use threaded dowels or Phillips screwdrivers.

53. Install oil pump (2) and torque oil pump-to-case bolts (1) to 30 N.m (265 in. lbs.). Do not reuse original oil pump bolts.

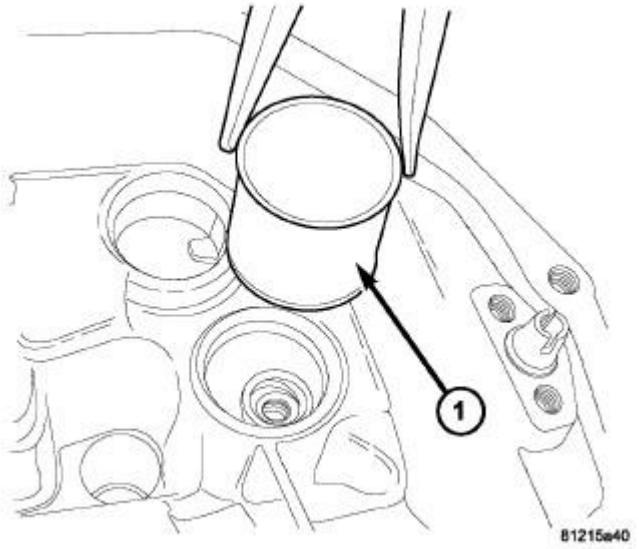

Fig. 131: Remove/Install Low/Reverse Accumulator Piston
Courtesy of CHRYSLER LLC

1 - ACCUMULATOR PISTON

54. Install low/reverse accumulator (1) as shown in illustration.

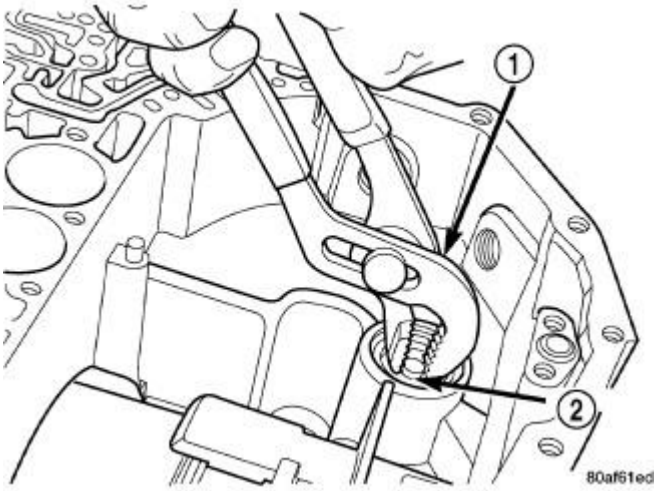

Fig. 132: Remove/Install Low/Reverse Accumulator Plug
Courtesy of CHRYSLER LLC

1 - ADJUSTABLE PLIERS 2 - PLUG

55. Install low/reverse accumulator plug (2).

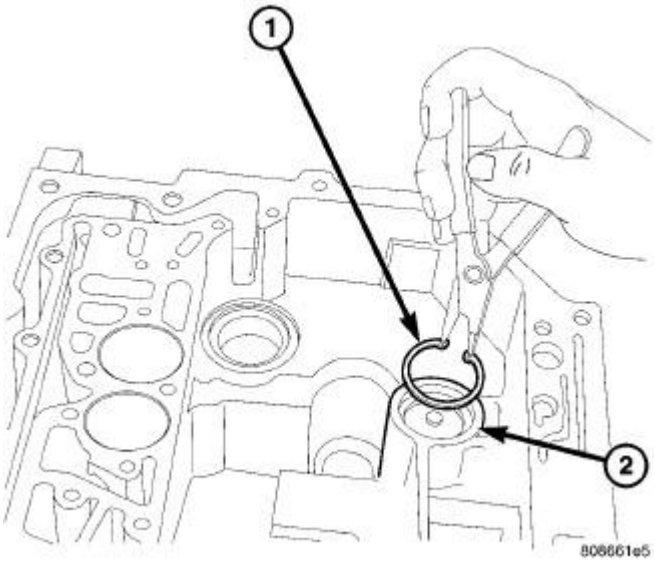

Fig. 133: Remove/Install Snap Ring
Courtesy of CHRYSLER LLC

1 - SNAP RING 2 - LOW/REVERSE ACCUMULATOR

56. Install low/reverse accumulator snap ring (1).

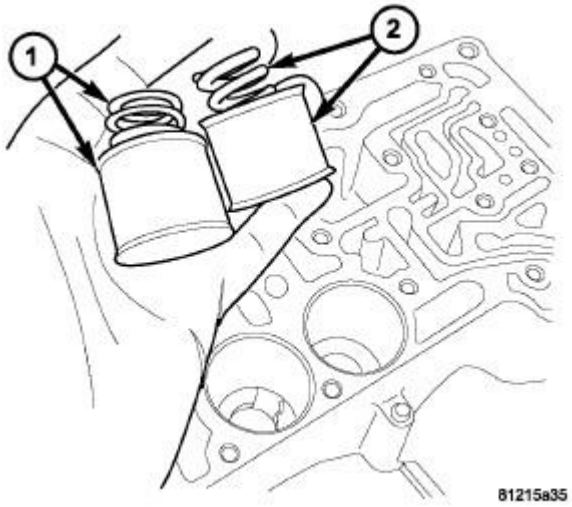

Fig. 134: Underdrive & Overdrive Accumulators
Courtesy of CHRYSLER LLC

1 - OVERDRIVE PISTON AND SPRING 2 - UNDERDRIVE PISTON AND SPRING

57. Install underdrive (2) and overdrive (1) accumulators and springs.

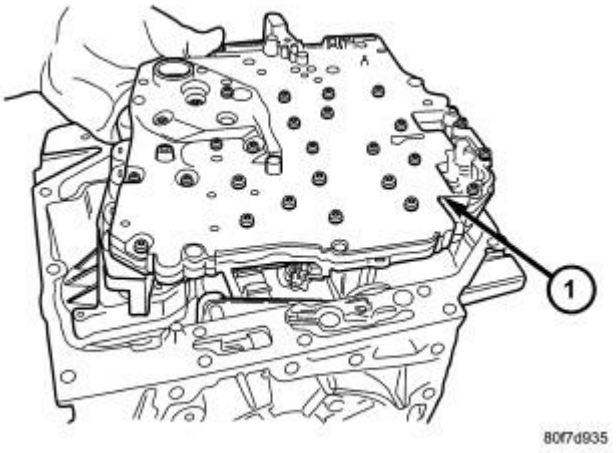

Fig. 135: Remove/Install Valve Body
Courtesy of CHRYSLER LLC

1 - VALVE BODY

CAUTION: Do not handle the valve body by the manual shaft. Damage could result.

58. Install valve body (1) into place as shown in illustration.

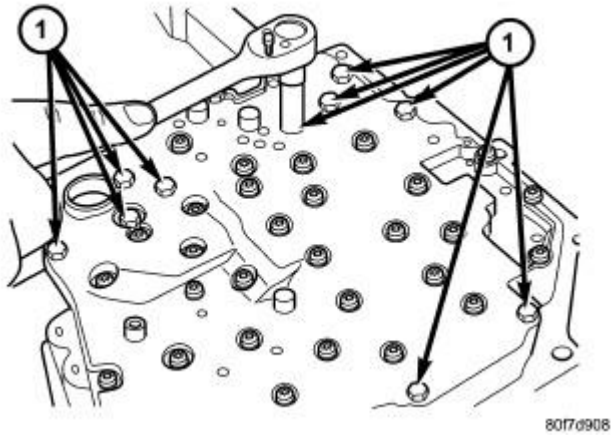

Fig. 136: Remove/Install Valve Body Fasteners
Courtesy of CHRYSLER LLC

1 - BOLTS

59. Install seven (7) valve body-to-case bolts (1) and torque to 12 N.m (105 in. lbs.).

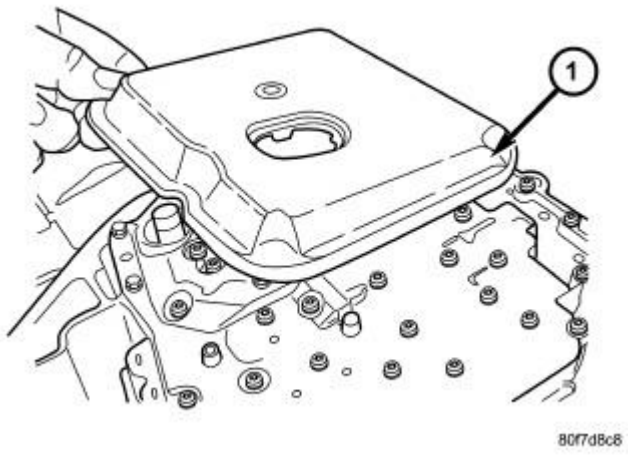

Fig. 137: Remove/Install Transmission Filter
Courtesy of CHRYSLER LLC

1 - TRANSMISSION FILTER

60. Install transmission oil filter (1) and o-ring. Tighten the bolts to 5 N.m (45 in. lbs.).
61. If necessary, install a new transmission fill tube grommet into the transmission case with Installer 8254.

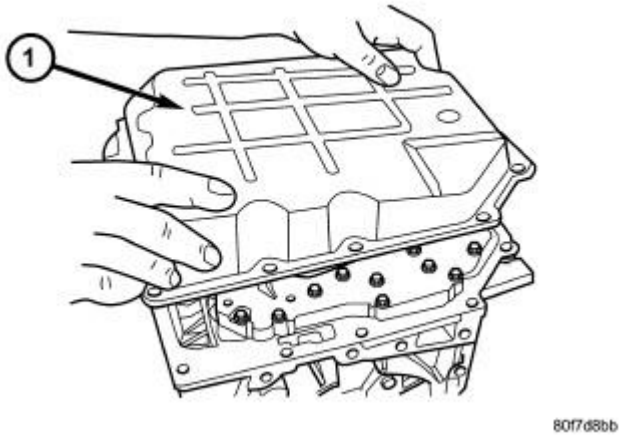

Fig. 138: Remove/Install Transmission Oil Pan
Courtesy of CHRYSLER LLC

1 - TRANSMISSION OIL PAN

62. Install transmission oil pan (1) with a bead of Mopar® ATF RTV.

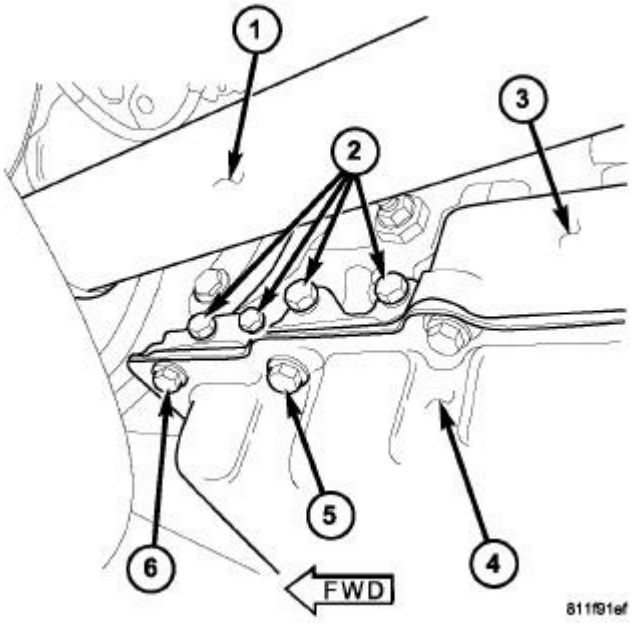

Fig. 139: Pan Fastener
Courtesy of CHRYSLER LLC

1 - FRONT DRIVESHAFT
2 - PRESSURE PORTS
3 - TRANSMISSION CASE
4 - TRANSMISSION OIL PAN
5 - SECOND TRANSMISSION OIL PAN BOLT ON LEFT SIDE
6 - FIRST TRANSMISSION OIL PAN BOLT

NOTE: Before installing the oil pan bolt in the bolt hole located between the torque converter clutch on and U/D clutch pressure tap circuits , it will be necessary to replenish the sealing patch on the bolt using Mopar® Lock AND Seal Adhesive.

63. Install and torque the oil pan-to-case bolts to 20 N.m (14.5 ft. lbs.).

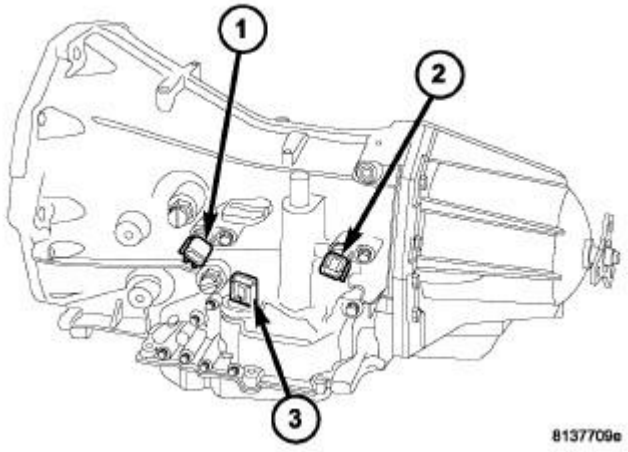

Fig. 140: Input And Output Speed Sensors & Transmission Range Sensor
Courtesy of CHRYSLER LLC

1 - INPUT SPEED SENSOR
2 - OUTPUT SPEED SENSOR
3 - TRANSMISSION RANGE SENSOR

NOTE: Before installing either speed sensor bolt, it will be necessary to replenish the sealing patch on the bolt using Mopar® Lock AND Seal Adhesive.

64. Install both speed sensors (1, 2) into the transmission case. Torque the speed sensor bolts to 9 N.m (80 in. lbs.).

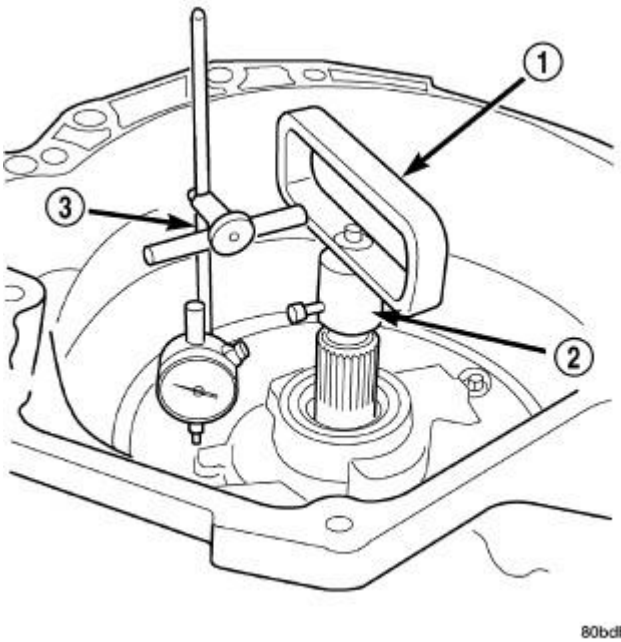

Fig. 141: Measure Input Shaft End Play Using Tool 8266A - Typical

Courtesy of CHRYSLER LLC

1 - TOOL 8266-8 2 - TOOL 8266-2 3 - TOOL C-3339A

65. As a final check of the transmission, measure the input shaft end play. This will indicate when a #4 thrust plate change is required. The #4 thrust plate is located behind the overdrive clutch hub. Attach a dial indicator to transmission bell housing with its plunger seated against end of input shaft. Move input shaft in and out to obtain end play reading. **Input shaft end play must be 0.127 to 0.635 mm (0.005 to 0.025 inch).** If not within specifications, make the necessary thrust plate adjustment.

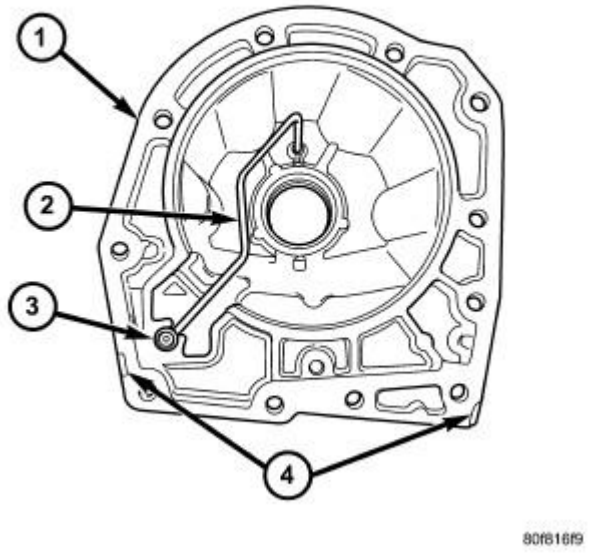

Fig. 142: Lube Tube Grommet
Courtesy of CHRYSLER LLC

1 - HOUSING 2 - LUBE TUBE 3 - GROMMET 4 - PRY SLOTS

66. Inspect the lube tube grommet (2) for damage. If the grommet lip is damaged, it will need to be replaced.

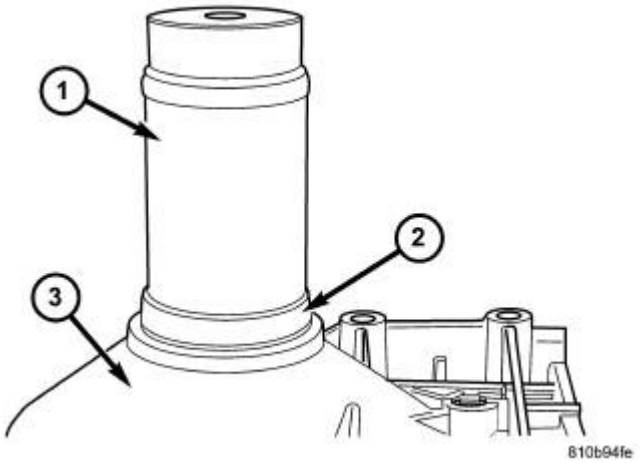

Fig. 143: Installing Output Shaft Bearing
Courtesy of CHRYSLER LLC

1 - BEARING INSTALLER 9287 2 - BEARING 3 - TRANSMISSION CASE

67. Install output shaft bearing in the rear transmission housing. Using Bearing Installer 9287 (1), install the output shaft bearing (2) into the transmission housing. **The closed side of the plastic cage must point towards the transmission.**

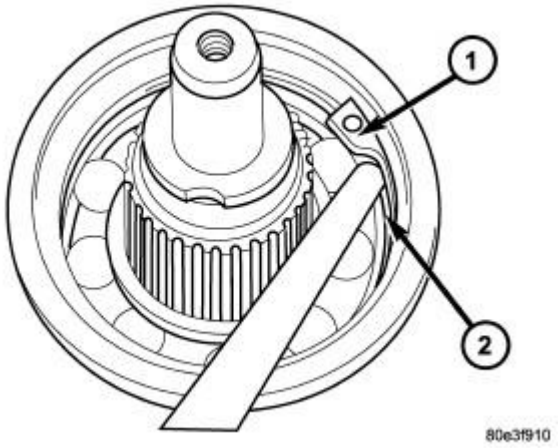

Fig. 144: Remove/Install Rear Output Shaft Retaining Ring
Courtesy of CHRYSLER LLC

1 - RETAINING RING 2 - OUTPUT SHAFT BEARING

68. Install the snap-ring into the groove in the output shaft.

69. Install the output shaft into the output shaft bearing.
70. Install the retaining ring (1). Be sure that the retaining ring is seated correctly in the groove.
71. Install the output shaft washer onto the output shaft.

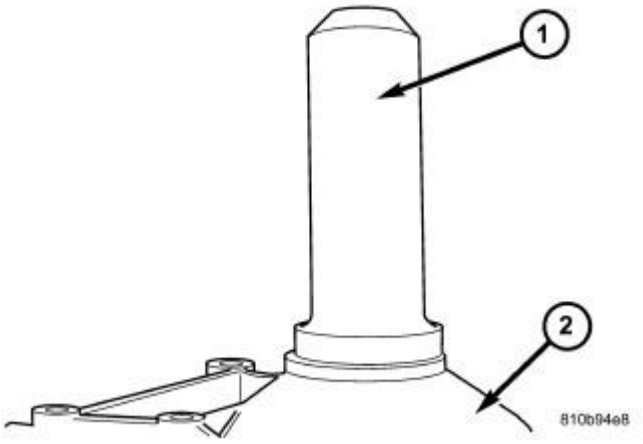

Fig. 145: Install Output Shaft Seal
Courtesy of CHRYSLER LLC

1 - SEAL INSTALLER 8902A 2 - TRANSMISSION CASE

72. Install a new transmission rear seal into the transmission case with Seal Installer 8902A (1).
73. Install the propeller shaft flange onto the output shaft and install an new flange nut finger tight.

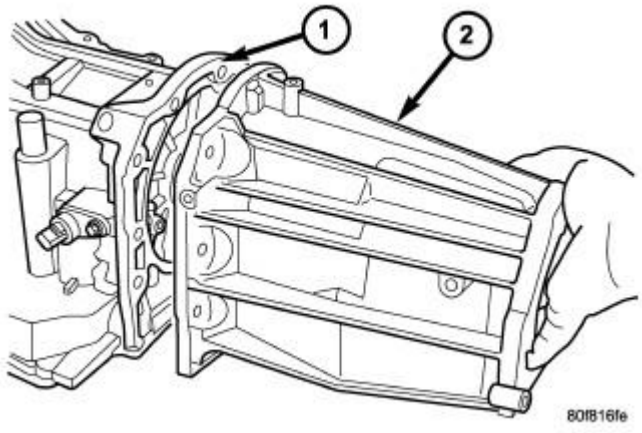

Fig. 146: Remove/Install Extension Housing
Courtesy of CHRYSLER LLC

74. Install the extension housing (2) onto the transmission case.

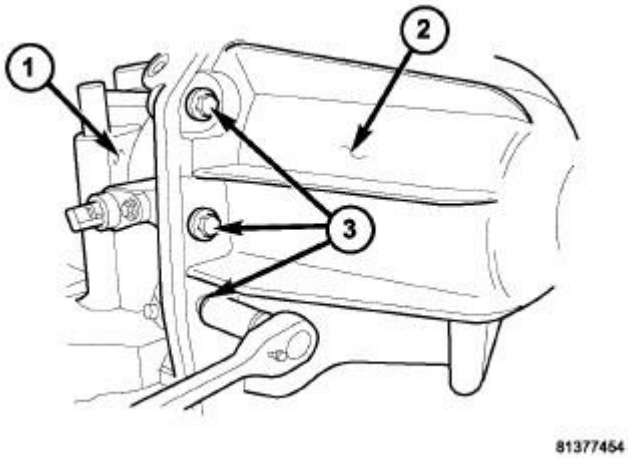

Fig. 147: Remove/Install Adapter/Extension Housing Bolts
Courtesy of CHRYSLER LLC

NOTE: Before installing the lowermost four extension housing bolts, it will be necessary to replenish the sealing patch on the bolts using Mopar® Lock AND Seal Adhesive.

75. Install the bolts that hold the extension housing onto the transmission case. Be sure to install any stud bolts to their original locations. Tighten the bolts to 54 N.m (40 ft.lbs.).

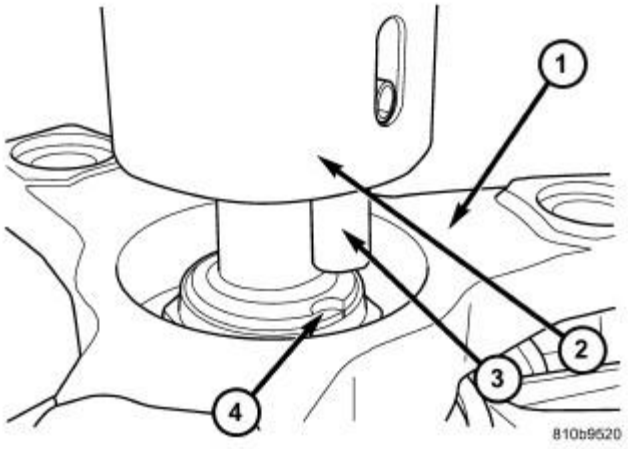

Fig. 148: Align Staking Tool 9078
Courtesy of CHRYSLER LLC

1 - PROPELLER SHAFT FLANGE
2 - STAKING TOOL 9078
3 - ALIGNMENT PIN
4 - OUTPUT SHAFT NOTCH

76. Verify that the transmission is in PARK in order to prepare for the installation of the output shaft nut. Tighten the flange nut to 200 N.m (147 ft.lbs.).
77. Stake the output shaft nut to the output shaft as follows. Place the Staking Tool 9078 (2) and Driver Handle C-4171 onto the output shaft.
78. Rotate the Staking Tool 9078 (2) until the alignment pin (3) engages the output shaft notch (4).

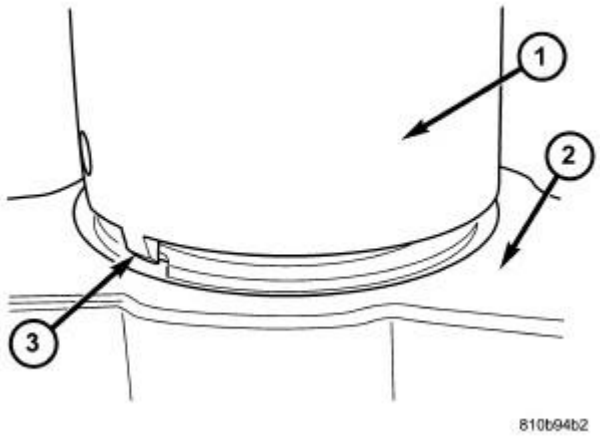

Fig. 149: Stake Output Shaft Nut
Courtesy of CHRYSLER LLC

1 - STAKING TOOL 9078
2 - PROPELLER FLANGE
3 - STAKING PIN

79. Press downward on the staking tool (1) until the staking pin (3) contacts the output shaft nut flange (2).
80. Strike the Driver handle C-4171 with a suitable hammer until the output shaft nut is securely staked to the output shaft.

INSTALLATION

INSTALLATION

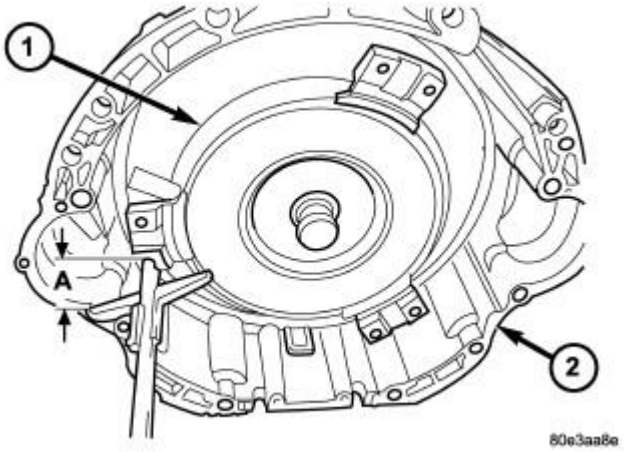

Fig. 150: Torque Converter Installation Depth
Courtesy of CHRYSLER LLC

1. Check torque converter hub and hub drive flats for sharp edges burrs, scratches, or nicks. Polish the hub and flats with 320/400 grit paper and crocus cloth if necessary. The hub must be smooth to avoid damaging pump seal at installation.

NOTE: Pay attention to transfer all clips, clip retainers, brackets, shields, etc. from the original transmission to the replacement transmission.

2. If a replacement transmission is being installed, transfer any components necessary, such as the manual shift lever and shift cable bracket, from the original transmission onto the replacement transmission.
3. Lubricate oil pump seal lip with transmission fluid.
4. Place torque converter (1) in position in transmission (2).

CAUTION: Do not damage oil pump seal or converter hub while inserting torque converter into the front of the transmission.

5. Align torque converter to oil pump seal opening.
6. Insert torque converter hub into oil pump.
7. While pushing torque converter inward, rotate converter until converter is fully seated in the oil pump gears.
8. Check converter seating with a scale and straightedge (measurement A). Surface of converter lugs should be at least 19 mm (3/4 in.) to rear of straightedge when converter is fully seated.

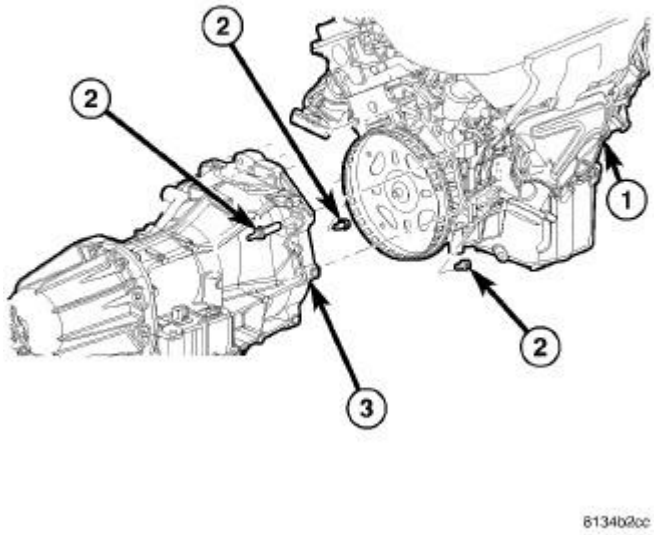

Fig. 151: Remove/Install Transmission
Courtesy of CHRYSLER LLC

9. Check condition of converter driveplate. Replace the plate if cracked, distorted or damaged. **Be sure transmission dowel pins are seated in engine block and protrude far enough to hold transmission in alignment.**
10. Apply a light coating of Mopar® High Temp Grease to the torque converter hub pocket in the rear pocket of the engine's crankshaft.
11. Raise transmission (3) and align the torque converter with the drive plate and the transmission converter housing with the engine block (1).
12. Position transmission forward. Then raise, lower or tilt transmission to align the converter housing with the engine block dowels.
13. Carefully work transmission forward and over engine block dowels until converter hub is seated in crankshaft. Verify that no wires or the transmission vent hose have become trapped between the engine block and the transmission.
14. Securely install two bolts (2) to secure the transmission to the engine.
15. Install remaining transmission to engine bolts (2). Tighten all botls to 68N.m (50 ft.lbs.).

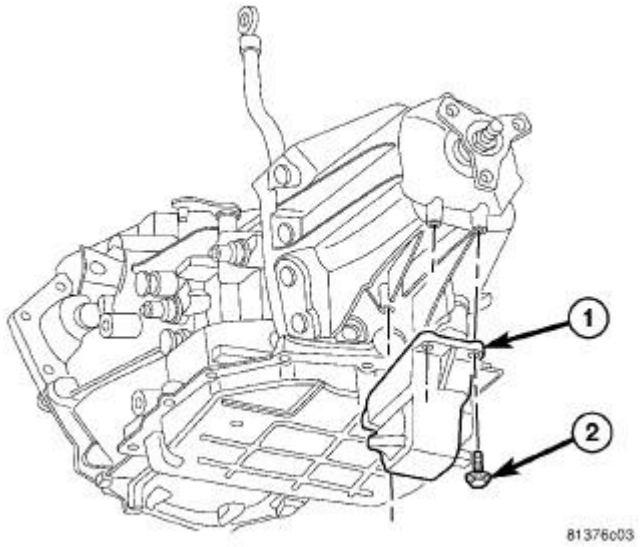

Fig. 152: Remove/Install Rear Support & Cushion
Courtesy of CHRYSLER LLC

16. Install rear transmission crossmember (1). Tighten crossmember to frame bolts to 68 N.m (50 ft.lbs.).
17. Install rear support (3) to transmission. Tighten bolts to 47 N.m (35 ft.lbs.).
18. Lower transmission onto crossmember and install bolts attaching transmission mount to crossmember. Tighten clevis bracket to crossmember bolts(2) to 47 N.m (35 ft.lbs.).
19. Remove engine support fixture.

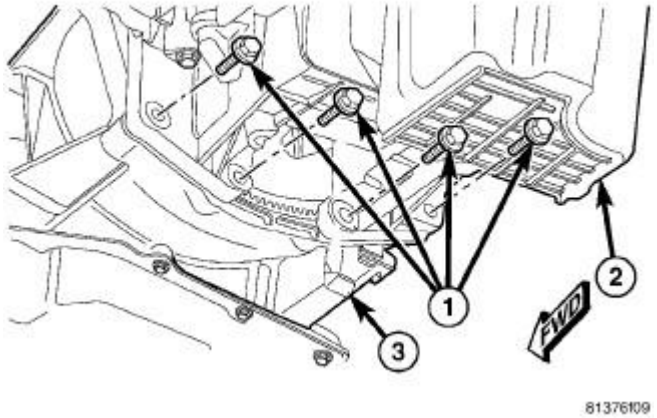

Fig. 153: Removing/Installing Engine Oil Pan To Transmission Bolts - 3.5L
Courtesy of CHRYSLER LLC

20. Install the bolts (1) that secure the transmission (3) to the engine oil pan (2). Tighten bolts to 39 N.m (29 ft.lbs.).

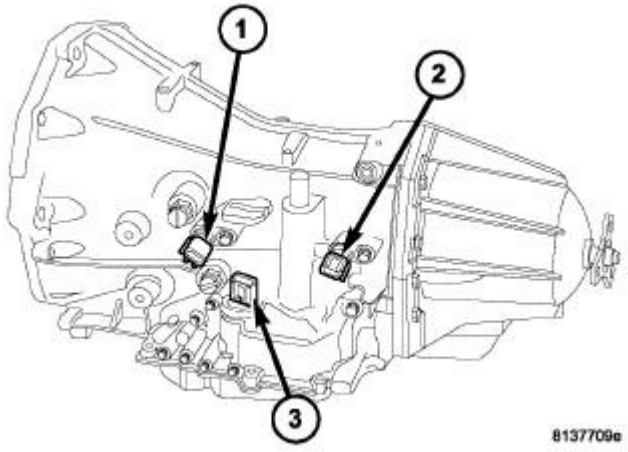

Fig. 154: Input And Output Speed Sensors & Transmission Range Sensor
Courtesy of CHRYSLER LLC

21. Connect the transmission wiring harness to the input speed sensor (1), output speed sensor (2) and transmission range sensor (3).

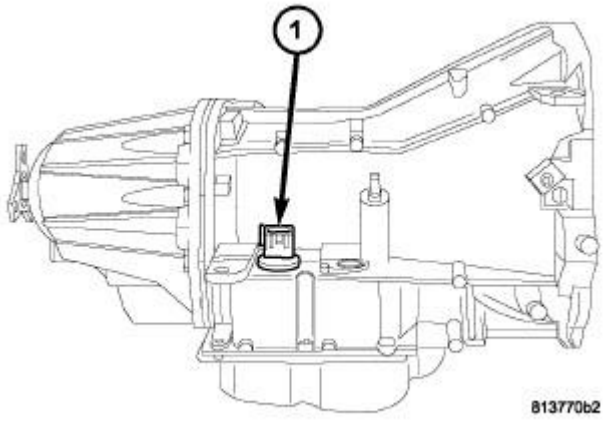

Fig. 155: Solenoid/Pressure Switch Assembly
Courtesy of CHRYSLER LLC

22. Connect transmission wire harness to the solenoid/pressure switch assembly (1).

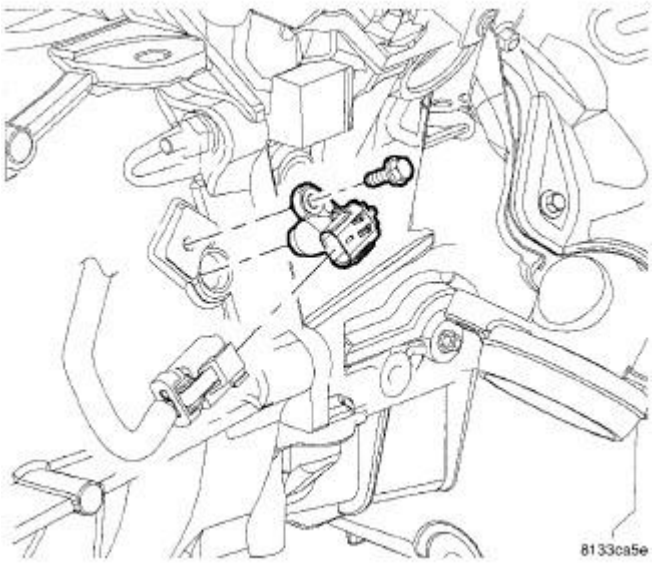

Fig. 156: Crankshaft Position Sensor
Courtesy of CHRYSLER LLC

23. Install the crankshaft position sensor and retaining bolt and connect transmissaion wire harness to the sensor. Refer to **Fuel System/Fuel Injection/SENSOR, Crankshaft Position - Installation** .
24. Verify that the transmission is in the PARK position by trying to rotate the propeller shaft. If the propeller shaft rotates, move the transmission manual shift lever to the full rearward position and turn the propeller shaft until the PARK system is engaged.

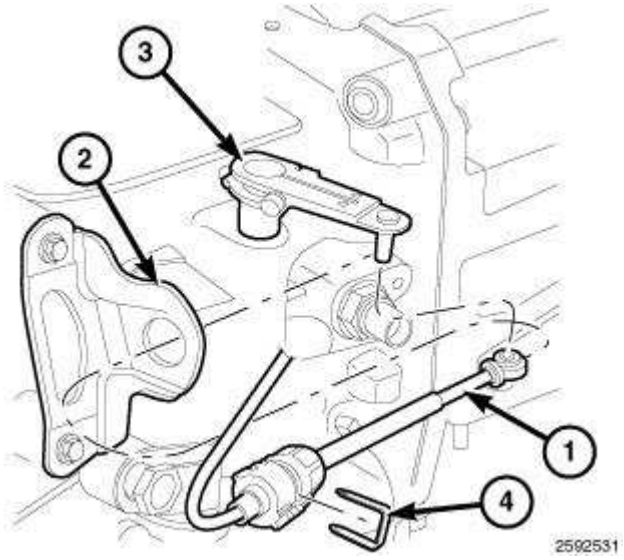

Fig. 157: Remove/Install Gearshift Cable
Courtesy of CHRYSLER LLC

25. Route the gearshift cable (1) through the mounting bracket (2).
26. Engage the gearshift cable (1) eyelet onto the transmission manual shift lever (3).

27. Install the gearshift cable retaining clip (4) (if equipped).

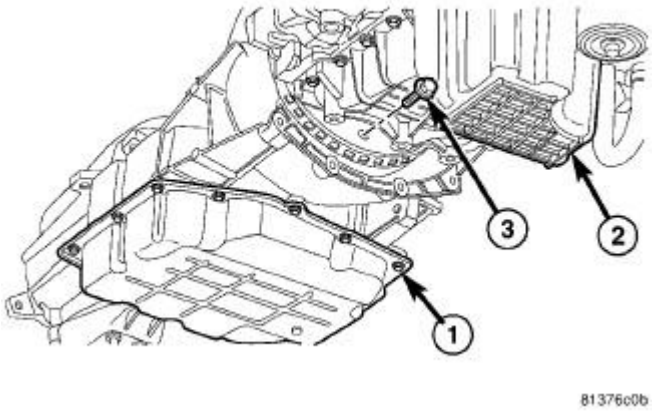

Fig. 158: Removing/Installing Torque Converter Bolts
Courtesy of CHRYSLER LLC

CAUTION: It is essential that the correct length bolts are used to attach the converter to the driveplate. Bolts that are too long will damage the clutch surface inside the converter.

28. Install all torque converter-to-driveplate bolts (3) by hand.
29. Verify that the torque converter is pulled flush to the driveplate.
30. Tighten all torque converter-to-driveplate bolts to 88N.m (65 ft. lbs.).

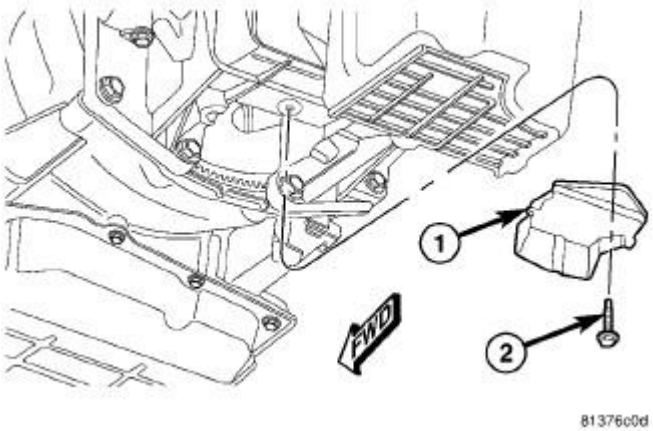

Fig. 159: Removing/Installing Torque Converter Access Cover - 3.5L
Courtesy of CHRYSLER LLC

31. Install the torque converter bolt cover (1) and bolts (2). Tighten the bolts to 11 N.m (8 ft.lbs.).

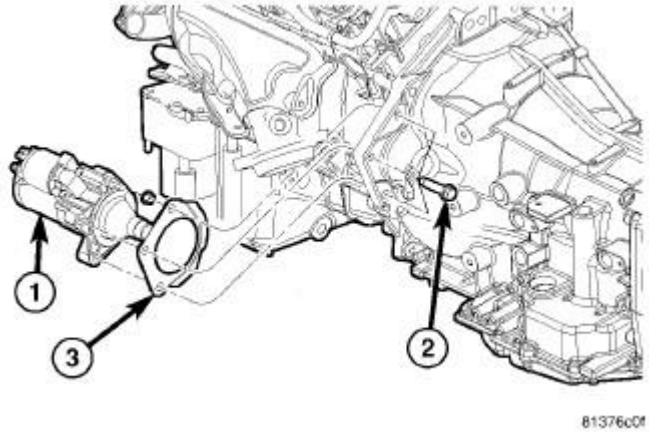

Fig. 160: Relocate Starter
Courtesy of CHRYSLER LLC

32. Install starter motor (1), closeout (3) and retaining bolts (3). Tighten bolts securely. Refer to **Electrical - Engine Systems/Starting/STARTER - Installation** .

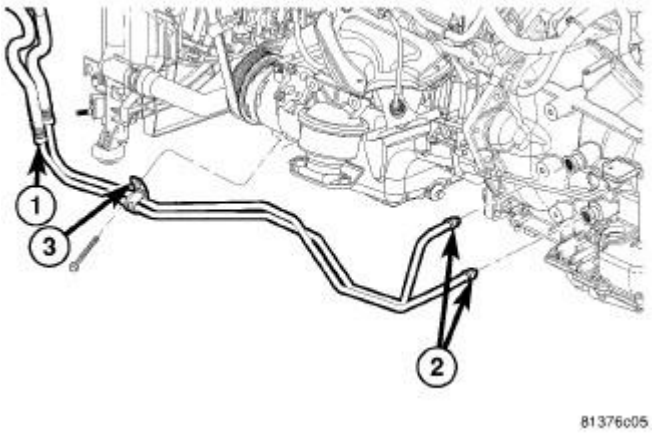

Fig. 161: Transmission Lines
Courtesy of CHRYSLER LLC

33. Connect the cooler line fittings (2) and cooler lines (1) to the transmission.
34. Install the transmission cooler line bracket (3) as equipped.

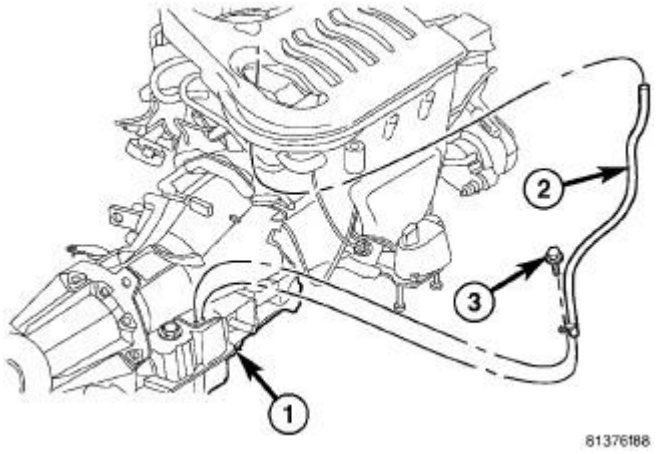

Fig. 162: Remove/Install Transmission Fill Tube
Courtesy of CHRYSLER LLC

NOTE: Inspect the fill tube grommet to determine if the grommet is new or used. If a new fill tube grommet is in the transmission case, pierce the center of the grommet with a ballpoint pen, or similar instrument, to prepare the grommet for the fill tube installation.

35. Install the transmission fill tube (2) onto the transmission (1).
36. Install the transmission fill tube retaining bolt (3). Tighten the bolt securely.
37. Install exhaust components.

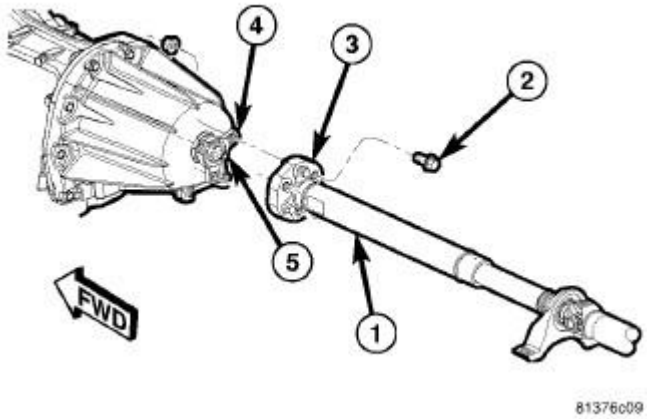

Fig. 163: Remove/Install Propeller Shaft
Courtesy of CHRYSLER LLC

38. Align and connect the propeller shaft flange (3) to the transmisiion output shaft flang (4) and install the retaining bolts (2). Refer to **Differential and Driveline/Propeller Shaft - Installation** .
39. Adjust gearshift cable if necessary.

40. Lower vehicle.
41. Connect negative battery cable.
42. Fill transmission with appropriate transmission fluid. Refer to **Vehicle Quick Reference/Capacities and Recommended Fluids - Description** according to the standard procedure. Refer to **Transmission and Transfer Case/Automatic - NAG1/FLUID and FILTER - Standard Procedure** .
43. Verify proper operation.

SCHEMATICS AND DIAGRAMS

42RLE - WITHOUT VARIABLE LINE PRESSURE

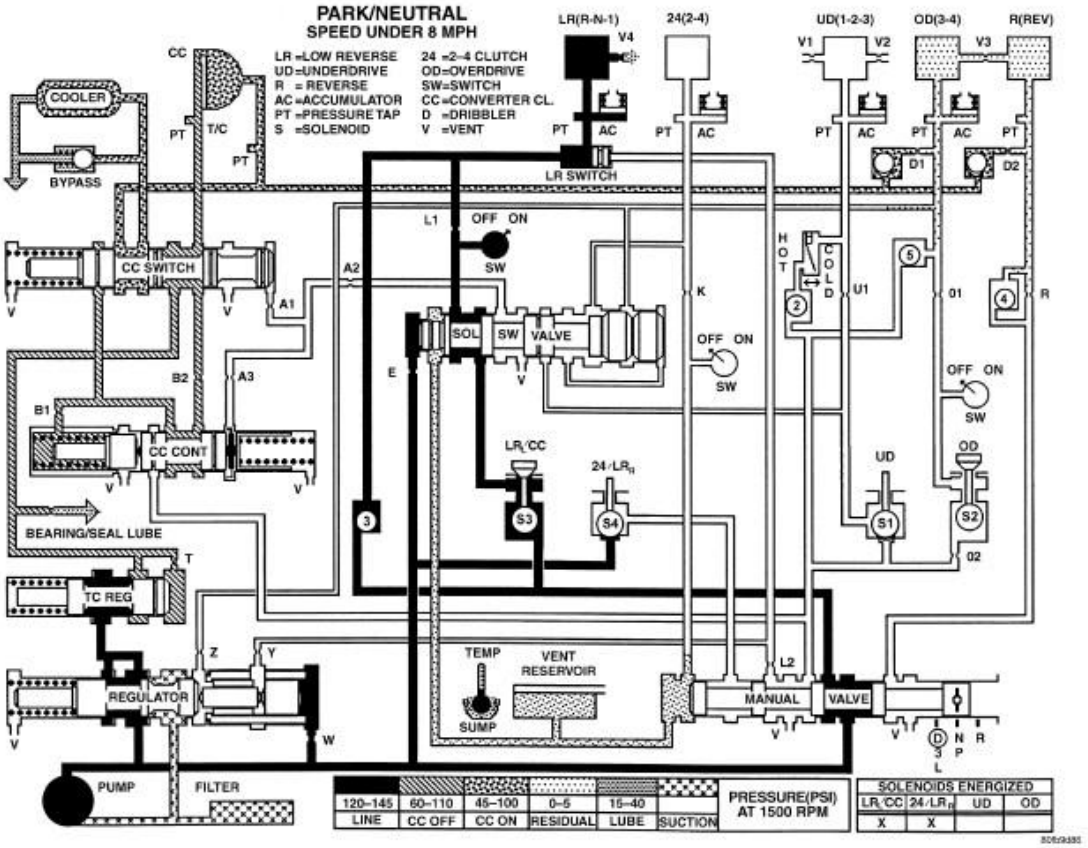

Fig. 164: Park/Neutral (Speed Under 8 mph)
Courtesy of CHRYSLER LLC

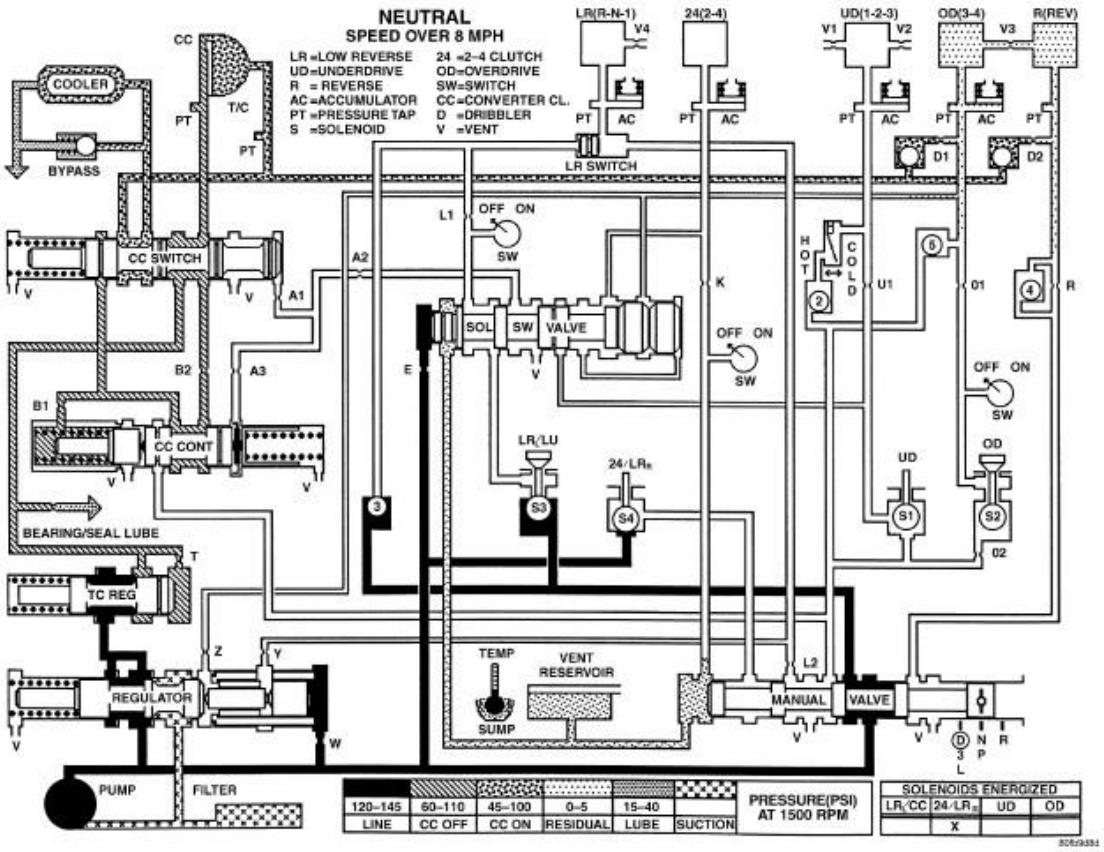

Fig. 165: Neutral (Speed Over 8 mph)
Courtesy of CHRYSLER LLC

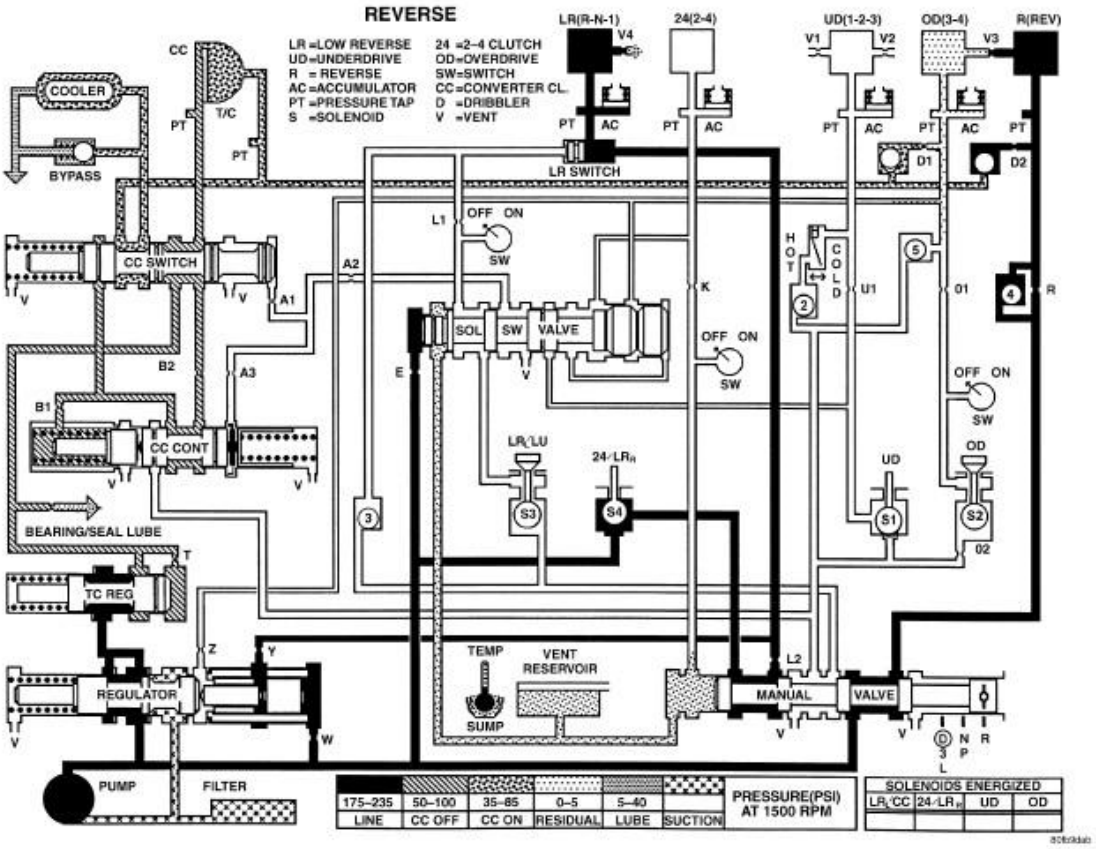

Fig. 166: Reverse
Courtesy of CHRYSLER LLC

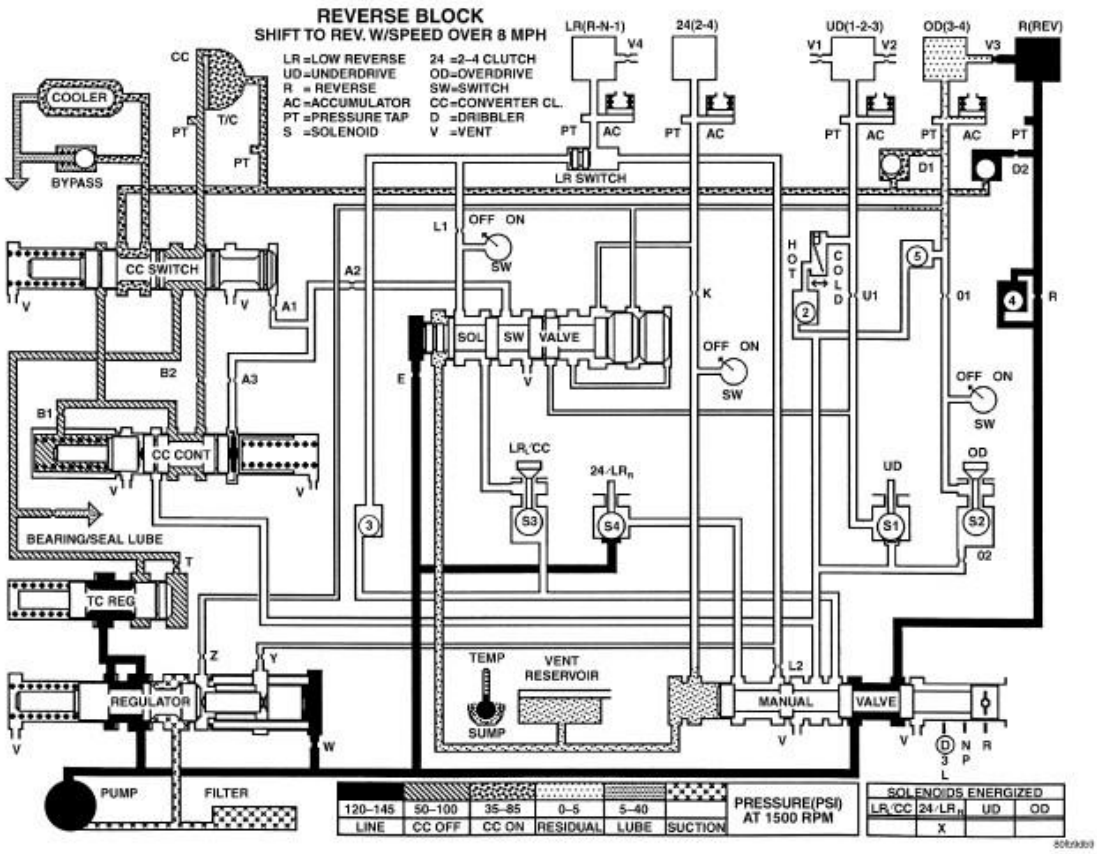

Fig. 167: Reverse Block (Shift to Reverse w/Speed Over 8 mph)
Courtesy of CHRYSLER LLC

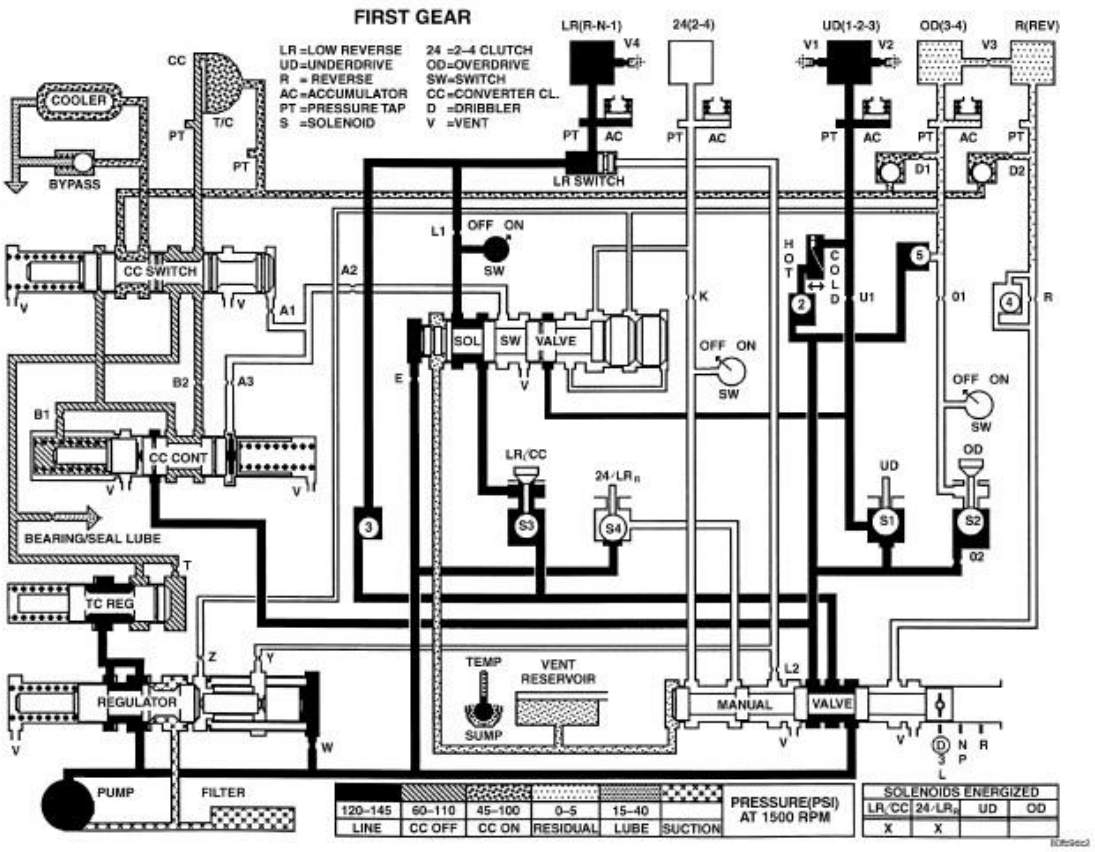

Fig. 168: First Gear
Courtesy of CHRYSLER LLC

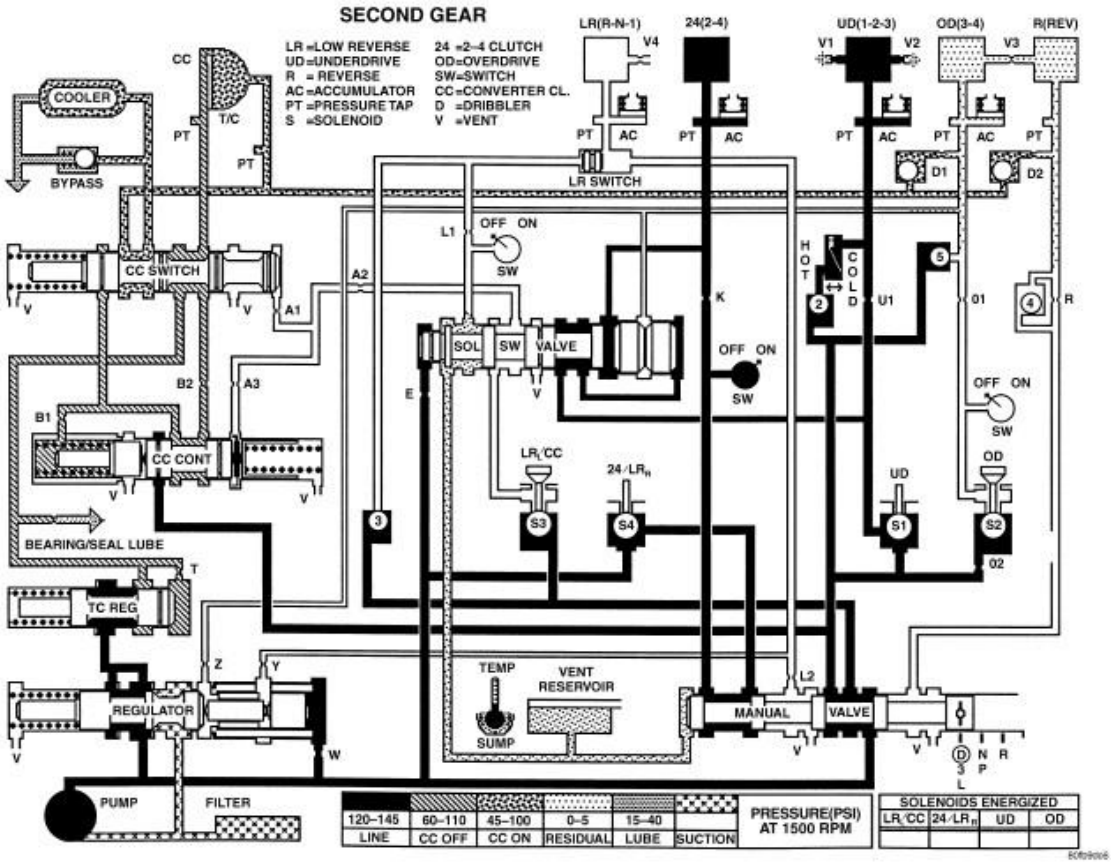

Fig. 169: Second Gear
Courtesy of CHRYSLER LLC

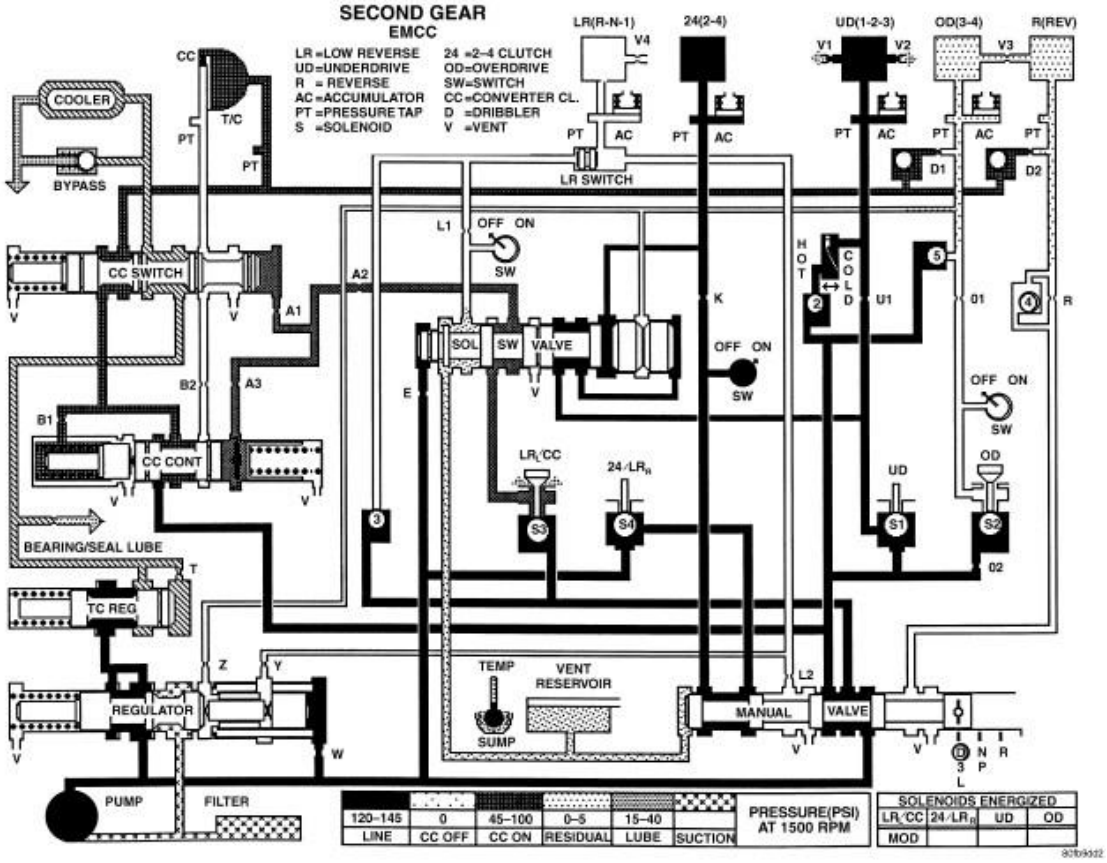

Fig. 170: Second Gear (EMCC)
Courtesy of CHRYSLER LLC

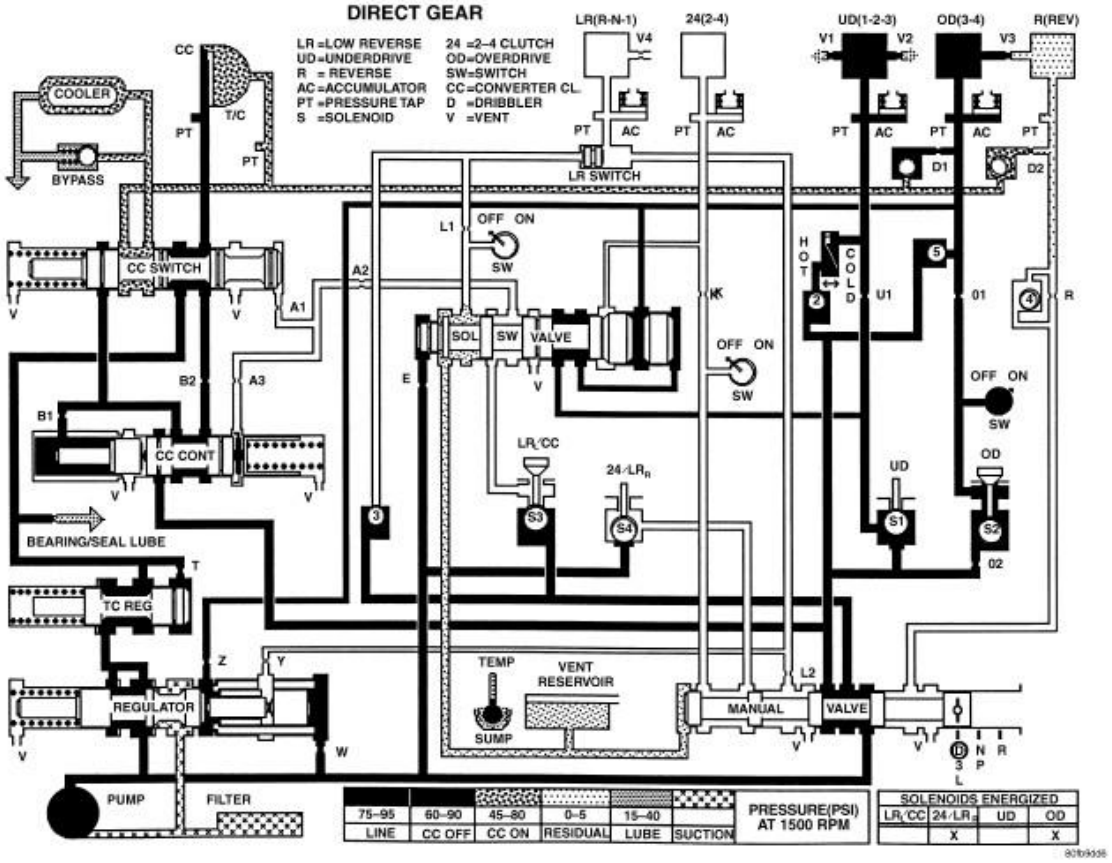

Fig. 171: Direct Gear
Courtesy of CHRYSLER LLC

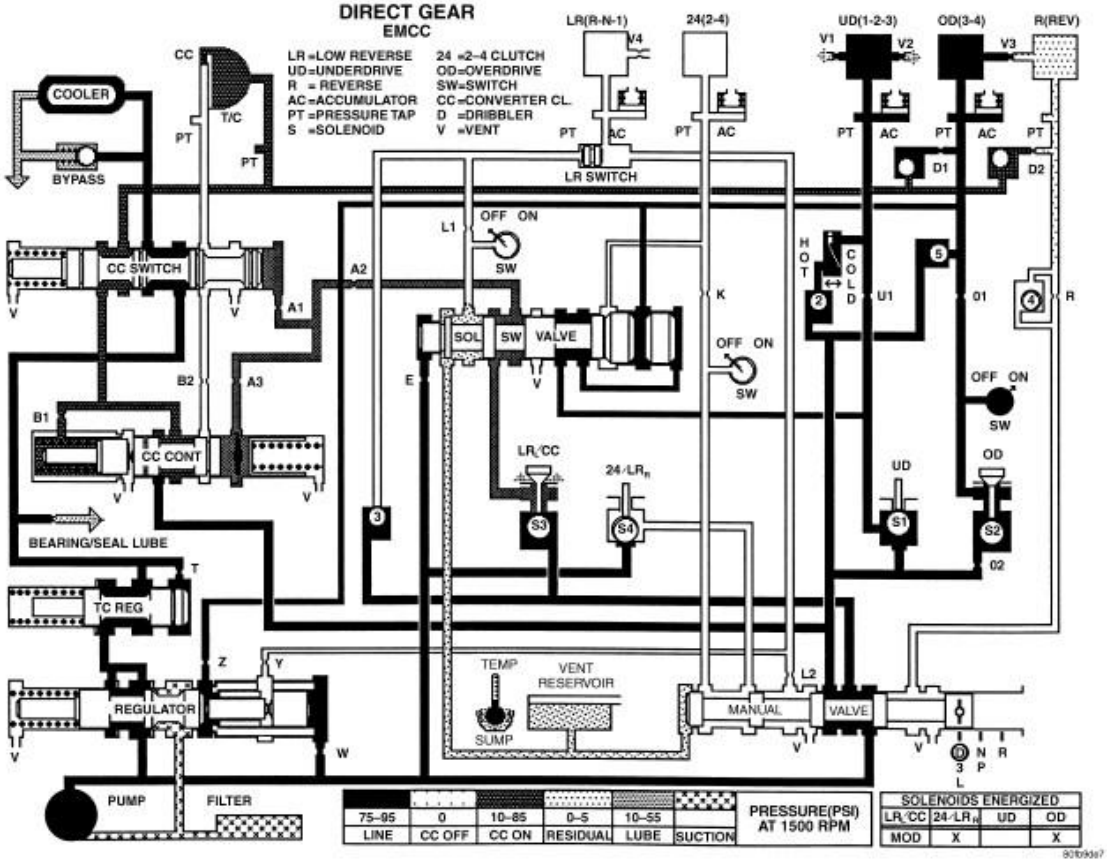

Fig. 172: Direct Gear (EMCC)
Courtesy of CHRYSLER LLC

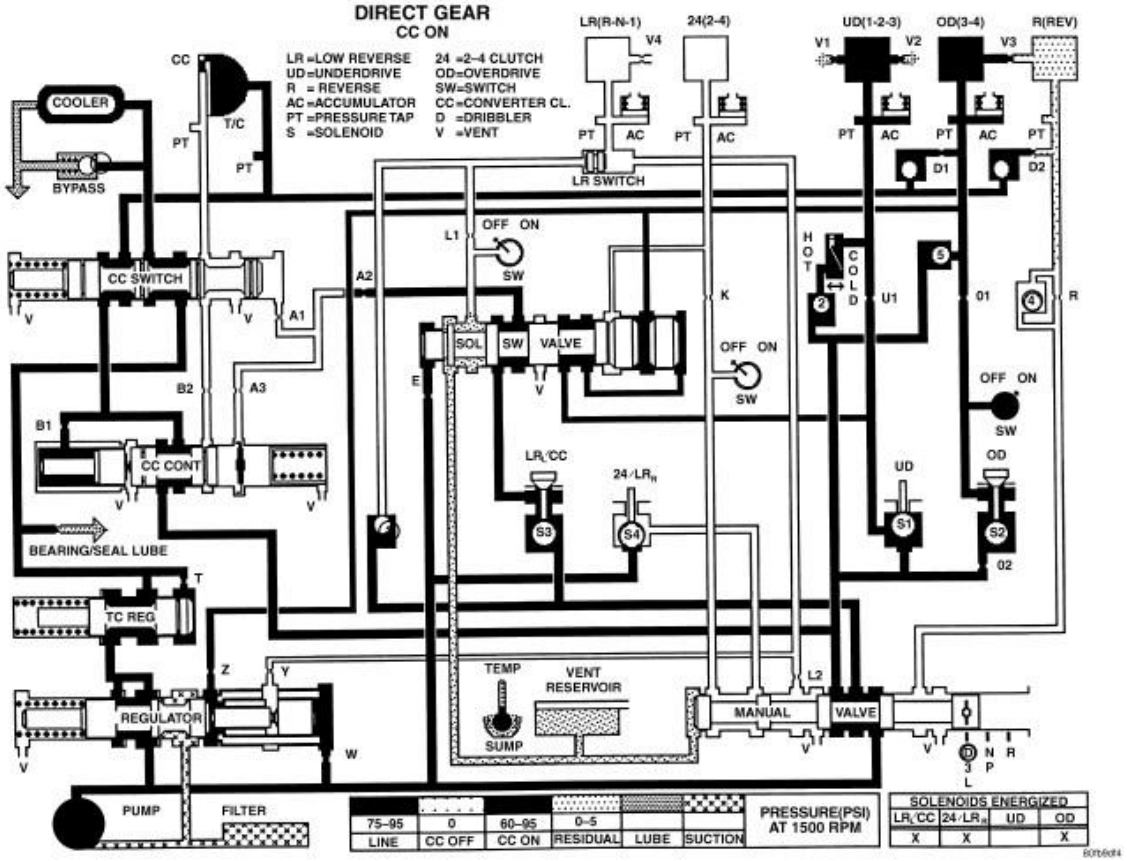

Fig. 173: Direct Gear (CC On)
Courtesy of CHRYSLER LLC

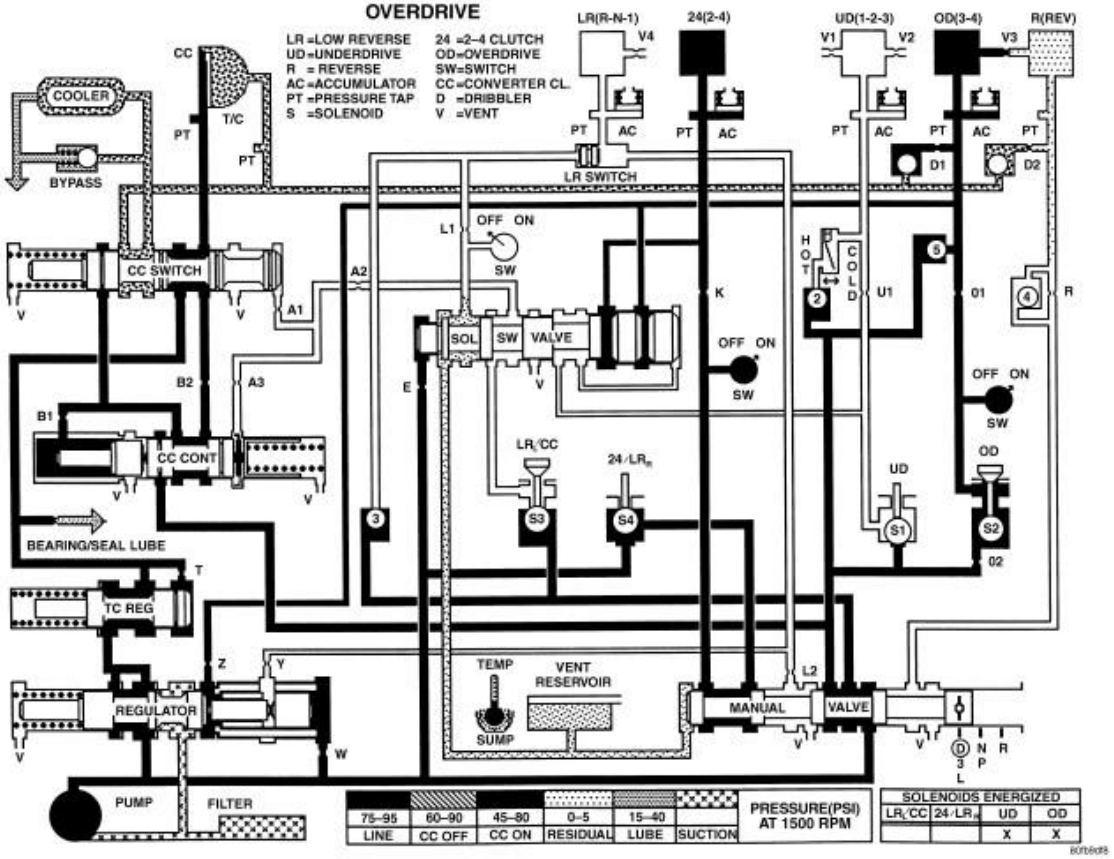

Fig. 174: Overdrive
Courtesy of CHRYSLER LLC

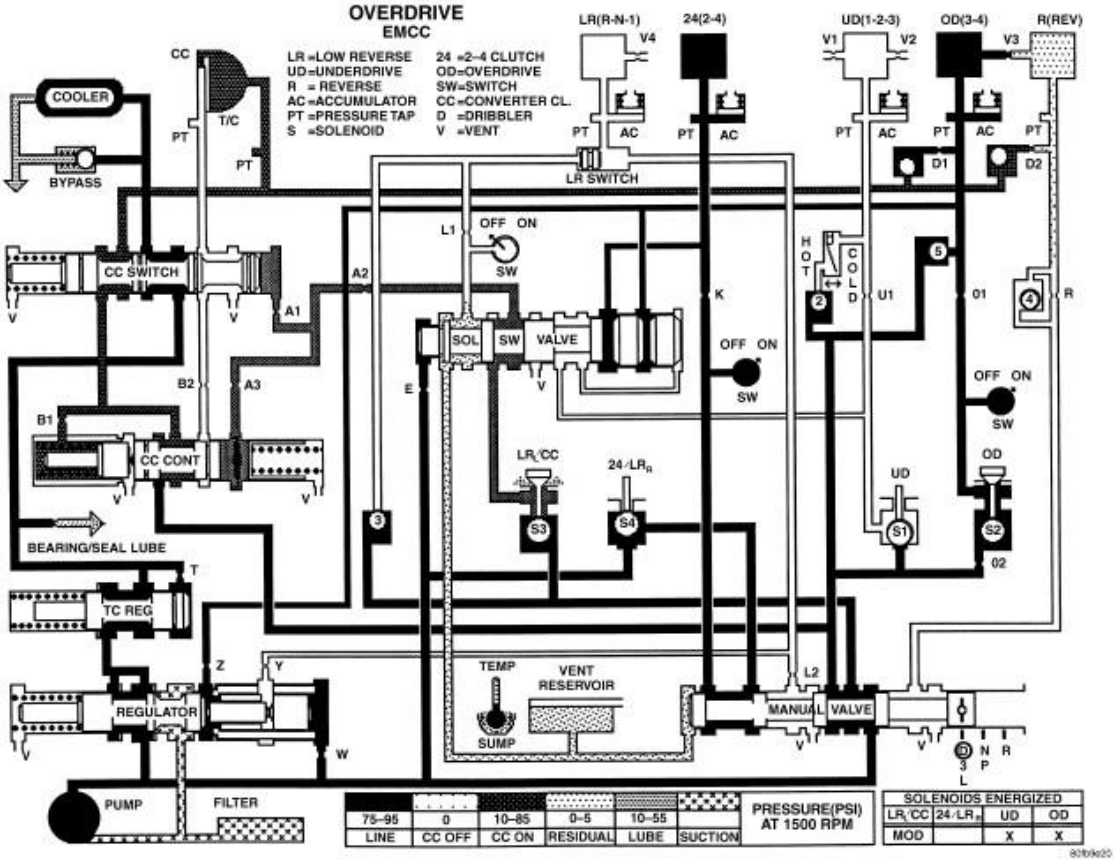

Fig. 175: Overdrive (EMCC)
Courtesy of CHRYSLER LLC

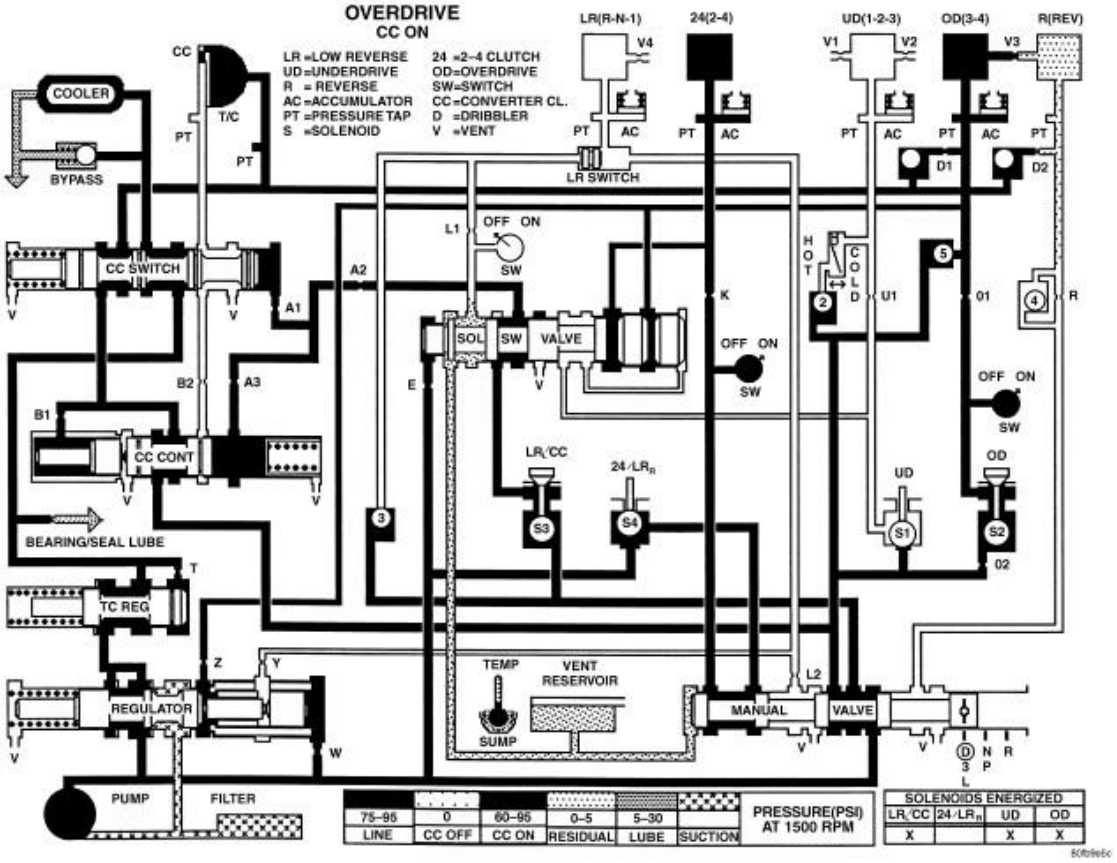

Fig. 176: Overdrive (CC On)
Courtesy of CHRYSLER LLC

42RLE - WITH VARIABLE LINE PRESSURE

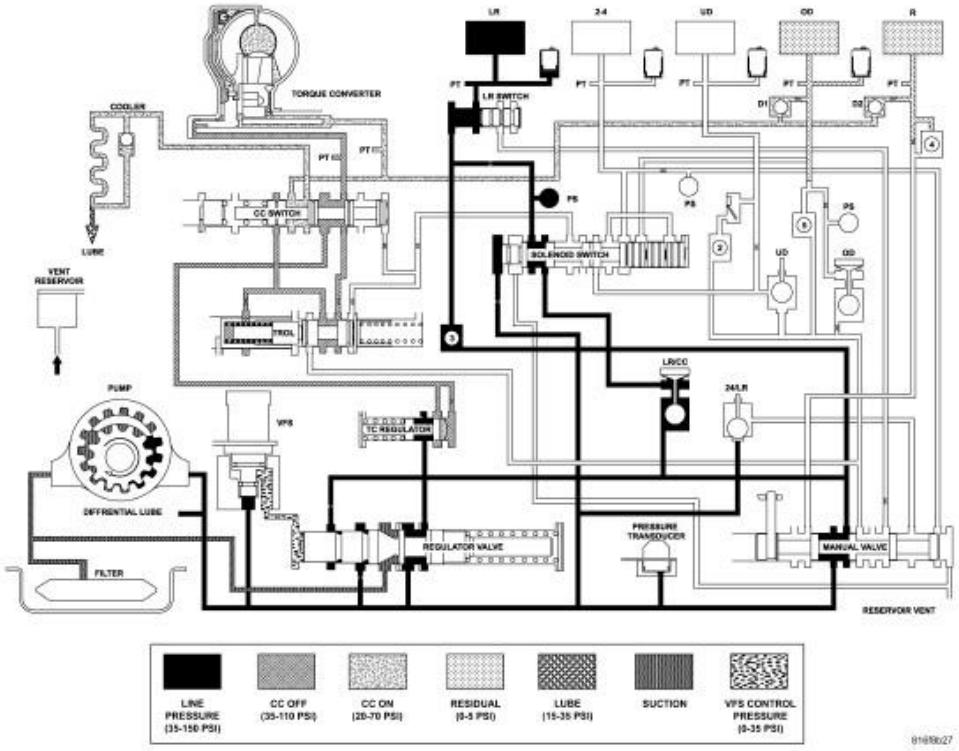

Fig. 177: Park and Neutral
Courtesy of CHRYSLER LLC

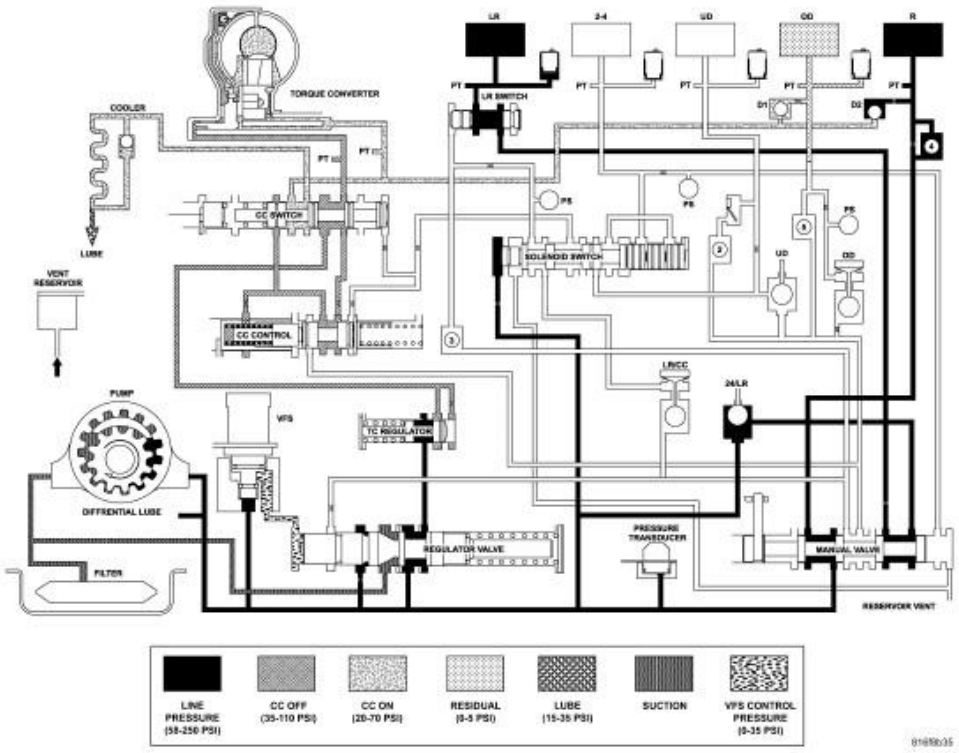

Fig. 178: Reverse
Courtesy of CHRYSLER LLC

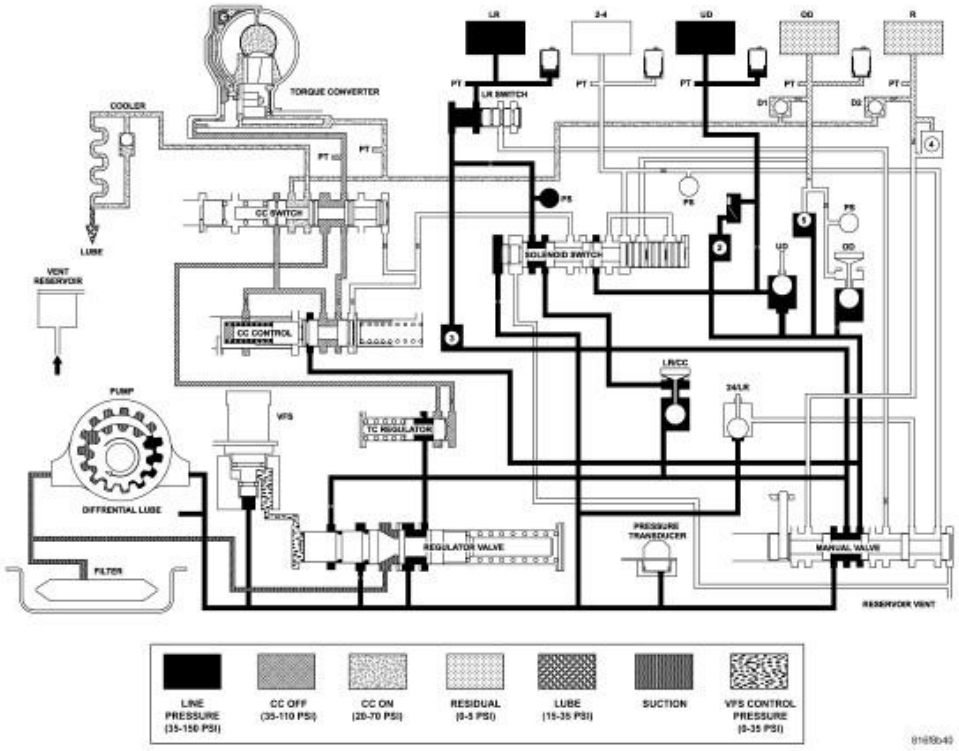

Fig. 179: Drive - First Gear
Courtesy of CHRYSLER LLC

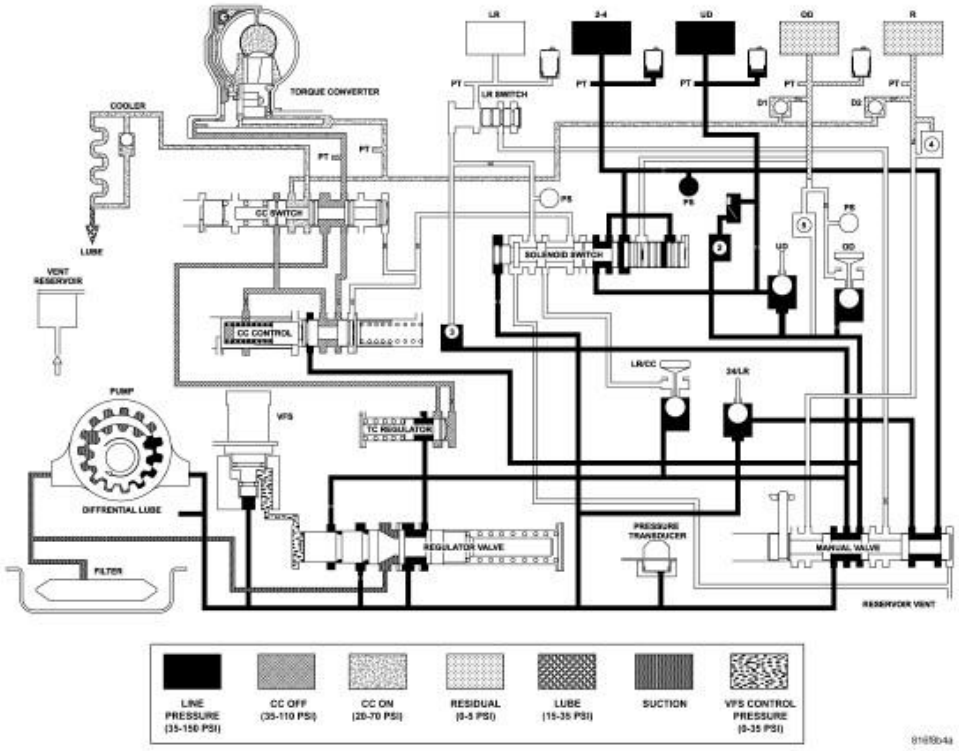

Fig. 180: Drive - Second Gear
Courtesy of CHRYSLER LLC

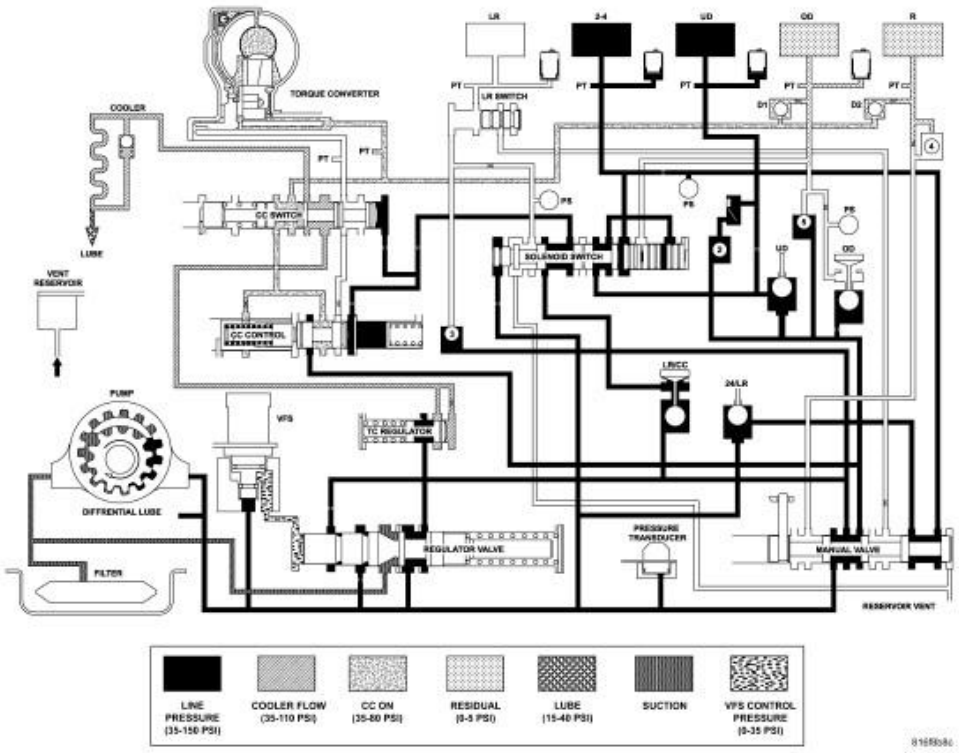

Fig. 181: Drive - Second Gear EMCC
Courtesy of CHRYSLER LLC

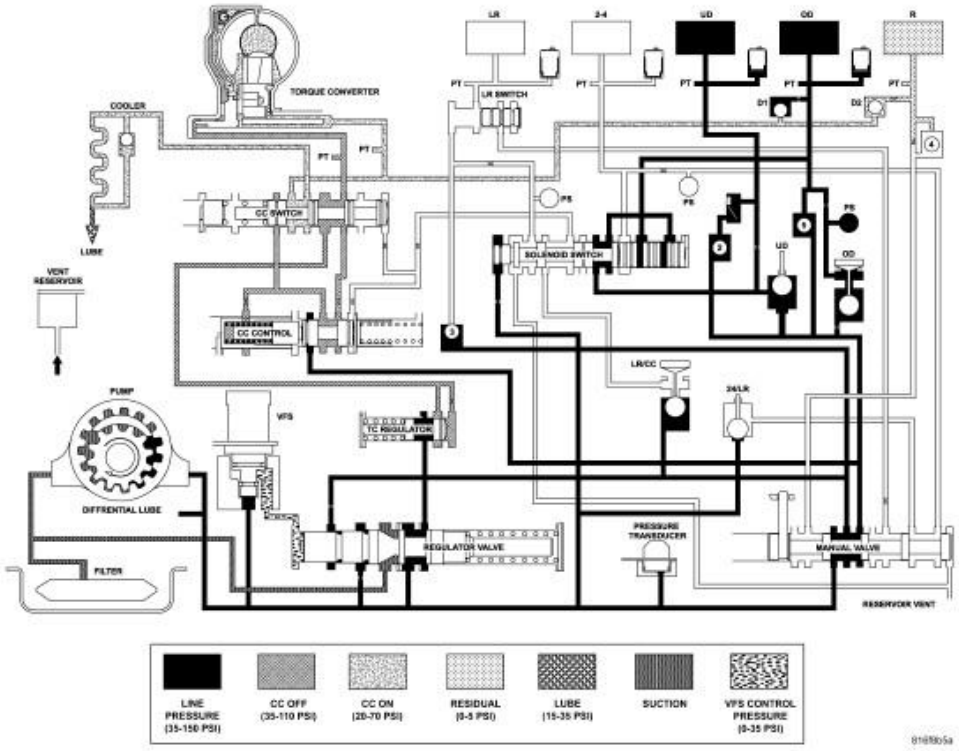

Fig. 182: Drive - Direct Gear
Courtesy of CHRYSLER LLC

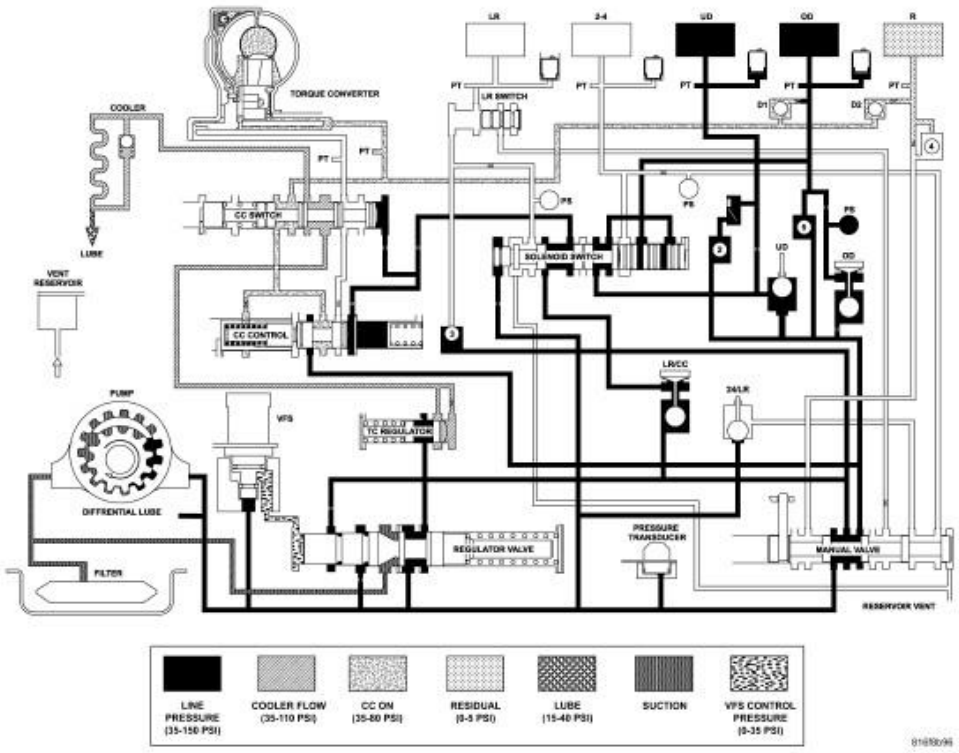

Fig. 183: Drive - Direct Gear EMCC
Courtesy of CHRYSLER LLC

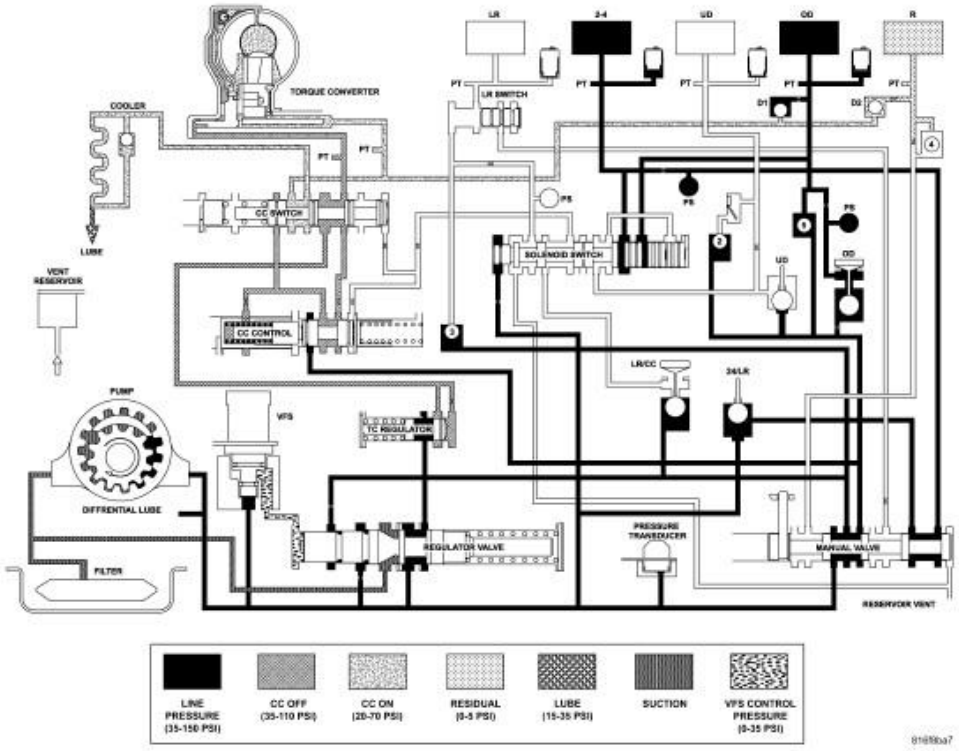

Fig. 184: Drive - Fourth Gear (Overdrive)
Courtesy of CHRYSLER LLC

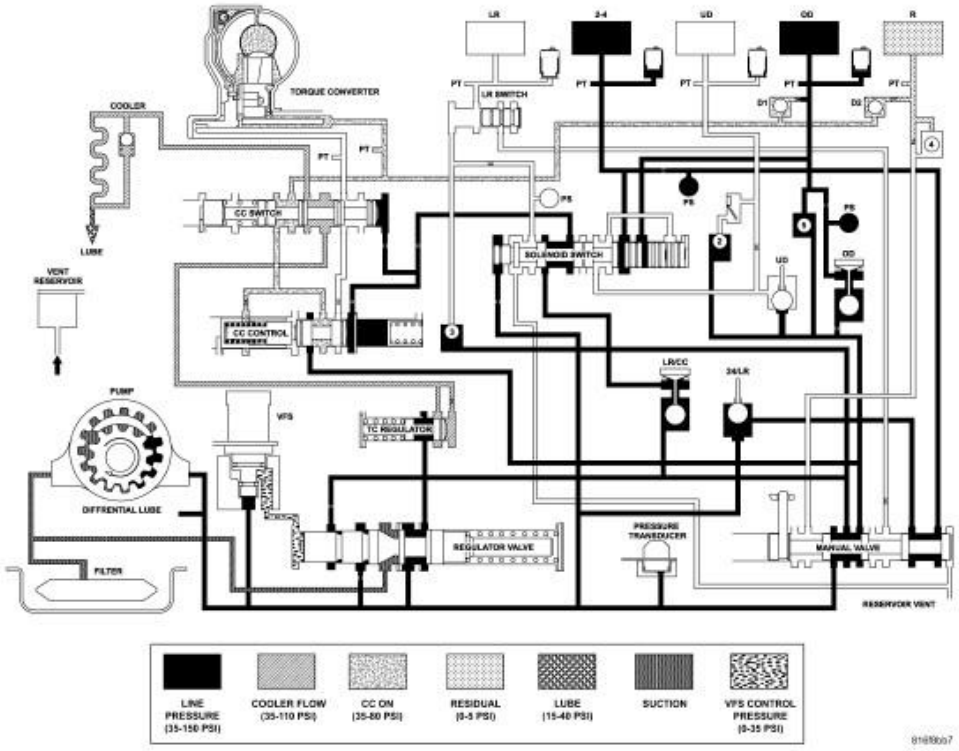

Fig. 185: Drive - Fourth Gear (Overdrive) EMCC
Courtesy of CHRYSLER LLC

SPECIFICATIONS

42RLE AUTOMATIC TRANSMISSION

GENERAL SPECIFICATIONS

Component	Description
Transmission Type	Four-Speed Automatic, Electronically Controlled, Fully Adaptive, Electronically Modulated Torque Converter
Lubrication Method	Pump (internal - external gear-type)
Cooling Method	Water Heat Exchanger and/or Air-to-Oil Heat Exchanger

GEAR RATIOS

Gear	Ratio
1st Gear	2.84:1
2nd Gear	1.57:1
3rd Gear (Direct)	1.00:1

4th Gear (Overdrive)	0.69:1
Reverse Gear	2.21:1

BEARING PRELOAD (Drag Torque)

Description	Metric	Standard
Output Shaft	0.22-0.903 N.m	1-8 in. lbs.

CLUTCH PACK

Description	Metric	Standard
Low/Reverse Clutch (Select Reaction Plate)	0.84-1.60 mm	0.033-0.063 in.
Two/Four Clutch (No Select)	0.76-2.64 mm	0.030-0.104 in.
Reverse Clutch (Select Snap Ring)	0.89-1.37 mm	0.035-0.054 in.
Overdrive Clutch (No Select)	1.07-3.25 mm	0.042-0.128 in.
Underdrive Clutch (Select Reaction Plate)	0.94-1.50 mm	0.037-0.059 in.

INPUT SHAFT

Description	Metric	Standard
End Play	0.127-0.635 mm	0.005-0.025 in.

OIL PUMP CLEARANCES

DESCRIPTION	METRIC	STANDARD
Outer Gear-to-Crescent	0.060-0.298 mm	0.0023-0.0117 in.
Inner Gear-to-Crescent	0.093-0.385 mm	0.0036-0.0151 in.
Outer Gear-to-Pocket	0.089-0.202 mm	0.0035-0.0079 in.
Outer Gear Side Clearance	0.020-0.046 mm	0.0008-0.0018 in.
Inner Gear Side Clearance	0.020-0.046 mm	0.0008-0.0018 in.

TORQUE SPECIFICATIONS

Description	N.m	Ft. Lbs.	In. Lbs.
Bolt, Torque Converter Housing to Engine	68	50	-
Bolt, Converter-to-Driveplate	88	65	-
Bolt, Fluid Filter-to-Valve Body	5	-	45
Bolt, L/R Piston Retainer-to-Case	5	-	45
Bolt, Adapter/Extension Housing	54	40	-
Bolt, Manual Valve Lever-to-Manual Valve	5	-	45
Bolt, Oil Pan-to-Case	20	14.5	-
Bolt, Oil Pump-to-Case	30	-	265

Bolt, Park Sprag Retainer	4.5	-	40
Bolt, Reaction Shaft Support Halves	28	-	250
Bolt, Solenoid/Pressure Switch Assembly-to-Valve Body	5.5	-	50
Bolt, Torque Converter Access Cover	11	8	-
Bolt, Transmission to Engine Oil Pan	39	29	-
Bolt, Valve Body-to-Case	12	-	105
Bolt, Valve Body-to-Transfer Plate	5	-	45
Fitting, Cooler Line	47.5	35	-
Nut, Output Shaft	200	147	-
Plug, Pressure Tap	5	-	45
Bolt, Input Speed-to-Case Sensor	9	-	80
Bolt, Output Speed-to-Case Sensor	9	-	80
Nut, Transfer Case	47	35	-
Bolt, Crossmember to Frame	68	50	-
Bolt, Rear Support to Transmission	47	35	-
Bolt, Clevis Bracket to Crossmember	47	35	-
Bolt, Clevis Bracket to Transmission	68	50	-
Screw, TRS/Manual Shaft Retaining	5	-	45
Screw, 2/4 Accumulator Retainer Plate	5	-	45

SPECIAL TOOLS

SPECIAL TOOLS

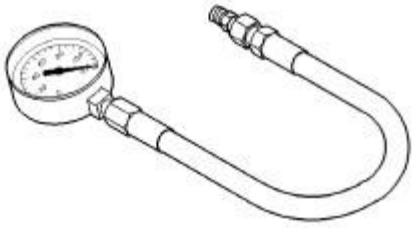

Fig. 186: Gauge , Pressure (High) - C-3293SP
Courtesy of CHRYSLER LLC

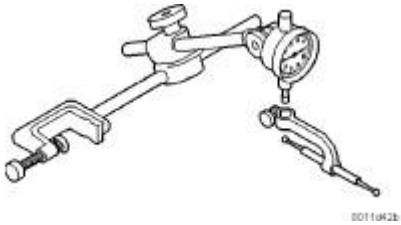

Fig. 187: Indicator, Dial - C-3339
Courtesy of CHRYSLER LLC

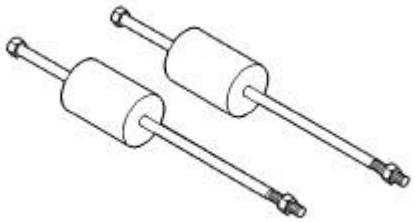

Fig. 188: Hammer, Slide - C-3752
Courtesy of CHRYSLER LLC

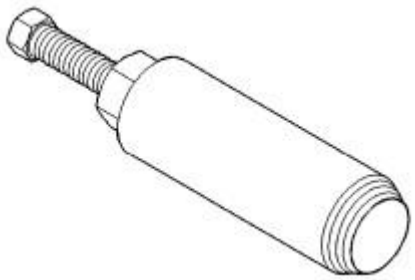

Fig. 189: Puller, Seal - C-3981B
Courtesy of CHRYSLER LLC

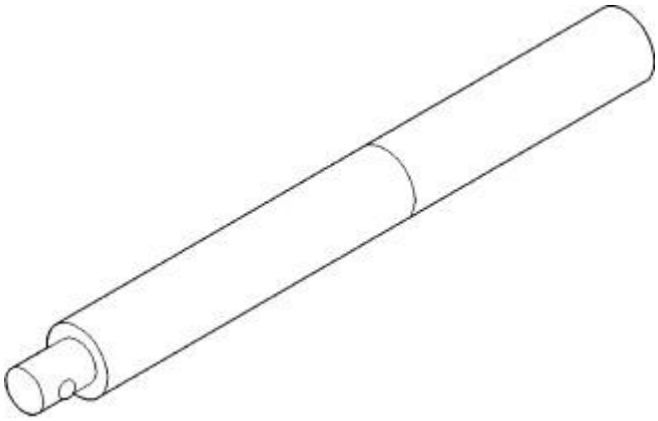

Fig. 190: Handle, Universal - C-4171
Courtesy of CHRYSLER LLC

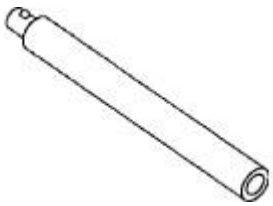

Fig. 191: Extension, Handle - C-4171-2

Courtesy of CHRYSLER LLC

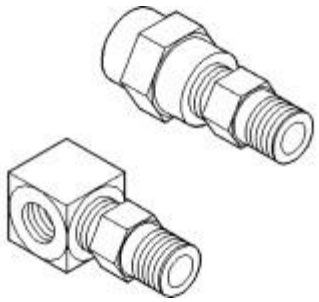

Fig. 192: Adapter Set - L-4559
Courtesy of CHRYSLER LLC

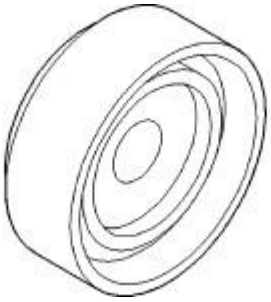

Fig. 193: INSTALLER MD998911
Courtesy of CHRYSLER LLC



Fig. 194: Puller Set - 5048
Courtesy of CHRYSLER LLC

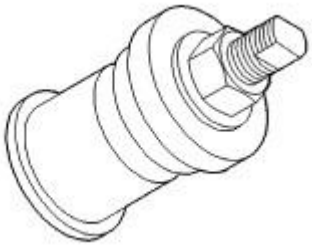

Fig. 195: Installer - 5050A
Courtesy of CHRYSLER LLC



Fig. 196: Compressor - 5058A
Courtesy of CHRYSLER LLC

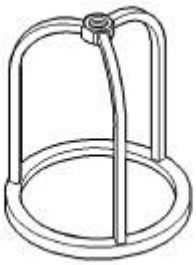

Fig. 197: Compressor - 5059-A
Courtesy of CHRYSLER LLC

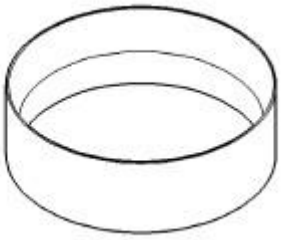

Fig. 198: Installer - 5067
Courtesy of CHRYSLER LLC

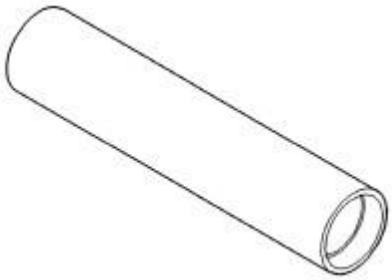

Fig. 199: Installer - 6052
Courtesy of CHRYSLER LLC

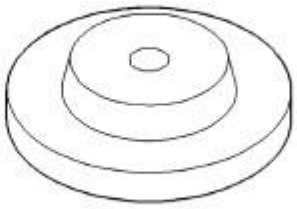

Fig. 200: Disc - 6057
Courtesy of CHRYSLER LLC



Fig. 201: Tip - 6268
Courtesy of CHRYSLER LLC

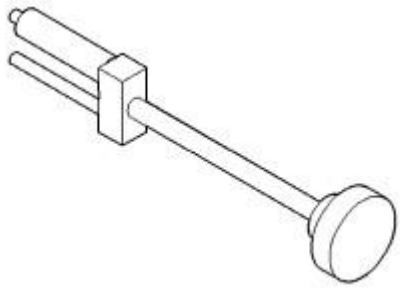

Fig. 202: Remover/Installer - 6301
Courtesy of CHRYSLER LLC

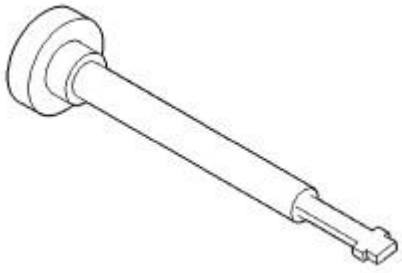

Fig. 203: Remover/Installer - 6302
Courtesy of CHRYSLER LLC

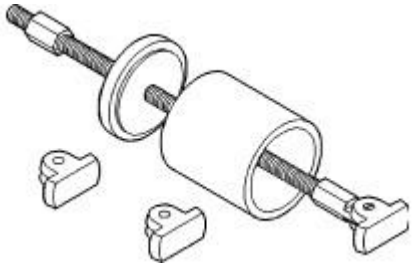

Fig. 204: Remover - 6310
Courtesy of CHRYSLER LLC



Fig. 205: Wrench - 6497
Courtesy of CHRYSLER LLC

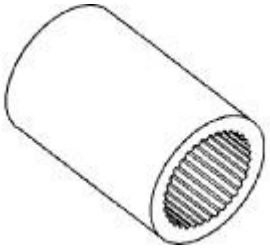

Fig. 206: Wrench - 6498-A
Courtesy of CHRYSLER LLC

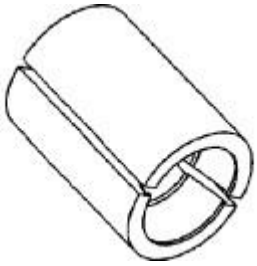

Fig. 207: Puller Jaws - 6545
Courtesy of CHRYSLER LLC



Fig. 208: Remover - 6596
Courtesy of CHRYSLER LLC

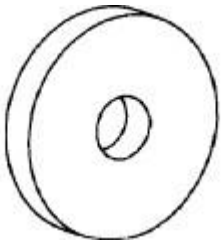

Fig. 209: Remover - 6597
Courtesy of CHRYSLER LLC

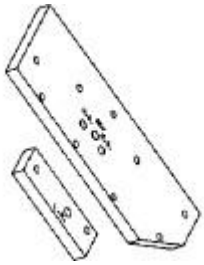

Fig. 210: Plate Set - 6599
Courtesy of CHRYSLER LLC

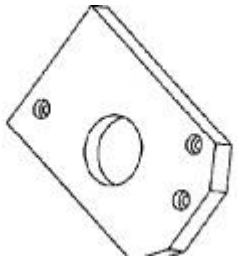

Fig. 211: Plate, Support - 6618A
Courtesy of CHRYSLER LLC



Fig. 212: Tool, Staking - 6639
Courtesy of CHRYSLER LLC

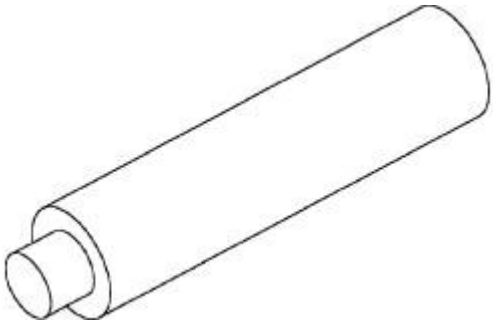

Fig. 213: Installer, Seal - 8254
Courtesy of CHRYSLER LLC

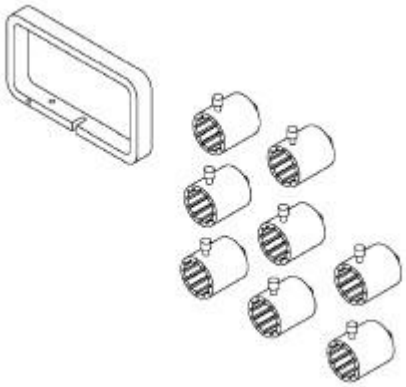

Fig. 214: End Play Set - 8266
Courtesy of CHRYSLER LLC



Fig. 215: Fixture, Pressure - 8391
Courtesy of CHRYSLER LLC

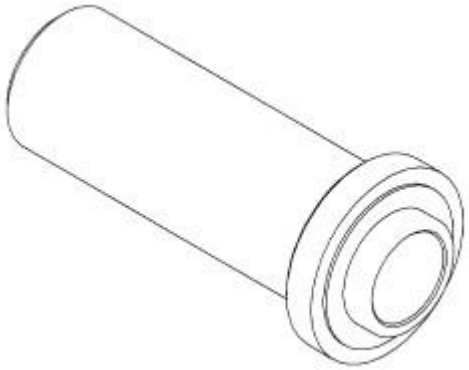

Fig. 216: Installer, Seal - 8902A
Courtesy of CHRYSLER LLC

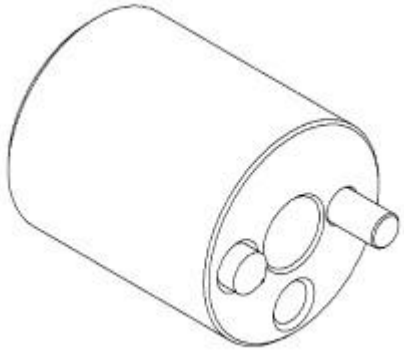

Fig. 217: Tool, Staking - 9078
Courtesy of CHRYSLER LLC

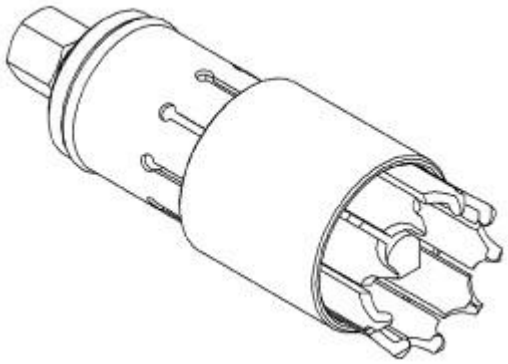

Fig. 218: Remover, Bearing - 9082
Courtesy of CHRYSLER LLC

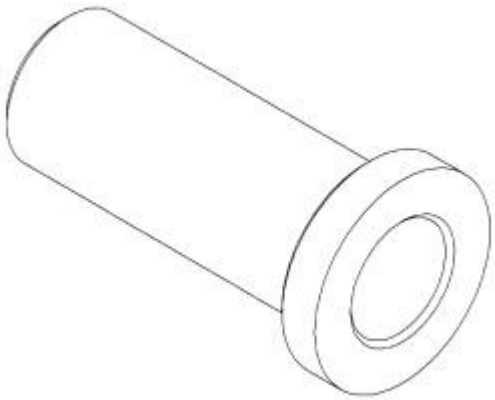

Fig. 219: Installer, Bearing - 9287
Courtesy of CHRYSLER LLC

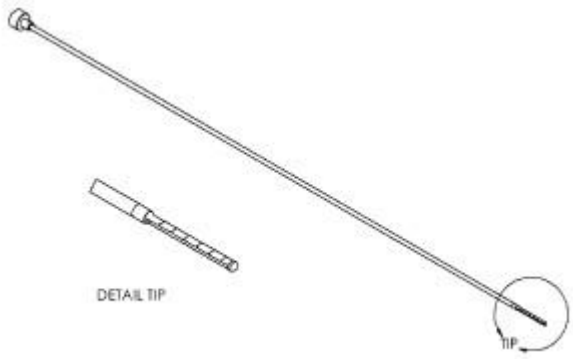

Fig. 220: Dipstick - 9336
Courtesy of CHRYSLER LLC

ACCUMULATOR

DESCRIPTION

DESCRIPTION

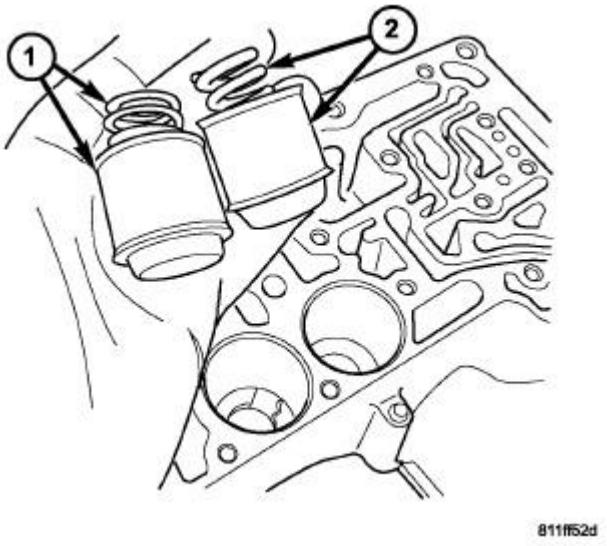

Fig. 221: Underdrive and Overdrive Accumulators
Courtesy of CHRYSLER LLC

1 - OVERDRIVE PISTON AND SPRING 2 - UNDERDRIVE PISTON AND SPRING

The 42RLE underdrive, overdrive, low/reverse, and 2/4 clutch hydraulic circuits each contain an accumulator. An accumulator typically consists of a piston, return spring(s), and a cover or plug. The overdrive (1) and underdrive (2) accumulators are located within the transmission case, and are retained by the valve body .

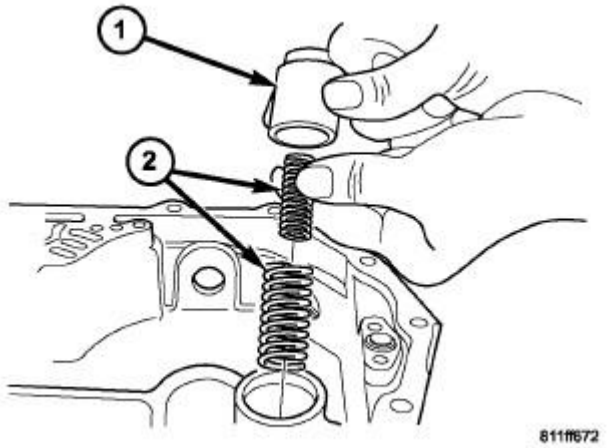

Fig. 222: Low/Reverse Accumulator
Courtesy of CHRYSLER LLC

1 - PISTON 2 - RETURN SPRINGS

The low reverse (1) accumulator is also located within the transmission case, but the assembly is retained by a cover and a snap-ring.

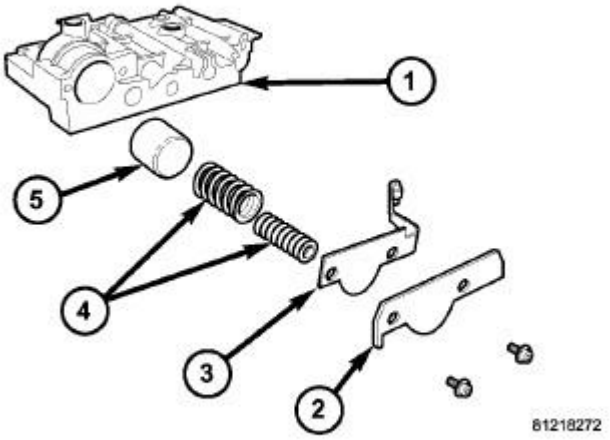

Fig. 223: Identifying 2/4 Accumulator Assembly
Courtesy of CHRYSLER LLC

1 - VALVE BODY
2 - RETAINER PLATE
3 - DETENT SPRING
4 - RETURN SPRINGS
5 - PISTON

The 2/4 accumulator (5) is located in the valve body. It is retained by a cover and retaining screws .

OPERATION

OPERATION

The function of an accumulator is to cushion the application of a frictional clutch element. When pressurized fluid is applied to a clutch circuit, the application force is dampened by fluid collecting in the respective accumulator chamber against the piston and springs. The intended result is a smooth, firm clutch application.

ASSEMBLY, INPUT CLUTCH

DISASSEMBLY

DISASSEMBLY

NOTE: If the input clutch assembly is being reconditioned (clutch/seal replacement) or replaced, it is necessary to perform the Quick Learn Procedure using the scan tool. Refer to Electrical - Electronic Control Modules/Electronic Control Modules/MODULE, Transmission Control - Standard Procedure .

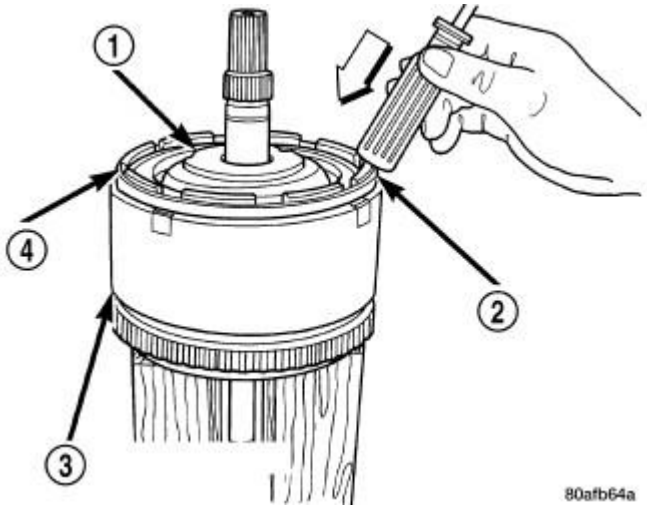

Fig. 224: Tapping Reaction Plate
Courtesy of CHRYSLER LLC

1 - #4 THRUST PLATE (SELECT)
2 - TAP DOWN REVERSE CLUTCH REACTION PLATE TO REMOVE OR INSTALL SNAP RING
3 - INPUT CLUTCH RETAINER
4 - REVERSE CLUTCH REACTION PLATE

1. Mount input clutch assembly to Input Clutch Pressure Fixture (Tool 8391).
2. Tap down (2) reverse clutch reaction plate (4) to release pressure from snap ring.

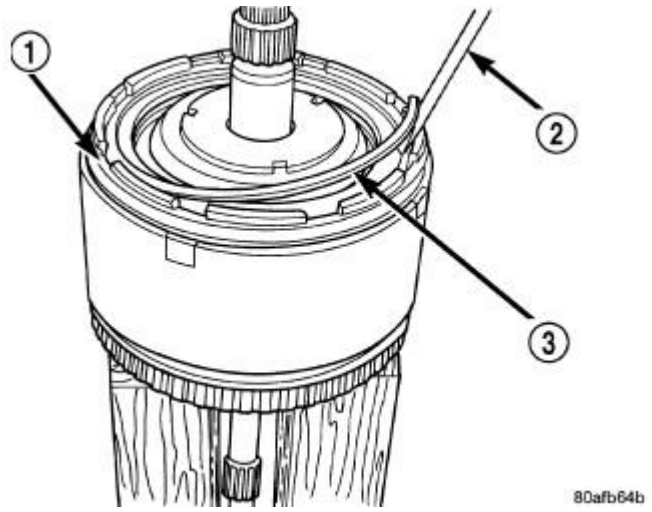

Fig. 225: Reverse Clutch Snap Ring
Courtesy of CHRYSLER LLC

1 - REACTION PLATE 2 - SCREWDRIVER 3 - REVERSE CLUTCH SNAP RING (SELECT)

3. Remove reverse clutch snap ring (3) .

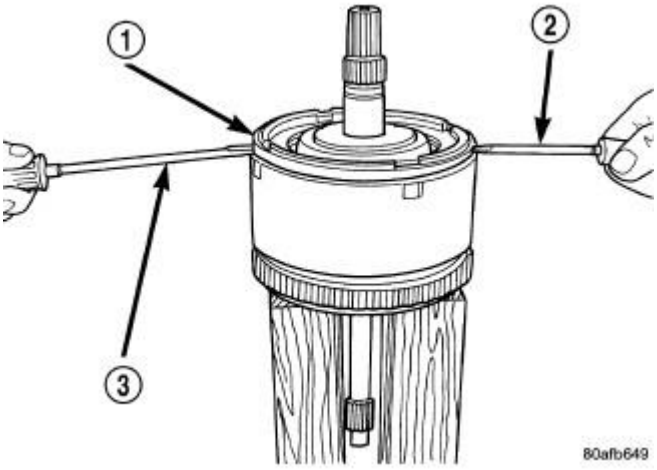

Fig. 226: Pry Reverse Clutch Reaction Plate
Courtesy of CHRYSLER LLC

1 - REVERSE CLUTCH REACTION PLATE 2 - SCREWDRIVER 3 - SCREWDRIVER

4. Pry up reverse clutch reaction plate (1) .

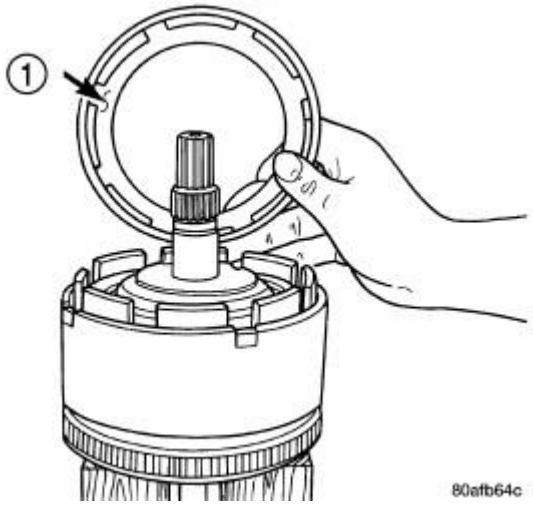

Fig. 227: Reverse Clutch Reaction Plate
Courtesy of CHRYSLER LLC

1 - REVERSE CLUTCH REACTION PLATE (INSTALL FLAT SIDE DOWN)

5. Remove reverse clutch reaction plate (1) .

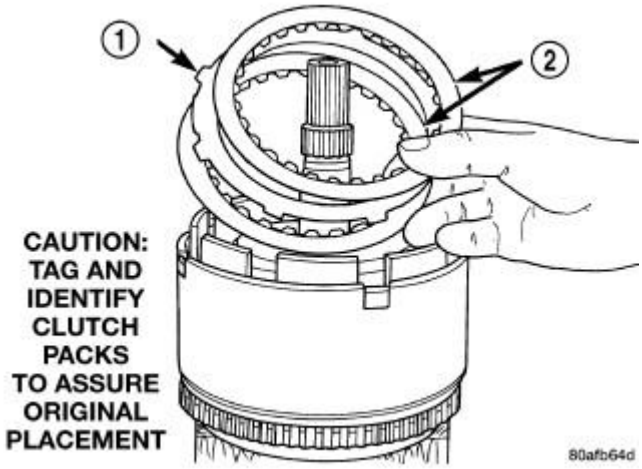

Fig. 228: Reverse Clutch Pack
Courtesy of CHRYSLER LLC

1 - REVERSE CLUTCH PLATE 2 - REVERSE CLUTCH DISC

NOTE: Tag reverse clutch pack for reassembly identification.

6. Remove the reverse clutch pack (two fibers/one steel) (1, 2) .

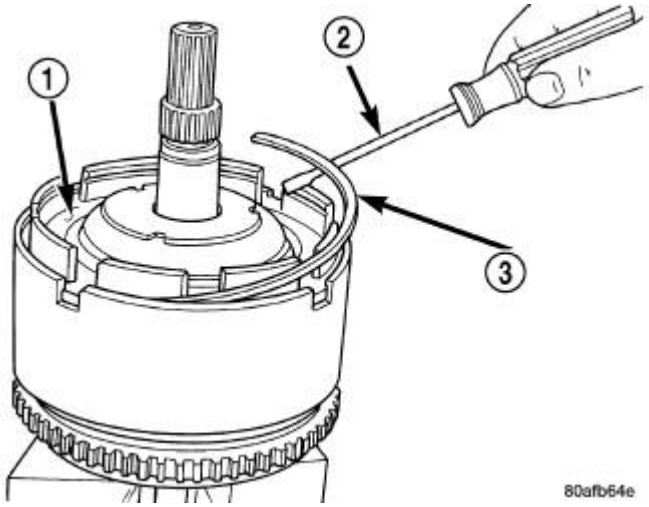

Fig. 229: OD/Reverse Pressure Plate Snap Ring
Courtesy of CHRYSLER LLC

1 - OD/REVERSE PRESSURE PLATE 2 - SCREWDRIVER 3 - OD/REVERSE PRESSURE PLATE SNAP RING

7. Remove the OD/Reverse reaction plate (1) snap ring (3) .

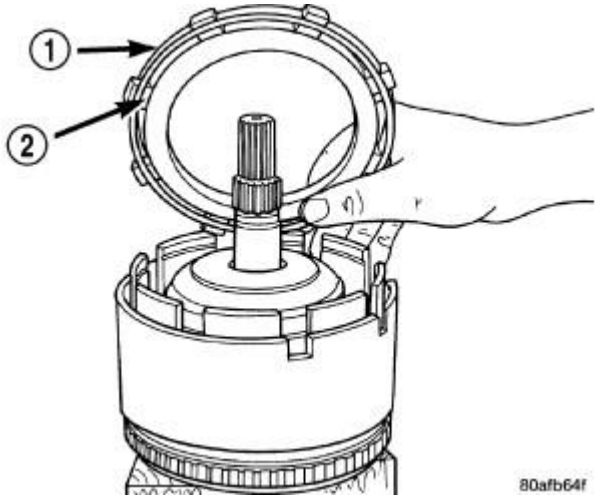

Fig. 230: OD/Reverse Reaction Plate
Courtesy of CHRYSLER LLC

1 - OD/REVERSE PRESSURE PLATE (STEP SIDE DOWN) 2 - (STEP SIDE DOWN)

8. Remove OD/Reverse pressure plate (1) .

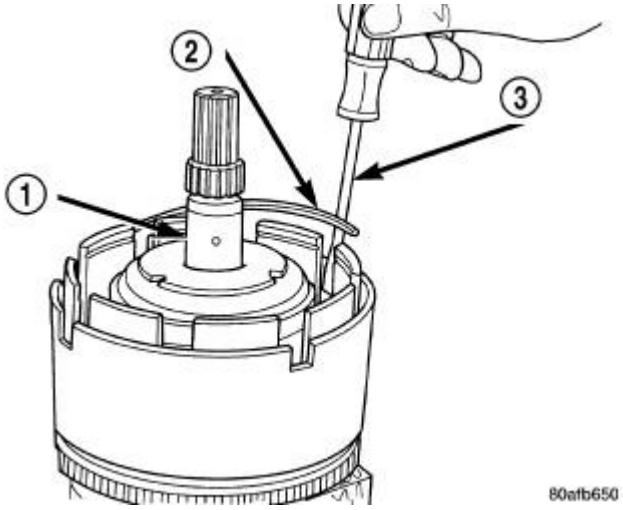

Fig. 231: Waved Snap Ring
Courtesy of CHRYSLER LLC

1 - OVERDRIVE SHAFT ASSEMBLY 2 - OD/REVERSE CLUTCH WAVED SNAP RING 3 - SCREWDRIVER

9. Remove OD/Reverse reaction plate wave snap ring (2) .

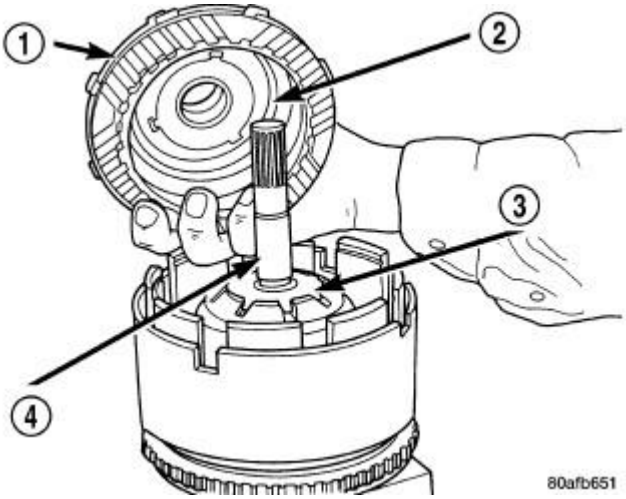

Fig. 232: Removing OD Clutch Pack
Courtesy of CHRYSLER LLC

1 - OVERDRIVE SHAFT ASSEMBLY AND OD CLUTCH PACK 2 - #3 THRUST PLATE 3 - #3 THRUST WASHER 4 - UNDERDRIVE SHAFT ASSEMBLY

10. Remove OD shaft/hub and OD clutch pack (1) .

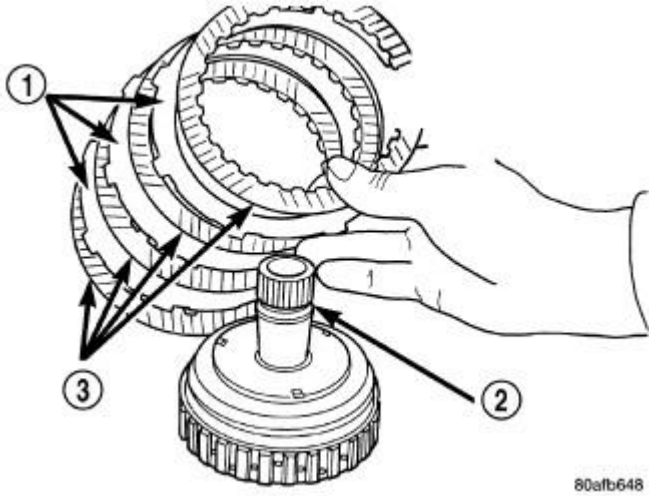

Fig. 233: Overdrive Clutch Pack
Courtesy of CHRYSLER LLC

1 - OVERDRIVE CLUTCH PLATE 2 - OVERDRIVE SHAFT ASSEMBLY 3 - OVERDRIVE CLUTCH DISC

NOTE: Tag overdrive clutch pack for reassembly identification.

11. Remove the overdrive clutch (1, 3) from the overdrive hub/shaft (2) .

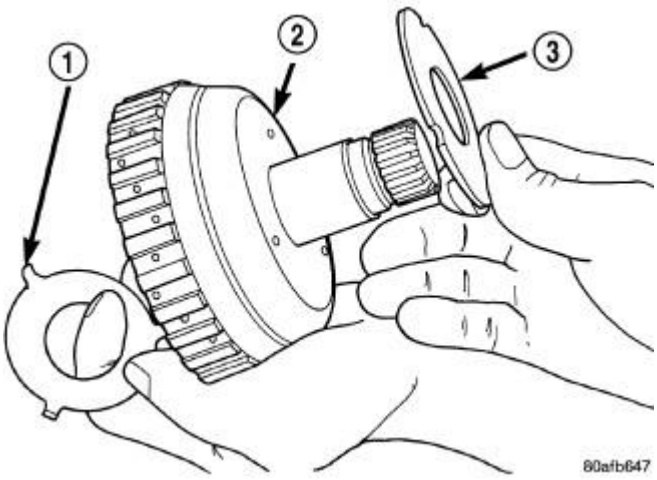

Fig. 234: Identifying #3 & #4 Thrust Washers
Courtesy of CHRYSLER LLC

1 - #3 THRUST PLATE (3 TABS) 2 - OD SHAFT ASSEMBLY

3 - #4 THRUST PLATE (3 SLOTS)

12. Remove and inspect number 3 and 4 thrust plates (1, 3) .

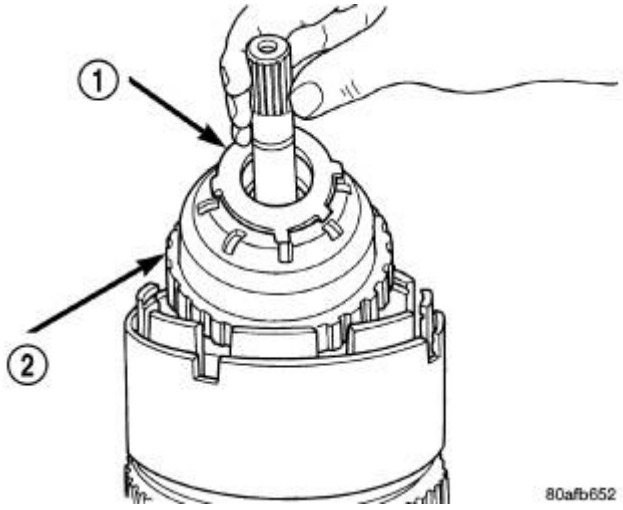

Fig. 235: Underdrive Shaft Assembly
Courtesy of CHRYSLER LLC

1 - #3 THRUST WASHER (5 TABS) 2 - UNDERDRIVE SHAFT ASSEMBLY

13. Remove the underdrive shaft assembly (2) .

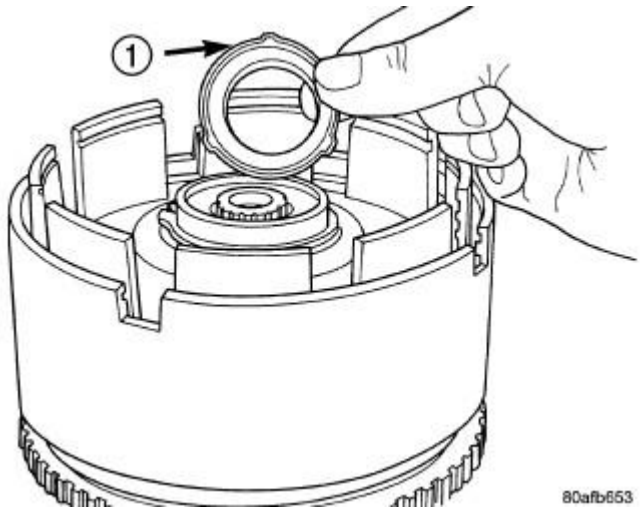

Fig. 236: No. 2 Needle Bearing
Courtesy of CHRYSLER LLC

1 - #2 NEEDLE BEARING (NOTE 3 TABS)

14. Remove the number 2 needle bearing (1) .

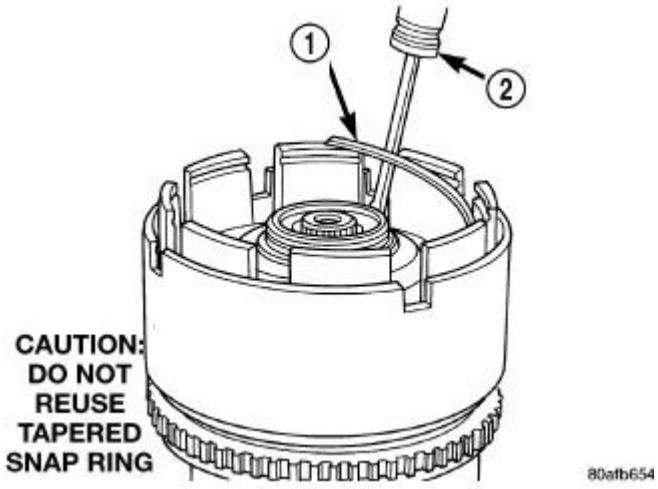

Fig. 237: Tapered Snap Ring
Courtesy of CHRYSLER LLC

1 - OVERDRIVE/UNDERDRIVE CLUTCHES REACTION PLATE TAPERED SNAP RING 2 - SCREWDRIVER (DO NOT SCRATCH REACTION PLATE)

15. Remove the OD/UD reaction plate tapered snap ring (1) .

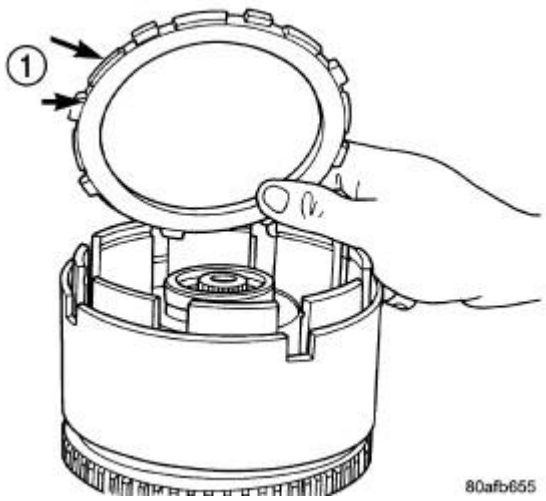

Fig. 238: OD/UD Reaction Plate
Courtesy of CHRYSLER LLC

1 - OD/UD CLUTCH REACTION PLATE (STEP SIDE DOWN)

NOTE: **The OD/UD clutch reaction plate has a step on both sides. The OD/UD clutches reaction plate goes tapered step side up.**

16. Remove the OD/UD reaction plate (1) .

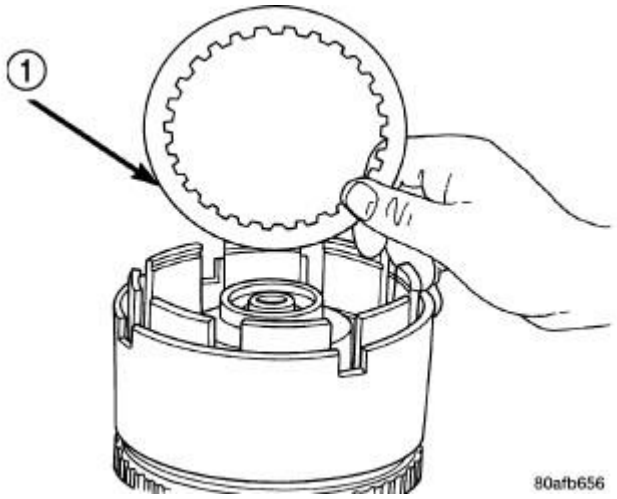

Fig. 239: Remove/Install Last UD Clutch Disc
Courtesy of CHRYSLER LLC

1 - ONE UNDERDRIVE CLUTCH DISC

17. Remove the first UD clutch disc (1) .

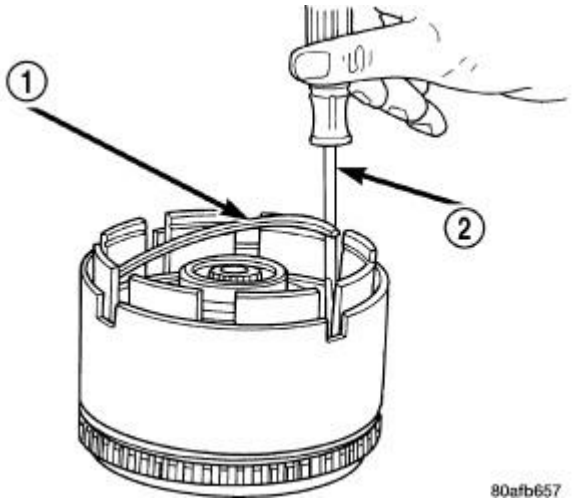

Fig. 240: UD Clutch Flat Snap Ring
Courtesy of CHRYSLER LLC

1 - UNDERDRIVE CLUTCH REACTION PLATE FLAT SNAP RING 2 - SCREWDRIVER

18. Remove the UD clutch flat snap ring (1) .

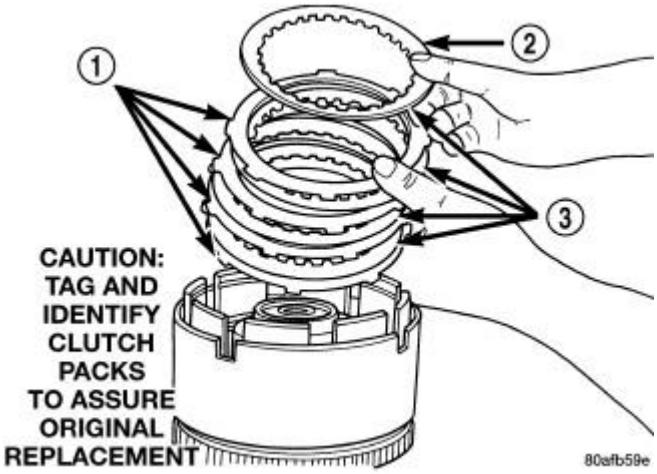

Fig. 241: Underdrive Clutch Pack
Courtesy of CHRYSLER LLC

1 - CLUTCH PLATE 2 - ONE UD CLUTCH DISC 3 - CLUTCH DISC

NOTE: Tag underdrive clutch pack for reassembly identification.

19. Remove the UD clutch pack (1, 3) .

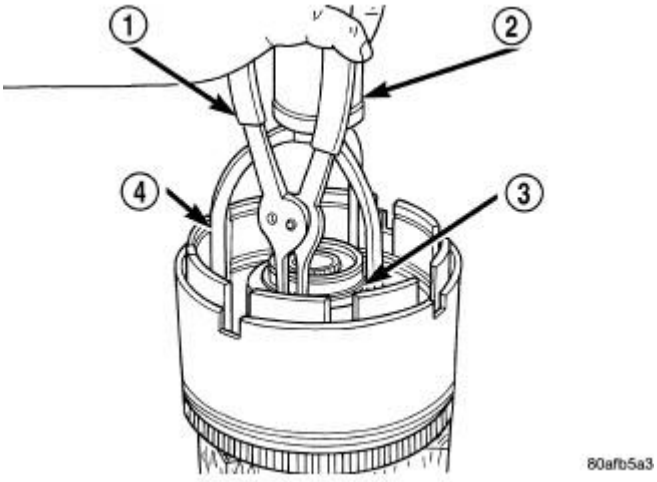

Fig. 242: UD Spring Retainer Snap Ring
Courtesy of CHRYSLER LLC

1 - SNAP RING PLIERS 2 - ARBOR PRESS RAM 3 - SNAP RING 4 - COMPRESSOR 5059-A

CAUTION: Compress return spring just enough to remove or install snap ring.

20. Using Compressor 5059-A (4) and an arbor press (2), compress UD clutch piston enough to remove snap ring (3) .

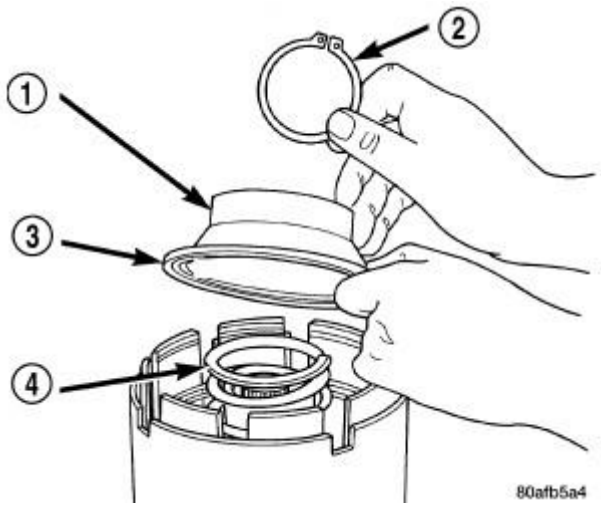

Fig. 243: UD Return Spring & Retainer
Courtesy of CHRYSLER LLC

1 - UNDERDRIVE SPRING RETAINER
2 - SNAP RING
3 - SEAL
4 - PISTON RETURN SPRING

21. Remove the underdrive spring retainer snap ring (2), spring retainer (1), and spring (4) .

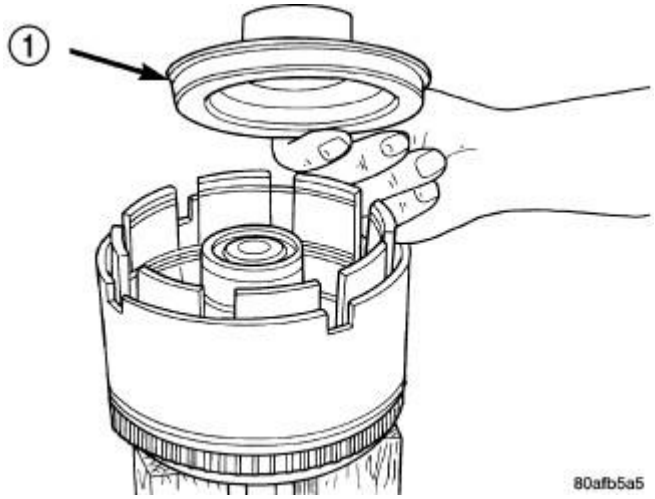

Fig. 244: Underdrive Clutch Piston
Courtesy of CHRYSLER LLC

1 - PISTON

22. Remove the UD clutch piston (1) .

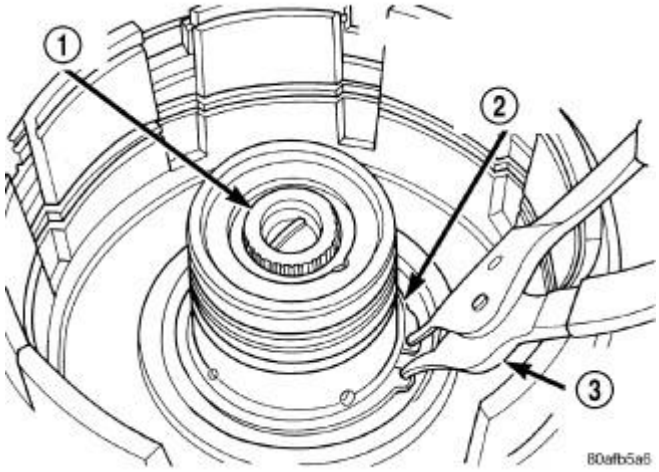

Fig. 245: Input Hub Tapered Snap Ring
Courtesy of CHRYSLER LLC

1 - INPUT SHAFT 2 - INPUT HUB SNAP RING (TAPERED SIDE UP WITH TABS IN CAVITY) 3 - SNAP RING PLIERS

23. Remove the input hub tapered snap ring (2) .

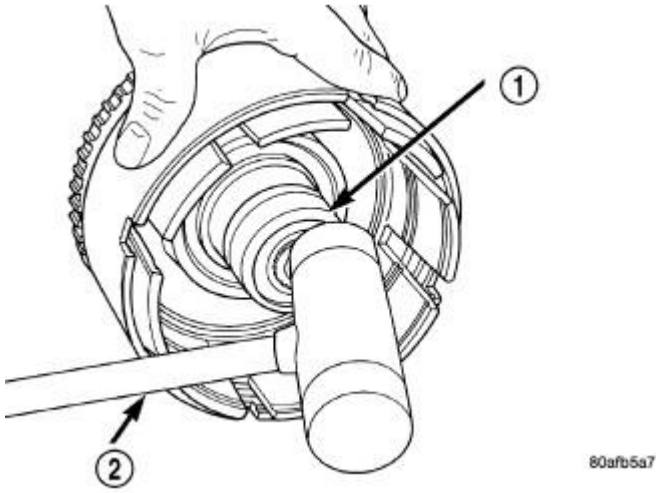

Fig. 246: Tap on Input Hub
Courtesy of CHRYSLER LLC

1 - INPUT SHAFT AND HUB ASSEMBLY

2 - PLASTIC HAMMER

24. Tap on input hub (1) with soft faced hammer (2) and separate input hub from OD/Reverse piston and clutch retainer.

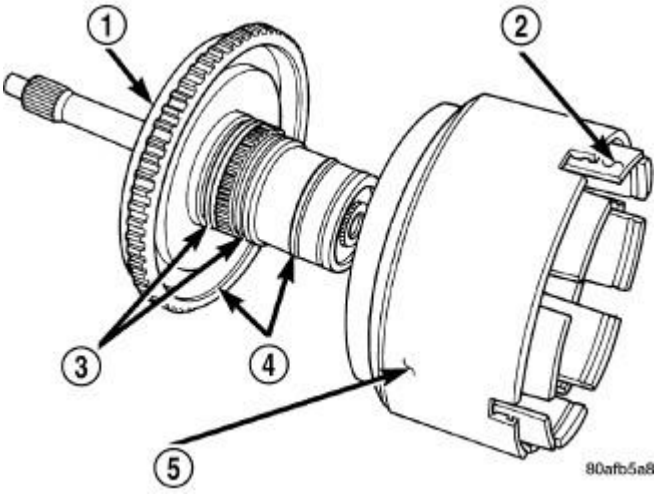

Fig. 247: Input Hub Removed
Courtesy of CHRYSLER LLC

1 - INPUT SHAFT AND HUB ASSEMBLY
2 - INPUT CLUTCH RETAINER
3 - O-RING
4 - SEAL
5 - OVERDRIVE/REVERSE PISTON

25. Separate the input hub from OD/Reverse piston (5) and clutch retainer (2) .

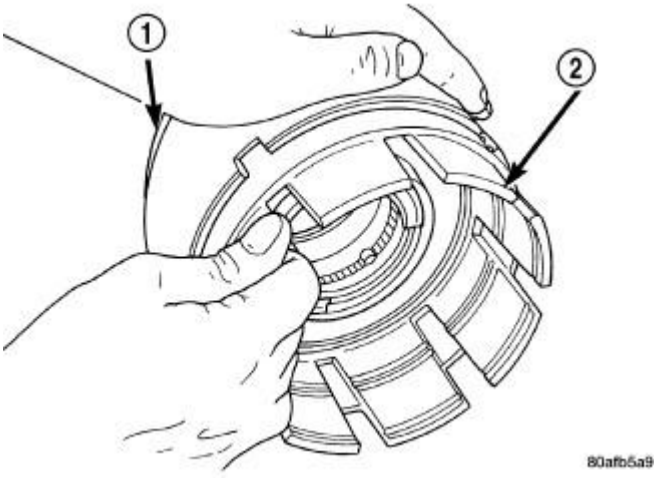

Fig. 248: Pull Retainer from Piston
Courtesy of CHRYSLER LLC

1 - OVERDRIVE/REVERSE PISTON 2 - INPUT CLUTCH RETAINER

26. Separate clutch retainer (2) from OD/Reverse piston (1) .

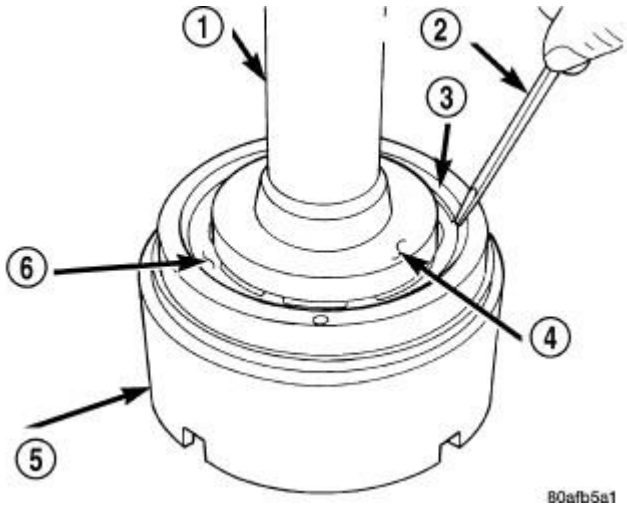

Fig. 249: Remove/Install Snap Ring
Courtesy of CHRYSLER LLC

1 - ARBOR PRESS RAM (COMPRESS RETURN SPRING JUST ENOUGH TO REMOVE OR INSTALL SNAP RING) 2 - SCREWDRIVER 3 - SNAP RING 4 - SPECIAL TOOL 6057 5 - OD/REVERSE PISTON 6 - RETURN SPRING

27. Using Disc 6057 (4) and an arbor press (1), compress OD/Reverse piston (5) return spring just enough to remove snap ring (3) .

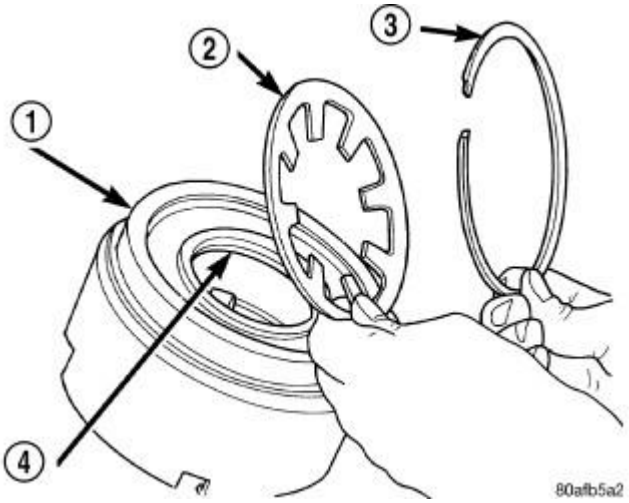

Fig. 250: Return Spring and Snap Ring
Courtesy of CHRYSLER LLC

1 - OD/REVERSE PISTON 2 - RETURN SPRING 3 - SNAP RING 4 - O-RING

28. Remove the OD/Reverse piston return spring (2) and snap ring (3) .

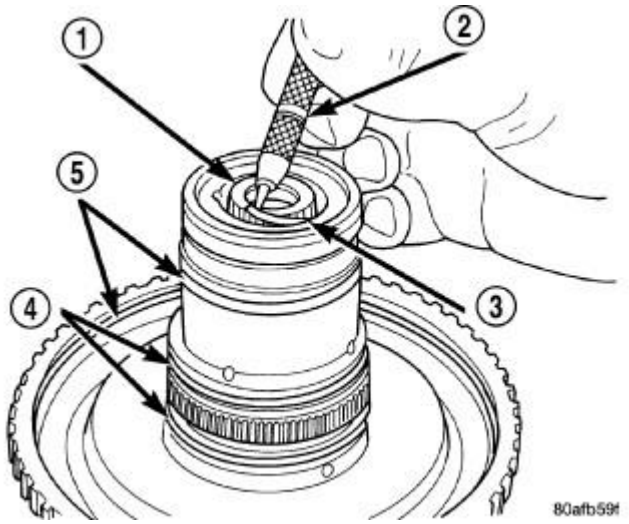

Fig. 251: Removing Input Shaft Snap Ring
Courtesy of CHRYSLER LLC

1 - INPUT SHAFT 2 - SHARP-POINTED TOOL 3 - SNAP RING 4 - O-RINGS 5 - SEALS

29. Remove input shaft (1) to input clutch hub snap ring (3) .

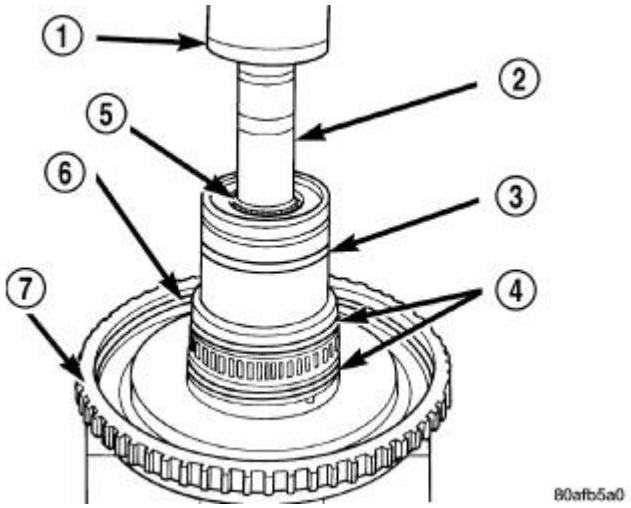

Fig. 252: Removing Input Shaft
Courtesy of CHRYSLER LLC

1 - ARBOR PRESS RAM
2 - SOCKET
3 - SEAL
4 - O-RINGS
5 - INPUT SHAFT
6 - SEAL
7 - INPUT CLUTCH HUB

30. Using a suitably sized socket (2) and an arbor press (1), remove input shaft (5) from input shaft hub.

ASSEMBLY

ASSEMBLY

Use petrolatum on all seals to ease assembly of components.

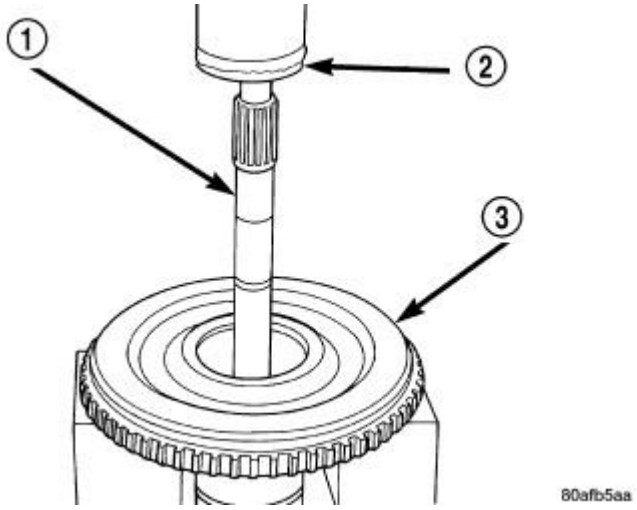

Fig. 253: Install Input Shaft
Courtesy of CHRYSLER LLC

1 - INPUT SHAFT 2 - ARBOR PRESS RAM 3 - INPUT CLUTCH HUB

1. Using an arbor press (2), install input shaft (1) to input shaft hub (3) .

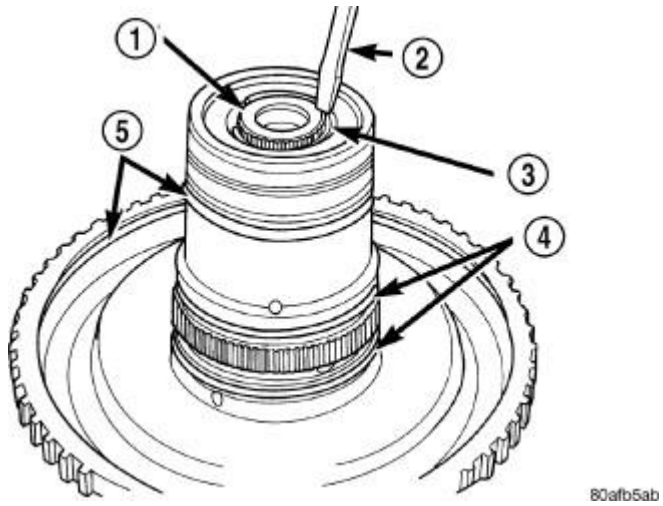

Fig. 254: Install Input Shaft Snap Ring
Courtesy of CHRYSLER LLC

1 - INPUT SHAFT 2 - SCREWDRIVER (DO NOT SCRATCH BEARING SURFACE) 3 - SNAP RING 4 - O-RINGS 5 - SEALS

2. Install input shaft snap ring (3) .

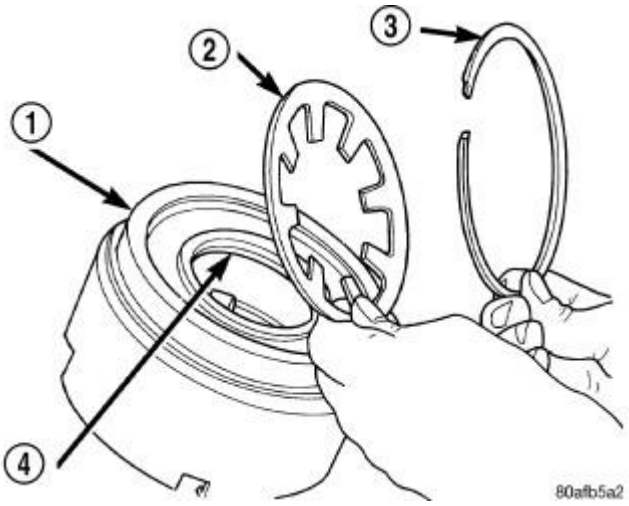

Fig. 255: Return Spring and Snap Ring
Courtesy of CHRYSLER LLC

1 - OD/REVERSE PISTON 2 - RETURN SPRING 3 - SNAP RING 4 - O-RING

3. Position the OD/Reverse piston return spring (2) and snap ring (3) onto the OD/Reverse piston (1) .

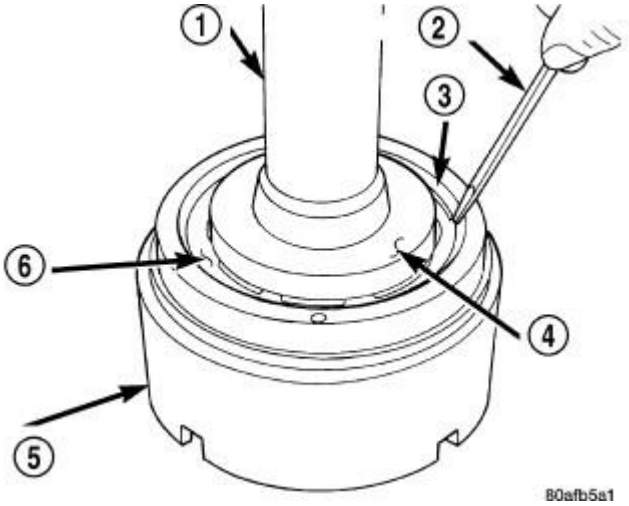

Fig. 256: Remove/Install Snap Ring
Courtesy of CHRYSLER LLC

1 - ARBOR PRESS RAM (COMPRESS RETURN SPRING JUST ENOUGH TO REMOVE OR INSTALL

SNAP RING) 2 - SCREWDRIVER 3 - SNAP RING 4 - SPECIAL TOOL 6057 5 - OD/REVERSE PISTON 6 - RETURN SPRING

4. Using an arbor press (1) and Disc 6057 (4), install the OD/Reverse piston return spring (6) and snap ring (3) .

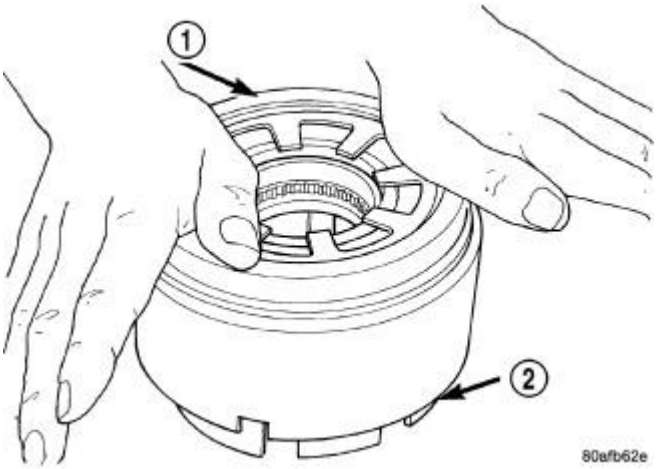

Fig. 257: Install OD/Reverse Piston
Courtesy of CHRYSLER LLC

1 - PUSH DOWN TO INSTALL OVERDRIVE/REVERSE PISTON 2 - INPUT CLUTCHES RETAINER

5. Install the OD/Reverse piston (1) assembly to the input clutch retainer (2) .

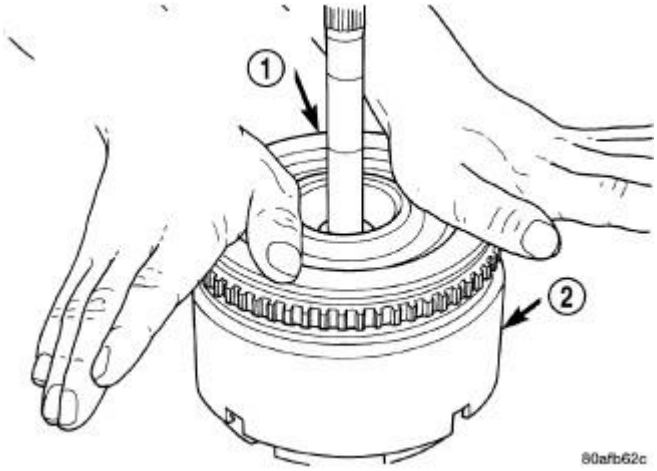

Fig. 258: Install Input Shaft Hub Assembly
Courtesy of CHRYSLER LLC

1 - PUSH DOWN TO INSTALL INPUT SHAFT HUB ASSEMBLY (ROTATE TO ALIGN SPLINES) 2 - OD/REV. PISTON

6. Install the input hub/shaft assembly (1) to the OD/Reverse piston/clutch retainer assembly (2) .

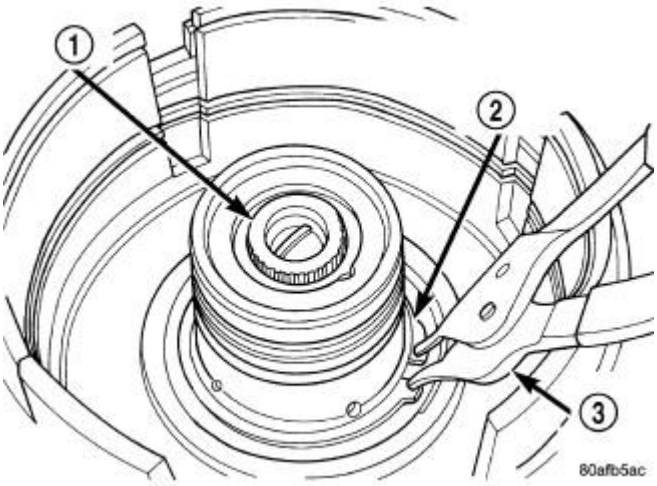

Fig. 259: Install Input Hub Tapered Snap Ring
Courtesy of CHRYSLER LLC

1 - INPUT SHAFT 2 - INPUT HUB SNAP RING (TAPERED SIDE UP WITH TABS IN CAVITY) 3 - SNAP RING PLIERS

7. Install input hub tapered snap ring (2) . **Make sure snap ring is fully seated.**

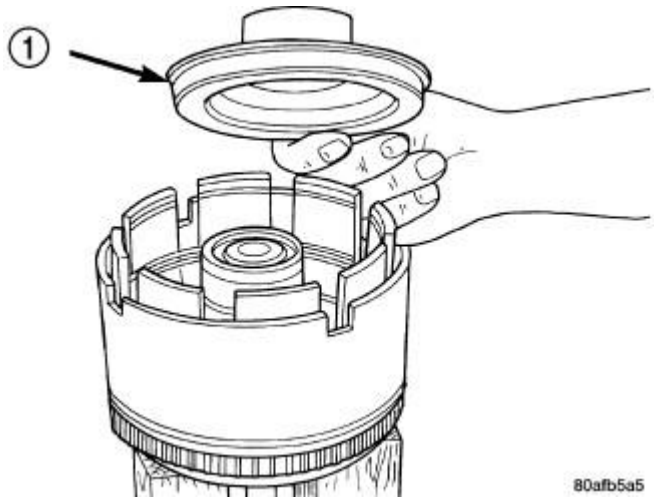

Fig. 260: Underdrive Clutch Piston
Courtesy of CHRYSLER LLC

1 - PISTON

8. Install the UD clutch piston (1) .

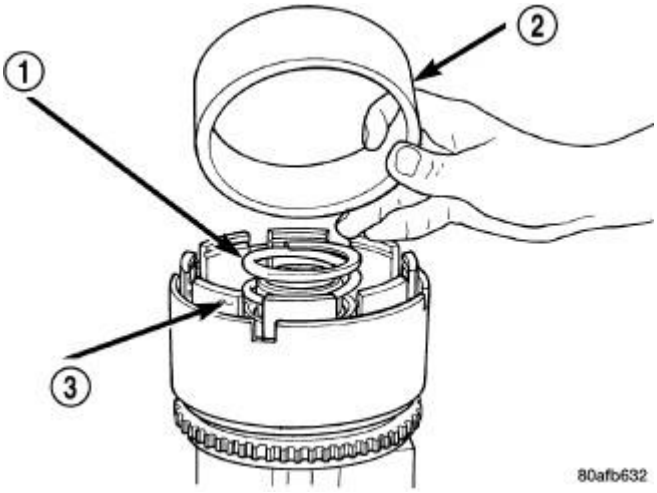

Fig. 261: Seal Compressor Special Tool 5067
Courtesy of CHRYSLER LLC

1 - PISTON RETURN SPRING 2 - SPECIAL TOOL 5067 3 - INPUT CLUTCH RETAINER

9. Install UD piston return spring (1) and Disc 5067 (2) .

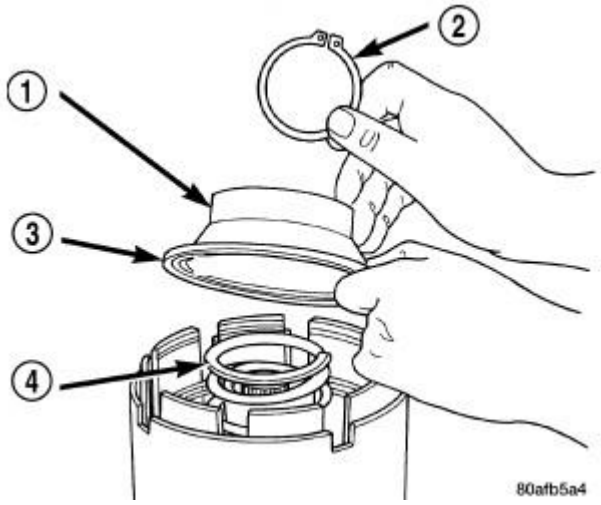

Fig. 262: UD Return Spring & Retainer
Courtesy of CHRYSLER LLC

1 - UNDERDRIVE SPRING RETAINER
2 - SNAP RING
3 - SEAL
4 - PISTON RETURN SPRING

10. Position the UD spring retainer (1) and snap ring (2) on the piston return spring (4) .

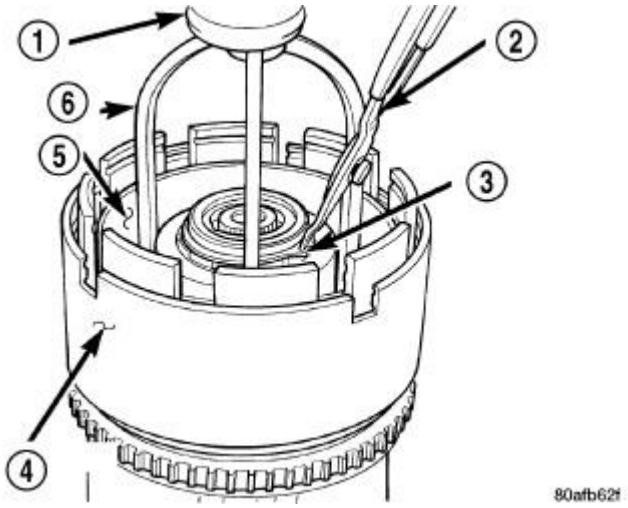

Fig. 263: Install UD Spring Retainer & Snap Ring
Courtesy of CHRYSLER LLC

1 - ARBOR PRESS RAM
2 - SNAP RING PLIERS
3 - SNAP RING
4 - OD/REVERSE PISTON
5 - TOOL 5067

6 - TOOL 5059-A

CAUTION: Compress return spring just enough to install snap ring.

11. Using Compressor 5059-A (6) with Installer 5067 (5) and an arbor press (1), install the UD spring retainer and snap ring (3) .

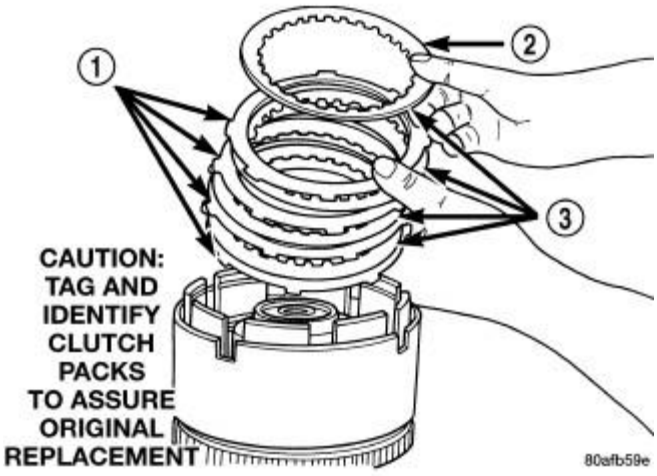

Fig. 264: Underdrive Clutch Pack
Courtesy of CHRYSLER LLC

1 - CLUTCH PLATE 2 - ONE UD CLUTCH DISC 3 - CLUTCH DISC

12. Install the UD clutch pack (four fibers/four steels) (1, 3) . Leave the top disc (2) out until after the snap ring is installed.

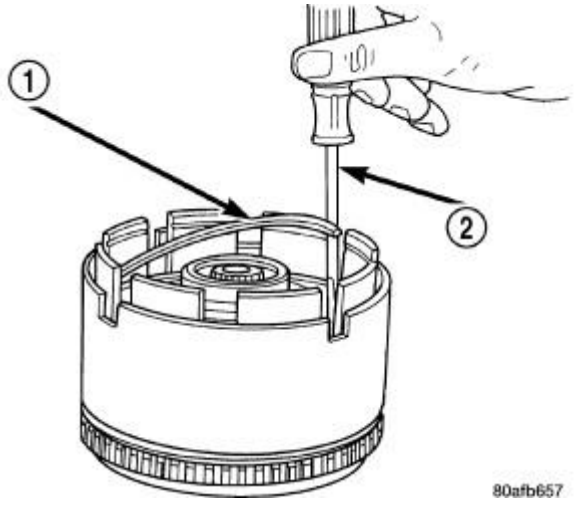

Fig. 265: UD Clutch Flat Snap Ring
Courtesy of CHRYSLER LLC

1 - UNDERDRIVE CLUTCH REACTION PLATE FLAT SNAP RING 2 - SCREWDRIVER

13. Install the UD clutch flat snap ring (1) .

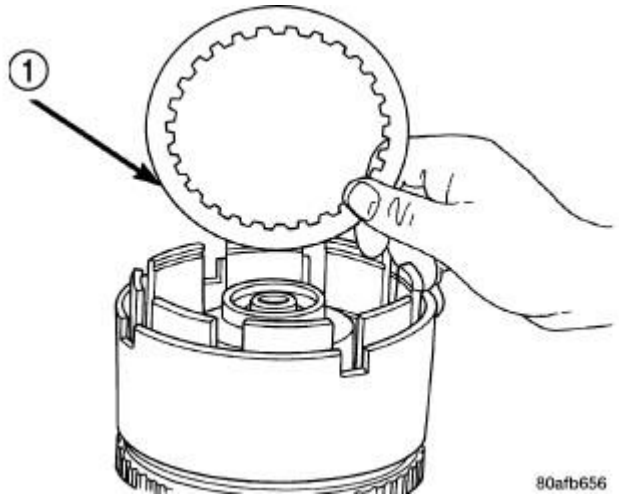

Fig. 266: Remove/Install Last UD Clutch Disc
Courtesy of CHRYSLER LLC

1 - ONE UNDERDRIVE CLUTCH DISC

14. Install the last UD clutch disc (1) .

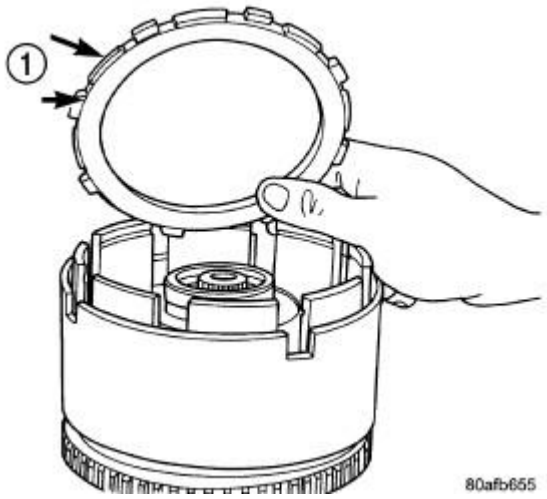

Fig. 267: OD/UD Reaction Plate
Courtesy of CHRYSLER LLC

1 - OD/UD CLUTCH REACTION PLATE (STEP SIDE DOWN)

15. Install the OD/UD clutch reaction plate (1) . The OD/UD clutches reaction plate has a step on both sides. Install the OD/UD clutches reaction plate tapered step side up.

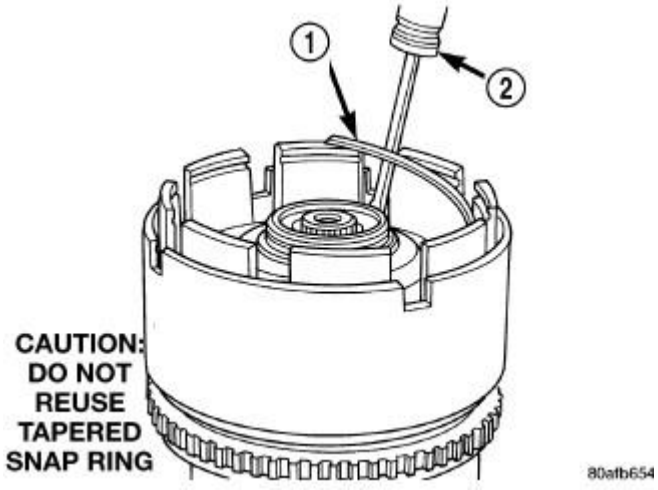

Fig. 268: Tapered Snap Ring
Courtesy of CHRYSLER LLC

1 - OVERDRIVE/UNDERDRIVE CLUTCHES REACTION PLATE TAPERED SNAP RING 2 - SCREWDRIVER (DO NOT SCRATCH REACTION PLATE)

NOTE: Snap ring ends must be located within one finger of the input clutch hub. Be sure that snap ring is fully seated, by pushing with screwdriver, into snap ring groove all the way around.

16. Install the UD/OD tapered snap ring (1) .

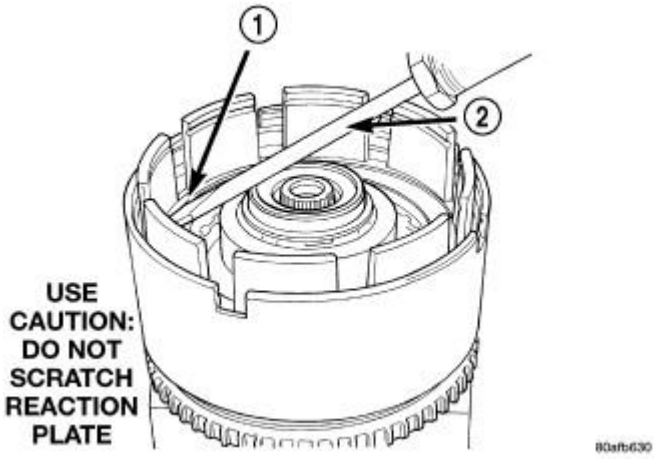

Fig. 269: Seating Tapered Snap Ring
Courtesy of CHRYSLER LLC

1 - OVERDRIVE/UNDERDRIVE CLUTCHES REACTION PLATE TAPERED SNAP RING
2 - SCREWDRIVER

17. Seat tapered snap ring (1) to ensure proper installation.

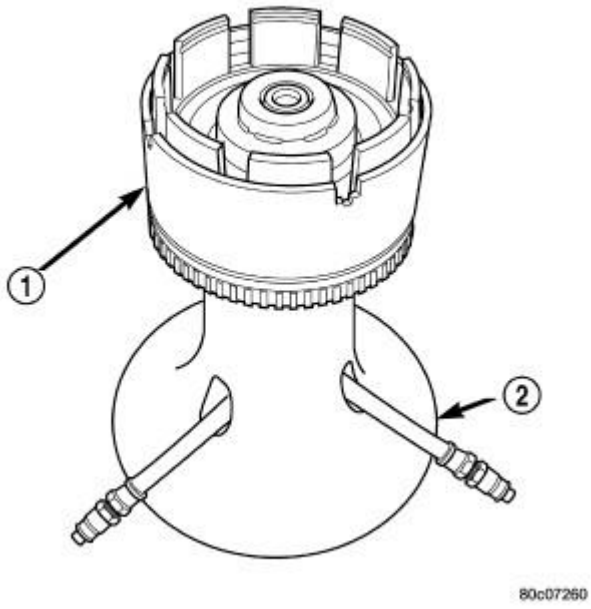

Fig. 270: Input Clutch Assembly On Pressure Fixture Tool - 8391
Courtesy of CHRYSLER LLC

1 - INPUT CLUTCH ASSEMBLY

2 - INPUT CLUTCH PRESSURE FIXTURE - 8391

18. Install input clutch assembly (1) to the Input Clutch Pressure Fixture 8391 (2).

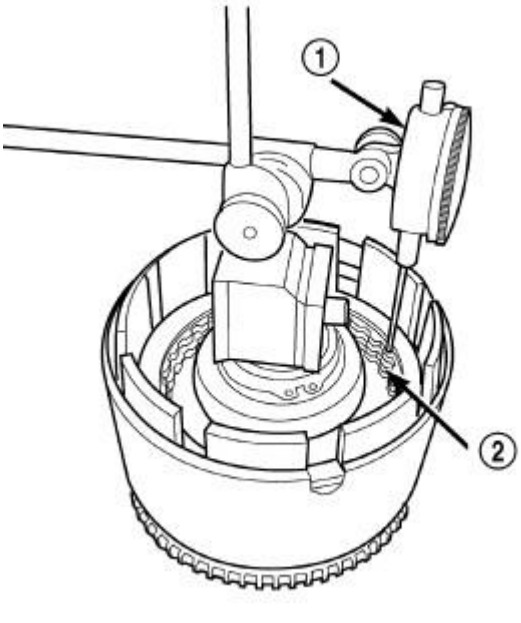

Fig. 271: Set Up Dial Indicator to Measure UD Clutch Clearance
Courtesy of CHRYSLER LLC

1 - DIAL INDICATOR 2 - UNDERDRIVE CLUTCH

19. Set up Dial Indicator C-3339A (1) on the UD clutch pack (2).

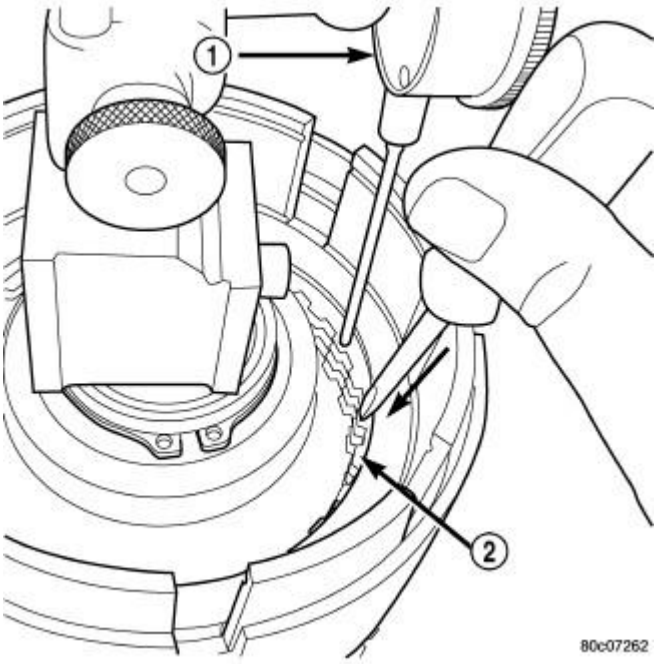

Fig. 272: Press Down on UD Clutch Pack and Zero Dial Indicator
Courtesy of CHRYSLER LLC

1 - DIAL INDICATOR 2 - UNDERDRIVE CLUTCH

20. Using moderate pressure, press down and hold (near indicator) the UD clutch pack (2) with screwdriver or suitable tool and zero dial indicator (1) . When releasing pressure on clutch pack, indicator reading should advance 0.005-0.010 inches.

CAUTION: Do not apply more than 30 psi (206 kPa) to the underdrive clutch pack.

21. Apply 30 psi (206 kPa) to the underdrive hose on Pressure Fixture 8391 and measure UD clutch clearance. Measure and record UD clutch pack measurement in four (4) places, 90° apart.
22. Take average of four measurements and compare with UD clutch pack clearance specification. **Underdrive clutch pack clearance must be 0.94-1.50 mm (0.037-0.059 in.).**
23. If necessary, select the proper reaction plate to achieve specifications.

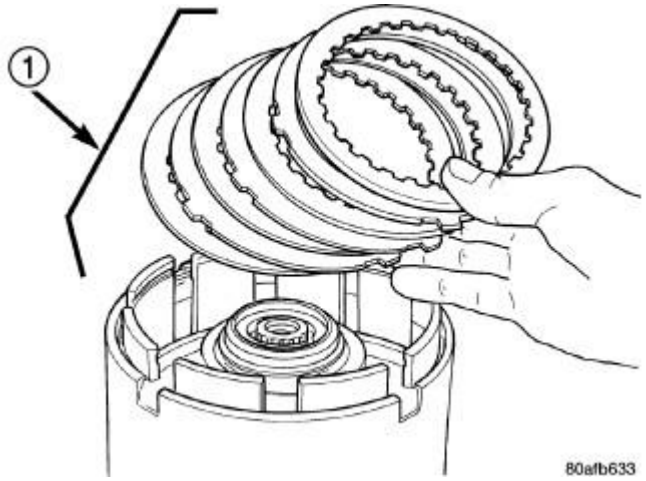

Fig. 273: Install OD Clutch Pack
Courtesy of CHRYSLER LLC

1 - OVERDRIVE CLUTCH PACK

24. Install the OD clutch pack (four fibers/three steels) (1) .

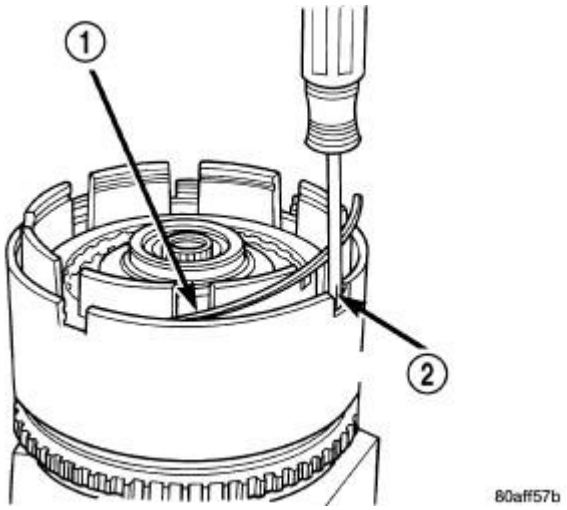

Fig. 274: Install Waved Snap Ring
Courtesy of CHRYSLER LLC

1 - OVERDRIVE REACTION PLATE WAVED SNAP RING 2 - SCREWDRIVER

25. Install OD reaction plate waved snap ring (1) .

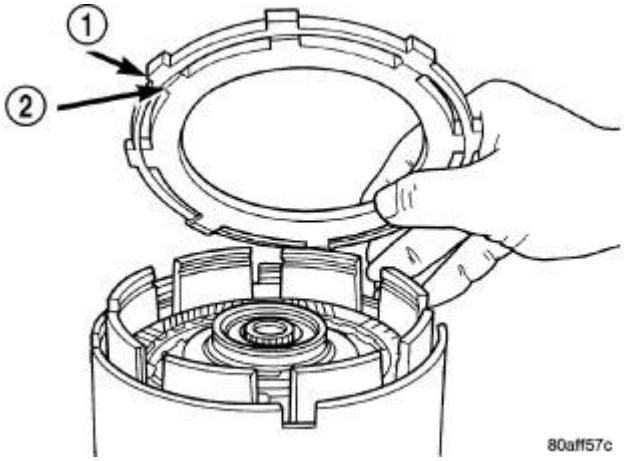

Fig. 275: OD/Reverse Reaction Plate
Courtesy of CHRYSLER LLC

1 - OVERDRIVE/REVERSE PRESSURE PLATE 2 - (STEP SIDE DOWN)

26. Install the OD/Reverse reaction plate (1) with large step down (towards OD clutch pack) .

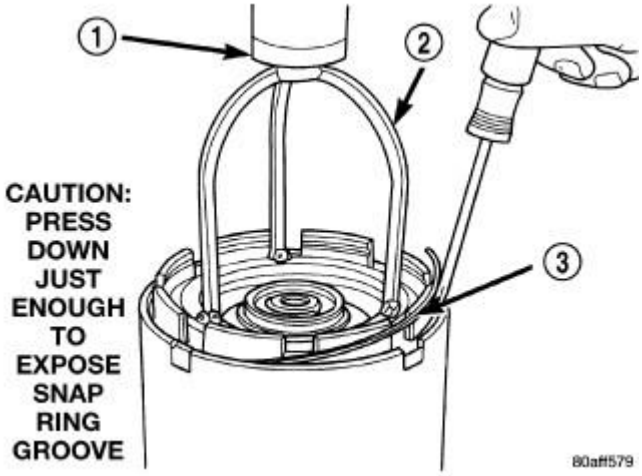

Fig. 276: Install Flat Snap Ring
Courtesy of CHRYSLER LLC

1 - ARBOR PRESS RAM 2 - TOOL 5059-A 3 - FLAT SNAP RING

27. Install Compressor tool 5059-A (2).
28. Using shop press (1) compress clutch pack enough to expose snap ring grove.
29. Install OD reaction plate flat snap ring (3) .

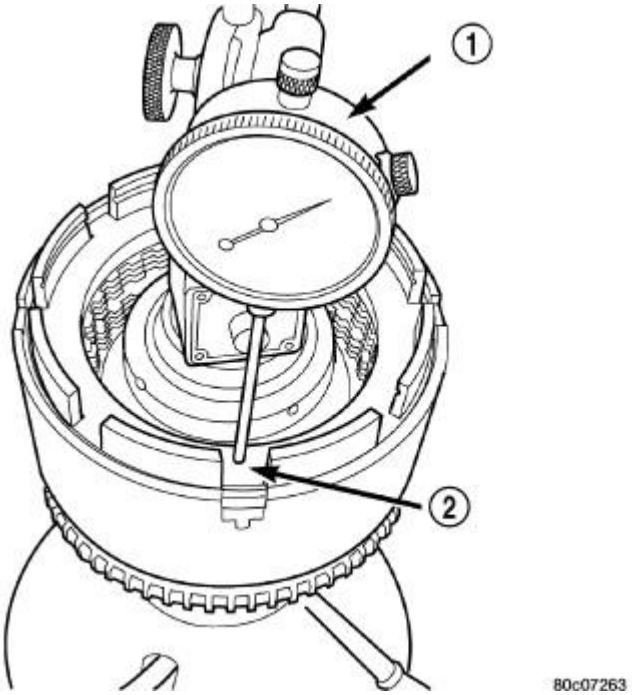

Fig. 277: Measure OD Clutch Pack Clearance
Courtesy of CHRYSLER LLC

1 - DIAL INDICATOR 2 - OD/REVERSE PRESSURE PLATE

30. Measure OD clutch pack clearance. Set up Dial Indicator C-3339A (1) on top of the OD/Reverse reaction plate (2).
31. Zero dial indicator and apply 30 psi (206 kPa) air pressure to the overdrive clutch hose on Pressure Fixture 8391. Measure and record OD clutch pack measurement in four (4) places, 90° apart.
32. Take average of four measurements and compare with OD clutch pack clearance specification. **The overdrive (OD) clutch pack clearance is 1.07-3.25 mm (0.042-0.128 in.).**

    If not within specifications, the clutch is not assembled properly. There is no adjustment for the OD clutch clearance.

33. Install reverse clutch pack (two fibers/one steel) (1, 2).

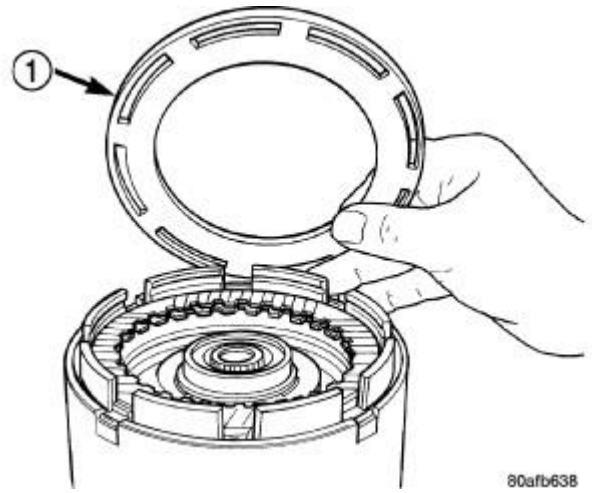

Fig. 278: Install Reaction Plate
Courtesy of CHRYSLER LLC

1 - REVERSE CLUTCH REACTION PLATE (FLAT SIDE DOWN)

34. Install reverse clutch reaction plate (1) with the flat side down towards reverse clutch .

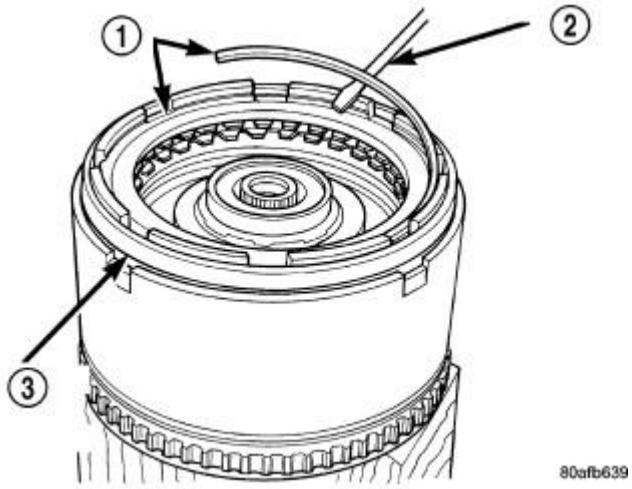

Fig. 279: Install Reverse Clutch Snap Ring
Courtesy of CHRYSLER LLC

1 - REVERSE CLUTCH SNAP RING (SELECT) 2 - SCREWDRIVER 3 - REVERSE CLUTCH REACTION PLATE

35. Tap reaction plate (3) down to allow installation of the reverse clutch snap ring (1). Install reverse clutch snap ring (1).

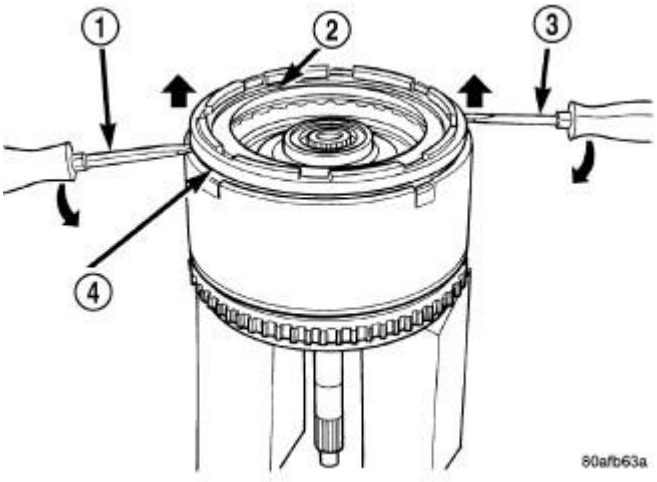

Fig. 280: Pry Up Reaction Plate
Courtesy of CHRYSLER LLC

1 - SCREWDRIVER 2 - SNAP RING 3 - SCREWDRIVER 4 - MUST RAISE REVERSE REACTION PLATE TO RAISE SNAP RING

36. Pry up reverse reaction plate (4) to seat against snap ring (2).

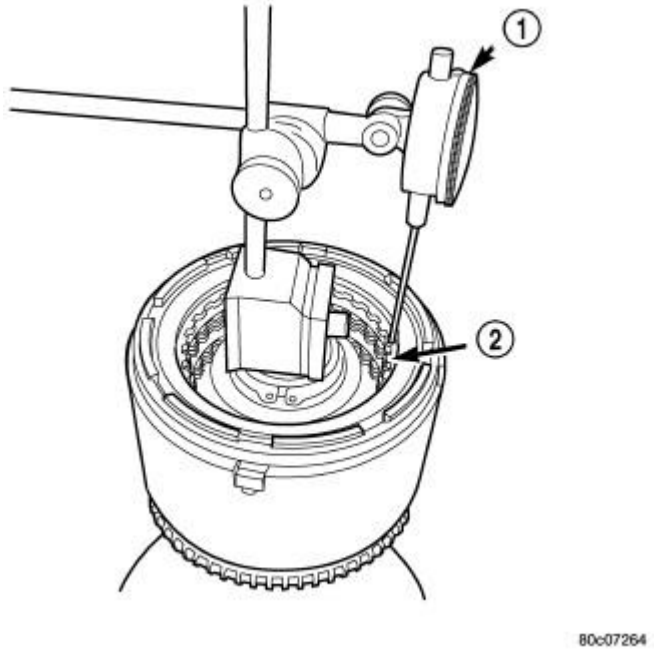

Fig. 281: Measure Reverse Clutch Pack Clearance
Courtesy of CHRYSLER LLC

1 - DIAL INDICATOR 2 - REVERSE CLUTCH

37. Set up a Dial Indicator C-3339A (1) on the reverse clutch pack (2).

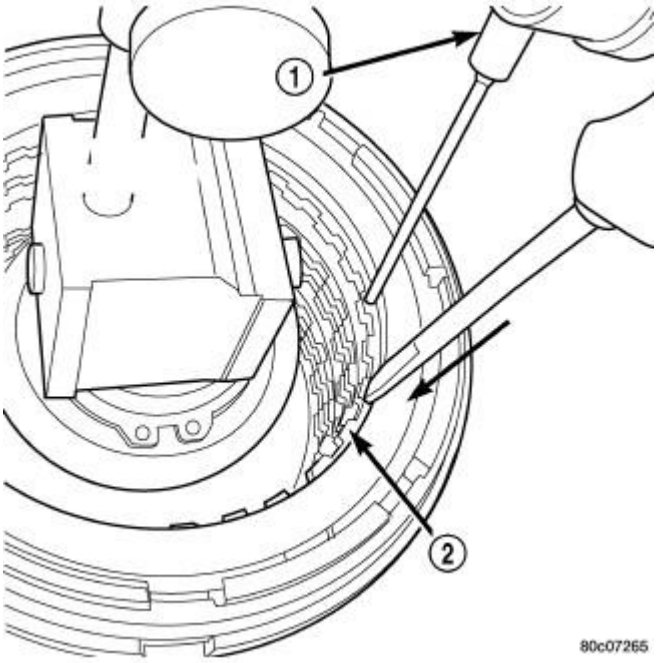

Fig. 282: Press Down on Reverse Clutch and Zero Indicator
Courtesy of CHRYSLER LLC

1 - DIAL INDICATOR 2 - REVERSE CLUTCH

38. Using moderate pressure, press down and hold (near indicator) reverse clutch disc (2) with screwdriver or suitable tool and zero dial indicator (1). When releasing pressure, indicator should advance 0.005-0.010 inches as clutch pack relaxes.
39. Apply 30 psi (206 kPa) air pressure to the reverse clutch hose on Pressure Fixture 8391. Measure and record reverse clutch pack measurement in four (4) places, 90° apart.
40. Take average of four measurements and compare with reverse clutch pack clearance specification. **The reverse clutch pack clearance is 0.89-1.37 mm (0.035-0.054 in.).** Select the proper reverse clutch snap ring to achieve specifications.
41. To complete the assembly, reverse clutch and overdrive clutch must be removed.

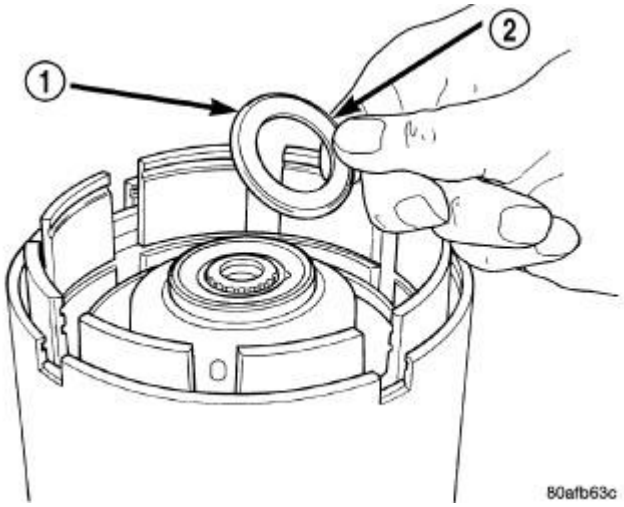

Fig. 283: Install No. 2 Needle Bearing
Courtesy of CHRYSLER LLC

1 - #2 NEEDLE BEARING (NOTE 3 SMALL TABS) 2 - TABS UP

42. Install the number 2 needle bearing (1) .

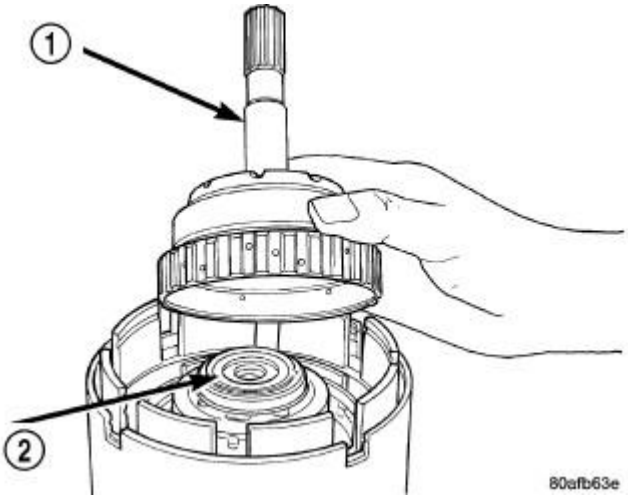

Fig. 284: Install Underdrive Shaft Assembly
Courtesy of CHRYSLER LLC

1 - UNDERDRIVE SHAFT ASSEMBLY 2 - #2 NEEDLE BEARING

43. Install the underdrive shaft assembly (1) .

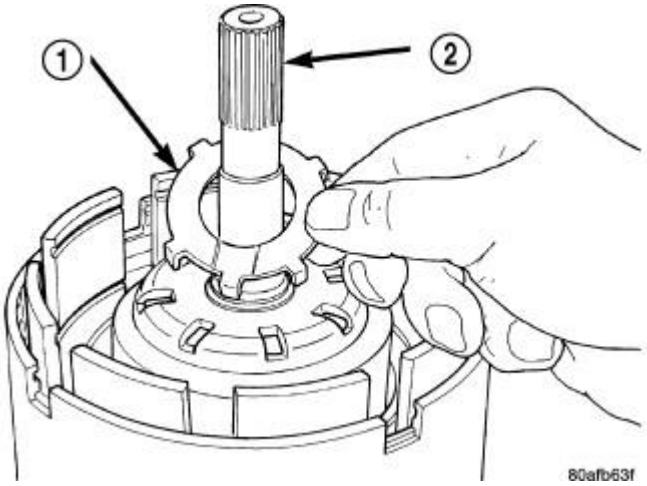

Fig. 285: Install No. 3 Thrust Washer
Courtesy of CHRYSLER LLC

1 - #3 THRUST WASHER (NOTE 5 TABS)
2 - UNDERDRIVE SHAFT ASSEMBLY

44. Install the number 3 thrust washer (1) to the underdrive shaft assembly (2). Be sure five tabs are seated properly.

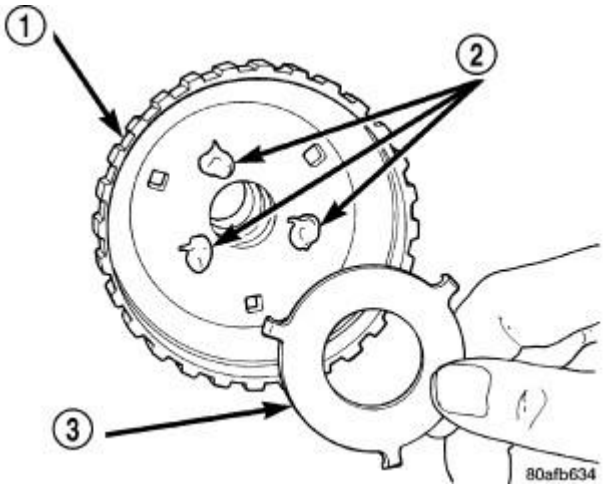

Fig. 286: Install No. 3 Thrust Plate
Courtesy of CHRYSLER LLC

1 - OVERDRIVE SHAFT ASSEMBLY
2 - DABS OF PETROLATUM (FOR RETENTION)
3 - #3 THRUST PLATE (NOTE 3 TABS)

45. Install the number 3 thrust plate (3) to the bottom of the overdrive shaft assembly (1). Retain with petrolatum or transmission assembly gel (2).

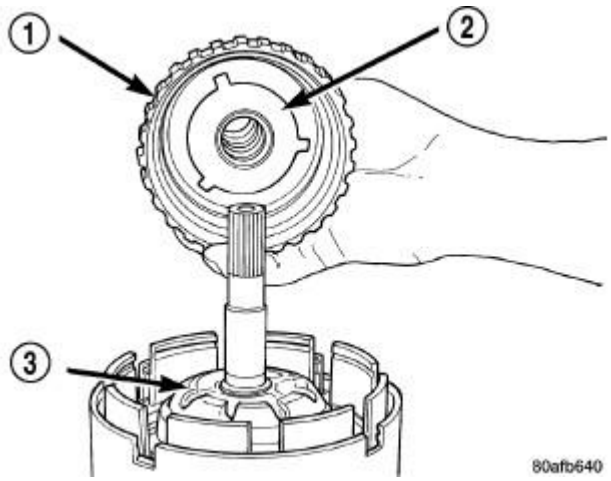

Fig. 287: Install Overdrive Shaft Assembly
Courtesy of CHRYSLER LLC

1 - OVERDRIVE SHAFT ASSEMBLY 2 - #3 THRUST PLATE 3 - #3 THRUST WASHER

46. Install the overdrive shaft assembly (1).

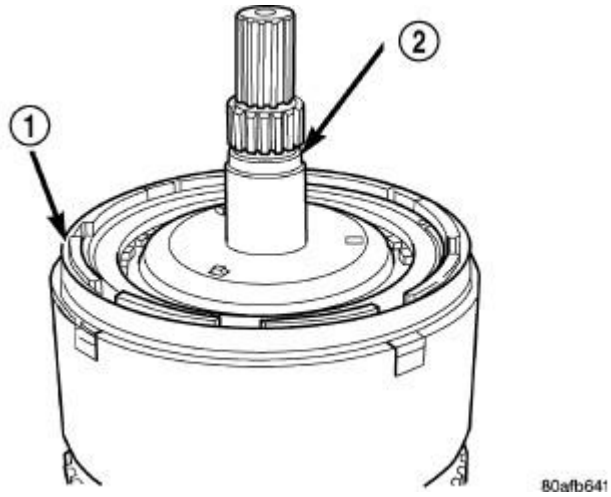

Fig. 288: Input Clutch Assembly
Courtesy of CHRYSLER LLC

1 - INPUT CLUTCH ASSEMBLY 2 - OVERDRIVE SHAFT ASSEMBLY

47. Reinstall overdrive and reverse clutch. **Rechecking these clutch clearances is not necessary.**

ASSEMBLY, TRANSMISSION SOLENOID AND PRESSURE SWITCH

DESCRIPTION

DESCRIPTION

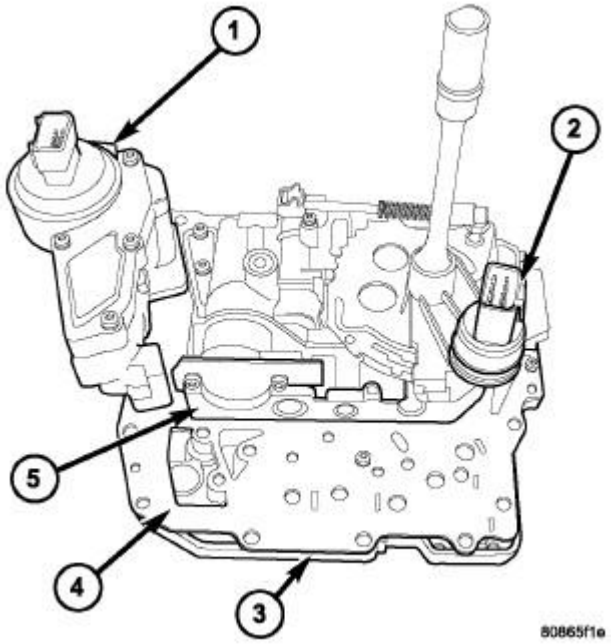

Fig. 289: Valve Body Assembly
Courtesy of CHRYSLER LLC

1 - SOLENOID/PRESSURE SWITCH ASSEMBLY
2 - TRS
3 - TRANSFER PLATE
4 - SEPARATOR PLATE
5 - VALVE BODY

The Solenoid/Pressure Switch Assembly (1) is inside the transmission and mounted to the valve body assembly. The assembly consists of four solenoids that control hydraulic pressure to the L/R, 2/4, OD, and UD friction elements (transmission clutches), and the torque converter clutch. The reverse clutch is controlled by line pressure from the manual valve in the valve body. The solenoids are contained within the Solenoid/Pressure Switch Assembly, and can only be serviced by replacing the assembly.

The solenoid assembly also contains pressure switches that monitor and send hydraulic circuit information to the TCM. Likewise, the pressure switches can only be service by replacing the assembly.

OPERATION

OPERATION

SOLENOIDS

The solenoids receive electrical power from the Transmission Control Relay through a single wire. The TCM energizes or operates the solenoids individually by grounding the return wire of the solenoid needed. When a solenoid is energized, the solenoid valve shifts, and a fluid passage is opened or closed (vented or applied), depending on its default operating state. The result is an apply or release of a frictional element.

The 2/4 and UD solenoids are normally applied, which allows fluid to pass through in their relaxed or "off" state. By design, this allows transmission limp-in (P,R,N,2) in the event of an electrical failure.

The continuity of the solenoids and circuits are periodically tested. Each solenoid is turned on or off depending on its current state. An inductive spike should be detected by the TCM during this test. If no spike is detected, the circuit is tested again to verify the failure. In addition to the periodic testing, the solenoid circuits are tested if a speed ratio or pressure switch error occurs.

PRESSURE SWITCHES

The TCM relies on three pressure switches to monitor fluid pressure in the L/R, 2/4, and OD hydraulic circuits. The primary purpose of these switches is to help the TCM detect when clutch circuit hydraulic failures occur. The range for the pressure switch closing and opening points is 11-23 psi. Typically the switch opening point will be approximately one psi lower than the closing point. For example, a switch may close at 18 psi and open at 17 psi. The switches are continuously monitored by the TCM for the correct states (open or closed) in each gear as shown in the following chart:

PRESSURE SWITCH STATES

GEAR	L/R	2/4	OD
R	OP	OP	OP
P/N	CL	OP	OP
1st	CL	OP	OP
2nd	OP	CL	OP
D	OP	OP	CL
OD	OP	CL	CL
OP = OPEN			
CL = CLOSED			

A Diagnostic Trouble Code (DTC) will set if the TCM senses any switch open or closed at the wrong time in a given gear.

The TCM also tests the 2/4 and OD pressure switches when they are normally off (OD and 2/4 are tested in 1st gear, OD in 2nd gear, and 2/4 in 3rd gear). The test simply verifies that they are operational, by looking for a closed state when the corresponding element is applied. Immediately after a shift into 1st, 2nd, or 3rd gear with the engine speed above 1000 RPM, the TCM momentarily turns on element pressure to the 2/4 and/or OD clutch circuits to identify that the appropriate switch has closed. If it doesn't close, it is tested again. If the switch fails to close the second time, the appropriate Diagnostic Trouble Code (DTC) will set.

REMOVAL

REMOVAL

NOTE: **If the Solenoid/Pressure Switch Assembly is being replaced, the Quick Learn Procedure must be performed. Refer to Electrical - Electronic Control Modules/Electronic Control Modules/MODULE, Transmission Control - Standard Procedure .**

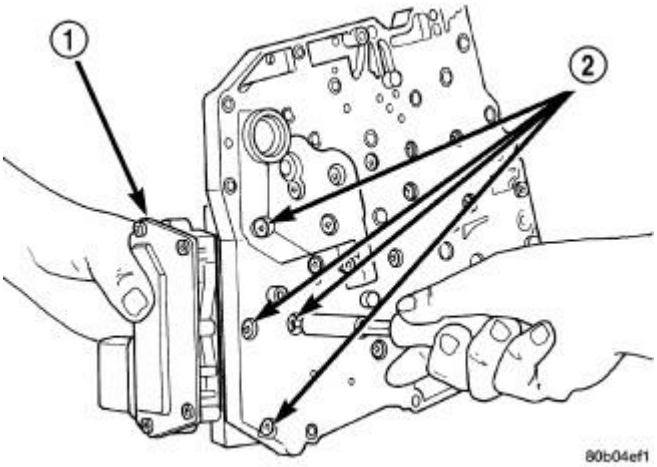

Fig. 290: Solenoid Retaining Screws
Courtesy of CHRYSLER LLC

1 - SOLENOID/PRESSURE SWITCH ASSEMBLY
2 - RETAINING SCREWS

1. Raise vehicle on hoist.
2. Remove valve body assembly from transmission. See **Transmission and Transfer Case/Automatic - 42RLE/VALVE BODY - Removal**.
3. Remove Solenoid/Pressure Switch Assembly retaining screws (2) from solenoid .

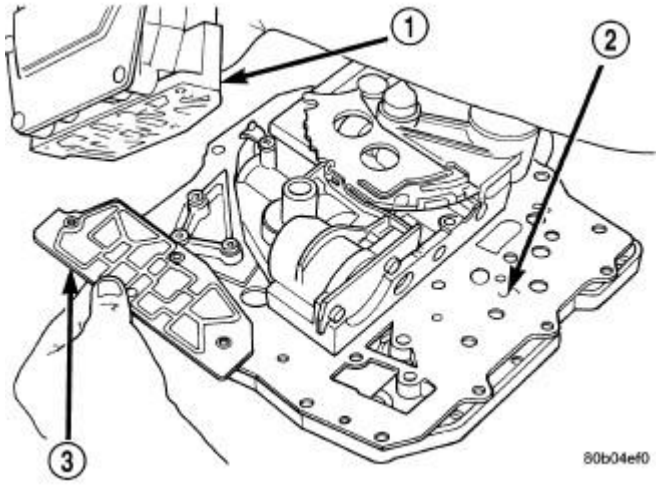

Fig. 291: Solenoid/Pressure Switch Assembly & Screen
Courtesy of CHRYSLER LLC

1 - SOLENOID/PRESSURE SWITCH ASSEMBLY
2 - VALVE BODY
3 - SCREEN

4. Remove Solenoid/Pressure Switch Assembly (1) and screen from valve body (2) .

INSTALLATION

INSTALLATION

NOTE: If the Solenoid/Pressure Switch assembly is being replaced, the Quick Learn Procedure must be performed. Refer to Electrical - Electronic Control Modules/Electronic Control Modules/MODULE, Transmission Control - Standard Procedure .

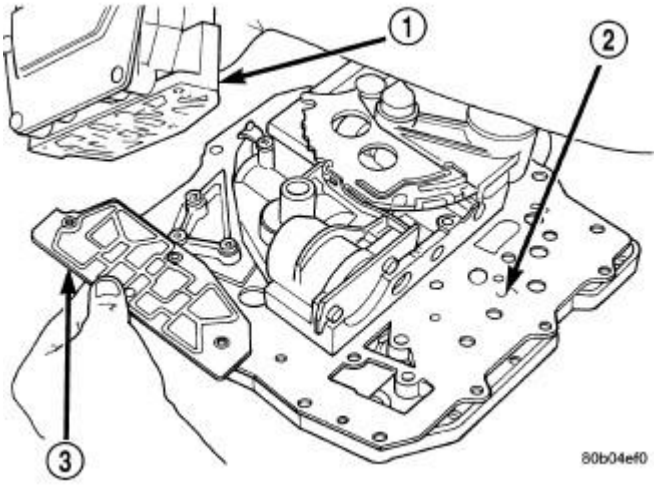

Fig. 292: Solenoid/Pressure Switch Assembly & Screen
Courtesy of CHRYSLER LLC

1 - SOLENOID/PRESSURE SWITCH ASSEMBLY 2 - VALVE BODY 3 - SCREEN

1. Install Solenoid/Pressure Switch Assembly (1) and screen (3) to the separator and transfer plates.

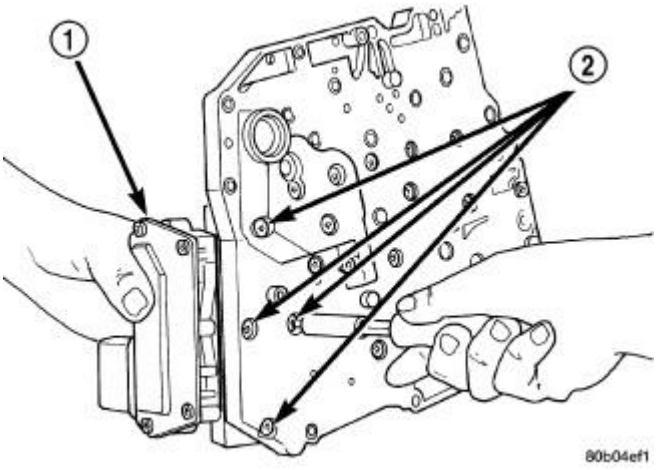

Fig. 293: Solenoid Retaining Screws
Courtesy of CHRYSLER LLC

1 - SOLENOID/PRESSURE SWITCH ASSEMBLY 2 - RETAINING SCREWS

2. Install and tighten retaining screws (2) to 5.5 N.m (50 in. lbs.) torque.
3. Install valve body. See **Transmission and Transfer Case/Automatic - 42RLE/VALVE BODY - Installation**.

BEARING

ADJUSTMENTS

ADJUSTMENTS

Take extreme care when removing and installing bearing cups and cones. **Use only an arbor press for installation,** as a hammer may not properly align the bearing cup or cone. Burrs or nicks on the bearing seat will give a false end play reading, while gauging for proper shims. Improperly seated bearing cup and cones are subject to low-mileage failure.

Bearing cups and cones should be replaced if they show signs of pitting or heat distress.

If distress is seen on either the cup or bearing rollers, both cup and cone must be replaced.

NOTE: Bearing drag torque specifications must be maintained to avoid premature bearing failures.

Used (original) bearing may lose up to 50 percent of the original drag torque after break-in.

NOTE: All bearing adjustments must be made with no other component interference or gear inter-mesh.

Oil all bearings before checking turning torque.

BEARING, OUTPUT SHAFT

REMOVAL

REMOVAL

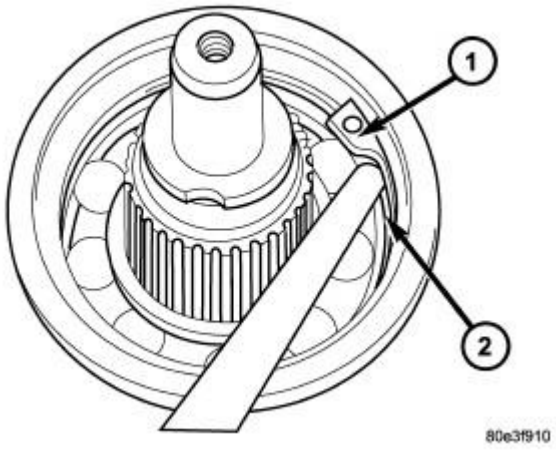

Fig. 294: Remove/Install Rear Output Shaft Retaining Ring
Courtesy of CHRYSLER LLC

1 - RETAINING RING 2 - OUTPUT SHAFT BEARING

1. Raise and support vehicle.
2. Remove the propeller shaft. Refer to **Differential and Driveline/Propeller Shaft - Removal** .
3. Verify that the transmission is in PARK in order to prepare for the removal of the output shaft nut.
4. Remove the nut holding the propeller shaft flange to the output shaft and remove the flange.
5. Remove the transmission rear oil seal with a suitable slide hammer and screw.
6. Remove the transmission rear output shaft bearing retaining ring (1) .

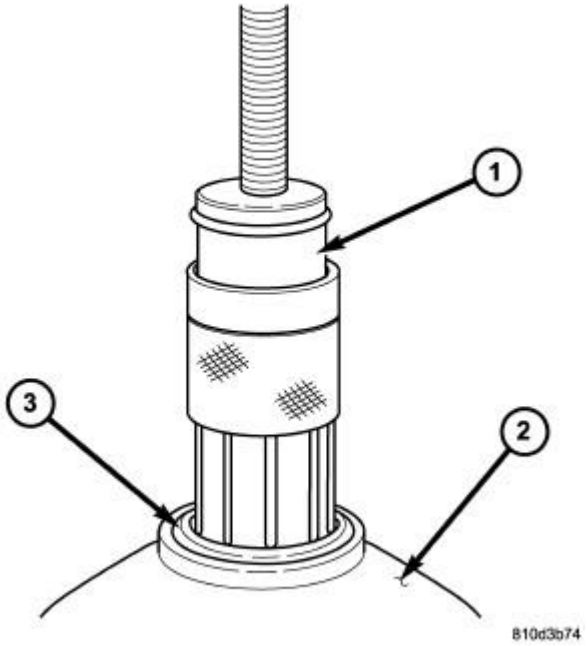

Fig. 295: Position Remover 9082A On Bearing
Courtesy of CHRYSLER LLC

1 - BEARING REMOVER 9082A
2 - TRANSMISSION CASE
3 - OUTPUT SHAFT BEARING

7. Position Bearing Remover 9082A (1) over the inner race of the output shaft bearing.

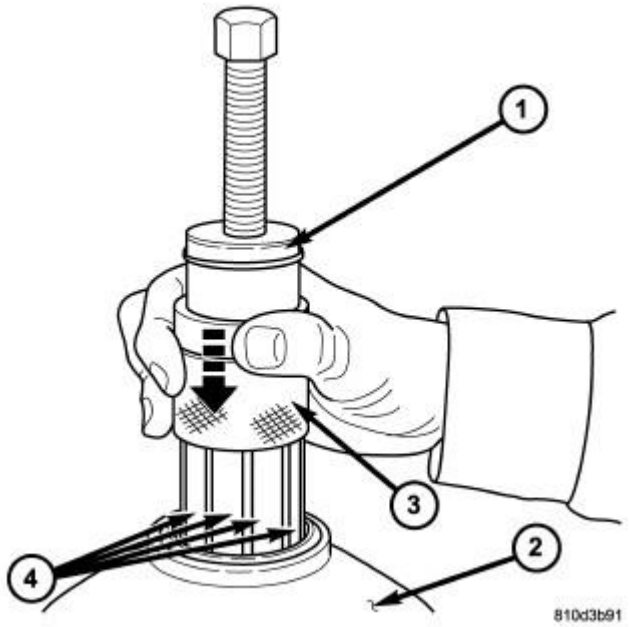

Fig. 296: Slide Remover 9082A Collar Downward
Courtesy of CHRYSLER LLC

1 - BEARING REMOVER 9082A
2 - TRANSMISSION CASE
3 - COLLAR
4 - FINGERS

NOTE: Due to production variations in the bearing, it may not be possible to slide the collar fully downward. It is only necessary to slide the collar down far enough that the fingers securely grasp the inner bearing race.

8. Slide the collar (3) on the Bearing Remover 9082A (1) downward over the fingers (3) of the tool.

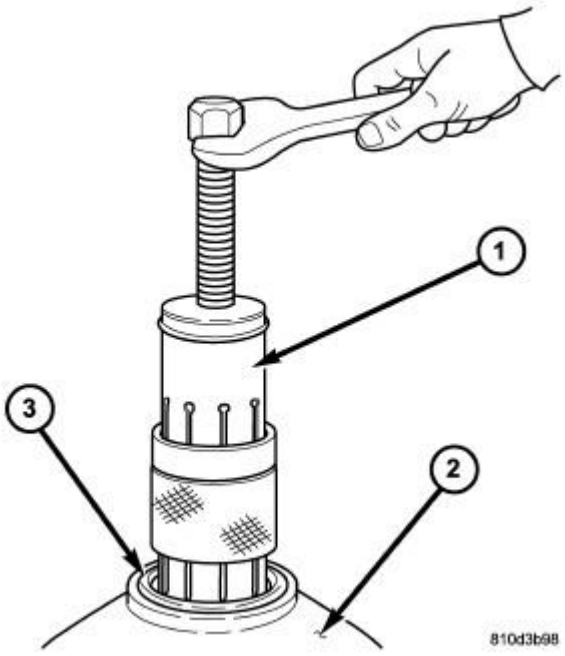

Fig. 297: Removing Output Shaft Bearing
Courtesy of CHRYSLER LLC

1 - BEARING REMOVER 9082A
2 - TRANSMISSION CASE
3 - OUTPUT SHAFT BEARING

9. Remove the output shaft bearing (3) .

INSTALLATION

INSTALLATION

CAUTION: To obtain proper output shaft end play a 0.3 mm (.0118 in) shim should be used between the output shaft bearing and flange.

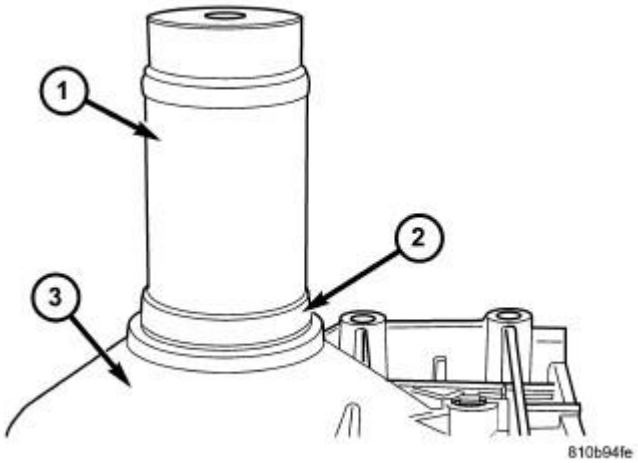

Fig. 298: Installing Output Shaft Bearing
Courtesy of CHRYSLER LLC

1 - BEARING INSTALLER 9287 2 - BEARING 3 - TRANSMISSION CASE

1. Install output shaft bearing in the rear transmission housing. Using Bearing Installer 9287 (1) , install the output shaft bearing (2) into the transmission housing. **The closed side of the plastic cage must point towards the transmission.**

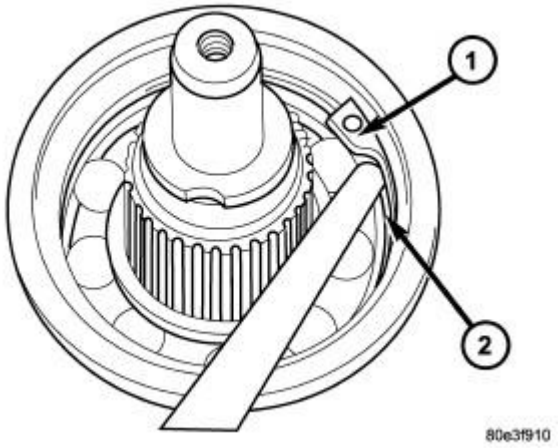

Fig. 299: Remove/Install Rear Output Shaft Retaining Ring
Courtesy of CHRYSLER LLC

1 - RETAINING RING 2 - OUTPUT SHAFT BEARING

2. Install the retaining ring (1) . Ensure that the retaining ring is seated correctly in the groove.

3. Install the output shaft washer onto the output shaft.

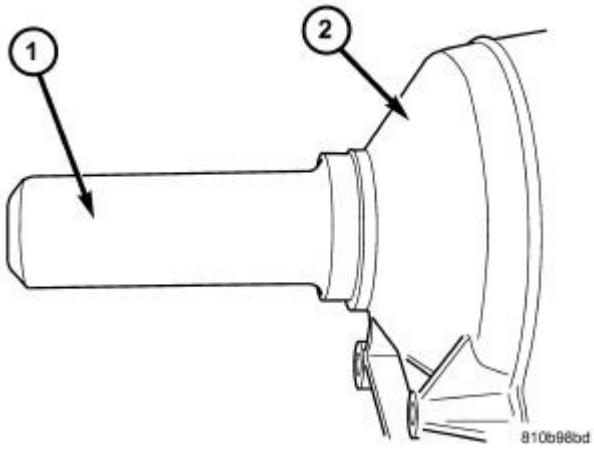

Fig. 300: Installing A New Transmission Rear Seal
Courtesy of CHRYSLER LLC

1 - SEAL INSTALLER 8902A 2 - TRANSMISSION CASE

4. Install a new transmission rear seal into the transmission case with Seal Installer 8902A (1) .
5. Verify that the transmission is in PARK in order to prepare for the installation of the output shaft nut.
6. Install the propeller shaft flange onto the output shaft and install an new flange nut. Tighten the flange nut to 200 N.m (147 ft.lbs.).

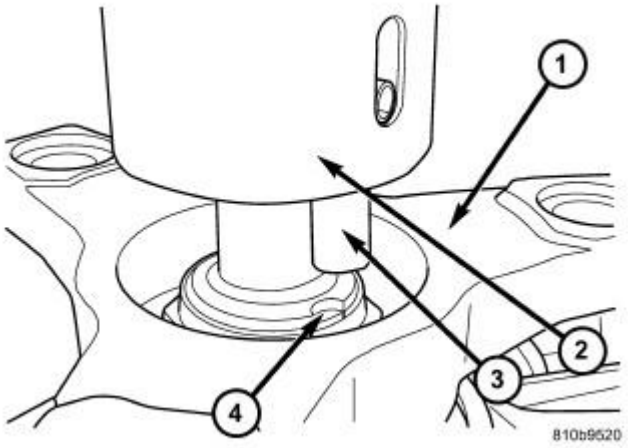

Fig. 301: Align Staking Tool 9078
Courtesy of CHRYSLER LLC

1 - PROPELLER SHAFT FLANGE

2 - STAKING TOOL 9078 3 - ALIGNMENT PIN 4 - OUTPUT SHAFT NOTCH

7. Stake the output shaft nut to the output shaft as follows.Place the Staking Tool 9078 (2) and Driver Handle C-4171 onto the output shaft.
8. Rotate the Staking Tool 9078 (2) until the alignment pin (3) engages the output shaft notch (4) .

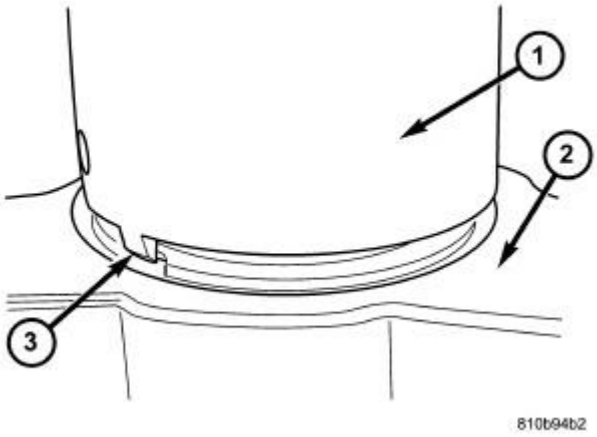

Fig. 302: Stake Output Shaft Nut
Courtesy of CHRYSLER LLC

1 - STAKING TOOL 9078 2 - PROPELLER FLANGE 3 - STAKING PIN

9. Press downward on the staking tool (1) until the staking pin (3) contacts the output shaft nut flange (2) .
10. Strike the Driver handle C-4171 with a suitable hammer until the output shaft nut is securely staked to the output shaft.
11. Install the propeller shaft. Refer to **Differential and Driveline/Propeller Shaft - Installation** .

CABLE, PARK LOCK

DESCRIPTION

DESCRIPTION

The Park Lock Cable is no longer used. The ignition lock out is controlled by means of a Gated Park Switch (electronic micro switch) located in the shifter assembly.

CABLE, SHIFT

DIAGNOSIS AND TESTING

GEARSHIFT CABLE

1. Engine starts must be possible with shift lever in PARK or NEUTRAL positions only. Engine starts must not be possible in any other gear position.
2. With the shift lever in the:
   a. PARK position - Apply upward force on the shift arm and remove pressure. Engine starts must be possible.
   b. PARK position - Apply downward force on the shift arm and remove pressure. Engine starts must be possible.
   c. NEUTRAL position - Normal position. Engine starts must be possible.
   d. NEUTRAL position - Engine running and brakes applied, apply upward force on the shift arm. Transmission shall not be able to shift from neutral to reverse.

REMOVAL

REMOVAL

1. Shift transmission into PARK.
2. Raise vehicle.

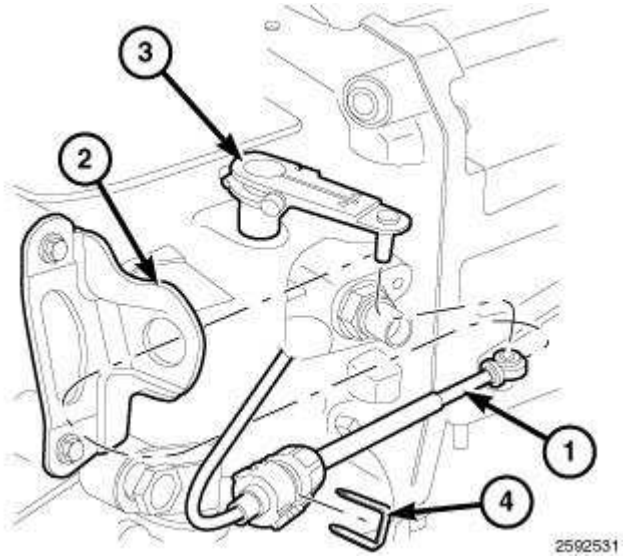

Fig. 303: Remove/Install Gearshift Cable
Courtesy of CHRYSLER LLC

3. Remove the gearshift cable retaining clip (4) (if equipped).
4. Disconnect the gearshift cable (1) eyelet at transmission manual shift lever (3) and pull the cable out of the mounting bracket (2).

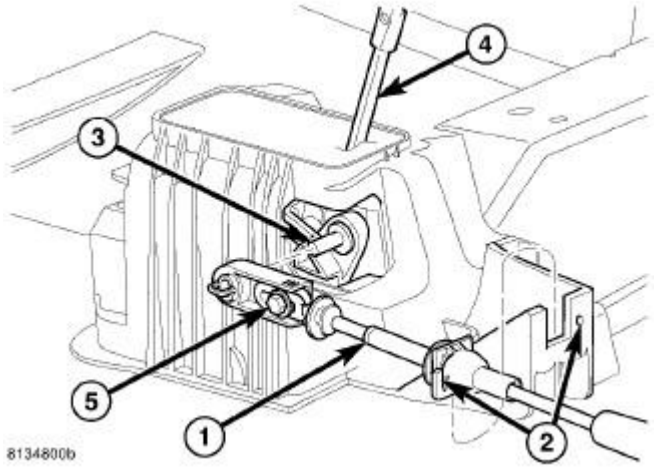

Fig. 304: Gearshift Cable At Shifter Assembly
Courtesy of CHRYSLER LLC

1 - GEARSHIFT CABLE
2 - CABLE RETAINER AND NOTCH
3 - SHIFTER ASSEMBLY PIN
4 - SHIFT LEVER
5 - ADJUSTMENT BOLT

5. Lower the vehicle.
6. Remove the floor console. Refer to **Body/Interior/CONSOLE, Floor - Removal** as necessary to access the shift mechanism and cables.
7. If necessary, remove the bolts holding the shield, covering the gearshift and park lock cables, to the floorpan and remove the shield.
8. Remove the gearshift cable (1) from the shift lever pin (3).
9. Remove the gearshift cable retainer (2) from the notch (2) in the shifter assembly.

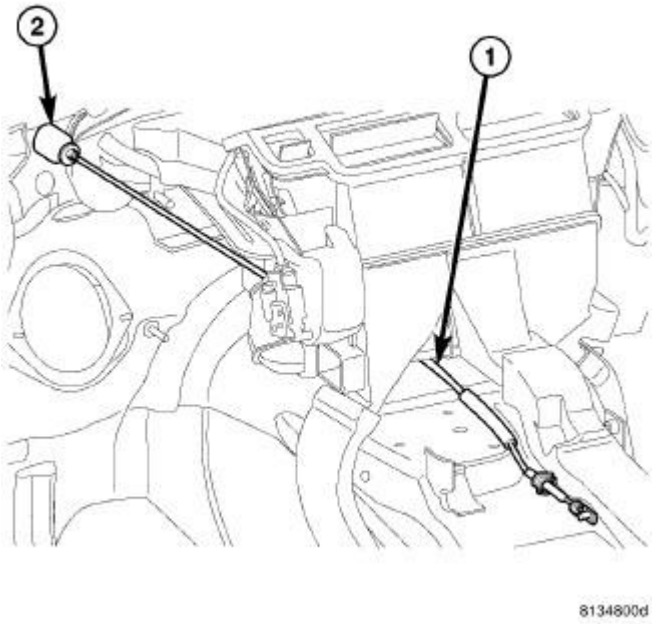

Fig. 305: Gearshift Cable Grommet
Courtesy of CHRYSLER LLC

1 - GEARSHIFT CABLE 2 - GROMMET

10. From under the hood, remove the shift cable grommet (2) from the dash panel.
11. Remove gearshift cable (1) from vehicle.

INSTALLATION

INSTALLATION

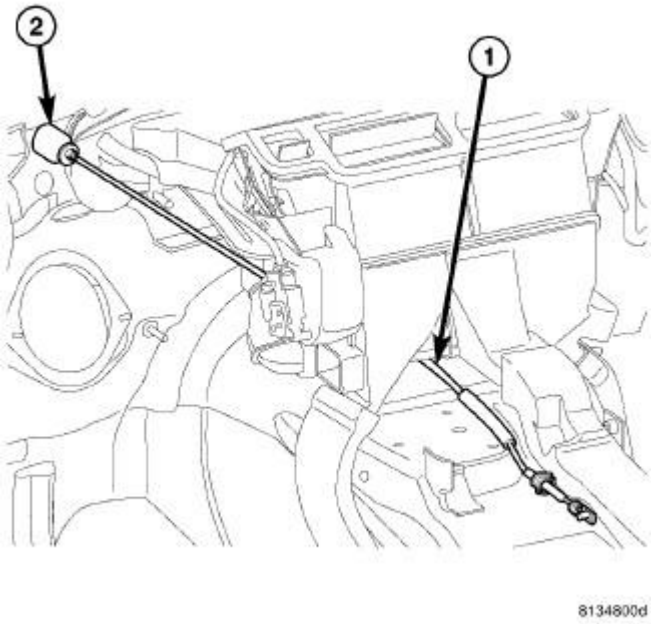

Fig. 306: Gearshift Cable Grommet
Courtesy of CHRYSLER LLC

1 - GEARSHIFT CABLE 2 - GROMMET

1. From under the hood, route the gearshift cable (1) through the dash panel and toward the shifter assembly.
2. Install the grommet (2) to the dash panel.

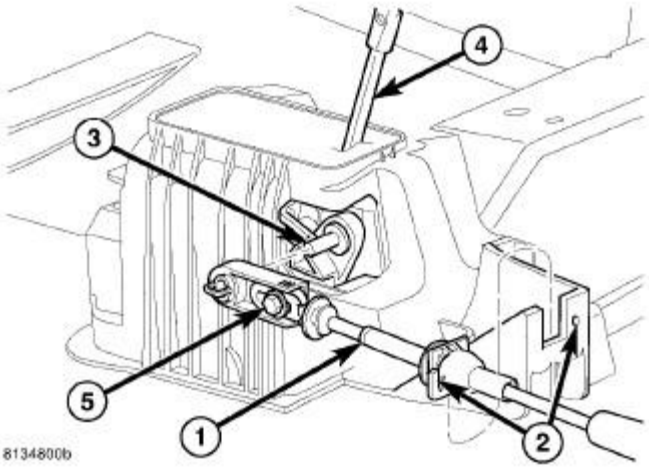

Fig. 307: Gearshift Cable At Shifter Assembly
Courtesy of CHRYSLER LLC

1 - GEARSHIFT CABLE 2 - CABLE RETAINER AND NOTCH 3 - SHIFTER ASSEMBLY PIN 4 - SHIFT LEVER 5 - ADJUSTMENT BOLT

3. Engage the gearshift cable retainer (2) into the notch (2) in the shifter assembly.
4. Install the gearshift cable (1) onto the shift lever pin (3).
5. Loosen the cable adjustment screw (5), if necessary.

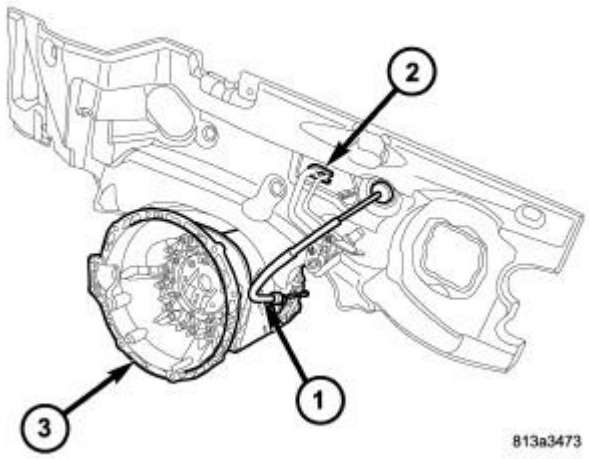

Fig. 308: Gearshift Cable Routing
Courtesy of CHRYSLER LLC

1 - GEARSHIFT CABLE 2 - HEATER HOSES 3 - TRANSMISSION

6. From under the hood, route the gearshift cable (1) forward of the air conditioning lines and the heater hoses (2) and toward the transmission (3) manual lever.
7. Raise vehicle.
8. Verify that the transmission is in the PARK position by trying to rotate the propeller shaft. If the propeller shaft rotates, move the transmission manual shift lever until the PARK system is engaged.

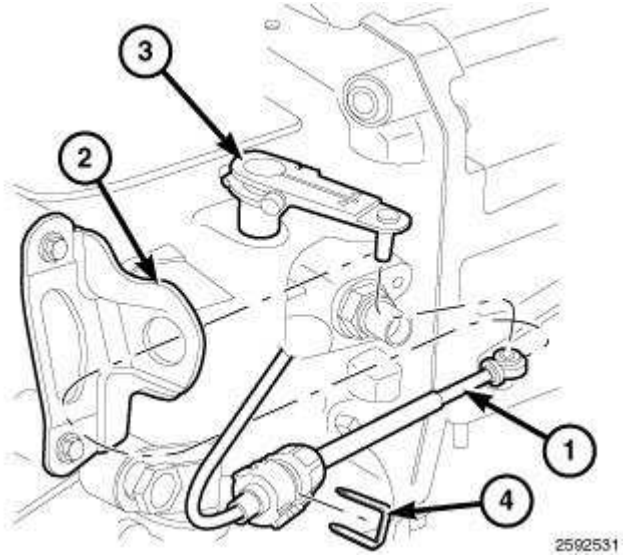

Fig. 309: Remove/Install Gearshift Cable
Courtesy of CHRYSLER LLC

9. Route the gearshift cable (1) through the mounting bracket (2).
10. Engage the gearshift cable (1) eyelet onto the transmission manual shift lever (3).
11. Install the gearshift cable retaining clip (4) (if equipped).
12. Lower vehicle.

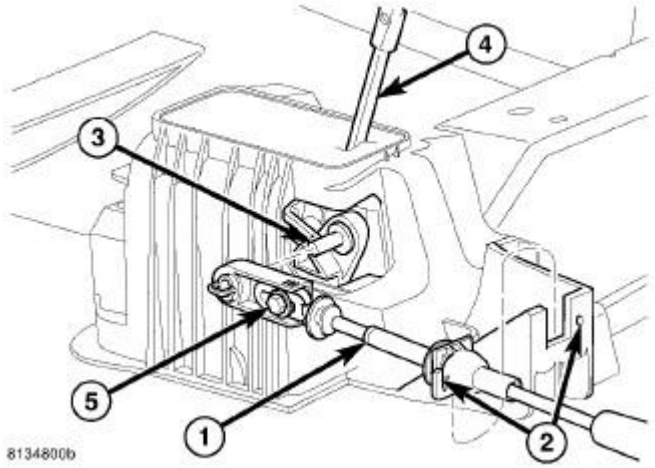

Fig. 310: Gearshift Cable At Shifter Assembly
Courtesy of CHRYSLER LLC

1 - GEARSHIFT CABLE
2 - CABLE RETAINER AND NOTCH
3 - SHIFTER ASSEMBLY PIN
4 - SHIFT LEVER
5 - ADJUSTMENT BOLT

13. Verify that the shifter is in the PARK position and tighten the adjustment screw (5) to 7 N.m (65 in.lbs.).
14. Verify correct shifter operation.
15. If necessary, install the shield, covering the gearshift and park lock cables, to the floorpan and install the bolts to hold the shield to the floorpan.
16. Install the floor console. Refer to **Body/Interior/CONSOLE, Floor - Installation** as necessary.

ADJUSTMENTS

GEARSHIFT CABLE

Check adjustment by starting the engine in PARK and NEUTRAL. Adjustment is CORRECT if the engine starts only in these positions. Adjustment is INCORRECT if the engine starts in one but not both positions. If the engine starts in any position other than PARK or NEUTRAL, or if the engine will not start at all, the park/neutral position contact may be faulty.

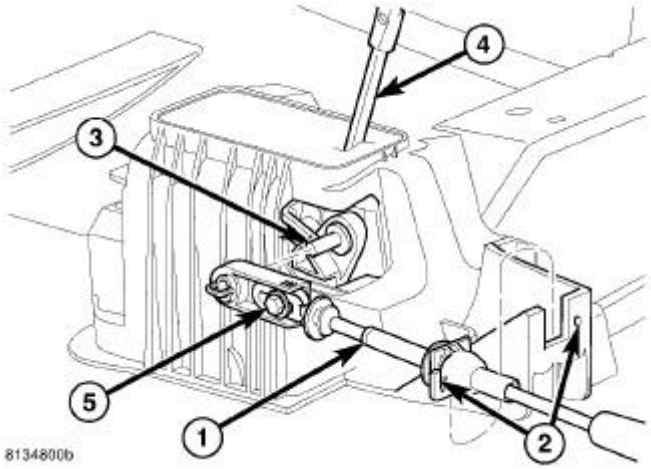

Fig. 311: Gearshift Cable At Shifter Assembly
Courtesy of CHRYSLER LLC

1 - GEARSHIFT CABLE
2 - CABLE RETAINER AND NOTCH
3 - SHIFTER ASSEMBLY PIN
4 - SHIFT LEVER
5 - ADJUSTMENT BOLT

1. Shift transmission into PARK.
2. Remove floor console as necessary for access to the shift cable adjustment. Refer to **Body/Interior/CONSOLE, Floor - Removal** .
3. Loosen the shift cable adjustment screw (5) .
4. Raise vehicle.

5. Unsnap cable eyelet from transmission shift lever.
6. Verify transmission shift lever is in PARK detent by moving lever fully rearward. Last rearward detent is PARK position.
7. Verify positive engagement of transmission park lock by attempting to rotate propeller shaft. Shaft will not rotate when park lock is engaged.
8. Snap cable eyelet onto transmission shift lever.

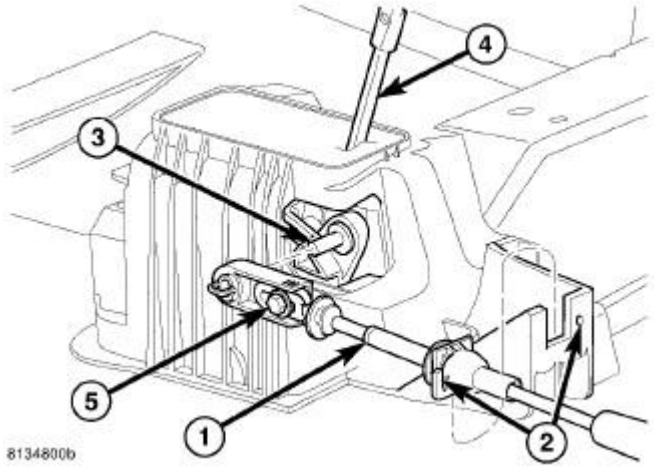

Fig. 312: Gearshift Cable At Shifter Assembly
Courtesy of CHRYSLER LLC

1 - GEARSHIFT CABLE
2 - CABLE RETAINER AND NOTCH
3 - SHIFTER ASSEMBLY PIN
4 - SHIFT LEVER
5 - ADJUSTMENT BOLT

9. Lower vehicle
10. Tighten the shift cable adjustment screw (5) to 7 N.m (65 in.lbs.).
11. Verify correct operation.
12. Install any floor console components removed for access. Refer to **Body/Interior/CONSOLE, Floor - Installation** .

DRIVING CLUTCHES

DESCRIPTION

DESCRIPTION

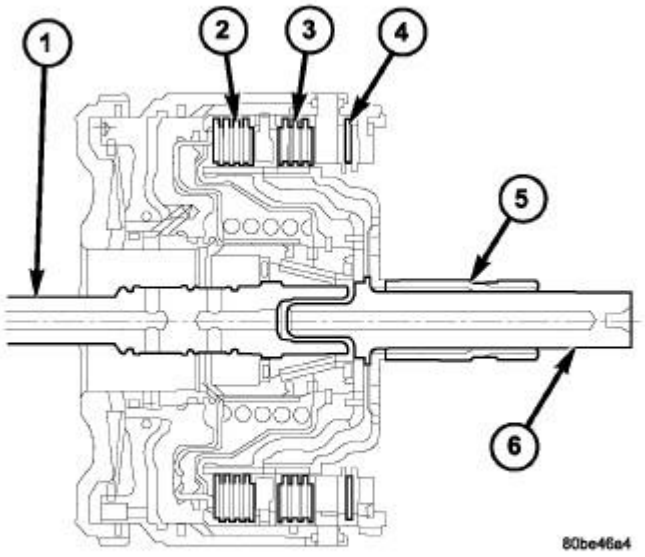

Fig. 313: Input Clutch Assembly
Courtesy of CHRYSLER LLC

1 - INPUT SHAFT
2 - UNDERDRIVE CLUTCH
3 - OVERDRIVE CLUTCH
4 - REVERSE CLUTCH
5 - OVERDRIVE SHAFT
6 - UNDERDRIVE SHAFT

Three hydraulically applied input clutches are used to drive planetary components. The underdrive (2), overdrive (3), and reverse (4) clutches are considered input/driving clutches and are contained within the input clutch assembly . The input clutch assembly also contains:

- Input shaft.
- Input hub.
- Clutch retainer.
- Underdrive piston.
- Overdrive/reverse piston.
- Overdrive hub.
- Underdrive hub.

OPERATION

OPERATION

The three input clutches are responsible for driving different components of the planetary geartrain.

NOTE: **See Transmission and Transfer Case/Automatic - 42RLE - Diagnosis and Testing for a collective view of which clutch elements are applied at each position of the selector lever.**

UNDERDRIVE CLUTCH

The underdrive clutch is hydraulically applied in first, second, and third (direct) gears by pressurized fluid against the underdrive piston. When the underdrive clutch is applied, the underdrive hub drives the rear sun gear.

OVERDRIVE CLUTCH

The overdrive clutch is hydraulically applied in third (direct) and overdrive gears by pressurized fluid against the overdrive/reverse piston. When the overdrive clutch is applied, the overdrive hub drives the front planet carrier.

REVERSE CLUTCH

The reverse clutch is hydraulically applied in reverse gear only by pressurized fluid against the overdrive/reverse piston. When the reverse clutch is applied, the front sun gear assembly is driven.

FLUID AND FILTER

DIAGNOSIS AND TESTING

CAUSES OF BURNT FLUID

Burnt, discolored fluid is a result of overheating which has two primary causes.

1. A result of restricted fluid flow through the main and/or auxiliary cooler. This condition is usually the result of a faulty or improperly installed drainback valve, a damaged oil cooler, or severe restrictions in the coolers and lines caused by debris or kinked lines.
2. Heavy duty operation with a vehicle not properly equipped for this type of operation. Trailer towing or similar high load operation will overheat the transmission fluid if the vehicle is improperly equipped. Such vehicles should have an auxiliary transmission fluid cooler, a heavy duty cooling system, and the engine/axle ratio combination needed to handle heavy loads.

EFFECTS OF INCORRECT FLUID LEVEL

A low fluid level allows the pump to take in air along with the fluid. Air in the fluid will cause fluid pressures to be low and develop slower than normal. If the transmission is overfilled, the gears churn the fluid into foam. This aerates the fluid and causing the same conditions occurring with a low level. In either case, air bubbles cause fluid overheating, oxidation, and varnish buildup which interferes

with valve and clutch operation. Foaming also causes fluid expansion which can result in fluid overflow from the transmission vent or fill tube. Fluid overflow can easily be mistaken for a leak if inspection is not careful.

FLUID CONTAMINATION

Transmission fluid contamination is generally a result of:

- adding incorrect fluid
- failure to clean dipstick and fill tube when checking level
- engine coolant entering the fluid
- internal failure that generates debris
- overheat that generates sludge (fluid breakdown)
- failure to replace contaminated converter after repair

The use of non-recommended fluids can result in transmission failure. The usual results are erratic shifts, slippage, abnormal wear and eventual failure due to fluid breakdown and sludge formation. Avoid this condition by using recommended fluids only.

The dipstick cap and fill tube should be wiped clean before checking fluid level. Dirt, grease and other foreign material on the cap and tube could fall into the tube if not removed beforehand. Take the time to wipe the cap and tube clean before withdrawing the dipstick.

Engine coolant in the transmission fluid is generally caused by a cooler malfunction. The only remedy is to replace the radiator as the cooler in the radiator is not a serviceable part. If coolant has circulated through the transmission, an overhaul is necessary.

The torque converter should be replaced whenever a failure generates sludge and debris. This is necessary because normal converter flushing procedures will not remove all contaminants.

STANDARD PROCEDURE

CHECK OIL LEVEL

1. Verify that the vehicle is parked on a level surface.
2. Remove the dipstick tube cap.

> **WARNING: Risk of accident from vehicle starting off by itself when engine running. Risk of injury from contusions and burns if you insert your hands into the engine when it is started or when it is running. Secure vehicle to prevent it from moving off by itself. Wear properly fastened and close-fitting work clothes. Do not touch hot or rotating parts.**

3. Actuate the service brake. Start engine and let it run at idle speed in selector lever position "P".

4. Shift through the transmission modes several times with the vehicle stationary and the engine idling
5. Warm up the transmission, wait at least 2 minutes and check the oil level with the engine running. Push the Oil Dipstick 9336A into transmission fill tube until the dipstick tip contacts the oil pan and pull out again, read off oil level, repeat if necessary.

NOTE: The dipstick protrudes from the fill tube when installed.

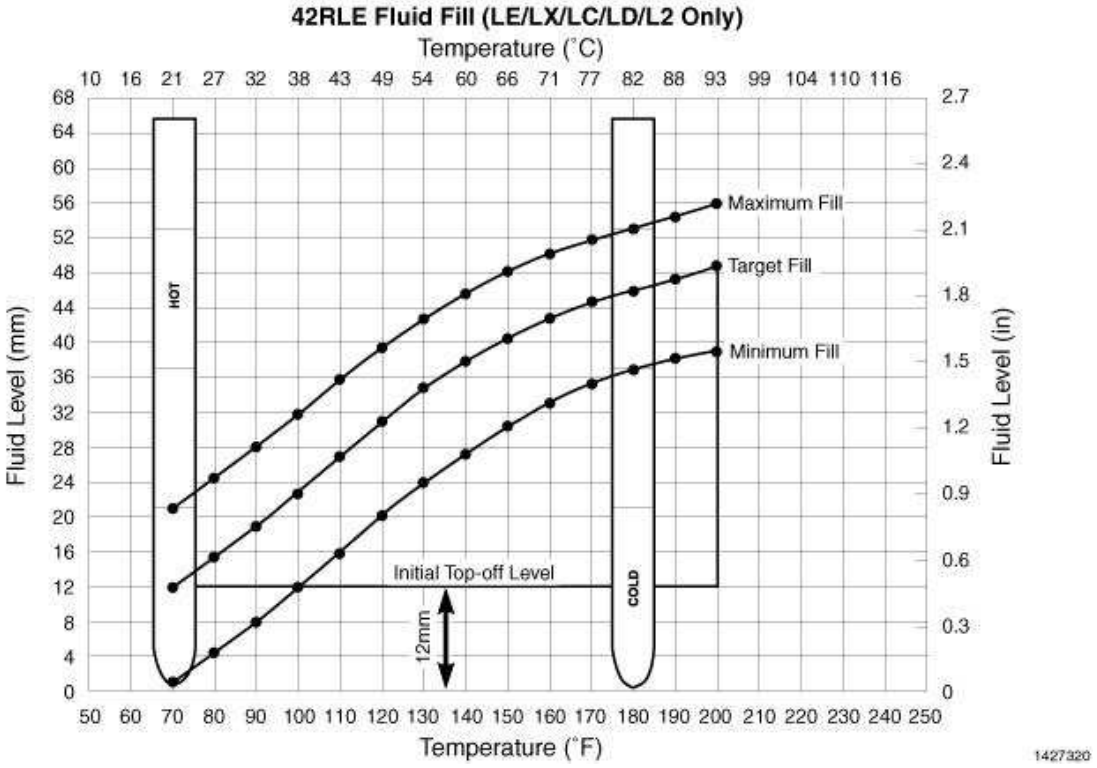

Fig. 314: 42RLE Fluid Temperature Chart
Courtesy of CHRYSLER LLC

6. Check transmission oil temperature using the appropriate scan tool.
7. The transmission Oil Dipstick 9336A has indicator marks every 10mm. Determine the height of the oil level on the dipstick and using the height, the transmission temperature, and the Transmission Fluid Graph, determine if the transmission oil level is correct.
8. Add or remove oil as necessary and recheck the oil level.
9. Once the oil level is correct, install the dipstick tube cap.

FLUID/FILTER SERVICE

NOTE: Only fluids of the type labeled Mopar® ATF+4, Automatic Transmission Fluid, should be used in the transmission sump. A filter change should be made at the time of the transmission oil change. The magnet (on the inside of the oil pan) should also be cleaned with a clean, dry cloth.

NOTE: **If the transmission is disassembled for any reason, the fluid and filter should be changed.**

1. Raise vehicle on a hoist. Place a drain container with a large opening, under transmission oil pan.

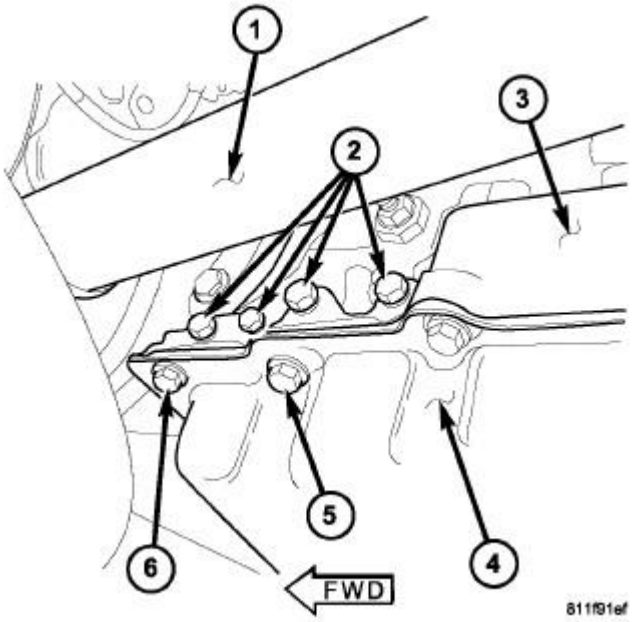

Fig. 315: Pan Fastener
Courtesy of CHRYSLER LLC

1 - FRONT DRIVESHAFT
2 - PRESSURE PORTS
3 - TRANSMISSION CASE
4 - TRANSMISSION OIL PAN
5 - SECOND TRANSMISSION OIL PAN BOLT ON LEFT SIDE
6 - FIRST TRANSMISSION OIL PAN BOLT

NOTE: **One of the oil pan bolts (5) has a sealing patch applied from the factory. Separate this bolt for reuse.**

2. Loosen pan bolts and tap the pan at one corner to break it loose allowing fluid to drain, then remove the oil pan.
3. Install a new filter and o-ring on bottom of the valve body and tighten retaining screws to 5 N.m (45 in. lbs.).

NOTE: **Before installing the oil pan bolt (5) in the bolt hole located between the**

torque converter clutch on and U/D clutch pressure tap circuits , it will be necessary to replentish the sealing patch on the bolt using Mopar® Lock AND Seal Adhesive.

4. Clean the oil pan and magnet. Reinstall pan using new Mopar® Silicone Adhesive sealant. Tighten oil pan bolts to 20 N.m (14.5 ft. lbs.).
5. Pour four quarts of Mopar® ATF+4, Automatic Transmission Fluid, through the dipstick opening.
6. Start engine and allow to idle for at least one minute. Then, with parking and service brakes applied, move selector lever momentarily to each position, ending in the park or neutral position.
7. Check the transmission fluid level and add an appropriate amount to bring the transmission fluid level to 3mm (1/8 in.) below the lowest mark on the dipstick.
8. Recheck the fluid level after the transmission has reached normal operating temperature, 82° C (180°F).
9. To prevent dirt from entering transmission, make certain that dipstick is fully seated into the dipstick opening.

TRANSMISSION FILL

To avoid overfilling transmission after a fluid change or overhaul, perform the following procedure:

1. Remove dipstick and insert clean funnel in transmission fill tube.
2. Add following initial quantity of Mopar® ATF +4, Automatic Transmission Fluid, to transmission:
   a. If only fluid and filter were changed, add **3 pints (1-1/2 quarts)** of ATF +4 to transmission.
   b. If transmission was completely overhauled, or torque converter was replaced or drained, add **12 pints (6 quarts)** of ATF +4 to transmission.
3. Apply parking brakes.
4. Start and run engine at normal curb idle speed.
5. Apply service brakes, shift transmission through all gear ranges then back to NEUTRAL, set parking brake, and leave engine running at curb idle speed.
6. Remove funnel, insert dipstick and check fluid level. If level is low, **add fluid to bring level to MIN mark on dipstick.** Check to see if the oil level is equal on both sides of the dipstick. If one side is noticably higher than the other, the dipstick has picked up some oil from the dipstick tube. Allow the oil to drain down the dipstick tube and re-check.
7. Drive vehicle until transmission fluid is at normal operating temperature.
8. With the engine running at curb idle speed, the gear selector in NEUTRAL, and the parking brake applied, check the transmission fluid level.

CAUTION: Do not overfill transmission, fluid foaming and shifting problems can result.

9. Add fluid to bring level up to MAX arrow mark.

When fluid level is correct, shut engine off, release park brake, remove funnel, and install dipstick in

fill tube.

GEARTRAIN, PLANETARY

DESCRIPTION

DESCRIPTION

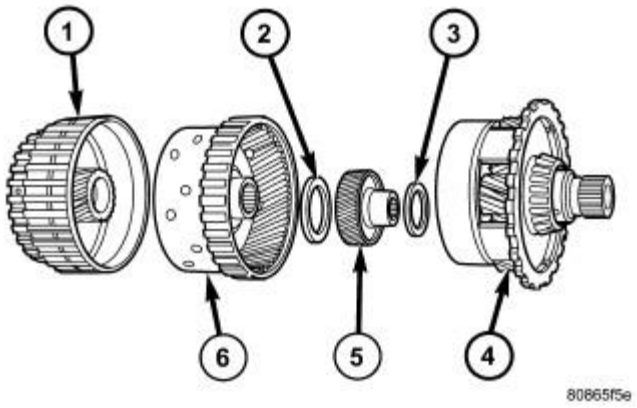

Fig. 316: Planetary Geartrain
Courtesy of CHRYSLER LLC

1 - FRONT SUN GEAR ASSEMBLY
2 - #6 THRUST BEARING
3 - #7 THRUST BEARING
4 - REAR CARRIER FRONT ANNULUS ASSEMBLY
5 - REAR SUN GEAR
6 - FRONT CARRIER REAR ANNULUS ASSEMBLY

The planetary geartrain is located between the input clutch assembly and the rear of the transmission case. The planetary geartrain consists of two sun gears, two planetary carriers, two annulus (ring) gears, and one output shaft .

OPERATION

OPERATION

The planetary geartrain utilizes two planetary gear sets that connect the transmission input shaft to the output shaft. Input and holding clutches drive or lock different planetary members to change output ratio or direction.

HOLDING CLUTCHES

DESCRIPTION

DESCRIPTION

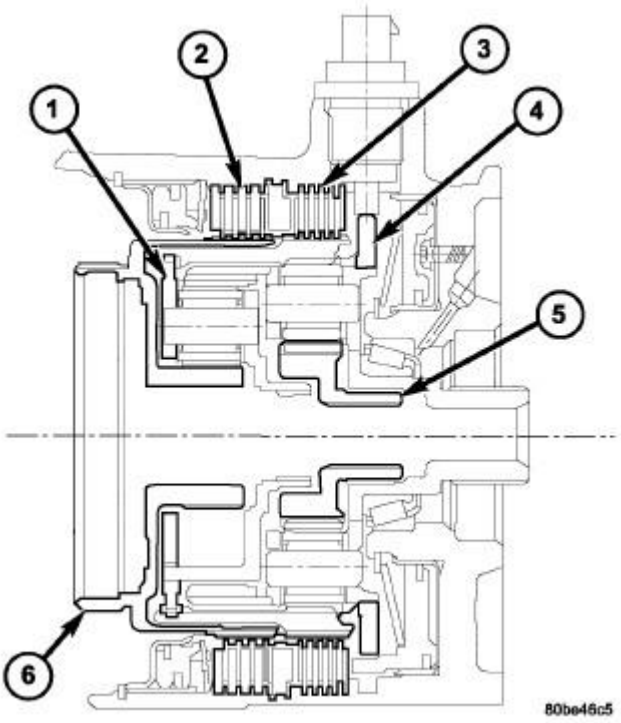

Fig. 317: 2/4 and Low/Reverse Clutches
Courtesy of CHRYSLER LLC

1 - FRONT PLANET CARRIER/REAR ANNULUS
2 - 2/4 CLUTCH
3 - L/R CLUTCH
4 - REAR PLANET CARRIER/FRONT ANNULUS
5 - REAR SUN GEAR
6 - FRONT SUN GEAR ASSEMBLY

Two hydraulically applied multi-disc clutches are used to hold planetary geartrain components stationary while the input clutches drive others. The 2/4 (2) and Low/Reverse (3) clutches are considered holding clutches and are contained at the rear of the transmission case .

OPERATION

OPERATION

NOTE: **See Transmission and Transfer Case/Automatic - 42RLE - Diagnosis and Testing for a collective view of which clutch elements are applied at each**

position of the selector lever.

2/4 CLUTCH

The 2/4 clutch is hydraulically applied in second and fourth gears by pressurized fluid against the 2/4 clutch piston. When the 2/4 clutch is applied, the front sun gear assembly is held or grounded to the transmission case.

LOW/REVERSE CLUTCH

The Low/Reverse clutch is hydraulically applied in park, reverse, neutral, and first gears by pressurized fluid against the Low/Reverse clutch piston. When the Low/Reverse clutch is applied, the front planet carrier/rear annulus assembly is held or grounded to the transmission case.

MECHANISM, BRAKE TRANSMISSION SHIFT INTERLOCK

DESCRIPTION

DESCRIPTION

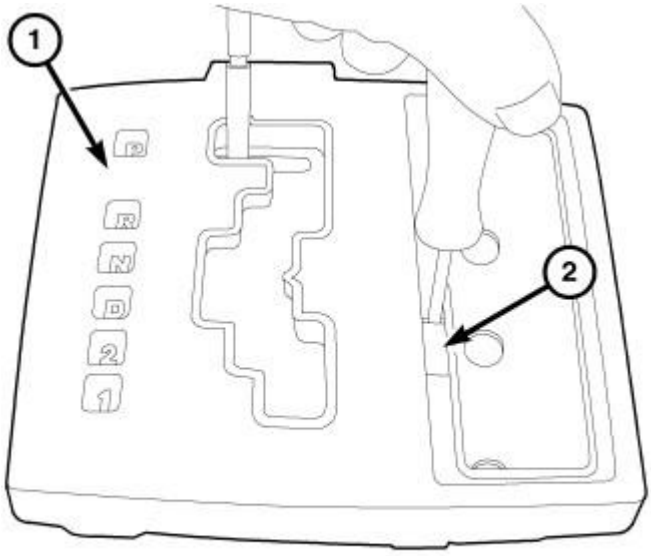

81d2c3ce

Fig. 318: Brake Transmission Shift Interlock (BTSI) Override
Courtesy of CHRYSLER LLC

The Brake Transmission Shifter/Ignition Interlock (BTSI) is a electronicly operated system that prevents the transmission gear shifter from being moved out of PARK without the proper driver inputs. The system also contains a solenoid that is integral to the shifter assembly.

A BTSI override (2) is provided on the inside of the shifter mechanism (1) to allow the vehicle to be shifted out of PARK in the event of an electrical failure.

OPERATION

OPERATION

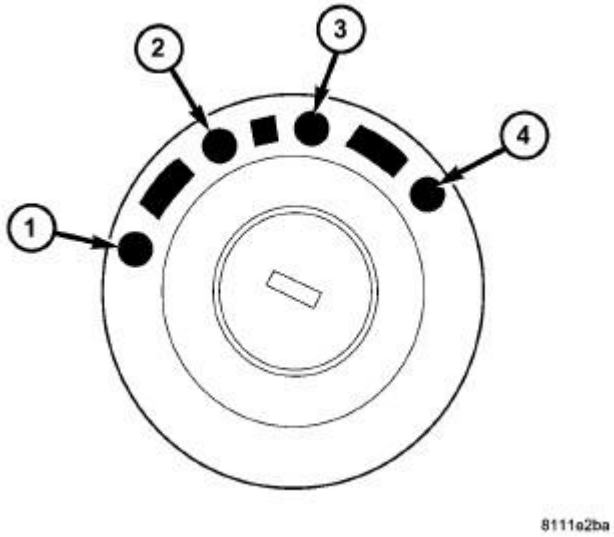

Fig. 319: Ignition Key/Switch Positions
Courtesy of CHRYSLER LLC

1 - LOCK 2 - ACC 3 - ON 4 - START

The Brake Transmission Shifter/Ignition Interlock (BTSI) is engaged whenever the ignition switch is in the LOCK (1) position. An additional electrically activated feature will prevent shifting out of the PARK position unless the brake pedal is depressed at least one-half inch. A solenoid in the shifter assembly is energized when the brake pedal is depressed. When the key is in the ON position and the brake pedal is depressed, the shifter is unlocked and will move into any position. An electronic micro switch also prevents the ignition switch from being turned to the LOCK position, unless the shifter is in the gated PARK position.

The following chart describes the normal operation of the Brake Transmission Shift Interlock (BTSI) system. If the "expected response" differs from the vehicle's response, then system repair and/or adjustment is necessary.

ACTION	EXPECTED RESPONSE
1. Turn key to the "ACC" position and depress brake pedal.	1. Shifter CAN be shifted out of park.
2. Turn key to the "ON" position, with foot off of brake pedal.	2. Shifter CANNOT be shifted out of park.

3. Turn key to the "ON" position and depress the brake pedal.	3. Shifter CAN be shifted out of park.
4. Leave shifter in any gear position, except PARK, and try to return key to the "LOCK" position.	4. Key cannot be returned to the "LOCK" position.
5. Return shifter to "PARK" and try to remove the key.	5. Key can be removed (after returning to "LOCK" position).
6. With the key removed, and the brake depressed, try to shift out of "PARK".	6. Shifter cannot be shifted out of "PARK".
NOTE: Any failure to meet these expected responses requires system adjustment or repair.	

BTSI Override

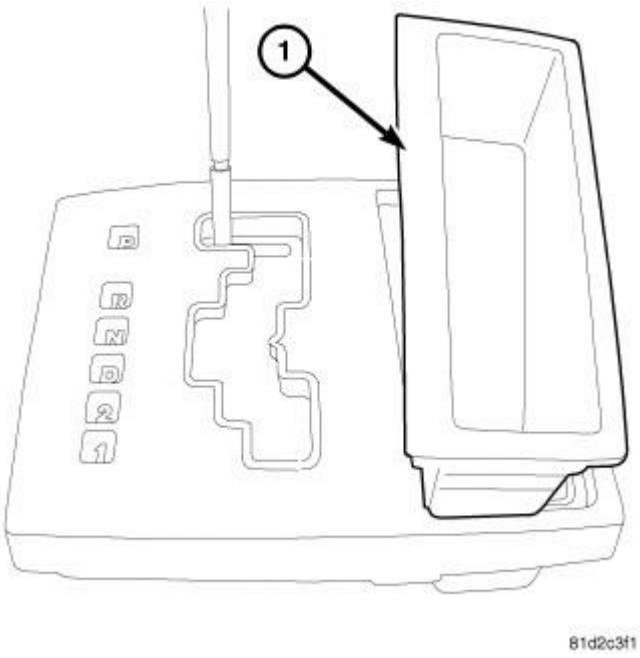

81d2c3f1

Fig. 320: Cubby Bin Liner
Courtesy of CHRYSLER LLC

In the event of an electrical failure, the vehicle can be shifted out of PARK by using the following procedure.

1. Turn the key to the ACC or ON position.
2. Remove the liner (1) to the cubby bin on the right side of the shifter.

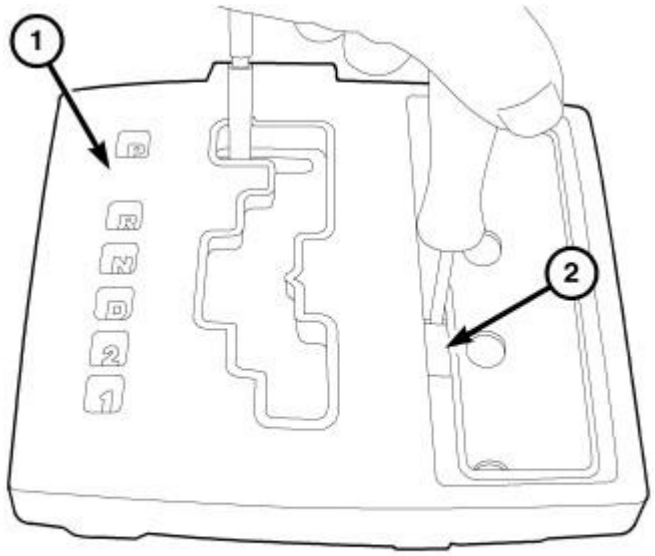

81d2c3ce

Fig. 321: Brake Transmission Shift Interlock (BTSI) Override
Courtesy of CHRYSLER LLC

3. Depress the BTSI override (2) on the inside of the shifter assembly (1).
4. While the override is depressed, move the shifter out of the PARK position.
5. Return the cubby bin liner to its original location.

DIAGNOSIS AND TESTING

BRAKE TRANSMISSION SHIFT INTERLOCK

SYSTEM VERIFICATION

1. Verify that the key can only be removed in the PARK position
2. When the shift lever is in PARK, the ignition key cylinder should rotate freely from ACC to LOCK. When the shifter is in any other gear or neutral position, the ignition key cylinder should not rotate to the LOCK position.
3. Shifting out of PARK should not be possible when the ignition key cylinder is in the ACC position and the brake pedal is not depressed.
4. Shifting out of PARK should not be possible while applying normal force on the shift lever and ignition key cylinder is in the ACC, ON, or START positions unless the foot brake pedal is depressed approximately 1/2 inch (12mm).
5. Shifting out of PARK should not be possible when the ignition key cylinder is in the LOCK position, regardless of the brake pedal position.
6. Shifting between any gears, NEUTRAL or into PARK may be done without depressing foot brake pedal with ignition switch in ACC, ON, or START positions.

ADJUSTMENTS

BRAKE TRANSMISSION SHIFT INTERLOCK

The park interlock cable is part of the brake/shift lever interlock system. Correct cable adjustment is important to proper interlock operation. The gear shift and park lock cables must both be correctly adjusted in order to shift out of PARK.

ADJUSTMENT PROCEDURE

1. Remove floor console as necessary for access to the park lock cable. Refer to **Body/Interior/CONSOLE, Floor - Removal** .
2. Shift the transmission into the PARK position.
3. Turn ignition switch to LOCK position. **Be sure ignition key cylinder is in the LOCK position. Cable will not adjust correctly in any other position.**

   NOTE: If the key will not turn to the LOCK position, pull up on the cable lock button and manually move the cable in and out until the key can be turned to the LOCK position.

4. Pull cable lock button up to release cable, if necessary.
5. Remove and discard the cable adjuster lock pin, if a new cable is being installed.
6. Ensure that the cable is free to self-adjust by pushing cable rearward and releasing.
7. Push lock button down until it snaps in place. The lock should be 1-2mm below the surface of the cylinderical portion of the cable adjustment housing.

BTSI FUNCTION CHECK

1. Verify removal of ignition key allowed in PARK position only.
2. When the shift lever is in PARK, the ignition key cylinder should rotate freely LOCK position. When the shifter is in any other position, the ignition key should not rotate to the LOCK position.
3. Shifting out of PARK should not be possible when the ignition key cylinder is in the ACC position and the brake pedal is not depressed.
4. Shifting out of PARK should not be possible while applying normal force on the shift lever and ignition key cylinder is in the ACC, ON, or START positions unless the foot brake pedal is depressed approximately 1/2 inch (12mm).
5. Shifting out of PARK should not be possible when the ignition key cylinder is in the LOCK position, regardless of the brake pedal position.
6. Shifting between any gears, NEUTRAL or into PARK may be done without depressing foot brake pedal with ignition switch in ACC, ON, or START positions.
7. The floor shifter lever and gate positions should be in alignment with all transmission detent positions.
8. Engine starts must be possible with shifter lever in PARK or NEUTRAL gate positions only. Engine starts must not be possible in any other gate positions other than PARK or NEUTRAL.
9. With the shifter lever handle in the:

- PARK position- apply forward force on center of handle and remove pressure. Engine start must be possible.
- PARK position- apply rearward force on center of handle and remove pressure. Engine start must be possible.
- NEUTRAL position- engine start must be possible.
- NEUTRAL position, engine running and brakes applied- Apply forward force on center of shift handle. Transmission should not be able to shift into REVERSE detent.

PUMP, TRANSMISSION OIL

DESCRIPTION

DESCRIPTION

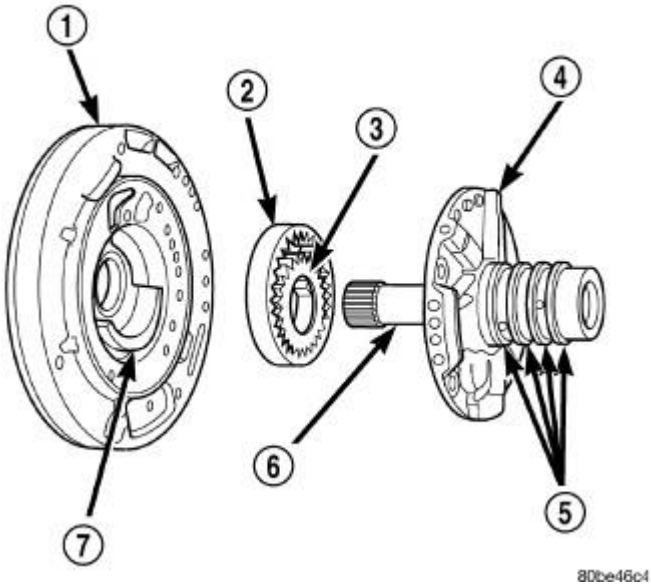

Fig. 322: Oil Pump Assembly
Courtesy of CHRYSLER LLC

1 - PUMP HOUSING
2 - OUTER PUMP GEAR
3 - INNER PUMP GEAR
4 - REACTION SHAFT SUPPORT
5 - SEAL RINGS (4)
6 - REACTION SHAFT
7 - CRESCENT

The oil pump is located in the pump housing inside the bell housing of the transmission case. The oil pump assembly consists of an inner (3) and outer (2) gear, a housing (1), and a cover that also serves as the reaction shaft support (6).

OPERATION

OPERATION

As the torque converter rotates, the converter hub rotates the inner and outer gears. As the gears rotate, the clearance between the gear teeth increases in the crescent area, and creates a suction at the inlet side of the pump. This suction draws fluid through the pump inlet from the oil pan. As the clearance between the gear teeth in the crescent area decreases, it forces pressurized fluid into the pump outlet and to the valve body.

DISASSEMBLY

DISASSEMBLY

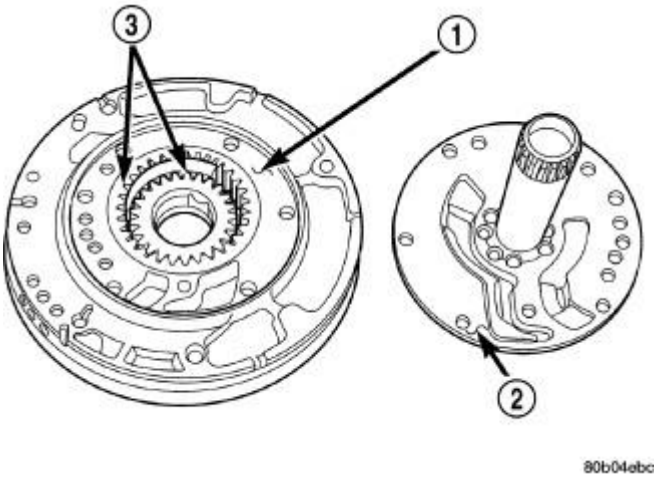

Fig. 323: Reaction Shaft Support
Courtesy of CHRYSLER LLC

1 - PUMP HOUSING 2 - REACTION SHAFT SUPPORT 3 - PUMP GEARS

1. Remove the reaction shaft support bolts.
2. Remove the reaction shaft support (2) from the pump housing (1).

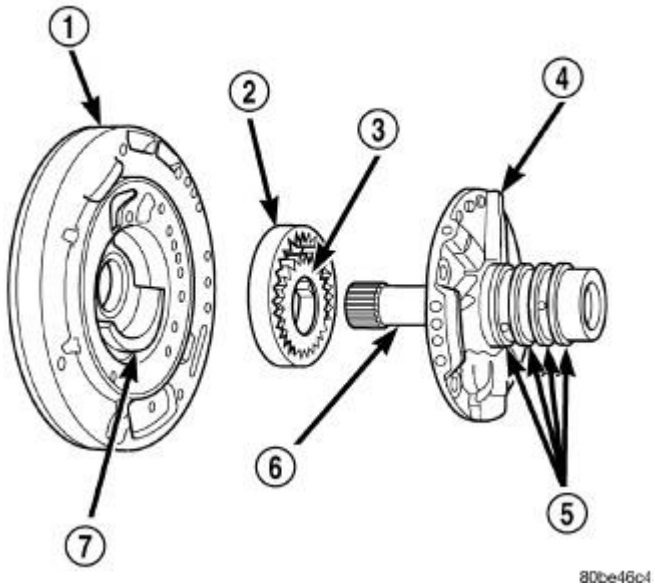

Fig. 324: Oil Pump Assembly
Courtesy of CHRYSLER LLC

1 - PUMP HOUSING
2 - OUTER PUMP GEAR
3 - INNER PUMP GEAR
4 - REACTION SHAFT SUPPORT
5 - SEAL RINGS (4)
6 - REACTION SHAFT
7 - CRESCENT

3. Remove the pump gears (2, 3) and check for wear and damage on pump housing (1) and gears (2, 3).

CLEANING

CLEANING

Clean pump and support components with solvent and dry them with compressed air.

INSPECTION

INSPECTION

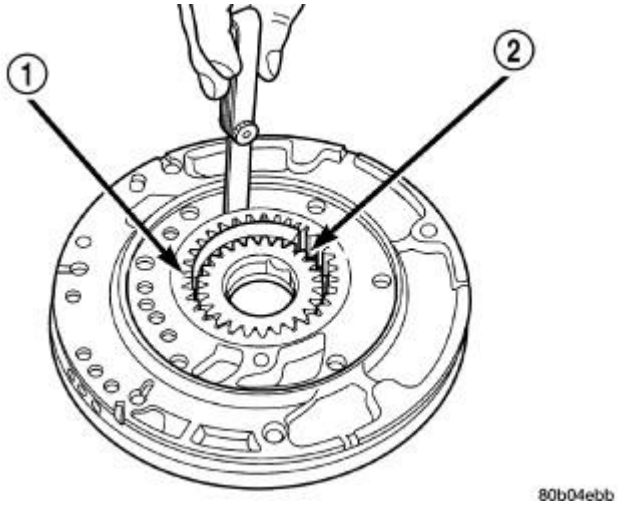

Fig. 325: Measure Outer Gear to Pocket
Courtesy of CHRYSLER LLC

1 - OUTER GEAR 2 - POCKET

1. Re-install the gears and check clearances.
2. Measure the clearance between the outer gear (1) and the pump pocket (2) . Clearance should be 0.089-0.202 mm (0.0035-0.0079 in.).
3. Measure clearance between outer gear and crescent. Clearance should be 0.060-0.298 mm (0.0023-0.0117 in.).
4. Measure clearance between inner gear and crescent. Clearance should be 0.093-0.385 mm (0.0036-0.0151 in.).

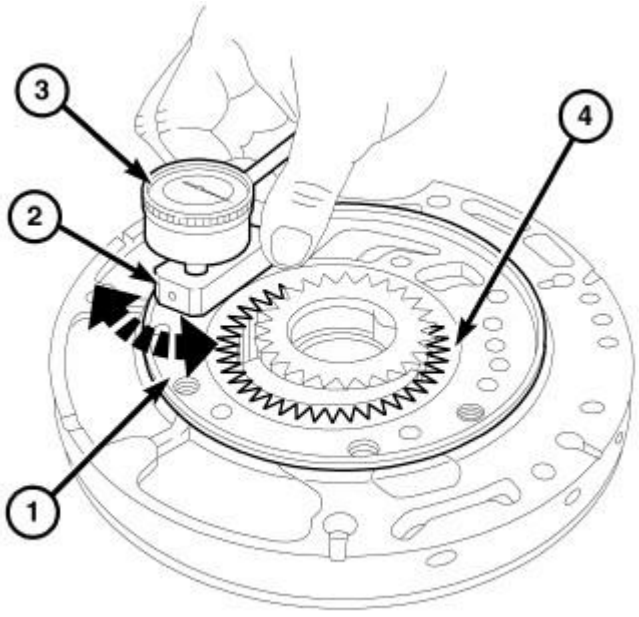

Fig. 326: SCOOTER BLOCK
Courtesy of CHRYSLER LLC

1 - OIL PUMP HOUSING FLAT SURFACE 2 - SCOOTER BLOCK D-115-2A 3 - 9524 90° DIAL INDICATOR or C-3339A DIAL INDICATOR 4 - PUMP GEAR

5. Install the 9524 90° or the C-3339A Dial indicator (3) into the Scooter Block D-115-2A (2).
6. Zero the Dial Indicator (3) in the scooter block assembly on a flat surface (1) of the pump housing.
7. While applying slight downward pressure rotate the front of the scooter block side ways onto the outer gear (4).
8. Measure and record the gear height to the pump housing case clearance.
9. The clearance should be 0.020-0.046 mm (0.0008-0.0018 in.). If not replace the oil pump assembly.

ASSEMBLY

ASSEMBLY

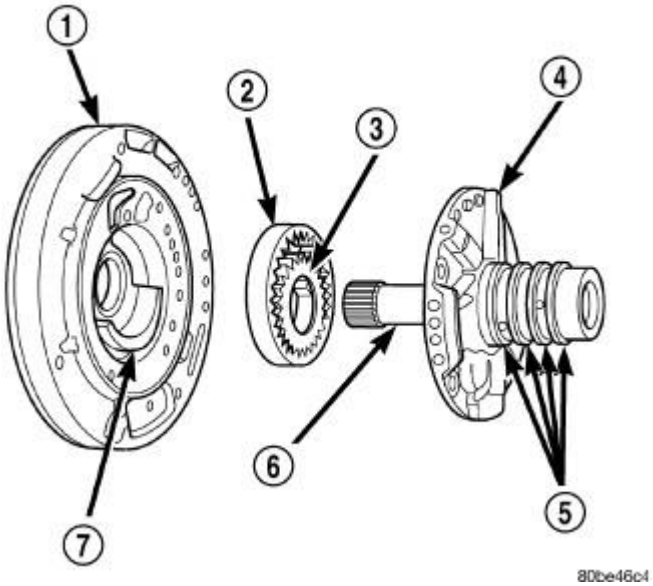

Fig. 327: Oil Pump Assembly
Courtesy of CHRYSLER LLC

1 - PUMP HOUSING 2 - OUTER PUMP GEAR 3 - INNER PUMP GEAR 4 - REACTION SHAFT SUPPORT

5 - SEAL RINGS (4)
6 - REACTION SHAFT
7 - CRESCENT

1. Assemble oil pump as shown in illustration
2. Install and torque reaction shaft support-to-oil pump housing bolts to 28 N.m (250 in. lbs.) torque.

RELAY, TRANSMISSION CONTROL

DESCRIPTION

DESCRIPTION

NOTE: Due to different power control configurations, the Transmission Control Relay (if equipped) may be referred to as a PCM relay.

The relay is supplied fused B+ voltage, energized by the TCM, and is used to supply power to the solenoid pack when the transmission is in normal operating mode.

OPERATION

OPERATION

NOTE: Due to different power control configurations, the Transmission Control Relay (if equipped) may be referred to as a PCM relay.

When the relay is "off", no power is supplied to the solenoid pack and the transmission is in "limp-in" mode. After a controller reset, the TCM energizes the relay. Prior to this, the TCM verifies that the contacts are open by checking for no voltage at the switched battery terminals. After this is verified, the voltage at the solenoid pack pressure switches is checked. After the relay is energized, the TCM monitors the terminals to verify that the voltage is greater than 3 volts.

SEAL, OIL PUMP

REMOVAL

REMOVAL

1. Remove the transmission from the vehicle. See **Transmission and Transfer Case/Automatic - 42RLE - Removal**.
2. Remove the torque converter from the transmission bellhousing.
3. Use a screw mounted in a slide hammer to remove oil pump seal.

INSTALLATION

INSTALLATION

1. Clean and inspect oil pump seal seat. Then install seal using Seal Installer C-4193A.
2. Clean and inspect torque converter hub. If nicks, scratches or hub wear are found, torque converter replacement will be required.

CAUTION: If the torque converter is being replaced, apply a light coating of grease to the crankshaft pilot hole. Also inspect the engine drive plate for cracks. If any cracks are found replace the drive plate. Do not attempt to repair a cracked drive plate. Always use new torque converter to drive plate bolts.

3. Apply a light film of transmission oil to the torque converter hub and oil seal lips. Then install torque converter into transmission. Be sure that the hub lugs mesh with the front pump lugs when installing.
4. Reinstall the transmission into the vehicle. See **Transmission and Transfer Case/Automatic - 42RLE - Installation**.

SEAL, OUTPUT SHAFT

REMOVAL

REMOVAL

1. Remove the propeller shaft. Refer to **Differential and Driveline/Propeller Shaft - Removal** . Move propeller shaft to the right and tie up.
2. Verify that the transmission is in PARK in order to prepare for the removal of the output shaft nut.
3. Remove the nut holding the propeller shaft flange to the output shaft and remove the flange.
4. Remove the output shaft seal with suitable screw and slide hammer.

INSTALLATION

INSTALLATION

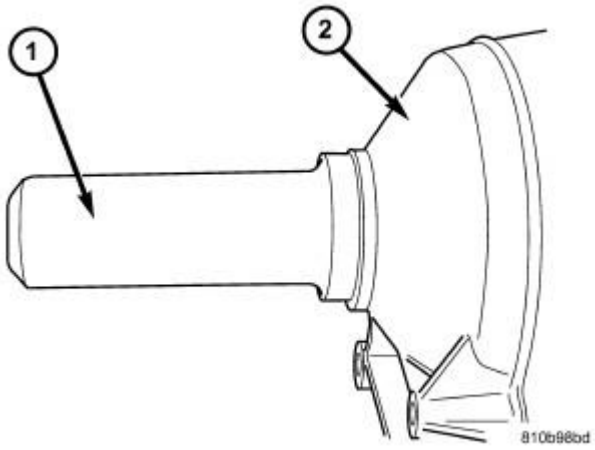

Fig. 328: Installing A New Transmission Rear Seal
Courtesy of CHRYSLER LLC

1 - SEAL INSTALLER 8902A 2 - TRANSMISSION CASE

1. Position the new output shaft seal over the output shaft and against the transmission case.
2. Use Seal Installer 8902A (1) to install the seal.
3. Verify that the transmission is in PARK in order to prepare for the installation of the output shaft nut.
4. Install the propeller shaft flange onto the output shaft and install an new flange nut. Tighten the flange nut to 200 N.m (147 ft.lbs.).

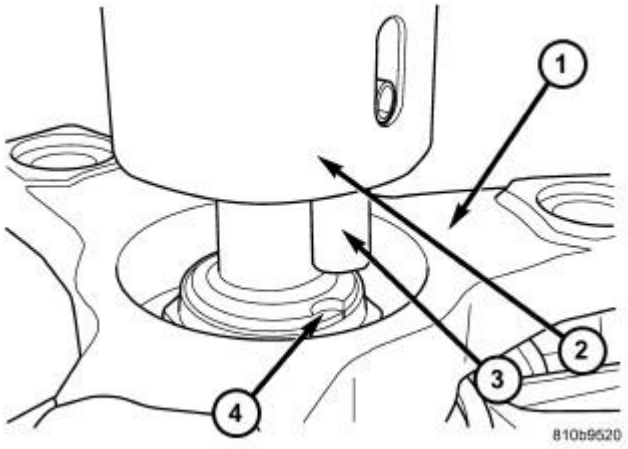

Fig. 329: Align Staking Tool 9078
Courtesy of CHRYSLER LLC

1 - PROPELLER SHAFT FLANGE 2 - STAKING TOOL 9078

3 - ALIGNMENT PIN 4 - OUTPUT SHAFT NOTCH

5. Stake the output shaft nut to the output shaft as follows. Place the Staking Tool 9078 (2) and Driver Handle C-4171 onto the output shaft.
6. Rotate the Staking Tool 9078 (2) until the alignment pin (3) engages the output shaft notch (4) .

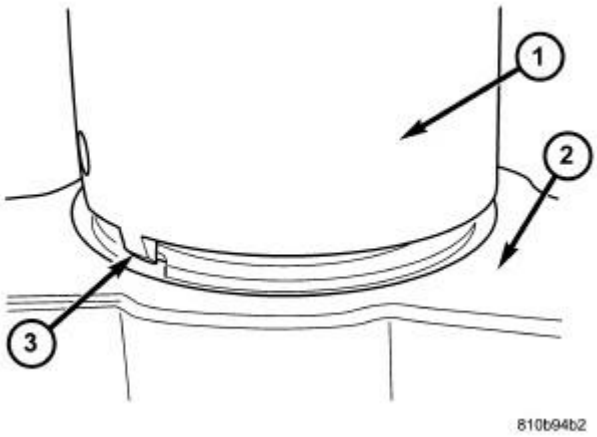

Fig. 330: Stake Output Shaft Nut
Courtesy of CHRYSLER LLC

1 - STAKING TOOL 9078 2 - PROPELLER FLANGE 3 - STAKING PIN

7. Press downward on the staking tool until the staking pin (3) contacts the output shaft nut flange (2) .
8. Strike the Driver handle C-4171 with a suitable hammer until the output shaft nut is securely staked to the output shaft.
9. Install the propeller shaft. Refer to **Differential and Driveline/Propeller Shaft - Installation** .

SENSOR, SPEED, INPUT

DESCRIPTION

DESCRIPTION

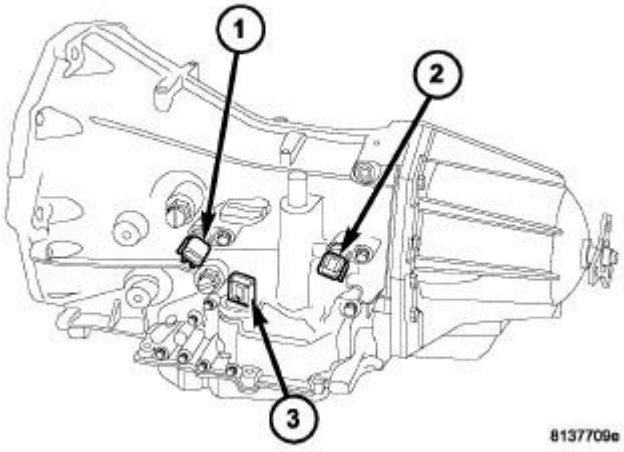

Fig. 331: Input And Output Speed Sensors & Transmission Range Sensor
Courtesy of CHRYSLER LLC

1 - INPUT SPEED SENSOR 2 - OUTPUT SPEED SENSOR 3 - TRANSMISSION RANGE SENSOR

The Input (1) and Output (2) Speed Sensors are two-wire magnetic pickup devices that generate AC signals as rotation occurs. They are mounted in the left side of the transmission case and are considered primary inputs to the Transmission Control Module (TCM).

OPERATION

OPERATION

The Input Speed Sensor provides information on how fast the input shaft is rotating. As the teeth of the input clutch hub pass by the sensor coil, an AC voltage is generated and sent to the TCM. The TCM interprets this information as input shaft RPM.

The Output Speed Sensor generates an AC signal in a similar fashion, though its coil is excited by rotation of the rear planetary carrier lugs. The TCM interprets this information as output shaft RPM.

The TCM compares the input and output speed signals to determine the following:

- Transmission gear ratio
- Speed ratio error detection
- CVI calculation

The TCM also compares the input speed signal and the engine speed signal to determine the following:

- Torque converter clutch slippage

- Torque converter element speed ratio

REMOVAL

REMOVAL

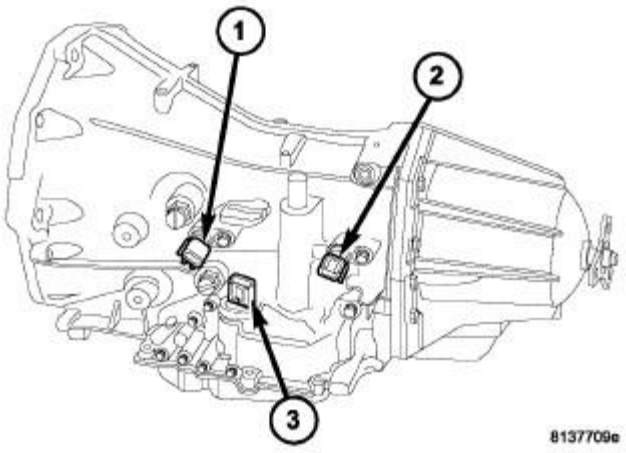

Fig. 332: Input And Output Speed Sensors & Transmission Range Sensor
Courtesy of CHRYSLER LLC

1 - INPUT SPEED SENSOR 2 - OUTPUT SPEED SENSOR 3 - TRANSMISSION RANGE SENSOR

1. Raise vehicle.
2. Place a suitable fluid catch pan under the transmission.
3. Remove the wiring connector from the input speed sensor (1) .

NOTE: The speed sensor bolt has a sealing patch applied from the factory. Be sure to reuse the same bolt.

4. Remove the bolt holding the input speed sensor (1) to the transmission case.
5. Remove the input speed sensor (1) from the transmission case.

INSTALLATION

INSTALLATION

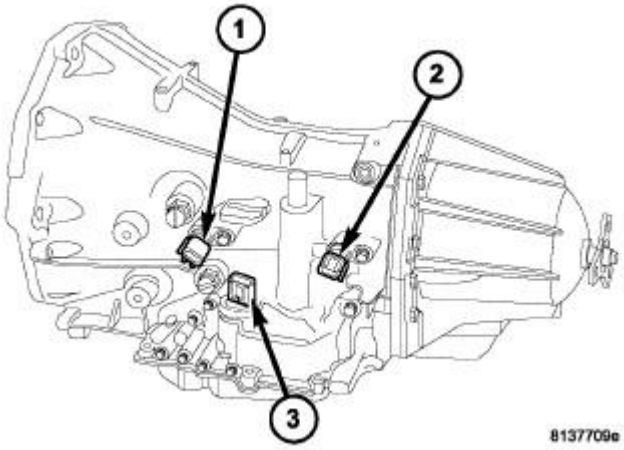

Fig. 333: Input And Output Speed Sensors & Transmission Range Sensor
Courtesy of CHRYSLER LLC

1 - INPUT SPEED SENSOR
2 - OUTPUT SPEED SENSOR
3 - TRANSMISSION RANGE SENSOR

1. Install the input speed sensor (1) into the transmission case.

NOTE: Before installing the speed sensor bolt, it will be necessary to replentish the sealing patch on the bolt using Mopar® Lock AND Seal Adhesive.

2. Install the bolt to hold the input speed sensor (1) into the transmission case. Tighten the bolt to 9 N.m (80 in.lbs.).
3. Install the wiring connector onto the input speed sensor
4. Verify the transmission fluid level. Add fluid as necessary. See **Transmission and Transfer Case/Automatic - 42RLE/FLUID and FILTER - Standard Procedure**.
5. Lower vehicle.

SENSOR, SPEED, OUTPUT

DESCRIPTION

DESCRIPTION

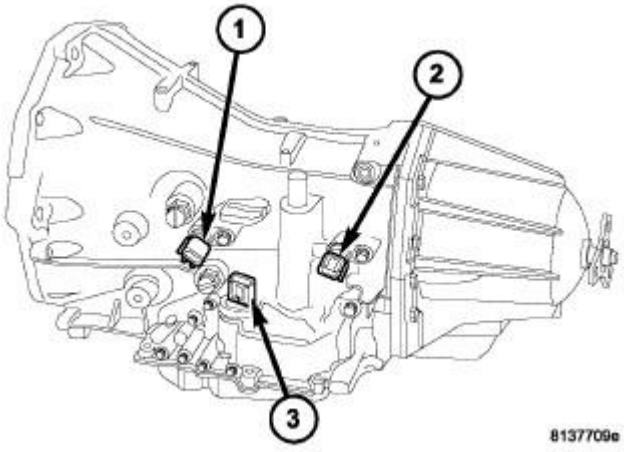

Fig. 334: Input And Output Speed Sensors & Transmission Range Sensor
Courtesy of CHRYSLER LLC

1 - INPUT SPEED SENSOR 2 - OUTPUT SPEED SENSOR 3 - TRANSMISSION RANGE SENSOR

The Input (1) and Output (2) Speed Sensors are two-wire magnetic pickup devices that generate AC signals as rotation occurs. They are mounted in the left side of the transmission case and are considered primary inputs to the Transmission Control Module (TCM).

OPERATION

OPERATION

The Input Speed Sensor provides information on how fast the input shaft is rotating. As the teeth of the input clutch hub pass by the sensor coil, an AC voltage is generated and sent to the TCM. The TCM interprets this information as input shaft RPM.

The Output Speed Sensor generates an AC signal in a similar fashion, though its coil is excited by rotation of the rear planetary carrier lugs. The TCM interprets this information as output shaft RPM.

The TCM compares the input and output speed signals to determine the following:

- Transmission gear ratio
- Speed ratio error detection
- CVI calculation

The TCM also compares the input speed signal and the engine speed signal to determine the following:

- Torque converter clutch slippage

- Torque converter element speed ratio

REMOVAL

REMOVAL

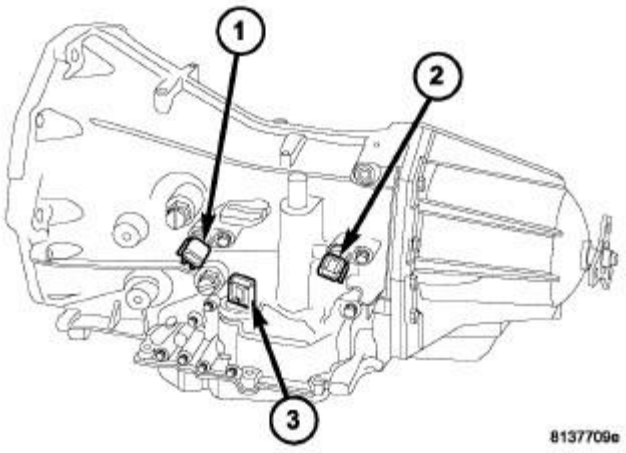

Fig. 335: Input And Output Speed Sensors & Transmission Range Sensor
Courtesy of CHRYSLER LLC

1 - INPUT SPEED SENSOR 2 - OUTPUT SPEED SENSOR 3 - TRANSMISSION RANGE SENSOR

1. Raise vehicle.
2. Place a suitable fluid catch pan under the transmission.
3. Remove the wiring connector from the output speed sensor (2) .

NOTE: The speed sensor bolt has a sealing patch applied from the factory. Be sure to reuse the same bolt.

4. Remove the bolt holding the output speed sensor (2) to the transmission case.
5. Remove the output speed sensor (2) from the transmission case.

INSTALLATION

INSTALLATION

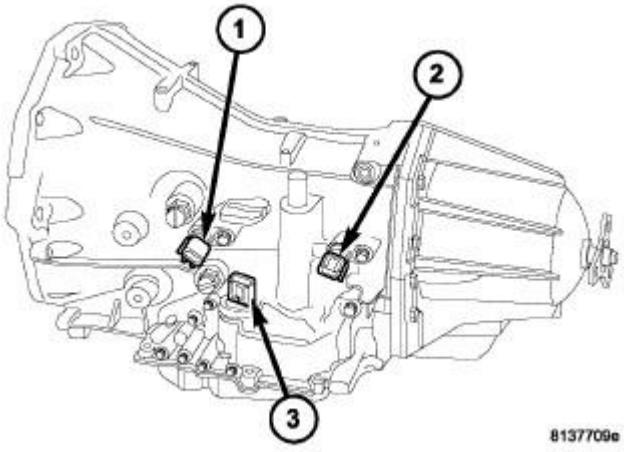

Fig. 336: Input And Output Speed Sensors & Transmission Range Sensor
Courtesy of CHRYSLER LLC

1 - INPUT SPEED SENSOR
2 - OUTPUT SPEED SENSOR
3 - TRANSMISSION RANGE SENSOR

1. Install the output speed sensor (2) into the transmission case.

   NOTE: Before installing the speed sensor bolt, it will be necessary to replentish the sealing patch on the bolt using Mopar® Lock AND Seal Adhesive.

2. Install the bolt to hold the output speed sensor (2) into the transmission case. Tighten the bolt to 9 N.m (80 in.lbs.).
3. Install the wiring connector onto the output speed sensor (2).
4. Verify the transmission fluid level. Add fluid as necessary. See **Transmission and Transfer Case/Automatic - 42RLE/FLUID and FILTER - Standard Procedure**.
5. Lower vehicle.

SENSOR, TRANSMISSION OIL TEMPERATURE

DESCRIPTION

DESCRIPTION

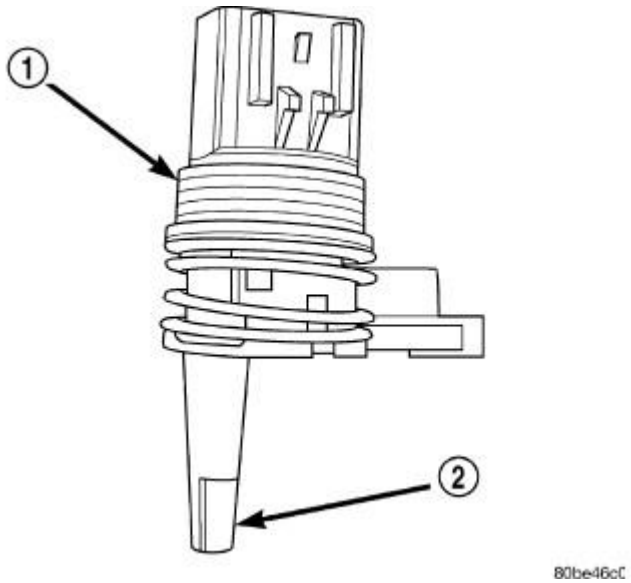

Fig. 337: Transmission Temperature Sensor
Courtesy of CHRYSLER LLC

1 - TRANSMISSION RANGE SENSOR 2 - TEMPERATURE SENSOR

The transmission temperature sensor (2) is located in the transmission range sensor (1) and communicates transmission sump temperature to the TCM.

OPERATION

OPERATION

The transmission range sensor (TRS) has an integrated thermistor that the TCM uses to monitor the transmission's sump temperature. Since fluid temperature can affect transmission shift quality and convertor lock up, the TCM requires this information to determine which shift schedule to operate in. The TCM also monitors this temperature data so it can energize the vehicle cooling fan(s) when a transmission "overheat" condition exists. If the thermistor circuit fails, the TCM will revert to calculated oil temperature usage.

CALCULATED TEMPERATURE

A failure in the temperature sensor or circuit will result in calculated temperature being substituted for actual temperature. Calculated temperature is a predicted fluid temperature which is calculated from a combination of inputs:

- Battery (ambient) temperature
- Engine coolant temperature
- In-gear run time since start-up

SENSOR, TRANSMISSION RANGE

DESCRIPTION

DESCRIPTION

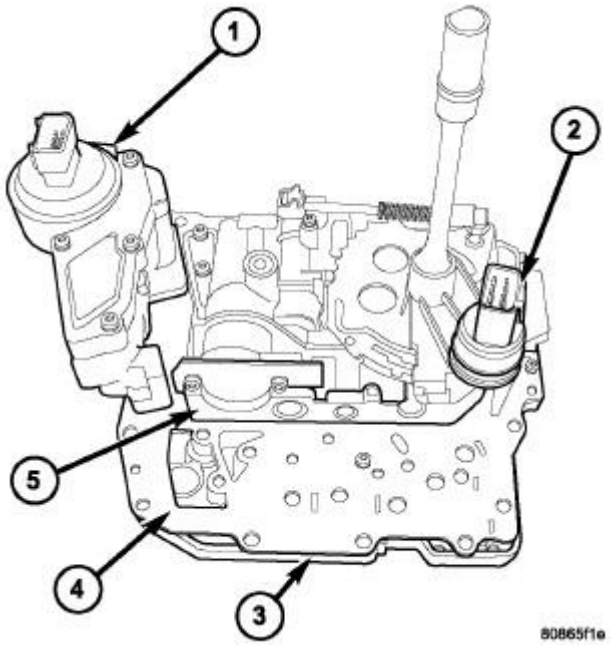

Fig. 338: Valve Body Assembly
Courtesy of CHRYSLER LLC

1 - SOLENOID/PRESSURE SWITCH ASSEMBLY
2 - TRS
3 - TRANSFER PLATE
4 - SEPARATOR PLATE
5 - VALVE BODY

The Transmission Range Sensor (TRS) (2) is mounted to the top of the valve body inside the transmission and can only be serviced by removing the valve body assembly. The electrical connector extends through the transmission case.

The Transmission Range Sensor (TRS) has four switch contacts that monitor shift lever position and send the information to the PCM.

OPERATION

OPERATION

The Transmission Range Sensor (TRS) communicates shift lever position (SLP) to the TCM as a

combination of open and closed switches. Each shift lever position has an assigned combination of switch states (open/closed) that the TCM receives from four sense circuits. The TCM interprets this information and determines the appropriate transmission gear position and shift schedule.

Since there are four switches, there are 16 possible combinations of open and closed switches (codes). Seven of these codes are related to gear position and three are recognized as "between gear" codes. This results in six codes which should never occur. These are called "invalid" codes. An invalid code will result in a DTC, and the TCM will then determine the shift lever position based on pressure switch data. This allows reasonably normal transmission operation with a TRS failure.

TRS SWITCH STATES

SLP	T42	T41	T3	T1
P	CL	CL	CL	OP
R	CL	OP	OP	OP
N	CL	CL	OP	CL
D	OP	OP	OP	CL
2	OP	OP	CL	OP
1	CL	OP	CL	CL

REMOVAL

REMOVAL

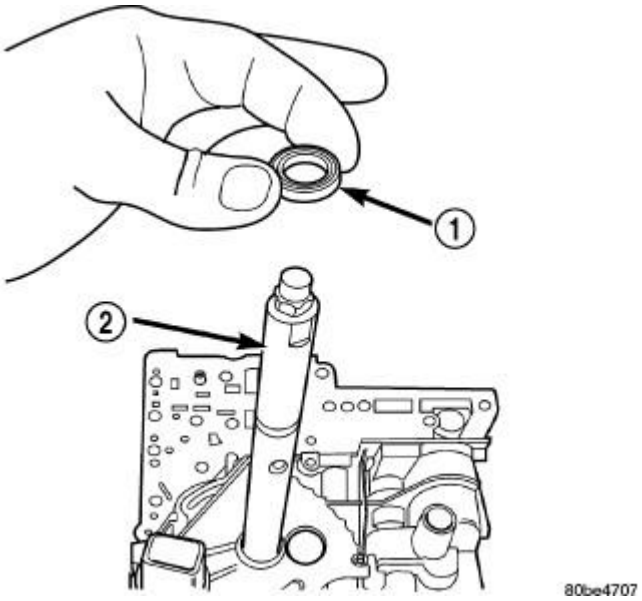

Fig. 339: Manual Shaft Seal - Typical
Courtesy of CHRYSLER LLC

1 - SEAL 2 - MANUAL SHAFT

1. Remove valve body assembly from vehicle. See **Transmission and Transfer Case/Automatic - 42RLE/VALVE BODY - Removal**.
2. Remove the manual shaft seal (1) .

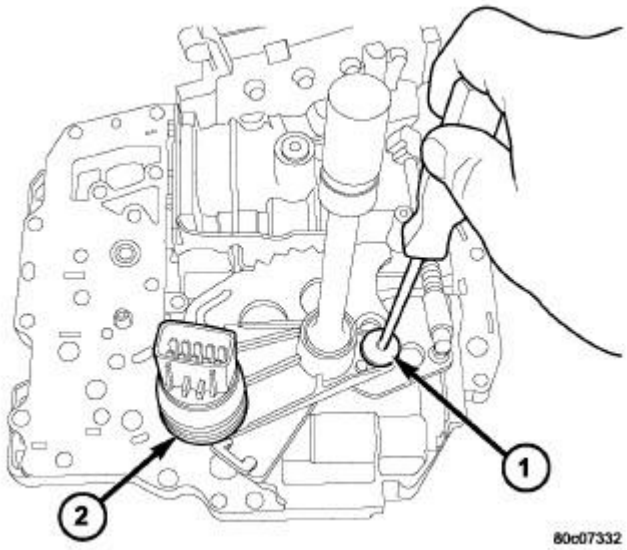

Fig. 340: Manual Shaft Retaining Screw
Courtesy of CHRYSLER LLC

1 - SCREW 2 - TRS

3. Remove manual shaft/TRS retaining screw (1) .
4. Slide TRS off of manual valve shaft.

INSTALLATION

INSTALLATION

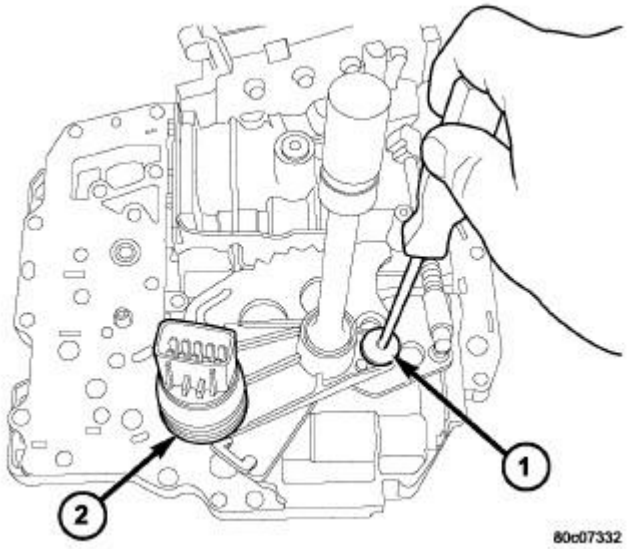

Fig. 341: Manual Shaft Retaining Screw
Courtesy of CHRYSLER LLC

1 - SCREW 2 - TRS

1. Install the TRS (2) to the manual shaft. Make sure TRS locating pin rests in manual valve bore slot.
2. Install the TRS/manual shaft retaining screw (1) and torque to 5 N.m (45 in. lbs.) torque.

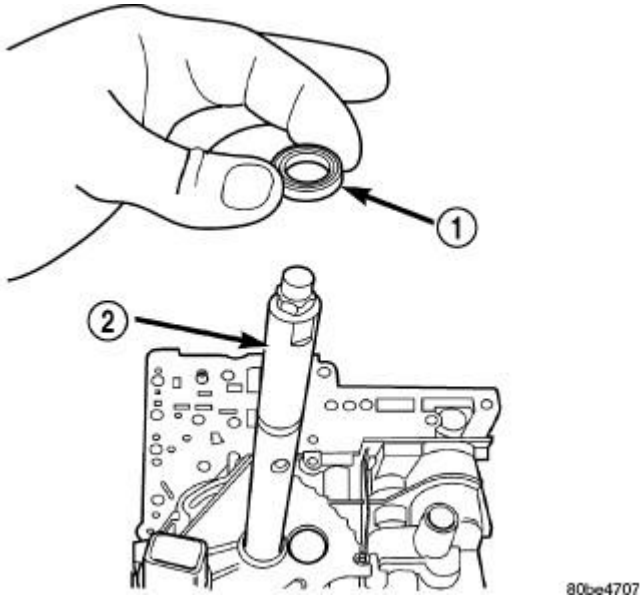

Fig. 342: Manual Shaft Seal - Typical
Courtesy of CHRYSLER LLC

1 - SEAL 2 - MANUAL SHAFT

3. Install the manual shaft seal (1) .
4. Install valve body to the transmission. See **Transmission and Transfer Case/Automatic - 42RLE/VALVE BODY - Installation**.

SENSOR, VARIABLE LINE PRESSURE

DESCRIPTION

DESCRIPTION

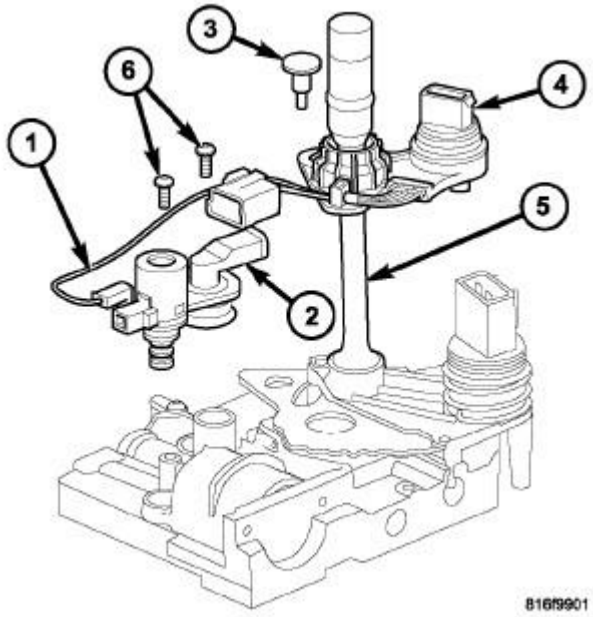

Fig. 343: Variable Line Pressure Components
Courtesy of CHRYSLER LLC

1 - PRESSURE CONTROL SOLENOID 2 - LINE PRESSURE SENSOR 3 - SHOULDER SCREW 4 - VARIABLE LINE PRESSURE HEADER 5 - MANUAL SHAFT 6 - SCREWS

The line pressure sensor (2) is mounted on the top of the valve body, next to the pressure control solenoid (1).

The TCM utilizes a closed-loop system to control transmission line pressure. The system contains a variable force style solenoid, the Pressure Control Solenoid. The solenoid is duty cycle controlled by the TCM to vent the unnecessary line pressure supplied by the oil pump back to the sump. The system also contains a variable pressure style sensor, the Line Pressure Sensor, which is a direct input to the TCM. The line pressure solenoid monitors the transmission line pressure and completes the feedback loop to the TCM. The TCM uses this information to adjust its control of the pressure control solenoid to achieve the desired line pressure.

OPERATION

OPERATION

The TCM calculates the desired line pressure based upon inputs from the transmission and engine. The TCM calculates the torque input to the transmission and uses that information as the primary input to the calculation. The line pressure is set to a predetermined value during shifts and when the transmission is in the PARK and NEUTRAL positions. This is done to ensure consistent shift quality. During all other operation, the actual line pressure is compared to the desired line pressure and adjustments are made to the pressure control solenoid duty cycle.

REMOVAL

REMOVAL

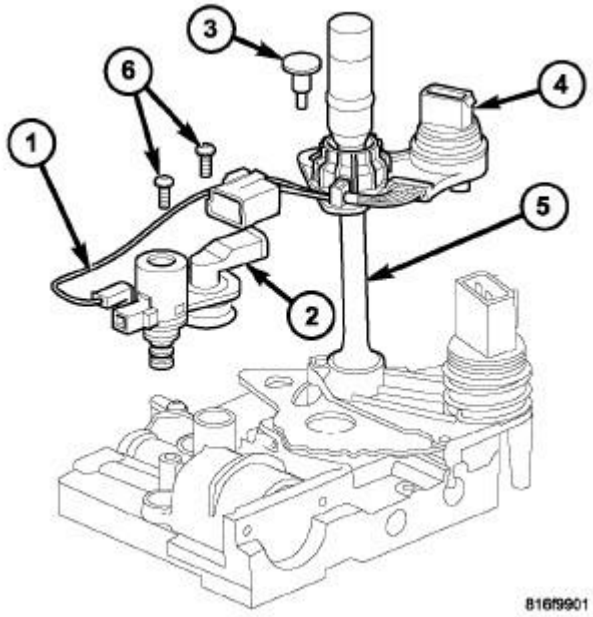

Fig. 344: Variable Line Pressure Components
Courtesy of CHRYSLER LLC

1 - PRESSURE CONTROL SOLENOID
2 - LINE PRESSURE SENSOR

3 - SHOULDER SCREW
4 - VARIABLE LINE PRESSURE HEADER
5 - MANUAL SHAFT
6 - SCREWS

1. Remove the valve body from the transmission. See **Transmission and Transfer Case/Automatic - 42RLE/VALVE BODY - Removal**.
2. Remove the electrical connectors from the pressure control solenoid (1) and the line pressure sensor (2).
3. Remove the screws (6) holding the pressure control solenoid (1) and line pressure sensor (2) to the valve body.
4. Remove the pressure control solenoid and line pressure sensor from the valve body.

INSTALLATION

INSTALLATION

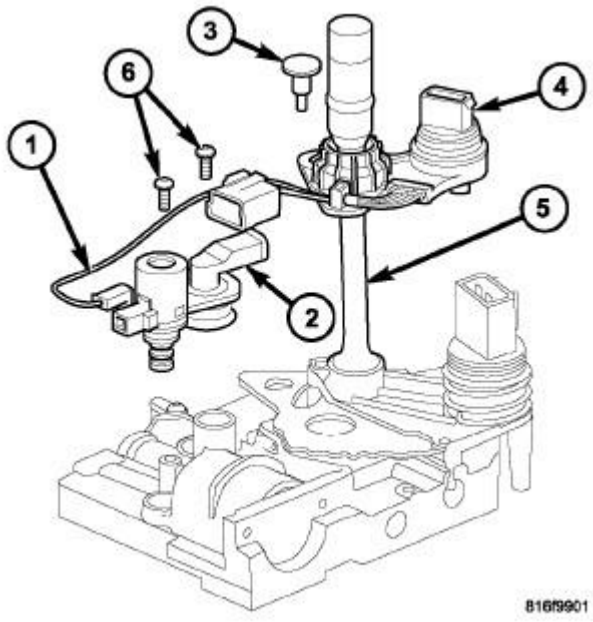

Fig. 345: Variable Line Pressure Components
Courtesy of CHRYSLER LLC

1 - PRESSURE CONTROL SOLENOID
2 - LINE PRESSURE SENSOR
3 - SHOULDER SCREW
4 - VARIABLE LINE PRESSURE HEADER
5 - MANUAL SHAFT
6 - SCREWS

1. Install the pressure control solenoid (1) and line pressure sensor (2) into the valve body.
2. Install the screws (6) to hold the pressure control solenoid (1) and line pressure sensor (2) to the valve body.
3. Install the electrical connectors to the pressure control solenoid (1) and the line pressure sensor (2).
4. Install the valve body into the transmission. See **Transmission and Transfer Case/Automatic - 42RLE/VALVE BODY - Installation**.

SHIFTER, TRANSMISSION

DESCRIPTION

DESCRIPTION

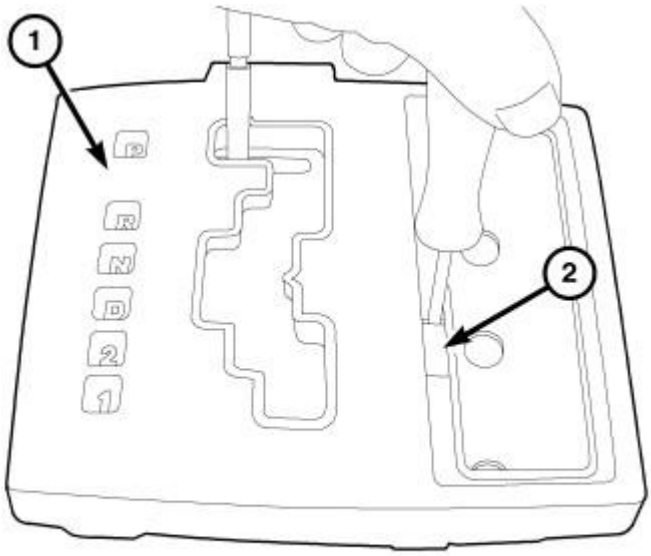

Fig. 346: Brake Transmission Shift Interlock (BTSI) Override
Courtesy of CHRYSLER LLC

The automatic transmission is operated with the help of a shift lever assembly (SLA) (1) located in the floor console. There are six positions to which the selection lever can be shifted: P, R, N, D, 2, 1.

All selector lever positions are identified by the SLA and transmitted by a shift cable to the selector shaft in the transmission.

The SLA is comprised of the following functions:

- **Key lock:** Depending on the selector lever position, the ignition cylinder is locked/unlocked, i.e., the ignition key can be removed only if the selector lever is in position "P". An electronic micro switch in the shifter assembly is used to perform this function.

- **Park lock:** The selector lever is not released from position "P" until the brake pedal has been applied and the ignition key is in the ON" position. Shift lock is controlled by the ignition module in conjunction with a brake switch and a locking solenoid in the SLA. As soon as the brake pedal is applied firmly, the locking solenoid is energized and retracted to unlock the selector lever. If the selector lever cannot be moved out of position "P" due to a malfunction, the shift lock function can be overridden (2).

OPERATION

OPERATION

With the selector lever in position "D", the transmission control module (TCM) automatically shifts the gears that are best-suited to the current operating situation. This means that shifting of gears is continuously adjusted to current driving and operating conditions in line with the selected shift range and the accelerator pedal position. Starting off is always performed in 1st gear.

The current selector lever position or, if the shift range has been limited, the current shift range limit is indicated in the instrument cluster display.

The permissible shifter positions and transmission operating ranges are:

- P = Parking lock and engine starting.
- R = Reverse.
- N = Neutral and engine starting (no power is transmitted to the axles).
- D = The shift range includes all forward gears.
- 2 = Shift range is limited to gears 1 to 3.
- 1 = Shift range is limited to the 1st gear.

REMOVAL

SHIFTER - FLOOR MOUNT

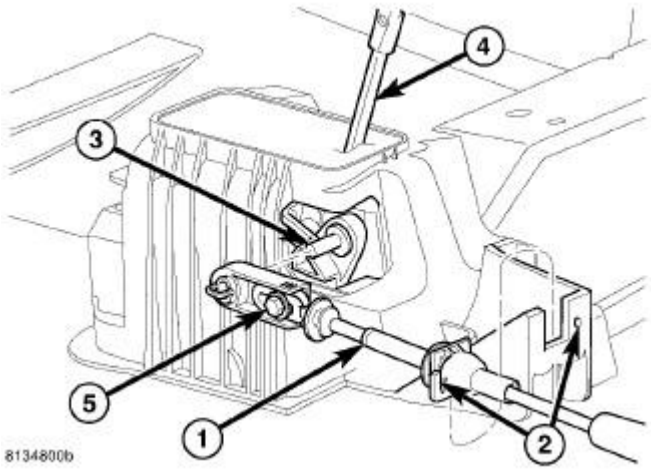

Fig. 347: Gearshift Cable At Shifter Assembly
Courtesy of CHRYSLER LLC

1 - GEARSHIFT CABLE
2 - CABLE RETAINER AND NOTCH
3 - SHIFTER ASSEMBLY PIN
4 - SHIFT LEVER
5 - ADJUSTMENT BOLT

1. Remove any necessary console parts for access to shift lever assembly and shifter cables. Refer to **Body/Interior/CONSOLE, Floor - Removal** .
2. Shift transmission into PARK.
3. Disconnect the transmission shift cable (1) at shift lever (3) and shifter assembly bracket (2).
4. Remove the shift cable retainer (2) from the notch in the shifter assembly (2).

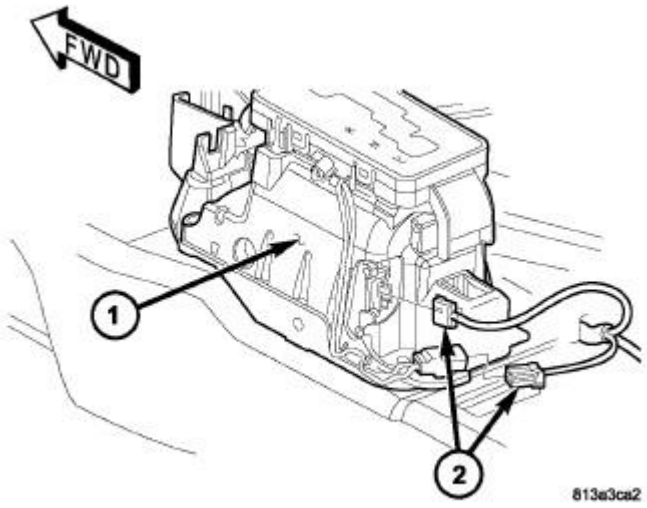

Fig. 348: Shifter Wiring Connectors - Typical
Courtesy of CHRYSLER LLC

1 - SHIFTER ASSEMBLY
2 - WIRING CONNECTORS

5. Disengage all wiring connectors (2) from the shifter assembly (1).

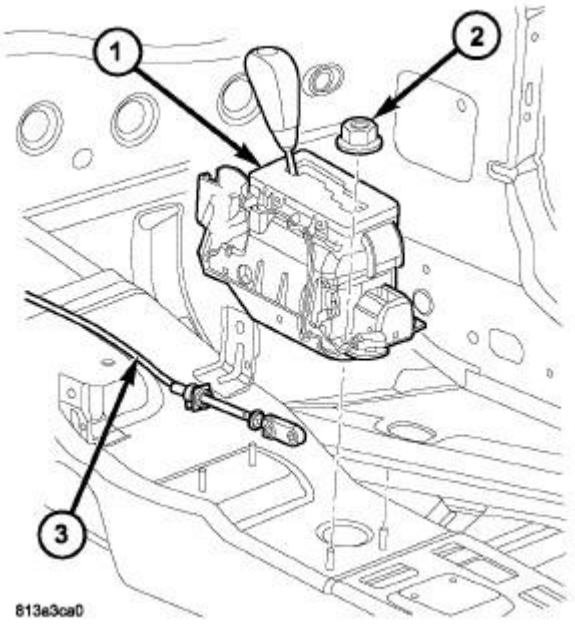

Fig. 349: Shifter Assembly
Courtesy of CHRYSLER LLC

1 - SHIFTER ASSEMBLY 2 - NUTS 3 - GEARSHIFT CABLE

6. Remove all nuts (2) holding the shifter assembly (1) to the floor pan.
7. Remove the shifter assembly (1) from the vehicle.

INSTALLATION

SHIFTER - FLOOR MOUNT

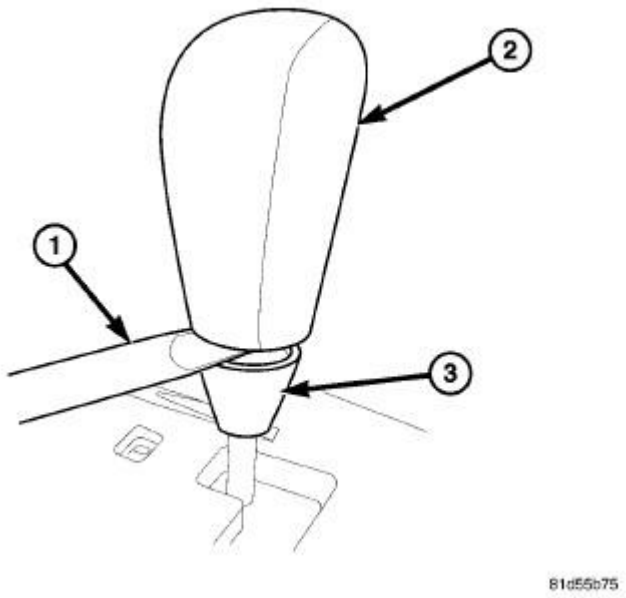

Fig. 350: Shifter Lower Trim
Courtesy of CHRYSLER LLC

1. If a new shifter assembly is being installed, use a trim stick (1) to separate the shift knob lower trim (3) from the shift knob (2).

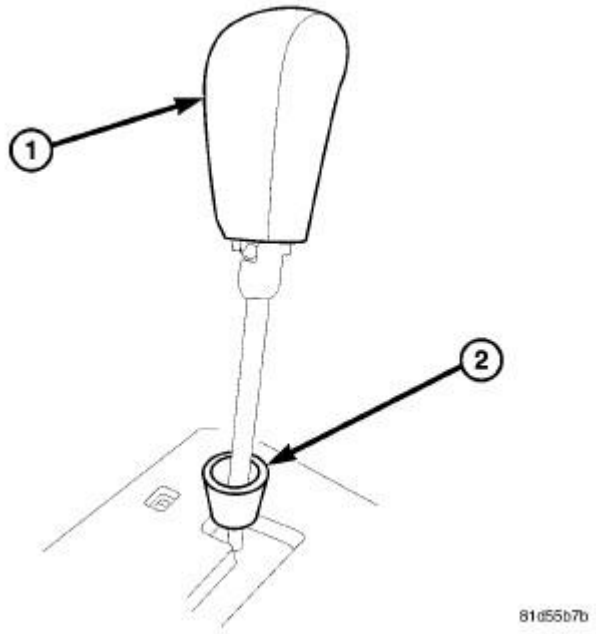

Fig. 351: Removing Shift Knob
Courtesy of CHRYSLER LLC

2. Pull up on the shift knob (1) to remove the knob from the shaft then remove the lower trim (2).
3. Install the lower trim onto the new shifter shaft. Install the shift knob onto the shaft by hand. Install the lower trim onto the shift knob.

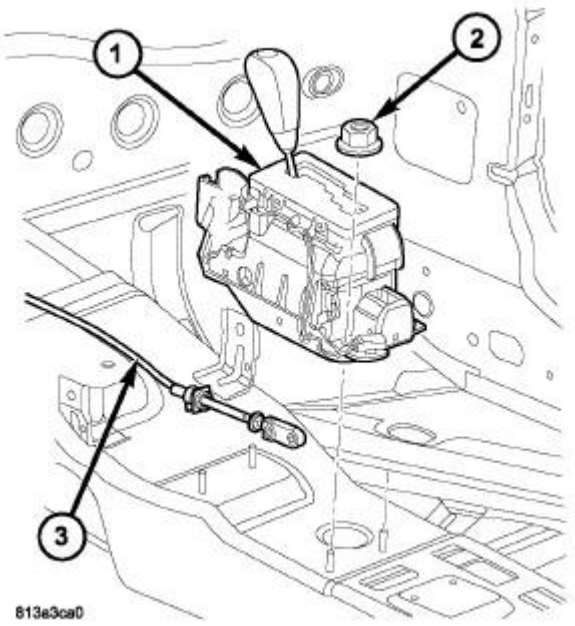

Fig. 352: Shifter Assembly
Courtesy of CHRYSLER LLC

1 - SHIFTER ASSEMBLY
2 - NUTS
3 - GEARSHIFT CABLE

4. Install shifter assembly (1) onto the shifter assembly studs on the floor pan.
5. Install the nuts (2) to hold the shifter assembly (1) onto the floor pan. Tighten nuts to 7 N.m (65 in.lbs.).

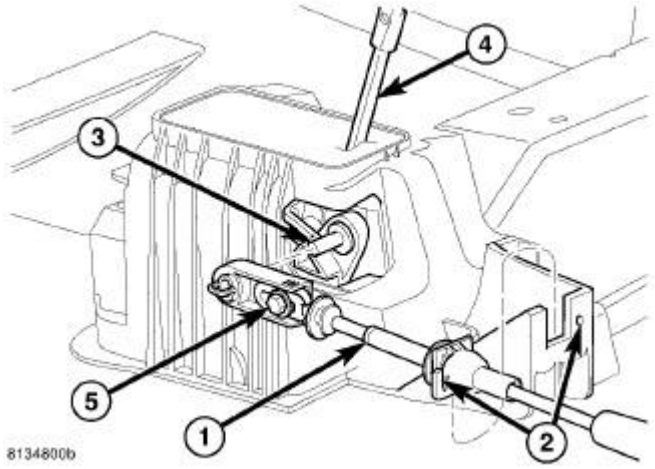

Fig. 353: Gearshift Cable At Shifter Assembly
Courtesy of CHRYSLER LLC

1 - GEARSHIFT CABLE
2 - CABLE RETAINER AND NOTCH
3 - SHIFTER ASSEMBLY PIN
4 - SHIFT LEVER
5 - ADJUSTMENT BOLT

6. Place the floor shifter lever in PARK position.
7. Loosen the adjustment screw (5) on the gearshift cable (1).
8. Install the gearshift cable (1) to the shift lever pin (3).

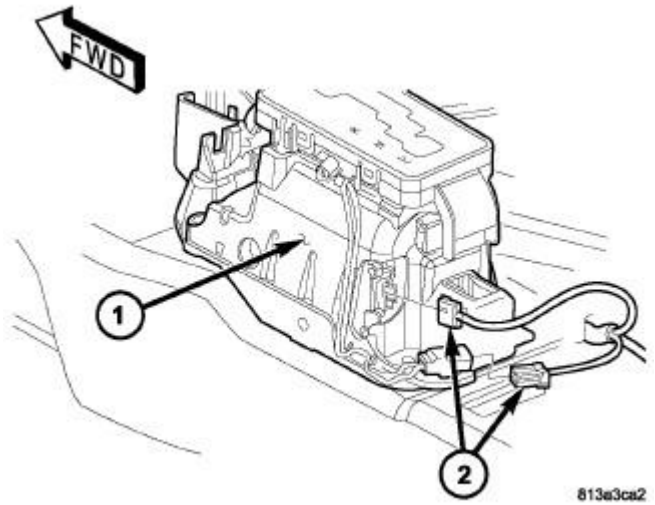

Fig. 354: Shifter Wiring Connectors
Courtesy of CHRYSLER LLC

1 - SHIFTER ASSEMBLY 2 - WIRING CONNECTORS

9. Install the wiring harness connectors (2) to the shifter assembly.
10. Verify that the shift lever is in the PARK position and the transmission park sprag is set by rocking the vehicle.
11. Tighten the adjustment screw to 7 N.m (65 in.lbs.).
12. Verify correct shifter, park lock, and BTSI operation.
13. Install any console parts removed for access to shift lever assembly and shift cables. Refer to **Body/Interior/CONSOLE, Floor - Installation** .

SOLENOID, PRESSURE CONTROL

DESCRIPTION

DESCRIPTION

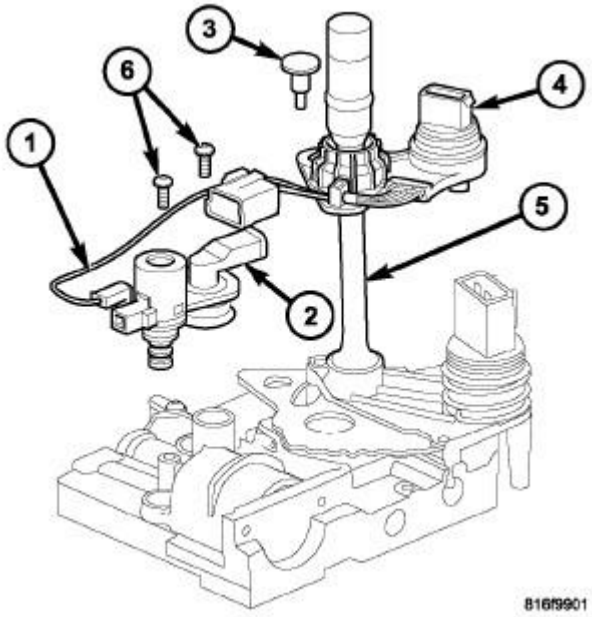

Fig. 355: Variable Line Pressure Components
Courtesy of CHRYSLER LLC

1 - PRESSURE CONTROL SOLENOID 2 - LINE PRESSURE SENSOR 3 - SHOULDER SCREW 4 - VARIABLE LINE PRESSURE HEADER 5 - MANUAL SHAFT

6 - SCREWS

The pressure control solenoid (1) is mounted on the top of the valve body, next to the line pressure sensor (2).

The TCM utilizes a closed-loop system to control transmission line pressure. The system contains a variable force style solenoid, the Pressure Control Solenoid. The solenoid is duty cycle controlled by the TCM to vent the unnecessary line pressure supplied by the oil pump back to the sump. The system also contains a variable pressure style sensor, the Line Pressure Sensor, which is a direct input to the TCM. The line pressure solenoid monitors the transmission line pressure and completes the feedback loop to the TCM. The TCM uses this information to adjust its control of the pressure control solenoid to achieve the desired line pressure.

OPERATION

OPERATION

The pressure control solenoid (PCS) is a variable force (VFS) style solenoid. A VFS solenoid is an electro-hydraulic actuator, combining a solenoid and a regulating valve.

The transmission control module varies the current for the PCS, which varies the pressure in the line pressure hydraulic circuit. When the current (duty cycle) of the PCS is low, the pressure in the circuit is higher. At 0 current (0% duty cycle), the pressure is at the maximum value. Conversely, when the current is maximized (100% duty cycle), the pressure in the circuit is at the lowest possible value.

REMOVAL

REMOVAL

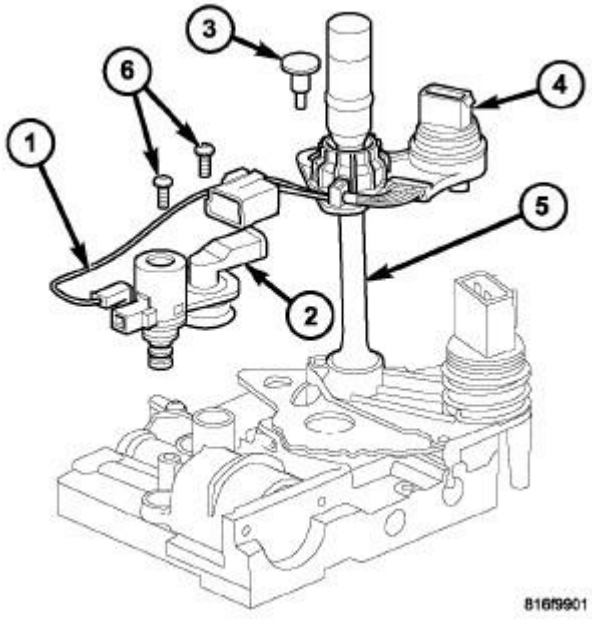

Fig. 356: Variable Line Pressure Components
Courtesy of CHRYSLER LLC

1 - PRESSURE CONTROL SOLENOID
2 - LINE PRESSURE SENSOR
3 - SHOULDER SCREW
4 - VARIABLE LINE PRESSURE HEADER
5 - MANUAL SHAFT
6 - SCREWS

1. Remove the valve body from the transmission. See **Transmission and Transfer Case/Automatic - 42RLE/VALVE BODY - Removal**.
2. Remove the electrical connectors from the pressure control solenoid (1) and the line pressure sensor (2).
3. Remove the screws (6) holding the pressure control solenoid (1) and line pressure sensor (2) to the valve body.
4. Remove the pressure control solenoid and line pressure sensor from the valve body.

INSTALLATION

INSTALLATION

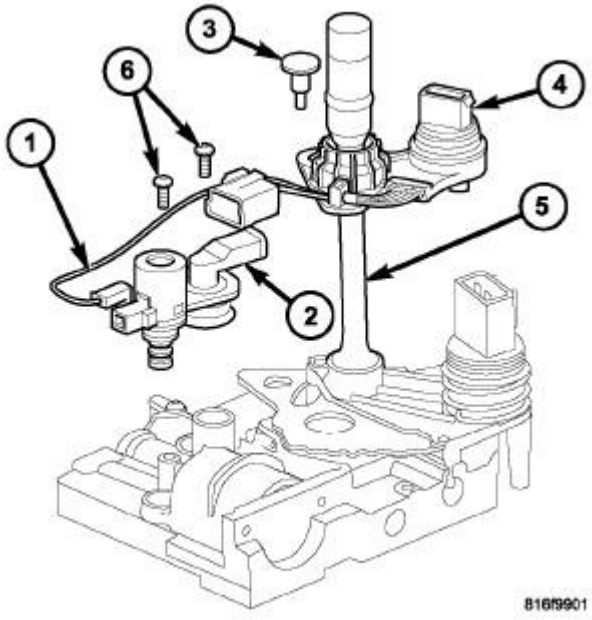

Fig. 357: Variable Line Pressure Components
Courtesy of CHRYSLER LLC

1 - PRESSURE CONTROL SOLENOID
2 - LINE PRESSURE SENSOR
3 - SHOULDER SCREW
4 - VARIABLE LINE PRESSURE HEADER
5 - MANUAL SHAFT
6 - SCREWS

1. Install the pressure control solenoid (1) and line pressure sensor (2) into the valve body.
2. Install the screws (6) to hold the pressure control solenoid (1) and line pressure sensor (2) to the valve body.
3. Install the electrical connectors to the pressure control solenoid (1) and the line pressure sensor (2).
4. Install the valve body into the transmission. See **Transmission and Transfer Case/Automatic - 42RLE/VALVE BODY - Installation**.

TORQUE CONVERTER

DESCRIPTION

DESCRIPTION

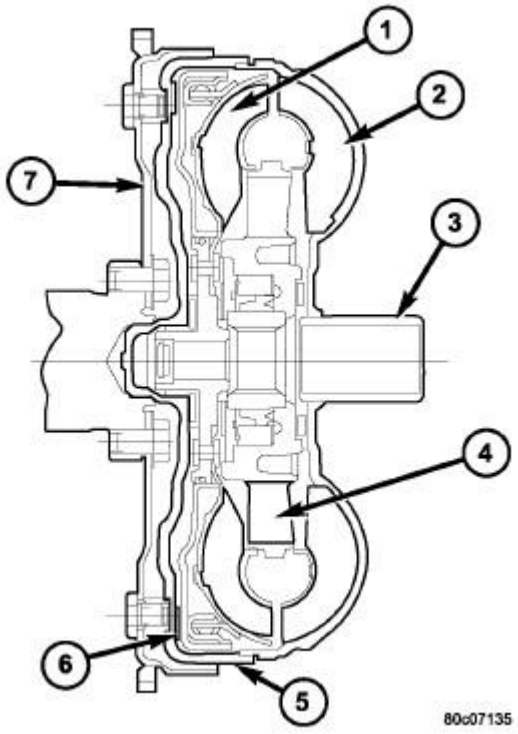

Fig. 358: Torque Converter Assembly
Courtesy of CHRYSLER LLC

1 - TURBINE
2 - IMPELLER
3 - HUB
4 - STATOR
5 - FRONT COVER
6 - CONVERTER CLUTCH DISC
7 - DRIVE PLATE

The torque converter is a hydraulic device that couples the engine crankshaft to the transmission. The torque converter consists of an outer shell with an internal turbine (1), a stator (4), an overrunning clutch, an impeller (2) and an electronically applied converter clutch (6). The converter clutch provides reduced engine speed and greater fuel economy when engaged. Clutch engagement also provides reduced transmission fluid temperatures. The torque converter hub drives the transmission oil (fluid) pump.

The torque converter is a sealed, welded unit that is not repairable and is serviced as an assembly.

CAUTION: The torque converter must be replaced if a transmission failure resulted in large amounts of metal or fiber contamination in the fluid.

TORQUE CONVERTER IMPELLER IDENTIFICATION

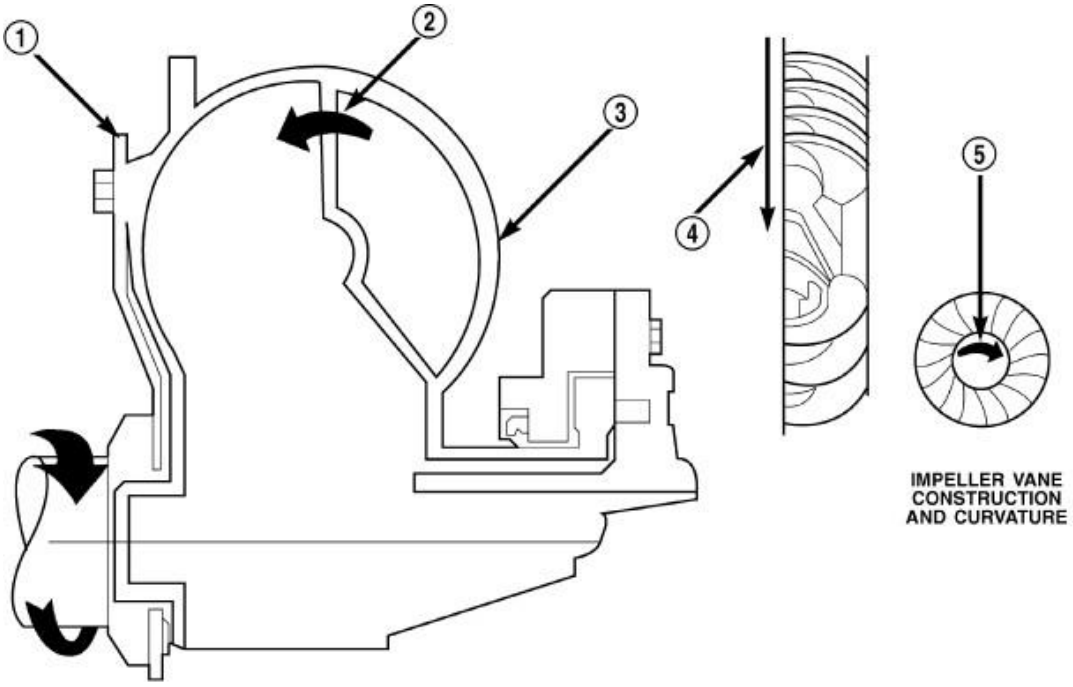

Fig. 359: Impeller
Courtesy of CHRYSLER LLC

1 - ENGINE FLEXPLATE	4 - ENGINE ROTATION
2 - OIL FLOW FROM IMPELLER SECTION INTO TURBINE SECTION	5 - ENGINE ROTATION
3 - IMPELLER VANES AND COVER ARE INTEGRAL	

The impeller is an integral part of the converter housing. The impeller consists of curved blades placed radially along the inside of the housing on the transmission side of the converter. As the converter housing is rotated by the engine, so is the impeller, because they are one and the same and are the driving members of the system.

TURBINE

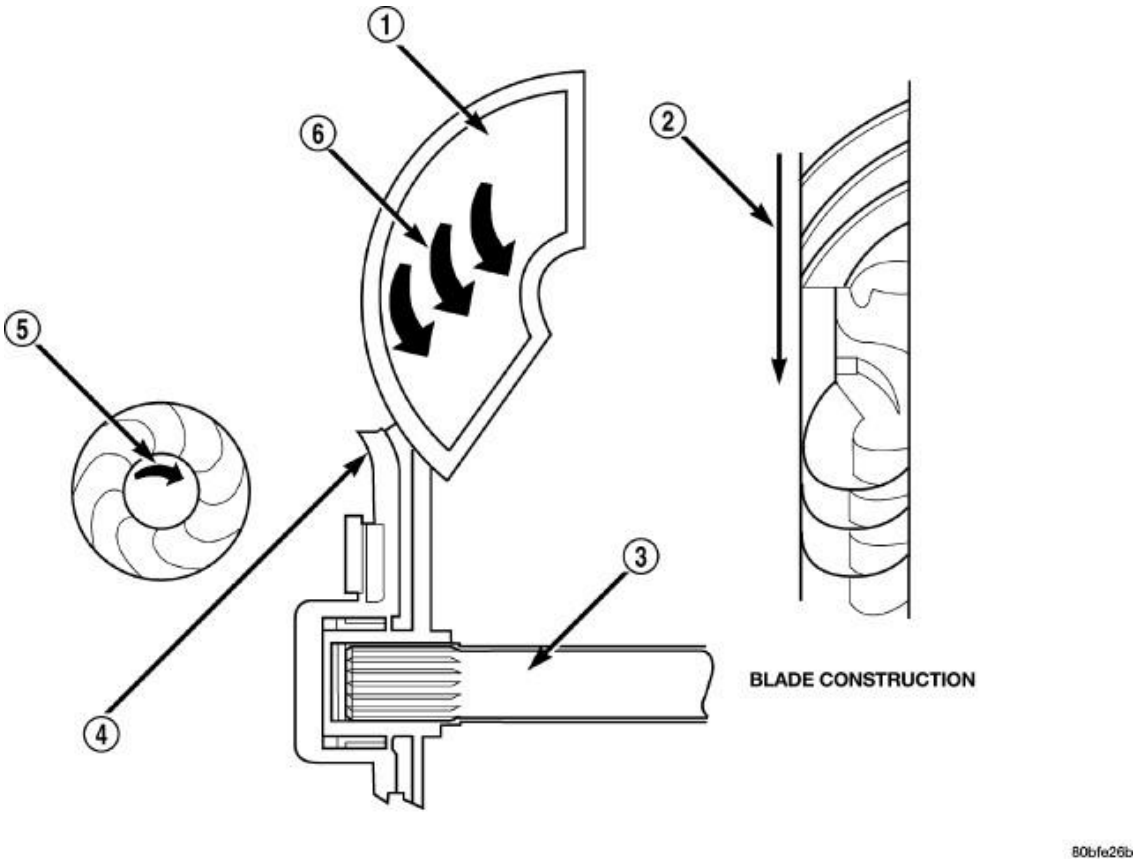

Fig. 360: Turbine
Courtesy of CHRYSLER LLC

1 - TURBINE VANE	4 - PORTION OF TORQUE CONVERTER COVER
2 - ENGINE ROTATION	5 - ENGINE ROTATION
3 - INPUT SHAFT	6 - OIL FLOW WITHIN TURBINE SECTION

The turbine is the output, or driven, member of the converter. The turbine is mounted within the housing opposite the impeller, but is not attached to the housing. The input shaft is inserted through the center of the impeller and splined into the turbine. The design of the turbine is similar to the impeller, except the blades of the turbine are curved in the opposite direction.

STATOR

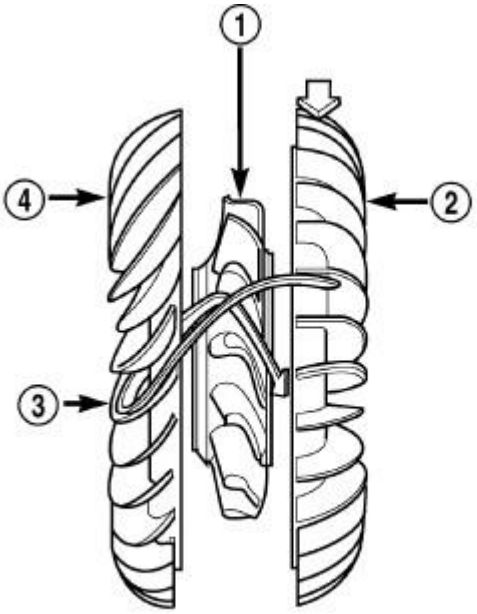

Fig. 361: Stator Location
Courtesy of CHRYSLER LLC

1 - STATOR 2 - IMPELLER 3 - FLUID FLOW 4 - TURBINE

The stator assembly is mounted on a stationary shaft which is an integral part of the oil pump. The stator (1) is located between the impeller (2) and the turbine (4) within the torque converter case.

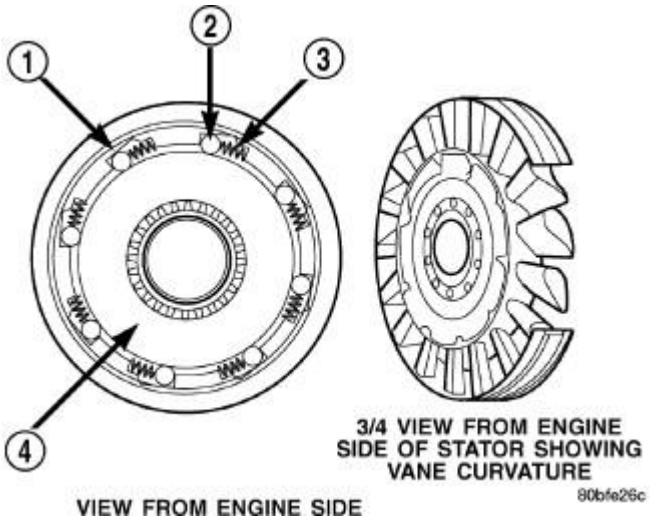

Fig. 362: Stator Components
Courtesy of CHRYSLER LLC

1 - CAM (OUTER RACE) 2 - ROLLER 3 - SPRING 4 - INNER RACE

The stator contains an over-running clutch (1-4) , which allows the stator to rotate only in a clockwise direction. When the stator is locked against the over-running clutch, the torque multiplication feature of the torque converter is operational.

TORQUE CONVERTER CLUTCH (TCC)

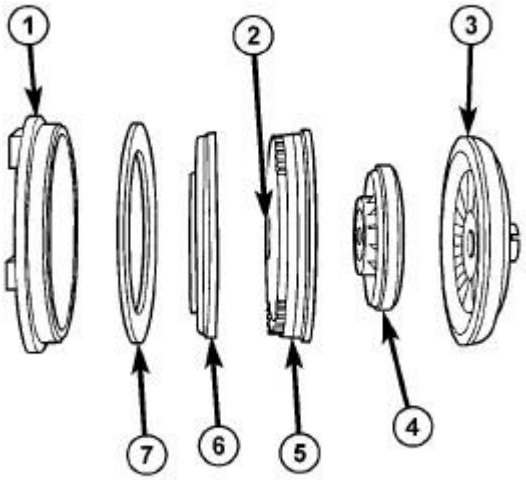

Fig. 363: Torque Converter Clutch (TCC)
Courtesy of CHRYSLER LLC

1 - IMPELLER FRONT COVER 2 - THRUST WASHER ASSEMBLY 3 - IMPELLER 4 - STATOR 5 - TURBINE 6 - PISTON 7 - FRICTION DISC

The TCC was installed to improve the efficiency of the torque converter that is lost to the slippage of the fluid coupling. Although the fluid coupling provides smooth, shock-free power transfer, it is natural for all fluid couplings to slip. If the impeller (3) and turbine (5) were mechanically locked together, a zero slippage condition could be obtained. A hydraulic piston (6) with friction material (7) was added

to the turbine assembly (5) to provide this mechanical lock-up.

In order to reduce heat build-up in the transmission and buffer the powertrain against torsional vibrations, the TCM can duty cycle the L/R-CC Solenoid to achieve a smooth application of the torque converter clutch. This function, referred to as Electronically Modulated Converter Clutch (EMCC) can occur at various times depending on the following variables:

- Shift lever position
- Current gear range
- Transmission fluid temperature
- Engine coolant temperature
- Input speed
- Throttle angle
- Engine speed

OPERATION

OPERATION

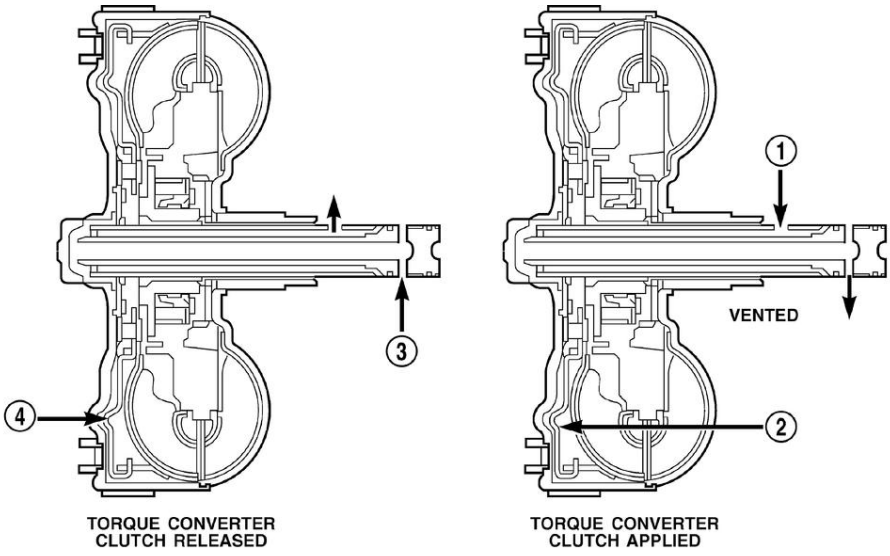

Fig. 364: Torque Converter Fluid Operation - Typical
Courtesy of CHRYSLER LLC

1 - APPLY PRESSURE	3 - RELEASE PRESSURE
2 - THE PISTON MOVES SLIGHTLY FORWARD	4 - THE PISTON MOVES SLIGHTLY REARWARD

The converter impeller (driving member), which is integral to the converter housing and bolted to the engine drive plate, rotates at engine speed. The converter turbine (driven member), which reacts from fluid pressure generated by the impeller, rotates and turns the transmission input shaft.

TURBINE

As the fluid that was put into motion by the impeller blades strikes the blades of the turbine, some of the energy and rotational force is transferred into the turbine and the input shaft. This causes both of them (turbine and input shaft) to rotate in a clockwise direction following the impeller. As the fluid is leaving the trailing edges of the turbine's blades it continues in a "hindering" direction back toward the impeller. If the fluid is not redirected before it strikes the impeller, it will strike the impeller in such a direction that it would tend to slow it down.

STATOR

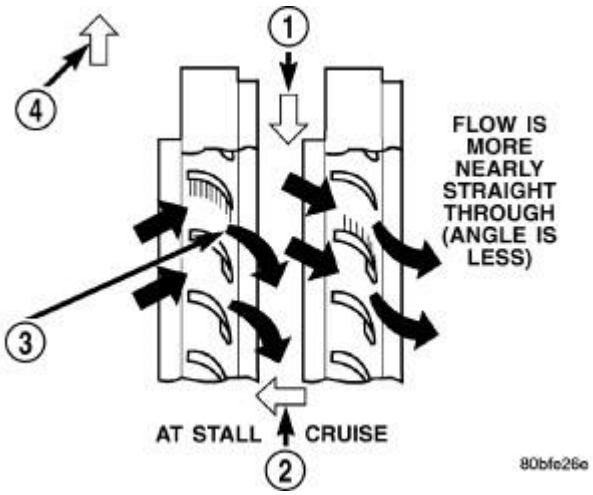

Fig. 365: Stator Operation
Courtesy of CHRYSLER LLC

1 - DIRECTION STATOR WILL FREE WHEEL DUE TO OIL PUSHING ON BACKSIDE OF VANES
2 - FRONT OF ENGINE
3 - INCREASED ANGLE AS OIL STRIKES VANES
4 - DIRECTION STATOR IS LOCKED UP DUE TO OIL PUSHING AGAINST STATOR VANES

Torque multiplication is achieved by locking the stator's over-running clutch to its shaft . Under stall conditions (the turbine is stationary), the oil leaving the turbine blades strikes the face of the stator blades and tries to rotate them in a counterclockwise direction. When this happens the over-running clutch of the stator locks and holds the stator from rotating. With the stator locked, the oil strikes the stator blades and is redirected into a "helping" direction before it enters the impeller. This circulation of oil from impeller to turbine, turbine to stator, and stator to impeller, can produce a maximum torque multiplication of about 2.4:1. As the turbine begins to match the speed of the impeller, the fluid that was hitting the stator in such as way as to cause it to lock-up is no longer doing so. In this condition of operation, the stator begins to free wheel and the converter acts as a fluid coupling.

TORQUE CONVERTER CLUTCH (TCC)

In a standard torque converter, the impeller and turbine are rotating at about the same speed and the stator is freewheeling, providing no torque multiplication. By applying the turbine's piston and friction

material to the front cover, a total converter engagement can be obtained. The result of this engagement is a direct 1:1 mechanical link between the engine and the transmission.

The clutch can be engaged in second, third, and fourth gear ranges depending on overdrive control switch position. If the overdrive control switch is in the normal ON position, the clutch will engage after the shift to fourth gear. If the control switch is in the OFF position, the clutch will engage after the shift to third gear.

The TCM controls the torque converter by way of internal logic software. The programming of the software provides the TCM with control over the L/R-CC Solenoid. There are four output logic states that can be applied as follows:

- No EMCC
- Partial EMCC
- Full EMCC
- Gradual-to-no EMCC

NO EMCC

Under No EMCC conditions, the L/R Solenoid is OFF. There are several conditions that can result in NO EMCC operations. No EMCC can be initiated due to a fault in the transmission or because the TCM does not see the need for EMCC under current driving conditions.

PARTIAL EMCC

Partial EMCC operation modulates the L/R Solenoid (duty cycle) to obtain partial torque converter clutch application. Partial EMCC operation is maintained until Full EMCC is called for and actuated. During Partial EMCC some slip does occur. Partial EMCC will usually occur at low speeds, low load and light throttle situations.

FULL EMCC

During Full EMCC operation, the TCM increases the L/R Solenoid duty cycle to full ON after Partial EMCC control brings the engine speed within the desired slip range of transmission input speed relative to engine RPM.

GRADUAL-TO-NO EMCC

This operation is to soften the change from Full or Partial EMCC to No EMCC. This is done at mid-throttle by decreasing the L/R Solenoid duty cycle.

REMOVAL

REMOVAL

1. Remove transmission and torque converter from vehicle. See **Transmission and Transfer Case/Automatic - 42RLE - Removal** or, see refer to **Transmission and Transfer**

Case/Automatic - NAG1 - Removal .

2. Place a suitable drain pan under the converter housing end of the transmission.

CAUTION: Verify that transmission is secure on the lifting device or work surface, the center of gravity of the transmission will shift when the torque converter is removed creating an unstable condition. The torque converter is a heavy unit. Use caution when separating the torque converter from the transmission.

3. Pull the torque converter forward until the center hub clears the oil pump seal.
4. Separate the torque converter from the transmission.

INSTALLATION

INSTALLATION

NOTE: Check converter hub and drive notches for sharp edges, burrs, scratches, or nicks. Polish the hub and notches with 320/400 grit paper or crocus cloth if necessary. The hub must be smooth to avoid damaging the pump seal at installation.

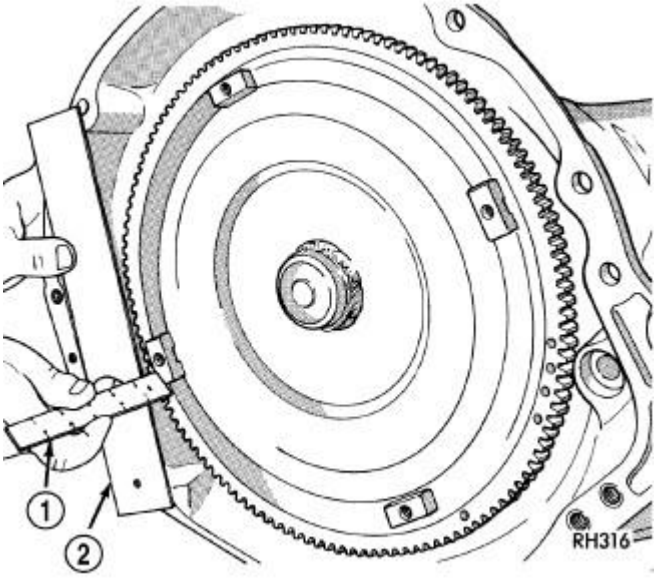

Fig. 366: Checking Torque Converter Seating - Typical
Courtesy of CHRYSLER LLC

1 - SCALE
2 - STRAIGHTEDGE

1. Lubricate oil pump seal lip with transmission fluid.

2. Place torque converter in position on transmission.

CAUTION: Do not damage oil pump seal or bushing while inserting torque converter into the front of the transmission.

3. Align torque converter to oil pump seal opening.
4. Insert torque converter hub into oil pump.
5. While pushing torque converter inward, rotate converter until converter is fully seated in the oil pump gears.
6. Check converter seating with a scale (1) and straightedge (2) . Surface of converter lugs should be 1/2 in. to rear of straightedge when converter is fully seated.
7. If necessary, temporarily secure converter with C-clamp attached to the converter housing.
8. Install the transmission in the vehicle. See **Transmission and Transfer Case/Automatic - 42RLE - Installation** or, refer to **Transmission and Transfer Case/Automatic - NAG1 - Installation** .
9. Fill the transmission with the recommended fluid.

VALVE BODY

DESCRIPTION

DESCRIPTION

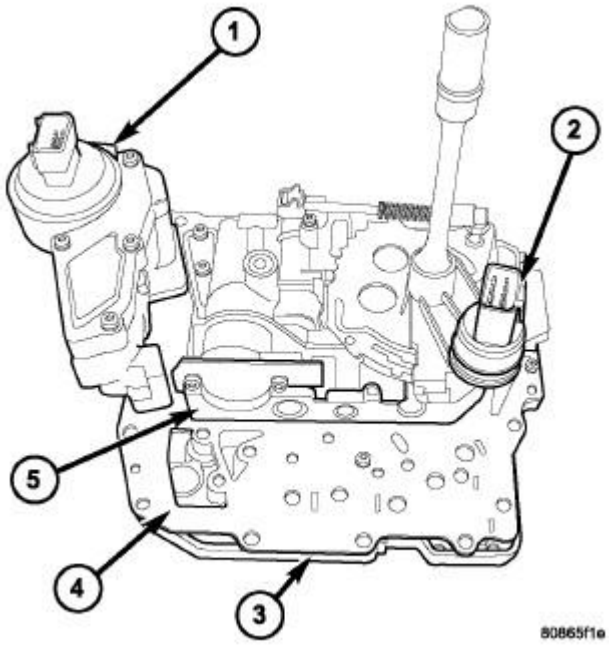

Fig. 367: Valve Body Assembly
Courtesy of CHRYSLER LLC

1 - SOLENOID/PRESSURE SWITCH ASSEMBLY 2 - TRS 3 - TRANSFER PLATE 4 - SEPARATOR PLATE 5 - VALVE BODY

The valve body assembly consists of a cast aluminum valve body (5), separator plate (4), and transfer plate (3). The valve body contains valves and check balls that control fluid delivery to the torque converter clutch, solenoid/pressure switch assembly, and frictional clutches.

Also mounted to the valve body assembly are the solenoid/pressure switch assembly and the transmission range sensor (2) .

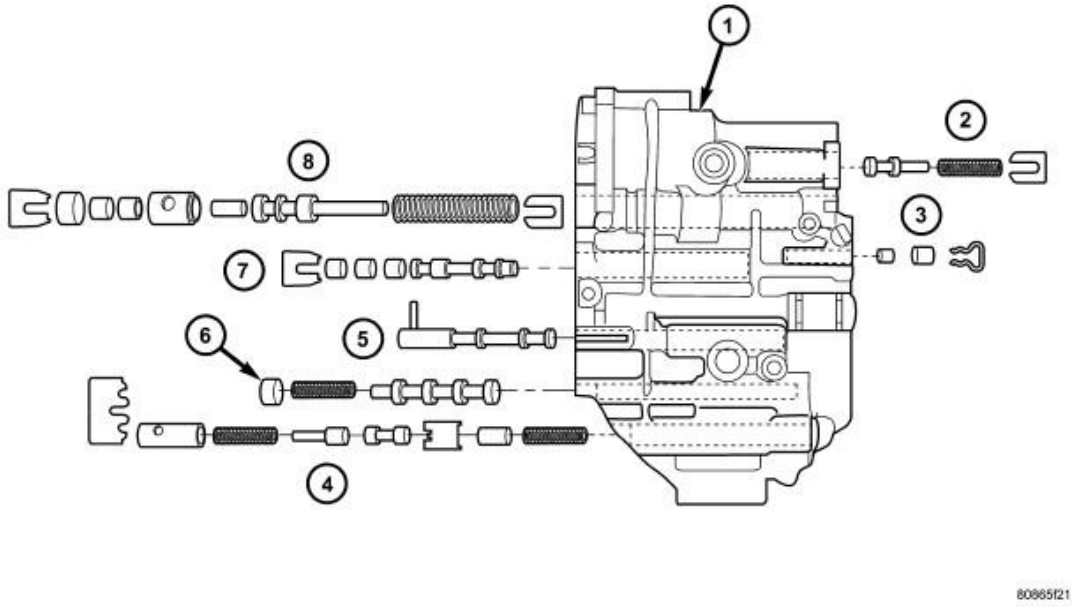

Fig. 368: Valve Body - Exploded
Courtesy of CHRYSLER LLC

1 - VALVE BODY 2 - T/C REGULATOR VALVE 3 - L/R SWITCH VALVE 4 - CONVERTER CLUTCH CONTROL VALVE 5 - MANUAL VALVE 6 - CONVERTER CLUTCH SWITCH VALVE 7 - SOLENOID SWITCH VALVE 8 - REGULATOR VALVE

The valves contained within the valve body (1) include the following:

- Regulator valve (8)

- Solenoid switch valve (7)
- Manual valve (5)
- Converter clutch switch valve (6)
- Converter clutch control valve (4)
- Torque converter regulator valve (2)
- Low/Reverse switch valve (3)

In addition, the valve body also contains the thermal valve, #2, 3, 4 AND 5 check balls and the 2/4 accumulator assembly.

OPERATION

OPERATION

NOTE: See Transmission and Transfer Case/Automatic - 42RLE - Schematics and Diagrams for a visual aid in determining valve location, operation and design.

THERMAL VALVE

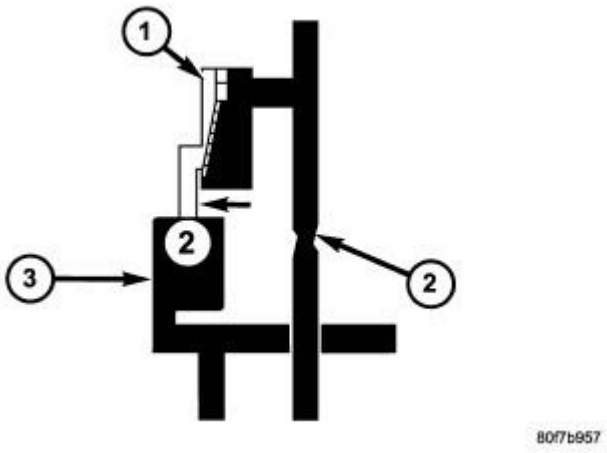

Fig. 369: Thermal Valve
Courtesy of CHRYSLER LLC

1 - THERMAL VALVE
2 - U1 ORIFICE
3 - NUMBER 2 CHECK BALL

The thermal valve (1) is a bi-metallic shudder valve that helps control the venting rate of oil pressure in the underdrive clutch passage during release of the clutch. When the oil temperature is approximately 20 degrees Fahrenheit or less, the valve is fully open to assist in venting oil past the U1 orifice (2). At temperatures above 20 degrees, the valve starts to close and becomes fully closed at approximately 140 degrees. The thermal valve is located in the transfer plate of the valve body.

REGULATOR VALVE

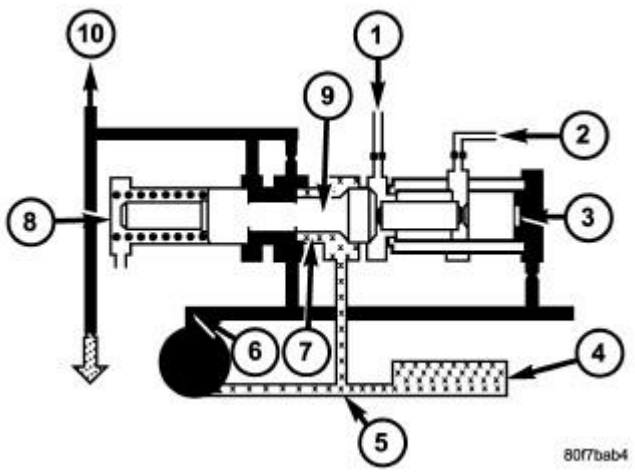

Fig. 370: Regulator Valve
Courtesy of CHRYSLER LLC

1 - FROM OVERDRIVE CLUTCH CIRCUIT
2 - FROM MANUAL VALVE
3 - HYDRAULIC PRESSURE
4 - FILTER
5 - PUMP INLET
6 - PUMP OUTLET
7 - OIL PRESSURE REGULATED AT THIS POINT
8 - SPRING TENSION
9 - REGULATOR VALVE
10 - TORQUE CONVERTER CONTROL VALVE

The regulator valve (9) controls hydraulic pressure in the transmission. It receives unregulated pressure from the pump (6), which works against spring tension (8) to maintain oil at specific pressures. A system of sleeves and ports allows the regulator valve to work at one of three predetermined pressure levels. Regulated oil pressure is also referred to as "line pressure."

SOLENOID SWITCH VALVE

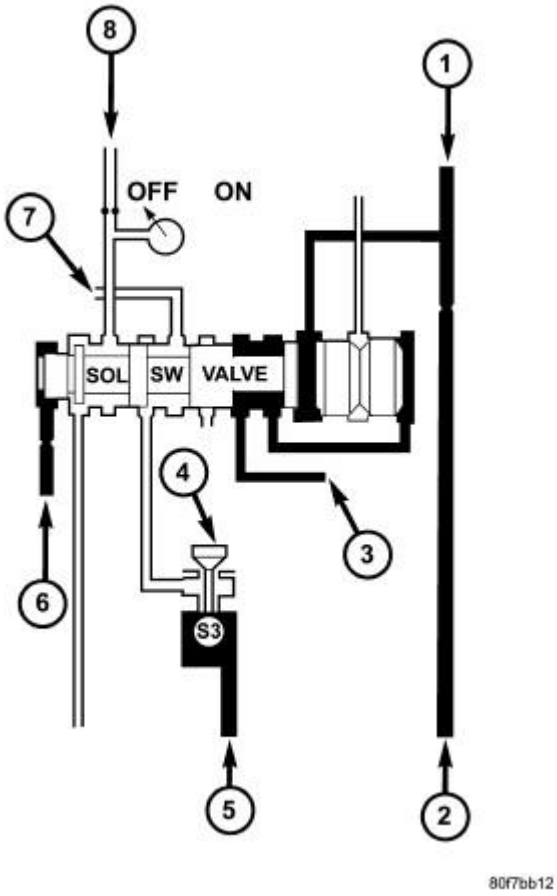

Fig. 371: Solenoid Switch Valve De-Energized
Courtesy of CHRYSLER LLC

1 - 2/4 CLUTCH
2 - MANUAL VALVE
3 - UD CLUTCH
4 - LR/CC SOLENOID DE-ENERGIZED
5 - MANUAL VALVE
6 - LINE PRESSURE
7 - CONVERTER CLUTCH SWITCH AND CONTROL VALVES
8 - LR CLUTCH

The solenoid switch valve controls line pressure from the LR/CC solenoid (4). In one position, it allows the low/reverse clutch to be pressurized. In the other, it directs line pressure to the converter control and converter clutch valves (7).

MANUAL VALVE

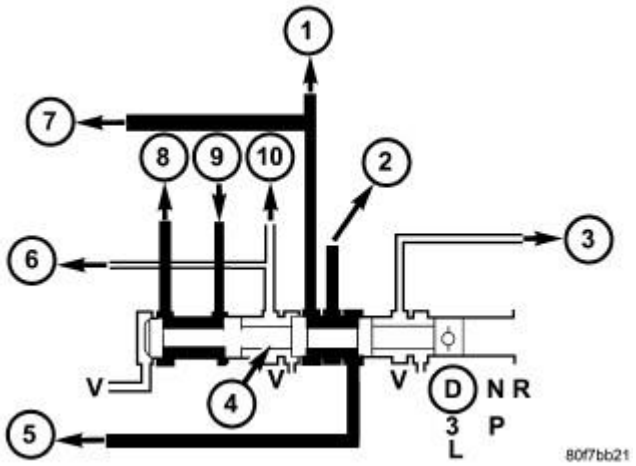

Fig. 372: Manual Valve
Courtesy of CHRYSLER LLC

1 - UD CLUTCH
2 - LR/CC CLUTCH
3 - REVERSE CLUTCH
4 - MANUAL VALVE
5 - REGULATOR VALVE
6 - REGULATOR VALVE
7 - CONVERTER CLUTCH CONTROL VALVE
8 - 2/4 CLUTCH
9 - 2/4 - L/R SOLENOID
10 - L/R CLUTCH

The manual valve (4) is operated by the mechanical shift linkage. Its primary responsibility is to send line pressure to the appropriate hydraulic circuits and solenoids. The valve has three operating ranges or positions.

CONVERTER CLUTCH SWITCH VALVE

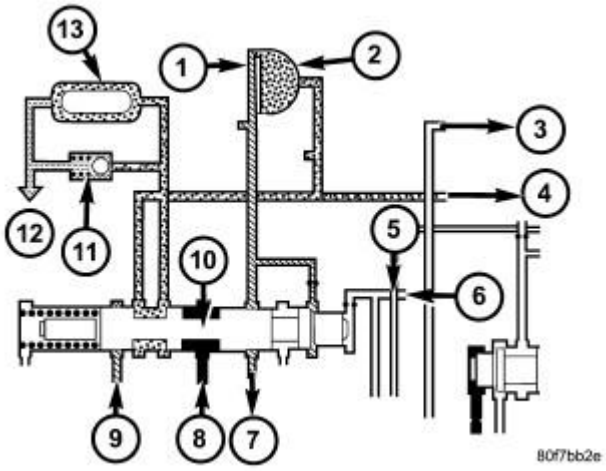

Fig. 373: Converter Clutch Switch Valve
Courtesy of CHRYSLER LLC

1 - CONVERTER CLUTCH
2 - TORQUE CONVERTER
3 - LR CLUTCH
4 - DRIBBLERS
5 - REGULATOR VALVE
6 - SOLENOID SWITCH VALVE
7 - CONVERTER CLUTCH CONTROL VALVE
8 - TORQUE CONVERTER REGULATOR VALVE
9 - CONVERTER CLUTCH CONTROL VALVE
10 - CONVERTER CLUTCH SWITCH VALVE
11 - BYPASS VALVE
12 - LUBE
13 - COOLER

The main responsibility of the converter clutch switch valve (10) is to control hydraulic pressure applied to the front (off) side of the converter clutch piston. Line pressure from the regulator valve (5) is fed to the torque converter regulator valve (8). The pressure is then directed to the converter clutch switch valve (10) and to the front side of the converter clutch piston. This pressure pushes the piston back and disengages the converter clutch.

CONVERTER CLUTCH CONTROL VALVE

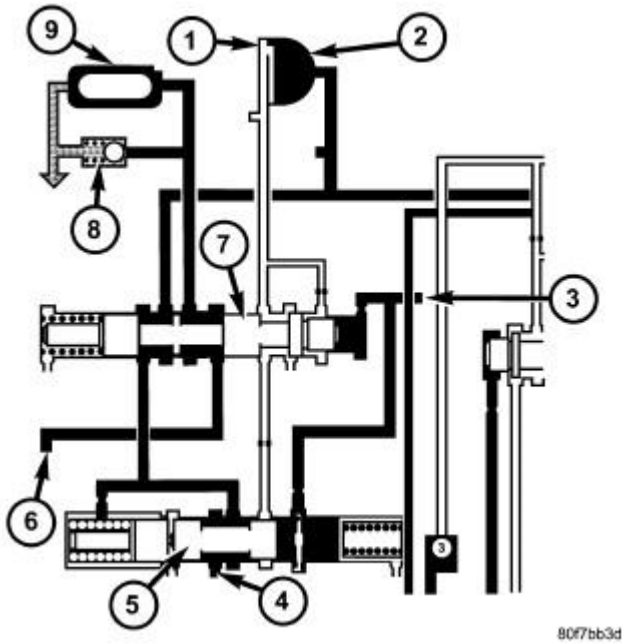

Fig. 374: Converter Clutch Control Valve
Courtesy of CHRYSLER LLC

1 - CONVERTER CLUTCH
2 - TORQUE CONVERTER
3 - LR/CC SOLENOID
4 - FROM MANUAL VALVE
5 - CONVERTER CLUTCH CONTROL VALVE
6 - TORQUE CONVERTER REGULATOR VALVE
7 - CONVERTER CLUTCH SWITCH VALVE
8 - BYPASS VALVE
9 - COOLER

The converter clutch control valve (5) controls the back (on) side of the torque converter clutch (1). When the controller energizes or modulates the LR/CC solenoid to apply the converter clutch piston, both the converter clutch control valve (5) and the converter control valve move, allowing pressure to be applied to the back side of the clutch.

T/C REGULATOR VALVE

The torque converter regulator valve slightly regulates the flow of fluid to the torque converter.

LOW/REVERSE SWITCH VALVE

The low/reverse clutch is applied from different sources, depending on whether low (1st) gear or reverse is selected. The low/reverse switch valve alternates positions depending on from which direction fluid pressure is applied. By design, when the valve is shifted by fluid pressure from one

channel, the opposing channel is blocked. The switch valve alienates the possibility of a sticking ball check, thus providing consistent application of the low/reverse clutch under these operating conditions.

REMOVAL

REMOVAL

NOTE: **If valve body is being reconditioned or replaced, it is necessary to perform the Quick Learn Procedure. Refer to Electrical - Electronic Control Modules/Electronic Control Modules/MODULE, Transmission Control - Standard Procedure .**

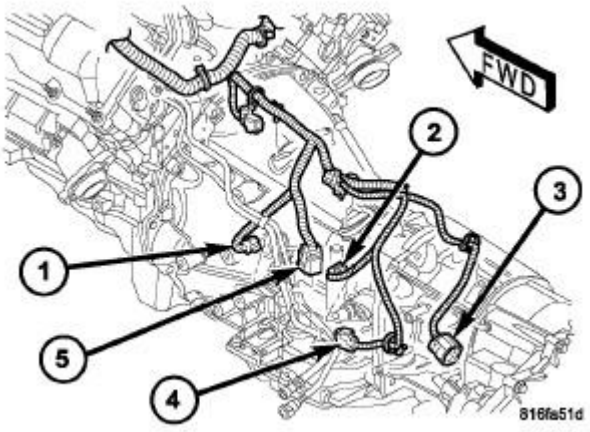

Fig. 375: Locating Transmission Wiring Connectors
Courtesy of CHRYSLER LLC

1 - INPUT SPEED SENSOR
2 - OUTPUT SPEED SENSOR
3 - SHIFT MOTOR AND MODE SENSOR ASSEMBLY
4 - VARIABLE LINE PRESSURE CONNECTOR
5 - TRANSMISSION RANGE SENSOR

1. Disconnect the transmission range sensor (5) and solenoid/pressure switch assembly wiring connectors.
2. Disconnect the variable line pressure connector (4), if equipped.
3. Disconnect the shift cable from the shift lever (at the transmission).
4. Move the manual shift lever clockwise as far as it will go. This should be one position past the L position. Then remove the manual shift lever.

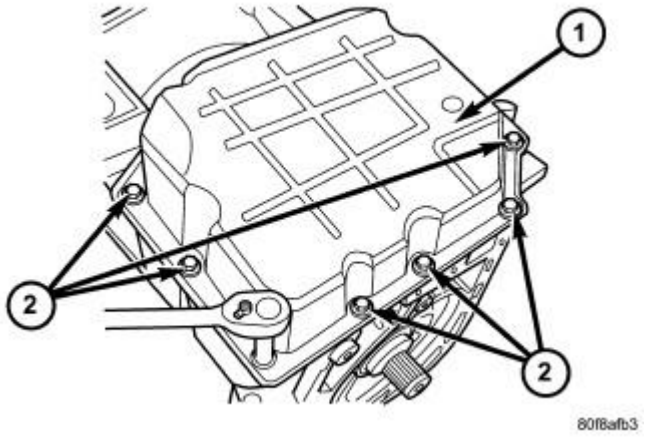

Fig. 376: Remove/Install Transmission Oil Pan Bolts
Courtesy of CHRYSLER LLC

1 - TRANSMISSION OIL PAN 2 - BOLTS

NOTE: One of the oil pan bolts has a sealing patch applied from the factory. Separate this bolts for reuse.

5. Remove transmission pan bolts (2) .

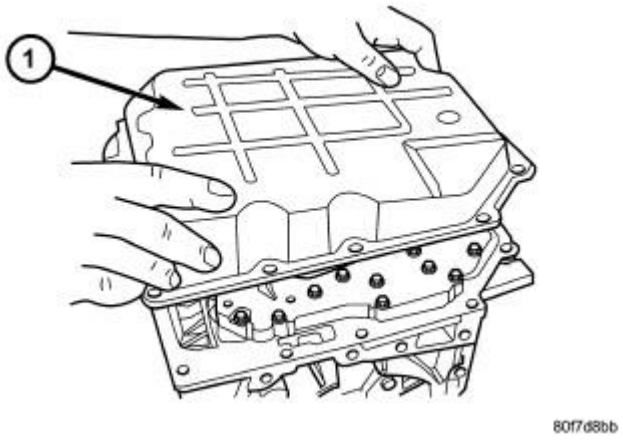

Fig. 377: Remove/Install Transmission Oil Pan
Courtesy of CHRYSLER LLC

1 - TRANSMISSION OIL PAN

6. Remove transmission oil pan (1) .

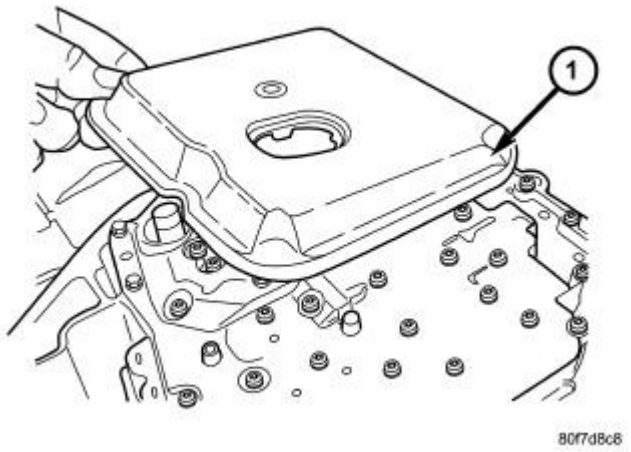

Fig. 378: Remove/Install Transmission Filter
Courtesy of CHRYSLER LLC

1 - TRANSMISSION FILTER

7. Remove oil filter (1) from valve body. It is held in place by two screws.

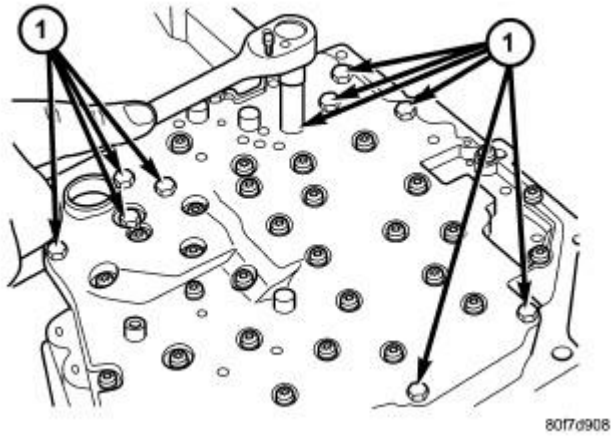

Fig. 379: Remove/Install Valve Body Fasteners
Courtesy of CHRYSLER LLC

1 - BOLTS

8. Remove valve body bolts-to-case (1) .

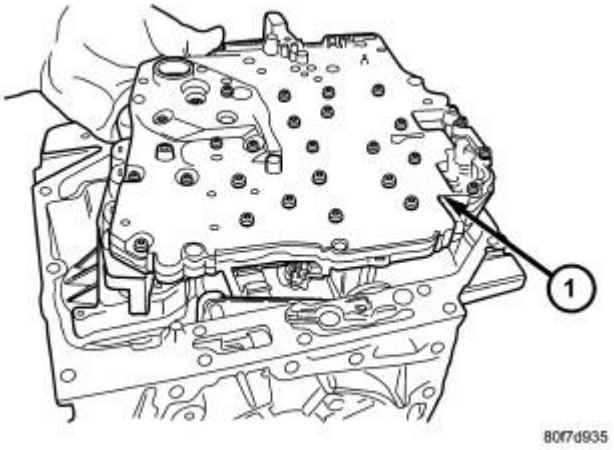

Fig. 380: Remove/Install Valve Body
Courtesy of CHRYSLER LLC

1 - VALVE BODY

CAUTION: The overdrive and underdrive accumulators and springs may fall out when removing the valve body.

9. Carefully remove valve body assembly (1) from the transmission .

DISASSEMBLY

DISASSEMBLY

NOTE: If the valve body is being reconditioned or replaced, it is necessary to perform the Quick Learn Procedure using the scan tool. Refer to Electrical - Electronic Control Modules/Electronic Control Modules/MODULE, Transmission Control - Standard Procedure .

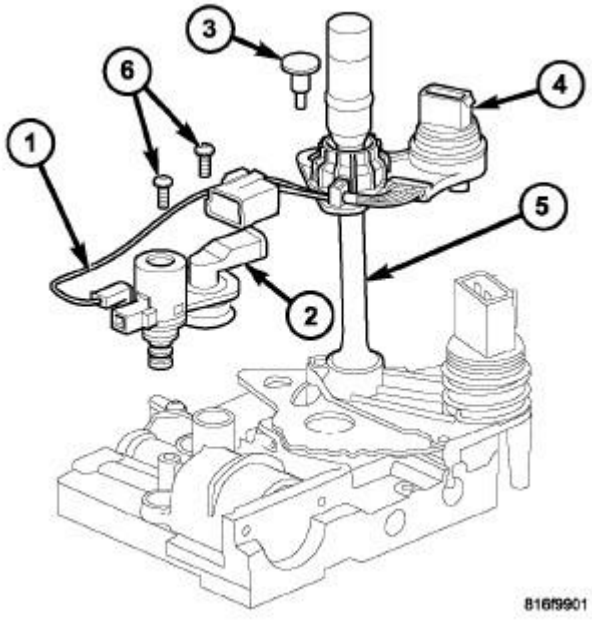

Fig. 381: Variable Line Pressure Components
Courtesy of CHRYSLER LLC

1 - PRESSURE CONTROL SOLENOID
2 - LINE PRESSURE SENSOR
3 - SHOULDER SCREW
4 - VARIABLE LINE PRESSURE HEADER
5 - MANUAL SHAFT
6 - SCREWS

1. Remove the electrical connectors from the pressure control solenoid (1) and the line pressure sensor (2).
2. Remove the screws (6) holding the pressure control solenoid (1) and line pressure sensor (2) to the valve body.
3. Remove the pressure control solenoid and line pressure sensor from the valve body.
4. Remove the shoulder screw (3) holding the variable line pressure header (4) to the valve body.
5. Remove the variable line pressure header from the manual shaft (5).

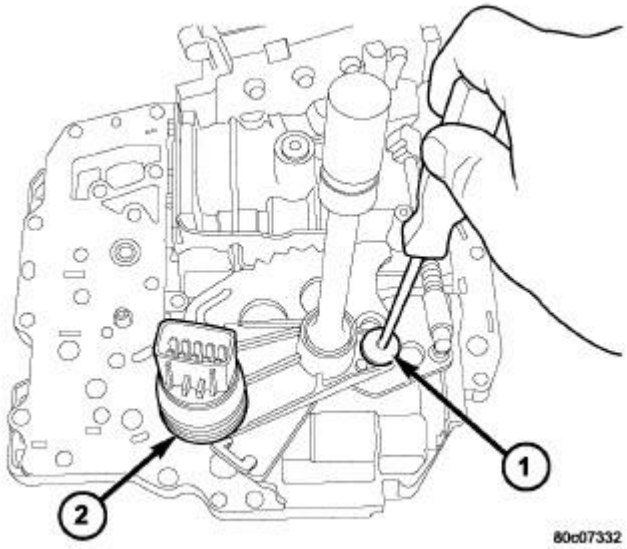

Fig. 382: Manual Shaft Retaining Screw
Courtesy of CHRYSLER LLC

1 - SCREW 2 - TRS

6. Remove manual shaft seal.
7. Remove manual shaft screw (1) .

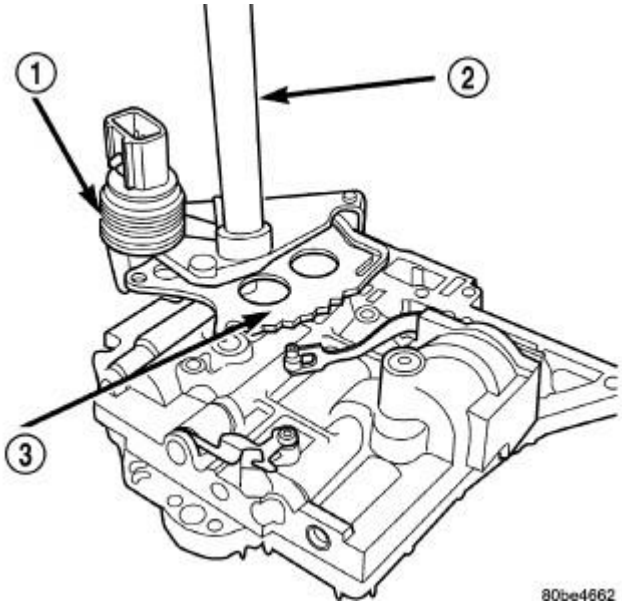

Fig. 383: Manual Shaft/Rooster Comb & Transmission Range Sensor
Courtesy of CHRYSLER LLC

1 - TRANSMISSION RANGE SENSOR

2 - MANUAL SHAFT
3 - ROOSTER COMB

8. Remove Transmission Range Sensor (TRS) (1) and manual shaft (2) .

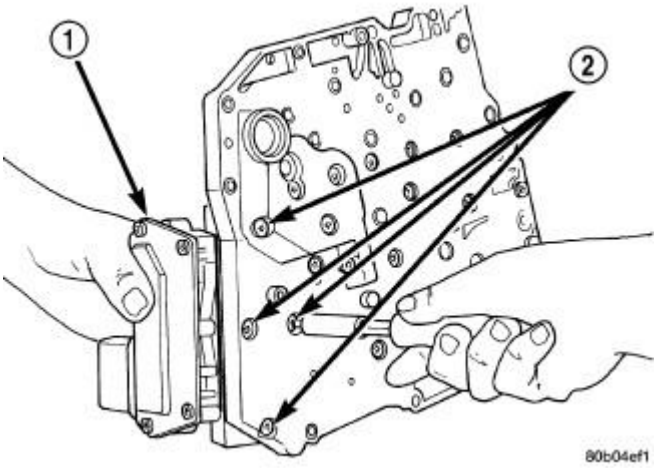

Fig. 384: Solenoid Retaining Screws
Courtesy of CHRYSLER LLC

1 - SOLENOID/PRESSURE SWITCH ASSEMBLY
2 - RETAINING SCREWS

9. Remove Solenoid/Pressure Switch Assembly (1) from valve body .

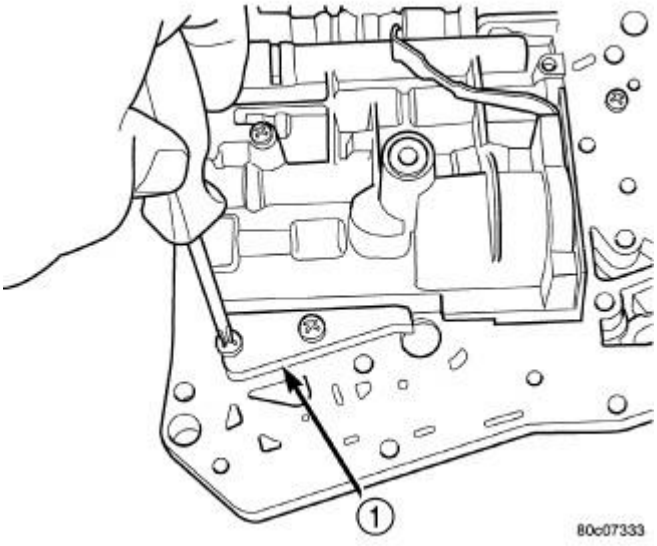

Fig. 385: Remove/Install Stiffener Plate
Courtesy of CHRYSLER LLC

1 - STIFFENER PLATE

10. Remove valve body stiffener plate (1) .

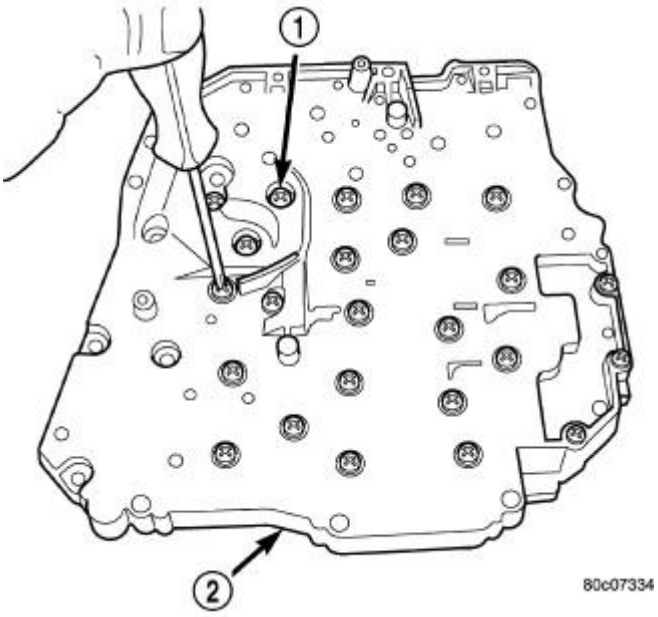

Fig. 386: Remove/Install Transfer Plate-at-Valve Body Screws
Courtesy of CHRYSLER LLC

1 - SCREW (24) 2 - TRANSFER PLATE

11. Invert valve body assembly and remove transfer plate-to-valve body screws (1) .

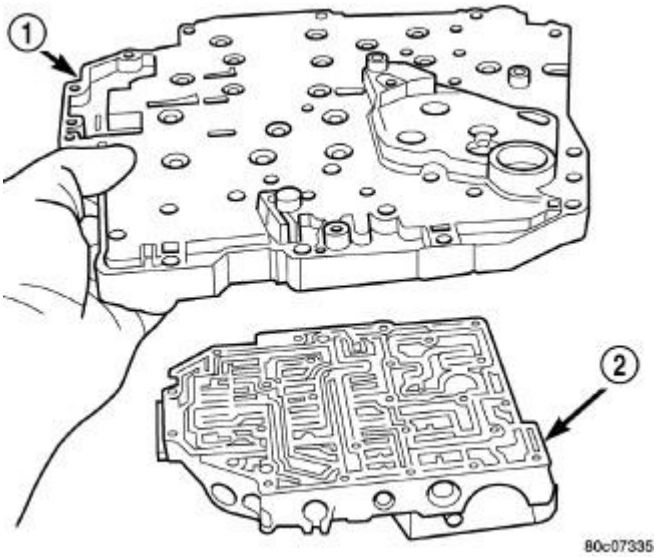

Fig. 387: Remove/Install Transfer Plate-at-Valve Body

Courtesy of CHRYSLER LLC

1 - TRANSFER PLATE 2 - VALVE BODY

12. Remove transfer/separator plate (1) from valve body (2).

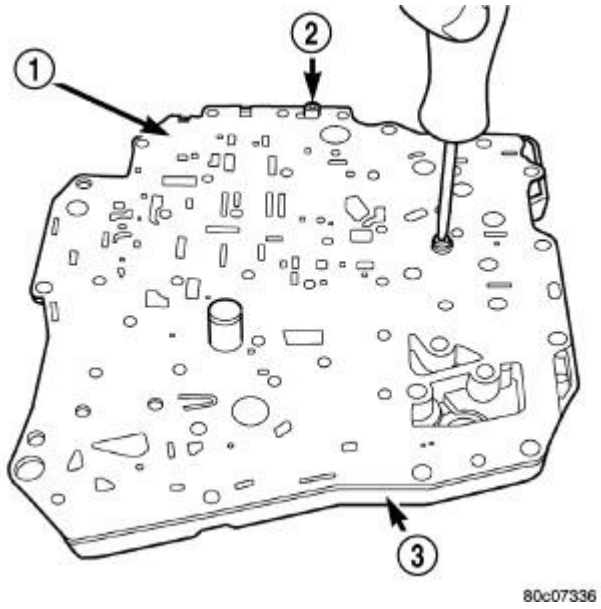

Fig. 388: Remove/Install Separator Plate-at-Transfer Plate Screws
Courtesy of CHRYSLER LLC

1 - SEPARATOR PLATE 2 - SCREW (2) 3 - TRANSFER PLATE

13. Remove separator plate-to-transfer plate screws (2) .

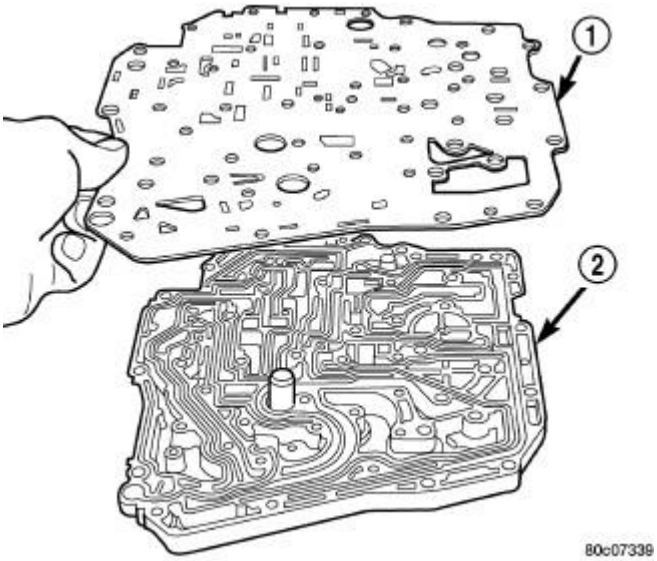

Fig. 389: Remove/Install Separator Plate-at-Transfer Plate
Courtesy of CHRYSLER LLC

1 - SEPARATOR PLATE 2 - TRANSFER PLATE

14. Remove separator plate (1) from transfer plate (2) .

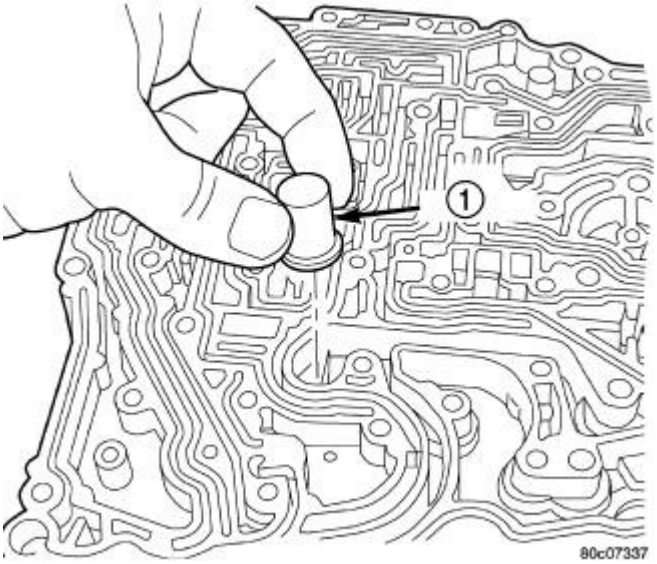

Fig. 390: Remove/Install Oil Screen-at-Transfer Plate
Courtesy of CHRYSLER LLC

1 - OIL SCREEN

15. Remove the oil screen (1) from the transfer plate .

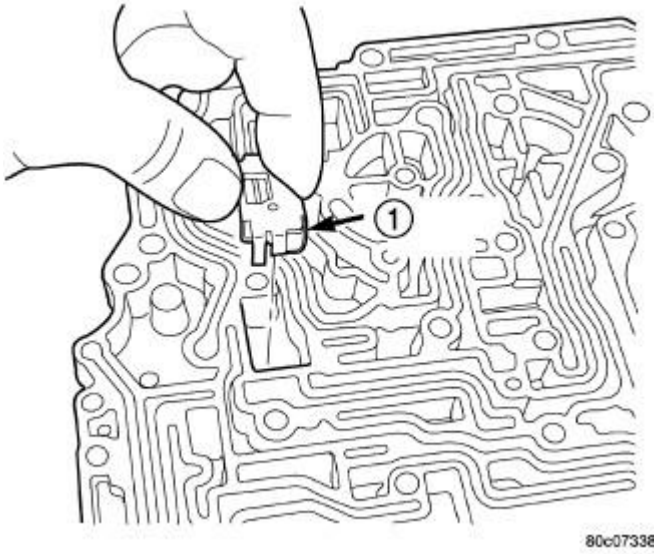

Fig. 391: Remove/Install Thermal Valve-at-Transfer Plate
Courtesy of CHRYSLER LLC

1 - THERMAL VALVE

16. Remove thermal valve (1) from transfer plate.

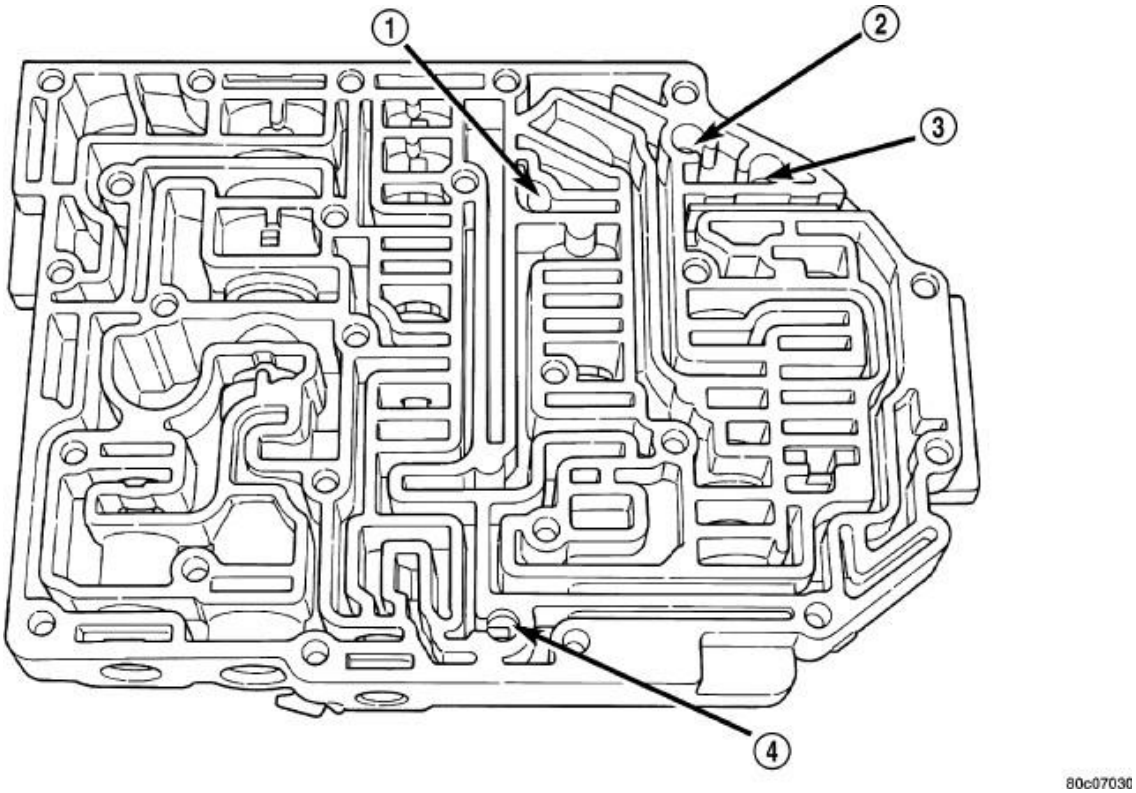

Fig. 392: Ball Check Location
Courtesy of CHRYSLER LLC

1 - (#4) BALL CHECK LOCATION
2 - (#2) BALL CHECK LOCATION
3 - (#5) BALL CHECK LOCATION
4 - (#3) BALL CHECK LOCATION

17. Remove valve body check balls (1-4). Note their location for assembly ease.

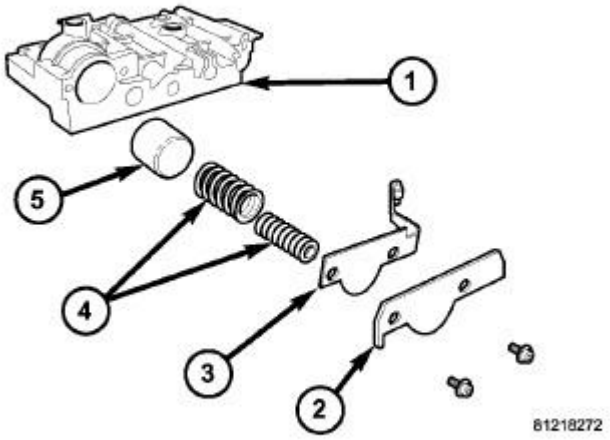

Fig. 393: Identifying 2/4 Accumulator Assembly
Courtesy of CHRYSLER LLC

1 - VALVE BODY
2 - RETAINER PLATE
3 - DETENT SPRING
4 - RETURN SPRINGS
5 - PISTON

18. Remove 2/4 accumulator assembly (1-5) .

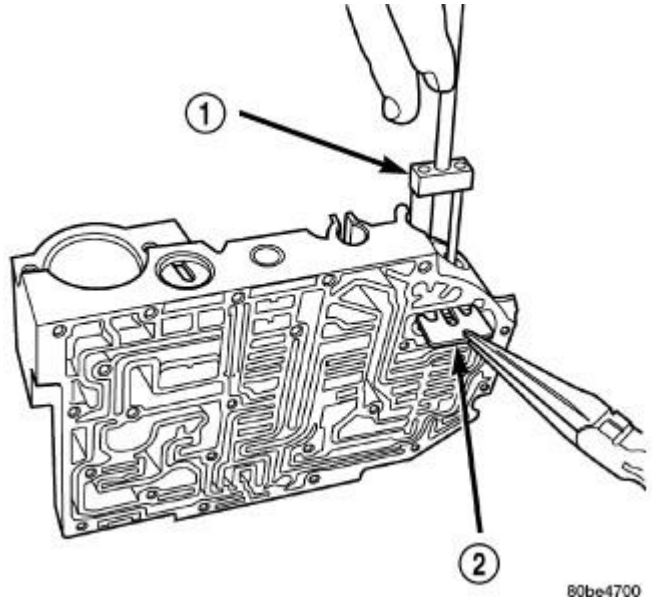

Fig. 394: Remove/Install Dual Retainer Plate Using Tool 6301
Courtesy of CHRYSLER LLC

1 - REMOVER/INSTALLER 6301 2 - RETAINER

19. Remove dual retainer plate (2) from valve body. Use Remover/Installer 6301 (1) to remove plate (2) .

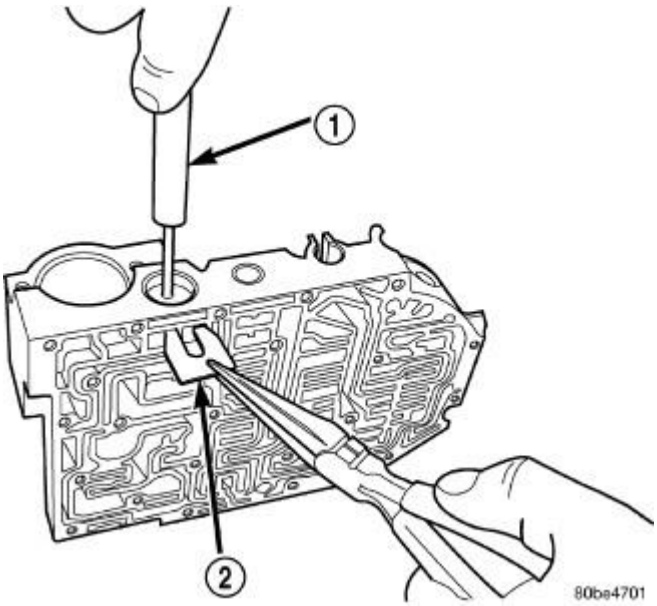

Fig. 395: Remove/Install Regulator Valve Spring Retainer Using Tool 6302
Courtesy of CHRYSLER LLC

1 - TOOL 6302

2 - RETAINER

20. Remove regulator valve spring retainer (2) .

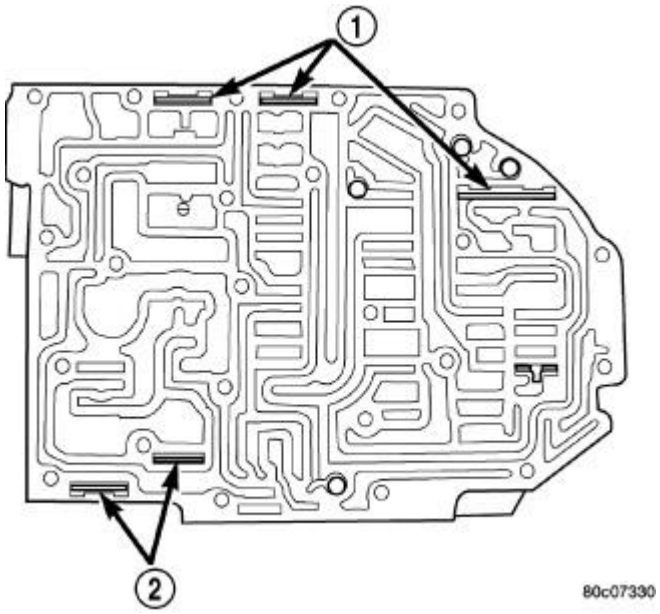

Fig. 396: Valve Retainer Location
Courtesy of CHRYSLER LLC

1 - RETAINER 2 - RETAINER

21. Remove remaining retainers (1, 2) .

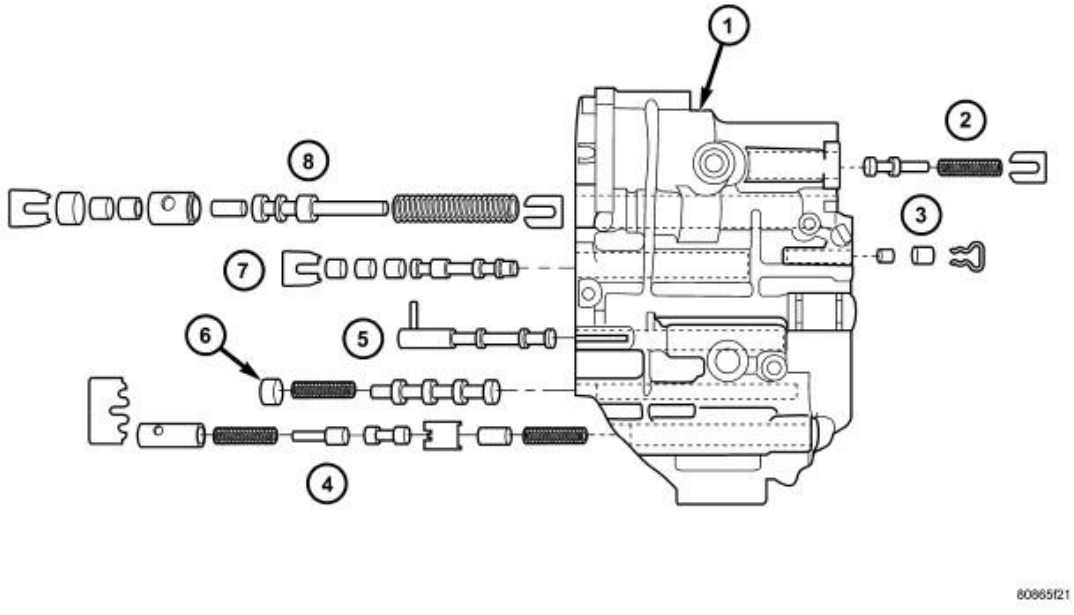

Fig. 397: Valve Body Assembly
Courtesy of CHRYSLER LLC

1 - VALVE BODY
2 - T/C REGULATOR VALVE
3 - L/R SWITCH VALVE
4 - CONVERTER CLUTCH CONTROL VALVE
5 - MANUAL VALVE
6 - CONVERTER CLUTCH SWITCH VALVE
7 - SOLENOID SWITCH VALVE
8 - REGULATOR VALVE

22. Remove all valves and springs .
23. Cleanliness through entire disassembly and assembly of the valve body cannot be overemphasized. When disassembling, each part should be washed in a suitable solvent, then dried by compressed air. **Do not wipe parts with shop towels.** All mating surfaces in the valve body are accurately machined; therefore, careful handling of all parts must be exercised to avoid nicks or burrs.

ASSEMBLY

ASSEMBLY

NOTE: **If the valve body assembly is being reconditioned or replaced, it is necessary to perform the Quick Learn Procedure using the scan tool. Refer to Electrical - Electronic Control Modules/Electronic Control Modules/MODULE, Transmission Control - Standard Procedure .**

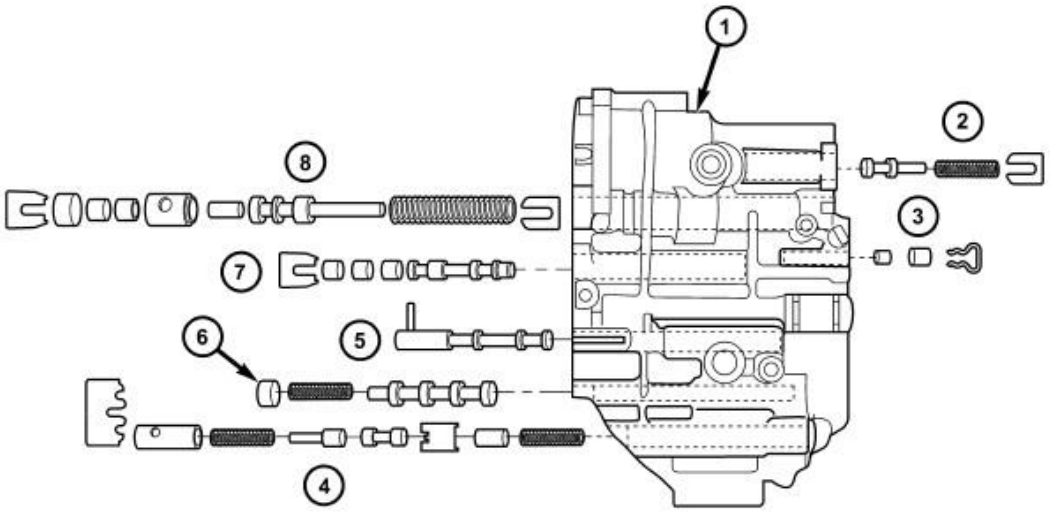

80865f21

Fig. 398: Valve Body Assembly
Courtesy of CHRYSLER LLC

1 - VALVE BODY
2 - T/C REGULATOR VALVE
3 - L/R SWITCH VALVE
4 - CONVERTER CLUTCH CONTROL VALVE
5 - MANUAL VALVE
6 - CONVERTER CLUTCH SWITCH VALVE
7 - SOLENOID SWITCH VALVE
8 - REGULATOR VALVE

1. Install all valves and springs as shown in illustration .

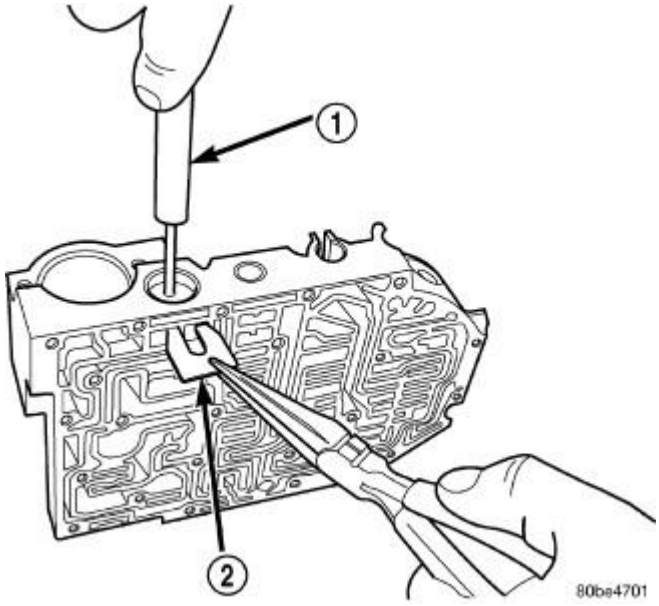

Fig. 399: Remove/Install Regulator Valve Spring Retainer Using Tool 6302
Courtesy of CHRYSLER LLC

1 - TOOL 6302
2 - RETAINER

2. Using Remover / Installer l regulator valve spring retainer (2) .

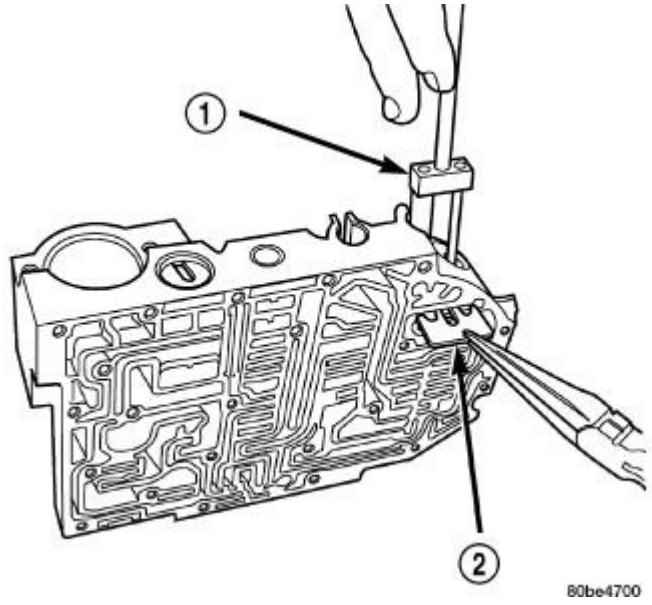

Fig. 400: Remove/Install Dual Retainer Plate Using Tool 6301
Courtesy of CHRYSLER LLC

1 - REMOVER/INSTALLER 6301 2 - RETAINER

3. Install dual retainer plate (2) using Remover/Installer 6301 (1) .

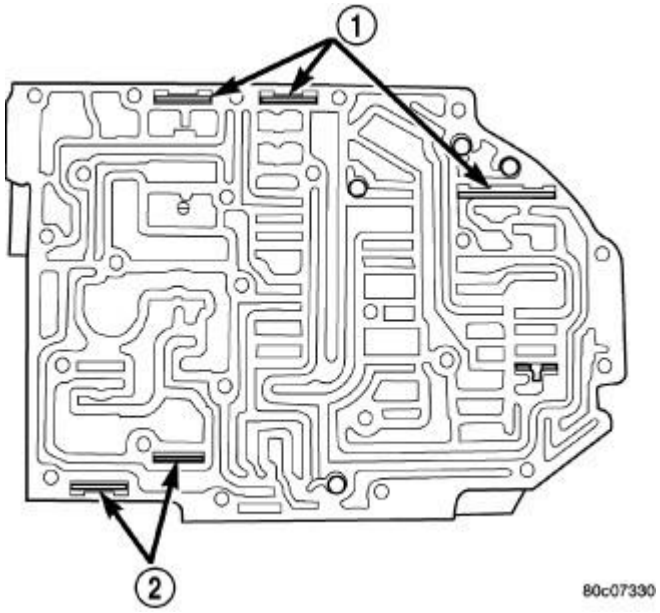

Fig. 401: Valve Retainer Location
Courtesy of CHRYSLER LLC

1 - RETAINER 2 - RETAINER

4. Verify that all retainers (1, 2) are installed as shown in illustration . Retainers should be flush or below valve body surface.

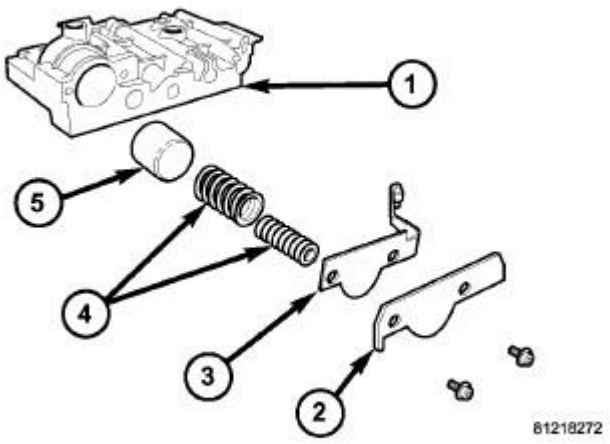

Fig. 402: Identifying 2/4 Accumulator Assembly
Courtesy of CHRYSLER LLC

1 - VALVE BODY
2 - RETAINER PLATE
3 - DETENT SPRING
4 - RETURN SPRINGS
5 - PISTON

5. Install 2/4 Accumulator components (1-5) as shown in illustration . Torque 2/4 Accumulator retainer plate to 5 N.m (45 in. lbs.).

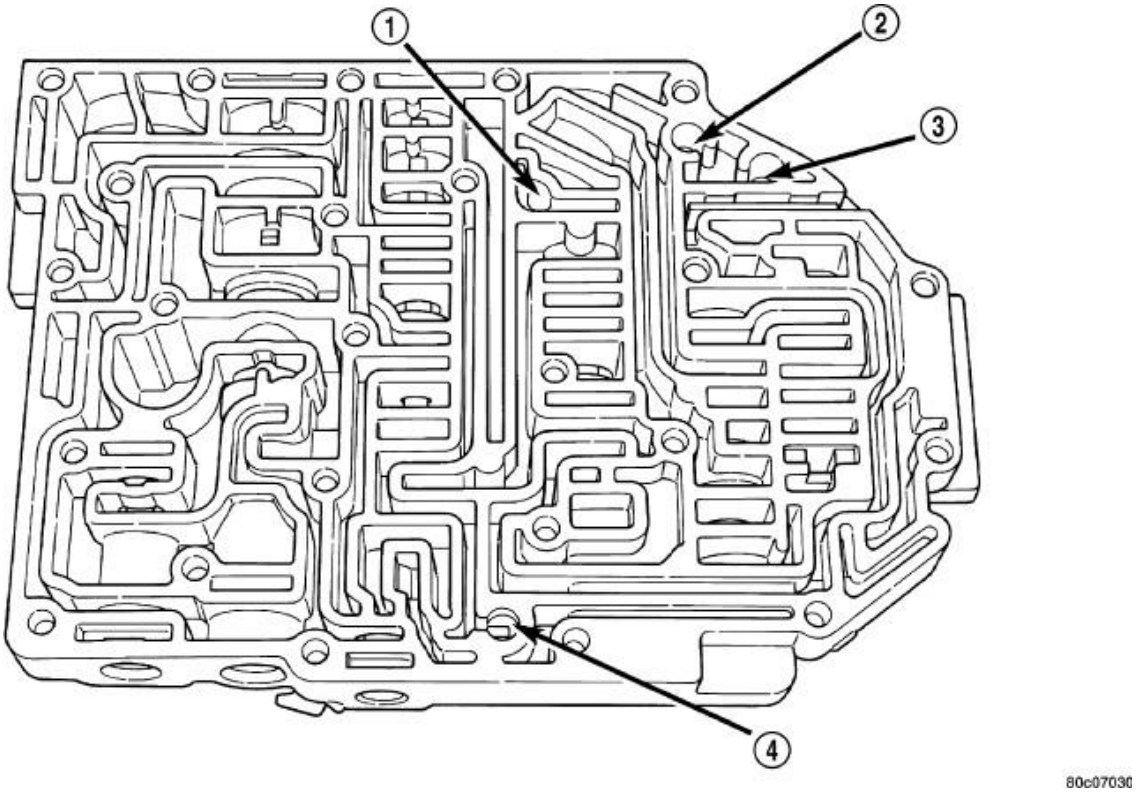

Fig. 403: Ball Check Location
Courtesy of CHRYSLER LLC

1 - (#4) BALL CHECK LOCATION
2 - (#2) BALL CHECK LOCATION
3 - (#5) BALL CHECK LOCATION
4 - (#3) BALL CHECK LOCATION

6. Install check balls into position as shown in illustration . If necessary, secure them with petrolatum or transmission assembly gel for assembly ease.

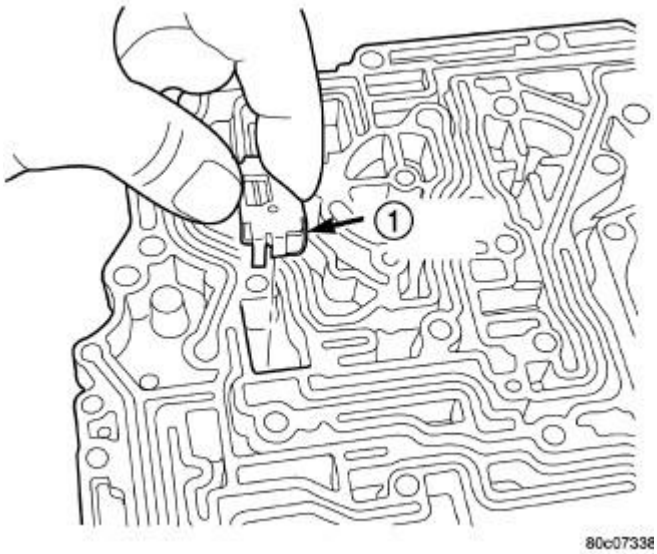

Fig. 404: Remove/Install Thermal Valve-at-Transfer Plate
Courtesy of CHRYSLER LLC

1 - THERMAL VALVE

7. Install thermal valve (1) to the transfer plate .

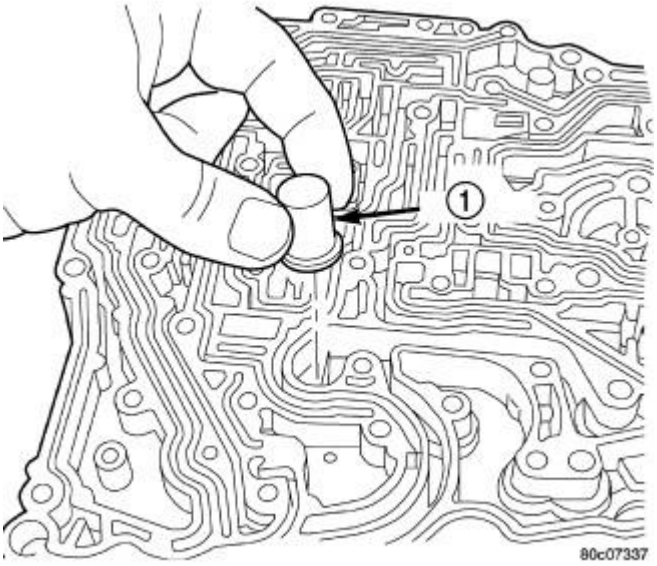

Fig. 405: Remove/Install Oil Screen-at-Transfer Plate
Courtesy of CHRYSLER LLC

1 - OIL SCREEN

8. Install the oil screen (1) to the transfer plate .

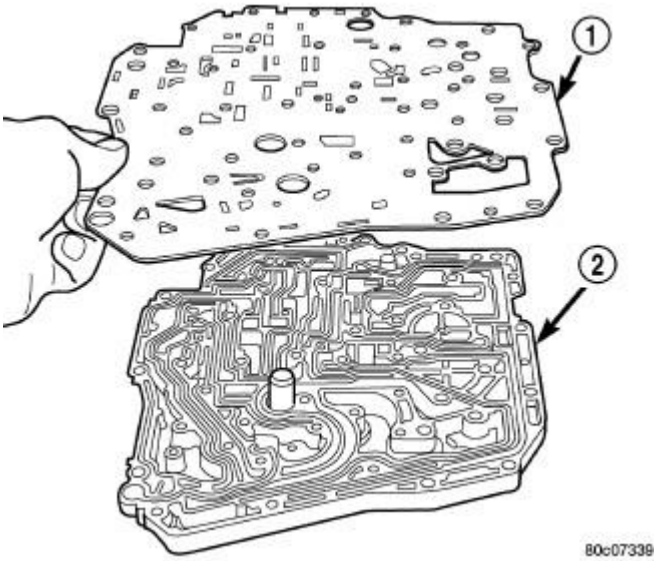

Fig. 406: Remove/Install Separator Plate-at-Transfer Plate
Courtesy of CHRYSLER LLC

1 - SEPARATOR PLATE 2 - TRANSFER PLATE

9. Install separator plate (1) to transfer plate (2) .

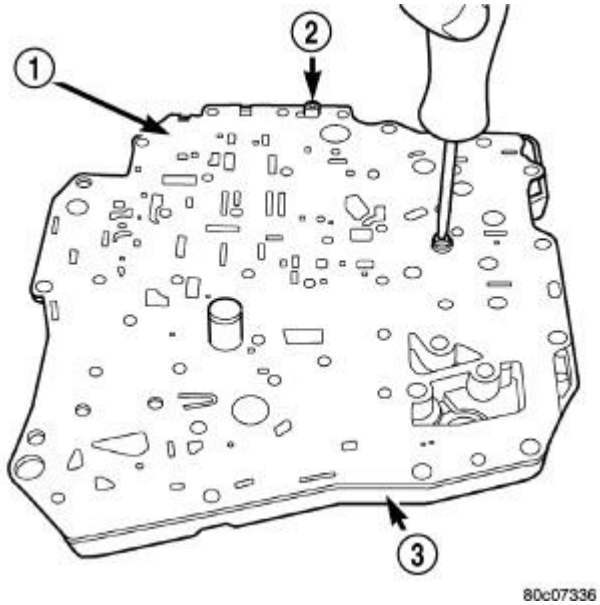

Fig. 407: Remove/Install Separator Plate-at-Transfer Plate Screws
Courtesy of CHRYSLER LLC

1 - SEPARATOR PLATE 2 - SCREW (2)

3 - TRANSFER PLATE

10. Install the two separator plate-to-transfer plate screws (2) .

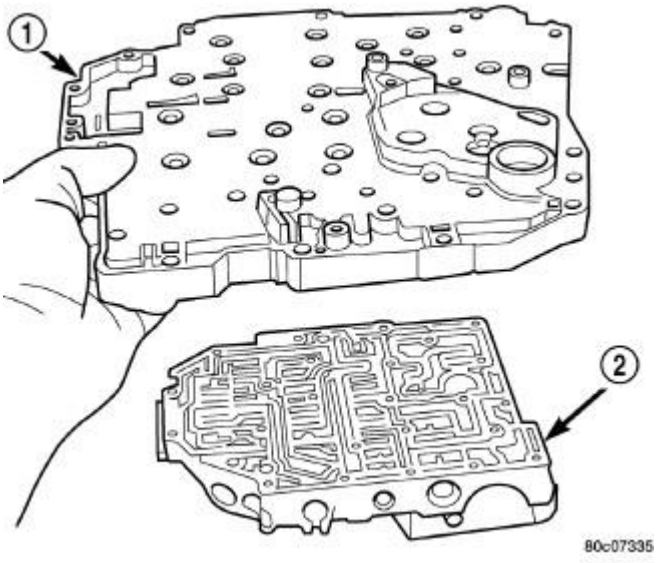

Fig. 408: Remove/Install Transfer Plate-at-Valve Body
Courtesy of CHRYSLER LLC

1 - TRANSFER PLATE 2 - VALVE BODY

11. Install the transfer plate (1) to the valve body (2) .

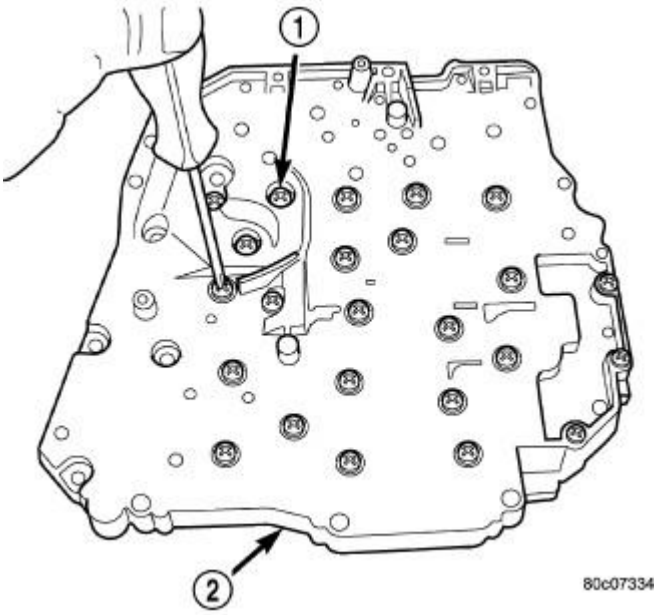

Fig. 409: Remove/Install Transfer Plate-at-Valve Body Screws

Courtesy of CHRYSLER LLC

1 - SCREW (24) 2 - TRANSFER PLATE

12. Install the transfer plate-to-valve body screws (1) and torque to 5 N.m (45 in. lbs.).

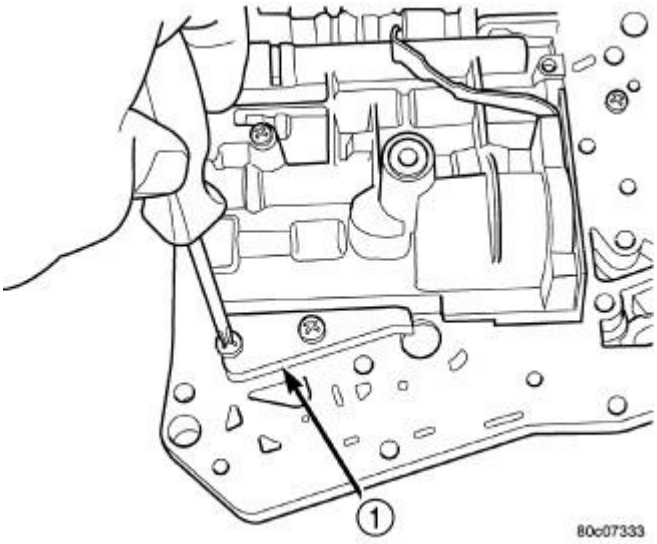

Fig. 410: Remove/Install Stiffener Plate
Courtesy of CHRYSLER LLC

1 - STIFFENER PLATE

13. Install the stiffener plate (1) .

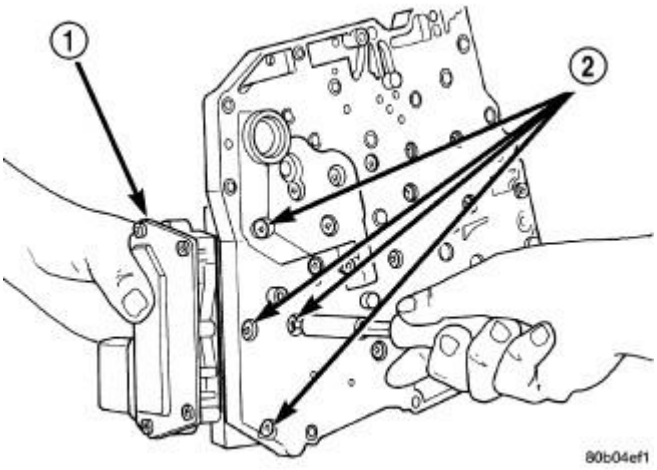

Fig. 411: Solenoid Retaining Screws
Courtesy of CHRYSLER LLC

1 - SOLENOID/PRESSURE SWITCH ASSEMBLY 2 - RETAINING SCREWS

14. Install the solenoid/pressure switch assembly (1) and screws to the transfer plate and torque to 5.5 N.m (50 in. lbs.).

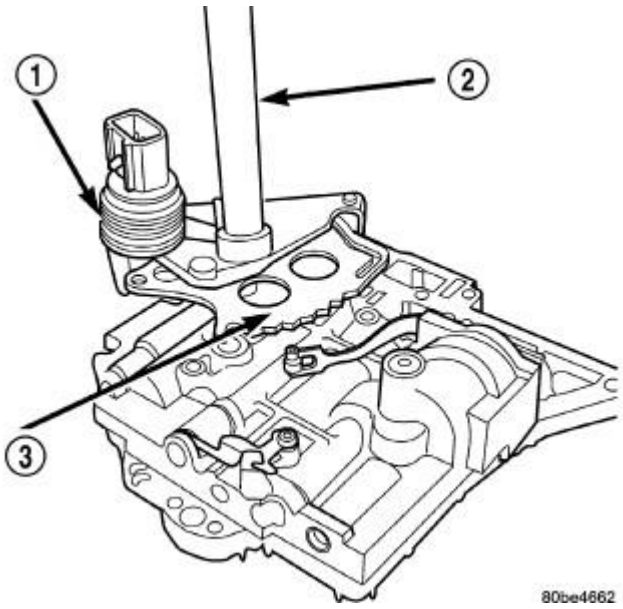

Fig. 412: Manual Shaft/Rooster Comb & Transmission Range Sensor
Courtesy of CHRYSLER LLC

1 - TRANSMISSION RANGE SENSOR 2 - MANUAL SHAFT 3 - ROOSTER COMB

15. Install the manual shaft/rooster comb (3) and transmission range sensor (1) to the valve body .

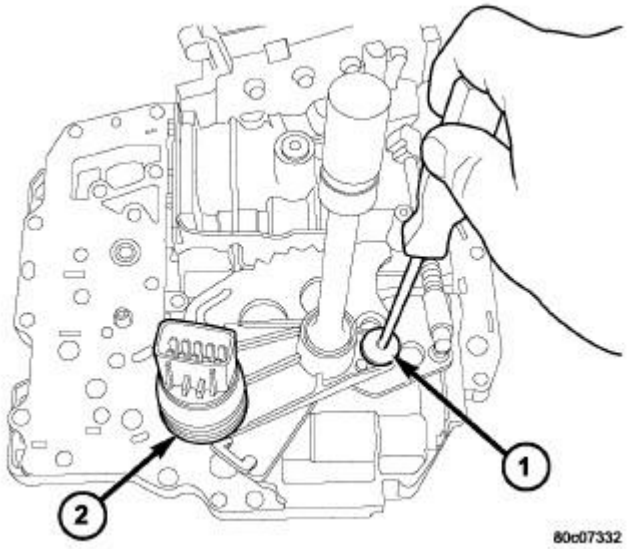

Fig. 413: Manual Shaft Retaining Screw
Courtesy of CHRYSLER LLC

1 - SCREW 2 - TRS

16. Install the TRS/manual shaft retaining screw (1) and torque to 5 N.m (45 in. lbs.).
17. Install manual shaft seal.

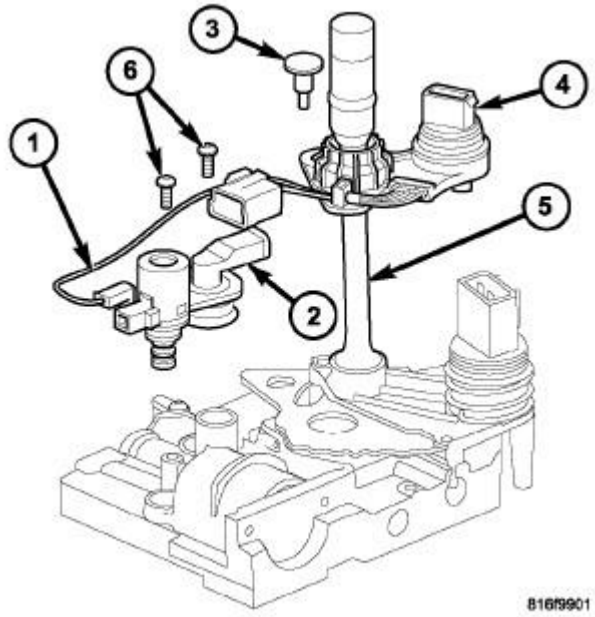

Fig. 414: Variable Line Pressure Components

Courtesy of CHRYSLER LLC

1 - PRESSURE CONTROL SOLENOID 2 - LINE PRESSURE SENSOR 3 - SHOULDER SCREW 4 - VARIABLE LINE PRESSURE HEADER 5 - MANUAL SHAFT 6 - SCREWS

18. Install the variable line pressure header onto the manual shaft (5) .
19. Install the shoulder screw (3) to hold the variable line pressure header (4) to the valve body.
20. Install the pressure control solenoid and line pressure sensor into the valve body.
21. Install the screws (6) to hold the pressure control solenoid (1) and line pressure sensor (2) to the valve body.
22. Install the electrical connectors to the pressure control solenoid (1) and the line pressure sensor (2).

INSTALLATION

INSTALLATION

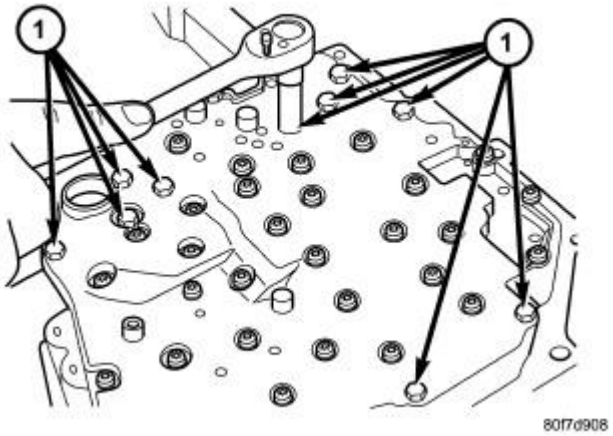

Fig. 415: Remove/Install Valve Body Fasteners
Courtesy of CHRYSLER LLC

1 - BOLTS

1. Install valve body into position and start bolts (1). Torque valve body to transmission case bolts (1) to 12 N.m (105 in. lbs.) torque.

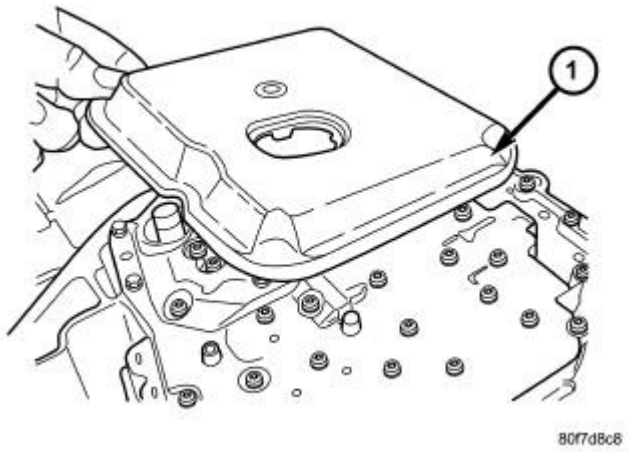

Fig. 416: Remove/Install Transmission Filter
Courtesy of CHRYSLER LLC

1 - TRANSMISSION FILTER

2. Install transmission oil filter (1) .

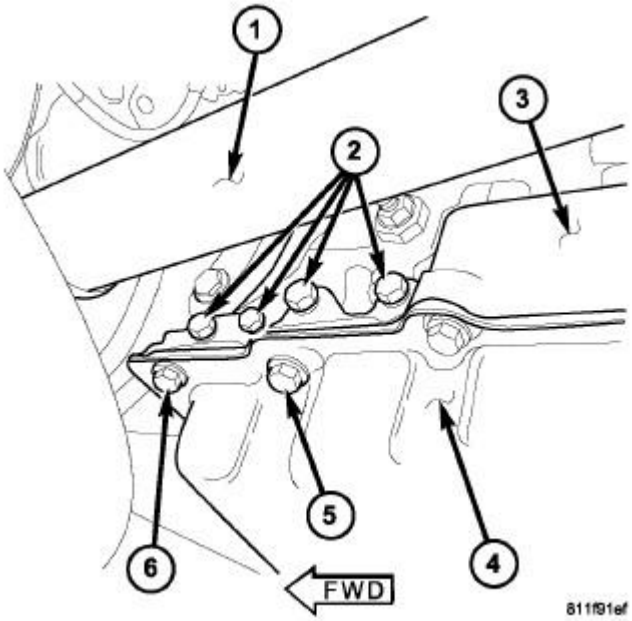

Fig. 417: Pan Fastener Location
Courtesy of CHRYSLER LLC

1 - FRONT DRIVESHAFT 2 - PRESSURE PORTS 3 - TRANSMISSION CASE

4 - TRANSMISSION OIL PAN 5 - SECOND TRANSMISSION OIL PAN BOLT ON LEFT SIDE 6 - FIRST TRANSMISSION OIL PAN BOLT

NOTE: **Before installing the oil pan bolt in the bolt hole (5) located between the torque converter clutch on and U/D clutch pressure tap circuits, it will be necessary to replenish the sealing patch on the bolt using MOPAR® Lock AND Seal Adhesive.**

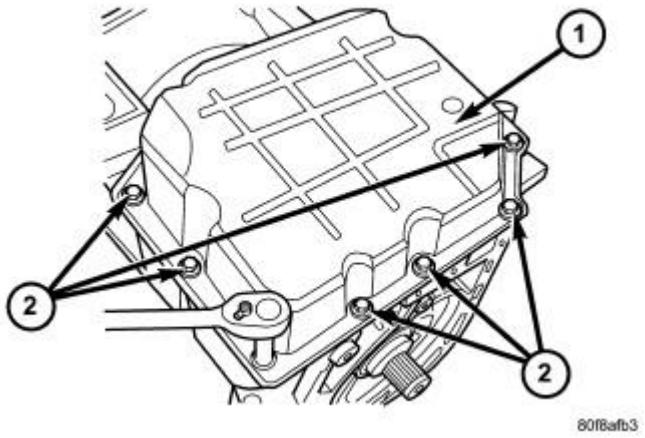

Fig. 418: Remove/Install Transmission Oil Pan Bolts
Courtesy of CHRYSLER LLC

1 - TRANSMISSION OIL PAN 2 - BOLTS

3. Make sure oil pan (1) and case rail are clean and dry. Install an 1/8" bead of RTV to the transmission oil pan and install to case. Tighten bolts (2) to 20 N.m (14.5 ft. lbs.).

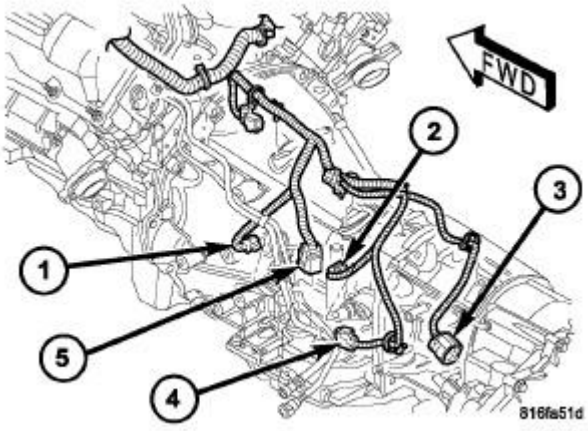

Fig. 419: Locating Transmission Wiring Connectors
Courtesy of CHRYSLER LLC

1 - INPUT SPEED SENSOR
2 - OUTPUT SPEED SENSOR
3 - SHIFT MOTOR AND MODE SENSOR ASSEMBLY
4 - VARIABLE LINE PRESSURE CONNECTOR
5 - TRANSMISSION RANGE SENSOR

4. Lower vehicle and connect the transmission range sensor (5) connector.
5. Connect solenoid/pressure switch assembly connector.
6. Connect the variable line pressure connector (4), if equipped.
7. Lower vehicle.
8. Fill transmission with ATF+4, Automatic Transmission Fluid. Verify proper fluid level. See **Transmission and Transfer Case/Automatic - 42RLE/FLUID and FILTER - Standard Procedure**.

NOTE: **If the valve body has been reconditioned or replaced, it is necessary to perform the Quick Learn Procedure. Refer to Electrical - Electronic Control Modules/Electronic Control Modules/MODULE, Transmission Control - Standard Procedure .**

AUTOMATIC TRANSMISSION NAG1 -

Service Information - Challenger

DESCRIPTION

DESCRIPTION

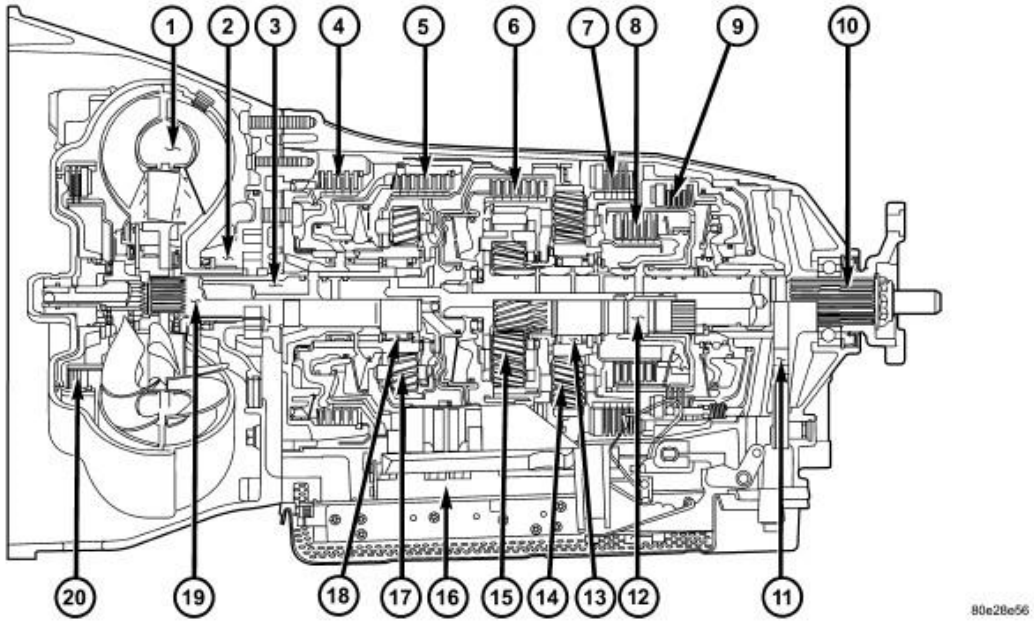

Fig. 1: NAG1 Automatic Transmission
Courtesy of CHRYSLER LLC

1 - TORQUE CONVERTER	11 - PARKING LOCK GEAR
2 - OIL PUMP	12 - INTERMEDIATE SHAFT
3 - DRIVESHAFT	13 - FREEWHEEL F2
4 - MULTI-DISC HOLDING CLUTCH B1	14 - REAR PLANETARY GEAR SET
5 - DRIVING CLUTCH K1	15 - CENTER PLANETARY GEAR SET
6 - DRIVING CLUTCH K2	16 - ELECTROHYDRAULIC CONTROL UNIT
7 - MULTI-DISC HOLDING CLUTCH B3	17 - FRONT PLANETARY GEAR SET
8 - DRIVING CLUTCH K3	18 - FREEWHEEL F1
9 - MULTI-DISC HOLDING CLUTCH B2	19 - STATOR SHAFT
10 - OUTPUT SHAFT	20 - TORQUE CONVERTER LOCK-UP CLUTCH

The NAG1 automatic transmission is an electronically controlled 5-speed transmission with a lock-up clutch in the torque converter. The ratios for the gear stages are obtained by 3 planetary gear sets. Fifth gear is designed as an overdrive with a high-speed ratio.

NAG1 identifies a family of transmissions and means "N"ew "A"utomatic "G"earbox, generation 1.

Various marketing names are associated with the NAG1 family of transmissions, depending on the transmission variation being used in a specific vehicle. Some examples of the marketing names are: W5A300, W5A380, and W5A580. The marketing name can be interpreted as follows:

- W = A transmission using a hydraulic torque converter.
- 5 = 5 forward gears.
- A = Automatic Transmission.
- 580 = Maximum input torque capacity in Newton meters.

The gears are actuated electronically/hydraulically. The gears are shifted by means of an appropriate combination of three multi-disc holding clutches, three multi-disc driving clutches, and two freewheeling clutches.

Electronic transmission control enables precise adaptation of pressures to the respective operating conditions and to the engine output during the shift phase which results in a significant improvement in shift quality.

Furthermore, it offers the advantage of a flexible adaptation to various vehicle and engines.

Basically, the automatic transmission with electronic control offers the following advantages:

- Reduces fuel consumption.
- Improved shift comfort.
- More favorable step-up through the five gears.
- Increased service life and reliability.
- Lower maintenance costs.

TRANSMISSION IDENTIFICATION

The transmission can be generically identified visually by the presence of a round 13-way connector located near the front corner of the transmission oil pan, on the right side. Specific transmission information can be found stamped into a pad on the left side of the transmission, above the oil pan rail.

TRANSMISSION GEAR RATIOS

The gear ratios for the NAG1 automatic transmission are as follows:

1st Gear

3.59:1

2nd Gear

2.19:1

3rd Gear

1.41:1

4th Gear

1.00:1

5th Gear

0.83:1

Reverse

3.16:1

TRANSMISSION HOUSING

The converter housing and transmission are made from a light alloy. These are bolted together and centered via the outer multi-disc carrier of multi-disc holding clutch, B1. A coated intermediate plate provides the sealing. The oil pump and the outer multi-disc carrier of the multi-disc holding clutch, B1, are bolted to the converter housing. The stator shaft is pressed into it and prevented from rotating by splines. The electrohydraulic unit is bolted to the transmission housing from underneath. A sheet metal steel oil pan forms the closure.

MECHANICAL SECTION

The mechanical section consists of a input shaft, output shaft, a sun gear shaft, and three planetary gear sets which are coupled to each other. The planetary gear sets each have four planetary pinion gears. The oil pressure for the torque converter lock-up clutch and clutch K2 is supplied through bores in the input shaft. The oil pressure to clutch K3 is transmitted through the output shaft. The lubricating oil is distributed through additional bores in both shafts. All the bearing points of the gear sets, as well as the freewheeling clutches and actuators, are supplied with lubricating oil. The parking lock gear is connected to the output shaft via splines.

Freewheeling clutches F1 and F2 are used to optimize the shifts. The front freewheel, F1, is supported on the extension of the stator shaft on the transmission side and, in the locking direction, connects the sun gear of the front planetary gear set to the transmission housing. In the locking direction, the rear freewheeling clutch, F2, connects the sun gear of the center planetary gear set to the sun gear of the rear planetary gear set.

ELECTROHYDRAULIC CONTROL UNIT

The electrohydraulic control unit comprises the shift plate made from light alloy for the hydraulic control and an electrical control unit. The electrical control unit comprises of a supporting body made of plastic, into which the electrical components are assembled. The supporting body is mounted on the shift plate and screwed to it.

Strip conductors inserted into the supporting body make the connection between the electrical components and a plug connector. The connection to the wiring harness on the vehicle and the transmission control module (TCM) is produced via this 13-pin plug connector with a bayonet lock.

SHIFT GROUPS

The hydraulic control components (including actuators) which are responsible for the pressure distribution before, during, and after a gear change are described as a shift group. Each shift group contains a command valve, a holding pressure shift valve, a shift pressure shift valve, overlap regulating valve, and a solenoid.

The hydraulic system contains three shift groups: 1-2/4-5, 2-3, and 3-4. Each shift group can also be described as being in one of two possible states. The active shift group is described as being in the shift phase when it is actively engaging/disengaging a clutch combination. The 1-2/4-5 shift group control the B1 and K1 clutches. The 2-3 shift group controls the K2 and K3 clutches. The 3-4 shift group controls the K3 and B2 clutches.

OPERATION

OPERATION

The transmission control is divided into the electronic and hydraulic transmission control functions. While the electronic transmission control is responsible for gear selection and for matching the pressures to the torque to be transmitted, the transmission's power supply control occurs via hydraulic elements in the electrohydraulic control module. The oil supply to the hydraulic elements, such as the hydrodynamic torque converter, the shift elements and the hydraulic transmission control, is provided by way of an oil pump connected with the torque converter.

The Transmission Control Module (TCM) allows for the precise adaptation of pressures to the corresponding operating conditions and to the engine output during the gearshift phase, resulting in a noticeable improvement in shift quality. The engine speed limit can be reached in the individual gears at full throttle and kickdown. The shift range can be changed in the forward gears while driving, but the TCM employs a downshift safeguard to prevent over-revving the engine. The system offers the additional advantage of flexible adaptation to different vehicle and engine variants.

EMERGENCY RUNNING FUNCTION

In order to ensure a safe driving state and to prevent damage to the automatic transmission, the TCM control module switches to limp-home mode in the event of critical faults. A diagnostic trouble code (DTC) assigned to the fault is stored in memory. All solenoid and regulating valves are thus de-energized.

The net effect is:

- The last engaged gear remains engaged.
- The modulating pressure and shift pressures rise to the maximum levels.
- The torque converter lockup clutch is deactivated.

In order to preserve the operability of the vehicle to some extent, the hydraulic control can be used to engage 2nd gear or reverse using the following procedure:

- Stop the vehicle.
- Move selector lever to "P".
- Switch off engine.
- Wait at least 10 seconds.
- Start engine.
- Move selector lever to D: 2nd gear.
- Move selector lever to R: Reverse gear.

The limp-home function remains active until the DTC is rectified or the stored DTC is erased with the appropriate scan tool. Sporadic faults can be reset via ignition OFF/ON.

CLUTCH APPLICATION

Refer to **CLUTCH APPLICATION** for which shift elements are applied in each gear position.

CLUTCH APPLICATION

GEAR	RATIO	B1	B2	B3	K1	K2	K3	F1	F2
1	3.59	X*	X	-	-	-	X*	X	X
2	2.19	-	X	-	X	-	X*	-	X
3	1.41	-	X	-	X	X	-	-	-
4	1.00	-	-	-	X	X	X	-	-
5	0.83	X	-	-	-	X	X	X*	-
N	N/A	X	-	-	-	-	X	-	-
R	3.16	X*	-	X	-	-	X	X	-
R - Limp In	1.93	X	X	X	-	-	-	-	-
* = The shift components required during coast.									

FIRST GEAR POWERFLOW

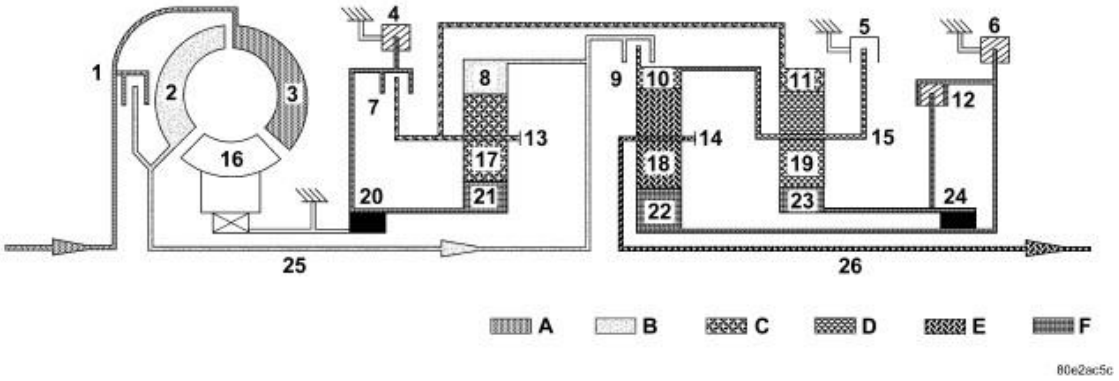

Fig. 2: First Gear Powerflow
Courtesy of CHRYSLER LLC

1 - TORQUE CONVERTER LOCK-UP CLUTCH	14 - CENTER PLANETARY CARRIER
2 - TORQUE CONVERTER TURBINE	15 - REAR PLANETARY CARRIER
3 - TORQUE CONVERTER IMPELLER	16 - TORQUE CONVERTER STATOR
4 - HOLDING CLUTCH B1	17 - FRONT PLANETARY PINION GEARS
5 - HOLDING CLUTCH B3	18 - CENTER PLANETARY PINION GEARS
6 - HOLDING CLUTCH B2	19 - REAR PLANETARY PINION GEARS
7 - DRIVING CLUTCH K1	20 - FREEWHEELING CLUTCH F1
8 - FRONT PLANETARY ANNULUS GEAR	21 - FRONT PLANETARY SUN GEAR
9 - DRIVING CLUTCH K2	22 - CENTER PLANETARY SUN GEAR
10 - CENTER PLANETARY ANNULUS GEAR	23 - REAR PLANETARY SUN GEAR
11 - REAR PLANETARY ANNULUS GEAR	24 - FREEWHEELING CLUTCH F2
12 - DRIVING CLUTCH K3	25 - INPUT SHAFT
13 - FRONT PLANETARY CARRIER	26 - OUTPUT SHAFT
A - ENGINE SPEED	D - SECOND GEAR RATIO
B - TRANSMISSION INPUT SPEED	E - THIRD GEAR RATIO
C - FIRST GEAR RATIO	F - FIXED PARTS

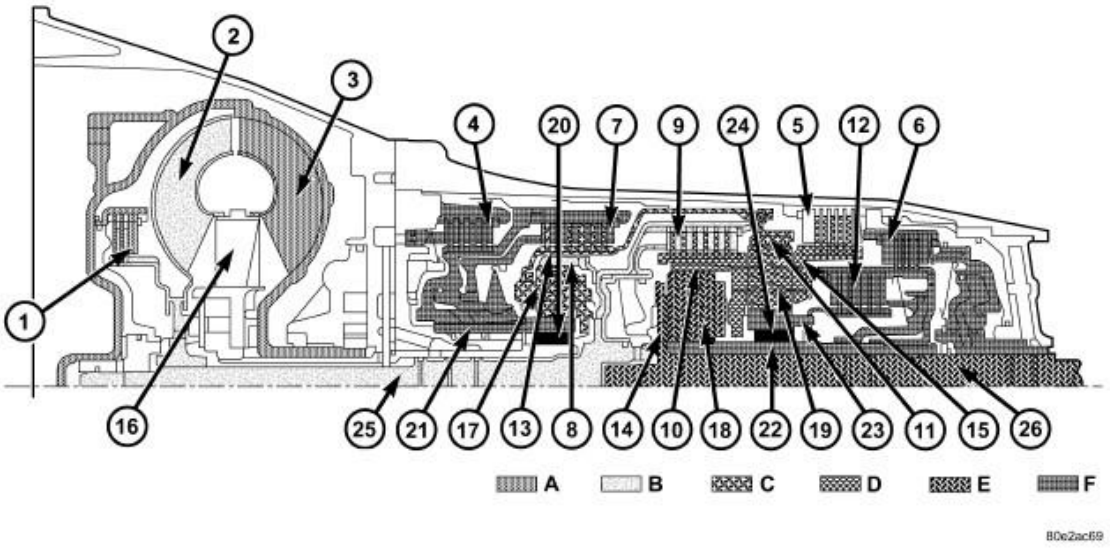

Fig. 3: First Gear Powerflow
Courtesy of CHRYSLER LLC

1 - TORQUE CONVERTER LOCK-UP CLUTCH	14 - CENTER PLANETARY CARRIER
2 - TORQUE CONVERTER TURBINE	15 - REAR PLANETARY CARRIER
3 - TORQUE CONVERTER IMPELLER	16 - TORQUE CONVERTER STATOR
4 - HOLDING CLUTCH B1	17 - FRONT PLANETARY PINION GEARS
5 - HOLDING CLUTCH B3	18 - CENTER PLANETARY PINION GEARS
6 - HOLDING CLUTCH B2	19 - REAR PLANETARY PINION GEARS
7 - DRIVING CLUTCH K1	20 - FREEWHEELING CLUTCH F1
8 - FRONT PLANETARY ANNULUS GEAR	21 - FRONT PLANETARY SUN GEAR
9 - DRIVING CLUTCH K2	22 - CENTER PLANETARY SUN GEAR
10 - CENTER PLANETARY ANNULUS GEAR	23 - REAR PLANETARY SUN GEAR
11 - REAR PLANETARY ANNULUS GEAR	24 - FREEWHEELING CLUTCH F2
12 - DRIVING CLUTCH K3	25 - INPUT SHAFT
13 - FRONT PLANETARY CARRIER	26 - OUTPUT SHAFT
A - ENGINE SPEED	D - SECOND GEAR RATIO
B - TRANSMISSION INPUT SPEED	E - THIRD GEAR RATIO
C - FIRST GEAR RATIO	F - FIXED PARTS

Torque from the torque converter is increased via the input shaft (25) and all three planetary gearsets and transferred to the output shaft (26).

Front Planetary Gear Set

The annulus gear (8) is driven by the input shaft (25). The sun gear (21) is held against the housing by the locked freewheel F1 (20) during acceleration and via the engaged multiple-disc holding clutch

B1 (4) during deceleration. The planetary pinion gears (17) turn on the fixed sun gear (21) and increase the torque from the annulus gear (8) to the planetary carrier (13). The planetary carrier (13) moves at a reduced speed in the running direction of the engine.

Rear Planetary Gear Set

The annulus gear (11) turns at a reduced speed due to the mechanical connection to the front planetary carrier (15). The sun gear (23) is held against the housing by the engaged multiple-disc holding clutch B2 (6), by the locked freewheel F2 (24) during acceleration and by the engaged multiple-disc clutch K3 (12) during deceleration. The planetary gears (19) turn on the fixed sun gear (23) and increase the torque from the annulus gear (11) to the planetary carrier (15). The planetary carrier (15) moves at a reduced speed in the running direction of the engine.

Center Planetary Gear Set

The annulus gear (10) is driven at the same speed as the rear planetary carrier (15) as a result of a mechanical connection. The sun gear (22) is held against the housing by the multiple-disc holding clutch B2 (6). The planetary pinion gears (18) turn on the fixed sun gear (22) and increase the torque from the annulus gear (10) to the planetary carrier (14). The output shaft (26) connected to the planetary carrier (14) turns at a reduced speed in the running direction of the engine.

SECOND GEAR POWERFLOW

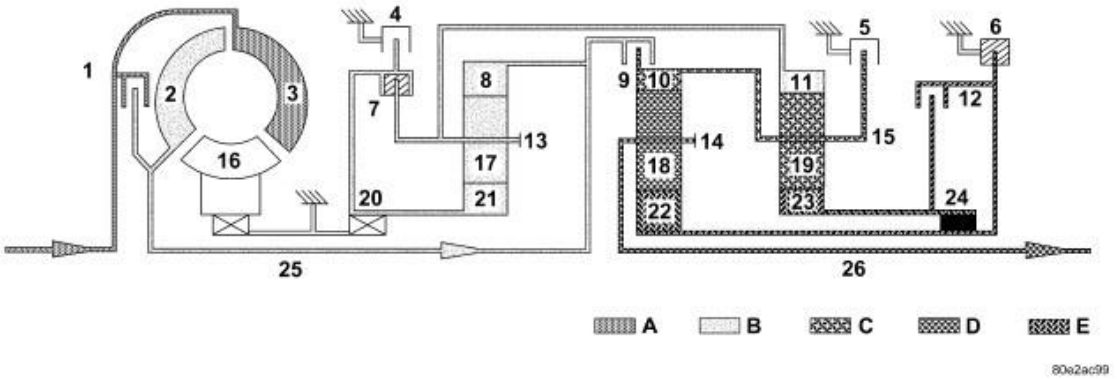

Fig. 4: Second Gear Powerflow
Courtesy of CHRYSLER LLC

1 - TORQUE CONVERTER LOCK-UP CLUTCH	14 - CENTER PLANETARY CARRIER
2 - TORQUE CONVERTER TURBINE	15 - REAR PLANETARY CARRIER
3 - TORQUE CONVERTER IMPELLER	16 - TORQUE CONVERTER STATOR
4 - HOLDING CLUTCH B1	17 - FRONT PLANETARY PINION GEARS
5 - HOLDING CLUTCH B3	18 - CENTER PLANETARY PINION GEARS
6 - HOLDING CLUTCH B2	19 - REAR PLANETARY PINION GEARS
7 - DRIVING CLUTCH K1	20 - FREEWHEELING CLUTCH F1

8 - FRONT PLANETARY ANNULUS GEAR	21 - FRONT PLANETARY SUN GEAR
9 - DRIVING CLUTCH K2	22 - CENTER PLANETARY SUN GEAR
10 - CENTER PLANETARY ANNULUS GEAR	23 - REAR PLANETARY SUN GEAR
11 - REAR PLANETARY ANNULUS GEAR	24 - FREEWHEELING CLUTCH F2
12 - DRIVING CLUTCH K3	25 - INPUT SHAFT
13 - FRONT PLANETARY CARRIER	26 - OUTPUT SHAFT
A - ENGINE SPEED	D - SECOND GEAR RATIO
B - TRANSMISSION INPUT SPEED	E - FIXED PARTS
C - FIRST GEAR RATIO	-

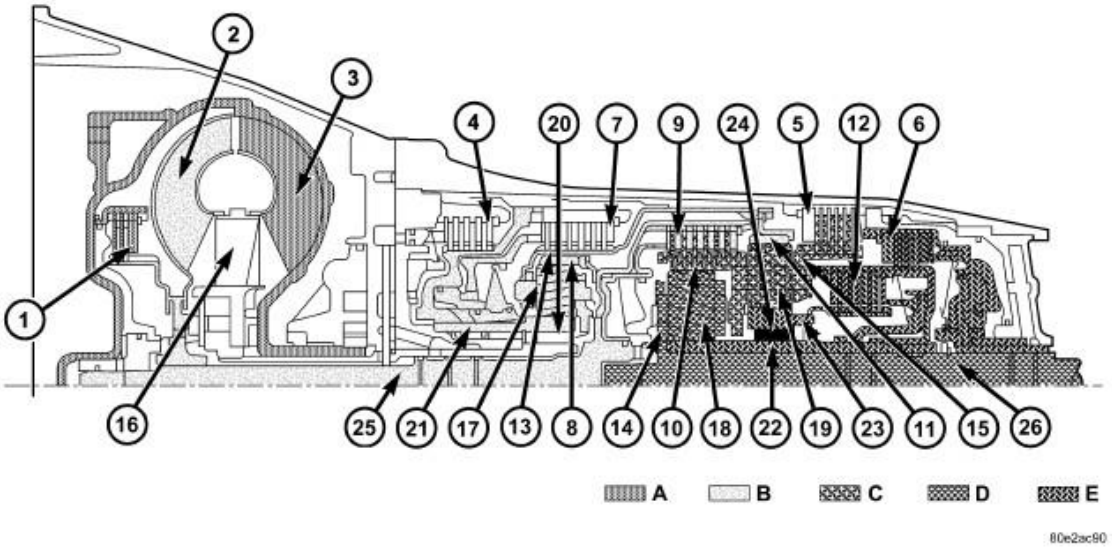

Fig. 5: Second Gear Powerflow
Courtesy of CHRYSLER LLC

1 - TORQUE CONVERTER LOCK-UP CLUTCH	14 - CENTER PLANETARY CARRIER
2 - TORQUE CONVERTER TURBINE	15 - REAR PLANETARY CARRIER
3 - TORQUE CONVERTER IMPELLER	16 - TORQUE CONVERTER STATOR
4 - HOLDING CLUTCH B1	17 - FRONT PLANETARY PINION GEARS
5 - HOLDING CLUTCH B3	18 - CENTER PLANETARY PINION GEARS
6 - HOLDING CLUTCH B2	19 - REAR PLANETARY PINION GEARS
7 - DRIVING CLUTCH K1	20 - FREEWHEELING CLUTCH F1
8 - FRONT PLANETARY ANNULUS GEAR	21 - FRONT PLANETARY SUN GEAR
9 - DRIVING CLUTCH K2	22 - CENTER PLANETARY SUN GEAR
10 - CENTER PLANETARY ANNULUS GEAR	23 - REAR PLANETARY SUN GEAR
11 - REAR PLANETARY ANNULUS GEAR	24 - FREEWHEELING CLUTCH F2
12 - DRIVING CLUTCH K3	25 - INPUT SHAFT
13 - FRONT PLANETARY CARRIER	26 - OUTPUT SHAFT

A - ENGINE SPEED	D - SECOND GEAR RATIO
B - TRANSMISSION INPUT SPEED	E - FIXED PARTS
C - FIRST GEAR RATIO	-

Torque from the torque converter is increased via the input shaft (25) and the center and rear planetary gearset and transferred to the output shaft (26).

Front Planetary Gear Set

The planetary carrier (13) and sun gear (21) are connected via the engaged multiple-disc clutch K1 (7). The planetary gearset is therefore blocked and turns as a closed unit at the input speed due to the mechanical connection of the annulus gear (8) and input shaft.

Rear Planetary Gear Set

The annulus gear (11) turns at the input speed as a result of the mechanical connection to the front planetary carrier (13). The sun gear (23) is held against the housing by the engaged multiple-disc holding clutch B2 (6), by the locked freewheel F2 (24) during acceleration and by the engaged multiple-disc clutch K3 (12) during deceleration. The planetary pinion gears (19) turn on the fixed sun gear (23) and increase the torque from the annulus gear (11) to the planetary carrier (15). The planetary carrier (15) moves at a reduced speed in the running direction of the engine.

Center Planetary Gear Set

The annulus gear (10) is driven at the same speed as the rear planetary carrier (15) as a result of a mechanical connection. The sun gear (22) is held against the housing by the multiple-disc holding clutch B2 (6). The planetary pinion gears (18) turn on the fixed sun gear (22) and increase the torque from the annulus gear (10) to the planetary carrier (14). The output shaft (5) connected to the planetary carrier (14) turns at a reduced speed in the running direction of the engine.

THIRD GEAR POWERFLOW

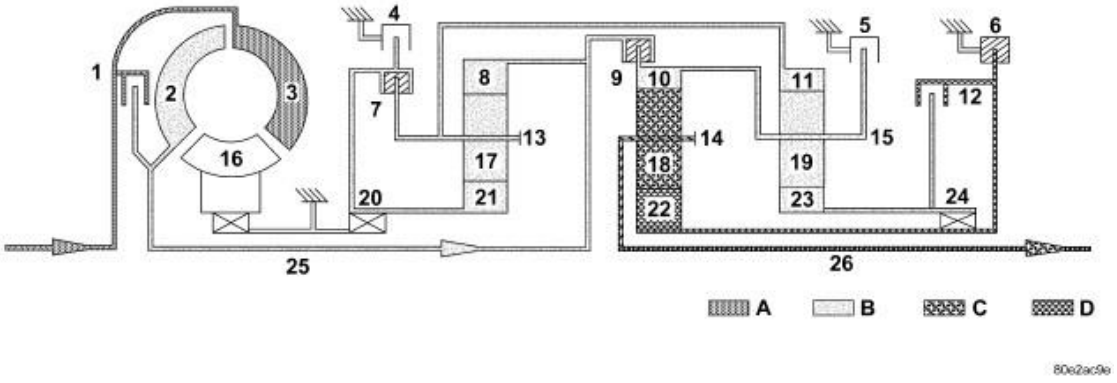

Fig. 6: Third Gear Powerflow
Courtesy of CHRYSLER LLC

1 - TORQUE CONVERTER LOCK-UP CLUTCH	14 - CENTER PLANETARY CARRIER
2 - TORQUE CONVERTER TURBINE	15 - REAR PLANETARY CARRIER
3 - TORQUE CONVERTER IMPELLER	16 - TORQUE CONVERTER STATOR
4 - HOLDING CLUTCH B1	17 - FRONT PLANETARY PINION GEARS
5 - HOLDING CLUTCH B3	18 - CENTER PLANETARY PINION GEARS
6 - HOLDING CLUTCH B2	19 - REAR PLANETARY PINION GEARS
7 - DRIVING CLUTCH K1	20 - FREEWHEELING CLUTCH F1
8 - FRONT PLANETARY ANNULUS GEAR	21 - FRONT PLANETARY SUN GEAR
9 - DRIVING CLUTCH K2	22 - CENTER PLANETARY SUN GEAR
10 - CENTER PLANETARY ANNULUS GEAR	23 - REAR PLANETARY SUN GEAR
11 - REAR PLANETARY ANNULUS GEAR	24 - FREEWHEELING CLUTCH F2
12 - DRIVING CLUTCH K3	25 - INPUT SHAFT
13 - FRONT PLANETARY CARRIER	26 - OUTPUT SHAFT
A - ENGINE SPEED	C - FIRST GEAR RATIO
B - TRANSMISSION INPUT SPEED	D - FIXED PARTS

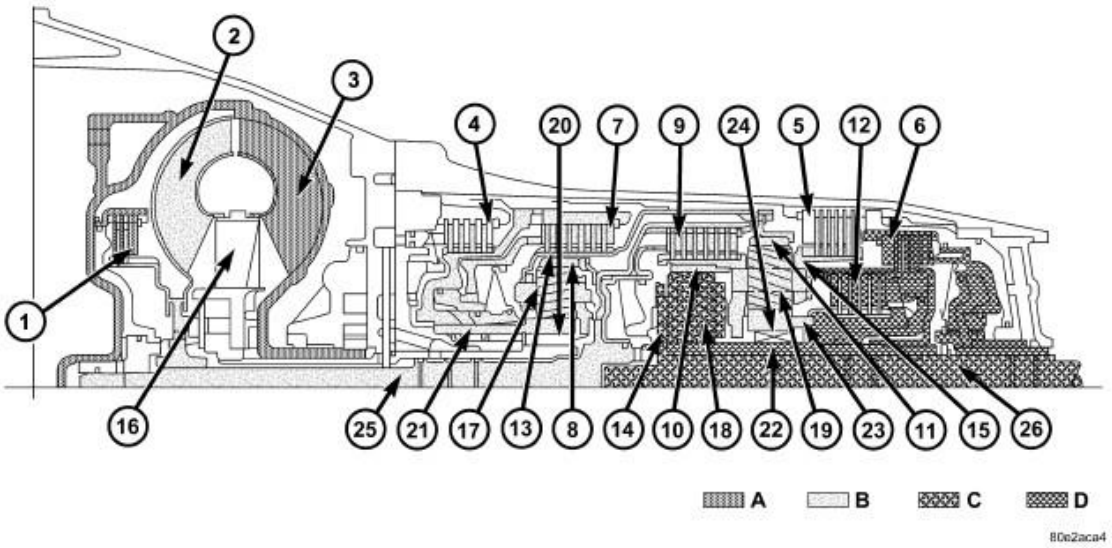

Fig. 7: Third Gear Powerflow
Courtesy of CHRYSLER LLC

1 - TORQUE CONVERTER LOCK-UP CLUTCH	14 - CENTER PLANETARY CARRIER
2 - TORQUE CONVERTER TURBINE	15 - REAR PLANETARY CARRIER
3 - TORQUE CONVERTER IMPELLER	16 - TORQUE CONVERTER STATOR
4 - HOLDING CLUTCH B1	17 - FRONT PLANETARY PINION GEARS
5 - HOLDING CLUTCH B3	18 - CENTER PLANETARY PINION GEARS
6 - HOLDING CLUTCH B2	19 - REAR PLANETARY PINION GEARS

7 - DRIVING CLUTCH K1	20 - FREEWHEELING CLUTCH F1
8 - FRONT PLANETARY ANNULUS GEAR	21 - FRONT PLANETARY SUN GEAR
9 - DRIVING CLUTCH K2	22 - CENTER PLANETARY SUN GEAR
10 - CENTER PLANETARY ANNULUS GEAR	23 - REAR PLANETARY SUN GEAR
11 - REAR PLANETARY ANNULUS GEAR	24 - FREEWHEELING CLUTCH F2
12 - DRIVING CLUTCH K3	25 - INPUT SHAFT
13 - FRONT PLANETARY CARRIER	26 - OUTPUT SHAFT
A - ENGINE SPEED	C - FIRST GEAR RATIO
B - TRANSMISSION INPUT SPEED	D - FIXED PARTS

Torque from the torque converter is increased via the input shaft (25) and the center planetary gearset and transferred to the output shaft (26).

Front Planetary Gear Set

The planetary carrier (13) and sun gear (21) are connected via the engaged multiple-disc clutch K1 (7). The planetary gearset is therefore locked and turns as a closed unit at the input speed due to the mechanical connection of the annulus gear (8) and input shaft (25).

Rear Planetary Gear Set

The multiple-disc clutch K2 (9) is engaged and transfers the input speed of the input shaft (25) to the planetary carrier (15) via the annulus gear (10). The annulus gear (11) turns in the same way as the planetary carrier (15) due to the mechanical connection with the locked front planetary gearset. This planetary gearset is therefore locked and turns as a closed unit.

Center Planetary Gear Set

The annulus gear (10) turns at the input speed as a result of the engaged multiple-disc clutch K2 (9). The sun gear (22) is held against the housing by the multiple-disc holding clutch B2 (6). The planetary pinion gears (18) turn on the fixed sun gear (22) and increase the torque from the annulus gear (10) to the planetary carrier (14). The output shaft (26) connected to the planetary carrier (14) turns at a reduced speed in the running direction of the engine.

FOURTH GEAR POWERFLOW

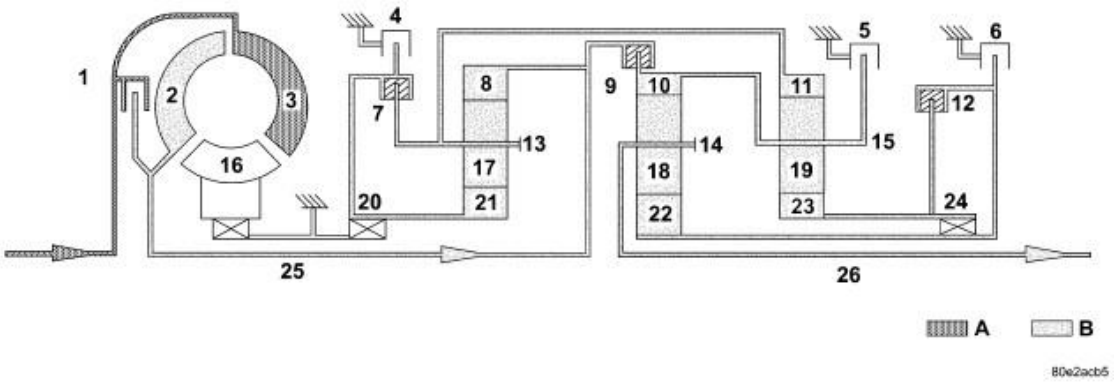

Fig. 8: Fourth Gear Powerflow
Courtesy of CHRYSLER LLC

1 - TORQUE CONVERTER LOCK-UP CLUTCH	14 - CENTER PLANETARY CARRIER
2 - TORQUE CONVERTER TURBINE	15 - REAR PLANETARY CARRIER
3 - TORQUE CONVERTER IMPELLER	16 - TORQUE CONVERTER STATOR
4 - HOLDING CLUTCH B1	17 - FRONT PLANETARY PINION GEARS
5 - HOLDING CLUTCH B3	18 - CENTER PLANETARY PINION GEARS
6 - HOLDING CLUTCH B2	19 - REAR PLANETARY PINION GEARS
7 - DRIVING CLUTCH K1	20 - FREEWHEELING CLUTCH F1
8 - FRONT PLANETARY ANNULUS GEAR	21 - FRONT PLANETARY SUN GEAR
9 - DRIVING CLUTCH K2	22 - CENTER PLANETARY SUN GEAR
10 - CENTER PLANETARY ANNULUS GEAR	23 - REAR PLANETARY SUN GEAR
11 - REAR PLANETARY ANNULUS GEAR	24 - FREEWHEELING CLUTCH F2
12 - DRIVING CLUTCH K3	25 - INPUT SHAFT
13 - FRONT PLANETARY CARRIER	26 - OUTPUT SHAFT
A - ENGINE SPEED	B - TRANSMISSION INPUT SPEED

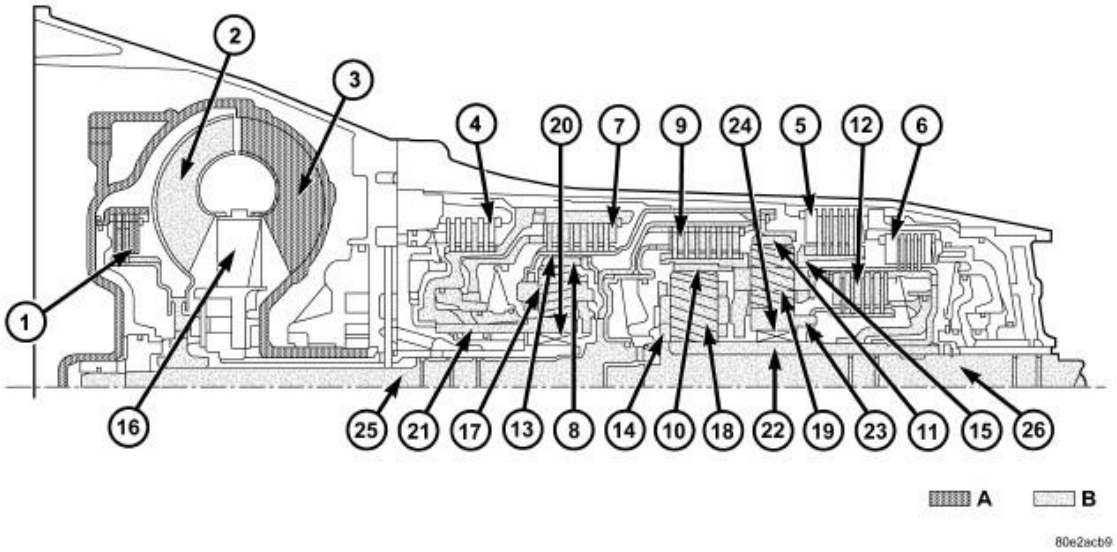

Fig. 9: Fourth Gear Powerflow
Courtesy of CHRYSLER LLC

1 - TORQUE CONVERTER LOCK-UP CLUTCH	14 - CENTER PLANETARY CARRIER
2 - TORQUE CONVERTER TURBINE	15 - REAR PLANETARY CARRIER
3 - TORQUE CONVERTER IMPELLER	16 - TORQUE CONVERTER STATOR
4 - HOLDING CLUTCH B1	17 - FRONT PLANETARY PINION GEARS
5 - HOLDING CLUTCH B3	18 - CENTER PLANETARY PINION GEARS
6 - HOLDING CLUTCH B2	19 - REAR PLANETARY PINION GEARS
7 - DRIVING CLUTCH K1	20 - FREEWHEELING CLUTCH F1
8 - FRONT PLANETARY ANNULUS GEAR	21 - FRONT PLANETARY SUN GEAR
9 - DRIVING CLUTCH K2	22 - CENTER PLANETARY SUN GEAR
10 - CENTER PLANETARY ANNULUS GEAR	23 - REAR PLANETARY SUN GEAR
11 - REAR PLANETARY ANNULUS GEAR	24 - FREEWHEELING CLUTCH F2
12 - DRIVING CLUTCH K3	25 - INPUT SHAFT
13 - FRONT PLANETARY CARRIER	26 - OUTPUT SHAFT
A - ENGINE SPEED	B - TRANSMISSION INPUT SPEED

Speed and torque are not converted by the direct gear ratio of the 4th gear. Power is transferred from the input shaft (25) to the output shaft (26) via three locked planetary gearsets.

Front Planetary Gear Set

The planetary carrier (13) and sun gear (21) are connected via the engaged multiple-disc clutch K1 (7). The planetary gearset is therefore locked and turns as a closed unit at the input speed due to the mechanical connection of the annulus gear (8) and the input shaft (25).

Rear Planetary Gear Set

The multiple-disc clutch K2 (9) is engaged and transfers the input speed of the input shaft (25) to the planetary carrier (15) via the annulus gear (10). The annulus gear (11) turns in the same way as the planetary carrier (15) due to the mechanical connection with the locked front planetary gearset. The planetary gearset is therefore locked and turns as a closed unit.

Center Planetary Gear Set

The annulus gear (10) turns at the input speed as a result of the engaged multiple-disc clutch K2 (9). The multiple-disc clutch K3 (12) connects the sun gears (22) and (23) of the rear and center planetary gearset. The planetary gearset is locked by the same speeds of the annulus gear (10) and the sun gear (22) and it turns as a closed unit.

FIFTH GEAR POWERFLOW

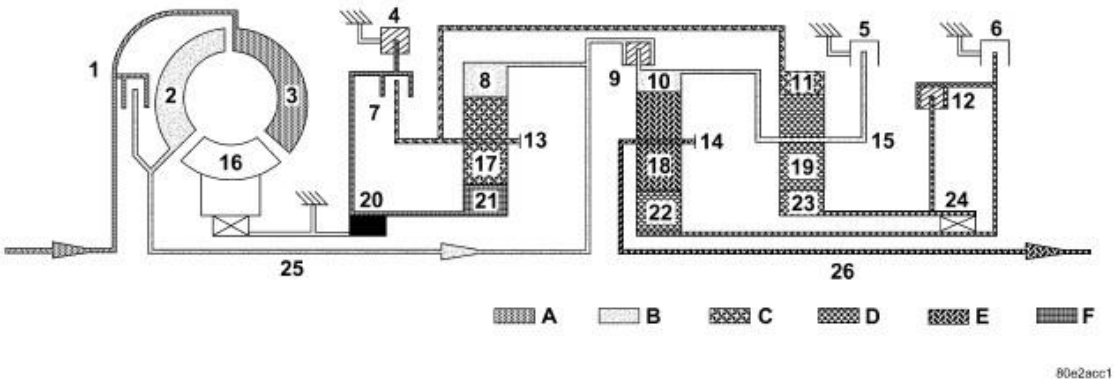

Fig. 10: Fifth Gear Powerflow
Courtesy of CHRYSLER LLC

1 - TORQUE CONVERTER LOCK-UP CLUTCH	14 - CENTER PLANETARY CARRIER
2 - TORQUE CONVERTER TURBINE	15 - REAR PLANETARY CARRIER
3 - TORQUE CONVERTER IMPELLER	16 - TORQUE CONVERTER STATOR
4 - HOLDING CLUTCH B1	17 - FRONT PLANETARY PINION GEARS
5 - HOLDING CLUTCH B3	18 - CENTER PLANETARY PINION GEARS
6 - HOLDING CLUTCH B2	19 - REAR PLANETARY PINION GEARS
7 - DRIVING CLUTCH K1	20 - FREEWHEELING CLUTCH F1
8 - FRONT PLANETARY ANNULUS GEAR	21 - FRONT PLANETARY SUN GEAR
9 - DRIVING CLUTCH K2	22 - CENTER PLANETARY SUN GEAR
10 - CENTER PLANETARY ANNULUS GEAR	23 - REAR PLANETARY SUN GEAR
11 - REAR PLANETARY ANNULUS GEAR	24 - FREEWHEELING CLUTCH F2
12 - DRIVING CLUTCH K3	25 - INPUT SHAFT
13 - FRONT PLANETARY CARRIER	26 - OUTPUT SHAFT
A - ENGINE SPEED	D - SECOND GEAR RATIO
B - TRANSMISSION INPUT SPEED	E - THIRD GEAR RATIO

C - FIRST GEAR RATIO	F - FIXED PARTS

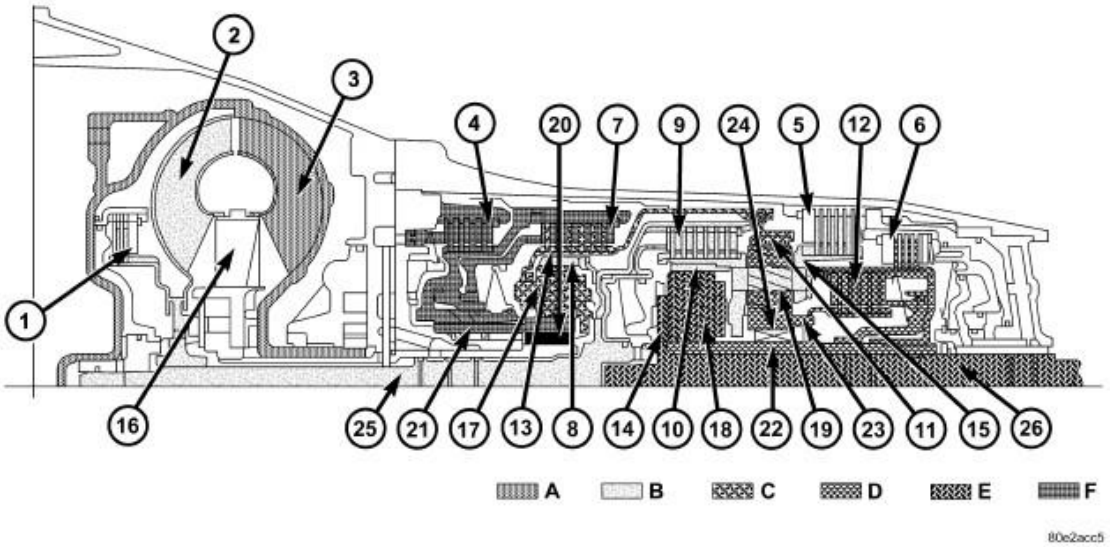

Fig. 11: Fifth Gear Powerflow
Courtesy of CHRYSLER LLC

1 - TORQUE CONVERTER LOCK-UP CLUTCH	14 - CENTER PLANETARY CARRIER
2 - TORQUE CONVERTER TURBINE	15 - REAR PLANETARY CARRIER
3 - TORQUE CONVERTER IMPELLER	16 - TORQUE CONVERTER STATOR
4 - HOLDING CLUTCH B1	17 - FRONT PLANETARY PINION GEARS
5 - HOLDING CLUTCH B3	18 - CENTER PLANETARY PINION GEARS
6 - HOLDING CLUTCH B2	19 - REAR PLANETARY PINION GEARS
7 - DRIVING CLUTCH K1	20 - FREEWHEELING CLUTCH F1
8 - FRONT PLANETARY ANNULUS GEAR	21 - FRONT PLANETARY SUN GEAR
9 - DRIVING CLUTCH K2	22 - CENTER PLANETARY SUN GEAR
10 - CENTER PLANETARY ANNULUS GEAR	23 - REAR PLANETARY SUN GEAR
11 - REAR PLANETARY ANNULUS GEAR	24 - FREEWHEELING CLUTCH F2
12 - DRIVING CLUTCH K3	25 - INPUT SHAFT
13 - FRONT PLANETARY CARRIER	26 - OUTPUT SHAFT
A - ENGINE SPEED	D - SECOND GEAR RATIO
B - TRANSMISSION INPUT SPEED	E - THIRD GEAR RATIO
C - FIRST GEAR RATIO	F - FIXED PARTS

Torque from the torque converter is increased via the input shaft (25) and all three planetary gearsets and transferred to the output shaft (26).

Front Planetary Gear Set

The annulus gear (8) is driven by the input shaft (25). The sun gear (21) is held against the housing by the locked freewheel F1 (20) during acceleration and via the engaged multiple-disc holding clutch B1 (4) during deceleration. The planetary pinion gears (17) turn on the fixed sun gear (21) and increase the torque from the annulus gear (8) to the planetary carrier (13). The planetary carrier (13) moves at a reduced speed in the running direction of the engine.

Rear Planetary Gear Set

The multiple-disc clutch K2 (9) is engaged and transfers the input speed of the input shaft (25) to the planetary carrier (15) via the annulus gear (10). The annulus gear (11) turns at a reduced speed due to the mechanical connection with the front planetary carrier (13). The planetary pinion gears (19) turn between the annulus gear (11) and the sun gear (23). The sun gear (23) moves at an increased speed in the running direction of the engine.

Center Planetary Gear Set

The annulus gear (10) turns at the input speed as a result of the engaged multiple-disc clutch K2 (9). The multiple-disc clutch K3 (12) transfers an increased speed to the sun gear (22) due to the connection with the sun gear (23). The planetary pinion gears (18) turn between the annulus gear (10) and the sun gear (22). The speed of the planetary carrier (14) and the output shaft connected to the planetary carrier (5) lies between that of the annulus gear (10) and the sun gear (22). This provides a step-up ratio.

REVERSE GEAR POWERFLOW

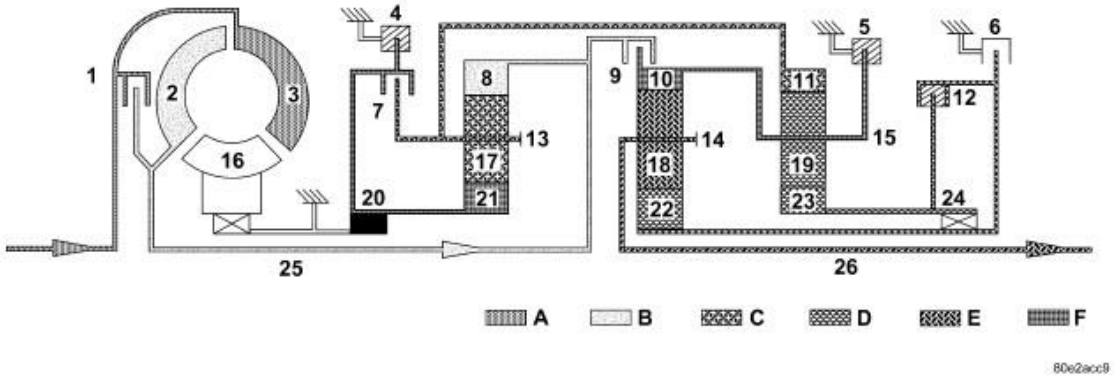

Fig. 12: Reverse Gear Powerflow
Courtesy of CHRYSLER LLC

1 - TORQUE CONVERTER LOCK-UP CLUTCH	14 - CENTER PLANETARY CARRIER
2 - TORQUE CONVERTER TURBINE	15 - REAR PLANETARY CARRIER
3 - TORQUE CONVERTER IMPELLER	16 - TORQUE CONVERTER STATOR
4 - HOLDING CLUTCH B1	17 - FRONT PLANETARY PINION GEARS
5 - HOLDING CLUTCH B3	18 - CENTER PLANETARY PINION GEARS

6 - HOLDING CLUTCH B2	19 - REAR PLANETARY PINION GEARS
7 - DRIVING CLUTCH K1	20 - FREEWHEELING CLUTCH F1
8 - FRONT PLANETARY ANNULUS GEAR	21 - FRONT PLANETARY SUN GEAR
9 - DRIVING CLUTCH K2	22 - CENTER PLANETARY SUN GEAR
10 - CENTER PLANETARY ANNULUS GEAR	23 - REAR PLANETARY SUN GEAR
11 - REAR PLANETARY ANNULUS GEAR	24 - FREEWHEELING CLUTCH F2
12 - DRIVING CLUTCH K3	25 - INPUT SHAFT
13 - FRONT PLANETARY CARRIER	26 - OUTPUT SHAFT
A - ENGINE SPEED	D - SECOND GEAR RATIO
B - TRANSMISSION INPUT SPEED	E - THIRD GEAR RATIO
C - FIRST GEAR RATIO	F - FIXED PARTS

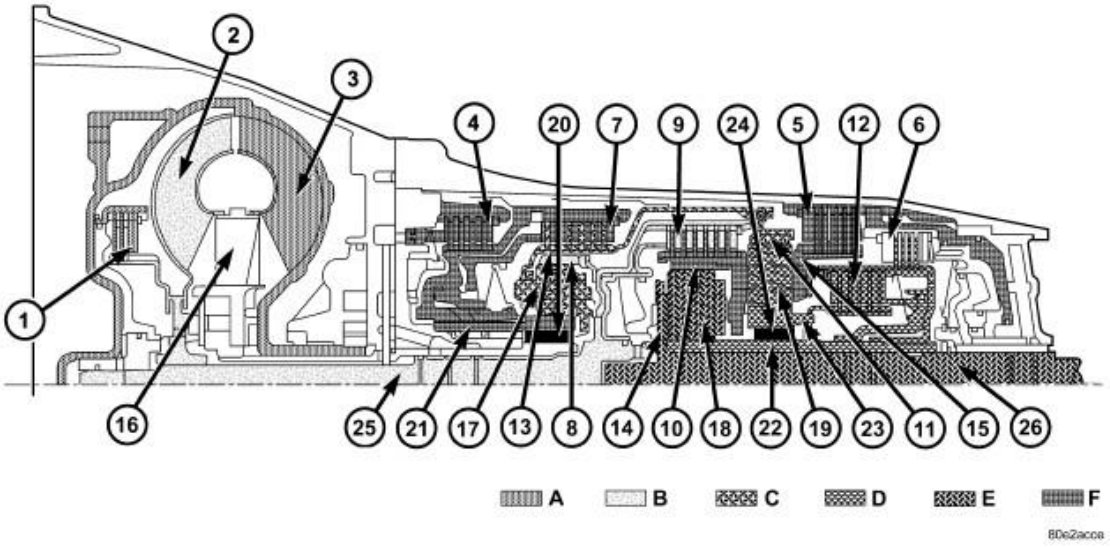

Fig. 13: Reverse Gear Powerflow
Courtesy of CHRYSLER LLC

1 - TORQUE CONVERTER LOCK-UP CLUTCH	14 - CENTER PLANETARY CARRIER
2 - TORQUE CONVERTER TURBINE	15 - REAR PLANETARY CARRIER
3 - TORQUE CONVERTER IMPELLER	16 - TORQUE CONVERTER STATOR
4 - HOLDING CLUTCH B1	17 - FRONT PLANETARY PINION GEARS
5 - HOLDING CLUTCH B3	18 - CENTER PLANETARY PINION GEARS
6 - HOLDING CLUTCH B2	19 - REAR PLANETARY PINION GEARS
7 - DRIVING CLUTCH K1	20 - FREEWHEELING CLUTCH F1
8 - FRONT PLANETARY ANNULUS GEAR	21 - FRONT PLANETARY SUN GEAR
9 - DRIVING CLUTCH K2	22 - CENTER PLANETARY SUN GEAR
10 - CENTER PLANETARY ANNULUS GEAR	23 - REAR PLANETARY SUN GEAR
11 - REAR PLANETARY ANNULUS GEAR	24 - FREEWHEELING CLUTCH F2

12 - DRIVING CLUTCH K3	25 - INPUT SHAFT
13 - FRONT PLANETARY CARRIER	26 - OUTPUT SHAFT
A - ENGINE SPEED	D - SECOND GEAR RATIO
B - TRANSMISSION INPUT SPEED	E - THIRD GEAR RATIO
C - FIRST GEAR RATIO	F - FIXED PARTS

Torque from the torque converter is increased via the input shaft (25) and all three planetary gearsets and transferred with reversed direction of rotation to the output shaft (26).

Front Planetary Gear Set

The annulus gear (8) is driven by the input shaft (25). The sun gear (21) is held against the housing by the locked freewheel F1 (20) during acceleration and via the engaged multiple-disc holding clutch B1 (4) during deceleration. The planetary pinion gears (17) turn on the fixed sun gear (21) and increase the torque from the annulus gear (8) to the planetary carrier (13). The planetary carrier (13) moves at a reduced speed in the running direction of the engine.

Rear Planetary Gear Set

The planetary carrier (15) is held against the housing by the engaged multiple-disc holding clutch B3 (5). The annulus gear (11) turns at a reduced speed due to the mechanical connection to the front planetary carrier (13). The planetary gears (19) turn between the annulus gear (11) and the sun gear (23). The direction is reversed by the held planetary carrier (15) so that the sun gear (23) turns in the opposite direction to the running direction of the engine.

Center Planetary Gear Set

The annulus gear (10) is held against the housing by the multiple-disc holding clutch B3 (5) via the mechanical connection to the planetary carrier (15). The sun gear (22) turns backwards due to the engaged multiple-disc clutch K3 (12). The planetary gears (18) turn on the fixed annulus gear (10) and increase the torque from the sun gear (22) to the planetary carrier (14). The output shaft (26) connected to the planetary carrier (14) turns at a reduced speed in the opposite direction to the running direction of the engine.

REVERSE GEAR POWERFLOW - LIMP IN

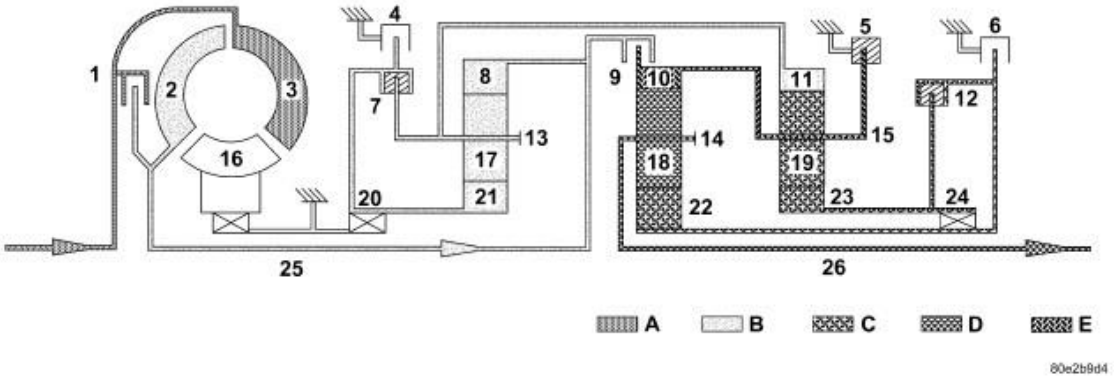

Fig. 14: Reverse Gear Powerflow - Limp In or 4WD Low Range
Courtesy of CHRYSLER LLC

1 - TORQUE CONVERTER LOCK-UP CLUTCH	14 - CENTER PLANETARY CARRIER
2 - TORQUE CONVERTER TURBINE	15 - REAR PLANETARY CARRIER
3 - TORQUE CONVERTER IMPELLER	16 - TORQUE CONVERTER STATOR
4 - HOLDING CLUTCH B1	17 - FRONT PLANETARY PINION GEARS
5 - HOLDING CLUTCH B3	18 - CENTER PLANETARY PINION GEARS
6 - HOLDING CLUTCH B2	19 - REAR PLANETARY PINION GEARS
7 - DRIVING CLUTCH K1	20 - FREEWHEELING CLUTCH F1
8 - FRONT PLANETARY ANNULUS GEAR	21 - FRONT PLANETARY SUN GEAR
9 - DRIVING CLUTCH K2	22 - CENTER PLANETARY SUN GEAR
10 - CENTER PLANETARY ANNULUS GEAR	23 - REAR PLANETARY SUN GEAR
11 - REAR PLANETARY ANNULUS GEAR	24 - FREEWHEELING CLUTCH F2
12 - DRIVING CLUTCH K3	25 - INPUT SHAFT
13 - FRONT PLANETARY CARRIER	26 - OUTPUT SHAFT
A - ENGINE SPEED	D - SECOND GEAR RATIO
B - TRANSMISSION INPUT SPEED	E - FIXED PARTS
C - FIRST GEAR RATIO	-

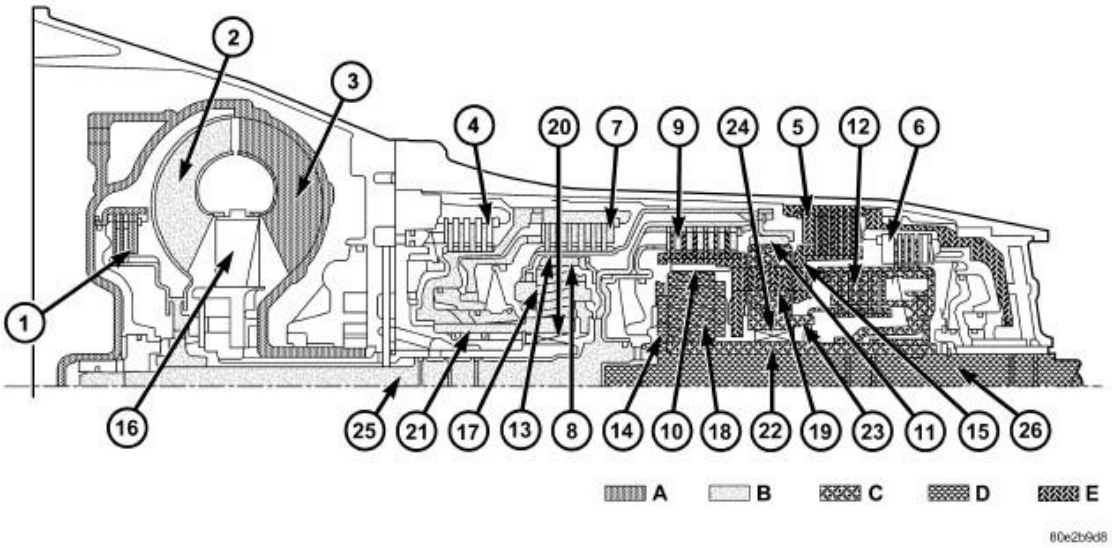

Fig. 15: Reverse Gear Powerflow - Limp In
Courtesy of CHRYSLER LLC

1 - TORQUE CONVERTER LOCK-UP CLUTCH	14 - CENTER PLANETARY CARRIER
2 - TORQUE CONVERTER TURBINE	15 - REAR PLANETARY CARRIER
3 - TORQUE CONVERTER IMPELLER	16 - TORQUE CONVERTER STATOR
4 - HOLDING CLUTCH B1	17 - FRONT PLANETARY PINION GEARS
5 - HOLDING CLUTCH B3	18 - CENTER PLANETARY PINION GEARS
6 - HOLDING CLUTCH B2	19 - REAR PLANETARY PINION GEARS
7 - DRIVING CLUTCH K1	20 - FREEWHEELING CLUTCH F1
8 - FRONT PLANETARY ANNULUS GEAR	21 - FRONT PLANETARY SUN GEAR
9 - DRIVING CLUTCH K2	22 - CENTER PLANETARY SUN GEAR
10 - CENTER PLANETARY ANNULUS GEAR	23 - REAR PLANETARY SUN GEAR
11 - REAR PLANETARY ANNULUS GEAR	24 - FREEWHEELING CLUTCH F2
12 - DRIVING CLUTCH K3	25 - INPUT SHAFT
13 - FRONT PLANETARY CARRIER	26 - OUTPUT SHAFT
A - ENGINE SPEED	D - SECOND GEAR RATIO
B - TRANSMISSION INPUT SPEED	E - FIXED PARTS
C - FIRST GEAR RATIO	-

Torque from the torque converter is increased via the input shaft (25) and all three planetary gearsets and transferred with reversed direction of rotation to the output shaft (26) .

Front Planetary Gear Set

The clutch K1 (7) is shifted. The planetary carrier (13) and sun gear (21) are connected to each other as a result. The annulus gear (8) is driven via the input shaft (25). The planetary gear set is locked

and turns as a unit.

Rear Planetary Gear Set

The planetary carrier (15) is held against the housing by the engaged multiple-disc holding clutch B3 (5). The annulus gear (11) turns at a reduced speed due to the mechanical connection to the front planetary carrier (13). The planetary pinion gears (19) turn between the annulus gear (11) and the sun gear (23). The direction is reversed by the held planetary carrier (15) so that the sun gear (23) turns in the opposite direction to the running direction of the engine.

Center Planetary Gear Set

The annulus gear (10) is held against the housing by the multiple-disc holding clutch B3 (5) via the mechanical connection to the planetary carrier (15). The sun gear (22) turns backwards due to the engaged multiple-disc clutch K3 (12). The planetary gears (18) turn on the fixed annulus gear (10) and increase the torque from the sun gear (22) to the planetary carrier (14). The output shaft (26) connected to the planetary carrier (14) turns at a reduced speed in the opposite direction to the running direction of the engine.

SHIFT GROUPS/ SHIFT SEQUENCE

1-2 Shift - First Gear Engaged

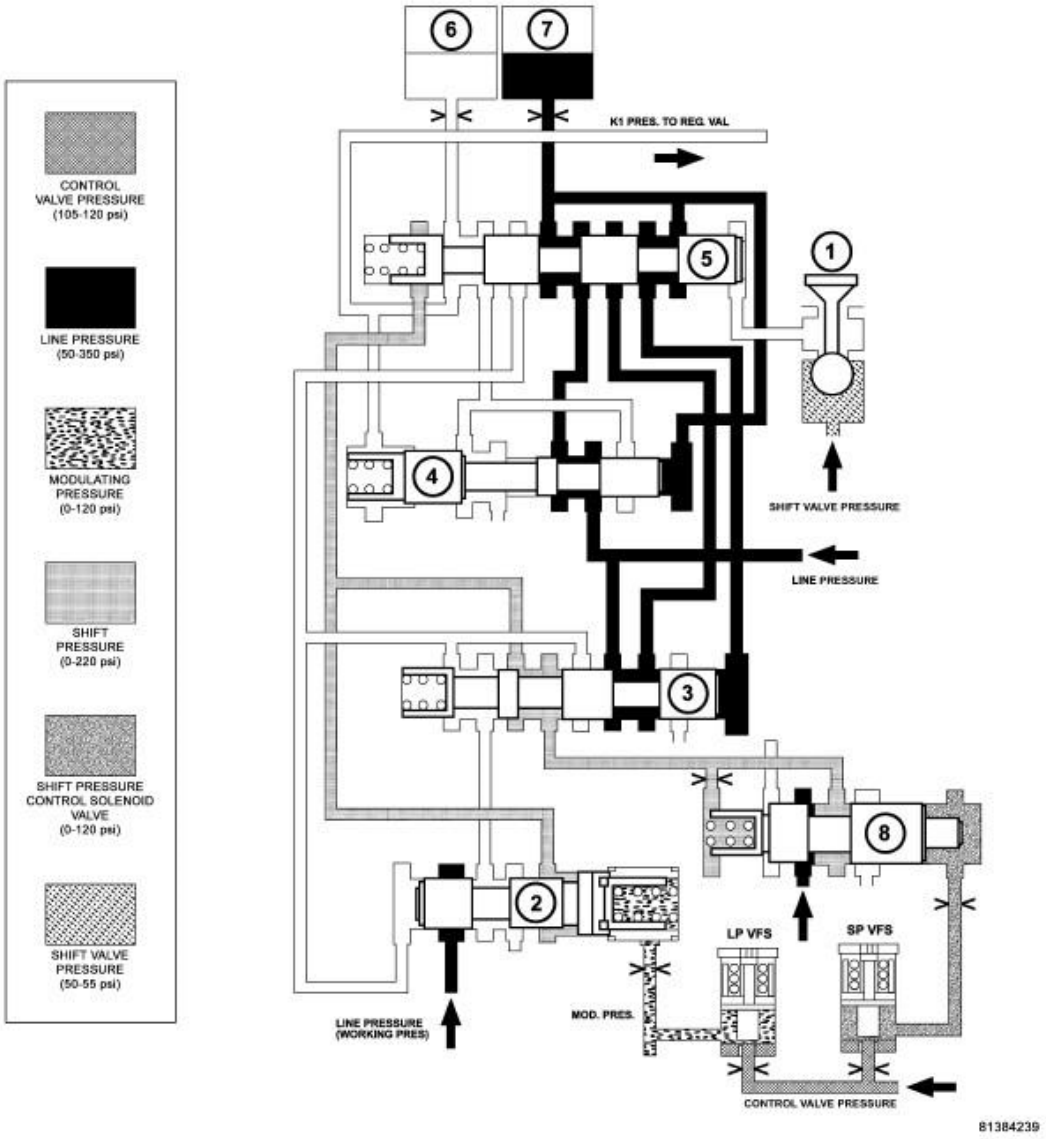

Fig. 16: First Gear Engaged
Courtesy of CHRYSLER LLC

1 - 1-2/4-5 SHIFT SOLENOID	5 - 1-2/4-5 COMMAND VALVE
2 - 1-2/4-5 OVERLAP VALVE	6 - DRIVING CLUTCH K1
3 - 1-2/4-5 SHIFT PRESSURE SHIFT VALVE	7 - HOLDING CLUTCH B1
4 - 1-2/4-5 HOLDING PRESSURE SHIFT VALVE	8 - SHIFT PRESSURE REGULATING VALVE

The end face of the command valve (5) is kept unpressurized via the solenoid valve for 1-2 and 4-5 shift (1). Because of the holding pressure shift valve (4), the working pressure (p-A) is present at the multiple-disc holding clutch B1 (7). Clutch K1 (6) is unpressurized.

Shift Phase - 1-2 Shift Phase 1

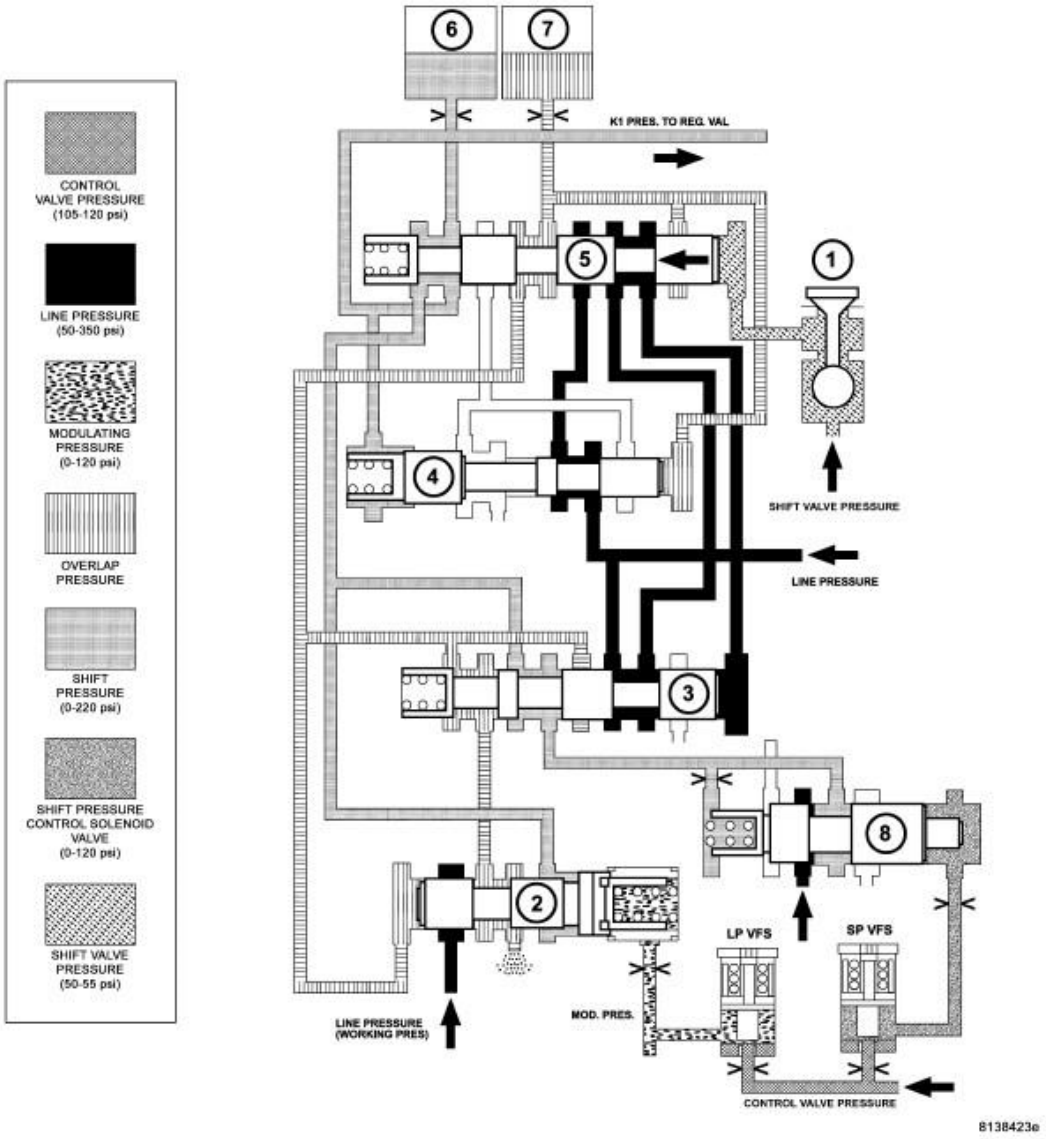

Fig. 17: Shift Phase - 1-2 Shift Phase 1
Courtesy of CHRYSLER LLC

1 - 1-2/4-5 SHIFT SOLENOID	5 - 1-2/4-5 COMMAND VALVE
2 - 1-2/4-5 OVERLAP VALVE	6 - DRIVING CLUTCH K1
3 - 1-2/4-5 SHIFT PRESSURE SHIFT VALVE	7 - HOLDING CLUTCH B1
4 - 1-2/4-5 HOLDING PRESSURE SHIFT VALVE	8 - SHIFT PRESSURE REGULATING VALVE

When the 1-2 and 4-5 shift solenoid valve (1) is turned on, the shift valve pressure (p-SV) is directed onto the end face of the command valve (5). The command valve is moved and the shift pressure (p-S) coming from the shift pressure shift valve (3) is directed via the command valve (5) onto clutch K1 (6).

Simultaneously the clutch B1 (7) is subjected to overlap pressure by the overlap regulating valve (2). The pressure in the clutch B1 (7) as it disengages is controlled during the shift phase depending on engine load by the modulating pressure and the applying clutch pressure (the shift pressure in clutch K1). The controlled pressure in clutch B1 (7) is inversely proportional to the capacity of the clutch being engaged. The rising shift pressure (p-S) at clutch K1 (6) acts on the annular face of the overlap regulating valve (2) and reduces the overlap pressure regulated by the overlap regulating valve (2). When a corresponding pressure level is reached at the holding pressure shift valve (4), this valve switches over.

Shift Phase - 1-2 Shift Phase 2

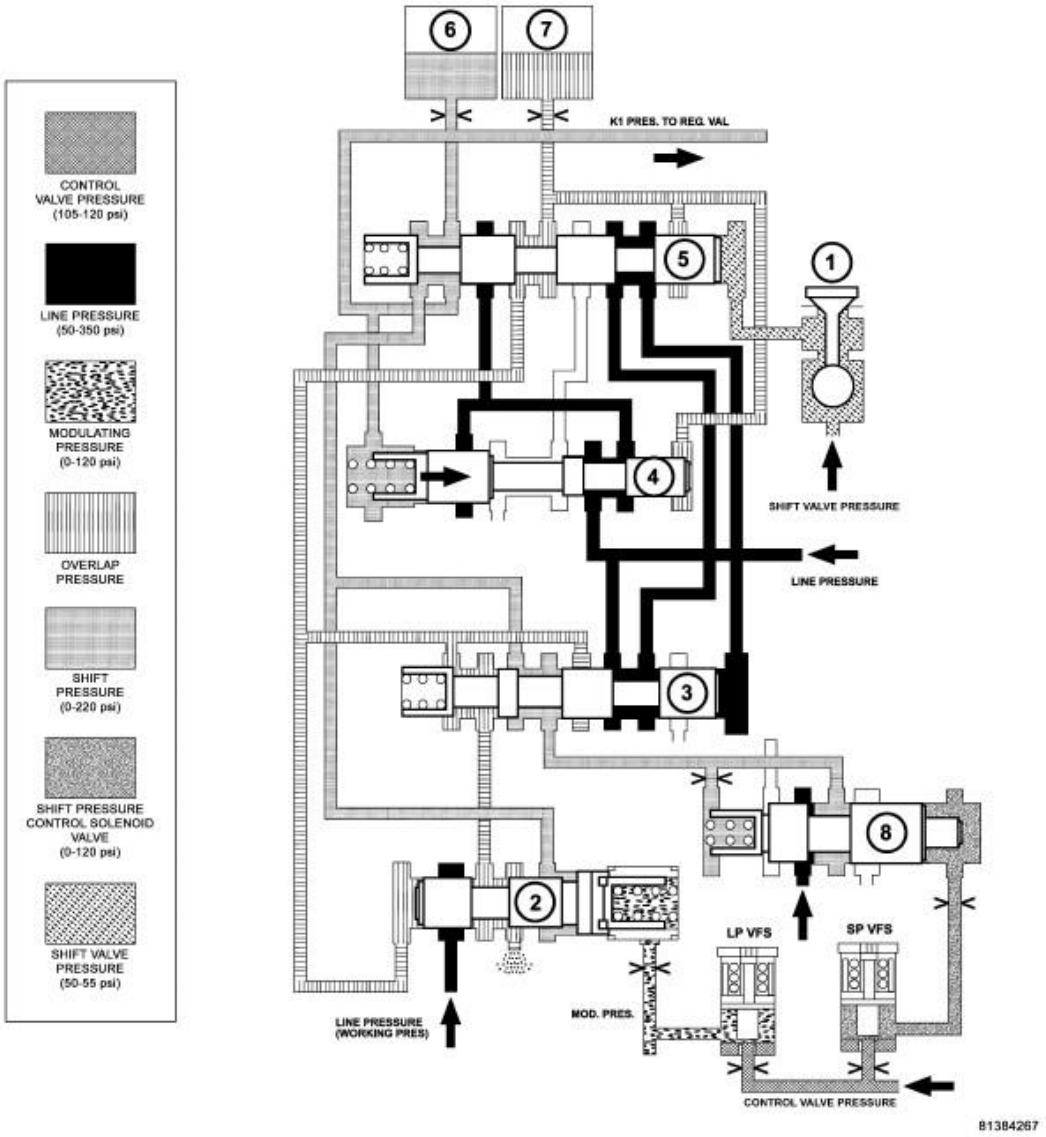

Fig. 18: Shift Phase - 1-2 Shift Phase 2
Courtesy of CHRYSLER LLC

1 - 1-2/4-5 SHIFT SOLENOID	5 - 1-2/4-5 COMMAND VALVE

2 - 1-2/4-5 OVERLAP VALVE	6 - DRIVING CLUTCH K1
3 - 1-2/4-5 SHIFT PRESSURE SHIFT VALVE	7 - HOLDING CLUTCH B1
4 - 1-2/4-5 HOLDING PRESSURE SHIFT VALVE	8 - SHIFT PRESSURE REGULATING VALVE

The B1 (7) pressure acting on the end face of the shift pressure shift valve (3) is replaced by the working pressure (p-A). The shift pressure is also routed to the spring end of the holding valve (4) and the holding valve downshifts. The line pressure is then routed to the command valve (5).

Second Gear Engaged

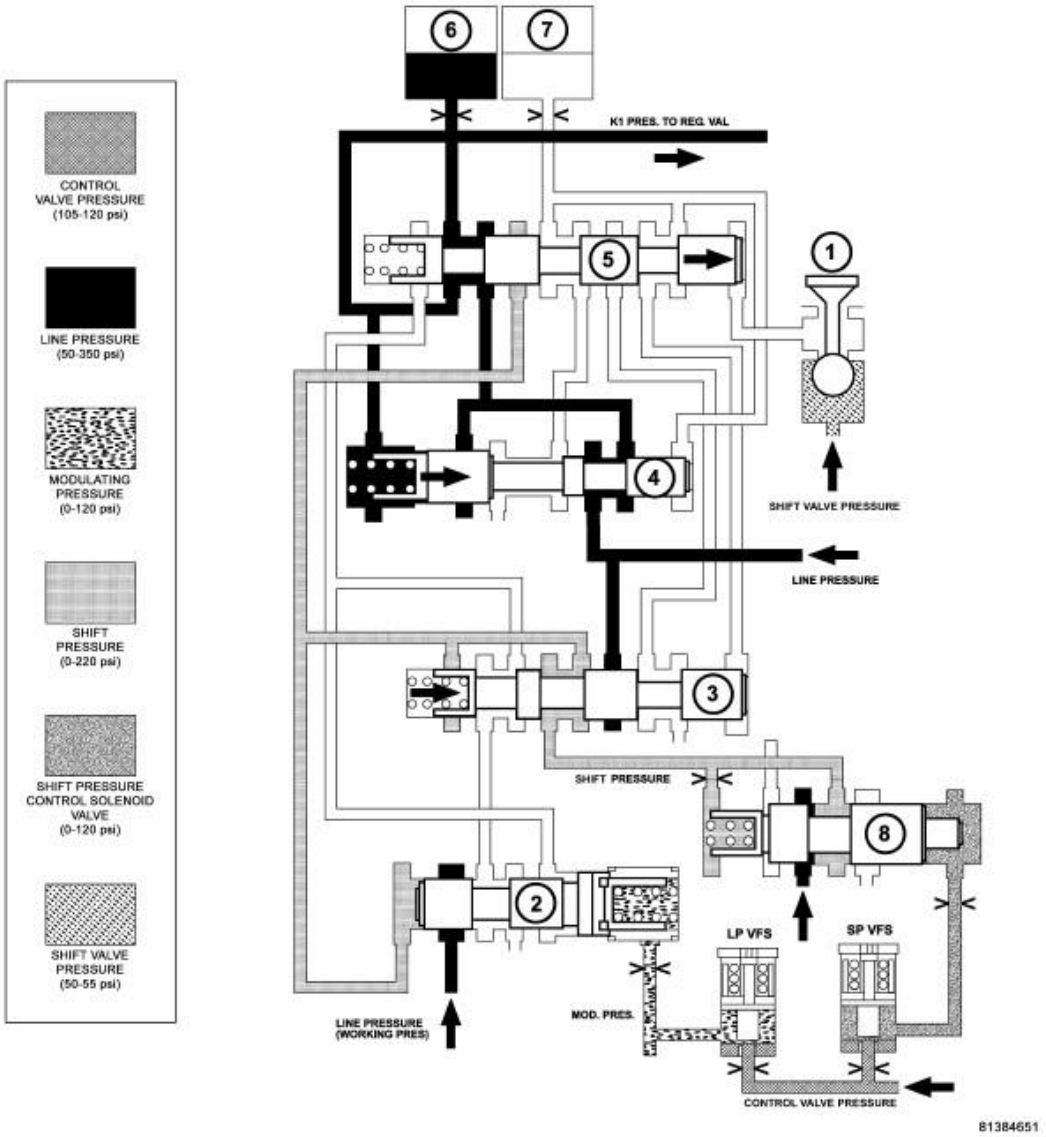

Fig. 19: Second Gear Engaged
Courtesy of CHRYSLER LLC

1 - 1-2/4-5 SHIFT SOLENOID	5 - 1-2/4-5 COMMAND VALVE
2 - 1-2/4-5 OVERLAP VALVE	6 - DRIVING CLUTCH K1
3 - 1-2/4-5 SHIFT PRESSURE SHIFT VALVE	7 - HOLDING CLUTCH B1
4 - 1-2/4-5 HOLDING PRESSURE SHIFT VALVE	8 - SHIFT PRESSURE REGULATING VALVE

After the gearchange is complete, the pressure on the end face of the command valve (5) is reduced via the 1-2 and 4-5 shift solenoid valve (1), and the command valve (5) is pushed back to its basic position. Via the holding pressure shift valve (4) the working pressure (p-A) now passes via the command valve (5) to clutch K1 (6). The multiple-disc holding clutch B1 (7) is deactivated (unpressurized). The spring of the shift pressure shift valve (3) pushes the valve back to its basic position.

Shift Phase - 2-1 Shift Phase 1

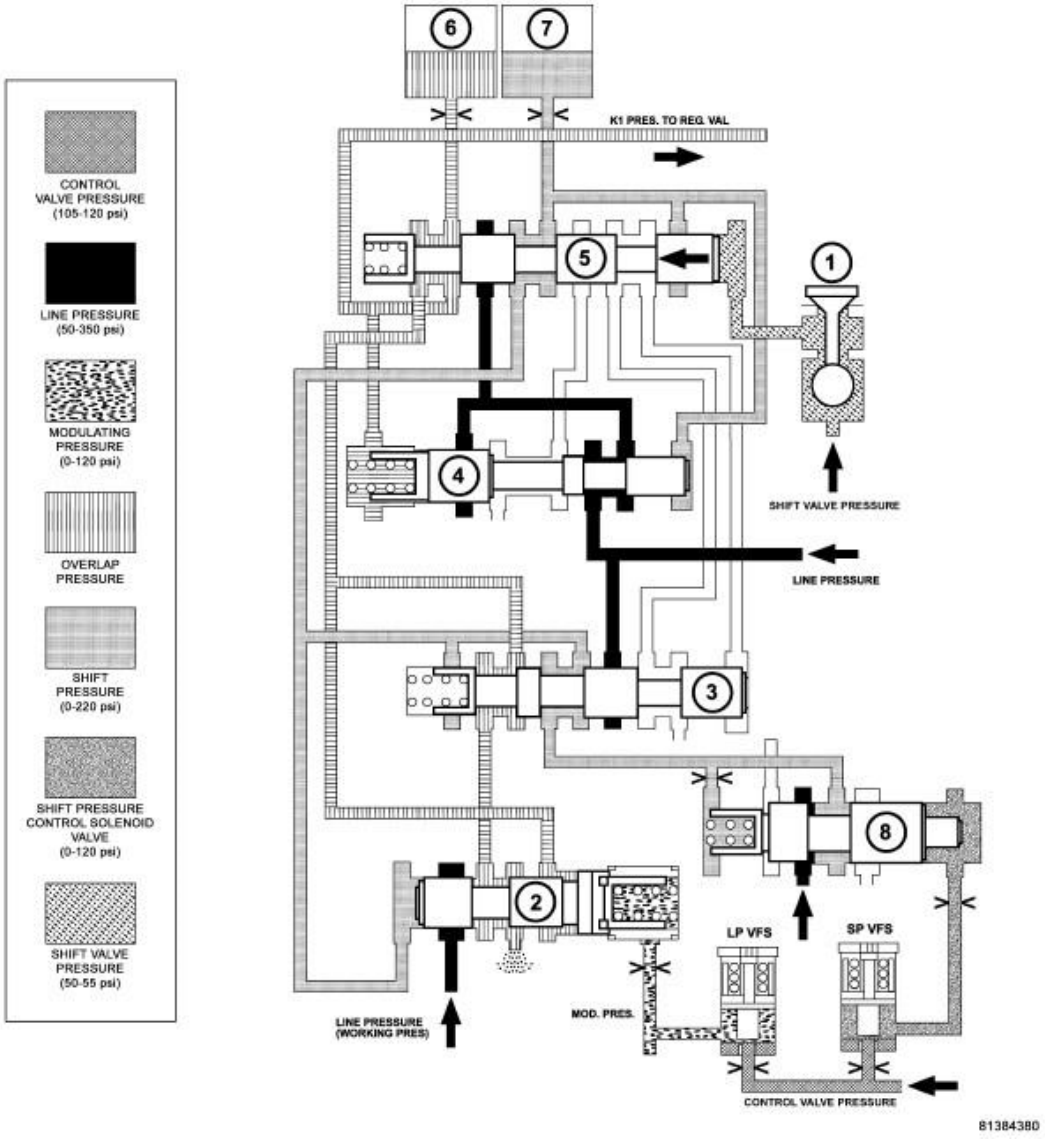

Fig. 20: Shift Phase - 2-1 Shift Phase 1
Courtesy of CHRYSLER LLC

1 - 1-2/4-5 SHIFT SOLENOID	5 - 1-2/4-5 COMMAND VALVE
2 - 1-2/4-5 OVERLAP VALVE	6 - DRIVING CLUTCH K1
3 - 1-2/4-5 SHIFT PRESSURE SHIFT VALVE	7 - HOLDING CLUTCH B1
4 - 1-2/4-5 HOLDING PRESSURE SHIFT VALVE	8 - SHIFT PRESSURE REGULATING VALVE

The 1-2/4-5 shift solenoid (1) is turned ON to apply shift pressure (p-S) to the end face of the 1-2/4-5 command valve (5). This allows the command valve to up-shift and the shift pressure coming from the 1-2/4-5 shift valve (3) is routed to the holding clutch B1 (7) via the command valve.

Simultaneously, the pressure in the releasing clutch, K1 (6), is regulated at the 1-2/4-5 overlap valve (2). The pressure in the K1 clutch as it disengages is controlled during the shift phase depending on engine load, via the modulating pressure (p-MOD), and the shift pressure in clutch B1 (7). The increasing shift pressure in clutch B1, which also acts on the end face of the overlap valve, reduces the overlap pressure.

Shift Phase - 2-1 Shift Phase 2

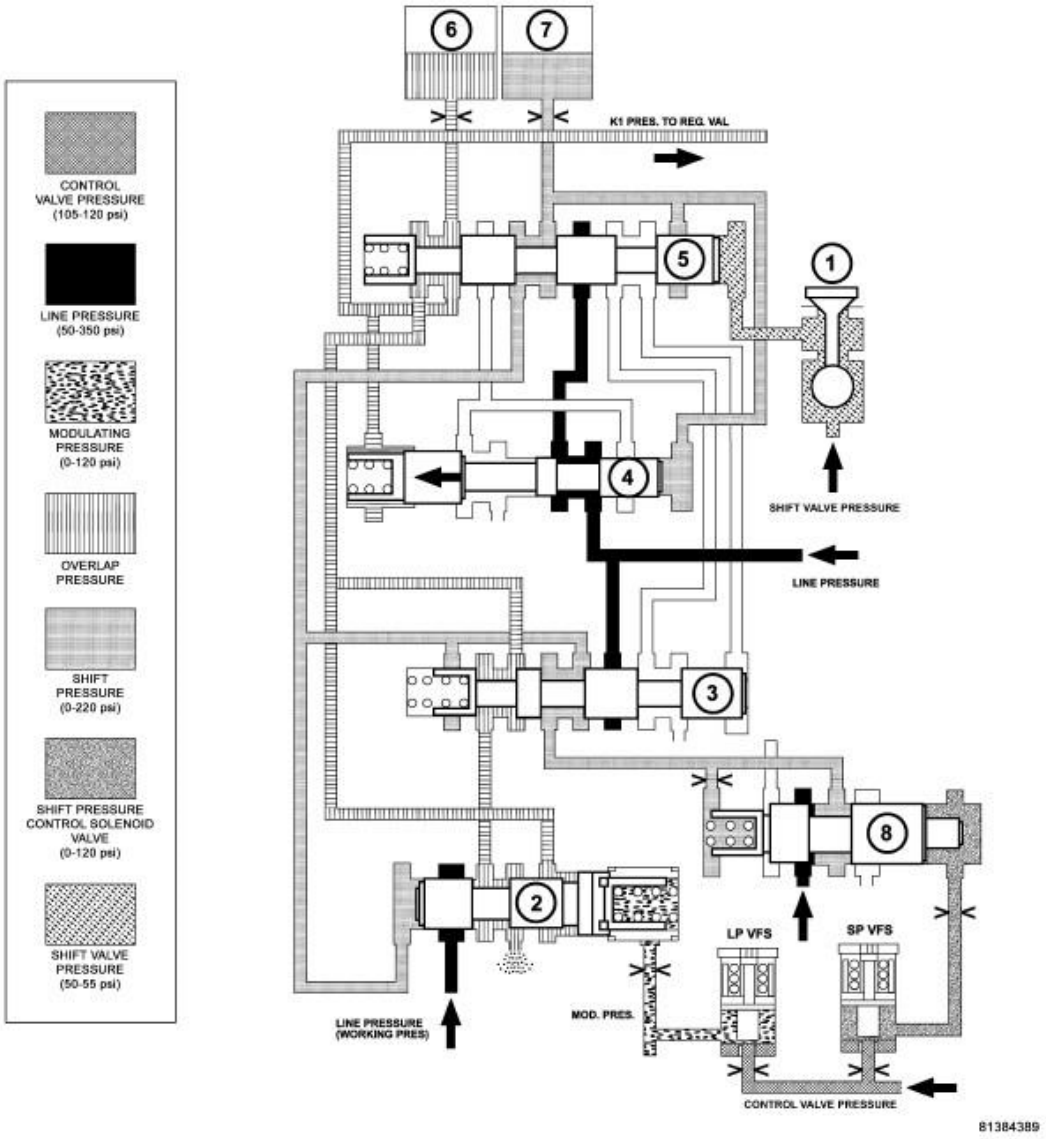

Fig. 21: Shift Phase - 2-1 Shift Phase 2
Courtesy of CHRYSLER LLC

1 - 1-2/4-5 SHIFT SOLENOID	5 - 1-2/4-5 COMMAND VALVE
2 - 1-2/4-5 OVERLAP VALVE	6 - DRIVING CLUTCH K1
3 - 1-2/4-5 SHIFT PRESSURE SHIFT VALVE	7 - HOLDING CLUTCH B1
4 - 1-2/4-5 HOLDING PRESSURE SHIFT VALVE	8 - SHIFT PRESSURE REGULATING VALVE

The pressure in clutch B1 (7) acting on the end face of the 1-2/4-5 holding valve (4) forces the valve to up-shift against the spring pressure and allows line pressure (p-A) to pass through the command valve (5).

2-1 Shift - First Gear Engaged

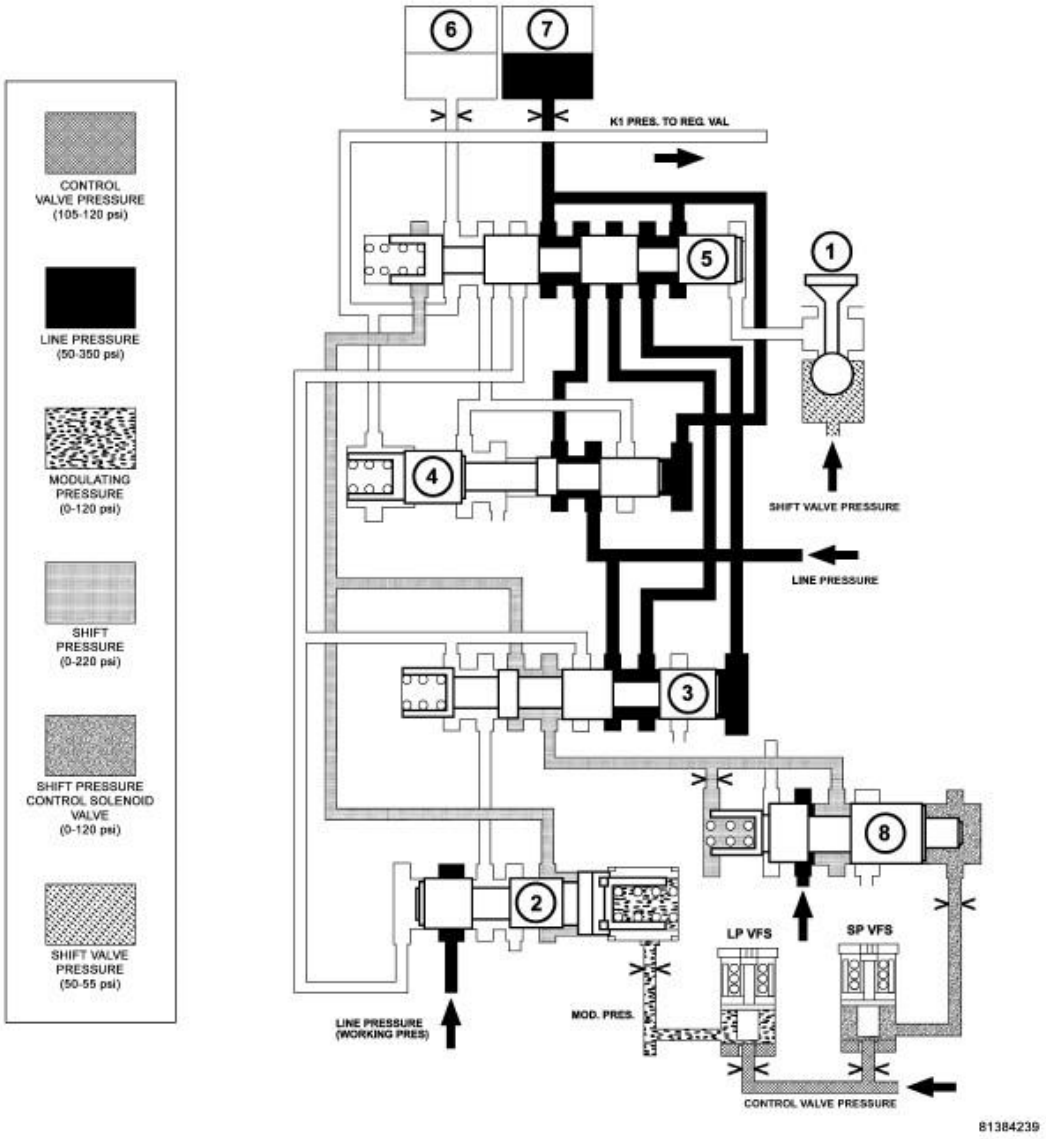

Fig. 22: First Gear Engaged
Courtesy of CHRYSLER LLC

1 - 1-2/4-5 SHIFT SOLENOID	5 - 1-2/4-5 COMMAND VALVE
2 - 1-2/4-5 OVERLAP VALVE	6 - DRIVING CLUTCH K1
3 - 1-2/4-5 SHIFT PRESSURE SHIFT VALVE	7 - HOLDING CLUTCH B1
4 - 1-2/4-5 HOLDING PRESSURE SHIFT VALVE	8 - SHIFT PRESSURE REGULATING VALVE

After the gear change is complete, the 1-2/4-5 shift solenoid (1) is turned off. This reduces the pressure on the end face of the 1-2/4-5 command valve (5) to 0 psi and the spring pressure downshifts the valve to its initial position. The line pressure (p-A) is switched to the holding clutch B1 (7) and the end face of the holding valve by the downshifted command valve. The upshifted holding valve also allows the remaining pressure in clutch K1 (6) to be vented.

Gear Shift N to D (1st gear) - Engine Started

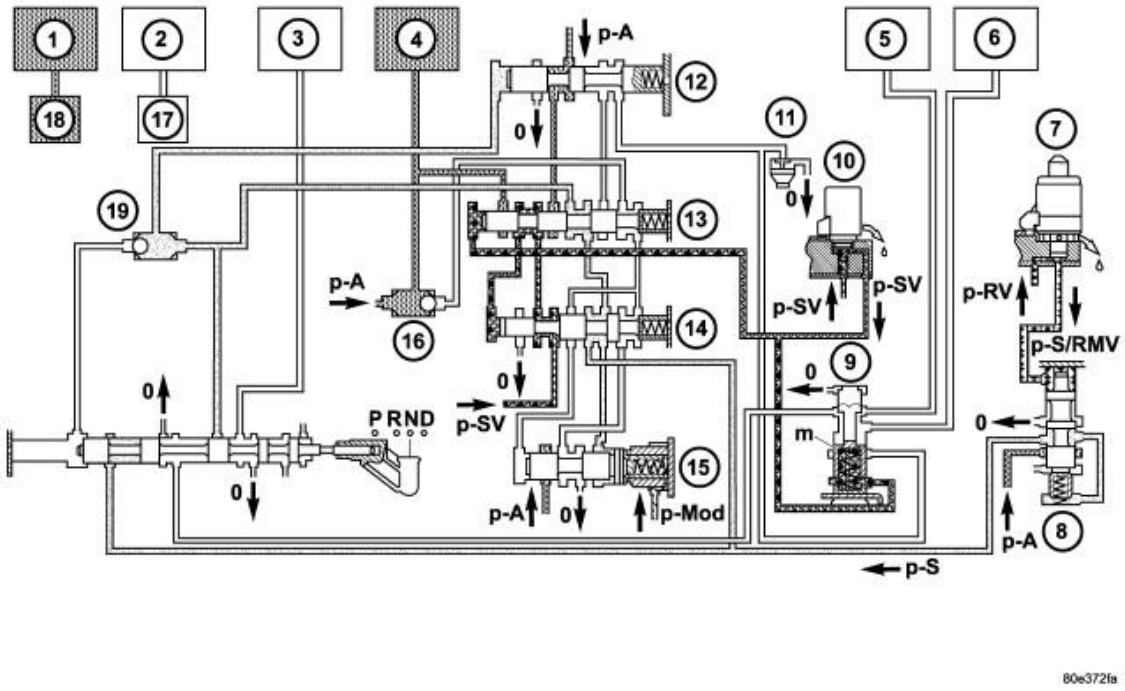

Fig. 23: Gear Shift N to D (1st Gear) - Engine Started
Courtesy of CHRYSLER LLC

1 - HOLDING CLUTCH B1	11 - PRESSURE HOLDING VALVE
2 - DRIVING CLUTCH K1	12 - 3-4 HOLDING PRESSURE SHIFT VALVE
3 - HOLDING CLUTCH B3	13 - 3-4 COMMAND VALVE
4 - DRIVING CLUTCH K3	14 - 3-4 SHIFT PRESSURE SHIFT VALVE
5 - HOLDING CLUTCH B2 PISTON	15 - 3-4 OVERLAP REGULATING VALVE
6 - HOLDING CLUTCH B2 PISTON OPPOSING FACE	16 - BALL VALVE
7 - SHIFT PRESSURE REGULATING SOLENOID	17 - 1-2/4-5 COMMAND VALVE
8 - SHIFT PRESSURE REGULATING VALVE	18 - 1-2/4-5 COMMAND VALVE
9 - SHIFT VALVE B2	19 - BALL VALVE
10 - 3-4 SHIFT SOLENOID	

With the engine started and the gearshift lever in the NEUTRAL or PARK positions, holding clutch B1 (1) and driving clutch K3 (4) are applied and the various valves in the 1-2/4-5 shift group are positioned to apply pressure to the holding clutch B2.

Activation Sequence

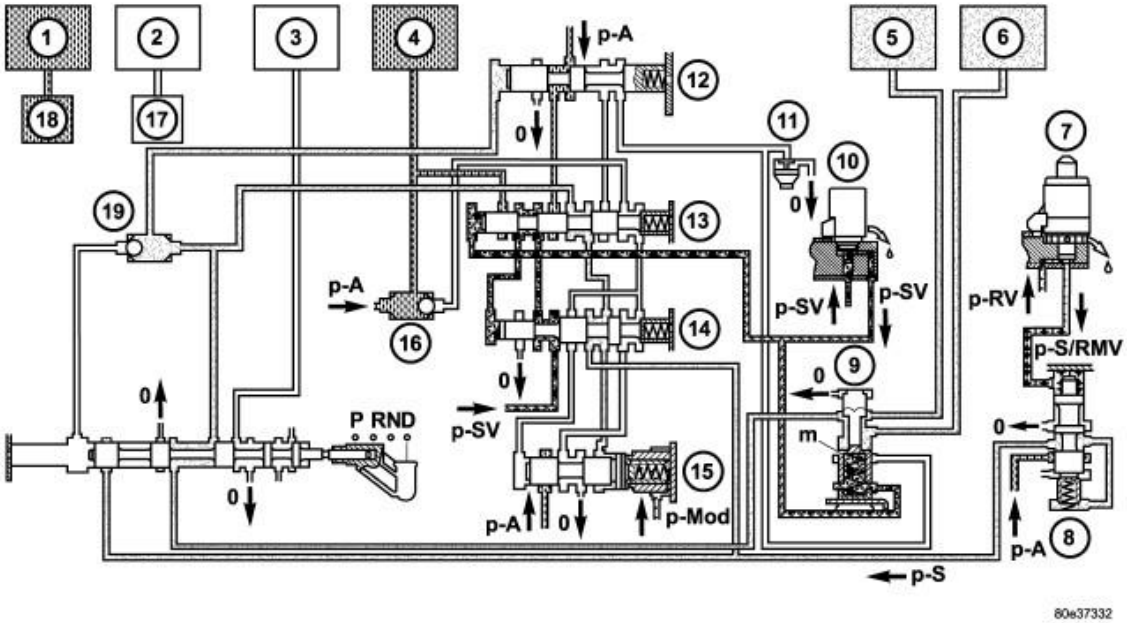

Fig. 24: Activation Sequence
Courtesy of CHRYSLER LLC

1 - HOLDING CLUTCH B1	11 - PRESSURE HOLDING VALVE
2 - DRIVING CLUTCH K1	12 - 3-4 HOLDING PRESSURE SHIFT VALVE
3 - HOLDING CLUTCH B3	13 - 3-4 COMMAND VALVE
4 - DRIVING CLUTCH K3	14 - 3-4 SHIFT PRESSURE SHIFT VALVE
5 - HOLDING CLUTCH B2 PISTON	15 - 3-4 OVERLAP REGULATING VALVE
6 - HOLDING CLUTCH B2 PISTON OPPOSING FACE	16 - BALL VALVE
7 - SHIFT PRESSURE REGULATING SOLENOID	17 - 1-2/4-5 COMMAND VALVE
8 - SHIFT PRESSURE REGULATING VALVE	18 - 1-2/4-5 COMMAND VALVE
9 - SHIFT VALVE B2	19 - BALL VALVE
10 - 3-4 SHIFT SOLENOID	

The selector valve opens the shift pressure (p-S) feed connection from the ball valve (19) with the shift valve B2 (9). With the shift valve B2 (9) in the upper position, shift pressure (p-S) travels behind the piston B2 (5) and simultaneously to the opposing face of the piston B2 (6). The multiple-disc holding clutch B2 begins to close.

The pressure on the opposing face of the piston B2 (6) ensures a soft activation of the multiple-disc holding clutch B2.

First Gear Engaged

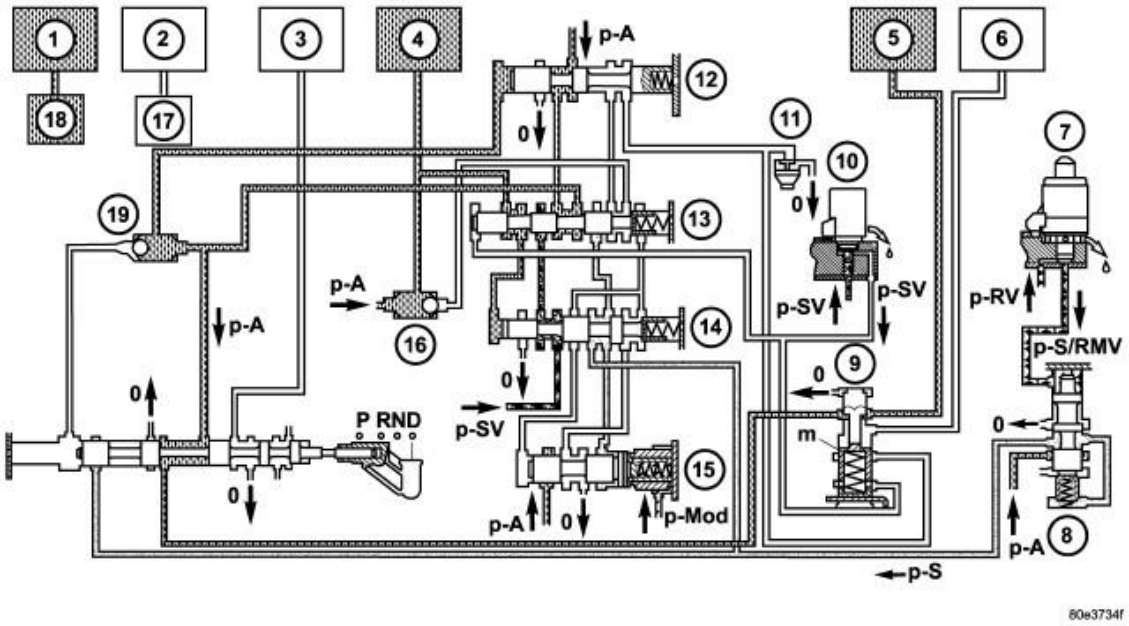

Fig. 25: First Gear Engaged
Courtesy of CHRYSLER LLC

1 - HOLDING CLUTCH B1	11 - PRESSURE HOLDING VALVE
2 - DRIVING CLUTCH K1	12 - 3-4 HOLDING PRESSURE SHIFT VALVE
3 - HOLDING CLUTCH B3	13 - 3-4 COMMAND VALVE
4 - DRIVING CLUTCH K3	14 - 3-4 SHIFT PRESSURE SHIFT VALVE
5 - HOLDING CLUTCH B2 PISTON	15 - 3-4 OVERLAP REGULATING VALVE
6 - HOLDING CLUTCH B2 PISTON OPPOSING FACE	16 - BALL VALVE
7 - SHIFT PRESSURE REGULATING SOLENOID	17 - 1-2/4-5 COMMAND VALVE
8 - SHIFT PRESSURE REGULATING VALVE	18 - 1-2/4-5 COMMAND VALVE
9 - SHIFT VALVE B2	19 - BALL VALVE
10 - 3-4 SHIFT SOLENOID	

The TCM monitors the activation sequence via the speed of the input shaft, which slows down as the frictional connection in the multiple-disc holding clutch increases. When the speed drops to the specified level, the TCM shuts off the power to the 3-4 shift solenoid valve (10) . The spring chamber of the shift valve B2 (9) is depressurized and switches downwards. This connects the line to the opposing face of the piston B2 (6) with the pressure holding valve (11). The pressure on the opposing face of the piston B2 (6) drops to a residual pressure.

The working pressure (p-A) is formed and travels via the 2-3 holding pressure shift valve, the 2-3 command valve and the ball valve (16) to multi-plate clutch K3 (4) and via the 3-4 command valve (13) to the end face of the 3-4 shift pressure shift valve (14). The 3-4 shift pressure shift valve (14) is moved against the force of the spring towards the right. At the same time the 3-4 solenoid valve (10)

is energized. This allows shift valve pressure (p-SV) to enter the spring chamber of the shift valve B2 (9) and to reach the end face of the 3-4 command valve (13). The shift valve B2 (9) is held in the upper position and the 3-4 command valve (13) switches towards the right. At the end face of the 3-4 shift pressure shift valve (14) the working pressure (p-A) is replaced by shift valve pressure (p-SV).

The 3-4 command valve (13) moves to the left. Working pressure (p-A) travels via the holding pressure shift valve (12) and the 3-4 command valve (13) to the piston of multiple-disc holding clutch B2 (5).

DIAGNOSIS AND TESTING

AIR CHECKING TRANSMISSION CLUTCH OPERATION

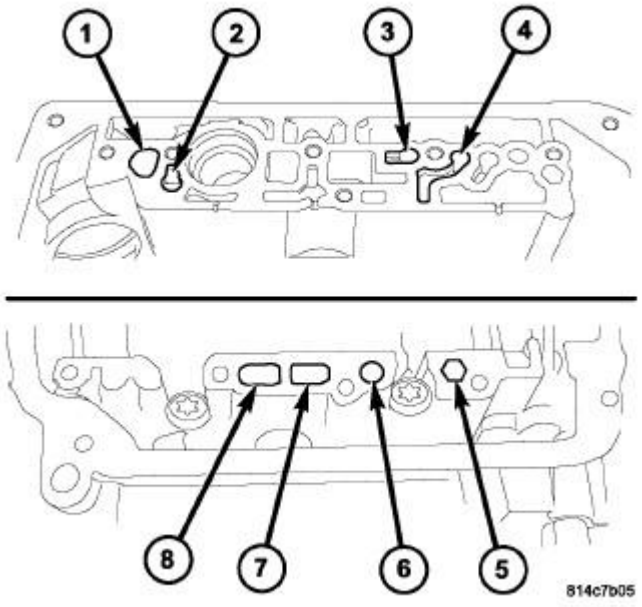

Fig. 26: NAG1 Clutch Application Ports
Courtesy of CHRYSLER LLC

1 - K1 CLUTCH APPLY PORT
2 - B1 CLUTCH APPLY PORT
3 - K2 CLUTCH APPLY PORT
4 - TORQUE CONVERTER CLUTCH APPLY PORT
5 - B3 CLUTCH APPLY PORT
6 - B2 CLUTCH COUNTER-PRESSURE PORT
7 - K3 CLUTCH APPLY PORT
8 - B2 CLUTCH APPLY PORT

The ports (1 - 8), are the clutch apply passages.

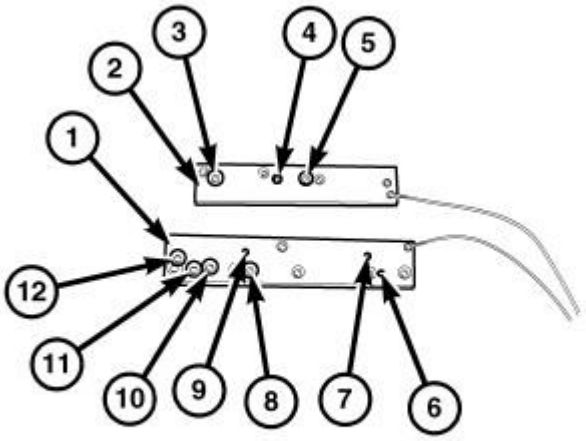

Fig. 27: NAG1 AIR ADAPTER PLATES
Courtesy of CHRYSLER LLC

1 - NAG1 AIR CHECK ADAPTER PLATE 10007 - 1
2 - NAG1 AIR CHECK ADAPTER PLATE 10007 - 2
3 - B3 CLUTCH PORT
4 - K3 CLUTCH PORT
5 - B2 CLUTCH PORT
6 - K1 CLUTCH PORT
7 - B1 CLUTCH PORT
8 - K2 CLUTCH PORT
9 - TORQUE CONVERTER CLUTCH LOCK - UP PORT
10 - TORQUE CONVERTER IN PORT
11 - COOLER OUT PORT
12 - TORQUE CONVERTER OUT PORT

When the adapter plates 10007 (1&2) are placed over the ports, proper operation of the transmission clutches can be verified. Air-pressure testing can be used to check transmission clutch operation. The test can be conducted with the transmission either in the vehicle (where applicable) or on the work bench, as a final check.

Air-pressure testing requires that the oil pan and valve body be removed from the transmission.

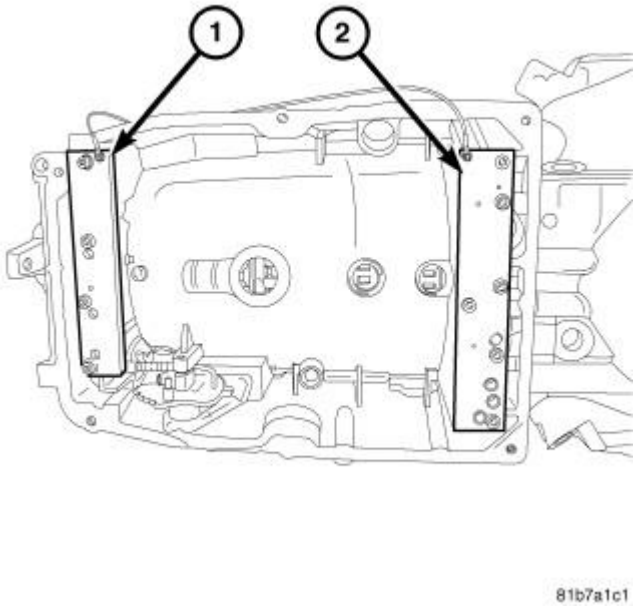

Fig. 28: NAG1 TRANSMISSION ADAPTER PLATE
Courtesy of CHRYSLER LLC

1 - AIR ADAPTER PLATE 10007 - 2 2 - AIR ADAPTER PLATE 10007 - 1

NOTE: The air supply which is used must be free of moisture and dirt. Use a pressure of 30 psi to test clutch operation.

NOTE: When checking the K1 clutch , air must pass through numerous passages to reach the clutch it's self, therefore only a slight application will be noted.

1. Remove the oil pan.
2. Remove the valve body (electrohydraulic unit). See **Transmission and Transfer Case/Automatic - NAG1/UNIT, Electrohydraulic Control - Removal**
3. Using the existing valve body (electrohydraulic unit) mounting bolts attach the Air Adapter Plates 10007 (1&2). Tighten the bolt to 8 N.m (71 in. lbs.).
4. Apply 30 psi of air pressure to each port

If the clutch is functioning, a soft thump will be heard as the clutch is applied. The clutch application can also be felt by touching the appropriate element while applying air pressure. As the air pressure is released, the clutch should also release.

AUTOMATIC TRANSMISSION

CONDITION	POSSIBLE CAUSES	CORRECTION	
		1. Check for latest	

Harsh N-D Engagement or Harsh N-R Engagement	1. Transmission adaptation/ calibration.	level TCM software. Perform the TCM adaptation procedure. Refer to **Electrical - Electronic Control Modules/Electronic Control Modules/MODULE, Transmission Control - Standard Procedure** .
	2. Transmission in limp-home mode.	2. Check TCM for DTCs. Repair as needed.
	3. Driveline lash/movement.	3. Check engine mounts, transmission mount, driveshaft couplings, rear crossmember mounts, axle mounts and axle lash.
	4. Converter clutch or lock up control valve malfunction.	4. Perform converter clutch diagnostics test. Inspect valve body for stuck or sticky lock up control valve. If valve motion is free, replace lock up solenoid and retest.
	5. Valve Body Malfunction.	5. Inspect valve body for stuck or sticky regulator valve.
	6. Clutch or planetary component damage.	6. Remove, disassemble and repair transmission as necessary.
	7. Water in Trans.	7.Perform TSB, recommend to split and clean VB if heavily contaminated.
		1. Check for latest

	1. Transmission adaptation/ calibration.	level TCM software. Perform the TCM adaptation procedure. Refer to **Electrical - Electronic Control Modules/Electronic Control Modules/MODULE, Transmission Control - Standard Procedure** .
	2. Torque converter fluid drain back, delayed soft engagement.	2. If vehicle moves normally after 3 seconds of shifting into gear, no repair is necessary. If longer, inspect pump for worn bushing.
DELAYED N-D OR N-R ENGAGEMENT	3. Fluid Level Low.	3. Check and adjust fluid level. See **Transmission and Transfer Case/Automatic - NAG1/FLUID and FILTER - Standard Procedure**
	4. Filter plugged.	4. Check TC out pressure, if < 10psi, check for plugged filter. Replace if needed.
	5. Filter damaged or missing, missing o-ring.	5. Check for damaged/missing filter or cut/missing o-ring.
	6. Valve Body Malfunction.	6. Inspect valve body for stuck/ sticky regulator valve or shift group valves.
	7. Oil pump gears worn/damaged.	7. Inspect pump for damage or excessive clearances. Replace if needed.

NO DRIVE OR REVERSE ENGAGEMENT (vehicle will not move)	1. Misadjusted/damaged shift cable.	1. Inspect shift system. Adjust and/or replace worn/damaged parts.
	2. Fluid level low.	2. Check and adjust fluid level. See **Transmission and Transfer Case/Automatic - NAG1/FLUID and FILTER - Standard Procedure**
	3. Filter plugged.	3. Check TC out pressure, if < 10psi, check for plugged filter. Replace if needed.
	4. Filter damaged or missing, missing filter o-ring.	4. Check for damaged/missing filter or cut/missing o-ring.
	5 Hydraulic system-Low/no line pressure.	5. Remove Electrohydraulic Unit. Inspect or sticky/stuck regulator valve. If valve motion is free, replace line pressure solenoid and retest. If condition still exists check for worn/damaged pump. Replace pump assembly if needed.
	6. TCM in Limp Mode	6. Clear codes and reset.
	7. Stuck Pressure Regulator Valve	7. Split Electrohydraulic Unit t and inspect pressure regulator valve. Remove debris if present. Be certain all shift valves are free, if

		any valve can't be freed replace Electrohydraulic Unit.
	8. Broken Weld at Front Annulus	8. Replace Hard Parts as Necessary.
	9. Broken Input Shaft Weld	9. Replace Hard Parts as Necessary.
	10. Defective T/C	10. Replace T/C, make sure filter is not clogged.
	11. Broken Output Shaft Weld	11. Replace parts as necessary
	12. Broken/Missing Rear Annulus Weld.	12. Replace parts as necessary.
	13. Unseated Rear Annulus Gear snap ring.	13. Properly install or replace snap ring.
	14. Valves not returned to their home position.	14. Split Electrohydraulic Unit and inspect 3-4 command valve as well as all other valves, being certain they move freely and are free of debris.
SHUDDER GARAGE SHIFT R-D OR D-R	1. Transmission adaptation/ calibration.	1. Check for latest level TCM software. Perform the TCM adaptation procedure. Refer to **Electrical - Electronic Control Modules/Electronic Control Modules/MODULE, Transmission Control - Standard Procedure** .
	2. Customer applying throttle while shift is in progress.	2. Instruct customer to wait until shift is complete prior to applying throttle.
		1. Check for latest level TCM software.

HARSH ROLLING GARAGE SHIFT R-D OR D-R	1. Transmission adaptation/ calibration.	Perform the TCM adaptation procedure. Refer to **Electrical - Electronic Control Modules/Electronic Control Modules/MODULE, Transmission Control - Standard Procedure** .
	2. Customer shifting into desired range with vehicle motion.	2. Instruct customer to only shift into the desired range with the vehicle stopped and the service brake applied.
	3. Transmission in limp-home mode.	3. Check TCM for DTCs. Repair as needed.
ENGINE STALLS	1. TCC Solenoid Wire in Harness.	1. Inspect for and repair any short, ground, or open.
	2. TCC Solenoid Defective, Bent Terminals or Debris Shorting Terminals.	2. Check for codes, refer to Diagnostic and testing.
	3. Debris sticking the TCC Solenoid Open.	3. Remove the TCC Solenoid and try to blow air through it. No air should flow. If air flows freely, replace the TCC Solenoid.
	4. TCC LU Control Valve Stuck.	4. Split the Electrohydraulic Unit and inspect the TCC LU valve for any debris. Remove debris if present. If valve can't be freed replace Electrohydraulic Unit.
		1. Perform converter clutch diagnostics

ENGINE STALLS WHEN TRANSMISSION IS SHIFTED INTO R OR D.	1. Converter clutch or lock up control valve malfunction.	test. Inspect valve body for stuck or sticky lock up control valve. If valve motion is free, replace lock up solenoid and retest.
	2. Defective torque converter.	2. Replace torque converter.
CLUNK/CLICK NOISE DURING GARAGE SHIFT FROM R-D OR D-R	1. Stick-slip condition between output flange and output shaft nut upon torque reversal from R to D or D to R. Click on first launch.	1. Replace output flange and nut.
HARSH UPSHIFT OR DOWNSHIFT	1. Transmission adaptation/ calibration.	1. Check for latest level TCM software. Perform the TCM adaptation procedure. Refer to **Electrical - Electronic Control Modules/Electronic Control Modules/MODULE, Transmission Control - Standard Procedure** .
	2. Electrohydraulic Unit malfunction.	2. Inspect valve body for sticky/stuck valves. Repair as needed. If valve motion is free, replace shift pressure solenoid and line pressure solenoid and retest.
	3. Damaged or misbuilt clutch.	3. Remove, disassemble and repair transmission as needed.
		1. Check for latest level TCM software. Perform the TCM adaptation procedure. Refer to

EMCC SHUDDER AND/OR ROUGH SHIFTs	1. Transmission adaptation/ calibration.	**Electrical - Electronic Control Modules/Electronic Control Modules/MODULE, Transmission Control - Standard Procedure** .
	2. Fluid condition, contamination or wrong type.	2. Change fluid per service information procedures. See **Transmission and Transfer Case/Automatic - NAG1/FLUID and FILTER - Standard Procedure**.
	3. Electrohydraulic Unit malfunction.	3. Remove Electrohydraulic Unit. Inspect for sticky/stuck lock up control valve. If valve motion is free, replace the lock up solenoid and retest.
	4. Defective torque converter.	4. Replace torque converter.
GRATING OR SCRAPING NOISE PROPORTIONAL TO ENGINE SPEED	1. Torque converter bolts contacting dust shield.	1. Dust shield bent. Replace if needed. Torque converter bolt backed out. Replace with new bolt and torque to proper level.
	2. Damaged/broken drive plate.	2. Inspect driveplate. Replace if needed.
GRATING OR SCRAPING NOISE PROPORTIONAL TO TRANSMISSION OUTPUT SPEED	1. Driveshaft or rear axle noise.	1. Check driveshaft, center bearing and axle for noise or contact with other components.
	2. Transmission output bearing noise.	2. Replace output bearing and retest.
	3. Internal	3. Remove, disassemble and

	transmission damage.	repair transmission as needed.
HIGH PITCHED WHINE/NOISE RELATED TO ENGINE SPEED	1. Fluid level low.	1. Check and adjust fluid level. See **Transmission and Transfer Case/Automatic - NAG1/FLUID and FILTER - Standard Procedure**.
	2. Transmission in limp-home mode.	2. Check TCM for DTCs. Repair as needed.
	3. Filter plugged.	3. Check TC out pressure, if < 10psi, check for plugged filter. Replace if needed.
	4. Filter damaged or missing.	4. Check for damaged/missing filter or cut/missing o-ring.
	5. Oil pump bushing worn/ damaged.	5. Visually inspect for worn or damaged pump bushing. Replace pump assembly if needed.
	6. Oil pump gears worn/ damaged.	6. Inspect for worn or damaged pump gears. Replace pump assembly if needed.
NOISE ONLY IN 1ST OR 5TH GEAR	1. Broken Tab on K1/K2 Thrust bearing.	1. Replace K1/K2 Thrust bearing.
FLARES ON THE 1 - 2 SHIFT	1. Failed F1 ORC. See **Transmission and Transfer Case/Automatic - NAG1/CLUTCH - Operation**.	1. Replace F1 ORC, B1 Retainer and K1 Retainer.
		2. Split Electrohydraulic Unit and inspect 1-2/4-5 valves.

	2. Stuck 1-2 / 4-5 valve.	Remove debris if present. If valve can't be freed replace Electrohydraulic Unit.
BUMPSHIFT ON 2-1 DOWNSHIFT	1. K1 belleville retainer snap ring.	1. K1 Belleville retainer snap rings may become unseated. Disassemble trans and re-seat snap ring. Verify there are no stuck 1-2/4-5 shift valves in the Electrohydaulic unit prior to removing the trans.
FLARES ON THE 2-3 SHIFT	1.K2 Piston Bottomed Out.	1. Replace Input Shaft Assembly. This issue can be verified by making immediate repeated shifts between 2nd and 3rd. If the flare is eliminated on subsequent shifts to 3rd, It is likely that this is the issue.
	2. Failed F2 ORC. See **Transmission and Transfer Case/Automatic - NAG1/CLUTCH - Operation**.	2. Replace F2 ORC, Rear Sun Gear and Front Sun Gear
	3. Stuck 2-3 Valves.	3. Split Electrohydraulic Unit and inspect 2-3 valves. Remove debris if present. If valve can't be freed replace Electrohydraulic Unit.
	4. K2 Clutch Slipping.	4. Inspect and if damaged replace K2 Clutch Discs and

		Seals.
	5. 2-3 Shift Pressure Valve Spring Deformed.	5. It is possible that when the steel cover plate was screwed to the Electrohydraulic Unit, the spring was pinched thus deforming the bore and sticking the valve. Remove the Electrohydraulic Unit and remove the steel plate covering the 2-3 shift pressure valve. If the valve can't be freely removed from the bore, the spring was pinched and the Electrohydraulic Unit requires replacement.
	6. B1 bushing missing.	6. Replace B1 retainer and input shaft.
SLIPS ON 2-3 UPSHIFT	1. Transmission adaptation/ calibration.	1. Check for latest level TCM software. Perform the TCM adaptation procedure. Refer to **Electrical - Electronic Control Modules/Electronic Control Modules/MODULE, Transmission Control - Standard Procedure** .
	2. Fluid level low.	2. Check and adjust fluid level. See **Transmission and Transfer Case/Automatic - NAG1/FLUID and FILTER - Standard Procedure**.

	3. Filter damaged or missing.	3. Check for damaged/missing filter or cut/missing o-ring.	
	4. Valve body malfunction.	4. Check for sticky/stuck 2-3 shift pressure valve or regulator valve.	
	5. F2 or B2 clutch damaged.	5. Disassemble transmission, inspect for damaged F2 or B2 clutch. Repair as needed.	
FLARE OR NEUTRALS ON THE 3-4 / 4-3 SHIFT	1. Debris sticking the 3-4 Holding Valve or Debris Sticking the 3-4 Shift Pressure Valve	1. Split Electrohydraulic Unit and remove the 3-4 Shift Pressure and 3-4 Holding Valves. Flush the valves and bores with a solvent such as mineral spirits. (Note: Debris can be a very small sliver unnoticable unless flushing onto filter paper.) Only if the valve can not be freed should the Electrohydraulic Unit be replaced.	-
	3. Two Plastic Check Balls in one pocket.	3. Split the Electrohydraulic Unit and inspect and verify that there is only one plastic check ball in each of the 4 pockets. If there are two in any pocket, remove one and re-assemble.	
SLIPS, BANGS INTO GEAR,		1. Disassemble the transmission, remove the pump and gears from the bell housing. Inspect the pump gear face	

DELAYED ENGAGEMENT, VENT TUBE LEAK	1. Casting Void in the Bell Housing.	in the bell housing for a 3/16" diameter void between the pump suction and drainback circuits. If void is present, replace the bell housing.
SLIPS ON 3-4 UPSHIFT	1. Transmission adaptation/ calibration.	1. Check for latest level TCM software. Perform the TCM adaptation procedure. Refer to **Electrical - Electronic Control Modules/Electronic Control Modules/MODULE, Transmission Control - Standard Procedure** .
	2. Fluid level low.	2. Check and adjust fluid level. See **Transmission and Transfer Case/Automatic - NAG1/FLUID and FILTER - Standard Procedure**.
	3. Filter damaged or missing.	3. Check for damaged/missing filter or cut/missing o-ring.
	4. Valve body malfunction.	4. Check for sticky/stuck 3 - 4 shift pressure valve or regulator valve.
	5. K3 or B2 clutch damaged.	5. Disassemble transmission, inspect for damaged K3 or B2 clutch. Repair as needed.
		1. Check for latest level TCM software. Perform the TCM adaptation procedure. Refer to

SLIPS ON 4-5 UPSHIFT	1. Transmission adaptation/ calibration.	**Electrical - Electronic Control Modules/Electronic Control Modules/MODULE, Transmission Control - Standard Procedure** .
	2. Fluid level low.	2. Check and adjust fluid level. See **Transmission and Transfer Case/Automatic - NAG1/FLUID and FILTER - Standard Procedure**.
	3. Filter damaged or missing.	3. Check for damaged/missing filter or cut/missing o-ring.
	4. Electrohydraulic Unit malfunction.	4. Check for sticky/stuck 1 -2/4- 5 shift pressure valve or regulator valve.
	5. B1 or K1 clutch damaged.	5. Disassemble transmission, inspect for damaged B1 or K1 clutch. Repair as needed.
IN-GEAR SHUDDER ON HEAVY ACCELERATION	1. Fluid level low.	1. Check and adjust fluid level. See **Transmission and Transfer Case/Automatic - NAG1/FLUID and FILTER - Standard Procedure**.
	2. Filter damaged or missing.	2. Check for damaged/missing filter or cut/missing o-ring.
NO DRIVE ENGAGEMENT	1. Customer shifting into N at vehicle speeds greater than 25 mph and tipping in on the throttle.	1. Instruct the customer that they should not shift into N at vehicle speeds greater 25 mph.

FOLLOWING A SHIFT TO N	2. Shift system malfunction.	2. Inspect shift system for proper adjustment or damage. Check shifter for DTCs. Repair as needed.
REVERSE GEAR POSITION BLOCKED ENGAGEMENT WHEN MOVING SHIFT LEVER FROM D POSITION	1. Customer shifting into R at vehicle speeds greater than 7 mph.	1. Instruct customer that R shifter position is blocked at vehicle speeds greater than 7 mph.
	2. Shift system malfunction.	2. Inspect shift system for proper adjustment or damage. Check shifter for DTCs. Repair as needed.
NO ENGINE CRANKING IN P OR N	1. Gearshift cable adjustment.	1. Adjust shift cable and retest.
	2. Shift system malfunction.	2. Check shifter DTCs. Inspect shift cable and lever assembly. Adjust and/or replace worn/ damaged parts.
	3. Valve body malfunction.	3. Starter lockout contact malfunction. Remove valve body, replace lead frame assembly. See **Transmission and Transfer Case/Automatic - NAG1/CONTACT, Temperature Sensor\Park-Neutral - Operation**.
INCORRECT TRANSMISSION TEMPERATURE	1. Defective Trans Temp Sensor.	1. Verify proper temperature sensor operation.
	1. Loose/Corroded TCM Connector (Both C1 and C2 Connectors).	1. Disconnect, inspect, and reconnect TCM connector. Make sure to check for

		any pushed out pins.
SPEED SENSOR ERROR	2. Unlatched Electrohydraulic Unit connector.	2. Remove the Electrohydraulic Unit connector and inspect for any oil or damaged pins. (Note: There is no Electrohydraulic Unit connector pin in position #5) Re-attach the connector and insure that the locking ring tab is fully latched.
	3. Wires Shorted or Open.	3. Ohm the speed sensor wires to make sure there is not a short to another circuit or ground. Visually inspect for any chafing of the wires. Repair as necessary.
	4. TCM Defective.	4. After checking the wiring and connectors replace the TCM.
	1. Leak in area of bell housing.	1. Check bolt torque on internal bell housing bolts. If loose, replace fastener and torque to proper level. If bolts are to proper torque level, check pump outer seal and impeller seal. Replace if needed.
	2. Leak in area of control unit (valve body) electrical connector.	2. Check connector for damaged (cut), flattened or missing o-rings. Replace as needed.
		3. Check for proper torque on oil pan

	3. Leak in area of pan gasket.	clamps. Check for mis-positioned or rolled gasket. Repair as needed.
	4. Leak in area of park guide plug.	4. Remove park guide plug. Check for damaged (cut) or missing o-ring. If o-ring is in good condition, install new plug.
	5. Leak in area of shift lever.	5. Check for damaged shift lever seal or damaged lever. Repair as needed.
	6. Leak in area of output flange.	6. Check for worn/damaged slinger seal and output seal. Visually inspect output flange seal surface for damage. Repair as needed.
FLUID LEAK	7. Leak in area of transmission vent.	7. Check fluid level for overfill condition. Adjust as needed. If fluid level is within specification, ride check vehicle. Monitor transmission temperature. If high operating temperatures are observed, fluid may be contaminated or cooling system malfunctioning. Change fluid per service information procedures. Refer to cooling system diagnostics if needed.
		8. Inspect fill tube cap for proper

	8. Leak in area of transmission fill tube.	installation. Inspect fill tube grommet between case and fill tube for leakage. Repair as needed.	

AUTOMATIC TRANSMISSION - GENERAL CONDITIONS

CAUTION: Before attempting any repair on a NAG1 automatic transmission, check for Diagnostic Trouble Codes with the appropriate scan tool.

Transmission malfunctions may be caused by these general conditions:

- Poor engine performance.
- Improper adjustments.
- Hydraulic malfunctions.
- Mechanical malfunctions.
- Electronic malfunctions.
- Transfer case performance (if equipped).

Diagnosis of these problems should always begin by checking the easily accessible variables: fluid level and condition, gearshift cable adjustment. Then perform a road test to determine if the problem has been corrected or if more diagnosis is necessary.

PRELIMINARY

Two basic procedures are required to help diagnose the transmission. One procedure is for vehicles that are drivable and an alternate procedure for disabled vehicles the will not back up or move forward.

VEHICLE IS DRIVABLE

1. Check for transmission fault codes using the appropriate scan tool.
2. Adjust the gearshift cable if complaint was based on delayed, erratic, or harsh shifts.
3. Road test and note how the transmission upshifts, downshifts, and engages.
4. Check fluid level and condition.

VEHICLE IS DISABLED

1. Check for a broken or disconnected gearshift cable.
2. Check for cracked, leaking cooler lines, or loose or missing pressure-port plugs.
3. Check fluid level and condition.
4. Check shifter linkage: Is the cable connected to the lever at the transmission and does the lever

move with gear change on the console shifter? If no movement, repair shift cable and or shifter.

5. With shifter in PARK, attempt to rotate the drive shaft(s) to make sure the transmission output shaft coupler/flange is secure.
6. Check the transfer case operation (if equipped).
7. Raise and support the vehicle on safety stands. With the transmission in PARK, start the engine and allow to idle for several minutes. Shift the transmission into gear and note the following:
    a. If the propeller shaft turns but wheels do not, problem is with the differential or axle shafts.
    b. If the propeller shaft does not turn and the transmission is noisy, stop the engine. Remove the oil pan and check for debris. If the pan is clear, remove the transmission and check for damaged driveplate, converter, oil pump, or input shaft.
    c. If the propeller shaft does not turn and the transmission is not noisy, perform the hydraulic-pressure test to determine if problem is hydraulic or mechanical.
8. Air pressure test the B1, K3, and B2 clutch circuits. See **Transmission and Transfer Case/Automatic - NAG1 - Diagnosis and Testing**.
9. Check the Transmission Control Module (TCM) wiring, valve body, and solenoids. (Utilize fault codes to diagnose if available).
10. Remove the oil pan and check filter presence and condition (not plugged and seated).
11. If debris is found in the pan, tear down the transmission and inspect all hard parts (front annulus gear, gear to retainer and, input shaft, etc.) and clutches. If the hard parts do not show signs of damage, replace the torque converter and filter.
12. Remove the valve body, disassemble, and inspect the line pressure regulating valve for being stuck, clean and remove debris.
13. Check the pump rotor for failed inner lugs that are driven by the damper hub.

ROAD TESTING

Before road testing, be sure the fluid level and control cable adjustments have been checked and adjusted if necessary. Verify that all diagnostic trouble codes have been resolved.

Observe engine performance during the road test. A poorly tuned engine will not allow accurate analysis of transmission operation.

Operate the transmission in all gear ranges. Check for shift variations and engine flare which indicates slippage. Note if shifts are harsh, spongy, delayed, early, or if part throttle downshifts are sensitive.

Slippage indicated by engine flare, usually means clutch, overrunning clutch, or line pressure problems.

A slipping clutch can often be determined by comparing which internal units are applied in the various gear ranges. The Clutch Application chart **CLUTCH APPLICATION** provides a basis for analyzing road test results.

CLUTCH APPLICATION

GEAR	RATIO	B1	B2	B3	K1	K2	K3	F1	F2
1	3.59	X*	X	-	-	-	X*	X	X
2	2.19	-	X	-	X	-	X*	-	X
3	1.41	-	X	-	X	X	-	-	-
4	1.00	-	-	-	X	X	X	-	-
5	0.83	X	-	-	-	X	X	X*	-
N	N/A	X	-	-	-	-	X	-	-
R	3.16	X*	-	X	-	-	X	X	-
R - Limp In	1.93	X	X	X	-	-	-	-	-
* = The shift components required during coast.									

STANDARD PROCEDURE

ALUMINUM THREAD REPAIR

Damaged or worn threads in the aluminum transmission case and valve body can be repaired by the use of Heli-Coils™, or equivalent. This repair consists of drilling out the worn-out damaged threads. The hole is tapped with a special Heli-Coil tap, or equivalent, and a Heli-Coil insert, or equivalent, is installed into the hole. This brings the hole back to its original thread size.

Heli-Coil™, or equivalent, tools and inserts are readily available from most automotive parts suppliers.

REMOVAL

3.5L REMOVAL

NOTE: **If the transmission is being reconditioned (clutch/seal replacement) or replaced, it is necessary to perform the TCM Adaptation Procedure using the scan tool. Refer to Electrical - Electronic Control Modules/Electronic Control Modules/MODULE, Transmission Control - Standard Procedure .**

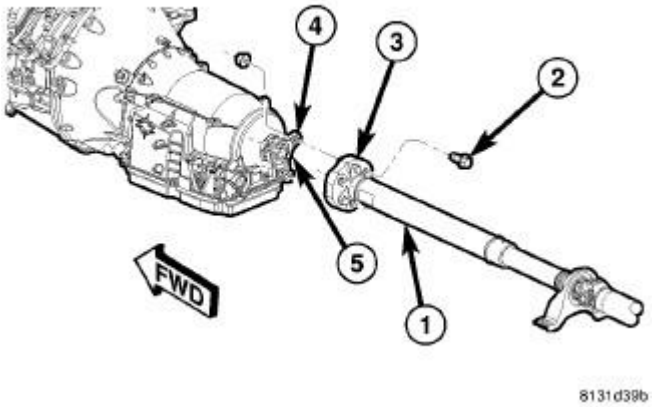

Fig. 29: Removing/Installing Propeller Shaft
Courtesy of CHRYSLER LLC

1 - PROPELLER SHAFT
2 - BOLTS
3 - PROPELLER SHAFT COUPLER
4 - COMPANION FLANGE
5 - PROPELLER SHAFT PILOT

1. Disconnect the negative battery cable.
2. Raise and support the vehicle.
3. Remove the exhaust system.
4. Mark propeller shaft (1) and the transmission flange (4) for assembly alignment.
5. Remove the bolts (2) holding the rear propeller shaft coupler (3) to the transmission flange (4).
6. Slide the propeller shaft (1) rearward until the coupler clears the propeller shaft pilot (5) on the transmission output shaft.

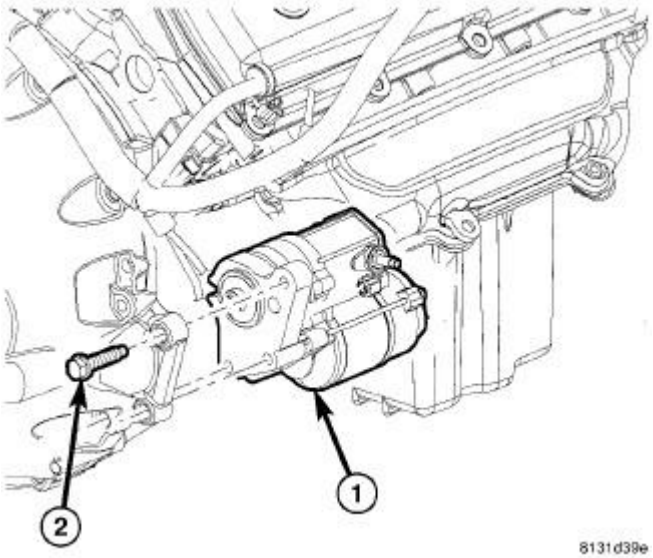

Fig. 30: Starter & Fasteners
Courtesy of CHRYSLER LLC

1 - STARTER 2 -BOLTS

7. Remove the bolts (2) holding the starter motor (1) to the transmission. Refer to **Electrical - Engine Systems/Starting/STARTER - Removal** .
8. Remove the starter (1) from the transmission starter pocket and safely relocate.

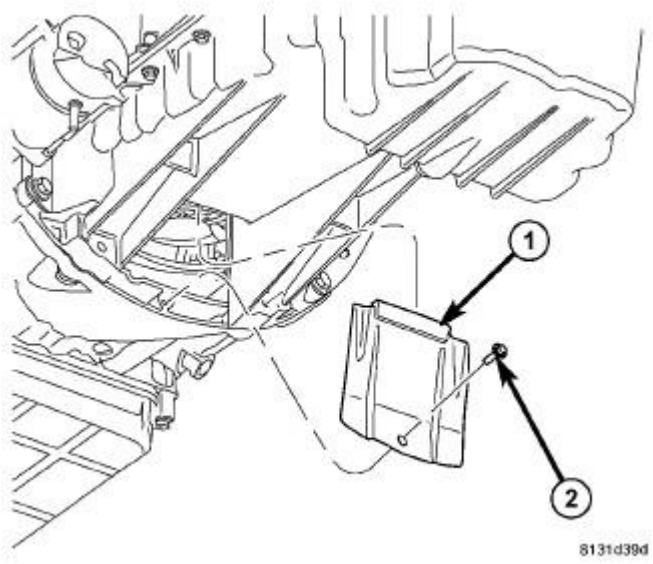

Fig. 31: Identifying Torque Converter Access Cover & Fastener
Courtesy of CHRYSLER LLC

1 - ACCESS COVER 2 - BOLT

9. Remove the bolt (2) holding the torque converter access cover (1) to the transmission.
10. Remove the torque converter access cover (1) from the transmission.

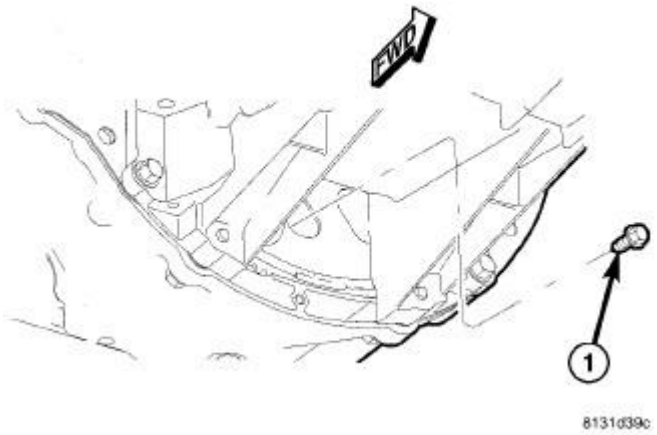

Fig. 32: Removing/Installing Torque Converter Bolts
Courtesy of CHRYSLER LLC

1 - TORQUE CONVERTER BOLTS

11. Remove any splash shields necessary to gain access to the crankshaft damper bolts.
12. Rotate crankshaft in clockwise direction until converter bolts (1) are accessible. Then remove bolts (1) one at a time. Rotate crankshaft with socket wrench on dampener bolt.

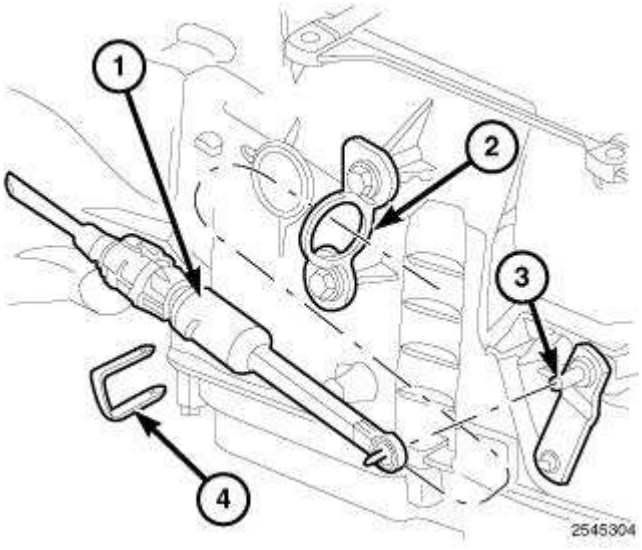

Fig. 33: Identifying Gearshift Cable, Eyelet & Manual Shift Lever

Courtesy of CHRYSLER LLC

13. Remove the gearshift cable retaining clip (4) (if equipped).
14. Disconnect the gearshift cable (1) from the shift lever (3), and remove cable from bracket (2).

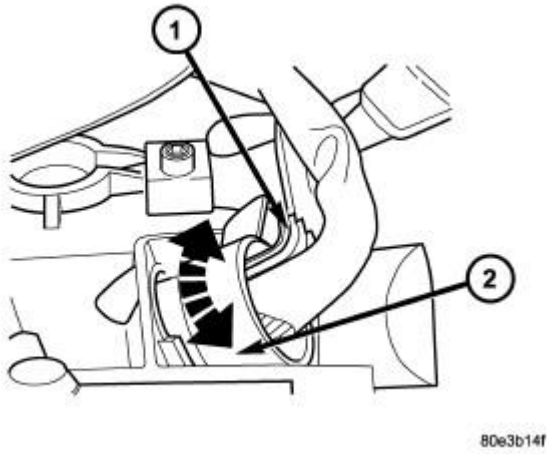

Fig. 34: Remove/Install Wiring Connector Plug
Courtesy of CHRYSLER LLC

1 - PLUG CONNECTOR 2 - ADAPTER PLUG

15. Disconnect 13-pin plug connector (1). Turn bayonet lock of the adapter plug (2) anti-clockwise.
16. Remove the 13-pin connector (1) from the transmission.
17. Remove the fill tube bolt at the transmission case.

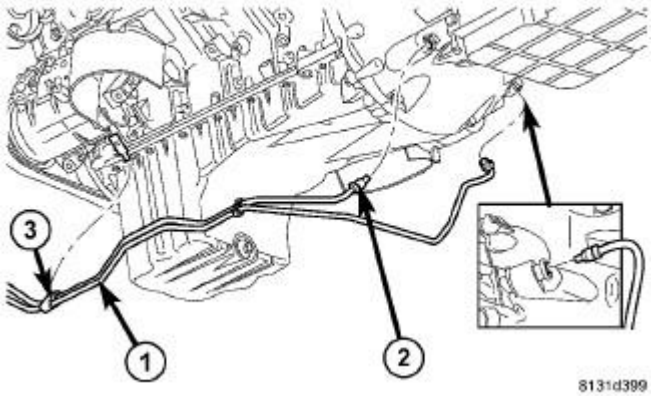

Fig. 35: Transmission Lines
Courtesy of CHRYSLER LLC

1 - TRANSMISSION OIL COOLER LINES
2 - COOLER LINE FITTINGS
3 - SUPPORT CLAMPS

18. Disconnect transmission fluid cooler lines (1) at transmission fittings (2) and clips (3).
19. Disconnect the transmission vent hose from the transmission.

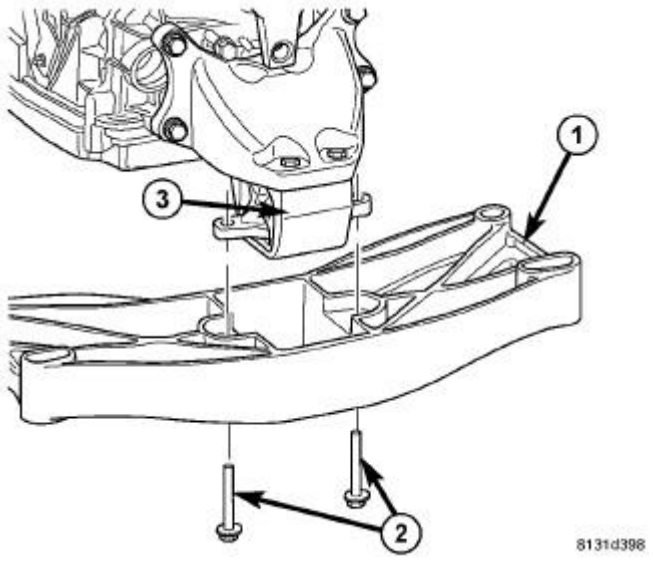

Fig. 36: Removing/Installing Trans Mount Bolts
Courtesy of CHRYSLER LLC

20. Raise transmission slightly with service jack to relieve load on crossmember and supports.
21. Remove bolts (2) securing rear support and cushion (3) to transmission crossmember (1).
22. Remove bolts attaching crossmember (1) to frame and remove crossmember.

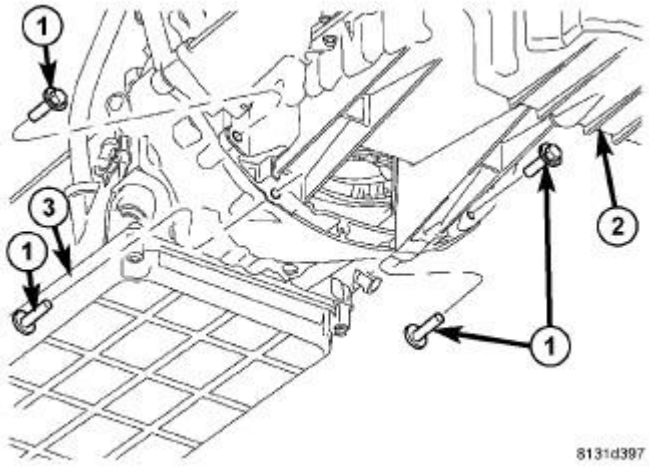

Fig. 37: Removing/Installing Transmission To Oil Pan Bolts

Courtesy of CHRYSLER LLC

1 - BOLTS 2 - ENGINE OIL PAN 3 - TRANSMISSION

23. Remove the bolts (1) holding the engine oil pan (2) to the transmission (3).

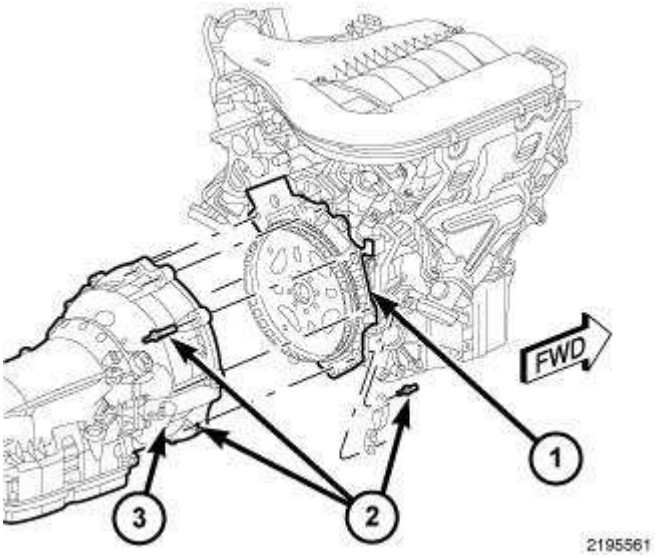

Fig. 38: Identifying Transmission, Engine & Fasteners
Courtesy of CHRYSLER LLC

24. Remove all remaining torque converter housing bolts (2) securing the transmission (3) to the engine block (1).
25. While removing the fill tube from the transmission case, carefully work transmission and torque converter assembly rearward off engine block dowels.
26. Hold torque converter in place during transmission removal.
27. Lower transmission and remove assembly from under the vehicle.
28. To remove torque converter, carefully slide torque converter out of the transmission.

REMOVAL

NOTE: If the transmission is being reconditioned (clutch/seal replacement) or replaced, it is necessary to perform the TCM Adaptation Procedure using the scan tool. Refer to Electrical - Electronic Control Modules/Electronic Control Modules/MODULE, Transmission Control - Standard Procedure .

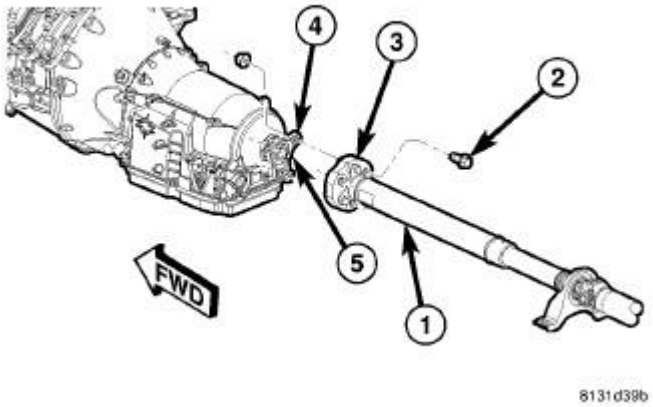

Fig. 39: Removing/Installing Propeller Shaft
Courtesy of CHRYSLER LLC

1 - PROPELLER SHAFT
2 - BOLTS
3 - PROPELLER SHAFT COUPLER
4 - COMPANION FLANGE
5 - PROPELLER SHAFT PILOT

1. Disconnect the negative battery cable.
2. Raise and support the vehicle.
3. Remove the exhaust system.
4. Mark propeller shaft (1) and the transmission flange (4) for assembly alignment.
5. Remove the bolts (2) holding the rear propeller shaft coupler (3) to the transmission flange (4).
6. Slide the propeller shaft (1) rearward until the coupler clears the propeller shaft pilot (5) on the transmission output shaft.

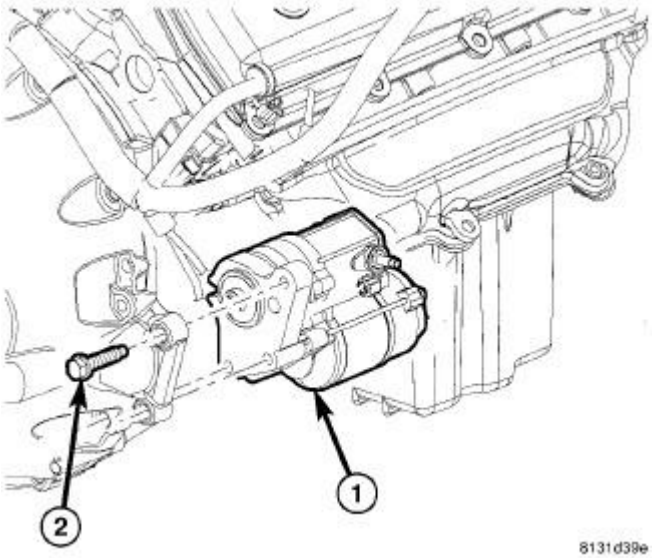

Fig. 40: Starter & Fasteners
Courtesy of CHRYSLER LLC

1 - STARTER 2 -BOLTS

7. Remove the bolts (2) holding the starter motor (1) to the transmission. Refer to **Electrical - Engine Systems/Starting/STARTER - Removal** .
8. Remove the starter (1) from the transmission starter pocket and safely relocate.

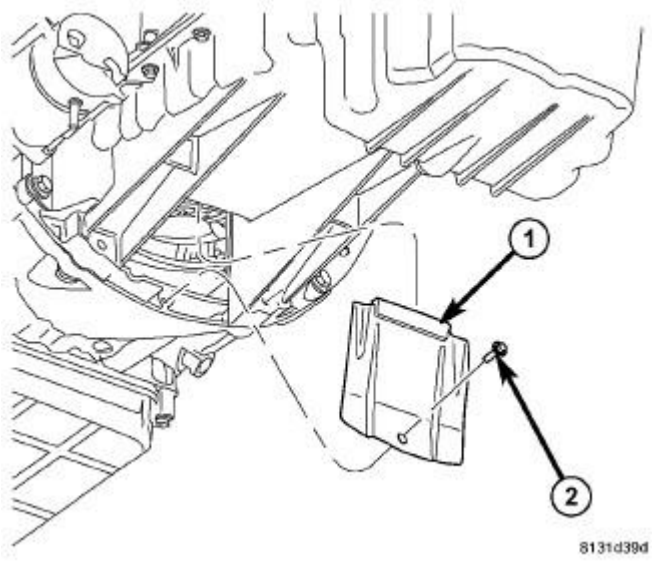

Fig. 41: Identifying Torque Converter Access Cover & Fastener
Courtesy of CHRYSLER LLC

1 - ACCESS COVER 2 - BOLT

9. Remove the bolt (2) holding the torque converter access cover (1) to the transmission.
10. Remove the torque converter access cover (1) from the transmission.

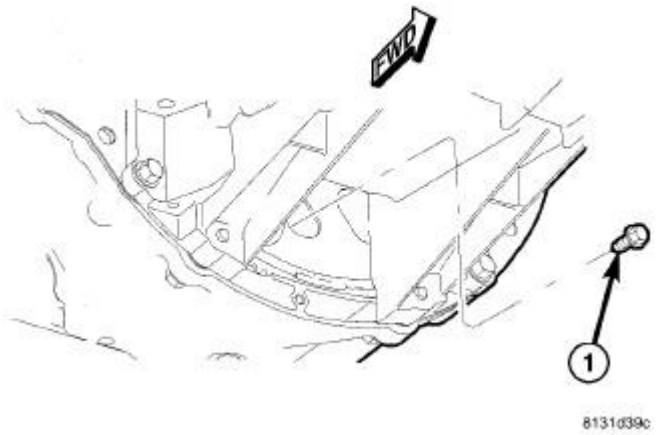

Fig. 42: Removing/Installing Torque Converter Bolts
Courtesy of CHRYSLER LLC

1 - TORQUE CONVERTER BOLTS

11. Remove any splash shields necessary to gain access to the crankshaft damper bolts.
12. Rotate crankshaft in clockwise direction until converter bolts (1) are accessible. Then remove bolts (1) one at a time. Rotate crankshaft with socket wrench on dampener bolt.

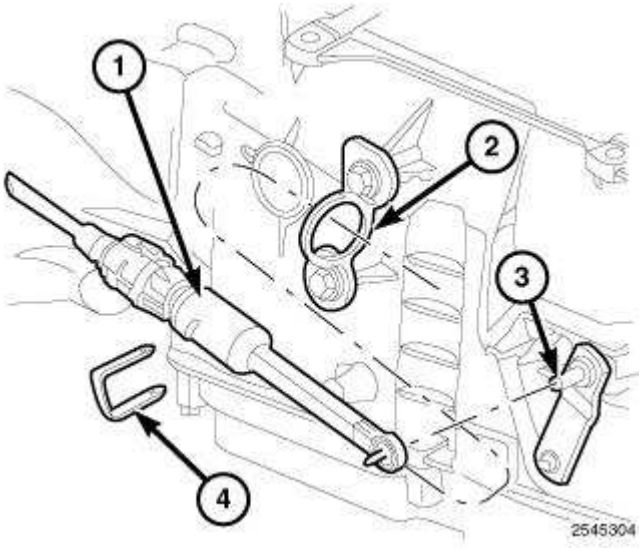

Fig. 43: Identifying Gearshift Cable, Eyelet & Manual Shift Lever

Courtesy of CHRYSLER LLC

13. Remove the gearshift cable retaining clip (4) (if equipped).
14. Disconnect the gearshift cable (1) from the shift lever (3), and remove cable from bracket (2).

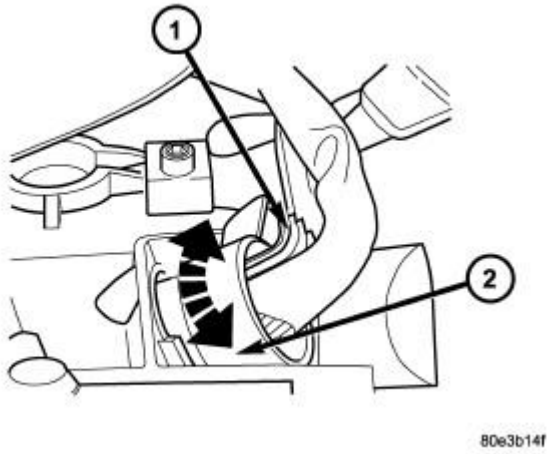

Fig. 44: Remove/Install Wiring Connector Plug
Courtesy of CHRYSLER LLC

1 - PLUG CONNECTOR 2 - ADAPTER PLUG

15. Disconnect 13-pin plug connector (1). Turn bayonet lock of the adapter plug (2) anti-clockwise.
16. Remove the 13-pin connector (1) from the transmission.
17. Remove the fill tube bolt at the transmission case.

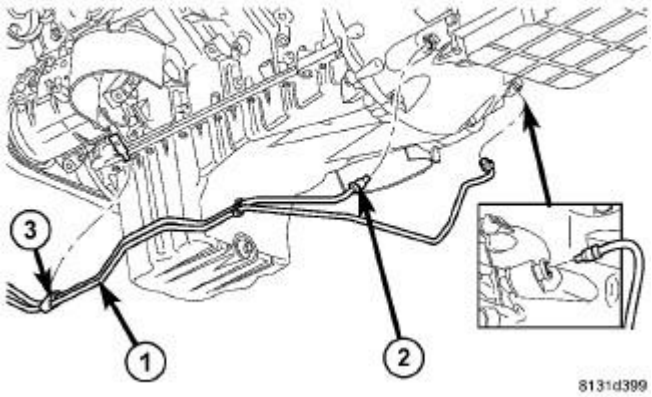

Fig. 45: Transmission Lines
Courtesy of CHRYSLER LLC

1 - TRANSMISSION OIL COOLER LINES
2 - COOLER LINE FITTINGS
3 - SUPPORT CLAMPS

18. Disconnect transmission fluid cooler lines (1) at transmission fittings (2) and clips (3).
19. Disconnect the transmission vent hose from the transmission.

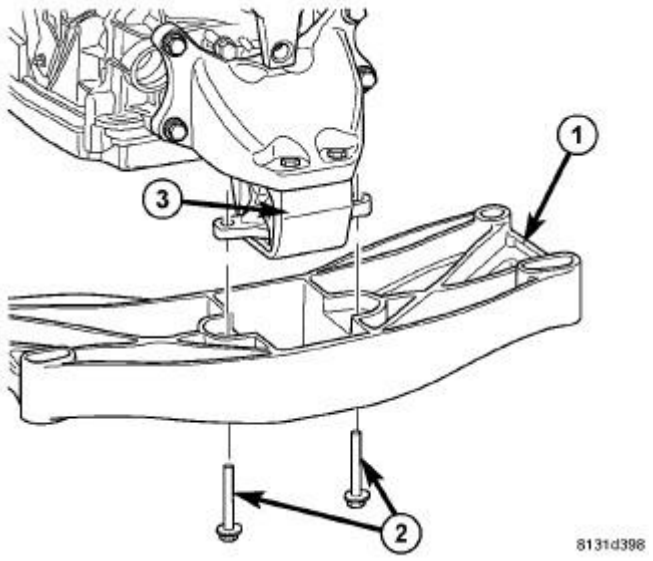

Fig. 46: Removing/Installing Trans Mount Bolts
Courtesy of CHRYSLER LLC

20. Raise transmission slightly with service jack to relieve load on crossmember and supports.
21. Remove bolts (2) securing rear support and cushion (3) to transmission crossmember (1).
22. Remove bolts attaching crossmember (1) to frame and remove crossmember.

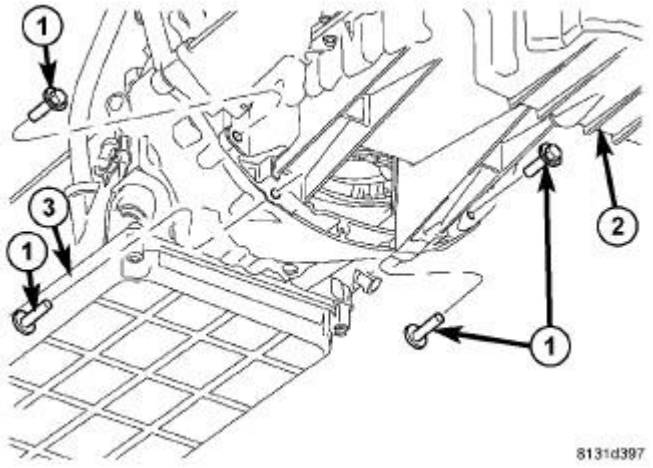

Fig. 47: Removing/Installing Transmission To Oil Pan Bolts

Courtesy of CHRYSLER LLC

1 - BOLTS 2 - ENGINE OIL PAN 3 - TRANSMISSION

23. Remove the bolts (1) holding the engine oil pan (2) to the transmission (3).

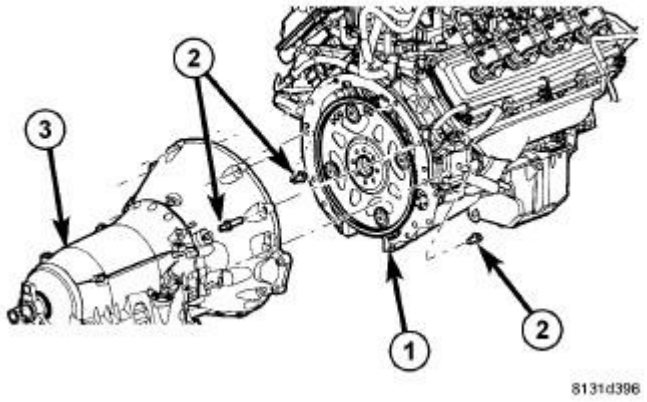

Fig. 48: Identifying Transmission, Engine & Fasteners
Courtesy of CHRYSLER LLC

1 - ENGINE 2 - BOLTS 3 - TRANSMISSION

24. Remove all remaining bolts (2) securing the transmission (3) to the engine block (1).
25. While removing the fill tube from the transmission case, carefully work transmission and torque converter assembly rearward off engine block dowels.
26. Hold torque converter in place during transmission removal.
27. Lower transmission and remove assembly from under the vehicle.
28. To remove torque converter, carefully slide torque converter out of the transmission.

DISASSEMBLY

DISASSEMBLY

NOTE: If the transmission is being reconditioned (clutch/seal replacement) or replaced, it is necessary to perform the TCM Adaptation Procedure using the scan tool. Refer to Electrical - Electronic Control Modules/Electronic Control Modules/MODULE, Transmission Control - Standard Procedure .

NOTE: **Tag all clutch pack assemblies, as they are removed for reassembly identification.**

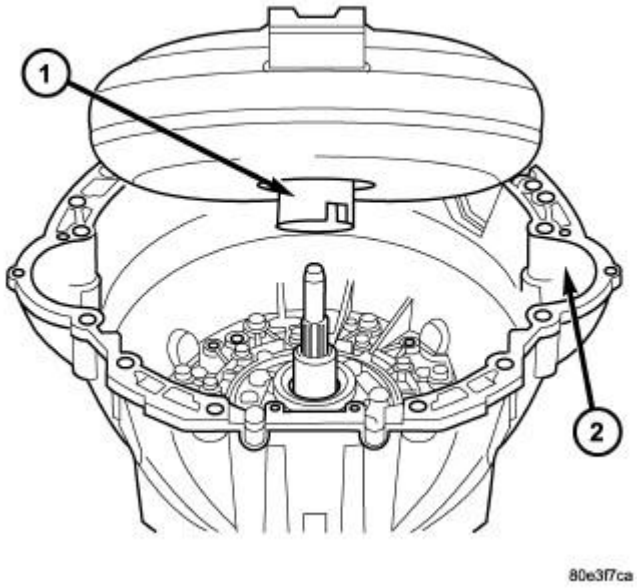

Fig. 49: Remove/Install Torque Converter
Courtesy of CHRYSLER LLC

1. Remove the torque converter (1) from the converter housing (2).

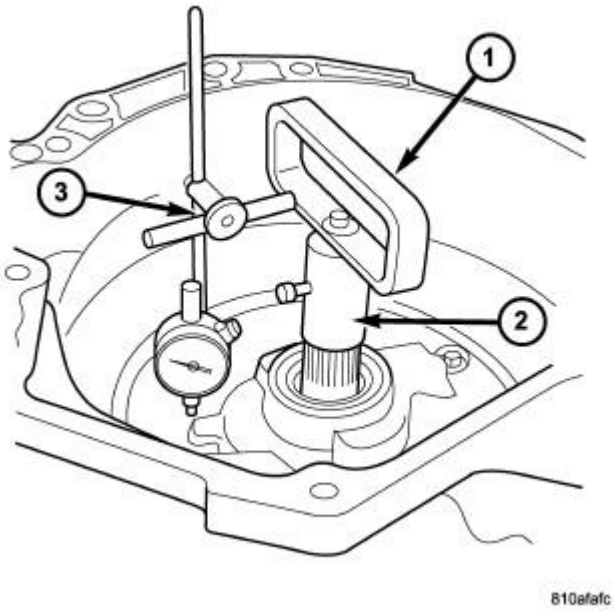

Fig. 50: Checking Input Shaft End Play
Courtesy of CHRYSLER LLC

2. Place transmission in a vertical position.
3. Measure input shaft end play as follows:
    a. Attach Adapter 8266-18 (2) to Handle 8266-8 (1).
    b. Attach dial indicator C-3339A (3)
    c. Install the assembled tools onto the input shaft of the transmission and tighten the retaining screw on Adapter 8266-18 to secure tool to the input shaft.
    d. Position the dial indicator plunger against a flat spot on the oil pump and zero the dial indicator.
    e. Move the input shaft in and out. Record the maximum travel for assembly reference.

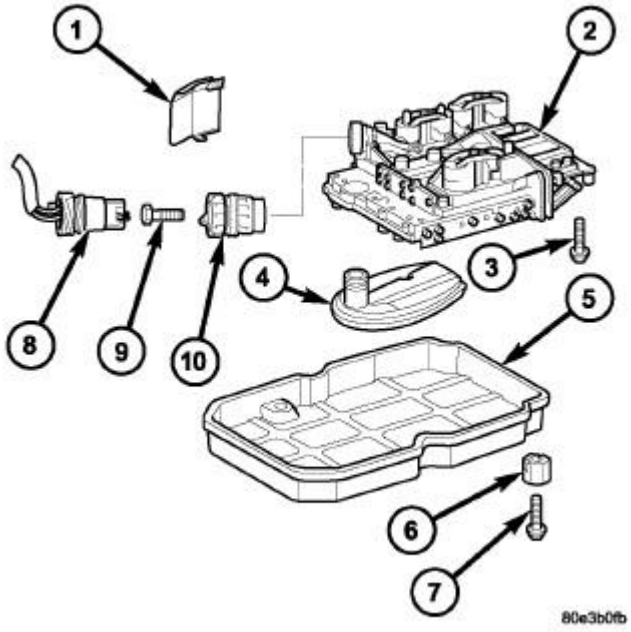

Fig. 51: Remove/Install Electrohydraulic Unit
Courtesy of CHRYSLER LLC

4. Loosen adapter plug bolt (9) and remove from the adapter plug (10) from the transmission housing.
5. Detach oil pan (5).
6. Remove oil filter (4).
7. Unscrew Torx® socket bolts (3) and remove electrohydraulic unit (2).
8. Air check the transmission. See **Transmission and Transfer Case/Automatic - NAG1 - Diagnosis and Testing**.

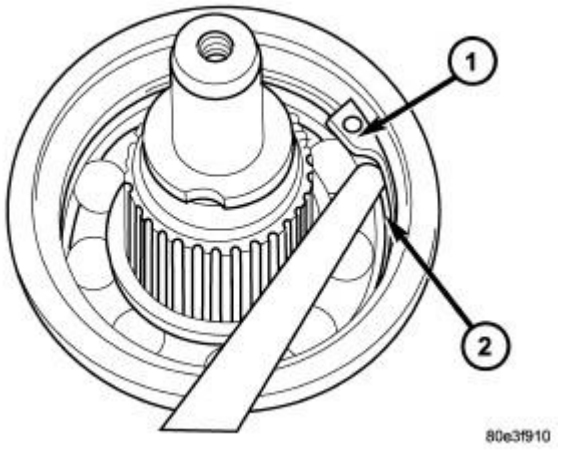

Fig. 52: Remove/Install Rear Output Shaft Retaining Ring
Courtesy of CHRYSLER LLC

9. Place the transmission in PARK.
10. Remove the propeller shaft flange nut using a 30 mm 12 point socket. Hold the propeller shaft flange securely while removing the nut.
11. Remove the propeller shaft flange.
12. Remove the transmission rear oil seal with a suitable slide hammer and screw.
13. Remove the transmission output shaft washer. Be sure to tag the washer since it is very similar to the geartrain end-play shim and they must not be interchanged.
14. Remove the retaining clip (1) that secures the transmission rear output shaft bearing to the transmission case.

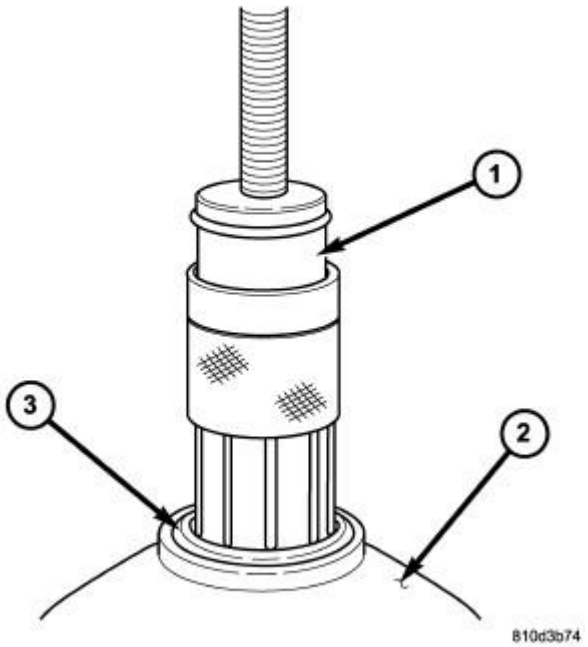

Fig. 53: Position Remover 9082A On Bearing
Courtesy of CHRYSLER LLC

15. Position Bearing Remover 9082A (1) to the transmission case (2) and over the inner race of the output shaft bearing (3).

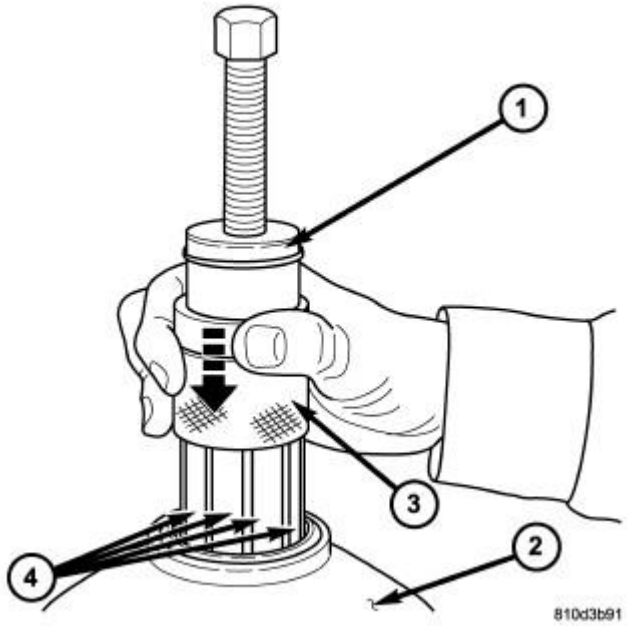

Fig. 54: Slide Remover 9082A Collar Downward
Courtesy of CHRYSLER LLC

NOTE: Due to production variations in the bearing, it may not be possible to slide the collar fully downward. It is only necessary to slide the collar down far enough that the fingers securely grasp the inner bearing race.

16. Slide the collar (3) downward over the fingers (4) on Bearing Remover 9082A (1)

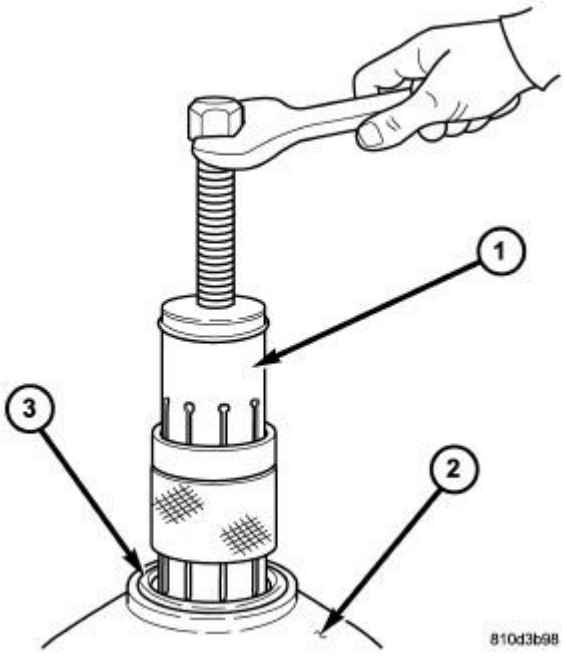

Fig. 55: Remove Output Shaft Bearing
Courtesy of CHRYSLER LLC

17. Using Bearing Remover 9082A (1), remove the output shaft bearing (3) from the transmission case (2).
18. Remove the geartrain end-play shim from the output shaft. Be sure to tag the shim since it is very similar to the output shaft washer and they must not be interchanged.

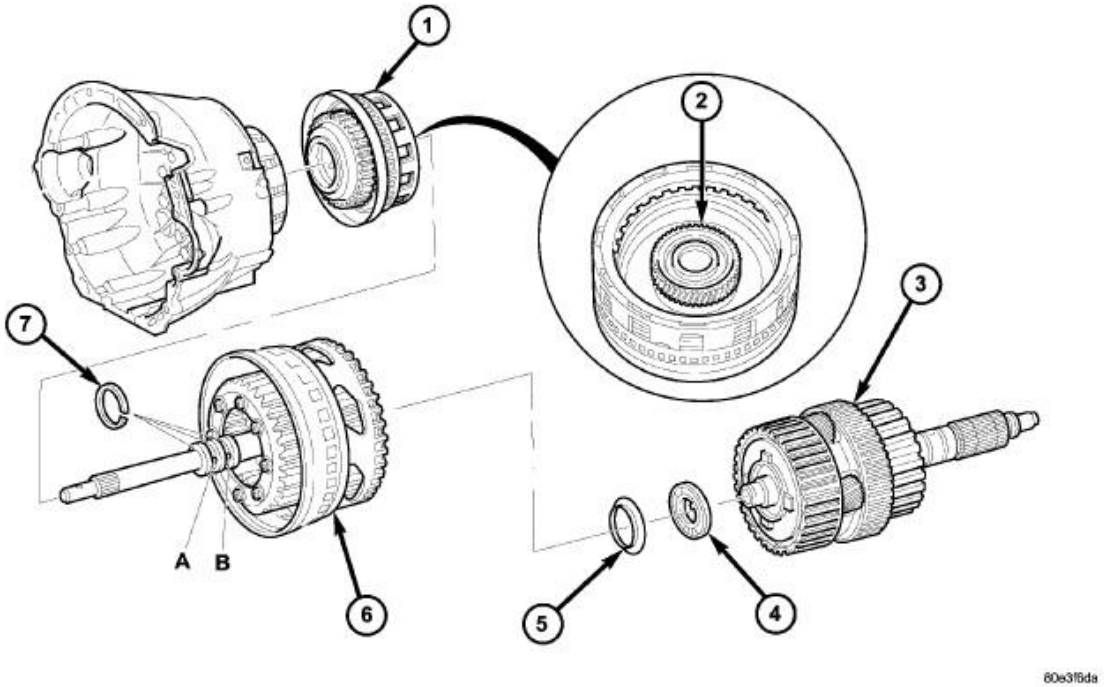

Fig. 56: Remove/Install K1, K2, and K3 Clutches
Courtesy of CHRYSLER LLC

1 - DRIVING CLUTCH K1	5 - THRUST WASHER
2 - SUN GEAR OF FRONT PLANETARY GEAR SET	6 - FRONT PLANETARY GEAR SET, DRIVING CLUTCH K2, AND INPUT SHAFT
3 - DRIVING CLUTCH K3, OUTPUT SHAFT , AND CENTER AND REAR PLANETARY GEAR SETS	7 - SEALING RINGS
4 - THRUST NEEDLE BEARING	

19. Remove the bolts holding the transmission housing to the converter housing from inside the converter housing.
20. Stand the transmission upright on the converter housing.
21. Remove the remaining bolts holding the transmission housing to the converter housing.
22. Remove the transmission housing from the converter housing.
23. Remove output shaft with center and rear gear set and clutch K3 (3).
24. Remove thrust needle bearing (4) and thrust washer (5).
25. Remove input shaft with clutch K2 and front gear set (6).
26. Remove clutch K1 (1).

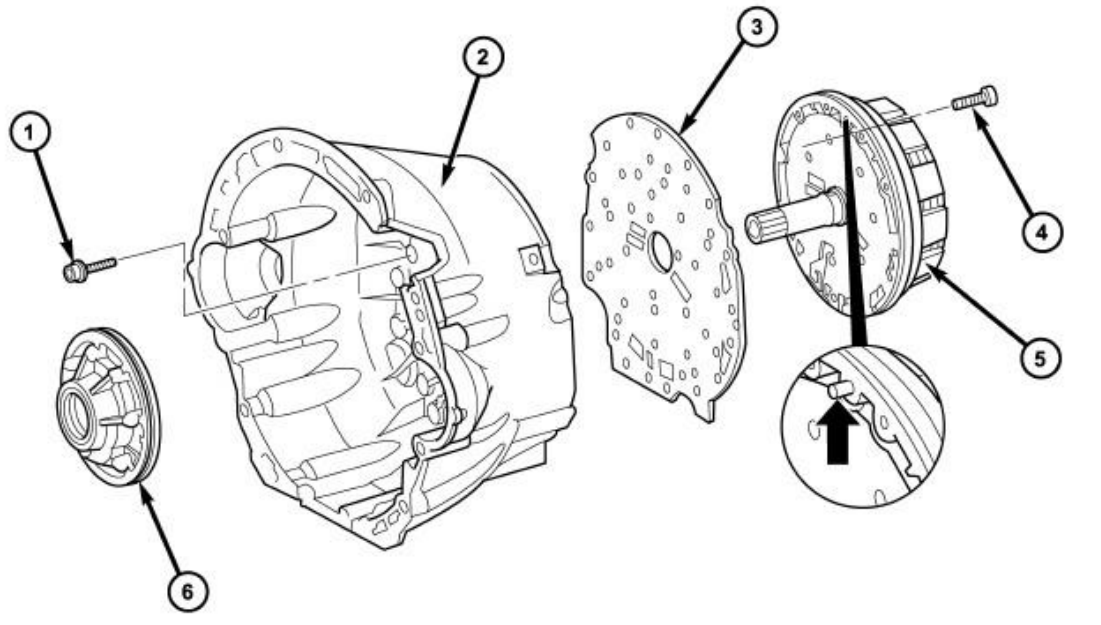

Fig. 57: Remove/Install Holding Clutch B1 and Oil Pump
Courtesy of CHRYSLER LLC

1 - BOLTS - M6X32	4 - BOLTS - M8X35
2 - CONVERTER HOUSING	5 - HOLDING CLUTCH B1
3 - INTERMEDIATE PLATE	6 - OIL PUMP

27. Unscrew Torx® socket bolts (4) and remove oil pump (6). Screw two opposed bolts into the oil pump housing and press the oil pump out of the converter housing by applying light blows with a plastic hammer.
28. Remove and discard the torque converter hub seal and the oil pump outer o-ring seal from the oil pump.
29. Unscrew Torx® socket bolts (1) and remove multiple-disc holding clutch B1 (5) from converter housing. Screw two opposed bolts into the multiple-disc holding clutch B1 (5) and separate from the converter housing by applying light blows with a plastic hammer.
30. Detach intermediate plate (3) from converter housing (2).

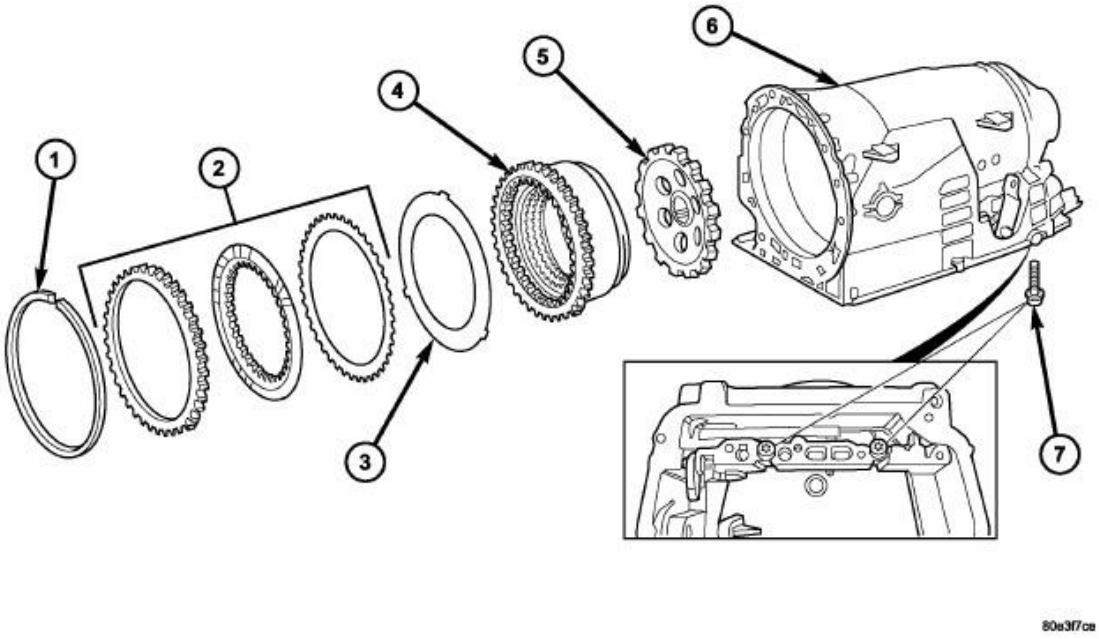

Fig. 58: Remove/Install B2, B3, & Parking Gear
Courtesy of CHRYSLER LLC

1 - SNAP-RING	5 - PARK GEAR
2 - HOLDING CLUTCH B3 DISCS	6 - TRANSMISSION HOUSING
3 - SPRING WASHER	7 - BOLTS - M8X60
4 - HOLDING CLUTCH B2	

31. Remove multiple-disc pack B3 (2) and spring washer (3) by removing snap-ring (1) in transmission housing. To facilitate removal of the snap-ring (1), compress the multiple-disc pack B3 (2). Note which clutch disc is removed just prior to the spring washer (3) for reassembly. If the clutch discs are re-used, this disc must be returned to its original position on top of the spring washer.
32. Unscrew Torx® socket bolts (7).
33. Remove multiple-disc holding clutch B2 (4) from transmission housing. The externally toothed disc carrier for multiple-disc holding clutch B2 is also the piston for multiple-disc holding clutch B3.
34. Remove parking lock gear (5).

CLEANING

CLEANING

The use of crocus cloth is permissible where necessary, providing it is used carefully. When used on shafts, or valves, use extreme care to avoid rounding off sharp edges. Sharp edges are vital as they prevent foreign matter from getting between the valve and valve bore.

Do not reuse oil seals, gaskets, seal rings, or O-rings during overhaul. Replace these parts as a matter of course. Also do not reuse snap rings or E-clips that are bent or distorted. Replace these parts as well.

Lubricate transmission parts with Mopar® ATF +4, Automatic Transmission Fluid, during overhaul and assembly. Use petroleum jelly, Mopar® Door Ease, or Ru-Glyde to prelubricate seals, O-rings, and thrust washers. Petroleum jelly can also be used to hold parts in place during reassembly.

Clean the case in a solvent tank. Flush the case bores and fluid passages thoroughly with solvent. Dry the case and all fluid passages with compressed air. Be sure all solvent is removed from the case and that all fluid passages are clear.

NOTE: **Do not use shop towels or rags to dry the case (or any other transmission component) unless they are made from lint-free materials. Lint will stick to case surfaces and transmission components and circulate throughout the transmission after assembly. A sufficient quantity of lint can block fluid passages and interfere with valve body operation.**

INSPECTION

INSPECTION

Inspect the case for cracks, porous spots, worn bores, or damaged threads. Damaged threads can be repaired with Helicoil® thread inserts. However, the case will have to be replaced if it exhibits any type of damage or wear.

ASSEMBLY

ASSEMBLY

NOTE: **If the transmission is being reconditioned (clutch/seal replacement) or replaced, it is necessary to perform the TCM Adaptation Procedure using the scan tool. Refer to Electrical - Electronic Control Modules/Electronic Control Modules/MODULE, Transmission Control - Standard Procedure .**

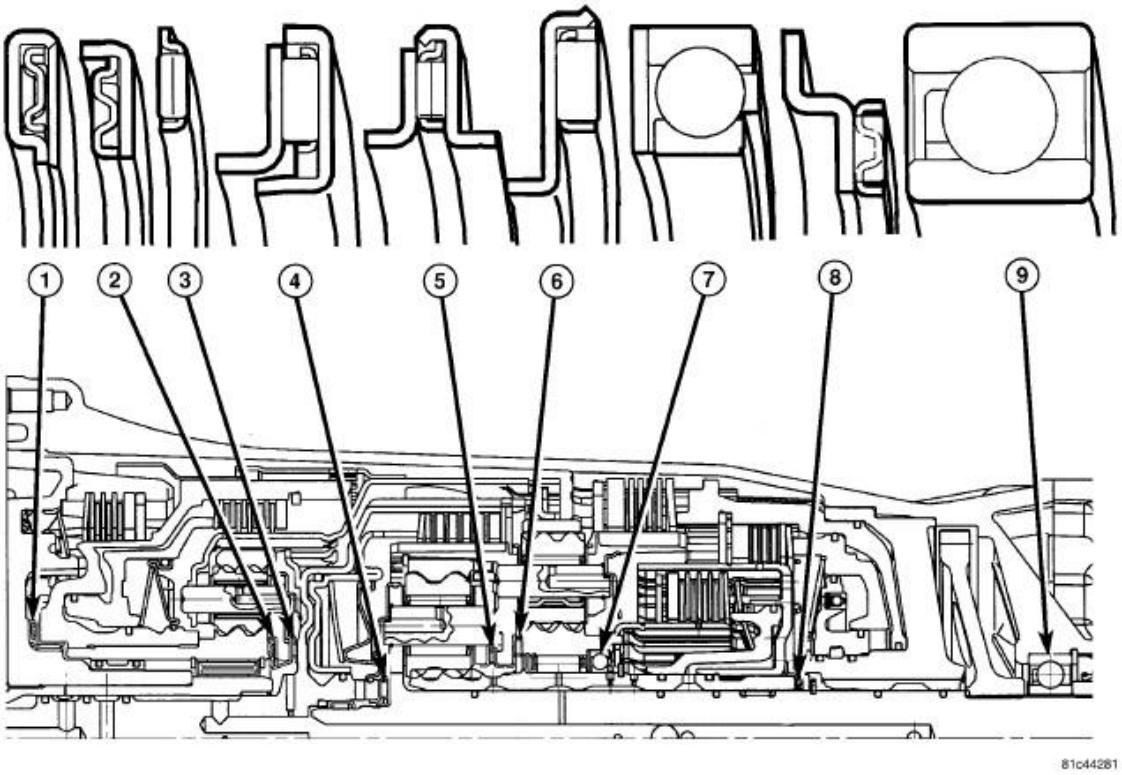

Fig. 59: NAG1 BEARING ORIENTATION
Courtesy of CHRYSLER LLC

1 - THRUST BEARING NO. 1	6 - THRUST BEARING NO. 6
2 - THRUST BEARING NO. 2	7 - ROLLER BEARING NO. 7
3 - THRUST BEARING NO. 3	8 - THRUST BEARING NO. 8

4 - THRUST BEARING NO. 4	9 - ROLLER BEARING NO. 9
5 - THRUST BEARING NO. 5	-

1. During assembly, install the thrust and roller bearings in the orientation shown in illustration.

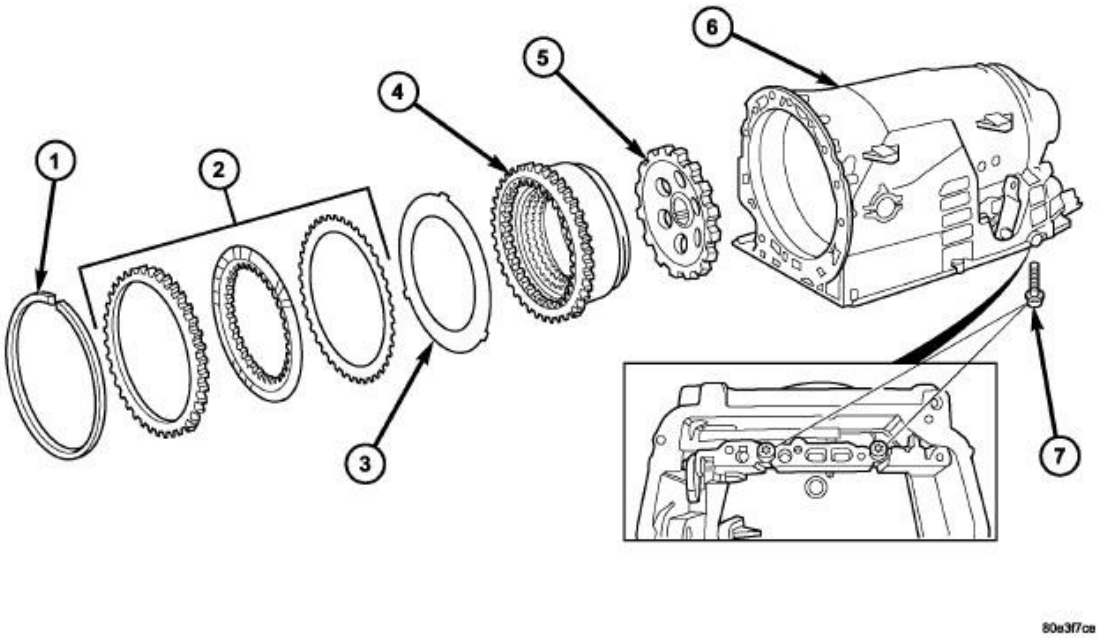

Fig. 60: Remove/Install B2, B3, & Parking Gear
Courtesy of CHRYSLER LLC

1 - SNAP-RING	5 - PARK GEAR
2 - HOLDING CLUTCH B3 DISCS	6 - TRANSMISSION HOUSING
3 - SPRING WASHER	7 - BOLTS - M8X60
4 - HOLDING CLUTCH B2	

2. Insert parking lock gear (5).
3. Install multiple-disc holding clutch B2 (4) in transmission housing (6).
4. Screw in both Torx® socket bolts (7). Tighten the bolts to 16 N.m (141 in.lbs.).

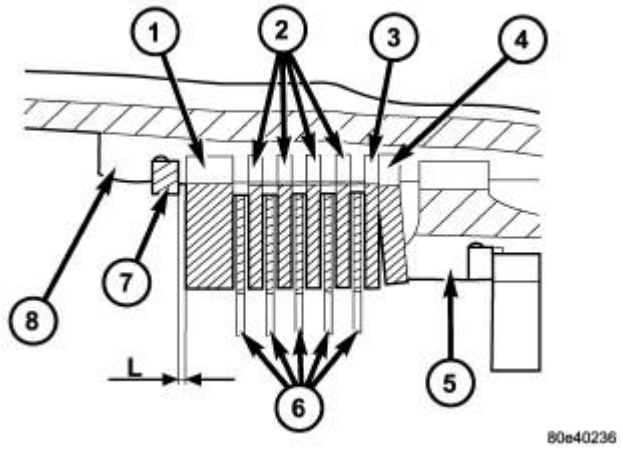

Fig. 61: Measure B3 Clutch Clearance
Courtesy of CHRYSLER LLC

1 - OUTER DISC - 6.5 MM (0.256 IN.)	5 - PISTON
2 - OUTER DISCS - 1.8 MM (0.071 IN.)	6 - FRICTION DISCS
3 - OUTER DISCS - 1.8 MM (0.071 IN.)	7 - SNAP-RING
4 - SPRING WASHER	8 - B3 DISC CARRIER

NOTE: During the measurement the snap ring (7) must contact the upper bearing surface of the groove in the outer multiple-disc carrier (8).

NOTE: Pay attention to sequence of discs. If the original clutch discs are reused, be sure to return the disc identified on disassembly as belonging on top of the spring washer (4) to its original location. Place new friction multiple-discs in ATF fluid for one hour before installing.

CAUTION: Apply only light pressure (less than 10 N (3 lbs.) of force) to the clutch pack when measuring the clutch clearance with the feeler gauge. Applying excessive force to the clutch will give an incorrect reading and lead to a transmission failure.

5. Insert and measure spring washer (4) and multiple-disc pack B3 (2, 6).
   a. Put multiple-discs for multiple-disc holding clutch B3 together in the sequence shown in the illustration and insert individually.
   b. Using a feeler gauge, determine the play "L" at three points between the snap ring (7) and outer multiple-disc (1). B3 clutch clearance should be 1.0-1.4 mm (0.039-0.055 in.). Adjust the clearance as necessary.
   c. Adjust with snap-ring (7), if necessary. Snap-rings are available in thicknesses of 3.2 mm

(0.126 in.), 3.5 mm (0.138 in.), 3.8 mm (0.150 in.), 4.1 mm (0.162 in.), 4.4 mm (0.173 in.), and 4.7 mm (0.185 in.).

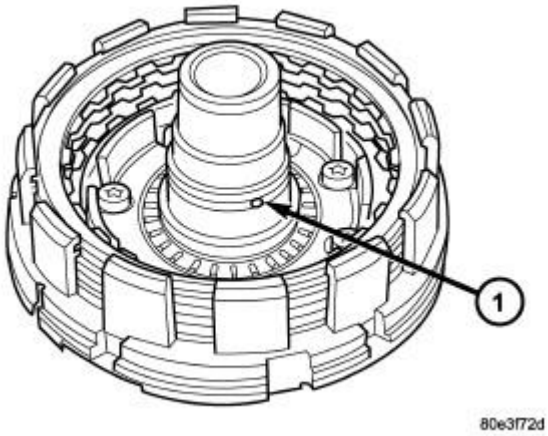

Fig. 62: Check K1 Feed Hole
Courtesy of CHRYSLER LLC

6. Check that the K1 clutch feed hole (1) in the inner hub of clutch B1 is free before installing clutch B1.

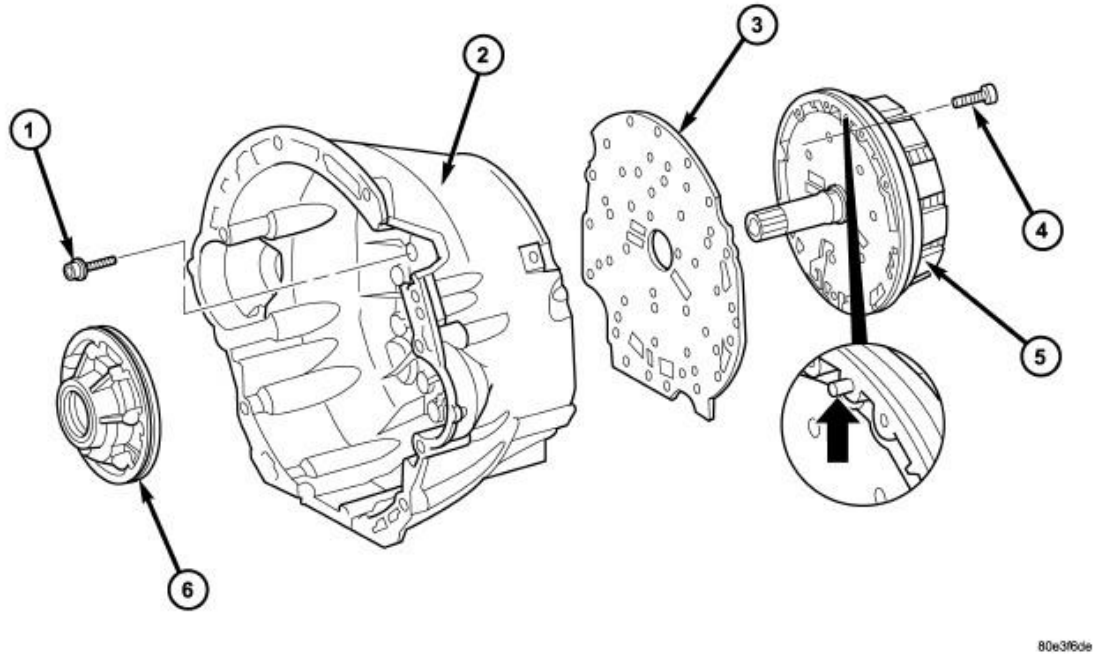

Fig. 63: Remove/Install Holding Clutch B1 and Oil Pump
Courtesy of CHRYSLER LLC

1 - BOLTS - M6X32	4 - BOLTS - M8X35

2 - CONVERTER HOUSING	5 - HOLDING CLUTCH B1
3 - INTERMEDIATE PLATE	6 - OIL PUMP

7. Place intermediate plate (3) on converter housing (2) and align.

NOTE: The intermediate plate can generally be used several times. The plate must not be coated with additional sealant

8. Install the holding clutch B1 (5) onto the converter housing and intermediate plate. Installed position of clutch B1 in relation to converter housing is specified by a plain dowel pin in clutch B1 (arrow in illustration).
9. Install the bolts to hold clutch B1 (5) to the converter housing.
10. Securely tighten multiple-disc holding clutch B1 (5) on converter housing (2) to 10 N.m (89 in.lbs.).

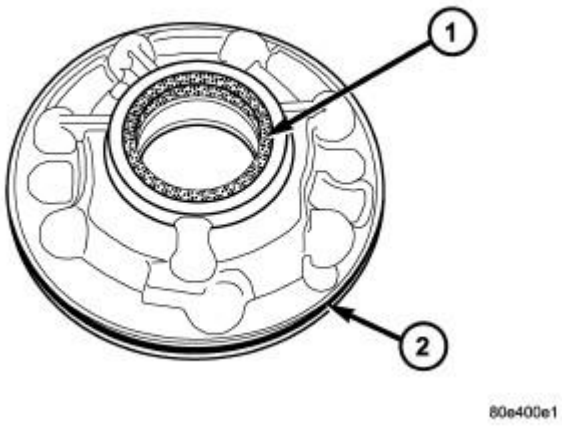

Fig. 64: Remove/Install Oil Pump Seals
Courtesy of CHRYSLER LLC

11. Install new inner oil seal (1) into the oil pump using Seal Installer 8902A.
12. Install new outer oil seal (2) onto the oil pump.

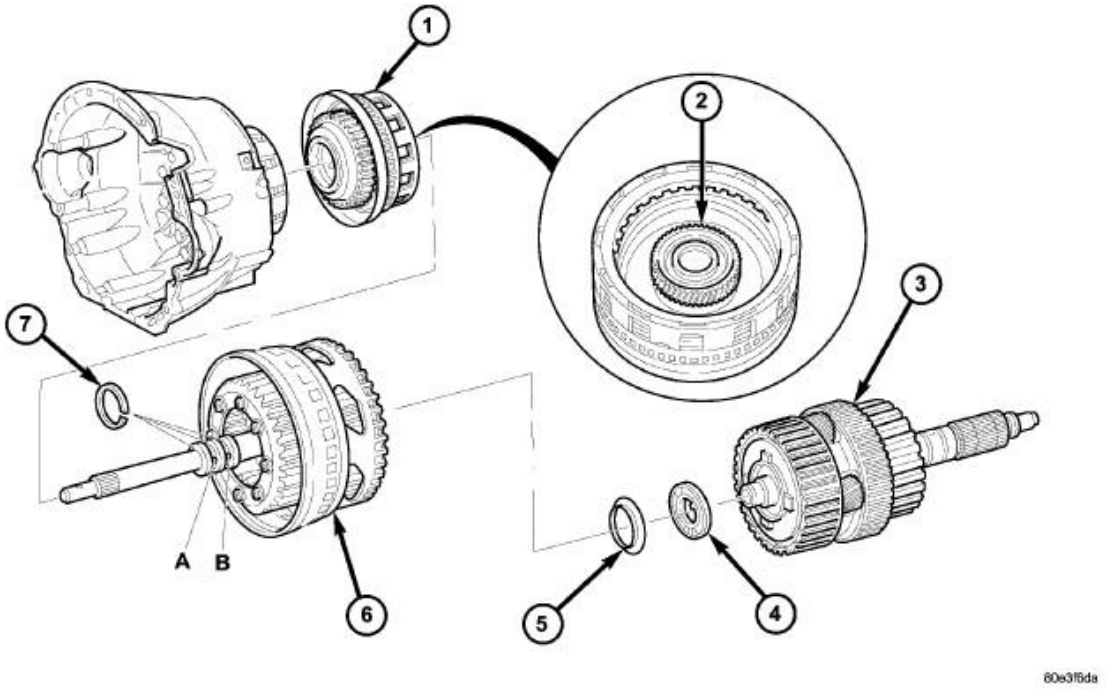

Fig. 65: Remove/Install K1, K2, and K3 Clutches
Courtesy of CHRYSLER LLC

1 - DRIVING CLUTCH K1	5 - THRUST WASHER
2 - SUN GEAR OF FRONT PLANETARY GEAR SET	6 - FRONT PLANETARY GEAR SET, DRIVING CLUTCH K2, AND INPUT SHAFT
3 - DRIVING CLUTCH K3, OUTPUT SHAFT , AND CENTER AND REAR PLANETARY GEAR SETS	7 - SEALING RINGS
4 - THRUST NEEDLE BEARING	

13. Install oil pump (6) and securely tighten. Tighten the oil pump bolts to 20 N.m (177 in.lbs.).
14. Using grease, insert sealing rings (7) in the groove so that the joint remains together.
15. Install the K1 (1) clutch onto the B1 clutch.
16. Install input shaft with clutch K2 (6) and front gear set (1).
17. Install front washer (5) and thrust needle bearing (4).

NOTE: Insure that the pinion gears are fully seated in the Rear Annulus (Hollow) Gear. If 50% of the pinion gear splines protrude, the Rear Annulus Gear was installed upside down in the K2 Clutch Retainer.

18. Install output shaft with center and rear gear set and clutch K3 (3).

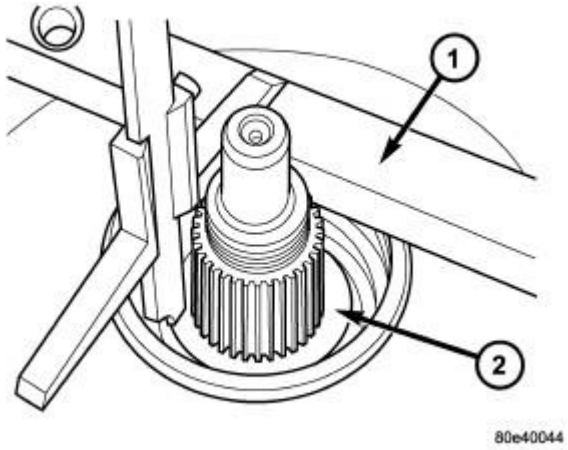

Fig. 66: Measuring From Transmission Housing -To- Park Gear
Courtesy of CHRYSLER LLC

19. Using grease, install both Teflon rings in the groove at the rear of the output shaft so that the joint stays together.
20. Mount transmission housing on converter housing.
21. Screw in Torx® socket bolts through the transmission housing into the converter housing. Tighten the bolts to 20 N.m (177 in.lbs.).

NOTE: Verify that there are no nicks or other irregularities in the surface of the transmission case that will cause an inaccurate measurement.

22. Measure end-play between park pawl gear and grooved ball bearing in order to select the proper geartrain end-play shim.
23. Place Gauge Bar 6311 (1) on transmission housing. Using a depth gauge, measure from the gauge bar to the parking lock gear (2).

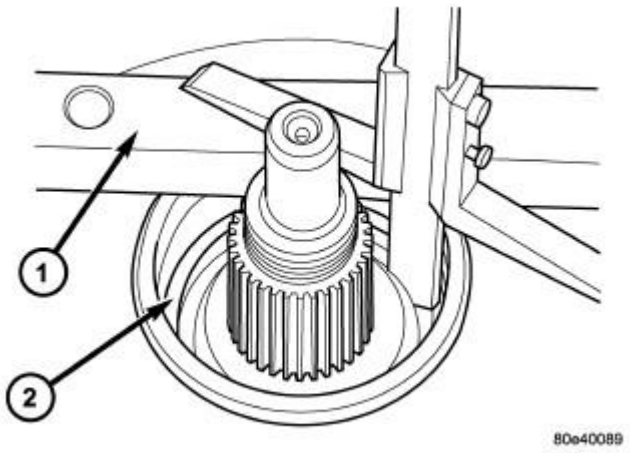

Fig. 67: Measuring From Transmission Housing -To- Rear Bearing Contact Surface

Courtesy of CHRYSLER LLC

24. Using a depth gauge, measure from Gauge Bar 6311 (1) to the contact surface of the output shaft bearing (2) in the transmission housing.
25. Subtract the first figure from the second figure to determine the current end-play of the transmission. Select a shim or a combination of two shims such that the end-play will be 0.3-0.5 mm (0.012-0.020 in.). Shims are available in thicknesses of 0.2 mm (0.008 in.), 0.3 mm (0.012 in.), 0.4 mm (0.016 in.), and 0.5 mm (0.020 in.).
26. Install the selected end-play shim.

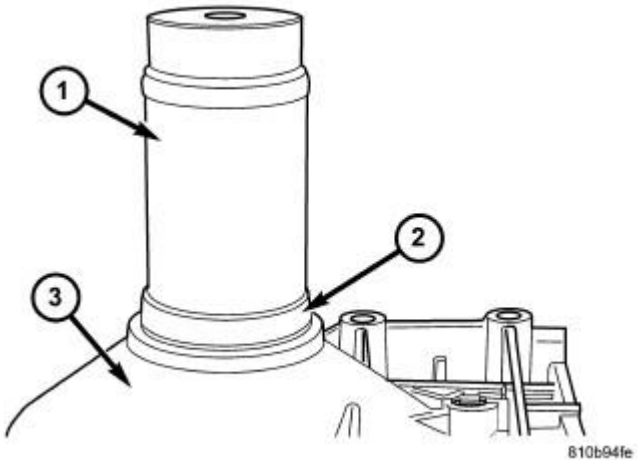

Fig. 68: Install Output Shaft Bearing
Courtesy of CHRYSLER LLC

27. Screw in Torx® socket bolts through the converter housing into the transmission housing. Tighten the bolts to 20 N.m (177 in.lbs.).

NOTE: The closed side of the plastic cage must point towards the parking lock gear.

28. Install output shaft bearing (2) in rear transmission case (3) using Bearing Installer 9287 (1)

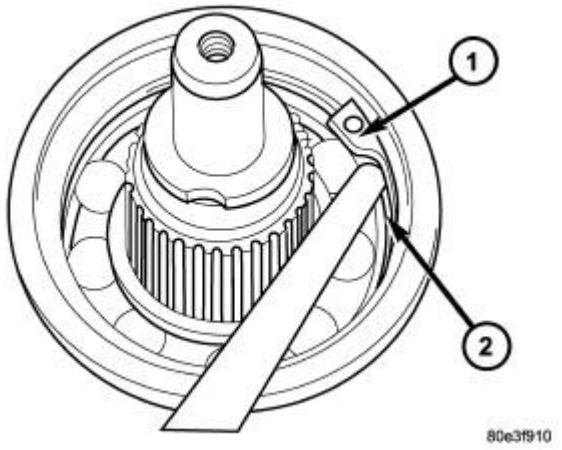

Fig. 69: Remove/Install Rear Output Shaft Retaining Ring
Courtesy of CHRYSLER LLC

29. Install the retaining ring (1) that secure the output shaft bearing (2). Ensure that the retaining ring is seated correctly in the groove.
30. Check that there is no play between the bearing and the retaining ring using feeler gauge.
31. There must be no play between the retaining ring and the bearing. If the ring cannot be installed, a thinner ring must be used. If there is play between the ring and the bearing, a thicker ring must be installed. Retaining rings are available in thicknesses of 2.0 mm (0.079 in.), 2.1 mm (0.083 in.), and 2.2 mm (0.087 in.).

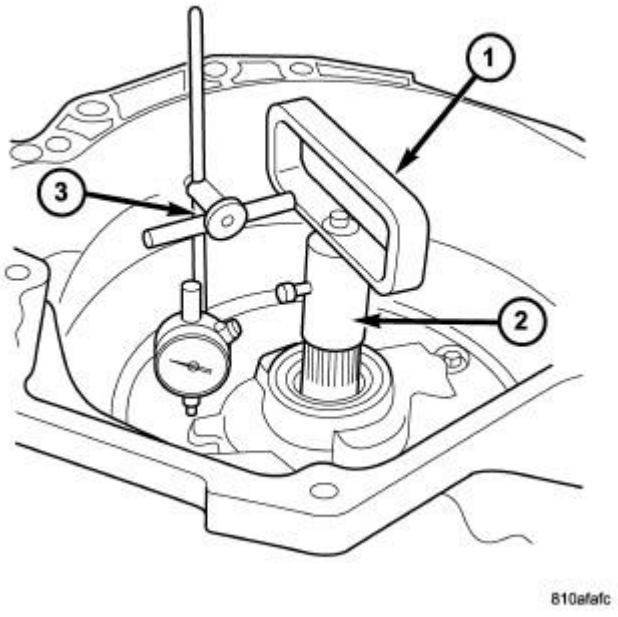

Fig. 70: Checking Input Shaft End Play
Courtesy of CHRYSLER LLC

32. Rotate the transmission so that the bellhousing is pointed upward and be sure that the output shaft is allowed to move freely.
33. Measure input shaft end-play.

NOTE: If end-play is incorrect, transmission is incorrectly assembled, or the geartrain end-play shim is incorrect. The geartrain end-play shim is selective.

NOTE: If necessary, a combination of shims can be used to achieve the required end-play.

a. Attach Adapter 8266-18 (2) to Handle 8266-8 (1).
b. Attach dial indicator C-3339A (3).
c. Install the assembled tools onto the input shaft of the transmission. Tighten the retaining screw on Adapter 8266-18 to secure it to the input shaft.
d. Position the dial indicator plunger against a flat spot on the oil pump and zero the dial indicator.
e. Move input shaft in and out and record reading. End play should be 0.3-0.5 mm (0.012-0.020 in.). Adjust as necessary.

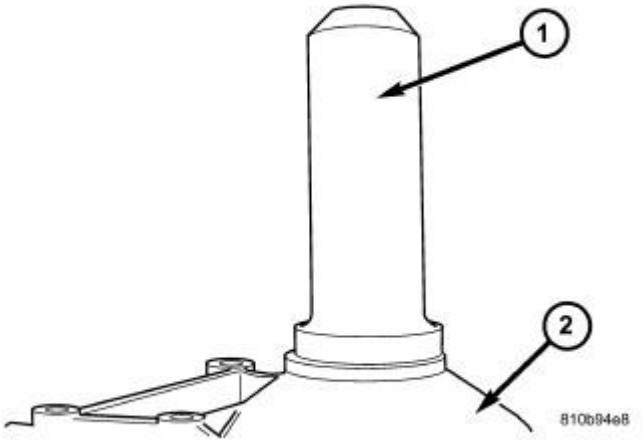

Fig. 71: Install Output Shaft Seal
Courtesy of CHRYSLER LLC

NOTE: The output shaft shim should be 0.3 mm (0.012 in.). If a 0.3 mm (0.012 in.) shim is not available, use a 0.2 mm (0.008 in.) 0.4 mm (0.016 in.) or 0.5 mm (.020 in.) shim.

34. Install the output shaft shim onto the output shaft.
35. Install a new transmission rear seal into the transmission case (2) with Seal Installer 8902A (1).

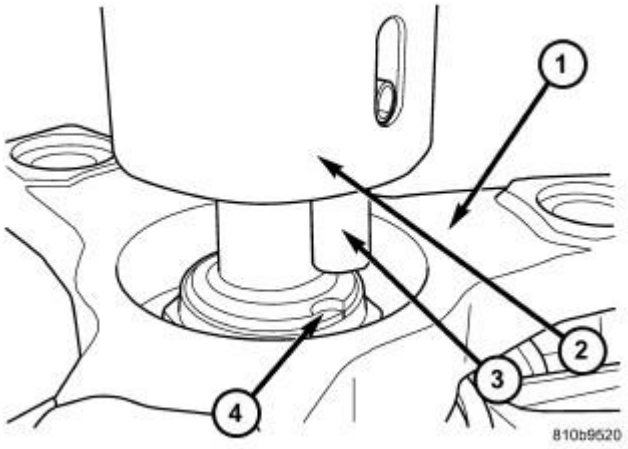

Fig. 72: Align Staking Tool 9078
Courtesy of CHRYSLER LLC

36. Place the transmission in PARK.
37. Inspect the seal protector on the rear of the output shaft flange. Replace the seal protector if damaged. the seal protector can be removed using a suitable pry tool and installed with a suitable tube style tool.
38. Install the propeller shaft flange (1) onto the output shaft and install an new flange nut. Tighten the flange nut using a 30 mm 12 point socket to 200 N.m (147.5 ft.lbs.).
39. Place the Staking Tool 9078 (2) and Driver Handle C-4171 onto the output shaft.
40. Rotate Staking Tool 9078 until the alignment pin (3) engages the output shaft notch (4).

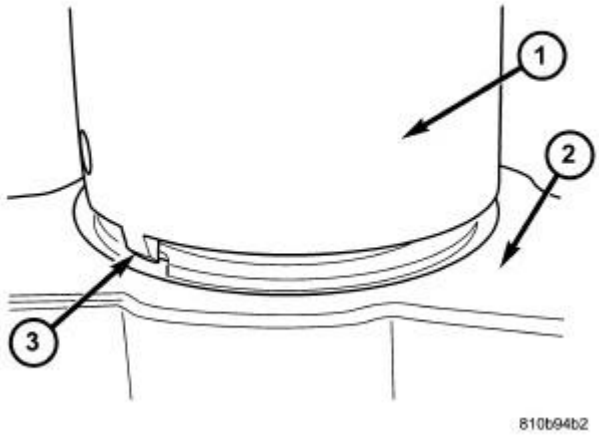

Fig. 73: Stake Output Shaft Nut
Courtesy of CHRYSLER LLC

41. Press downward on Staking Tool 9078 (1) until the staking pin (3) contacts the output shaft nut flange (2).
42. Strike the Driver handle C-4171 with a suitable hammer until the output shaft nut is securely

staked to the output shaft.

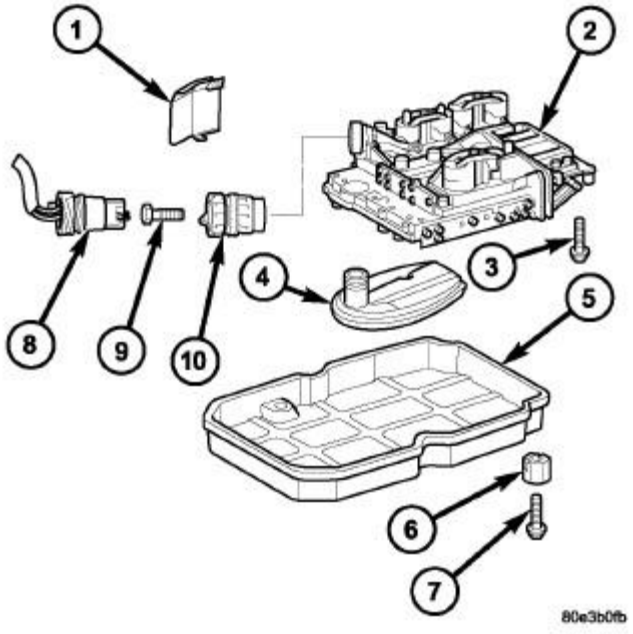

Fig. 74: Remove/Install Electrohydraulic Unit
Courtesy of CHRYSLER LLC

43. Install electrohydraulic unit (2). Tighten the bolts (3) to 8 N.m (71 in.lbs.).
44. Install oil filter (4).
45. Install oil pan (5). Tighten the bolts (7) to 8 N.m (71 in.lbs.).
46. Install the adapter plug (10). Tighten the bolt (9) to 2.5 N.m (22 in. lbs.).

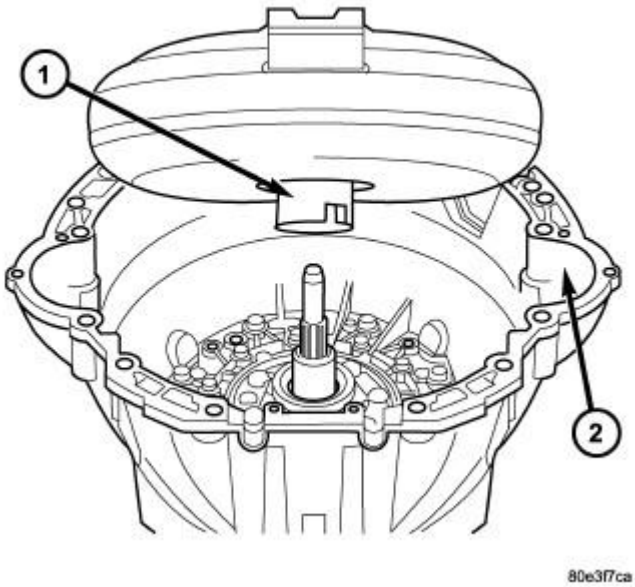

Fig. 75: Remove/Install Torque Converter
Courtesy of CHRYSLER LLC

47. Position the torque converter (1) to the converter housing (2). Align torque converter to the transmission input shaft and oil pump drive and carefully install the converter.

INSTALLATION

3.5L INSTALLATION

NOTE: Check torque converter hub and hub drive flats for sharp edges burrs, scratches, or nicks. Polish the hub and flats with 800/1000 grit paper and crocus cloth if necessary. The hub must be smooth to avoid damaging pump seal at installation.

NOTE: If a replacement transmission is being installed, transfer any components necessary, such as the manual shift lever and shift cable bracket, from the original transmission onto the replacement transmission.

1. Lubricate oil pump seal lip with transmission fluid.

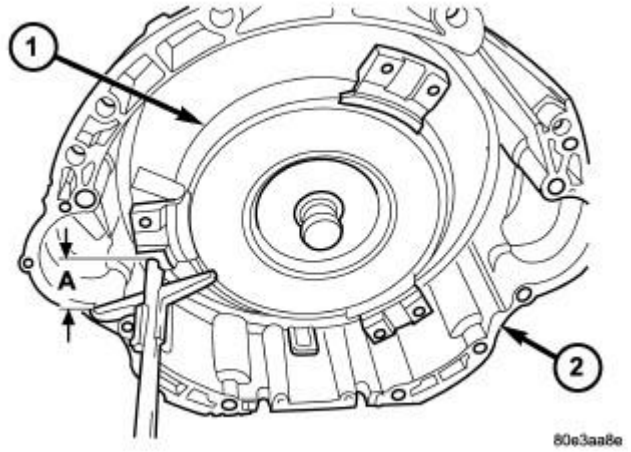

Fig. 76: Torque Converter Installation Depth
Courtesy of CHRYSLER LLC

1 - TORQUE CONVERTER 2 - TRANSMISSION HOUSING

2. Place torque converter (1) in position in transmission (2).

CAUTION: Do not damage oil pump seal or converter hub while inserting torque converter into the front of the transmission.

3. Align torque converter to oil pump seal opening.
4. Insert torque converter hub into oil pump.
5. While pushing torque converter inward, rotate converter until converter is fully seated in the oil pump gears.
6. Check converter seating with a scale and straightedge (A). Surface of converter lugs should be at least 19 mm (3/4 in.) to rear of straightedge when converter is fully seated.
7. If necessary, temporarily secure converter with C-clamp attached to the converter housing.
8. Check condition of converter driveplate. Replace the plate if cracked, distorted or damaged. **Also be sure transmission dowel pins are seated in engine block and protrude far enough to hold transmission in alignment.**
9. Apply a light coating of Mopar® High Temp Grease to the torque converter hub pocket in the rear pocket of the engine's crankshaft.

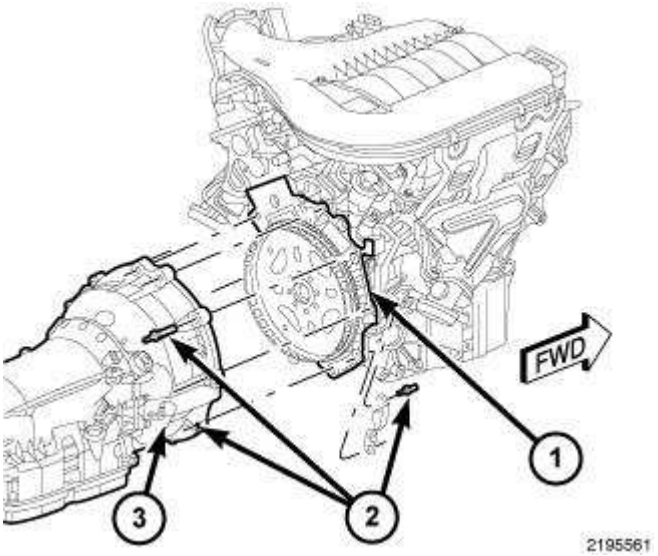

Fig. 77: Identifying Transmission, Engine & Fasteners
Courtesy of CHRYSLER LLC

10. Raise transmission (3) and align the torque converter with the drive plate and the transmission converter housing with the engine block (1).
11. Move transmission forward. Then raise, lower, or tilt transmission to align the converter housing with the engine block dowels.
12. While installing the fill tube into the transmission case, carefully work transmission forward and over engine block dowels until converter hub is seated in crankshaft. Verify that no wires, or the transmission vent hose, have become trapped between the engine block and the transmission.
13. Install two torque converter housing bolts (2) to attach the transmission to the engine.
14. Install the remaining torque converter housing to engine bolts (2). Tighten to 39 N.m (29 ft.lbs.).
15. Install the fill tube bolt at the transmission case. Tighten the bolt to 12 N.m (105 lbs in.).

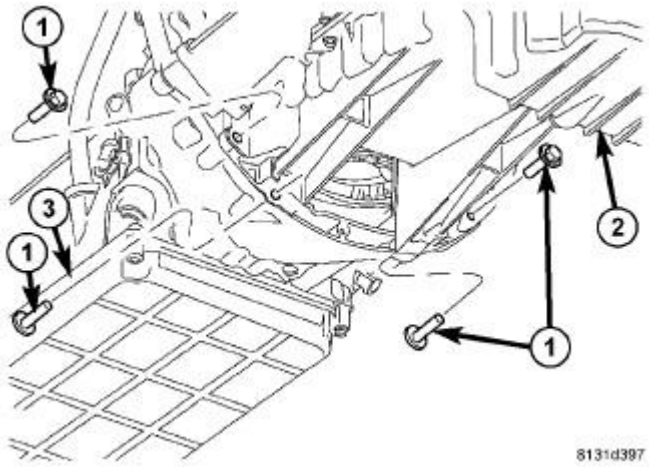

Fig. 78: Removing/Installing Transmission To Oil Pan Bolts
Courtesy of CHRYSLER LLC

1 - BOLTS 2 - ENGINE OIL PAN 3 - TRANSMISSION

16. Install the transmission (3) to engine oil pan (2) bolts (1). Tighten to 39 N.m (29 ft.lbs.).

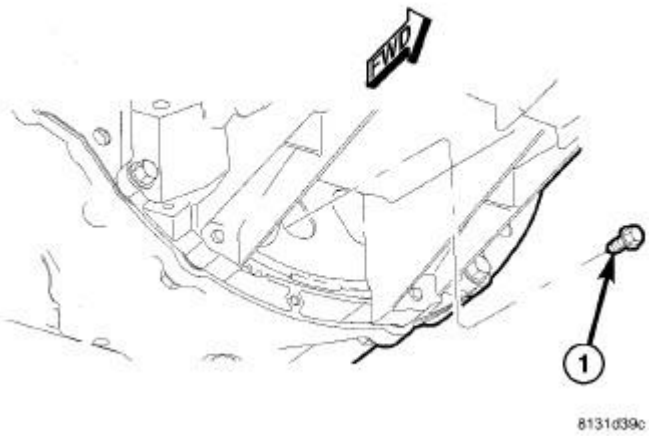

Fig. 79: Removing/Installing Torque Converter Bolts
Courtesy of CHRYSLER LLC

1 - TORQUE CONVERTER BOLTS

CAUTION: It is essential that correct length bolts be used to attach the converter to the driveplate. Bolts that are too long will damage the clutch surface inside the converter.

17. Install all torque converter-to-driveplate bolts (1) by hand.
18. Verify that the torque converter is pulled flush to the driveplate. Tighten bolts to 42 N.m (31 ft. lbs.).

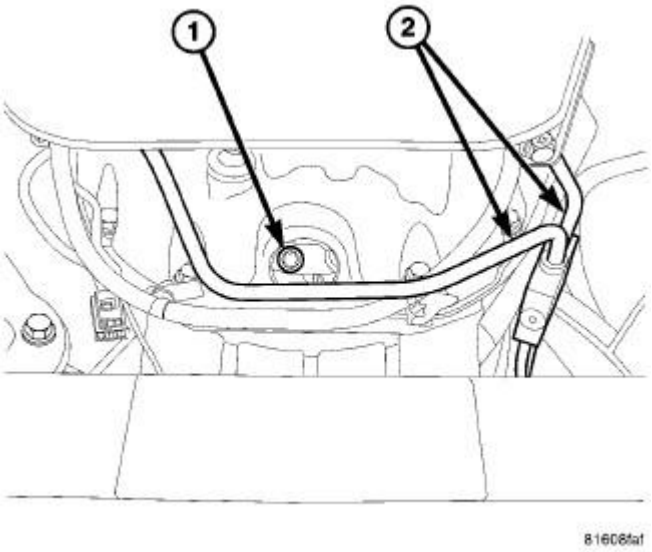

Fig. 80: TORQUE CONVERTER TO FLEX PLATE BOLTS
Courtesy of CHRYSLER LLC

1 - TORQUE CONVERTER BOLTS 2 - TRANSMISSION COOLER LINES

19. Install the torque converter bolt access cover (1) onto the transmission. Install the access cover bolt (2) and tighten to 11 N.m (8 ft.lbs.).

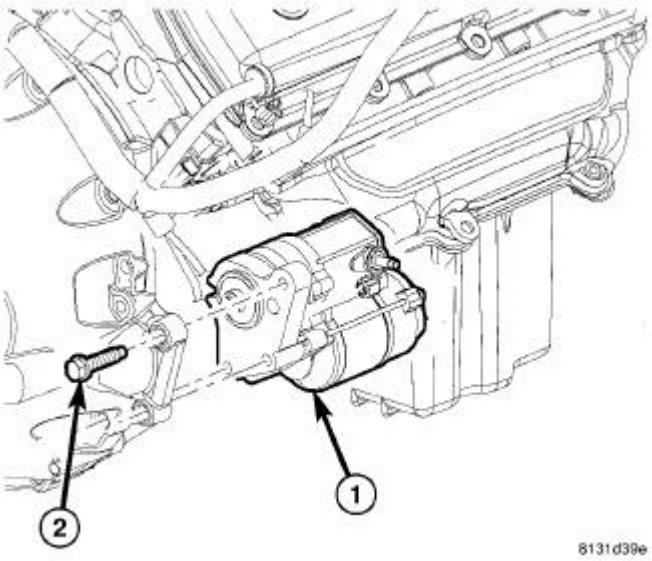

Fig. 81: Starter & Fasteners
Courtesy of CHRYSLER LLC

1 - STARTER

2 -BOLTS

20. Install starter motor (1). Refer to **Electrical - Engine Systems/Starting/STARTER - Installation** .

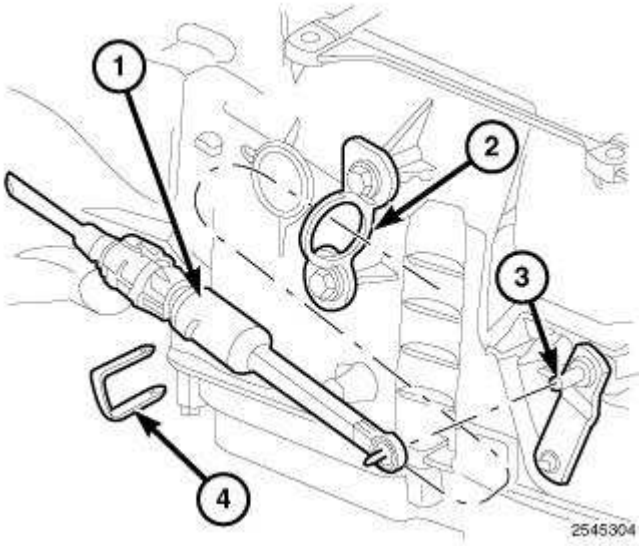

Fig. 82: Identifying Gearshift Cable, Eyelet & Manual Shift Lever
Courtesy of CHRYSLER LLC

21. Route the gearshift cable (1) through the mounting bracket (2).
22. Engage the gearshift cable (1) eyelet onto the transmission manual shift lever (3).
23. Install the gearshift cable retaining clip (4) (if equipped).

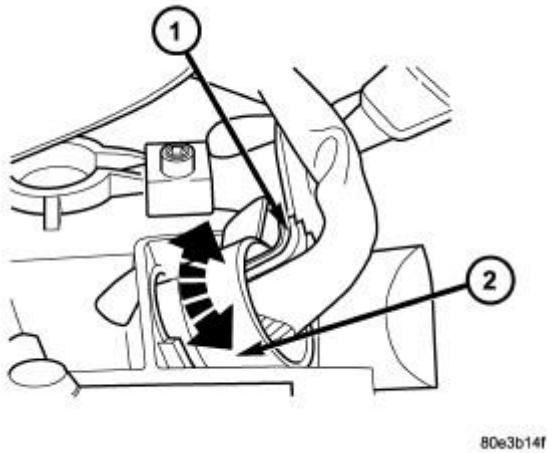

Fig. 83: Remove/Install Wiring Connector Plug
Courtesy of CHRYSLER LLC

1 - PLUG CONNECTOR

2 - ADAPTER PLUG

24. Check O-rings on plug connector (1), and replace if necessary.
25. Install the plug connector (1) into the adapter plug (2). Turn bayonet lock of the adapter plug (2) clockwise to connect plug connector (1).

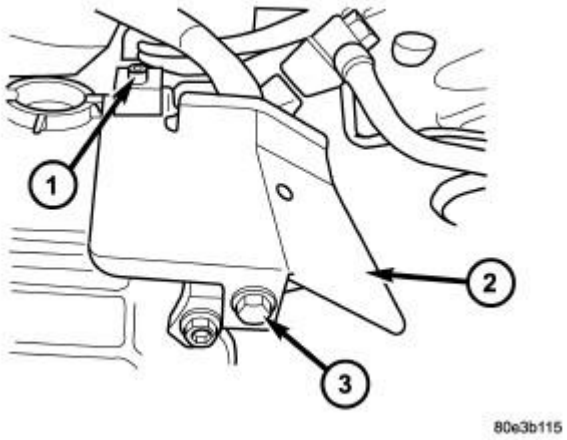

Fig. 84: Install Heat Shield
Courtesy of CHRYSLER LLC

1 - SCREW 2 - HEAT SHIELD 3 - BOLT

26. Position the heat shield (2), if equipped, onto the transmission housing and install the screw (1) and bolt (3) to hold the shield in place.

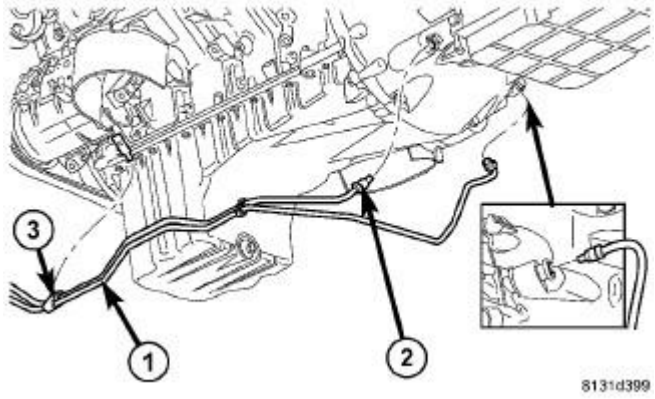

Fig. 85: Transmission Lines
Courtesy of CHRYSLER LLC

1 - TRANSMISSION OIL COOLER LINES 2 - COOLER LINE FITTINGS 3 - SUPPORT CLAMPS

27. Connect the cooler line fittings (2) and cooler lines (1) to the transmission.

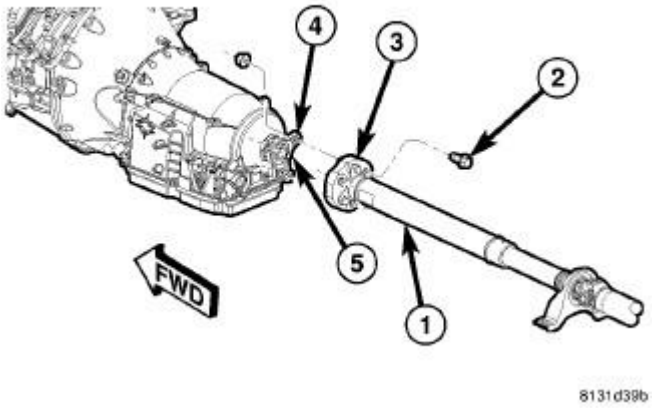

Fig. 86: Removing/Installing Propeller Shaft
Courtesy of CHRYSLER LLC

1 - PROPELLER SHAFT 2 - BOLTS 3 - PROPELLER SHAFT COUPLER 4 - COMPANION FLANGE 5 - PROPELLER SHAFT PILOT

28. Align and connect the propeller shaft (1). Refer to **Differential and Driveline/Propeller Shaft - Installation** .

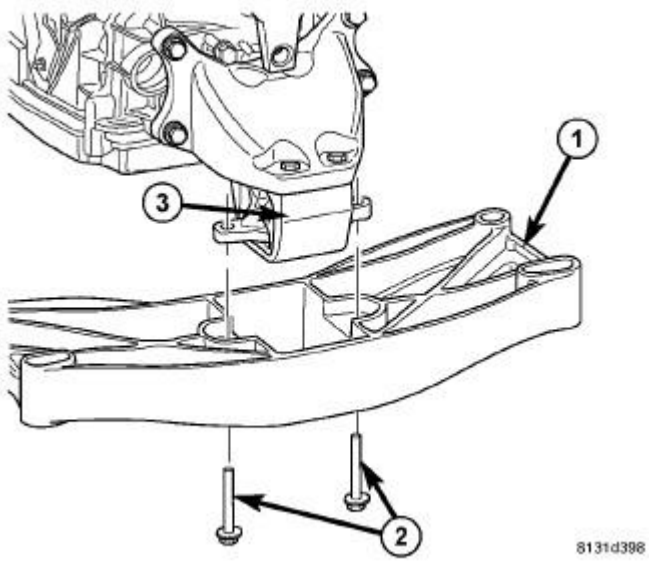

Fig. 87: Removing/Installing Trans Mount Bolts
Courtesy of CHRYSLER LLC

29. Install rear support (3) to transmission. Tighten bolts to 47 N.m (35 ft.lbs.)
30. Install rear transmission crossmember (1). Tighten crossmember to frame bolts to 68 N.m (50 ft.lbs.).
31. Lower transmission onto crossmember and install bolts attaching transmission mount to crossmember. Tighten clevis bracket to crossmember bolts (2) to 47 N.m (35 ft.lbs.).
32. Install exhaust components.
33. Install any necessary splash shields.
34. Adjust gearshift cable if necessary.
35. Lower vehicle.
36. Connect negative battery cable.
37. Fill the transmission with the appropriate transmission fluid. Refer to **Vehicle Quick Reference/Capacities and Recommended Fluids - Specifications** according to the standard procedure. See **Transmission and Transfer Case/Automatic - NAG1/FLUID and FILTER - Standard Procedure**.

NOTE: If the transmission is being reconditioned (clutch/seal replacement) or replaced, it is necessary to perform the TCM Adaptation Procedure using the scan tool. Refer to Electrical - Electronic Control Modules/Electronic Control Modules/MODULE, Transmission Control - Standard Procedure .

38. Verify proper operation.

INSTALLATION

NOTE: Check torque converter hub and hub drive flats for sharp edges burrs,

scratches, or nicks. Polish the hub and flats with 800/1000 grit paper and crocus cloth if necessary. The hub must be smooth to avoid damaging pump seal at installation.

NOTE: If a replacement transmission is being installed, transfer any components necessary, such as the manual shift lever and shift cable bracket, from the original transmission onto the replacement transmission.

1. Lubricate oil pump seal lip with transmission fluid.

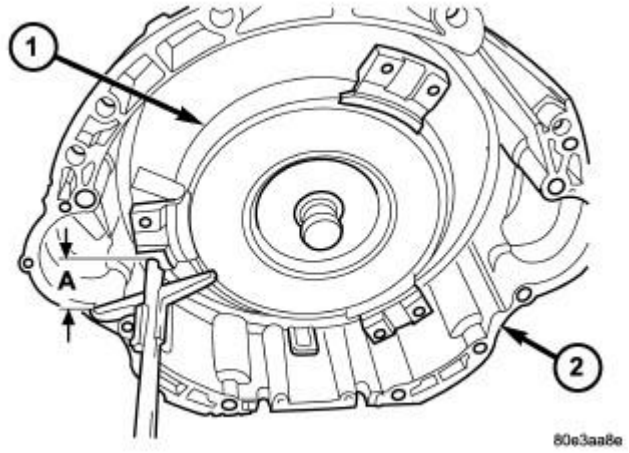

Fig. 88: Torque Converter Installation Depth
Courtesy of CHRYSLER LLC

1 - TORQUE CONVERTER
2 - TRANSMISSION HOUSING

2. Place torque converter (1) in position in transmission (2).

CAUTION: Do not damage oil pump seal or converter hub while inserting torque converter into the front of the transmission.

3. Align torque converter to oil pump seal opening.
4. Insert torque converter hub into oil pump.
5. While pushing torque converter inward, rotate converter until converter is fully seated in the oil pump gears.
6. Check converter seating with a scale and straightedge (A). Surface of converter lugs should be at least 19 mm (3/4 in.) to rear of straightedge when converter is fully seated.
7. If necessary, temporarily secure converter with C-clamp attached to the converter housing.

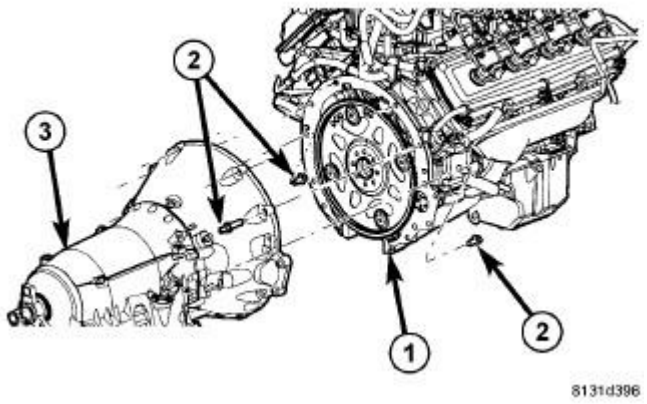

Fig. 89: Identifying Transmission, Engine & Fasteners
Courtesy of CHRYSLER LLC

1 - ENGINE
2 - BOLTS
3 - TRANSMISSION

8. Check condition of converter driveplate. Replace the plate if cracked, distorted or damaged. **Also be sure transmission dowel pins are seated in engine block and protrude far enough to hold transmission in alignment.**
9. Apply a light coating of Mopar® High Temp Grease to the torque converter hub pocket in the rear pocket of the engine's crankshaft.
10. Raise transmission (3) and align the torque converter with the drive plate and the transmission converter housing with the engine block (1).
11. Move transmission forward. Then raise, lower, or tilt transmission to align the converter housing with the engine block dowels.
12. While installing the fill tube into the transmission case, carefully work transmission forward and over engine block dowels until converter hub is seated in crankshaft. Verify that no wires, or the transmission vent hose, have become trapped between the engine block and the transmission.
13. Install two torque converter housing bolts (2) to attach the transmission to the engine.
14. Install the remaining torque converter housing to engine bolts (2). Tighten to 39 N.m (29 ft.lbs.).
15. Install the fill tube bolt at the transmission case. Tighten the bolt to 12 N.m (105 lbs in.).

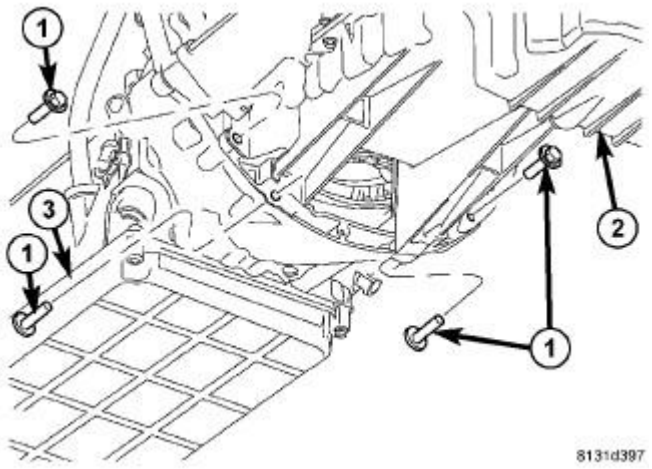

Fig. 90: Removing/Installing Transmission To Oil Pan Bolts
Courtesy of CHRYSLER LLC

1 - BOLTS 2 - ENGINE OIL PAN 3 - TRANSMISSION

16. Install the transmission (3) to engine oil pan (2) bolts (1). Tighten to 39 N.m (29 ft.lbs.).

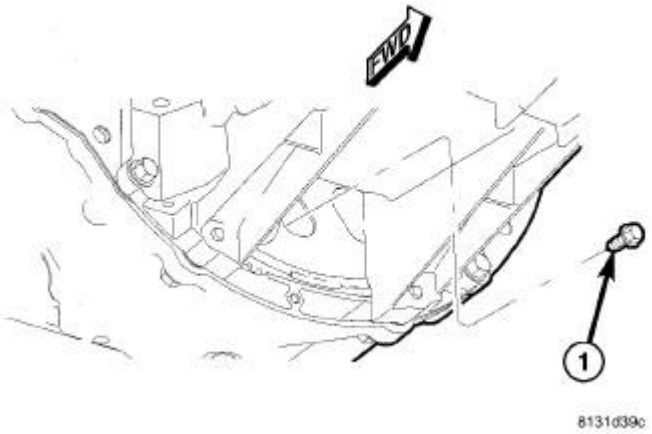

Fig. 91: Removing/Installing Torque Converter Bolts
Courtesy of CHRYSLER LLC

1 - TORQUE CONVERTER BOLTS

CAUTION: It is essential that correct length bolts be used to attach the converter to the driveplate. Bolts that are too long will damage the clutch surface inside the converter.

17. Install all torque converter-to-driveplate bolts (1) by hand.
18. Verify that the torque converter is pulled flush to the driveplate. Tighten bolts to 42 N.m (31 ft. lbs.).

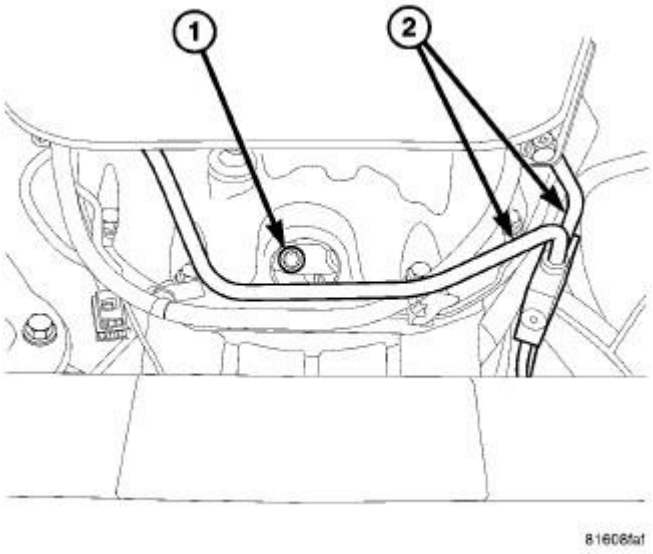

Fig. 92: TORQUE CONVERTER TO FLEX PLATE BOLTS
Courtesy of CHRYSLER LLC

1 - TORQUE CONVERTER BOLTS
2 - TRANSMISSION COOLER LINES

19. Install the torque converter bolt access cover (1) onto the transmission. Install the access cover bolt (2) and tighten to 11 N.m (8 ft.lbs.).

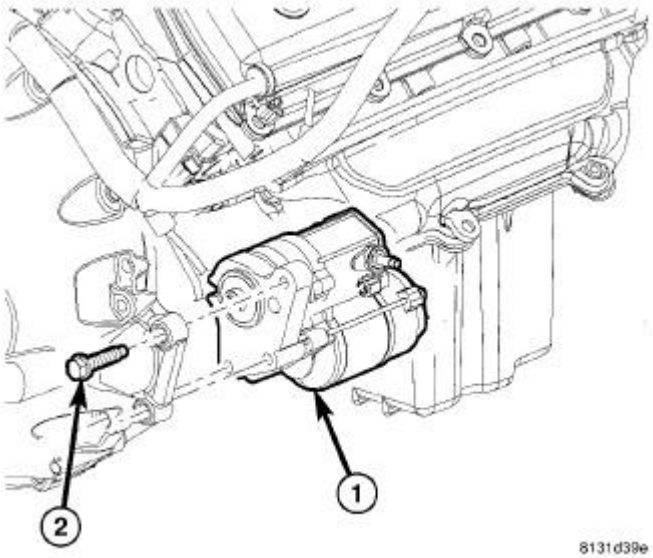

Fig. 93: Starter & Fasteners
Courtesy of CHRYSLER LLC

1 - STARTER 2 -BOLTS

20. Install starter motor (1). Refer to **Electrical - Engine Systems/Starting/STARTER - Installation** .

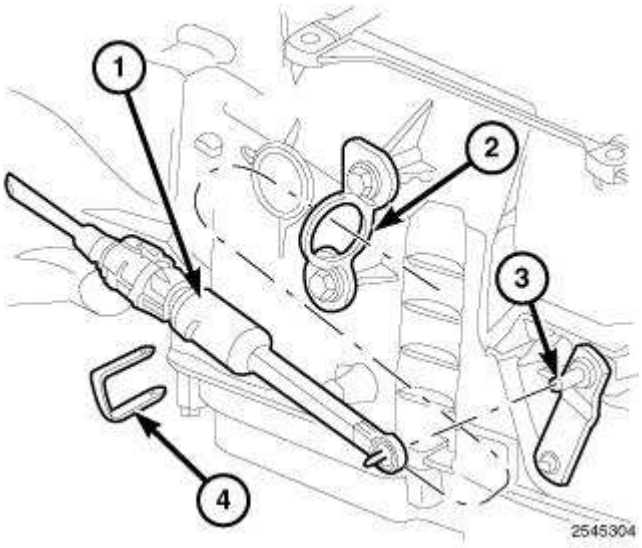

Fig. 94: Identifying Gearshift Cable, Eyelet & Manual Shift Lever
Courtesy of CHRYSLER LLC

21. Route the gearshift cable (1) through the mounting bracket (2).
22. Engage the gearshift cable (1) eyelet onto the transmission manual shift lever (3).
23. Install the gearshift cable retaining clip (4) (if equipped).

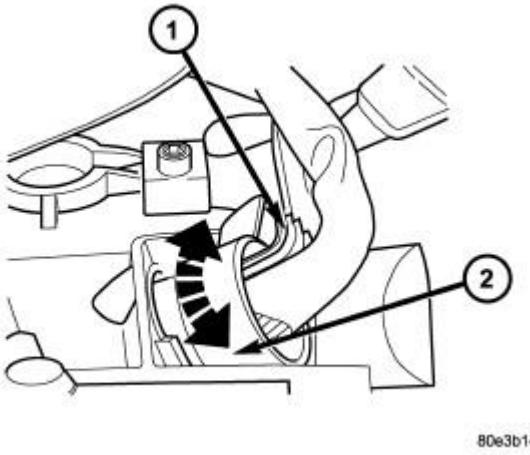

Fig. 95: Remove/Install Wiring Connector Plug

Courtesy of CHRYSLER LLC

1 - PLUG CONNECTOR 2 - ADAPTER PLUG

24. Check O-rings on plug connector (1), and replace if necessary.
25. Install the plug connector (1) into the adapter plug (2). Turn bayonet lock of the adapter plug (2) clockwise to connect plug connector (1).

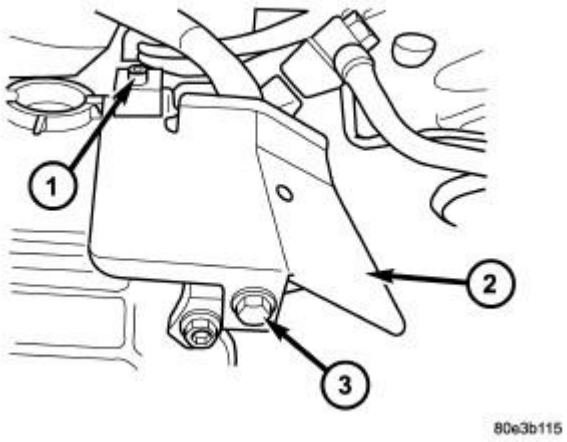

Fig. 96: Install Heat Shield
Courtesy of CHRYSLER LLC

1 - SCREW 2 - HEAT SHIELD 3 - BOLT

26. Position the heat shield (2), if equipped, onto the transmission housing and install the screw (1) and bolt (3) to hold the shield in place.

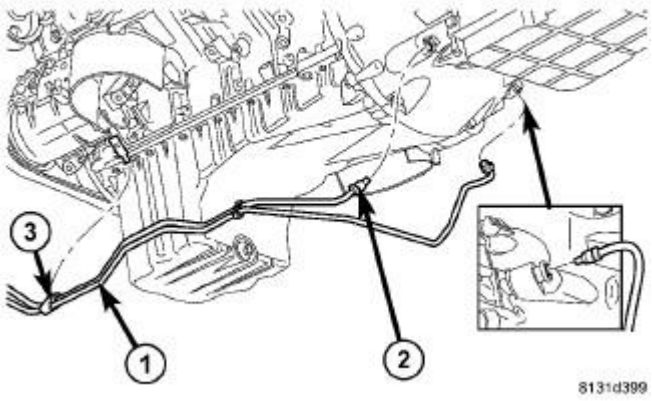

Fig. 97: Transmission Lines
Courtesy of CHRYSLER LLC

1 - TRANSMISSION OIL COOLER LINES
2 - COOLER LINE FITTINGS
3 - SUPPORT CLAMPS

27. Connect the cooler line fittings (2) and cooler lines (1) to the transmission.

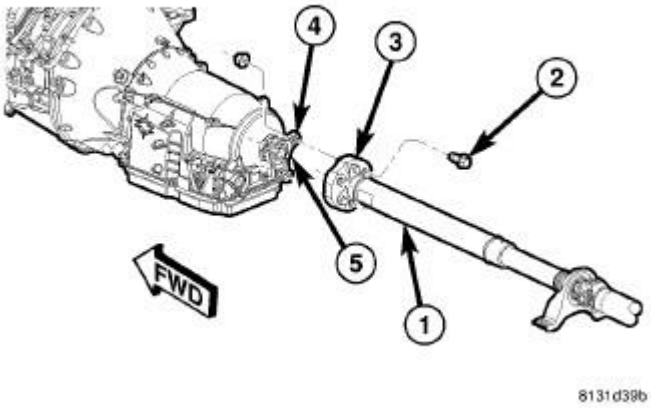

Fig. 98: Removing/Installing Propeller Shaft
Courtesy of CHRYSLER LLC

1 - PROPELLER SHAFT
2 - BOLTS
3 - PROPELLER SHAFT COUPLER
4 - COMPANION FLANGE
5 - PROPELLER SHAFT PILOT

28. Align and connect the propeller shaft (1). Refer to **Differential and Driveline/Propeller Shaft - Installation** .

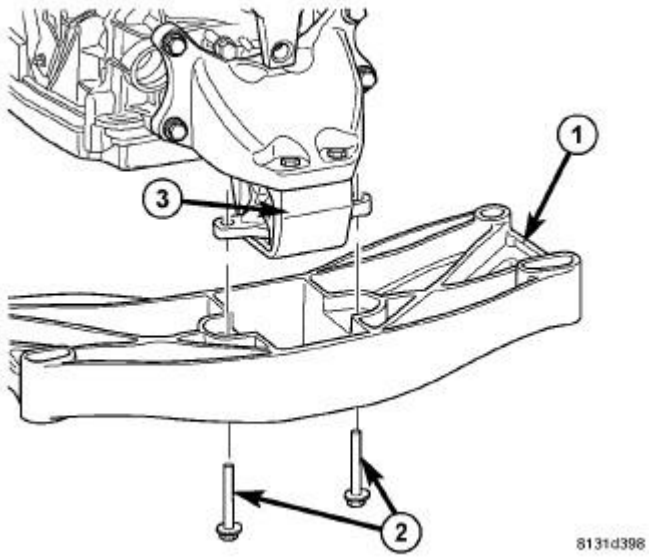

Fig. 99: Removing/Installing Trans Mount Bolts
Courtesy of CHRYSLER LLC

29. Install rear support (3) to transmission. Tighten bolts to 47 N.m (35 ft.lbs.)
30. Install rear transmission crossmember (1). Tighten crossmember to frame bolts to 68 N.m (50 ft.lbs.).
31. Lower transmission onto crossmember and install bolts attaching transmission mount to crossmember. Tighten clevis bracket to crossmember bolts (2) to 47 N.m (35 ft.lbs.).
32. Install exhaust components.
33. Install any necessary splash shields.
34. Adjust gearshift cable if necessary.
35. Lower vehicle.
36. Connect negative battery cable.
37. Fill the transmission with the appropriate transmission fluid. Refer to **Vehicle Quick Reference/Capacities and Recommended Fluids - Specifications** according to the standard procedure. See **Transmission and Transfer Case/Automatic - NAG1/FLUID and FILTER - Standard Procedure**.

NOTE: **If the transmission is being reconditioned (clutch/seal replacement) or replaced, it is necessary to perform the TCM Adaptation Procedure using the scan tool. Refer to Electrical - Electronic Control Modules/Electronic Control Modules/MODULE, Transmission Control - Standard Procedure .**

38. Verify proper operation.

SCHEMATICS AND DIAGRAMS

SCHEMATICS AND DIAGRAMS

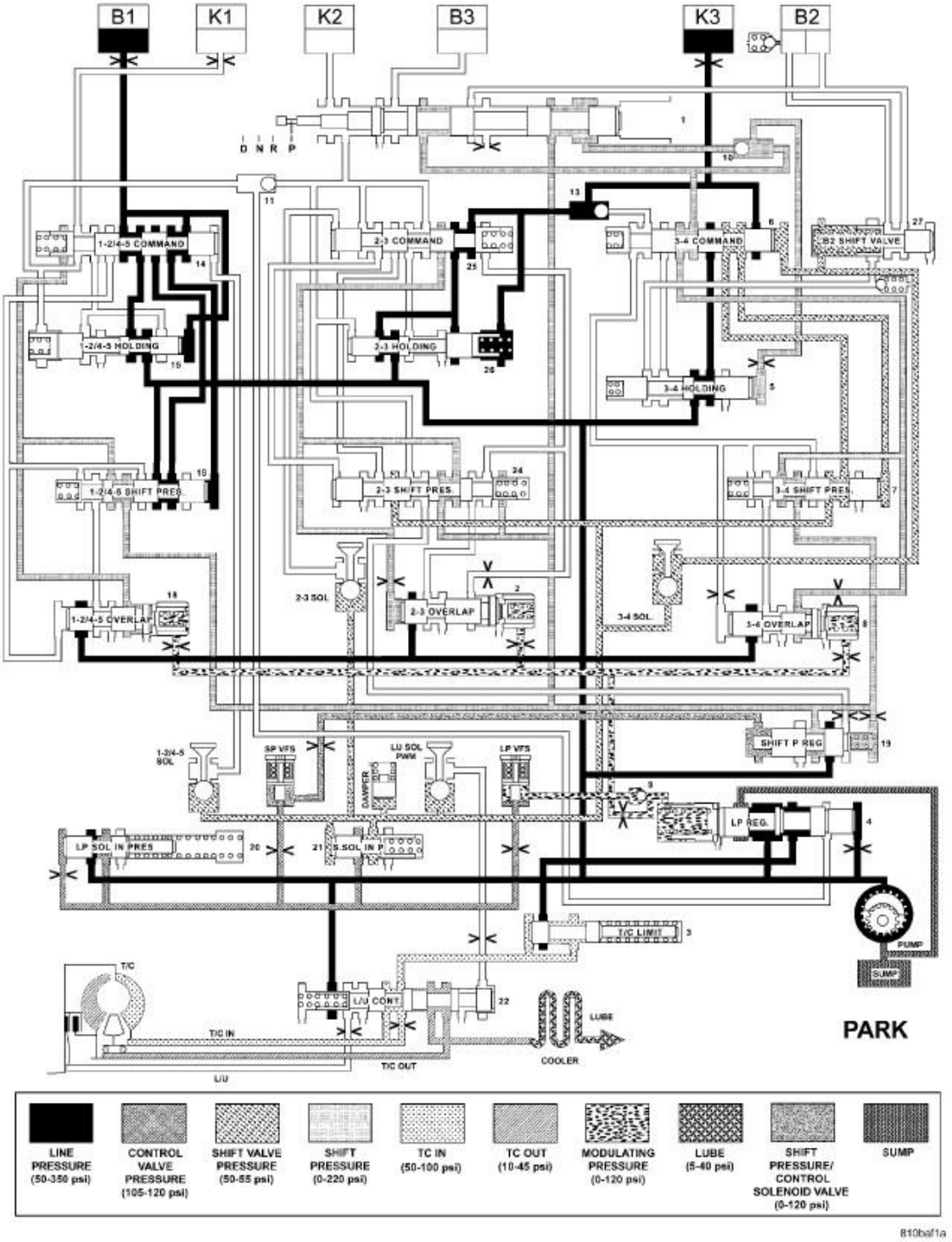

Fig. 100: HYDRAULIC FLOW IN PARK
Courtesy of CHRYSLER LLC

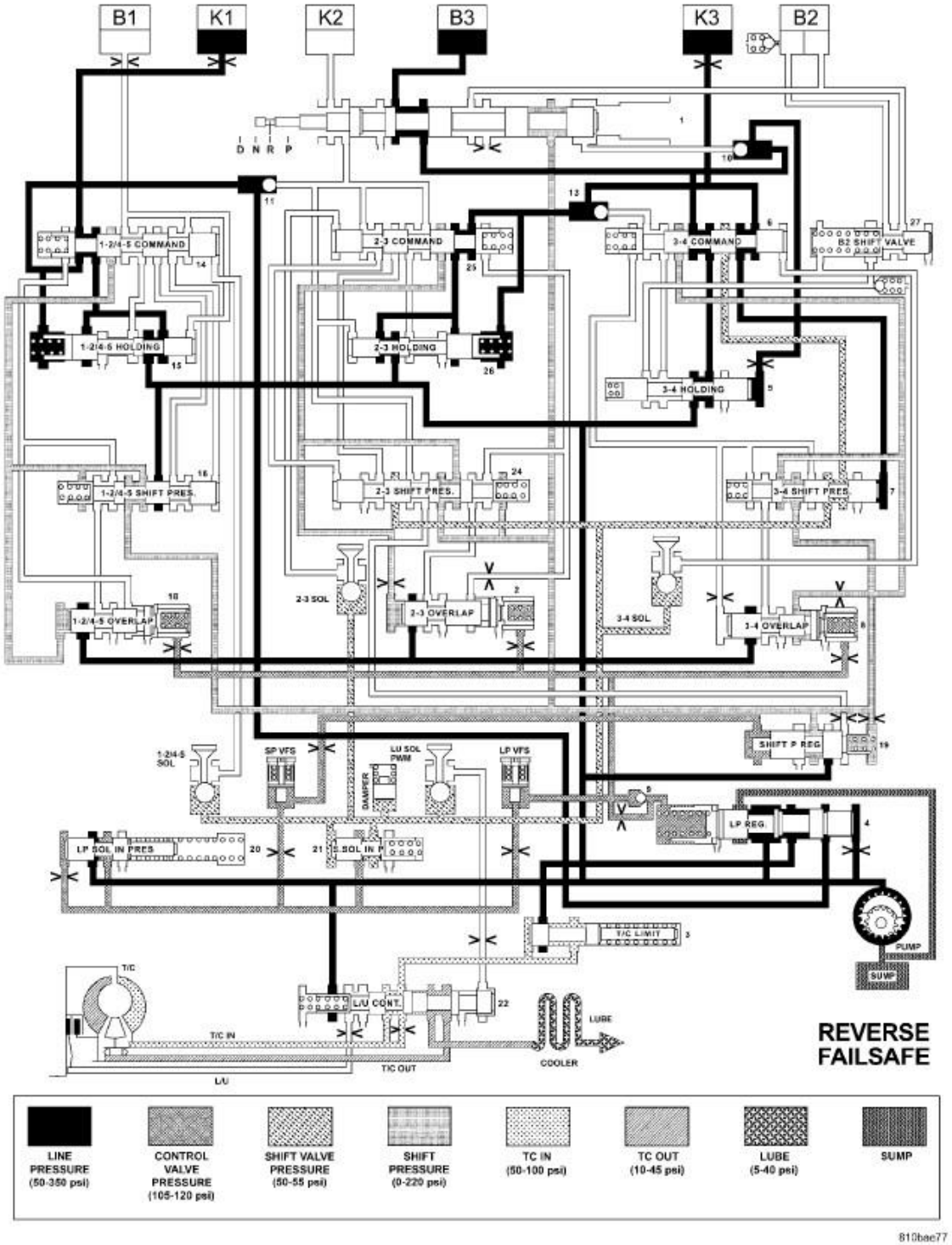

Fig. 101: HYDRAULIC FLOW IN REVERSE - FAILSAFE
Courtesy of CHRYSLER LLC

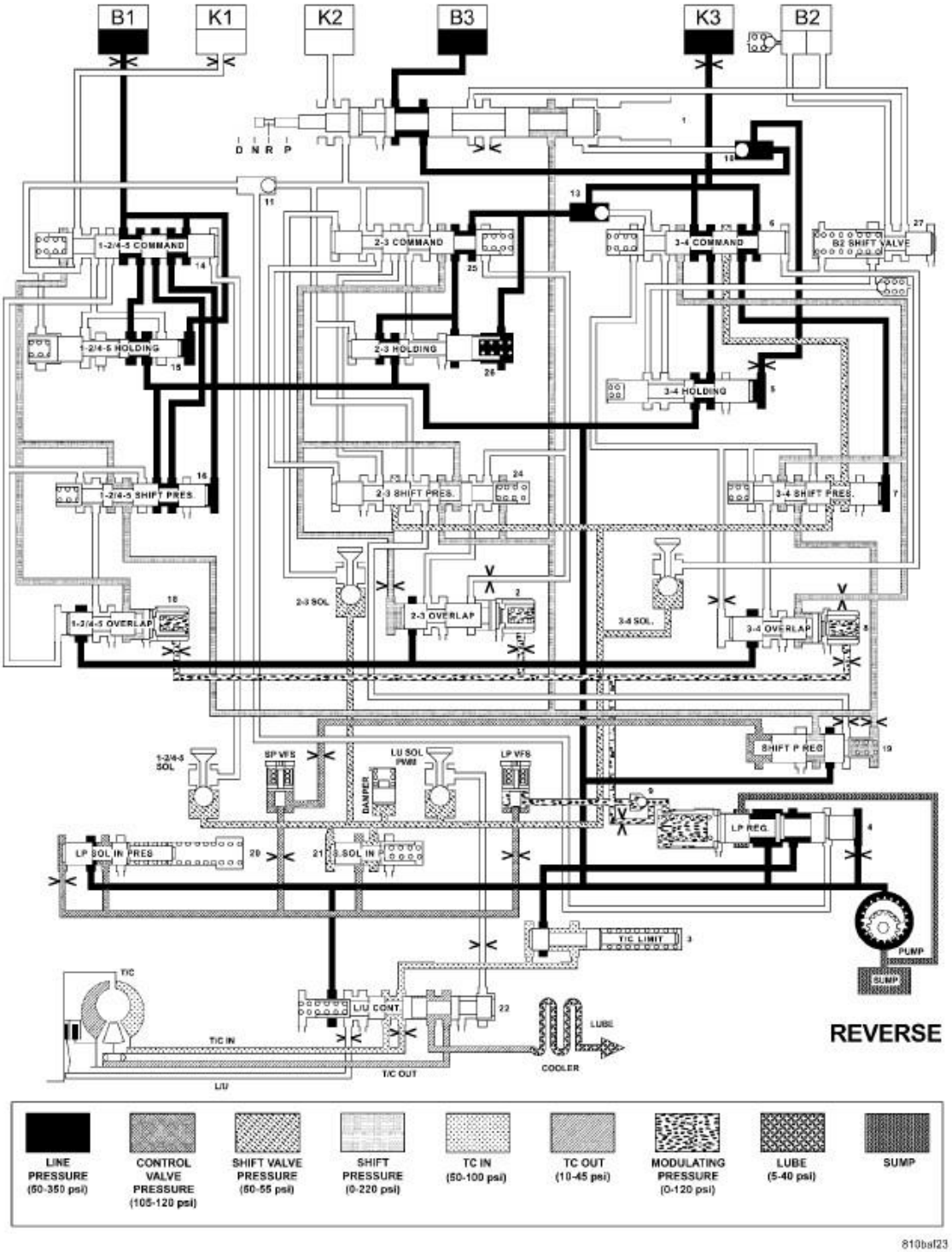

Fig. 102: HYDRAULIC FLOW IN REVERSE
Courtesy of CHRYSLER LLC

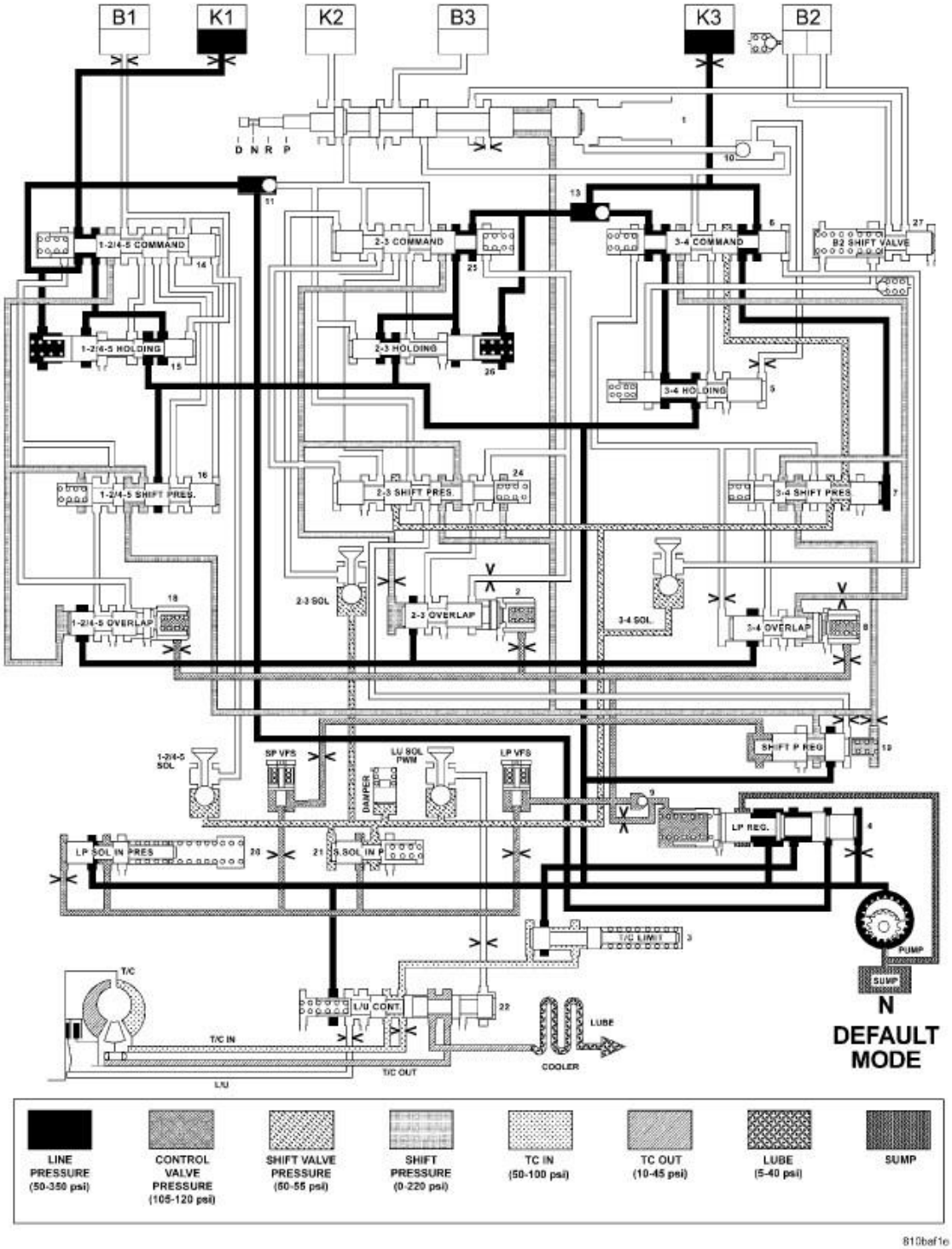

Fig. 103: HYDRAULIC FLOW IN NEUTRAL - DEFAULT
Courtesy of CHRYSLER LLC

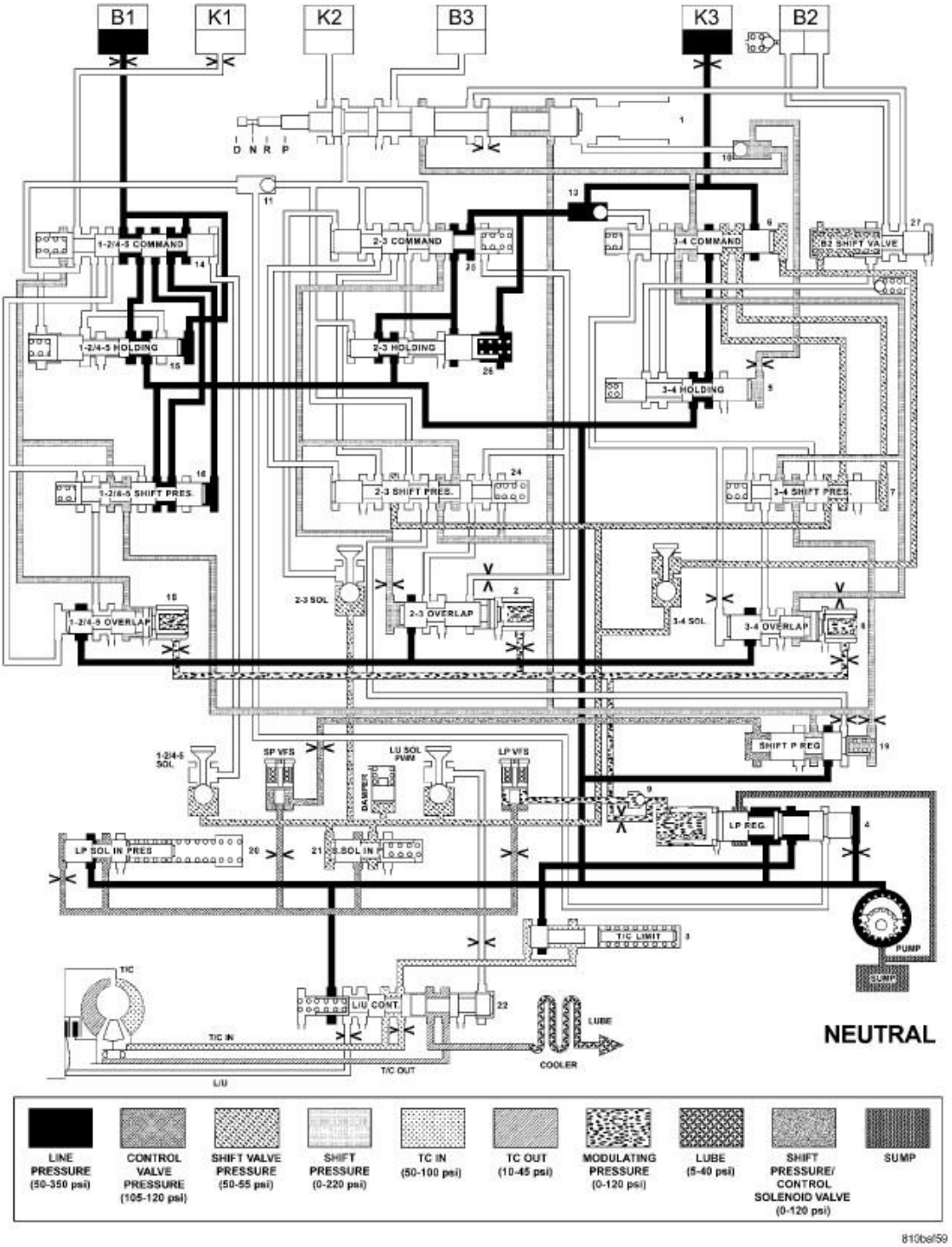

Fig. 104: HYDRAULIC FLOW IN NEUTRAL
Courtesy of CHRYSLER LLC

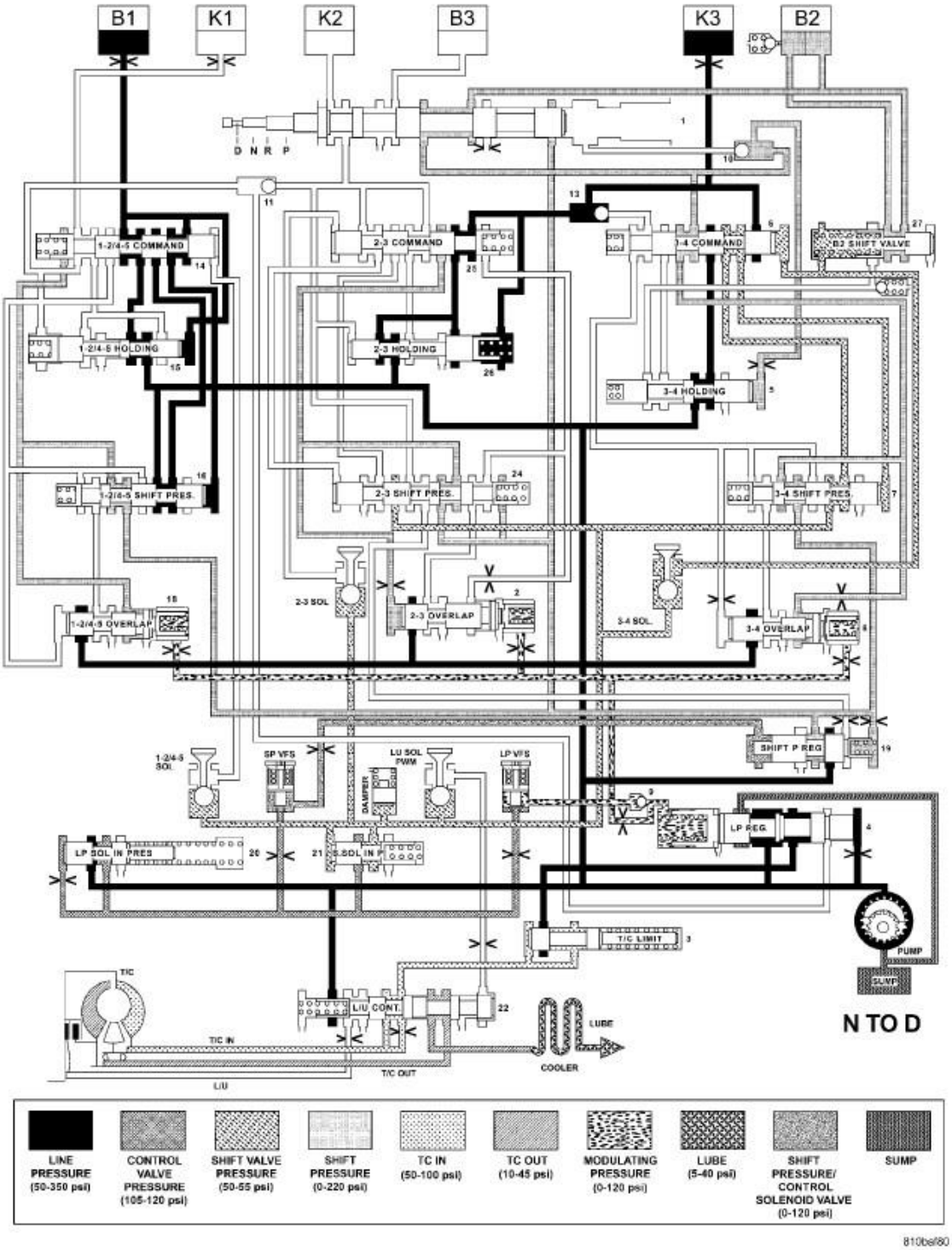

Fig. 105: HYDRAULIC FLOW IN NEUTRAL TO DRIVE TRANSITION
Courtesy of CHRYSLER LLC

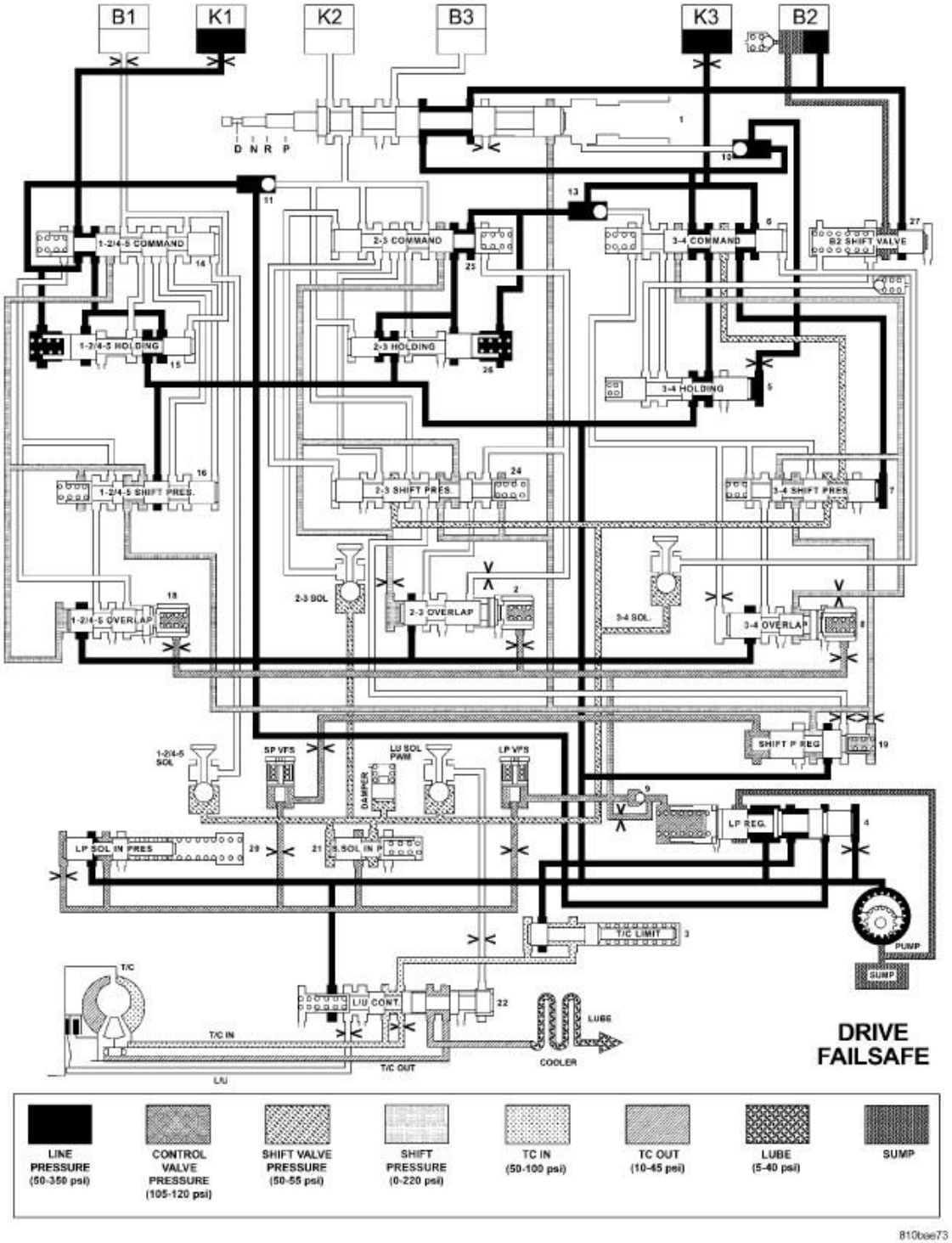

810bae73

Fig. 106: HYDRAULIC FLOW IN DRIVE - FAILSAFE
Courtesy of CHRYSLER LLC

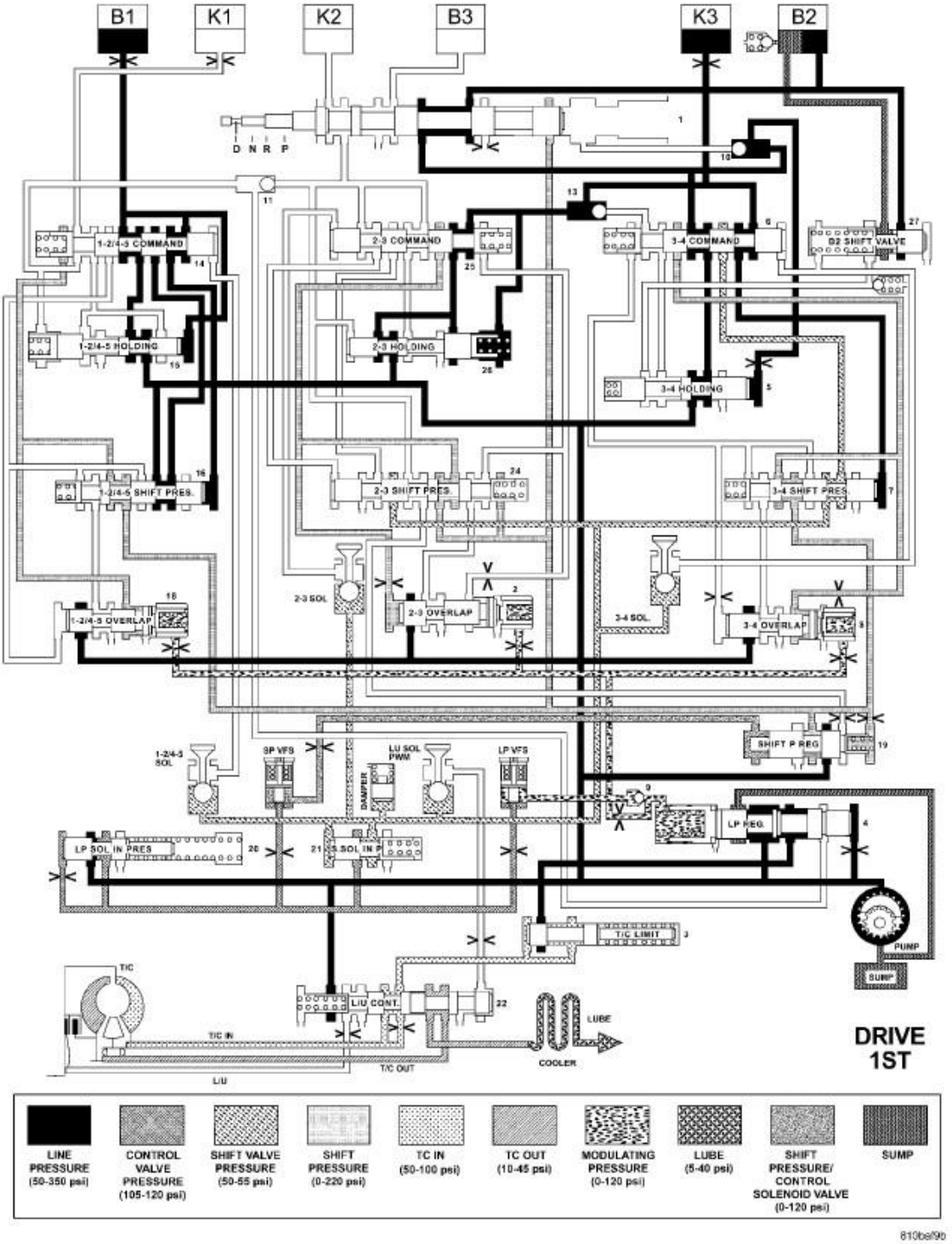

Fig. 107: HYDRAULIC FLOW IN DRIVE - FIRST GEAR
Courtesy of CHRYSLER LLC

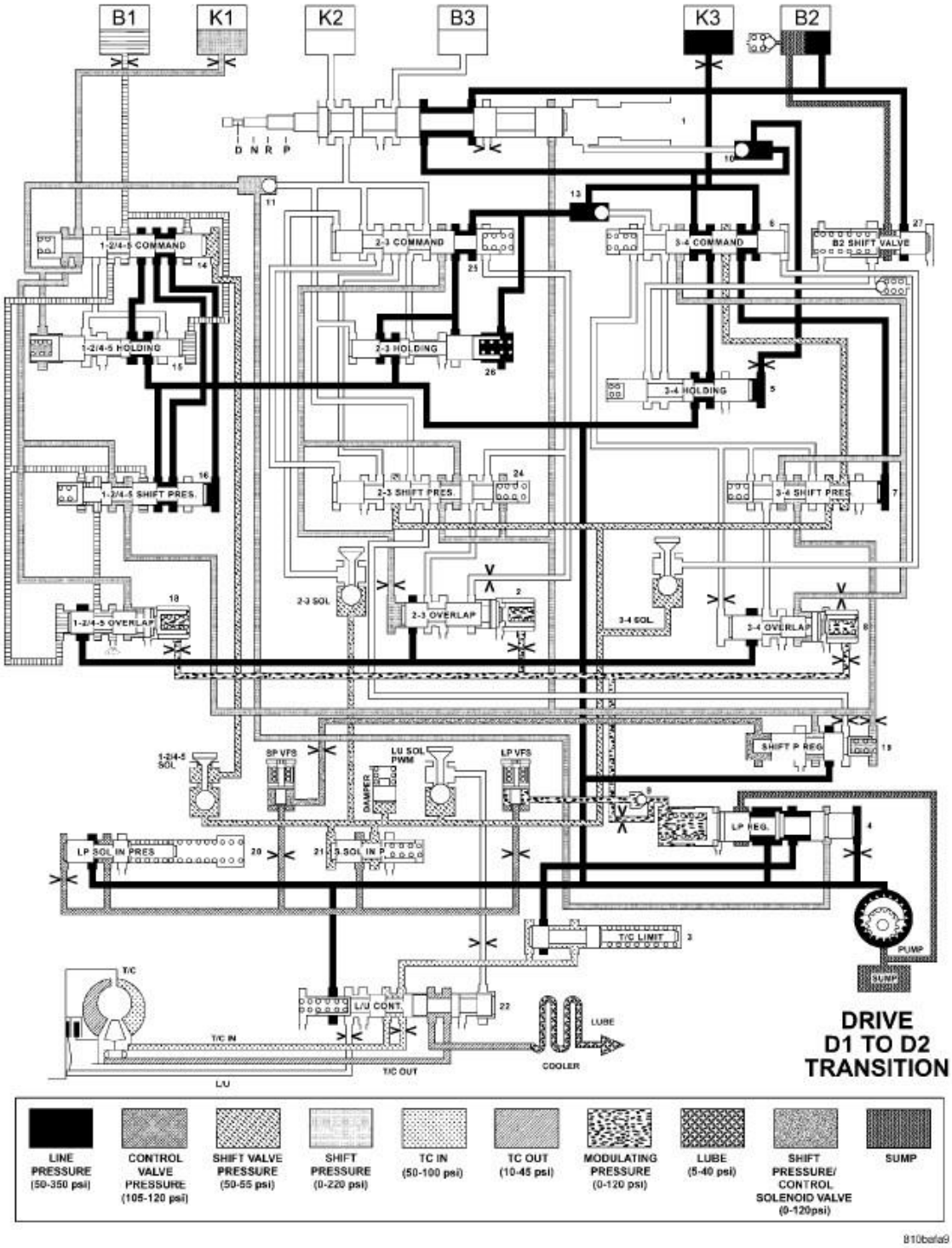

Fig. 108: HYDRAULIC FLOW IN DRIVE - FIRST TO SECOND GEAR TRANSITION
Courtesy of CHRYSLER LLC

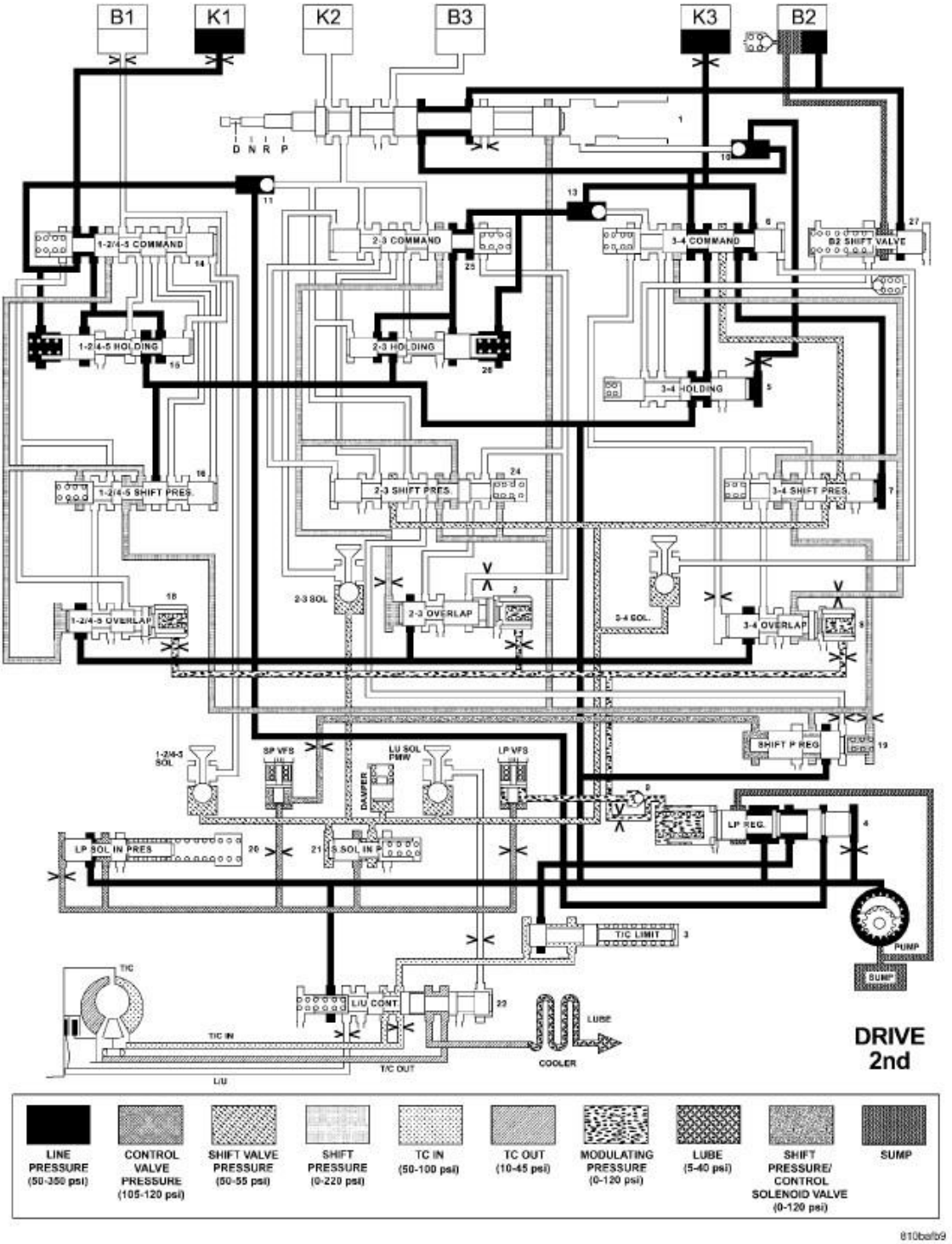

Fig. 109: HYDRAULIC FLOW IN DRIVE - SECOND GEAR
Courtesy of CHRYSLER LLC

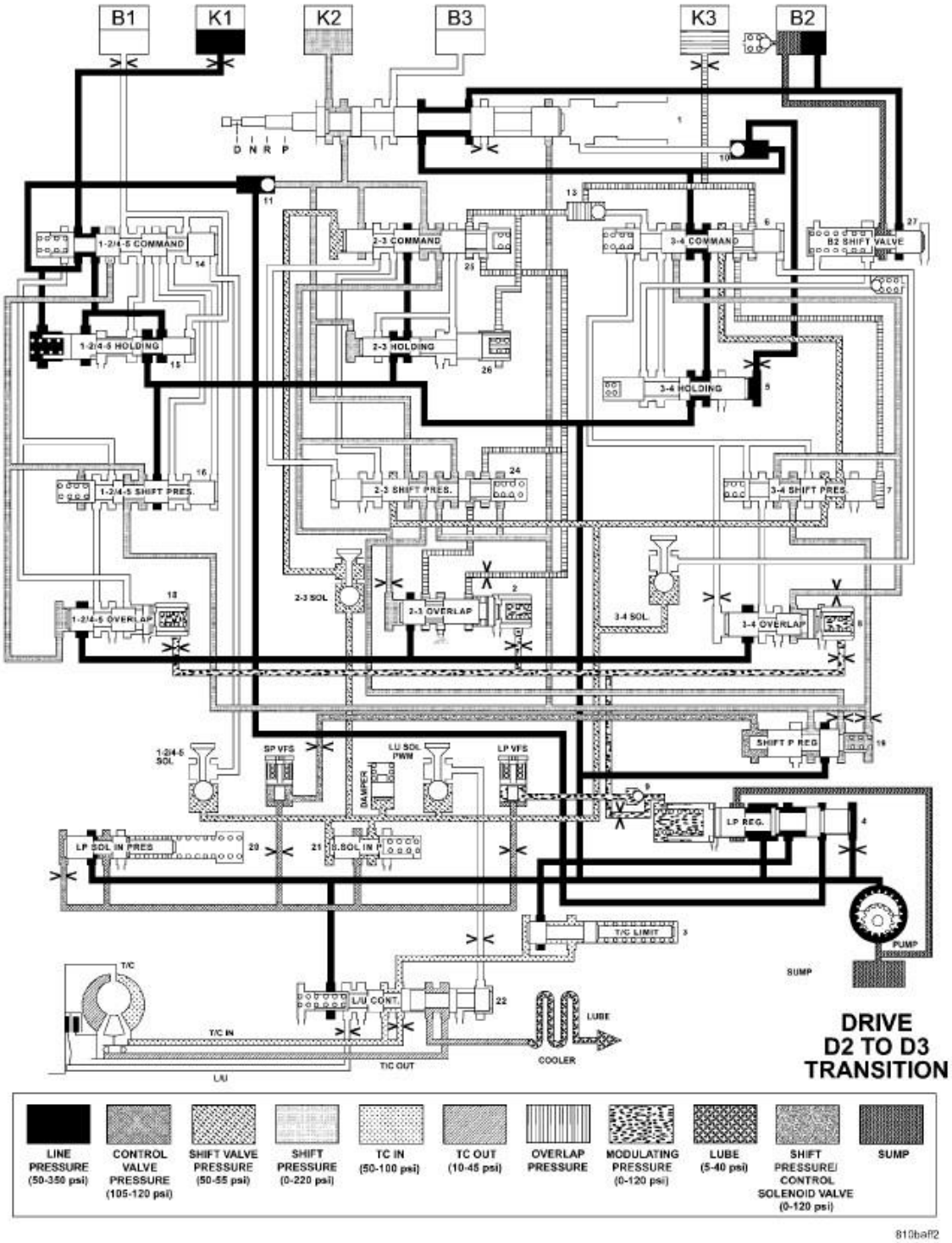

Fig. 110: HYDRAULIC FLOW IN DRIVE - SECOND TO THIRD GEAR TRANSITION
Courtesy of CHRYSLER LLC

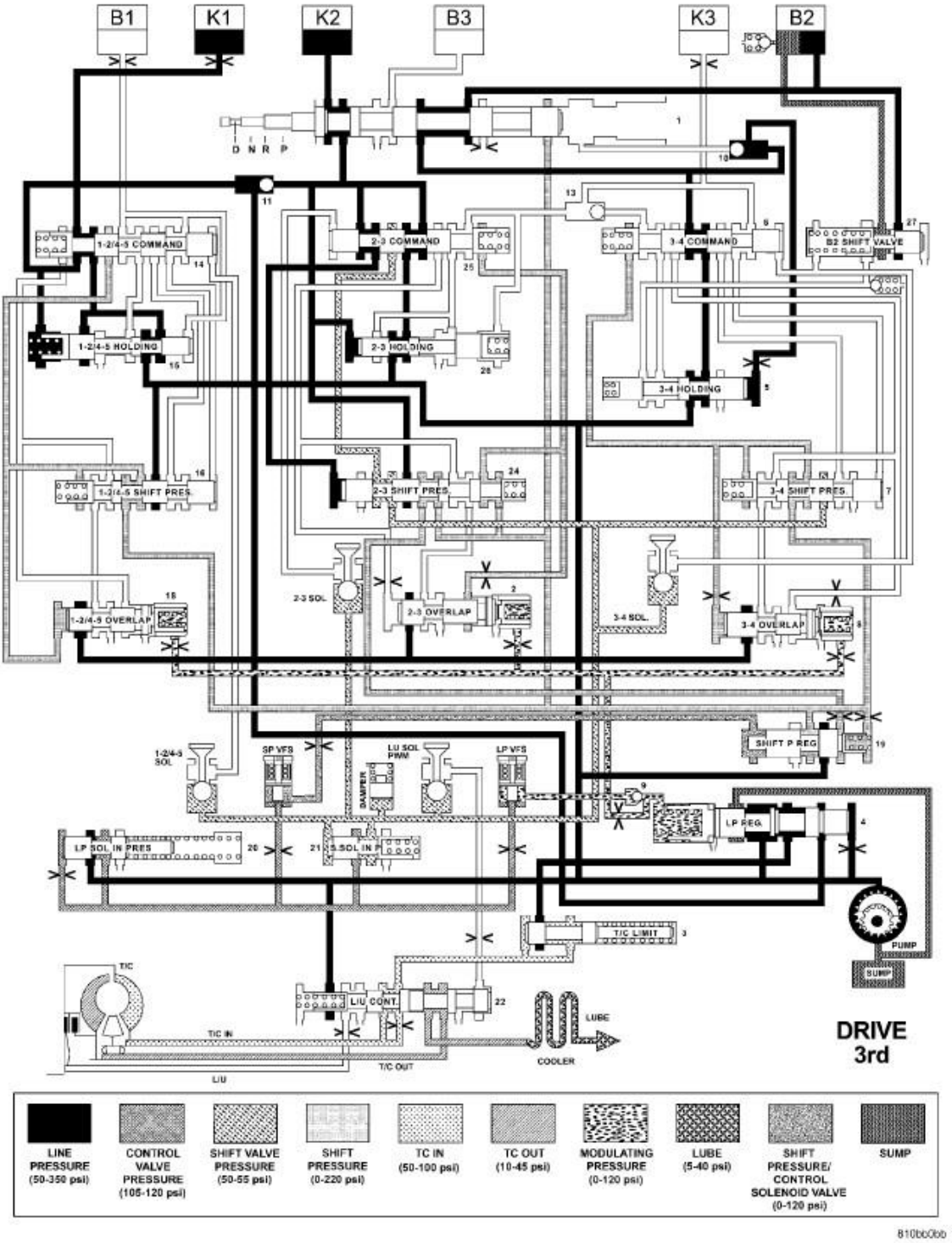

Fig. 111: HYDRAULIC FLOW IN DRIVE - THIRD GEAR
Courtesy of CHRYSLER LLC

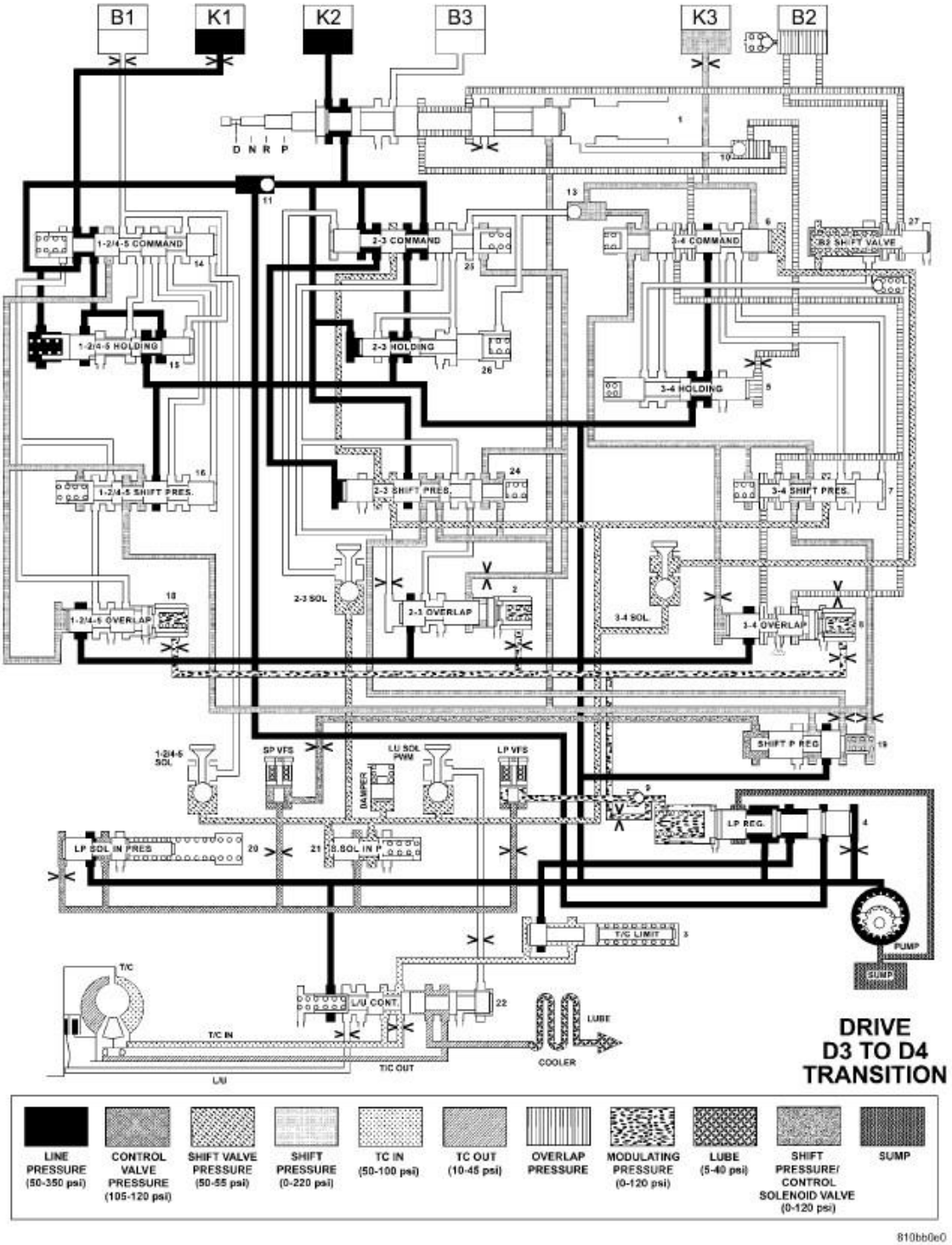

Fig. 112: HYDRAULIC FLOW IN DRIVE - THIRD TO FOURTH GEAR TRANSITION
Courtesy of CHRYSLER LLC

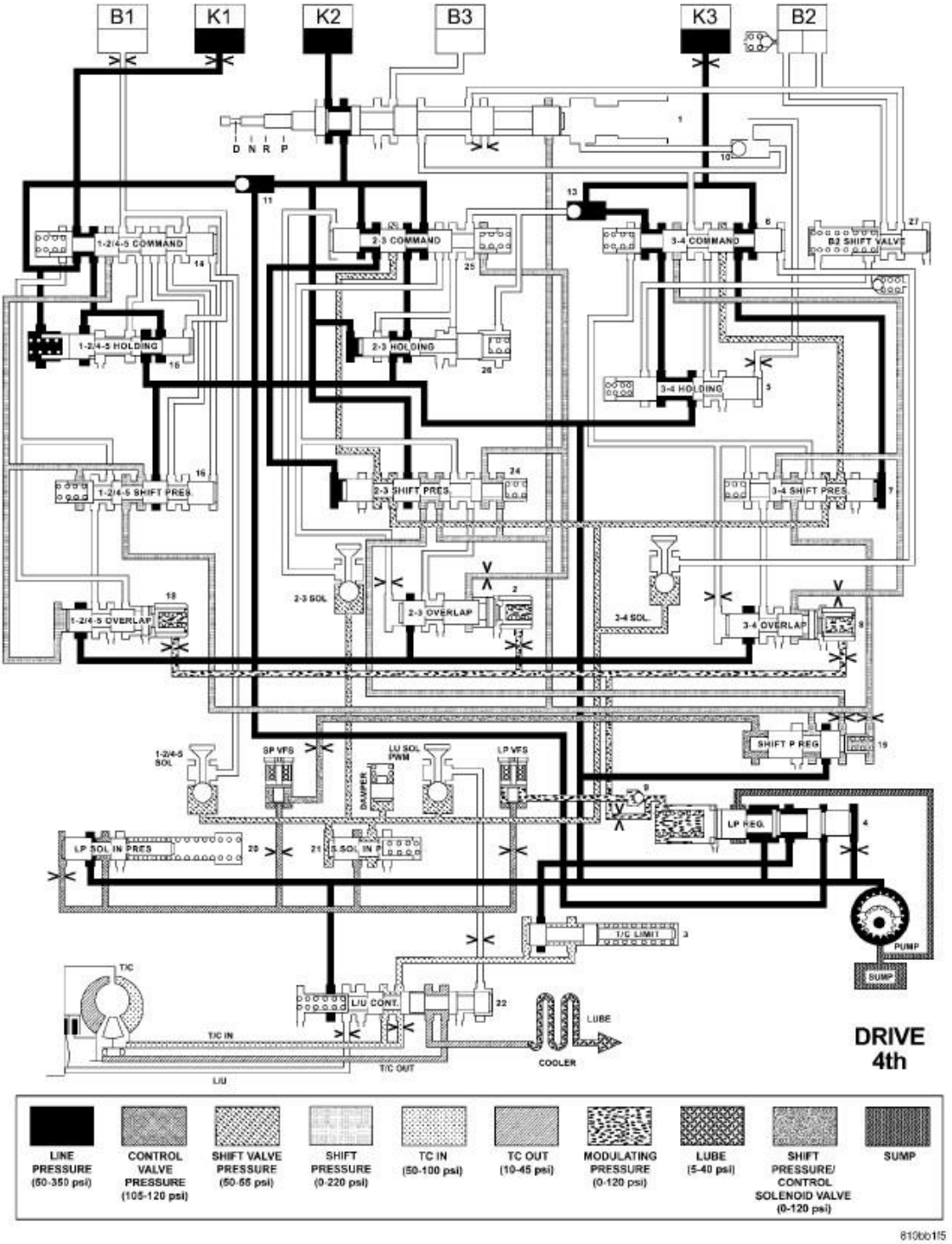

Fig. 113: HYDRAULIC FLOW IN DRIVE - FOURTH GEAR
Courtesy of CHRYSLER LLC

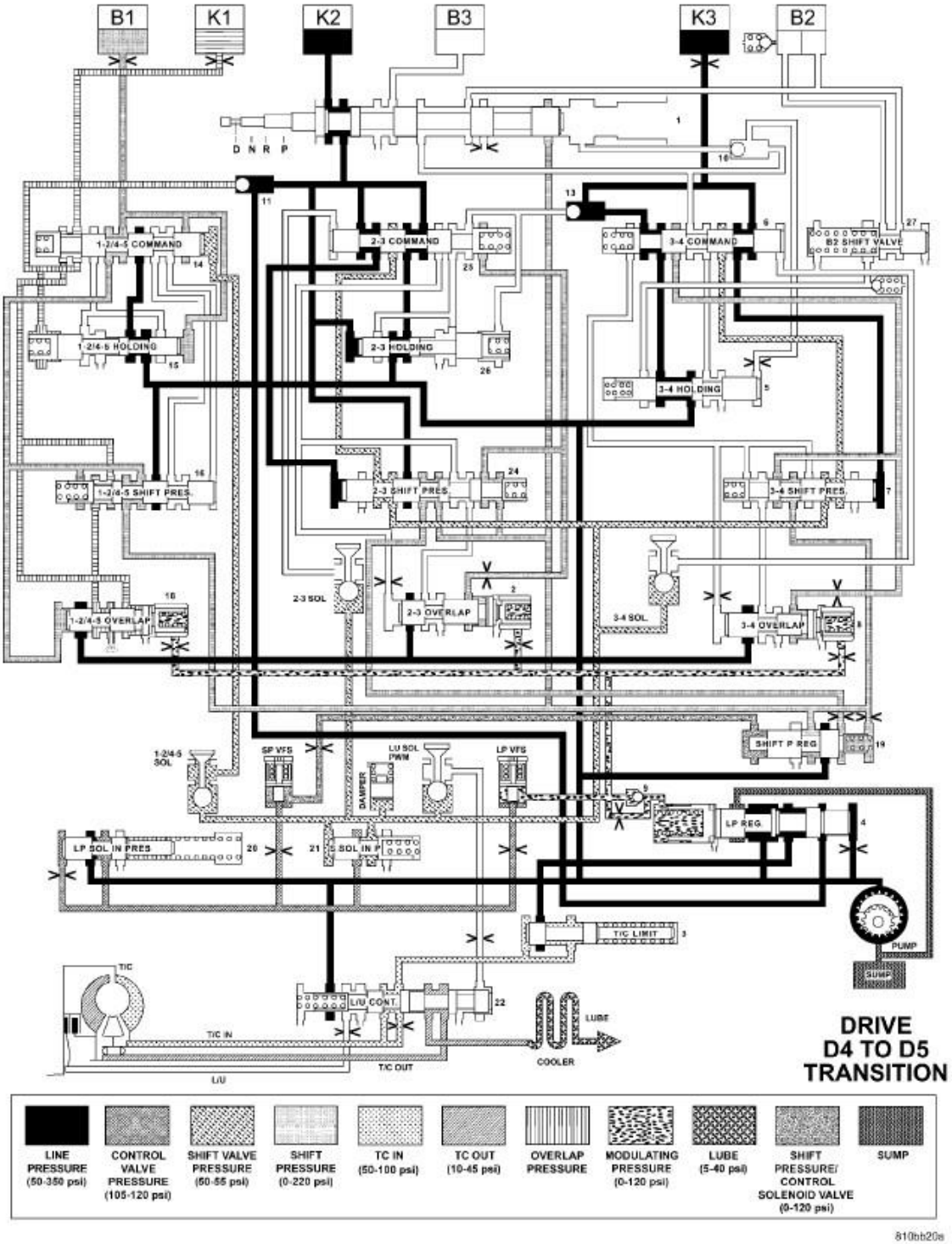

Fig. 114: HYDRAULIC FLOW IN DRIVE - FOURTH TO FIFTH GEAR TRANSITION
Courtesy of CHRYSLER LLC

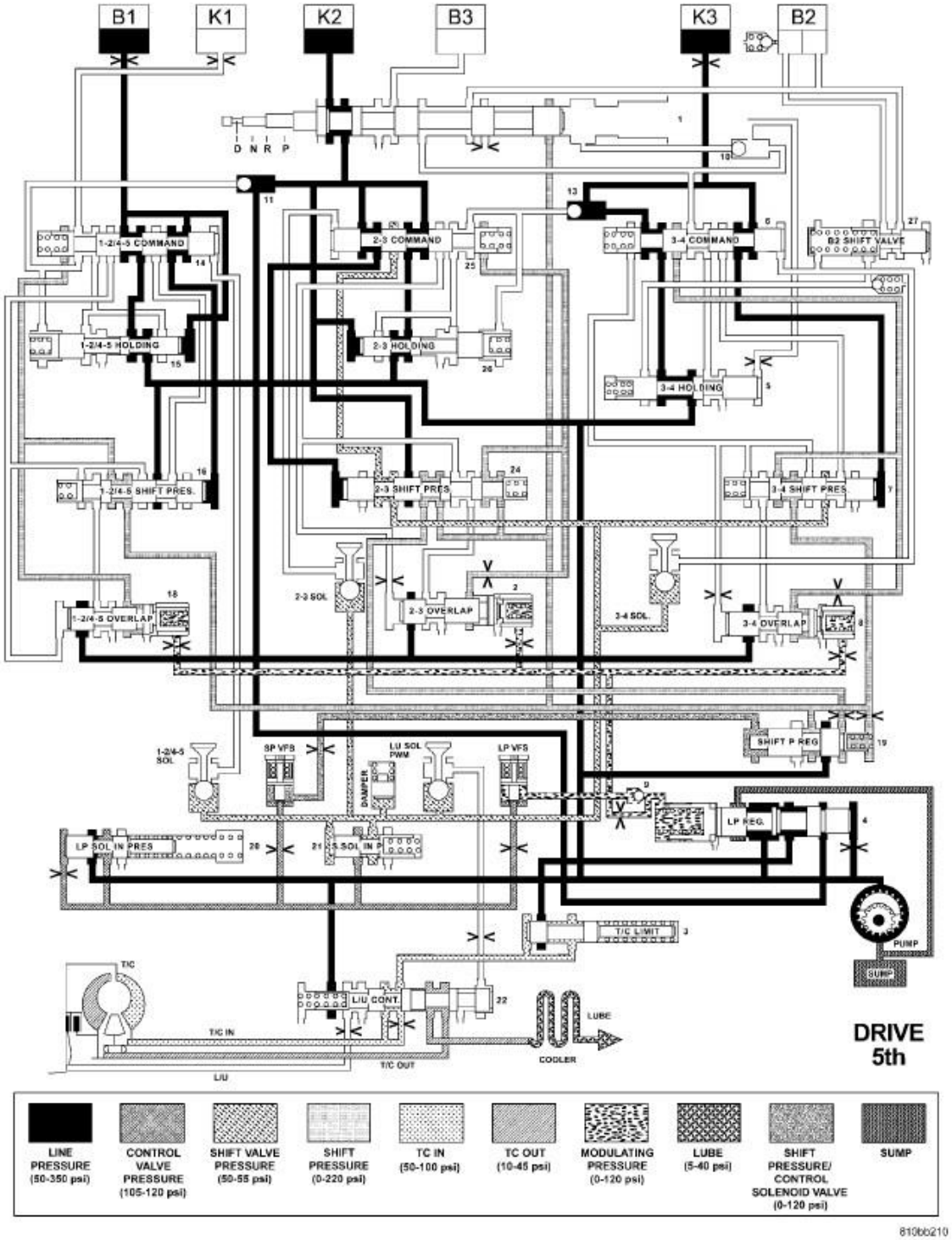

Fig. 115: HYDRAULIC FLOW IN DRIVE - FIFTH GEAR
Courtesy of CHRYSLER LLC

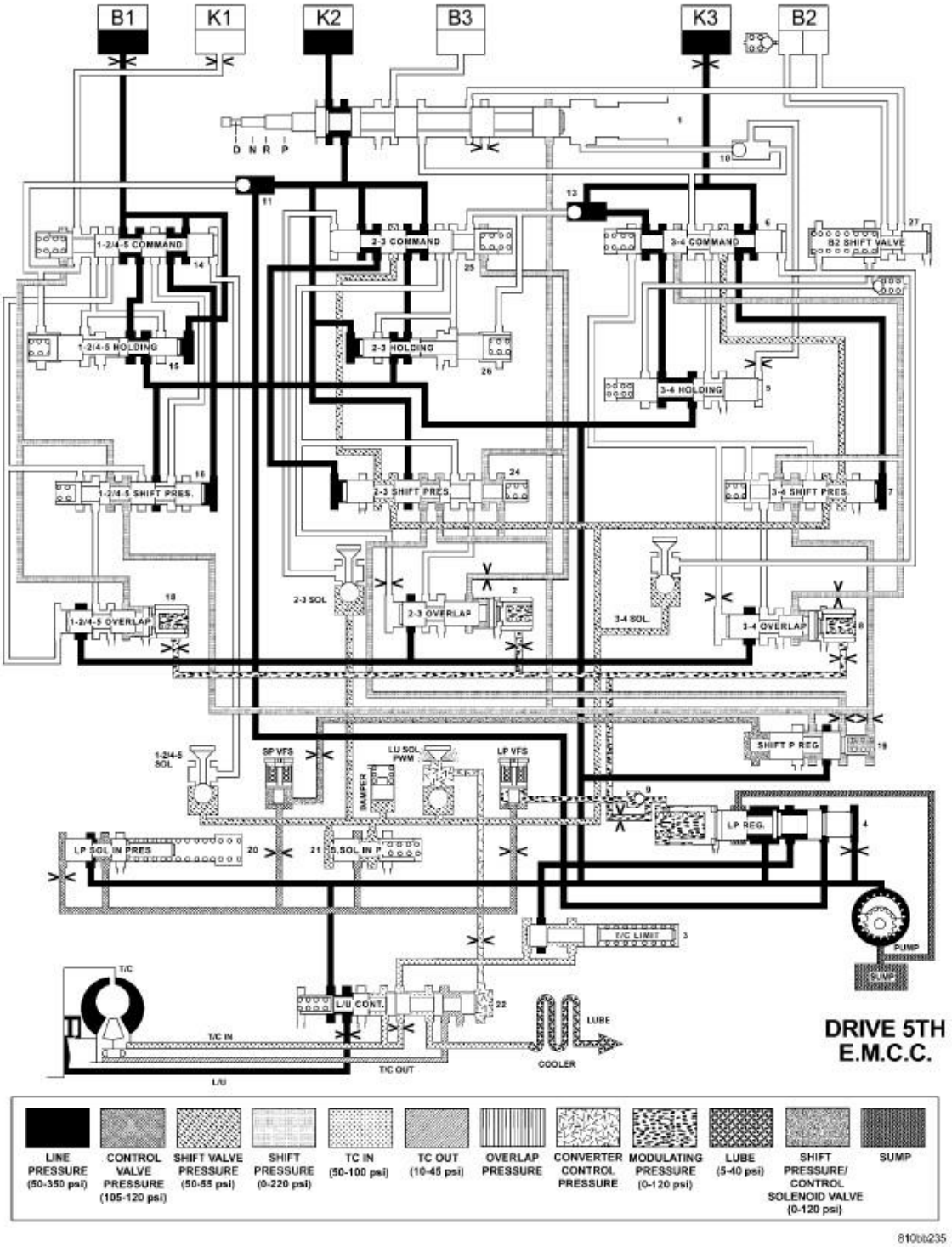

Fig. 116: HYDRAULIC FLOW IN DRIVE - FIFTH GEAR - EMCC
Courtesy of CHRYSLER LLC

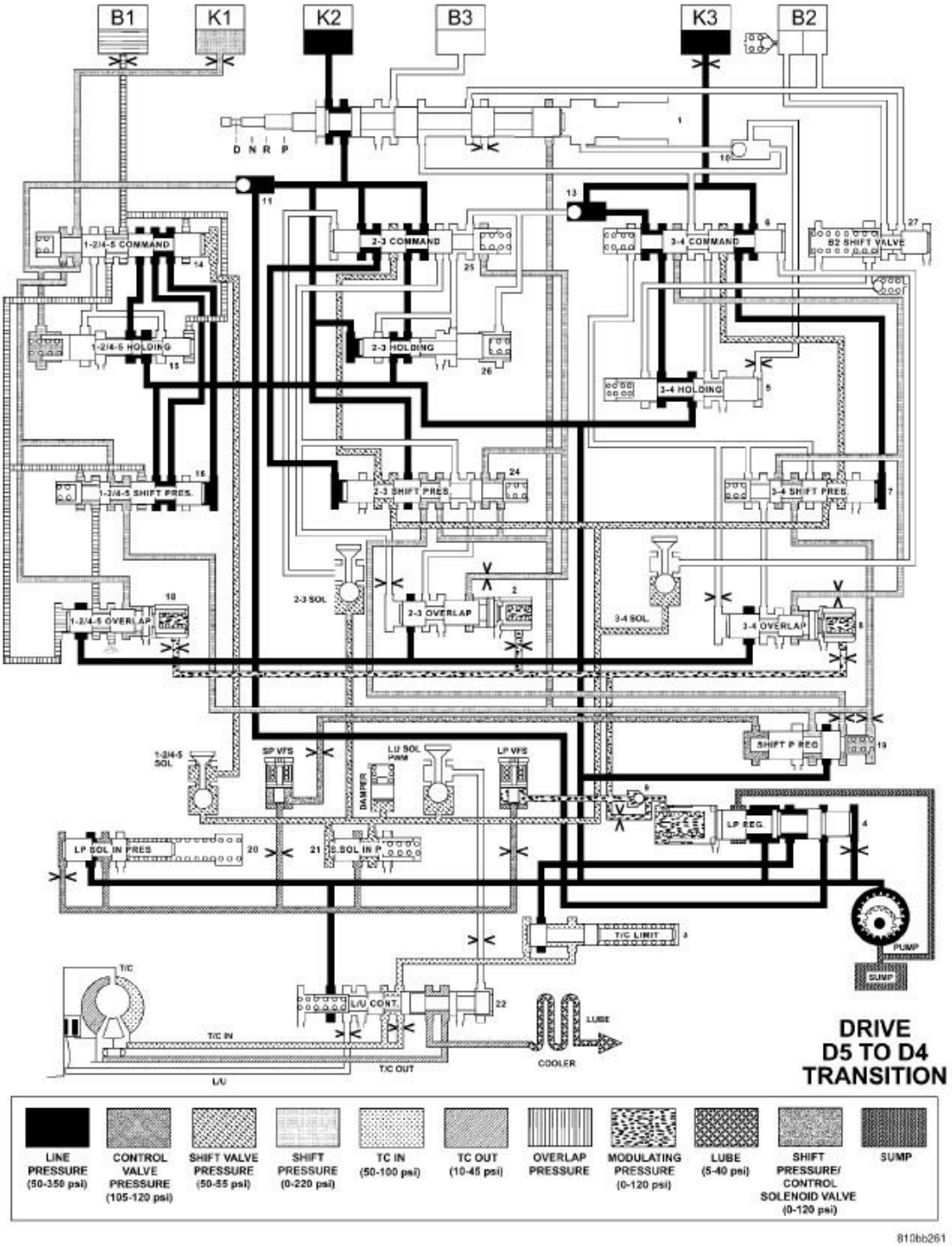

Fig. 117: HYDRAULIC FLOW IN DRIVE - FIFTH TO FOURTH GEAR TRANSITION
Courtesy of CHRYSLER LLC

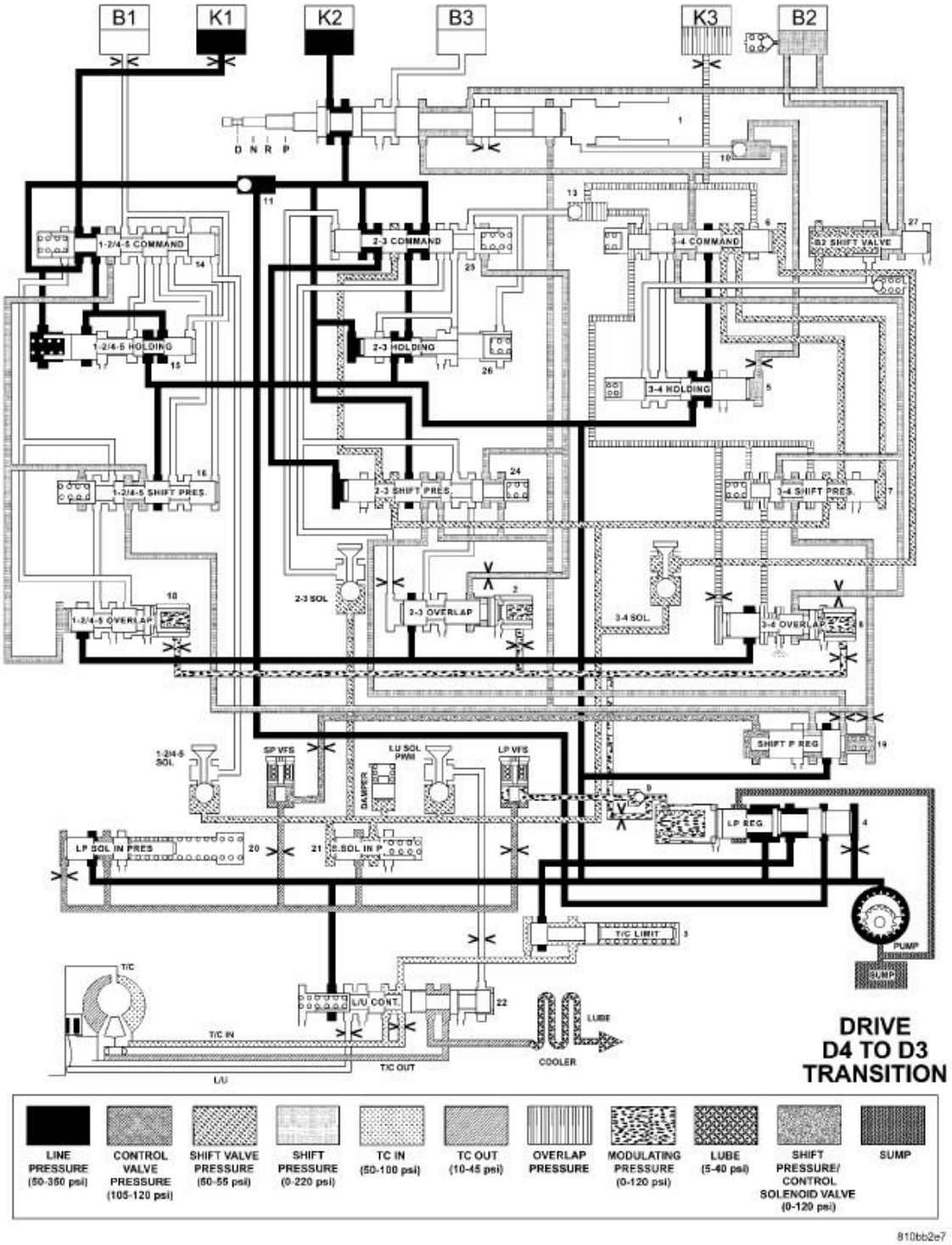

Fig. 118: HYDRAULIC FLOW IN DRIVE - FOURTH TO THIRD GEAR TRANSITION
Courtesy of CHRYSLER LLC

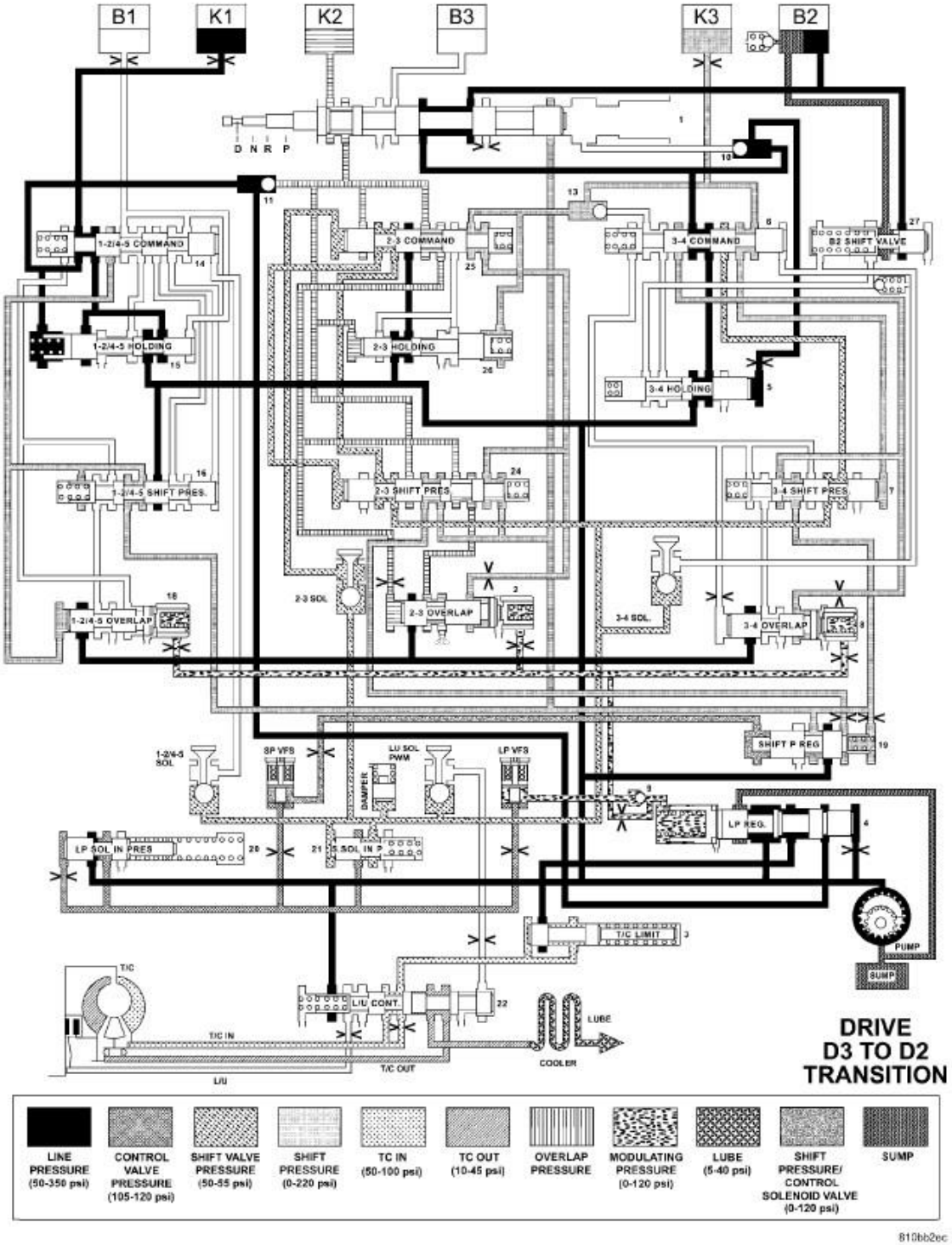

810bb2ec

Fig. 119: HYDRAULIC FLOW IN DRIVE - THIRD TO SECOND GEAR TRANSITION
Courtesy of CHRYSLER LLC

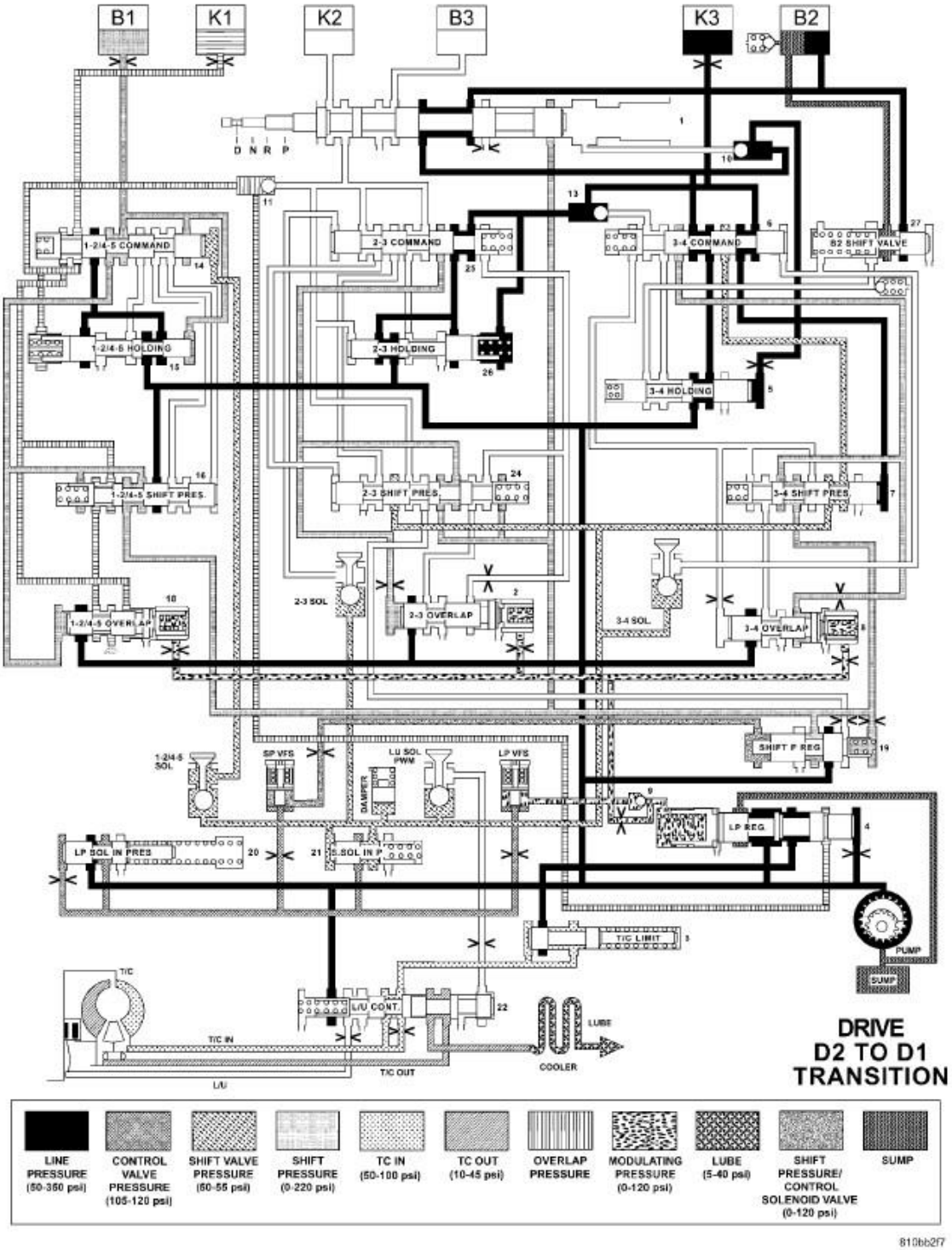

Fig. 120: HYDRAULIC FLOW IN DRIVE - SECOND TO FIRST GEAR TRANSITION
Courtesy of CHRYSLER LLC

SPECIFICATIONS

SPECIFICATIONS

GEAR RATIOS

Gear	Gear Ratio
1ST	3.59:1
2ND	2.19:1
3RD	1.41:1
4TH	1.00:1
5TH	0.83:1
REVERSE	3.16:1

CLEARANCES

COMPONENT		METRIC (mm)	INCH (in.)
Geartrain End-play		0.3-0.5	0.012-0.020
Geartrain End-play Shim		0.2, 0.3, 0.4, and 0.5	0.008, 0.012, 0.016, 0.020
Rear Planetary Gear Set End-play		0.15-0.6	0.006-0.024
Rear Planetary Gear Set Snap-rings		3.0, 3.4, and 3.7	0.118, 0.134, 0.146
B1 Clutch Clearance - Double Sided Friction Discs	2 Disc	2.3-2.7	0.091-0.106
	3 Disc	2.7-3.1	0.106-0.122
	4 Disc	3.0-3.4	0.118-0.134
B1 Clutch Clearance - Single Sided Friction Discs	4 Disc	2.2-2.6	0.087-0.102
	6 Disc	2.4-2.8	0.095-0.110
	8 Disc	2.6-3.0	0.102-0.118
B1 Clutch Snap-rings		2.6, 2.9, 3.2, 3.5, 3.8, and 4.1	0.102, 0.114, 0.126, 0.138, 0.150, 0.162
B2 Clutch Clearance	4 Disc	1.9-2.3	0.075-0.091
	5 Disc	2.0-2.4	0.079-0.095
B2 Clutch Snap-rings		2.9, 3.2, 3.5, 3.8, and 4.1	0.114, 0.126, 0.138, 0.150, 0.162
B3 Clutch Clearance		1.0-1.4	0.039-0.055
B3 Clutch Snap-rings		3.2, 3.5, 3.8, 4.1, 4.4, and 4.7	0.126, 0.138, 0.150, 0.162, 0.173, 0.185
K1 Clutch Clearance - Double Sided Friction Discs	3 Disc	2.7-3.1	0.106-0.122
	4 Disc	3.0-3.4	0.118-0.134
	5 Disc	3.3-3.7	0.13-0.146
	6 Disc	3.6-4.0	0.142-0.158
K1 Clutch Clearance - Single Sided Friction Discs	6 Disc	2.4-2.8	0.095-0.110
	8 Disc	2.6-3.0	0.102-0.118
	10 Disc	2.8-3.2	0.110-0.126
	12 Disc	2.9-3.3	0.114-0.130
K1 Clutch Snap-rings		2.6, 2.9, 3.2, 3.5, 3.8, and 4.1	0.102, 0.114, 0.126, 0.138, 0.150, 0.162
K2 Clutch Clearance	3 Disc	2.3-2.7	0.091-0.106

	4 Disc	2.4-2.8	0.095-0.110
	5 Disc	2.5-2.9	0.099-0.114
	6 Disc	2.7-3.1	0.106-0.122
K2 Clutch Snap-rings		2.3, 2.6, 2.9, 3.2, 3.5, and 3.8	0.091, 0.102, 0.114, 0.126, 0.138, 0.150
K3 Clutch Clearance - Double Sided Friction Discs	3 Disc	2.3-2.7	0.091-0.106
	4 Disc	2.4-2.8	0.095-0.110
	5 Disc	2.5-2.9	0.099-0.114
K3 Clutch Clearance - Single Sided Friction Discs	6 Disc	2.3-2.7	0.091-0.106
	8 Disc	2.4-2.8	0.095-0.110
	10 Disc	2.5-2.9	0.099-0.114
K3 Clutch Snap-rings		2.0, 2.3, 2.6, 2.9, 3.2, and 3.5	0.079, 0.091, 0.102, 0.114, 0.126, 0.138

TORQUE

DESCRIPTION	N.m	Ft. Lbs.	In. Lbs.
Bolt, B2 Clutch Carrier	16	-	141
Bolt, B1 Carrier to Converter Housing	10	-	88.5
Bolt, Oil Pump	20	-	177
Nut, Propeller Flange	200	147.5	-
Bolt , Clevis bracket to Crossmember	47	35	-
Bolt, Crossmember to Frame	68	50	-
Bolt, Electrohydraulic Unit	8	-	71
Bolt, Rear Support to Transmission	47	35	-
Bolt, Transmission Housing to Converter Housing	20	-	177
Bolt, Torque Converter Housing to Engine	39	29	-
Bolt, Torque Converter Access Cover	11	8	-
Bolt, transmission to Engine Oil Pan	39	29	-
Bolts, Oil Pan	8	-	71
Screws, Valve Body/Housing Side Cover	4	-	35
Bolt, Shift Plate	8	-	71

Bolt, Solenoid Leaf Spring	8	-	71
Nut, Shifter Mechanism to Floor Pan	7	-	65
Bolt, Torque Converter	42	31	-
Bolt, Lower Fill Tube	12	-	105

SPECIAL TOOLS

SPECIAL TOOLS - NAG1

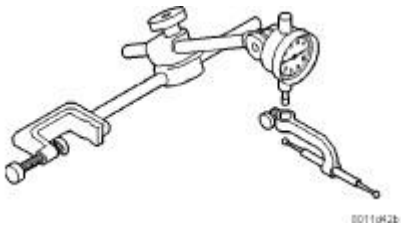

Fig. 121: SET, DIAL INDICATOR - C-3339A
Courtesy of CHRYSLER LLC

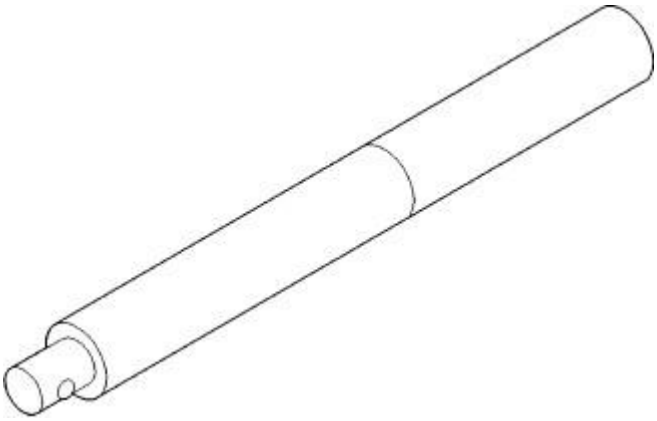

Fig. 122: DRIVER HANDLE, UNIVERSAL - C-4171
Courtesy of CHRYSLER LLC

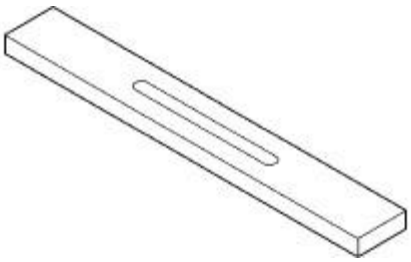

Fig. 123: GAUGE BAR - 6311
Courtesy of CHRYSLER LLC

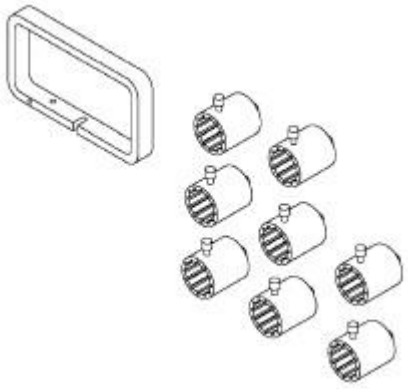

Fig. 124: FIXTURES, END PLAY - 8266A
Courtesy of CHRYSLER LLC

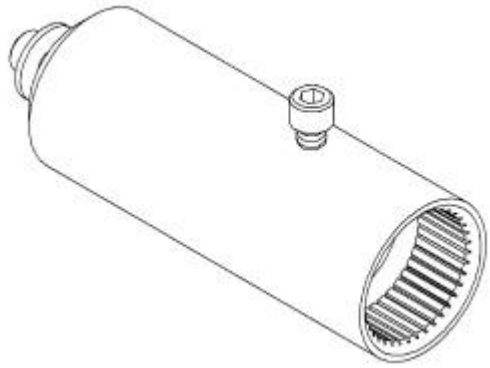

Fig. 125: SOCKET - 8266-18
Courtesy of CHRYSLER LLC

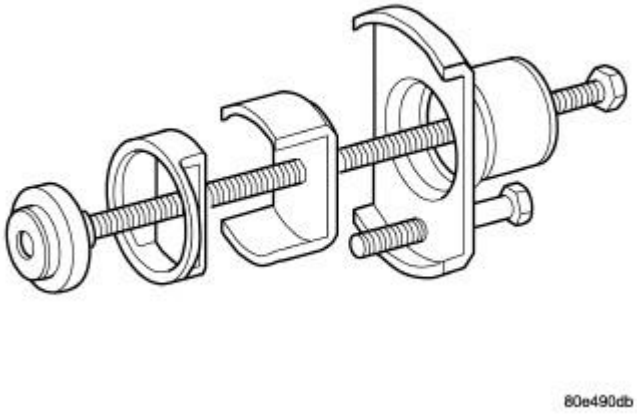

Fig. 126: COMPRESSOR, SPRING - 8900
Courtesy of CHRYSLER LLC

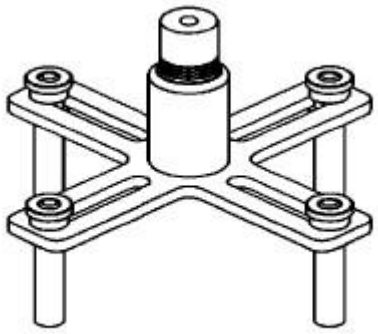

Fig. 127: PRESSING TOOL - 8901A
Courtesy of CHRYSLER LLC

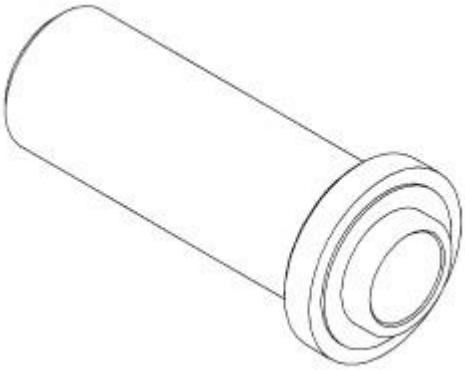

Fig. 128: INSTALLER, SEAL - 8902A
Courtesy of CHRYSLER LLC

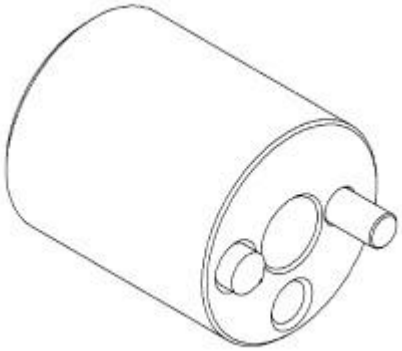

Fig. 129: STAKING TOOL - 9078
Courtesy of CHRYSLER LLC

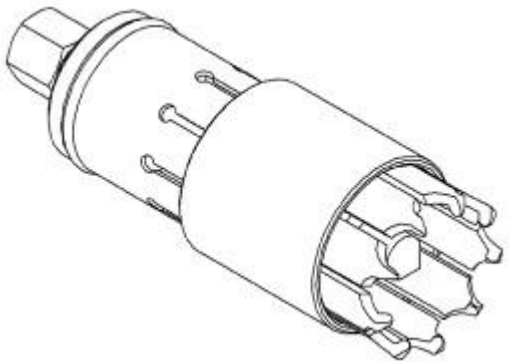

Fig. 130: REMOVER, BEARING - 9082A
Courtesy of CHRYSLER LLC

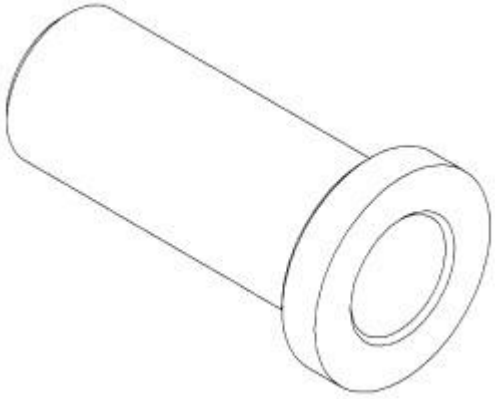

Fig. 131: INSTALLER, BEARING - 9287
Courtesy of CHRYSLER LLC

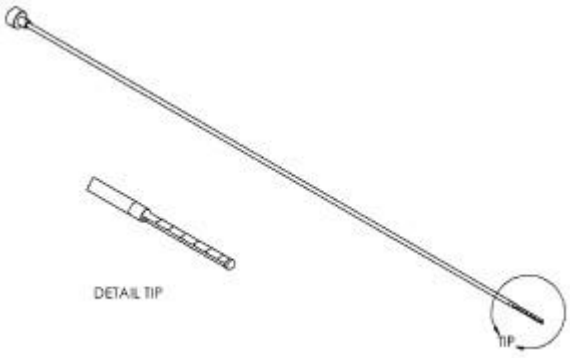

Fig. 132: DIPSTICK - 9336A
Courtesy of CHRYSLER LLC



Fig. 133: INSTALLATION DISC - 9902
Courtesy of CHRYSLER LLC

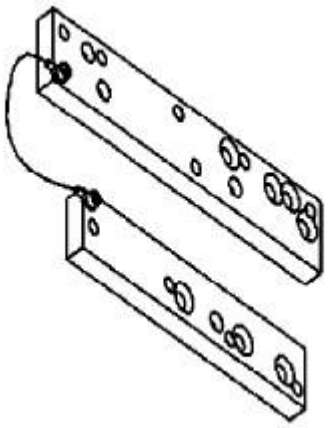

Fig. 134: PLATE, AIR PRESSURE TEST - 10007
Courtesy of CHRYSLER LLC

BEARING, OUTPUT SHAFT

REMOVAL

REMOVAL

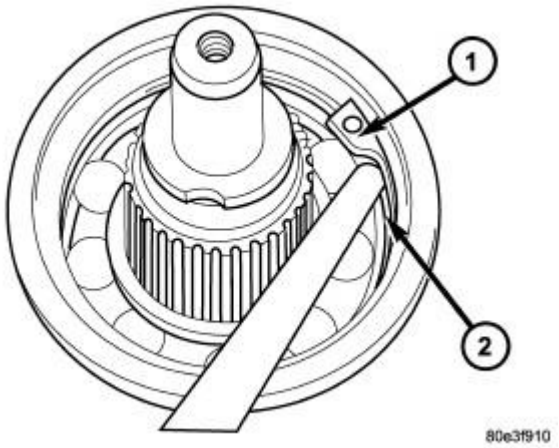

Fig. 135: Remove/Install Rear Output Shaft Retaining Ring
Courtesy of CHRYSLER LLC

1 - RETAINING RING 2 - OUTPUT SHAFT BEARING

1. Raise and support vehicle.
2. Remove the propeller shaft. Refer to **Differential and Driveline/Propeller Shaft - Removal** .
3. Verify that the transmission is in PARK in order to prepare for the removal of the output shaft nut.
4. Remove the nut, with a 30 mm 12 point socket, holding the propeller shaft flange to the output shaft and remove the flange.
5. Remove the transmission rear oil seal with a suitable slide hammer and screw.
6. Remove the transmission output shaft washer. Be sure to tag the washer since it is very similar to the geartrain end-play shim and they must not be interchanged.
7. Remove the transmission rear output shaft bearing retaining ring (1) .

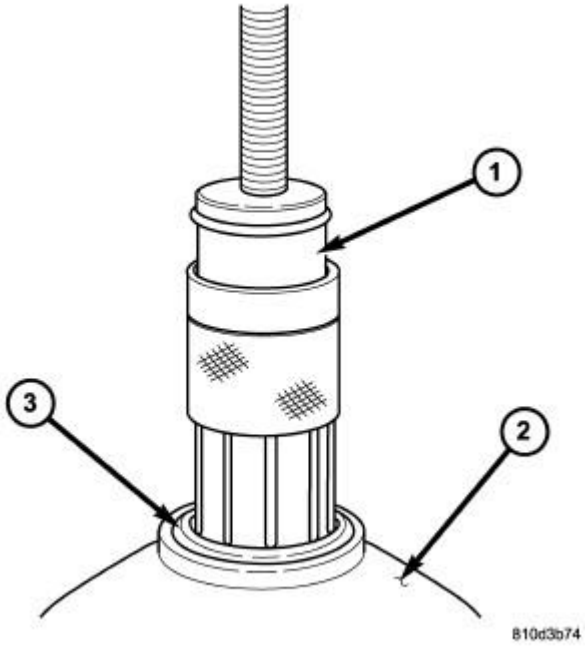

Fig. 136: Position Remover 9082A On Bearing
Courtesy of CHRYSLER LLC

1 - BEARING REMOVER 9082A
2 - TRANSMISSION CASE
3 - OUTPUT SHAFT BEARING

8. Position Bearing Remover 9082A (1) over the inner race of the output shaft bearing.

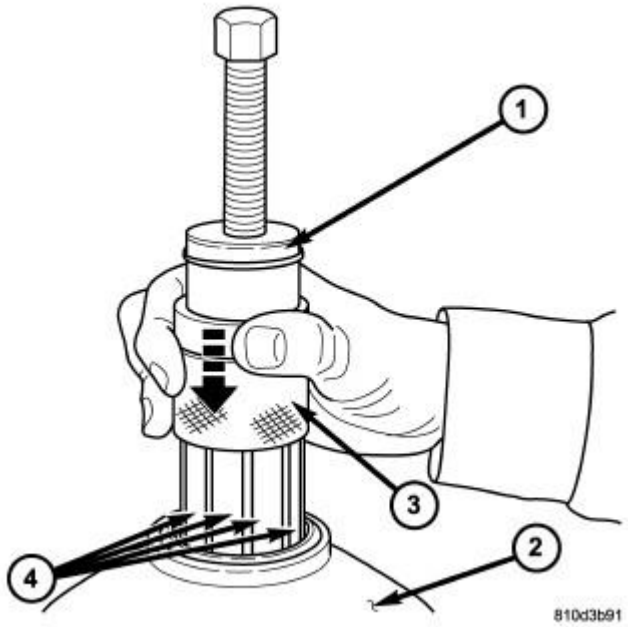

Fig. 137: Slide Remover 9082A Collar Downward
Courtesy of CHRYSLER LLC

1 - BEARING REMOVER 9082A
2 - TRANSMISSION CASE
3 - COLLAR
4 - FINGERS

NOTE: Due to production variations in the bearing, it may not be possible to slide the collar fully downward. It is only necessary to slide the collar down far enough that the fingers securely grasp the inner bearing race.

9. Slide the collar (3) on the Bearing Remover 9082A (1) downward over the fingers (3) of the tool.

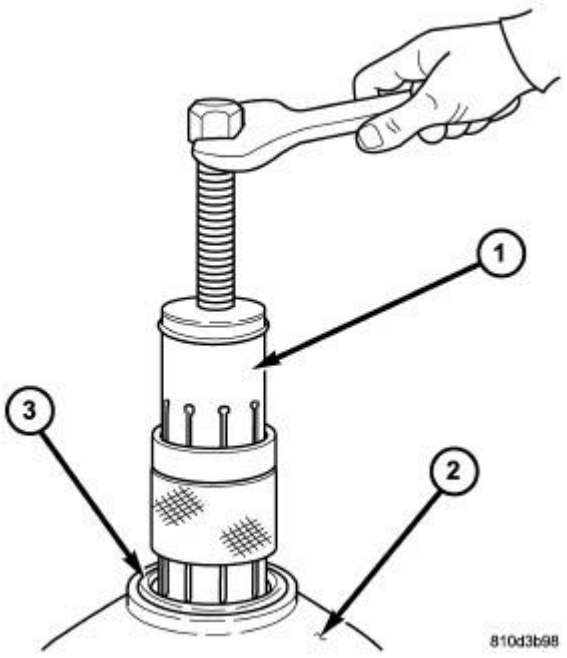

Fig. 138: Remove Output Shaft Bearing
Courtesy of CHRYSLER LLC

1 - BEARING REMOVER 9082A
2 - TRANSMISSION CASE
3 - OUTPUT SHAFT BEARING

CAUTION: Verify that the geartrain end-play shim has remained on the output shaft and against the park gear. The shim may be adhered to the bearing inner race. Retrieve the shim from the bearing and install over the output shaft and against the park gear.

10. Remove the output shaft bearing (3) .

INSTALLATION

INSTALLATION

NOTE: The output shaft shim should be 0.3 mm (0.012 in.). If a 0.3 mm (0.012 in.) shim is not available, use a 0.2 mm (0.008 in.) 0.4 mm (0.016 in.) or 0.5 mm (.020 in.) shim.

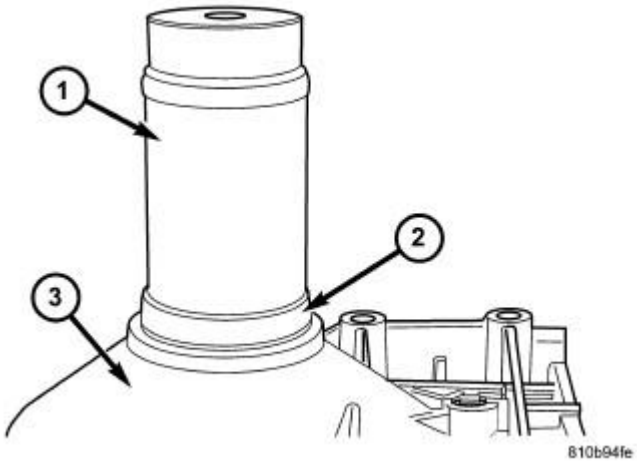

Fig. 139: Install Output Shaft Bearing
Courtesy of CHRYSLER LLC

1 - BEARING INSTALLER 9287 2 - BEARING 3 - TRANSMISSION CASE

CAUTION: Verify that the geartrain end-play shim is properly installed over the output shaft and against the park gear.

1. Install output shaft bearing in the rear transmission housing. Using Bearing Installer 9287 (1) , install the output shaft bearing (2) into the transmission housing. **The closed side of the plastic cage must point towards the parking lock gear.**

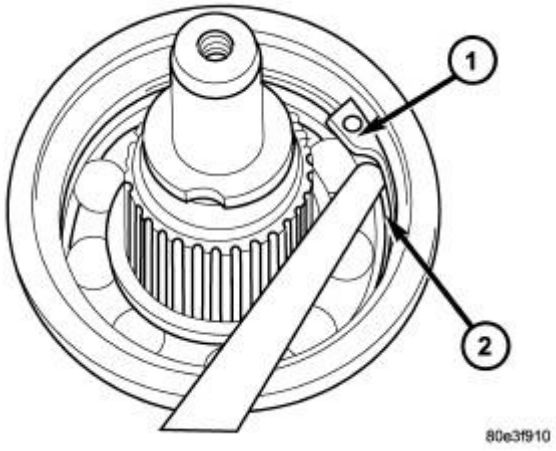

Fig. 140: Remove/Install Rear Output Shaft Retaining Ring
Courtesy of CHRYSLER LLC

1 - RETAINING RING

2 - OUTPUT SHAFT BEARING

2. Install the retaining ring (1) . Ensure that the retaining ring is seated correctly in the groove.
3. Check that there is no play between the bearing and the retaining ring using feeler gauge.
4. There must be no play between the retaining ring and the bearing. If the ring cannot be installed, a thinner ring must be used. If there is play between the ring and the bearing, a thicker ring must be installed. Retaining rings are available in thicknesses of 2.0 mm (0.079 in.), 2.1 mm (0.083 in.), and 2.2 mm (0.087 in.).
5. Install the output shaft washer onto the output shaft.

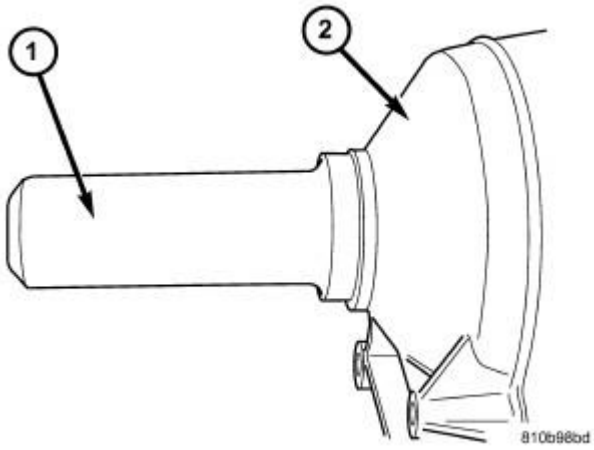

Fig. 141: Installing Output Shaft Seal
Courtesy of CHRYSLER LLC

1 - SEAL INSTALLER 8902A
2 - TRANSMISSION CASE

6. Install a new transmission rear seal into the transmission case with Seal Installer 8902A (1) .
7. Verify that the transmission is in PARK in order to prepare for the installation of the output shaft nut.
8. Install the propeller shaft flange onto the output shaft and install an new flange nut. Tighten the flange nut, with a 30 mm 12 point socket, to 200 N.m (147.5 ft.lbs.).

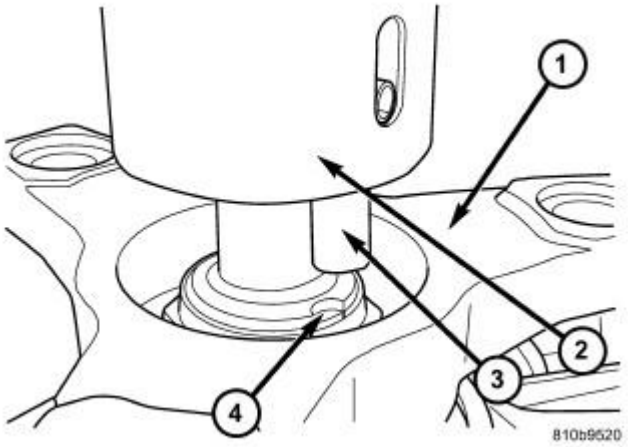

Fig. 142: Align Staking Tool 9078
Courtesy of CHRYSLER LLC

1 - PROPELLER SHAFT FLANGE
2 - STAKING TOOL 9078
3 - ALIGNMENT PIN
4 - OUTPUT SHAFT NOTCH

9. Stake the output shaft nut to the output shaft as follows. Place the Staking Tool 9078 (2) and Driver Handle C-4171 onto the output shaft.
10. Rotate the Staking Tool 9078 (2) until the alignment pin (3) engages the output shaft notch (4) .

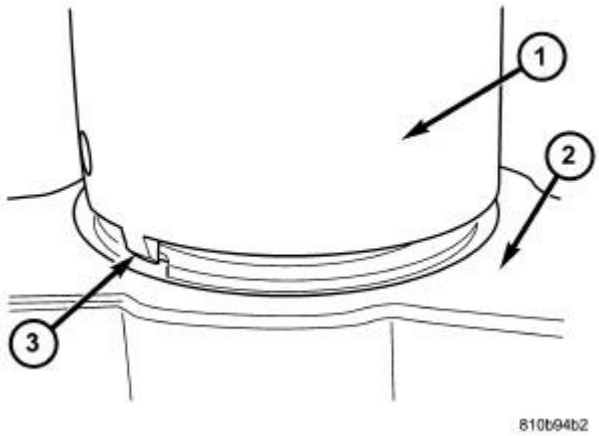

Fig. 143: Stake Output Shaft Nut
Courtesy of CHRYSLER LLC

1 - STAKING TOOL 9078
2 - PROPELLER FLANGE
3 - STAKING PIN

11. Press downward on the staking tool (1) until the staking pin (3) contacts the output shaft nut flange (2) .
12. Strike the Driver handle C-4171 with a suitable hammer until the output shaft nut is securely staked to the output shaft.
13. Install the propeller shaft. Refer to **Differential and Driveline/Propeller Shaft - Installation** .

CABLE, PARK LOCK

DESCRIPTION

DESCRIPTION

The Park Lock Cable is no longer used. The ignition lock out is controlled by means of a Gated Park Switch (electronic micro switch) located in the shifter assembly.

CABLE, SHIFT

DIAGNOSIS AND TESTING

GEARSHIFT CABLE

1. The floor shifter lever and gate positions should be in alignment with all transmission PARK, NEUTRAL, and gear detent positions.
2. Engine starts must be possible with floor shift lever in PARK or NEUTRAL gate positions only. Engine starts must not be possible in any other gear position.
3. With floor shift lever handle push-button not depressed and lever in:
    a. PARK position - Apply forward force on center of handle and remove pressure. Engine starts must be possible.
    b. PARK position - Apply rearward force on center of handle and remove pressure. Engine starts must be possible.
    c. NEUTRAL position - Normal position. Engine starts must be possible.
    d. NEUTRAL position - Engine running and brakes applied, apply forward force on center of shift handle. Transmission shall not be able to shift from NEUTRAL to REVERSE.

REMOVAL

REMOVAL

1. Shift transmission into PARK.
2. Raise vehicle.

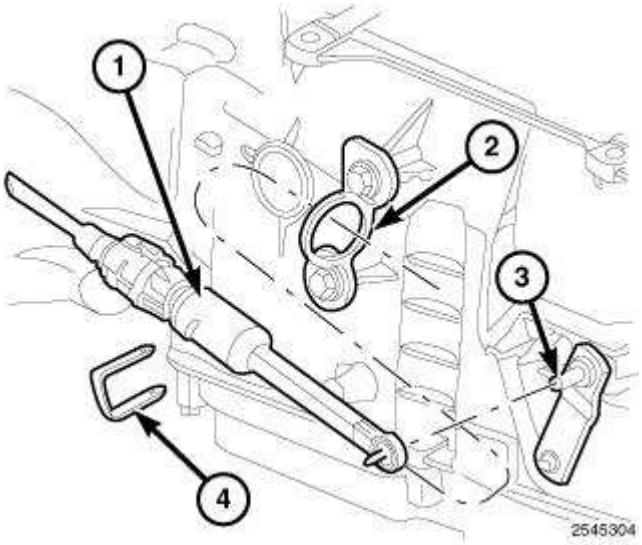

Fig. 144: Identifying Gearshift Cable, Eyelet & Manual Shift Lever
Courtesy of CHRYSLER LLC

3. Remove the gearshift cable retaining clip (4) (if equipped).
4. Disconnect the gearshift cable (1) from the shift lever (3), and remove cable from bracket (2).
5. Lower the vehicle.
6. Remove the floor console. Refer to **Body/Interior/CONSOLE, Floor - Removal** as necessary to access the shift mechanism and cables.
7. If necessary, remove the bolts holding the shield, covering the gearshift and park lock cables, to the floorpan and remove the shield.

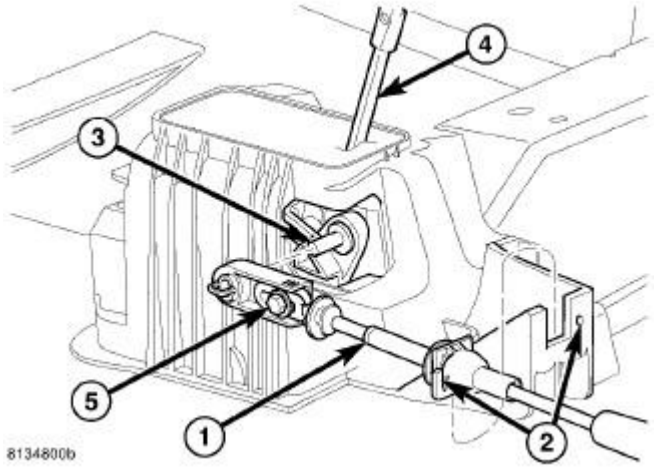

Fig. 145: Gearshift Cable at Shifter Assembly
Courtesy of CHRYSLER LLC

1 - GEARSHIFT CABLE 2 - CABLE RETAINER AND NOTCH

3 - SHIFTER ASSEMBLY PIN 4 - SHIFT LEVER 5 - ADJUSTMENT BOLT

8. Remove the gearshift cable (1) from the shift lever pin (3).
9. Remove the gearshift cable retainer (2) from the notch (2) in the shifter assembly.

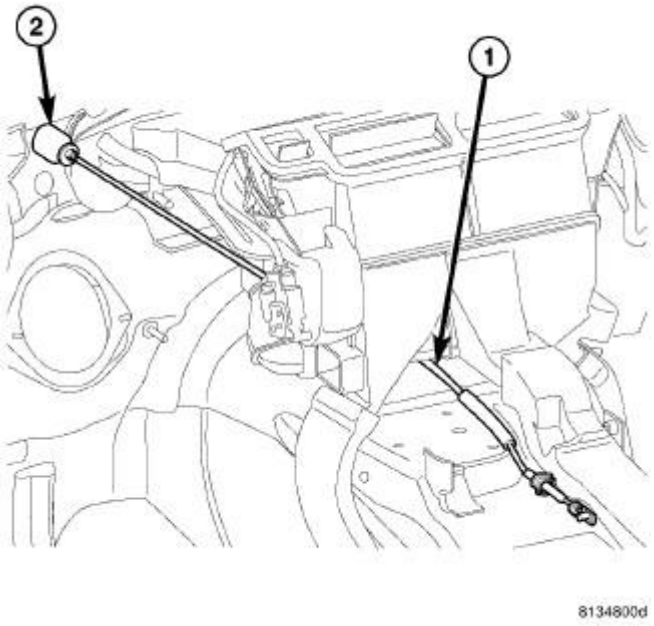

Fig. 146: Gearshift Cable Grommet
Courtesy of CHRYSLER LLC

1 - GEARSHIFT CABLE 2 - GROMMET

10. From under the hood, remove the shift cable grommet (2) from the dash panel.
11. Remove gearshift cable (1) from vehicle.

INSTALLATION

INSTALLATION

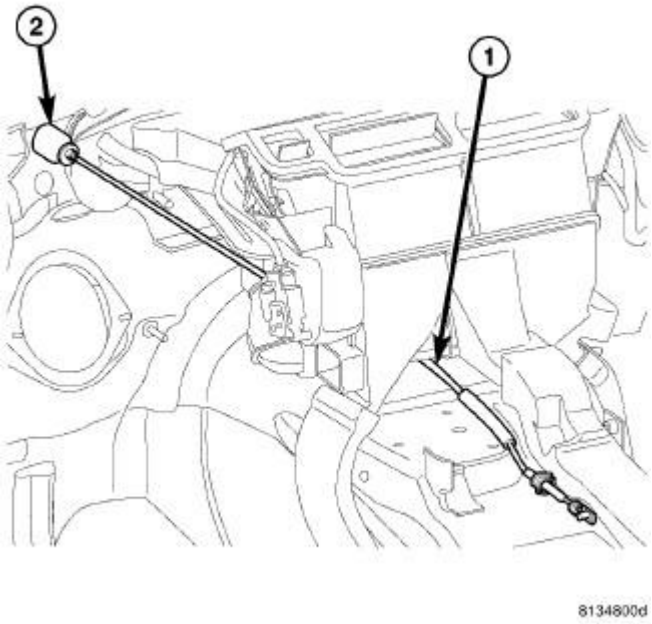

Fig. 147: Gearshift Cable Grommet
Courtesy of CHRYSLER LLC

1 - GEARSHIFT CABLE 2 - GROMMET

1. From under the hood, route the gearshift cable (1) through the dash panel and toward the shifter assembly.
2. From under the hood, install the grommet (2) to the dash panel.

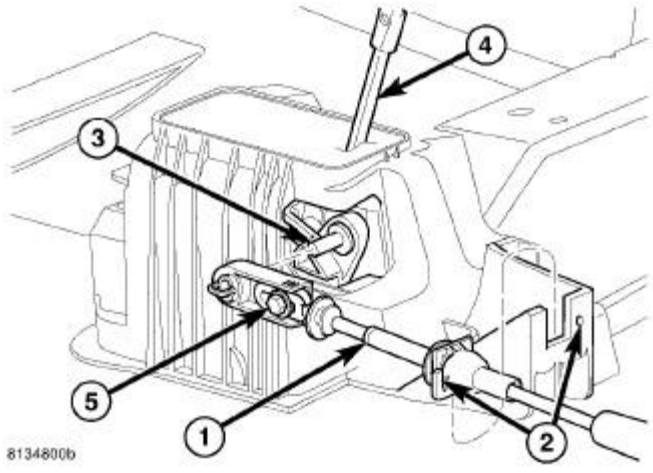

Fig. 148: Gearshift Cable at Shifter Assembly
Courtesy of CHRYSLER LLC

1 - GEARSHIFT CABLE 2 - CABLE RETAINER AND NOTCH 3 - SHIFTER ASSEMBLY PIN 4 - SHIFT LEVER 5 - ADJUSTMENT BOLT

3. Engage the gearshift cable retainer (2) into the notch (2) in the shifter assembly.
4. Install the gearshift cable (1) onto the shift lever pin (3).
5. Loosen the cable adjustment screw (5), if necessary.

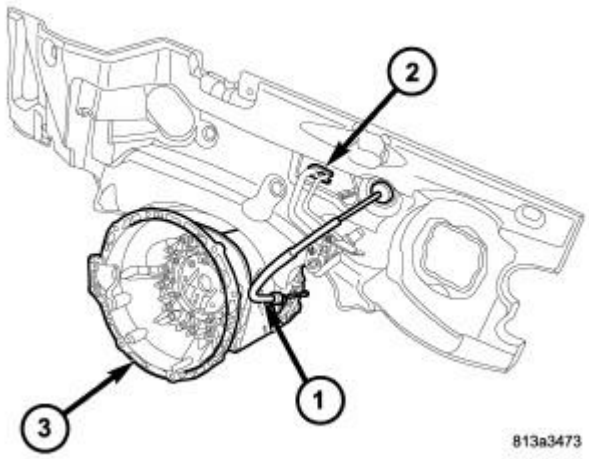

Fig. 149: Gearshift Cable Routing
Courtesy of CHRYSLER LLC

1 - GEARSHIFT CABLE 2 - HEATER HOSES 3 - TRANSMISSION

6. From under the hood, route the gearshift cable (1) forward of the air conditioning lines and the heater hoses (2) and toward the transmission (3) manual lever.
7. Raise vehicle.
8. Verify that the transmission is in the PARK position by trying to rotate the propeller shaft. If the propeller shaft rotates, move the transmission manual shift lever to the full rearward position and turn the propeller shaft until the PARK system is engaged.

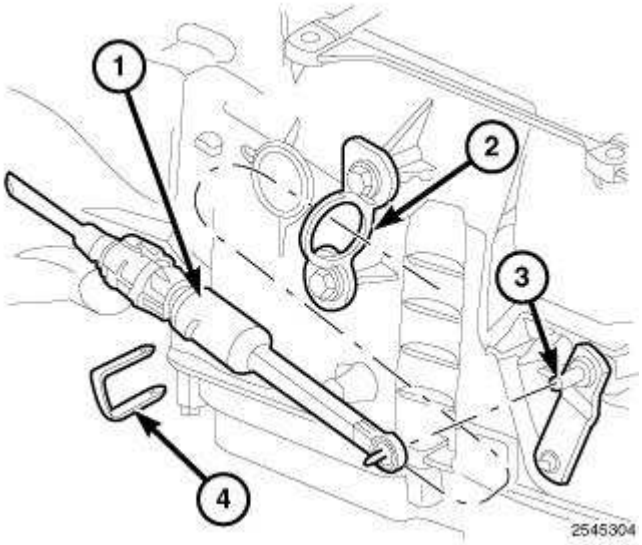

Fig. 150: Identifying Gearshift Cable, Eyelet & Manual Shift Lever
Courtesy of CHRYSLER LLC

9. Route the gearshift cable (1) through the mounting bracket (2).
10. Engage the gearshift cable (1) eyelet onto the transmission manual shift lever (3).
11. Install the gearshift cable retaining clip (4) (if equipped).
12. Lower vehicle.
13. Verify that the shifter is in the PARK position.

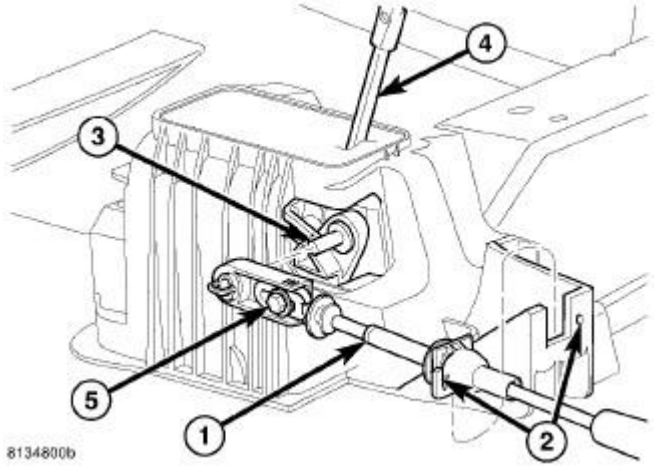

Fig. 151: Gearshift Cable at Shifter Assembly
Courtesy of CHRYSLER LLC

1 - GEARSHIFT CABLE
2 - CABLE RETAINER AND NOTCH
3 - SHIFTER ASSEMBLY PIN
4 - SHIFT LEVER

5 - ADJUSTMENT BOLT

14. Tighten the adjustment screw (5) to 7 N.m (65 in.lbs.).
15. Verify correct shifter operation.
16. If necessary, install the shield, covering the gearshift and park lock cables, to the floorpan and install the bolts to hold the shield to the floorpan.
17. Install the floor console. Refer to **Body/Interior/CONSOLE, Floor - Installation** , lower instrument panel components. Refer to **Body/Instrument Panel/BEZEL, Instrument Panel - Installation** and dash panel insulation pad as necessary.

ADJUSTMENTS

ADJUSTMENTS - GEARSHIFT CABLE

Check adjustment by starting the engine in PARK and NEUTRAL. Adjustment is CORRECT if the engine starts only in these positions. Adjustment is INCORRECT if the engine starts in one but not both positions. If the engine starts in any position other than PARK or NEUTRAL, or if the engine will not start at all, the park/neutral position contact may be faulty.

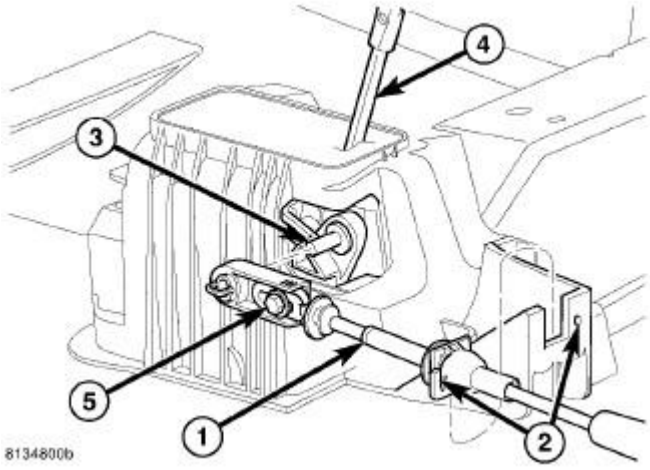

Fig. 152: Gearshift Cable at Shifter Assembly
Courtesy of CHRYSLER LLC

1 - GEARSHIFT CABLE
2 - CABLE RETAINER AND NOTCH
3 - SHIFTER ASSEMBLY PIN
4 - SHIFT LEVER
5 - ADJUSTMENT BOLT

1. Shift transmission into PARK.
2. Remove floor console as necessary for access to the shift cable adjustment. Refer to **Body/Interior/CONSOLE, Floor - Removal** .

3. Loosen the shift cable adjustment screw (5) .
4. Raise vehicle.
5. Unsnap cable eyelet from transmission shift lever.
6. Verify transmission shift lever is in PARK detent by moving lever fully rearward. Last rearward detent is PARK position.
7. Verify positive engagement of transmission park lock by attempting to rotate propeller shaft. Shaft will not rotate when park lock is engaged.
8. Snap cable eyelet onto transmission shift lever.

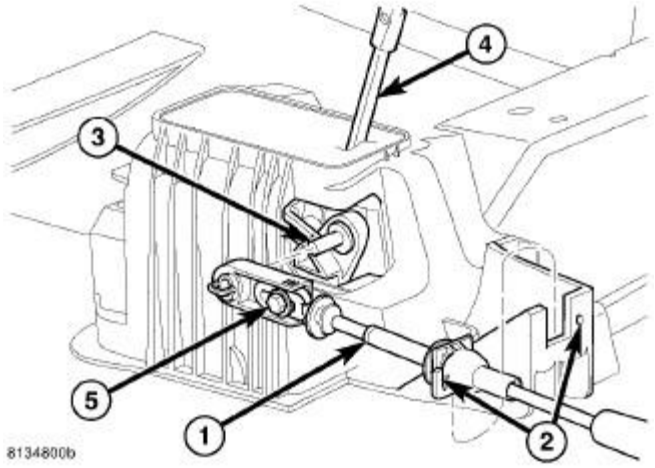

Fig. 153: Gearshift Cable at Shifter Assembly
Courtesy of CHRYSLER LLC

1 - GEARSHIFT CABLE
2 - CABLE RETAINER AND NOTCH
3 - SHIFTER ASSEMBLY PIN
4 - SHIFT LEVER
5 - ADJUSTMENT BOLT

9. Lower vehicle
10. Tighten the shift cable adjustment screw (5) to 7 N.m (65 in.lbs.).
11. Verify correct operation.
12. Install any floor console components removed for access. Refer to **Body/Interior/CONSOLE, Floor - Installation** .

CLUTCH, B1

DISASSEMBLY

DISASSEMBLY

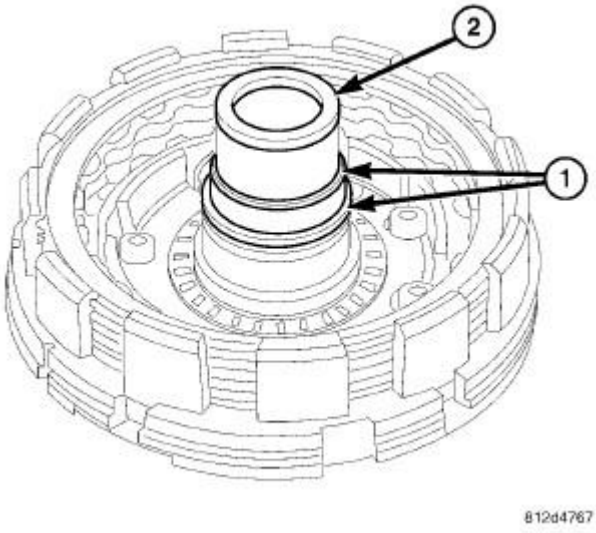

Fig. 154: Identifying Teflon Rings At Plate Carrier Hub
Courtesy of CHRYSLER LLC

1 - TEFLON RINGS 2 - PLATE CARRIER HUB

1. Remove the Teflon rings (1) from the B1 plate carrier hub (2).

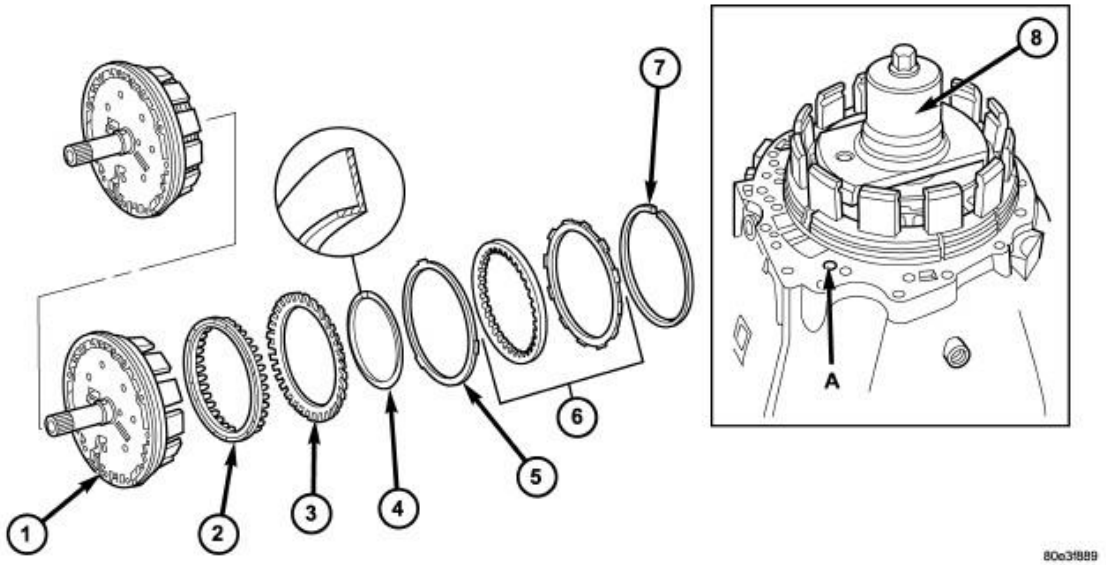

Fig. 155: Holding Clutch B1
Courtesy of CHRYSLER LLC

1 - HOLDING CLUTCH B1	5 - DISC SPRING

OUTER CARRIER	
2 - PISTON	6 - MULTIPLE DISC PACK
3 - DISC SPRING	7 - SNAP-RING
4 - SNAP-RING	8 - MULTI-USE SPRING COMPRESSOR 8900

2. Remove snap-ring (7) .
3. Remove multiple-disc pack (6) and disc spring (5) from outer multiple-disc carrier. Note which clutch disc is removed just prior to the disc spring (5) for reassembly. If the clutch discs are re-used, this disc must be returned to its original position on top of the disc spring.
4. Place the Multi-use Spring Compressor 8900 (8) on disc spring (3) and compress the spring until the snap-ring (4) is exposed.
5. Remove snap-ring (4).
6. Remove piston (2) from the outer multiple-disc carrier by carefully blowing compressed air into the bore (A).

ASSEMBLY

ASSEMBLY

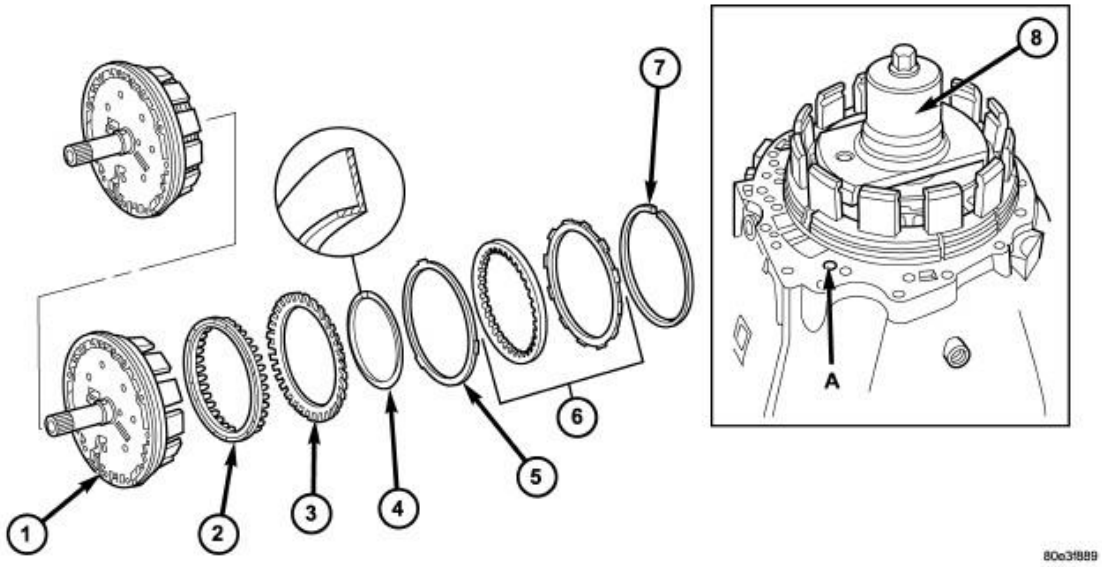

Fig. 156: Holding Clutch B1
Courtesy of CHRYSLER LLC

1 - HOLDING CLUTCH B1 OUTER CARRIER	5 - DISC SPRING
2 - PISTON	6 - MULTIPLE DISC PACK
3 - DISC SPRING	7 - SNAP-RING
4 - SNAP-RING	8 - MULTI-USE SPRING COMPRESSOR 8900

NOTE: Check vulcanized gasket, replace if necessary.

1. Install piston (2) in outer multiple-disc carrier (1).
2. Place compressor (8) on disc spring (3) and compress until the groove of the snap-ring is exposed.

   NOTE: The collar of the snap-ring must point towards the multiple-disc pack. After installing, check snap-ring for correct seat.

3. Insert snap-ring (4) .

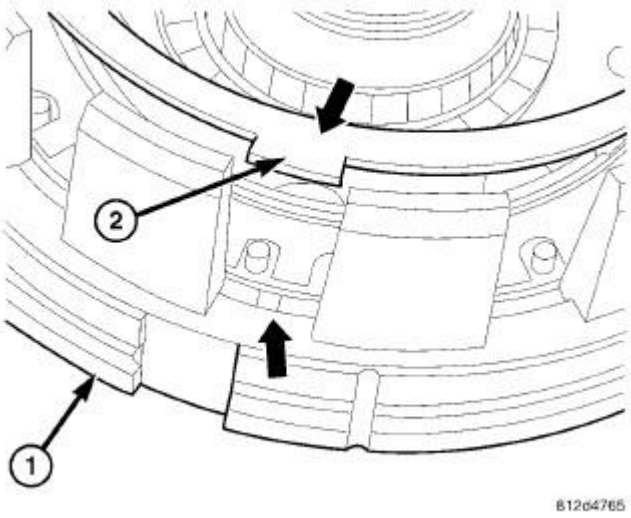

Fig. 157: Install the Disc Spring
Courtesy of CHRYSLER LLC

1 - B1 MULTIPLE-DISC CARRIER
2 - DISC SPRING

4. Insert disc spring (2) in the outer multiple-disc carrier. Observe the disc spring (2) installation position. The lugs of the disc spring (2) washer must align with the 3 raised pads (arrow in illustration) of the B1 multiple-disc carrier (1). The cone of the spring washer must point downwards.

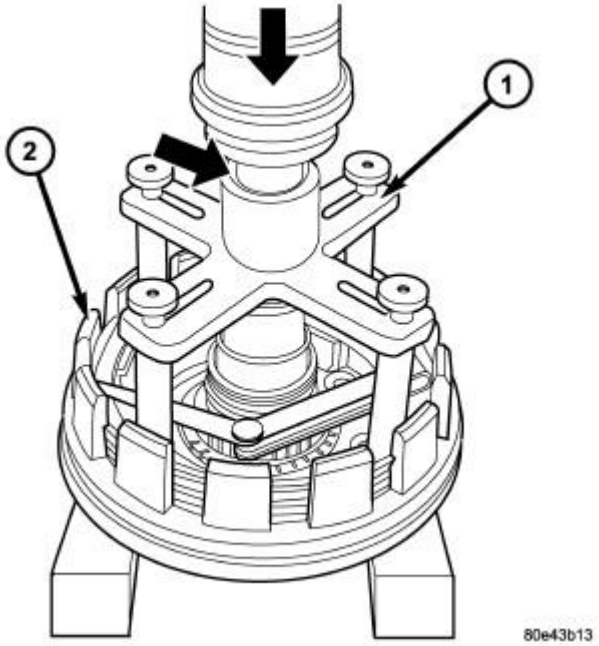

Fig. 158: Measure B1 Clutch Clearance
Courtesy of CHRYSLER LLC

1 - PRESSING TOOL 8901A 2 - B1 CLUTCH OUTER CARRIER

5. Insert the multiple-disc pack (6) in the outer multiple-disc carrier and measure the clutch clearance.

NOTE: Pay attention to the sequence of discs. If the original clutch discs are reused, be sure to return the disc identified on disassembly as belonging on top of the disc spring (5) to its original location.

CAUTION: When working with double sided friction discs, an externally lugged steel plate is installed first, followed by a friction disc, and continuing on until all the required discs are installed. When working with single sided friction discs, an externally lugged disc is installed first, followed by an internally lugged disc, and continuing on until all the required discs are installed. All single sided discs are installed with the friction side up.

NOTE: Place new friction multiple-discs in ATF fluid for one hour before installing.

6. Measure B1 clutch clearance by mounting Pressing Tool 8901A (1) on outer multiple disc.
7. Using a lever press, compress pressing tool to the upper most line marked 1200 N (the marking

ring is still visible, see small arrow in illustration).

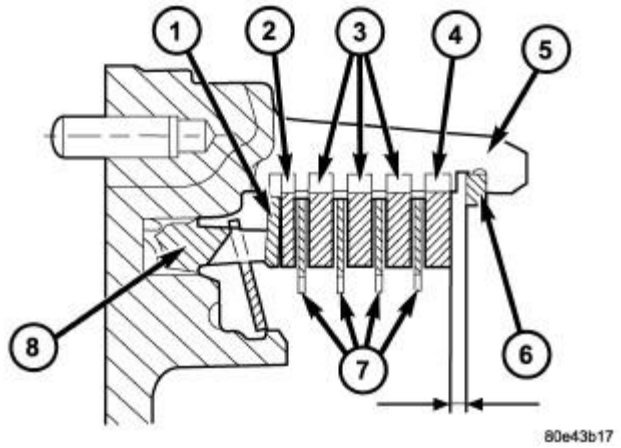

Fig. 159: B1 Clutch Stack-up - Double Sided Discs
Courtesy of CHRYSLER LLC

1 - DISC SPRING
2 - OUTER MULTIPLE DISC - 1.8 mm (0.071 IN.)
3 - OUTER MULTIPLE DISC - 2.8 mm (0.110 IN.)
4 - OUTER MULTIPLE DISC - 4.0 mm (0.158 IN.)
5 - B1 OUTER CARRIER
6 - SNAP-RING
7 - INNER MULTIPLE DISCS
8 - PISTON

8. For transmissions using double sided friction discs, use a feeler gauge to determine the play "L" at three points between the snap-ring (6) and outer multiple-disc (4). During the measurement, the snap-ring (6) must contact the upper bearing surface of the groove in the outer multiple-disc carrier (5). The correct clearance for transmissions using double sided friction discs is 2.3-2.7 mm (0.091-0.106 in.) for two friction disc versions, 2.7-3.1 mm (0.106-0.122 in.) for three disc versions, and 3.0-3.4 mm (0.118-0.134 in.) for four disc versions.
9. Adjust with snap-ring (6), if necessary. Snap-rings are available in thicknesses of 2.6 mm (0.102 in.), 2.9 mm (0.114 in.), 3.2 mm (0.126 in.), 3.5 mm (0.138 in.), 3.8 mm (0.150 in.), and 4.1 mm (0.162 in.).

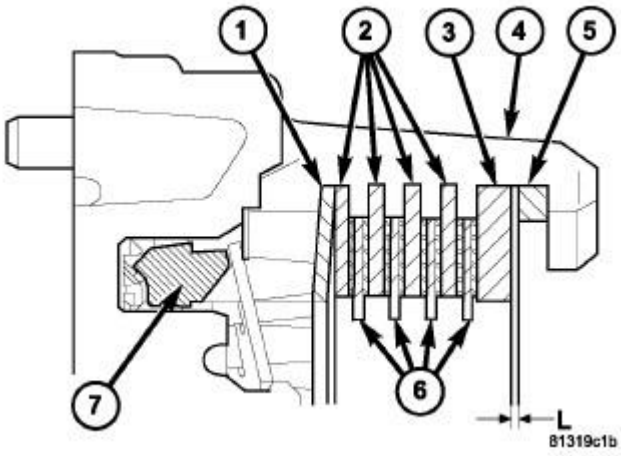

Fig. 160: B1 Clutch Stack-up - Single Sided Discs
Courtesy of CHRYSLER LLC

1 - DISC SPRING
2 - OUTER MULTIPLE DISC
3 - OUTER MULTIPLE DISC - 4.0 mm (0.158 IN.)
4 - B1 OUTER CARRIER
5 - SNAP-RING
6 - INNER MULTIPLE DISCS
7 - PISTON

10. For transmissions using single sided friction discs, use a feeler gauge to determine the play "L" at three points between the snap-ring (5) and outer multiple-disc (3). During the measurement, the snap-ring (5) must contact the upper bearing surface of the groove in the outer multiple-disc carrier (4). The correct clearance is 2.2-2.6 mm (0.087-0.102 in.) for four friction disc versions, 2.4-2.8 mm (0.095-0.110 in.) for six disc versions, and 2.6-3.0 mm (0.102-0.118 in.) for eight disc versions.
11. Adjust with snap-ring (5), if necessary. Snap-rings are available in thicknesses of 2.6 mm (0.102 in.), 2.9 mm (0.114 in.), 3.2 mm (0.126 in.), 3.5 mm (0.138 in.), 3.8 mm (0.150 in.), and 4.1 mm (0.162 in.).

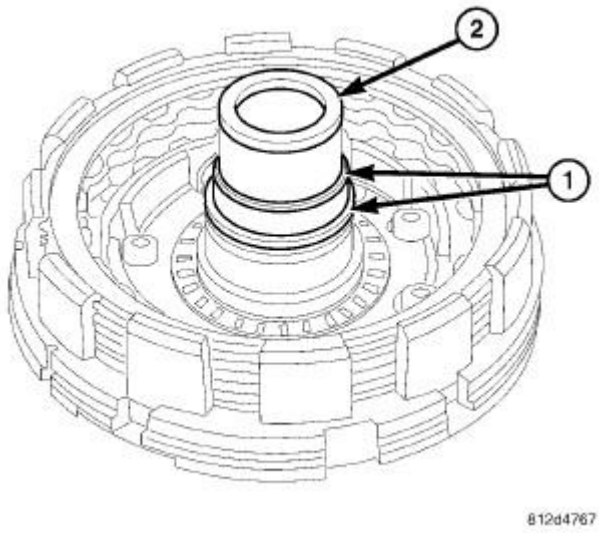

Fig. 161: Identifying Teflon Rings At Plate Carrier Hub
Courtesy of CHRYSLER LLC

1 - TEFLON RINGS 2 - PLATE CARRIER HUB

12. Install the teflon rings (1) onto the B1 plate carrier hub (2).
13. Coat Teflon rings (1) lightly with grease and insert in the groove so that the joint remains together.

CLUTCH, B2

DISASSEMBLY

DISASSEMBLY

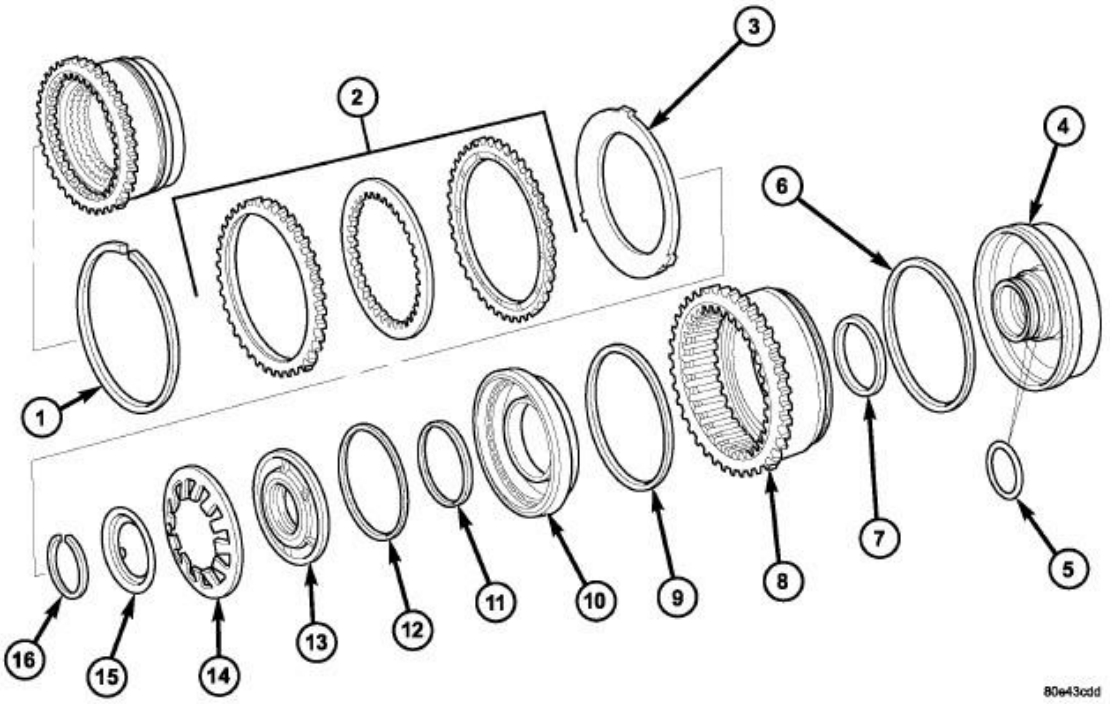

Fig. 162: Holding Clutch B2
Courtesy of CHRYSLER LLC

1 - SNAP-RING	9 - B2 PISTON SEALING RING
2 - MULTIPLE DISC PACK	10 - B2 PISTON
3 - DISC SPRING	11 - PISTON GUIDE SEALING RING
4 - B2 AND B3 PISTON GUIDE	12 - PISTON GUIDE SEALING RING
5 - O-RING	13 - PISTON GUIDE RING
6 - B3 PISTON SEALING RING	14 - PISTON BACK PRESSURE DISC SPRING
7 - B3 PISTON SEALING RING	15 - SPRING PLATE
8 - B3 PISTON/B2 OUTER DISC CARRIER	16 - SNAP-RING

1. Remove snap ring (1) .
2. Take multiple-disc pack B2 (2) and disc spring (3) out of the outer multiple-disc carrier B2 (8). The outer multiple-disc carrier for the multi-disc holding clutch B2 is the piston for the multiple-disc holding clutch B3 at the same time. Note which clutch disc is removed just prior to the disc spring (3) for reassembly. If the clutch discs are re-used, this disc must be returned to its original position on top of the disc spring.
3. Place the Multi-use Spring Compressor 8900 on the spring disc (14) and compress the spring until the groove for the snap-ring is exposed.
4. Remove snap-ring (16) .
5. Remove spring plate (15) and disc spring (14).

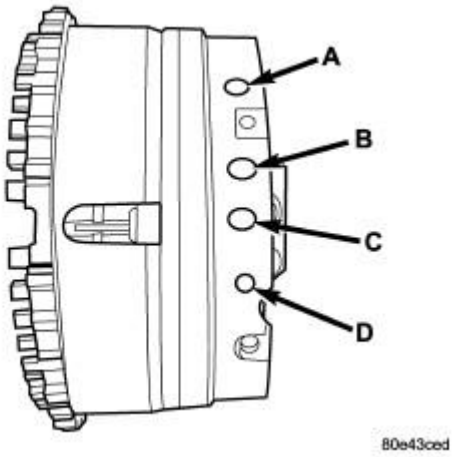

Fig. 163: B2 Clutch Oil Supply Locations
Courtesy of CHRYSLER LLC

A - B3 PISTON
B - B2 PISTON GUIDE RING SIDE
C - K3 CLUTCH FEED
D - B2 PISTON SHIFT SIDE

6. Separate piston guide ring (13) and the B2 piston (10) from the B3 piston (8) by blowing compressed air into the bore (**D**) .
7. Press piston guide ring (13) out of the B2 piston (10).
8. Separate piston guide (4) from the B3 piston (8) by blowing compressed air into the bore (**A**) .

ASSEMBLY

ASSEMBLY

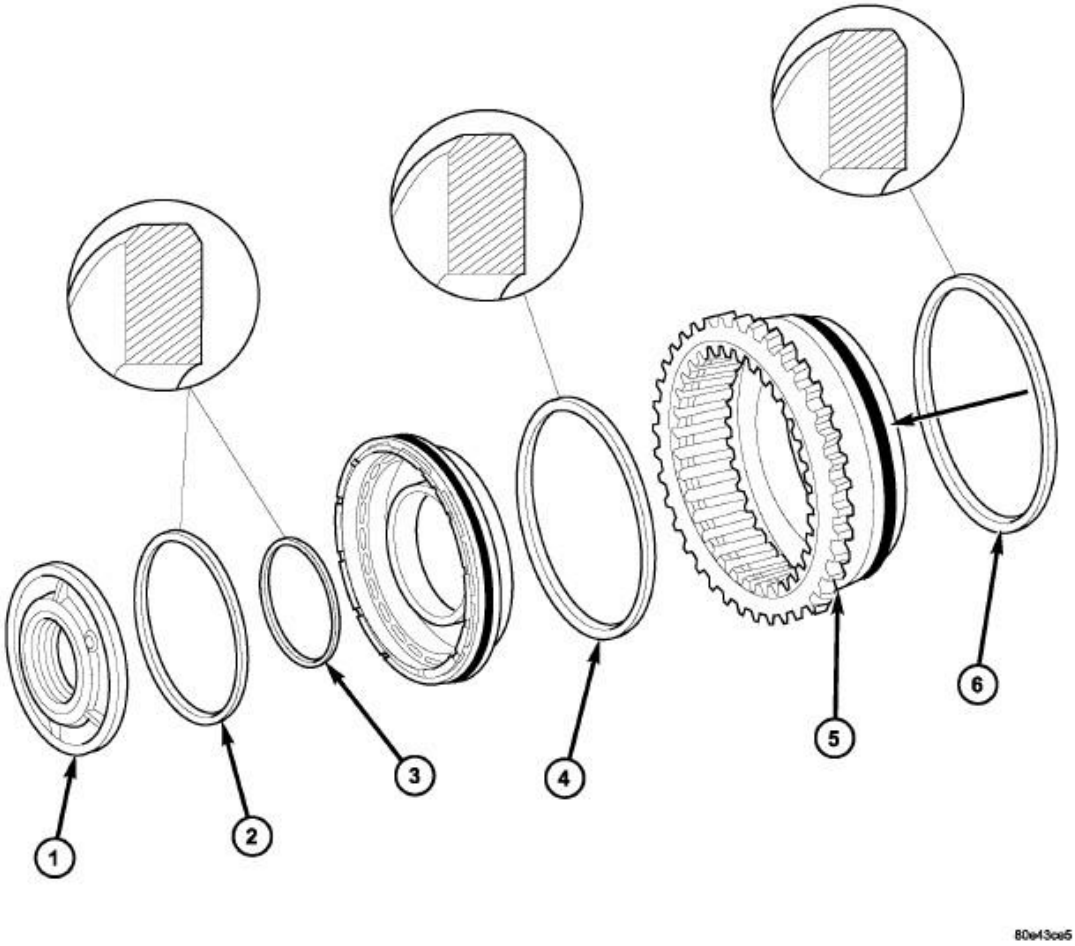

Fig. 164: Holding Clutch B2/B3 Seals
Courtesy of CHRYSLER LLC

1 - PISTON GUIDE RING	4 - B2 PISTON SEALING RING
2 - PISTON GUIDE RING SEALING RING	5 - B3 PISTON/B2 OUTER DISC CARRIER
3 - PISTON GUIDE RING SEALING RING	6 - B3 PISTON SEALING RING

1. Check all sealing rings (2-4, 6) , replace if necessary. The rounded off edges on the sealing rings (2, 4, 6) must point outwards.

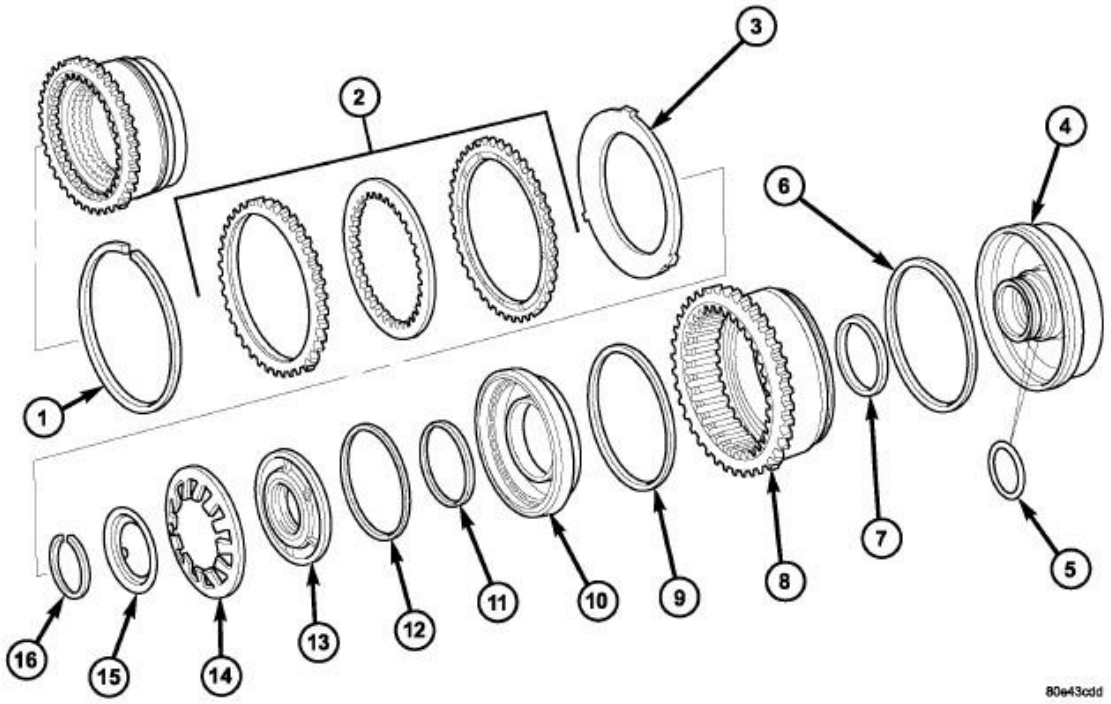

Fig. 165: Holding Clutch B2
Courtesy of CHRYSLER LLC

1 - SNAP-RING	9 - B2 PISTON SEALING RING
2 - MULTIPLE DISC PACK	10 - B2 PISTON
3 - DISC SPRING	11 - PISTON GUIDE SEALING RING
4 - B2 AND B3 PISTON GUIDE	12 - PISTON GUIDE SEALING RING
5 - O-RING	13 - PISTON GUIDE RING
6 - B3 PISTON SEALING RING	14 - PISTON BACK PRESSURE DISC SPRING
7 - B3 PISTON SEALING RING	15 - SPRING PLATE
8 - B3 PISTON/B2 OUTER DISC CARRIER	16 - SNAP-RING

2. Assemble piston guide (4) and B3 piston (8) in the correct position. Verify that the missing tooth in the B3 piston/B2 outer disc carrier (8) is aligned with the centerline of the two threaded holes in the B2 and B3 piston guide (4).
3. Insert B2 piston (10) in B3 piston (8).

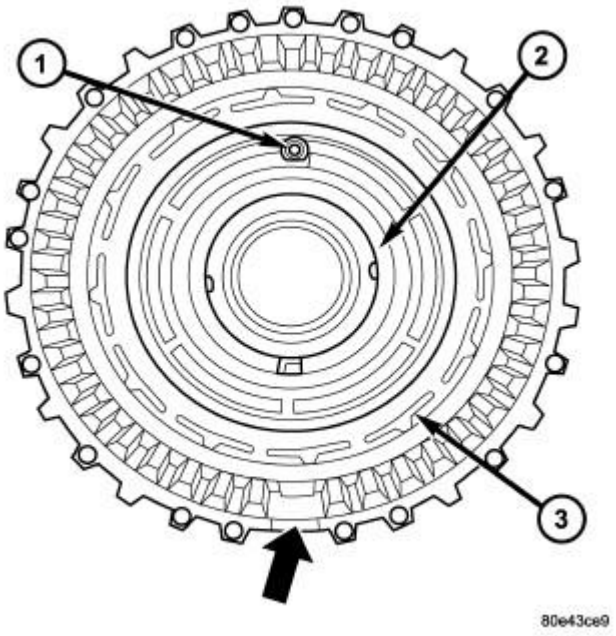

Fig. 166: B2 Piston and Piston Guide Ring
Courtesy of CHRYSLER LLC

1 - VALVE 2 - PISTON GUIDE RING 3 - B2 PISTON

4. Insert piston guide ring (2) . The valve (1) in the piston guide ring must be on top.
5. Insert disc spring (14) and spring plate (15). Insert disc spring with the curvature towards the spring plate
6. Place Multi-use Spring Compressor 8900 on the disc spring (14) and compress the spring until the groove for the snap-ring is exposed.
7. Insert snap-ring (16).

NOTE: **Pay attention to sequence of discs. If the original clutch discs are reused, be sure to return the disc identified on disassembly as belonging on top of the disc spring (3) to its original location. Place new friction multiple-discs in ATF fluid for one hour before installing.**

8. Insert disc spring (3) and multiple-disc pack (2) in the B2 outer multiple-disc carrier.
9. Insert snap-ring (1).

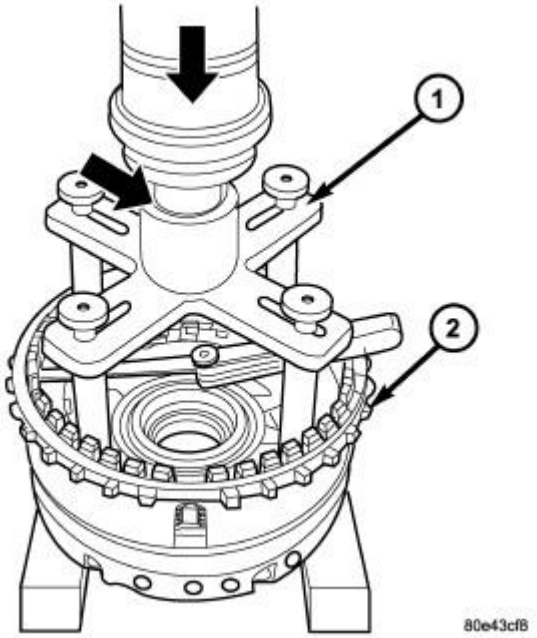

Fig. 167: Measure B2 Clutch Clearance
Courtesy of CHRYSLER LLC

1 - PRESSING TOOL 8901A 2 - B3 PISTON / B2 OUTER DISC CARRIER

NOTE: During the measurement the snap-ring must contact the upper bearing surface of the groove in the outer multiple-disc carrier.

10. Measure the B2 clutch pack clearance by mounting the Pressing Tool 8901A (1) on outer multiple disc.
11. Using a lever press, compress pressing tool to the upper most line marked 1200 N (the marking ring is still visible, see small arrow in illustration).

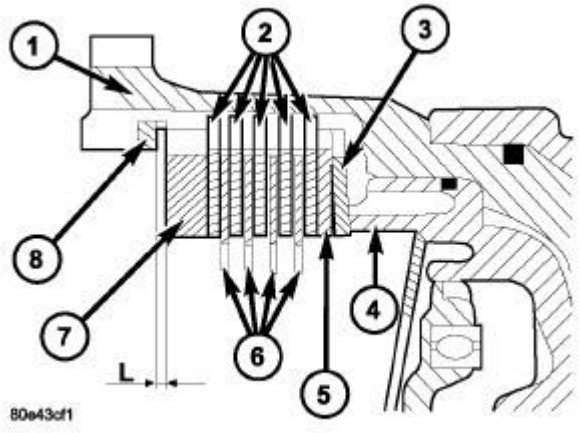

Fig. 168: B2 Clutch Stack-up
Courtesy of CHRYSLER LLC

1 - B2 OUTER DISC CARRIER
2 - FRICTION DISCS
3 - DISC SPRING
4 - B2 PISTON
5 - OUTER MULTIPLE DISC - 1.8 MM (0.071 IN.)
6 - OUTER MULTIPLE DISC - 1.8 MM (0.071 IN.)
7 - OUTER MULTIPLE DISC - 6.5 MM (0.256 IN.)
8 - SNAP-RING

12. Using a feeler gauge, determine the play "L" at three points between the snap-ring (8) and outer multiple-disc (7).
13. The correct clutch clearance is 1.9-2.3 mm (0.075-0.091 in.) for the four friction disc versions and 2.0-2.4 mm (0.079-0.095 in.) for the five disc versions.
14. Adjust with snap-ring (8), if necessary. Snap-rings are available in thicknesses of 2.9 mm (0.114 in.), 3.2 mm (0.126 in.), 3.5 mm (0.138 in.), 3.8 mm (0.150 in.), and 4.1 mm (0.162 in.).

FREEWHEELING CLUTCH IDENTIFICATION

DESCRIPTION

DESCRIPTION

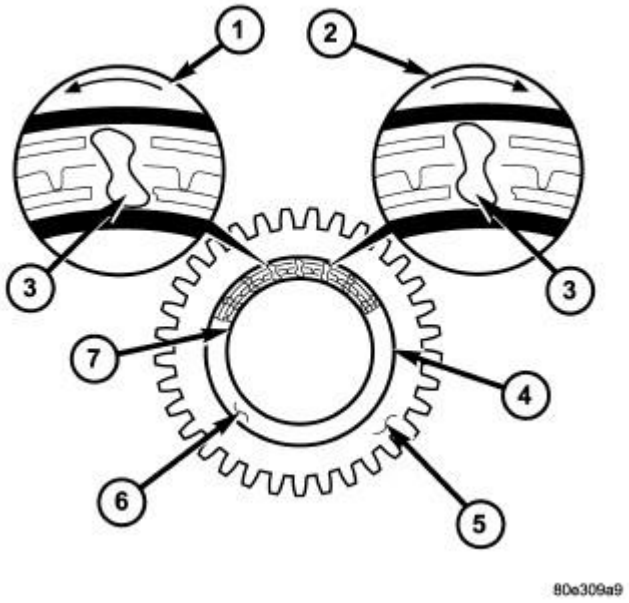

Fig. 169: Freewheeling Clutch
Courtesy of CHRYSLER LLC

1 - ROTATION DIRECTION "A"
2 - ROTATION DIRECTION "B"
3 - LOCKING ELEMENTS
4 - OUTER RACE
5 - FRONT OR REAR SUN GEAR
6 - LOCKING ELEMENT CAGE
7 - INNER RACE

Freewheeling clutches are installed in the front planetary gear set between the sun gear and the stator shaft, and in the rear planetary gear set between the sun gear and the intermediate shaft.

The freewheel consists of an outer race (4), an inner race (7), a number of locking elements (3) and a cage (6) for these locking elements.

OPERATION

OPERATION

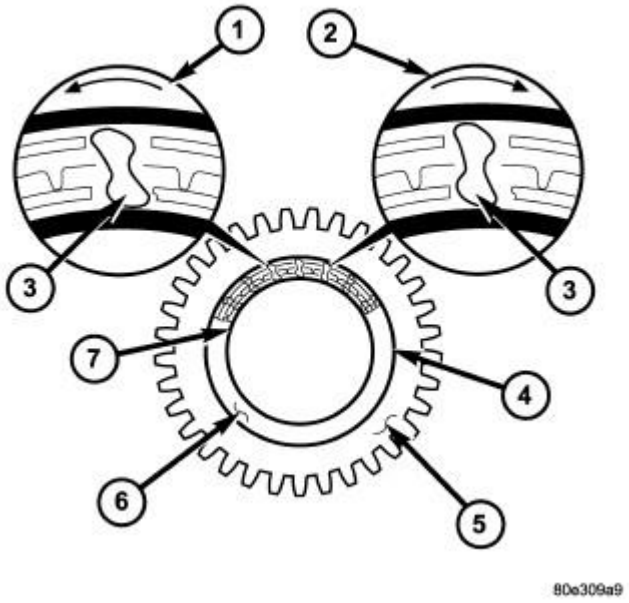

Fig. 170: Freewheeling Clutch
Courtesy of CHRYSLER LLC

1 - ROTATION DIRECTION "A"
2 - ROTATION DIRECTION "B"
3 - LOCKING ELEMENTS
4 - OUTER RACE
5 - FRONT OR REAR SUN GEAR
6 - LOCKING ELEMENT CAGE
7 - INNER RACE

The freewheeling clutch optimizes individual gearshifts. They lock individual elements of a planetary gear set together or against the transmission housing in one direction of rotation to allow the torque to be transmitted.

If the inner race (7) of the freewheeling clutch is locked and the outer race (4) turns counter-clockwise (1), the locking elements (3) adopt a diagonal position on account of their special contours, allowing the freewheel function. The inner race (4) slides under the locking elements (3) with minimal friction. If the rotation of the outer race (4) changes to clockwise (2), the locking elements (3) stand up and lock the outer and inner races (4, 7) together.

DISASSEMBLY

DISASSEMBLY

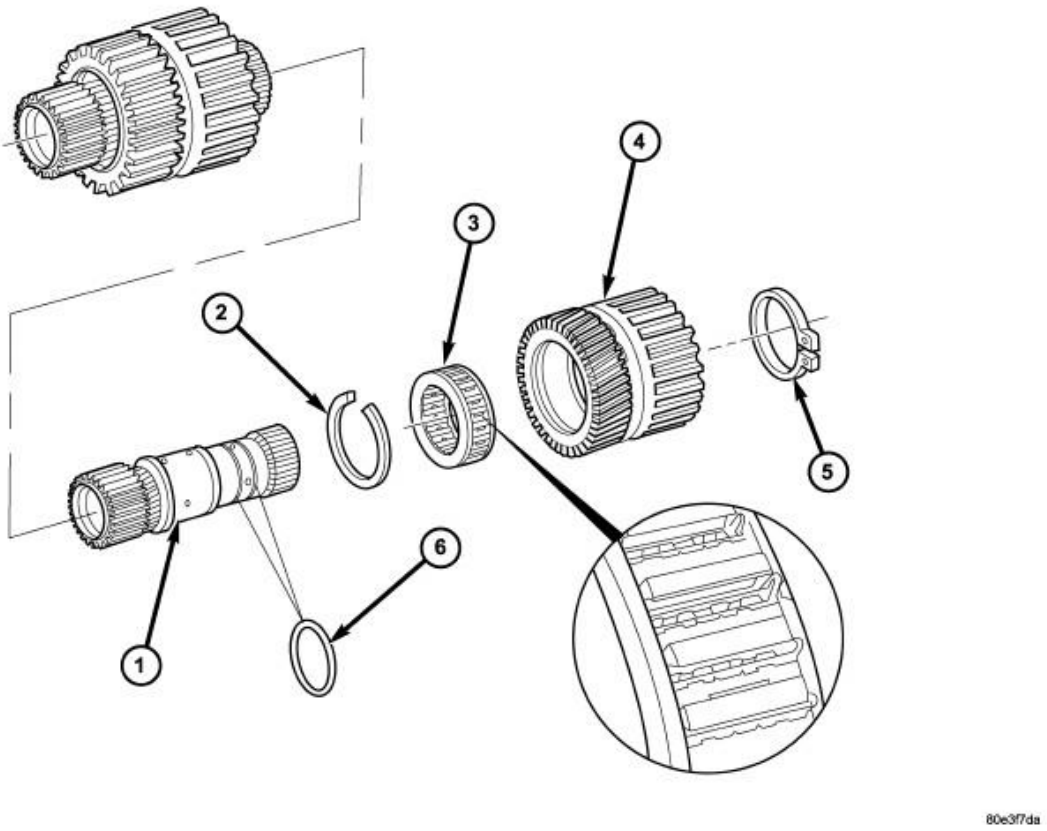

Fig. 171: Freewheeling Clutch F2
Courtesy of CHRYSLER LLC

1 - HOLLOW SHAFT	4 - K3 INNER DISC CARRIER AND REAR PLANETARY SUN GEAR
2 - F2 CLUTCH SNAP-RING	5 - RETAINING RING
3 - FREEWHEELING CLUTCH F2	6 - O-RINGS

1. Remove retaining ring (5) from hollow shaft (1).
2. Remove rear sun gear (4) with the K3 internally toothed disk carrier and rear freewheeling clutch F2 (3).
3. Remove snap-ring (2) for freewheel.
4. Press freewheeling clutch (3) out of sun gear.
5. Check O-rings (6), replace if necessary.

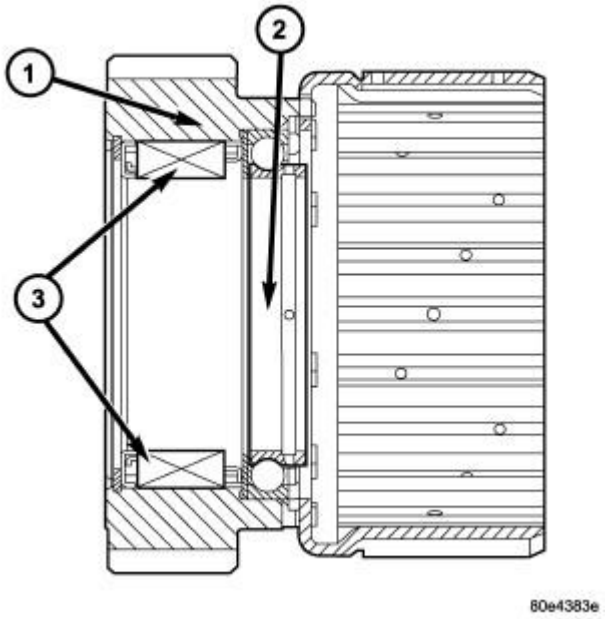

Fig. 172: Freewheeling Clutch F2 Anti-Friction Bearing
Courtesy of CHRYSLER LLC

1 - K3 INNER DISC CARRIER AND REAR PLANETARY SUN GEAR
2 - ANTI-FRICTION BEARING
3 - FREEWHEELING CLUTCH F2

6. Check the anti-friction bearing (2) in the rear planetary sun gear for damage. Replace as necessary.

ASSEMBLY

ASSEMBLY

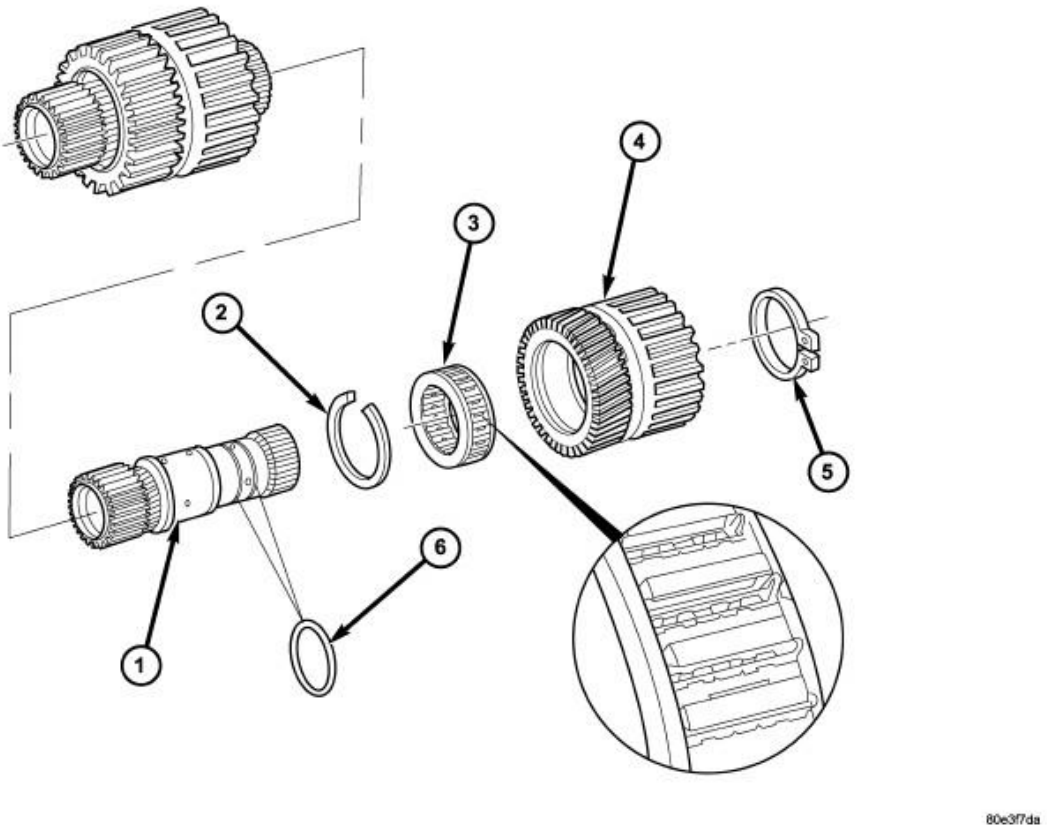

Fig. 173: Freewheeling Clutch F2
Courtesy of CHRYSLER LLC

1 - HOLLOW SHAFT	4 - K3 INNER DISC CARRIER AND REAR PLANETARY SUN GEAR
2 - F2 CLUTCH SNAP-RING	5 - RETAINING RING
3 - FREEWHEELING CLUTCH F2	6 - O-RINGS

NOTE: The side of the freewheeling clutch F2 (3) with the markings (directional arrow in illustration, part number, etc.) must be up when the clutch is installed in the sun gear (4).

1. Press freewheeling clutch F2 (3) into sun gear (4).
2. Install snap-ring (2) for freewheeling clutch.
3. Check O-rings (6) on hollow shaft, replace if necessary.
4. Install rear sun gear (4) with K3 internally toothed disc carrier and rear freewheeling clutch (3) onto the hollow shaft.
5. Verify proper operation of the freewheeling clutch F2. When the assembly is held with the F2 clutch snap-ring upward, it should be possible to rotate the hollow shaft counter-clockwise.
6. Install retaining ring (5) onto hollow shaft (1).

INPUT CLUTCH LOCATION

DESCRIPTION

DESCRIPTION

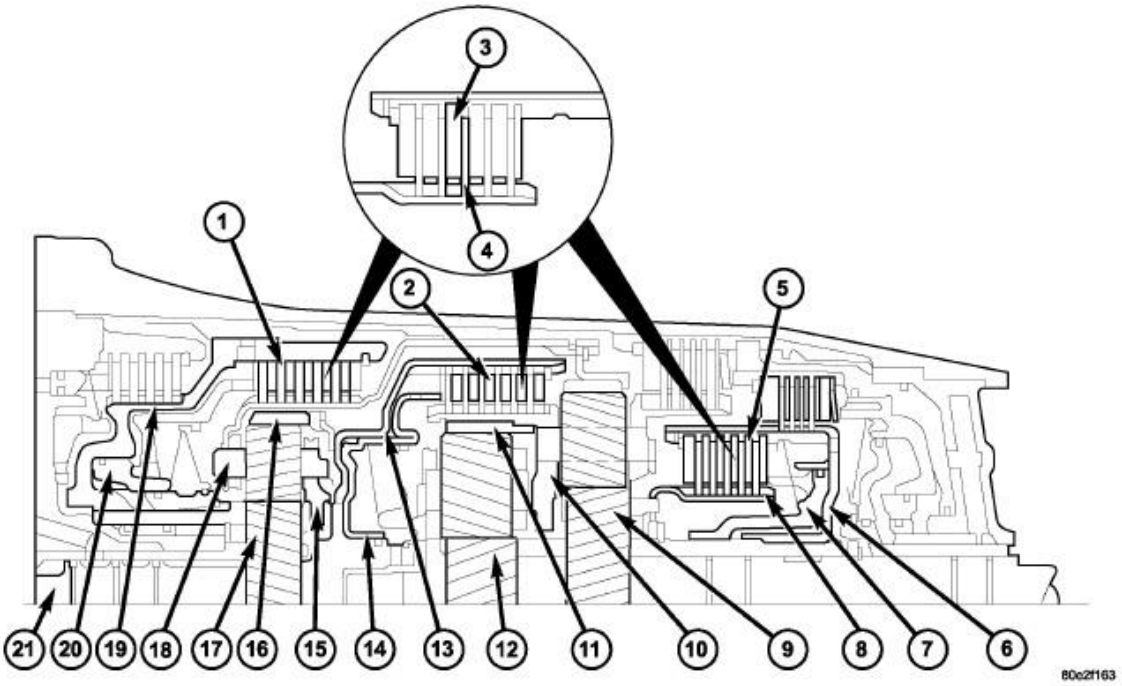

Fig. 174: Input Clutches
Courtesy of CHRYSLER LLC

1 - K1 CLUTCH	12 - CENTER PLANETARY GEARSET SUN GEAR
2 - K2 CLUTCH	13 - K2 CLUTCH EXTERNALLY TOOTHED DISC CARRIER
3 - EXTERNALLY TOOTHED DISC	14 - K2 CLUTCH PISTON
4 - INTERNALLY TOOTHED DISC	15 - FRONT PLANETARY GEARSET PLANETARY CARRIER
5 - K3 CLUTCH	16 - FRONT PLANETARY GEARSET ANNULUS GEAR
6 - K3 CLUTCH EXTERNALLY TOOTHED DISC CARRIER	17 - FRONT PLANETARY GEARSET SUN GEAR
7 - K3 CLUTCH PISTON	18 - K1 CLUTCH INTERNALLY TOOTHED DISC CARRIER
8 - K3 CLUTCH INTERNALLY TOOTHED DISC CARRIER	19 - K1 CLUTCH EXTERNALLY TOOTHED DISC CARRIER
9 - REAR PLANETARY GEARSET SUN GEAR	20 - K1 CLUTCH PISTON
10 - CENTER PLANETARY GEARSET	21 - INPUT SHAFT

PLANETARY CARRIER 11 - CENTER PLANETARY GEARSET ANNULUS GEAR	

Three multi-plate input clutches (1, 2, 5) , the front, middle and rear multi-plate clutches K1 (1), K2 (2), and K3 (5), are located in the planetary gear sets in the transmission housing.

A multi-plate input clutch consists of a number of internally toothed discs (4) on an internally toothed disc carrier and externally toothed discs (3) on an externally toothed disc carrier.

OPERATION

OPERATION

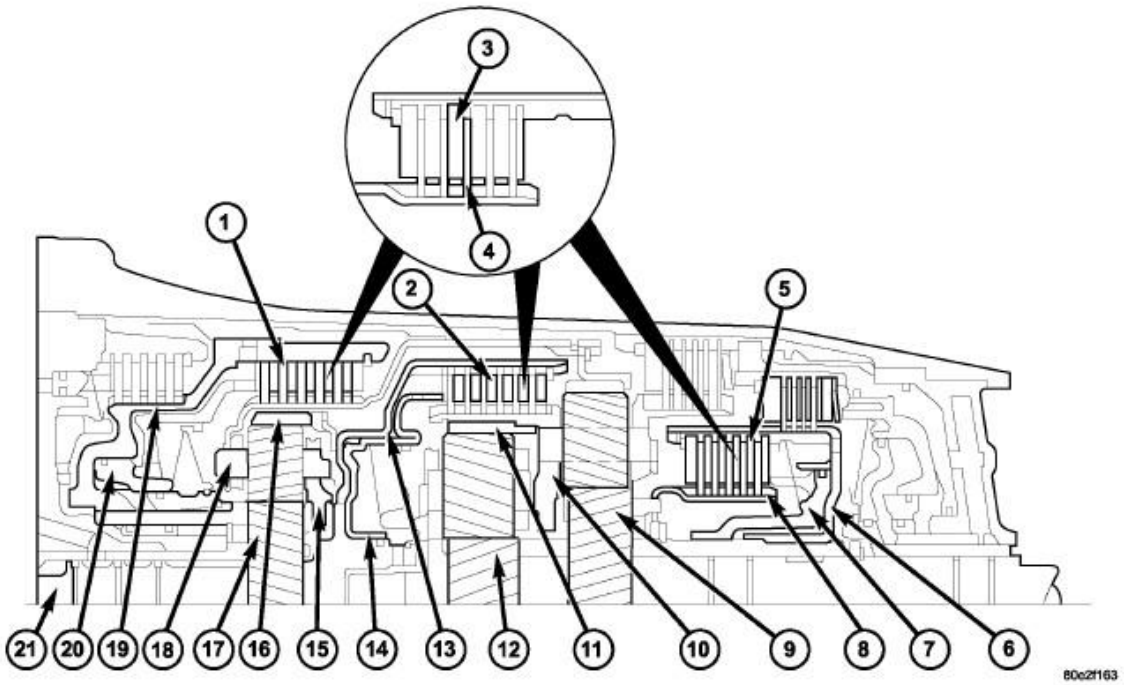

Fig. 175: Input Clutches
Courtesy of CHRYSLER LLC

1 - K1 CLUTCH	12 - CENTER PLANETARY GEARSET SUN GEAR
2 - K2 CLUTCH	13 - K2 CLUTCH EXTERNALLY TOOTHED DISC CARRIER
3 - EXTERNALLY TOOTHED DISC	14 - K2 CLUTCH PISTON
4 - INTERNALLY TOOTHED DISC	15 - FRONT PLANETARY GEARSET PLANETARY CARRIER
5 - K3 CLUTCH	16 - FRONT PLANETARY GEARSET ANNULUS GEAR
6 - K3 CLUTCH EXTERNALLY TOOTHED	17 - FRONT PLANETARY GEARSET SUN

DISC CARRIER	GEAR
7 - K3 CLUTCH PISTON	18 - K1 CLUTCH INTERNALLY TOOTHED DISC CARRIER
8 - K3 CLUTCH INTERNALLY TOOTHED DISC CARRIER	19 - K1 CLUTCH EXTERNALLY TOOTHED DISC CARRIER
9 - REAR PLANETARY GEARSET SUN GEAR	20 - K1 CLUTCH PISTON
10 - CENTER PLANETARY GEARSET PLANETARY CARRIER	21 - INPUT SHAFT
11 - CENTER PLANETARY GEARSET ANNULUS GEAR	

The input clutches produce a non-positive locking connection between two elements of a planetary gear set or between one element from each of two planetary gear sets in order to transmit the drive torque.

If the piston (20) on multi-plate clutch K1 (1) is subjected to oil pressure, it presses the internal and external discs of the disc set together. The sun gear (17) is locked with the planetary carrier (15) via the externally toothed disc carrier (19) and the internally toothed disc carrier (18). The front planetary gear set is thus locked and turns as a closed unit.

If the multi-plate clutch K2 (2) is actuated via the piston (14), the piston compresses the disc set. The annulus gear (16) of the front planetary gear set is locked with the annulus gear (11) of the center planetary gear set via the externally toothed disc carrier (13) and the center planetary carrier (10) on which the internally toothed discs are seated. Annulus gear (16) and annulus gear (11) turn at the same speed as the input shaft (21)

If the multi-plate clutch K3 (5) is actuated via the piston (7), the piston compresses the disc set. The sun gear (12) of the center planetary gear set is locked with the sun gear (9) of the rear planetary gear set via the externally toothed disc carrier (6) and the internally toothed disc carrier (8). Sun gear (12) and sun gear (9) turn at the same speed.

CLUTCH, K1

DISASSEMBLY

DISASSEMBLY

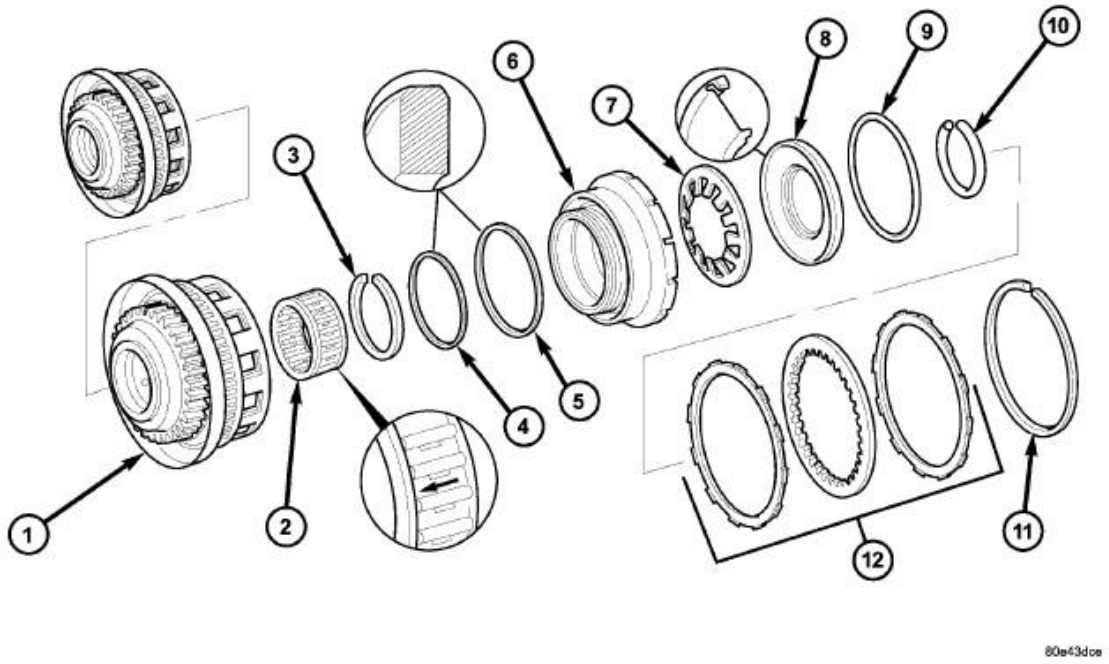

Fig. 176: Input Clutch K1 Components
Courtesy of CHRYSLER LLC

1 - K1 OUTER DISC CARRIER	7 - DISC SPRING
2 - FREEWHEELING CLUTCH F1	8 - SPRING PLATE
3 - SNAP-RING	9 - SPRING PLATE SEALING RING
4 - OUTER DISC CARRIER SEALING RING	10 - SNAP-RING
5 - PISTON SEALING RING	11 - SNAP-RING
6 - PISTON	12 - MULTIPLE DISC PACK - REFER TO TEXT FOR CORRECT ASSEMBLY ORDER

1. Remove snap-ring (11) from outer multiple-disc carrier (1).
2. Take multiple-disc pack (12) out of outer multiple-disc carrier (1). Note which clutch disc is removed just prior to the spring plate (8) for reassembly. If the clutch discs are re-used, this disc must be returned to its original position on top of the spring plate.

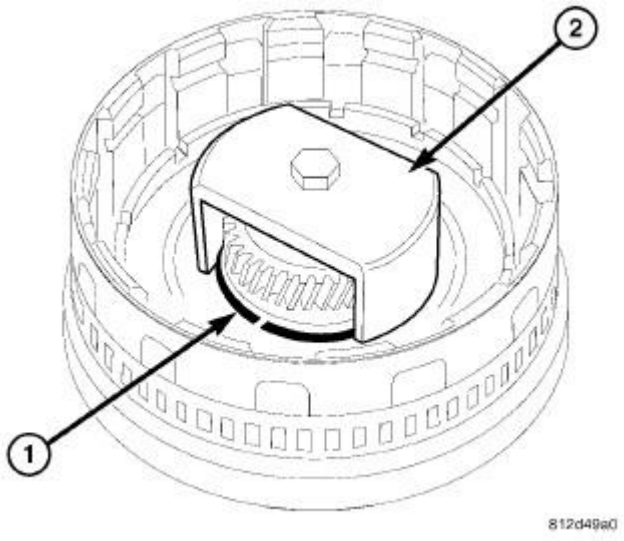

Fig. 177: Compressing Disc Spring
Courtesy of CHRYSLER LLC

1 - SNAP-RING 2 - MULTI-USE SPRING COMPRESSOR 8900

3. Place Multi-use Spring Compressor 8900 (2) on the spring plate and compress the spring until the snap-ring (1) is exposed.
4. Remove snap-ring (1).
5. Take out disc spring (7) and remove piston (6) by carefully blowing compressed air into the drilled oil feed passage.
6. Remove snap-ring (3) and take out front freewheeling clutch F1 (2). Take care when removing the F1 clutch to prevent the clutch sprags from falling out. If this occurs, the clutch must be replaced.

ASSEMBLY

ASSEMBLY

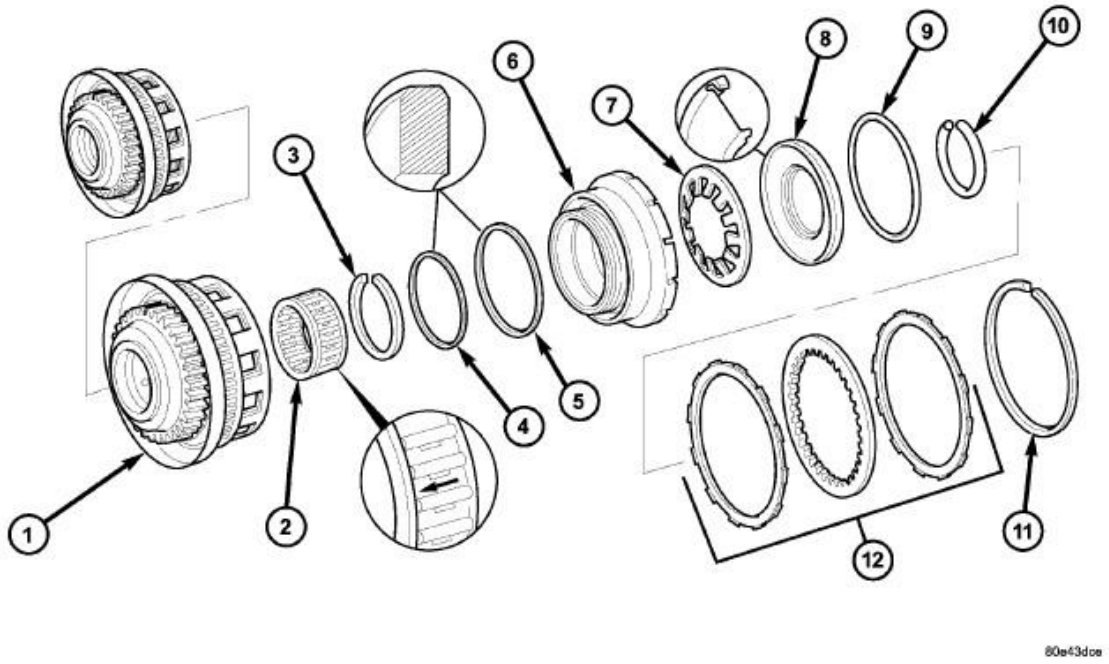

Fig. 178: Input Clutch K1 Components
Courtesy of CHRYSLER LLC

1 - K1 OUTER DISC CARRIER	7 - DISC SPRING
2 - FREEWHEELING CLUTCH F1	8 - SPRING PLATE
3 - SNAP-RING	9 - SPRING PLATE SEALING RING
4 - OUTER DISC CARRIER SEALING RING	10 - SNAP-RING
5 - PISTON SEALING RING	11 - SNAP-RING
6 - PISTON	12 - MULTIPLE DISC PACK - REFER TO TEXT FOR CORRECT ASSEMBLY ORDER

1. Install piston (6) in the outer multiple-disc carrier (1). Check sealing rings (4 and 5), replace if necessary. The rounded off edges of the sealing rings must point outwards.
2. Insert disc spring (7) . Insert disc spring with the curvature towards the piston.
3. Insert spring plate (8). Insert spring plate with the curvature towards the sun gear. Check sealing ring (9), replace if necessary.

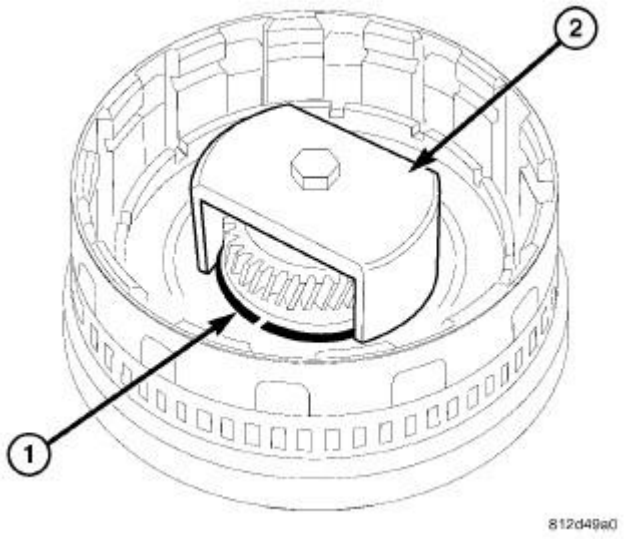

Fig. 179: Compressing Disc Spring
Courtesy of CHRYSLER LLC

1 - SNAP-RING 2 - MULTI-USE SPRING COMPRESSOR 8900

4. Place Multi-use Spring Compressor 8900 (2) on spring plate and compress the spring until the groove of the snap-ring (1) is exposed.
5. Insert snap-ring (1) . After installing, check snap-ring for correct seat.

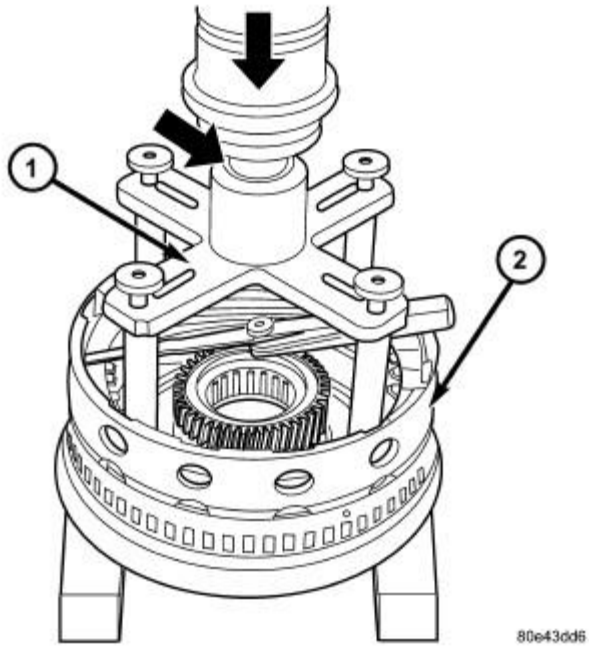

Fig. 180: Measuring K1 Clutch Clearance
Courtesy of CHRYSLER LLC

1 - PRESSING TOOL 8901A 2 - K1 OUTER DISC CARRIER

CAUTION: When working with double sided friction discs, an externally lugged steel plate is installed first, followed by a friction disc, and continuing on until all the required discs are installed. When working with single sided friction discs, an externally lugged disc is installed first, followed by an internally lugged disc, and continuing on until all the required discs are installed. All single sided discs are installed with the friction side up.

NOTE: Pay attention to the sequence of discs. If the original clutch discs are reused, be sure to return the disc identified on disassembly as belonging on top of the spring plate (8) to its original location.

NOTE: Place new friction multiple-discs in ATF fluid for one hour before installing.

6. Insert multiple-disc pack (12) in the outer multiple-disc carrier.
7. Insert snap-ring (11).
8. Measure the K1 clutch pack clearance by mounting Pressing Tool 8901A (1) on outer multiple disc.
9. Using a lever press, compress pressing tool to the upper most line marked 1200 N (the marking ring is still visible, see small arrow in illustration).

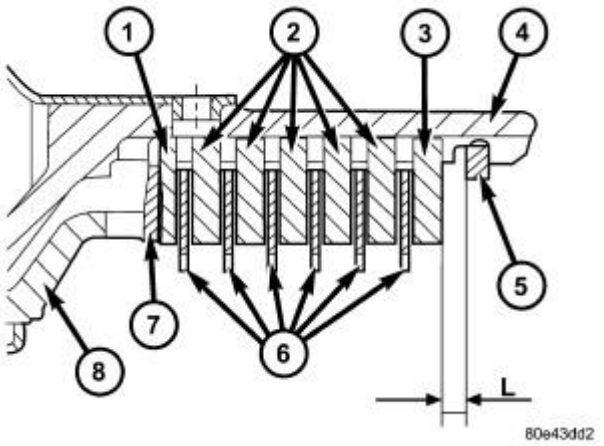

Fig. 181: Input Clutch K1 Stack-up - Double Sided Discs
Courtesy of CHRYSLER LLC

1 - OUTER MULTIPLE DISC - 1.8MM (0.071 IN.)
2 - OUTER MULTIPLE DISC - 2.8MM (0.110 IN.)
3 - OUTER MULTIPLE DISC - 4.0MM (0.158 IN.)
4 - K1 OUTER DISC CARRIER
5 - SNAP-RING
6 - FRICTION DISCS
7 - DISC SPRING
8 - PISTON

10. For transmissions using double sided friction discs, use a feeler gauge to determine the play "L" at three points between the snap-ring (5) and outer multiple-disc (3).
11. During the measurement the snap-ring (5) must contact the upper bearing surface of the groove in the outer multiple-disc carrier (4).
12. The correct clutch clearance for transmissions with double sided friction discs is 2.7-3.1 mm (0.106-0.122 in.) for three friction disc versions, 3.0-3.4 mm (0.118-0.134 in.) for four disc versions, 3.3-3.7 mm (0.130-0.146 in.) for five disc versions, and 3.6-4.0 mm (0.142-0.158 in.) for six disc versions.
13. Adjust with snap-ring (5), if necessary. Snap-rings are available in thicknesses of 2.6 mm (0.102 in.), 2.9 mm (0.114 in.), 3.2 mm (0.126 in.), 3.5 mm (0.138 in.), 3.8 mm (0.150 in.), and 4.1 mm (0.162 in.).
14. Insert front freewheeling clutch F1 (2) and fit snap-ring (3). The freewheeling clutch F1 (2) must be installed in the direction of the arrow in illustration.

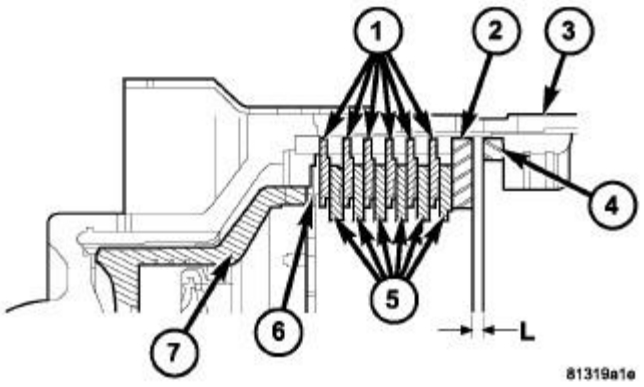

Fig. 182: Input Clutch K1 Stack-up - Single Sided Discs
Courtesy of CHRYSLER LLC

1 - OUTER MULTIPLE DISCS
2 - OUTER MULTIPLE DISC - 4.0MM (0.158 IN.)
3 - K1 OUTER DISC CARRIER
4 - SNAP-RING
5 - INNER MULTIPLE DISCS

6 - DISC SPRING
7 - PISTON

15. For transmissions using single sided friction discs, use a feeler gauge to determine the play "L" at three points between the snap-ring (4) and outer multiple-disc (2).
16. During the measurement the snap-ring (4) must contact the upper bearing surface of the groove in the outer multiple-disc carrier (3).
17. The correct clutch clearance for transmissions with single sided friction discs is 2.4-2.8 mm (0.095-0.110 in.) for six friction disc versions, 2.6-3.0 mm (0.102-0.118 in.) for eight disc versions, 2.8-3.2 mm (0.110-0.126 in.) for ten disc versions, and 2.9-3.3 mm (0.114-0.130 in.) for twelve disc versions.
18. Adjust with snap-ring (4), if necessary. Snap-rings are available in thicknesses of 2.6 mm (0.102 in.), 2.9 mm (0.114 in.), 3.2 mm (0.126 in.), 3.5 mm (0.138 in.), 3.8 mm (0.150 in.), and 4.1 mm (0.162 in.).
19. Insert front freewheeling clutch F1 (2) and fit snap-ring (3). The freewheeling clutch F1 (2) must be installed in the direction of the arrow in illustration.

CLUTCH, K2

DISASSEMBLY

DISASSEMBLY

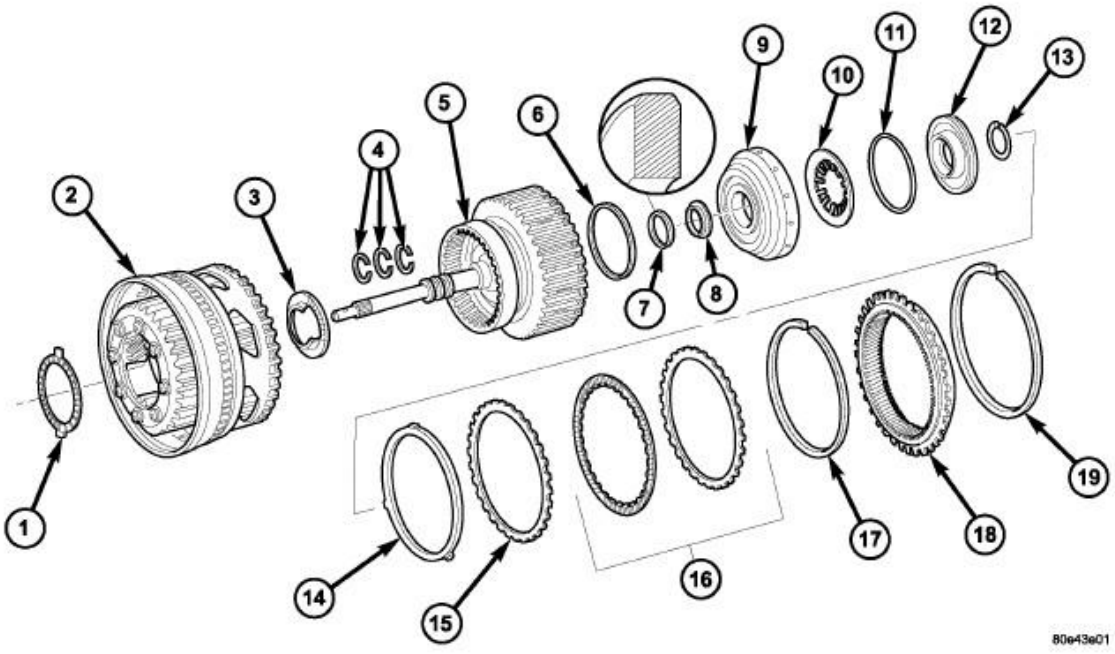

Fig. 183: Input Clutch K2 Components
Courtesy of CHRYSLER LLC

1 - NEEDLE ROLLER BEARING	11 - SPRING RETAINER SEALING - O-RING
2 - K1 INNER DISC CARRIER WITH INTEGRATED FRONT GEAR SET	12 - SPRING RETAINER
3 - THRUST BEARING	13 - SNAP-RING
4 - TORLON SEAL RINGS	14 - DISC SPRING
5 - INPUT SHAFT AND K2 CLUTCH	15 - EXTERNALLY TOOTHED PLATE - 1.8 MM (0.071 IN.)
6 - PISTON OUTER SEAL RING - O-RING	16 - MULTIPLE DISC PACK
7 - PISTON INNER SEAL RING	17 - SNAP-RING
8 - THRUST WASHER	18 - HOLLOW GEAR
9 - PISTON	19 - SNAP-RING
10 - DISC SPRING	-

1. Remove snap-ring (19) from the K1 inner multiple-disc carrier with integrated front gear set (2) and take off hollow gear (18).
2. Remove input shaft with clutch K2 (5) .
3. Remove needle thrust bearing (3).
4. Remove snap-ring (17) from K2 outer multiple-disc carrier.
5. Take out multiple-disc pack (16). Note which clutch disc is removed just prior to the disc spring (14) for reassembly. If the clutch discs are re-used, this disc must be returned to its original position on top of the disc spring.
6. Take out disc spring (14) .

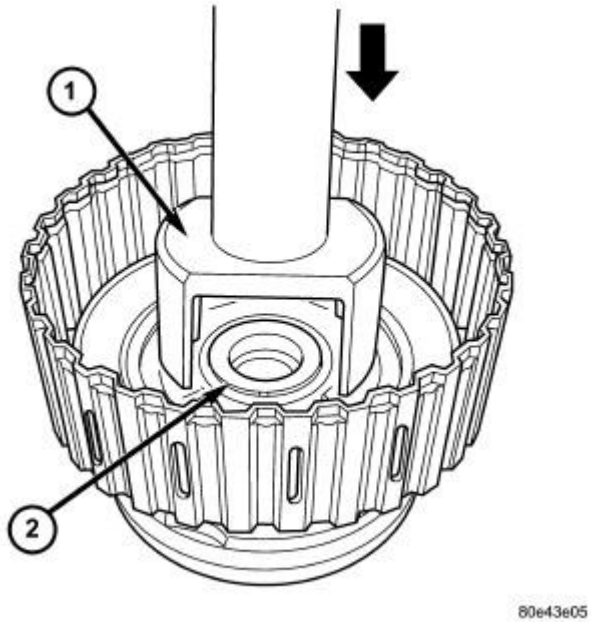

Fig. 184: Compressing K2 Clutch Spring
Courtesy of CHRYSLER LLC

1 - MULTI-USE SPRING COMPRESSOR 8900 2 - SNAP-RING

7. Fit Multi-use Spring Compressor 8900 (1) onto spring retainer (12) and press until snap-ring (2) is released.
8. Remove snap-ring (2) .
9. Take out disc spring (10) and pull piston (9) out of outer multiple-disc carrier.

ASSEMBLY

ASSEMBLY

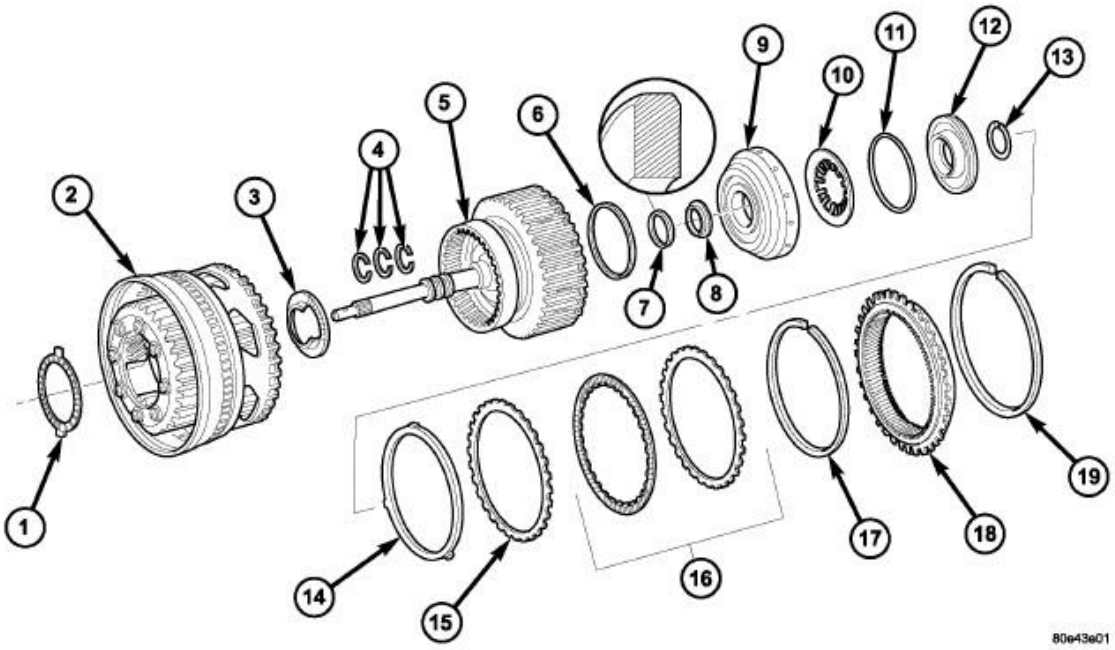

Fig. 185: Input Clutch K2 Components
Courtesy of CHRYSLER LLC

1 - NEEDLE ROLLER BEARING	11 - SPRING RETAINER SEALING - O-RING
2 - K1 INNER DISC CARRIER WITH INTEGRATED FRONT GEAR SET	12 - SPRING RETAINER
3 - THRUST BEARING	13 - SNAP-RING
4 - TORLON SEAL RINGS	14 - DISC SPRING
5 - INPUT SHAFT AND K2 CLUTCH	15 - EXTERNALLY TOOTHED PLATE - 1.8 MM (0.071 IN.)
6 - PISTON OUTER SEAL RING - O-RING	16 - MULTIPLE DISC PACK
7 - PISTON INNER SEAL RING	17 - SNAP-RING
8 - THRUST WASHER	18 - HOLLOW GEAR
9 - PISTON	19 - SNAP-RING

1. Install piston (9) in outer multiple-disc carrier. Inspect seals (6 and 7), replace if necessary. The rounded edges of the inner piston seal (7) must point to the outside.
2. Insert disk spring (10) and spring retainer (12). Insert disk spring (10) with curved side pointing toward spring retainer (12). Inspect seal (11) , replace if necessary.

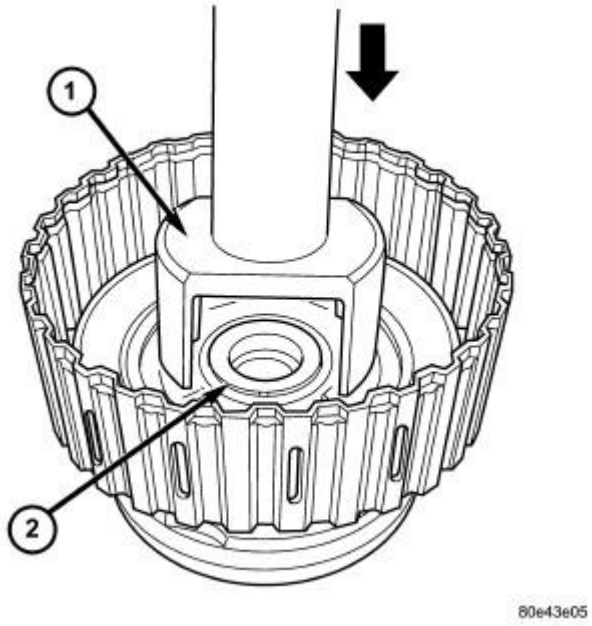

Fig. 186: Compressing K2 Clutch Spring
Courtesy of CHRYSLER LLC

1 - MULTI-USE SPRING COMPRESSOR 8900 2 - SNAP-RING

3. Place Multi-use Spring Compressor 8900 (1) on spring plate and press until the groove (2) of the snap-ring is exposed.
4. Insert snap-ring.
5. Insert disk spring (14).

NOTE: Pay attention to the sequence of discs. If the original clutch discs are reused, be sure to return the disc identified on disassembly as belonging on top of the disc spring (14) to its original location.

6. Insert multiple-disk set (16) into outer multiple-disk carrier.
7. Fit snap-ring (17).

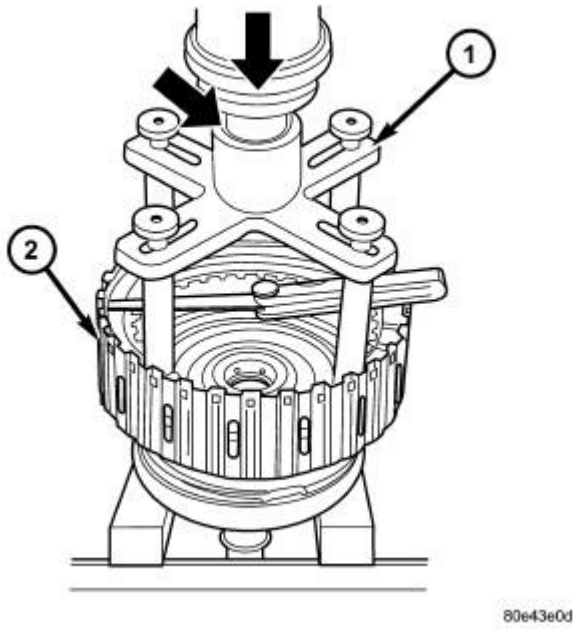

Fig. 187: Measuring K2 Clutch Clearance
Courtesy of CHRYSLER LLC

1 - PRESSING TOOL 8901A 2 - K1 INNER DISC CARRIER

8. Measure K2 clutch clearance by mounting Pressing Tool 8901A (1) on outer multiple disc.
9. Using a lever press, compress pressing tool to the upper most line marked 1200 N (the marking ring is still visible, see small arrow in illustration).

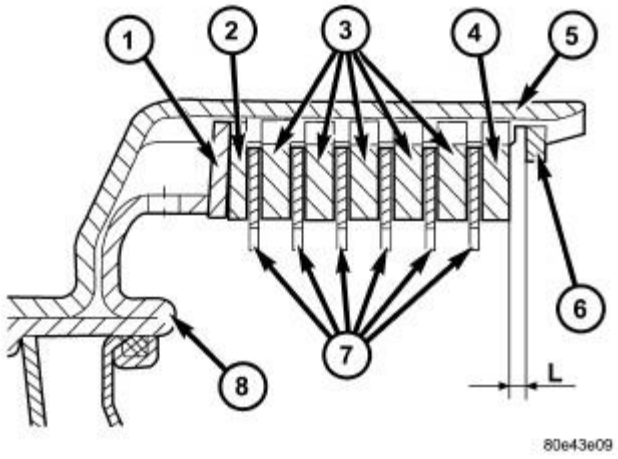

Fig. 188: Input Clutch K2 Stack-up
Courtesy of CHRYSLER LLC

1 - DISC SPRING 2 - OUTER MULTIPLE DISC - 1.8 MM (0.071 IN.) 3 - OUTER MULTIPLE DISC - 3.5 MM (0.138 IN.) 4 - OUTER MULTIPLE DISC - 4.0 MM (0.158 IN.) 5 - K2 OUTER DISC CARRIER 6 - SNAP-RING 7 - FRICTION DISCS 8 - PISTON

10. Using a feeler gauge, determine the play "L" at three points between the snap-ring (6) and outer multiple-disc (4).
11. During the measurement the snap-ring (6) must contact the upper bearing surface of the groove in the outer multiple-disc carrier.
12. The correct clutch clearance is 2.3-2.7 mm (0.091-0.106 in.) for three friction disc versions, 2.4-2.8 mm (0.095-0.110 in.) for four disc versions, 2.5-2.9 mm (0.099-0.114 in.) for five disc versions, and 2.7-3.1 mm (0.106-0.122 in.) for six disc versions.
13. Adjust with snap-ring (6), if necessary. Snap-rings are available in thicknesses of 2.3 mm (0.091 in.), 2.6 mm (0.102 in.), 2.9 mm (0.114 in.), 3.2 mm (0.126 in.), 3.5 mm (0.138 in.), and 3.8 mm (0.150 in.).

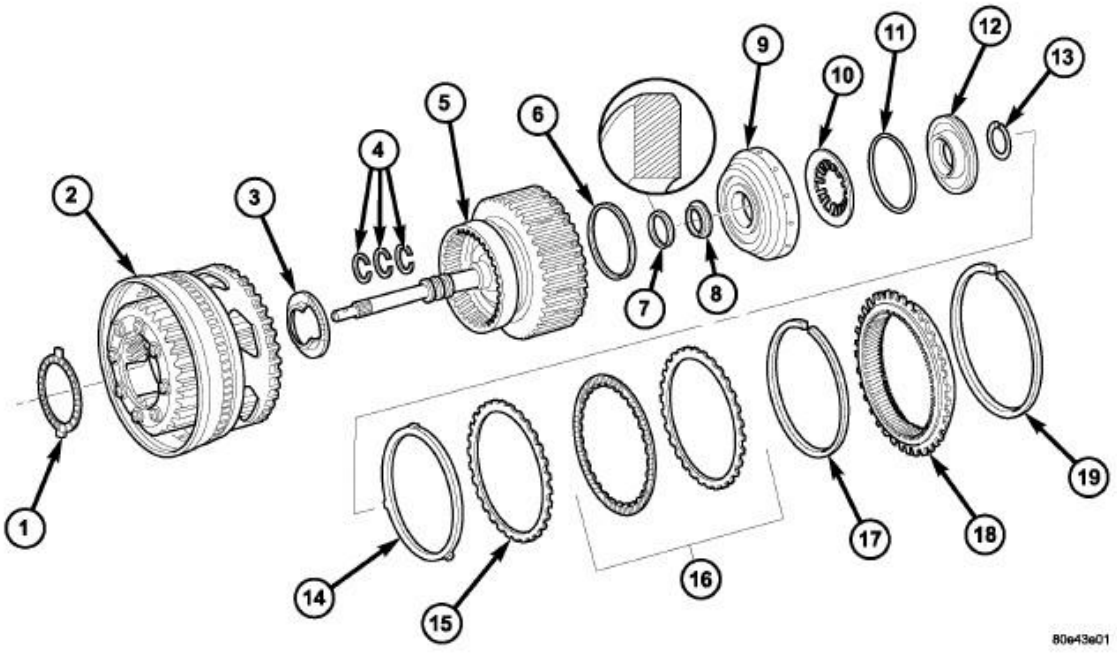

Fig. 189: Input Clutch K2 Components
Courtesy of CHRYSLER LLC

1 - NEEDLE ROLLER BEARING	11 - SPRING RETAINER SEALING - O-RING
2 - K1 INNER DISC	12 - SPRING RETAINER

CARRIER WITH INTEGRATED FRONT GEAR SET	
3 - THRUST BEARING	13 - SNAP-RING
4 - TORLON SEAL RINGS	14 - DISC SPRING
5 - INPUT SHAFT AND K2 CLUTCH	15 - EXTERNALLY TOOTHED PLATE - 1.8 MM (0.071 IN.)
6 - PISTON OUTER SEAL RING - O-RING	16 - MULTIPLE DISC PACK
7 - PISTON INNER SEAL RING	17 - SNAP-RING
8 - THRUST WASHER	18 - HOLLOW GEAR
9 - PISTON	19 - SNAP-RING
10 - DISC SPRING	-

14. Insert axial needle bearing (3) into K1 inner multiple-disk carrier. Insert axial needle bearing (3) with a little grease to prevent it slipping.
15. Install input shaft in K1 inner multiple-disc carrier with integrated front gear set (2).
16. Fit internally-geared wheel (18) and install snap-ring.

CLUTCH, K3

DISASSEMBLY

DISASSEMBLY

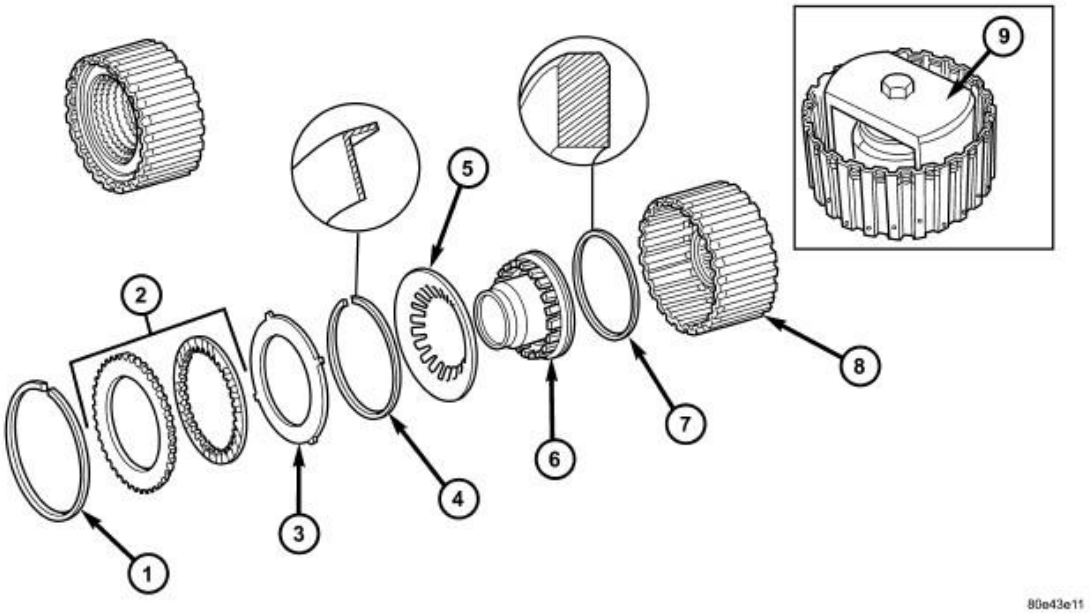

Fig. 190: Input Clutch K3 Components

Courtesy of CHRYSLER LLC

1 - SNAP-RING	6 - PISTON
2 - MULTIPLE DISC PACK	7 - SEALING RING
3 - DISK SPRING	8 - OUTER DISC CARRIER
4 - SNAP-RING	9 - MULTI-USE SPRING COMPRESSOR 8900
5 - SPRING PLATE	

1. Remove snap-ring (1) from outer multiple-disc carrier.
2. Remove multiple-disc pack (2) and disk spring (3) from outer multiple-disc carrier. Note which clutch disc is removed just prior to the disc spring (3) for reassembly. If the clutch discs are re-used, this disc must be returned to its original position on top of the spring plate.
3. Place Multi-use Spring Compressor 8900 (9) on the spring plate (5) and compress the spring until the snap-ring (4) is exposed.
4. Remove snap-ring (4).
5. Remove spring plate (5) and piston (6) from outer multiple-disc carrier.

ASSEMBLY

ASSEMBLY

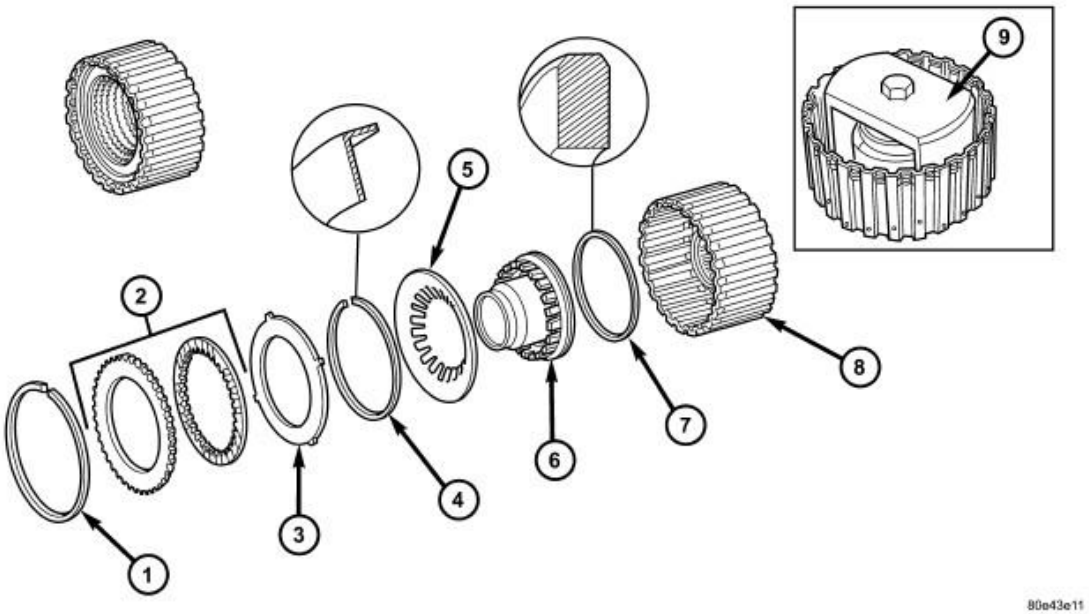

Fig. 191: Input Clutch K3 Components
Courtesy of CHRYSLER LLC

1 - SNAP-RING	6 - PISTON
2 - MULTIPLE DISC PACK	7 - SEALING RING
3 - DISK SPRING	8 - OUTER DISC CARRIER
4 - SNAP-RING	9 - MULTI-USE SPRING COMPRESSOR 8900

5 - SPRING PLATE

1. Install piston (6) in the outer multiple-disc carrier (8). Check sealing ring (7), replace if necessary. The rounded off edges of the sealing ring must point outwards.
2. Insert the spring plate (5). Insert the spring plate with the curvature towards the piston.
3. Mount the Multi-use Spring Compressor 8900 (9) on the spring plate and clamp until the snap-ring groove is exposed.
4. Insert snap-ring (4). The collar of the snap-ring must point towards the multiple-disc pack.

CAUTION: When working with double sided friction discs, an externally lugged steel plate is installed first, followed by a friction disc, and continuing on until all the required discs are installed. When working with single sided friction discs, an externally lugged disc is installed first, followed by an internally lugged disc, and continuing on until all the required discs are installed. All single sided discs are installed with the friction side up.

NOTE: Pay attention to the sequence of discs. If the original clutch discs are reused, be sure to return the disc identified on disassembly as belonging on top of the disk spring (3) to its original location.

NOTE: Place new friction multiple-discs in ATF fluid for one hour before installing.

5. Install disk spring (3) and multiple-disc pack (2) in outer multiple-disc carrier (8).
6. Insert snap-ring (1).

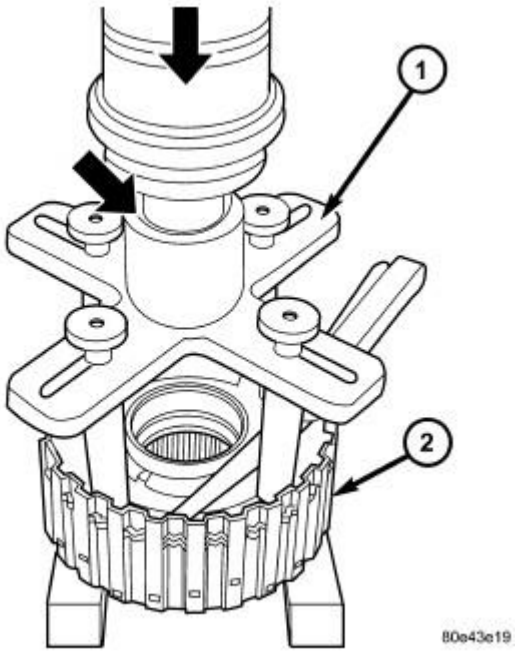

Fig. 192: Measuring K3 Clutch Clearance
Courtesy of CHRYSLER LLC

1 - PRESSING TOOL 8901A 2 - OUTER DISC CARRIER

7. Measure the K3 clutch clearance by mounting Pressing Tool 8901A (1) on outer multiple disc.
8. Using a lever press, compress pressing tool to the upper most line marked 1200 N (the marking ring is still visible, see small arrow in illustration).

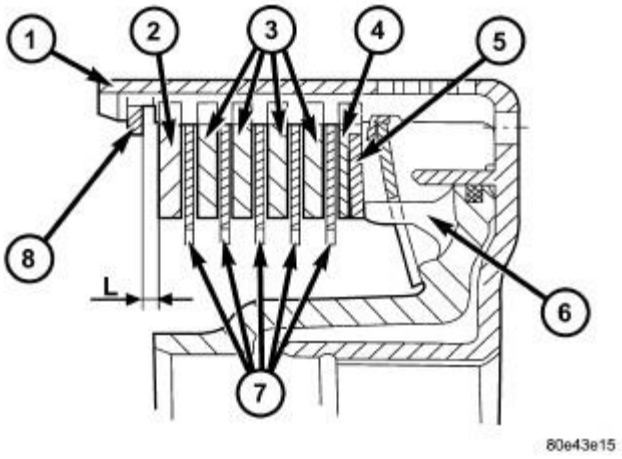

Fig. 193: Input Clutch K3 Stack-up - Double Sided Discs
Courtesy of CHRYSLER LLC

1 - OUTER DISC CARRIER
2 - OUTER MULTIPLE DISC - 4.0 MM (0.158 IN.)
3 - OUTER MULTIPLE DISC - 2.8 MM (0.110 IN.)
4 - OUTER MULTIPLE DISC - 1.8 MM (0.079 IN.)
5 - DISC SPRING
6 - PISTON
7 - FRICTION DISCS - 2.1 MM (0.083 IN.)
8 - SNAP-RING

9. For transmissions using double sided friction discs, use a feeler gauge to determine the play "L" at three points between the snap-ring (8) and outer multiple-disc (2).
10. During the measurement the snap-ring (8) must contact the upper bearing surface of the groove in the outer multiple-disc carrier.
11. The correct clutch clearance for transmissions with double sided friction discs is 2.3-2.7 mm (0.091-0.106 in.) for three friction disc versions, 2.4-2.8 mm (0.095-0.110 in.) for four disc versions, and 2.5-2.9 mm (0.099-0.114 in.) for five disc versions.
12. Adjust with snap-ring (8), if necessary. Snap-rings are available in thicknesses of 2.0 mm (0.079 in.), 2.3 mm (0.091 in.), 2.6 mm (0.102 in.), 2.9 mm (0.114 in.), 3.2 mm (0.126 in.), and 3.5 mm (0.138 in.).

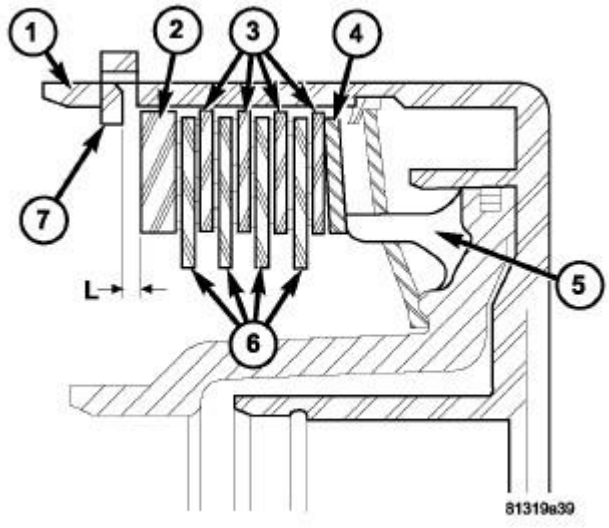

Fig. 194: Input Clutch K3 Stack-up - Single Sided Discs
Courtesy of CHRYSLER LLC

1 - OUTER DISC CARRIER
2 - OUTER MULTIPLE DISC - 4.0 MM (0.158 IN.)
3 - OUTER MULTIPLE DISCS
4 - DISC SPRING
5 - PISTON

6 - INNER MULTIPLE DISCS 7 - SNAP-RING

13. For transmissions using single sided friction discs, use a feeler gauge to determine the play "L" at three points between the snap-ring (7) and outer multiple-disc (2).
14. During the measurement the snap-ring (7) must contact the upper bearing surface of the groove in the outer multiple-disc carrier.
15. The correct clutch clearance for transmissions with single sided friction discs is 2.3-2.7 mm (0.091-0.106 in.) for six friction disc versions, 2.4-2.8 mm (0.095-0.110 in.) for eight disc versions, and 2.5-2.9 mm (0.099-0.114 in.) for ten disc versions.
16. Adjust with snap-ring (7), if necessary. Snap-rings are available in thicknesses of 2.0 mm (0.079 in.), 2.3 mm (0.091 in.), 2.6 mm (0.102 in.), 2.9 mm (0.114 in.), 3.2 mm (0.126 in.), and 3.5 mm (0.138 in.).

CONTACT, TEMPERATURE SENSOR\PARK-NEUTRAL

DESCRIPTION

PARK/NEUTRAL CONTACT

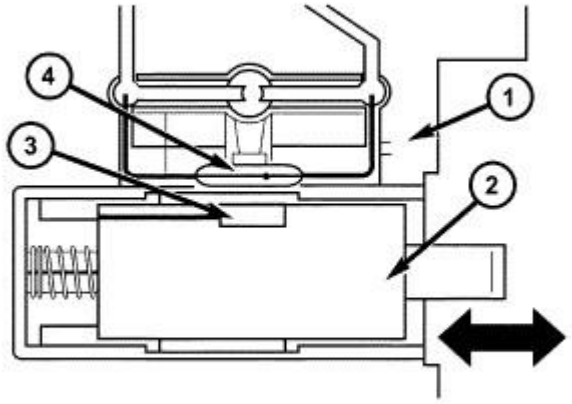

Fig. 195: Identifying Park-Neutral Switch
Courtesy of CHRYSLER LLC

The park/neutral contact (4) is located in the shell of the electric control unit and is fixed to the conductor tracks.

Its purpose is to recognize selector valve and selector lever positions "P" and "N". The park/neutral contact consists of:

- the plunger (2).
- the permanent magnet (3).
- the dry-reed contact (4).

TRANSMISSION TEMPERATURE SENSOR

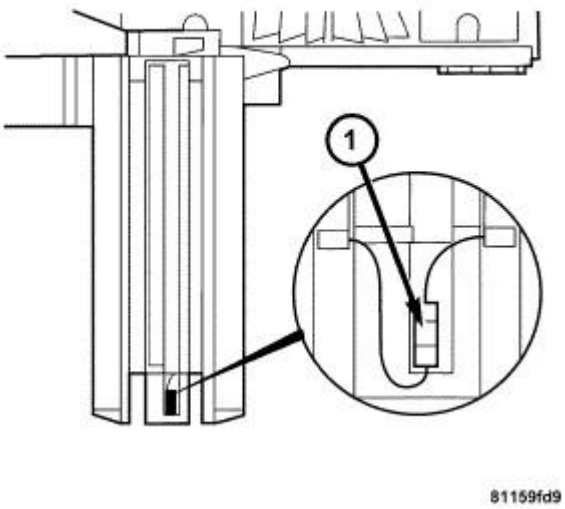

Fig. 196: Identifying Transmission Temperature Sensor
Courtesy of CHRYSLER LLC

The transmission oil temperature sensor (1) is located in the shell of the electric valve control unit and is fixed to the conductor tracks.

Its purpose is to measure the temperature of the transmission oil and pass the temperature to the TCM as an input signal. It is a temperature-dependent resistor (PTC).

OPERATION

PARK/NEUTRAL CONTACT

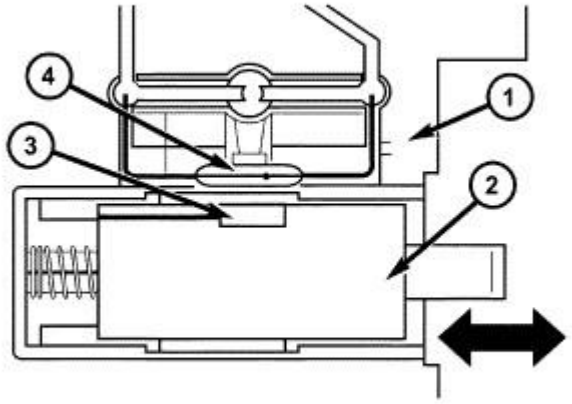

81159fc8

Fig. 197: Identifying Park-Neutral Switch
Courtesy of CHRYSLER LLC

In selector lever positions "P" and "N" the park/neutral contact (4) is actuated by a cam track which is located on the detent plate. The permanent magnet (3) is moved away from the dry-reed contact (4). The dry-reed contact (4) is opened. The TCM receives an electric signal. The circuit to the starter in the selector lever positions "P" and "N" is closed.

OPERATION - TRANSMISSION TEMPERATURE SENSOR

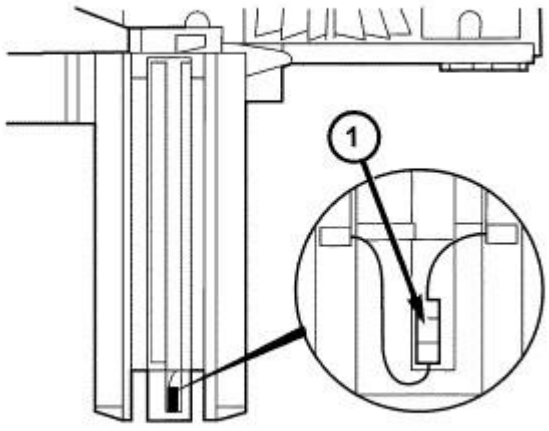

81159fd9

Fig. 198: Identifying Transmission Temperature Sensor
Courtesy of CHRYSLER LLC

The temperature of the transmission oil has a considerable effect on the shifting time and therefore

the shift quality. By measuring the oil temperature, shift operations can be optimized in all temperature ranges. The transmission oil temperature sensor (1) is switched in series with the park/neutral contact. The temperature signal is transferred to the TCM only when the dry-reed contact of the park/neutral contact is closed in REVERSE or a forward gear position.

Refer to the Transmission Temperature Sensor Specifications table for the relationship between transmission temperature, sensor voltage, and sensor resistance.

TRANSMISSION TEMP SENSOR SPECIFICATIONS

TEMPERATURE (C)	TEMPERATURE (F)	VOLTAGE	RESISTANCE
-50	-58	0.73	506.0
-45	-49	0.77	534.0
-40	-40	0.80	564.0
-35	-31	0.84	593.0
-30	-22	0.88	624.0
-25	-13	0.91	654.0
-20	-4	0.95	686.0
-15	5	0.98	718.0
-10	14	1.02	750.0
-5	23	1.05	783.0
0	32	1.09	817.0
5	41	1.12	851.0
10	50	1.16	886.0
15	59	1.19	921.0
20	68	1.23	957.0
25	77	1.26	994.0
30	86	1.30	1032.0
35	95	1.33	1070.0
40	104	1.37	1109.0
45	113	1.40	1149.0
50	122	1.44	1189.0
55	131	1.48	1231.0
60	140	1.51	1273.0
65	149	1.55	1316.0
70	158	1.58	1360.0
75	167	1.62	1405.0
80	176	1.65	1450.0
85	185	1.69	1497.0
90	194	1.72	1545.0
95	203	1.76	1594.0
100	212	1.79	1644.0
105	221	1.83	1695.0

110	230	1.86	1747.0
115	239	1.90	1800.0
120	248	1.93	1855.0
125	257	1.97	1911.0
130	266	2.00	1968.0
135	275	2.04	2027.0
140	284	2.08	2087.0
145	293	2.11	2148.0
150	302	2.15	2211.0
155	311	2.18	2276.0
160	320	2.22	2342.0
165	329	2.25	2410.0
170	338	2.29	2479.0
175	347	2.32	2551.0

FLUID AND FILTER

DESCRIPTION

DESCRIPTION

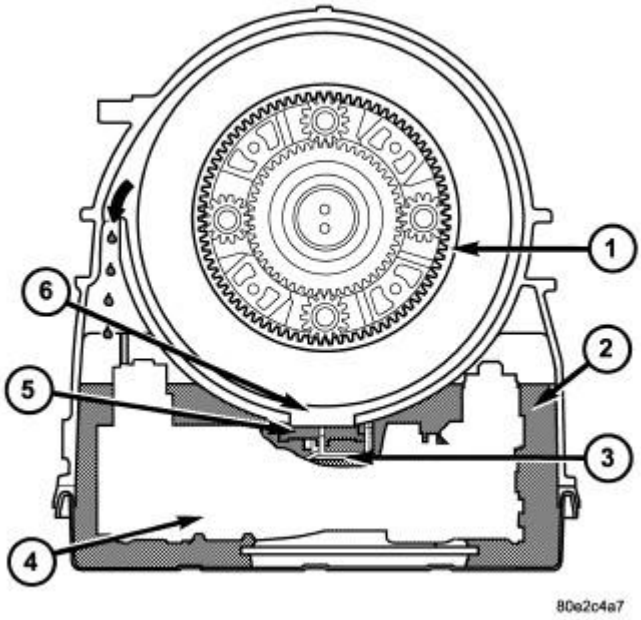

Fig. 199: Fluid Level Control
Courtesy of CHRYSLER LLC

1 - GEARSET CHAMBER

2 - OIL GALLERY
3 - SHELL OF ELECTROHYDRAULIC UNIT
4 - ELECTROHYDRAULIC UNIT
5 - FLOAT
6 - OPENING

The oil level control is located on the electrohydraulic unit (4) and consists of the float (5) which is integrated into the electrohydraulic unit. The float is positioned to plug the opening (6) between the oil gallery (2) and gearset chamber (1) so that the rotating gearsets do not splash about in oil as the oil level rises. The oil level control reduces power loss and prevents oil from being thrown out of the transmission housing at high oil temperatures.

OPERATION

OPERATION

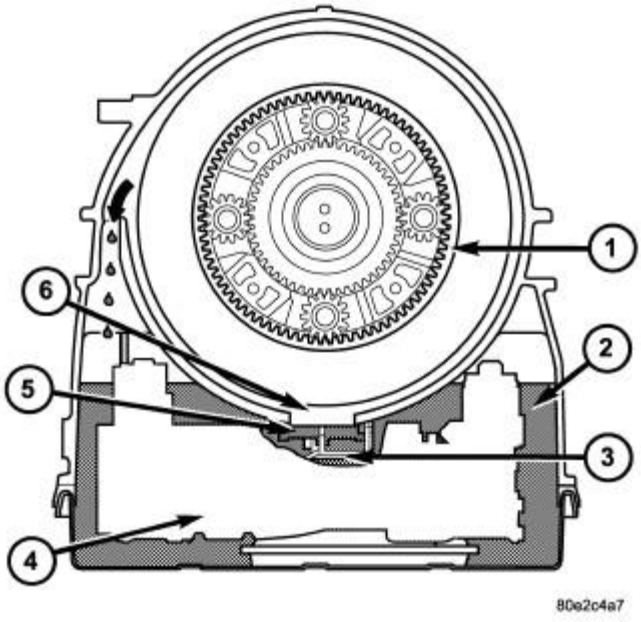

Fig. 200: Fluid Level Control
Courtesy of CHRYSLER LLC

1 - GEARSET CHAMBER
2 - OIL GALLERY
3 - SHELL OF ELECTROHYDRAULIC UNIT
4 - ELECTROHYDRAULIC UNIT
5 - FLOAT
6 - OPENING

With low oil levels, the lubricating oil which flows constantly out of the gearset, flows back to oil gallery (2) though the opening (6). If the oil level rises, the oil presses the float (5) against the housing opening (6). The float (5) therefore separates the oil gallery (2) from the gearset chamber (1). The lubricating oil which continues to flow out of the gearsets is thrown against the housing wall, incorporated by the rotating parts and flows back into the oil gallery (2) through the upper opening (arrow in illustration).

DIAGNOSIS AND TESTING

EFFECTS OF INCORRECT FLUID LEVEL

A low fluid level allows the pump to take in air along with the fluid. Air in the fluid will cause fluid pressures to be low and develop slower than normal. If the transmission is overfilled, the gears churn the fluid into foam. This aerates the fluid and causing the same conditions occurring with a low level. In either case, air bubbles cause fluid overheating, oxidation, and varnish buildup which interferes with valve and clutch operation. Foaming also causes fluid expansion which can result in fluid overflow from the transmission vent or fill tube. Fluid overflow can easily be mistaken for a leak if inspection is not careful.

CAUSES OF BURNT FLUID

Burnt, discolored fluid is a result of overheating which has three primary causes.

1. Internal clutch slippage, usually caused by low line pressure, inadequate clutch apply pressure, or clutch seal failure.
2. A result of restricted fluid flow through the main and/or auxiliary cooler. This condition is usually the result of a faulty or improperly installed drainback valve, a damaged oil cooler, or severe restrictions in the coolers and lines caused by debris or kinked lines.
3. Heavy duty operation with a vehicle not properly equipped for this type of operation. Trailer towing or similar high load operation will overheat the transmission fluid if the vehicle is improperly equipped. Such vehicles should have an auxiliary transmission fluid cooler, a heavy duty cooling system, and the engine/axle ratio combination needed to handle heavy loads.

FLUID CONTAMINATION

Transmission fluid contamination is generally a result of:

- adding incorrect fluid
- failure to clean dipstick and fill tube when checking level
- engine coolant entering the fluid
- internal failure that generates debris
- overheat that generates sludge (fluid breakdown)
- failure to replace contaminated converter after repair

The use of non-recommended fluids can result in transmission failure. The usual results are erratic shifts, slippage, abnormal wear and eventual failure due to fluid breakdown and sludge formation.

Avoid this condition by using recommended fluids only.

The dipstick cap and fill tube should be wiped clean before checking fluid level. Dirt, grease and other foreign material on the cap and tube could fall into the tube if not removed beforehand. Take the time to wipe the cap and tube clean before withdrawing the dipstick.

Engine coolant in the transmission fluid is generally caused by a cooler malfunction. The only remedy is to replace the radiator as the cooler in the radiator is not a serviceable part. If coolant has circulated through the transmission, an overhaul is necessary.

The torque converter should be replaced whenever a failure generates sludge and debris. This is necessary because normal converter flushing procedures will not remove all contaminants.

STANDARD PROCEDURE

CHECK OIL LEVEL

1. Verify the vehicle is parked on a level surface.
2. Remove the dipstick tube cap.

WARNING: There is a risk of accident from vehicle starting off by itself when engine running. There is a risk of injury from contusions and burns if you insert your hands into the engine when it is started or when it is running. Secure vehicle to prevent it from moving off by itself. Wear properly fastened and close-fitting work clothes. Do not touch hot or rotating parts.

3. Actuate the service brake. Start the engine and let it run at idle speed in selector lever position "P".
4. Shift through the transmission modes several times with the vehicle stationary and the engine idling.
5. Warm up the transmission and wait at least two minutes. Check the oil level with the engine running. Push the Oil Dipstick 9336A into the transmission fill tube until the dipstick tip contacts the oil pan. Pull out the oil dipstick and read the oil level. Repeat if necessary.

NOTE: The dipstick protrudes from the fill tube when installed.

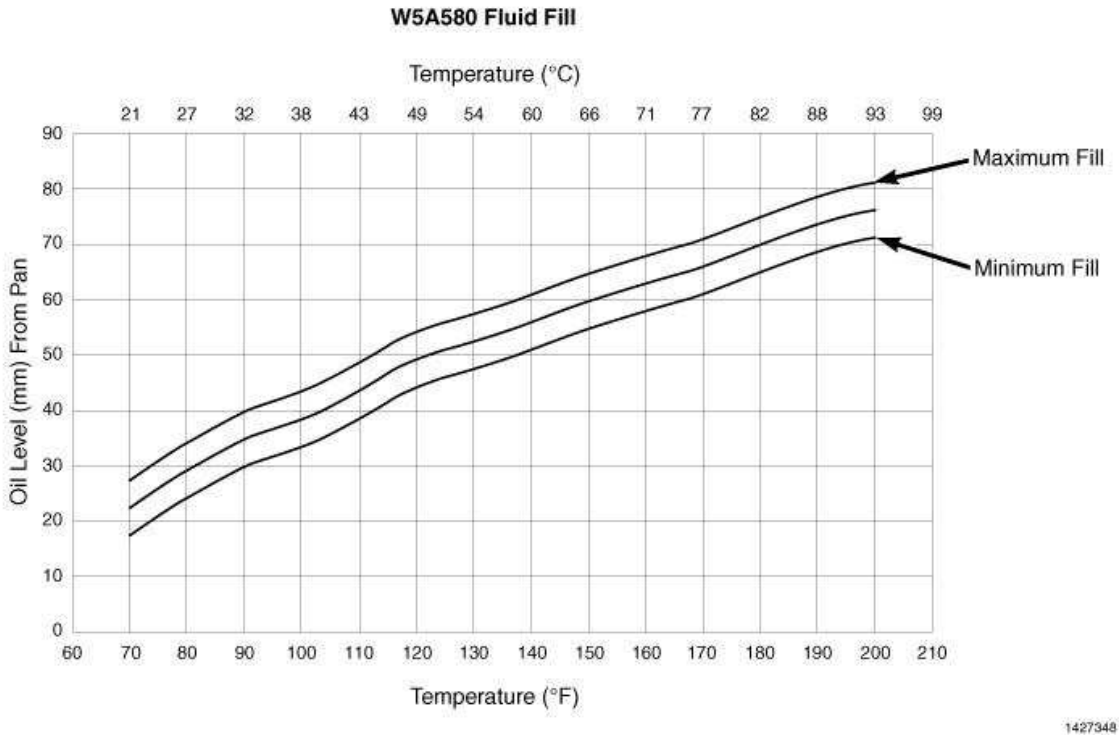

Fig. 201: NAG1 TRANSMISSION FILL GRAPH
Courtesy of CHRYSLER LLC

6. Check the transmission oil temperature using the appropriate scan tool.

NOTE: **The true transmission oil temperature can only be read by a scan tool with the transmission in REVERSE or any forward gear position. See Transmission and Transfer Case/Automatic - NAG1/CONTACT, Temperature Sensor\Park-Neutral - Operation.**

7. The transmission Oil Dipstick 9336A has indicator marks every 10 mm. With the transmission in PARK, determine the height of the oil level on the dipstick. Using the height, the transmission temperature and the transmission fluid graph, determine if the transmission oil level is correct.
8. Add or remove the oil as necessary and recheck the oil level.
9. Once the oil level is correct, install the dipstick tube cap.

TRANSMISSION FILL

To avoid overfilling transmission after a fluid change or overhaul, perform the following procedure:

1. Verify that the vehicle is parked on a level surface.
2. Remove the dipstick tube cap.
3. Add following initial quantity of Mopar® ATF +4, Automatic Transmission Fluid, to the transmission:

a. If only fluid and filter were changed, add **5.0 L (10.6pts.)** of transmission fluid to transmission.
b. If the transmission was completely overhauled or the torque converter was replaced or drained, add **7.7 L (16.3 pts.)** of transmission fluid to transmission.

4. Check the transmission fluid. See **Transmission and Transfer Case/Automatic - NAG1/FLUID and FILTER - Standard Procedure** and adjust as required.

FLUID/FILTER SERVICE

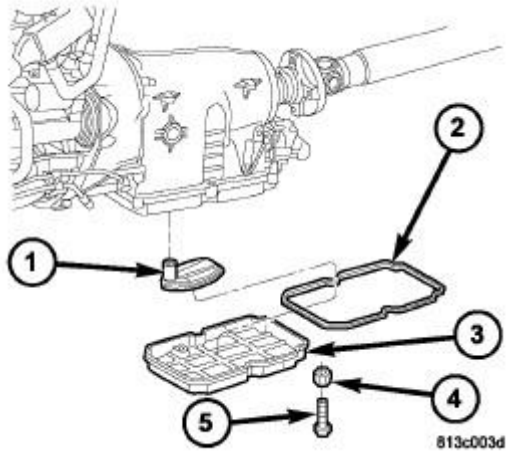

Fig. 202: Fluid/Filter Service Points
Courtesy of CHRYSLER LLC

1 - OIL FILTER
2 - OIL PAN GASKET
3 - OIL PAN
4 - RETAINER
5 - BOLT

1. Run the engine until the transmission oil reaches operating temperature.
2. Raise and support vehicle.
3. Remove the bolts (5) and retainers (4) holding the oil pan to the transmission.
4. Remove the transmission oil pan (3) and gasket (2) from the transmission.
5. Remove the transmission oil filter (1) and o-ring from the electrohydraulic control unit.
6. Clean the inside of the oil pan (3) of any debris. Inspect the oil pan gasket (2) and replace if necessary.
7. Install a new oil filter (1) and o-ring into the electrohydraulic control unit.
8. Install the oil pan (3) and gasket (2) onto the transmission.
9. Install the oil pan bolts (5) and retainers (4). Torque the bolts to 8 N.m (70 in.lbs.).
10. Lower the vehicle and add 5.0 L (10.6 pts.) of transmission fluid to the transmission.

11. Check the oil level. See **Transmission and Transfer Case/Automatic - NAG1/FLUID and FILTER - Standard Procedure**.

PLANETARY GEARTRAIN IDENTIFICATION

DESCRIPTION

DESCRIPTION

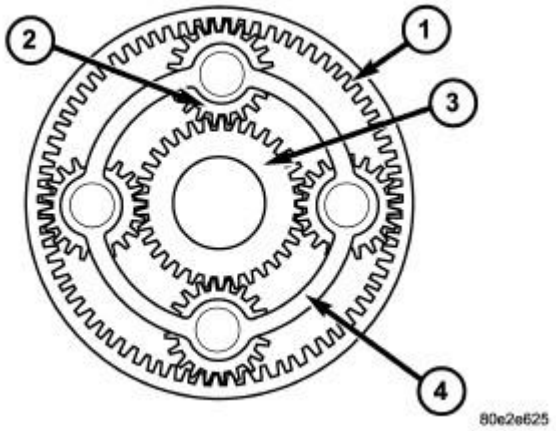

Fig. 203: Planetary Geartrain
Courtesy of CHRYSLER LLC

1 - ANNULUS GEAR
2 - PLANETARY PINION GEARS
3 - SUN GEAR
4 - PLANETARY CARRIER

Three planetary gear sets are used to produce the different gear ratios. These are located in the mechanical part of the transmission as the front, middle and rear planetary gear sets.

OPERATION

OPERATION

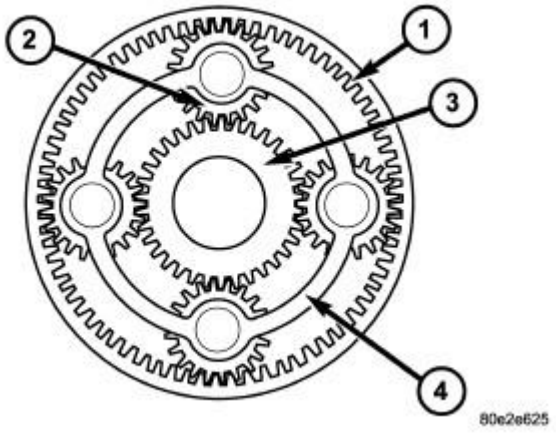

Fig. 204: Planetary Geartrain
Courtesy of CHRYSLER LLC

1 - ANNULUS GEAR 2 - PLANETARY PINION GEARS 3 - SUN GEAR 4 - PLANETARY CARRIER

The annulus gear (1) and sun gear (3) elements of a planetary gear system are alternately driven and braked by the actuating elements of the multi-plate clutch and multiple-disc brake. The planetary pinion gears (2) can turn on the internal gearing of the annulus gear (1) and on the external gearing of the sun gear (3). This allows for a variety of gear ratios and the reversal of the rotation direction without the need for moving gear wheels or shift collars. When two components of the planetary gear set are locked together, the planetary gear set is locked and turns as a closed unit.

The torque and engine speed are converted according to the lever ratios and the ratio of the number of teeth on the driven gears to that on the drive gears, and is referred to as the gear ratio. The overall ratio of a number of planetary gear sets connected in series is obtained by multiplying the partial ratios.

DISASSEMBLY

DISASSEMBLY

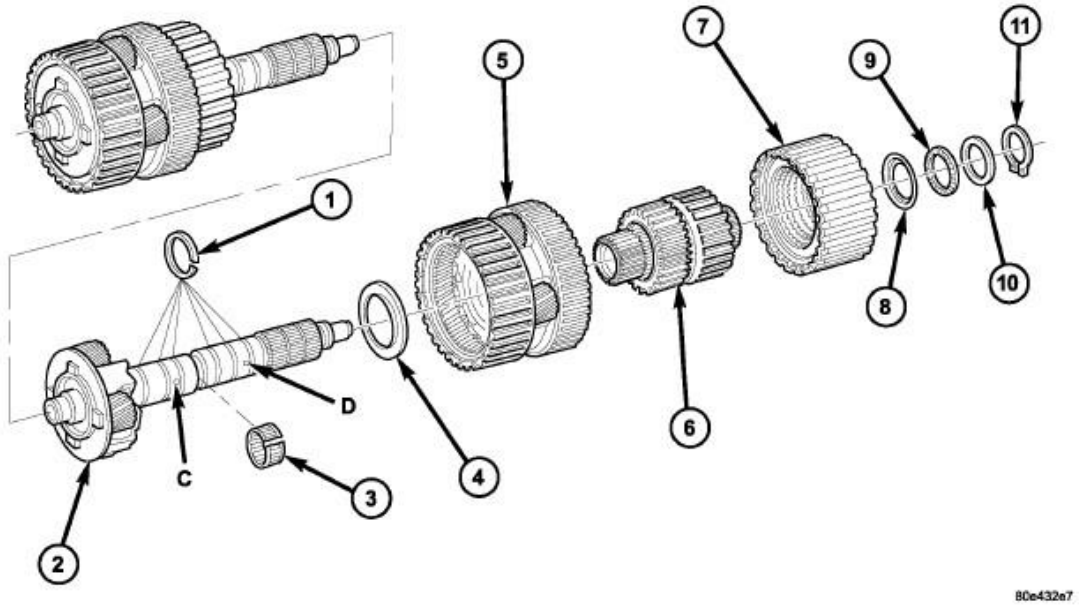

Fig. 205: Output Shaft With Center & Rear Planetary Geartrain
Courtesy of CHRYSLER LLC

1 - TEFLON RINGS	7 - DRIVING CLUTCH K3
2 - OUTPUT SHAFT WITH CENTER PLANETARY CARRIER	8 - THRUST WASHER
3 - NEEDLE BEARING	9 - AXIAL NEEDLE BEARING
4 - THRUST WASHER	10 - SHIM
5 - REAR PLANETARY GEAR SET	11 - RETAINING RING
6 - REAR HOLLOW SHAFT/FREEWHEELING CLUTCH F2	

1. Remove upper two visible Teflon rings (1) from output shaft.
2. Remove retaining ring (11), shim (10), thrust needle bearing (9) and thrust washer (8) from output shaft.
3. Remove clutch K3 (7).
4. Remove rear tubular shaft/freewheeling clutch F2 (6) from output shaft.
5. Remove rear gear set (5) with integrated tubular shaft of center gear set from output shaft.
6. Remove thrust washer (4).

ASSEMBLY

ASSEMBLY

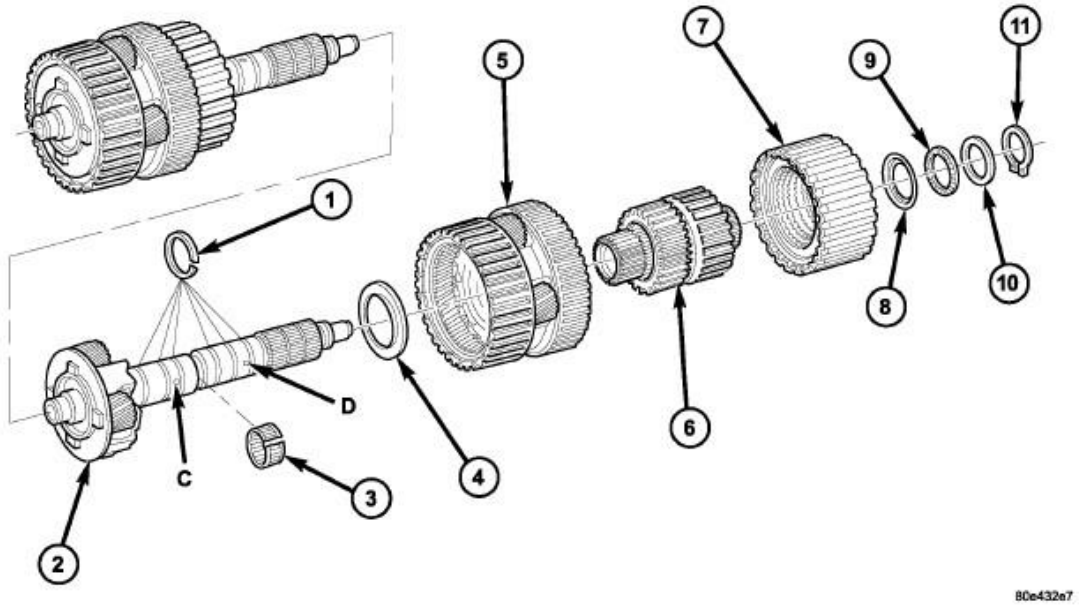

Fig. 206: Output Shaft With Center & Rear Planetary Geartrain
Courtesy of CHRYSLER LLC

1 - TEFLON RINGS	7 - DRIVING CLUTCH K3
2 - OUTPUT SHAFT WITH CENTER PLANETARY CARRIER	8 - THRUST WASHER
3 - NEEDLE BEARING	9 - AXIAL NEEDLE BEARING
4 - THRUST WASHER	10 - SHIM
5 - REAR PLANETARY GEAR SET	11 - RETAINING RING
6 - REAR HOLLOW SHAFT/FREEWHEELING CLUTCH F2	

1. Mount thrust washer (4) with the collar pointing towards the planet carrier.
2. Mount the rear gear set (5) on the rear hollow shaft (6).
3. Using grease, install lower three Teflon rings (1) in the groove so that the joint stays together
4. Put rear hollow shaft/freewheeling clutch F2 (6) with rear gear set (5) onto output shaft.
5. Install clutch K3 (7).
6. Mount retaining ring, shim, thrust needle bearing and thrust washer (8 - 11) .
7. Using grease, insert the upper two Teflon rings (1) in the groove so that the joint remains together.

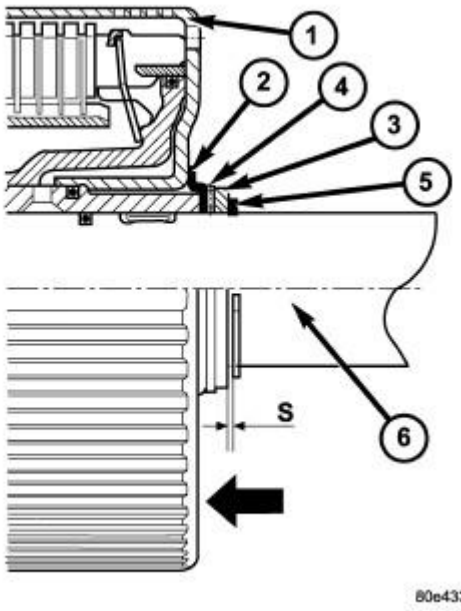

Fig. 207: Checking Center & Rear Planetary End-Play
Courtesy of CHRYSLER LLC

1 - DRIVING CLUTCH K3
2 - THRUST WASHER
3 - SHIM
4 - AXIAL NEEDLE BEARING
5 - RETAINING RING
6 - OUTPUT SHAFT WITH CENTER PLANETARY CARRIER

NOTE: During the test, apply a contact force by hand to K3 in the direction of the arrow in illustration.

8. Inspect axial play between shim (10) and retaining ring (11). Check axial play "S" between shim (10) and retaining ring (1) using a feeler gauge. Clearance should be 0.15-0.6 mm (0.006-0.024 in.). Shims are available in thicknesses of 3.0 mm (0.118 in.), 3.4 mm (0.134 in.), and 3.7 mm (0.146 in.). Adjust as necessary

HOLDING CLUTCHES

DESCRIPTION

DESCRIPTION

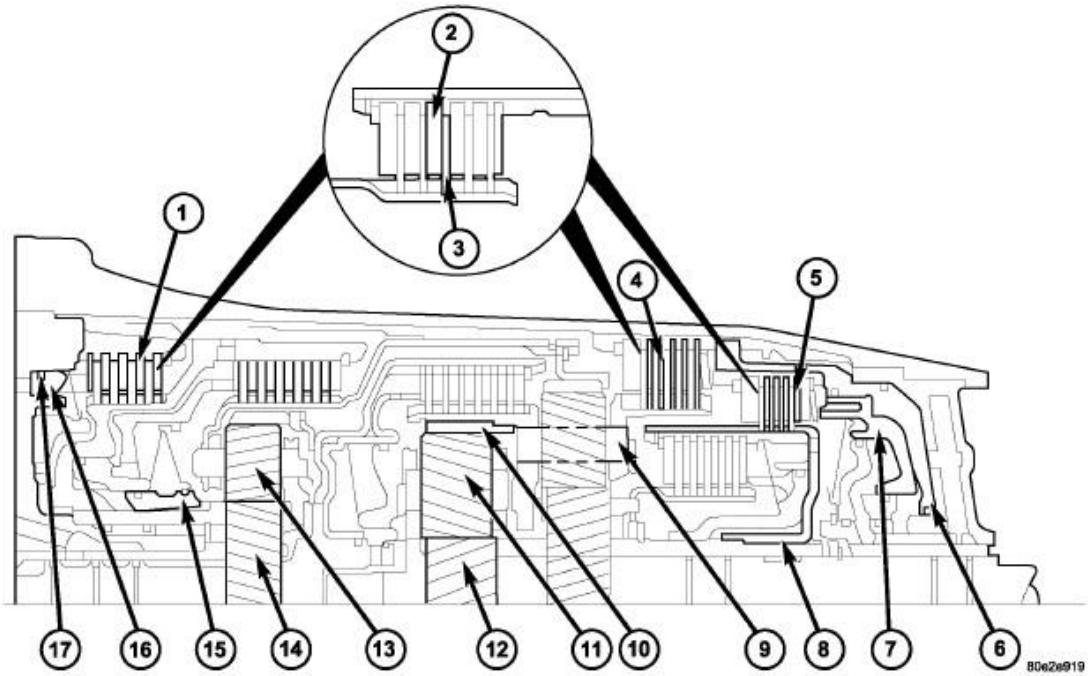

Fig. 208: Holding Clutches
Courtesy of CHRYSLER LLC

1 - B1 CLUTCH	10 - CENTER PLANETARY GEARSET ANNULUS GEAR
2 - EXTERNALLY TOOTHED DISC	11 - CENTER PLANETARY GEARSET PINION GEARS
3 - INTERNALLY TOOTHED DISC	12 - CENTER PLANETARY GEARSET SUN GEAR
4 - B3 CLUTCH	13 - FRONT PLANETARY GEARSET PINION GEARS
5 - B2 CLUTCH	14 - FRONT PLANETARY GEARSET SUN GEAR
6 - B3 CLUTCH PISTON	15 - B1 CLUTCH INTERNALLY TOOTHED DISC CARRIER
7 - B2 CLUTCH PISTON	16 - B1 CLUTCH PISTON
8 - B2 CLUTCH INTERNALLY TOOTHED DISC CARRIER	17 - B1 CLUTCH EXTERNALLY TOOTHED DISC CARRIER
9 - REAR PLANETARY GEARSET PLANETARY CARRIER	

Three multiple-disc holding clutches, the front, B1 (1), middle, B3 (4), and rear multiple disc clutches, B2 (5), are located in the planetary gear sets in the transmission housing.

A multiple-disc holding clutch consists of a number of internally toothed discs (3) on an internally toothed disc carrier and externally toothed discs (2) on an externally toothed disc carrier, which is rigidly connected to the transmission housing.

OPERATION

OPERATION

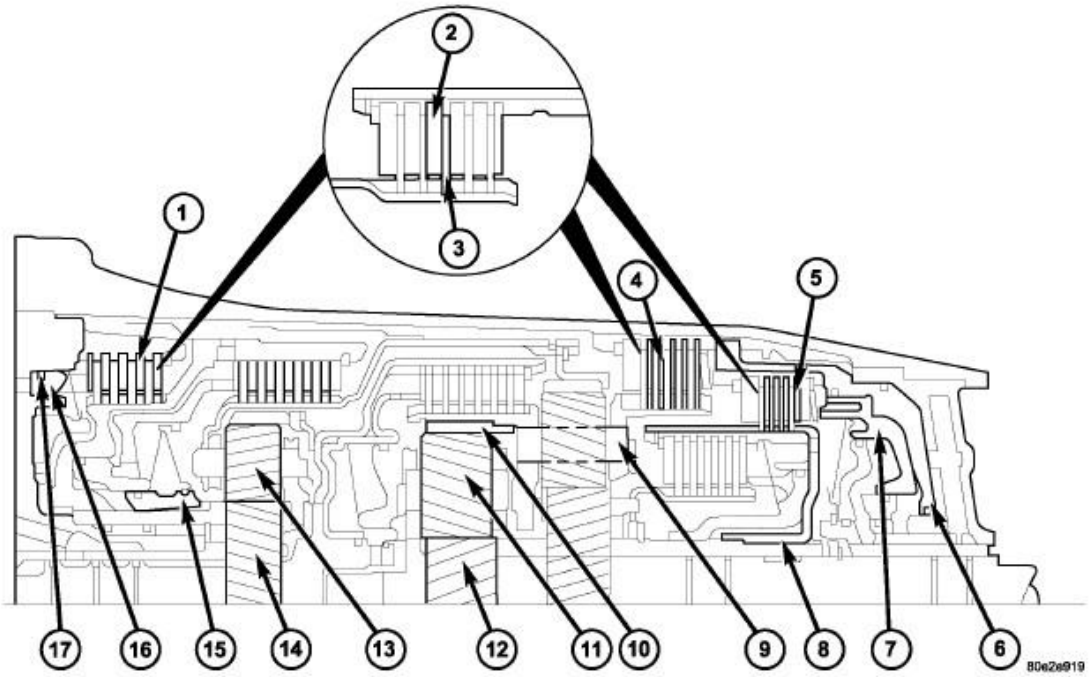

Fig. 209: Holding Clutches
Courtesy of CHRYSLER LLC

1 - B1 CLUTCH	10 - CENTER PLANETARY GEARSET ANNULUS GEAR
2 - EXTERNALLY TOOTHED DISC	11 - CENTER PLANETARY GEARSET PINION GEARS
3 - INTERNALLY TOOTHED DISC	12 - CENTER PLANETARY GEARSET SUN GEAR
4 - B3 CLUTCH	13 - FRONT PLANETARY GEARSET PINION GEARS
5 - B2 CLUTCH	14 - FRONT PLANETARY GEARSET SUN GEAR
6 - B3 CLUTCH PISTON	15 - B1 CLUTCH INTERNALLY TOOTHED DISC CARRIER
7 - B2 CLUTCH PISTON	16 - B1 CLUTCH PISTON
8 - B2 CLUTCH INTERNALLY TOOTHED DISC CARRIER	17 - B1 CLUTCH EXTERNALLY TOOTHED DISC CARRIER
9 - REAR PLANETARY GEARSET PLANETARY CARRIER	

The holding clutches connect the annulus gear, sun gear, or planetary carrier of a planetary gear set against the transmission housing in order to transmit the drive torque.

If the piston (16) on multiple-disc holding clutch B1 (1) is subjected to oil pressure, it presses the internal (3) and external discs (2) of the disc set together. The internally toothed disc carrier (15) locks the sun gear (14) against the housing. The planetary pinion gears (13) turn on the sun gear (14).

If the multiple-disc holding clutch B2 (5) is actuated via the piston (7), the piston compresses the disc set. The internally toothed disc carrier (8) locks the sun gear (12) against the housing. The planetary pinion gears (11) turn on the sun gear (12).

If the multiple-disc holding clutch B3 (4) is actuated via the piston (6), the planetary carrier (9) and the annulus gear (10) are locked. When the multiple-disc brake B3 (4) is actuated, the direction of rotation is reversed.

MECHANISM, BRAKE TRANSMISSION SHIFT INTERLOCK

DESCRIPTION

DESCRIPTION

NOTE: Some shifter assemblies may have a small external trim cover to actuate the Brake Transmission Shifter/Ignition Interlock (BTSI).

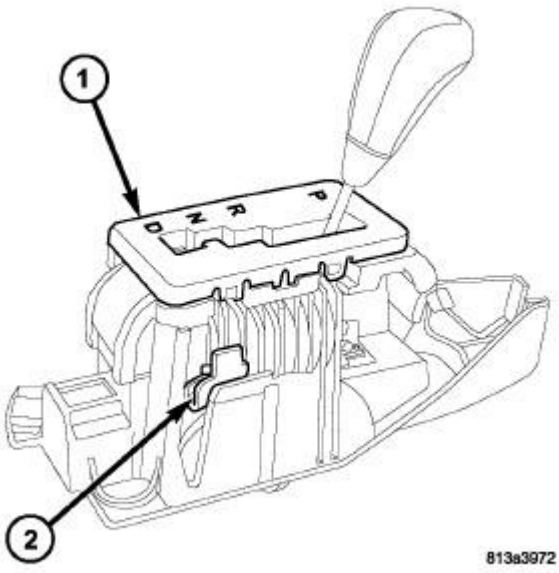

Fig. 210: Brake Transmission Shifter/Ignition Interlock (BTSI) Override
Courtesy of CHRYSLER LLC

1 - SHIFTER ASSEMBLY
2 - BTSI OVERRIDE

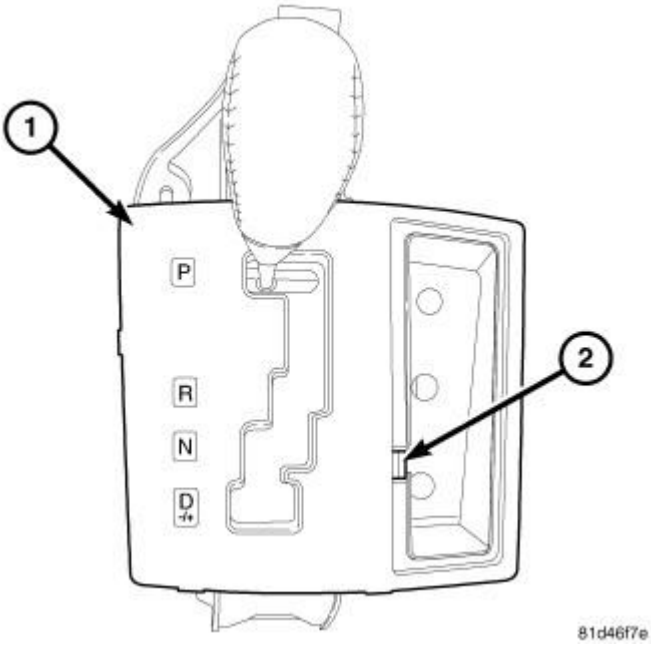

Fig. 211: NAG1 BTSI
Courtesy of CHRYSLER LLC

The Brake Transmission Shifter/Ignition Interlock (BTSI) is an electronically operated system that prevents the transmission gear shifter from being moved out of PARK without the proper driver inputs. The system contains a solenoid that is integral to the shifter assembly. The solenoid permits shifter movement out of PARK when the brake is depressed and prevents shifter movement into REVERSE unless a shift into REVERSE is permitted.

A BTSI override (2) is provided on the side of the shifter mechanism (1) to allow the vehicle to be shifted out of PARK in the event of an electrical failure.

OPERATION

OPERATION

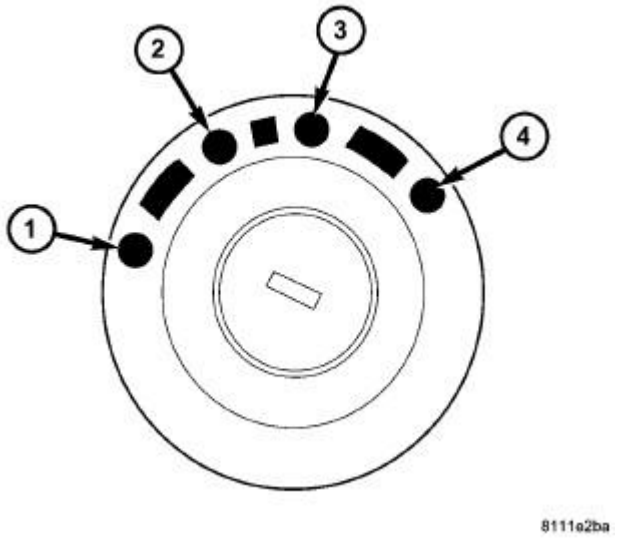

Fig. 212: Ignition Key/Switch Positions
Courtesy of CHRYSLER LLC

1 - LOCK 2 - ACC 3 - ON 4 - START

The Brake Transmission Shifter/Ignition Interlock (BTSI) is engaged whenever the ignition switch is in the LOCK (1) position. An additional electrically activated feature will prevent shifting out of the PARK position unless the brake pedal is depressed at least one-half inch. A solenoid in the shifter assembly is energized when the ignition is in the ON position and the brake pedal is depressed. When the key is in the ON position and the brake pedal is depressed, the shifter is unlocked and will move into any position. The interlock system also prevents the ignition switch from being turned to the LOCK position, unless the shifter is in the gated PARK position.

The following chart describes the normal operation of the Brake Transmission Shift Interlock (BTSI) system. If the "expected response" differs from the vehicle's response, then system repair and/or adjustment is necessary.

ACTION	EXPECTED RESPONSE
1. Turn key to the "ACC" position and depress brake pedal.	1. Shifter CAN be shifted out of park.
2. Turn key to the "ON" position, with foot off of brake pedal.	2. Shifter CANNOT be shifted out of park.
3. Turn key to the "ON" position and depress the brake pedal.	3. Shifter CAN be shifted out of park.
4. Leave shifter in any gear, except "PARK", and try to return key to the "LOCK" position.	4. Key cannot be returned to the "LOCK" position.

5. Return shifter to "PARK" and try to remove the key.	5. Key can be removed (after returning to "LOCK" position).
6. With the key removed, and the brake depressed, try to shift out of "PARK".	6. Shifter cannot be shifted out of "PARK".
NOTE: Any failure to meet these expected responses requires system adjustment or repair.	

BTSI Override

NOTE: Some shifter assemblies may have a small external trim cover to actuate the Brake Transmission Shifter/Ignition Interlock (BTSI).

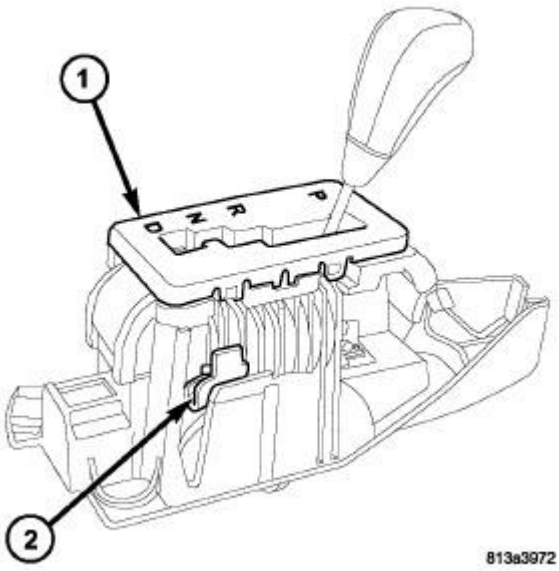

Fig. 213: Brake Transmission Shifter/Ignition Interlock (BTSI) Override
Courtesy of CHRYSLER LLC

In the event of an electrical failure, the vehicle can be shifted out of PARK by using the following procedure.

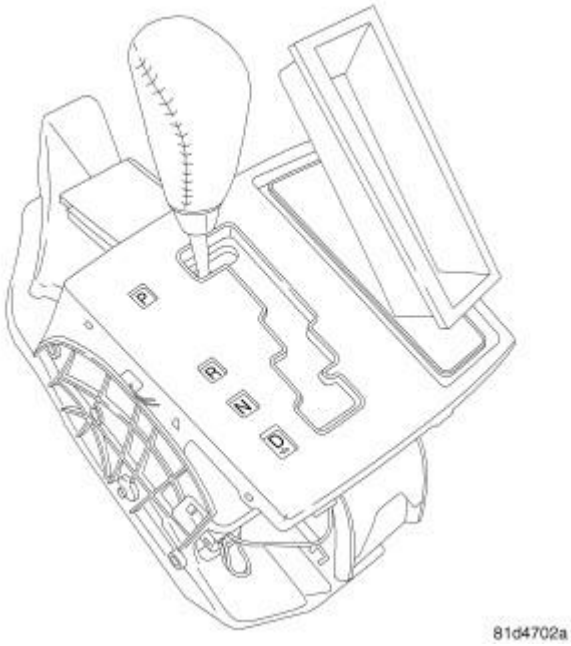

Fig. 214: CUBBY BIN LINER
Courtesy of CHRYSLER LLC

1. Turn the key to the ACC or ON position.
2. Remove the liner to the cubby bin to the right side of the shifter.

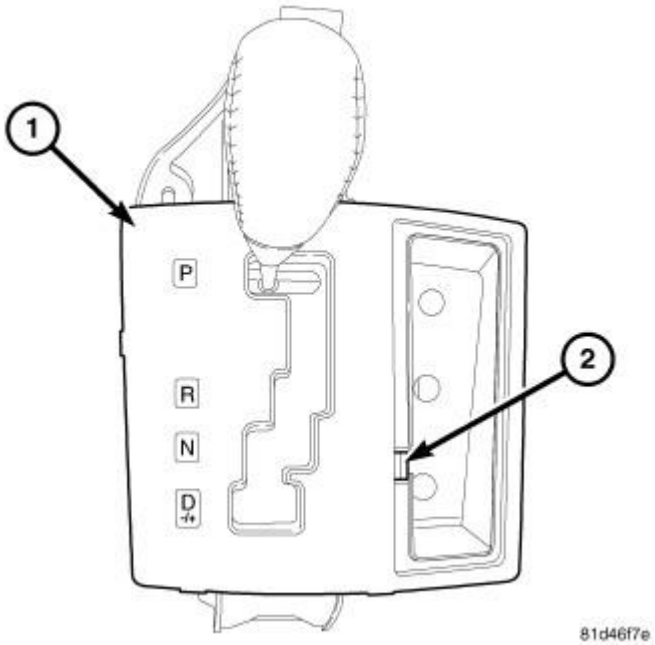

Fig. 215: NAG1 BTSI
Courtesy of CHRYSLER LLC

3. Depress the BTSI override (2) on the side of the shifter assembly (1).

4. While the override is depressed, move the shifter out of the PARK position.
5. Return the cubby bin liner to its original location.

DIAGNOSIS AND TESTING

DIAGNOSIS AND TESTING - BRAKE TRANSMISSION SHIFT INTERLOCK

SYSTEM VERIFICATION

1. Verify that the key can only be removed in the PARK position
2. When the shift lever is in PARK, the ignition key cylinder should rotate freely from ACC to LOCK. When the shifter is in any other gear or neutral position, the ignition key cylinder should not rotate to the LOCK position.
3. Shifting out of PARK should not be possible when the ignition key cylinder is in the ACC position and the brake pedal is not depressed.
4. Shifting out of PARK should not be possible while applying normal force on the shift lever and ignition key cylinder is in the ACC, ON, or START positions unless the foot brake pedal is depressed approximately 1/2 inch (12mm).
5. Shifting out of PARK should not be possible when the ignition key cylinder is in the LOCK position, regardless of the brake pedal position.
6. Shifting between any gears, NEUTRAL or into PARK may be done without depressing foot brake pedal with ignition switch in ACC, ON, or START positions.

PUMP, TRANSMISSION OIL

DESCRIPTION

DESCRIPTION

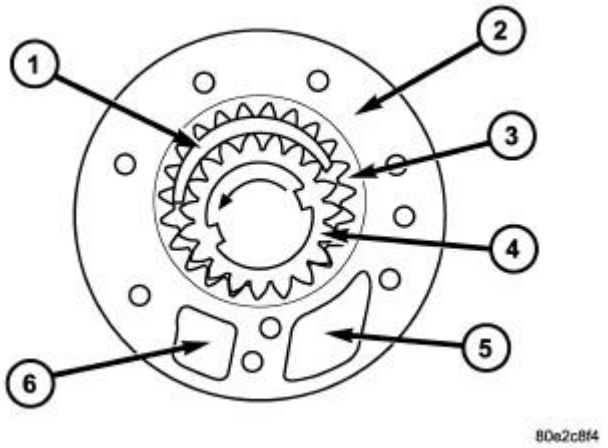

Fig. 216: Oil Pump
Courtesy of CHRYSLER LLC

1 - CRESCENT
2 - OIL PUMP
3 - EXTERNAL GEAR
4 - INTERNAL GEAR
5 - INLET CHAMBER
6 - PRESSURE CHAMBER

The oil pump (2) (crescent-type pump) is installed in the bellhousing behind the torque converter and is driven by the drive flange of the torque converter. The pump creates the oil pressure required for the hydraulic procedures.

OPERATION

OPERATION

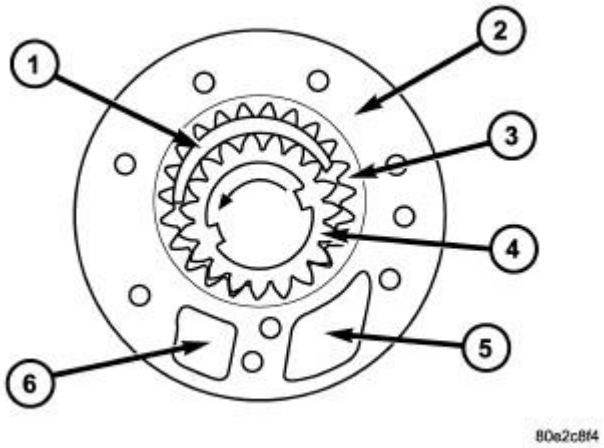

Fig. 217: Oil Pump
Courtesy of CHRYSLER LLC

1 - CRESCENT
2 - OIL PUMP
3 - EXTERNAL GEAR
4 - INTERNAL GEAR
5 - INLET CHAMBER
6 - PRESSURE CHAMBER

When the engine is running, the oil is pumped through the inlet chamber (5) along the upper and lower side of the crescent (1) to the pressure chamber (6) of the housing. The meshing of the teeth prevents oil flowing from the delivery side to the intake side. An external gear (3) is eccentrically mounted in the pump housing. The external gear is driven by the internal gear (4) which is connected to the torque converter hub.

DISASSEMBLY

DISASSEMBLY

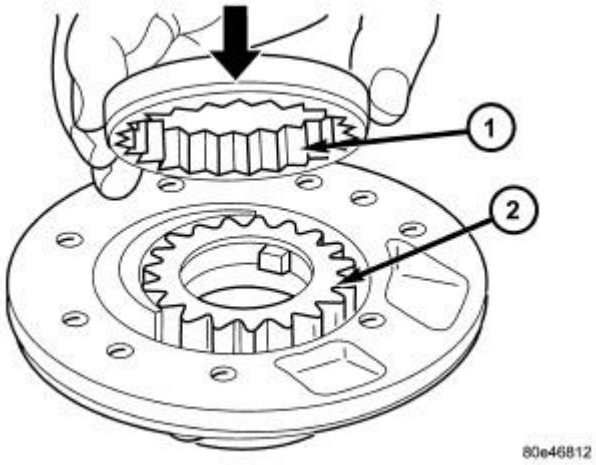

Fig. 218: Oil Pump Gears
Courtesy of CHRYSLER LLC

1 - OUTER PUMP ROTOR 2 - INNER PUMP ROTOR

1. Remove pump gears (1 and 2) from pump housing.

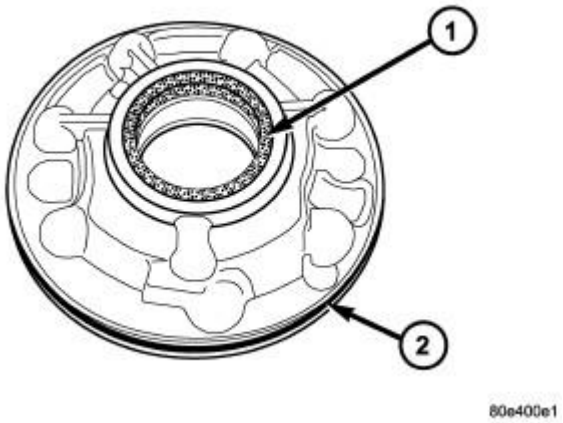

Fig. 219: Remove/Install Oil Pump Seals
Courtesy of CHRYSLER LLC

1 - INNER OIL SEAL 2 - OUTER OIL SEAL

2. Remove the inner oil pump seal (1) .
3. Replace the outer oil pump O-ring (2) .

CLEANING

CLEANING

Clean pump and support components with solvent and dry them with compressed air.

INSPECTION

INSPECTION

Before measuring any oil pump components, perform a thorough visual inspection of all the components. If any sign of scoring, scratches, or other damage is seen, replace the oil pump as an assembly.

SIDE CLEARANCE

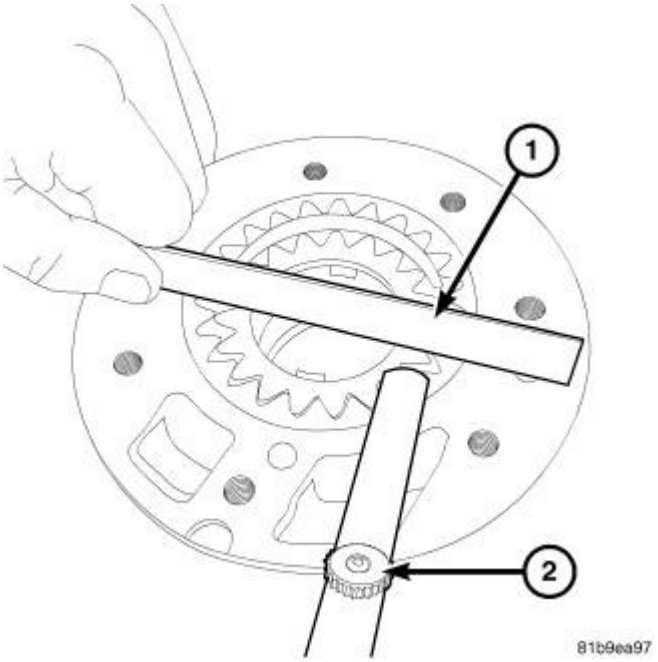

Fig. 220: Checking Oil Pump Side Clearance
Courtesy of CHRYSLER LLC

1 - FLAT PLATE 2 - FEELER GAUGE

Side clearance is the difference between the thickness of the pump gears and the depth of the pocket in the pump housing. Side clearance can be measured by laying a flat plate (1) across the mounting face of the pump housing, and measuring the distance between the plate and the gears with a feeler gauge (2).

Acceptable side clearance:

- Inner gear: 0.064 mm (0.0025 in) max
- Outer gear: 0.069 mm (0.0027 in) max

TIP CLEARANCE

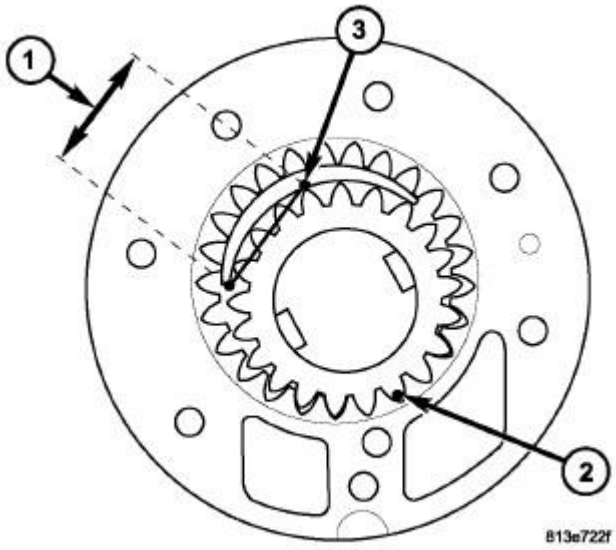

Fig. 221: Oil Pump Tip Clearance
Courtesy of CHRYSLER LLC

1 - MEASURE 37MM FROM THE CORNER OF CRESCENT
2 - TIGHT MESH HERE
3 - MEASURE TIP CLEARANCE HERE

Tip clearance is the difference between the tip diameters of the gear teeth and the corresponding diameters of the pocket in the pump housing.

Tip clearance for the inner gear can be checked by moving the inner gear into tight mesh (2) with the outer gear as shown in illustration. Clearance between the ID of the crescent feature of the housing and the OD of the teeth of the inner gear (3) should then me measured at a point 37 mm (1.45 in.) from the corner of the crescent (1) feature, as shown in illustration below.

Acceptable tip clearance for inner gear:

- 0.85 mm (0.033 in) max

ASSEMBLY

ASSEMBLY

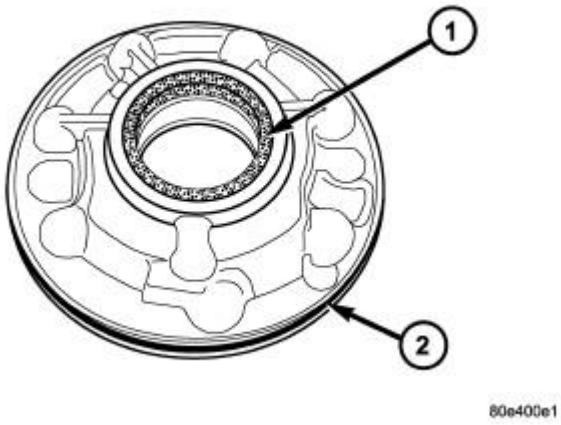

Fig. 222: Remove/Install Oil Pump Seals
Courtesy of CHRYSLER LLC

1 - INNER OIL SEAL 2 - OUTER OIL SEAL

1. Install new inner oil pump seal (1) with Seal Installer 8902A.
2. Replace O-ring (2) .

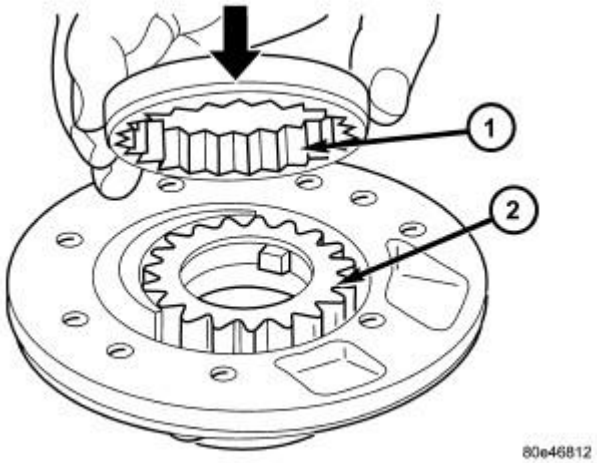

Fig. 223: Oil Pump Gears
Courtesy of CHRYSLER LLC

1 - OUTER PUMP ROTOR 2 - INNER PUMP ROTOR

3. Lubricate pump gears and place in the pump housing. Insert pump gear (1) so that the chamfer (arrow in illustration) points towards the pump housing.

SEAL, FILL TUBE

REMOVAL

REMOVAL

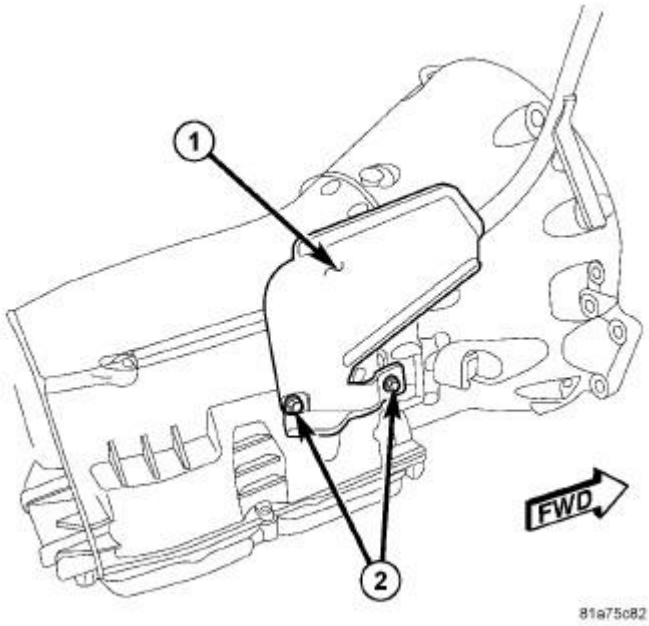

Fig. 224: Water Shield
Courtesy of CHRYSLER LLC

1 - WATER SHIELD 2 - WATER SHIELD BOLTS

1. Lift and support the vehicle.
2. Remove water shield bolts and water shield (if equipped).

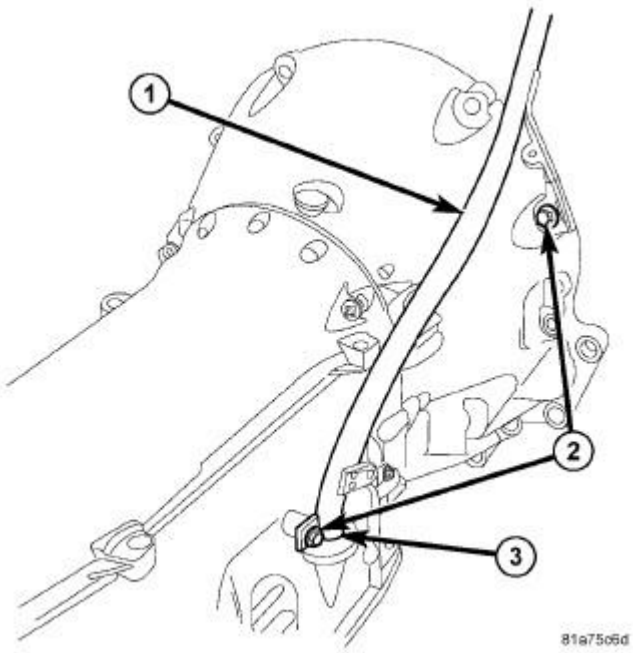

Fig. 225: Typical Fill Tube Bolts
Courtesy of CHRYSLER LLC

1 - FILL TUBE
2 - FILL TUBE BOLTS
3 - FILL TUBE SEAL

3. Remove the transmission fill tube bolts (2).
4. Lift the transmission fill tube out of the transmission case.
5. Using a small pry tool remove the transmission fill tube seal.

INSTALLATION

INSTALLATION



Fig. 226: Pierce Fill Tube Seal
Courtesy of CHRYSLER LLC

1. Pierce the new transmission fill tube seal along the molded "Y" from the outside.

NOTE: If the new fill tube seal can not be fully installed into the transmission case fill tube bore by hand, a "C" clamp must be used.

CAUTION: Do not over tighten the "C" clamp during fill tube oil seal installation. Transmission oil pan damage or bending may occur.

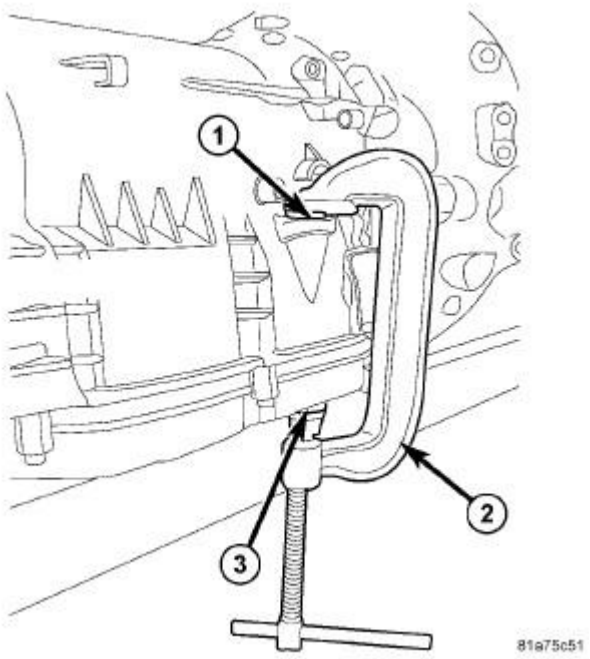

Fig. 227: "C"-CLAMP
Courtesy of CHRYSLER LLC

1 - SEAL INSTALLER DISC 9902
2 - "C" CLAMP
3 - SHIM STOCK

2. Lubricate the new transmission fill tube seal with MOPAR® ATF+4 ATF and install the new fill tube seal into the transmission case fill tube bore.
    a. Position seal installer disc 9902 (1) between the "C" clamp (2) and the new transmission fill tube seal
    b. Position a shim stock (3) between the "C" clamp (2) and the **edge** of the transmission oil pan.
    c. Lightly tighten the "C" clamp until the fill tube seal is fully installed into the transmission case fill tube bore.
3. Clean and lubricate the end of the transmission fill tube with MOPAR® ATF+4 ATF and install the fill tube into the transmission case fill tube bore.

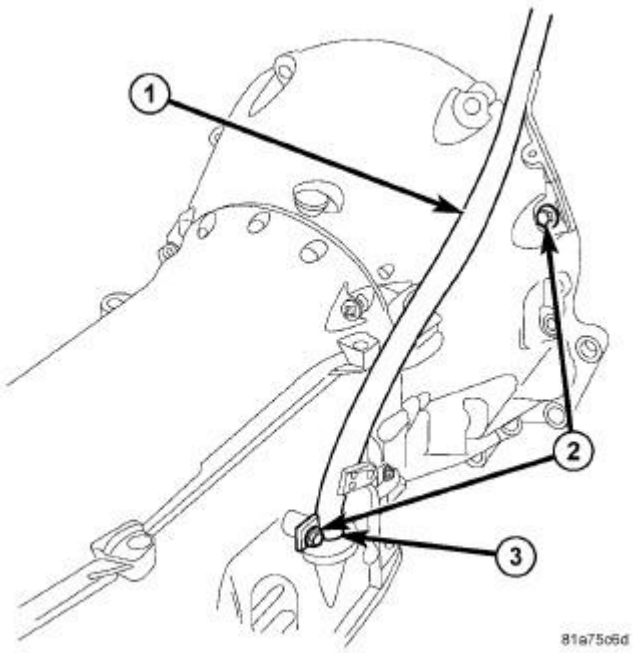

Fig. 228: Typical Fill Tube Bolts
Courtesy of CHRYSLER LLC

1 - FILL TUBE
2 - FILL TUBE BOLTS
3 - FILL TUBE SEAL

4. Loosely install the fill tube bolts (2).
5. Tighten the upper fill tube bolt to 39 N.m (29 ft.lbs.).
6. Tighten the lower fill tube bolt to 12 N.m (105 in.lbs.).

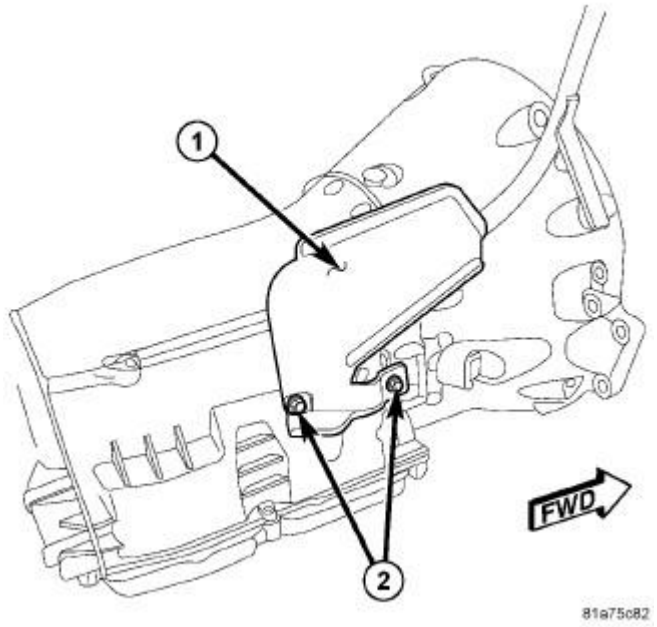

Fig. 229: Water Shield
Courtesy of CHRYSLER LLC

1 - WATER SHIELD 2 - WATER SHIELD BOLTS

7. Install the water shield (1) and water shield bolts (2) (if equipped).
8. Tighten the water shield bolts to 12 N.m (9 ft.lbs).
9. Lower vehicle to check and fill transmission as necessary.

SEAL, OUTPUT SHAFT

REMOVAL

REMOVAL

1. Remove the propeller shaft. Refer to **Differential and Driveline/Propeller Shaft - Removal** . Move propeller shaft to the right and tie up.
2. Verify that the transmission is in PARK in order to prepare for the removal of the output shaft nut.

NOTE: When removing the propeller shaft flange be certain the shim remains on the output shaft.

3. Remove the nut, with a 30 mm 12 point socket, holding the propeller shaft flange to the output shaft and remove the flange.

4. Remove the output shaft seal with suitable screw and slide hammer.

INSTALLATION

INSTALLATION

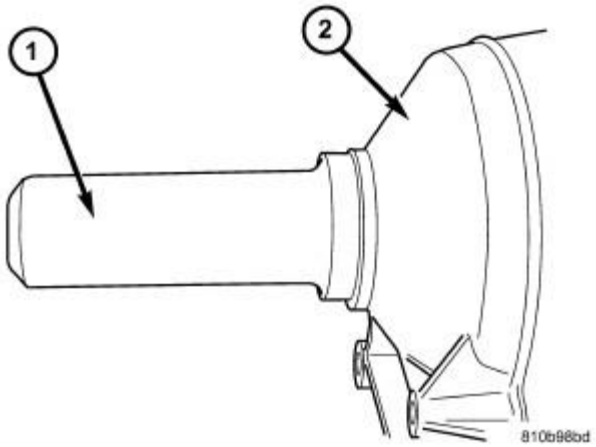

Fig. 230: Installing Output Shaft Seal
Courtesy of CHRYSLER LLC

1 - SEAL INSTALLER 8902A 2 - TRANSMISSION CASE

1. Position the new output shaft seal over the output shaft and against the transmission case.
2. Use Seal Installer 8902A (1) to install the seal.
3. Verify that the transmission is in PARK in order to prepare for the installation of the output shaft nut.

NOTE: When installing the propeller shaft flange be certain the shim remained on the output shaft.

4. Install the propeller shaft flange onto the output shaft and install an new flange nut. Tighten the flange nut, with a 30 mm 12 point socket, to 200 N.m (147.5 ft.lbs.).

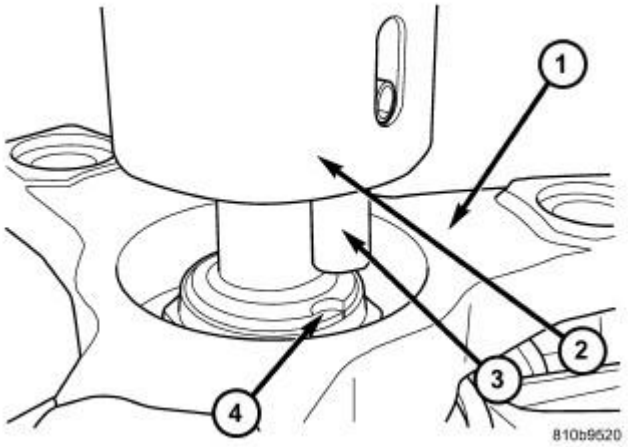

Fig. 231: Align Staking Tool 9078
Courtesy of CHRYSLER LLC

1 - PROPELLER SHAFT FLANGE
2 - STAKING TOOL 9078
3 - ALIGNMENT PIN
4 - OUTPUT SHAFT NOTCH

5. Stake the output shaft nut to the output shaft as follows.Place the Staking Tool 9078 (2) and Driver Handle C-4171 onto the output shaft.
6. Rotate the Staking Tool 9078 (2) until the alignment pin (3) engages the output shaft notch (4) .

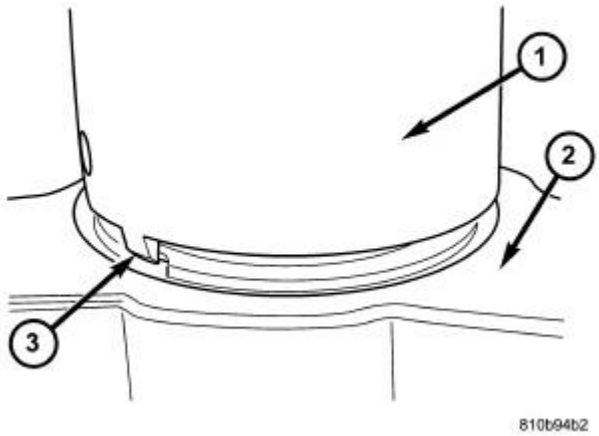

Fig. 232: Stake Output Shaft Nut
Courtesy of CHRYSLER LLC

1 - STAKING TOOL 9078
2 - PROPELLER FLANGE
3 - STAKING PIN

7. Press downward on the staking tool until the staking pin (3) contacts the output shaft nut flange (2) .
8. Strike the Driver handle C-4171 with a suitable hammer until the output shaft nut is securely staked to the output shaft.
9. Install the propeller shaft. Refer to **Differential and Driveline/Propeller Shaft - Installation** .

SEAL, TORQUE CONVERTER HUB

REMOVAL

REMOVAL

1. Remove the torque converter. See **Transmission and Transfer Case/Automatic - NAG1/TORQUE CONVERTER - Removal**.
2. Remove the torque converter hub seal with suitable screw and slide hammer.

INSTALLATION

INSTALLATION

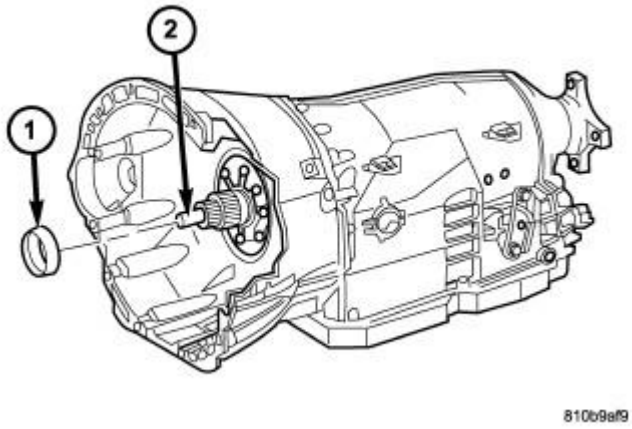

Fig. 233: Positioning Torque Converter Hub Seal
Courtesy of CHRYSLER LLC

1 - TORQUE CONVERTER HUB SEAL 2 - INPUT SHAFT

1. Position the torque converter hub seal (1) over the input shaft and against the transmission oil pump.

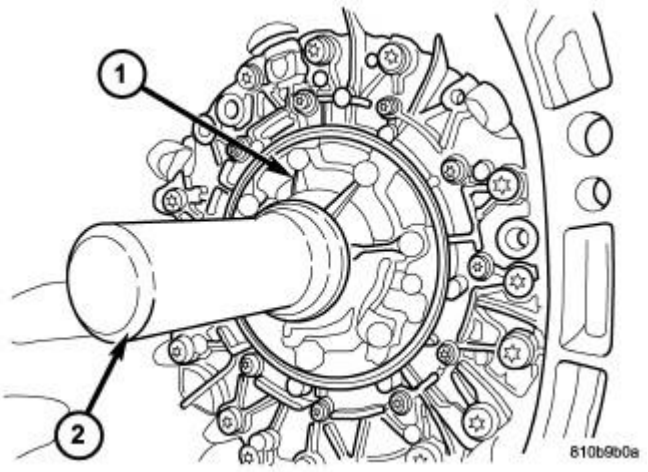

Fig. 234: Install Torque Converter Hub Seal
Courtesy of CHRYSLER LLC

1 - OIL PUMP 2 - SEAL INSTALLER 8902A

2. Using Seal Installer 8902A (2) , install a new torque converter hub seal.
3. Install the torque converter. See **Transmission and Transfer Case/Automatic - NAG1/TORQUE CONVERTER - Installation**.

SENSOR, SPEED, INPUT

DESCRIPTION

DESCRIPTION

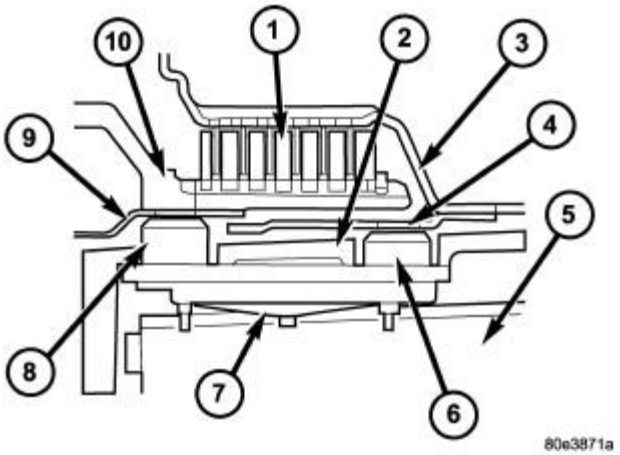

Fig. 235: Speed Sensors
Courtesy of CHRYSLER LLC

1 - DRIVING CLUTCH K1
2 - TRANSMISSION HOUSING
3 - DRIVING CLUTCH K1 INTERNALLY TOOTHED DISC
4 - EXCITER RING
5 - VALVE HOUSING OF SHIFT PLATE
6 - N2 SPEED SENSOR
7 - SPRING
8 - N3 SPEED SENSOR
9 - EXCITER RING
10 - DRIVING CLUTCH K1 EXTERNALLY TOOTHED DISC

The speed sensors, N2 and N3, (6, 8) are fixed to the shell of the electrohydraulic control unit's lead frame via contact blades. The speed sensors are pressed against the transmission housing (2) by a spring (7) which is held against the valve housing of the shift plate (5). This ensures a defined distance between the speed sensors and the exciter ring (4).

OPERATION

OPERATION

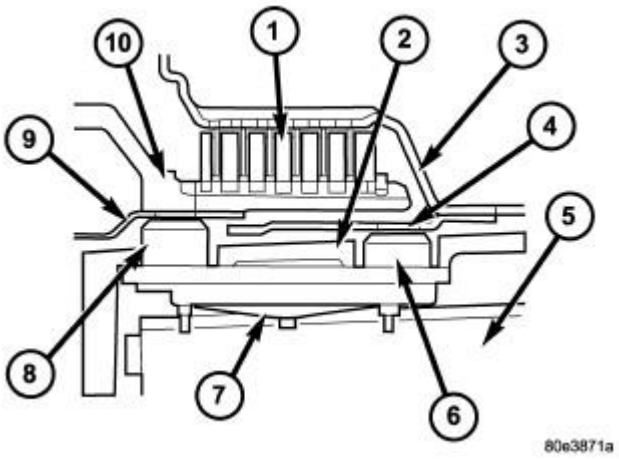

Fig. 236: Input Speed Sensors
Courtesy of CHRYSLER LLC

1 - DRIVING CLUTCH K1
2 - TRANSMISSION HOUSING
3 - DRIVING CLUTCH K1 INTERNALLY TOOTHED DISC
4 - EXCITER RING
5 - VALVE HOUSING OF SHIFT PLATE
6 - N2 SPEED SENSOR
7 - SPRING
8 - N3 SPEED SENSOR

9 - EXCITER RING
10 - DRIVING CLUTCH K1 EXTERNALLY TOOTHED DISC

Signals from the speed sensors, N2 and N3, (6, 8) are recorded in the transmission control module (TCM), together with the wheel and engine speeds and other information, and are processed into an input signal for electronic control.

Speed sensor N2 (6) records the speed of the front planetary rear annulus assembly (10). Speed sensor N3 (8) records the speed of the K1 clutch (3).

RELATIVE SPEED SENSOR READINGS - NAG 1 TRANSMISSION

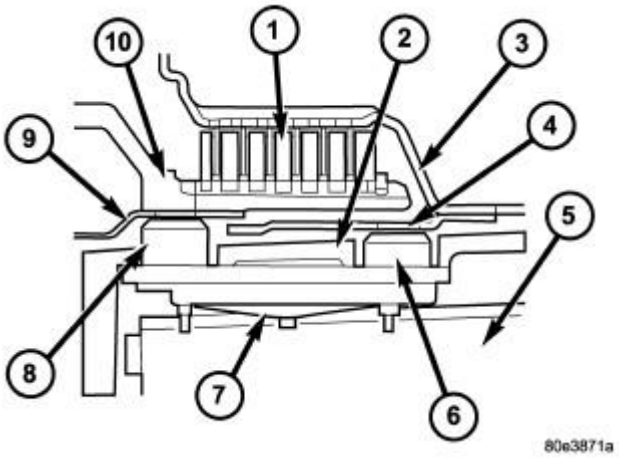

Fig. 237: Input Speed Sensors
Courtesy of CHRYSLER LLC

1 - DRIVING CLUTCH K1
2 - TRANSMISSION HOUSING
3 - DRIVING CLUTCH K1 INTERNALLY TOOTHED DISC
4 - EXCITER RING
5 - VALVE HOUSING OF SHIFT PLATE
6 - N2 SPEED SENSOR
7 - SPRING
8 - N3 SPEED SENSOR
9 - EXCITER RING
10 - DRIVING CLUTCH K1 EXTERNALLY TOOTHED DISC

There are several things to note regarding the function of the N2 and N3 speed sensors.

- K1 clutch (N3 speed sensor) will show no rotation whenever the B1 Brake is applied. N3 = Zero in 1st, 5th and Reverse.
- With the vehicle moving forward or reverse, N2 speed sensor reading will be greater than zero

in all gears

- Whenever the K1 clutch is applied (2nd, 3rd, and 4th) N2 will be equal to N3.
- There is no speed sensor internal to the transmission that directly measures input shaft speed. However, when K1 is applied N2 equals input shaft/turbine speed.
- The engine speed is fed to the TCM via can bus thus providing impeller speed.
- There is no speed sensor internal to the transmission that directly measures output shaft speed. ABS wheel sensors provide output shaft speed.
- K1 clutch (N3 speed sensor) will show no rotation whenever the B1 Brake is applied. N3 is equal to zero in 1st, 5th and Reverse gears.
- With the vehicle moving forward or reverse, N2 speed sensor reading will be greater than zero in all gears.
- Whenever the K1 clutch is applied (2nd, 3rd, and 4th) N2 will be equal to N3.
- There is no speed sensor internal to the transmission that directly measures input shaft speed. However, when K1 is applied N2 equals input shaft/turbine speed.
- The engine speed is fed to the TCM via the vehicle's communication bus thus providing impeller speed.
- There is no speed sensor internal to the transmission that directly measures output shaft speed. ABS wheel sensors provide output shaft speed.

NOTE: N2 sensor, N3 sensor, output shaft speed sensor are speeds relative to the input shaft turbine speed.

GEAR	INPUT SHAFT/TURBINE SPEED	N2 SENSOR	N3 SENSOR	OUTPUT SHAFT SPEED	OVERALL RATIO
1ST	1.0000	0.6081	0.0000	0.2782	3.59
2ND	1.0000	1.0000	1.0000	0.4574	2.19
3RD	1.0000	1.0000	1.0000	0.7115	1.41
4TH	1.0000	1.0000	1.0000	1.0000	1.00
5TH	1.0000	0.6081	0.0000	1.2035	0.83
REVERSE (S)	1.0000	0.6081	0.0000	-0.3157	-3.17

Based on the preceding chart, it appears that N3 sensor is redundant and provides no additional information. However, the TCM needs to know Input Shaft/Turbine speed. Since the N2 sensor is not directly tied to the Input Shaft, the N3 sensor is required to inform the TCM to divide the N2 value by 0.6081 or 1.0000 to calculate actual Turbine speed.

SHIFTER, TRANSMISSION

DESCRIPTION

DESCRIPTION

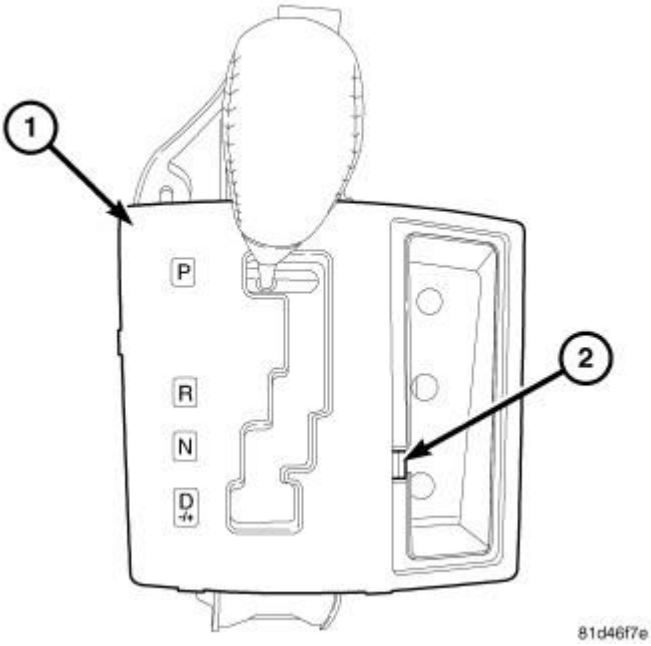

Fig. 238: NAG1 BTSI
Courtesy of CHRYSLER LLC

The automatic transmission is operated with the help of a shift lever assembly (SLA) (1) located in the floor console. There are four positions to which the selection lever can be shifted: P, R, N, D. In addition, the selector lever can be moved sideways (+/-) in position "D" to adjust the shift range.

All selector lever positions, as well as selected shift ranges in position "D", are identified by the SLA. The information is then sent to the transmission control module (TCM) via an electrical connection. At the same time, the selector lever positions "P", "R", "N" and "D" are transmitted by a shift cable to the selector shaft in the transmission.

The SLA is comprised of the following functions:

- **Key lock:** Depending on the selector lever position, the ignition cylinder is locked/unlocked, i.e., the ignition key can be removed only if the selector lever is in position "P". An electronic micro switch in the shifter assembly is used to perform this function.
- **Park lock:** The selector lever is not released from position "P" until the brake pedal has been applied and the ignition key is in the ON" position. Shift lock is controlled by the ignition module in conjunction with the brake switch and a locking solenoid in the SLA. As soon as the brake pedal is applied firmly, the locking solenoid is energized and retracted to unlock the selector lever. If the selector lever cannot be moved out of position "P" due to a malfunction, the shift lock function can be overridden (2).
- **Reverse inhibitor:** As soon as the vehicle speed exceeds approximately 4-7 mph, it is no longer possible to move the selector lever from position "N" to position "R". The reverse inhibit functionality is controlled by the same solenoid as the park lock. As the vehicle accelerates past the calibrated speed threshold, the solenoid is energized to block the sideways motion of the shift lever necessary to move from NEUTRAL to REVERSE. The reverse inhibit is not released until the vehicle speed falls below approximately 4-7 mph and the shifter is moved out of the "D"

shifter position.

OPERATION

OPERATION

With the selector lever in position "D", the transmission control module (TCM) automatically shifts the gears that are best-suited to the current operating situation. This means that shifting of gears is continuously adjusted to current driving and operating conditions in line with the selected shift range and the accelerator pedal position. Starting off is always performed in 1st gear.

The selector lever positions are determined by a sensor assembly internal to the shift lever assembly (SLA). The sensor assembly identifies the various positions of the SLA according to the following table.

Shift Lever Position	Bit 0	Bit 1	Bit 2	Bit 3
Default	0	0	0	0
"D"	1	0	1	0
"N"	0	1	1	0
"R"	1	1	1	0
"P"	0	0	0	1
"+"	1	0	0	1
"-"	0	1	0	1
"ND"	1	1	0	1
"RN"	0	0	1	1
"PR"	1	0	1	1
Implausible	1	1	1	1

NOTE: There are currently two different software functions out for "AutoStick" most cars use the upper gear limit functionality as described, but some cars (SRT and RT) use more of a 'gear hold' functionality. These vehicles are able to toggle between 1-2-3-4-5-D when you do the + / - shifts and will not downshift automatically, these systems "hold the gear"

The permissible shifter positions and transmission operating ranges are:

- P = Parking lock and engine starting.
- R = Reverse.
- N = Neutral and engine starting (no power is transmitted to the axles).
- D = The shift range includes all forward gears.

The shift range can be adjusted to the current operating conditions by tipping the selector lever to the left-hand side ("-") or the right-hand side ("+") when in position "D". If the shift range is limited, the

display in the instrument cluster indicates the selected shift range and not the currently engaged gear.

- 4= Shift range is limited to gears 1 to 4.
- 3= Shift range is limited to gears 1 to 3.
- 2= Shift range is limited to gears 1 to 2.
- 1= Shift range is limited to the 1st gear.

Tipping the shift lever will have the following results:

- **Tipping the selector lever toward "-" one time after another:** The shift range is reduced in descending sequence by one gear each time, i.e., from D - 4 - 3 - 2 - 1. If the selected limitation of the shift range would result in a downshift causing excessive engine speed, the shifting is not executed and the engaged gear as well as the shift range remain unchanged. This is to prevent the engine from overspeeding. Engine retardation is low with the selector lever in position "D". To make use of the full braking power of the engine, "manual" downshifting by tipping the lever towards the left-hand side is recommended. If this has been done, subsequent upshifting must be carried out manually as well.
- **Tipping the selector lever toward "-" and holding it in this position:** The currently engaged gear in range "D" is indicated in the instrument cluster display and the shift range is limited to this gear.
- **Tipping the selector lever toward "+" one time after another:** The shift range is increased by one gear each time and the increased shift range is displayed in the instrument cluster; possibly, the transmission upshifts to a faster gear.
- **Tipping the selector lever toward "+" several times:** The shift range is increased by one gear each time the lever is tipped until the shift range ends up in "D".
- **Tipping the selector lever toward "+" and holding it in this position:** The shift range is extended immediately to "D", shift ranges are indicated in ascending sequence; possibly, the transmission upshifts to a faster gear due to the extension of the shift range.

REMOVAL

REMOVAL

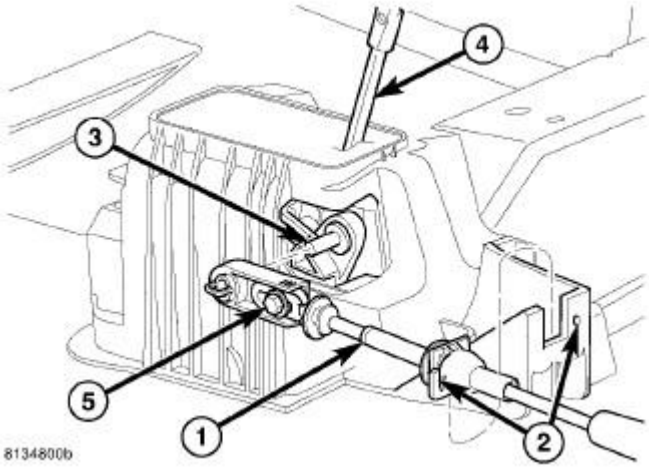

Fig. 239: Gearshift Cable at Shifter Assembly
Courtesy of CHRYSLER LLC

1 - GEARSHIFT CABLE
2 - CABLE RETAINER AND NOTCH
3 - SHIFTER ASSEMBLY PIN
4 - SHIFT LEVER
5 - ADJUSTMENT BOLT

1. Remove any necessary console parts for access to shift lever assembly and shifter cables. Refer to **Body/Interior/CONSOLE, Floor - Removal** .
2. Shift transmission into PARK.
3. Disconnect the transmission shift cable (1) at shift lever (3) and shifter assembly bracket (2).
4. Remove the shift cable retainer (2) from the notch in the shifter assembly (2).

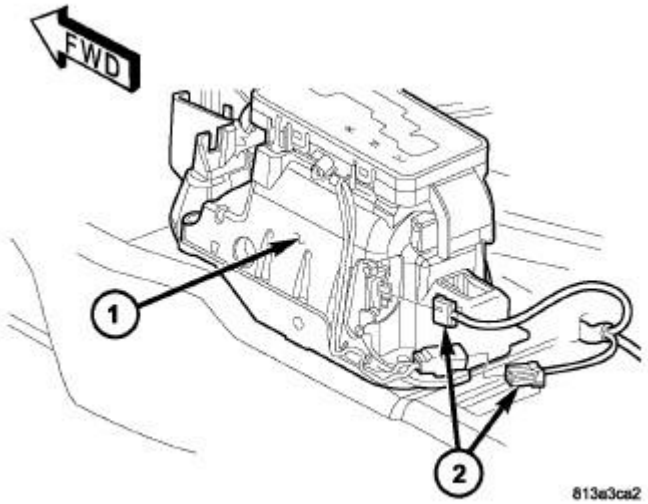

Fig. 240: Shifter Wiring Connectors - Typical
Courtesy of CHRYSLER LLC

1 - SHIFTER ASSEMBLY 2 - WIRING CONNECTORS

5. Disengage all wiring connectors (2) from the shifter assembly (1).

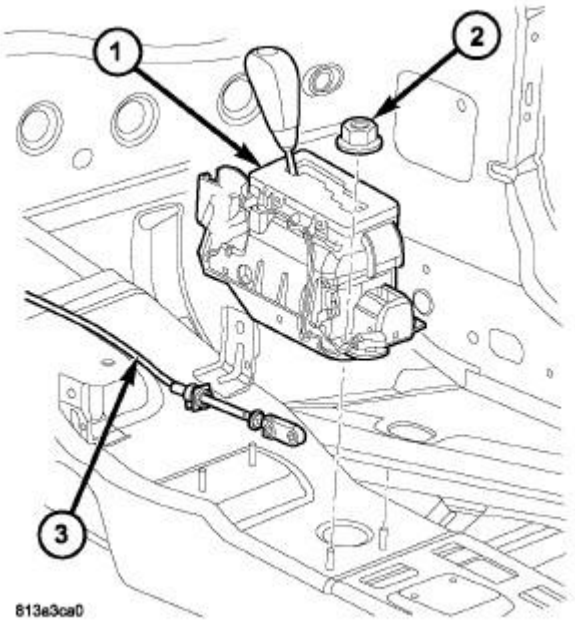

Fig. 241: Shifter Assembly
Courtesy of CHRYSLER LLC

1 - SHIFTER ASSEMBLY 2 - NUTS 3 - GEARSHIFT CABLE

6. Remove all nuts (2) holding the shifter assembly (1) to the floor pan.
7. Remove the shifter assembly (1) from the vehicle.

INSTALLATION

INSTALLATION

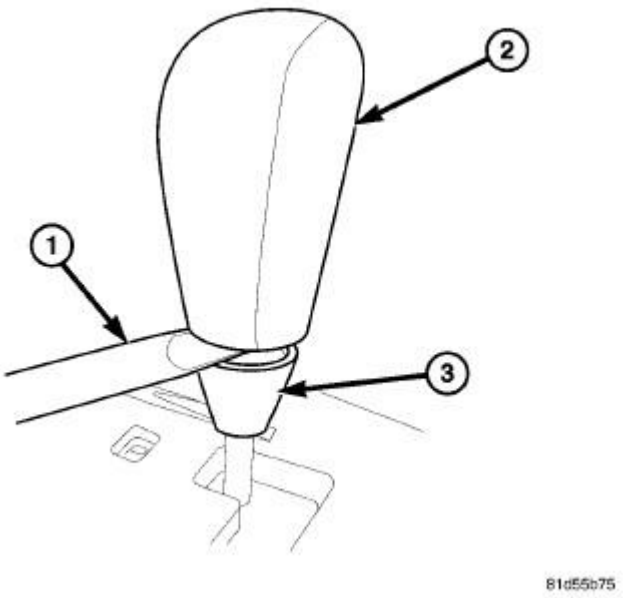

Fig. 242: Shifter Lower Trim
Courtesy of CHRYSLER LLC

1. If a new shifter assembly is being installed, use a trim stick (1) to separate the shift knob lower trim (3) from the shift knob (2).

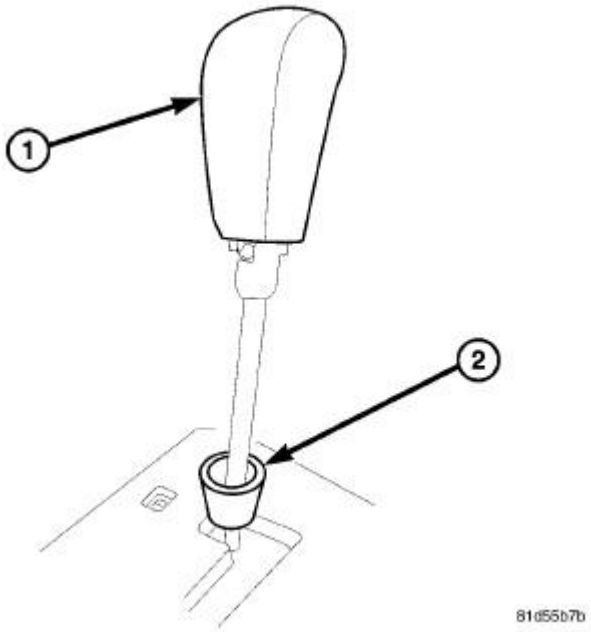

Fig. 243: Remove Shift Knob
Courtesy of CHRYSLER LLC

2. Pull up on the shift knob (1) to remove the knob from the shaft then remove the lower trim (2).
3. Install the lower trim onto the new shifter shaft. Install the shift knob onto the shaft by hand. Install the lower trim onto the shift knob.

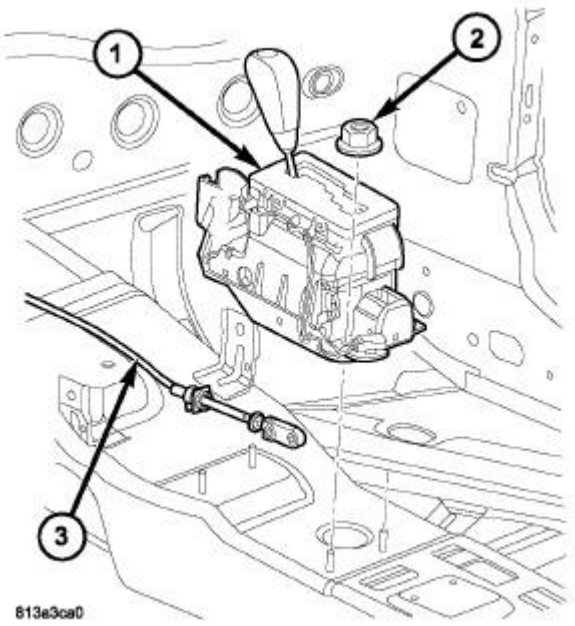

Fig. 244: Shifter Assembly
Courtesy of CHRYSLER LLC

1 - SHIFTER ASSEMBLY
2 - NUTS
3 - GEARSHIFT CABLE

4. Install shifter assembly (1) onto the shifter assembly studs on the floor pan.
5. Install the nuts (2) to hold the shifter assembly (1) onto the floor pan. Tighten nuts to 7 N.m (65 in.lbs.).

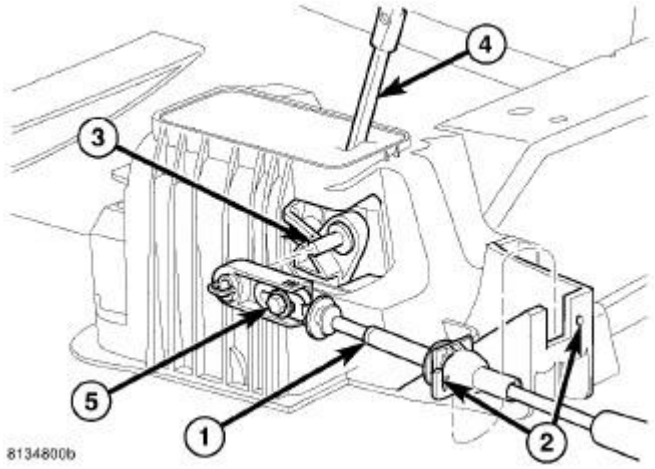

Fig. 245: Gearshift Cable at Shifter Assembly
Courtesy of CHRYSLER LLC

1 - GEARSHIFT CABLE
2 - CABLE RETAINER AND NOTCH
3 - SHIFTER ASSEMBLY PIN
4 - SHIFT LEVER
5 - ADJUSTMENT BOLT

6. Place the floor shifter lever in PARK position.
7. Loosen the adjustment screw (5) on the gearshift cable (1).
8. Install the gearshift cable (1) to the shift lever pin (3).

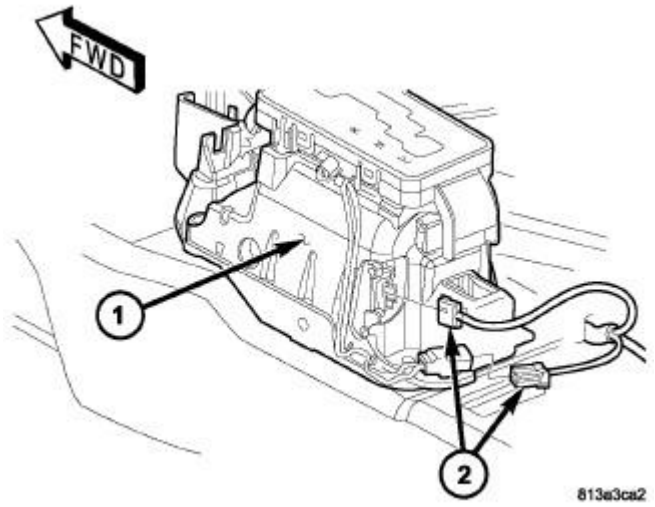

Fig. 246: Shifter Wiring Connectors
Courtesy of CHRYSLER LLC

1 - SHIFTER ASSEMBLY 2 - WIRING CONNECTORS

9. Install the wiring harness connectors (2) to the shifter assembly.
10. Verify that the shift lever is in the PARK position and the transmission park sprag is set by rocking the vehicle.
11. Tighten the adjustment screw to 7 N.m (65 in.lbs.).
12. Verify correct shifter, park lock, and BTSI operation.
13. Install any console parts removed for access to shift lever assembly and shift cables. Refer to **Body/Interior/CONSOLE, Floor - Installation** .

SOLENOID, TRANSMISSION

DESCRIPTION

DESCRIPTION

The typical electrical solenoid used in automotive applications is a linear actuator. It is a device that produces motion in a straight line. This straight line motion can be either forward or backward in direction, and short or long distance.

A solenoid is an electromechanical device that uses a magnetic force to perform work. It consists of a coil of wire, wrapped around a magnetic core made from steel or iron, and a spring loaded, movable plunger, which performs the work, or straight line motion. The shift valves (solenoids) are On-Off solenoids and are powered up by the TCM with a 12-volt power source and are internally grounded in the transmission. The Torque Converter Clutch (TCC) and Pressure Control (PC) solenoids are also powered up by the TCM and internally grounded in the transmission but are pulse with modulated (PWM). PWM measurable voltage varies depending on percentage of modulation requested by the TCM.

The solenoids used in transmission applications are attached to valves which can be classified as **normally open** or **normally closed** . The **normally open** solenoid valve is defined as a valve which allows hydraulic flow when no current or voltage is applied to the solenoid. The **normally closed** solenoid valve is defined as a valve which does not allow hydraulic flow when no current or voltage is applied to the solenoid. These valves perform hydraulic control functions for the transmission and must therefore be durable and tolerant of dirt particles. For these reasons, the valves have hardened steel poppets and ball valves. The solenoids operate the valves directly, which means that the solenoids must have very high outputs to close the valves against the sizable flow areas and line pressures found in current transmissions. Fast response time is also necessary to ensure accurate control of the transmission.

The strength of the magnetic field is the primary force that determines the speed of operation in a particular solenoid design. A stronger magnetic field will cause the plunger to move at a greater speed than a weaker one. There are basically two ways to increase the force of the magnetic field:

1. Increase the amount of current applied to the coil or

2. Increase the number of turns of wire in the coil.

The most common practice is to increase the number of turns by using thin wire that can completely fill the available space within the solenoid housing. The strength of the spring and the length of the plunger also contribute to the response speed possible by a particular solenoid design.

A solenoid can also be described by the method by which it is controlled. Some of the possibilities include variable force, pulse-width modulated, constant ON, or duty cycle. The variable force and pulse-width modulated versions utilize similar methods to control the current flow through the solenoid to position the solenoid plunger at a desired position somewhere between full ON and full OFF. The constant ON and duty cycled versions control the voltage across the solenoid to allow either full flow or no flow through the solenoid's valve.

UPSHIFT/DOWNSHIFT SOLENOID VALVES

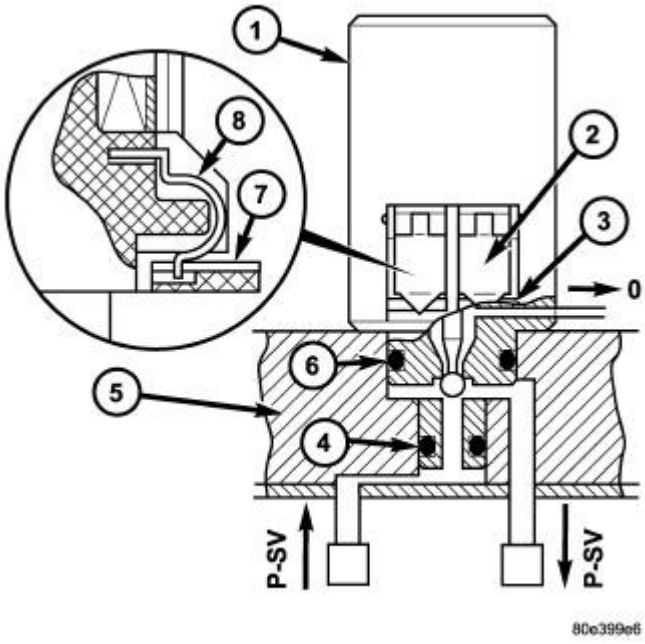

Fig. 247: Upshift/Downshift Solenoid Valves
Courtesy of CHRYSLER LLC

1 - UPSHIFT/DOWNSHIFT SOLENOID VALVE
2 - CONTACT SPRING
3 - CONDUCTOR TRACK
4 - O-RING
5 - VALVE HOUSING OF SHIFT PLATE
6 - O-RING
7 - CONDUCTOR TRACK
8 - CONTACT SPRING

The solenoid valves (1) for upshifts and downshifts are located in the shell of the electric control unit and pressed against the shift plate with a spring.

The solenoid valves (1) initiate the upshift and downshift procedures in the shift plate.

The solenoid valves (1) are sealed off from the valve housing of the shift plate (5) by two O-rings (4, 6). The contact springs (8) at the solenoid valve engage in a slot in the conductor tracks (7). The force of the contact spring (8) ensures safe contacts.

MODULATING PRESSURE CONTROL SOLENOID VALVE

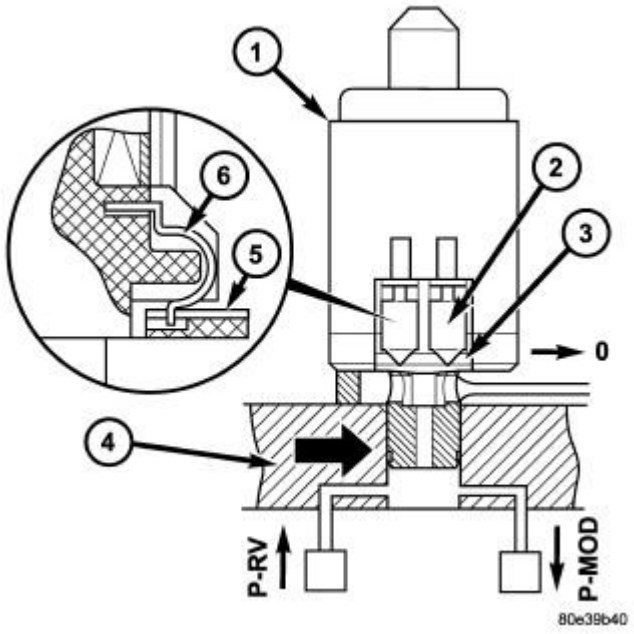

Fig. 248: Modulating Pressure Control Solenoid Valve
Courtesy of CHRYSLER LLC

1 - MODULATING PRESSURE CONTROL SOLENOID VALVE
2 - CONTACT SPRING
3 - CONDUCTOR TRACK
4 - VALVE HOUSING SHIFT PLATE
5 - CONDUCTOR TRACK
6 - CONTACT SPRING

The modulating pressure control solenoid valve (1) is located in the shell of the electric valve control unit and pressed against the shift plate by a spring.

Its purpose is control the modulating pressure depending on the continuously changing operating conditions, such as load and gear change.

The modulating pressure regulating solenoid valve (1) has an interference fit and is sealed off to the valve body of the shift plate (4) by a seal (arrow in illustration). The contact springs (2) at the solenoid valve engage in a slot in the conductor tracks (3). The force of the contact springs (2) ensures secure contacts.

TORQUE CONVERTER LOCKUP CLUTCH PWM SOLENOID VALVE

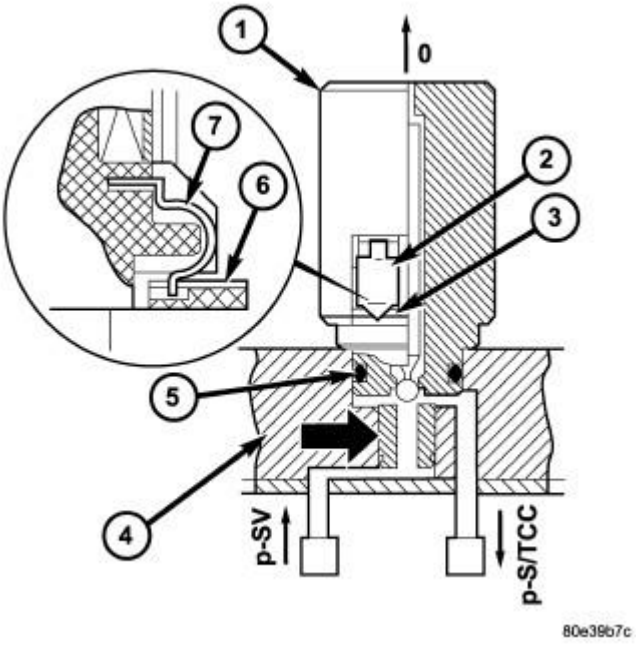

Fig. 249: Torque Converter Lockup Clutch PWM Solenoid Valve
Courtesy of CHRYSLER LLC

1 - TORQUE CONVERTER LOCKUP CLUTCH PWM SOLENOID VALVE
2 - CONTACT SPRING
3 - CONDUCTOR TRACK
4 - VALVE HOUSING OF SHIFT PLATE
5 - O-RING
6 - CONDUCTOR TRACK
7 - CONTACT SPRING

The torque converter lockup clutch PWM solenoid valve (1) is located in the shell of the electric valve control unit and pressed against the shift plate by a spring.

The PWM solenoid valve (1) for the torque converter lockup controls the pressure for the torque converter lockup clutch.

The torque converter lockup PWM solenoid valve (1) is sealed off to the valve body of the shift plate (4) by an O-ring (5) and a seal (arrow in illustration). The contact springs (2) at the solenoid valve engage in a slot in the conductor tracks (3). The force of the contact springs (2) ensures secure

contacts.

SHIFT PRESSURE CONTROL SOLENOID VALVE

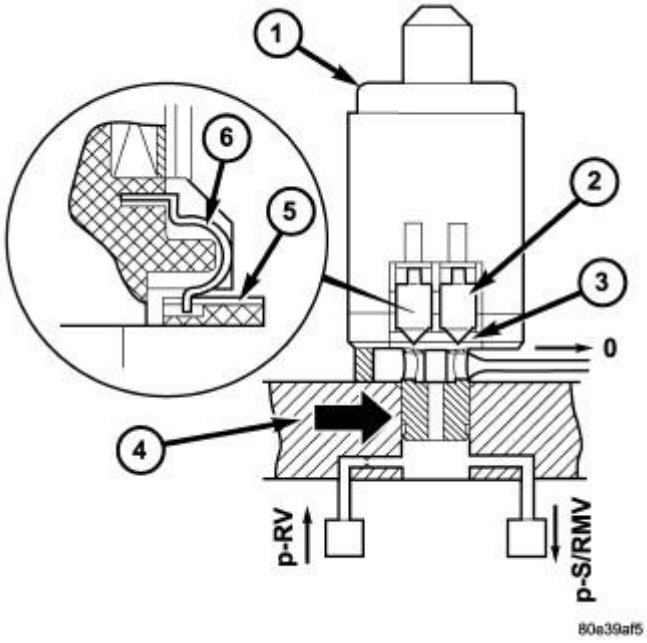

Fig. 250: Shift Pressure Control Solenoid Valve
Courtesy of CHRYSLER LLC

1 - SHIFT PRESSURE CONTROL SOLENOID VALVE
2 - CONTACT SPRING
3 - CONDUCTOR TRACK
4 - VALVE HOUSING SHIFT PLATE
5 - CONDUCTOR TRACK
6 - CONTACT SPRING

The shift pressure control solenoid valve (1) is located in the shell of the electric valve control unit and pressed against the shift plate by a spring.

Its purpose is to control the shift pressure depending on the continuously changing operating conditions, such as load and gear change.

The shift pressure regulating solenoid valve (1) has an interference fit and is sealed off to the valve body of the shift plate (4) by a seal (arrow in illustration). The contact springs (2) at the solenoid valve engage in a slot in the conductor tracks (3). The force of the contact springs (2) ensures secure contacts.

OPERATION

OPERATION

NOTE: A scan tool can only display a estimated pressure based on the current fed to the solenoid. Therefore if there's a stuck Line Pressure Regulating valve and the transmission has insufficient pressure, the scan tool will still display estimated MOD and Shift pressures because the solenoids are being fed the correct amount of current.

The solenoids are fed a 12-volt source from the TCM (Transmission Control Module). When an electrical current is applied to the solenoid coil, a magnetic field is created which produces an attraction to the plunger, causing the plunger to move and work against the spring pressure and the load applied by the fluid the valve is controlling. The plunger is normally directly attached to the valve which it is to operate. When the current is removed from the coil, the attraction is removed and the plunger will return to its original position due to spring pressure.

The plunger is made of a conductive material and accomplishes this movement by providing a path for the magnetic field to flow. By keeping the air gap between the plunger and the coil to the minimum necessary to allow free movement of the plunger, the magnetic field is maximized.

UPSHIFT/DOWNSHIFT SOLENOID VALVES

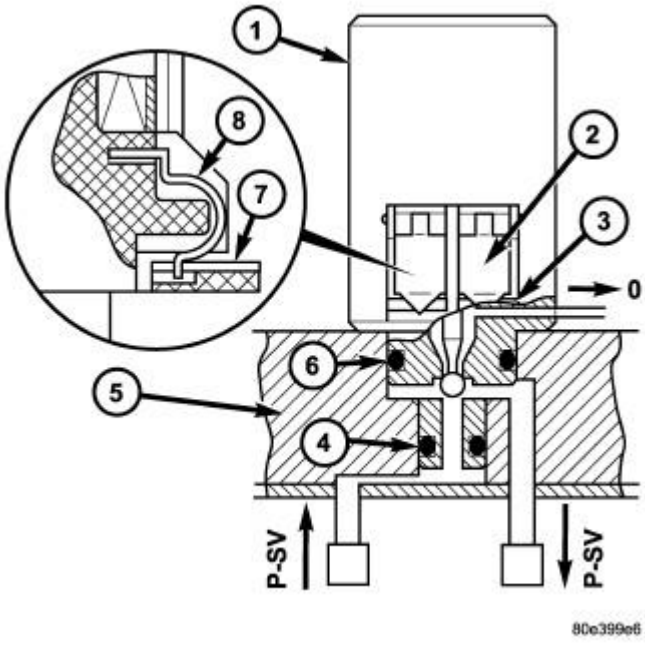

Fig. 251: Upshift/Downshift Solenoid Valves
Courtesy of CHRYSLER LLC

1 - UPSHIFT/DOWNSHIFT SOLENOID VALVE
2 - CONTACT SPRING
3 - CONDUCTOR TRACK

4 - O-RING
5 - VALVE HOUSING OF SHIFT PLATE
6 - O-RING
7 - CONDUCTOR TRACK
8 - CONTACT SPRING

If a solenoid valve (1) is actuated by the TCM, it opens and guides the control pressure (p-SV) to the assigned command valve. The solenoid valve remains actuated and therefore open until the shifting process is complete. The shift pressure (p-SV) to the command valve is reduced to zero as soon as the power supply to the solenoid valve is interrupted.

MODULATING PRESSURE CONTROL SOLENOID VALVE

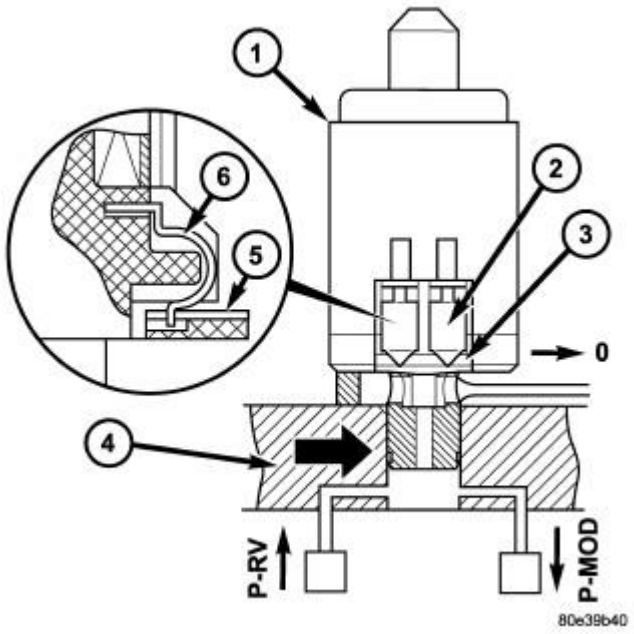

Fig. 252: Modulating Pressure Control Solenoid Valve
Courtesy of CHRYSLER LLC

1 - MODULATING PRESSURE CONTROL SOLENOID VALVE
2 - CONTACT SPRING
3 - CONDUCTOR TRACK
4 - VALVE HOUSING SHIFT PLATE
5 - CONDUCTOR TRACK
6 - CONTACT SPRING

The modulating pressure regulating solenoid valve (1) assigns a proportional pressure to the current which is controlled by the TCM according to the load.

TORQUE CONVERTER LOCKUP CLUTCH PWM SOLENOID VALVE

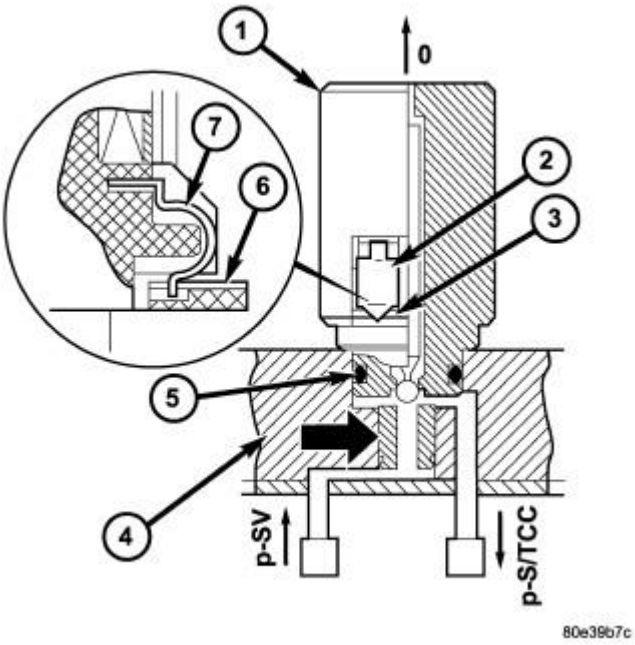

Fig. 253: Torque Converter Lockup Clutch PWM Solenoid Valve
Courtesy of CHRYSLER LLC

1 - TORQUE CONVERTER LOCKUP CLUTCH PWM SOLENOID VALVE
2 - CONTACT SPRING
3 - CONDUCTOR TRACK
4 - VALVE HOUSING OF SHIFT PLATE
5 - O-RING
6 - CONDUCTOR TRACK
7 - CONTACT SPRING

The torque converter lockup PWM solenoid (1) valve converts pulse-wave-modulated current controlled by the TCM into the appropriate hydraulic control pressure (p-S/TCC).

SHIFT PRESSURE CONTROL SOLENOID VALVE

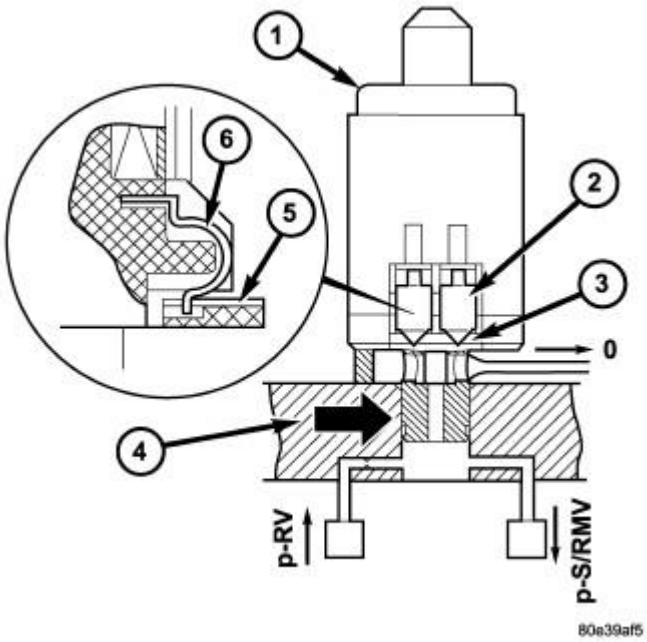

Fig. 254: Shift Pressure Control Solenoid Valve
Courtesy of CHRYSLER LLC

1 - SHIFT PRESSURE CONTROL SOLENOID VALVE
2 - CONTACT SPRING
3 - CONDUCTOR TRACK
4 - VALVE HOUSING SHIFT PLATE
5 - CONDUCTOR TRACK
6 - CONTACT SPRING

The shift pressure regulating solenoid valve (1) assigns a proportional pressure to the current which is controlled by the TCM according to the load.

TORQUE CONVERTER

DESCRIPTION

DESCRIPTION

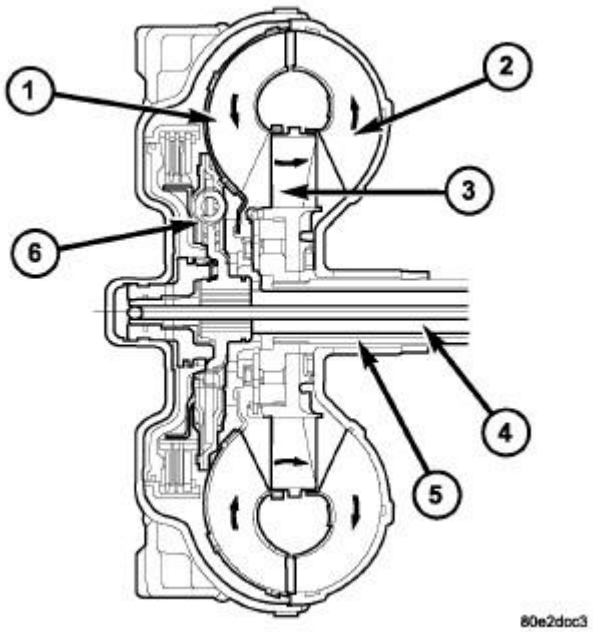

Fig. 255: Torque Converter
Courtesy of CHRYSLER LLC

1 - TURBINE
2 - IMPELLER
3 - STATOR
4 - INPUT SHAFT
5 - STATOR SHAFT
6 - TURBINE DAMPER

CAUTION: The torque converter must be replaced if a transmission failure resulted in large amounts of metal or fiber contamination in the fluid.

The torque converter is a hydraulic device that couples the engine crankshaft to the transmission. The torque converter consists of an outer shell with an internal turbine (1), a stator (3), an overrunning clutch, an impeller (2), and an electronically applied converter clutch. The converter clutch provides reduced engine speed and greater fuel economy when engaged. Clutch engagement also provides reduced transmission fluid temperatures. The converter clutch engages in third through fifth gears. The torque converter hub drives the transmission oil (fluid) pump.

A turbine damper (6) has been added for some applications to help improve vehicle noise, vibration, and harshness (NVH) characteristics.

The torque converter is a sealed, welded unit that is not repairable and is serviced as an assembly.

IMPELLER

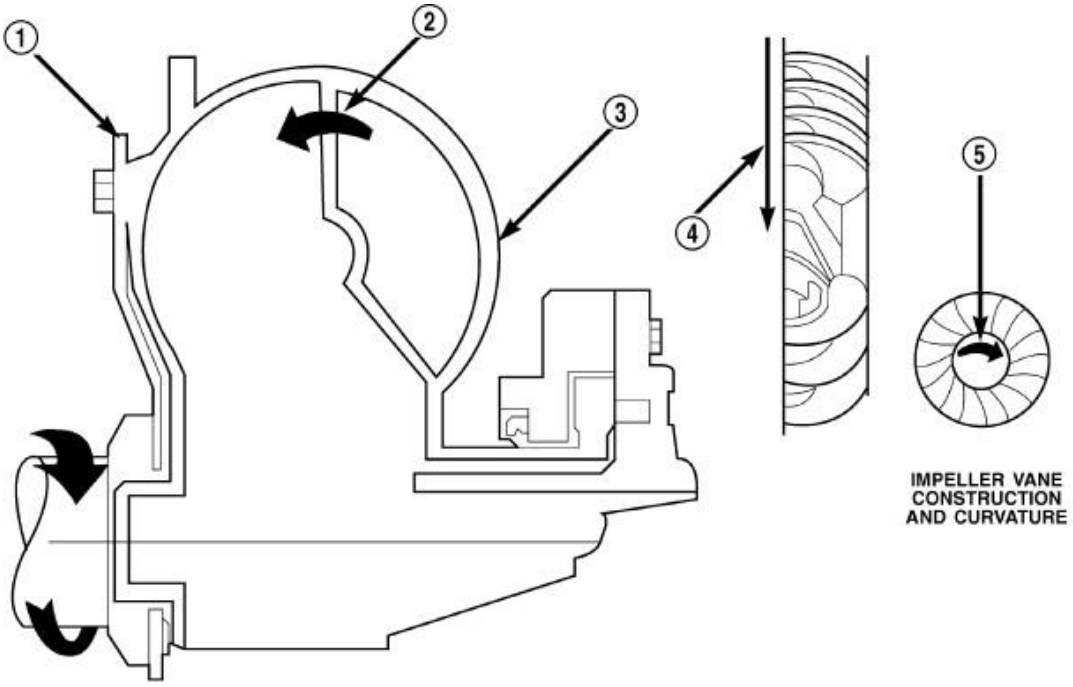

Fig. 256: Impeller
Courtesy of CHRYSLER LLC

1 - ENGINE FLEXPLATE	4 - ENGINE ROTATION
2 - OIL FLOW FROM IMPELLER SECTION INTO TURBINE SECTION	5 - ENGINE ROTATION
3 - IMPELLER VANES AND COVER ARE INTEGRAL	

The impeller (3) is an integral part of the converter housing. The impeller consists of curved blades placed radially along the inside of the housing on the transmission side of the converter. As the converter housing is rotated by the engine, so is the impeller, because they are one and the same and are the driving members of the system.

TURBINE

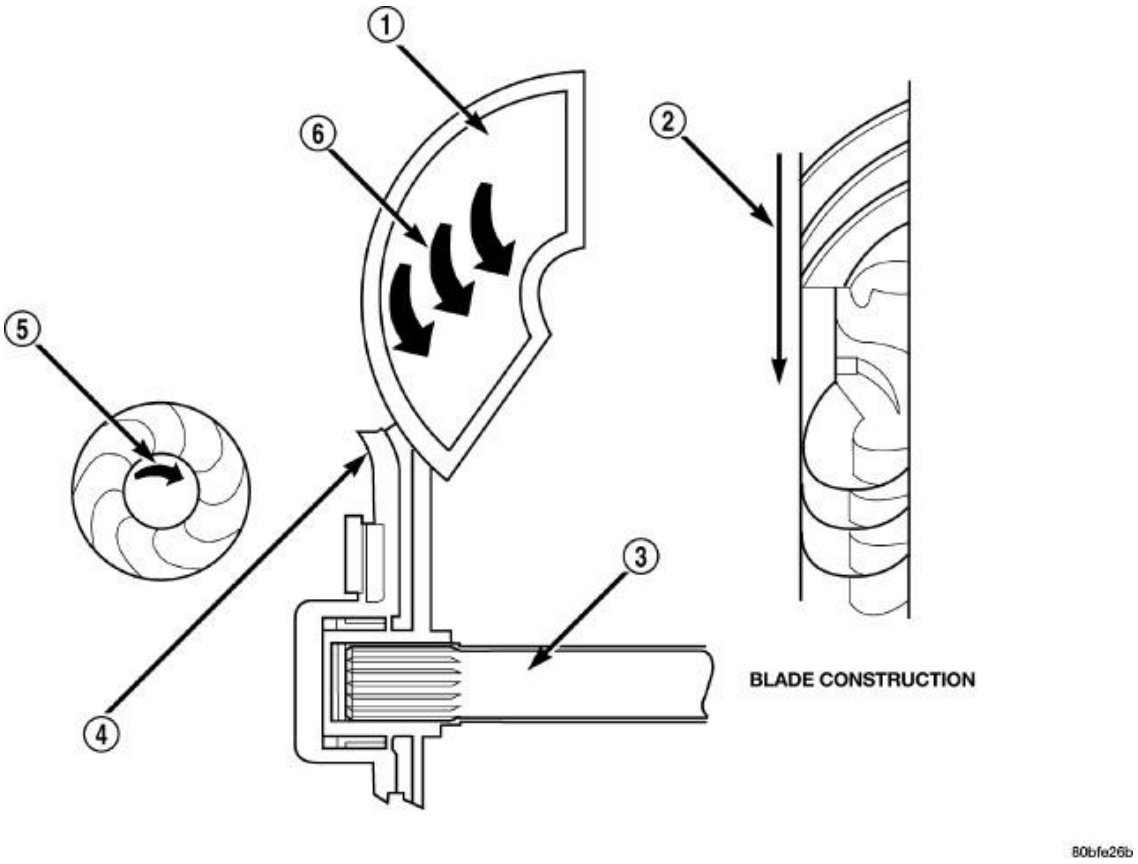

Fig. 257: Turbine
Courtesy of CHRYSLER LLC

1 - TURBINE VANE	4 - PORTION OF TORQUE CONVERTER COVER
2 - ENGINE ROTATION	5 - ENGINE ROTATION
3 - INPUT SHAFT	6 - OIL FLOW WITHIN TURBINE SECTION

The turbine (1) is the output, or driven, member of the converter. The turbine is mounted within the housing opposite the impeller, but is not attached to the housing. The input shaft is inserted through the center of the impeller and splined into the turbine. The design of the turbine is similar to the impeller, except the blades of the turbine are curved in the opposite direction.

STATOR

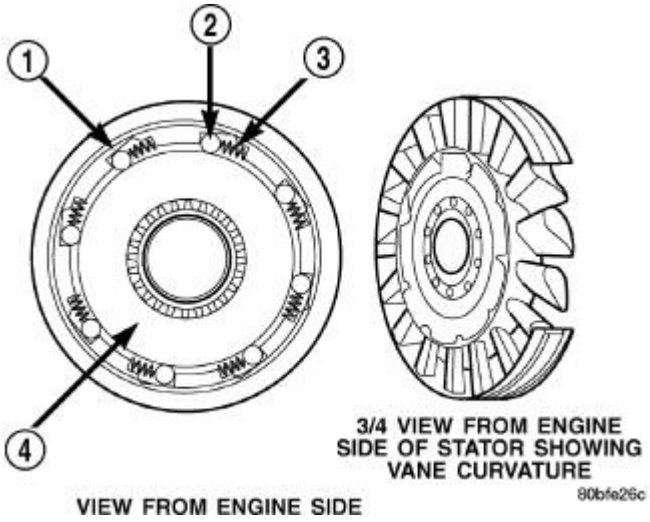

Fig. 258: Stator Components
Courtesy of CHRYSLER LLC

1 - CAM (OUTER RACE) 2 - ROLLER 3 - SPRING 4 - INNER RACE

The stator assembly (1-4) is mounted on a stationary shaft which is an integral part of the oil pump.

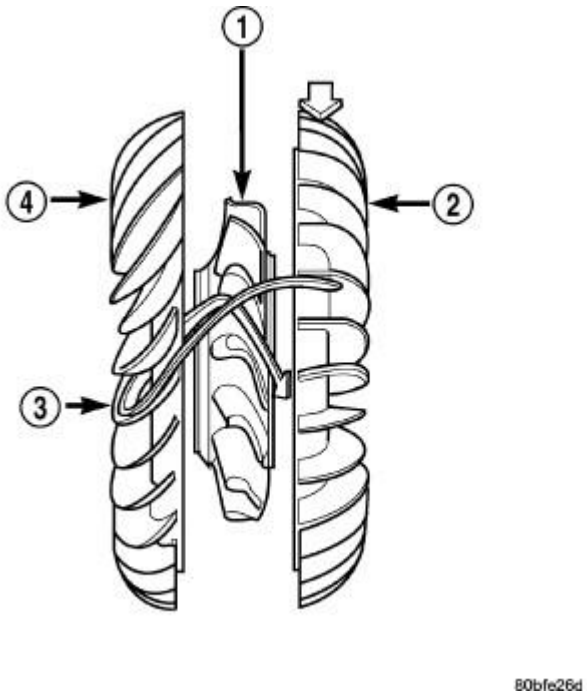

Fig. 259: Stator Location
Courtesy of CHRYSLER LLC

1 - STATOR
2 - IMPELLER
3 - FLUID FLOW
4 - TURBINE

The stator (1) is located between the impeller (2) and turbine (4) within the torque converter case . The stator contains a freewheeling clutch, which allows the stator to rotate only in a clockwise direction. When the stator is locked against the freewheeling clutch, the torque multiplication feature of the torque converter is operational.

TORQUE CONVERTER CLUTCH (TCC)

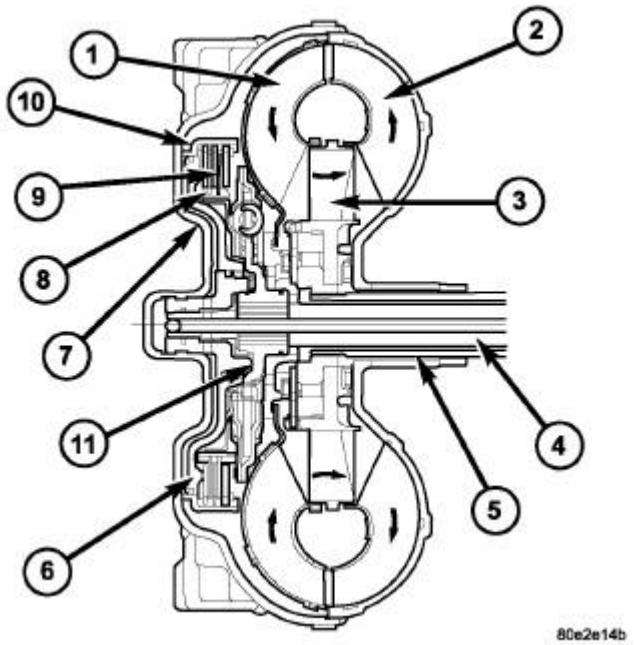

Fig. 260: Torque Converter Lock-up Clutch
Courtesy of CHRYSLER LLC

1 - TURBINE
2 - IMPELLER
3 - STATOR
4 - INPUT SHAFT
5 - STATOR SHAFT
6 - PISTON
7 - COVER SHELL
8 - INTERNALLY TOOTHED DISC CARRIER
9 - CLUTCH PLATE SET
10 - EXTERNALLY TOOTHED DISC CARRIER
11 - TURBINE DAMPER

The TCC (9) was installed to improve the efficiency of the torque converter that is lost to the slippage of the fluid coupling. Although the fluid coupling provides smooth, shock-free power transfer, it is natural for all fluid couplings to slip. If the impeller and turbine were mechanically locked together, a zero slippage condition could be obtained. A hydraulic piston with friction material was added to the turbine assembly to provide this mechanical lock-up.

In order to reduce heat build-up in the transmission and buffer the powertrain against torsional vibrations, the TCM can duty cycle the torque converter lock-up solenoid to achieve a smooth application of the torque converter clutch. This function, referred to as Electronically Modulated Converter Clutch (EMCC) can occur at various times depending on the following variables:

- Shift lever position
- Current gear range
- Transmission fluid temperature
- Engine coolant temperature
- Input speed
- Throttle angle
- Engine speed

OPERATION

OPERATION

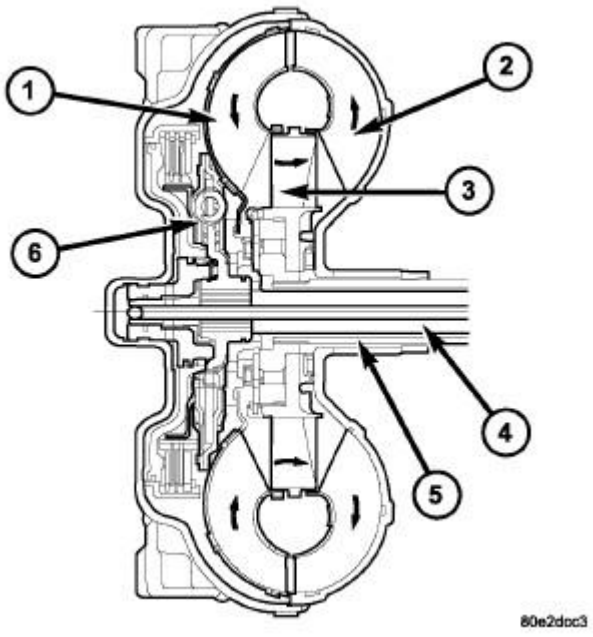

Fig. 261: Torque Converter
Courtesy of CHRYSLER LLC

1 - TURBINE
2 - IMPELLER
3 - STATOR
4 - INPUT SHAFT
5 - STATOR SHAFT
6 - TURBINE DAMPER

The converter impeller (driving member) (2) , which is integral to the converter housing and bolted to the engine drive plate, rotates at engine speed. The converter turbine (driven member) (1), which reacts from fluid pressure generated by the impeller, rotates and turns the transmission input shaft (4).

TURBINE

As the fluid that was put into motion by the impeller blades strikes the blades of the turbine, some of the energy and rotational force is transferred into the turbine and the input shaft. This causes both of them (turbine and input shaft) to rotate in a clockwise direction following the impeller. As the fluid is leaving the trailing edges of the turbine's blades it continues in a "hindering" direction back toward the impeller. If the fluid is not redirected before it strikes the impeller, it will strike the impeller in such a direction that it would tend to slow it down.

STATOR

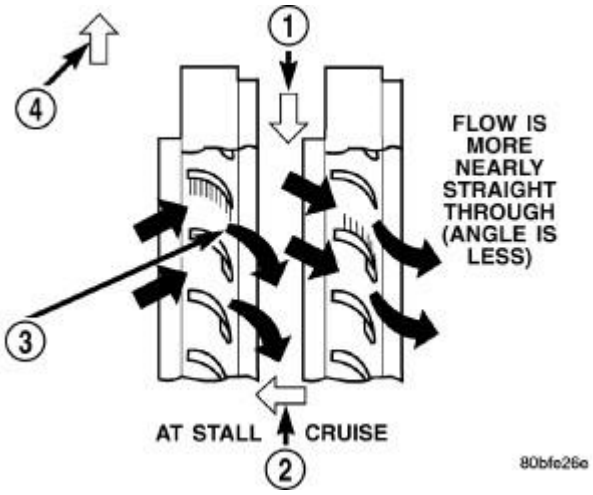

Fig. 262: Stator Operation
Courtesy of CHRYSLER LLC

1 - DIRECTION STATOR WILL FREE WHEEL DUE TO OIL PUSHING ON BACKSIDE OF VANES
2 - FRONT OF ENGINE
3 - INCREASED ANGLE AS OIL STRIKES VANES
4 - DIRECTION STATOR IS LOCKED UP DUE TO OIL PUSHING AGAINST STATOR VANES

Torque multiplication is achieved by locking the stator's over-running clutch to its shaft. Under stall

conditions (the turbine is stationary), the oil leaving the turbine blades strikes the face of the stator blades and tries to rotate them in a counterclockwise direction. When this happens the over-running clutch of the stator locks and holds the stator from rotating. With the stator locked, the oil strikes the stator blades and is redirected into a "helping" direction before it enters the impeller. This circulation of oil from impeller to turbine, turbine to stator, and stator to impeller, can produce a maximum torque multiplication of about 2.0:1. As the turbine begins to match the speed of the impeller, the fluid that was hitting the stator in such as way as to cause it to lock-up is no longer doing so. In this condition of operation, the stator begins to free wheel and the converter acts as a fluid coupling.

TORQUE CONVERTER CLUTCH (TCC)

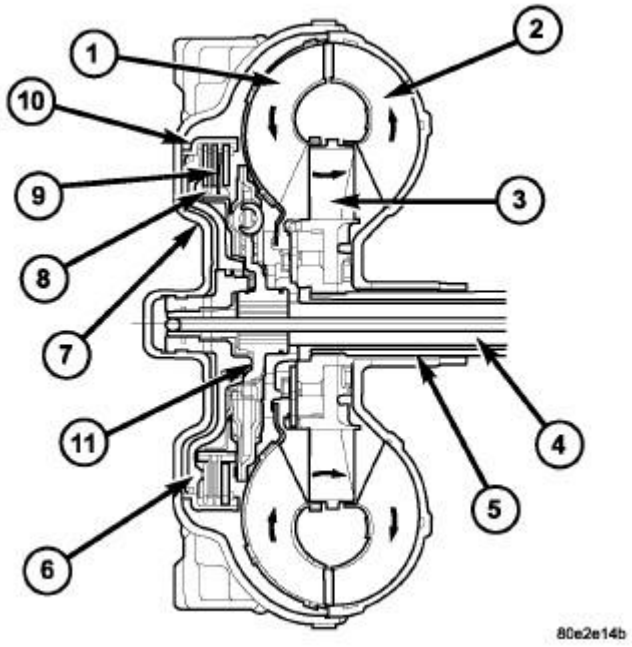

Fig. 263: Torque Converter Lock-up Clutch
Courtesy of CHRYSLER LLC

1 - TURBINE
2 - IMPELLER
3 - STATOR
4 - INPUT SHAFT
5 - STATOR SHAFT
6 - PISTON
7 - COVER SHELL
8 - INTERNALLY TOOTHED DISC CARRIER
9 - CLUTCH PLATE SET
10 - EXTERNALLY TOOTHED DISC CARRIER
11 - TURBINE DAMPER

In a standard torque converter, the impeller (2) and turbine (1) are rotating at about the same speed

and the stator (3) is freewheeling, providing no torque multiplication. By applying the turbine's piston and friction material (9) , a total converter engagement can be obtained. The result of this engagement is a direct 1:1 mechanical link between the engine and the transmission.

The clutch can be engaged in second, third, fourth, and fifth gear ranges.

The TCM controls the torque converter by way of internal logic software. The programming of the software provides the TCM with control over the torque converter solenoid. There are four output logic states that can be applied as follows:

- No EMCC
- Partial EMCC
- Full EMCC
- Gradual-to-no EMCC

NO EMCC

Under No EMCC conditions, the TCC Solenoid is OFF. There are several conditions that can result in NO EMCC operations. No EMCC can be initiated due to a fault in the transmission or because the TCM does not see the need for EMCC under current driving conditions.

PARTIAL EMCC

Partial EMCC operation modulates the TCC Solenoid (duty cycle) to obtain partial torque converter clutch application. Partial EMCC operation is maintained until Full EMCC is called for and actuated. During Partial EMCC some slip does occur. Partial EMCC will usually occur at low speeds, low load and light throttle situations.

FULL EMCC

During Full EMCC operation, the TCM increases the TCC Solenoid duty cycle to full ON after Partial EMCC control brings the engine speed within the desired slip range of transmission input speed relative to engine RPM.

GRADUAL-TO-NO EMCC

This operation is to soften the change from Full or Partial EMCC to No EMCC. This is done at mid-throttle by decreasing the TCC Solenoid duty cycle.

REMOVAL

REMOVAL

1. Remove transmission and torque converter from vehicle. See **Transmission and Transfer Case/Automatic - NAG1 - Removal**
2. Place a suitable drain pan under the converter housing end of the transmission.

CAUTION: Verify that transmission is secure on the lifting device or work surface, the center of gravity of the transmission will shift when the torque converter is removed creating an unstable condition. The torque converter is a heavy unit. Use caution when separating the torque converter from the transmission.

3. Pull the torque converter forward until the center hub clears the oil pump seal.
4. Separate the torque converter from the transmission.

INSTALLATION

INSTALLATION

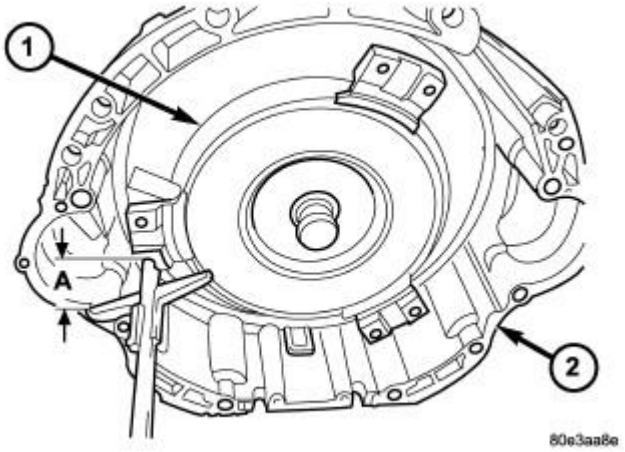

Fig. 264: Torque Converter Installation Depth
Courtesy of CHRYSLER LLC

1 - TORQUE CONVERTER 2 - TRANSMISSION HOUSING

Check converter hub and drive flats for sharp edges, burrs, scratches, or nicks. Polish the hub and flats with 320/400 grit paper or crocus cloth if necessary. The hub must be smooth to avoid damaging the pump seal at installation.

1. Lubricate oil pump seal lip with transmission fluid.
2. Place torque converter in position on transmission.

CAUTION: Do not damage oil pump seal or converter hub while inserting torque converter into the front of the transmission.

3. Align torque converter to oil pump seal opening.
4. Insert torque converter hub into oil pump.

5. While pushing torque converter inward, rotate converter until converter is fully seated in the oil pump gears.
6. Check converter seating with a scale and straightedge . Surface of converter lugs should be at least 19 mm (3/4 in.) to rear of straightedge when converter is fully seated.
7. If necessary, temporarily secure converter with C-clamp attached to the converter housing.
8. Install the transmission in the vehicle.
9. Fill the transmission with the recommended fluid.

ELECTROHYDRAULIC CONTROL UNIT COMPONENT IDENTIFICATION

DESCRIPTION

DESCRIPTION

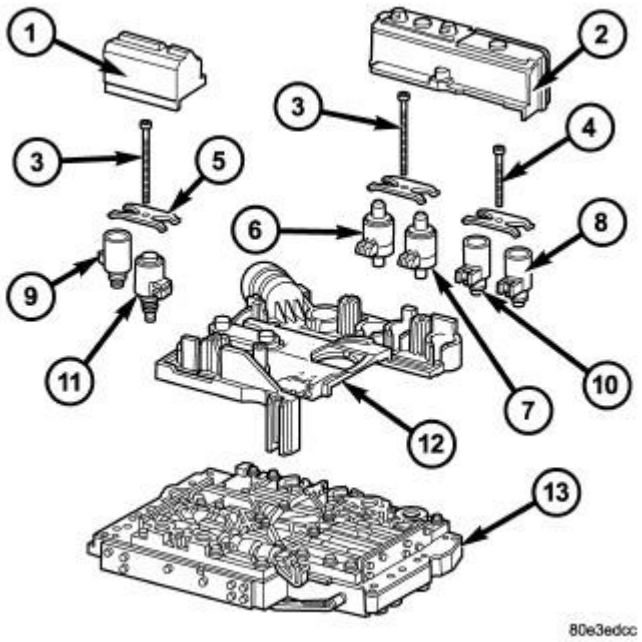

Fig. 265: Electrical Unit Components
Courtesy of CHRYSLER LLC

1 - SOLENOID CAP (if equipped)
2 - SOLENOID CAP (if equipped)
3 - BOLT - M6X32
4 - BOLT - M6X30
5 - LEAF SPRING
6 - MODULATING PRESSURE REGULATING SOLENOID VALVE
7 - SHIFT PRESSURE REGULATING SOLENOID
8 - 3-4 SHIFT SOLENOID

9 - TORQUE CONVERTER LOCK-UP SOLENOID
10 - 1-2/4-5 SHIFT SOLENOID
11 - 2-3 SHIFT SOLENOID
12 - ELECTRICAL CONTROL UNIT
13 - SHIFT PLATE

The electrohydraulic control unit comprises the shift plate (13) made from light alloy for the hydraulic control and an electrical control unit (12). The electrical control unit (12) comprises of a supporting body made of plastic, into which the electrical components (1 - 11) are assembled. The supporting body is mounted on the shift plate (13) and screwed to it.

Strip conductors inserted into the supporting body make the connection between the electrical components and a plug connector. The connection to the wiring harness on the vehicle and the transmission control module (TCM) is produced via this 13-pin plug connector with a bayonet lock.

ELECTRICAL CONTROL UNIT

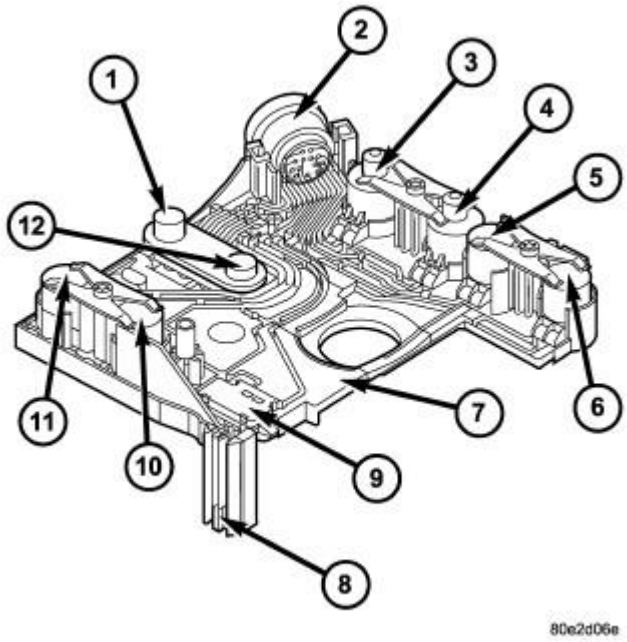

Fig. 266: Electrical Control Unit
Courtesy of CHRYSLER LLC

1 - N3 SPEED SENSOR
2 - PLUG CONNECTOR
3 - MODULATING PRESSURE REGULATING SOLENOID
4 - SHIFT PRESSURE REGULATING SOLENOID
5 - 1-2/4-5 SHIFT SOLENOID
6 - 3-4 SHIFT SOLENOID

7 - ELECTRICAL CONTROL UNIT
8 - TRANSMISSION TEMPERATURE SENSOR
9 - STARTER INTERLOCK CONTACT
10 - 2-3 SHIFT SOLENOID
11 - TORQUE CONVERTER LOCK-UP SOLENOID
12 - N2 SPEED SENSOR

The electric valve control unit (7) consists of a plastic shell which houses the RPM sensors (1,12), regulating solenoid valves (3, 4), solenoid valves (5, 6, 10), the TCC solenoid valve (11), the park/neutral contact (9), and the transmission oil temperature sensor (8). Conductor tracks integrated into the shell connect the electric components to a plug connection (2). This 13-pin plug connection (2) establishes the connection to the vehicle-side cable harness and to the transmission control module (TCM). With the exception of the solenoid valves, all other electric components are fixed to the conductor tracks.

HYDRAULIC CONTROL UNIT

Working Pressure (Line Pressure or Operating Pressure) (p-A)

The working pressure provides the pressure supply to the hydraulic control and the transmission shift elements. It is the highest hydraulic pressure in the entire hydraulic system. The working pressure is regulated at the working pressure regulating valve in relation to the load and gear. All other pressures required for the transmission control are derived from the working pressure.

Lubrication Pressure (p-Sm)

At the working pressure regulating valve surplus oil is diverted to the lubrication pressure regulating valve, from where it is used in regulated amounts to lubricate and cool the mechanical transmission components and the torque converter. Furthermore, the lubrication pressure (p-Sm) is also used to limit the pressure in the torque converter.

Shift Pressure (p-S)

The shift pressure is determined by the shift pressure regulating solenoid valve and the shift pressure regulating valve. The shift pressure:

- Regulates the pressure in the activating shift element during the shift phase.
- Determines together with the modulating pressure the pressure reduction at the deactivating shift element as regulated by the overlap regulating valve.
- Initializes 2nd gear in limp-home mode.

Modulating Pressure (p-Mod)

The modulating pressure influences the size of the working pressure and determines together with the shift pressure the pressure regulated at the overlap regulating valve. The modulating pressure is regulated at the modulating pressure regulating solenoid valve, which is under regulating valve pressure. The modulating pressure is variable and relative to the engine load.

Regulating Valve/Control Valve Pressure (p-RV)

The regulating valve pressure is regulated at the regulating valve pressure regulating valve in relation to the working pressure (p-A) up to a maximum pressure of 8 bar (116 psi). It supplies the modulating pressure regulating solenoid valve, the shift pressure regulating solenoid valve and the shift valve pressure regulating valve.

Shift Valve Pressure (p-SV)

The shift valve pressure (p-SV) is derived from the regulating valve pressure (p-RV), is regulated at the shift valve pressure regulating valve and is then present at the:

- 1-2 and 4-5 shift solenoid valve.
- 3-4 shift solenoid valve.
- 2-3 shift solenoid valve.
- Torque converter lockup solenoid valve.
- 3-4 and 2-3 shift pressure shift valve.

The shift valve pressure (p-SV) controls the command valves via the upshift/downshift solenoid valves.

Overlap Pressure (p-U)

The overlap pressure controls the shift component pressure reduction during a shift phase. The pressure in a shift element as it disengages is controlled during the shift phase depending on engine load (modulating pressure) and the pressure in the shift element as it engages. The adjusted pressure is inversely proportional to the transmission capability of the shift element being engaged (controlled overlap).

Working Pressure Regulating Valve (Operating Pressure)

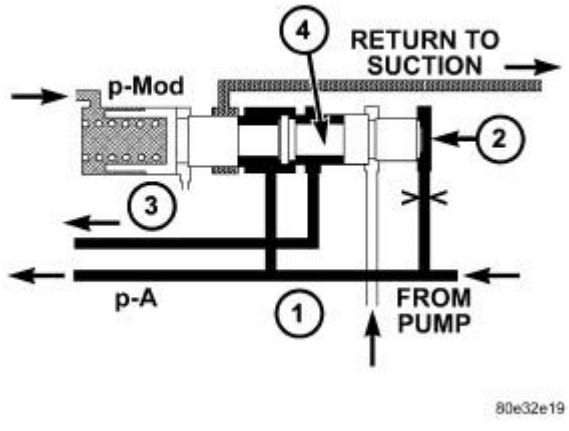

Fig. 267: Working Pressure Regulating Valve
Courtesy of CHRYSLER LLC

1 - PRESSURE FROM K1/K2 2 - END FACE 3 - TO TORQUE CONVERTER REGULATING VALVE 4 - WORKING PRESSURE REGULATING VALVE

The working pressure regulating valve (4) is located in the valve housing of the shift plate. It regulates the primary pressure of the hydraulic system.

Torque Converter Lockup Clutch Regulating Valve

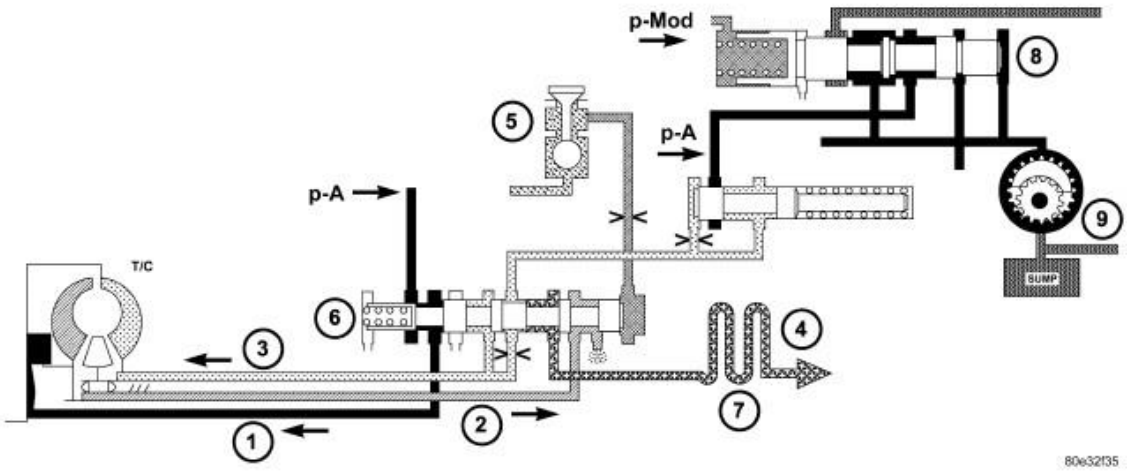

Fig. 268: Torque Converter Lockup Clutch Regulating Valve
Courtesy of CHRYSLER LLC

1 - TORQUE CONVERTER LOCK-UP CLUTCH 2 - TORQUE CONVERTER OUTPUT 3 - TORQUE CONVERTER INPUT 4 - LUBRICATION 5 - TORQUE CONVERTER LOCK-UP SOLENOID 6 - TORQUE CONVERTER LOCK-UP CLUTCH REGULATING VALVE 7 - OIL COOLER 8 - LINE PRESSURE REGULATING VALVE 9 - OIL PUMP

The torque converter lock-up clutch regulating valve (6) is located in the valve housing of the

electrohydraulic control module. The valve is responsible for the hydraulic control of the torque converter lockup clutch and distribution of the lubricating oil.

Overlap Regulating Valve

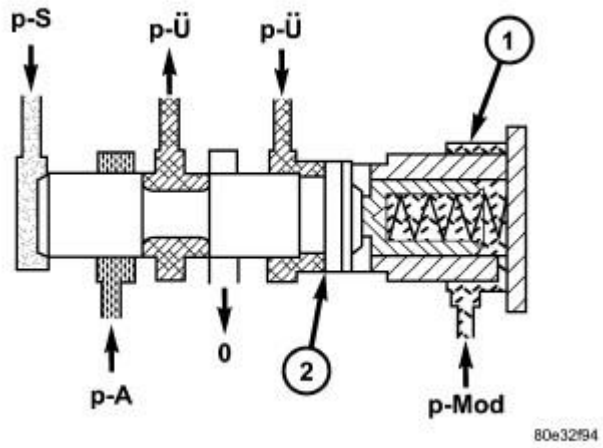

Fig. 269: Overlap Regulating Valve
Courtesy of CHRYSLER LLC

1 - OVERLAP REGULATING VALVE 2 - ANNULAR SURFACE ON OVERLAP REGULATING VALVE

Each shift group is assigned one overlap regulating valve (1) . The 1-2 / 4-5 overlap regulating valve is installed in the shift valve housing; the 2-3 and 3-4 overlap regulating valves are installed in the valve housing. The overlap regulating valve regulates the pressure reduction during a shift phase.

Command Valve

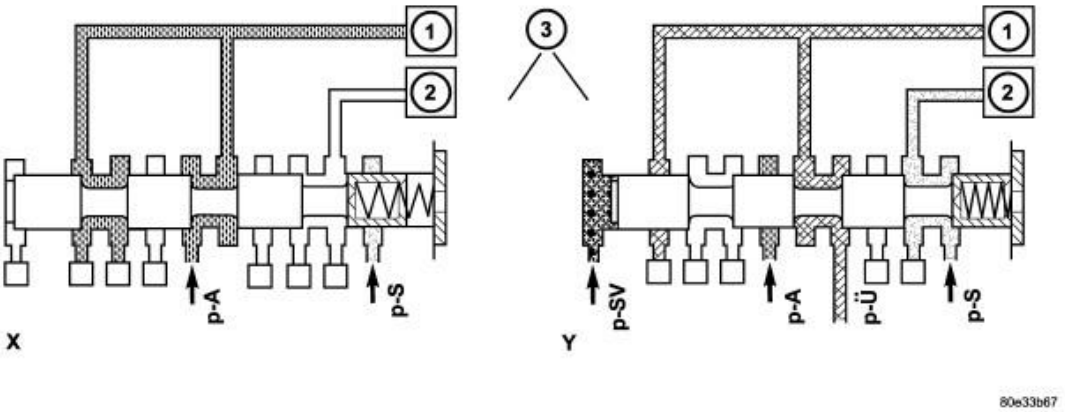

Fig. 270: Command Valve
Courtesy of CHRYSLER LLC

1 - HOLDING CLUTCH B1 2 - DRIVING CLUTCH K1 3 - 1-2/4-5 COMMAND VALVE

Each shift group possesses one command valve (3) . The 1-2 / 4-5 and 2-3 command valves are installed in the shift valve housing, the 3-4 command valve is installed in the valve housing. The command valve switches the shift group from the stationary phase to the shift phase and back again.

Holding Pressure Shift Valve

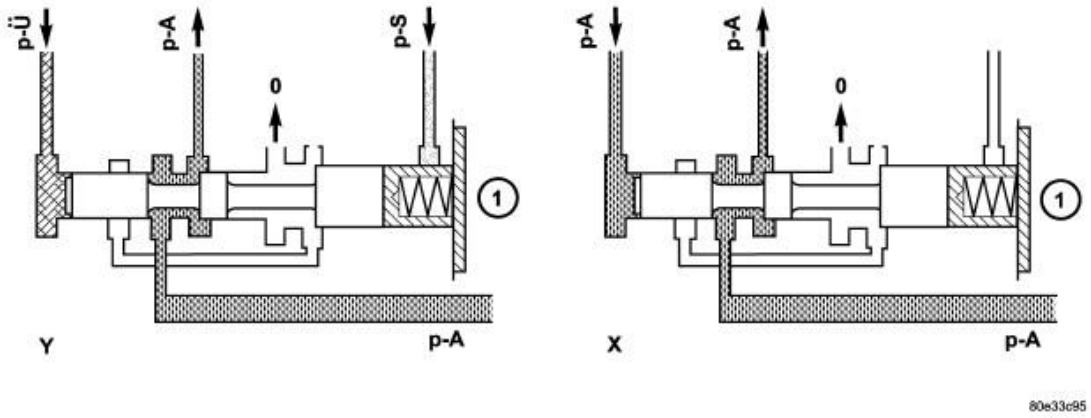

Fig. 271: Holding Pressure Shift Valve
Courtesy of CHRYSLER LLC

1 - HOLDING PRESSURE SHIFT VALVE

Each shift group possesses one holding pressure shift valve (1) . The 1-2 / 4-5 and 2-3 holding pressure shift valves are installed in the shift valve housing; the 3-4 holding pressure shift valve is installed in the valve housing. The holding pressure shift valve allocates the working pressure to one actuator of a shift group.

Shift Pressure Shift Valve

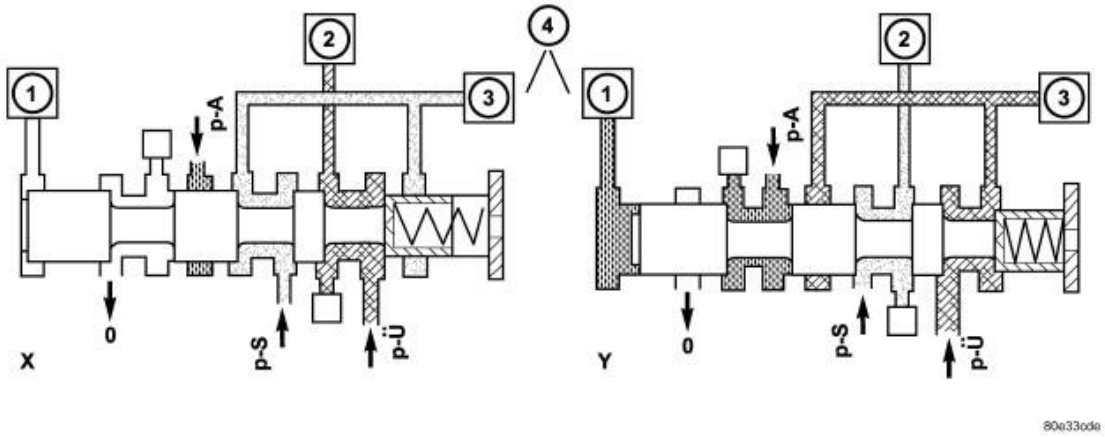

Fig. 272: Shift Pressure Shift Valve
Courtesy of CHRYSLER LLC

1 - 1-2/4-5 COMMAND VALVE 2 - DRIVING CLUTCH K1 3 - HOLDING CLUTCH B1 4 - 1-2/4-5 SHIFT PRESSURE SHIFT VALVE

Each shift group possesses one shift pressure shift valve (4) . The 1-2 / 4-5 and 2-3 shift pressure shift valves are installed in the shift valve housing; the 3-4 shift pressure shift valve is installed in the valve housing. It assigns the shift pressure (p-S) to the activating actuator and the overlap pressure (p-U) regulated by the overlap regulating valve to the deactivating actuator.

Lubrication Pressure Regulating Valve

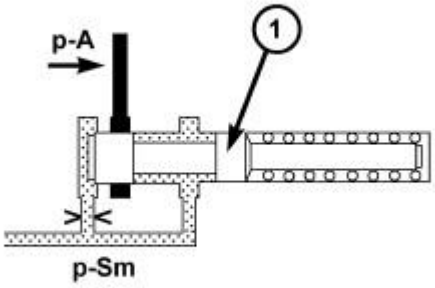

Fig. 273: Lubrication Pressure Regulating Valve
Courtesy of CHRYSLER LLC

1 - LUBRICATION PRESSURE REGULATING VALVE

The lubrication pressure regulating valve (1) is located in the valve housing of the electrohydraulic control module. The valve controls the fluid to lubricate and cool the mechanical part of the transmission, and limits the pressure in the torque converter.

Shift Pressure Regulating Valve

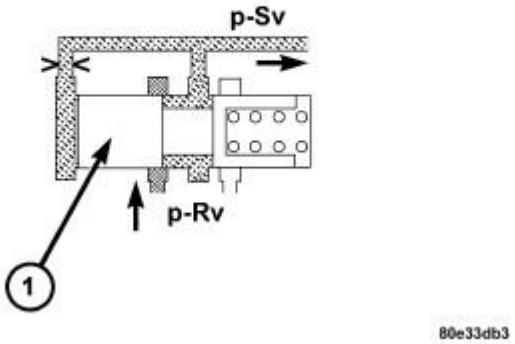

Fig. 274: Shift Pressure Regulating Valve
Courtesy of CHRYSLER LLC

1 - SHIFT PRESSURE REGULATING VALVE

The shift pressure regulating valve (1) is located in the valve housing of the shift plate. It regulates the shift pressure (p-S).

Regulating Valve Pressure Regulating Valve

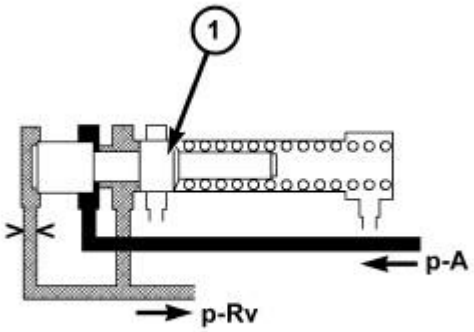

Fig. 275: Regulating Valve Pressure Regulating Valve
Courtesy of CHRYSLER LLC

1 - REGULATING VALVE PRESSURE REGULATING VALVE

The regulating valve pressure regulating valve (1) is located in the valve housing of the electrohydraulic control module. It regulates the regulating valve/control valve pressure (p-RV).

Shift Valve Pressure Regulating Valve

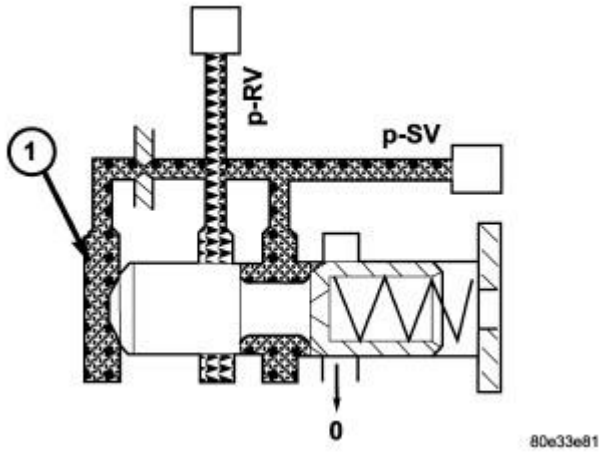

Fig. 276: Shift Valve Pressure Regulating Valve
Courtesy of CHRYSLER LLC

1 - SHIFT VALVE PRESSURE REGULATING VALVE

The shift valve pressure regulating valve (1) is located in the valve housing of the electrohydraulic control module. It regulates the shift valve pressure (p-SV).

OPERATION

OPERATION

ELECTRICAL CONTROL UNIT

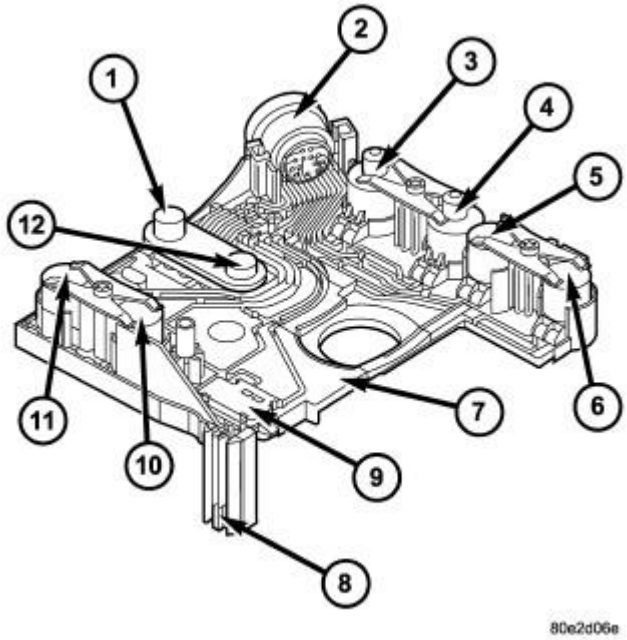

Fig. 277: Electrical Control Unit
Courtesy of CHRYSLER LLC

1 - N3 SPEED SENSOR
2 - PLUG CONNECTOR
3 - MODULATING PRESSURE REGULATING SOLENOID
4 - SHIFT PRESSURE REGULATING SOLENOID
5 - 1-2/4-5 SHIFT SOLENOID
6 - 3-4 SHIFT SOLENOID
7 - ELECTRICAL CONTROL UNIT
8 - TRANSMISSION TEMPERATURE SENSOR
9 - STARTER INTERLOCK CONTACT
10 - 2-3 SHIFT SOLENOID
11 - TORQUE CONVERTER LOCK-UP SOLENOID
12 - N2 SPEED SENSOR

Signals from the transmission control module (TCM) are converted into hydraulic functions in the electric valve control unit (7) . The RPM sensors (1, 12), starter interlock contact (9), and transmission oil temperature sensor (8) of the electric valve control unit (7) supply the TCM with input signals. The solenoid valves are controlled by the TCM and trigger the hydraulic functions.

HYDRAULIC CONTROL UNIT

Working Pressure Regulating Valve (Line Pressure or Operating Pressure)

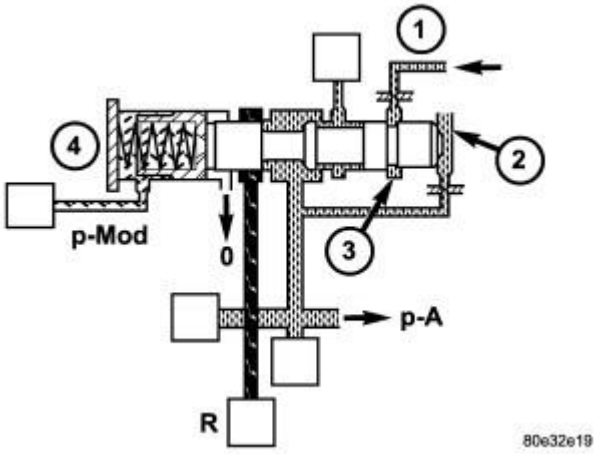

Fig. 278: Working Pressure Regulating Valve
Courtesy of CHRYSLER LLC

1 - PRESSURE FROM K1/K2
2 - END FACE
3 - ANNULAR SURFACE
4 - WORKING PRESSURE REGULATING VALVE

The working pressure (p-A) is regulated at the working pressure regulating valve (4) in relation to load (modulating pressure, p-Mod) and gear (K1 or K2 pressure) (1). The spring in the working pressure regulating valve sets a minimum pressure level (basic pressure).

Torque Converter Lockup Clutch Regulating Valve

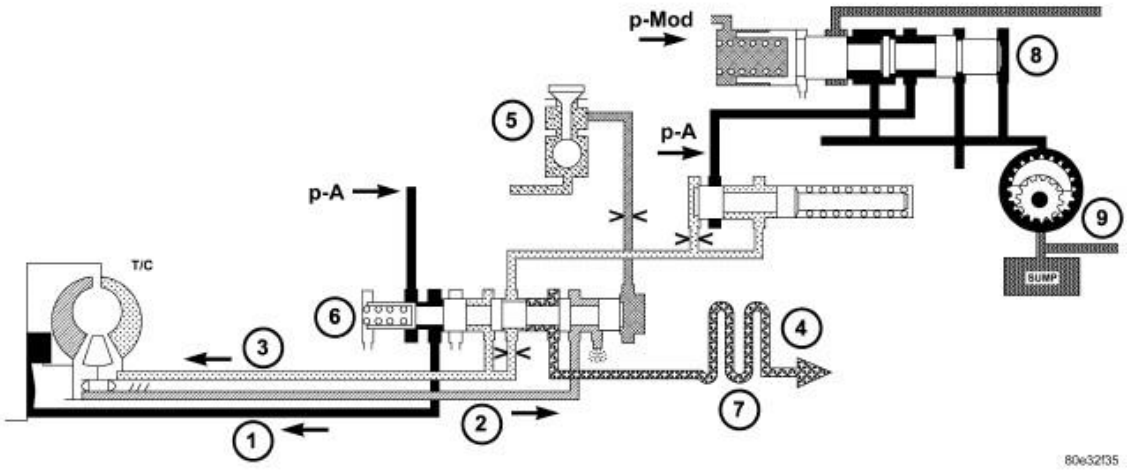

Fig. 279: Torque Converter Lockup Clutch Regulating Valve
Courtesy of CHRYSLER LLC

1 - TORQUE CONVERTER LOCK-UP CLUTCH
2 - TORQUE CONVERTER OUTPUT
3 - TORQUE CONVERTER INPUT
4 - LUBRICATION
5 - TORQUE CONVERTER LOCK-UP SOLENOID
6 - TORQUE CONVERTER LOCK-UP CLUTCH REGULATING VALVE
7 - OIL COOLER
8 - LINE PRESSURE REGULATING VALVE
9 - OIL PUMP

The torque converter lockup clutch regulating valve (6) regulates the torque converter lock-up clutch working pressure (p-TCC) in relation to the torque converter clutch control pressure (p-S/TCC). According to the size of the working pressure (p-A), the torque converter lockup clutch is either Engaged, Disengaged, or Slipping. When the regulating valve (6) is in the lower position, lubricating oil flows through the torque converter and oil cooler (7) into the transmission (torque converter lockup clutch unpressurized). In its regulating position (slipping, torque converter lockup clutch pressurized), a reduced volume of lubricating oil flows through the annular passage bypassing the torque converter and passing direct through the oil cooler into the transmission. The rest of the lubricating oil is directed via the throttle "a" into the torque converter in order to cool the torque converter lockup clutch.

Overlap Regulating Valve

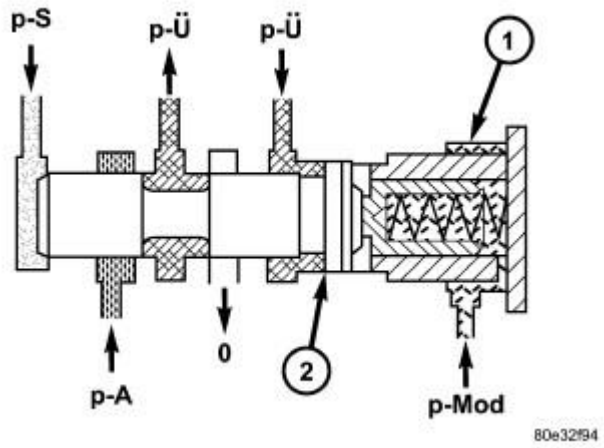

Fig. 280: Overlap Regulating Valve
Courtesy of CHRYSLER LLC

1 - OVERLAP REGULATING VALVE 2 - ANNULAR SURFACE ON OVERLAP REGULATING VALVE

During the shift phase the pressure in the deactivating shift actuator is regulated in relation to the engine load (modulating pressure, p-Mod) and the pressure in the activating actuator. The regulated pressure is inversely proportional to the transfer capacity of the activating shift actuator (regulated overlap).

Command Valve

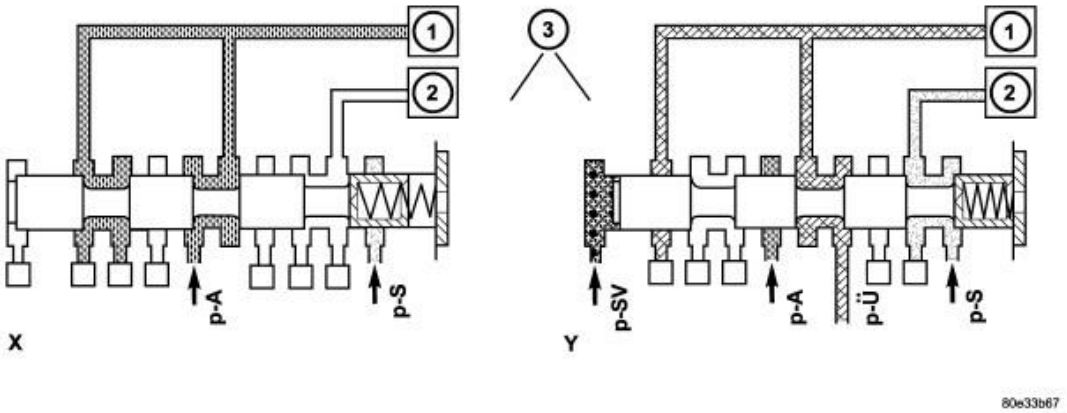

Fig. 281: Command Valve
Courtesy of CHRYSLER LLC

1 - HOLDING CLUTCH B1 2 - DRIVING CLUTCH K1 3 - 1-2/4-5 COMMAND VALVE

When the end face is unpressurized (stationary phase), the working pressure (p-A) is directed to the actuated shift element. If the end face of the command valve is subjected to the shift valve pressure (p-SV) (shift phase), then the shift pressure (p-S) is switched to the activating element and the overlap pressure (p-U) is switched to the deactivating element.

Shift Valve Holding Pressure

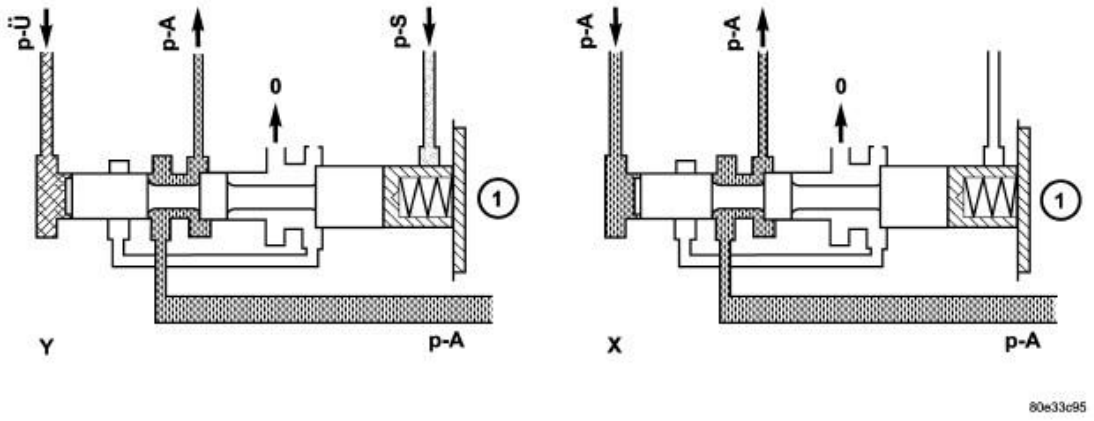

Fig. 282: Shift Valve Holding Pressure
Courtesy of CHRYSLER LLC

1 - HOLDING PRESSURE SHIFT VALVE

The holding pressure shift valve (1) is actuated by the pressures present at the end face in the actuators and a spring. It assigns the working pressure (p-A) to the actuator with the higher pressure (taking into account the spring force and the effective surface area). The other element of the shift group is then unpressurized. The valve switches over only during the shift phase and only at a certain pressure ratio between the overlap pressure (p-U) and the shift pressure (p-S).

Shift Pressure Shift Valve

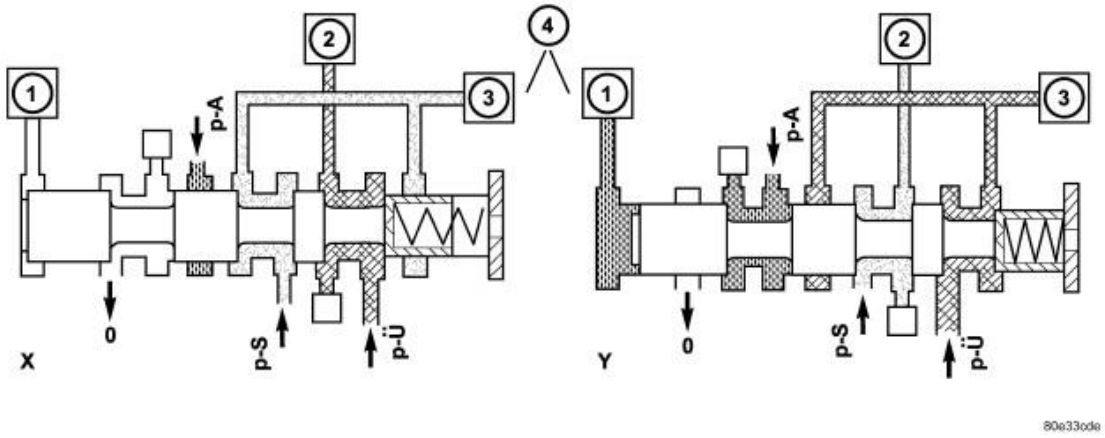

Fig. 283: Shift Pressure Shift Valve

Courtesy of CHRYSLER LLC

1 - 1-2/4-5 COMMAND VALVE 2 - DRIVING CLUTCH K1 3 - HOLDING CLUTCH B1 4 - 1-2/4-5 SHIFT PRESSURE SHIFT VALVE

When the multiple-disc brake B1 (3) is activated, the working pressure (p-A) is applied to the end face of the 1-2 / 4-5 shift pressure shift valve (4) via the command valve (1). Its shift state is maintained during the shift phase by substituting the shift element pressure acting on its end face (and which is variable during the shift phase) with a corresponding constant pressure. When the multi-plate clutch K1 (2) is activated, the end face of the shift valve is unpressurized during the stationary and shift phases, so the shift state is maintained during the shift phase in this case too.

Lubrication Pressure Regulating Valve

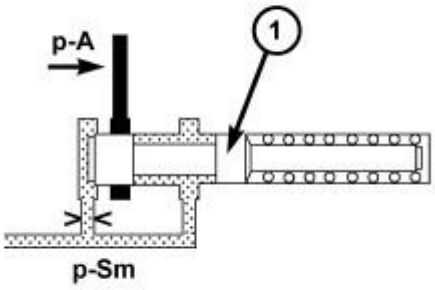

Fig. 284: Lubrication Pressure Regulating Valve
Courtesy of CHRYSLER LLC

1 - LUBRICATION PRESSURE REGULATING VALVE

At the working pressure regulating valve surplus oil is diverted to the lubrication pressure regulating valve (1) , from where the lubrication pressure (p-Sm) is used in regulated amounts to supply the transmission lubrication system including the torque converter.

Shift Pressure Regulating Valve

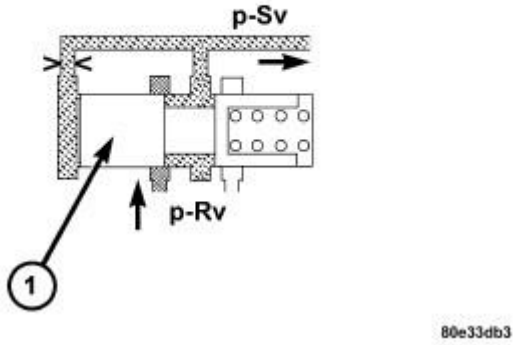

Fig. 285: Shift Pressure Regulating Valve
Courtesy of CHRYSLER LLC

1 - SHIFT PRESSURE REGULATING VALVE

The shift pressure is determined by the shift pressure regulating solenoid valve and the shift pressure regulating valve (1) . In addition, pressure from the clutch K2 is also present at the annular surface of the shift pressure regulating valve. This reduces the shift pressure in 2nd gear.

Regulating Valve Pressure Regulating Valve

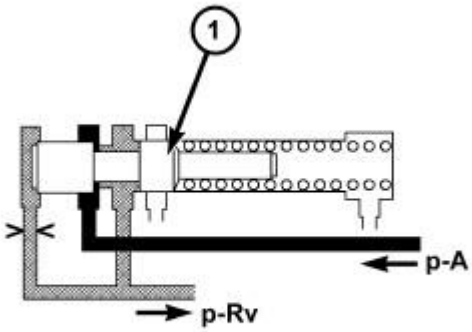

Fig. 286: Regulating Valve Pressure Regulating Valve
Courtesy of CHRYSLER LLC

1 - REGULATING VALVE PRESSURE REGULATING VALVE

The regulating valve pressure (p-RV) is set at the regulating valve pressure regulating valve (1) in relation to the working pressure (p-A) as far as the maximum pressure.

Shift Valve Pressure Regulating Valve

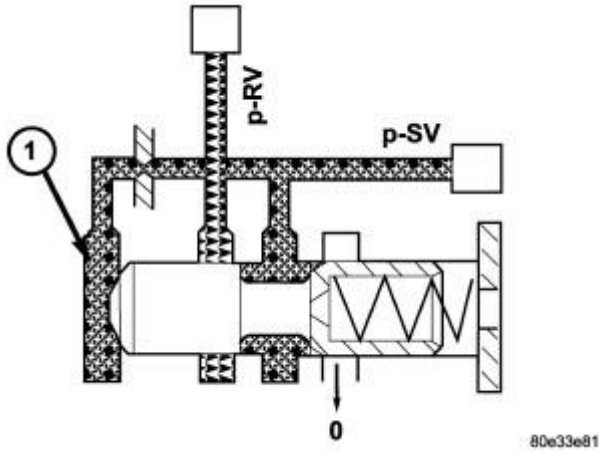

Fig. 287: Shift Valve Pressure Regulating Valve
Courtesy of CHRYSLER LLC

1 - SHIFT VALVE PRESSURE REGULATING VALVE

The non-constant regulating valve pressure (p-RV) is regulated to a constant shift valve pressure (p-SV) at the shift valve pressure regulating valve (1) and is used to supply the 1-2 and 4-5 / 3-4 / 2-3 solenoid valves and the torque converter lockup clutch PWM solenoid valve.

REMOVAL

REMOVAL

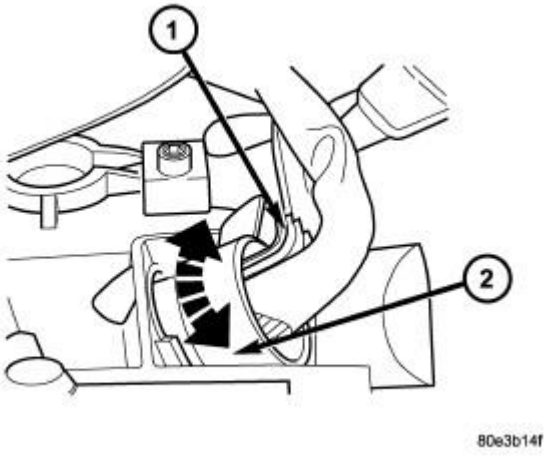

Fig. 288: Remove/Install Wiring Connector Plug
Courtesy of CHRYSLER LLC

1 - PLUG CONNECTOR

2 - ADAPTER PLUG

1. Move selector lever to position "P".
2. Raise vehicle.
3. Disconnect 13-pin plug connector (1) . Turn bayonet lock of the adapter plug (2) anti-clockwise.

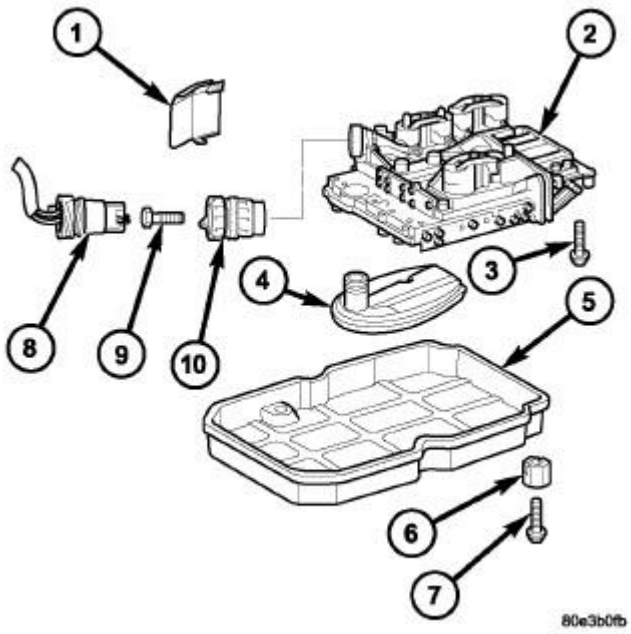

Fig. 289: Remove/Install Electrohydraulic Unit
Courtesy of CHRYSLER LLC

1 - HEAT SHIELD
2 - ELECTROHYDRAULIC UNIT
3 - BOLT
4 - OIL FILTER
5 - OIL PAN
6 - CLAMPING ELEMENT
7 - BOLT
8 - 13-PIN PLUG CONNECTOR
9 - BOLT
10 - ADAPTER PLUG

4. Loosen the adapter plug bolt (9) and remove from the adapter plug (10) from the transmission housing.
5. Detach oil pan (5).
6. Remove oil filter (4).
7. Unscrew Torx® socket bolts (3) and remove electrohydraulic control module (2).

DISASSEMBLY

DISASSEMBLY

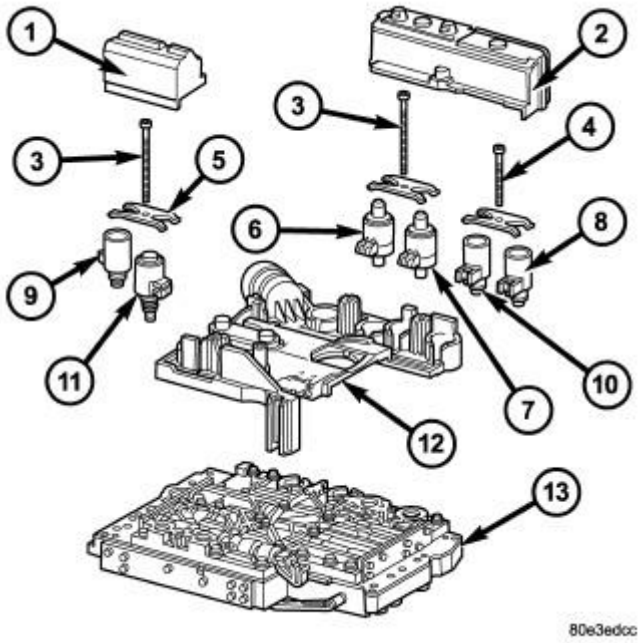

Fig. 290: Electrical Unit Components
Courtesy of CHRYSLER LLC

1 - SOLENOID CAP (if equipped)
2 - SOLENOID CAP (if equipped)
3 - BOLT - M6X32
4 - BOLT - M6X30
5 - LEAF SPRING
6 - MODULATING PRESSURE REGULATING SOLENOID VALVE
7 - SHIFT PRESSURE REGULATING SOLENOID
8 - 3-4 SHIFT SOLENOID
9 - TORQUE CONVERTER LOCK-UP SOLENOID
10 - 1-2/4-5 SHIFT SOLENOID
11 - 2-3 SHIFT SOLENOID
12 - ELECTRICAL CONTROL UNIT
13 - SHIFT PLATE

1. Remove electrohydraulic unit from the vehicle. See **Transmission and Transfer Case/Automatic - NAG1/UNIT, Electrohydraulic Control - Removal**
2. Remove solenoid caps (1, 2) if equipped.
3. Unscrew Torx® socket bolts (3, 4).

NOTE: Pay attention to the different lengths of the Torx® socket bolts.

4. Remove leaf springs (5).
5. Withdraw solenoid valves (6 - 11) from shift plate (13).

NOTE: Check O-rings on solenoid valves for damage and replace if necessary.

6. Bend away retaining lug on stiffening rib on transmission oil temperature sensor.
7. Remove electrohydraulic control module (12) from the shift plate (13).

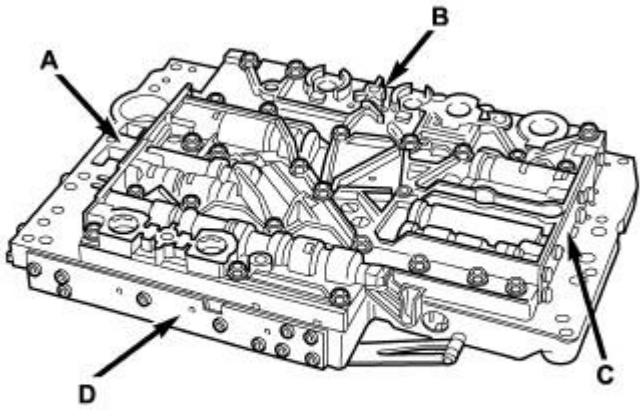

Fig. 291: Shift Valve Group Locations
Courtesy of CHRYSLER LLC

A - OPERATING AND LUBRICATING PRESSURE REGULATING VALVES AND 2-3 OVERLAP VALVE
B - 1-2/4-5 SHIFT GROUP AND SHIFT, SHIFT VALVE, AND REGULATING VALVE PRESSURE REGULATING VALVES
C - 3-4 SHIFT GROUP
D - 2-3 SHIFT GROUP, TCC LOCK-UP AND B2 REGULATING VALVES

8. Note the locations of the major shift valve group components for assembly reference.

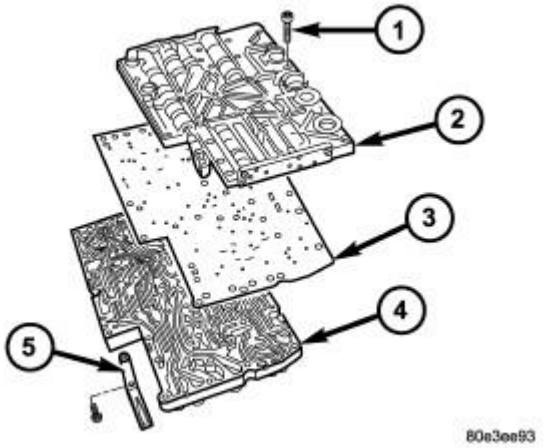

Fig. 292: Shift Plate Components
Courtesy of CHRYSLER LLC

1 - BOLTS - 29
2 - VALVE HOUSING
3 - SEALING PLATE
4 - VALVE BODY
5 - LEAF SPRING

NOTE: Pay great attention to cleanliness for all work on the shift plate. Fluffy cloths must not be used. Leather cloths are particularly good. After dismantling, all parts must be washed and blown out with compressed-air, noting that parts may be blown away.

A - Operating and Lubricating Pressure Regulating valves and 2-3 Overlap valve

B - 1-2/4-5 Shift Group and Shift, Shift Valve, and Regulating Valve Pressure Regulating Valves

C - 3-4 Shift Group

D - 2-3 Shift Group, TCC Lock-up, and B2 Regulating Valves

9. Unbolt leaf spring (5).
10. Unscrew Torx® bolts (1).
11. Remove valve housing (2) from valve body (4).
12. Remove sealing plate (3).

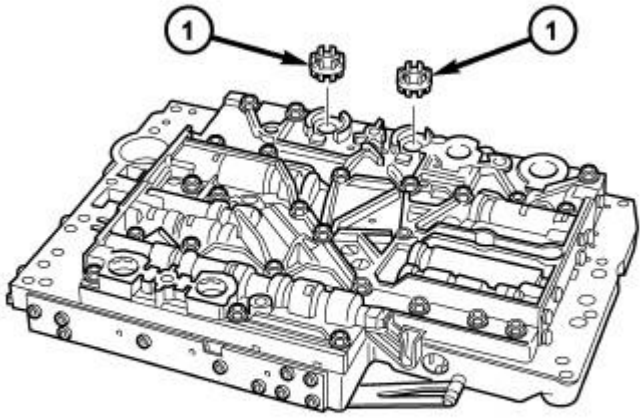

Fig. 293: Solenoid Valve Strainer Locations
Courtesy of CHRYSLER LLC

1 - SOLENOID VALVE STRAINERS

13. Remove the strainers (1) for the modulating pressure and shift pressure control solenoid valves from the valve housing.

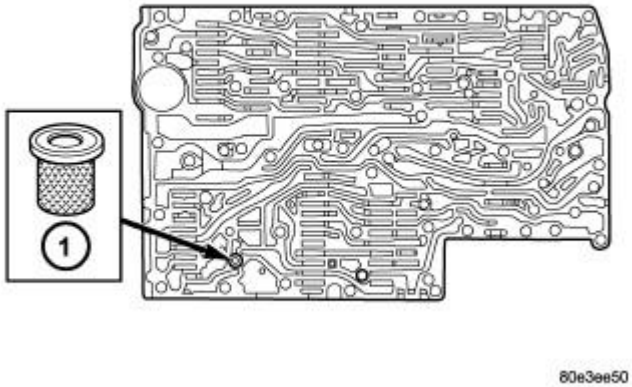

Fig. 294: Converter Lock-up Solenoid Valve Strainer Location
Courtesy of CHRYSLER LLC

1 - CONVERTER LOCK-UP SOLENOID STRAINER

14. Remove the strainer (1) in the inlet to torque converter lock-up control solenoid valve.

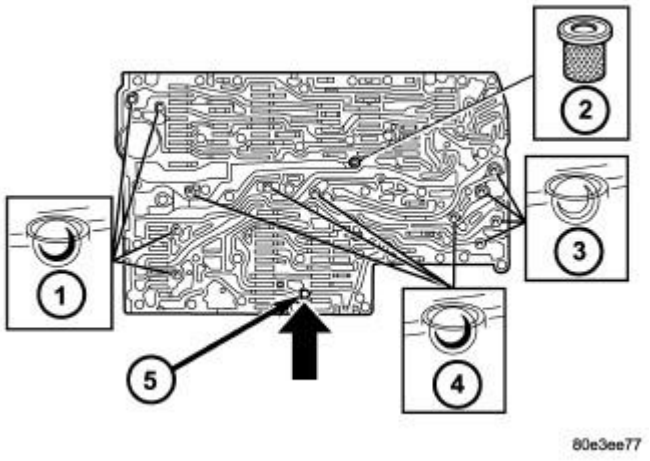

Fig. 295: Checking Balls & Strainer Location
Courtesy of CHRYSLER LLC

1 - STEEL CHECK BALLS
2 - CENTRAL STRAINER
3 - STEEL CHECK BALLS
4 - PLASTIC CHECK BALLS
5 - PLAIN DOWEL PIN

NOTE: A total of 12 valve balls are located in the valve body, four made from plastic (4) and eight from steel (1, 3).

15. Note the location of all check balls (1, 3, 4) and the central strainer (2) for re-installation. Remove all check balls (1, 3, 4) and the central strainer (2).

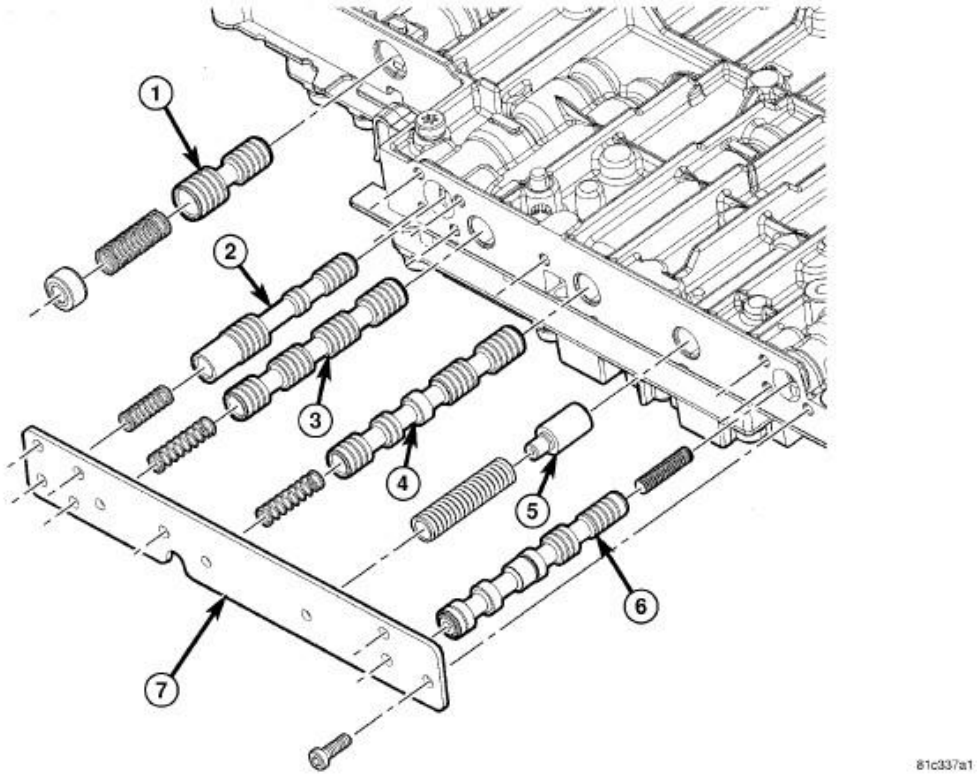

Fig. 296: Lower Valve Body Section 1
Courtesy of CHRYSLER LLC

1 - B2 SHIFT VALVE	5 - TCC DAMPER VALVE - if equipped
2 -2-3 HOLDING PRESSURE SHIFT VALVE	6 - TCC LOCK-UP REGULATOR VALVE
3 - 2-3 COMMAND VALVE	7 - SIDE COVER
4 - 2-3 SHIFT PRESSURE	-

16. Remove the screws holding the side cover (7) to the valve body and valve housing.
17. Remove the B-2 Shift Valve assembly (1), 2-3 Holding Pressure Valve assembly (2), 2-3 Command Valve assembly (3), 2-3 Shift Pressure assembly (4), TCC Damper Valve (5) if equipped and the TCC Lock-Up Regulator Valve assembly (6) from the valve body.
18. Check all valves for ease of movement and shavings.

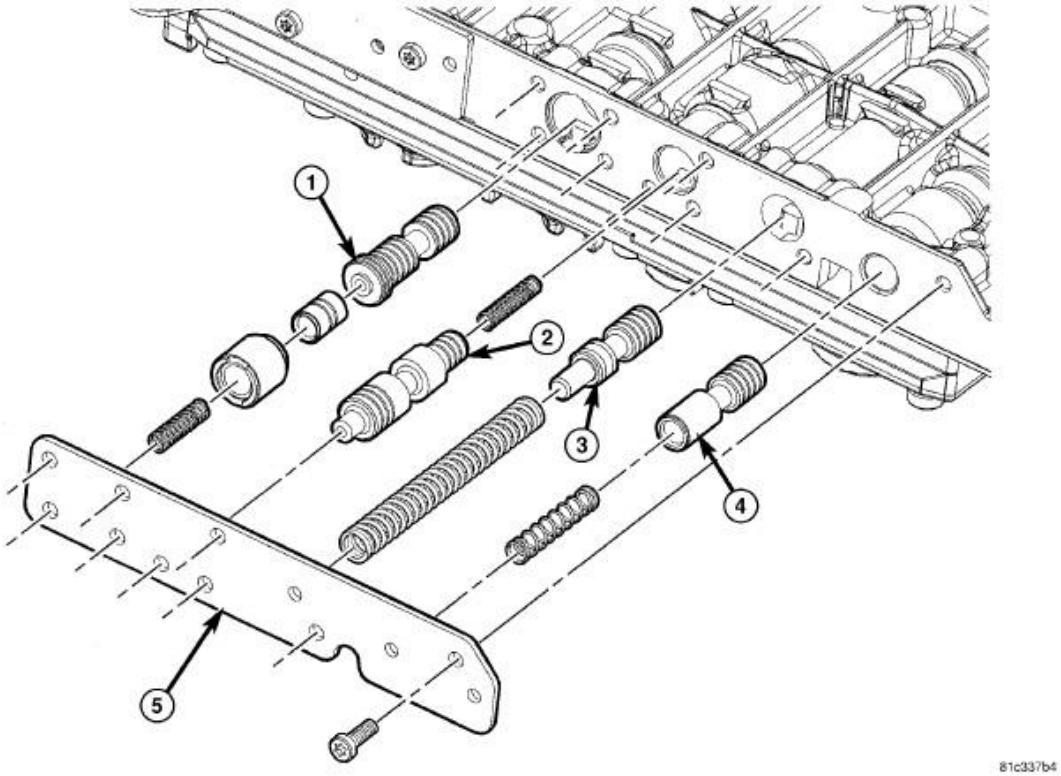

Fig. 297: Lower Valve Body Section 2
Courtesy of CHRYSLER LLC

1 - 1-2 / 4-5 OVERLAP REGULATING SLEEVE AND PISTON	4 - SHIFT SOLENOID PRESSURE REGULATING VALVE
2 - SHIFT PRESSURE REGULATING VALVE	5 - SIDE COVER
3 - CONTROL VALVE PRESSURE REGULATOR	-

19. Remove the screws holding the side cover (5) to the valve body and valve housing.
20. Remove the 1-2 / 4-5 Overlap Regulating Valve, Sleeve, and Piston assembly (1), Shift Pressure Regulating Valve assembly (2), Control Valve Pressure Regulator assembly (3), and the Shift Solenoid Pressure Regulating Valve (4) from the valve body.
21. Check all valves for ease of movement and shavings.

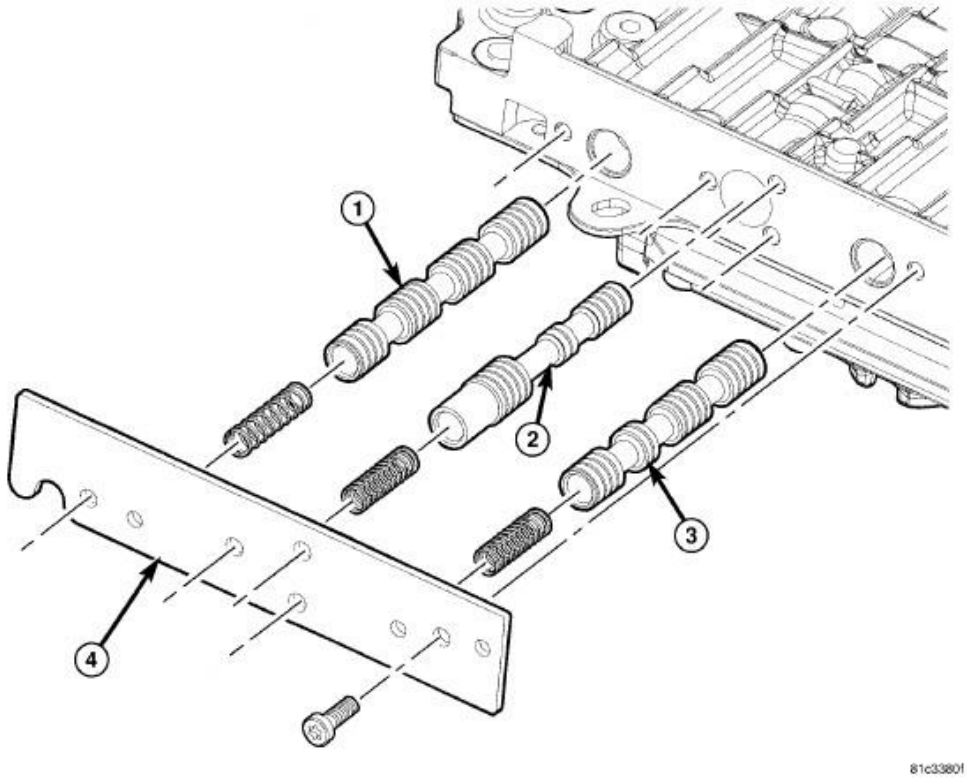

Fig. 298: Lower Valve Body Section 3
Courtesy of CHRYSLER LLC

1 - 1-2 / 4-5 COMMAND VALVE	3 - 1-2 / 4-5 SHIFT PRESSURE
2 - 1-2 / 4-5 HOLDING PRESSURE SHIFT VALVE	4 - SIDE COVER

22. Remove the screws holding the side cover (4) to the valve body and valve housing.
23. Remove the 1-2 / 4-5 Command valve assembly (1), 1-2 / 4-5 Holding Pressure Shift Valve (2) and the 1-2 / 4-5 Shift Pressure Shift Valve assembly (3) from the valve body.
24. Check all valves for ease of movement and shavings.

NOTE: The sleeves and pistons of the overlap regulating valves must not be mixed up.

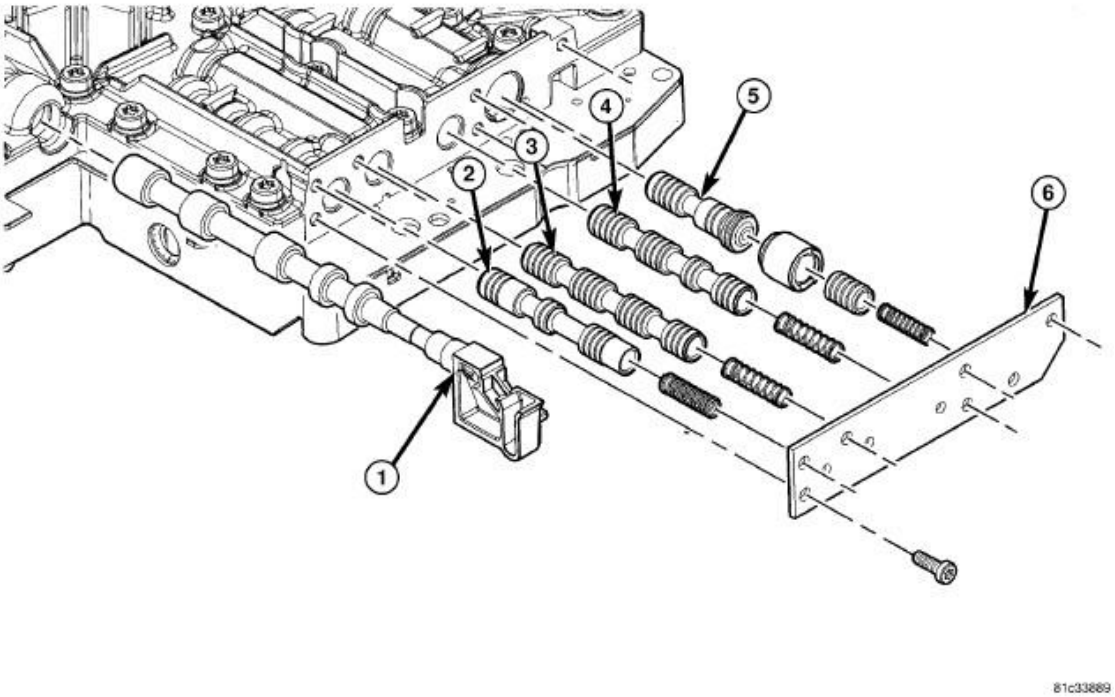

Fig. 299: Upper Valve Body Section 1
Courtesy of CHRYSLER LLC

1 - SELECTOR VALVE	4 - 3-4 SHIFT PRESSURE
2 - 3-4 HOLDING PRESSURE SHIFT VALVE	5 - 3-4 OVERLAP REGULATING VALVE, SLEEVE, AND PISTON
3 - 3-4 COMMAND VALVE	6 - SIDE COVER

25. Remove the screws holding the side cover (6) to the valve body and valve housing.
26. Remove the sector valve (1).
27. Remove 3-4 Holding Pressure Shift Valve assembly (2), 3-4 Command Valve assembly (3), 3-4 Shift Pressure Shift Valve assembly (4) and the 3-4 Overlap Regulating Valve Sleeve and Piston assembly (5) from the valve body.
28. Check all valves for ease of movement and shavings.

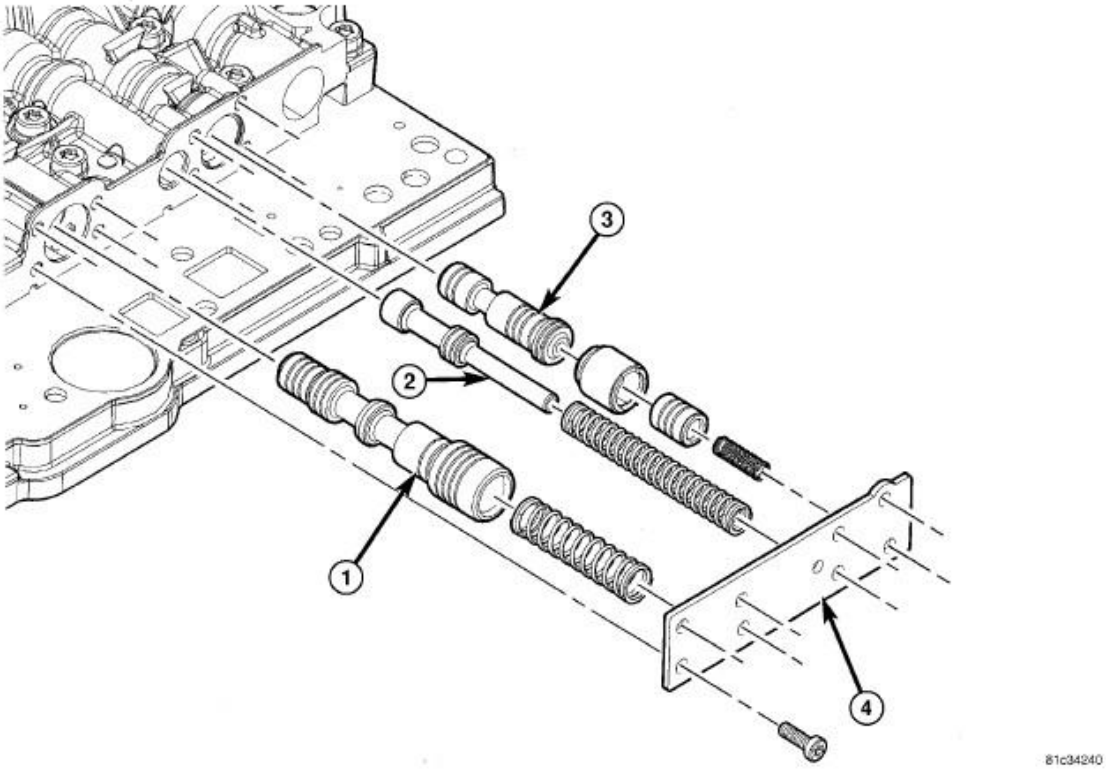

Fig. 300: Upper Valve Body Section 2
Courtesy of CHRYSLER LLC

1 - LINE PRESSURE REGULATING VALVE	3 - 2-3 OVERLAP REGULATING VALVE, SLEEVE, AND PISTON
2 - LUBRICATING PRESSURE REGULATING VALVE	4 - SIDE COVER

29. Remove the screws holding the side cover (4) to the valve body and valve housing.
30. Remove the Line Pressure Regulating Valve assembly (1), Lubricating Pressure Regulating Valve assembly (2) and the 2-3 Overlap Regulating Valve, Sleeve and Piston assembly (3) from the valve body.
31. Check all valves for ease of movement and shavings.

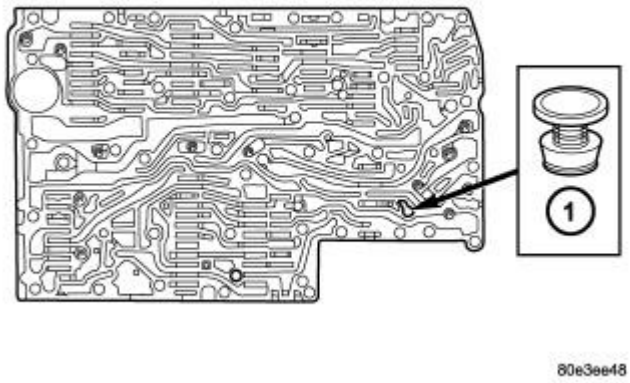

Fig. 301: Pressure Feed Valve Location
Courtesy of CHRYSLER LLC

1 - PRESSURE FEED VALVE

32. Remove the pressure supply valve (1) from the valve body.

CLEANING

CLEANING

NOTE: Fine and extremely fine metallic particles have been known affect valve operation in this transmission. While these particles may be to small to see with the naked eye, they can cause flares, or momentary going into neutral, on shifts.

Clean and flush the valve housings, valves, plugs, springs, and separator plates thoroughly with a standard parts cleaning solution only. Do not use gasoline, kerosene, or any type of caustic solution.

Do not immerse any of the electrical components in cleaning solution. Clean the electrical components by wiping them off with dry shop towels only.

Dry all except the electrical parts with compressed air. Make sure all passages are clean and free from obstructions. **Do not use rags or shop towels to dry or wipe off valve body components. Lint from these materials can stick to valve body parts, interfere with valve operation, and clog filters and fluid passages.**

INSPECTION

INSPECTION

Inspect all of the valve body mating surfaces for scratches, nicks, burrs, or distortion. Use a straightedge to check surface flatness. Minor scratches may be removed with crocus cloth using only

very light pressure.

Minor distortion of a valve body mating surface may be corrected by smoothing the surface with a sheet of crocus cloth. Position the crocus cloth on a surface plate, sheet of plate glass or equally flat surface. If distortion is severe or any surfaces are heavily scored, the valve body will have to be replaced. If crocus cloth is used be certain to flush valve body thoroughly.

Inspect the valves and plugs for scratches, burrs, nicks, or scores. Minor surface scratches on steel valves and plugs can be removed with crocus cloth but **do not round off the edges of the valve or plug lands.** Maintaining sharpness of these edges is vitally important. The edges prevent foreign matter from lodging between the valves and plugs and the bore.

Inspect all the valve and plug bores in the valve body. Use a penlight to view the bore interiors. Replace the valve body if any bores are distorted or scored. Inspect all of the valve body springs. The springs must be free of distortion, warpage or broken coils.

Trial fit each valve and plug in its bore to check freedom of operation. When clean and dry, the valves and plugs should drop freely into the bores.

Valve body bores do not change dimensionally with use. If the valve body functioned correctly when new, it will continue to operate properly after cleaning and inspection. It should not be necessary to replace a valve body assembly unless it is damaged in handling.

ASSEMBLY

ASSEMBLY

CAUTION: Make certain all valves and springs are assembled correctly. Failure to follow this caution may result in transmission failure.

ASSEMBLY

NAG1 VALVE BODY SPRING DIMENSION		
VALVE	**SPRING FREE LENGTH**	**TOTAL COILS**
2-3 Holding	18.8 -19.6 mm (0.74 - 0.77 in.)	12
T/C Clutch Damper	37.5 - 38.5 mm (1.48 - 1.51 in.)	19.5
1-2 / 4-5 Overlap	20.95 - 21.65 mm (0.82 - 0.85 In.)	14.5
Shift Pressure Regulator	22.4 - 23.6 mm (0.88 - 0.93 in.)	14.5
Control Valve Pressure Regulator	79.2 - 82.4 mm (3.12 - 3.24 in.)	29
Shift Solenoid Pressure Regulating Valve	32.6 - 34.4 mm (1.28 -	15.5

	1.35 in.)	
T/C Clutch (LU) Regulator	22.8 - 23.6 mm (0.90 - 0.93 in.)	18.5
B2 Shift Valve	25.8 - 27.0 mm (1.01 - 1.06 in.)	16.5
3/4 Over Lap	21.0 - 20.4 mm (0.83 - 0.80 in.)	13
3-4 Holding, 1-2 / 4-5 Holding, 1-2 / 4-5 Shift Pressure	21.1 - 22.5 mm (0.83 - 0.88 in.)	14
3-4 Command, 3-4 Shift Pressure, 1-2 / 4-5 Command, 2-3 Shift Pressure, 2-3 Command	23.9 - 25.3 mm (0.94 - 1.00 in.)	11.5
Lubricating Pressure Regulating Valve	64.8 - 68.2 mm (2.55 - 2.68 in.)	24
2-3 Overlap	16.9 - 18.7 mm (0.66 - 0.74 in.)	13
Line Pressure Regulator	43.8 - 46.2 mm (1.72 - 1.82 in.)	13.5

NOTE: **Pay great attention to cleanliness for all work on the shift plate. Fluffy cloths must not be used. Leather cloths are particularly good. After dismantling, all parts must be washed and blown out with compressed-air, noting that parts may be blown away.**

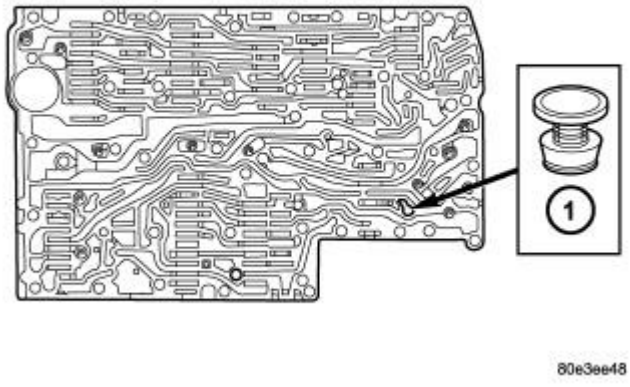

Fig. 302: Pressure Feed Valve Location
Courtesy of CHRYSLER LLC

1 - PRESSURE FEED VALVE

1. Install the pressure supply valve (1) into the valve body.

NAG1 VALVE BODY SPRING DIMENSION		

VALVE	SPRING FREE LENGTH	TOTAL COILS
2-3 Holding (2)	18.8 -19.6 mm (0.74 - 0.77 in.)	12
T/C Clutch Damper (5)	37.5 - 38.5 mm (1.48 - 1.51 in.)	19.5
T/C Clutch (LU) Regulator (6)	22.8 - 23.6 mm (0.90 - 0.93 in.)	18.5
B2 Shift Valve (1)	25.8 - 27.0 mm (1.01 - 1.06 in.)	16.5
2-3 Shift Pressure (4), 2-3 Command (3)	23.9 - 25.3 mm (0.94 -1.00 in.)	11.5

2. Lubricate and install the B-2 Shift Valve assembly (1), 2-3 Holding Pressure Valve assembly (2), 2-3 Command Valve assembly (3), 2-3 Shift Pressure Shift Valve assembly (4), TCC Damper Valve (5) if equipped and the T/CC Lock-Up Regulator Valve assembly (6) into the valve body.
3. Install the side cover and the screws holding the side cover (7) to the valve body and valve housing. Tighten the screws to 4 N.m (35 in.lbs.).

NAG1 VALVE BODY SPRING DIMENSION		
VALVE	**SPRING FREE LENGTH**	**TOTAL COILS**
1-2 / 4-5 Overlap (1)	20.95 - 21.65 mm (0.82 - 0.85 In.)	14.5
Shift Pressure Regulator (2)	22.4 - 23.6 mm (0.88 - 0.93 in.)	14.5
Control Valve Pressure Regulator (3)	79.2 - 82.4 mm (3.12 - 3.24 in.)	29
Shift Solenoid Pressure Regulating Valve (4)	32.6 - 34.4 mm (1.28 - 1.35 in.)	15.5

4. Lubricate and install the 1-2 / 4-5 Overlap Regulating Valve, Sleeve, and Piston assembly (1), Shift Pressure Regulating Valve assembly (2), Control Valve Pressure Regulator Valve assembly (3) and Shift Solenoid Pressure Regulating Valve assembly (4) into the valve body.
5. Install the side cover and the screws holding the side cover (5) to the valve body and valve housing. Tighten the screws to 4 N.m (35 in.lbs.).

NAG1 VALVE BODY SPRING DIMENSION		
VALVE	**SPRING FREE LENGTH**	**TOTAL COILS**
1-2 / 4-5 Holding (2), 1-2 / 4-5 Shift Pressure (3)	21.1 - 22.5 mm (0.83 - 0.88 in.)	14
1-2 / 4-5 Command (1)	23.9 - 25.3 mm (0.94 -1.00 in.)	11.5

6. Lubricate and install the 1-2 / 4-5 Command valve assembly (1), 1-2 / 4-5 Holding Pressure Shift Valve (2) and the 1-2 / 4-5 Shift Pressure assembly (3) into the valve body.
7. Install the side cover and the screws holding the side cover (4) to the valve body and valve housing. Tighten the screws to 4 N.m (35 in.lbs.).

NAG1 VALVE BODY SPRING DIMENSION		
VALVE	**SPRING FREE LENGTH**	**TOTAL COILS**

3/4 Over Lap (5)	20.4 - 21.0 mm (0.80 - 0.83 in.)	13
3-4 Holding (2)	21.1 - 22.5 mm (0.83 - 0.88 in.)	14
3-4 Command (3), 3-4 Shift Pressure (4)	23.9 - 25.3 mm (0.94 -1.00 in.)	11.5

8. Lubricate and install the sector valve (1).
9. Lubricate and install 3-4 Holding Pressure Shift Valve assembly (2), 3-4 Command Valve assembly (3), 3-4 Shift Pressure assembly (4) and the 3-4 Overlap Regulating Valve Sleeve and Piston assembly (5) into the valve body.
10. Install the side cover and the screws holding the side cover (6) to the valve body and valve housing. Tighten the screws to 4 N.m (35 in.lbs.).

NAG1 VALVE BODY SPRING DIMENSION		
VALVE	**SPRING FREE LENGTH**	**TOTAL COILS**
Lubricating Pressure Regulating Valve (2)	64.8 - 68.2 mm (2.55 - 2.68 in.)	24
2-3 Overlap (3)	16.9 - 18.7 mm (0.66 - 0.74 in.)	13
Line Pressure Regulator (1)	43.8 - 46.2 mm (1.72 - 1.82 in.)	13.5

11. Lubricate and install the Operating Pressure Regulating Valve assembly (1), Lubricating Pressure Regulating Valve assembly (2) and the 2-3 Overlap Regulating Valve, Sleeve and Piston assembly (3) into the valve body.
12. Install the side cover and the screws holding the side cover (6) to the valve body and valve housing. Tighten the screws to 4 N.m (35 in.lbs.).

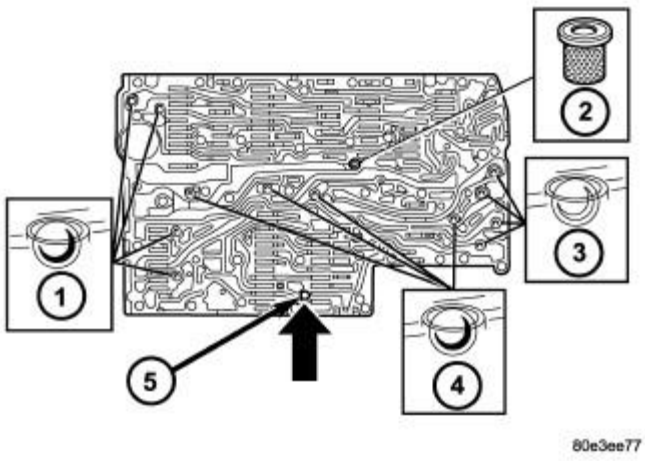

Fig. 303: Checking Balls & Strainer Location
Courtesy of CHRYSLER LLC

1 - STEEL CHECK BALLS
2 - CENTRAL STRAINER
3 - STEEL CHECK BALLS
4 - PLASTIC CHECK BALLS

5 - PLAIN DOWEL PIN

NOTE: **A total of 12 valve balls are located in the valve body, four made from plastic (4) and eight from steel (1, 3).**

13. Install all check balls (1, 3, 4) and the central strainer (2).

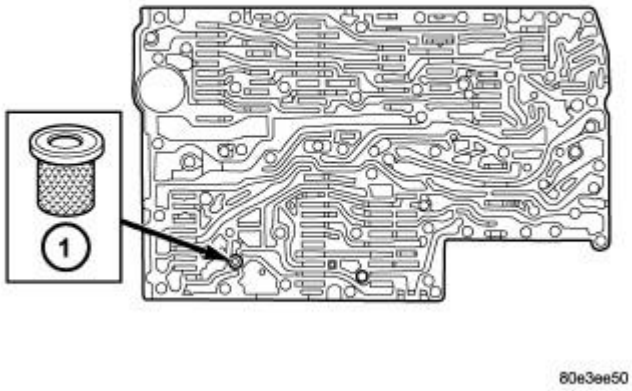

Fig. 304: Converter Lock-up Solenoid Valve Strainer Location
Courtesy of CHRYSLER LLC

1 - CONVERTER LOCK-UP SOLENOID STRAINER

14. Install the strainer (1) in the inlet to torque converter lock-up control solenoid valve.

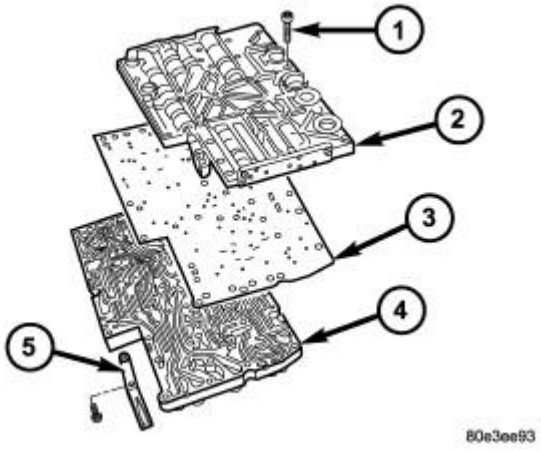

Fig. 305: Shift Plate Components
Courtesy of CHRYSLER LLC

1 - BOLTS - 29

2 - VALVE HOUSING 3 - SEALING PLATE 4 - VALVE BODY 5 - LEAF SPRING

15. Position the sealing plate (3) onto the valve body (4) .
16. Install the valve housing (2) onto the valve body (4) and sealing plate (3).
17. Install the shift plate Torx® bolts (1) . Tighten the bolts to 8 N.m (71 in.lbs.).
18. Install leaf spring (5) .

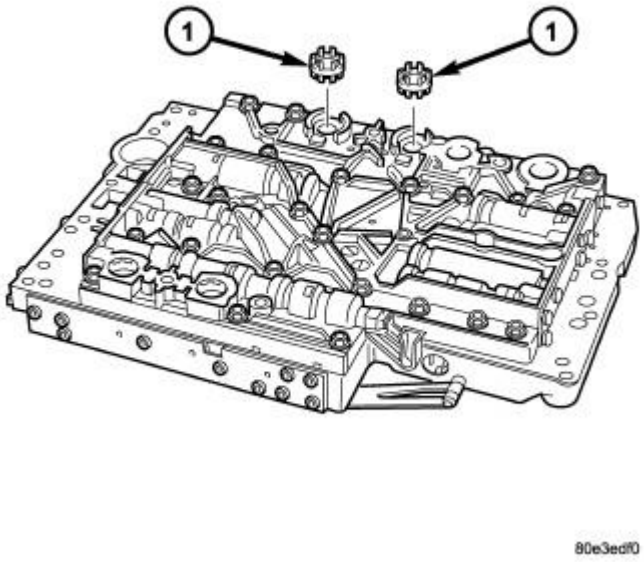

Fig. 306: Solenoid Valve Strainer Locations
Courtesy of CHRYSLER LLC

1 - SOLENOID VALVE STRAINERS

19. Install the strainers (1) for the modulating pressure and shift pressure control solenoid valves into the valve housing.

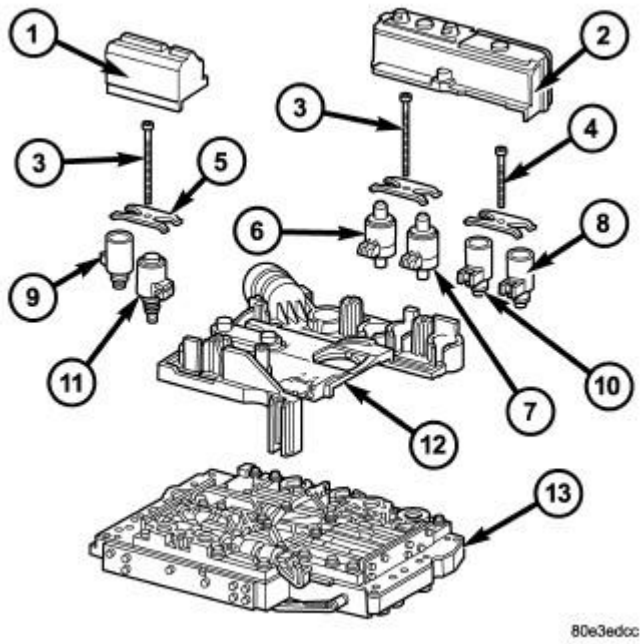

Fig. 307: Electrical Unit Components
Courtesy of CHRYSLER LLC

1 - SOLENOID CAP (if equipped)
2 - SOLENOID CAP (if equipped)
3 - BOLT - M6X32
4 - BOLT - M6X30
5 - LEAF SPRING
6 - MODULATING PRESSURE REGULATING SOLENOID VALVE
7 - SHIFT PRESSURE REGULATING SOLENOID
8 - 3-4 SHIFT SOLENOID
9 - TORQUE CONVERTER LOCK-UP SOLENOID
10 - 1-2/4-5 SHIFT SOLENOID
11 - 2-3 SHIFT SOLENOID
12 - ELECTRICAL CONTROL UNIT
13 - SHIFT PLATE

20. Install the electrohydraulic control module (12) onto the shift plate (13) .
21. Bend the retaining lug on stiffening rib on transmission oil temperature sensor to retain the electrohydraulic control module.
22. Install the solenoid valves (6-11) into shift plate (13).

NOTE: Check O-rings on solenoid valves for damage and replace if necessary.

23. Install the leaf springs (5).
24. Install the Torx® socket bolts (3, 4) . Tighten the bolts to 8 N.m (71 in.lbs.).

NOTE: Pay attention to the different lengths of the Torx® socket bolts.

25. Install the solenoid caps (1, 2) if equipped.
26. Install the electrohydraulic unit into the vehicle.

INSTALLATION

INSTALLATION

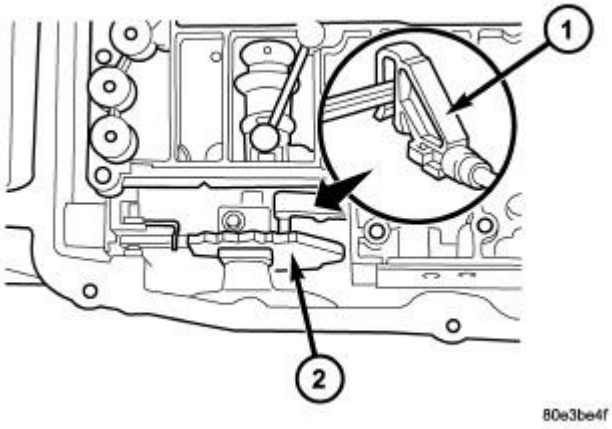

Fig. 308: Connecting Selector Valve -To- Detent Plate
Courtesy of CHRYSLER LLC

1 - SELECTOR VALVE 2 - DETENT PLATE

1. Position the electrohydraulic unit in the transmission housing.
2. Insert selector valve (1) in driver of detent plate (2). When installing the electrohydraulic control module in the transmission housing, the plastic part of the selector valve (1) must engage in the driver of the detent plate (2).

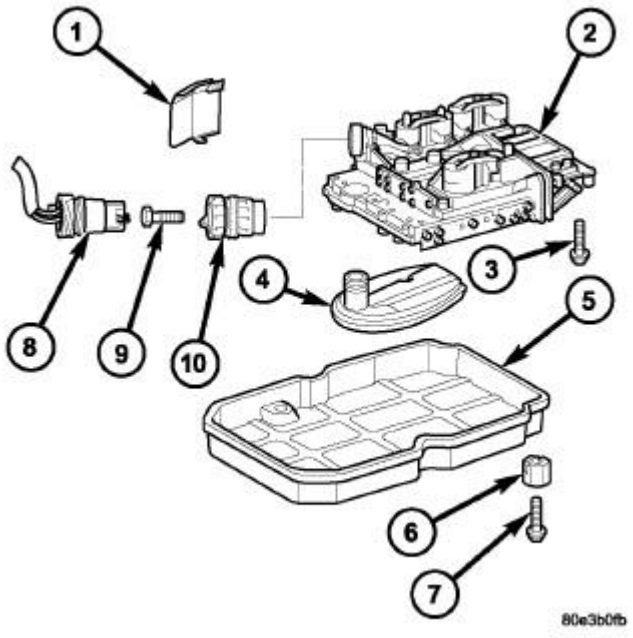

Fig. 309: Remove/Install Electrohydraulic Unit
Courtesy of CHRYSLER LLC

1 - HEAT SHIELD
2 - ELECTROHYDRAULIC UNIT
3 - BOLT
4 - OIL FILTER
5 - OIL PAN
6 - CLAMPING ELEMENT
7 - BOLT
8 - 13-PIN PLUG CONNECTOR
9 - BOLT
10 - ADAPTER PLUG

3. Install the Torx® socket bolts (3) and torque to 8 N.m (71 in.lbs.).
4. Install a new oil filter (4) .
5. Install oil pan (5) and torque the oil pan bolts to 8 N.m (71 in.lbs.).
6. Install the adapter plug (10) into the transmission housing and tighten the bolt (9) to 2.5 N.m (22 in.lbs.).

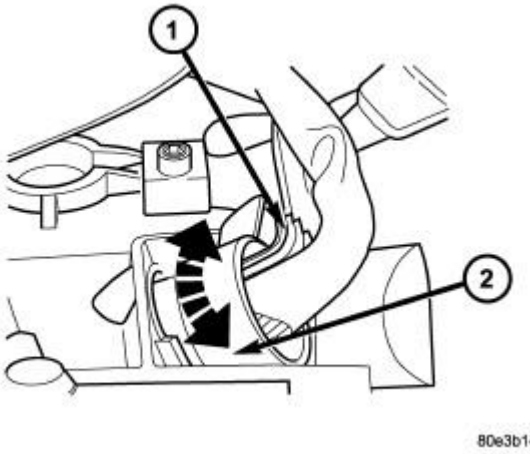

Fig. 310: Remove/Install Wiring Connector Plug
Courtesy of CHRYSLER LLC

1 - PLUG CONNECTOR 2 - ADAPTER PLUG

7. Check O-ring on plug connector (1) , and replace if necessary.
8. Install the plug connector (1) into the adapter plug (2). Turn bayonet lock of adapter plug (2) clockwise to connect plug connector (1).
9. Fill the transmission with the correct oil. Refer to **Vehicle Quick Reference/Capacities and Recommended Fluids - Specifications** using the standard procedure. See **Transmission and Transfer Case/Automatic - NAG1/FLUID and FILTER - Standard Procedure**.

GENERAL INFORMATION

Trouble Shooting - Basic Procedures

* PLEASE READ THIS FIRST *

NOTE: **This is GENERAL information. This article is not intended to be specific to any unique situation or individual vehicle configuration. The purpose of this Trouble Shooting information is to provide a list of common causes to problem symptoms. For model-specific Trouble Shooting, refer to SUBJECT, DIAGNOSTIC, or TESTING articles available in the section(s) you are accessing.**

ACCESSORIES & ELECTRICAL

CHARGING SYSTEM TROUBLE SHOOTING

NOTE: **This is GENERAL information. This article is not intended to be specific to any unique situation or individual vehicle configuration. The purpose of this Trouble Shooting information is to provide a list of common causes to problem symptoms. For model-specific Trouble Shooting, refer to SUBJECT, DIAGNOSTIC, or TESTING articles available in the section(s) you are accessing.**

NOTE: **This is GENERAL information. This article is not intended to be specific to any unique situation or individual vehicle configuration. The purpose of this Trouble Shooting information is to provide a list of common causes to problem symptoms. For model-specific Trouble Shooting, refer to SUBJECT, DIAGNOSTIC, or TESTING articles available in the section(s) you are accessing.**

BASIC CHARGING SYSTEM TROUBLE SHOOTING CHART

CONDITION & POSSIBLE CAUSE	CORRECTION
Vehicle Will Not Start	
Dead battery	Check battery cells, alternator belt tension and alternator output
Loose or corroded battery connections	Check all charging system connections
Ignition circuit or switch malfunction	Check and replace as necessary
Alternator Light Stays On With Engine Running	
Loose or worn alternator drive belt	Check alternator drive tension and condition, See Belt Adjustment in TUNE-UP article in the TUNE-UP section

Loose alternator wiring connections	Check all charging system connections
Short in alternator light wiring	See Indicator Warning Lights in STANDARD INSTRUMENTS in the ACCESSORIES & EQUIPMENT section
Defective alternator stator or diodes	See Bench Tests in ALTERNATOR article
Defective regulator	See Regulator Check in ALTERNATOR article
Alternator Light Stays Off With Ignition Switch ON	
Blown fuse	See WIRING DIAGRAMS
Defective alternator	See Testing in ALTERNATOR article
Defective indicator light bulb or socket	See Indicator Warning Lights in STANDARD INSTRUMENTS in the ACCESSORIES & EQUIPMENT section
Alternator Light Stays OFF With Ignition Switch ON	
Short in alternator wiring	See On-Vehicle Tests in ALTERNATOR article
Defective rectifier bridge	See Bench Tests in ALTERNATOR article
Lights or Fuses Burn Out Frequently	
Defective alternator wiring	See On-Vehicle Tests in ALTERNATOR article
Defective regulator	See Regulator Check in ALTERNATOR article
Defective battery	Check and replace as necessary
Ammeter Gauge Shows Discharge	
Loose or worn drive belt	Check alternator drive belt tension and condition. See Belt Adjustment in TUNE-UP article in the TUNE-UP section
Defective wiring	Check all wires and wire connections
Defective alternator or regulator	See Bench Tests and On-Vehicle Tests in ALTERNATOR article
Defective ammeter, or improper ammeter wiring connection	See Testing in STANDARD

	INSTRUMENTS in the ACCESSORIES & EQUIPMENT section
Noisy Alternator	
Loose drive pulley	Tighten drive pulley attaching nut
Loose mounting bolts	Tighten all alternator mounting bolts
Worn or dirty bearings	See Bearing Replacement ALTERNATOR article
Defective diodes or stator	See Bench Test in ALTERNATOR article
Battery Does Stay Charged	
Loose or worn drive belt	Check alternator drive belt tension and condition. See Belt Adjustment in appropriate TUNE-UP article in the TUNE-UP section
Loose or corroded battery connections	Check all charging system connections
Loose alternator connections	Check all charging system connections
Defective alternator or battery	See On-Vehicle Tests and Bench Tests in ALTERNATOR article
Add-on electrical accessories exceeding alternator capacity	Install larger alternator
Battery Overcharged-Uses Too Much Water	
Defective battery	Check alternator output and repair as necessary
Defective alternator	See On-Vehicle Test and Bench Tests in ALTERNATOR article
Excessive alternator voltage	Check alternator output and repair as necessary

IGNITION SYSTEM TROUBLE SHOOTING

NOTE: This is GENERAL information. This article is not intended to be specific to any unique situation or individual vehicle configuration. The purpose of this Trouble Shooting information is to provide a list of common causes to problem symptoms. For model-specific Trouble Shooting, refer to SUBJECT, DIAGNOSTIC, or TESTING articles available in the section(s) you are accessing.

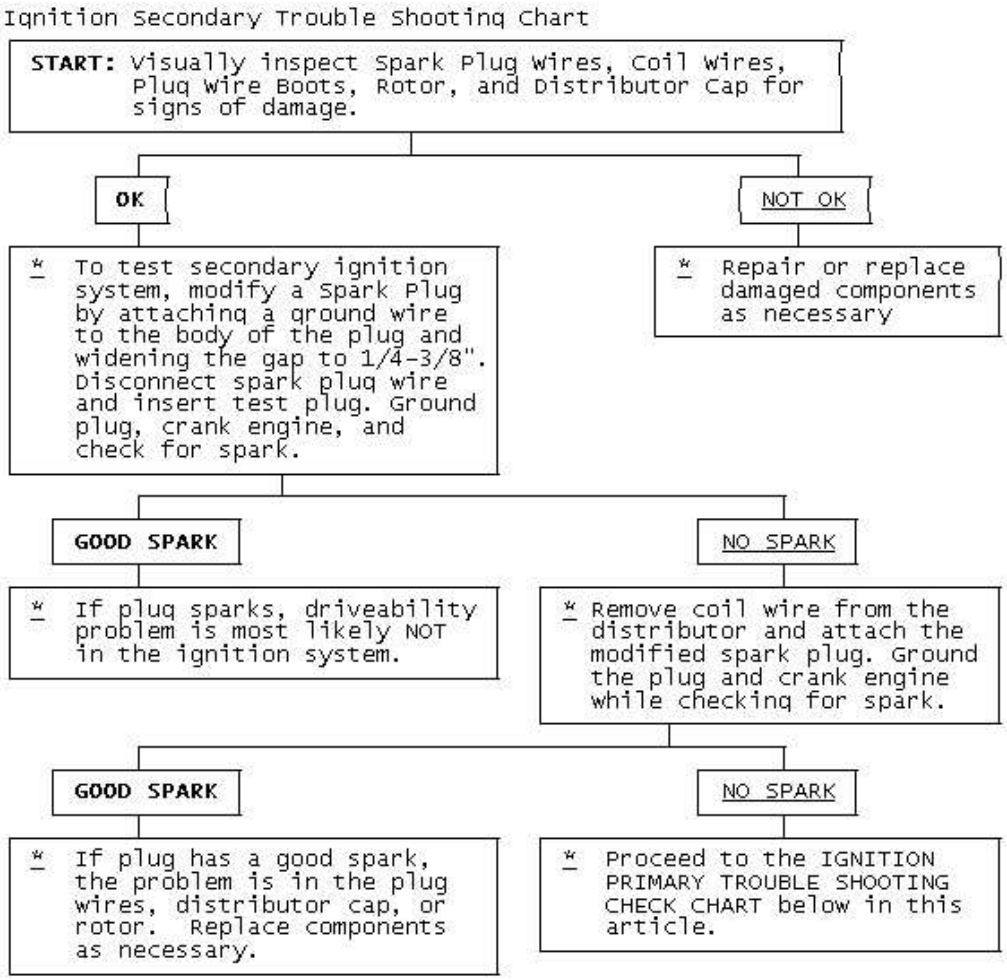

Fig. 1: Ignition Secondary Trouble Shooting Chart

Ignition Primary Trouble Shooting Chart

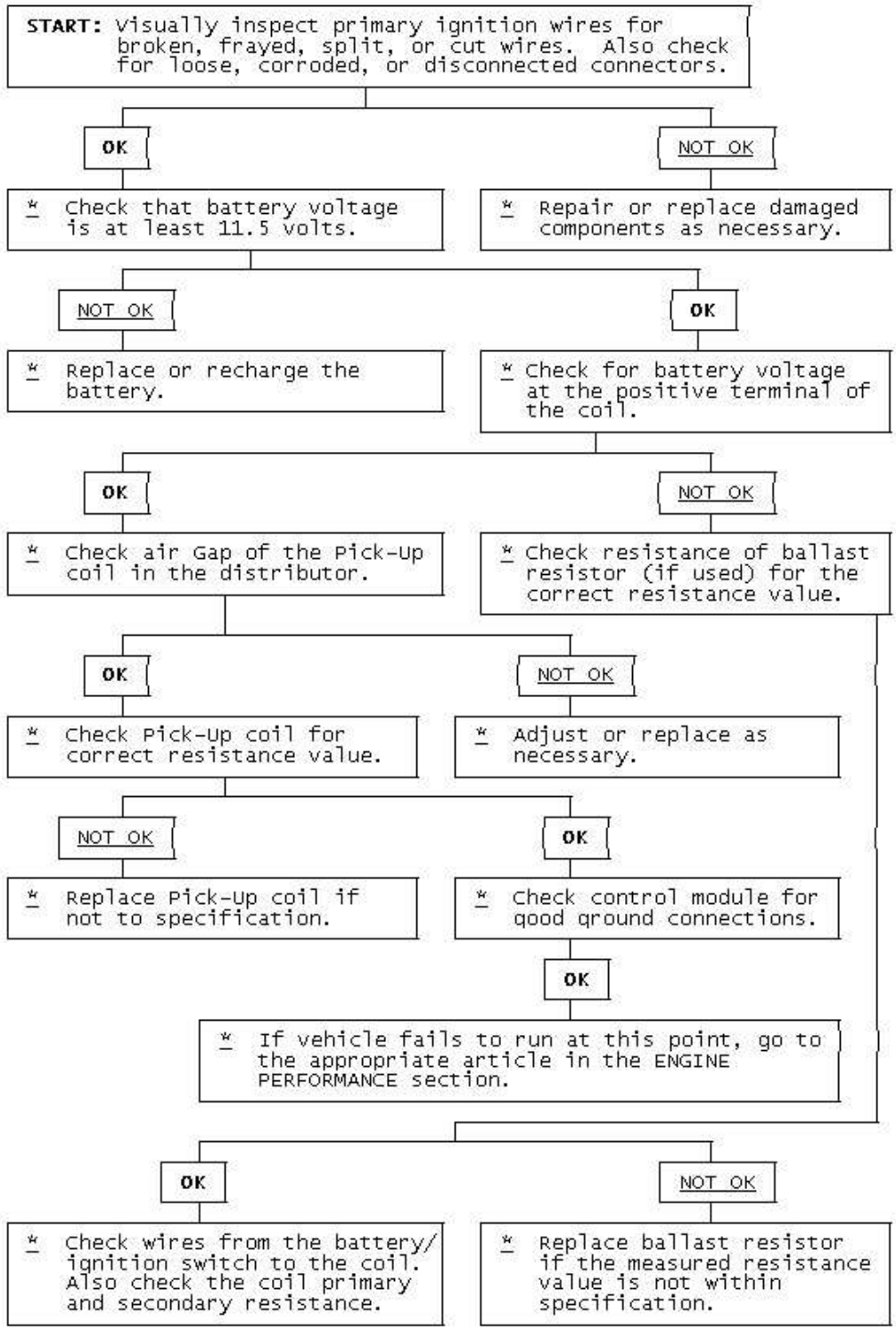

Fig. 2: Ignition Primary Trouble Shooting Chart

STARTER TROUBLE SHOOTING

NOTE: This is GENERAL information. This article is not intended to be specific to any unique situation or individual vehicle configuration. The purpose of this Trouble Shooting information is to provide a list of common causes to problem symptoms. For model-specific Trouble Shooting, refer to SUBJECT, DIAGNOSTIC, or TESTING articles available in the section(s) you are accessing.

BASIC STARTER TROUBLE SHOOTING CHART

CONDITION & POSSIBLE CAUSE	CORRECTION
Starter Fails to Operate	
Dead battery or bad connections between starter and battery	Check battery charge and all wires and connections to starter
Ignition switch faulty or misadjusted	Adjust or replace ignition switch
Open circuit between starter switch ignition terminal on starter relay	Check and repair wires and connections as necessary
Starter relay or starter defective	See Testing in STARTER article
Open solenoid pull-in wire	Testing in STARTER article
Starter Does Not Operate and Headlights Dim	
Weak battery or dead cell	Charge or replace battery as necessary
Loose or corroded battery connections	Check that battery connections are clean and tight
Internal ground in starter windings	See Testing in STARTER article
Grounded starter fields	See Testing in STARTERS
Armature rubbing on pole	See STARTER article shoes
Starter Turns but Engine Does Not Rotate	
Starter clutch slipping	See STARTER article
Broken clutch housing	See STARTER article
Pinion shaft rusted or dry	See STARTER article
Engine basic timing incorrect	See Ignition Timing in TUNE-UP article
Broken teeth on engine flywheel	Replace flywheel and check for starter pinion gear damage
Starter Will Not Crank Engine	
Faulty overrunning clutch	See STARTER article

Broken clutch housing	See STARTER article
Broken flywheel teeth	Replace flywheel and check for starter pinion gear damage
Armature shaft sheared or reduction gear teeth stripped	See STARTER article
Weak battery	Charge or replace battery as necessary
Faulty solenoid	See On-Vehicle Tests in STARTER article
Poor grounds	Check all ground connections for tight and clean connections
Ignition switch faulty or misadjusted	Adjust or replace ignition switch as necessary
Starter Cranks Engine Slowly	
Battery weak or defective	Charge or replace battery as necessary
Engine overheated	See ENGINE COOLING SYSTEM article
Engine oil too heavy	Check that proper viscosity oil is used
Poor battery-to-starter connections	Check that all between battery and starter are clean and tight
Current draw too low or too high	See Bench Tests in STARTER article
Bent armature, loose pole shoes screws or worn bearing	See STARTER article
Burned solenoid contacts	Replace solenoid
Faulty starter	Replace starter
Starter Engages Engine Only Momentarily	
Engine timing too far advanced	See Ignition Timing in TUNE-UP article
Overrunning clutch not engaging properly	Replace overrunning clutch. See STARTER article
Broken starter clutch	See STARTER article
Broken teeth on engine flywheel	Replace flywheel and check starter pinion gear for damage
Weak drive assembly thrust spring	See STARTER article
Weak hold-in coil	See Bench Tests in STARTER article
Starter Drive Will Not Engage	
Defective point assembly	See Testing in STARTER

	article
Poor point assembly ground	See Testing in STARTER article
Defective pull-in coil	Replace starter solenoid
Starter Relay Does Not Close	
Dead battery	Charge or replace battery as necessary
Faulty wiring	Check all wiring and connections leading to relay
Neutral safety switch faulty	Replace neutral safety switch
Starter relay faulty	Replace starter relay
Starter Drive Will Not Disengage	
Starter motor loose on mountings	Tighten starter attach bolts
Worn drive end bushing	See STARTER article
Damaged engine flywheel teeth	Replace flywheel and starter pinion gear for damage
Drive yolk return spring broken or missing	Replace return spring
Faulty ignition switch	Replace ignition switch
Insufficient clearance between winding leads to solenoid terminal and main contact in solenoid	Replace starter solenoid
Starter clutch not disengaging	Replace starter clutch
Ignition starter switch	Replace ignition switch contacts sticking
Starter Relay Operates but Solenoid Does Not	
Faulty solenoid switch, switch connections or relay	Check all wiring between relay and solenoid or replace relay or solenoid as necessary
Broken lead or loose soldered connections	Repair wire or wire connections as necessary
Solenoid Plunger Vibrates When Switch is Engaged	
Weak battery	Charge or replace battery as necessary
Solenoid contacts corroded	Clean contacts or replace solenoid
Faulty wiring	Check all wiring leading to solenoid
Broken connections inside switch cover	Repair connections or replace solenoid
Open hold-in wire	solenoid
Low Current Draw	
Worn brushes or weak brush springs	Replace brushes or brush

	springs as necessary
High Pitched Whine During Cranking Before Engine Fires but Engine Fires and Cranks Normally	
Distance too great between starter pinion and flywheel	Align starter or check that correct starter and flywheel are being used
High Pitched Whine After Engine Fires With Key released. Engine Fires and Cranks Normally	
Distance too small between starter pinion and flywheel	Flywheel runout contributes to the intermittent nature

AIR CONDITIONING & HEAT

AIR CONDITIONING TROUBLE SHOOTING

WARNING: This is GENERAL information. This article is not intended to be specific to any unique situation or individual vehicle configuration. The purpose of this Trouble Shooting information is to provide a list of common causes to problem symptoms. For model-specific Trouble Shooting, refer to SUBJECT, DIAGNOSTIC, or TESTING articles available in the section(s) you are accessing.

BASIC AIR CONDITIONING TROUBLE SHOOTING CHART

CONDITION	POSSIBLE CAUSE
Compressor Not Working	Compressor clutch circuit open.
.....	Compressor clutch coil inoperative.
.....	Poor clutch ground connection.
.....	Fan belts loose.
.....	Thermostatic switch inoperative.
.....	Thermostatic switch not adjusted.
.....	Ambient temperature switch open.
.....	Superheat fuse blown.
Excessive Noise or Vibration	Missing or loose mounting bolts.
.....	Bad idler pulley bearings.
.....	Fan belts not tightened correctly.
.....	Compressor clutch contacting body.
.....	Excessive system pressure.
.....	Compressor oil level low.
.....	Damaged clutch bearings.
.....	Damaged reed valves.
.....	Damaged compressor.
Insufficient or No Cooling; Compressor Working	Expansion valve inoperative.
.....	Heater control valve stuck open.

.....	Low system pressure.
.....	Blocked condenser fins.
.....	Blocked evaporator fins.
.....	Vacuum system leak.
.....	Vacuum motors inoperative.
.....	Control cables improperly adjusted.
.....	Restricted air inlet.
.....	Mode doors binding.
.....	Blower motor inoperative.
.....	Temperature above system capacity.

HEATER SYSTEM TROUBLE SHOOTING

NOTE: This is GENERAL information. This article is not intended to be specific to any unique situation or individual vehicle configuration. The purpose of this Trouble Shooting information is to provide a list of common causes to problem symptoms. For model-specific Trouble Shooting, refer to DIAGNOSTIC, or TESTING articles available in the section(s) you are accessing.

BASIC HEATER SYSTEM TROUBLE SHOOTING CHART

CONDITION	POSSIBLE CAUSE
Insufficient, Erratic, or No Heat	Low Coolant Level
.....	Incorrect thermostat.
.....	Restricted coolant flow through core.
.....	Heater hoses plugged.
.....	Misadjusted control cable.
.....	Sticking heater control valve.
.....	Vacuum hose leaking.
.....	Vacuum hose blocked.
.....	Vacuum motors inoperative.
.....	Blocked air inlet.
.....	Inoperative heater blower motor.
.....	Oil residue on heater core fins.
.....	Dirt on heater core fins.
Too Much Heat	Improperly adjusted cables.
.....	Sticking heater control valve.
.....	No vacuum to heater control valve.
.....	Temperature door stuck open.
Air Flow Changes During Acceleration	Vacuum system leak.
.....	Bad check valve or reservoir.
Air From Defroster At All Times	Vacuum system leak.

.....	Improperly adjusted control cables.
.....	Inoperative vacuum motor.
Blower Does Not Operate Correctly	Blown fuse.
.....	Blower motor windings open.
.....	Resistors burned out.
.....	Motor ground connection loose.
.....	Wiring harness connections loose.
.....	Blower motor switch inoperative.
.....	Blower relay inoperative.
.....	Fan binding or foreign object in housing.
.....	Fan blades broken or bent.

BRAKES

BRAKE SYSTEM TROUBLE SHOOTING

NOTE: This is GENERAL information. This article is not intended to be specific to any unique situation or individual vehicle configuration. The purpose of this Trouble Shooting information is to provide a list of common causes to problem symptoms. For model-specific Trouble Shooting, refer to SUBJECT, DIAGNOSTIC, or TESTING articles available in the section(s) you are accessing.

BRAKE SYSTEM TROUBLE SHOOTING CHART

CONDITION & POSSIBLE CAUSE	CORRECTION
Brakes Pull Left or Right	
Incorrect tire pressure	Inflate tires to proper pressure
Front end out of alignment	See WHEEL ALIGNMENT
Mismatched tires	Check tires sizes
Restricted brake lines or hoses	Check hose routing
Loose or malfunctioning caliper	See DISC BRAKES or BRAKE SYSTEM
Bent shoe or oily linings	See DRUM BRAKES or BRAKE SYSTEM
Malfunctioning rear brakes	See DRUM, DISC BRAKES or BRAKE SYSTEM
Loose suspension parts	See SUSPENSION
Noises Without Brakes Applied	
Front linings worn out	Replace linings
Dust or oil on drums or rotors	See DRUM, DISC BRAKES or BRAKE SYSTEM
Noises With Brakes Applied	

Insulator on outboard shoe damaged	See DISC BRAKES or BRAKE SYSTEM
Incorrect pads or linings	Replace pads or linings
Brake Rough, Chatters or Pulsates	
Excessive lateral runout	Check rotor runout
Parallelism not to specifications	Reface or replace rotor
Wheel bearings not adjusted	See SUSPENSION
Rear drums out-of-round	Reface or replace drums
Disc pad reversed, steel against rotor	Remove and reinstall pad
Excessive Pedal Effort	
Malfunctioning power unit	See POWER BRAKES or BRAKE SYSTEM
Partial system failure	Check fluid and pipes
Worn disc pad or lining	Replace pad or lining
Caliper piston stuck or sluggish	See DISC BRAKES or BRAKE SYSTEM
Master cylinder piston stuck	See MASTER CYLINDERS or BRAKE SYSTEM
Brake fade due to incorrect pads for linings	Replace pads or linings
Linings or pads glazed	Replace pads or linings
Worn drums	Reface or replace drums
Excessive Pedal Travel	
Partial brake system failure	Check fluid and pipes
Insufficient fluid in master cylinder	See MASTER CYLINDERS or BRAKE SYSTEM
Air trapped in system	See BRAKE BLEEDING or BRAKE SYSTEM
Rear brakes not adjusted	See Adjustments in DRUM BRAKES or BRAKE SYSTEM
Bent shoe or lining	See DRUM BRAKES or BRAKE SYSTEM
Plugged master cylinder cap	See MASTER CYLINDERS or BRAKE SYSTEM
Improper brake fluid	Replace brake fluid
Pedal Travel Decreasing	
Compensating port plugged	See MASTER CYLINDERS or BRAKE SYSTEM
Swollen cup in master cylinder	See MASTER CYLINDERS or BRAKE SYSTEM
Master cylinder piston not returning	See MASTER CYLINDERS or BRAKE SYSTEM
Weak shoe retracting springs	See DRUM BRAKES

	BRAKE SYSTEM
Wheel cylinder piston sticking	See DRUM BRAKES or BRAKE SYSTEM
Dragging Brakes	
Master cylinder pistons not returning	See MASTER CYLINDERS BRAKE SYSTEM
Restricted brake lines or hoses	Check line routing
Incorrect parking brake adjustment	See DRUM BRAKES BRAKE SYSTEM
Parking Brake cables frozen	See DRUM BRAKES BRAKE SYSTEM
Incorrect installation of inboard disc pad	Remove and replace correctly
Power booster output rod too long	See POWER BRAKE UNITS BRAKE SYSTEM
Brake pedal not returning freely	See DISC, DRUM BRAKES BRAKE SYSTEM
Brakes Grab or Uneven Braking Action	
Malfunction of combination valve	See CONTROL VALVE or BRAKE SYSTEM
Malfunction of power brake unit	See POWER BRAKE UNITS or BRAKE SYSTEM
Binding brake pedal	See DISC, DRUM BRAKES or BRAKE SYSTEM
Pulsation or Roughness	
Uneven pad wear caused by caliper	See DISC BRAKES or BRAKE SYSTEM
Uneven rotor wear	See DISC BRAKES or BRAKE SYSTEM
Drums out-of-round	Reface or replace drums

ENGINE MECHANICAL

COOLING SYSTEM TROUBLE SHOOTING

NOTE: This is GENERAL information. This article is not intended to be specific to any unique situation or individual vehicle configuration. The purpose of this Trouble Shooting information is to provide a list of common causes to problem symptoms. For model-specific Trouble Shooting, refer to SUBJECT, DIAGNOSTIC, or TESTING articles available in the section(s) you are accessing.

COOLING SYSTEM TROUBLE SHOOTING

CONDITION & POSSIBLE CAUSE	CORRECTION

Overheating	
Coolant Leak	Fill/Pressure Test System
A/C Condenser Fins Clogged	Remove/Clean Condenser
Radiator Fins Clogged	Remove/Clean Radiator
Thermostat Stuck Closed	Replace Thermostat
Clogged Cooling System Passages	Clean/Flush Cooling System
Water Pump Malfunction	Replace Water Pump
Fan Clutch Malfunction	Replace Fan Clutch
Retarded Ignition Timing	Reset Ignition Timing
Cooling Fan Malfunction	Test Cooling Fan/Circuit
Cooling Fan Motor Malfunction	Test Fan Motor
Cooling Fan Relay Malfunction	Test Fan Relay
Faulty Radiator Cap	Replace Radiator Cap
Broken/Slipping Fan Belt	Replace Fan Belt
Restricted Exhaust	Repair Exhaust System
Corrosion	
Impurities In Coolant	Clean/Flush System
Coolant Leakage	
Damaged hose	Replace Hose
Leaky Water Pump	Replace Water Pump
Damaged Radiator Seam	Replace/Repair Radiator
Leaky Thermostat Cover	Replace Thermostat Cover
Cylinder Head Problem	Check Head/Head Gasket
Leaky Freeze Plugs	Replace Freeze Plugs
Recovery System Inoperative	
Loose and/or Defective Radiator Cap	Replace Radiator Cap
Overflow Tube Clogged and/or Leaking	Repair Tube
Recovery Bottle Vent Restricted	Clean Vent
No Heater Core Flow	
Collapsed Heater Hose	Replace Heater Hose
Plugged Heater Core	Clean/Replace Heater Core
Faulty Heater Valve	Replace Heater Valve

GASOLINE ENGINE - MECHANICAL TROUBLE SHOOTING

NOTE: **This is GENERAL information. This article is not intended to be specific to any unique situation or individual vehicle configuration. The purpose of this Trouble Shooting information is to provide a list of common causes to problem symptoms. For model-specific Trouble Shooting, refer to SUBJECT, DIAGNOSTIC, or TESTING articles available in the section(s) you are accessing.**

BASIC GASOLINE ENGINE - MECHANICAL TROUBLE SHOOTING CHART

CONDITION & POSSIBLE CAUSE	CORRECTION
Engine Lopes At Idle	
Intake manifold-to-head leaks	Replace manifold gasket, See ENGINES
Blown head gasket	Replace head gasket, See ENGINES
Worn timing gears, chain or sprocket	Replace gears, chain or sprocket
Worn camshaft lobes	Replace camshaft, See ENGINES
Overheated engine	Check cooling system, See COOLING
Blocked crankcase vent valve	Remove restriction
Leaking EGR valve	Repair leak and/or replace valve
Faulty fuel pump	Replace fuel pump
Engine Has Low Power	
Leaking fuel pump	Repair leak and/or replace fuel pump
Excessive piston-to-bore clearance	Install larger pistons, See ENGINES
Sticking valves or weak valve springs	Check valve train components, See ENGINES
Incorrect valve timing	Reset valve timing, See ENGINES
Worn camshaft lobes	Replace camshaft, See ENGINES
Blown head gasket	Replace head gasket. See ENGINES.
Clutch slipping	Adjust pedal and/or replace components, See ENGINES
Engine overheating	Check cooling system, See COOLING
Auto. Trans. pressure regulator valve faulty	Replace pressure regulator valve
Auto. Trans. fluid level too low	Add fluid as necessary
Improper vacuum diverter valve operation	Replace vacuum diverter valve
Vacuum leaks	Inspect vacuum system and repair as required
Leaking piston rings	Replace piston rings, See

	ENGINES
Faulty High Speed Operation	
Low fuel pump volume	Replace fuel pump
Leaking valves or worn	Replace valves and/or springs, See ENGINES
Incorrect valve timing	Reset valve timing,See ENGINES
Intake manifold restricted	Remove restriction
Worn distributor shaft	Replace distributor
Faulty Acceleration	
Improper fuel pump stroke	Remove pump and reset pump stroke
Incorrect ignition timing	Reset ignition timing, See TUNE-UP
Leaking valves	Replace valves, See ENGINES
Worn fuel pump diaphragm or piston	Replace diaphragm or piston
Intake Backfire	
Improper ignition timing	Reset ignition timing, See TUNE-UP
Faulty accelerator pump discharge	Replace accelerator pump
Improper choke operation	Check choke and adjust as required
Defective EGR valve	Replace EGR valve
Fuel mixture too lean	Reset air/fuel mixture, See TUNE-UP
Choke valve initial clearance too large	Reset choke valve initial clearance
Exhaust Backfire	
Vacuum leak	Inspect and repair vacuum system
Faulty vacuum diverter valve	Replace vacuum diverter valve
Faulty choke operation	Check choke and adjust as required
Exhaust system leak	repair exhaust system leak
Engine Detonation	
Ignition timing too far advanced	Reset ignition timing, See TUNE-UP
Faulty ignition system	Check ignition timing, See TUNE-UP
Spark plugs loose or faulty	Retighten or replace plugs

Fuel delivery system clogged	Inspect lines, pump and filter for clog
EGR valve inoperative	Replace EGR valve
PCV system inoperative	Inspect and/or replace hoses or valve
Vacuum leaks	Check vacuum system and repair leaks
Excessive combustion chamber deposits	Remove built-up deposits
Leaking, sticking or broken valves	Inspect and/or replace valves
External Oil Leakage	
Fuel pump improperly seated or worn gasket	Remove pump, replace gasket and seat properly
Oil pan gasket broken or pan bent	Straighten pan and replace gasket
Timing chain cover gasket broken	Replace timing chain cover gasket
Rear main oil seal worn	Replace rear main oil seal
Oil pan drain plug not seated properly	Remove and reinstall drain plug
Camshaft bearing drain hole blocked	Remove restriction
Oil pressure sending switch leaking	Remove and reinstall sending switch
Excessive Oil Consumption	
Worn valve stems or guides	Replace stems or guides, See ENGINES
Valve "O" ring seals damaged	Replace "O" ring seals, See ENGINES
Plugged oil drain back holes	Remove restrictions
Improper PCV valve operation	Replace PCV valve
Engine oil level too high	Remove excess oil
Engine oil too thin	Replace thicker oil
Valve stem oil deflectors damaged	Replace oil deflectors
Incorrect piston rings	Replace piston rings, See ENGINES
Piston ring gaps not staggered	Reinstall piston rings, See ENGINES
Insufficient piston ring tension	Replace rings, See ENGINES
Piston ring grooves or oil return	slots clogged Replace piston rings, See ENGINES
Piston rings sticking in grooves	Replace piston rings, See ENGINES

Piston ring grooves excessively worn	Replace piston and rings, See ENGINES
Compression rings installed upside down	Replace compression rings correctly, See ENGINES
Worn or scored cylinder walls	Rebore cylinders or replace block
Mismatched oil ring expander and rail	Replace oil ring expander and rail, See ENGINES
Intake gasket dowels too long	Replace intake gasket dowels
Excessive main or connecting rod bearing clearance	Replace main or connecting rod bearings, See ENGINES
No Oil Pressure	
Low oil level	Add oil to proper level
Oil pressure sender or gauge broken	Replace sender or gauge
Oil pump malfunction	Remove and overhaul oil pump, See ENGINES
Oil pressure relief valve sticking	Remove and reinstall valve
Oil pump passages blocked	Overhaul oil pump, See ENGINES
Oil pickup screen or tube blocked	Remove restriction
Loose oil inlet tube	Tighten oil inlet tube
Loose camshaft bearings	Replace camshaft bearings, See ENGINES
Internal leakage at oil passages	Replace block or cylinder head
Low Oil Pressure	
Low engine oil level	Add oil to proper level
Engine oil too thin	Remove and replace with thicker oil
Excessive oil pump clearance	Reduce oil pump clearance, See ENGINES
Oil pickup tube or screen blocked	Remove restrictions
Main, rod or cam bearing clearance excessive	Replace bearing to reduce clearance, See ENGINES
High Oil Pressure	
Improper grade of oil	Replace with proper oil
Oil pressure relief valve stuck closed	Eliminate binding
Oil pressure sender or gauge faulty	Replace sender or gauge
Noisy Main Bearings	
Inadequate oil supply	Check oil delivery to main bearings

Excessive main bearing clearance	Replace main bearings, See ENGINES
Excessive crankshaft end play	Replace crankshaft, See ENGINES
Loose flywheel or torque converter	Tighten attaching bolts
Loose or damaged vibration damper	Tighten or replace vibration damper
Crankshaft journals out-of-round	Re-grind crankshaft journals
Excessive belt tension	Loosen belt tension
Noisy Connecting Rods	
Excessive bearing clearance or missing bearing	Replace bearing, See ENGINES
Crankshaft rod journal out-of-round	Re-grind crankshaft journal
Misaligned connecting rod or cap	Remove rod or cap and realign
Incorrectly tightened rod bolts	Remove and re-tighten rod bolts
Noisy Pistons and Rings	
Excessive piston-to-bore clearance	Install larger pistons, See ENGINES
Bore tapered or out-of-round	Rebore block
Piston ring broken	Replace piston rings, See ENGINES
Piston pin loose or seized	Replace piston pin, See ENGINES
Connecting rods misaligned	Realign connecting rods
Ring side clearance too loose or tight	Replace with larger or smaller rings
Carbon build-up on piston	Remove carbon
Noisy Valve Train	
Worn or bent push rods	Replace push rods, See ENGINES
Worn rocker arms or bridged pivots	Replace push rods, See ENGINES
Dirt or chips in valve lifters	Remove lifters and remove dirt/chips
Excessive valve lifter leak-down	Replace valve lifters, See ENGINES
Valve lifter face worn	Replace valve lifters, See ENGINES
Broken or cocked valve springs	Replace or reposition springs

Too much valve stem-to-guide clearance	Replace valve guides, See ENGINES
Valve bent	Replace valve, See ENGINES
Loose rocker arms	Retighten rocker arms, See ENGINES
Excessive valve seat run-out	Reface valve seats, See ENGINES
Missing valve lock	Install new valve lock
Excessively worn camshaft lobes	Replace camshaft, See ENGINES
Plugged valve lifter oil holes	Eliminate restriction or replace lifter
Faulty valve lifter check ball	Replace lifter check ball, See ENGINES
Rocker arm nut installed upside down	Remove and reinstall correctly
Valve lifter incorrect for engine	Remove and replace valve lifters
Faulty push rod seat or lifter plunger	Replace plunger or push rod
Noisy Valves	
Improper valve lash	Re-adjust valve lash, See ENGINES
Worn or dirty valve lifters	Clean and/or replace lifters
Worn valve guides	Replace valve guides, See ENGINES
Excessive valve seat or face run-out	Reface seats or valve face
Worn camshaft lobes	Replace camshaft, See ENGINES
Loose rocker arm studs	Re-tighten rocker arm studs, See ENGINES
Bent push rods	Replace push rods, See ENGINES
Broken valve springs	Replace valve springs, See ENGINES
Burned,Sticking or Broken Valves	
Weak valve springs or warped valves	Replace valves and/or springs, See ENGINES
Improper lifter clearance	Re-adjust clearance or replace lifters
Worn guides or improper guide clearance	Replace valve guides, See ENGINES

Out-of-round valve seats or improper seat width	Re-grind valve seats
Gum deposits on valve stems, seats or guide	Remove deposits
Improper spark timing	Re-adjust spark timing
Broken Pistons/Rings	
Undersize pistons	Replace with larger pistons, See ENGINES
Wrong piston rings	Replace with correct rings, See ENGINES
Out-of-round cylinder bore	Re-bore cylinder bore
Improper connecting rod alignment	Remove and realign connecting rods
Excessively worn ring grooves	Replace pistons, See ENGINES
Improperly assembled piston pins	Re-assemble pin-to-piston, See ENGINES
Insufficient ring gap clearance	Install new rings, See ENGINES
Engine overheating	Check cooling system
Incorrect ignition timing	Re-adjust ignition timing, See TUNE-UP
Excessive Exhaust Noise	
Leaks at manifold to head, or to pipe	Replace manifold or pipe gasket
Exhaust manifold cracked or broken	Replace exhaust manifold, See ENGINES

ENGINE PERFORMANCE

CARBURETOR TROUBLE SHOOTING:

NOTE: **This is GENERAL information. This article is not intended to be specific to any unique situation or individual vehicle configuration. The purpose of this Trouble Shooting information is to provide a list of common causes to problem symptoms. For model-specific Trouble Shooting, refer to SUBJECT, DIAGNOSTIC, or TESTING articles available in the section(s) you are accessing.**

BASIC COLD START SYMPTOMS TROUBLE SHOOTING CHART

CONDITION & POSSIBLE CAUSE	CORRECTION
Engine Won't Start	
Choke not closing	Check choke operation, see FUEL SYSTEMS
Choke linkage bent	Check linkage, see FUEL SYSTEM

Engine Starts, Then Dies	
Choke vacuum kick setting too wide	Check setting and adjust see, FUEL SYSTEMS
Fast idle RPM too low	Reset RPM to specification, see TUNE-UP
Fast idle cam index incorrect	Reset fast idle cam index, see FUEL SYSTEMS
Vacuum leak	Inspect vacuum system for leaks
Low fuel pump outlet	Repair or replace pump, see FUEL SYSTEMS
Low carburetor fuel level	Check float setting see FUEL SYSTEM
Engine Quits Under Load	
Choke vacuum kick setting incorrect	Reset vacuum kick setting,see FUEL SYSTEMS
Fast idle cam index incorrect	Reset fast idle cam index, see FUEL SYSTEM
Incorrect hot fast idle speed RPM	Reset fast idle RPM, see TUNE-UP
Engine Starts, Runs Up, Then Idles, Slowly With Black Smoke	
Choke vacuum kick set too narrow	Reset vacuum kick, see FUEL SYSTEMS
Fast idle cam index incorrect	Reset fast idle cam index, see FUEL SYSTEMS
Hot fast idle RPM too low	Reset fast idle RPM, see TUNE-UP

BASIC HOT START SYMPTOMS TROUBLE SHOOTING CHART

CONDITION & POSSIBLE CAUSE	CORRECTION
Engine Won't Start	
Engine flooded	Allow fuel to evaporate

BASIC COLD ENGINE DRIVEABILITY SYMPTOMS TROUBLE SHOOTING CHART

CONDITION & POSSIBLE CAUSE	CORRECTION
Engine Stalls in Gear	
Choke vacuum kick setting incorrect	Reset choke vacuum kick, see FUEL SYSTEMS
Fast idle RPM incorrect	Reset fast idle RPM, see TUNE-UP
Fast idle cam index incorrect	Reset fast idle cam see FUEL SYSTEMS

Acceleration Sag or Stall	
Defective choke control switch	Replace choke control switch
Choke vacuum kick setting incorrect	Reset choke vacuum kick see, FUEL SYSTEMS
Float level incorrect (too low)	Adjust float level, FUEL SYSTEMS
Accelerator pump defective	Repair or replace pump see FUEL SYSTEMS
Secondary throttles not closed	Inspect lockout adjustment, see FUEL SYSTEMS
Sag or Stall After Warmup	
Defective choke control switch	Replace choke control switch, see FUEL SYSTEMS
Defective accelerator pump	Replace pump, see FUEL SYSTEMS
Float level incorrect (too low)	Adjust float level, see FUEL SYSTEMS
Backfiring & Black Smoke	
Plugged heat crossover system	Remove restriction

BASIC WARM ENGINE DRIVEABILITY SYMPTOMS TROUBLE SHOOTING CHART

CONDITION & POSSIBLE CAUSE	**CORRECTION**
Hesitation With Small Amount of Gas Pedal Movement	
Vacuum leak	Inspect vacuum lines
Accelerator pump weak or inoperable	Replace pump, see FUEL SYSTEMS
Float level setting too low	Reset float level, see,FUEL SYSTEMS
Metering rods sticking or binding	Inspect and/or replace rods, see FUEL SYSTEMS
Carburetor idle or transfer system plugged	Inspect system and remove restriction
Frozen or binding heated air inlet	Inspect heated air door for binding
Hesitation With Heavy Gas Pedal Movement	
Defective accelerator pump	Replace pump, see FUEL SYSTEMS
Metering rod carrier sticking or binding	Remove restriction
Large vacuum leak	Inspect vacuum system and repair leak
Float level setting too low	Reset float level, see FUEL

	SYSTEMS
Defective fuel pump, lines or filter	Inspect pump, lines and filter
Air door setting incorrect	Adjust air door setting, see FUEL

DIESEL ENGINE TROUBLE SHOOTING

NOTE: This is GENERAL information. This article is not intended to be specific to any unique situation or individual vehicle configuration. The purpose of this Trouble Shooting information is to provide a list of common causes to problem symptoms. For model-specific Trouble Shooting, refer to SUBJECT, DIAGNOSTIC, or TESTING articles available in the section(s) you are accessing.

NOTE: Diesel engines mechanical diagnosis is the same as gasoline engines for items such as noisy valves, bearings, pistons, etc. The following trouble shooting covers only items pertaining to diesel engines.

BASIC DIESEL ENGINE TROUBLE SHOOTING CHART

CONDITION & POSSIBLE CAUSE	CORRECTION
Engine Won't Crank	
Bad battery connections or dead batteries	Check connections and/or replace batteries
Bad starter connections or bad starter	Check connections and/or replace starter
Engine Cranks Slowly, Won't Start	
Bad battery connections or dead batteries	Check connections and/or replace batteries
Engine oil too heavy	Replace engine oil
Engine Cranks Normally, But Will Not Start	
Glow plugs not functioning	Check glow plug system, see FUEL SYSTEMS
Glow plug control not functioning	Check controller, see FUEL SYSTEMS
Fuel not injected into cylinders	Check fuel injectors, see FUEL SYSTEMS
No fuel to injection pump	Check fuel delivery system
Fuel filter blocked	Replace fuel filter
Fuel tank filter blocked	Replace fuel tank filter
Fuel pump not operating	Check pump operation and/or replace pump
Fuel return system blocked	Inspect system and remove restriction

No voltage to fuel solenoid	Check solenoid and connections
Incorrect or contaminated fuel	Replace fuel
Incorrect injection pump timing	Re-adjust pump timing, see FUEL SYSTEMS
Low compression	Check valves, pistons, rings, see ENGINES
Injection pump malfunction	Inspect and/or replace injection pump
Engine Starts, Won't Idle	
Incorrect slow idle adjustment	Reset idle adjustment, see TUNE-UP
Fast idle solenoid malfunctioning	Check solenoid and connections
Fuel return system blocked	Check system and remove restrictions
Glow plugs go off too soon	See glow plug diagnosis in FUEL SYSTEMS
Injection pump timing incorrect	Reset pump timing, see FUEL SYSTEMS
No fuel to injection pump	Check fuel delivery system
Incorrect or contaminated fuel	Replace fuel
Low compression	Check valves, piston, rings, see ENGINES
Injection pump malfunction	Replace injection pump, see FUEL SYSTEMS
Fuel solenoid closes in RUN position	Check solenoid and connections
Engines Starts/Idles Rough W/out Smoke or Noise	
Incorrect slow idle adjustment	Reset slow idle, see TUNE-UP
Injection line fuel leaks	Check lines and connections
Fuel return system blocked	Check lines and connections
Air in fuel system	Bleed air from system
Incorrect or contaminated fuel	Replace fuel
Injector nozzle malfunction	Check nozzles, see FUEL SYSTEMS
Engines Starts and Idles Rough W/out Smoke or Noise, But Clears After Warm-Up	
Injection pump timing incorrect	Reset pump timing, see FUEL SYSTEMS
Engine not fully broken in	Put more miles on engine

Air in system	Bleed air from system
Injector nozzle malfunction	Check nozzles, see FUEL SYSTEMS
Engine Idles Correctly, Misfires Above Idle	
Blocked fuel filter	Replace fuel filter
Injection pump timing incorrect	Reset pump timing, see FUEL SYSTEMS
Incorrect or contaminated fuel	Replace fuel
Engine Won't Return To Idle	
Fast idle adjustment incorrect	Reset fast idle, see TUNE-UP
Internal injection pump malfunction	Replace injection pump, see FUEL SYSTEMS
External linkage binding	Check linkage and remove binding
Fuel Leaks On Ground	
Loose or broken fuel line	Check lines and connections
Internal injection pump seal leak	Replace injection pump, see FUEL SYSTEMS
Cylinder Knocking Noise	
Injector nozzles sticking open	Test injectors, see FUEL SYSTEMS
Very low nozzle opening pressure	Test injectors and/or replace
Loss of Engine Power	
Restricted air intake	Remove restriction
EGR valve malfunction	Replace EGR valve
Blocked or damaged exhaust system	Remove restriction and/or replace components
Blocked fuel tank filter	Replace filter
Restricted fuel filter	Remove restriction and/or replace filter
Block vent in gas cap	Remove restriction and/or replace cap
Tank-to-injection pump fuel supply blocked	Check fuel lines and connections
Blocked fuel return system	Remove restriction
Incorrect or contaminated fuel	Replace fuel
Blocked injector nozzles	Check nozzle for blockage, see FUEL SYSTEMS
Low compression	Check valves, rings, pistons, see ENGINES

Loud Engine Noise With Black Smoke	
Basic timing incorrect	Reset timing, see FUEL SYSTEMS
EGR valve malfunction	Replace EGR valve
Internal injection pump malfunction	Replace injection pump, see FUEL SYSTEMS
Incorrect injector pump housing pressure	Check pressure, see FUEL SYSTEMS
Engine Overheating	
Cooling system leaks	Check cooling system and repair leaks
Belt slipping or damaged	Check tension and/or replace belt
Thermostat stuck closed	Remove and replace thermostat, see ENGINE COOLING
Head gasket leaking	Replace head gasket
Oil Light on at Idle	
Low oil pump pressure	Check oil pump operation, see ENGINES
Oil cooler or line restricted	Remove restriction and/or replace cooler
Engine Won't Shut Off	
Injector pump fuel solenoid does not return fuel valve to OFF position	Remove and check solenoid and replace if needed

VACUUM PUMP DIAGNOSIS

CONDITION & POSSIBLE CAUSE	CORRECTION
Excessive Noise	
Loose pump-to-drive assembly screws	Tighten screws
Loose tube on pump assembly	Tighten tube
Valves not functioning properly	Replace valves
Oil Leakage	
Loose end plug	Tighten end plug
Bad seal crimp	Remove and re-crimp seal

FUEL INJECTION TROUBLE SHOOTING

NOTE: This is GENERAL information. This article is not intended to be specific to any unique situation or individual vehicle configuration. The purpose of this Trouble Shooting information is to provide a list of common causes to problem symptoms. For model-specific Trouble Shooting, refer to SUBJECT, DIAGNOSTIC, or TESTING articles available in the section(s) you are accessing.

BASIC FUEL INJECTION TROUBLE SHOOTING CHART

CONDITION & POSSIBLE CAUSE	CORRECTION
Engine Won't Start (Cranks Normally)	
Cold start valve inoperative	Test valve and circuit
Poor connection;vacuum or wiring	Check vacuum and electrical connections
Contaminated fuel	Test fuel for water or alcohol
Defective fuel pump relay or circuit	Test relay and wiring
Battery too low	Charge and test battery
Low fuel pressure	Test pressure regulator and fuel pump, check for restricted lines and filters
No distributor reference pulses	Repair ignition system as necessary
Open coolant temperature sensor circuit	Test sensor and wiring
Shorted W.O.T. switch in T.P.S.	Disconnect W.O.T. switch, engine should start
Defective ECM	Replace ECM
Fuel tank residual pressure valve leaks	Test for fuel pressure drop after shut down
Hard Starting	
Disconnected hot air tube to air cleaner	Reconnect tube and test control valve
Defective Idle Air Control (IAC) valve	Test valve operation and circuit
Shorted, open or misadjusted T.P.S.	Test and adjust or replace T.P.S.
EGR valve open	Test EGR valve and control circuit
Poor Oxygen sensor signal	Test for shorted or circuit
Incorrect mixture from PCV system	Test PCV for flow, check sealing of oil filter cap
Poor High Speed Operation	
Low fuel pump volume	Faulty pump or restricted fuel lines or filters
Poor MAP sensor signal	Test MAP sensor, vacuum hose and wiring
Poor Oxygen sensor signal	Test for shorted or open sensor or circuit
Open coolant temperature sensor circuit	Test sensor and wiring
Faulty ignition operation	Check wires for cracks or poor con- nections, test

	secondary voltage with oscilloscope
Contaminated fuel	Test fuel for water or alcohol
Intermittent ECM ground	Test ECM ground connection for resistance
Restricted air cleaner	Replace air cleaner
Restricted exhaust system	Test for exhaust manifold back pressure
Poor MAF sensor signal	Check leakage between sensor and manifold
Poor VSS signal	If tester for ALCL hook-up is available check that VSS reading matches speedometer
Ping or Knock on Acceleration	
Poor Knock sensor signal	Test for shorted or open sensor or circuit
Poor Baro sensor signal	Test for shorted or open sensor or circuit
Improper ignition timing	See VEHICLE EMISSION CONTROL LABEL (where applicable)
Check for engine overheating problems	Low coolant, loose belts or electric cooling fan inoperative

NOTE: For additional electronic fuel injection trouble shooting information, see the appropriate article in the ENGINE PERFORMANCE section (not all vehicles have Computer Engine Control articles). Information is provided there for diagnosing fuel system problems on vehicles with electronic fuel injection.

IGNITION SYSTEM TROUBLE SHOOTING

NOTE: This is GENERAL information. This article is not intended to be specific to any unique situation or individual vehicle configuration. The purpose of this Trouble Shooting information is to provide a list of common causes to problem symptoms. For model-specific Trouble Shooting, refer to SUBJECT, DIAGNOSTIC, or TESTING articles available in the section(s) you are accessing.

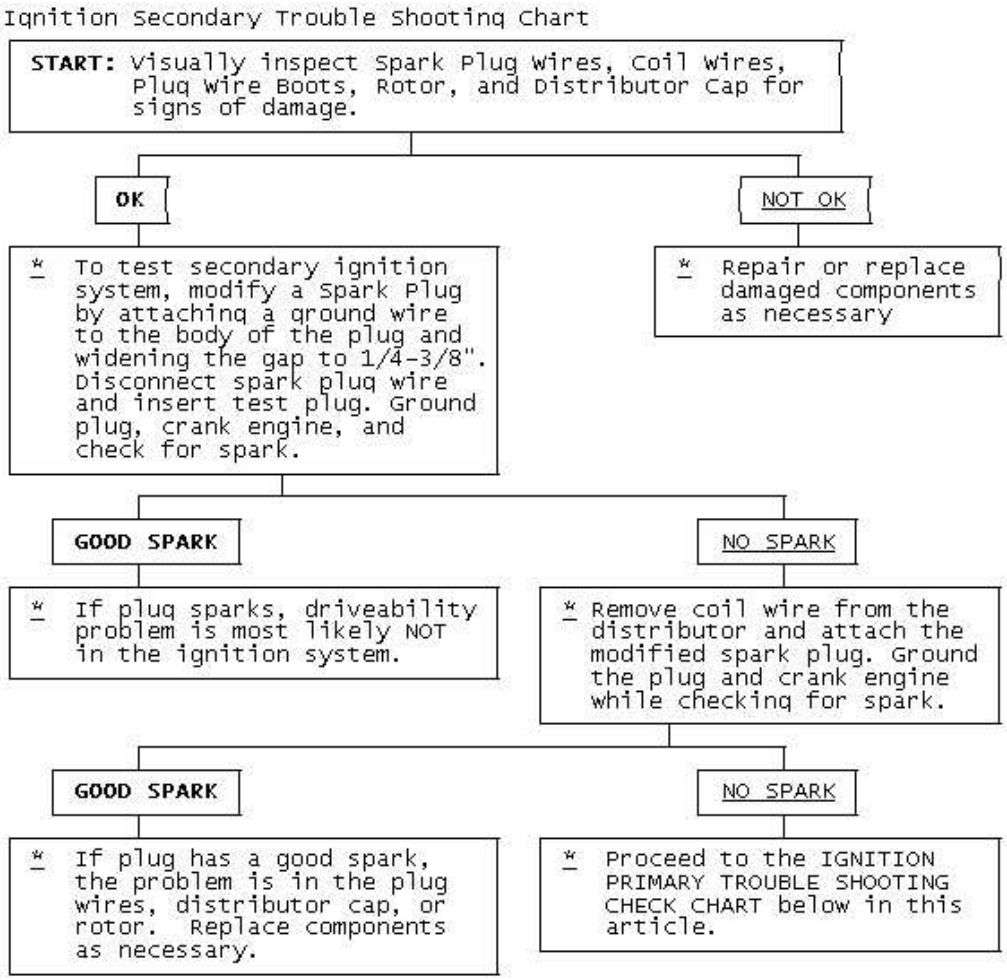

Fig. 3: Ignition Secondary Trouble Shooting Chart

Ignition Primary Trouble Shooting Chart

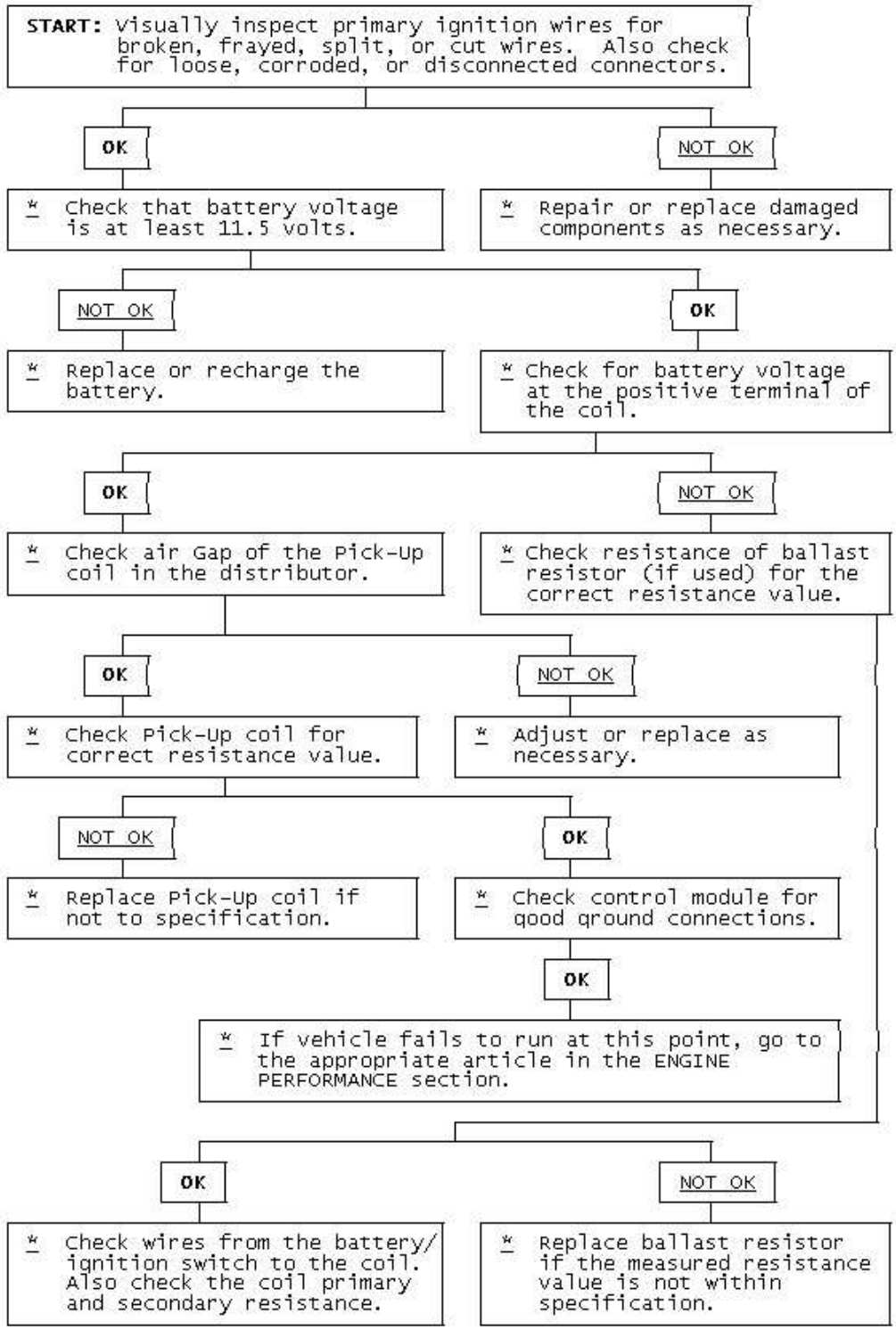

Fig. 4: Ignition Primary Trouble Shooting Chart

STARTER TROUBLE SHOOTING

NOTE: This is GENERAL information. This article is not intended to be specific to any unique situation or individual vehicle configuration. The purpose of this Trouble Shooting information is to provide a list of common causes to problem symptoms. For model-specific Trouble Shooting, refer to SUBJECT, DIAGNOSTIC, or TESTING articles available in the section(s) you are accessing.

BASIC STARTER TROUBLE SHOOTING CHART

CONDITION & POSSIBLE CAUSE	CORRECTION
Starter Fails to Operate	
Dead battery or bad connections between starter and battery	Check battery charge and all wires and connections to starter
Ignition switch faulty or misadjusted	Adjust or replace ignition switch
Open circuit between starter switch ignition terminal on starter relay	Check and repair wires and connections as necessary
Starter relay or starter defective	See Testing in STARTER article
Open solenoid pull-in wire	See Testing in STARTER article
Starter Does Not Operate and Headlights Dim	
Weak battery or dead cell	Charge or replace battery as necessary
Loose or corroded battery connections	Check that battery connections are clean and tight
Internal ground in starter windings	See Testing in STARTER article
Grounded starter fields	See Testing in STARTERS
Armature rubbing on pole shoes	See STARTER article
Starter Turns but Engine Does Not Rotate	
Starter clutch slipping	See STARTER article
Broken clutch housing	See STARTER article
Pinion shaft rusted or dry	See STARTER article
Engine basic timing incorrect	See Ignition Timing in TUNE-UP article
Broken teeth on engine flywheel	Replace flywheel and check for starter pinion

	gear damage
Starter Will Not Crank Engine	
Faulty overrunning clutch	See STARTER article
Broken clutch housing	See STARTER article
Broken flywheel teeth	Replace flywheel and check for starter pinion gear damage
Armature shaft sheared or reduction gear teeth stripped	See STARTER article
Weak battery	Charge or replace battery as necessary
Faulty solenoid	See On-Vehicle Tests in STARTER article
Poor grounds	Check all ground connections for tight and clean connections
Ignition switch faulty or misadjusted	Adjust or replace ignition switch as necessary
Starter Cranks Engine Slowly	
Battery weak or defective	Charge or replace battery as necessary
Engine overheated	See ENGINE COOLING SYSTEM article
Engine oil too heavy	Check that proper viscosity oil is used
Poor battery-to-starter connections	Check that all between battery and starter are clean and tight
Current draw too low or too high	See Bench Tests in STARTER article
Bent armature, loose pole shoes screws or worn bearings	See STARTER article
Burned solenoid contacts	Replace solenoid
Faulty starter	Replace starter
Starter Engages Engine Only Momentarily	
Engine timing too far advanced	See Ignition Timing in TUNE-UP article
Overrunning clutch not engaging properly	Replace overrunning clutch. See STARTER article
Broken starter clutch	See STARTER article
Broken teeth on engine flywheel	Replace flywheel and check starter pinion gear for damage
Weak drive assembly thrust spring	See STARTER article

Weak hold-in coil	See Bench Tests in STARTER article
Starter Drive Will Not Engage	
Defective point assembly	See Testing in STARTER article
Poor point assembly ground	See Testing in STARTER article
Defective pull-in coil	Replace starter solenoid
Starter Relay Does Not Close	
Dead battery	Charge or replace battery as necessary
Faulty wiring	Check all wiring and connections leading to relay
Neutral safety switch faulty	Replace neutral safety switch
Starter relay faulty	Replace starter relay
Starter Drive Will Not Disengage	
Starter motor loose on mountings	Tighten starter attach bolts
Worn drive end bushing	See STARTER article
Damaged engine flywheel teeth	Replace flywheel and starter pinion gear for damage
Drive yolk return spring broken or missing	Replace return spring
Faulty ignition switch	Replace ignition switch
Insufficient clearance between winding leads to solenoid terminal and main contact in solenoid	Replace starter solenoid
Starter clutch not disengaging	Replace starter clutch
Ignition starter switch contacts sticking	Replace ignition switch
Starter Relay Operates but Solenoid Does Not	
Faulty solenoid switch, switch connections or relay	Check all wiring between relay and solenoid or replace relay or solenoid as necessary
Broken lead or loose soldered connections	Repair wire or wire connections as necessary
Solenoid Plunger Vibrates When Switch is Engaged	
Weak battery	Charge or replace battery as necessary
Solenoid contacts corroded	Clean contacts or replace solenoid
Faulty wiring	Check all wiring leading to solenoid

Broken connections inside switch cover	Repair connections or replace solenoid
Open hold-in wire	Replace solenoid
Low Current Draw	
Worn brushes or weak	Replace brushes or brush springs as necessary
High Pitched Whine During Cranking Before Engine Fires but Engine Fires and Cranks Normally	
Distance too great between starter pinion and flywheel	Align starter or check that correct starter and flywheel are being used
High Pitched Whine After Engine Fires With Key released. Engine Fires and Cranks Normally	
Distance too small between starter pinion and flywheel	Flywheel runout contributes to the intermittent nature

TUNE-UP TROUBLE SHOOTING - GAS ENGINE VEHICLES

NOTE: This is GENERAL information. This article is not intended to be specific to any unique situation or individual vehicle configuration. The purpose of this Trouble Shooting information is to provide a list of common causes to problem symptoms. For model-specific Trouble Shooting, refer to SUBJECT, DIAGNOSTIC, or TESTING articles available in the section(s) you are accessing.

BASIC SPARK PLUG TROUBLE SHOOTING CHARTS

CONDITION & POSSIBLE CAUSE	CORRECTION
Normal Spark Plug Condition	
Light Tan or Gray deposits	No Action
Electrode not burned or fouled	No Action
Gap tolerance not changed	No Action
Cold Fouling or Carbon Deposits	
Overrich air/fuel mixture	Adjust air/fuel mixture, see ENGINE PERFORMANCE section
Faulty choke	Replace choke assembly, see ENGINE PERFORMANCE section
Clogged air filter	Clean and/or replace air filter
Incorrect idle speed or dirty carburetor	Reset idle speed and/ or clean carburetor
Faulty ignition wires	Replace ignition wiring
Prolonged operation at idle	Shut engine off during long idle

Sticking valves or worn valve guide seals	Check valve train
Wet Fouling or Oil Deposits	
Worn rings and pistons	Install new rings and pistons
Excessive cylinder wear	Rebore or replace block
Excessive valve guide clearance	Worn or loose bearing
Gap Bridged	
Deposits in combustion chamber becoming fused to electrode	Clean combustion chamber of deposits
Blistered Electrode	
Engine overheating	Check cooling system
Wrong type of fuel	Replace with correct fuel
Loose spark plugs	Retighten spark plugs
Over-advanced ignition timing	Reset ignition timing see ENGINE PERFORMANCE
Pre-Ignition or Melted Electrodes	
Incorrect type of fuel	Replace with correct fuel
Incorrect ignition timing	Reset ignition timing see ENGINE PERFORMANCE
Burned valves	Replace valves
Engine Overheating	Check cooling system
Wrong type of spark plug, too hot	Replace with correct spark plug, see ENGINE PERFORMANCE
Chipped Insulators	
Severe detonation	Check for over-advanced timing or combustion
Improper gapping procedure	Re-gap spark plugs
Rust Colored Deposits	
Additives in unleaded fuel	Try different fuel brand
Water In Combustion Chamber	
Blown head gasket or cracked head	Repair or replace head or head gasket

NOTE: **Before diagnosing an electronic ignition system, ensure that all wiring is connected properly between distributor, wiring connector and spark plugs. Ignition problem will show up either as: Engine Will Not Start or Engine Runs Rough.**

BASIC ELECTRONIC IGNITION TROUBLE SHOOTING CHARTS

CONDITION & POSSIBLE CAUSE	CORRECTION
Engine Won't Start	

Open circuit between distributor and bulkhead connector	Repair circuit
Open circuit between bulkhead connector and ignition switch	Repair circuit
Open circuit between ignition switch and starter solenoid	Repair circuit
Engine Runs Rough	
Fuel lines leaking or clogged	Tighten fitting, remove restriction
Initial timing incorrect	Reset ignition timing see ENGINE PERFORMANCE
Centrifugal advance malfunction	Repair distributor advance
Defective spark plugs or wiring	Replace plugs or plug wiring
Component Failure	
Spark arc-over on cap, rotor or coil	Replace cap, rotor or or coil
Defective pick-up coil	Replace pick-up coil
Defective ignition coil	Replace ignition coil
Defective vacuum unit	Replace vacuum unit
Defective control module	Replace control module

BASIC ELECTRONIC IGNITION TROUBLE SHOOTING CHARTS - USING OSCILLOSCOPE PATTERNS

CONDITION & POSSIBLE CAUSE	CORRECTION
Firing Voltage Lines are the Same, but Abnormally High	
Retarded ignition timing	Reset ignition timing, see ENGINE PERFORMANCE section
Fuel mixture too lean	Readjust carburetor, see ENGINE PERFORMANCE
High resistance in coil wire	Replace coil wire
Corrosion in coil tower terminal	Clean and/or replace coil
Corrosion in distributor coil terminal	Clean and/or replace distributor cap
Firing Voltage Lines are the Same but Abnormally Low	
Fuel mixture too rich	Readjust carburetor, see ENGINE PERFORMANCE
Breaks in coil wire causing arcing	Replace coil wire
Cracked coil tower causing arcing	Replace coil
Low coil output	Replace coil
Low engine compression	Determine cause and repair
One or More, But Not All Firing Voltage Lines are Higher Than Others	
Carburetor idle mixture not balanced	Readjust carburetor, see ENGINE PERFORMANCE
EGR valve stuck open	Clean and/or replace valve

High resistance in spark plug wires	Replace spark plug wires
Cracked or broken spark plug insulator	Replace spark plugs
Intake vacuum leak	Repair leak
Defective spark plugs	Replace spark plugs
Corroded spark plug terminals	Replace spark plugs
One or More, But Not All Firing Voltage Lines Are Lower Than Others	
Curb idle mixture not balanced	Readjust carburetor, see ENGINE PERFORMANCE
Breaks in plug wires	Replace plug wires causing arcing
Cracked coil tower causing arcing	Replace coil
Low compression	Determine cause and repair
Defective spark plugs	Replace spark plugs
Corroded spark plugs	Replace spark plugs
Cylinders Not Firing	
Cracked distributor cap terminals	Replace distributor cap
Shorted spark plug wire	Determine cause and repair
Mechanical problem in engine	Determine cause and repair
Defective spark plugs	Replace spark plugs
Spark plugs fouled	Replace spark plugs

BASIC DRIVEABILITY PROBLEMS TROUBLE SHOOTING

CONDITION & POSSIBLE CAUSE	**CORRECTION**
Hard Starting	
Binding carburetor linkage	Eliminate binding
Binding choke linkage	Eliminate binding
Binding choke piston	Eliminate binding
Restricted choke vacuum	Check vacuum lines for blockage
Worn or dirty needle valve and seat	Clean carburetor, see ENGINE PERFORMANCE
Float sticking	Readjust or replace float see the ENGINE PERFORMANCE section
Incorrect choke adjustment	Reset choke adjustment see ENGINE PERFORMANCE
Defective coil	Replace coil
Improper spark plug gap	Regap spark plugs
Incorrect ignition timing	Reset ignition timing see ENGINE PERFORMANCE
Detonation	

Over-advanced ignition timing	Reset ignition timing see ENGINE PERFORMANCE
Defective spark plugs	Replace spark plugs
Fuel lines clogged	Clean fuel lines
EGR system malfunction	Check and repair EGR system
PCV system malfunction	Repair PCV system
Vacuum leaks	Check and repair vacuum system
Loose fan belts	Tighten or replace fan belts, see ENGINE PERFORMANCE
Restricted airflow	Remove restriction
Vacuum advance malfunction	Check distributor operation
Dieseling	
Binding carburetor linkage	Eliminate binding
Binding throttle linkage	Eliminate blinding
Binding choke linkage or fast idle cam	Eliminate binding
Defective idle solenoid	Replace idle solenoid see ENGINE PERFORMANCE
Improper base idle speed	Reset idle speed, see see ENGINE PERFORMANCE
Incorrect ignition timing	Reset ignition timing see ENGINE PERFORMANCE
Incorrect idle mixture setting	Reset idle mixture, see ENGINE PERFORMANCE
Faulty Acceleration	
Incorrect ignition timing	Reset ignition timing see ENGINE PERFORMANCE
Engine cold and choke too lean	Adjust choke and allow engine to warm-up
Defective spark plugs	Replace spark plugs
Defective coil	Replace coil
Faulty Low Speed Operation	
Clogged idle transfer slots	Clean idle transfer slots, see FUEL
Restricted idle air bleeds and passages	Disassemble and clean carburetor, see FUEL
Clogged air cleaner	Replace air filter
Defective spark plugs	Replace spark plugs
Defective ignition wires	Replace ignition wire see ENGINE PERFORMANCE
Defective distributor cap	Replace distributor cap

Faulty High Speed Operation	
Incorrect ignition timing	Reset ignition timing see ENGINE PERFORMANCE
Defective distributor centrifugal advance	Replace advance mechanism
Defective distributor vacuum advance	Replace advance unit
Incorrect spark plugs or plug gap	Check gap and/or replace spark plugs
Faulty choke operation	Check choke and repair as required
Clogged vacuum passages	Remove restrictions
Improper size or clogged main jet	Check jet size and clean, see FUEL
Restricted air cleaner	Check filter and replace as necessary
Defective distributor cap, rotor or coil	Replace cap, rotor or coil
Misfire at All Speeds	
Defective spark plugs	Replace spark plugs
Defective spark plug wires	Replace spark plug wires
Defective distributor cap, rotor, or coil	Replace cap, rotor, or coil
Cracked or broken vacuum hoses	Replace vacuum hoses
Vacuum leaks	Repair vacuum leaks
Fuel lines clogged	Remove restriction
Hesitation	
Cracked or broken vacuum	Replace vacuum hoses hoses
Vacuum leaks	Repair Vacuum leaks
Binding carburetor linkage	Eliminate binding
Binding throttle linkage	Eliminate binding
Binding choke linkage or fast idle cam	Eliminate binding
Improper float setting	Readjust float setting, see FUEL
Cracked or broken ignition wires	Replace ignition wires
Rough Idle, Missing or Stalling	
Incorrect curb idle or fast idle speed	Reset idle speed, see see ENGINE PERFORMANCE
Incorrect basic timing	Reset ignition timing see ENGINE PERFORMANCE
Improper idle mixture adjustment	Reset idle mixture, see ENGINE PERFORMANCE
Improper feedback system operation	Check feedback system see ENGINE PERFORMANCE

Incorrect spark plug gap	Reset spark plug gap, see ENGINE PERFORMANCE
Moisture in ignition components	Dry components
Loose or broken ignition wires	Replace ignition wires
Damaged distributor cap or or rotor	Replace distributor cap or rotor
Faulty ignition coil	Replace ignition coil
Fuel filter clogged or worn	Replace fuel filter
Damaged idle mixture screw	Replace idle mixture screw, see FUEL
Improper fast idle cam adjustment	Reset fast idle cam adjustment, see TUNE- see ENGINE PERFORMANCE
Improper EGR valve operation	Replace EGR valve
Faulty PCV valve air flow	Replace PCV valve
Choke binding or improper choke setting	Reset choke or eliminate binding
Vacuum leak	Repair vacuum leak
Improper float bowl fuel level	Reset float adjustment, see FUEL
Clogged air bleed or idle passages	Clean carburetor passages, see FUEL
Clogged or worn air cleaner filter	Replace air filter
Faulty choke vacuum diaphragm	Replace diaphragm, see ENGINE PERFORMANCE
Exhaust manifold heat valve inoperative	Replace heat valve
Improper distributor spark advance	Check distributor operation
Leaking valves or valve components	Check and repair valvetrain
Improper carburetor mounting	Remove and remount carburetor
Excessive play in distributor shaft	Replace distributor
Loose or corroded wiring connections	Repair or replace as required
Engine Surges	
Improper PCV valve airflow	Replace PCV valve
Vacuum leaks	Repair vacuum leaks
Clogged air bleeds	Remove restriction
EGR valve malfunction	Replace EGR valve
Restricted air cleaner filter	Replace air filter
Cracked or broken vacuum hoses	Replace vacuum hoses
Cracked or broken ignition wires	Replace ignition wires
Vacuum advance malfunction	Check unit and replace as

	necessary
Defective or fouled spark plugs	Replace spark plugs
Ping or Spark Knock	
Incorrect ignition timing	Reset ignition timing see ENGINE PERFORMANCE
Distributor centrifugal or vacuum advance malfunction	Check operation and replace as necessary
Carburetor setting too lean	Readjust mixture setting, see ENGINE PERFORMANCE
Vacuum leak	Eliminate vacuum leak
EGR valve malfunction	Replace EGR valve
Poor Gasoline Mileage	
Cracked or broken vacuum	Replace vacuum hoses hoses
Vacuum leaks	Repair vacuum leaks
Defective ignition wires	Replace wires
Incorrect choke setting	Readjust setting, see ENGINE PERFORMANCE
Defective vacuum advance	Replace vacuum advance
Defective spark plugs	Replace spark plugs
Binding carburetor power piston	Eliminate binding
Dirt in carburetor jets	Clean and/or replace jets
Incorrect float adjustment	Readjust float setting, see FUEL
Defective power valve	Replace power valve, see ENGINE PERFORMANCE
Incorrect idle speed	Readjust idle speed
Engine Stalls	
Improper float level	Readjust float level
Leaking needle valve and seat	Replace needle valve and seat
Vacuum leaks	Eliminate vacuum leaks

VACUUM PUMP - DIESEL TROUBLE SHOOTING

NOTE: This is GENERAL information. This article is not intended to be specific to any unique situation or individual vehicle configuration. The purpose of this Trouble Shooting information is to provide a list of common causes to problem symptoms. For model-specific Trouble Shooting, refer to SUBJECT, DIAGNOSTIC, or TESTING articles available in the section(s) you are accessing.

NOTE: Diesel engines mechanical diagnosis is the same as gasoline engines for items

such as noisy valves, bearings, pistons, etc. The following trouble shooting covers only items pertaining to diesel engines.

VACUUM PUMP (DIESEL) TROUBLE SHOOTING CHART

CONDITION & POSSIBLE CAUSE	CORRECTION
Excessive Noise	
Loose pump-to-drive assembly screws	Tighten screws
Loose tube on pump assembly	Tighten tube
Valves not functioning properly	Replace valves
Oil Leakage	
Loose end plug	Tighten end plug
Bad seal crimp	Remove and re-crimp seal

MANUAL TRANSMISSION

MANUAL TRANSMISSION TROUBLE SHOOTING

NOTE: This is GENERAL information. This article is not intended to be specific to any unique situation or individual vehicle configuration. The purpose of this Trouble Shooting information is to provide a list of common causes to problem symptoms. For model-specific Trouble Shooting, refer to SUBJECT, DIAGNOSTIC, or TESTING articles available in the section(s) you are accessing.

MANUAL TRANSMISSION/TRANSAXLE TROUBLE SHOOTING

Condition	Possible Cause
Noisy In Forward Gears	Low gear oil level, Loose bell housing bolts, Worn bearings or gears
Clunk On Deceleration (FWD Only)	Loose engine mounts, Worn inboard CV joints, Worn differential pinion shaft, Side gear hub counterbore in case worn oversize
Gear Clash When Shifting Forward Gears	Clutch Out Of Adjustment, Shift linkage damaged or out of adjustment, Gears or synchronizers damaged, Low gear oil level
Transmission Noisy When Moving (RWD Only) Quiet In Neutral With Clutch Engaged	Worn rear outputshaft bearing
Gear Rattle	Worn bearings, Wrong gear oil, Low gear oil, Worn gears
Steady Ticking At Idle (Increases With RPM)	Broken tooth on gear
Gear Clash When Shifting Forward Gears	Worn or broken synchronizers
Loud Whine In Reverse	Normal condition (1)
Noise When Stepping On Clutch	Bad release bearing, Worn pilot bearing
Ticking Or Screeching As Clutch Is Engaged	Faulty release bearing, Uneven pressure plate

	fingers
Click Or Snap When Clutch Is Engaged	Worn clutch fork, Worn or broken front bearing retainer
Transmission Shifts Hard	Clutch not releasing, Shift mechanism binding, Clutch installed backwards
Will Not Shift Into One Gear, Shifts Into All Others	Bent shift fork, Worn detent balls
Locked Into Gear, Cannot Shift	Clutch adjustment, Worn detent balls
Transmission Jumps Out Of Gear	Pilot bearing worn, Bent shift fork, Worn gear teeth or face, Excessive gear train end play, Worn synchronizers, Missing detent ball spring, Shift mechanism worn or out of adjustment, Engine or transmission mount bolts loose or out of adjustment, Transmission not aligned
Shift Lever Rattle	Worn shift lever or detents, Worn shift forks, Worn synchronizers sleeve
Shift Lever Hops Under Acceleration	Worn engine or transmission mounts
(1) Most units use spur cut gears in reverse and are noisy	

POWERTRAIN

CLUTCH TROUBLE SHOOTING

NOTE: This is GENERAL information. This article is not intended to be specific to any unique situation or individual vehicle configuration. The purpose of this Trouble Shooting information is to provide a list of common causes to problem symptoms. For model-specific Trouble Shooting, refer to SUBJECT, DIAGNOSTIC, or TESTING articles available in the section(s) you are accessing.

BASIC CLUTCH TROUBLE SHOOTING CHART

CONDITION & POSSIBLE CAUSE	CORRECTION
Chattering or Grabbing	
Incorrect clutch adjustment	Adjust clutch
Oil, grease or glaze on facings	Disassemble and clean or replace
Loose "U" joint flange	See DRIVE AXLES article
Worn input shaft spline	Replace input shaft
Binding pressure plate	Replace pressure plate
Binding release lever	See CLUTCH article
Binding clutch disc hub	Replace clutch disc
Unequal pressure plate contact	Replace worn/misaligned components
Loose/bent clutch disc	Replace clutch disc

Incorrect transmission alignment	Realign transmission
Worn pressure plate, disc or flywheel	Replace damaged components
Broken or weak pressure springs	Replace pressure plate
Sticking clutch pedal	Lubricate clutch pedal & linkage
Incorrect clutch disc facing	Replace clutch disc
Engine loose in chassis	Tighten all mounting bolts
Failure to Release	
Oil or grease on clutch facings	Clean or replace clutch clutch disc
Incorrect release lever or pedal adjustment	See CLUTCH article
Worn or broken clutch facings	Replace clutch disc
Bent clutch disc or pressure plate	Replace damaged components
Clutch disc hub binding on input shaft	Clean or replace clutch disc and/or input shaft
Binding pilot bearing	Replace pilot bearing
Sticking release bearing sleeve	Replace release bearing and/or sleeve
Binding clutch cable	See CLUTCH article
Defective clutch master	Replace master cylinder
Defective clutch slave	Replace slave cylinder
Air in hydraulic system	Bleed hydraulic system
Rattling	
Weak or broken release lever spring	Replace spring and check alignment
Damaged pressure plate	Replace pressure plate
Broken clutch return spring	Replace return spring
Worn splines on clutch disc or input shaft	Replace clutch disc and/or input shaft
Worn clutch release bearing	Replace release bearing
Dry or worn pilot bearing	Lubricate or replace pilot bearing
Unequal release lever contact	Align or replace release lever
Incorrect pedal free play	Adjust free play
Warped or damaged clutch disc	Replace damaged components
Slipping	
Pressure springs worn or	Release pressure plate
Oily, greasy or worn facings	Clean or replace clutch disc
Incorrect clutch alignment	Realign clutch assembly

Warped clutch disc or pressure plate	Replace damaged components
Binding release levers or clutch pedal	Lubricate and/or replace release components
Squeaking	
Worn or damaged release	Replace release bearing
Dry or worn pilot or release bearing	Lubricate or replace assembly
Pilot bearing turning in crankshaft	Replace pilot bearing and/or crankshaft
Worn input shaft bearing	Replace bearing and seal
Incorrect transmission alignment	Realign transmission
Dry release fork between pivot	Lubricate release fork and pivot
Heavy and/or Stiff Pedal	
Sticking release bearing sleeve	Replace release bearing and/or sleeve
Dry or binding clutch pedal hub	Lubricate and align components
Floor mat interference with pedal	Lay mat flat in proper area
Dry or binding ball/fork pivots	Lubricate and align components
Faulty clutch cable	Replace clutch cable
Noisy Clutch Pedal	
Faulty interlock switch	Replace interlock switch
Self-adjuster ratchet noise	Lubricate or replace self-adjuster
Speed control interlock switch	Lubricate or replace interlock switch
Clutch Pedal Sticks Down	
Binding clutch cable	See CLUTCH article
Springs weak in pressure plate	Replace pressure plate
Binding in clutch linkage	Lubricate and free linkage
Noisy	
Dry release bearing	Lubricate or replace release bearing
Dry or worn pilot bearing	Lubricate or replace bearing
Worn input shaft bearing	Replace bearing
Transmission Click	
Weak springs in pressure	Replace pressure plate plate
Release fork loose on ball stud	Replace release fork and/or ball stud
Oil on clutch disc damper	Replace clutch disc

Broken spring in slave cylinder	Replace slave cylinder

DRIVE AXLE - NOISE DIAGNOSIS

Unrelated Noises

Some driveline trouble symptoms are also common to the engine, transmission, wheel bearings, tires, and other parts of the vehicle. Ensure cause of trouble actually is in the drive axle before adjusting, repairing, or replacing any of its parts.

Non-Drive Axle Noises

A few conditions can sound just like drive axle noise and have to be considered in pre-diagnosis. The 4 most common noises are exhaust, tires, CV/universal joints and wheel trim rings.

In certain conditions, the pitch of the exhaust gases may e gear whine. At other times, it may be mistaken for a wheel bearing rumble.

Tires, especially radial and snow, can have a high-pitched tread whine or roar, similar to gear noise. Also, some non-standard tires with an unusual tread construction may emit a roar or whine.

Defective CV/universal joints may cause clicking noises or excessive driveline play that can be improperly diagnosed as drive axle problems.

Trim and moldings also can cause a whistling or whining noise. Ensure none of these components are causing the noise before disassembling the drive axle.

Gear Noise

A "howling" or "whining" noise from the ring and pinion gear can be caused by an improper gear pattern, gear damage, or improper bearing preload. It can occur at various speeds and driving conditions, or it can be continuous.

Before disassembling axle to diagnose and correct gear ke sure that tires, exhaust, and vehicle trim have been checked as possible causes.

Chuckle

This is a particular rattling noise that sounds like a stick against the spokes of a spinning bicycle wheel. It occurs while decelerating from 40 MPH and usually can be heard until vehicle comes to a complete stop. The frequency varies with the speed of the vehicle.

A chuckle that occurs on the driving phase is usually caused ive clearance due to differential gear wear, or by a damaged tooth on the coast side of the pinion or ring gear. Even a very small tooth nick or a ridge on the edge of a gear tooth is enough the cause the noise.

This condition can be corrected simply by cleaning the gear tooth nick or ridge with a small grinding

wheel. If either gear is damaged or scored badly, the gear set must be replaced. If metal has broken loose, the carrier and housing must be cleaned to remove particles that could cause damage.

Knock

This is very similar to a chuckle, though it may be louder, and occur on acceleration or deceleration. Knock can be caused by a gear tooth that is damaged on the drive side of the ring and pinion gears. Ring gear bolts that are hitting the carrier casting can cause knock. Knock can also be due to excessive end play in the axle shafts.

Clunk

Clunk is a metallic noise heard when an automatic transmission is engaged in Reverse or Drive, or when throttle is applied or released. It is caused by backlash somewhere in the driveline, but not necessarily in the axle. To determine whether driveline clunk is caused by the axle, check the total axle backlash as follows:

1. Raise vehicle on a frame or twinpost hoist so that drive wheels are free. Clamp a bar between axle companion flange and a part of the frame or body so that flange cannot move.
2. On conventional drive axles, lock the left wheel to keep it from turning. On all models, turn the right wheel slowly until it is felt to be in Drive condition. Hold a chalk marker on side of tire about 12" from center of wheel. Turn wheel in the opposite direction until it is again felt to be in Drive condition.
3. Measure the length of the chalk mark, which is the total axle backlash. If backlash is one inch or less, drive axle is not the source of clunk noise.

Bearing Whine

Bearing whine is a high-pitched sound similar to a whistle. It is usually caused by malfunctioning pinion bearings. Pinion bearings operate at drive shaft speed. Roller wheel bearings may whine in a similar manner if they run completely dry of lubricant. Bearing noise will occur at all driving speeds. This distinguishes it from gear whine, which usually comes and goes as speed changes.

Bearing Rumble

Bearing rumble sounds like marbles being tumbled. It is usually caused by a malfunctioning wheel bearing. The lower pitch is because the wheel bearing turns at only about 1/3 of drive shaft speed.

Chatter On Turns

This is a condition where the entire front or rear of vehicle vibrates when vehicle is moving. The vibration is plainly felt as well as heard. Extra differential thrust washers installed during axle repair can cause a condition of partial lock-up that creates this chatter.

Axle Shaft Noise

Axle shaft noise is similar to gear noise and pinion bearing whine. Axle shaft bearing noise will normally distinguish itself from gear noise by occurring in all driving modes (Drive, cruise, coast and

float), and will persist with transmission in Neutral while vehicle is moving at problem speed.

If vehicle displays this noise condition, remove suspect parts, replace wheel seals and install a new set of bearings. Re-evaluate vehicle for noise before removing any internal components.

Vibration

Vibration is a high-frequency trembling, shaking or grinding condition (felt or heard) that may be constant or variable in level and can occur during the total operating speed range of the vehicle.

The types of vibrations that can be felt in the vehicle can d into 3 main groups:

- Vibrations of various unbalanced rotating parts of the vehicle.
- Resonance vibrations of the body and frame structures caused by rotating of unbalanced parts.
- Tip-in moans of resonance vibrations from stressed engine or exhaust system mounts or driveline flexing modes.

DRIVE AXLE - RWD TROUBLE SHOOTING

NOTE: **This is GENERAL information. This article is not intended to be specific to any unique situation or individual vehicle configuration. The purpose of this Trouble Shooting information is to provide a list of common causes to problem symptoms. For model-specific Trouble Shooting, refer to SUBJECT, DIAGNOSTIC, or TESTING articles available in the section(s) you are accessing. For definitions of listed noises or sounds, see DRIVE AXLE - NOISE DIAGNOSIS under POWERTRAIN.**

DRIVE AXLE (RWD) TROUBLE SHOOTING

CONDITION & POSSIBLE CAUSE	CORRECTION
Knocking or Clunking	
Differential Side Gear Clearance	Check Clearance
Worn Pinion Shaft	Replace Pinion Shaft
Axle Shaft End Play	Check End Play
Missing Gear Teeth	Check Differential/Replace Gear
Wrong Axle Backlash	Check Backlash
Misaligned Driveline	Realign Driveline
Clinking During Engagement	
Side Gear Clearance	Check Clearance
Ring and Pinion Backlash	Check Backlash
Worn/Loose Pinion Shaft	Replace Shaft/Bearing
Bad "U" Joint	Replace "U" Joint
Sticking Slip Yoke	Lube Slip Yoke

Broken Rear Axle Mount	Replace Mount
Loose Drive Shaft Flange	Check Flange
Click/Chatter On Turns	
Differential Side Gear Clearance	Check Clearance
Wrong Turn On Plates (1)	Replace Clutch Plates
Wrong Differential Lubricant (1)	Change Lubricant
Knock Or Click	
Flat Spot on Rear Wheel Bearing	Replace Wheel Bearing
Low Vibration At All Speeds	
Faulty Wheel Bearing	Replace Wheel Bearing
Faulty "U" Joint	Replace "U" Joint
Faulty Drive Shaft	Balance Drive Shaft
Faulty Companion Flange	Replace Flange
Faulty Slip Yoke Flange	Replace Flange
(1) Limited slip differential only.	

FWD AXLE SHAFTS & CV JOINTS TROUBLE SHOOTING

NOTE: This is GENERAL information. This article is not intended to be specific to any unique situation or individual vehicle configuration. The purpose of this Trouble Shooting information is to provide a list of common causes to problem symptoms. For model-specific Trouble Shooting, refer to SUBJECT, DIAGNOSTIC, or TESTING articles available in the section(s) you are accessing.

BASIC FWD AXLE SHAFTS & CV JOINTS TROUBLE SHOOTING CHART

CONDITION	POSSIBLE CAUSE
Grease Leaks	CV boot torn or cracked
Clicking Noise on Cornering	Damaged outer CV
Clunk Noise on Acceleration	Damaged inner CV
Vibration or Shudder on Acceleration	Sticking, damaged or worn CV Misalignment or spring height

STEERING & SUSPENSION

MANUAL STEERING GEAR TROUBLE SHOOTING

NOTE: This is GENERAL information. This article is not intended to be specific to any unique situation or individual vehicle configuration. The purpose of this Trouble Shooting information is to provide a list of common causes to problem symptoms. For model-specific Trouble Shooting, refer to SUBJECT, DIAGNOSTIC, or TESTING articles available in the section(s) you are accessing.

BASIC MANUAL STEERING GEAR TROUBLE SHOOTING CHART

CONDITION & POSSIBLE CAUSE	CORRECTION
Rattle or Chucking Noise in Rack and Pinion	
Rack and pinion mounting bracket loose	Tighten all mounting bolts
Lack of/or incorrect lubricant	Correct as necessary
Steering gear mounting bolts loose	Tighten all mounting bolts
Excessive Play	
Front wheel bearing improperly adjusted	See FRONT SUSPENSION article
Loose or worn steering linkage	See STEERING LINKAGE article
Loose or worn steering gear shift	See MANUAL STEERING GEAR article
Steering arm loose on gear shaft	See MANUAL STEERING GEAR article
Steering gear housing bolts loose	Tighten all mounting bolts
Steering gear adjustment too loose	See MANUAL STEERING GEAR article
Steering arms loose on knuckles	Tighten and check steering linkage
Rack and pinion mounting loose	Tighten all mounting bolts
Rack and pinion out of adjustment	See adjustment in STEERING article
Tie rod end loose	Tighten and check steering linkage
Excessive Pitman shaft-to-ball nut lash	Repair as necessary
Poor Returnability	
Lack of lubricant in ball joint or linkage	Lubricate and service systems
Binding in linkage or ball joints	See STEERING LINKAGE and SUSPENSION article
Improper front end alignment	See WHEEL ALIGNMENT article
Improper tire pressure	Inflate to proper pressure
Tie rod binding	Inflate to proper pressure
Shaft seal rubbing shaft	See STEERING COLUMN article
Excessive Vertical Motion	
Improper tire pressure	Inflate to proper pressure
Tires, wheels or rotors out of balance	Balance tires then check wheels and rotors
Worn or faulty shock absorbers	Check and replace if necessary

Loose tie rod ends or steering	Tighten or replace if necessary
Loose or worn wheel bearings	See SUSPENSION article
Steering Pulls to One Side	
Improper tire pressure	Inflate to proper pressure
Front tires are different sizes	Rotate or replace if necessary
Wheel bearings not adjusted properly	See FRONT SUSPENSION article
Bent or broken suspension components	See FRONT SUSPENSION article
Improper wheel alignment	See WHEEL ALIGNMENT article
Brakes dragging	See BRAKES article
Instability	
Low or uneven tire pressure	Inflate to proper pressure
Loose or worn wheel bearings	See FRONT SUSPENSION article
Loose or worn idler arm bushing	See FRONT SUSPENSION article
Loose or worn strut bushings	See FRONT SUSPENSION article
Incorrect front wheel alignment	See WHEEL ALIGNMENT article
Steering gear not centered	See MANUAL STEERING GEARS article
Springs or shock	Check and replace if necessary
Improper cross shaft	See MANUAL STEERING GEARS article

POWER STEERING TROUBLE SHOOTING

NOTE: This is GENERAL information. This article is not intended to be specific to any unique situation or individual vehicle configuration. The purpose of this Trouble Shooting information is to provide a list of common causes to problem symptoms. For model-specific Trouble Shooting, refer to SUBJECT, DIAGNOSTIC, or TESTING articles available in the section(s) you are accessing.

BASIC POWER STEERING TROUBLE SHOOTING CHART

CONDITION & POSSIBLE CAUSE	CORRECTION
Rattle or Chucking Noise	
Pressure hoses touching engine parts	Adjust to proper clearance

Loose Pitman shaft	Adjust or replace if necessary
Tie rods ends or Pitman arm loose	Tighten and check system
Rack and pinion mounts loose	Tighten all mounting bolts
Free play in worm gear	See POWER STEERING GEAR article
Loose sector shaft or thrust bearing adjustment	See POWER STEERING GEAR
Free play in pot coupling	See STEERING COLUMN article
Worn shaft serrations	See STEERING COLUMN article
Growl in Steering Pump	
Excessive pressure in hoses	Restricted hoses, see POWER STEERING GEAR article
Scored pressure plates	See POWER STEERING GEAR article
Scored thrust plates or rotor	See POWER STEERING GEAR article
Extreme wear of cam ring	See POWER STEERING GEAR article
Rattle in Steering Pump	
Vanes not installed	See POWER STEERING PUMP article
Vanes sticking in rotor	See POWER STEERING PUMP article
Swish noise in Pump	
Defective flow control valve	See POWER STEERING PUMP article
Groan in Steering Pump	
Air in fluid	See POWER STEERING PUMP article
Poor pressure hose connection	Tighten and check, replace if necessary
Squawk When Turning	
Damper "O" ring on valve spool cut	See POWER STEERING PUMP article
Moan or Whine in Pump	
Pump shaft bearing scored	Replace bearing and fluid
Air in fluid or fluid level low	See POWER STEERING PUMP article
Hose or column grounded	Check and replace if

	necessary
Cover "O" ring missing or damaged	See POWER STEERING PUMP article
Valve cover baffle missing or damaged	See POWER STEERING PUMP article
Interference of components in pump	See POWER STEERING PUMP article
Loose or poor bracket alignment	Correct or replace if necessary
Hissing When Parking	
Internal leakage in steering gear	Check valved assembly first
Chirp in Steering Pump	
Loose or worn power steering belt	Adjust or replace if necessary
Buzzing When Not Steering	
Noisy pump	See POWER STEERING PUMP article
Free play in steering shaft bearing	See STEERING COLUMN article
Bearing loose on shaft serrations	See STEERING COLUMN article
Clicking Noise in Pump	
Pump slippers too long	See POWER STEERING PUMP article
Broken slipper springs	See POWER STEERING PUMP article
Excessive wear or nicked rotors	See POWER STEERING PUMP article
Damaged cam contour	See POWER STEERING PUMP article
Poor Return of Wheel	
Wheel rubbing against turn signal	See STEERING COLUMN SWITCHES article
Flange rubbing steering gear adjuster	See STEERING COLUMN article
Tight or frozen steering shaft bearing	See STEERING COLUMN article
Steering gear out of adjustment	See POWER STEERING GEAR article
Sticking or plugged spool valve	See POWER STEERING PUMP article
Improper front end alignment	See WHEEL ALIGNMENT

	article
Wheel bearings worn or loose	See FRONT SUSPENSION article
Ties rods or ball joints binding	Check and replace if necessary
Intermediate shaft joints binding	See STEERING COLUMN article
Kinked pressure hoses	Correct or replace if necessary
Loose housing head spanner nut	See POWER STEERING GEAR article
Damaged valve lever	See POWER STEERING GEAR article
Sector shaft adjusted too tight	See ADJUSTMENTS in POWER STEERING GEAR article
Worm thrust bearing adjusted too tight	See ADJUSTMENTS in POWER STEERING GEAR article
Reaction ring sticking in cylinder	See POWER STEERING GEAR article
Reaction ring sticking in housing head	See POWER STEERING GEAR article
Steering pump internal leakage	See POWER STEERING PUMP article
Steering gear-to-column misalignment	See STEERING COLUMN article
Lack of lubrication in linkage	Service front suspension
Lack of lubrication in ball joints	Service front suspension
Increased Effort When Turning Wheel Fast Foaming, Milky Power Steering Fluid, Low Fluid Level or Low Pressure	
High internal pump leakage	See POWER STEERING PUMP article
Power steering pump belt slipping	Adjust or replace if necessary
Low fluid level	Check and fill to proper level
Engine idle speed to low	Adjust to correct setting
Air in pump fluid system	See POWER STEERING PUMP article
Pump output low	See POWER STEERING PUMP article
Steering gear malfunctioning	See POWER STEERING GEAR article

Wheel Surges or Jerks	
Low fluid level	Check and fill to proper level
Loose fan belt	Adjust or replace if necessary
Insufficient pump pressure	See POWER STEERING PUMP article
Sticky flow control valve	See POWER STEERING PUMP article
Linkage hitting oil pan at full turn	Replace bent components
Kick Back or Free Play	
Air in pump fluid system	See POWER STEERING PUMP article
Worn poppet valve in steering gear	See POWER STEERING PUMP article
Excessive over center lash	See POWER STEERING GEAR article
Thrust bearing out of adjustment	See POWER STEERING GEAR article
Free play in pot coupling	See POWER STEERING PUMP article
Steering gear coupling loose on shaft	See POWER STEERING PUMP article
Steering disc mounting bolts loose	Tighten or replace if necessary
Coupling loose on worm shaft	Tighten or replace if necessary
Improper sector shaft adjustment	See POWER STEERING GEAR article
Excessive worm piston side play	See POWER STEERING GEAR article
Damaged valve lever	See POWER STEERING GEAR article
Universal joint loose	Tighten or replace if necessary
Defective rotary valve	See POWER STEERING GEAR article
No Power When Parking	
Sticking flow control valve	See POWER STEERING PUMP article
Insufficient pump pressure output	See POWER STEERING PUMP article
Excessive internal pump leakage	See POWER STEERING PUMP article

Excessive internal gear leakage	See POWER STEERING PUMP article
Flange rubs against gear adjust plug	See STEERING COLUMN article
Loose pump belt	Adjust or replace if necessary
Low fluid level	Check and add proper amount of fluid
Engine idle too low	Adjust to correct setting
Steering gear-to-column misaligned	See STEERING COLUMN article
No Power, Left Turn	
Left turn reaction seal "O" ring worn	See POWER STEERING GEAR article
Left turn reaction seal damaged/missing	See POWER STEERING GEAR article
Cylinder head "O" ring damaged	See POWER STEERING PUMP article
No Power, Right Turns	
Column pot coupling bottomed	See STEERING COLUMN article
Right turn reaction seal "O" ring worn	See POWER STEERING GEAR article
Right turn reaction seal damaged	See POWER STEERING GEAR article
Internal leakage through piston end plug	See POWER STEERING GEAR article
Internal leakage through side plugs	See POWER STEERING GEAR article
Lack of Effort in Turning	
Left and/or right reaction seal sticking in cylinder head	Replace, see POWER STEERING GEAR article
Wanders to One Side	
Front end alignment incorrect	See WHEEL ALIGNMENT article
Unbalanced steering gear valve	See POWER STEERING GEAR article
Low Pressure Due to Steering Pump	
Flow control valve stuck or inoperative	See POWER STEERING PUMP article
Pressure plate not flat against cam ring	See POWER STEERING PUMP article
Extreme wear of cam ring	Replace and check

	adjustments
Scored plate, thrust plate or rotor	See POWER STEERING PUMP article
Vanes not installed properly	See POWER STEERING PUMP article
Vanes sticking in rotor slots	See POWER STEERING PUMP article
Cracked/broken thrust or pressure plate	See POWER STEERING PUMP article

STEERING COLUMN TROUBLE SHOOTING

NOTE: This is GENERAL information. This article is not intended to be specific to any unique situation or individual vehicle configuration. The purpose of this Trouble Shooting information is to provide a list of common causes to problem symptoms. For model-specific Trouble Shooting, refer to SUBJECT, DIAGNOSTIC, or TESTING articles available in the section(s) you are accessing.

BASIC STEERING COLUMN TROUBLE SHOOTING CHART

CONDITION & POSSIBLE CAUSE	CORRECTION
Noise in Steering	
Coupling pulled apart	See STEERING COLUMNS article
Column not correctly aligned	See STEERING COLUMNS article
Broken lower joint	Replace joint
Horn contact ring not	See STEERING COLUMN article
Bearing not lubricated	See STEERING COLUMN article
Shaft snap ring not properly seated	Reseat or replace snap ring
Plastic spherical joint not lubricated	See STEERING COLUMN article
Shroud or housing loose	Tighten holding screws
Lock plate retaining ring not seated	See STEERING COLUMN article
Loose sight shield	Tighten holding screws
High Steering Shaft Effort	
Column assembly misaligned	See STEERING COLUMN article
Improperly installed dust shield	Adjust or replace
Tight steering universal joint	See STEERING COLUMN article

High Shift Effort	
Column is out of alignment	See STEERING COLUMN article
Improperly installed dust shield	Adjust or replace
Seals or bearings not lubricated	See STEERING COLUMNS article
Mounting bracket screws too long	Replace with new shorter screws
Burrs on shift tube	Remove burrs or replace tube
Lower bowl bearing assembled wrong	See STEERING COLUMN article
Shift tube bent or broken	Replace as necessary
Improper adjustment of shift levers	See STEERING COLUMN article
Improper Trans. Shifting	
Sheared shift tube joint	Replace as necessary
Sheared lower shaft lever	Replace as necessary
Improper shift lever adjustment	See STEERING COLUMN article
Improper gate plate adjustment	See STEERING COLUMN article
Excess Play in Column	
Instrument panel bracket bolts loose	Tighten bolts and check bracket
Broken weld nut on jacket	See STEERING COLUMN article
Instrument bracket capsule sheared	See STEERING COLUMN article
Column bracket/jacket bolts loose	Tighten bolts and check bracket
Steering Locks in Gear	
Release lever mechanism	See STEERING COLUMN article

SUSPENSION TROUBLE SHOOTING

NOTE: This is GENERAL information. This article is not intended to be specific to any unique situation or individual vehicle configuration. The purpose of this Trouble Shooting information is to provide a list of common causes to problem symptoms. For model-specific Trouble Shooting, refer to SUBJECT, DIAGNOSTIC, or TESTING articles available in the section(s) you are accessing.

BASIC SUSPENSION TROUBLE SHOOTING CHART

CONDITION & POSSIBLE CAUSE	CORRECTION
Front End Noise	
Loose or worn wheel	See Wheel Bearing Adjustment in SUSPENSION
Worn shocks or shock mountings	Replace struts or strut mountings
Worn struts or strut mountings	Replace struts or strut mountings
Loose or worn lower control arm	See SUSPENSION
Loose steering gear-to-frame bolts	See STEERING
Worn control arm bushings	See SUSPENSION
Ball joints not lubricated	Lubricate ball joints & see Ball Joint Checking in SUSPENSION
Front Wheel Shake, Shimmy, or Vibration	
Tires or wheels out of balance	Check tire balance
Incorrect wheel alignment	See WHEEL ALIGNMENT
Drive shaft unbalanced	Check drive shaft balance
Loose or worn wheel bearings	See WHEEL ALIGNMENT
Loose or worn tie rod ends	See SUSPENSION
Worn upper ball joints	See Ball Joint Checking in SUSPENSION
Worn shock absorbers	Replace shock absorbers
Worn strut bushings	Replace strut bushings
Car Pulls to One Side	
Mismatched or uneven tires	Check tire condition
Broken or sagging springs	See SUSPENSION
Loose or worn strut bushings	See SUSPENSION
Improper wheel alignment	See WHEEL ALIGNMENT
Improper rear axle alignment	Check rear axle alignment
Power steering gear unbalanced	See STEERING
Front brakes dragging	See BRAKES
Abnormal Tire Wear	
Unbalanced tires	Check tire balance & rotation
Sagging or broken springs	See SUSPENSION
Incorrect front end alignment	See WHEEL ALIGNMENT
Faulty shock absorbers	Replace chock absorbers
Scuffed Tires	
Toe-In incorrect	See WHEEL ALIGNMENT
Suspension arm bent or twisted	See appropriate

	SUSPENSION article
Springs Bottom or Sag	
Bent or broken springs	See SUSPENSION
Leaking or worn shock absorbers	Replace shock absorbers
Frame misalignment	Check frame for damage
Spring Noises	
Loose "U" Bolts	See SUSPENSION
Loose or worn bushings	See SUSPENSION
Worn or missing interliners	See SUSPENSION
Shock Absorber Noise	
Loose shock mountings	Check & tighten mountings
Worn bushings	Replace bushings
Air in system	Bleed air from system
Undercoating on shocks	Remove undercoating
Car Leans or Sways on Corners	
Loose stabilizer bar	See SUSPENSION
Faulty shocks or mountings	Replace shocks or mountings
Broken or sagging springs	See SUSPENSION
Shock Absorbers Leaking	
Worn seals or reservoir tube crimped	See SUSPENSION
Broken Springs	
Loose "U" bolts	See SUSPENSION
Inoperative shock absorbers	Replace shock absorbers

WHEEL ALIGNMENT TROUBLE SHOOTING

NOTE: This is GENERAL information. This article is not intended to be specific to any unique situation or individual vehicle configuration. The purpose of this Trouble Shooting information is to provide a list of common causes to problem symptoms. For model-specific Trouble Shooting, refer to SUBJECT, DIAGNOSTIC, or TESTING articles available in the section(s) you are accessing.

BASIC WHEEL ALIGNMENT TROUBLE SHOOTING CHART

CONDITION & POSSIBLE CAUSE	CORRECTION
Premature Tire Wear	
Improper tire inflation	Check tire pressure
Front alignment out of tolerance	See ALIGNMENT SPECS in WHEEL ALIGNMENT section
Suspension components worn	See SUSPENSION section
Steering system components worn	See STEERING section

Improper standing height	See WHEEL ALIGNMENT
Uneven or sagging springs	See SUSPENSION section
Bent wheel	See WHEEL ALIGNMENT
Improper torsion bar adjustment	See SUSPENSION section
Loose or worn wheel bearings	See WHEEL BEARING ADJ. in SUSPENSION section
Worn or defective shock	Replace shock absorbers
Tires out of balance	Check tire balance
Pulls to One Side	
Improper tire inflation	Check tire pressure
Brake dragging	See BRAKE section
Mismatched tires	See WHEEL ALIGNMENT
Broken or sagging spring	See SUSPENSION section
Broken torsion bar	See SUSPENSION section
Power steering valve not centered	See STEERING section
Front alignment out of tolerance	See WHEEL ALIGNMENT section
Defective wheel bearing	See WHEEL BEARINGS in SUSPENSION section
Uneven sway bar links	See SUSPENSION section
Frame bent	Check for frame damage
Steering system bushing worn	See STEERING section
Hard Steering	
Idler arm bushing too tight	See STEERING LINKAGE in STEERING section
Ball joint tight or seized	See SUSPENSION section
Steering linkage too tight	See STEERING LINKAGE in STEERING section
Power steering fluid low	Add proper amount of fluid
Power steering drive belt loose	See STEERING section
Power steering pump defective	See STEERING section
Steering gear out of adjustment	See STEERING section
Incorrect wheel alignment	See WHEEL ALIGNMENT
Damaged steering gear	See STEERING section
Damaged suspension	See SUSPENSION section
Bent steering knuckle or supports	See SUSPENSION section
Vehicle "Wanders"	
Strut rod or control arm bushing worn	See SUSPENSION section
Loose or worn wheel bearings	See WHEEL BEARINGS in SUSPENSION section
Improper tire inflation	Check tire pressure

Stabilizer bar missing or defective	See SUSPENSION section
Wheel alignment out of tolerance	See Adjustment in WHEEL ALIGNMENT section
Broken spring	See SUSPENSION section
Defective shock absorber	Replace shock absorbers
Worn steering & suspension components	See SUSPENSION section
Front End Shimmy	
Tire out of balance/round	Check tire balance
Excessive wheel runout	See WHEEL ALIGNMENT
Insufficient or improper caster	See WHEEL ALIGNMENT section
Worn suspension or steering components	See SUSPENSION section
Defective shock absorbers	Replace shock absorber
Wheel bearings worn or loose	See WHEEL BEARING ADJ. in SUSPENSION section
Power steering reaction Bracket loose	See STEERING section
Steering gear box (rack) mounting loose	See STEERING section
Steering gear adjustment loose	See STEERING section
Worn spherical joints	See SUSPENSION section
Toe-In Not Adjustable	
Lower control arm bent	See SUSPENSION section
Frame bent	Check frame for damage
Camber Not Adjustable	
Control arm bent	See SUSPENSION section
Frame bent	Check frame for damage
Hub & bearing not seated properly	See SUSPENSION section

ELECTRICAL

Battery System - Challenger

DESCRIPTION

DESCRIPTION

This vehicle is equipped with a single 12-volt battery located in the rear floor area near the spare tire. The battery system for this vehicle covers the following related components:

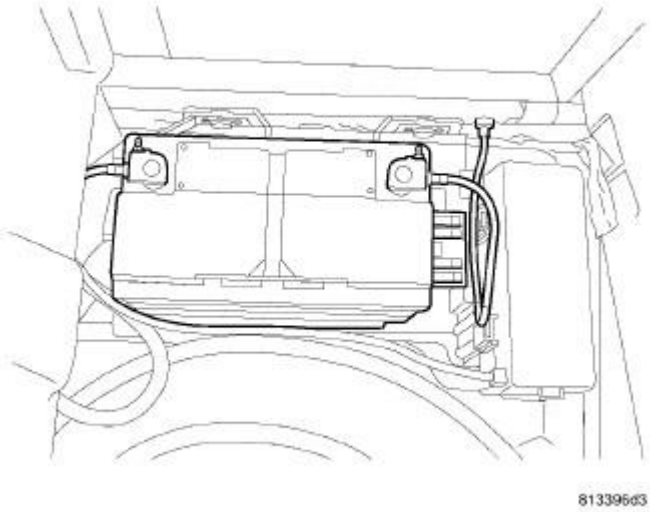

Fig. 1: Locating Battery
Courtesy of CHRYSLER LLC

- **Battery** - The storage battery provides a reliable means of storing a renewable source of electrical energy within the vehicle.
- **Battery Cables** - The battery cables connect the positive and negatively charged battery terminal posts to the vehicle electrical system.
- **Battery Holddown** - The battery holddown hardware secures the battery in the battery tray.
- **Battery Retention Strap** - The battery retention strap securely holds the battery in place in the event of a rear impact collision.
- **Battery Tray** - The battery tray provides a secure mounting location in the vehicle for the battery and an anchor point for the battery holddown hardware.

For battery system maintenance schedules. Refer to **Vehicle Quick Reference/Maintenance Schedules - Description** . Refer to **Vehicle Quick Reference/Jump Starting - Standard Procedure** for the proper jump starting procedure. The battery must be fully-charged before any battery system diagnosis or testing procedures can be performed.

OPERATION

OPERATION

The battery system is designed to provide a safe, efficient, reliable and mobile means of delivering and storing electrical energy. This electrical energy is required to operate the engine starting system, as well as many of the other vehicle accessory systems for limited durations while the engine or charging system are not operating. The battery system is also designed to provide a reserve of electrical energy to supplement the charging system for short durations while the engine is running and the electrical current demands of the vehicle exceed the output of the charging system. In addition to delivering, and storing electrical energy for the vehicle, the battery system serves as a capacitor and voltage stabilizer for the vehicle electrical system. It absorbs most abnormal or transient voltages caused by the switching of any of the electrical components or circuits in the vehicle.

DIAGNOSIS AND TESTING

BATTERY SYSTEM

The battery, starting, and charging systems in the vehicle operate with one another and must be tested as a complete system. In order for the engine to start and the battery to maintain its charge properly, all of the components that are used in these systems must perform within specifications. It is important that the battery, starting, and charging systems be thoroughly tested and inspected any time a battery needs to be charged or replaced. The cause of abnormal battery discharge, overcharging or early battery failure must be diagnosed and corrected before a battery is replaced and before a vehicle is returned to service. The service information for these systems has been separated within this service manual to make it easier to locate the specific information you are seeking. However, when attempting to diagnose any of these systems, it is important that you keep their interdependency in mind.

The diagnostic procedures used for the battery, starting, and charging systems include the most basic conventional diagnostic methods, to the more sophisticated On-Board Diagnostics (OBD) built into the Powertrain Control Module (PCM). Use of an induction-type milliampere ammeter, a volt/ohmmeter, a battery charger, a carbon pile rheostat (load tester) and a 12-volt test lamp may be required. All OBD-sensed systems are monitored by the PCM. Each monitored circuit is assigned a Diagnostic Trouble Code (DTC). The PCM will store a DTC in electronic memory for any inoperative system it detects. Refer to **Engine - Diagnosis and Testing** for the proper charging system on-board diagnostic test procedures.

MICRO 420 BATTERY TESTER

The Micro 420 automotive battery system tester is designed to help the dealership technicians diagnose the cause of a defective battery. See **Electrical - Engine Systems/Battery System/BATTERY - Standard Procedure** for directions on using the Micro 420 battery tester.

BATTERY SYSTEM DIAGNOSIS		
CONDITION	**POSSIBLE CAUSES**	**CORRECTION**

THE BATTERY SEEMS WEAK OR DEAD WHEN ATTEMPTING TO START THE ENGINE.	1. The electrical system ignition-off draw is excessive.	1. See **Electrical - Engine Systems/Battery System/BATTERY - Standard Procedure** for the proper test procedures. Repair the excessive ignition-off draw, as required.
	2. The charging system is faulty.	2. Determine if the charging system is performing to specifications. Repair the faulty charging system, as required.
	3. The battery is discharged.	3. Determine the battery state-of-charge using the Micro 420 battery tester. See **Electrical - Engine Systems/Battery System/BATTERY - Standard Procedure**. Charge the faulty battery as required.
	4. The battery terminal connections are loose or corroded.	4. See **Electrical - Engine Systems/Battery System/CABLES, Battery - Diagnosis and Testing**. Clean and tighten the battery terminal connections, as required.
	5. The battery has an incorrect size or rating for this vehicle.	5. See **Electrical - Engine Systems/Battery System - Specifications** for the proper size and rating. Replace an incorrect battery, as required.
	6. The battery is faulty.	6. Determine the battery cranking capacity using the Micro 420 battery tester. See **Electrical - Engine Systems/Battery System/BATTERY - Standard Procedure**. Replace the faulty battery, as required.
	7. The starting system is faulty.	7. Determine if the starting system is performing to specifications. Repair the faulty starting system, as required.
	8. The battery is physically damaged.	8. Inspect the battery for loose terminal posts or a cracked and leaking case. Replace the damaged battery, as required.
THE BATTERY STATE OF CHARGE CANNOT BE MAINTAINED.	1. The battery has an incorrect size or rating for this vehicle.	1. See **Electrical - Engine Systems/Battery System - Specifications** for the proper size and rating. Replace an incorrect battery, as required.
	2. The battery terminal connections are loose or corroded.	2. See **Electrical - Engine Systems/Battery System/CABLES, Battery - Diagnosis and Testing**. Clean and tighten the battery terminal connections, as required.

	3. The electrical system ignition-off draw is excessive.	3. See **Electrical - Engine Systems/Battery System/BATTERY - Standard Procedure** for the proper test procedures. Repair the faulty electrical system, as required.
	4. The battery is faulty.	4. Test the battery using the Micro 420 battery tester. See **Electrical - Engine Systems/Battery System/BATTERY - Standard Procedure**. Replace the faulty battery, as required.
	5. The starting system is faulty.	5. Determine if the starting system is performing to specifications. Repair the faulty starting system, as required.
	6. The charging system is faulty.	6. Determine if the charging system is performing to specifications. Repair the faulty charging system, as required.
	7. Electrical loads exceed the output of the charging system.	7. Inspect the vehicle for aftermarket electrical equipment which might cause excessive electrical loads.
	8. Slow driving or prolonged idling with high-amperage draw systems in use.	8. Advise the vehicle operator, as required.
THE BATTERY WILL NOT ACCEPT A CHARGE.	1. The battery is faulty.	1. Test the battery using the Micro 420 battery tester. See **Electrical - Engine Systems/Battery System/BATTERY - Standard Procedure**. Replace the faulty battery, as required.

STANDARD PROCEDURE

BATTERY RECONNECTION

NOTE: This reconnection procedure is to be performed anytime the battery has been disconnected.

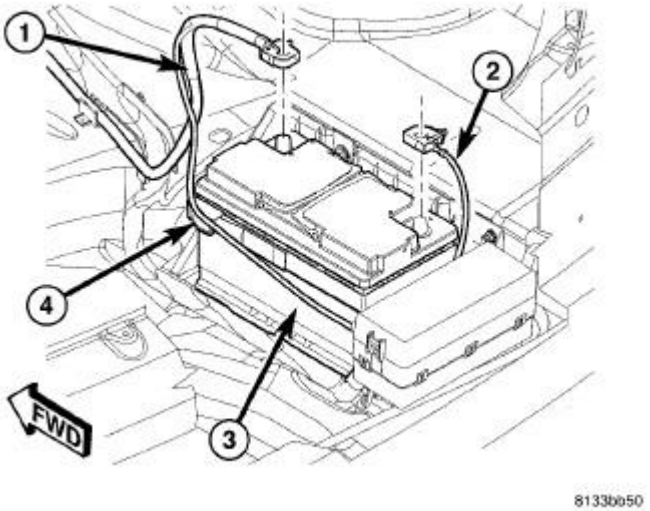

Fig. 2: Disconnecting/Connecting Battery Cables
Courtesy of CHRYSLER LLC

1. Connect the battery negative cable (2) to the battery post and tighten the clamp nut.
2. Install the rear compartment floor trim panel.

CAUTION: Once the battery has been connected, review and perform the following information as applicable.

AUTO UP FRONT WINDOW

If the vehicle is equipped with the auto-up front window feature, once the battery is reconnected the door module needs to be calibrated. The door module requires calibration anytime the battery or door module has been disconnected for any length of time. To calibrate, perform the following:

1. Turn the Ignition to the Run position.
2. Regardless of current window position, move the driver side front window upward until the window stalls in the full up position. Allow the window motor to stall for at least 2 seconds before releasing the switch.
3. Move the driver side front window downward until the window stalls in the full down position. Allow the window motor to stall for at least 2 seconds before releasing the switch.
4. Move the driver side front window upward until the window stalls in the full up position. Allow the window motor to stall for at least 2 second before releasing the switch.
5. Repeat steps 2 - 4 for the passenger side front window.
6. Verify the windows are properly calibrated by operating the express down and up features on the windows. Repeat this procedure if the calibration failed. If unable to properly calibrate after the second attempt, check the Driver's Door Module (DDM) and Passenger's Door Module (PDM) for Diagnostic Trouble Codes (DTCs) and correct as required.

ELECTRONIC STABILITY PROGRAM (ESP)

If the vehicle is equipped with ESP, once the battery is reconnected, the Steering Angle Sensor (SAS) within the Antilock Brake Module (ABM) needs to be calibrated. The SAS requires calibration (initialization) using the scan tool anytime the battery or an ABS (ESP) component has been disconnected for any length of time. **If the SAS is not calibrated following battery reconnection, the ESP/BAS indicator lamp will flash continuously with no DTCs.**

To calibrate (initialize), perform the following:

1. Position the front wheels straight ahead and center the steering wheel.
2. Connect the scan tool to the vehicle.
3. Follow the directions on the scan tool.

CLEANING

CLEANING

The following information details the recommended cleaning procedures for the battery and related components. In addition to the maintenance schedules found in this service information. Refer to **Vehicle Quick Reference/Maintenance Schedules - Description** it is recommended that these procedures be performed any time the battery or related components must be removed for vehicle service.

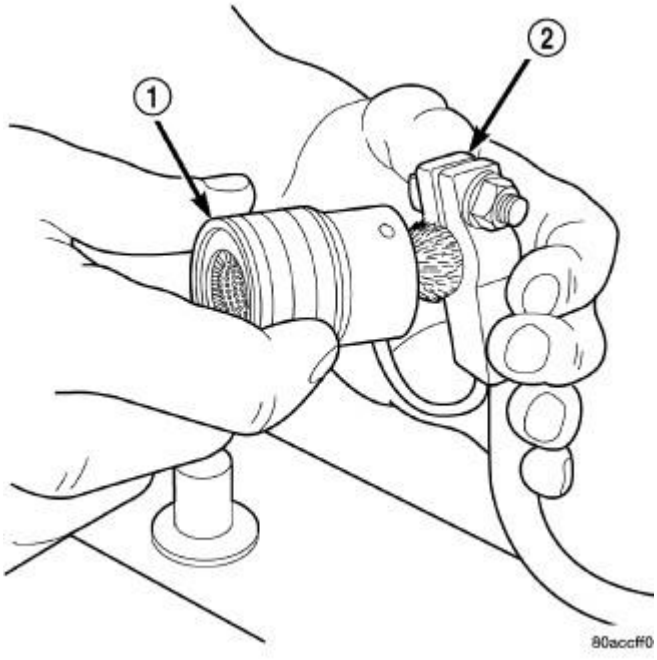

Fig. 3: Cleaning Battery Cable Terminal Clamps
Courtesy of CHRYSLER LLC

1. Clean the battery cable terminal clamps (2) of all corrosion. Remove any corrosion using a wire brush or cleaning tool (1), and a sodium bicarbonate (baking soda) and warm water cleaning solution.
2. Clean the battery tray and battery holddown hardware using a stiff bristle parts cleaning brush and a sodium bicarbonate (baking soda) and warm water cleaning solution.

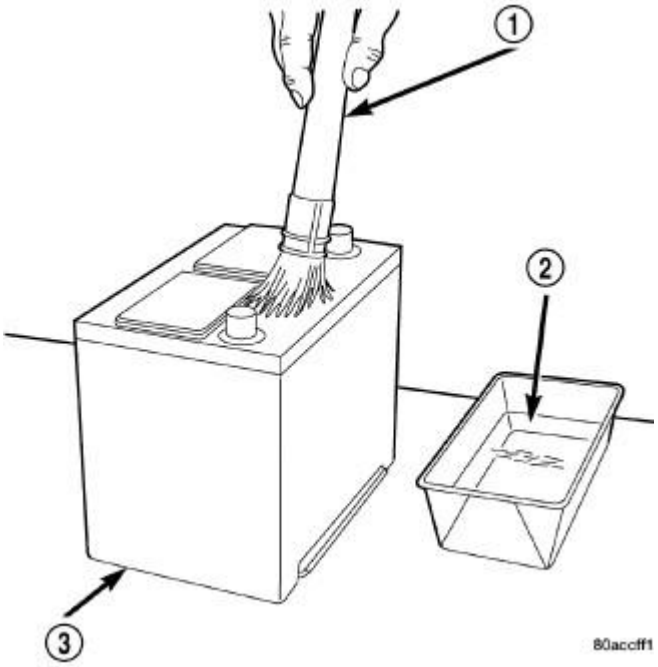

Fig. 4: Cleaning Outside Of Battery Case
Courtesy of CHRYSLER LLC

3. If the removed battery is to be reinstalled, clean the outside of the battery case and the top cover (3) with a sodium bicarbonate (baking soda) and warm water cleaning solution (2) using a stiff bristle parts cleaning brush (1) to remove any acid film. Rinse the battery with clean water. Ensure that the cleaning solution does not enter the battery cells through the vent holes. If the battery is being replaced. See **Electrical - Engine Systems/Battery System - Specifications** for the factory-installed battery specifications. Confirm that the replacement battery is the correct size and has the correct ratings for the vehicle.

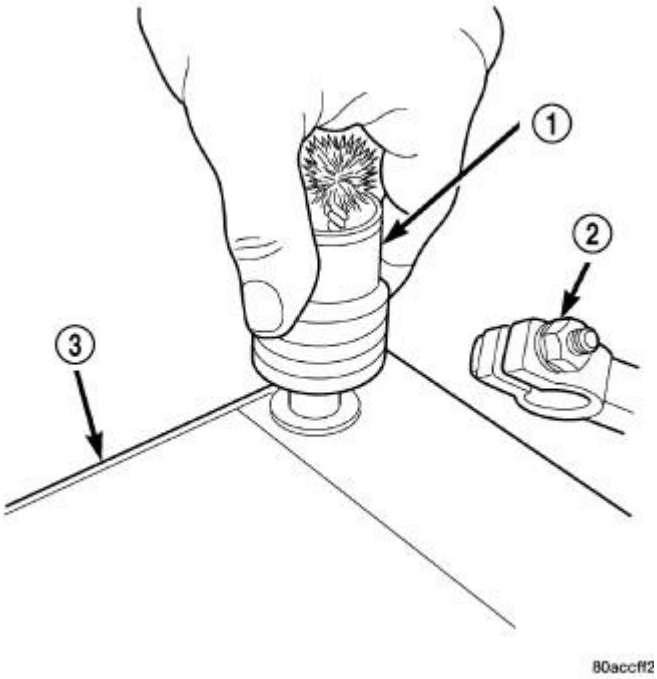

Fig. 5: Cleaning Battery Terminal Post Using Terminal Cleaner
Courtesy of CHRYSLER LLC

4. Clean any corrosion from the battery terminals with a wire brush or terminal cleaner (1), and a sodium bicarbonate (baking soda) and warm water cleaning solution.

INSPECTION

INSPECTION

The following information details the recommended inspection procedures for the battery and related components. In addition to the maintenance schedules. Refer to **Vehicle Quick Reference/Maintenance Schedules - Description** , it is recommended that these procedures be performed any time the battery or related components are removed for vehicle service.

1. Inspect the battery cable terminals for damage. Replace any battery cable that has a damaged or deformed terminal.
2. Inspect the battery tray and battery holddown hardware for damage. Replace any damaged parts.
3. Inspect the battery case for cracks or other damage that could result in electrolyte leaks. Also, check the battery terminals for looseness. Batteries with damaged cases or loose terminals must be replaced.
4. Inspect the battery built-in test indicator sight glass (if equipped) for an indication of the battery condition. If the battery is discharged, charge as required. See **Electrical - Engine Systems/Battery System/BATTERY - Standard Procedure**.

SPECIFICATIONS

BATTERY

The battery Group Size number, the Cold Cranking Amperage (CCA) rating, and the Reserve Capacity (RC) rating, or Ampere-Hours (AH) rating, can be found on the original equipment battery label. Be certain that a replacement battery has the correct Group Size number, as well as CCA, and RC or AH ratings that equal or exceed the original equipment specification for the vehicle being serviced. Battery sizes and ratings are discussed in more detail below.

- **Group Size** - The outside dimensions and terminal placement of the battery conform to standards established by the Battery Council International (BCI). Each battery is assigned a BCI Group Size number to help identify a correct -sized replacement.
- **Cold Cranking Amperage** - The Cold Cranking Amperage (CCA) rating specifies how much current (in amperes) the battery can deliver for 30 seconds at -18°C (0°F). Terminal voltage must not fall below 7.2 volts during or after the 30 second discharge period. The CCA required is generally higher as engine displacement increases, depending upon the starter current draw requirements.
- **Reserve Capacity** - The Reserve Capacity (RC) rating specifies the time (in minutes) it takes for battery terminal voltage to fall below 10.5 volts, at a discharge rate of 25 amperes. RC is determined with the battery fully-charged at 26.7°C (80° F). This rating estimates how long the battery might last after a charging system failure, under minimum electrical load.
- **Ampere-Hours** - The Ampere-Hours (AH) rating specifies the current (in amperes) that a battery can deliver steadily for 20 hours, with the voltage in the battery not falling below 10.5 volts. This rating is sometimes identified as the 20-hour discharge rating.

BATTERY CLASSIFICATIONS AND RATINGS				
BCI Group Size Classification	**Cold Cranking Amperage**	**Reserve Capacity**	**Ampere - Hours**	**Load Test Amperage**
H7	625	140 Minutes	80	250

SPECIAL TOOLS

SPECIAL TOOLS

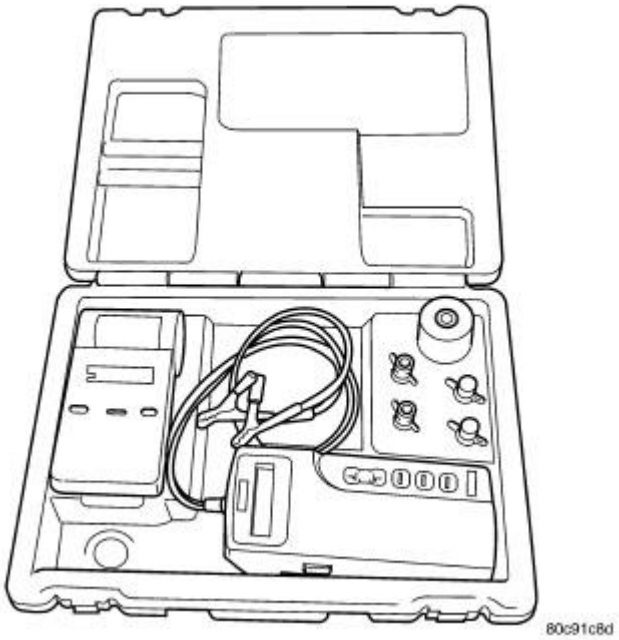

Fig. 6: Micro 420 Battery Tester
Courtesy of CHRYSLER LLC

BATTERY

DESCRIPTION

DESCRIPTION

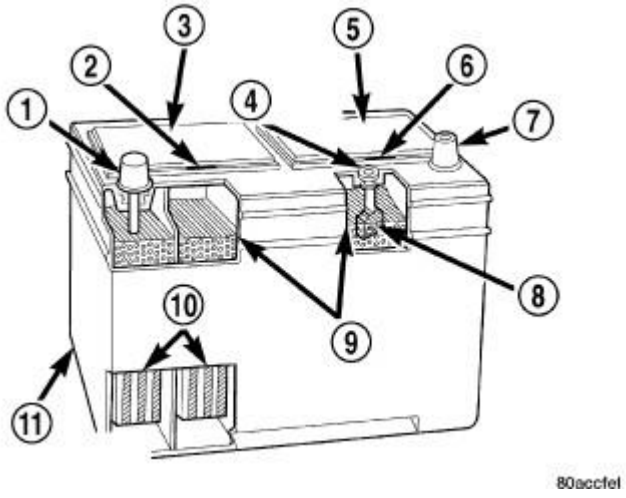

Fig. 7: Battery Components
Courtesy of CHRYSLER LLC

This vehicle is equipped with a single, 12-volt, maintenance-free battery located in the rear floor area near the spare tire. The battery is comprised of the following components:

- Positive Post (1)
- Vent (2)
- Cell Cap (3)
- Vent (4)
- Cell Cap (5)
- Vent (6)
- Negative Post (7)
- Indicator Eye (8) if equipped
- Electrolyte Level (9)
- Plate Groups (10)
- Maintenance Free Battery assembly (11)

This battery is designed to provide a safe, efficient and reliable means of storing electrical energy in a chemical form. This means of energy storage allows the battery to produce the electrical energy required to operate the engine starting system, as well as to operate many of the other vehicle accessory systems for limited durations while the engine or charging system are not operating. The battery is made up of six individual cells that are connected in series. Each cell contains positively charged plate groups that are connected with lead straps to the positive terminal post, and negatively charged plate groups that are connected with lead straps to the negative terminal post. Each plate consists of a stiff mesh framework or grid coated with lead dioxide (positive plate) or sponge lead (negative plate). Insulators or plate separators made of a non-conductive material are inserted between the positive and negative plates to prevent them from contacting or shorting against one another. These dissimilar metal plates are submerged in a sulfuric acid and water solution called an electrolyte.

The battery Group Size number, the Cold Cranking Amperage (CCA) rating, and the Reserve Capacity (RC) rating or Ampere-Hours (AH) rating can be found on the original equipment battery label. Be certain that a replacement battery has the correct Group Size number, as well as CCA, and RC or AH ratings that equal or exceed the original equipment specification for the vehicle being serviced. See **Electrical - Engine Systems/Battery System - Specifications** for the proper factory-installed battery specifications.

OPERATION

OPERATION

The battery is designed to store electrical energy in a chemical form. When an electrical load is applied to the terminals of the battery, an electrochemical reaction occurs. This reaction causes the battery to discharge electrical current from its terminals. As the battery discharges, a gradual chemical change takes place within each cell. The sulfuric acid in the electrolyte combines with the plate materials, causing both plates to slowly change to lead sulfate. At the same time, oxygen from the positive plate material combines with hydrogen from the sulfuric acid, causing the electrolyte to become mainly water. The chemical changes within the battery are caused by the movement of excess or free electrons between the positive and negative plate groups. This movement of electrons produces a flow of electrical current through the load device attached to the battery terminals.

As the plate materials become more similar chemically, and the electrolyte becomes less acid, the voltage potential of each cell is reduced. However, by charging the battery with a voltage higher than that of the battery itself, the battery discharging process is reversed. Charging the battery gradually changes the sulfated lead plates back into sponge lead and lead dioxide, and the water back into sulfuric acid. This action restores the difference in the electron charges deposited on the plates, and the voltage potential of the battery cells. For a battery to remain useful, it must be able to produce high-amperage current over an extended period. A battery must also be able to accept a charge, so that its voltage potential may be restored.

The battery is vented to release excess hydrogen gas that is created when the battery is being charged or discharged. However, even with these vents, hydrogen gas can collect in or around the battery. If hydrogen gas is exposed to flame or sparks, it may ignite. If the electrolyte level is low, the battery may arc internally and explode. If the battery cell caps cannot be removed, the battery must be replaced if the electrolyte level becomes low.

DIAGNOSIS AND TESTING

BATTERY

The battery must be completely charged and the terminals should be properly cleaned and inspected before diagnostic procedures are performed. See **Electrical - Engine Systems/Battery System - Cleaning** and see **Electrical - Engine Systems/Battery System - Inspection** for the proper battery cleaning and inspection procedures. See **Electrical - Engine Systems/Battery System/BATTERY - Standard Procedure** for the proper battery charging procedures.

MICRO 420 BATTERY TESTER

The Micro 420 automotive battery tester is designed to help the dealership technicians diagnose the cause of an inoperative battery. See **Electrical - Engine Systems/Battery System/BATTERY - Standard Procedure** for instructions on the use of the Micro 420 battery tester.

WARNING: If the battery shows signs of freezing, leaking or loose posts, do not test, assist-boost, or charge. The battery may arc internally and explode. Personal injury and/or vehicle damage may result.

WARNING: Explosive hydrogen gas forms in and around the battery. Do not smoke, use flame, or create sparks near the battery. Personal injury and possible vehicle damage may result.

WARNING: The battery contains sulfuric acid, which is poisonous and caustic. Avoid contact with the skin, eyes, or clothing. In the event of contact, flush with water and call a physician immediately. Keep out of the reach of children.

A battery that will not accept a charge is inoperative, and must be replaced. Further testing is not required. A fully-charged battery must be load tested to determine its cranking capacity. A battery that is fully-charged, but does not pass the load test, is inoperative and must be replaced.

NOTE: **Completely discharged batteries may take several hours to accept a charge. Refer to Standard Procedure for the proper battery charging procedures.**

STANDARD PROCEDURE

BATTERY CHARGING

Battery charging is the means by which the battery can be restored to its full voltage potential. A battery is fully-charged when:

- Micro 420 electrical system tester indicates battery is OK.
- All of the battery cells are gassing freely during battery charging.
- Open-circuit voltage of the battery is 12.65 volts or above.

WARNING: **Never exceed twenty amperes when charging a cold (-1°C [30°F] or lower) battery. The battery may arc internally and explode. Personal injury and/or vehicle damage may result.**

WARNING: **If the battery shows signs of freezing, leaking, loose posts, do not test, assist-boost, or charge. The battery may arc internally and explode. Personal injury and/or vehicle damage may result.**

WARNING: **Explosive hydrogen gas forms in and around the battery. Do not smoke, use flame, or create sparks near the battery. Personal injury and/or vehicle damage may result.**

WARNING: **The battery contains sulfuric acid, which is poisonous and caustic. Avoid contact with the skin, eyes, or clothing. In the event of contact, flush with water and call a physician immediately. Keep out of the reach of children.**

WARNING: **If the battery is equipped with removable cell caps, be certain that each of the cell caps is in place and tight before the battery is returned to service. Personal injury and possible vehicle damage may result from loose or missing cell caps.**

CAUTION: **Always disconnect and isolate the battery negative cable before charging a battery. Do not exceed sixteen volts while charging a battery. Damage to the vehicle electrical system components may result.**

CAUTION: **Battery electrolyte will bubble inside the battery case during normal battery charging. Electrolyte boiling or being discharged from the battery vents indicates a battery overcharging condition. Immediately reduce the charging rate or turn off the charger to evaluate the battery condition. Damage to the battery may result from overcharging.**

CAUTION: The battery should not be hot to the touch. If the battery feels hot to the touch, turn off the charger and let the battery cool before continuing the charging operation. Damage to the battery may result.

After the battery has been charged to 12.65 volts or greater, perform a load test to determine the battery cranking capacity. See **Electrical - Engine Systems/Battery System/BATTERY - Standard Procedure** for the proper battery load test procedures. If the battery will endure a load test, return the battery to service. If the battery will not endure a load test, it is inoperative and must be replaced.

Clean and inspect the battery holddown, tray, terminals, posts, and top before completing battery service. See **Electrical - Engine Systems/Battery System - Cleaning** and see **Electrical - Engine Systems/Battery System - Inspection** for the proper battery system cleaning and inspection procedures.

CHARGING A COMPLETELY DISCHARGED BATTERY

The following procedure should be used to recharge a completely discharged battery. Unless this procedure is properly followed, a good battery may be needlessly replaced.

1. Measure the voltage at the battery posts with a voltmeter, accurate to 1/10 (0.10) volt. If the reading is below ten volts, the battery charging current will be low. It could take some time before the battery accepts a current greater than a few milliamperes. Such low current may not be detectable on the ammeters built into many battery chargers.
2. Disconnect and isolate the battery negative cable. Connect the battery charger leads. Some battery chargers are equipped with polarity-sensing circuitry. This circuitry protects the battery charger and the battery from being damaged if they are improperly connected. If the battery state-of-charge is too low for the polarity-sensing circuitry to detect, the battery charger will not operate. This makes it appear that the battery will not accept charging current. See the instructions provided by the manufacturer of the battery charger for details on how to bypass the polarity-sensing circuitry.
3. Battery chargers vary in the amount of voltage and current they provide. The amount of time required for a battery to accept measurable charging current at various voltages is shown in the CHARGE RATE chart. If the charging current is still not measurable at the end of the charging time, the battery is inoperative and must be replaced. If the charging current is measurable during the charging time, the battery may be good and the charging should be completed in the normal manner.

CHARGE RATE	
Voltage	**Hours**
16.0 volts maximum	up to 4 hours
14.0 to 15.9 volts	up to 8 hours
13.9 volts or less	up to 16 hours

CHARGING TIME REQUIRED

The time required to charge a battery will vary, depending upon the following factors:

- **Battery Capacity** - A completely discharged heavy-duty battery requires twice the charging time of a small capacity battery.
- **Temperature** - A longer time will be needed to charge a battery at -18°C (0°F) than at 27°C (80° F). When a fast battery charger is connected to a cold battery, the current accepted by the battery will be very low at first. As the battery warms, it will accept a higher charging current rate (amperage).
- **Charger Capacity** - A battery charger that supplies only five amperes will require a longer charging time. A battery charger that supplies twenty amperes or more will require a shorter charging time.
- **State-Of-Charge** - A completely discharged battery requires more charging time than a partially discharged battery. Electrolyte is nearly pure water in a completely discharged battery. At first, the charging current (amperage) will be low. As the battery charges, the specific gravity of the electrolyte will gradually rise.

The BATTERY CHARGING TIME chart gives an indication of the time required to charge a typical battery at room temperature based upon the battery state-of-charge and the charger capacity.

BATTERY CHARGING TIME			
Charging Amperage	**5 Amps**	**10 Amps**	**20 Amps**
Open Circuit Voltage	**Hours Charging @ 21° C (70° F)**		
12.25 to 12.49	6 hours	3 hours	1.5 hours
12.00 to 12.24	10 hours	5 hours	2.5 hours
10.00 to 11.99	14 hours	7 hours	3.5 hours
Below 10.00	18 hours	9 hours	4.5 hours

USING MICRO 420 BATTERY TESTER

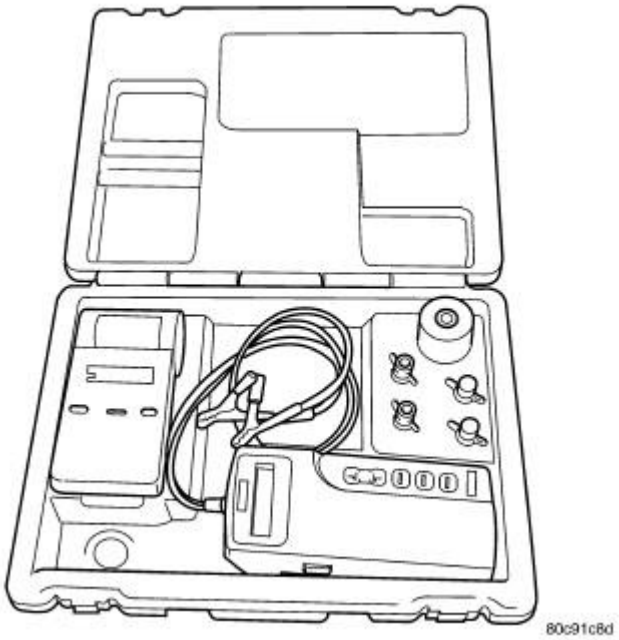

Fig. 8: Micro 420 Battery Tester
Courtesy of CHRYSLER LLC

Always use the Micro 420 Instruction Service Information that was supplied with the tester as a reference. If the Instruction Service Information is not available the following procedure can be used:

WARNING: Always wear appropriate eye protection and use extreme caution when working with batteries.

BATTERY TESTING

1. If testing the battery OUT-OF-VEHICLE, clean the battery terminals with a wire brush before testing. See **Electrical - Engine Systems/Battery System - Cleaning**.
2. If testing the battery IN-THE-VEHICLE, make certain all of the vehicle accessory loads are OFF, including the ignition. **The preferred test position is at the battery terminals** . If the battery is not accessible, you may test using both the positive and negative jumper posts. Select TESTING AT JUMPER POST when connecting to that location.
3. Connect the tester to the battery or jumper posts, the red clamp to positive (+) and the black clamp to negative (-).

NOTE: Multiple batteries connected in parallel must have the ground cable disconnected to perform a battery test. Failure to disconnect may result in false battery test readings.

4. Using the ARROW key select **in** or **out** of vehicle testing and press ENTER to make a selection.
5. If not selected, choose the Cold Cranking Amp (CCA) battery rating. Or select the appropriate

battery rating for your area (see menu). The tester will then run its self programmed test of the battery and display the results. Refer to the BATTERY TEST RESULTS chart noted below.

CAUTION: If REPLACE BATTERY is the result of the test, this may mean a poor connection between the vehicle's cables and battery exists. After disconnecting the vehicle's battery cables from the battery, retest the battery using the OUT-OF-VEHICLE test before replacing.

6. While viewing the battery test result, press the CODE button and the tester will prompt you for the last 4 digits of the VIN. Use the UP/DOWN arrow buttons to scroll to the correct character; then press ENTER to select and move to the next digit. Then press the ENTER button to view the SERVICE CODE. Pressing the CODE button a second time will return you to the test results.

BATTERY TEST RESULTS	
GOOD BATTERY	Return to service
GOOD - RECHARGE	Fully charge battery and return to service
CHARGE AND RETEST	Fully charge battery and retest battery
REPLACE BATTERY	Replace the battery and retest complete system
BAD-CELL REPLACE	Replace the battery and retest complete system

OPEN-CIRCUIT VOLTAGE TEST

A battery open-circuit voltage (no load) test will show the approximate state-of-charge of a battery. This test can be used in place of the hydrometer test when a hydrometer is not available, or for maintenance-free batteries with non-removable cell caps.

Before proceeding with this test, completely charge the battery. See **Electrical - Engine Systems/Battery System/BATTERY - Standard Procedure**.

1. Before measuring the open-circuit voltage, the surface charge must be removed from the battery. Turn on the headlamps for fifteen seconds, then allow up to five minutes for the battery voltage to stabilize.
2. Disconnect and isolate both battery cables, negative cable first.

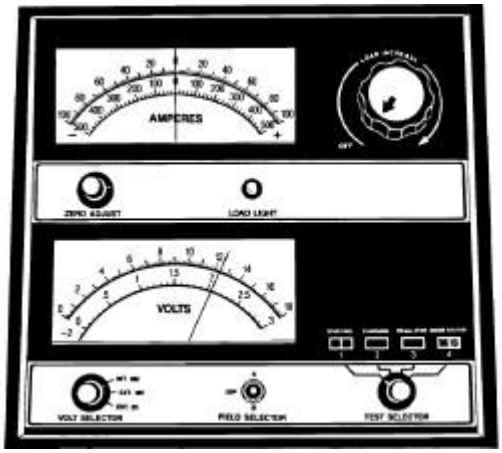

Fig. 9: Voltmeter
Courtesy of CHRYSLER LLC

3. Using a voltmeter connected to the battery posts, measure the open-circuit voltage.

See the OPEN-CIRCUIT VOLTAGE chart. This voltage reading will indicate the battery state-of-charge, but will not reveal its cranking capacity. If a battery has an open-circuit voltage reading of 12.4 volts or greater, it may be load tested to reveal its cranking capacity. See **Electrical - Engine Systems/Battery System/BATTERY - Standard Procedure**.

OPEN CIRCUIT VOLTAGE	
Open Circuit Voltage	**Charge Percentage**
11.7 volts or less	0%
12.0 volts	25%
12.3 volts	50%
12.6 volts	75%
12.8 volts or more	100%

IGNITION-OFF DRAW TEST

The term Ignition-Off Draw (IOD) identifies a normal condition where power is being drained from the battery with the ignition switch in the Off position. A normal vehicle electrical system will draw from five to thirty-five milliamperes (0.005 to 0.035 ampere) with the ignition switch in the Off position, and all non-ignition controlled circuits in proper working order. Up to thirty-five milliamperes are needed to enable the memory functions for the Powertrain Control Module (PCM), digital clock, electronically tuned radio, and other modules which may vary with the vehicle equipment.

A vehicle that has not been operated for approximately twenty days, may discharge the battery to an inadequate level. When a vehicle will not be used for twenty days or more (stored), remove the IOD fuse from the Junction Block (JB). This will reduce battery discharging.

Excessive IOD can be caused by:

- Electrical items left on.

- Inoperative or improperly adjusted switches.
- Inoperative or shorted electronic modules and components.
- An internally shorted generator.
- Intermittent shorts in the wiring.

If the IOD is over thirty-five milliamperes, the problem must be found and corrected before replacing a battery. In most cases, the battery can be charged and returned to service after the excessive IOD condition has been corrected.

1. Verify that all electrical accessories are off. Turn off all lamps, remove the ignition key, and close all doors. If the vehicle is equipped with an illuminated entry system or an electronically tuned radio, allow the electronic timer function of these systems to automatically shut off (time out). This may take up to three minutes. See the ELECTRONIC MODULE IGNITION-OFF DRAW chart for more information.

ELECTRONIC MODULE IGNITION-OFF DRAW (IOD)			
Module	**Time Out? (If Yes, Interval And Wake-Up Input)**	**IOD**	**IOD After Time Out**
Radio	No	1 to 3 milliamperes	N/A
Audio Power Amplifier	No	up to 1 milliampere	N/A
Central Timer Module (CTM)	No	4.75 milliamperes (max.)	N/A
Powertrain Control Module (PCM)	No	0.95 milliampere	N/A
ElectroMechanical Instrument Cluster (EMIC)	No	0.44 milliampere	N/A
Combination Flasher	No	0.08 milliampere	N/A

2. Determine that the underhood lamp is operating properly, then disconnect the lamp wire harness connector or remove the lamp bulb.
3. Disconnect the battery negative cable.
4. Set an electronic digital multi-meter to its highest amperage scale. Connect the multi-meter between the disconnected battery negative cable terminal clamp and the battery negative terminal post. Make sure that the doors remain closed so that the illuminated entry system is not activated. The multi-meter amperage reading may remain high for up to three minutes, or may not give any reading at all while set in the highest amperage scale, depending upon the

electrical equipment in the vehicle. The multi-meter leads must be securely clamped to the battery negative cable terminal clamp and the battery negative terminal post. If continuity between the battery negative terminal post and the negative cable terminal clamp is lost during any part of the IOD test, the electronic timer function will be activated and all of the tests will have to be repeated.

5. After about three minutes, the high-amperage IOD reading on the multi-meter should become very low or nonexistent, depending upon the electrical equipment in the vehicle. If the amperage reading remains high, remove and replace each fuse or circuit breaker in the Power Distribution Center (PDC) and then in the Junction Block (JB), one at a time until the amperage reading becomes very low, or nonexistent. Refer to **SYSTEM WIRING DIAGRAMS** for complete PDC and JB fuse, circuit breaker, and circuit identification. This will isolate each circuit and identify the circuit that is the source of the high-amperage IOD. If the amperage reading remains high after removing and replacing each fuse and circuit breaker, disconnect the wire harness from the generator. If the amperage reading now becomes very low or nonexistent, diagnose and repair the Charging System as necessary. After the high-amperage IOD has been corrected, switch the multi-meter to progressively lower amperage scales and, if necessary, repeat the fuse and circuit breaker remove-and-replace process to identify and correct all sources of excessive IOD. It is now safe to select the lowest milliampere scale of the multi-meter to check the low-amperage IOD.

   CAUTION: Do not open any doors, or turn on any electrical accessories with the lowest milliampere scale selected, or the multi-meter may be damaged.

6. Observe the multi-meter reading. The low-amperage IOD should not exceed thirty-five milliamperes (0.035 ampere). If the current draw exceeds thirty-five milliamperes, isolate each circuit using the fuse and circuit breaker remove-and-replace process in 5. The multi-meter reading will drop to within the acceptable limit when the source of the excessive current draw is disconnected. Repair this circuit as required; whether a wiring short, incorrect switch adjustment, or an inoperative component is the cause.

REMOVAL

REMOVAL

WARNING: A SUITABLE PAIR OF HEAVY DUTY RUBBER GLOVES AND SAFETY GLASSES SHOULD BE WORN WHEN REMOVING OR SERVICING A BATTERY.

WARNING: REMOVE METALLIC JEWELRY TO AVOID INJURY BY ACCIDENTAL ARCING OF BATTERY CURRENT.

1. Make sure ignition switch is in OFF position and all accessories are turned OFF.
2. Remove the rear compartment floor, trim panel to gain access to the battery.

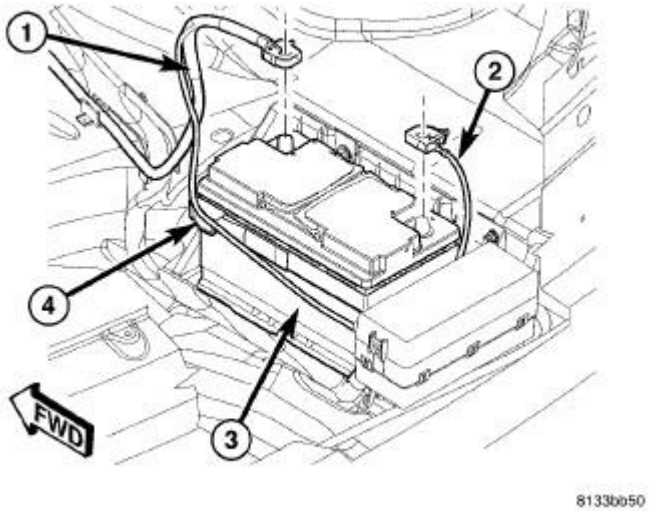

Fig. 10: Disconnecting/Connecting Battery Cables
Courtesy of CHRYSLER LLC

3. Disconnect the battery negative cable (2) from the battery terminal.
4. Disconnect the battery positive cable (1) from the battery terminal.
5. Unlatch the battery retention strap (4).

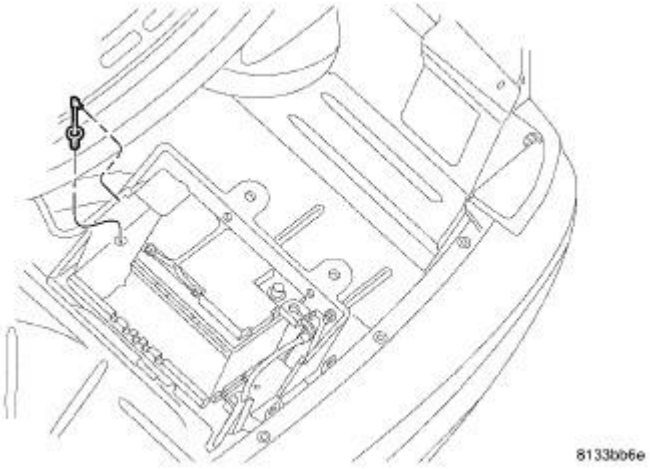

Fig. 11: Battery Vent Tube
Courtesy of CHRYSLER LLC

CAUTION: Use care when disconnecting the battery vent tube from the battery. The vent tube nipple is made of plastic and is easily damaged if not disconnected properly.

6. Gently disconnect the battery vent tube from the battery nipple.

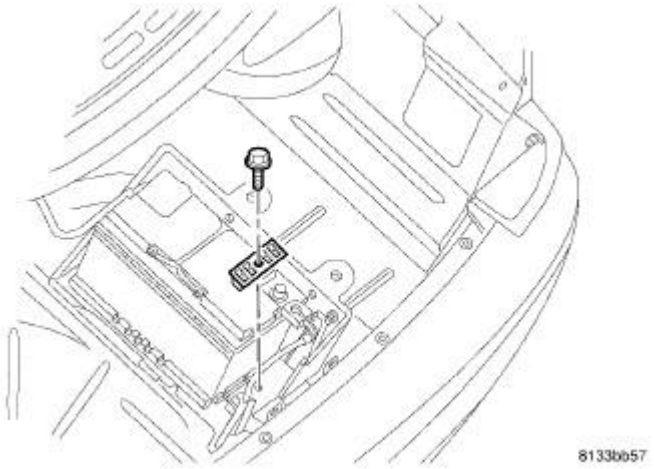

Fig. 12: Battery Hold Down Clamp
Courtesy of CHRYSLER LLC

7. Remove the battery hold down clamp and remove the battery from the vehicle.

INSTALLATION

INSTALLATION

WARNING: A SUITABLE PAIR OF HEAVY DUTY RUBBER GLOVES AND SAFETY GLASSES SHOULD BE WORN WHEN REMOVING OR SERVICING A BATTERY.

WARNING: REMOVE METALLIC JEWELRY TO AVOID INJURY BY ACCIDENTAL ARCING OF BATTERY CURRENT.

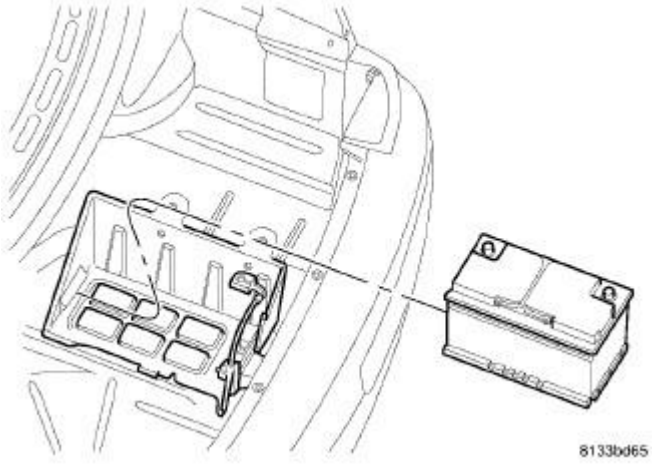

Fig. 13: Battery Tray
Courtesy of CHRYSLER LLC

1. Position the battery in the battery tray.

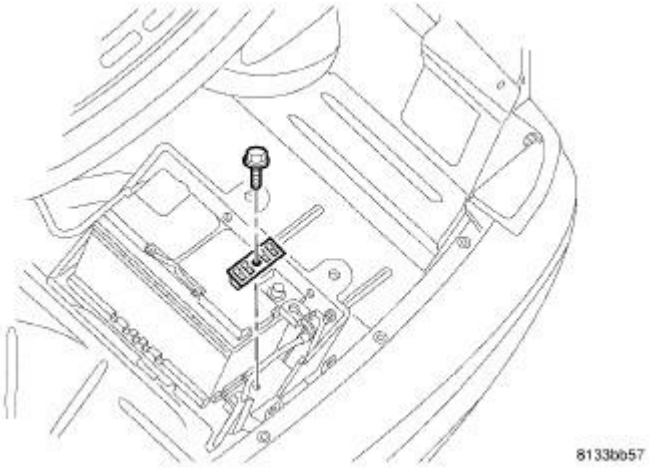

Fig. 14: Battery Hold Down Clamp
Courtesy of CHRYSLER LLC

2. Install the battery hold down clamp and bolt. Torque the bolt to 4 N.m (35 in. lbs.).

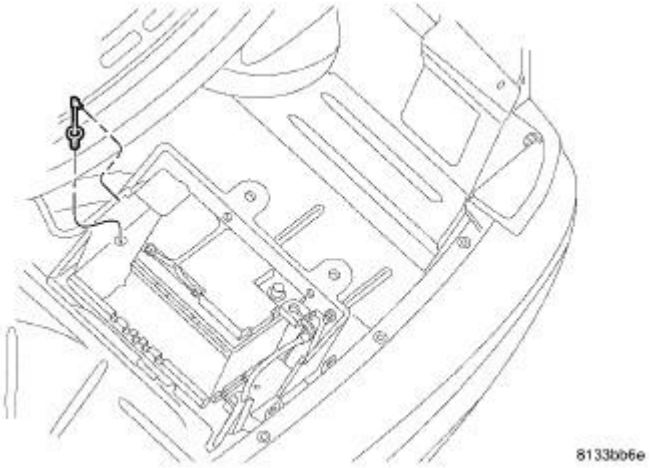

Fig. 15: Battery Vent Tube
Courtesy of CHRYSLER LLC

CAUTION: Use care when connecting the battery vent tube to the battery. The vent tube nipple is made of plastic and is easily damaged if not connected properly.

3. Gently connect the battery vent tube to the battery nipple.

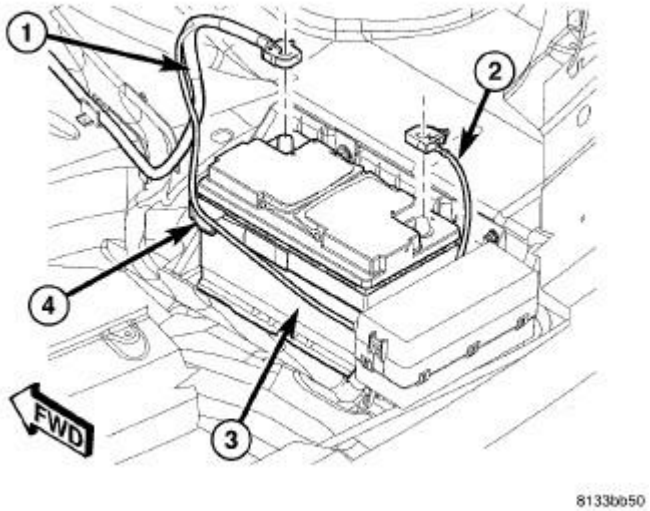

Fig. 16: Disconnecting/Connecting Battery Cables
Courtesy of CHRYSLER LLC

4. Latch the battery retention strap (4).
5. Connect the battery positive cable (1).
6. Connect the battery negative cable (2). Follow the battery reconnection procedure. See **Electrical - Engine Systems/Battery System - Standard Procedure**.
7. Install the rear compartment floor trim panel.

CABLES, BATTERY

DESCRIPTION

DESCRIPTION

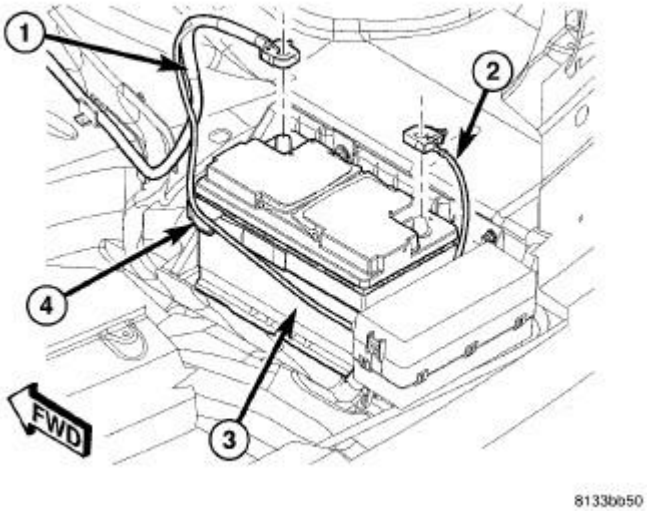

Fig. 17: Disconnecting/Connecting Battery Cables
Courtesy of CHRYSLER LLC

The battery cables (1) and (2) are large gauge, stranded copper wires sheathed within a heavy plastic or synthetic rubber insulating jacket. The wire used in the battery cables combines excellent flexibility and reliability with high electrical current carrying capacity. The battery cables feature a stamped brass clamping type female battery terminal crimped onto one end of the battery cable wire and then solder-dipped. A square headed pinch-bolt and hex nut are installed at the open end of the female battery terminal clamp. Large eyelet type terminals are crimped onto the opposite end of the battery cable wire and then solder-dipped. The battery positive cable wires (1) have a red insulating jacket to provide visual identification and feature a larger female battery terminal clamp to allow connection to the larger battery positive terminal post. The battery negative cable wires (2) have a black insulating jacket and a smaller female battery terminal clamp.

The battery cables cannot be repaired and, if damaged or faulty they must be replaced. Both the battery positive and negative cables are available for service replacement only as a unit with the battery wire harness, which may include portions of the wiring circuits for the generator and other components on some models. Refer to **SYSTEM WIRING DIAGRAMS** for the location of the proper battery cable wire harness diagrams. The wiring information also includes proper wire and connector repair procedures, further details on wire harness routing and retention, as well as pin-out and location views for the various wire harness connectors, splices and grounds.

OPERATION

OPERATION

The battery cables connect the battery terminal posts to the vehicle electrical system. These cables also provide a path back to the battery for electrical current generated by the charging system for restoring the voltage potential of the battery. The female battery terminal clamps on the ends of the battery cable wires provide a strong and reliable connection of the battery cable to the battery terminal posts. The terminal pinch bolts allow the female terminal clamps to be tightened around the

male terminal posts on the top of the battery. The eyelet terminals secured to the opposite ends of the battery cable wires from the female battery terminal clamps provide secure and reliable connection of the battery cables to the vehicle electrical system.

DIAGNOSIS AND TESTING

BATTERY CABLES

A voltage drop test will determine if there is excessive resistance in the battery cable terminal connections or the battery cable. If excessive resistance is found in the battery cable connections, the connection point should be disassembled, cleaned of all corrosion or foreign material, then reassembled. Following reassembly, check the voltage drop for the battery cable connection and the battery cable again to confirm repair.

When performing the voltage drop test, it is important to remember that the voltage drop is giving an indication of the resistance between the two points at which the voltmeter probes are attached. **EXAMPLE:** When testing the resistance of the battery positive cable, touch the voltmeter leads to the battery positive cable terminal clamp and to the battery positive cable eyelet terminal at the starter solenoid B(+) terminal stud. If you probe the battery positive terminal post and the battery positive cable eyelet terminal at the starter solenoid B(+) terminal stud, you are reading the combined voltage drop in the battery positive cable terminal clamp-to-terminal post connection and the battery positive cable.

VOLTAGE DROP TEST

The following operation will require a voltmeter accurate to 1/10 (0.10) volt. Before performing this test, be certain that the following procedures are accomplished:

- The battery is fully-charged. See **Electrical - Engine Systems/Battery System/BATTERY - Standard Procedure** for the proper battery charging procedure.
- The battery has successfully passed a load test. See **Electrical - Engine Systems/Battery System/BATTERY - Standard Procedure** for the proper load test procedure.
- Fully engage the parking brake.
- If the vehicle is equipped with an automatic transmission, place the gearshift selector lever in the Park position. If the vehicle is equipped with a manual transmission, place the gearshift selector lever in the Neutral position and block the clutch pedal in the fully depressed position.
- Verify that all lamps and accessories are turned off.
- To prevent the engine from starting, remove the Automatic Shut Down (ASD) relay. The ASD relay is located in the Intraged Power Module (IPM), in the engine compartment. See the fuse and relay layout label affixed to the underside of the IPM cover for ASD relay identification and location.

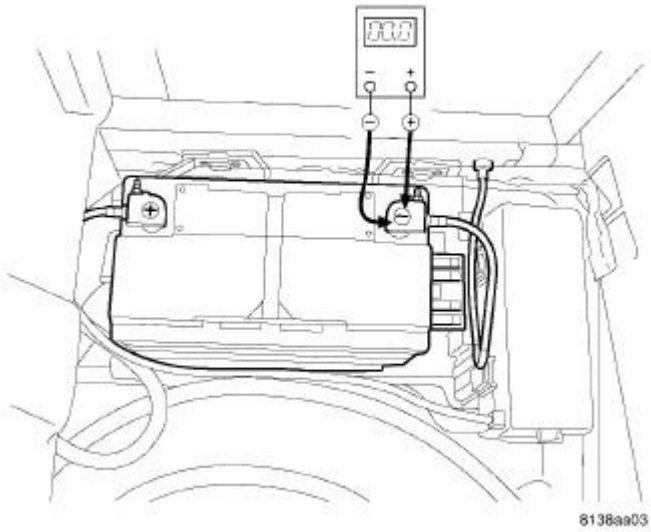

Fig. 18: Connecting Voltmeter To Battery Terminal Post
Courtesy of CHRYSLER LLC

1. Remove the spare tire cover to gain access to the battery. Connect the positive lead of the voltmeter to the battery negative terminal post. Connect the negative lead of the voltmeter to the battery negative cable terminal clamp. Rotate and hold the ignition switch in the Start position. Observe the voltmeter. If voltage is detected, correct the poor connection between the battery negative cable terminal clamp and the battery negative terminal post.

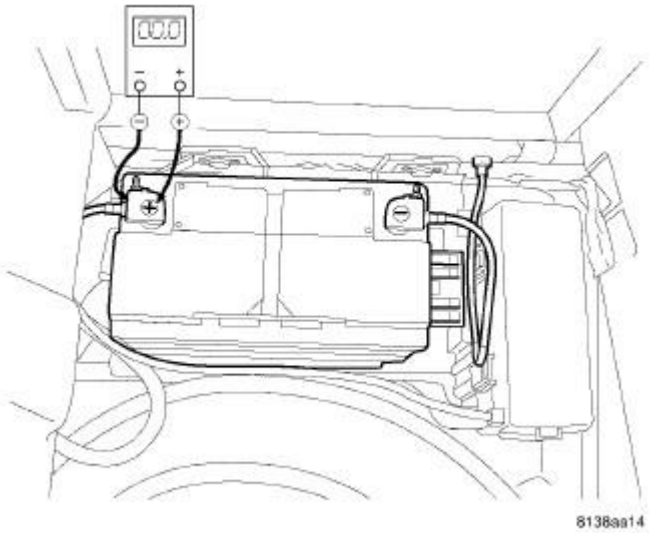

Fig. 19: Connecting Voltmeter To Battery Terminal Post
Courtesy of CHRYSLER LLC

2. Connect the positive lead of the voltmeter to the battery positive terminal post. Connect the negative lead of the voltmeter to the battery positive cable terminal clamp. Rotate and hold the

ignition switch in the Start position. Observe the voltmeter. If voltage is detected, correct the poor connection between the battery positive cable terminal clamp and the battery positive terminal post.

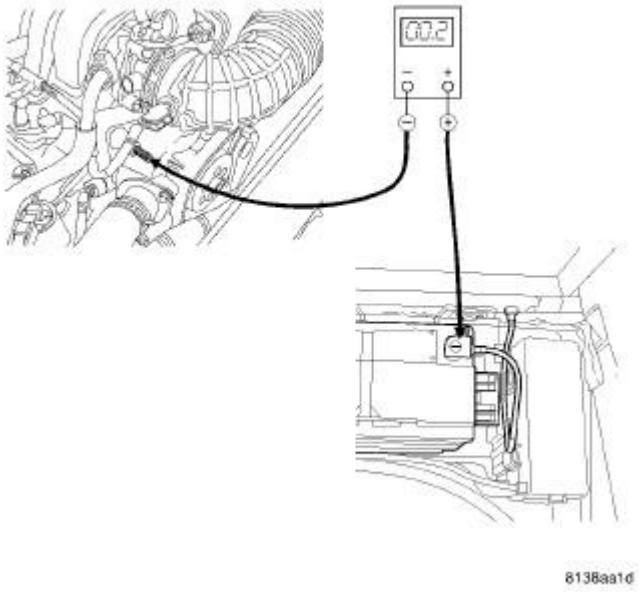

Fig. 20: Measuring Battery (-) And Ground
Courtesy of CHRYSLER LLC

3. Using a suitable jumper wire, connect the voltmeter to measure between the battery negative cable terminal clamp and a good clean ground on the engine block. Rotate and hold the ignition switch in the Start position. Observe the voltmeter. If the reading is above 0.2 volt, clean and tighten the battery negative cable eyelet terminal connection at the transmission housing. Repeat the test. If the reading is still above 0.2 volt, perform 4 and 5.

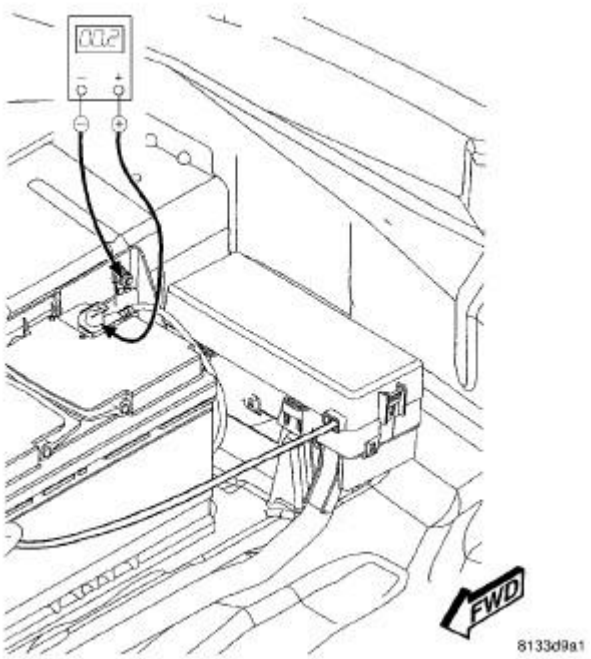

Fig. 21: Measuring Between Battery (-) Clamp And Battery (-) Cable Eyelet Terminal
Courtesy of CHRYSLER LLC

4. Connect the voltmeter to measure between the battery negative cable terminal clamp and the battery negative cable eyelet terminal connection at the vehicle body. Rotate and hold the ignition switch in the Start position. Observe the voltmeter. If the reading is above 0.2 volt, clean and tighten the battery negative cable eyelet terminal connection at the vehicle body. Repeat the test. If the reading is still above 0.2 volt, replace the battery rear negative cable. See **Electrical - Engine Systems/Battery System/CABLES, Battery - Removal**.

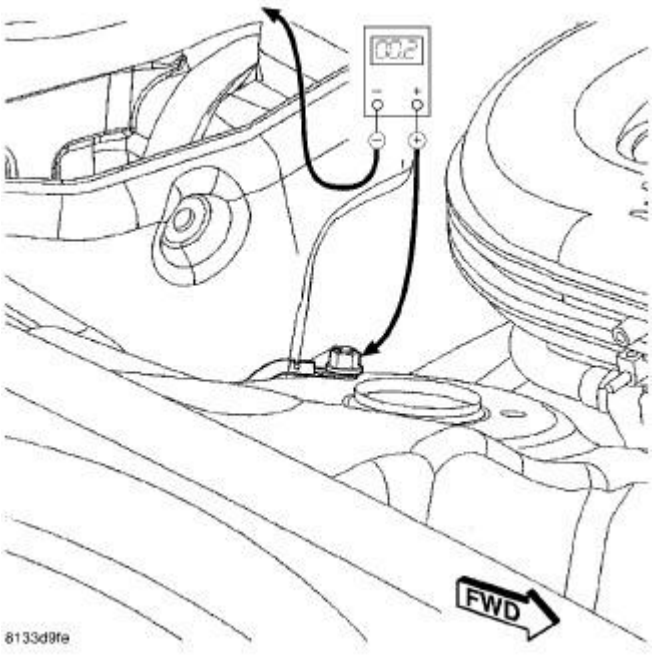

Fig. 22: Measuring Between Battery (-) Cable Eyelet And Right Front Strut Tower
Courtesy of CHRYSLER LLC

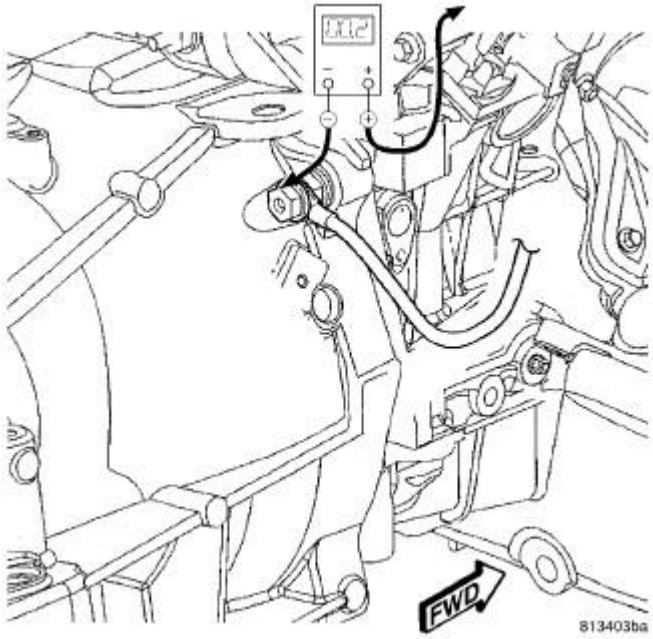

Fig. 23: Measuring Between Battery (-) Cable Eyelet And Transmission Housing
Courtesy of CHRYSLER LLC

5. Connect the voltmeter to measure between the battery negative cable eyelet terminal connection at the right front strut tower and the battery negative cable eyelet terminal

connection at the transmission housing. Rotate and hold the ignition switch in the Start position. Observe the voltmeter. If the reading is above 0.2 volt, clean and tighten the battery negative cable eyelet terminal connection at the right front strut tower. Repeat the test. If the reading is still above 0.2 volt, replace the battery front negative cable. See **Electrical - Engine Systems/Battery System/CABLES, Battery - Removal**.

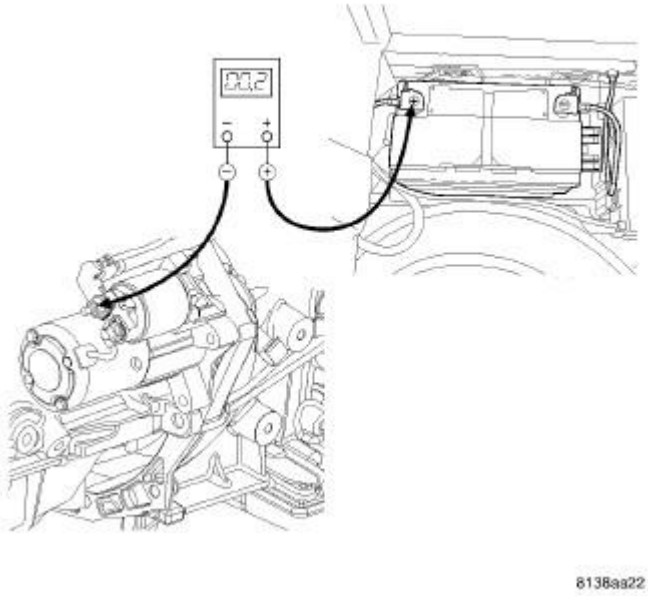

Fig. 24: Measuring Between Battery (+) And Starter Solenoid B(+)
Courtesy of CHRYSLER LLC

6. Using a suitable jumper wire, connect the voltmeter to measure between the battery positive cable terminal clamp and the starter solenoid B(+) terminal stud. Rotate and hold the ignition switch in the Start position. Observe the voltmeter. If the reading is above 0.2 volt, clean and tighten the battery positive cable eyelet terminal connection at the starter solenoid B(+) terminal stud. Repeat the test. If the reading is still above 0.2 volt, perform 7 and 8.

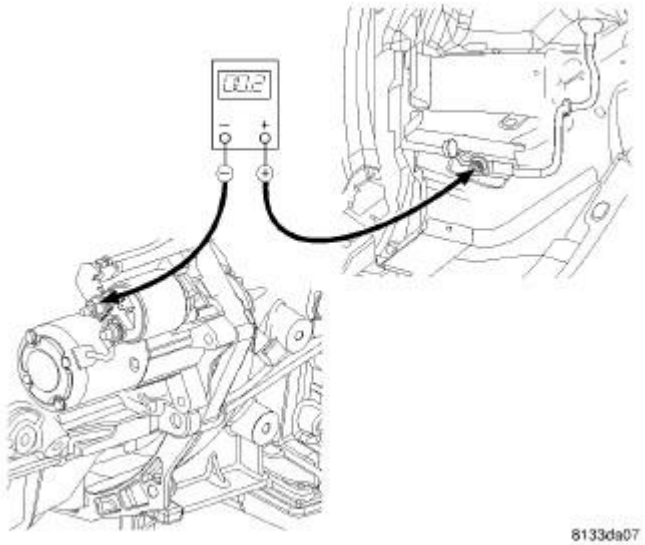

Fig. 25: Measuring Between Battery (+) Cable Bulkhead Outside Terminal And Starter Solenoid B(+) Terminal Stud
Courtesy of CHRYSLER LLC

7. Remove the right front wheelhouse splash shield to gain access to the battery positive cable bulkhead outside terminal. Refer to **Body/Exterior/SHIELD, Splash - Removal** . Connect the voltmeter to measure between the battery positive cable bulkhead outside terminal and the starter solenoid B(+) terminal stud. Rotate and hold the ignition switch in the Start position. Observe the voltmeter. If the reading is above 0.2 volt, clean and tighten the battery positive cable bulkhead outside terminal connection. Repeat the test. If the reading is still above 0.2 volt, replace the battery front positive cable. See **Electrical - Engine Systems/Battery System/CABLES, Battery - Removal**.

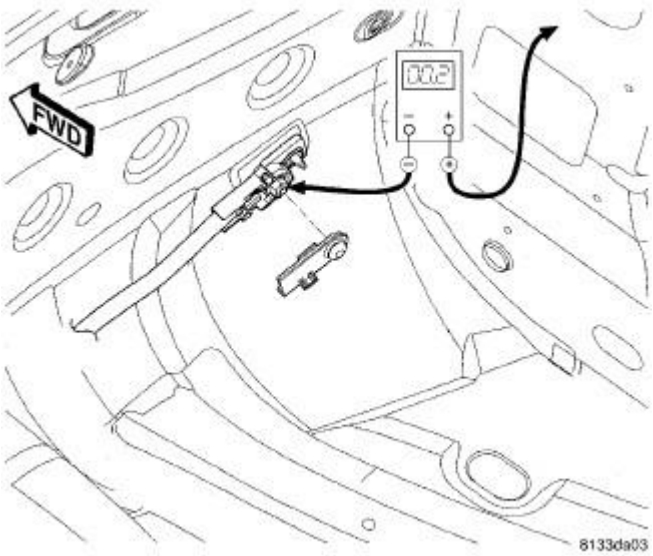

Fig. 26: Measuring Between Battery (+) Terminal Clamp And Battery (+) Cable Bulkhead

Inside Terminal Connection
Courtesy of CHRYSLER LLC

8. Remove the right front carpet to gain access to the battery positive cable bulkhead inside terminal. Connect the voltmeter to measure between the battery positive cable terminal clamp and the battery positive cable bulkhead inside terminal connection. Rotate and hold the ignition switch in the Start position. Observe the voltmeter. If the reading is above 0.2 volt, clean and tighten the battery positive cable bulkhead inside terminal connection. Repeat the test. If the reading is still above 0.2 volt, replace the battery rear positive cable. See **Electrical - Engine Systems/Battery System/CABLES, Battery - Removal**.

REMOVAL

REMOVAL

NEGATIVE - ENGINE COMPARTMENT

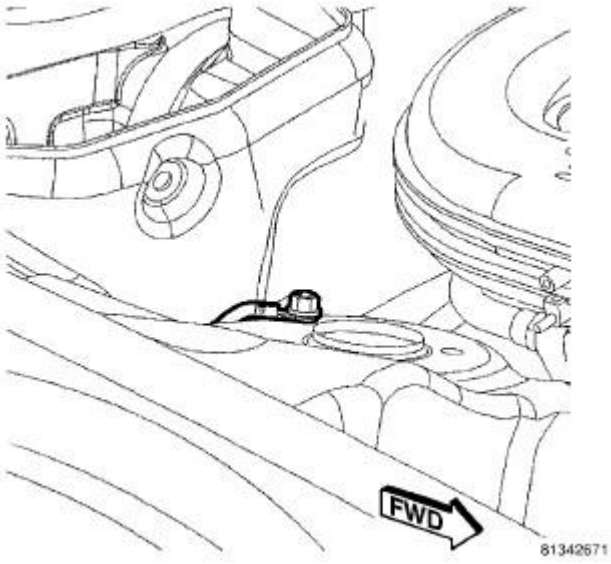

Fig. 27: Fastener Securing Negative Battery Cable To Right Front Strut Tower
Courtesy of CHRYSLER LLC

1. Turn the ignition switch to the Off position. Be certain that all electrical accessories are turned off.
2. Remove the spare tire cover to gain access to the battery.
3. Disconnect and isolate the battery negative cable.
4. Remove the fastener securing the battery negative cable to the right front strut tower.

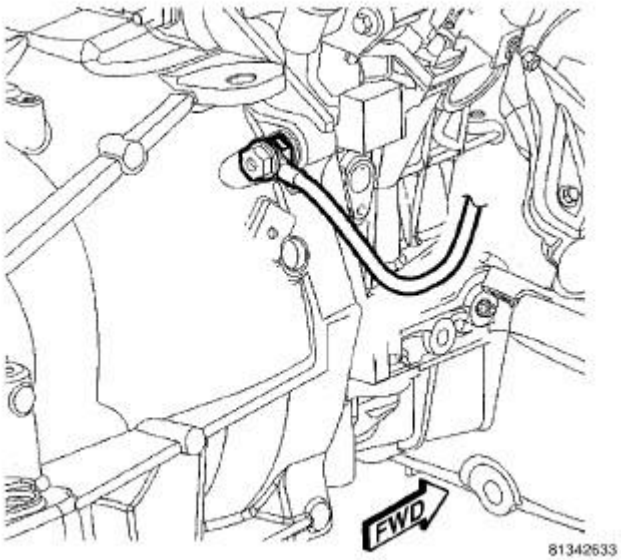

Fig. 28: Fastener Securing Negative Battery Cable To Transmission Housing
Courtesy of CHRYSLER LLC

5. Raise vehicle on hoist. Refer to **Vehicle Quick Reference/Hoisting - Standard Procedure** .
6. Remove the fastener securing the battery negative cable to the transmission housing.
7. One at a time, remove the battery cable retaining pushpins, fasteners and routing clips until the cable is free from the vehicle.
8. Remove the battery cable from the engine compartment.

NEGATIVE - REAR COMPARTMENT

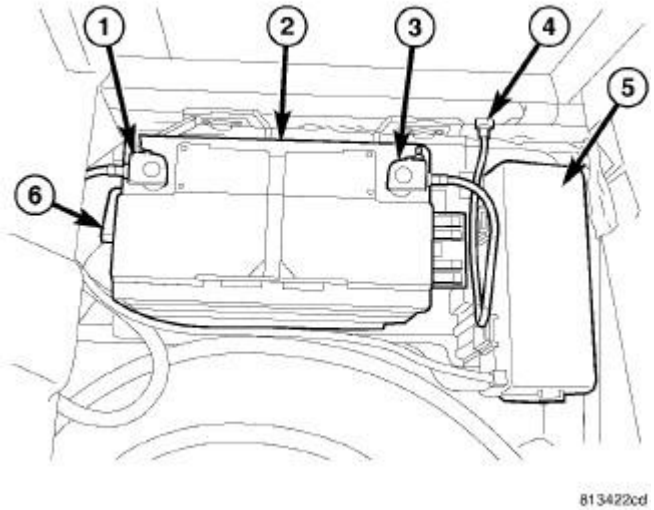

Fig. 29: Battery System Components And PDC Cover
Courtesy of CHRYSLER LLC

1. Turn the ignition switch to the Off position. Be certain that all electrical accessories are turned off.
2. Remove the spare tire cover to gain access to the battery.
3. Disconnect and isolate the battery negative cable (3).
4. Remove the fastener (4) securing the battery negative cable to the body.
5. Remove the cable from the vehicle.

POSITIVE - BATTERY TO BULKHEAD

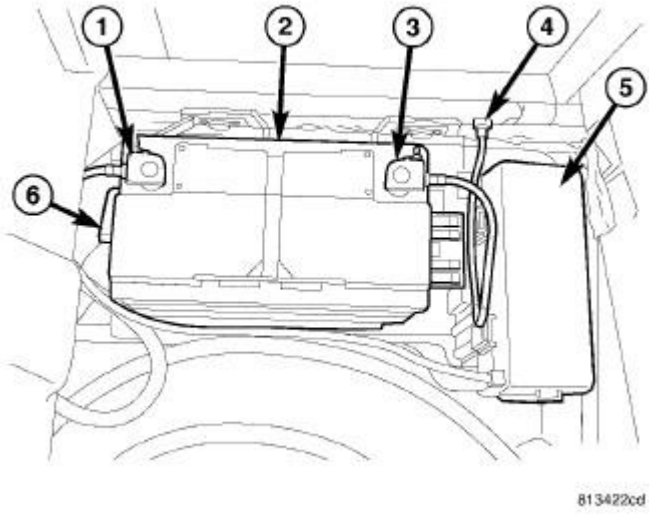

Fig. 30: Battery System Components And PDC Cover
Courtesy of CHRYSLER LLC

1. Turn the ignition switch to the Off position. Be certain that all electrical accessories are turned off.
2. Remove the spare tire cover to gain access to the battery.
3. Disconnect and isolate the battery negative cable (3).
4. Disconnect the battery positive cable (1).

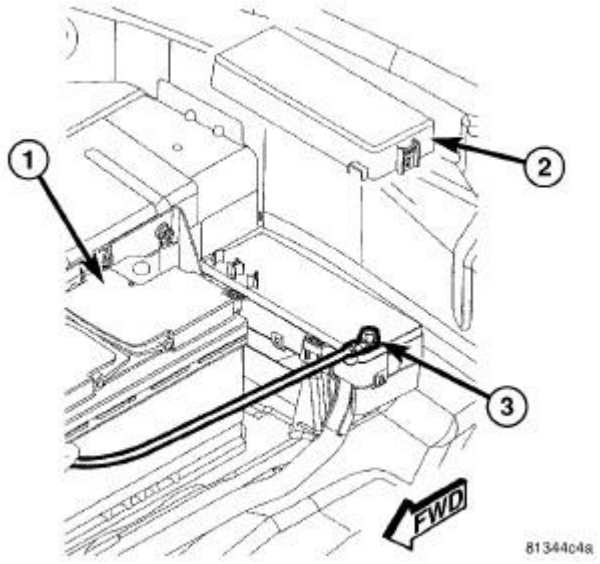

Fig. 31: Power Distribution Center
Courtesy of CHRYSLER LLC

5. Remove the Power Distribution Center (PDC) cover (2).
6. Remove the battery positive cable to rear PDC fastener (3).

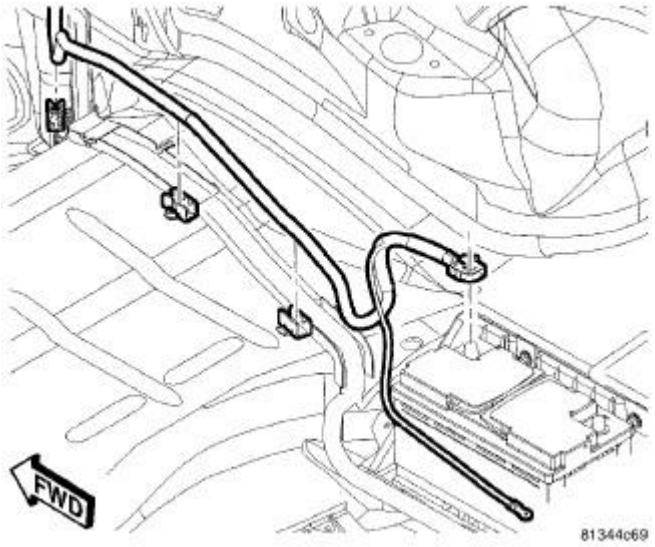

Fig. 32: Routing Clips
Courtesy of CHRYSLER LLC

7. One at a time, free the battery positive cable from the routing clips located in the rear compartment area.
8. Remove the right, front seat. Refer to **Body/Seats/SEAT - Removal** .
9. Remove the right, rear seat cushion. Pull upward at forward edge of each retainer loop of the

rear seat cushion to disengage retainer loops from cups in floor.

10. Remove the right cowl trim panel. Refer to **Body/Interior/PANEL, Cowl Trim - Removal** .
11. Remove the right quarter trim panel. Refer to **Body/Interior/PANEL, Quarter Trim - Removal** .
12. Position carpet aside to gain access to the battery positive cable.

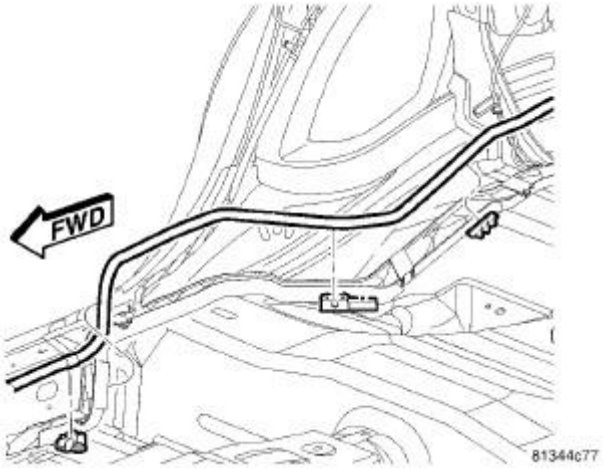

Fig. 33: Routing Clips
Courtesy of CHRYSLER LLC

13. One at a time, free the battery positive cable from the routing clips located in the rear seat area.

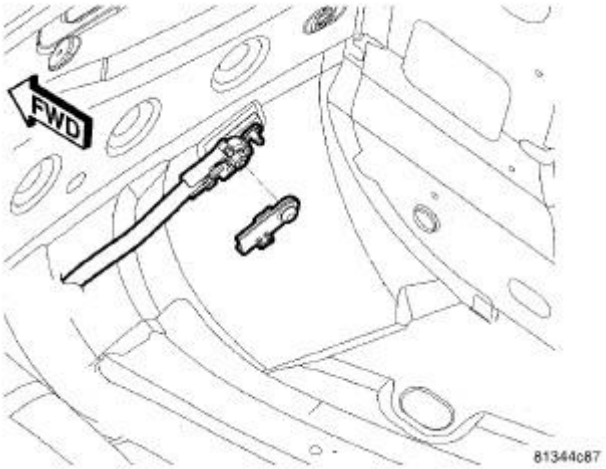

Fig. 34: Bulkhead Fastener
Courtesy of CHRYSLER LLC

14. Position the bulkhead insulator aside to gain access to the battery positive cable bulkhead fastener.
15. Remove the battery positive cable to bulkhead fastener.

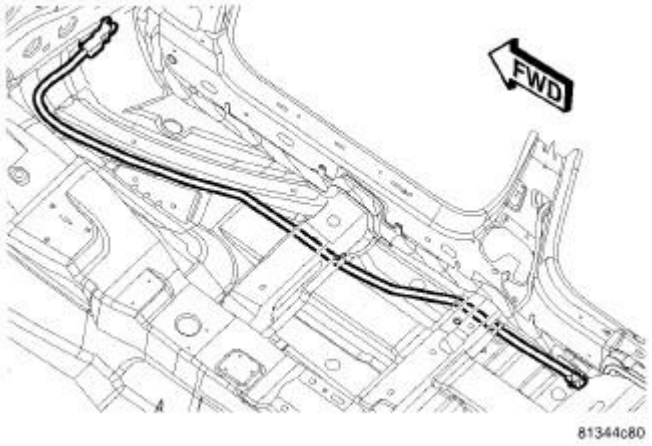

Fig. 35: Battery Positive Cable
Courtesy of CHRYSLER LLC

16. Remove the battery positive cable from the vehicle making note of the cable routing under the floor cross members.

POSITIVE - ENGINE COMPARTMENT

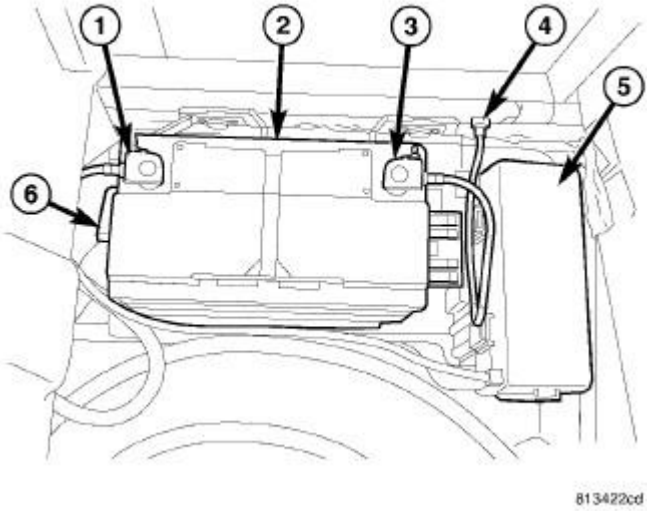

Fig. 36: Battery System Components And PDC Cover
Courtesy of CHRYSLER LLC

1. Turn the ignition switch to the Off position. Be certain that all electrical accessories are turned off.
2. Remove the spare tire cover to gain access to the battery.
3. Disconnect and isolate the battery negative cable (3).
4. Raise vehicle on hoist. Refer to **Vehicle Quick Reference/Hoisting - Standard Procedure** .

5. Remove the right front wheelhouse splash shield to gain access to the battery positive cable bulkhead outside terminal. Refer to **Body/Exterior/SHIELD, Splash - Removal** .

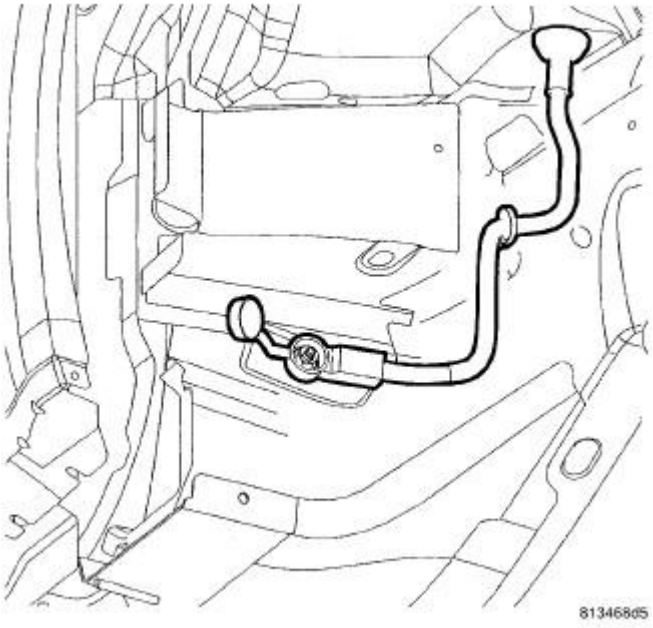

Fig. 37: Bulkhead Fastener
Courtesy of CHRYSLER LLC

6. Remove the battery positive cable to bulkhead fastener.

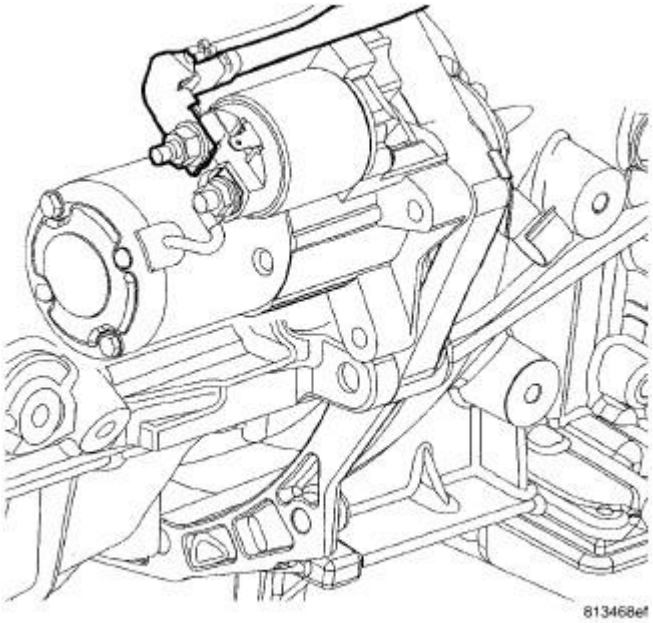

Fig. 38: Battery Positive Cable
Courtesy of CHRYSLER LLC

7. Remove the battery positive cable from the routing clip located at the back of the starter.
8. Remove the battery positive cable to starter fastener.

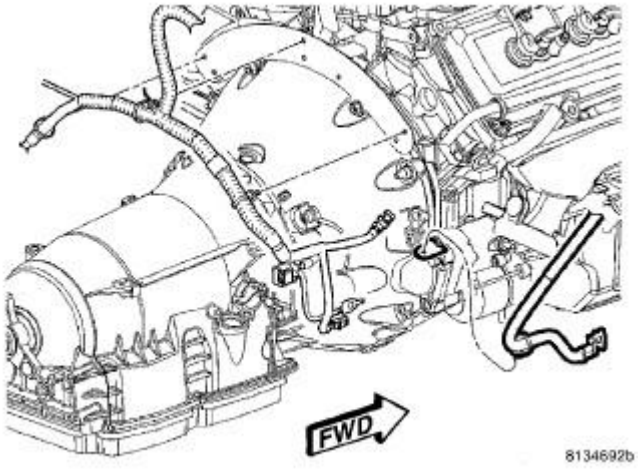

Fig. 39: Battery Positive Cable
Courtesy of CHRYSLER LLC

9. Remove the battery positive cable from the vehicle making note of the cable routing.

INSTALLATION

INSTALLATION

NEGATIVE - ENGINE COMPARTMENT

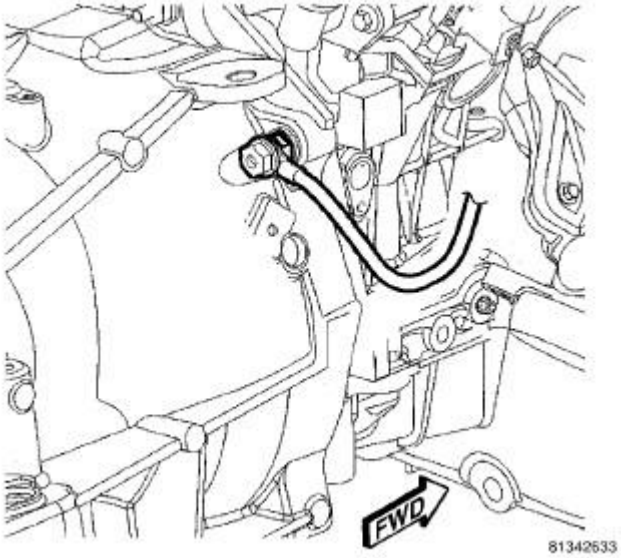

Fig. 40: Fastener Securing Negative Battery Cable To Transmission Housing
Courtesy of CHRYSLER LLC

1. Position the battery negative cable in the engine compartment.
2. Raise the vehicle on hoist. Refer to **Vehicle Quick Reference/Hoisting - Standard Procedure** .
3. Install the fastener securing the battery negative cable to the transmission housing. Tighten the bolt to 11 N.m (8 ft. lbs.).
4. One at a time, install the battery cable retaining pushpins, fasteners and routing clips until the cable is installed exactly where it was in the vehicle.
5. Lower the vehicle.

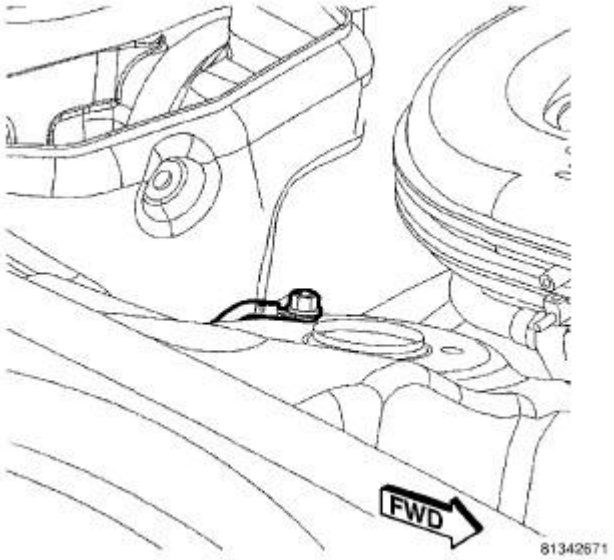

Fig. 41: Fastener Securing Negative Battery Cable To Right Front Strut Tower
Courtesy of CHRYSLER LLC

6. Install the fastener securing the battery negative cable to the right front strut tower.
7. Connect the battery negative cable. Follow the battery connection procedure. See **Electrical - Engine Systems/Battery System - Standard Procedure**
8. Install the spare tire cover.

NEGATIVE - REAR COMPARTMENT

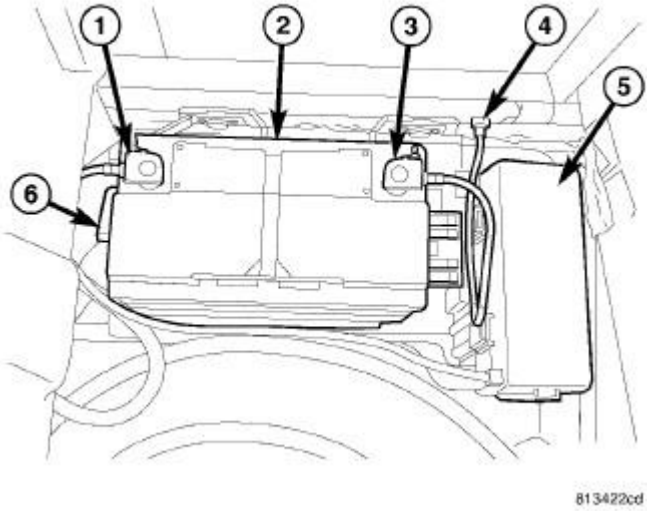

Fig. 42: Battery System Components And PDC Cover
Courtesy of CHRYSLER LLC

1. Position the battery negative cable in the vehicle.
2. Install the fastener (4) securing the battery negative cable to the body.
3. Connect the battery negative cable (3). Follow the battery connection procedure. See **Electrical - Engine Systems/Battery System - Standard Procedure**
4. Install the spare tire cover.

POSITIVE - BATTERY TO BULKHEAD

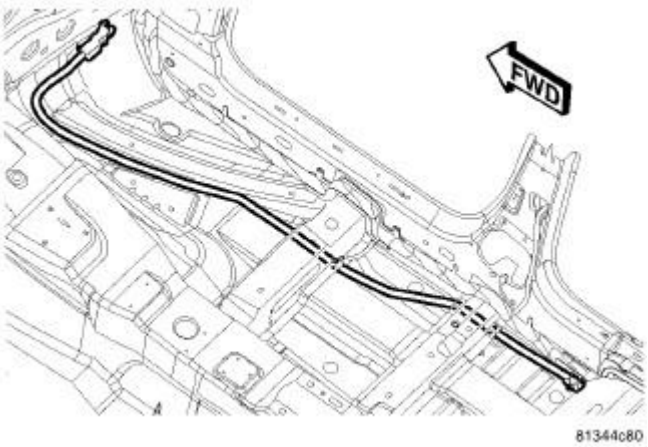

Fig. 43: Battery Positive Cable
Courtesy of CHRYSLER LLC

1. Position the battery positive cable in the vehicle taking care to route the cable under the floor cross members.

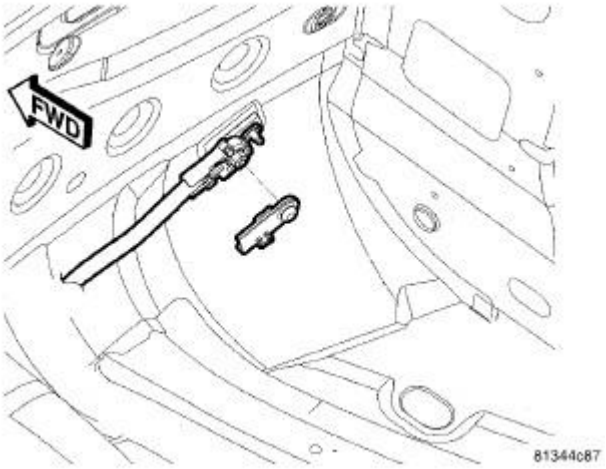

Fig. 44: Bulkhead Fastener
Courtesy of CHRYSLER LLC

2. Position the bulkhead insulator aside to gain access to the battery positive cable bulkhead fastener.
3. Install the battery positive cable to bulkhead fastener.
4. Position the bulkhead insulator back to the normal position.

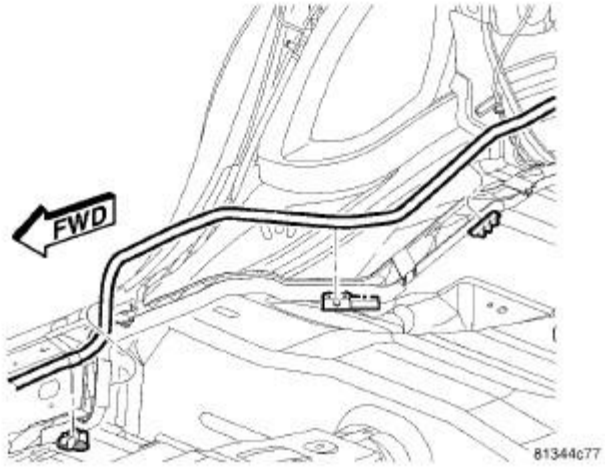

Fig. 45: Routing Clips
Courtesy of CHRYSLER LLC

5. One at a time, secure the battery positive cable to the routing clips located in the rear seat area.

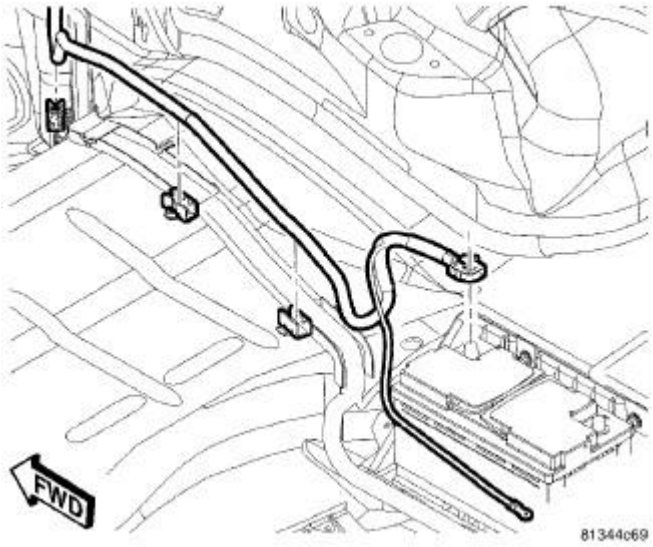

Fig. 46: Routing Clips
Courtesy of CHRYSLER LLC

6. One at a time, secure the battery positive cable to the routing clips located in the rear compartment area.
7. Position the carpet back to the normal position.
8. Install the right quarter trim panel. Refer to **Body/Interior/PANEL, Quarter Trim - Installation** .
9. Install the right cowl trim panel. Refer to **Body/Interior/PANEL, Cowl Trim - Installation** .
10. Install the right, rear seat cushion. Engage retainer loops into cup on floor kick up. Push downward at forward edge at each retainer loop of the rear seat cushion to engage retainers.
11. Install the right, front seat. Refer to **Body/Seats/SEAT - Installation** .

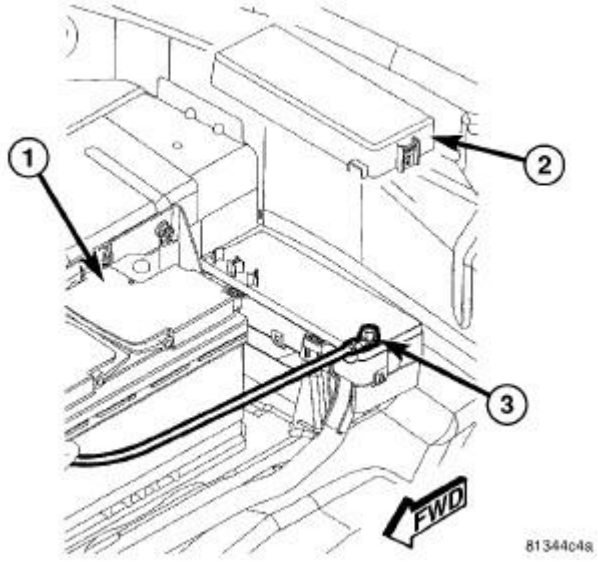

Fig. 47: Power Distribution Center

Courtesy of CHRYSLER LLC

12. Install the battery positive cable to rear Power Distribution Center (PDC) fastener (3).

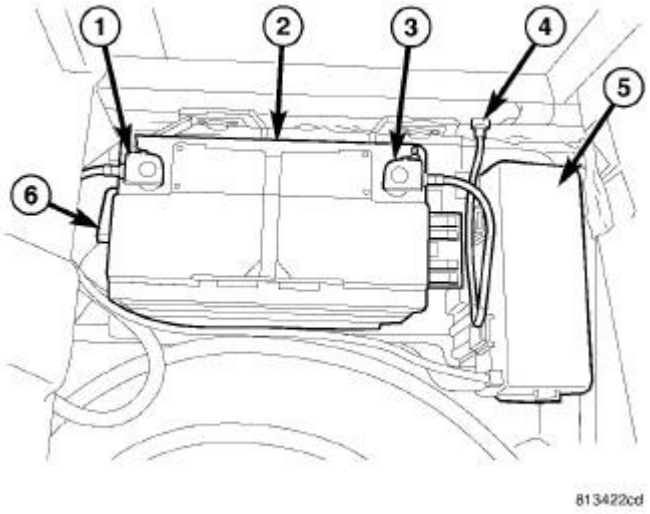

Fig. 48: Battery System Components And PDC Cover
Courtesy of CHRYSLER LLC

13. Install the PDC cover (5).
14. Connect the battery positive cable (1).
15. Connect the battery negative cable (3). Follow the battery connection procedure. See **Electrical - Engine Systems/Battery System - Standard Procedure**
16. Install the spare tire cover.

POSITIVE - ENGINE COMPARTMENT

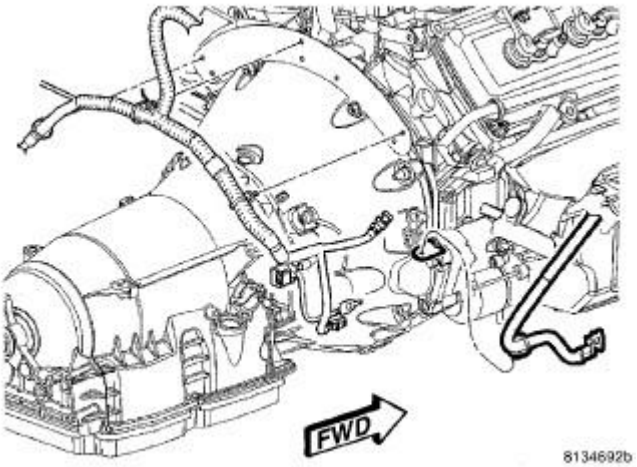

Fig. 49: Battery Positive Cable

Courtesy of CHRYSLER LLC

1. Position the battery positive cable in the engine compartment.
2. Secure the battery positive cable to the routing clip located at the back of the starter.

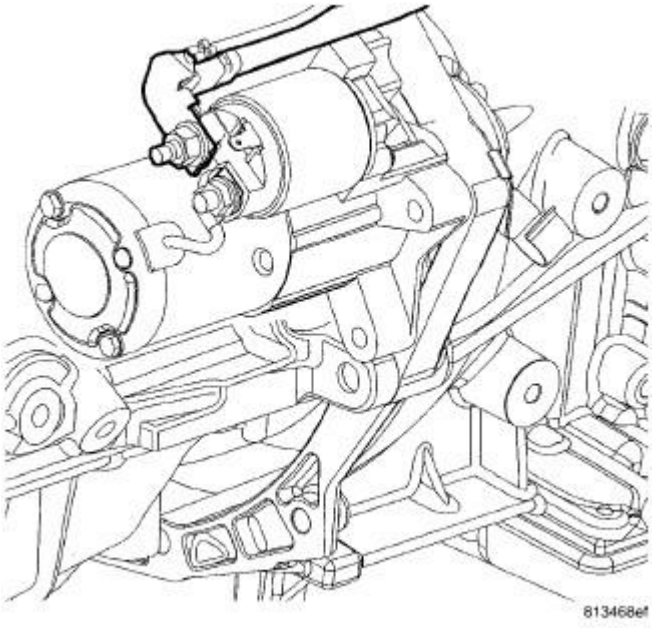

Fig. 50: Battery Positive Cable
Courtesy of CHRYSLER LLC

3. Install the battery positive cable to starter fastener.

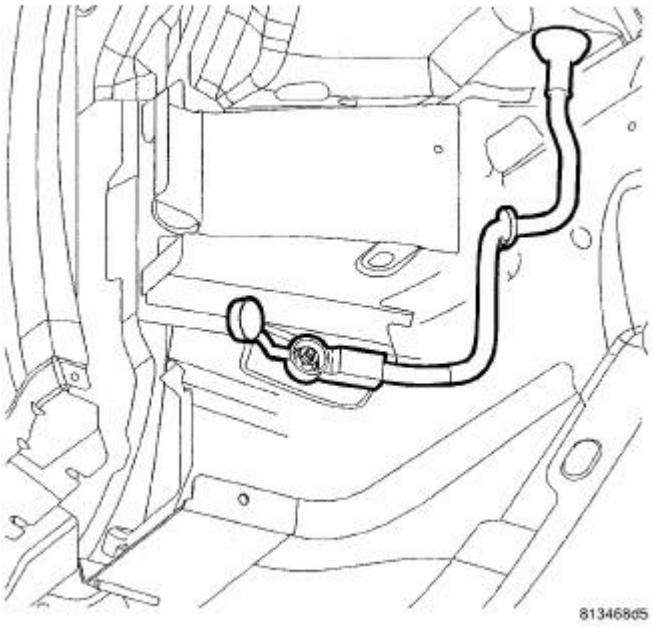

Fig. 51: Bulkhead Fastener
Courtesy of CHRYSLER LLC

4. Install the battery positive cable to bulkhead fastener.
5. Install the right front wheelhouse splash shield. Refer to **Body/Exterior/SHIELD, Splash - Installation** .
6. Lower the vehicle.

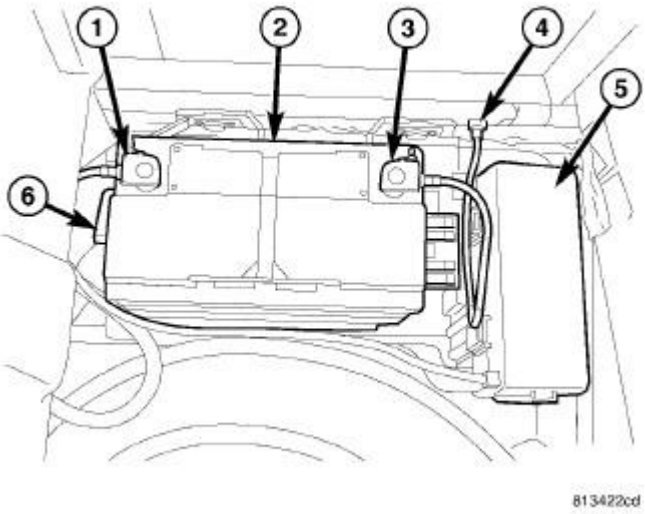

Fig. 52: Battery System Components And PDC Cover
Courtesy of CHRYSLER LLC

7. Connect the battery negative cable (3). Follow the battery connection procedure. See **Electrical - Engine Systems/Battery System - Standard Procedure**
8. Install the spare tire cover.

RETAINER, BATTERY

REMOVAL

REMOVAL

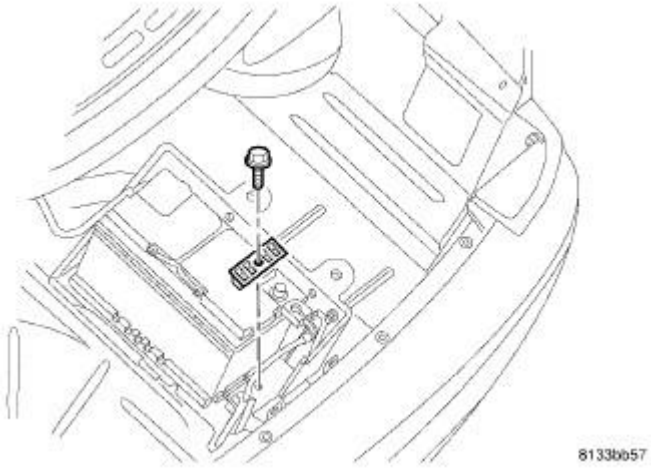

Fig. 53: Battery Hold Down Clamp
Courtesy of CHRYSLER LLC

1. Verify that the ignition switch and all accessories are OFF.
2. Remove the rear compartment floor, trim panel to gain access to the battery.
3. Disconnect and isolate the battery negative cable.
4. Remove the bolt from the battery holddown and remove the holddown.

INSTALLATION

INSTALLATION

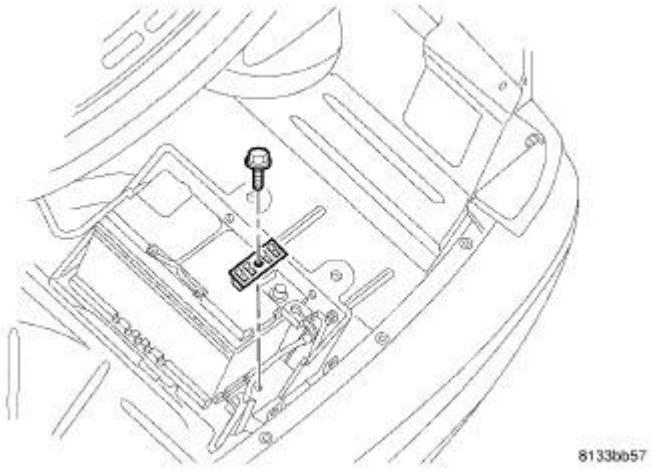

Fig. 54: Battery Hold Down Clamp
Courtesy of CHRYSLER LLC

1. Install the battery holddown clamp and bolt. Tighten the bolt to 4 N.m (35 in. lbs.).
2. Connect the battery negative cable. Follow the battery reconnection procedure. See **Electrical - Engine Systems/Battery System - Standard Procedure**
3. Install the rear compartment floor trim panel.

TRAY, BATTERY

REMOVAL

REMOVAL

1. Remove the battery. See **Electrical - Engine Systems/Battery System/BATTERY - Removal**.

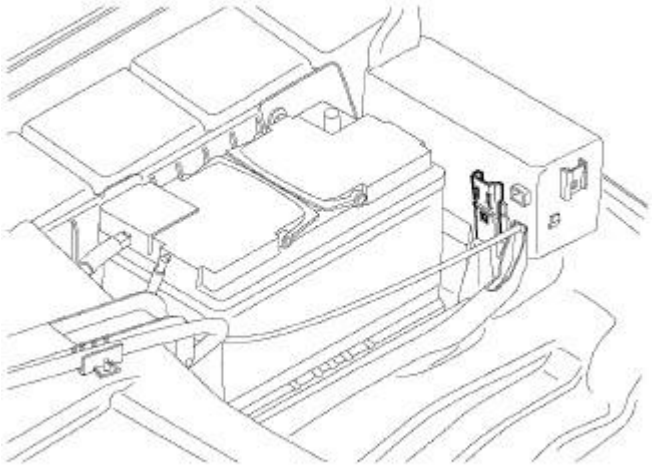

Fig. 55: Removing/Installing Power Distribution Center
Courtesy of CHRYSLER LLC

2. Using a small flat bladed tool, gently release the two mounting tabs that secure the Power Distribution Center (PDC) to the battery tray. Position the PDC aside.

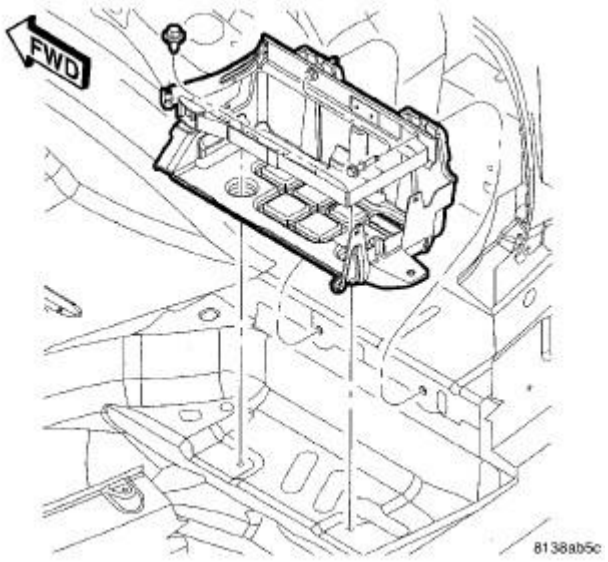

Fig. 56: Removing/Installing Battery Tray
Courtesy of CHRYSLER LLC

3. Remove the battery tray mounting fasteners and remove the battery tray from the vehicle.

INSTALLATION

INSTALLATION

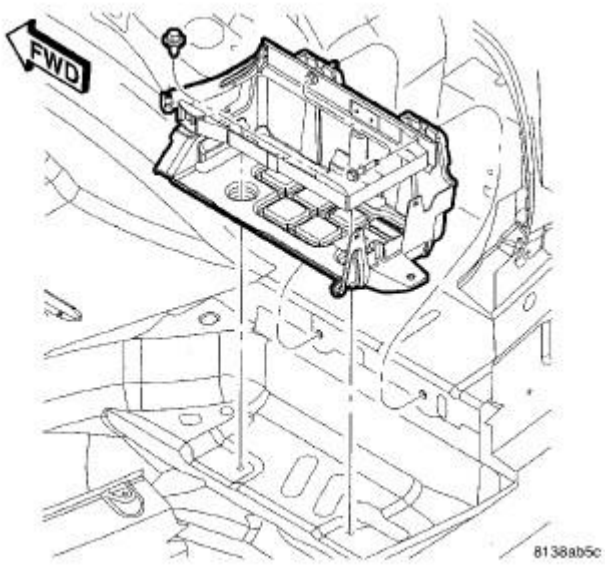

Fig. 57: Removing/Installing Battery Tray
Courtesy of CHRYSLER LLC

1. Position the battery tray in the vehicle and install the mounting fasteners.

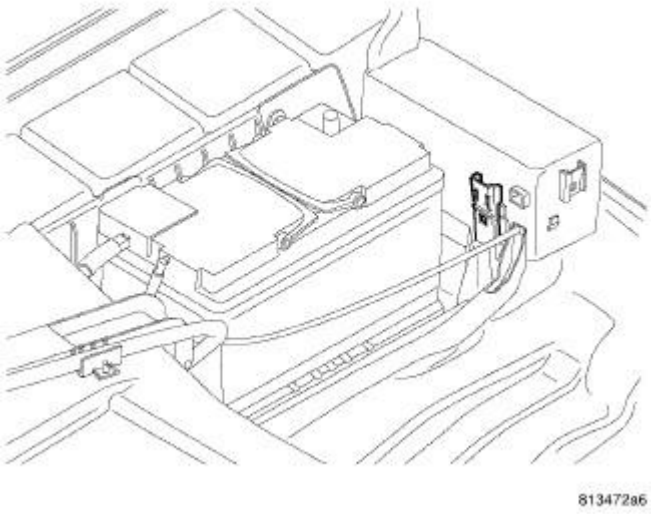

Fig. 58: Removing/Installing Power Distribution Center
Courtesy of CHRYSLER LLC

2. Position the Power Distribution Center (PDC) onto the battery tray mounting tabs. Gently apply downward pressure on the PDC until it snaps into place.
3. Install the battery. See **Electrical - Engine Systems/Battery System/BATTERY - Installation**.

ACCESSORIES AND EQUIPMENT

Body - Challenger

DESCRIPTION

DESCRIPTION - VEHICLE IDENTIFICATION

Throughout this service information, references to the Chrysler Corporation vehicle family identification code are used when describing a procedure that is unique to that vehicle. If a procedure is common to all vehicles covered in this service information, no reference will be made to a vehicle family code.

WARNING

SAFETY PRECAUTIONS AND WARNINGS

WARNING: Use an Occupational Safety and Health Administration (OSHA) approved breathing filter when spraying paint or solvents in a confined area. Failure to do so may result in serious or fatal injury.

Avoid prolonged skin contact with petroleum or alcohol - based cleaning solvents. Failure to do so may result in serious or fatal injury.

Do not stand under a hoisted vehicle that is not properly supported on safety stands. Failure to do so may result in serious or fatal injury.

CAUTION: When holes must be drilled or punched in an inner body panel, verify depth of space to the outer body panel, electrical wiring, or other components. Failure to do so may result in damage to the vehicle.

Do not weld exterior panels unless combustible material on the interior of vehicle is removed from the repair area. Fire or hazardous conditions may result.

Always have a fire extinguisher ready for use when welding.

Disconnect the negative (-) cable clamp from the battery when servicing electrical components that are live when the ignition is OFF. Failure to do so may result in damage to the electrical system.

Do not use abrasive chemicals, compounds or harsh alkaline based cleaning solvents on painted or upholstered surfaces. Failure to do so may result in damage to the vehicle surfaces.

Do not hammer or pound on plastic trim panel when servicing interior trim.

Failure to do so may result in damage to the trim panels.

DIAGNOSIS AND TESTING

WATER LEAKS

Water leaks can be caused by poor sealing, improper body component alignment, body seam porosity, missing plugs, or blocked drain holes. Centrifugal and gravitational force can cause water to drip from a location away from the actual leak point, making leak detection difficult. All body sealing points should be water tight in normal wet-driving conditions. Water flowing downward from the front of the vehicle should not enter the passenger or luggage compartment. Moving sealing surfaces will not always seal water tight under all conditions. At times, side glass or door seals will allow water to enter the passenger compartment during high pressure washing or hard driving rain (severe) conditions. Overcompensating on door or glass adjustments to stop a water leak that occurs under severe conditions can cause premature seal wear and excessive closing or latching effort. After completing a repair, water test vehicle to verify leak has stopped before returning vehicle to use.

VISUAL INSPECTION BEFORE WATER LEAK TESTS

Verify that floor and body plugs are in place, body drains are clear, and body components are properly aligned and sealed. If component alignment or sealing is necessary, refer to the appropriate service information for proper procedures.

WATER LEAK TESTS

> **WARNING: Do not use electric shop lights or tools in water test area. Personal injury can result.**

When the conditions causing a water leak have been determined, simulate the conditions as closely as possible.

- If a leak occurs with the vehicle parked in a steady light rain, flood the leak area with an open-ended garden hose.
- If a leak occurs while driving at highway speeds in a steady rain, test the leak area with a reasonable velocity stream or fan spray of water. Direct the spray in a direction comparable to actual conditions.
- If a leak occurs when the vehicle is parked on an incline, hoist the end or side of the vehicle to simulate this condition. This method can be used when the leak occurs when the vehicle accelerates, stops or turns. If the leak occurs on acceleration, hoist the front of the vehicle. If the leak occurs when braking, hoist the back of the vehicle. If the leak occurs on left turns, hoist the left side of the vehicle. If the leak occurs on right turns, hoist the right side of the vehicle. For hoisting recommendations. Refer to **Vehicle Quick Reference/Hoisting - Standard Procedure** .

WATER LEAK DETECTION

To detect a water leak point-of-entry, do a water test and watch for water tracks or droplets forming on the inside of the vehicle. If necessary, remove interior trim covers or panels to gain visual access to the leak area. If the hose cannot be positioned without being held, have someone help do the water test.

Some water leaks must be tested for a considerable length of time to become apparent. When a leak appears, find the highest point of the water track or drop. The highest point usually will show the point of entry. After leak point has been found, repair the leak and water test to verify that the leak has stopped.

Locating the entry point of water that is leaking into a cavity between panels can be difficult. The trapped water may splash or run from the cavity, often at a distance from the entry point. Most water leaks of this type become apparent after accelerating, stopping, turning, or when on an incline.

MIRROR INSPECTION METHOD

When a leak point area is visually obstructed, use a suitable mirror to gain visual access. A mirror can also be used to deflect light to a limited-access area to assist in locating a leak point.

BRIGHT LIGHT LEAK TEST METHOD

Some water leaks in the luggage compartment can be detected without water testing. Position the vehicle in a brightly lit area. From inside the darkened luggage compartment inspect around seals and body seams. If necessary, have a helper direct a drop light over the suspected leak areas around the luggage compartment. If light is visible through a normally sealed location, water could enter through the opening.

PRESSURIZED LEAK TEST METHOD

When a water leak into the passenger compartment cannot be detected by water testing, pressurize the passenger compartment and soap test exterior of the vehicle. To pressurize the passenger compartment, close all doors and windows, start engine, and set heater control to high blower in HEAT position. If engine can not be started, connect a charger to the battery to ensure adequate voltage to the blower. With interior pressurized, apply dish detergent solution to suspected leak area on the exterior of the vehicle. Apply detergent solution with spray device or soft bristle brush. If soap bubbles occur at a body seam, joint, seal or gasket, the leak entry point could be at that location.

WIND NOISE

Wind noise is the result of most air leaks. Air leaks can be caused by poor sealing, improper body component alignment, body seam porosity, or missing plugs in the engine compartment or door hinge pillar areas. All body sealing points should be airtight in normal driving conditions. Moving sealing surfaces will not always seal airtight under all conditions. At times, side glass or door seals will allow wind noise to be noticed in the passenger compartment during high cross winds. Over compensating on door or glass adjustments to stop wind noise that occurs under severe conditions can cause premature seal wear and excessive closing or latching effort. After a repair procedure has been performed, test vehicle to verify noise has stopped before returning vehicle to use.

VISUAL INSPECTION BEFORE TESTS

Verify that floor and body plugs are in place and body components are aligned and sealed. If component alignment or sealing is necessary, go to the appropriate service information for proper procedures.

ROAD TESTING WIND NOISE

1. Drive the vehicle to verify the general location of the wind noise.
2. Apply 50 mm (2 in.) masking tape in 150 mm (6 in.) lengths along weatherstrips, weld seams or moldings. After each length is applied, drive the vehicle. If noise goes away after a piece of tape is applied, remove tape, locate, and repair defect.

POSSIBLE CAUSE OF WIND NOISE

- Moldings standing away from body surface can catch wind and whistle.
- Gaps in sealed areas behind overhanging body flanges can cause wind-rushing sounds.
- Misaligned movable components.
- Missing or improperly installed plugs in pillars.
- Weld burn through holes.

STANDARD PROCEDURE

BODY LUBRICATION

Lubrication Requirements

Locks and all body pivot points, including such items as seat tracks, door hinge pivot points and rollers , liftgate, tailgate, sliding doors and hood hinges, should be lubricated periodically with a lithium based grease such as Mopar® Spray White Lube to ensure quiet, easy operation and to protect against rust and wear. Prior to the application of any lubricant, wipe the parts clean, to remove dust and grit. After lubricating, excess oil and grease should be removed. Particular attention should also be given to hood latching components to make sure they function properly. When performing other underhood services, clean and lubricate the hood latch release mechanism and safety catch.

The external lock cylinders should be lubricated twice a year, preferably in the fall and spring. Apply a small amount of a high quality lubricant such as Mopar® Lock Cylinder Lubricant directly into the lock cylinder.

Lubricant Application

Door Lock Cylinders

1. Apply a small amount of lubricant directly into the lock cylinder.
2. Apply a small amount of lubricant to the key.
3. Insert key into lock cylinder and cycle the mechanism from the locked to the unlocked position.

NOTE: Do not add more lubricant.

4. Cycle the lock cylinder mechanism several times to allow the lubricant to flow throughout the cylinder.
5. Wipe all lubricant from exterior of lock cylinder and key.

All Other Body Mechanisms

1. Clean component as described above.
2. Apply specified lubricant to all pivoting and sliding contact areas of component.

Lubricant Usage

Engine Oil

- door hinges - hinge pin and pivot contact areas
- hood hinges - pivot points
- liftgate hinges

Mopar® Spray White Lube or Equivalent

- door check straps
- liftgate latches
- liftgate prop pivots
- ash receiver
- fuel filler door remote control latch mechanism
- parking brake mechanism
- sliding seat tracks
- liftgate latch

Mopar® Multipurpose Grease or Equivalent

- all other hood mechanisms

Mopar® Lock Cylinder Lubricant or Equivalent

- door lock cylinders
- liftgate lock cylinder

BUZZ, SQUEAKS AND RATTLES

Buzz, Squeaks and Rattles (BSR's) may be caused by any one or more of the following and may be corrected as indicated:

- Loose fasteners should be tightened to specifications.
- Damaged or missing clips should be replaced.
- Damaged trim panels should be replaced.
- Incorrectly installed trim panels should be reinstalled properly.

Many BSR complaints such as loose trim, can be serviced using various tapes or lubricants. Tapes including foam, flock and anti-squeak, can be used to eliminate noises caused by metal, plastic and vinyl components. Long life lubricants and greases can also be used on a variety of components. Refer to the **BUZZ, SQUEAKS AND RATTLES** table for materials and usage.

BUZZ, SQUEAKS AND RATTLES

ITEM	FEATURES	APPLICATIONS	SERVICE TEMP
ITCH AND SQUEAK TAPE	An abrasion resistant material thin enough to conform to most irregular surfaces. Stops most itches and squeaks.	Between metal and metal, metal and plastic, metal and vinyl, vinyl and plastic. Interior. Examples: Trim panels and bezels.	-40° to 107° C (-40° to 225° F)
BLACK NYLON FLOCK	Nylon Flock with an aggressive acrylic adhesive. Provides for cushioning and compression fit, also isolates components. Water-resistant.	Between metal and metal, metal and plastic, vinyl and plastic. Examples: Pull cups, bezels, clips, ducts, top cover to glass, cowl panel.	-40° to 82° C (-40° to 180° F)
HIGH DENSITY URETHANE FOAM	Tear resistant, highly resilient and durable.	Between metal and metal, metal and plastic. Water-resistant. Examples: I/P, heavy metal rattles, isolating brackets.	-40° to 82° C (-40° to 180° F)
OPEN CELL FOAM TAPE	Soft foam conforms to irregular surfaces.	Wire harness and connector wrap. Examples: Seals, gasket, wiring, heat ducts.	-40° to 82° C (-40° to 180° F)
CLOSED CELL LOW DENSITY FOAM TAPE	Soft, conformable. Water-resistant.	Wherever bulk is needed. Prevents closing flutters and rattles when applied to door watershield. Examples: Door, I/P.	-40° to 82° C (-40° to 180° F)
NYE® GREASE 880	Long life.	Suspensions. Examples: Strut bushings, sway bars.	-40° to 200° C (-40° to 390° F)
KRYTOX® OIL	Long life. Will not dry out or harm plastics or rubber.	When access is not possible, oil will migrate to condition. Vinyl, rubber,	-34° to 205° C (-30° to 400° F)

		plastic, metal. Examples: Convertible top bushings, pull cups trim panel inserts.	
KRYTOX® GREASE	Long life. Will not dry out or harm plastics or rubber.	Vinyl, rubber, plastic, metal, glass. Examples: Weather-strips, backlite and windshield moldings.	-34° to 205° C (-30° to 400° F)

HEAT STAKING

1. Remove trim panel.
2. Bend or move the trim panel components at the heat staked joints. Observe the heat staked locations and/or component seams for looseness.
3. Heat stake the components.
    a. If the heat staked or component seam location is loose, hold the two components tightly together and using a soldering gun with a flat tip, melt the material securing the components together. Do not over heat the affected area, damage to the exterior of the trim panel may occur.
    b. If the heat staked material is broken or missing, use a hot glue gun to apply new material to the area to be repaired. The panels that are being heat staked must be held together while the applying the glue. Once the new material is in place, it may be necessary to use a soldering gun to melt the newly applied material. Do not over heat the affected area, damage to the exterior of the trim panel may occur.
4. Allow the repaired area to cool and verify the repair.
5. Install trim panel.

PLASTIC BODY PANEL REPAIR

There are many different types of plastics used in today's automotive environment. We group plastics in three different categories: Rigid, Semi-Rigid, and Flexible. Any of these plastics may require the use of an adhesion promoter for repair. These types of plastic are used extensively on Chrysler Motors vehicles. Always follow repair material manufacturer's plastic identification and repair procedures.

Rigid Plastics:

Examples of rigid plastic use: Fascias, Hoods, Doors, and other Body Panels, which include SMC, ABS, and Polycarbonates.

Semi-Rigid Plastics:

Examples of semi-rigid plastic use: Interior Panels, Under Hood Panels, and other Body Trim Panels.

Flexible Plastics:

Examples of flexible plastic use: Fascias, Body Moldings, and upper and lower Fascia Covers.

Repair Procedure:

The repair procedure for all three categories of plastics is basically the same. The one difference is the material used for the repair. The materials must be specific for each substrate, rigid repair material for rigid plastic repair, semi-rigid repair material for semi-rigid plastic repair and flexible repair material for flexible plastic repair.

Adhesion Promoter/Surface Modifier:

Adhesion Promoters/Surface Modifiers are required for certain plastics. All three categories may have plastics that require the use of adhesion promoter/surface modifiers. Always follow repair material manufacturer's plastic identification and repair procedures.

SAFETY PRECAUTION AND WARNINGS

WARNING:

- **Eye protection should be used when servicing components. Personal injury can result.**
- **Use an OSHA approved breathing mask when mixing epoxy, grinding, and spraying paint or solvents in a confined area. Personal injury can result.**
- **Avoid prolonged skin contact with resin, petroleum, or alcohol based solvents. Personal injury can result.**
- **Do not venture under a hoisted vehicle that is not properly supported on safety stands. Personal injury can result.**

NOTE:

- **When holes must be drilled or cut in body panels, verify locations of internal body components and electrical wiring. Damage to vehicle can result.**
- **Do not use abrasive chemicals or compounds on undamaged painted surfaces around repair areas. Damage to finish can result.**

RIGID, SEMI-RIGID, AND FLEXIBLE PLASTIC PARTS TYPES

CODE	FAMILY NAME	COMMON TRADE NAME	TYPICAL APPLICATION
ASA	ACRYLONITRILE STYRENE ACRYLITE	LURAN S	CONSOLES, GRILLES
ABS	ACRYLONITRILE BUTADIENE STYRENE	TERLURAN	"A" PILLARS, CONSOLES, GRILLES
ABS/PC	ABS/PC ALLOY	PULSE, PROLOY, BAYBLEND	DOORS, INSTRUMENT PANELS
ABS/PVC	ABS/PV ALLOY	PROLOY, PULSE, LUSTRAN, CYCLOVIN	DOOR PANELS, GRILLES, TRIM

BMC	BULK MOLDING COMPOUND	BMC	FENDER EXTENSIONS
EMA	EHTYLENE METHYL ACRYLATE/IONOMER	SURLYN, EMA, IONOMER	BUMPER GUARDS, PADS
METTON	METTON	METTON	GRILLES, KICK PANELS, RUNNING BOARDS
MPPO	MODIFIED POLYPHENYLENE OXIDE	MPPO	SPOILER ASSEMBLY
PA	POLYAMID	ZYTEL, VYDYNE, PA, MINLON	FENDERS, QUARTER PANELS
PET	THERMOPLASTIC POLYESTER	RYNITE	TRIM
PBT/PPO	PBT/PPO ALLOY	GERMAX	CLADDINGS
PBTP	POLYBUTYLENE THEREPTHALATE	PBT, PBTP, POCAN, VALOX	WHEEL COVERS, FENDERS, GRILLES
PBTP/EEBC	POLYBUTYLENE THEREPTHALATE/EEBC ALLOY	BEXLOY, "M", PBTP/EEBC	FASCIAS, ROCKER PANEL, MOLDINGS
PC	POLYCARBONATE	LEXAN, MERLON, CALIBRE, MAKROLON PC	TAIL LIGHT LENSES, IP TRIM, VALANCE PANELS
PC/ABS	PC/ABS ALLOY	GERMAX, BAY BLENDS, PULSE	DOORS, INSTRUMENT PANELS
PPO	POLYPHENYLENE OXIDE	AZDEL, HOSTALEN, MARLEX, PRFAX, NORYL, GTX, PPO	INTERIOR TRIM, DOOR PANELS, SPLASH SHIELDS, STEERING COLUMN SHROUD
PPO/PA	POLYPHENYLENE/POLYAMID	PPO/PA, GTX 910	FENDERS, QUARTER PANELS
PR/FV	FIBERGLASS REINFORCED PLASTIC	FIBERGLASS, FV, PR/FV	BODY PANELS
PS	POLYSTYRENE	LUSTREX, STYRON, PS	DOOR PANELS, DASH PANELS
RTM	RESIN TRANSFER MOLDING COMPOUND	RTM	BODY PANELS
SMC	SHEET MOLDED COMPOUND	SMC	BODY PANELS
TMC	TRANSFER MOLDING COMPOUND	TMC	GRILLES
UP	UNSATURATED POLYESTER (THERMOSETTING)	SMC, BMC, TMC, ZMC, IMC, XSMC, UP	GRILLE OPENING PANEL, LIFTGATES, FLARESIDE FENDERS, FENDER EXTENSIONS
EEBC	ETHER/ESTER BLOCKED CO-POLYMER	EEBC	BUMPERS

EEBC/PBTP	EEBC/POLYBUTYLENE TEREPTHALATE	EEBC, PBTP, BEXLOY	BUMPER, ROCKER PANELS
EMPP	ETHYLENE MODIFIED POLYPROPYLENE	EMPP	BUMPER COVERS
EPDM	ETHYLENE/PROPROPYLENE DIENE MONOMER	EPDM, NORDEL, VISTALON	BUMPERS
EPM	ETHYLENE/PROPROPYLENE CO-POLYMER	EPM	FENDERS
MPU	FOAM POLYURETHANE	MPU	SPOILERS
PE	POLYETHYLENE	ALATHON, DYLAN, LUPOLEN, MARLEX	-
PP	POLYPROPYLENE (BLENDS)	NORYL, AZDEL, MARLOX, DYLON, PRAVEX	INNER FENDER, SPOILERS, KICK PANELS
PP/EPDM	PP/EPDM ALLOY	PP/EPDM	SPOILERS, GRILLES
PUR	POLYURETHANE	COLONELS, PUR, PU	FASCIAS, BUMPERS
PUR/PC	PUR/PC ALLOY	TEXIN	BUMPERS
PVC	POLYVINYL CHLORIDE	APEX, GEON, VINYLITE	BODY MOLDINGS, WIRE INSULATION, STEERING WHEELS
RIM	REACTION INJECTED MOLDED POLYURETHANE	RIM, BAYFLEX	FRONT FASCIAS, MODULAR WINDOWS
RRIM	REINFORCED REACTION INJECTED MOLDED	PUR, RRIM	FASCIAS, BODY PANELS, BODY TRIMS
TPE	THERMO POLYETHYLENE	TPE, HYTREL, BEXLOY-V	FASCIAS, BUMPERS, CLADDINGS
TPO	THERMOPOLYOLEFIN	POLYTROPE, RENFLEX, SANTOPRENE, VISAFLEX, ETA, APEX, TPO, SHIELDS, CLADDINGS	BUMPERS, END CAPS, TELCAR, RUBBER, STRIPS, SIGHT, INTERIOR B POST
TPP	THERMO-POLYPROPYLENE	TPP	BUMPERS
TPU	THERMOPOLYURETHANE, POLYESTER	TPU, HYTREL, TEXIN, ESTANE	BUMPERS, BODY SIDE, MOLDINGS, FENDERS, FASCIAS

PANEL SECTIONING

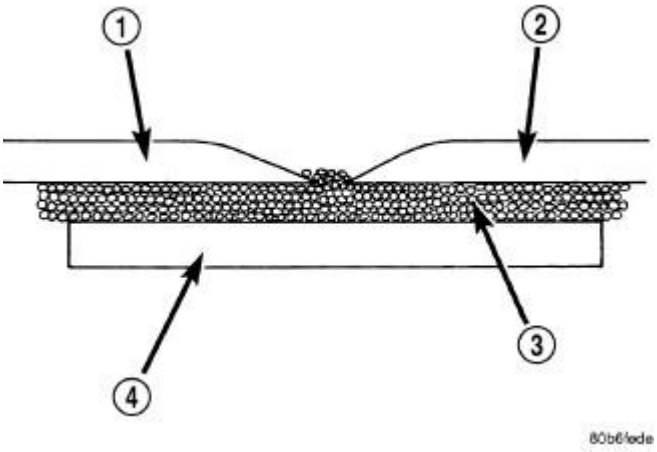

Fig. 1: Panel Sectioning
Courtesy of CHRYSLER LLC

1 - EXISTING PANEL 2 - NEW PANEL 3 - PANEL ADHESIVE 4 - BONDING STRIP

If it is required to section a large panel for a plastic repair, it will be necessary to reinforce the panel. To bond two plastic panels together, a reinforcement must overlap both panels. The panels must be "V'd" at a 20 degree angle. The area to be reinforced should be washed, then sanded. Be sure to wipe off any excess soap and water when finished. Lightly sand or abrade the plastic with an abrasive pad or sandpaper. Blow off any dust with compressed air or wipe with a clean dry rag.

When bonding plastic panels, follow repair material manufacturers recommendations. Be sure that enough adhesive has been applied to allow squeeze out and to fill the full bond line. Once the pieces have been brought together, do not move them until the adhesive is cured. The assembly can be held together with clamps, rivets, etc. A faster cure can be obtained by heating with a heat lamp or heat gun. After the parts have been bonded and have had time to cure, rough sand the seam and apply the final adhesive filler to the area being repaired. Smooth the filler with a spreader, wooden tongue depressor, or squeegee. For fine texturing, a small amount of water can be applied to the filler surface while smoothing. The cured filler can be sanded as necessary and, as a final step, cleanup can be done with soapy water. Wipe the surface clean with a dry cloth allowing time for the panel to dry before moving on with the repair.

PANEL REINFORCEMENT

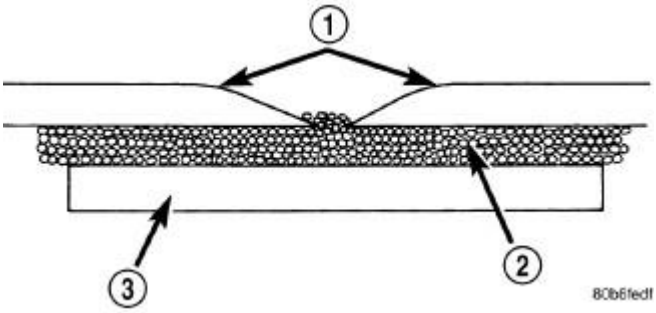

Fig. 2: Softened Edges
Courtesy of CHRYSLER LLC

1 - SOFTENED EDGES 2 - PANEL ADHESIVE 3 - BONDING STRIP

Structural repair procedures for rigid panels with large cracks and holes will require a reinforcement backing. Reinforcements can be made with several applications of glass cloth saturated with structural adhesive. Semi-rigid or flexible repair materials should be used for semi-rigid or flexible backing reinforcement and open meshed fiberglass dry wall tape can be used to form a reinforcement. The dry wall tape allows the resin to penetrate through and make a good bond between the panel and the adhesive. Structurally, the more dry wall tape used, the stronger the repair.

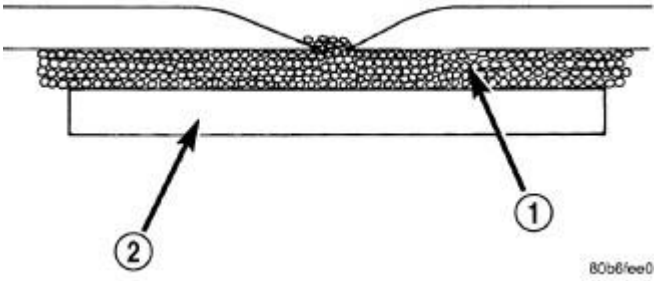

Fig. 3: Panel Reinforcement
Courtesy of CHRYSLER LLC

1 - PANEL ADHESIVE 2 - REINFORCEMENT

Another kind of repair that can be done to repair large cracks and holes is to use a scrap piece of similar plastic and bond with structural adhesive. The reinforcement should cover the entire break and should have a generous amount of overlap on either side of the cracked or broken area.

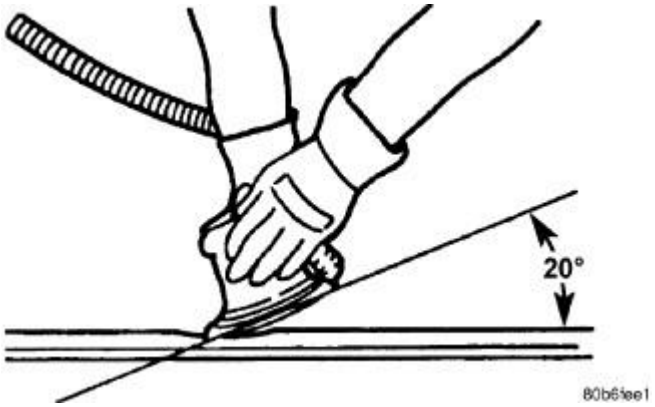

Fig. 4: Beveling Angle - 20 Degree
Courtesy of CHRYSLER LLC

When repairing plastic, the damaged area is first "V'd" out, or beveled. Large bonding areas are desirable when repairing plastic because small repairs are less likely to hold permanently. Beveling the area around a crack at a 20° angle will increase the bonding surface for a repair. It is recommended that sharp edges be avoided because the joint may show through after the panel is refinished.

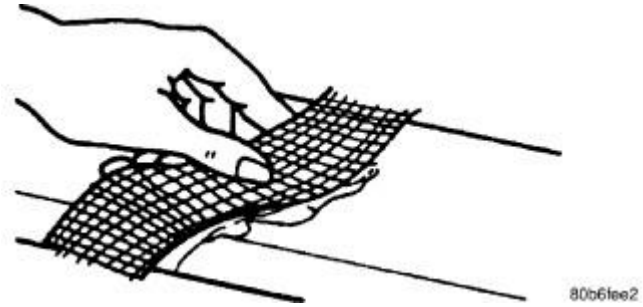

Fig. 5: Fiberglass Tape
Courtesy of CHRYSLER LLC

- Panel repair for both flexible and rigid panels are basically the same. The primary difference between flexible panel repair and rigid panel repair is in the adhesive materials used.
- The technician should first decide what needs to be done when working on any type of body panel. One should determine if it is possible to return the damage part to its original strength and appearance without exceeding the value of the replacement part.
- When plastic repairs are required, it is recommended that the part be left on the vehicle when ever possible. That will save time, and the panel will remain stationary during the repair. Misalignment can cause stress in the repair areas and can result in future failure.

VISUAL INSPECTION

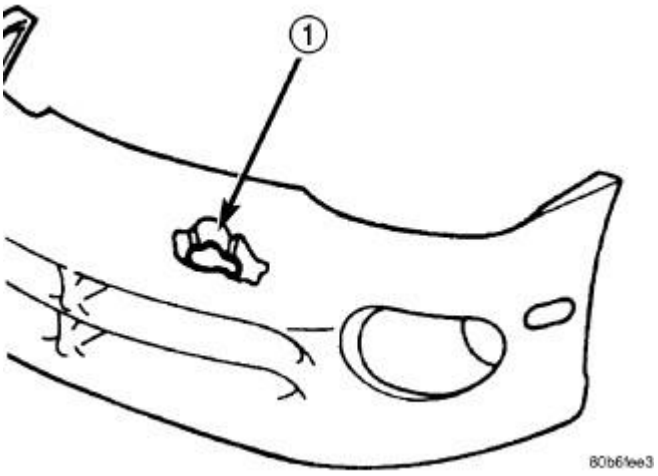

Fig. 6: Damage Component
Courtesy of CHRYSLER LLC

1 - PUNCTURE

Composite materials can mask the severity of an accident. Adhesive bond lines, interior structure of the doors, and steel structures need to be inspected carefully to get a true damage assessment. Close inspection may require partial removal of interior trim or inner panels.

Identify the type of repair: Puncture or Crack - Damage that has penetrated completely through the panel. Damage is confined to one general area; a panel section is not required. However, a backer panel, open fiberglass tape, or matted material must be bonded from behind.

PANEL SURFACE PREPARATION

If a body panel has been punctured, cracked, or crushed, the damaged area must be removed from the panel to achieve a successful repair. All spider web cracks leading away from a damaged area must be stopped or removed. To stop a running crack in a panel, drill a 6 mm (0.250 in.) hole at the end of the crack farthest away from the damage. If spider web cracks can not be stopped, the panel would require replacement. The surfaces around the damaged area should be stripped of paint and freed from wax and oil. Scuff surfaces around repair area with 360 grit wet/dry sandpaper, or equivalent, to assure adhesion of repair materials.

PATCHING PANELS

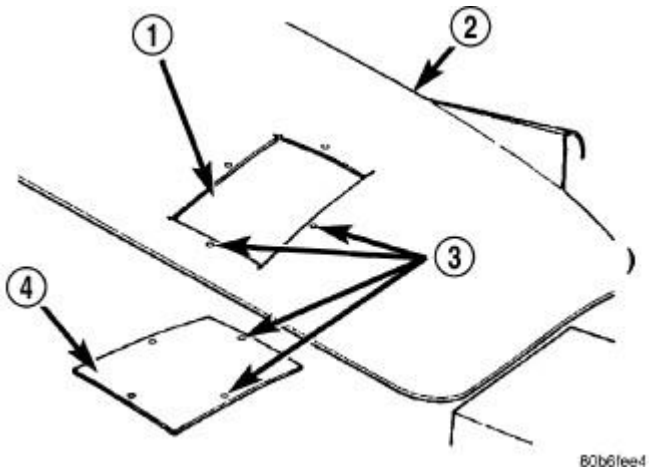

Fig. 7: Damaged Panel Cutout And Patch
Courtesy of CHRYSLER LLC

1 - CUTOUT 2 - DAMAGED BODY PANEL 3 - 4 MM (0.160 IN.) HOLES 4 - PATCH CUT TO SIZE

A panel that has extensive puncture type damage can be repaired by cutting out the damaged material. Use a suitable reciprocating saw or cut off wheel to remove the section of the panel that is damaged. The piece cut out can be used as a template to shape the new patch. It is not necessary to have access to the back of the panel to install a patch. Bevel edges of cutout at 20° to expose a larger bonding area on the outer side. This will allow for an increased reinforcement areas.

PANEL PATCH FABRICATIONS

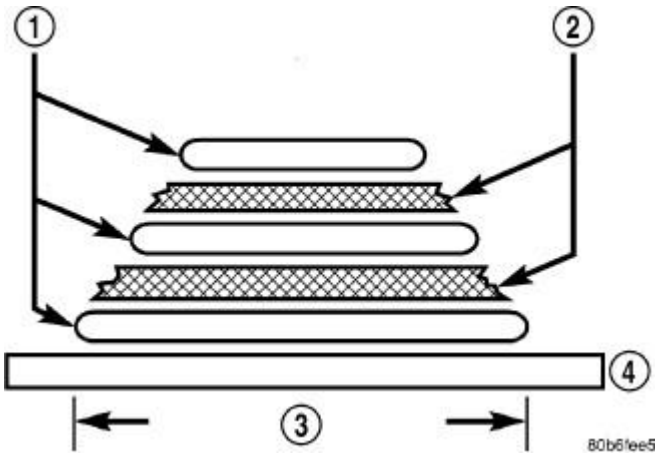

Fig. 8: Fabricated Panel
Courtesy of CHRYSLER LLC

1 - STRUCTURAL ADHESIVE 2 - FIBERGLASS CLOTH OR FIBERGLASS MESH TAPE

3 - WIDTH OF V-GROOVE
4 - WAXED PAPER

A patch can be fabricated from any rigid fiberglass panel that has comparable contour with the repair area. Lift gates and fenders can be used to supply patch material. If existing material is not available or compatible, a patch can be constructed with adhesive and reinforcement mesh (dry wall tape). Perform the following operation if required:

1. Cover waxed paper or plastic with adhesive backed nylon mesh (dry wall tape) larger than the patch required.
2. Tape waxed paper or plastic sheet with mesh to a surface that has a compatible contour to the repair area.
3. Apply a liberal coat of adhesive over the reinforcement mesh. If necessary apply a second or third coat of adhesive and mesh after first coat has cured. The thickness of the patch should be the same as the repair area.
4. After patch has cured, peel waxed paper or plastic from the back of the patch.
5. If desired, a thin film coat of adhesive can be applied to the back of the patch to cover mesh for added strength.

PANEL PATCH INSTALLATION

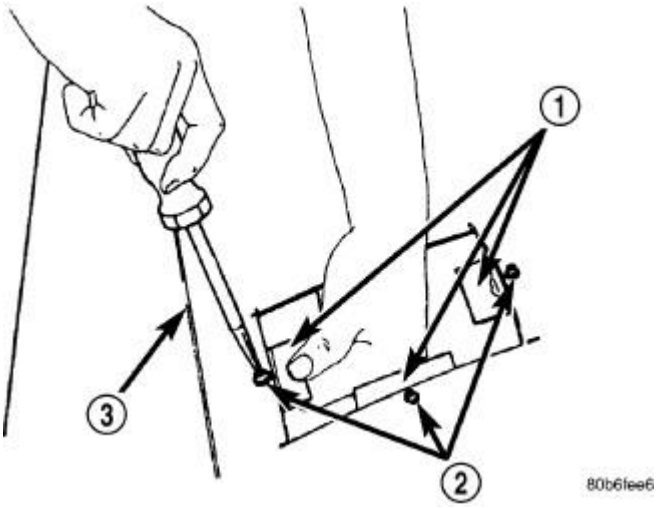

Fig. 9: Secure Support Squares To Body Panel
Courtesy of CHRYSLER LLC

1 - SUPPORT SQUARES
2 - SCREWS
3 - DAMAGED BODY PANEL

1. Make a paper or cardboard pattern the size and shape of the cutout hole in the panel.
2. Trim 3 mm (0.125 in.) from edges of pattern so patch will have a gap between connecting surfaces.

3. Using the pattern as a guide, cut the patch to size.
4. Cut scrap pieces of patch material into 50 mm (2 in.) squares to use as patch supports to sustain the patch in the cutout.
5. Drill 4 mm (0.160 in.) holes 13 mm (0.5 in.) in from edge of cutout hole.
6. Drill 4 mm (0.160 in.) holes 13 mm (0.5 in.) away from edge of patch across from holes drilled around cutout.
7. Drill 3 mm (0.125 in.) holes in the support squares 13 mm (0.5 in.) from the edge in the center of one side.
8. Scuff the backside of the body panel around the cutout hole with a scuff pad or sandpaper.
9. Mix enough adhesive to cover one side of all support squares.
10. Apply adhesive to cover one side of all support squares.
11. Using number 8 sheet metal screws, secure support squares to back side of body panel with adhesive sandwiched between the panel and squares.

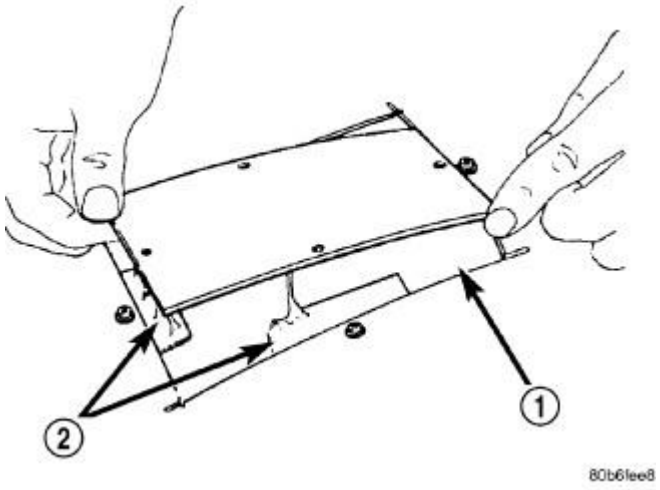

Fig. 10: Position Patch In Cutout And Align
Courtesy of CHRYSLER LLC

1 - CUTOUT 2 - SUPPORT SQUARES

12. Position patch in cutout against support squares and adjust patch until the gap is equal along all sides.
13. Drill 3 mm (0.125 in.) holes in the support squares through the pre-drilled holes in the patch.

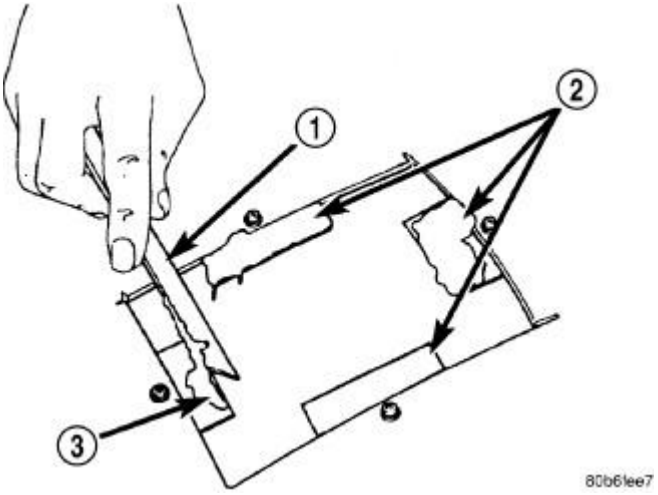

Fig. 11: Apply Adhesive To Support Squares
Courtesy of CHRYSLER LLC

1 - APPLICATOR 2 - SUPPORT SQUARES 3 - ADHESIVE

14. Apply a coat of adhesive to the exposed ends of the support squares.

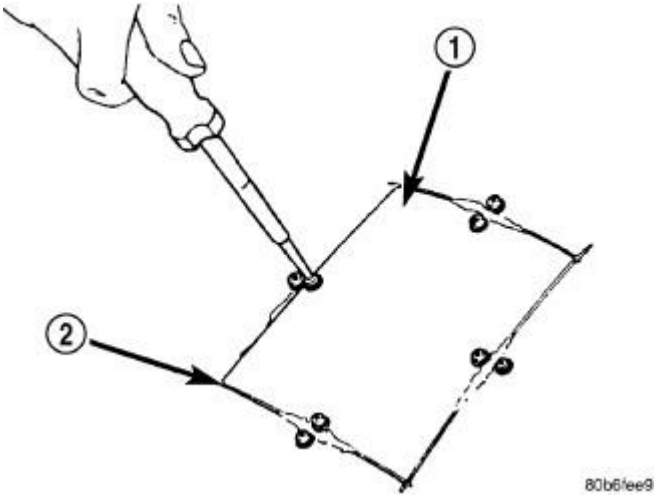

Fig. 12: Installing Screws
Courtesy of CHRYSLER LLC

1 - PATCH 2 - GAP

15. Install screws to hold the patch to support squares. Tighten screws until patch surface is flush with panel surface.
16. Allow adhesive to cure, and remove all screws.

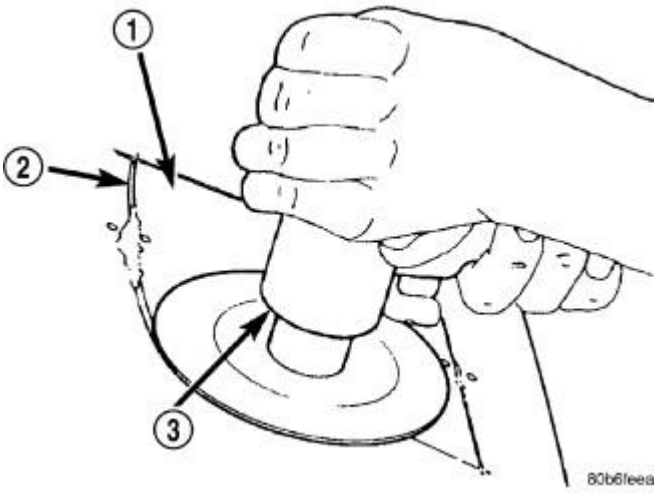

Fig. 13: Grind Surface
Courtesy of CHRYSLER LLC

1 - PATCH 2 - GAP 3 - DISC GRINDER

17. Using a 125 mm (5 in.) 24 grit disc grinder, grind a 50 mm (2 in.) to 75 mm (3 in.) wide and 2 mm (0.080 in.) deep path across the gaps around the patch. With compressed air, blow dust from around patch.

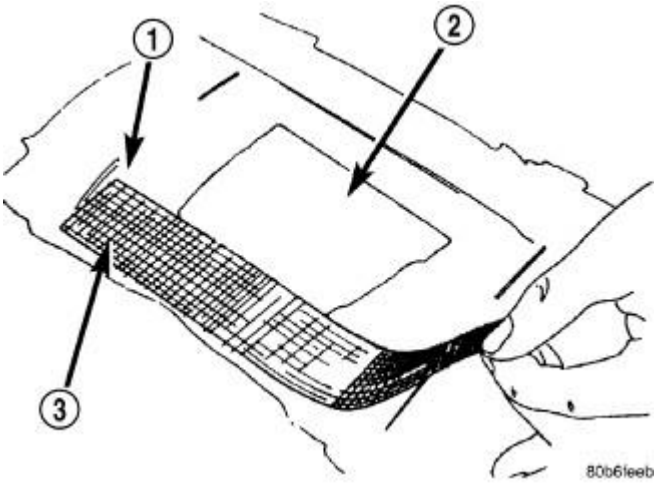

Fig. 14: Cover Gaps With Mesh
Courtesy of CHRYSLER LLC

1 - GROUND DOWN AREA 2 - PATCH 3 - MESH

18. Apply adhesive backed nylon mesh (dry wall tape) over gaps around patch.

19. Mix enough adhesive to cover the entire patch area.

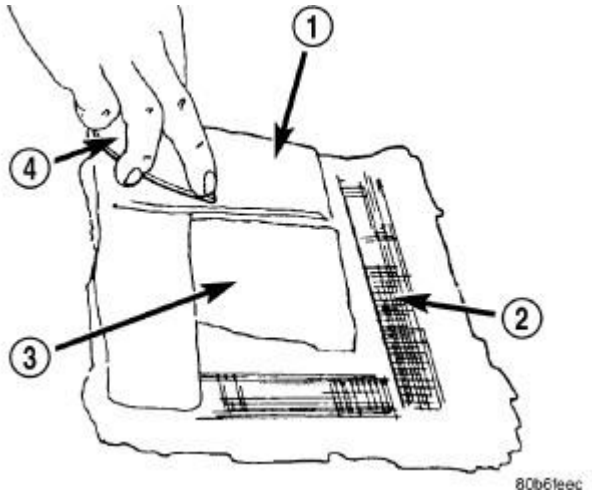

Fig. 15: Cover Mesh With Adhesive
Courtesy of CHRYSLER LLC

1 - ADHESIVE
2 - MESH
3 - PATCH
4 - SPREADER

20. Apply adhesive over the mesh around patch, and smooth epoxy with a wide spreader to reduce finish grinding. Use two to three layers of mesh and adhesive to create a stronger repair.

PATCHED PANEL SURFACING

After patch panel is installed, the patch area can be finished using the same methods as finishing other types of body panels. If mesh material is exposed in the patched area, grind surface down, and apply a coat of high quality rigid plastic body filler. Prime, block sand, and paint as required.

SPECIFICATIONS

TORQUE SPECIFICATIONS

TORQUE SPECIFICATIONS

DESCRIPTION	N.m	Ft. Lbs.	In. Lbs.
Front Console Shifter Bezel	3	-	23
Front Console to Instrument Panel	3	-	23
Front Door Bottom Pull Bracket to Window Regulator Rear Rail	11	-	100
Front Door Latch to Outer Latch Face	12	-	108
Front Door Bottom Pull Cup Bracket to Inside Front Door	11	-	100

Front Door Glass Clamps	10	-	90
Front Door Exterior Handle to Door	5	-	44
Front seat track to floor pan bolts	61	45	-
Front seat inboard pivot bolt	40	30	-
Front seat recliner to seat cushion frame	12	9	-
Front seat track to cushion frame bolt	12	9	-
Front seat back	40	30	-
Front seat back to seat cushion	30	22	-
Front seat arm rest - 60/40	12	9	-
Front arm rest - 50/50 split	25	18	-
Front seat back recliner to seat back	12	9	-
Front seat belt buckle anchor nut	40	29	-
Front seat belt retractor bolt	38	28	-
Front seat belt buckle anchor bolt	40	29	-
Front door hinge to hinge pillar bolt	28	21	-
Front Door Hinge to Bracket to Outside the Lower A-Pillar	30	-	22
Front door hinge to door nuts and bolt	28	21	-
Front door latch striker	28	20	-
Front seat rear outboard seat track to floor pan bolts	28	20	-
Front strut tower to tower brace bolts	38	28	-
Decklid latch striker	22	16	-
Decklid Spoiler SRT 8	6	4.4	-
Door hinge bolt and nut	28	21	-
Door hinge double ended stud	14	-	120
Headlamp Mounting Crossmember	28	-	21
Hood latch release cable handle to the cowl side	2.3 to 3.4	-	20 to 30
Hood latch to crossmember	22.6 to 33.9	-	200 to 300
Hood hinges	22.6 to 33.9	-	200 to 300
Horn to Crossmember	28	-	21
Instrument Panel Side Support Bolts	27	-	20
Interior Remote Handle to Inside Door	2	-	16
Instrument Panel Fence Bolts	8	-	70
Instrument Panel Bottom Bolts	6	-	55
Rear Child Tether anchor	20	15	-
Radiator Mounting Bracket to Headlamp Mounting Crossmember	28	-	21
Rear door glass to regulator bolt	11	-	105
Rear seat arm rest to seat back with ski pass	5	-	46
Rear seat back and belts to floor	44	32	-

Rear seat back 40 section to collar section	60	44	-
Rear seat back 60 section	16	12	-
Rear seat back collar assembly	60	44	-
Rear door hinge to B-pillar bolt	28	20	-
Rear door hinge to door bolt	28	20	-
Rear door latch striker	28	20	-
Sunroof module to roof panel	9	-	80

SPECIAL TOOLS

SPECIAL TOOLS

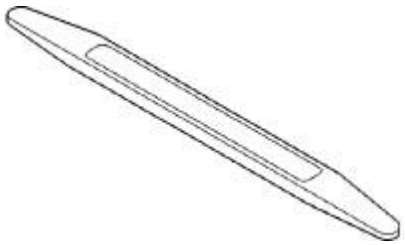

Fig. 16: Trim Stick C-4755
Courtesy of CHRYSLER LLC



Fig. 17: Torx Bit Set C-4794-B
Courtesy of CHRYSLER LLC

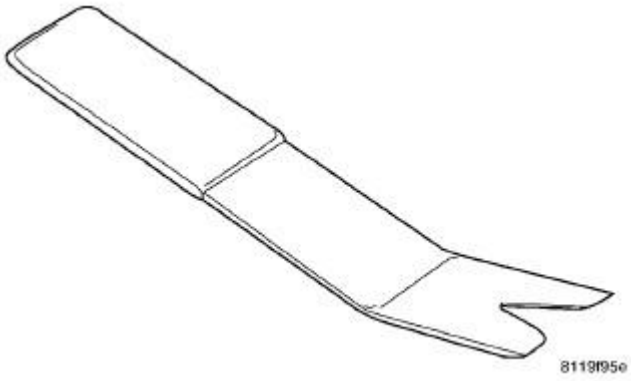

Fig. 18: Remover, Moldings C-4829-A
Courtesy of CHRYSLER LLC

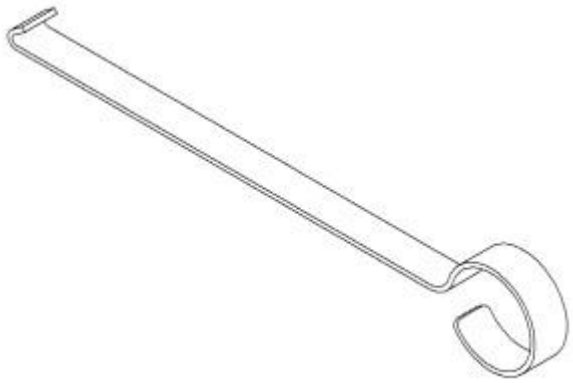

Fig. 19: Remover, Outer Door Belt Molding - 9093
Courtesy of CHRYSLER LLC

BODY STRUCTURE

GAP AND FLUSH

Specifications

GAP AND FLUSH

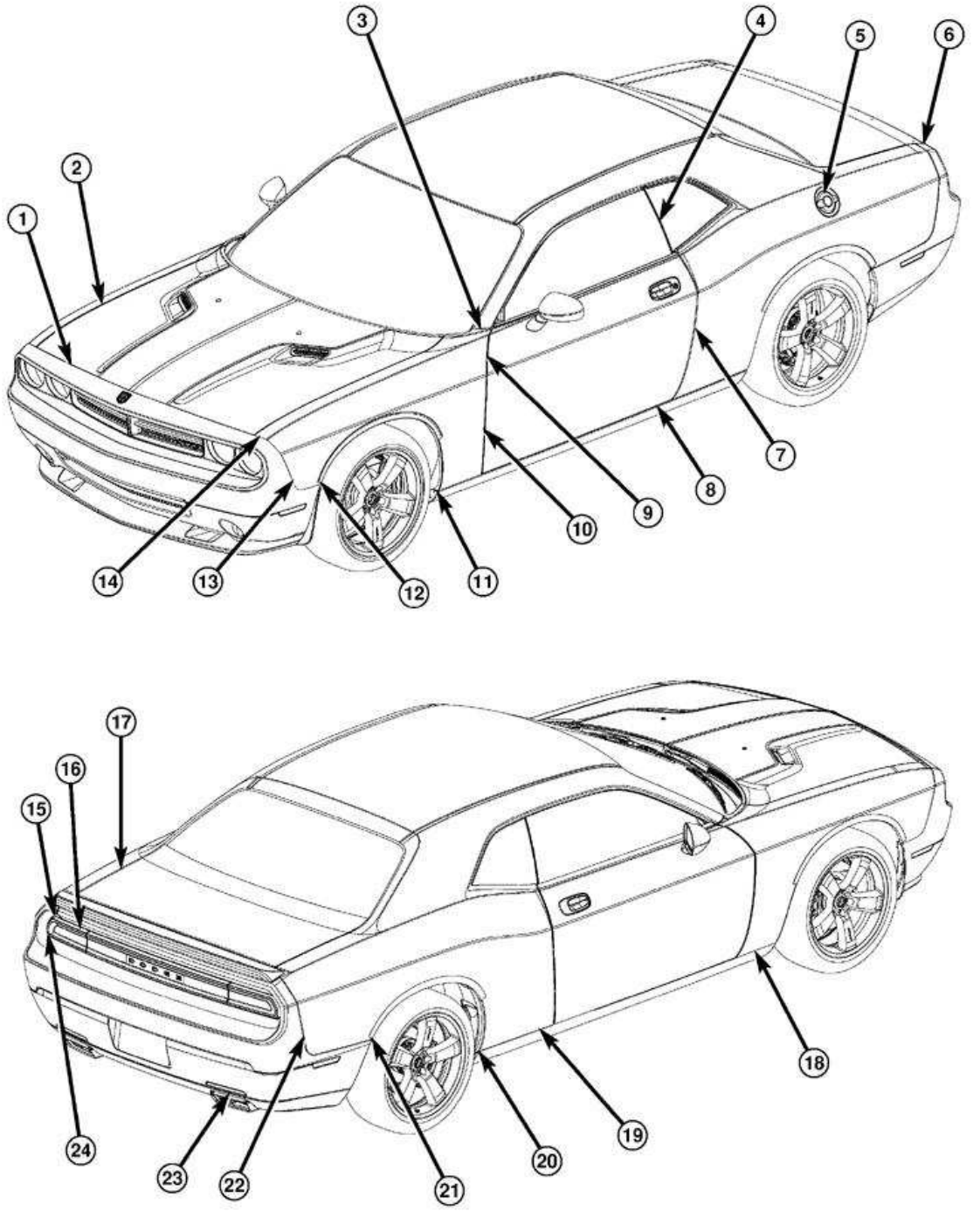

Fig. 20: Challenger Gap & Flush
Courtesy of CHRYSLER LLC

NOTE: All dimensions are in millimeters (mm).

- **O/F = Over Flush**
- **U/F = Under Flush**

- **U/D = Up/Down**
- **F/A = Fore/Aft**

CHALLENGER MEASUREMENTS

DIMENSION	DESCRIPTION	GAP	FLUSH
1	Hood to Fascia	3.5 +/- 1.5 Parallel within 2.0	Fascia O/F 0.5 +0.5/-1.0 Consistent within 1.5
2	Hood to Fender	3.5 +/- 1.0 Parallel within 1.0	Hood 1.0 U/F +/- 1.5 -
3	Fender to Body Side Aperture (A-Pillar)	3.0 +/- 1.0	-- -
4	Door Glass to Quarter Glass (Fixed)	6.0 +/- 2.0 Parallel within 2.0	By Design +0/-3.0 -
5	Fuel Filler Door to Body Side Aperture	Base: 3.0 +/- 1.0 Premium: 1.0 +/- 0.5 -	Base: Body Side Aperture O/F 0.5 +/- 1.0 Premium: No Flush Required
6	Decklid to Fascia Cross/Car	4.0 +/- 1.5	Decklid U/F 0.8 +/- 1.5 -
7	Door to Body Side Aperture -	4.0 +/- 1.0 Parallel within 1.0	0.0 +/- 1.0 Parallel within 1.0
8	Door to Side Sill Cladding -	6.0 +/- 2.0 Parallel within 2.0	3.25 +/-2.0 -
9	Fender to Door (Above Character Line)	4.5 +/- 1.0 Parallel within 1.0	+0/-2.0 -
10	Fender to Door (Below Character Line)	4.5 +/- 1.0 Parallel within 1.0	Fender O/F 1.0 +/- 1.0 Parallel within 1.0
11	Fender to Side Sill F/A @ Wheel Opening	--	U/F 1.0 +/- 2.0 -
12	Fascia to Fender F/A @ Wheel Opening Base Only	--	O/F 1.0 +/- 2.0 - -
13	Fascia to Fender (Side)	0.0/+ 1.0	O/F 0.5 +/- 1.0 Consistent within 1.0
14	Fascia to Fender	0.0/+ 1.0	U/F 0.5 +/- 1.0

15	Decklid to Fascia F/A	--	+/- 1.5 -
16	Tail Lamp to Decklid	8.0 +/- 2.0 Parallel within 2.0 Right to Left	-- - -
17	Decklid to Body Side Aperture -	4.0 +/- 1.0 Parallel within 1.5	Decklid U/F 0.8 +/- 1.5 -
18	Fender to Side Sill Cladding	3.0 +/- 1.5	2.5 +/- 2.0 -
19	Body Side Aperture to Side Sill Cladding	3.0 +/- 1.5	3.0 +/- 2.0 -
20	Body Side Aperture to Side Sill Cladding F/A @ Wheel Opening	--	U/F 1.0 +/- 2.0 -
21	Fascia to Body Side Aperture F/A @ Wheel Opening	--	O/F 1.0 +/- 2.0 -
22	Rear Fascia to Body Side Aperture	0.0/ +1.0	Fascia 0.0 +/- 1.0 -
23	Exhaust Tip to Fascia	25.0 +/- 4.0	--
24	Tail Lamp to Fascia	4.5 +/- 1.0	--

OPENING DIMENSIONS

Specifications

OPENING DIMENSIONS

Index

DESCRIPTION	FIGURE
ENGINE BOX	See **Fig. 21**.
WINDSHIELD	See **Fig. 22**.
DOORS	See **Fig. 23**.
QUARTER WINDOW	See **Fig. 24**.
REAR WINDOW	See **Fig. 25**.
DECK LID	See **Fig. 26**.

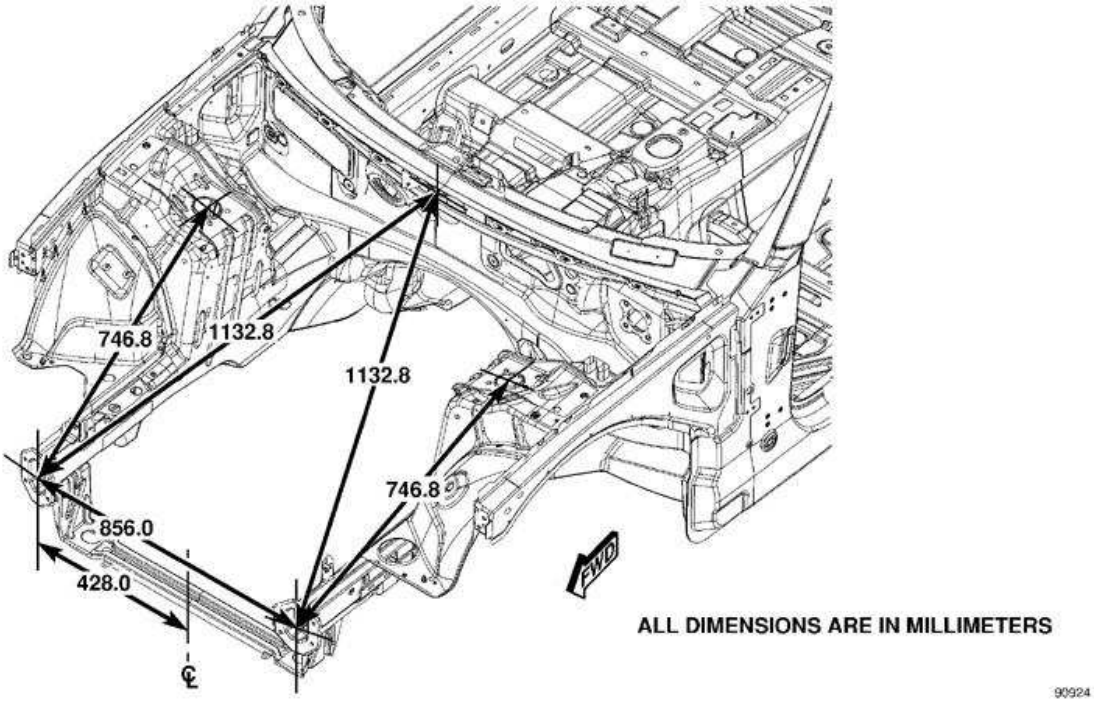

Fig. 21: Engine Box
Courtesy of CHRYSLER LLC

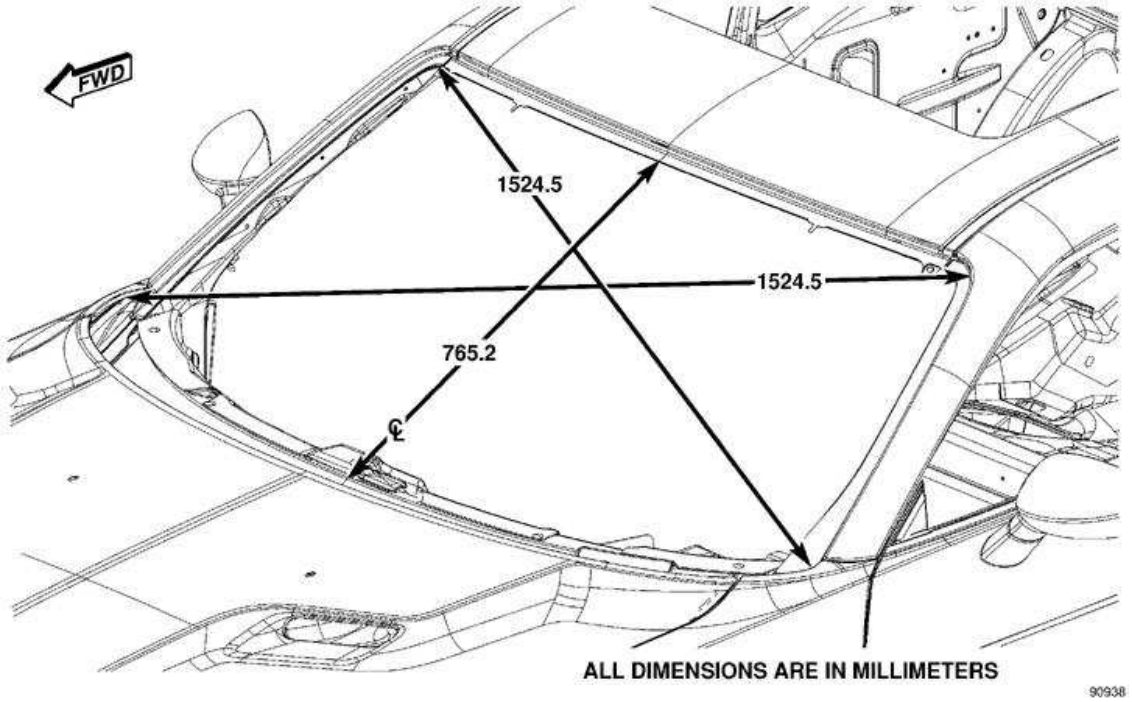

Fig. 22: Windshield
Courtesy of CHRYSLER LLC

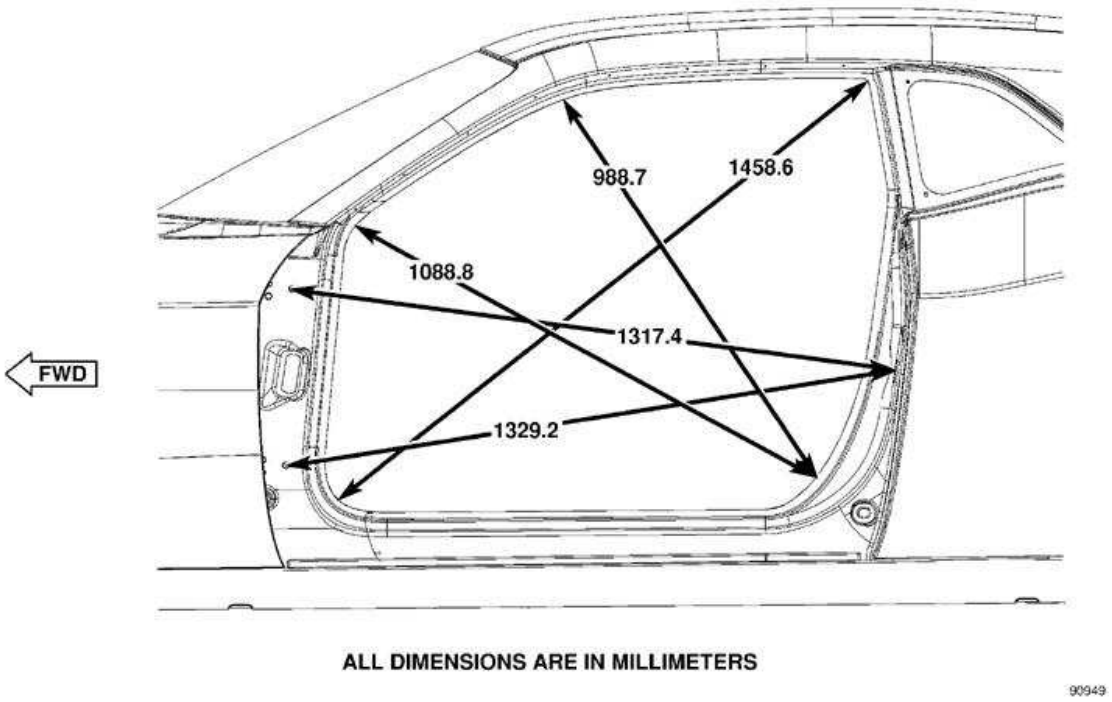

Fig. 23: Doors
Courtesy of CHRYSLER LLC

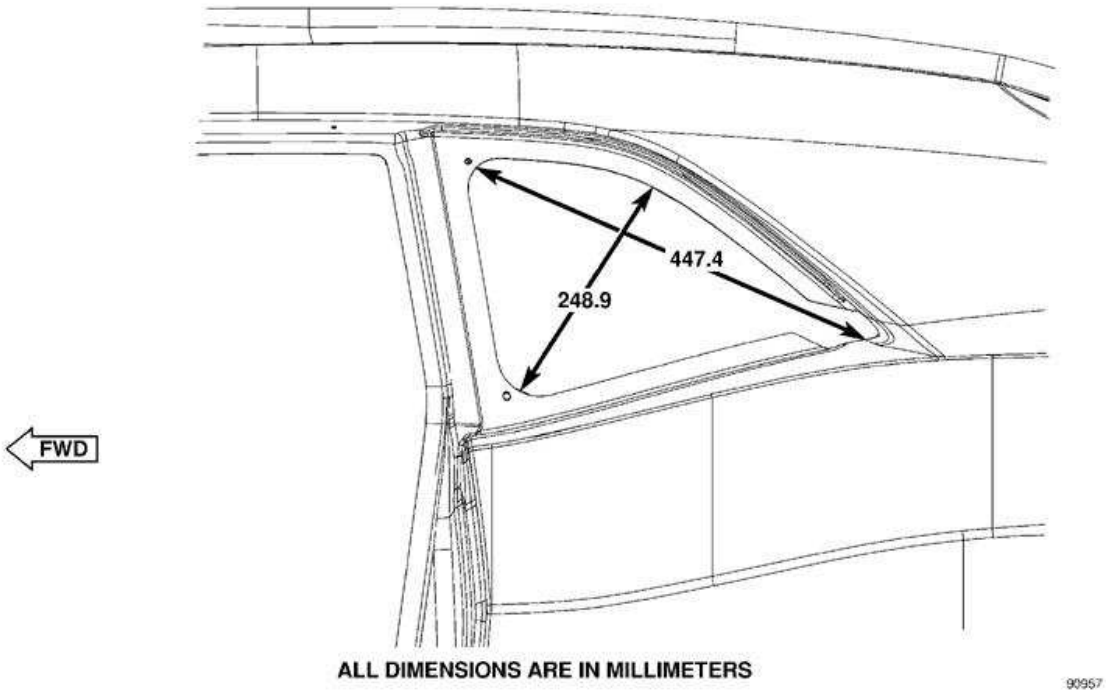

Fig. 24: Quarter Window
Courtesy of CHRYSLER LLC

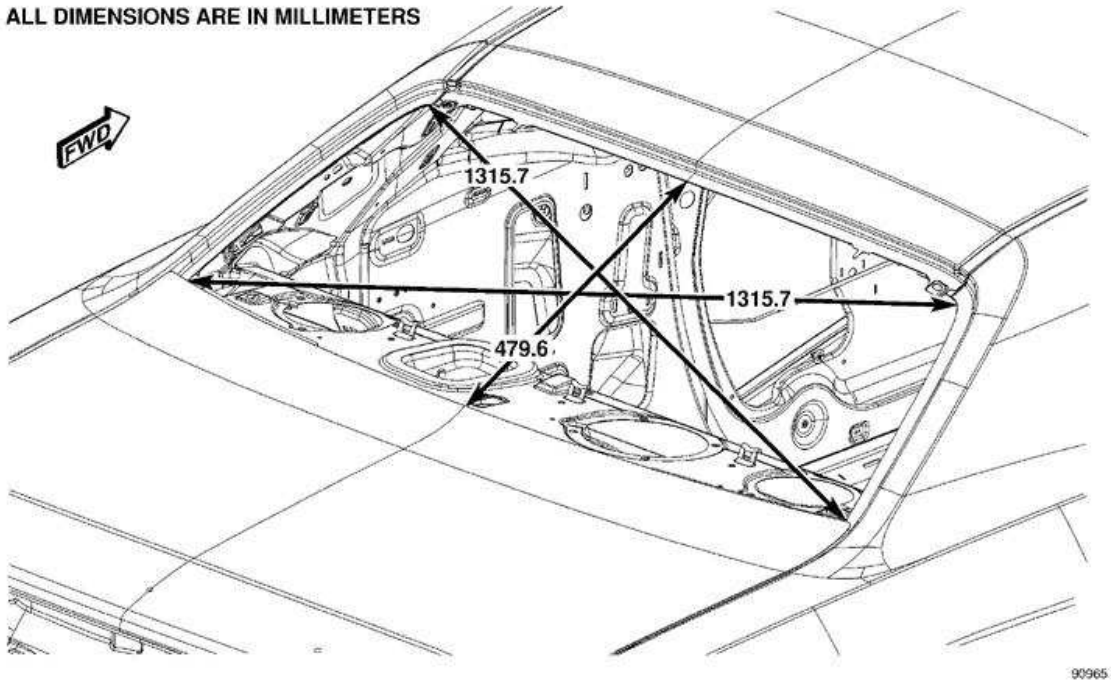

Fig. 25: Rear Window
Courtesy of CHRYSLER LLC

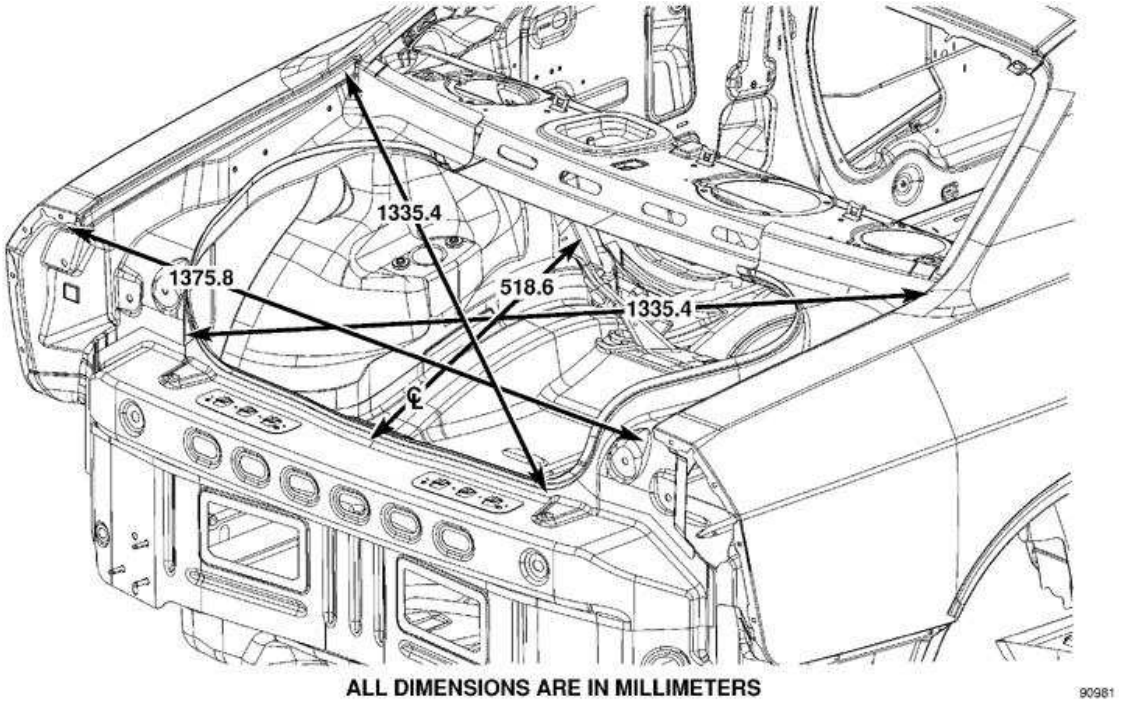

Fig. 26: Deck Lid
Courtesy of CHRYSLER LLC

SEALER LOCATIONS

Specifications

BODY SEALING LOCATIONS

Index

DESCRIPTION	FIGURE
APPLICATION METHODS	See **Fig. 27**.
FRONT COWL/LOAD BEAM	See **Fig. 28**.
COWL/INNER BODY SIDE	See **Fig. 29**.
COWL/INNER BODY SIDE	See **Fig. 30**.
FRONT FLOOR PAN/CENTER FLOOR PAN	See **Fig. 31**.
FLOOR/BODY SIDE INNER UNDERSIDE	See **Fig. 32**.
BODY SIDE APERTURE OUTER SILL	See **Fig. 33**.
ROOF/BODY SIDE APERTURE (1 OF 2)	See **Fig. 34**.
ROOF/BODY SIDE APERTURE (2 OF 2)	See **Fig. 35**.
QUARTER WINDOW	See **Fig. 36**.
ROOF/UPPER "C" PILLAR	See **Fig. 37**.
KICKUP CROSSMEMBER/FLOOR PAN	See **Fig. 38**.
CROSSMEMBER/OUTER RAIL SEAM	See **Fig. 39**.
OUTER REAR WHEELHOUSE/INNER PANEL (1 OF 2)	See **Fig. 40**.
OUTER REAR WHEELHOUSE/INNER PANEL (2 OF 2)	See **Fig. 41**.
REAR WHEELHOUSE(FRONT)/RAIL INNER/CENTER FLOOR PAN	See **Fig. 42**.
INNER RAIL/OUTER RAIL AT REAR WHEELHOUSE	See **Fig. 43**.
REAR FLOOR/BODY SIDE APERTURE INNER/LOWER DECK	See **Fig. 44**.
REAR WHEELHOUSE INNER/REAR FLOOR PAN	See **Fig. 45**.
UPPER DRAIN TROUGH/BODY SIDE APERTURE	See **Fig. 46**.
DECK LID TROUGH	See **Fig. 47**.
REAR FLOOR/LOWER DECK AND REAR RAILS	See **Fig. 48**.
REAR FLOOR PAN/REAR SUSPENSION CROSSMEMBER	See **Fig. 49**.
LOWER EXTENSION/LOWER WHEELHOUSE OUTER	See **Fig. 50**.
INNER TAIL LAMP CAN/LOWER DECK	See **Fig. 51**.
OUTER TAIL LAMP CAN	See **Fig. 52**.

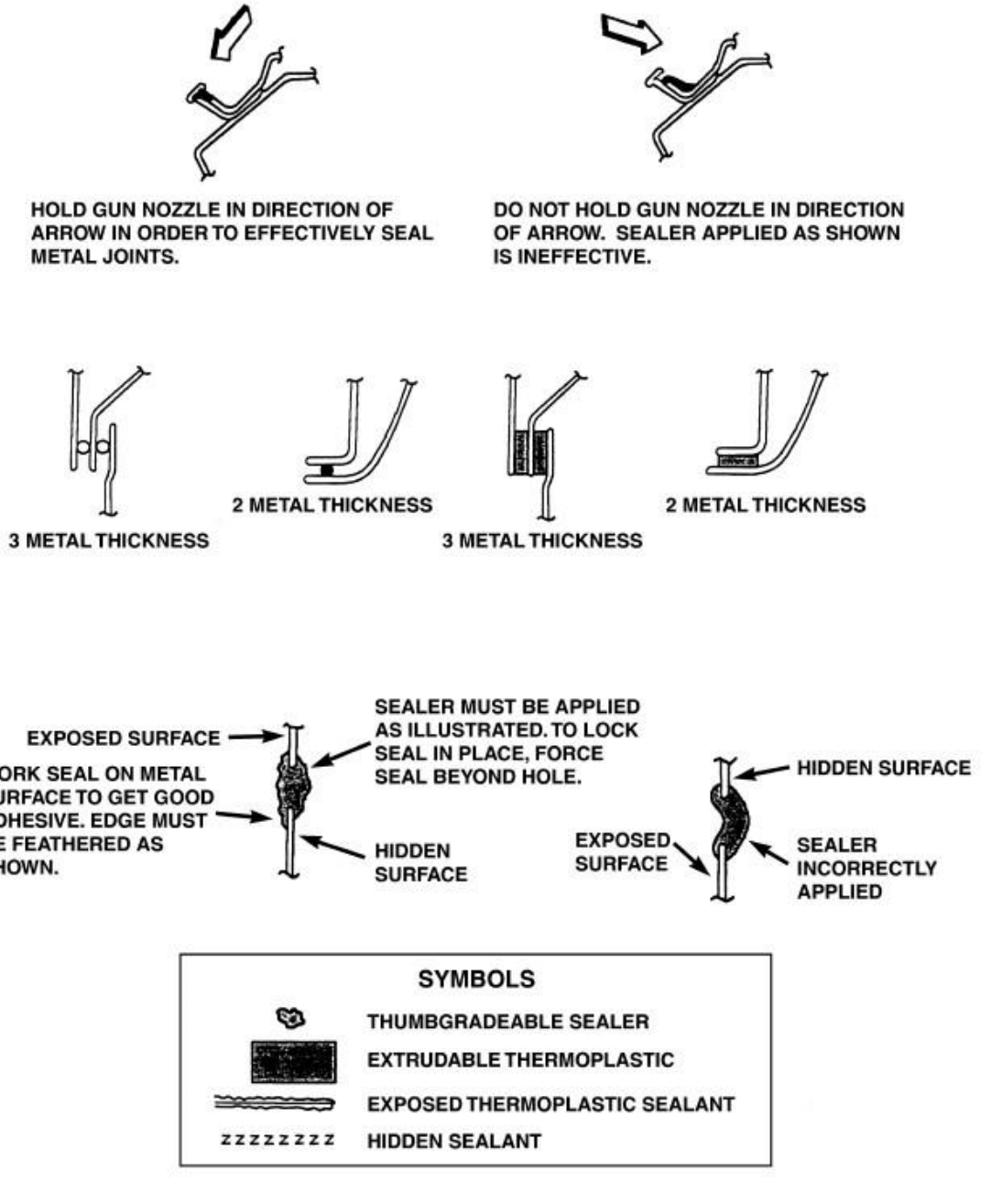

Fig. 27: Application Methods
Courtesy of CHRYSLER LLC

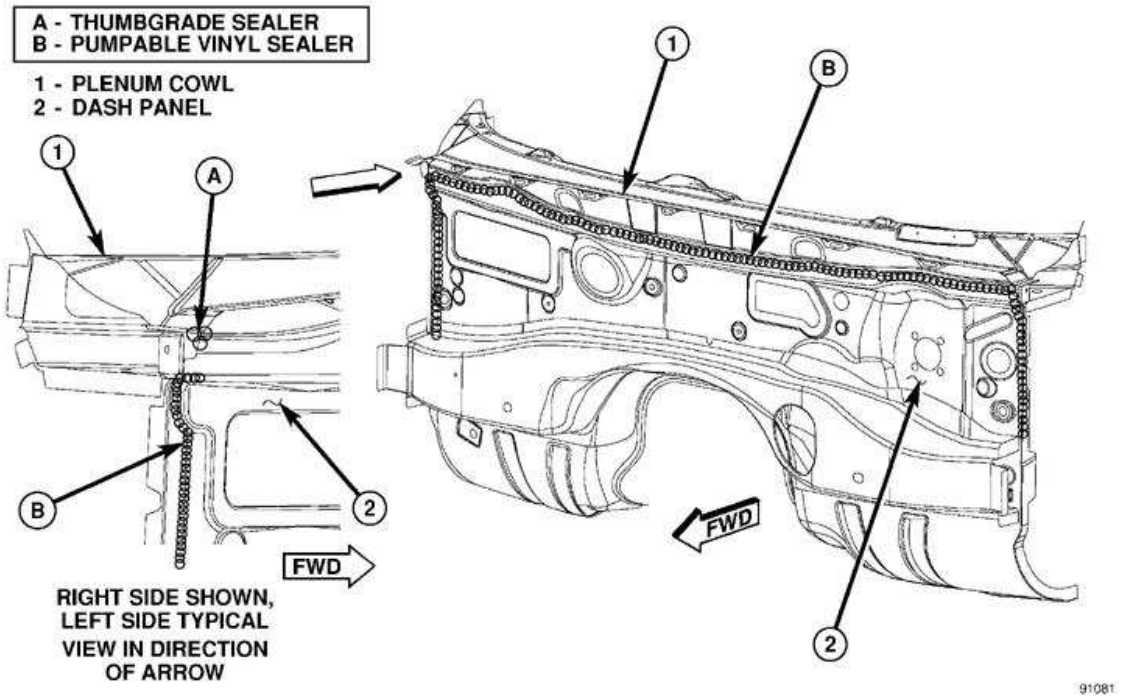

Fig. 28: Front Cowl/Load Beam
Courtesy of CHRYSLER LLC

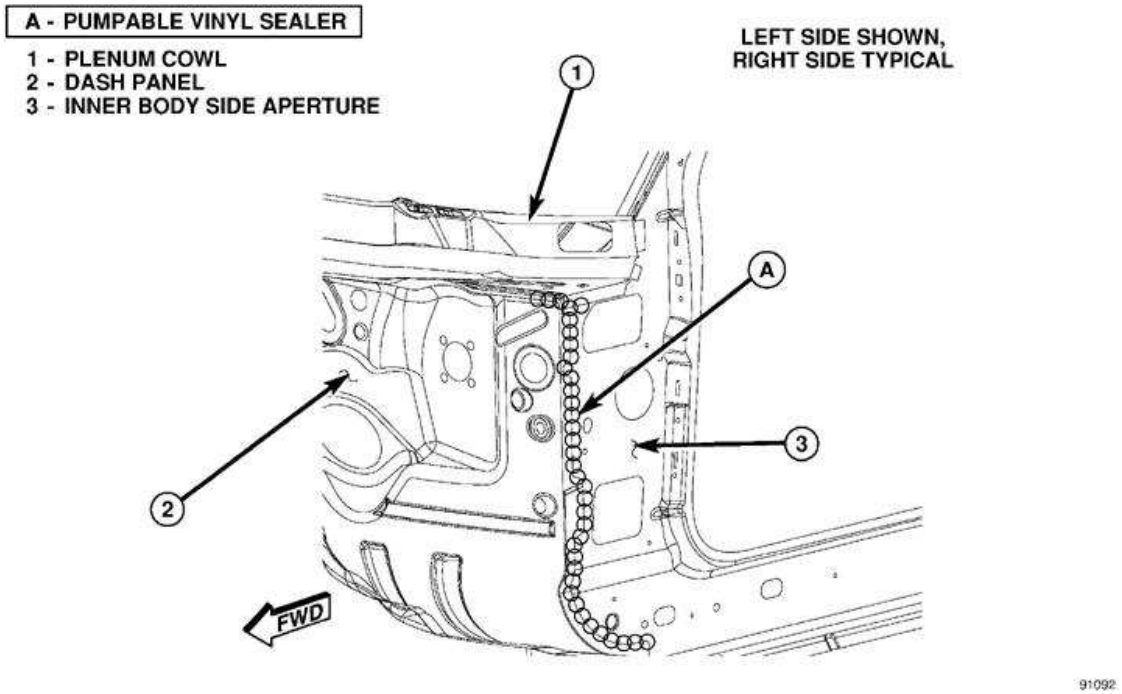

Fig. 29: Cowl/Inner Body Side
Courtesy of CHRYSLER LLC

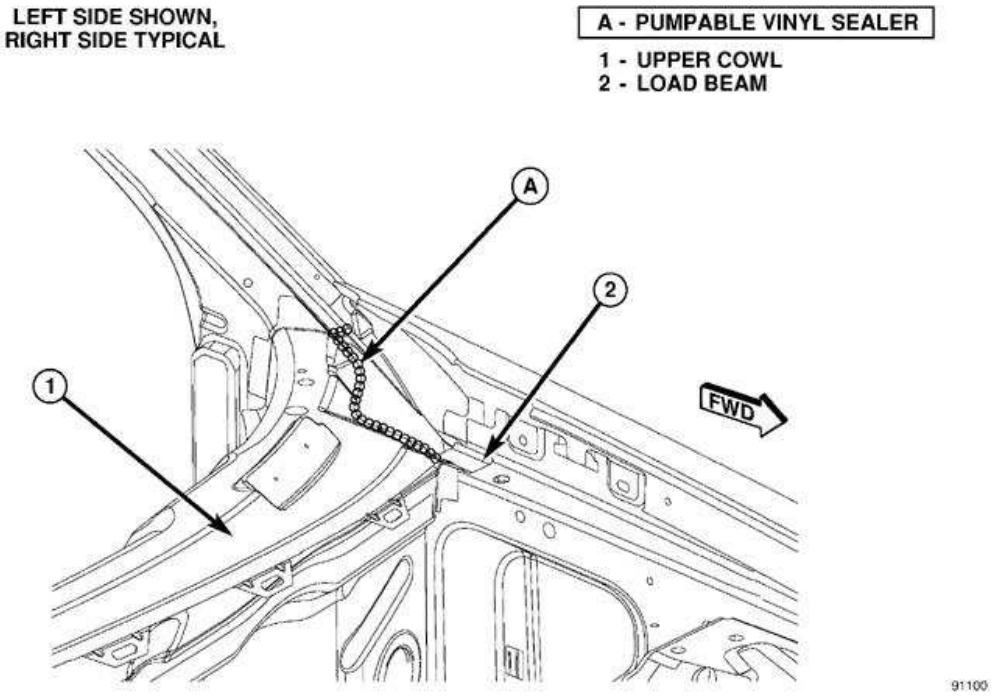

Fig. 30: Cowl/Inner Body Side
Courtesy of CHRYSLER LLC

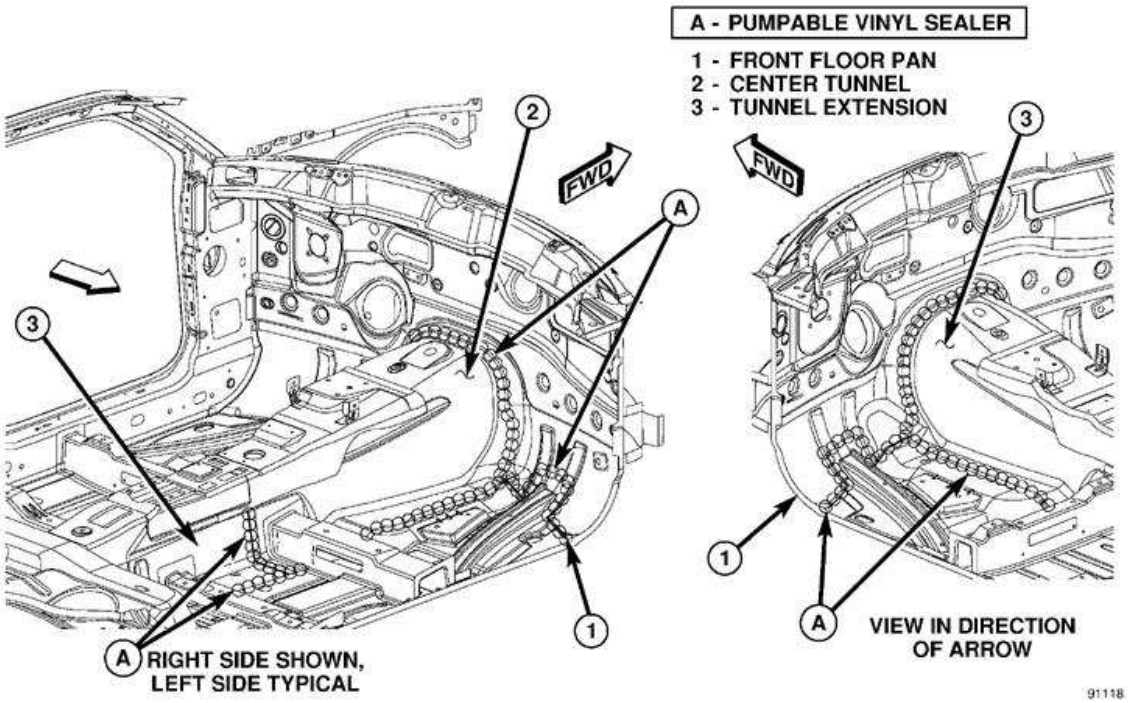

Fig. 31: Front Floor Pan/Center Floor Pan
Courtesy of CHRYSLER LLC

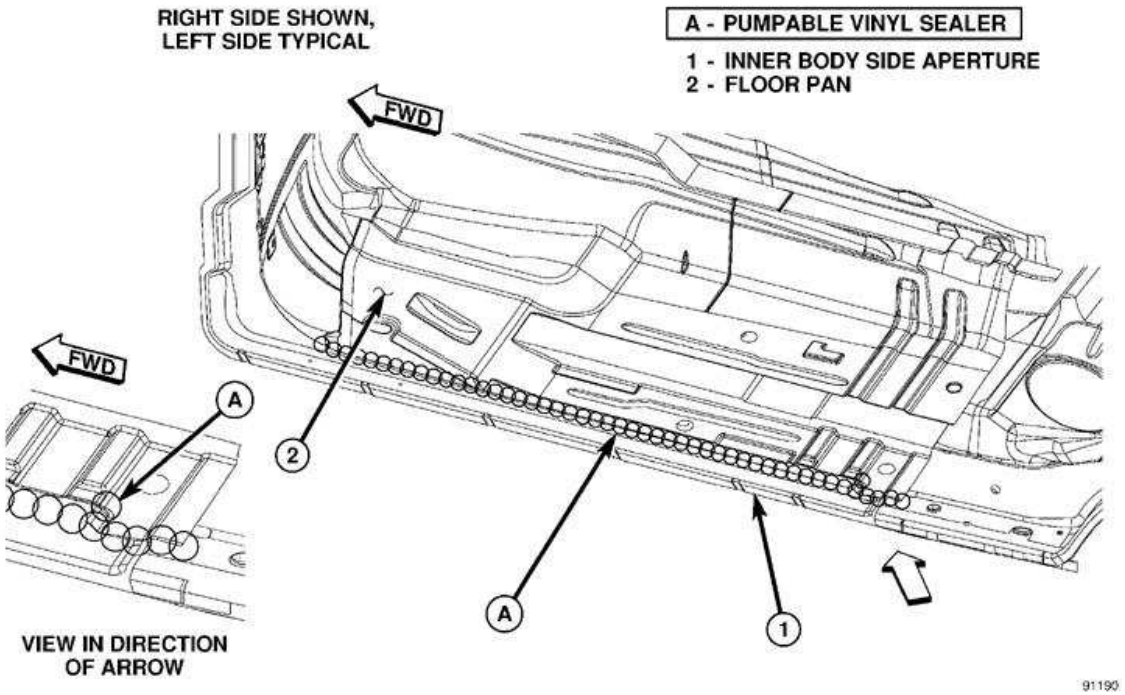

Fig. 32: Floor/Body Side Inner Underside
Courtesy of CHRYSLER LLC

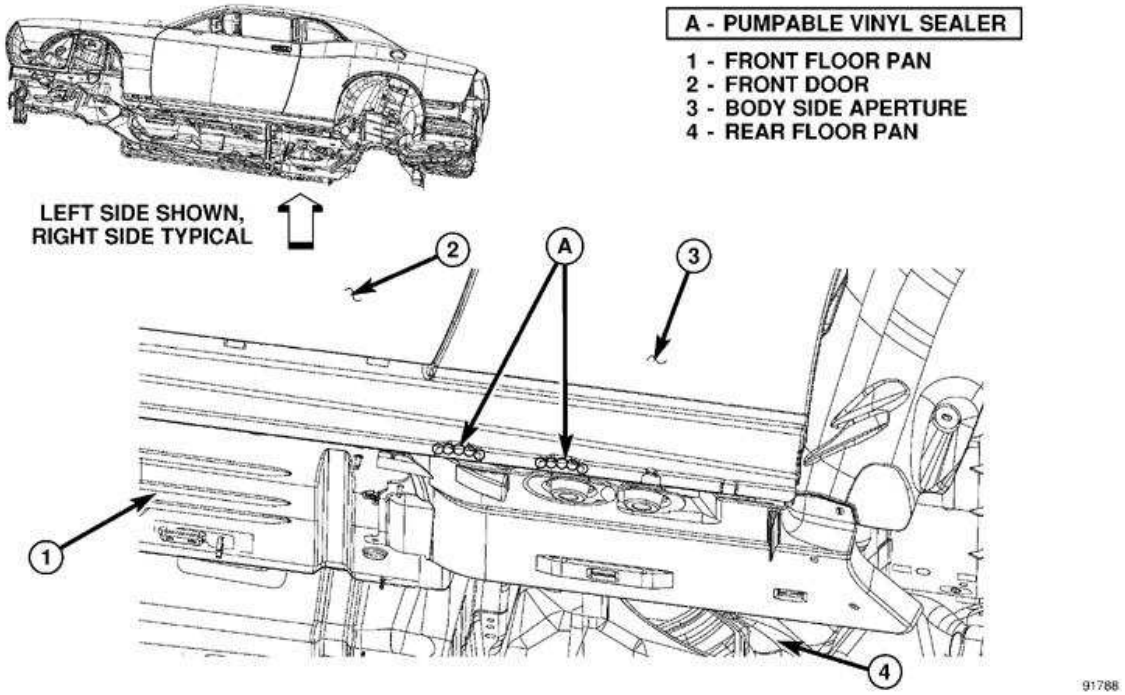

Fig. 33: Body Side Aperture Outer Sill
Courtesy of CHRYSLER LLC

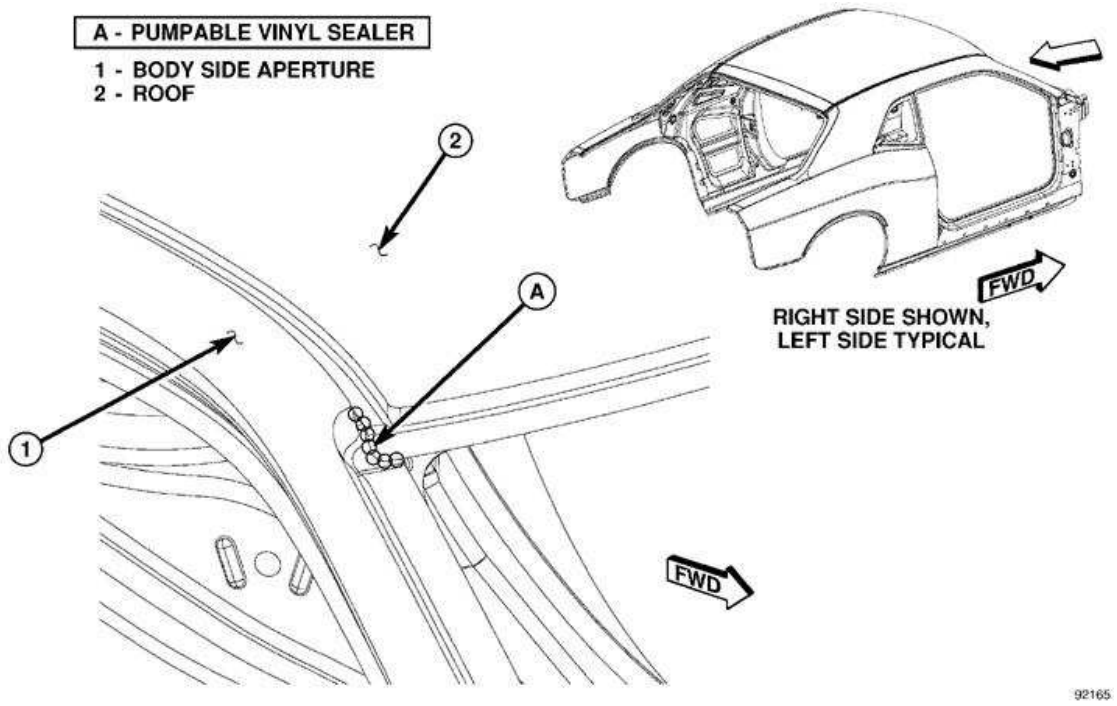

Fig. 34: Roof/Body Side Aperture (1 Of 2)
Courtesy of CHRYSLER LLC

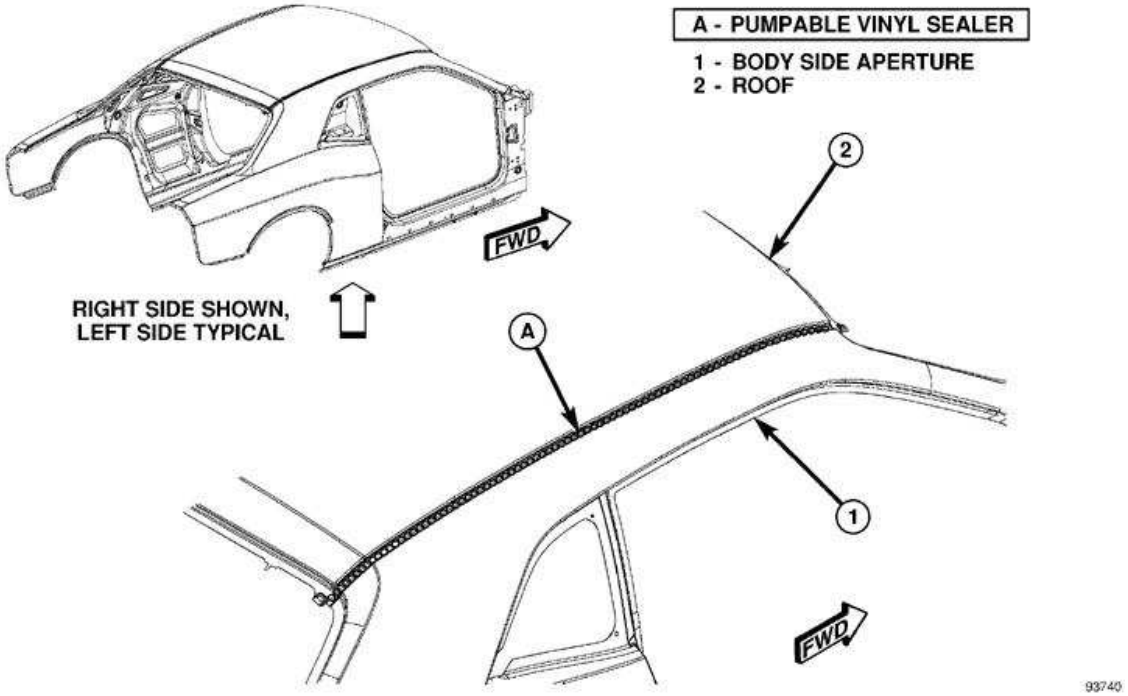

Fig. 35: Roof/Body Side Aperture (2 Of 2)
Courtesy of CHRYSLER LLC

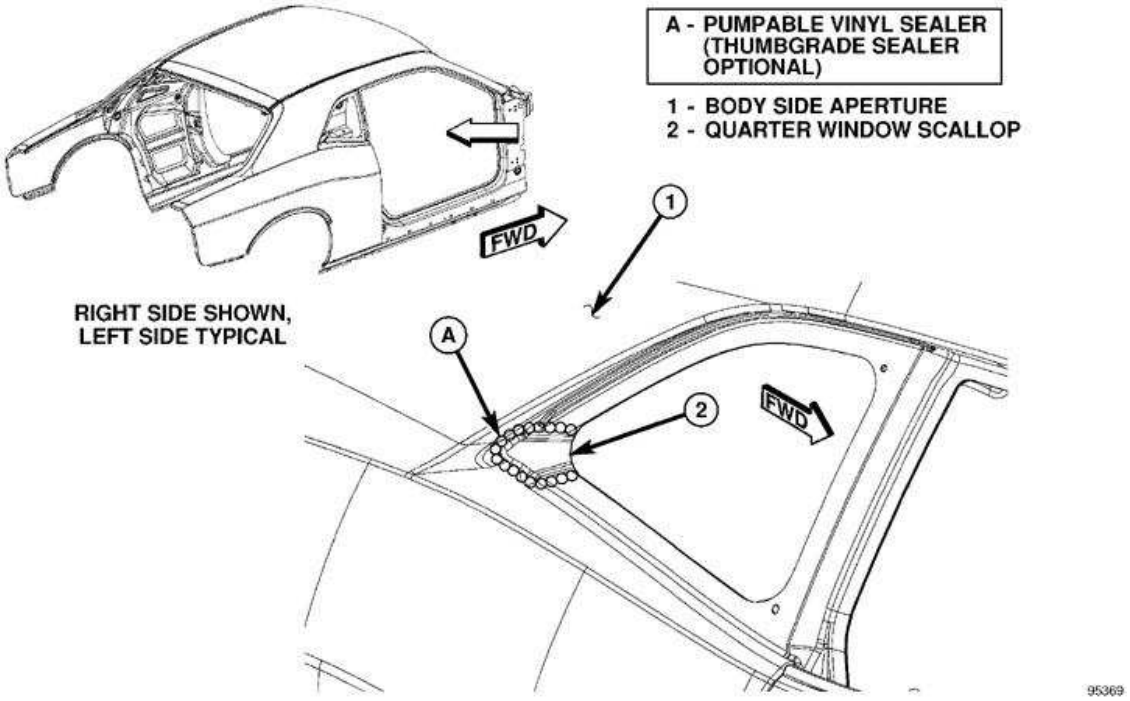

Fig. 36: Quarter Window
Courtesy of CHRYSLER LLC

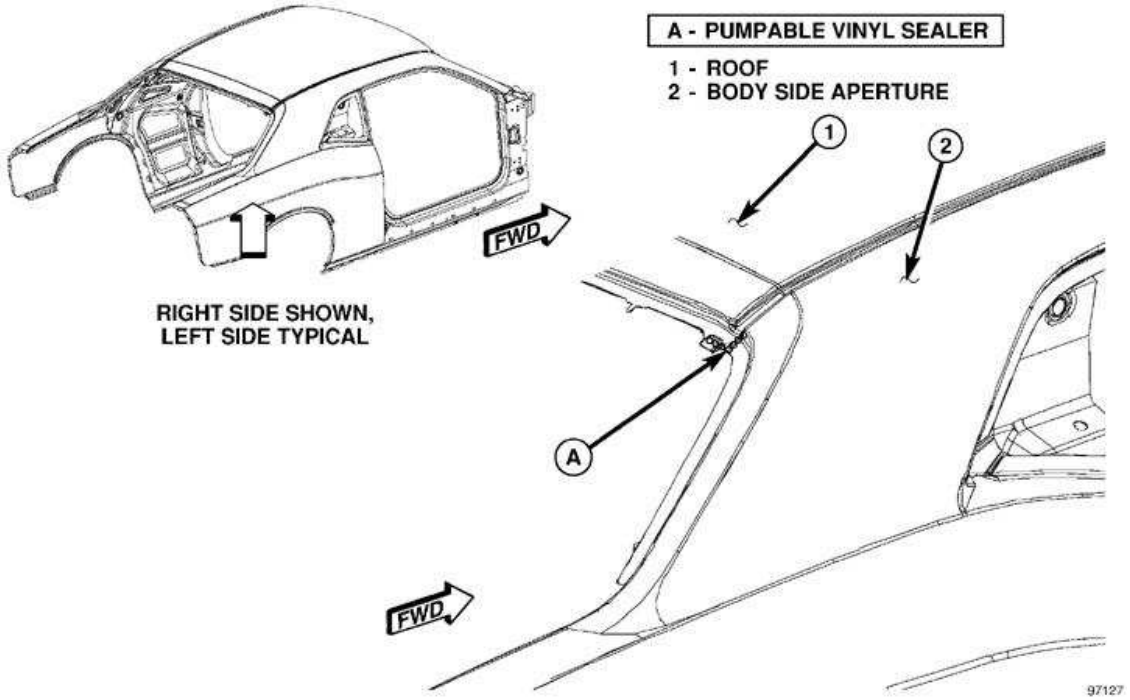

Fig. 37: Roof/Upper "C" Pillar
Courtesy of CHRYSLER LLC

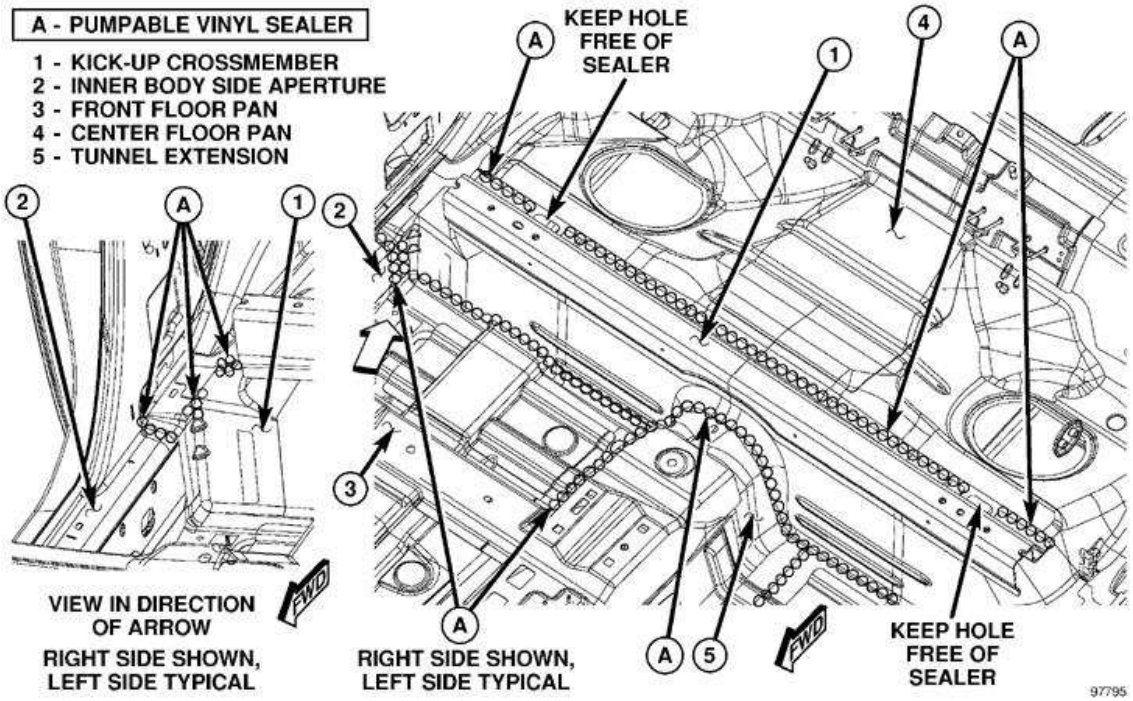

Fig. 38: Kickup Crossmember/Floor Pan
Courtesy of CHRYSLER LLC

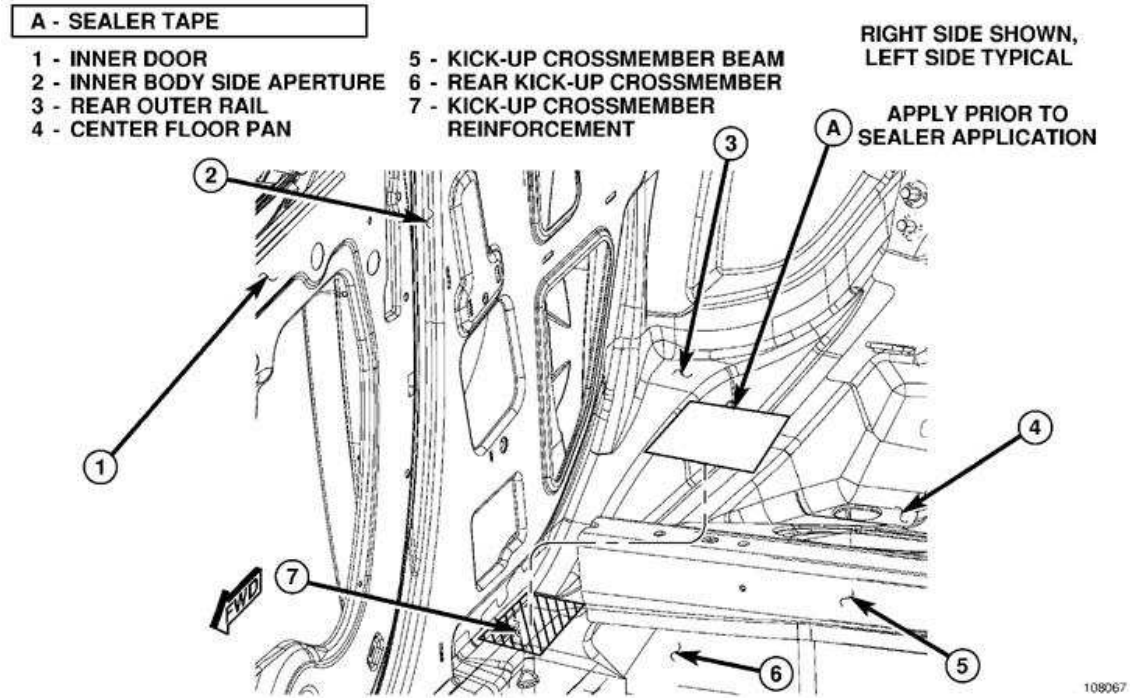

Fig. 39: Crossmember/Outer Rail Seam
Courtesy of CHRYSLER LLC

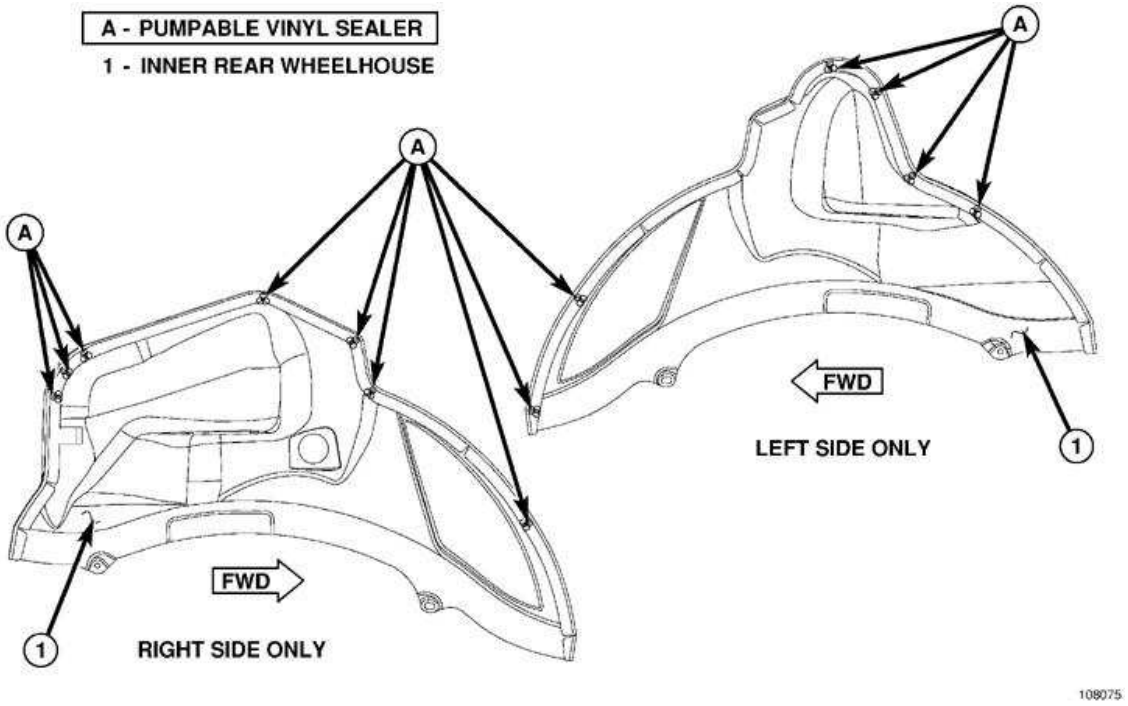

Fig. 40: Outer Rear Wheelhouse/Inner Panel (1 Of 2)
Courtesy of CHRYSLER LLC

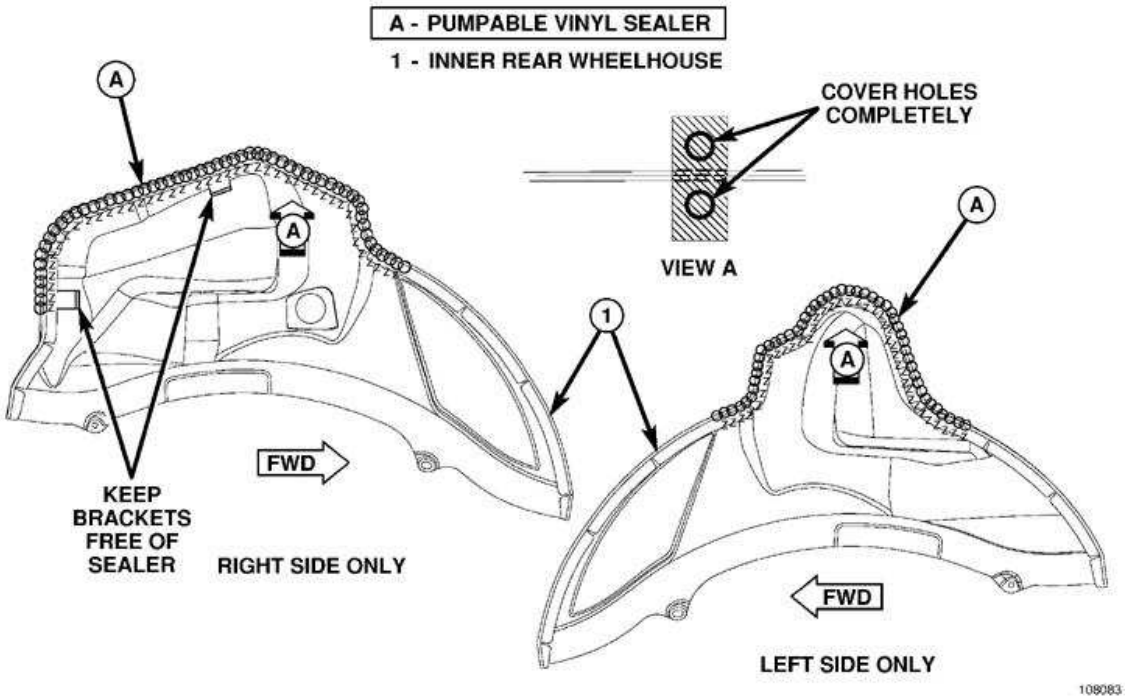

Fig. 41: Outer Rear Wheelhouse/Inner Panel (2 Of 2)
Courtesy of CHRYSLER LLC

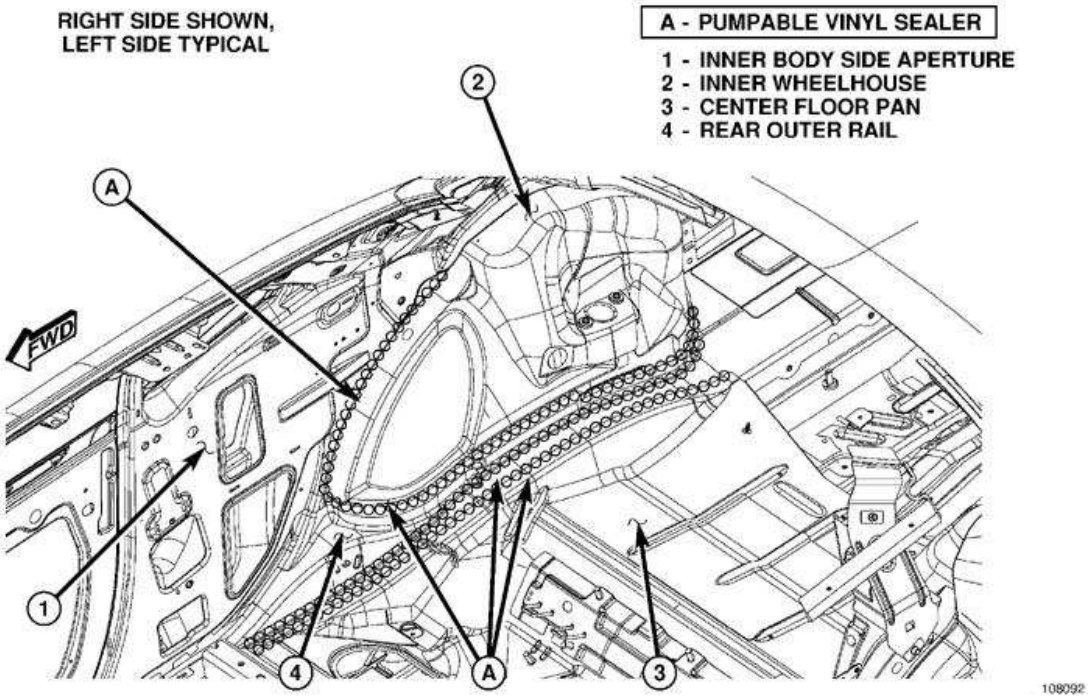

Fig. 42: Rear Wheelhouse (Front)/Rail Inner/Center Floor Pan
Courtesy of CHRYSLER LLC

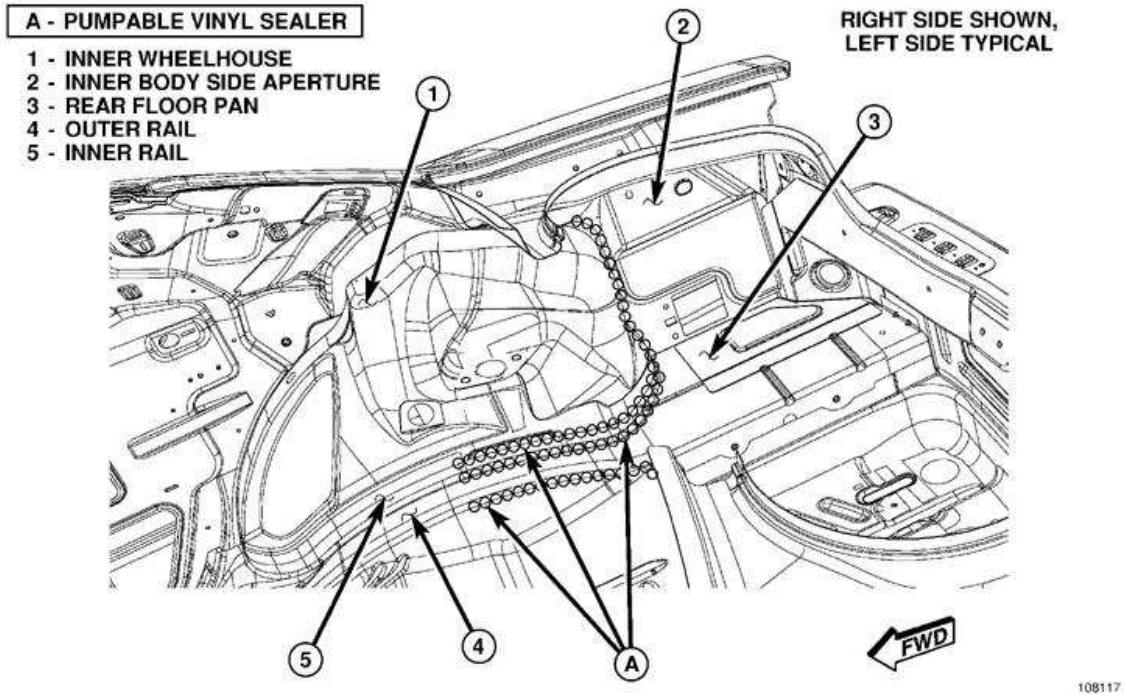

Fig. 43: Inner Rail/Outer Rail At Rear Wheelhouse
Courtesy of CHRYSLER LLC

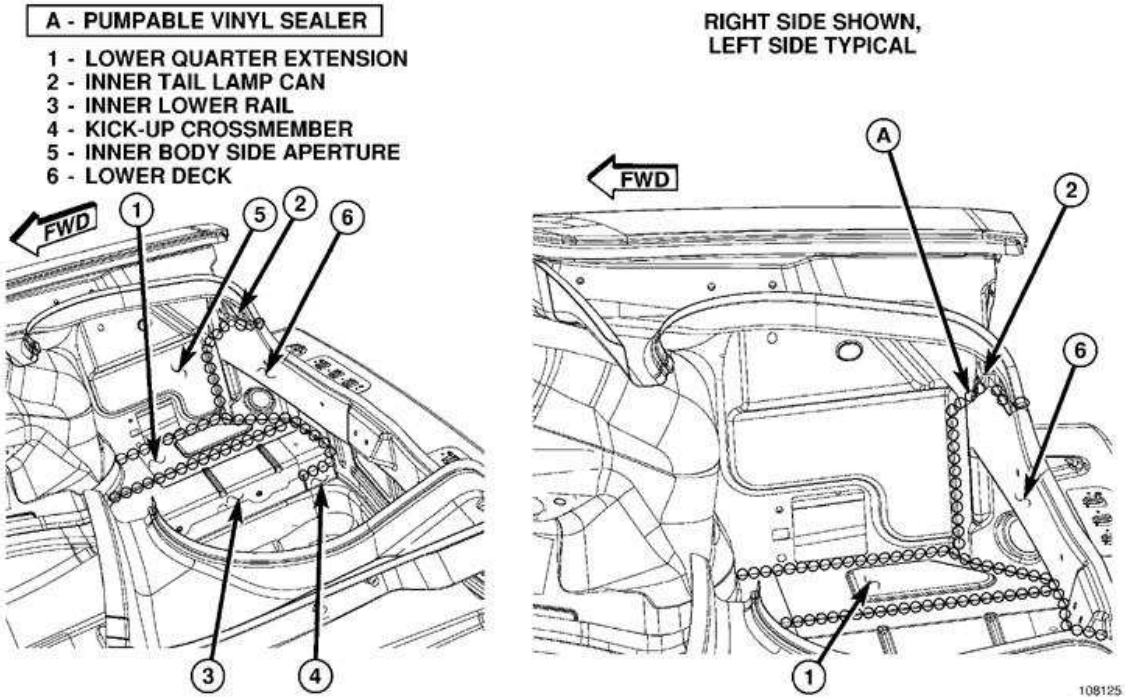

Fig. 44: Rear Floor/Body Side Aperture Inner/Lower Deck
Courtesy of CHRYSLER LLC

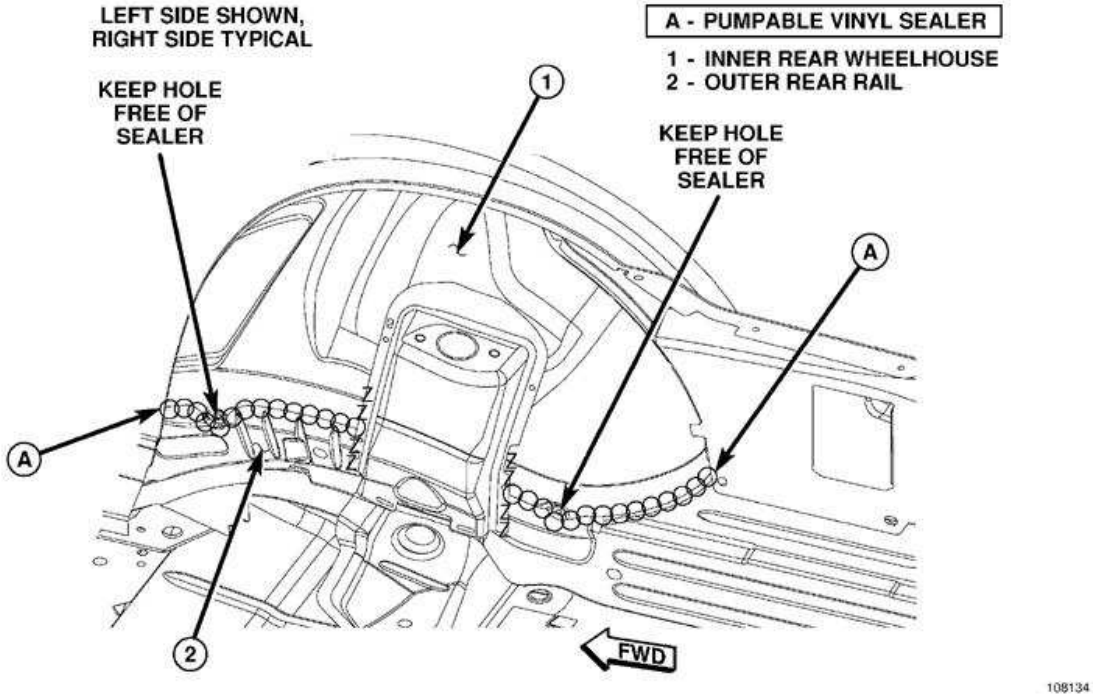

Fig. 45: Rear Wheelhouse Inner/Rear Floor Pan
Courtesy of CHRYSLER LLC

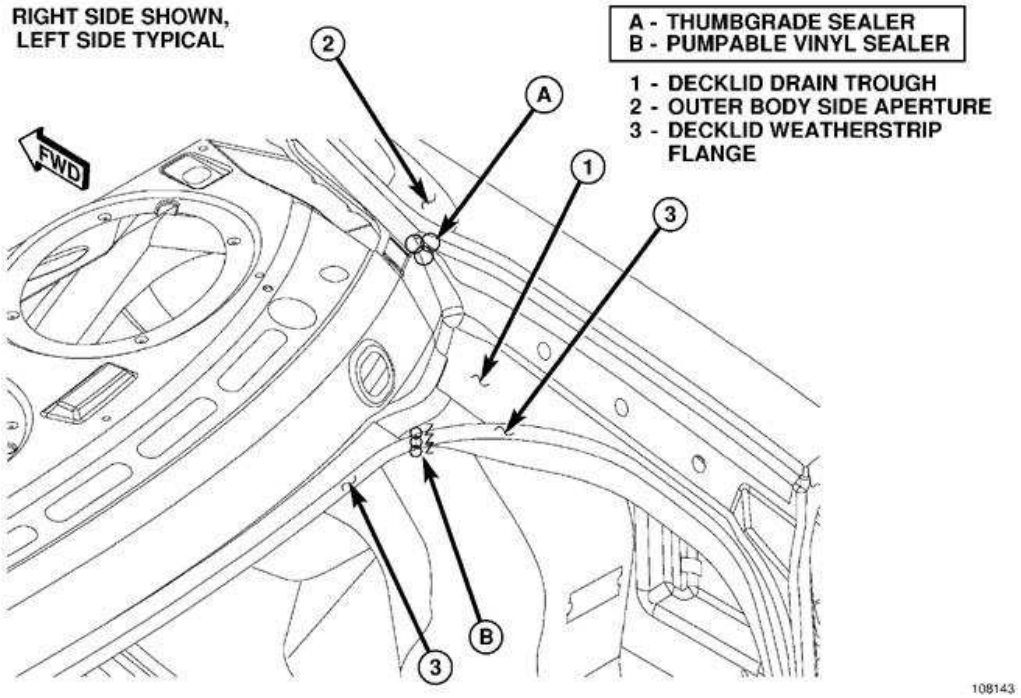

Fig. 46: Upper Drain Trough/Body Side Aperture
Courtesy of CHRYSLER LLC

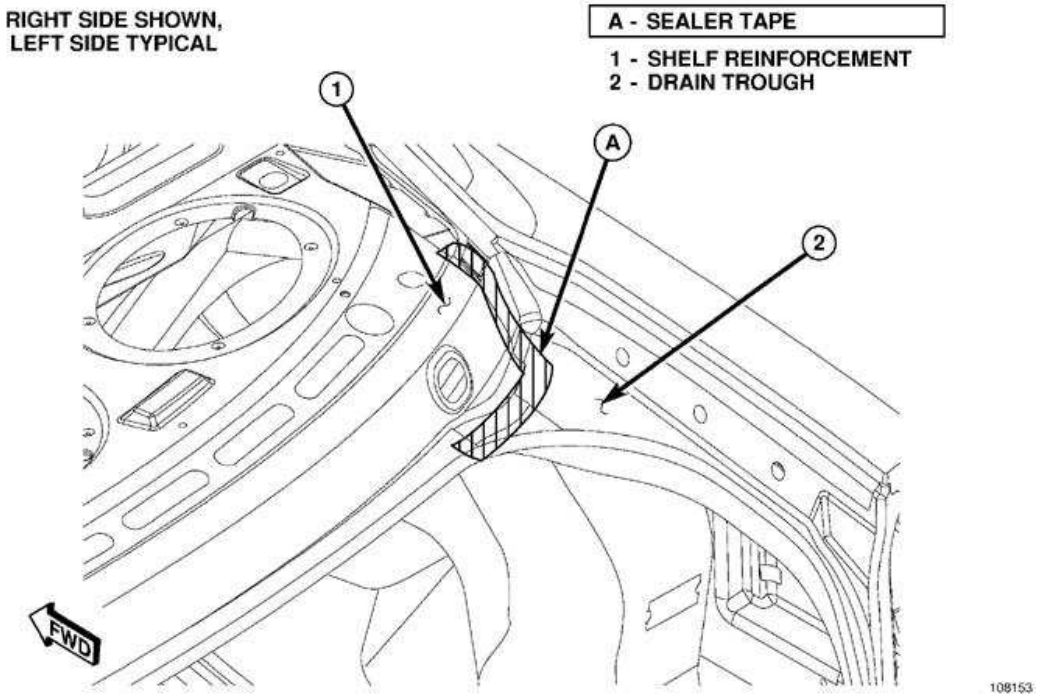

Fig. 47: Deck Lid Trough
Courtesy of CHRYSLER LLC

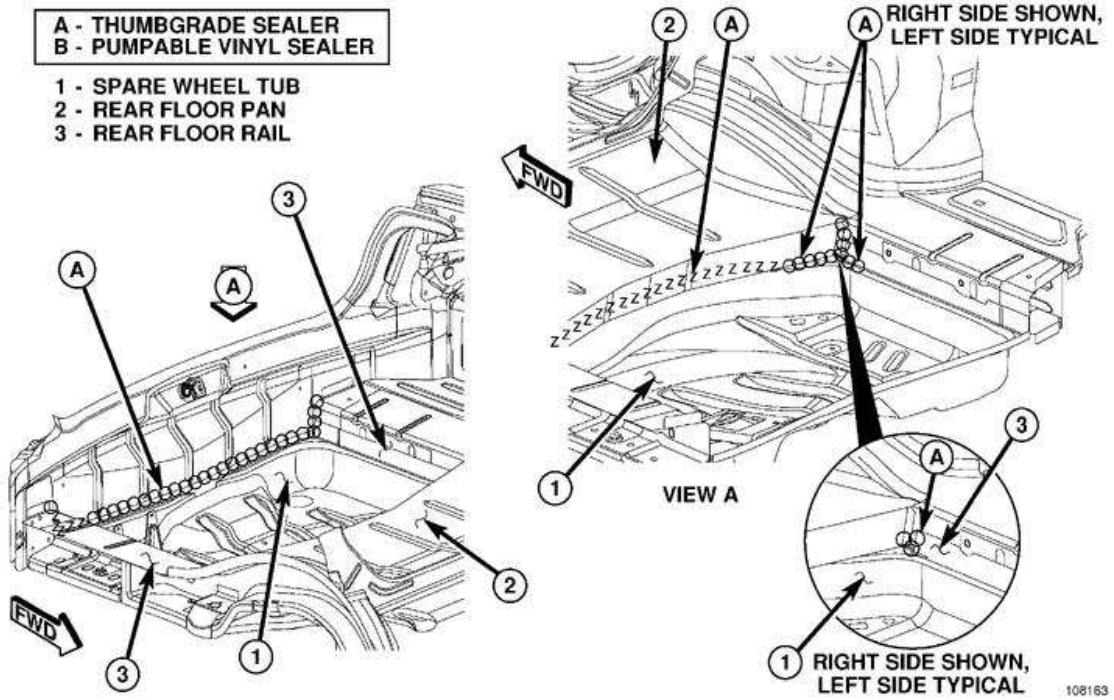

Fig. 48: Rear Floor/Lower Deck And Rear Rails
Courtesy of CHRYSLER LLC

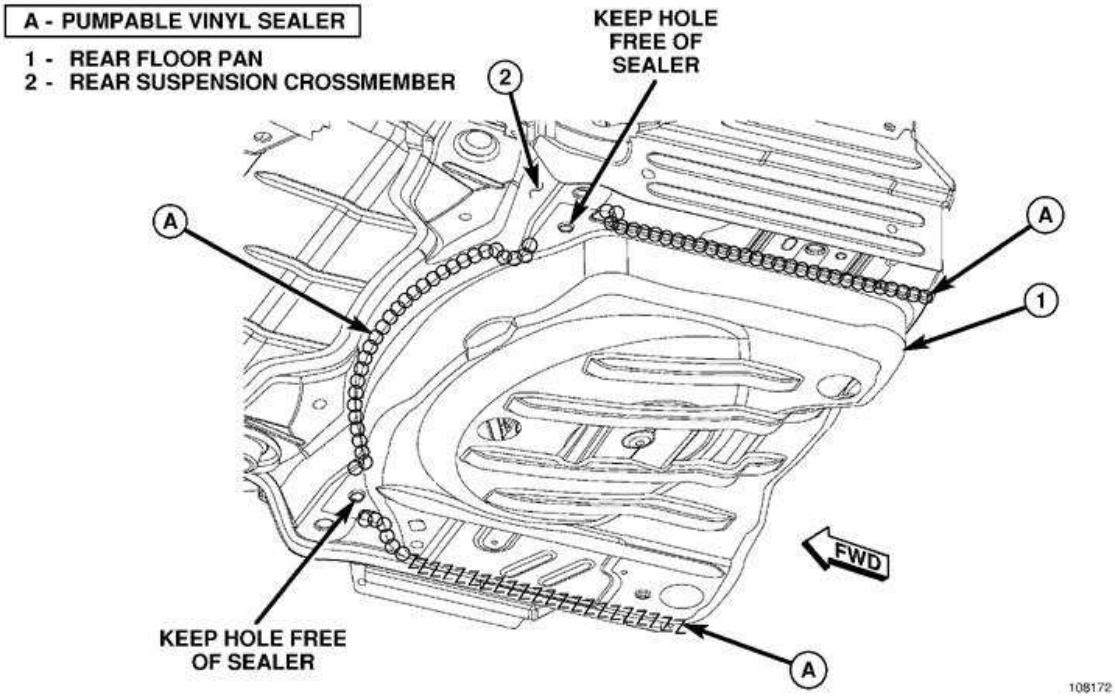

Fig. 49: Rear Floor Pan/Rear Suspension Crossmember
Courtesy of CHRYSLER LLC

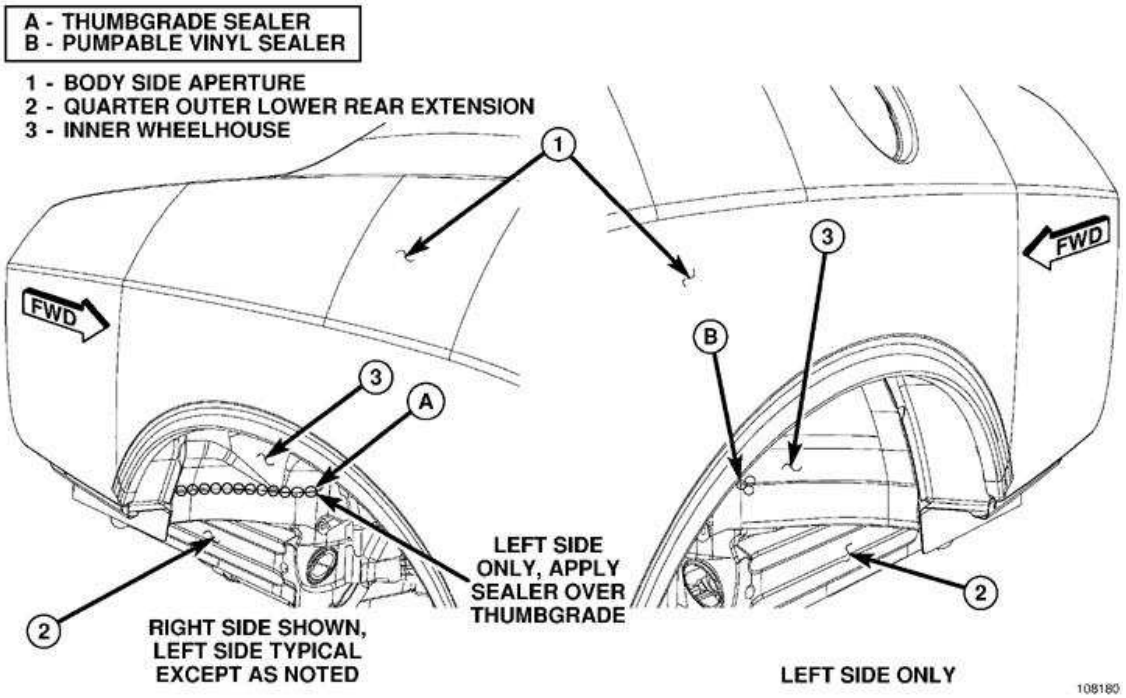

Fig. 50: Lower Extension/Lower Wheelhouse Outer
Courtesy of CHRYSLER LLC

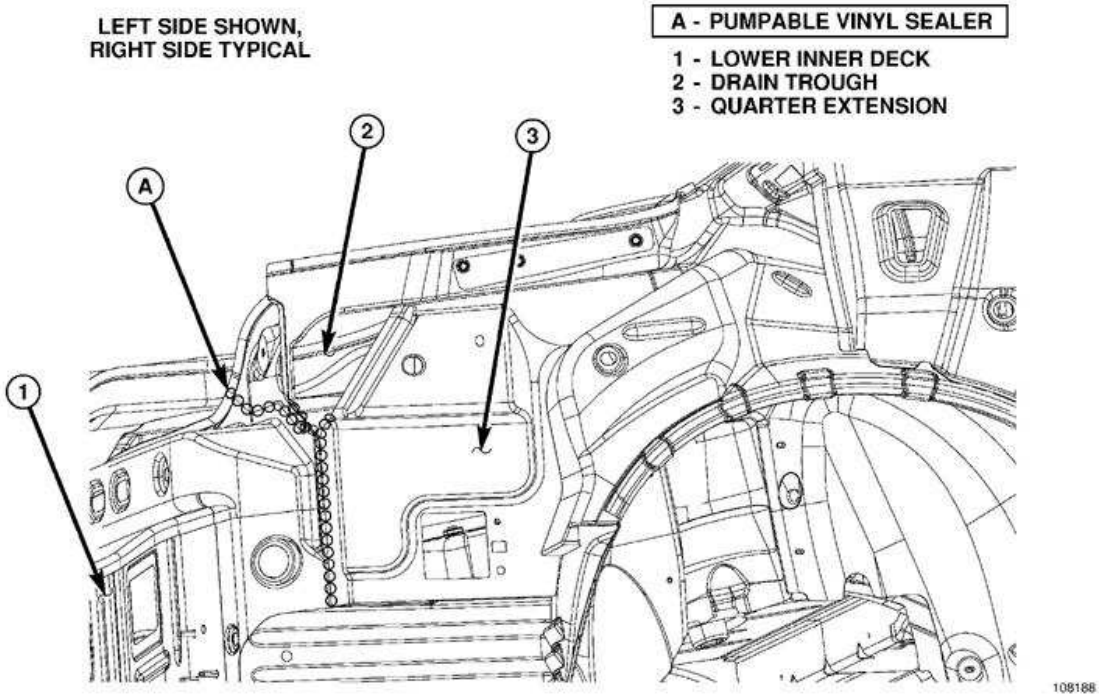

Fig. 51: Inner Tail Lamp Can/Lower Deck
Courtesy of CHRYSLER LLC

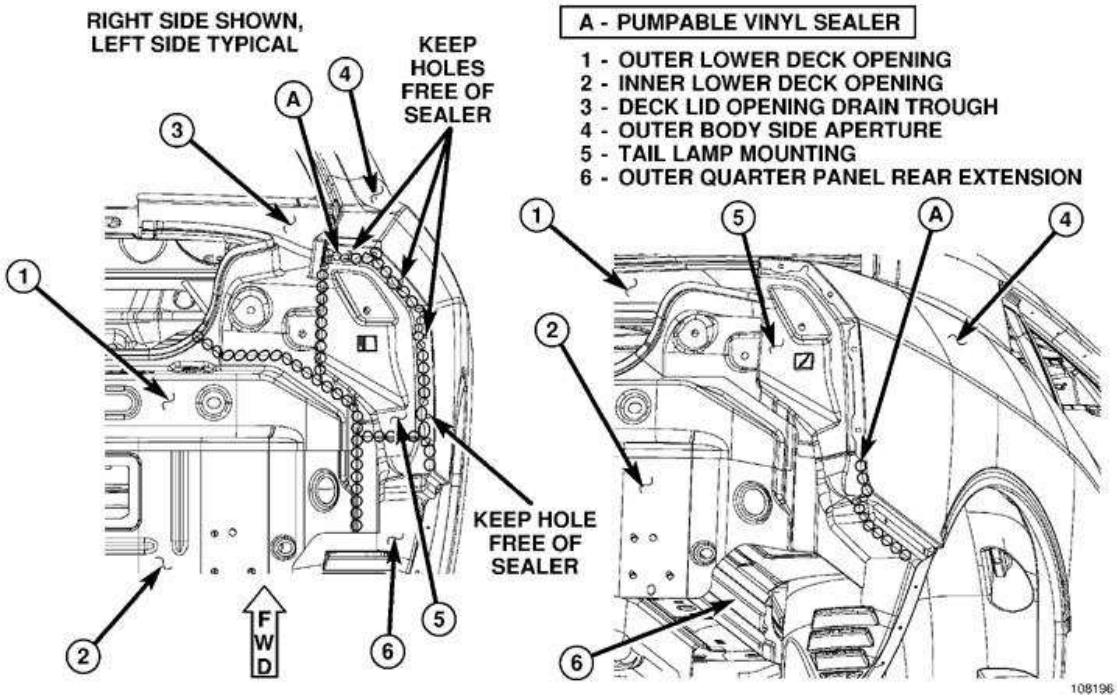

Fig. 52: Outer Tail Lamp Can
Courtesy of CHRYSLER LLC

STRUCTURAL ADHESIVE LOCATIONS

Specifications

STRUCTURAL ADHESIVE LOCATIONS

Index

DESCRIPTION	FIGURE
FRONT FLOOR (1 OF 2)	See **Fig. 53**.
FRONT FLOOR (2 OF 2)	See **Fig. 54**.
BODY SIDE APERTURE	See **Fig. 55**.
ENGINE BOX (1 OF 3)	See **Fig. 56**.
ENGINE BOX (2 OF 3)	See **Fig. 57**.
ENGINE BOX (3 OF 3)	See **Fig. 58**.
REAR LADDER AND FLOOR (1 OF 3)	See **Fig. 59**.
REAR LADDER AND FLOOR (2 OF 3)	See **Fig. 60**.
REAR LADDER AND FLOOR (3 OF 3)	See **Fig. 61**.
UNDERBODY COMPLETE	See **Fig. 62**.
FRAMED BODY IN WHITE WITHOUT BODY SIDE APERTURE (1 OF 2)	See **Fig. 63**.
FRAMED BODY IN WHITE WITHOUT BODY SIDE APERTURE (2 OF 2)	See **Fig. 64**.
BODY IN WHITE BEFORE ROOF (1 OF 2)	See **Fig. 65**.

BODY IN WHITE BEFORE ROOF (2 OF 2)	See **Fig. 66**.
FRAMED BODY IN WHITE WITHOUT CLOSURES WITH SUN ROOF	See **Fig. 67**.
FRAMED BODY IN WHITE WITHOUT CLOSURES WITHOUT SUN ROOF	See **Fig. 68**.
HOOD	See **Fig. 69**.
FRONT DOORS	See **Fig. 70**.
DECK LID	See **Fig. 71**.

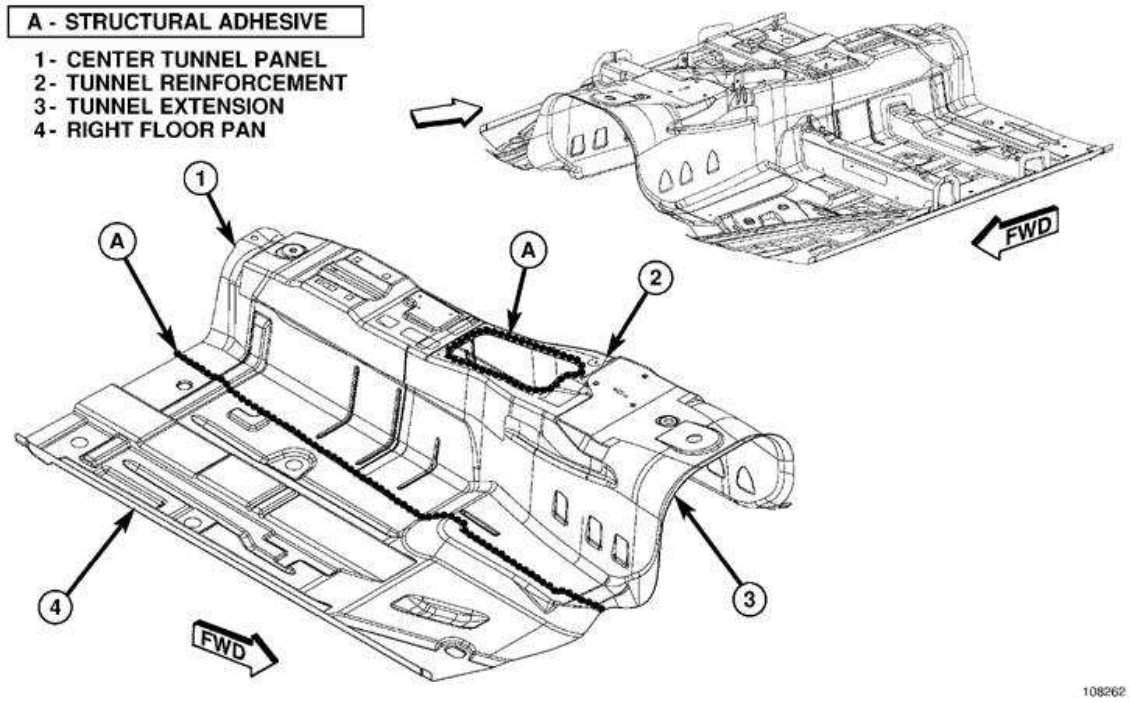

Fig. 53: Front Floor (1 Of 2)
Courtesy of CHRYSLER LLC

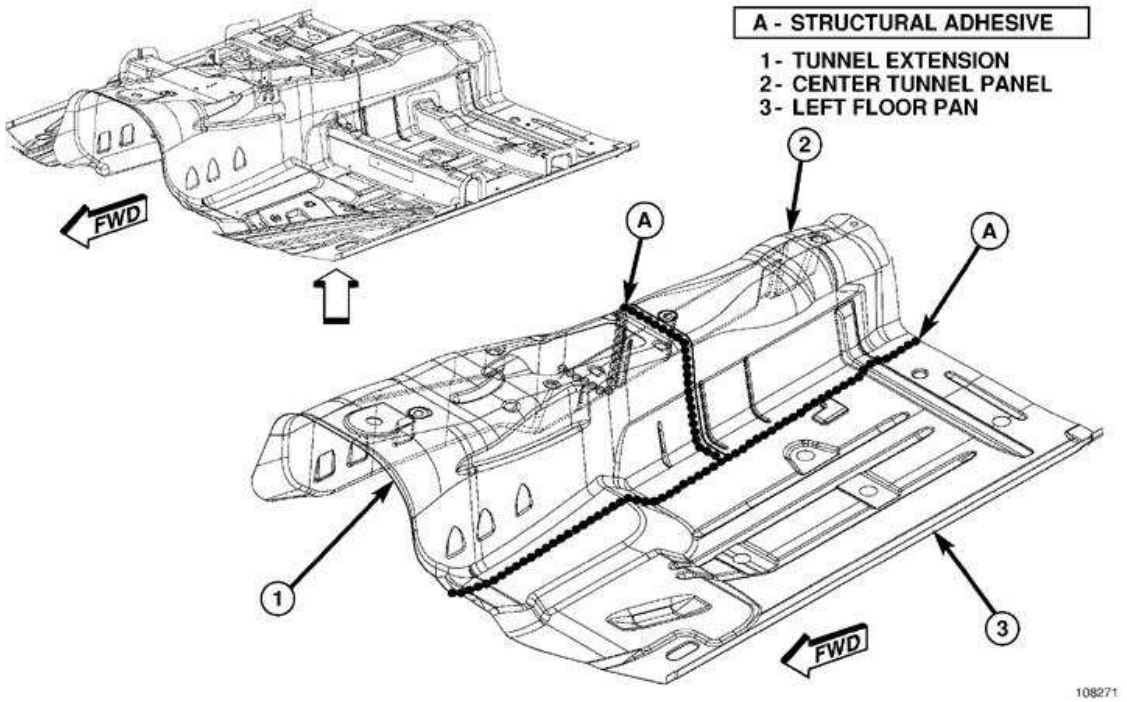

Fig. 54: Front Floor (2 Of 2)
Courtesy of CHRYSLER LLC

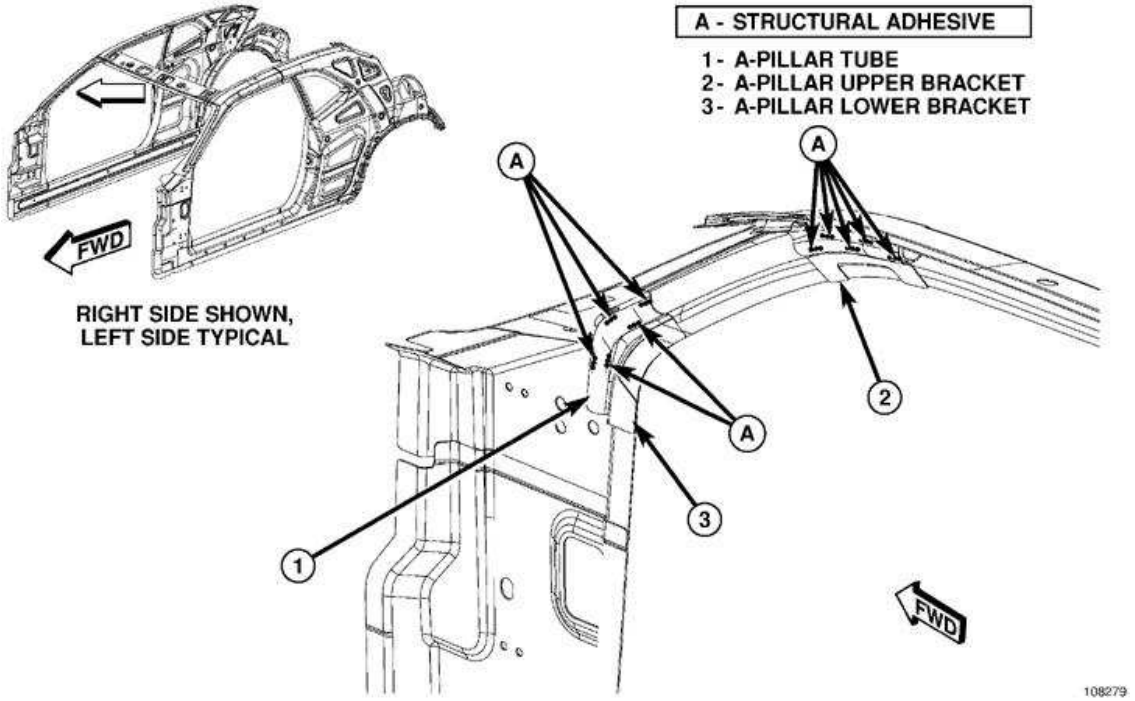

Fig. 55: Body Side Aperture
Courtesy of CHRYSLER LLC

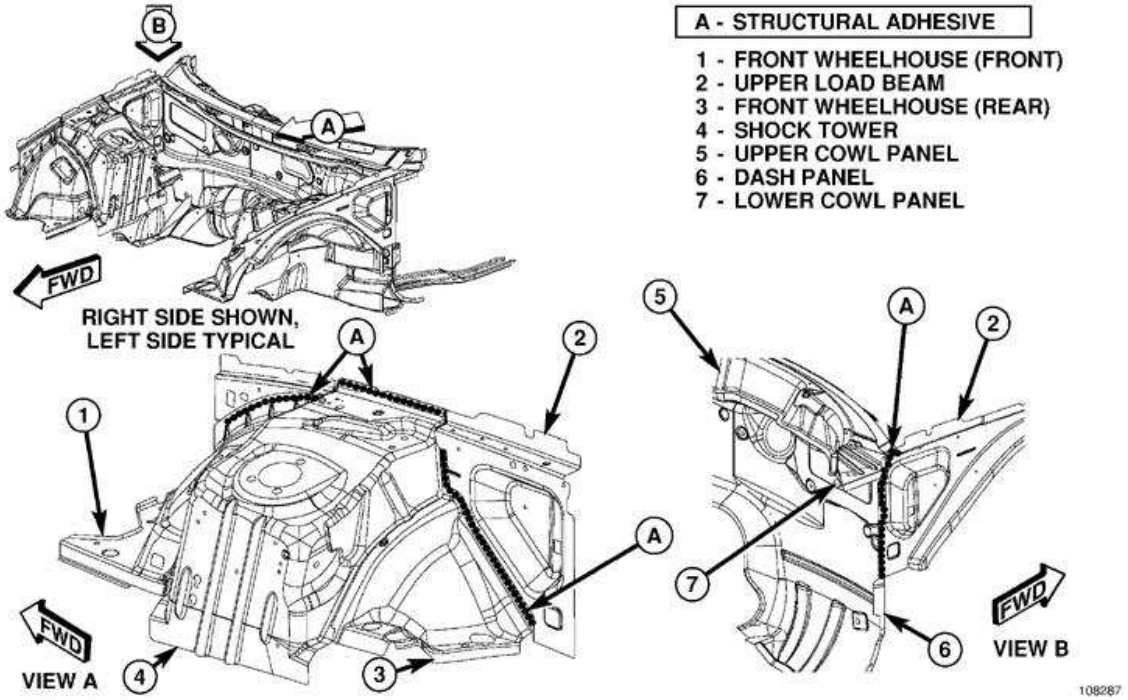

Fig. 56: Engine Box (1 Of 3)
Courtesy of CHRYSLER LLC

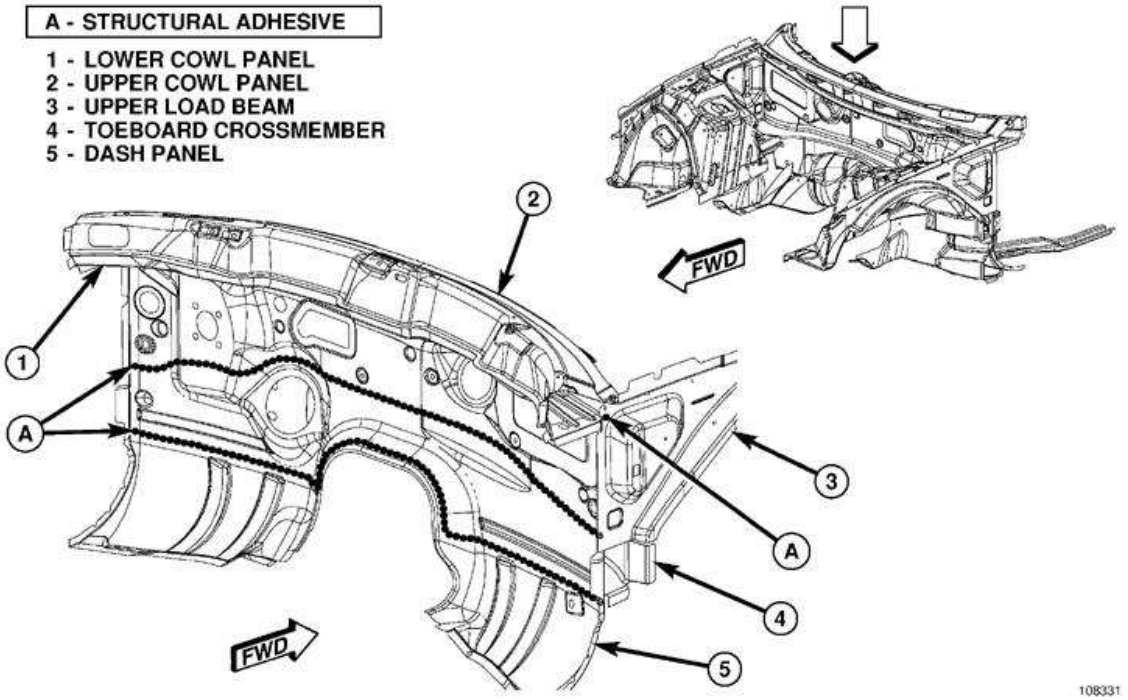

Fig. 57: Engine Box (2 Of 3)
Courtesy of CHRYSLER LLC

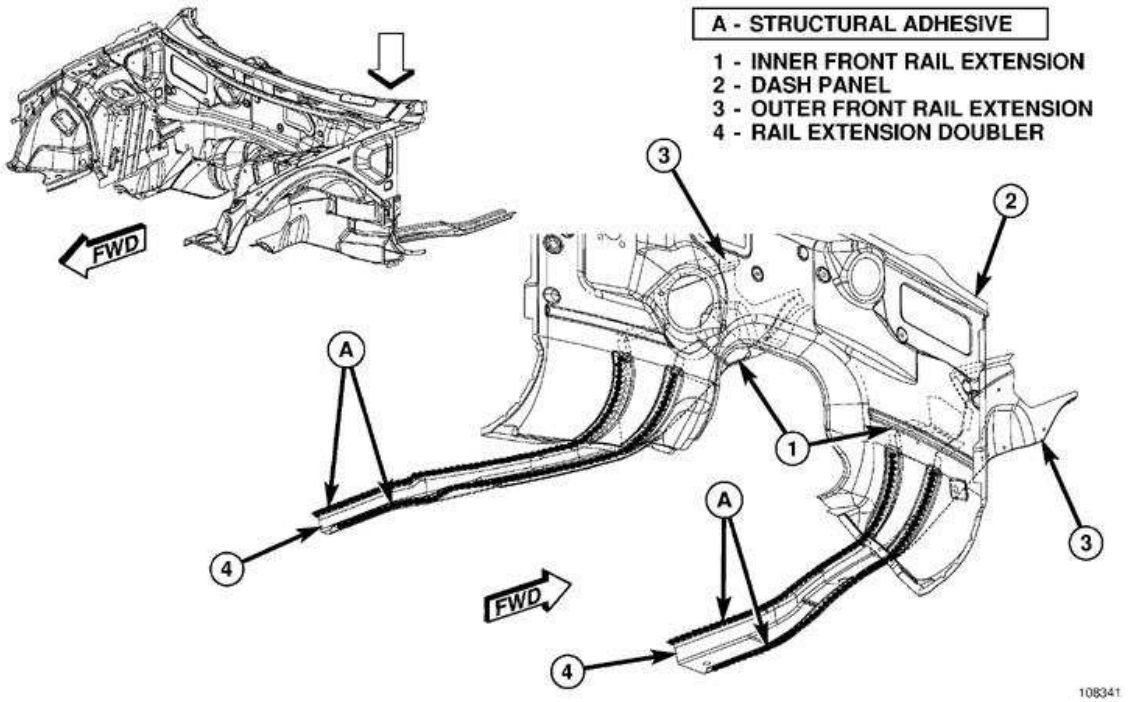

Fig. 58: Engine Box (3 Of 3)
Courtesy of CHRYSLER LLC

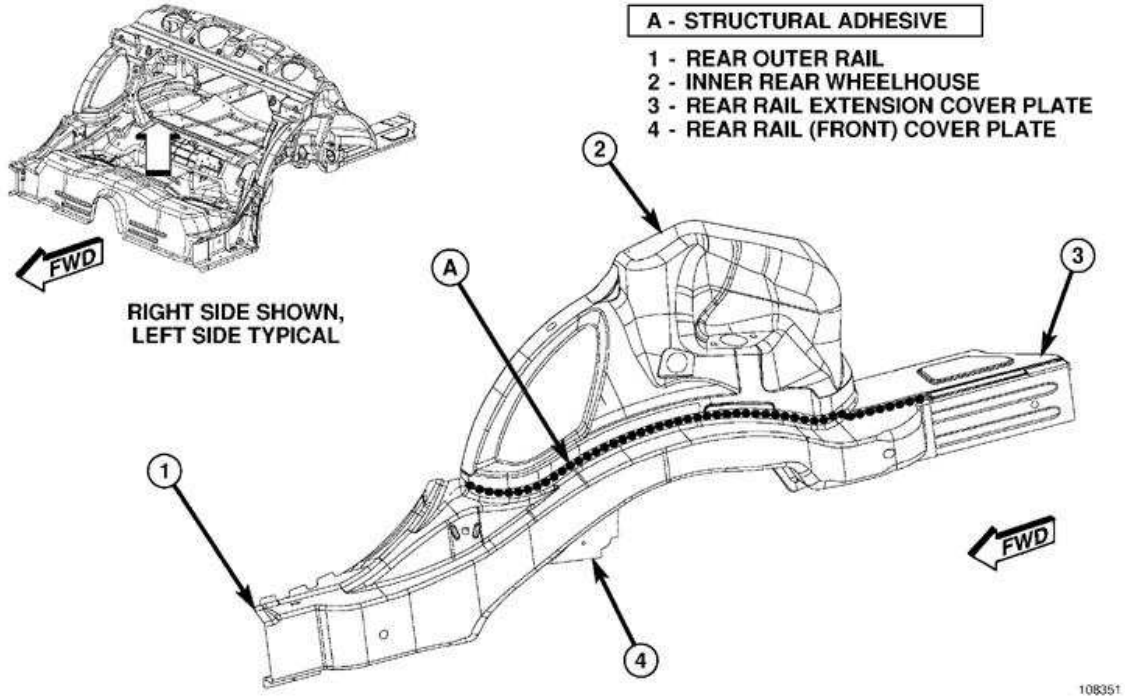

Fig. 59: Rear Ladder And Floor (1 Of 3)
Courtesy of CHRYSLER LLC

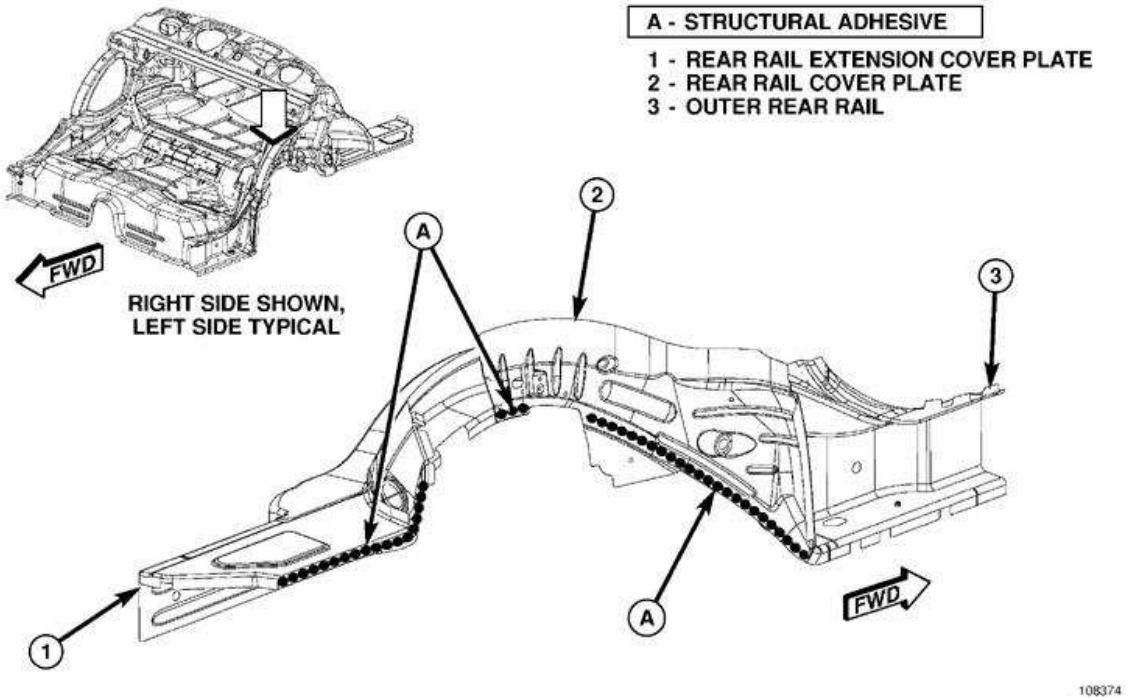

Fig. 60: Rear Ladder And Floor (2 Of 3)
Courtesy of CHRYSLER LLC

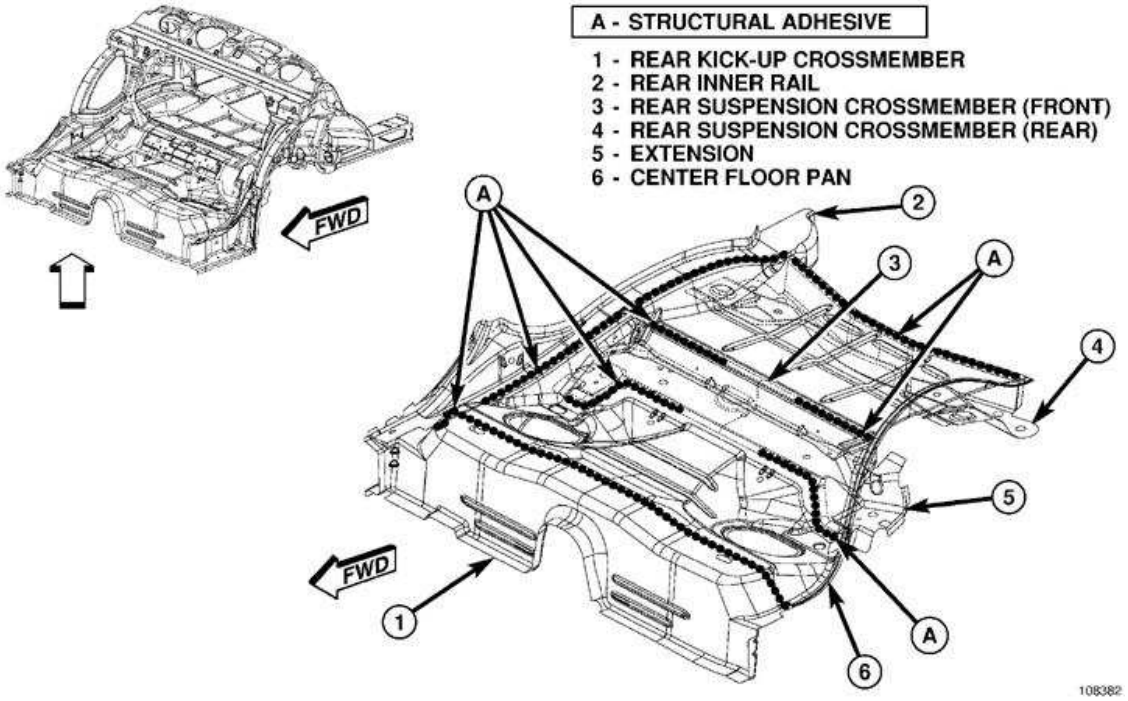

Fig. 61: Rear Ladder And Floor (3 Of 3)
Courtesy of CHRYSLER LLC

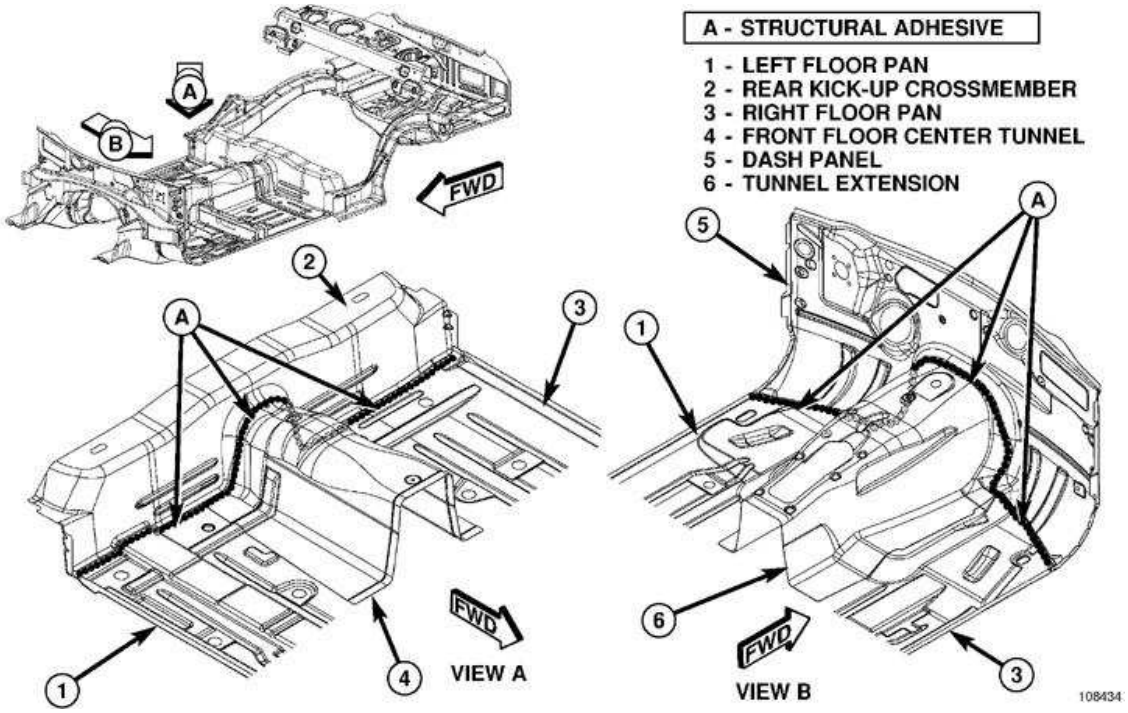

Fig. 62: Underbody Complete
Courtesy of CHRYSLER LLC

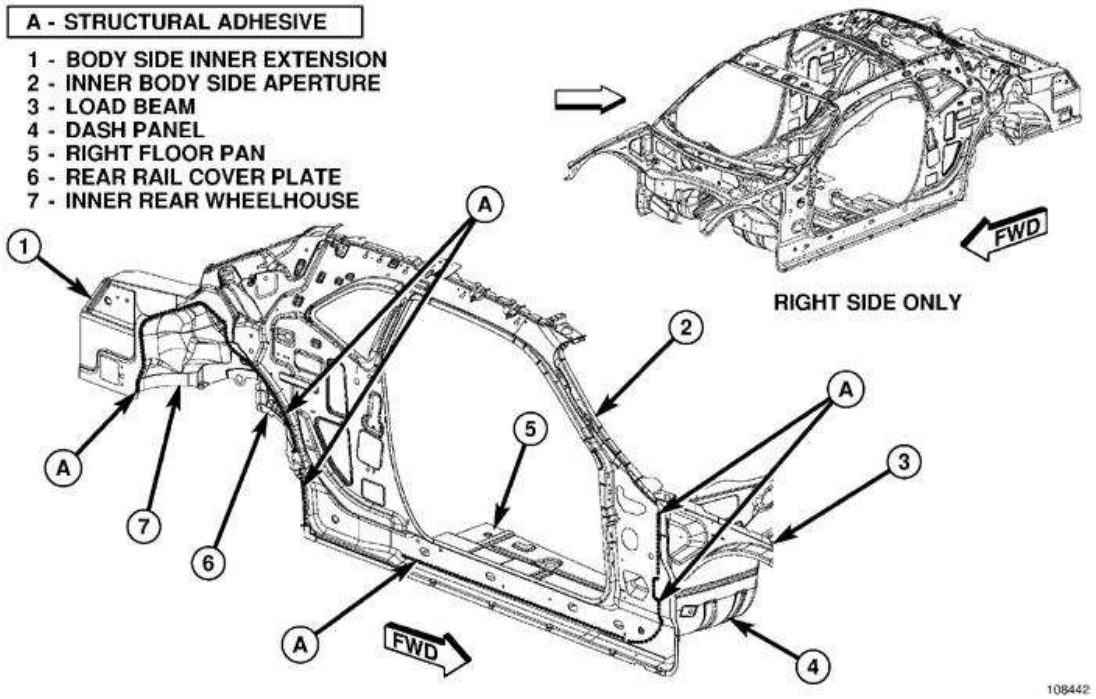

Fig. 63: Framed Body In White Without Body Side Aperture (1 Of 2)
Courtesy of CHRYSLER LLC

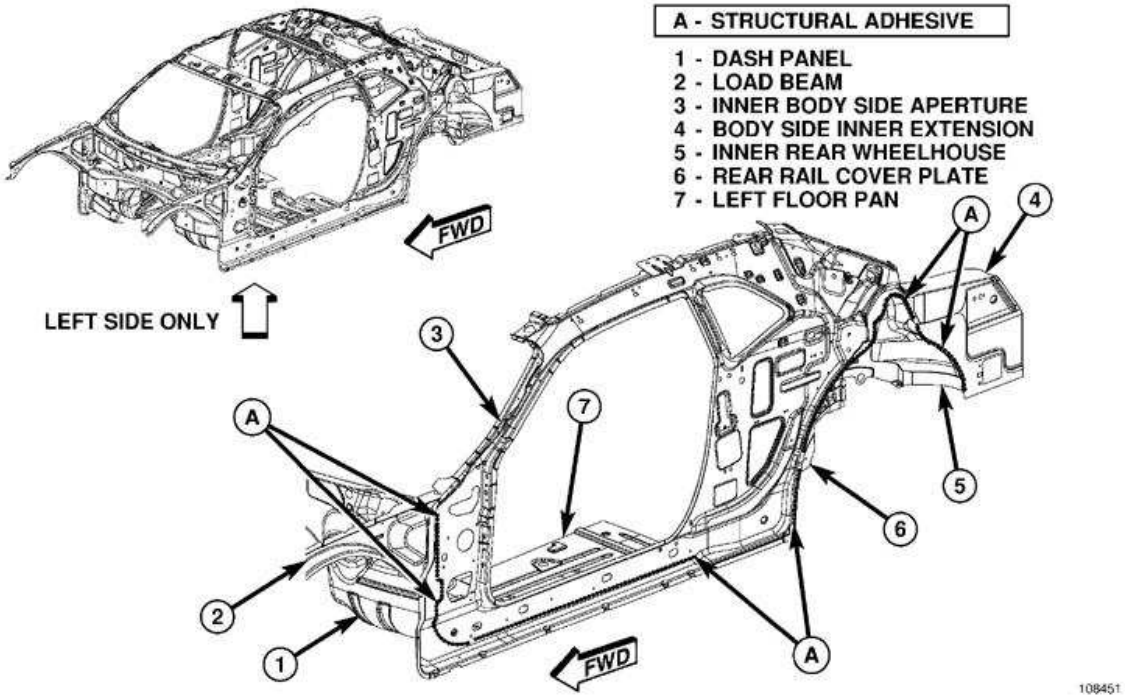

Fig. 64: Framed Body In White Without Body Side Aperture (2 Of 2)
Courtesy of CHRYSLER LLC

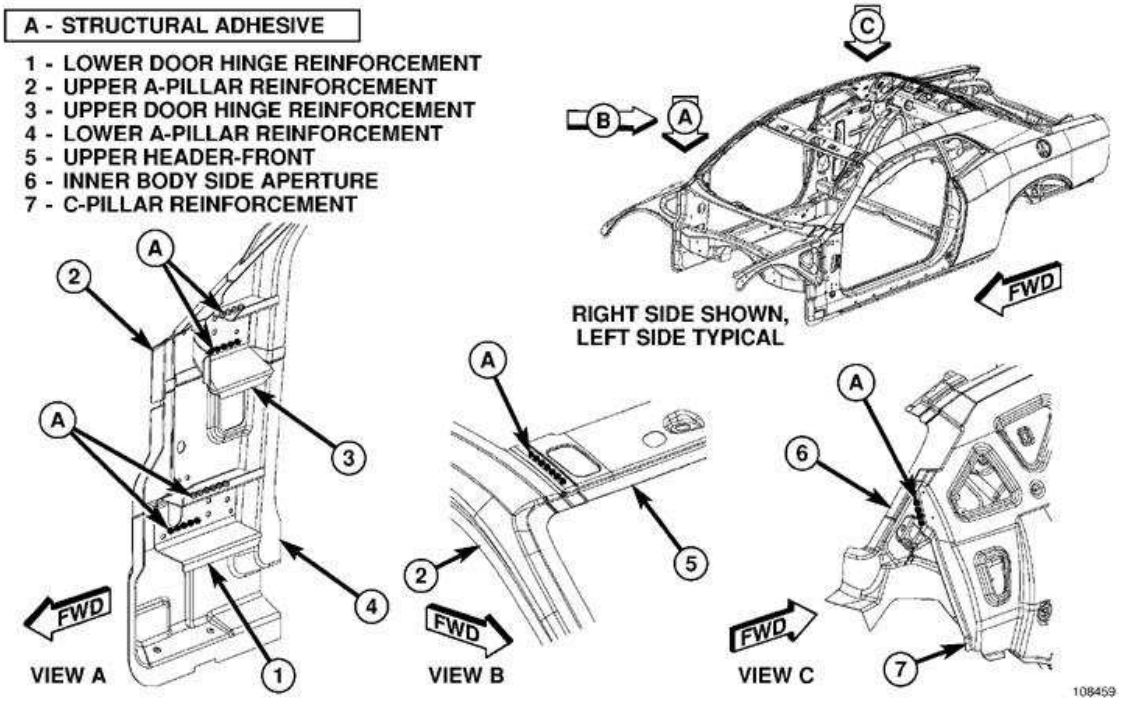

Fig. 65: Body In White Before Roof (1 Of 2)
Courtesy of CHRYSLER LLC

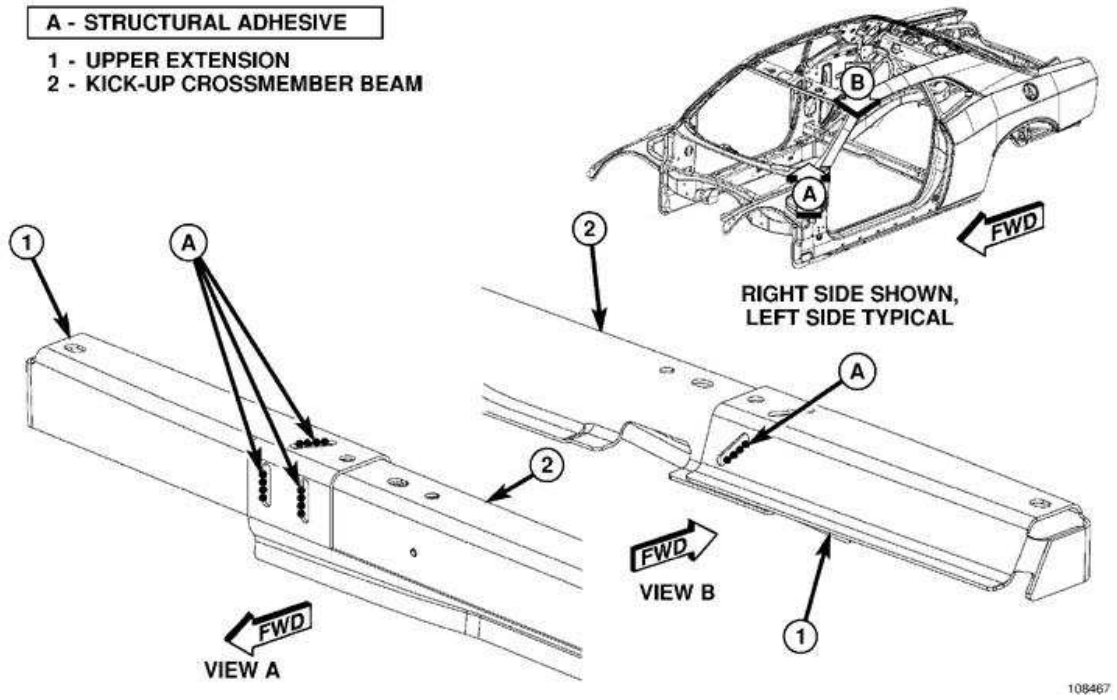

Fig. 66: Body In White Before Roof (2 Of 2)
Courtesy of CHRYSLER LLC

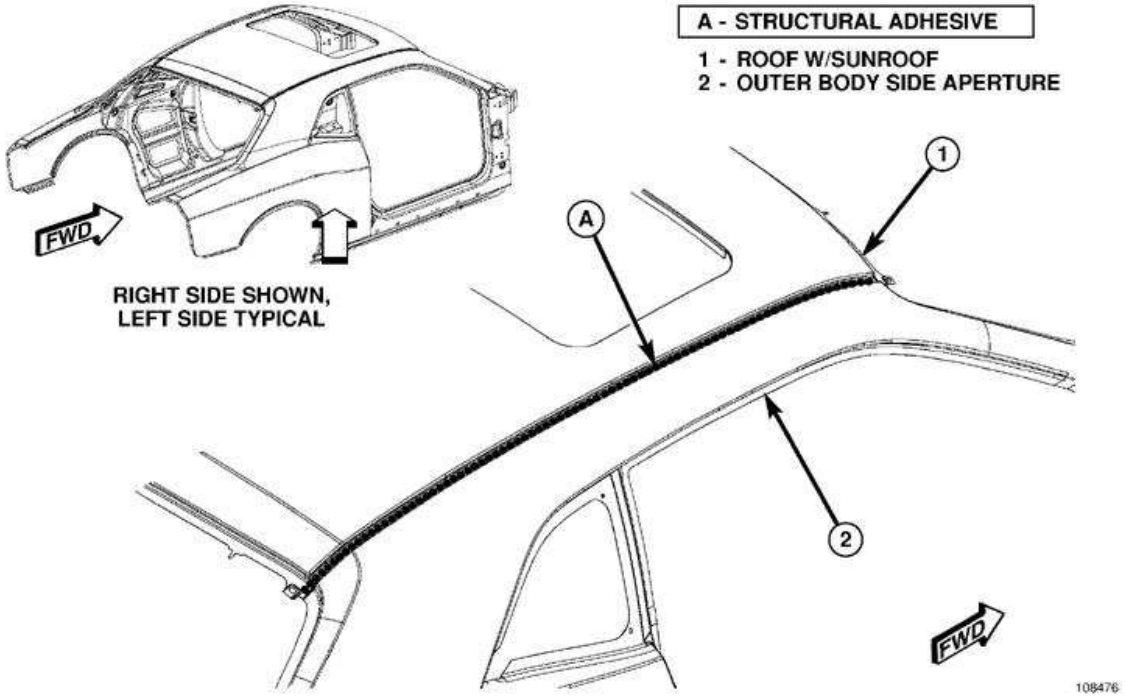

Fig. 67: Framed Body In White Without Closures With Sun Roof
Courtesy of CHRYSLER LLC

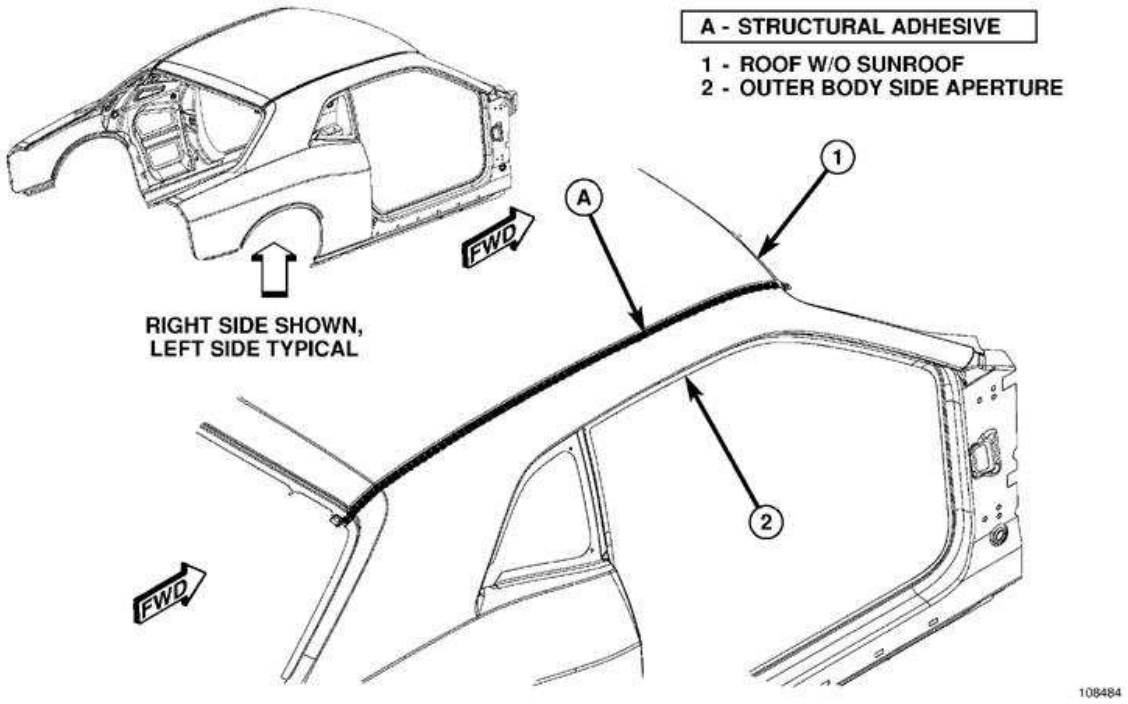

Fig. 68: Framed Body In White Without Closures Without Sun Roof
Courtesy of CHRYSLER LLC

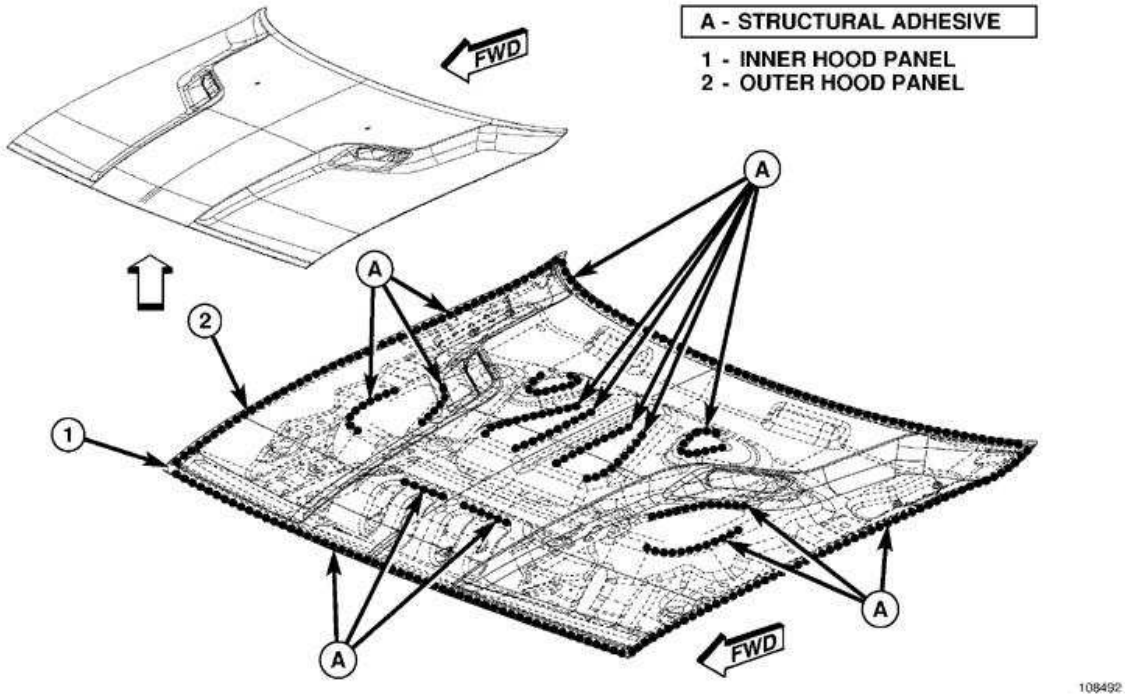

Fig. 69: Hood
Courtesy of CHRYSLER LLC

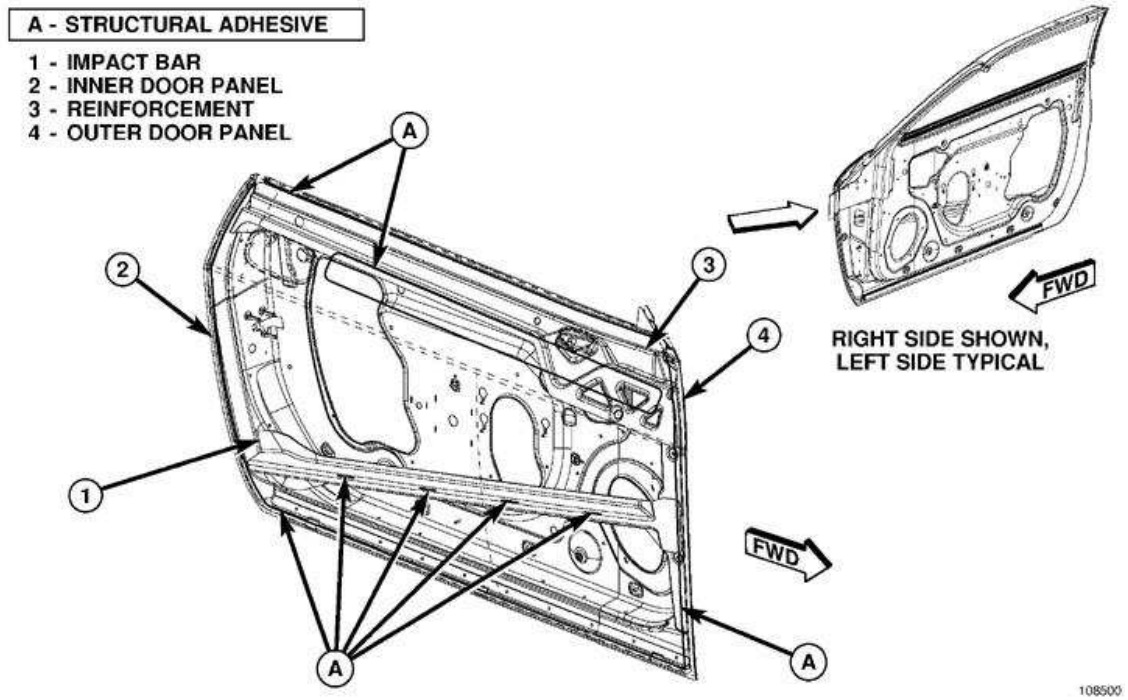

Fig. 70: Front Doors
Courtesy of CHRYSLER LLC

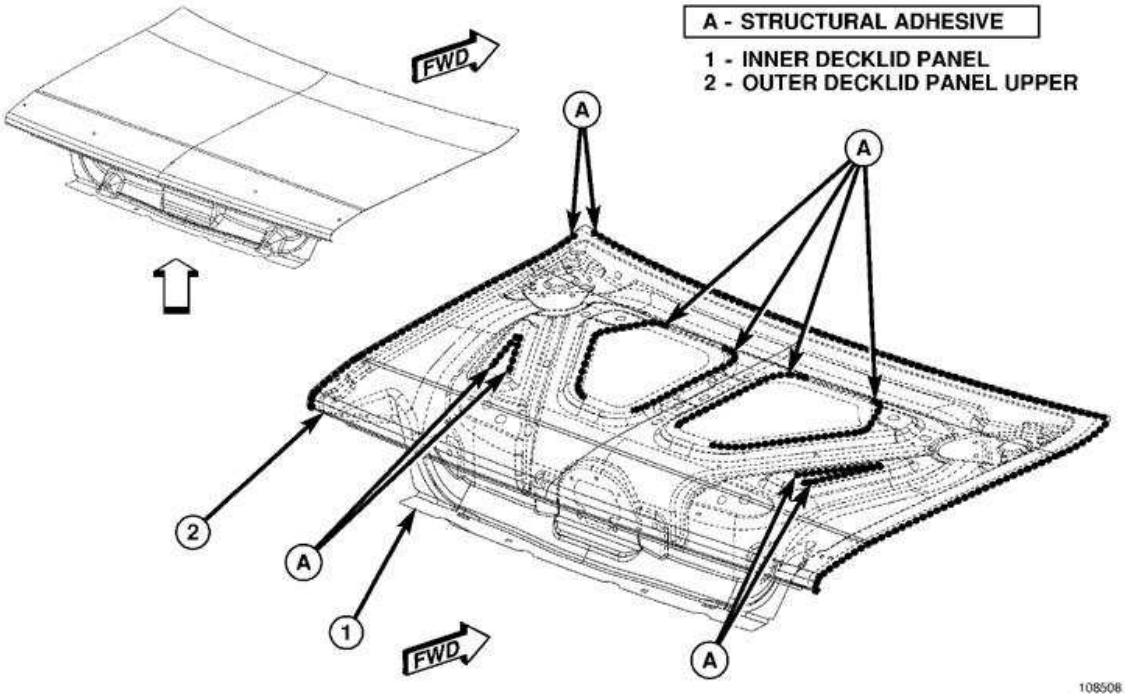

Fig. 71: Deck Lid
Courtesy of CHRYSLER LLC

WELD LOCATIONS

Specifications

WELD LOCATIONS

DESCRIPTION	FIGURE
Engine Box (1 of 9)	See **Fig. 72**.
Engine Box (2 of 9)	See **Fig. 73**.
Engine Box (3 of 9)	See **Fig. 74**.
Engine Box (4 of 9)	See **Fig. 75**.
Engine Box (5 of 9)	See **Fig. 76**.
Engine Box (6 of 9)	See **Fig. 77**.
Engine Box (7 of 9)	See **Fig. 78**.
Engine Box (8 of 9)	See **Fig. 80**.
Engine Box (1 of 4)	See **Fig. 81**.
Engine Box (2 of 4)	See **Fig. 82**.
Engine Box (3 of 4)	See **Fig. 83**.
Engine Box (4 of 4)	See **Fig. 84**.
Dash/Cowl/Plenum (1 of 6)	See **Fig. 85**.
Dash/Cowl/Plenum (2 of 6)	See **Fig. 86**.
Dash/Cowl/Plenum (3 of 6)	See **Fig. 87**.
Dash/Cowl/Plenum (4 of 6)	See **Fig. 88**.
Dash/Cowl/Plenum (5 of 6)	See **Fig. 89**.
Dash/Cowl/Plenum (6 of 6)	See **Fig. 90**.
Front Floor (1 of 19)	See **Fig. 91**.
Front Floor (2 of 19)	See **Fig. 92**.
Front Floor (3 of 19)	See **Fig. 93**.
Front Floor (4 of 19)	See **Fig. 94**.
Front Floor (5 of 19)	See **Fig. 95**.
Front Floor (6 of 19)	See **Fig. 96**.
Front Floor (7 of 19)	See **Fig. 97**.
Front Floor (8 of 19)	See **Fig. 98**.
Front Floor (9 of 19)	See **Fig. 99**.
Front Floor (10 of 19)	See **Fig. 100**.
Front Floor (11 of 19)	See **Fig. 101**.
Front Floor (12 of 19)	See **Fig. 102**.
Front Floor (13 of 19)	See **Fig. 103**.
Front Floor (14 of 19)	See **Fig. 104**.
Front Floor (15 of 19)	See **Fig. 105**.
Front Floor (16 of 19)	See **Fig. 106**.
Front Floor (17 of 19)	See **Fig. 107**.
Front Floor (18 of 19)	See **Fig. 108**.
Front Floor (19 of 19)	See **Fig. 109**.

Front Ladder, Rails and Wheelhouse (1 of 5)	See **Fig. 110**.
Front Ladder, Rails and Wheelhouse (2 of 5)	See **Fig. 111**.
Front Ladder, Rails and Wheelhouse (3 of 5)	See **Fig. 112**.
Front Ladder, Rails and Wheelhouse (4 of 5)	See **Fig. 113**.
Front Ladder, Rails and Wheelhouse (5 of 5)	See **Fig. 114**.
Rear Floor, Ladder, and Wheelhouse (1 of 8)	See **Fig. 115**.
Rear Floor, Ladder, and Wheelhouse (2 of 8)	See **Fig. 116**.
Rear Floor, Ladder, and Wheelhouse (3 of 8)	See **Fig. 117**.
Rear Floor, Ladder, and Wheelhouse (4 of 8)	See **Fig. 118**.
Rear Floor, Ladder, and Wheelhouse (5 of 8)	See **Fig. 119**.
Rear Floor, Ladder, and Wheelhouse (6 of 8)	See **Fig. 120**.
Rear Floor, Ladder, and Wheelhouse (7 of 8)	See **Fig. 121**.
Rear Floor, Ladder, and Wheelhouse (8 of 8)	See **Fig. 122**.
Rear Ladder (1 of 6)	See **Fig. 123**.
Rear Ladder (2 of 6)	See **Fig. 124**.
Rear Ladder (3 of 6)	See **Fig. 125**.
Rear Ladder (4 of 6)	See **Fig. 126**.
Rear Ladder (5 of 6)	See **Fig. 127**.
Rear Ladder (6 of 6)	See **Fig. 128**.
Rear Ladder and Floor (1 of 13)	See **Fig. 129**.
Rear Ladder and Floor (2 of 13)	See **Fig. 130**.
Rear Ladder and Floor (3 of 13)	See **Fig. 131**.
Rear Ladder and Floor (4 of 13)	See **Fig. 132**.
Rear Ladder and Floor (5 of 13)	See **Fig. 133**.
Rear Ladder and Floor (6 of 13)	See **Fig. 134**.
Rear Ladder and Floor (7 of 13)	See **Fig. 135**.
Rear Ladder and Floor (8 of 13)	See **Fig. 136**.
Rear Ladder and Floor (9 of 13)	See **Fig. 137**.
Rear Ladder and Floor (10 of 13)	See **Fig. 138**.
Rear Ladder and Floor (11 of 13)	See **Fig. 139**.
Rear Ladder and Floor (12 of 13)	See **Fig. 140**.
Rear Ladder and Floor (13 of 13)	See **Fig. 141**.
Underbody (1 of 10)	See **Fig. 142**.
Underbody (2 of 10)	See **Fig. 143**.
Underbody (3 of 10)	See **Fig. 144**.
Underbody (4 of 10)	See **Fig. 145**.
Underbody (5 of 10)	See **Fig. 146**.
Underbody (6 of 10)	See **Fig. 147**.
Underbody (7 of 10)	See **Fig. 148**.
Underbody (8 of 10)	See **Fig. 149**.
Underbody (9 of 10)	See **Fig. 150**.

	See **Fig. 151**.
Miscellaneous Body (1 of 7)	See **Fig. 152**.
Miscellaneous Body (2 of 7)	See **Fig. 153**.
Miscellaneous Body (3 of 7)	See **Fig. 154**.
Miscellaneous Body (4 of 7)	See **Fig. 155**.
Miscellaneous Body (5 of 7)	See **Fig. 156**.
Miscellaneous Body (6 of 7)	See **Fig. 157**.
Miscellaneous Body (7 of 7)	See **Fig. 158**.
Underbody Complete (1 of 10)	See **Fig. 159**.
Underbody Complete (2 of 10)	See **Fig. 160**.
Underbody Complete (3 of 10)	See **Fig. 161**.
Underbody Complete (4 of 10)	See **Fig. 162**.
Underbody Complete (5 of 10)	See **Fig. 163**.
Underbody Complete (6 of 10)	See **Fig. 164**.
Underbody Complete (7 of 10)	See **Fig. 165**.
Underbody Complete (8 of 10)	See **Fig. 166**.
Underbody Complete (9 of 10)	See **Fig. 167**.
Underbody Complete (10 of 10)	See **Fig. 168**.
Body Side Aperture (1 of 2)	See **Fig. 169**.
Body Side Aperture (2 of 2)	See **Fig. 170**.
Body Side Aperture Inner (1 of 3)	See **Fig. 171**.
Body Side Aperture Inner (2 of 3)	See **Fig. 172**.
Body Side Aperture Inner (3 of 3)	See **Fig. 173**.
Body Side Aperture Outer (1 of 7)	See **Fig. 174**.
Body Side Aperture Outer (2 of 7)	See **Fig. 175**.
Body Side Aperture Outer (3 of 7)	See **Fig. 176**.
Body Side Aperture Outer (4 of 7)	See **Fig. 177**.
Body Side Aperture Outer (5 of 7)	See **Fig. 178**.
Body Side Aperture Outer (6 of 7)	See **Fig. 179**.
Body Side Aperture Outer (7 of 7)	See **Fig. 180**.
Framed Body In White Without Body Side Aperture (1 of 7)	See **Fig. 181**.
Framed Body In White Without Body Side Aperture (2 of 7)	See **Fig. 182**.
Framed Body In White Without Body Side Aperture (3 of 7)	See **Fig. 183**.
Framed Body In White Without Body Side Aperture (4 of 7)	See **Fig. 184**.
Framed Body In White Without Body Side Aperture (5 of 7)	See **Fig. 185**.
Framed Body In White Without Body Side Aperture (6 of 7)	See **Fig. 186**.
Framed Body In White Without Body Side Aperture (7 of 7)	See **Fig. 187**.
Body In White Before Roof (1 of 13)	See **Fig. 188**.
Body In White Before Roof (2 of 13)	See **Fig. 189**.
Body In White Before Roof (3 of 13)	See **Fig. 190**.
Body In White Before Roof (4 of 13)	See **Fig. 191**.

	See **Fig. 192**.
Body In White Before Roof (6 of 13)	See **Fig. 193**.
Body In White Before Roof (7 of 13)	See **Fig. 194**.
Body In White Before Roof (8 of 13)	See **Fig. 195**.
Body In White Before Roof (9 of 13)	See **Fig. 196**.
Body In White Before Roof (10 of 13)	See **Fig. 197**.
Body In White Before Roof (11 of 13)	See **Fig. 198**.
Body In White Before Roof (12 of 13)	See **Fig. 199**.
Body In White Before Roof (13 of 13)	See **Fig. 200**.
Framed Body In White Without Closures With Sun Roof (1 of 3)	See **Fig. 201**.
Framed Body In White Without Closures With Sun Roof (2 of 3)	See **Fig. 202**.
Framed Body In White Without Closures With Sun Roof (3 of 3)	See **Fig. 203**.
Framed Body In White Without Closures Without Sun Roof (1 of 3)	See **Fig. 204**.
Framed Body In White Without Closures Without Sun Roof (2 of 3)	See **Fig. 205**.
Framed Body In White Without Closures Without Sun Roof (3 of 3)	See **Fig. 206**.
Hood (1 of 3)	See **Fig. 207**.
Hood (2 of 3)	See **Fig. 208**.
Hood (3 of 3)	See **Fig. 209**.
Doors (1 of 3)	See **Fig. 210**.
Doors (2 of 3)	See **Fig. 211**.
Doors (3 of 3)	See **Fig. 212**.
Decklid (1 of 4)	See **Fig. 213**.
Decklid (2 of 4)	See **Fig. 214**.
Decklid (3 of 4)	See **Fig. 215**.
Decklid (4 of 4)	See **Fig. 216**.
Miscellaneous Closures (1 of 2)	See **Fig. 217**.
Miscellaneous Closures (2 of 2)	See **Fig. 218**.

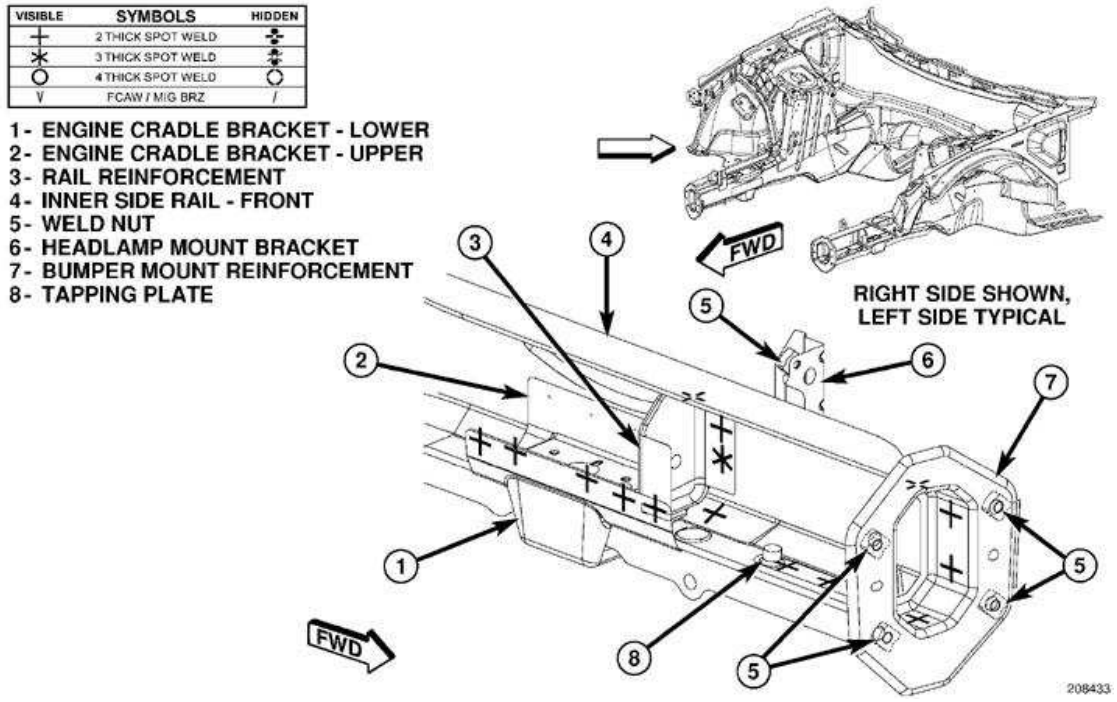

Fig. 72: Engine Box (1 of 9)
Courtesy of CHRYSLER LLC

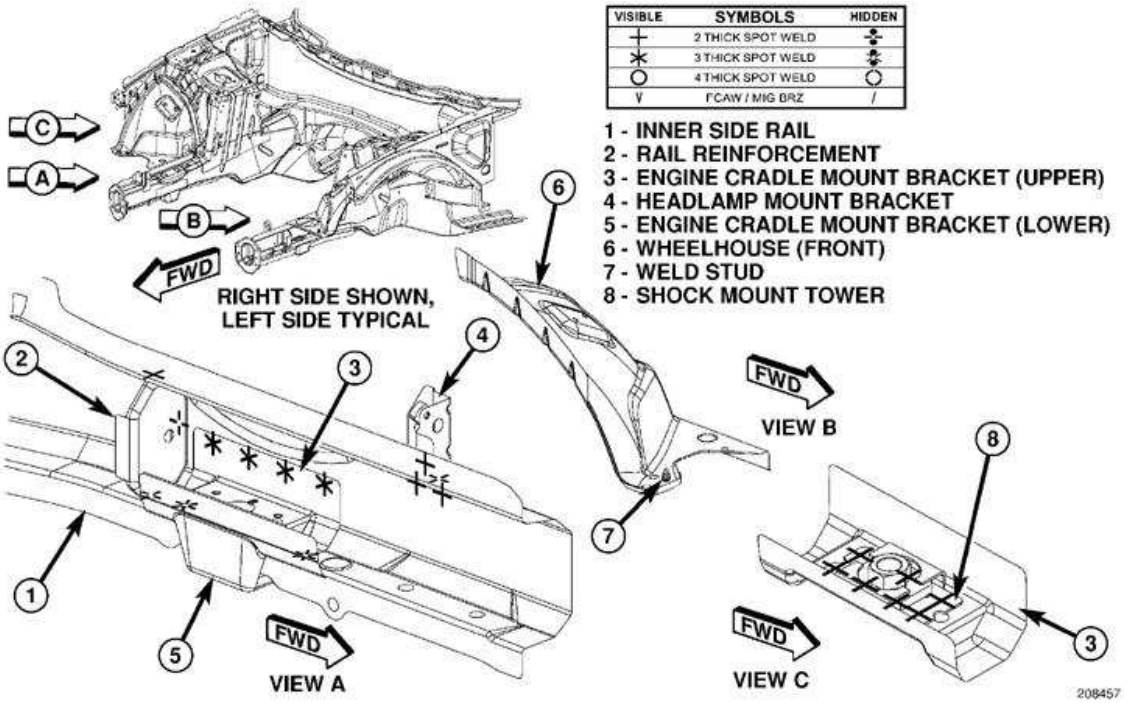

Fig. 73: Engine Box (2 of 9)
Courtesy of CHRYSLER LLC

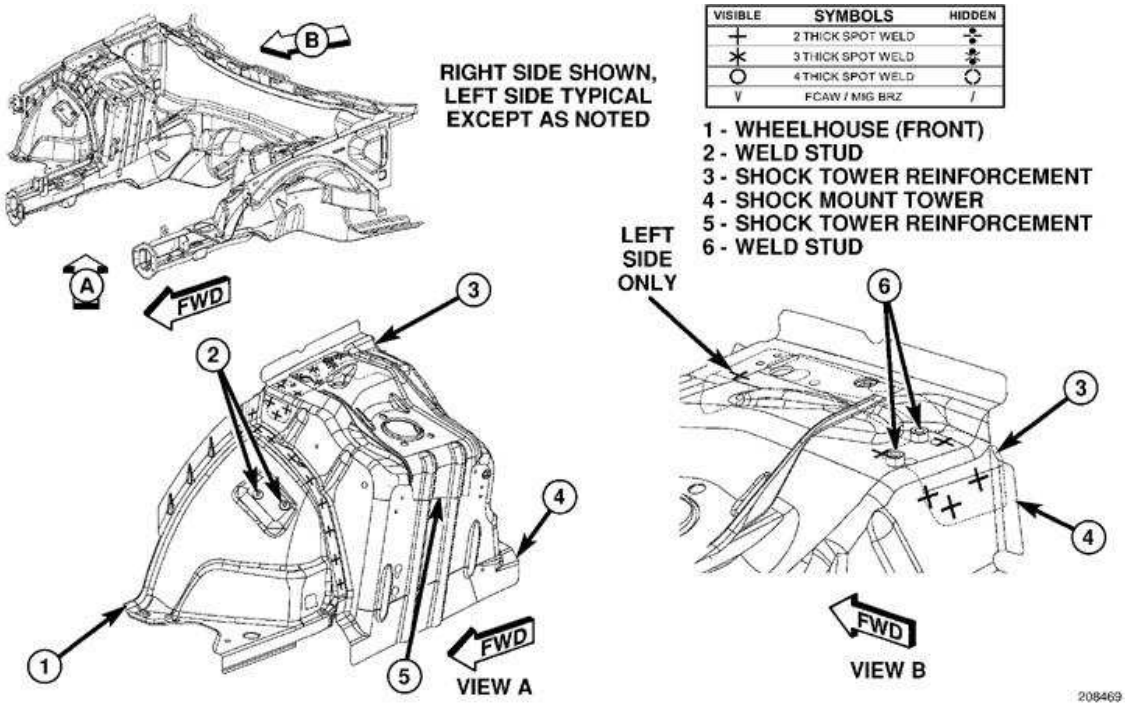

Fig. 74: Engine Box (3 of 9)
Courtesy of CHRYSLER LLC

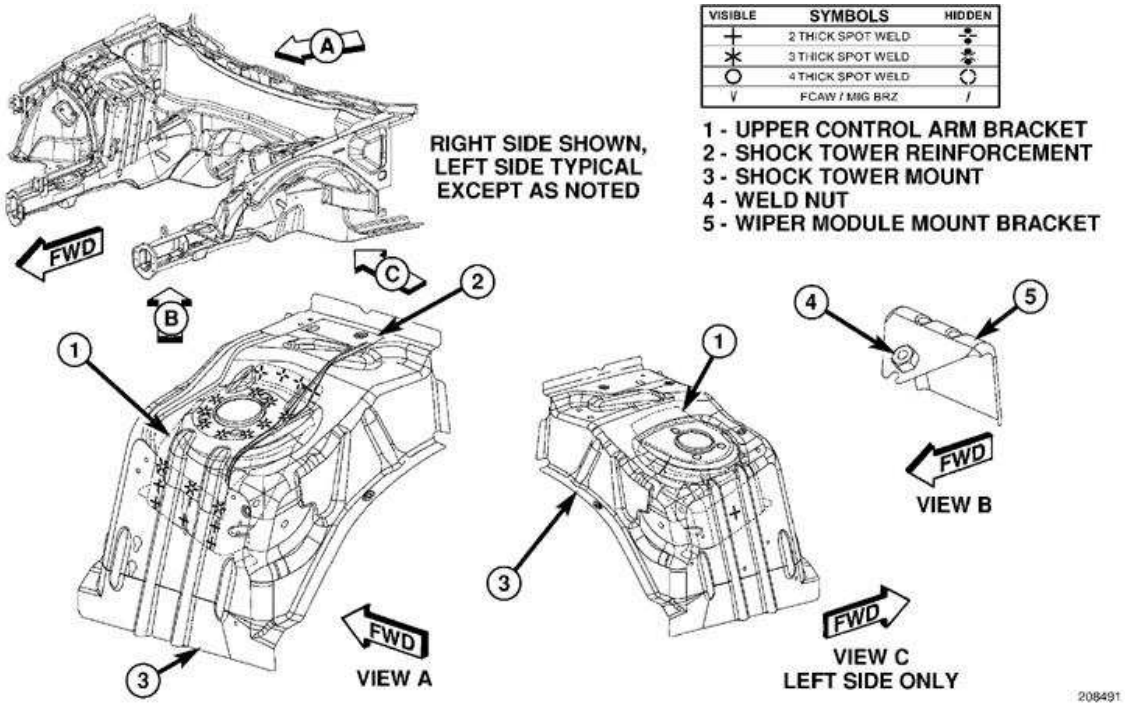

Fig. 75: Engine Box (4 of 9)
Courtesy of CHRYSLER LLC

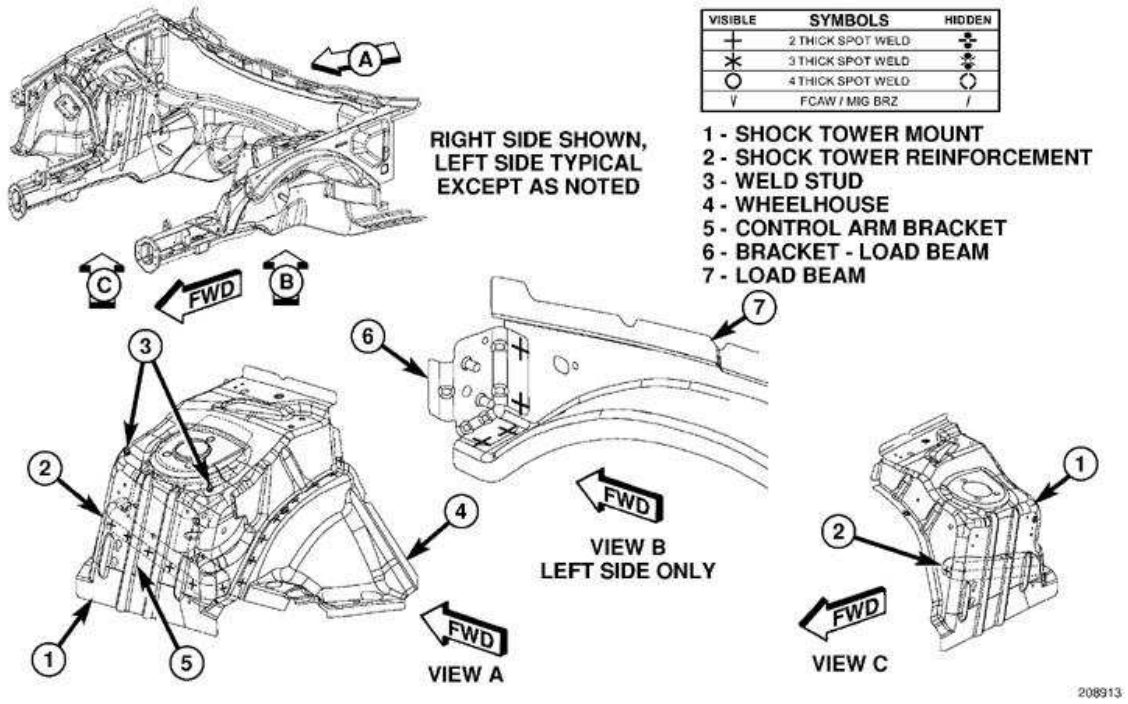

Fig. 76: Engine Box (5 of 9)
Courtesy of CHRYSLER LLC

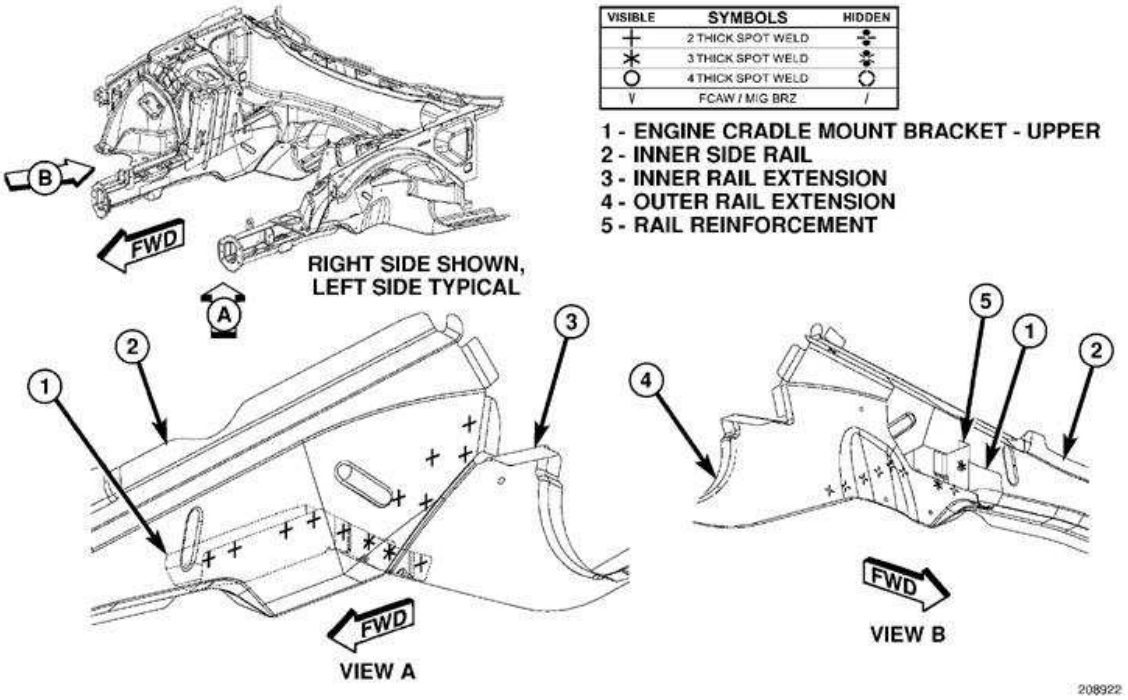

Fig. 77: Engine Box (6 of 9)
Courtesy of CHRYSLER LLC

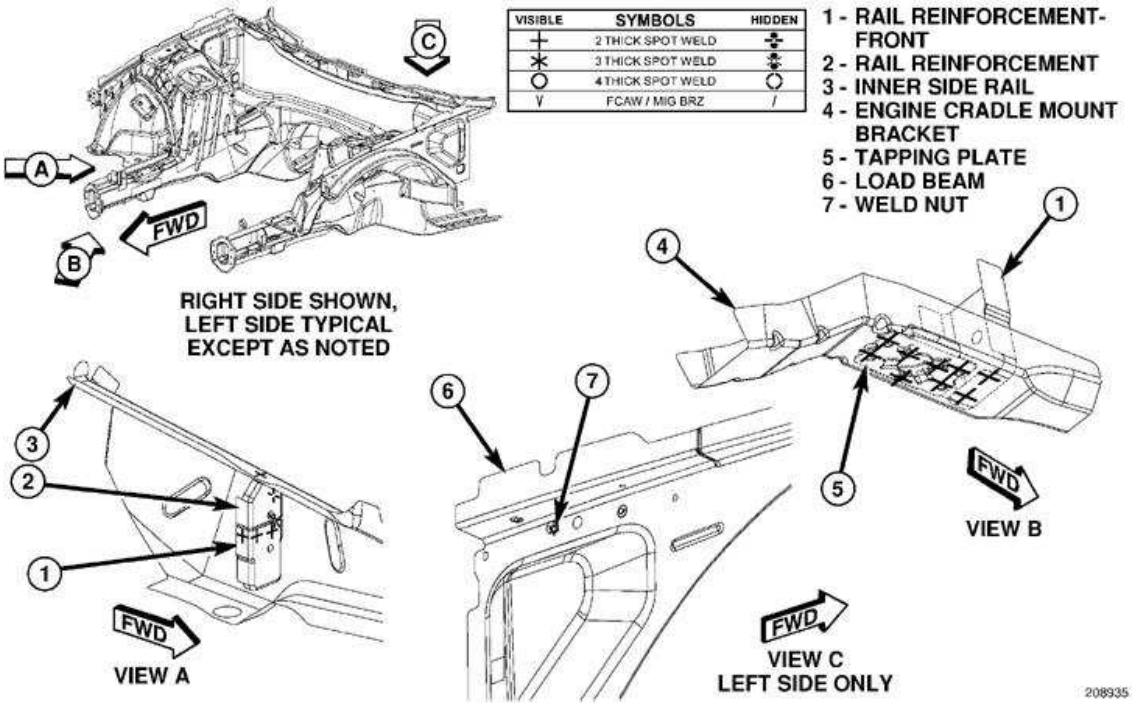

Fig. 78: Engine Box (7 of 9)
Courtesy of CHRYSLER LLC

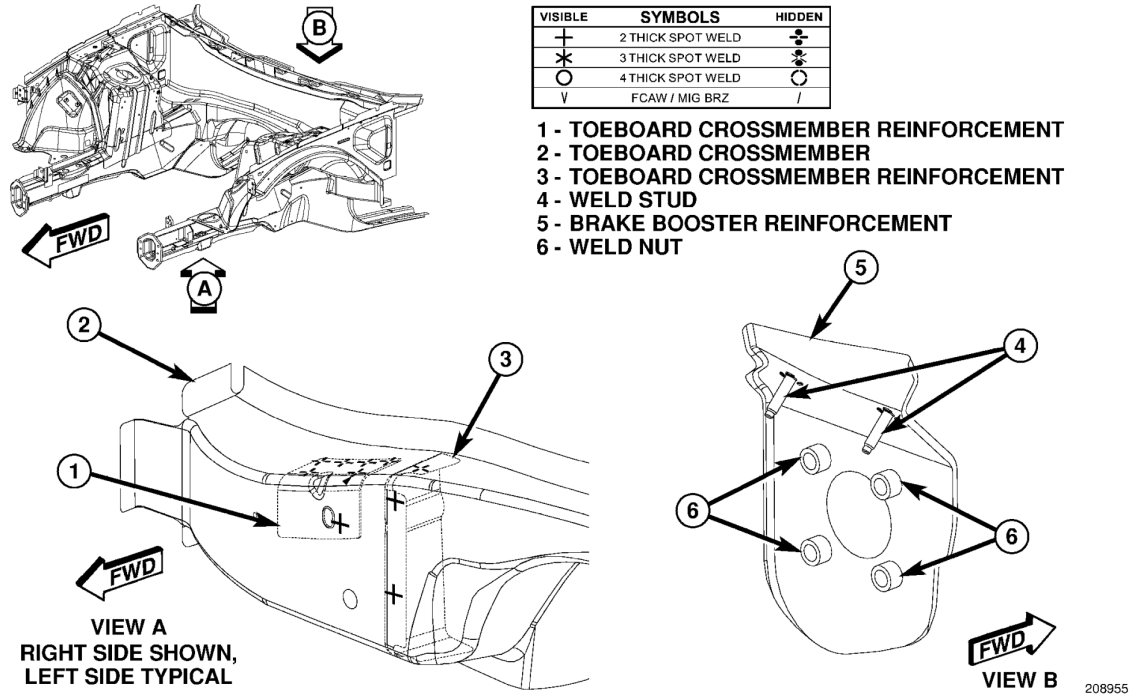

Fig. 79: Engine Box (8 of 9)
Courtesy of CHRYSLER LLC

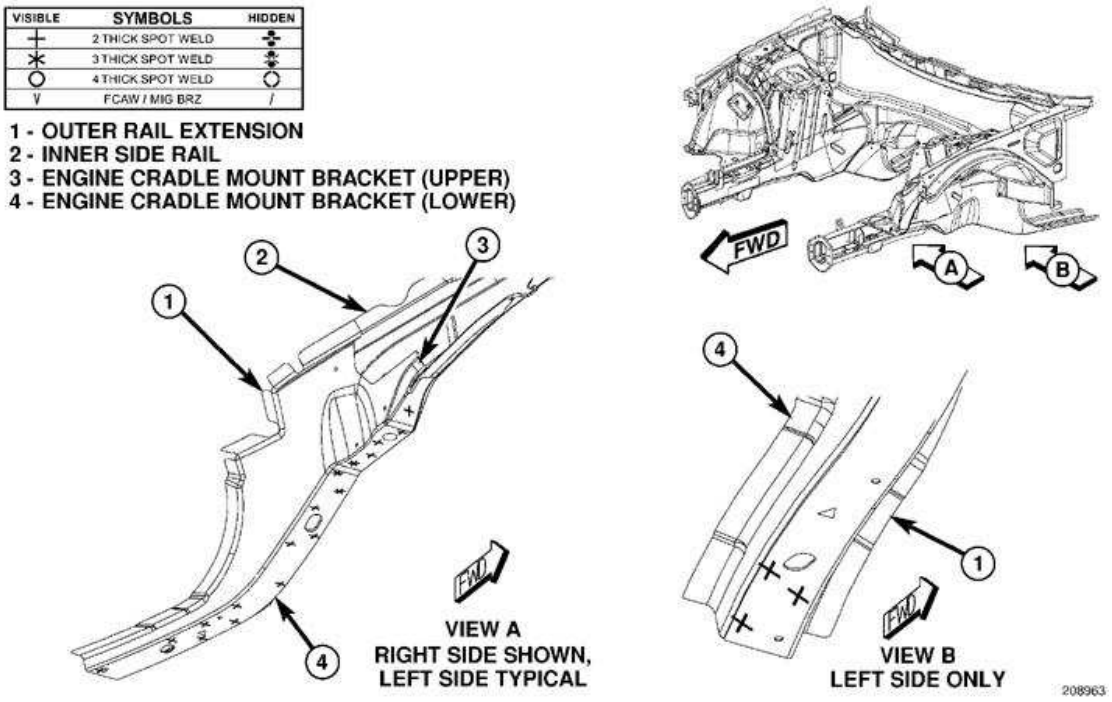

Fig. 80: Engine Box (9 of 9)
Courtesy of CHRYSLER LLC

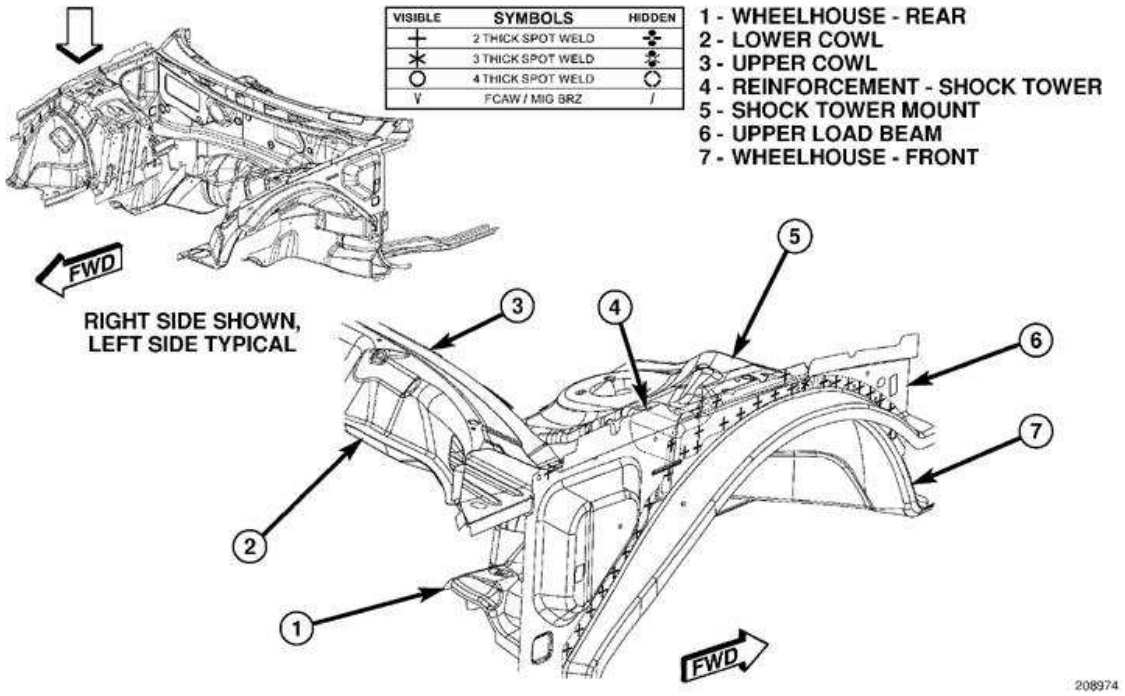

Fig. 81: Engine Box (1 of 4)
Courtesy of CHRYSLER LLC

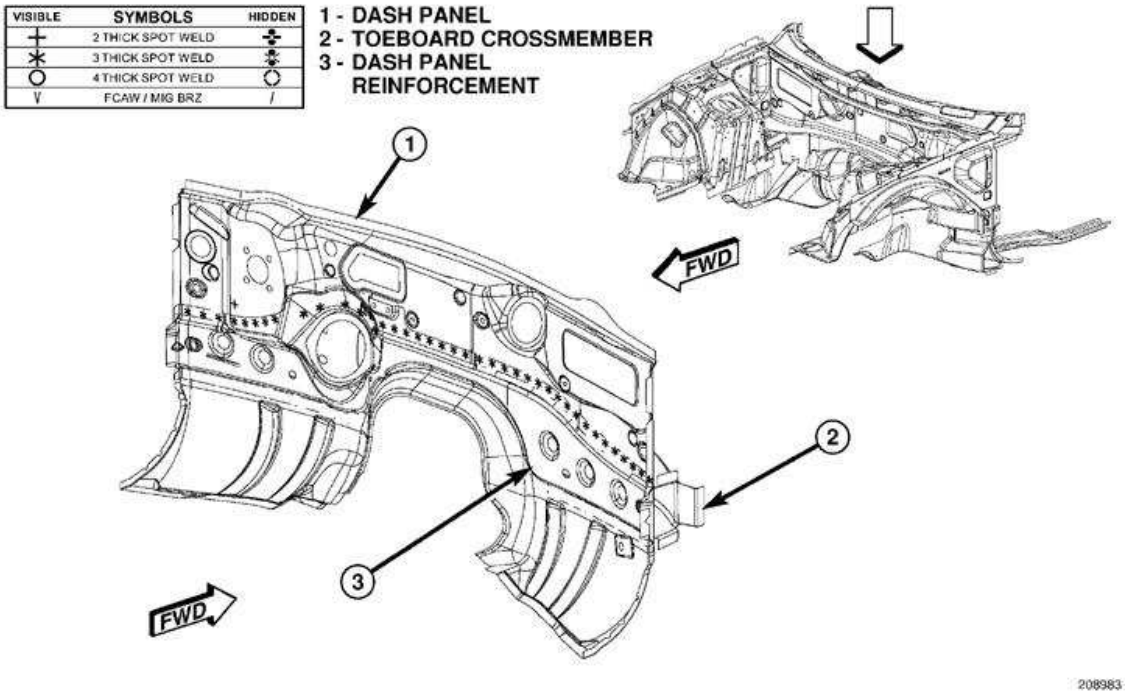

Fig. 82: Engine Box (2 of 4)
Courtesy of CHRYSLER LLC

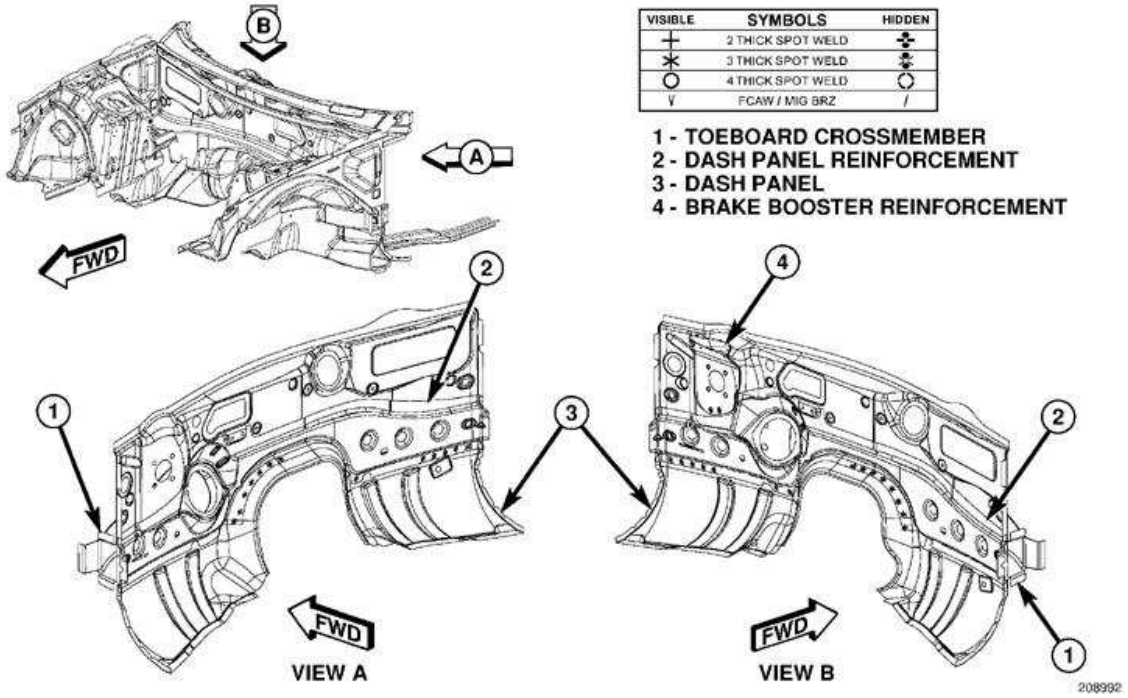

Fig. 83: Engine Box (3 of 4)
Courtesy of CHRYSLER LLC

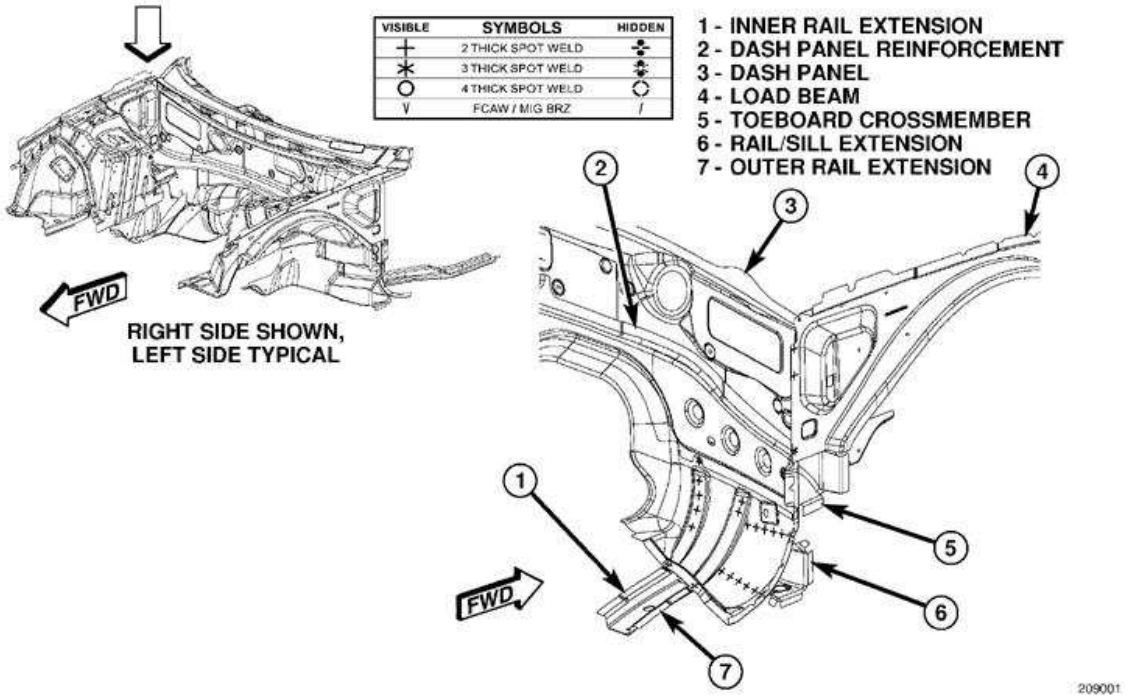

Fig. 84: Engine Box (4 of 4)
Courtesy of CHRYSLER LLC

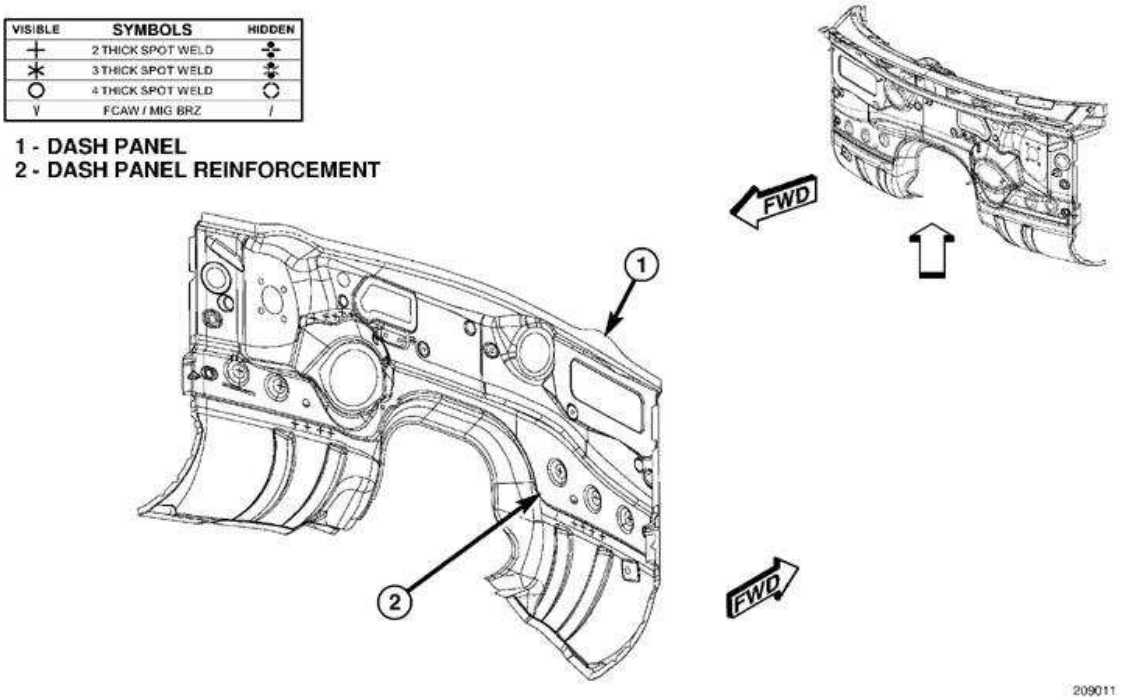

Fig. 85: Dash/Cowl/Plenum (1 of 6)
Courtesy of CHRYSLER LLC

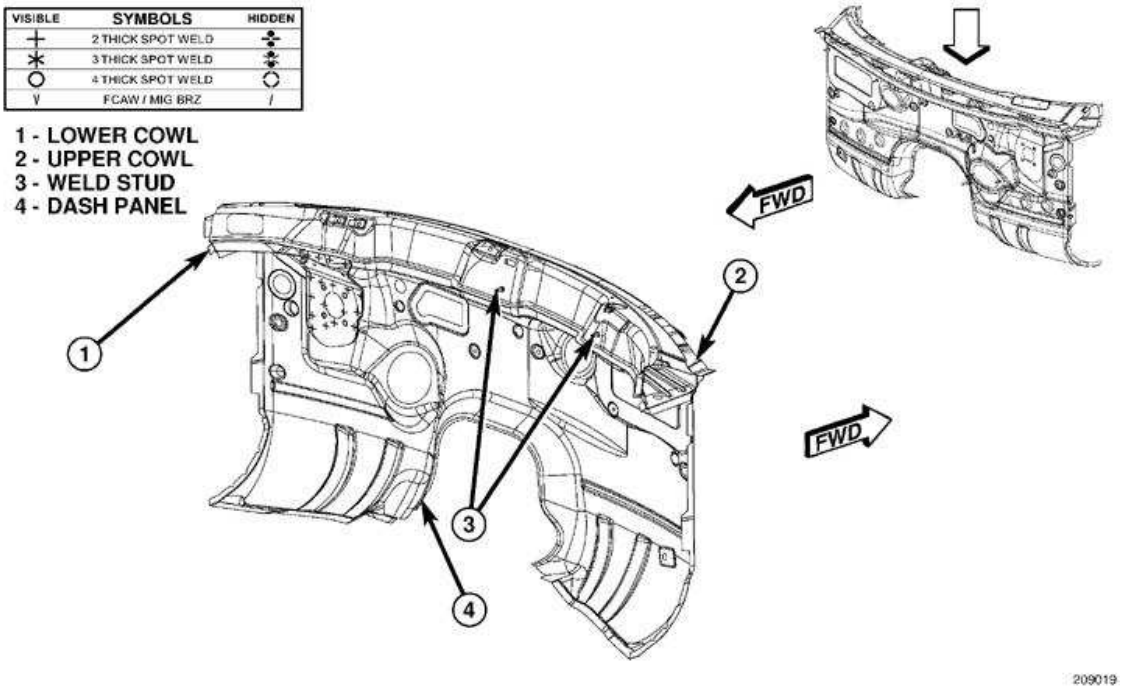

Fig. 86: Dash/Cowl/Plenum (2 of 6)
Courtesy of CHRYSLER LLC

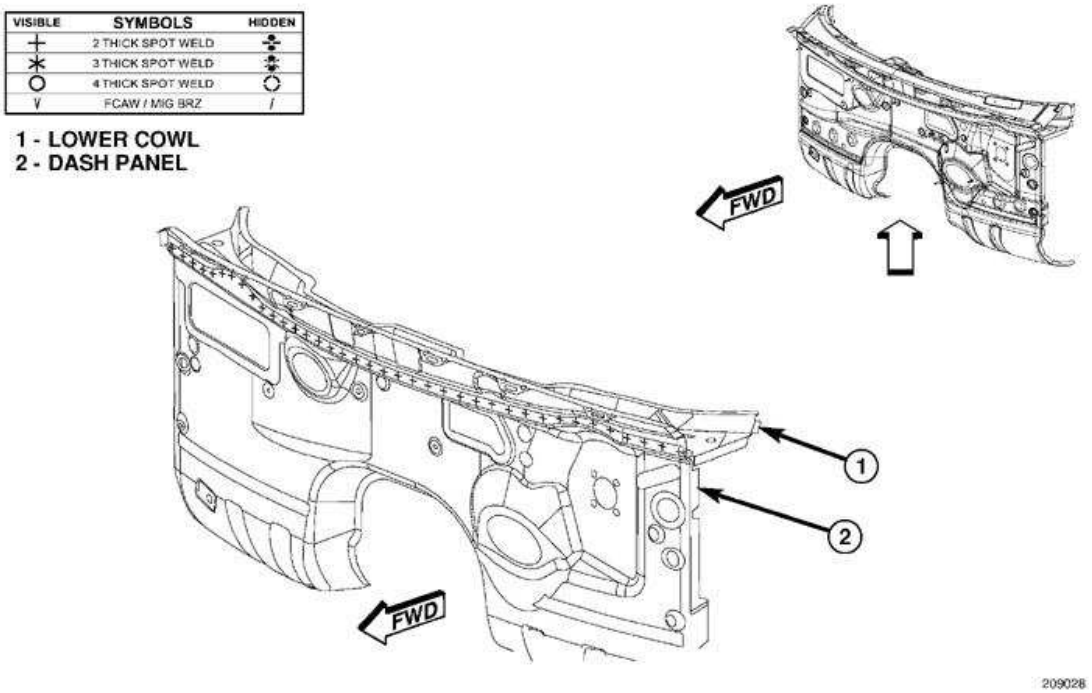

Fig. 87: Dash/Cowl/Plenum (3 of 6)
Courtesy of CHRYSLER LLC

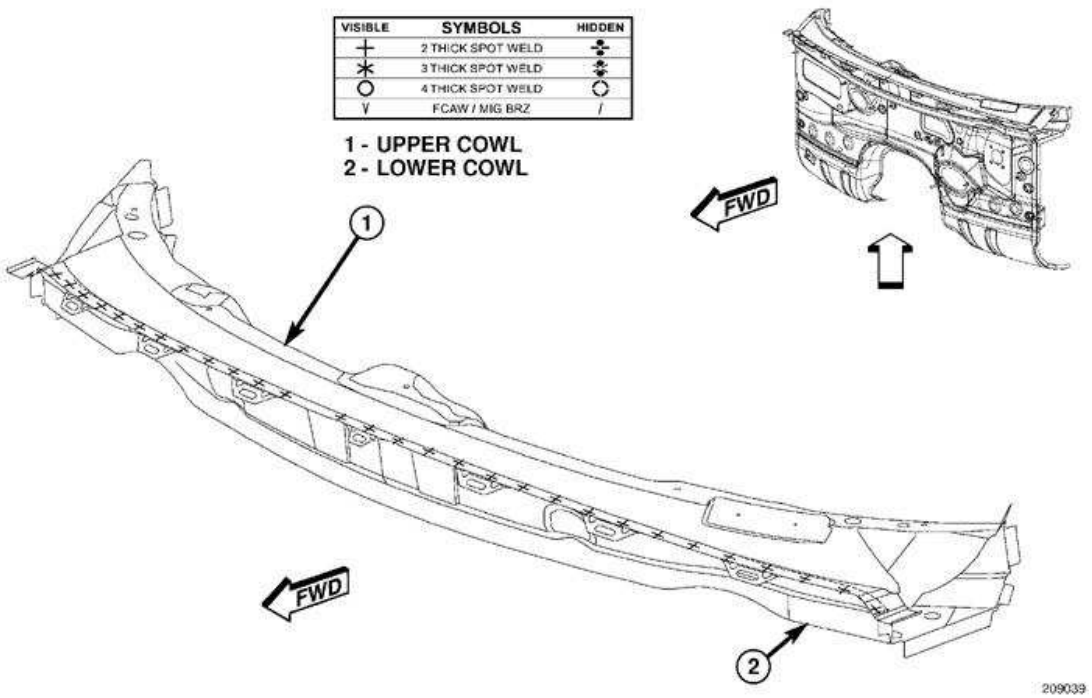

Fig. 88: Dash/Cowl/Plenum (4 of 6)
Courtesy of CHRYSLER LLC

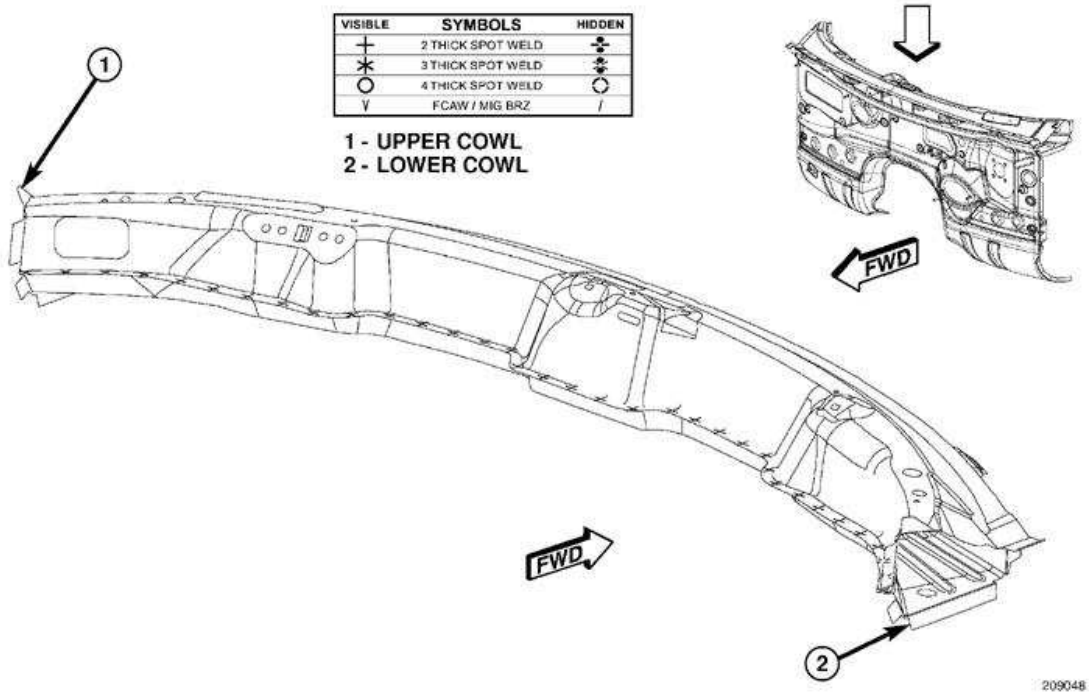

Fig. 89: Dash/Cowl/Plenum (5 of 6)
Courtesy of CHRYSLER LLC

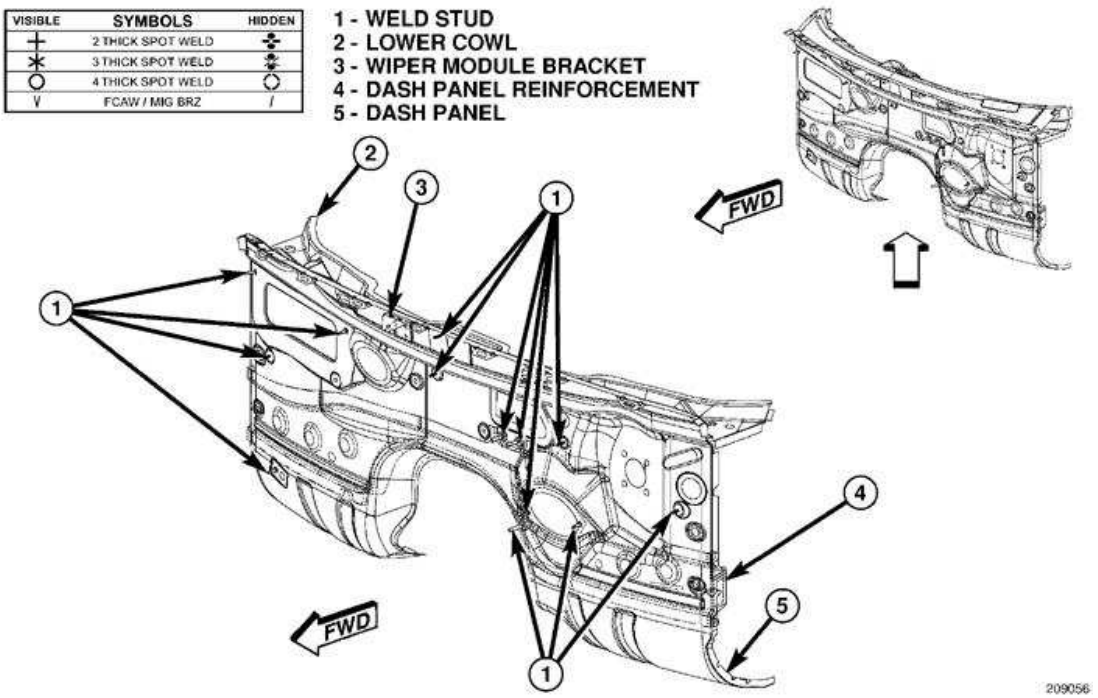

Fig. 90: Dash/Cowl/Plenum (6 of 6)
Courtesy of CHRYSLER LLC

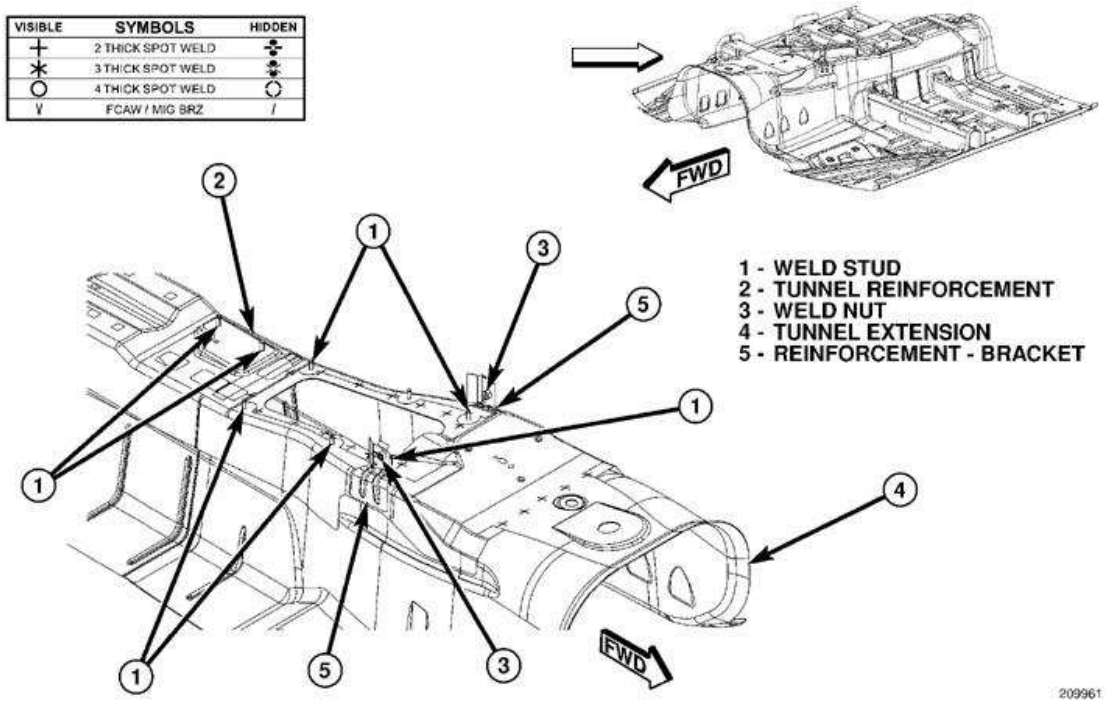

Fig. 91: Front Floor (1 of 19)
Courtesy of CHRYSLER LLC

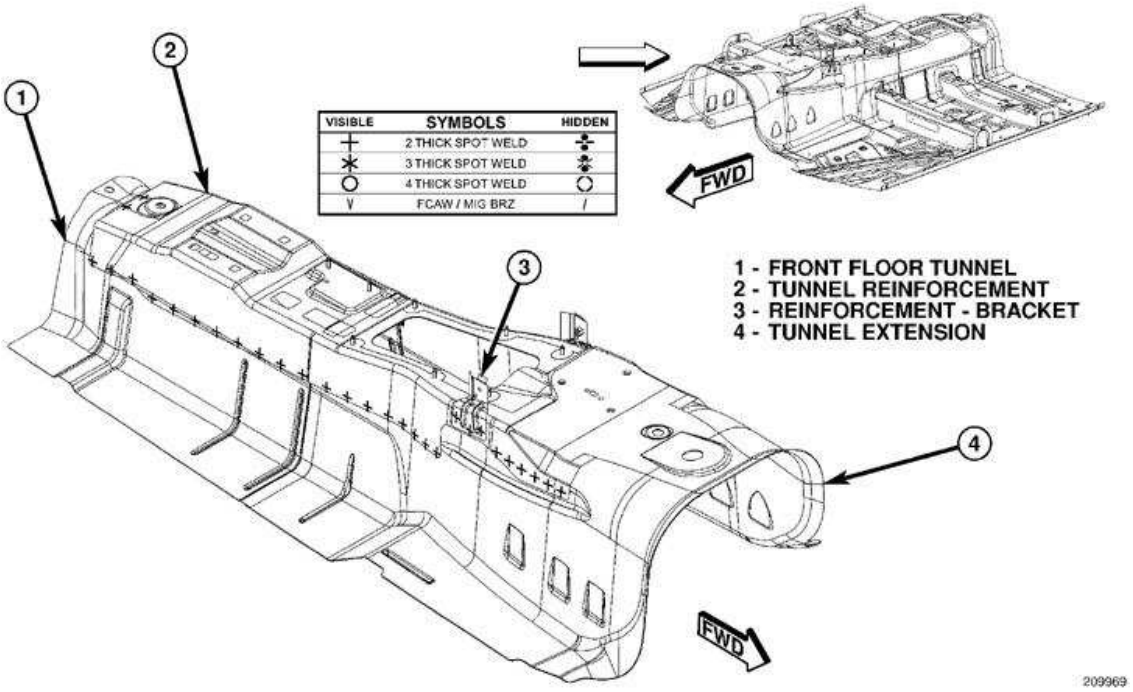

Fig. 92: Front Floor (2 of 19)
Courtesy of CHRYSLER LLC

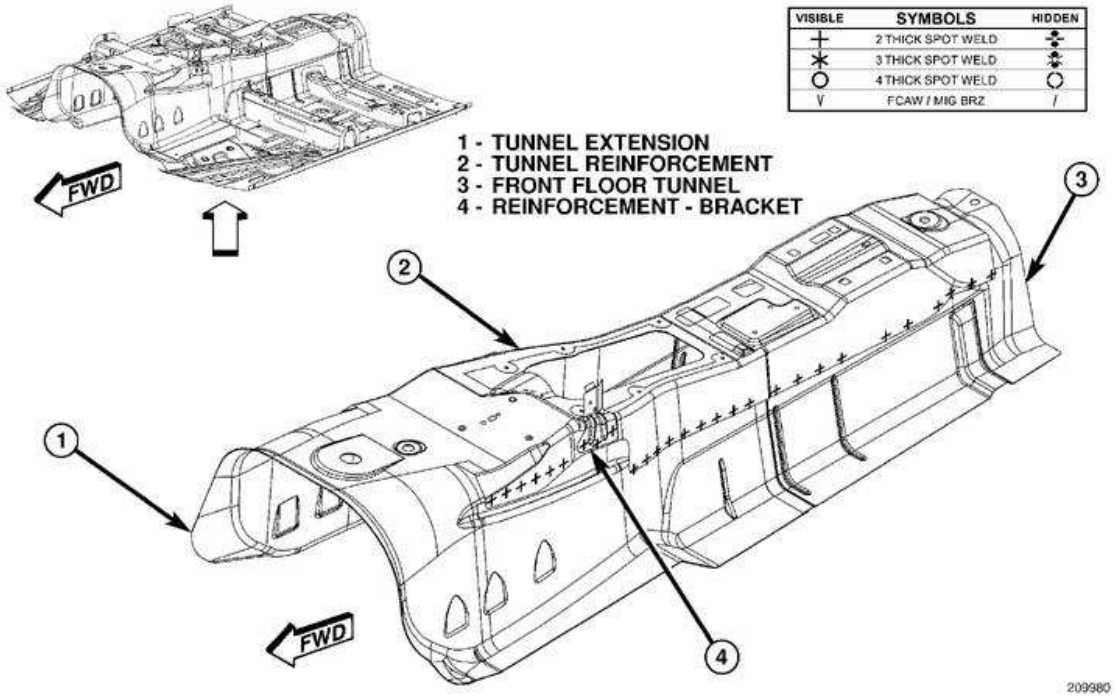

Fig. 93: Front Floor (3 of 19)
Courtesy of CHRYSLER LLC

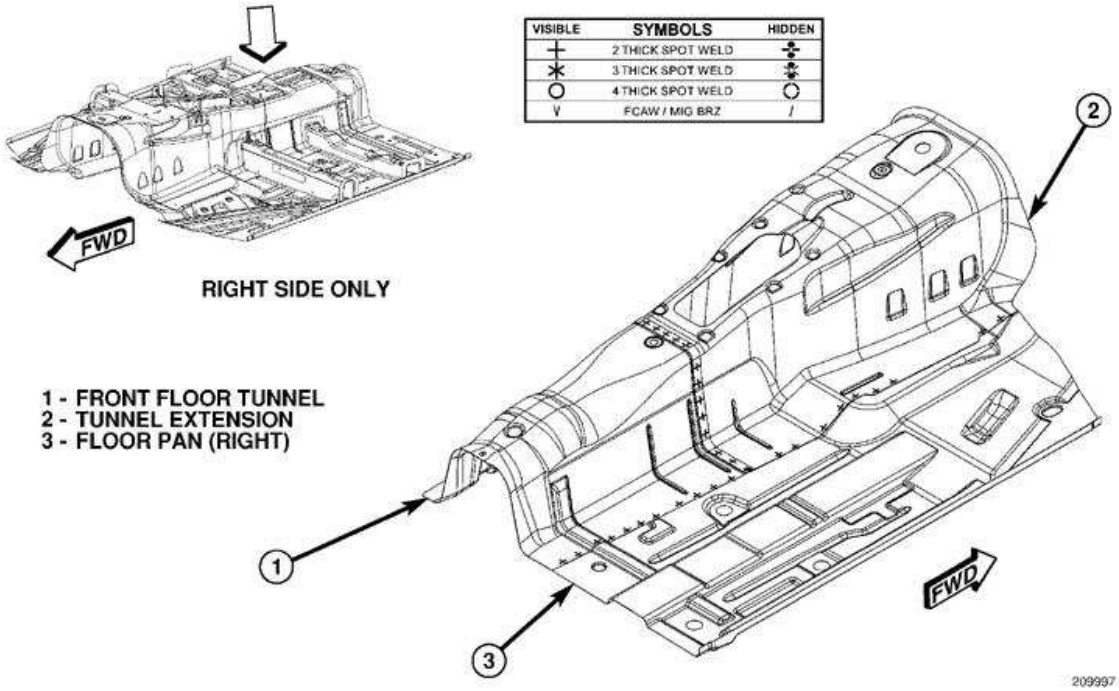

Fig. 94: Front Floor (4 of 19)
Courtesy of CHRYSLER LLC

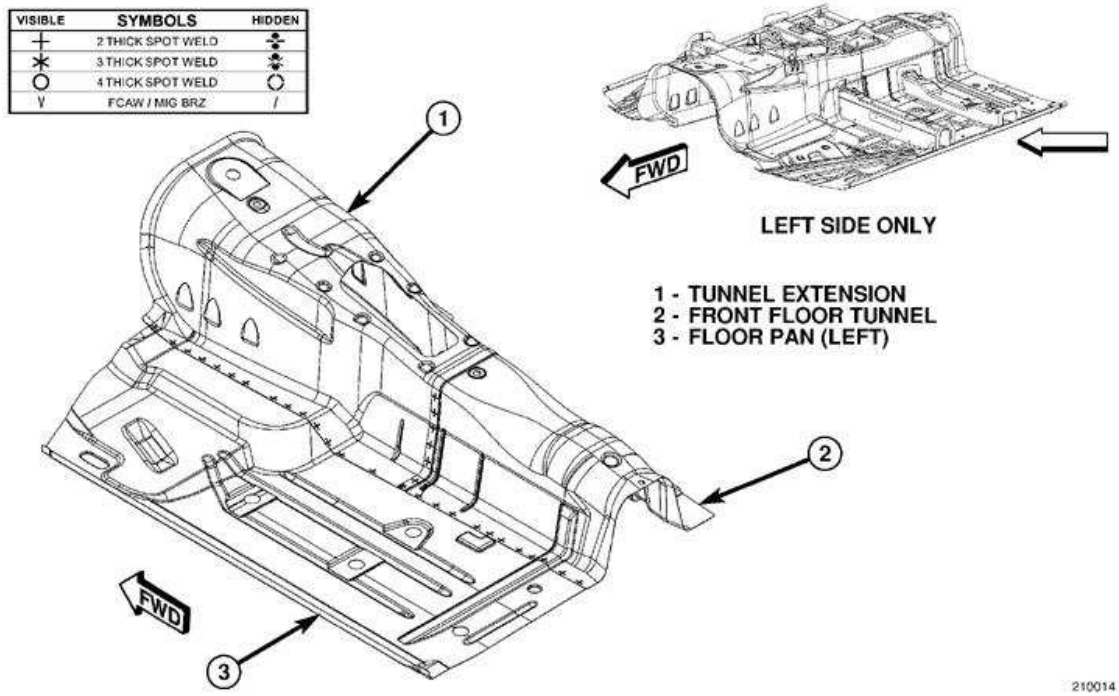

Fig. 95: Front Floor (5 of 19)
Courtesy of CHRYSLER LLC

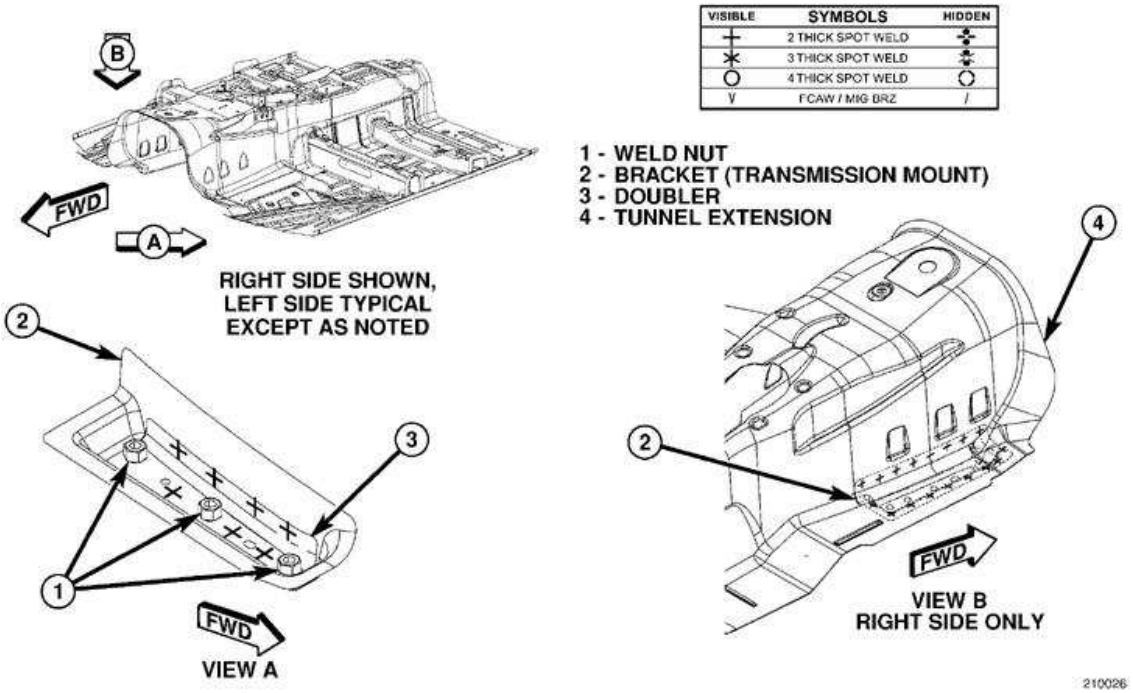

Fig. 96: Front Floor (6 of 19)
Courtesy of CHRYSLER LLC

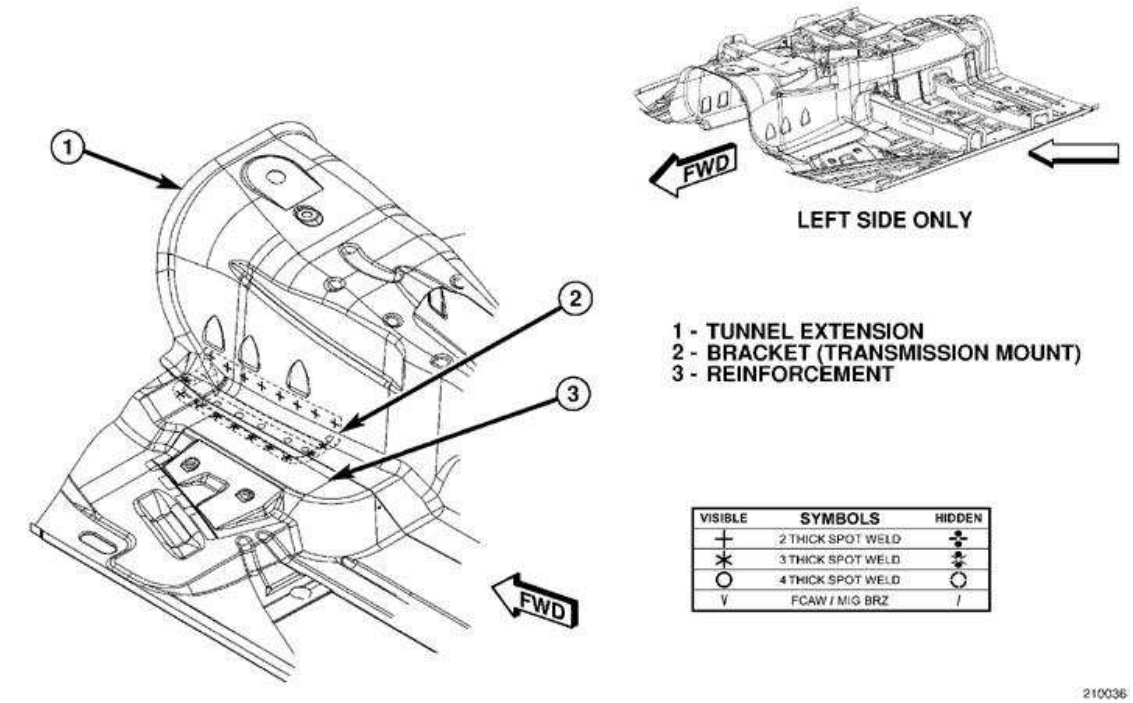

Fig. 97: Front Floor (7 of 19)
Courtesy of CHRYSLER LLC

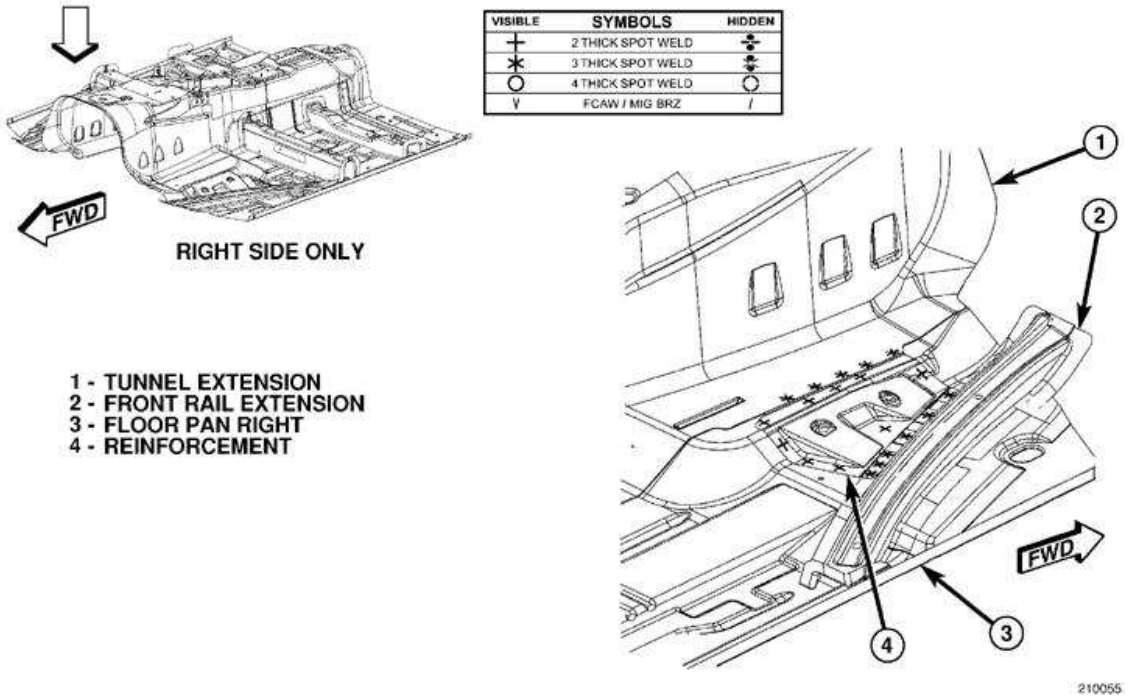

Fig. 98: Front Floor (8 of 19)
Courtesy of CHRYSLER LLC

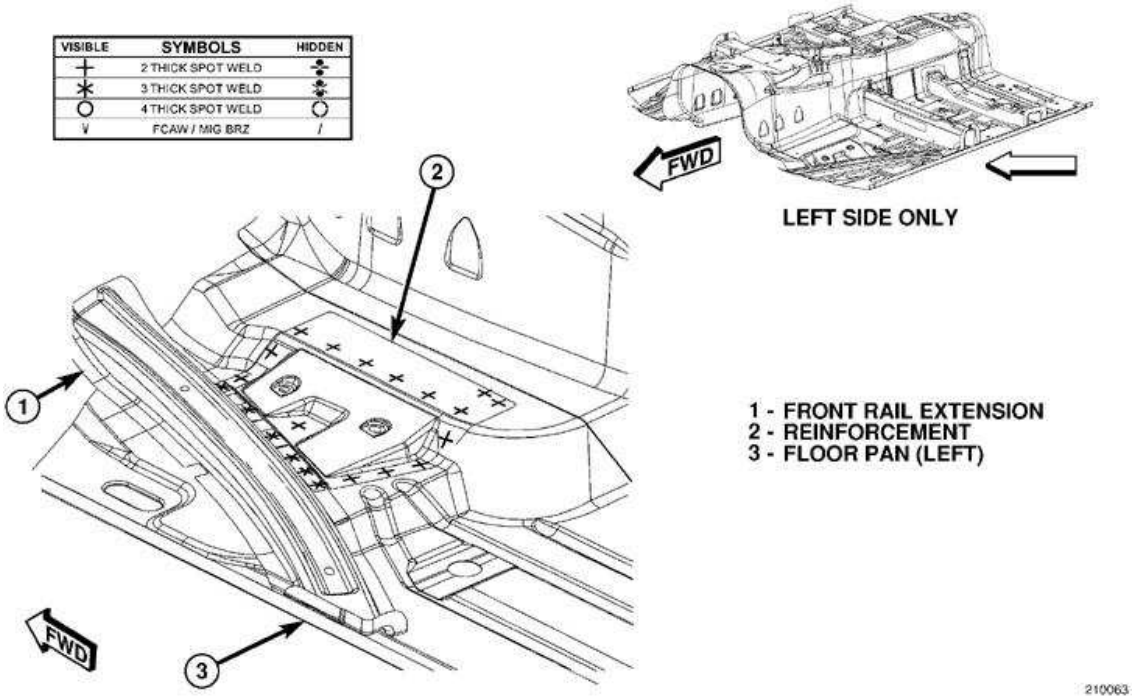

Fig. 99: Front Floor (9 of 19)
Courtesy of CHRYSLER LLC

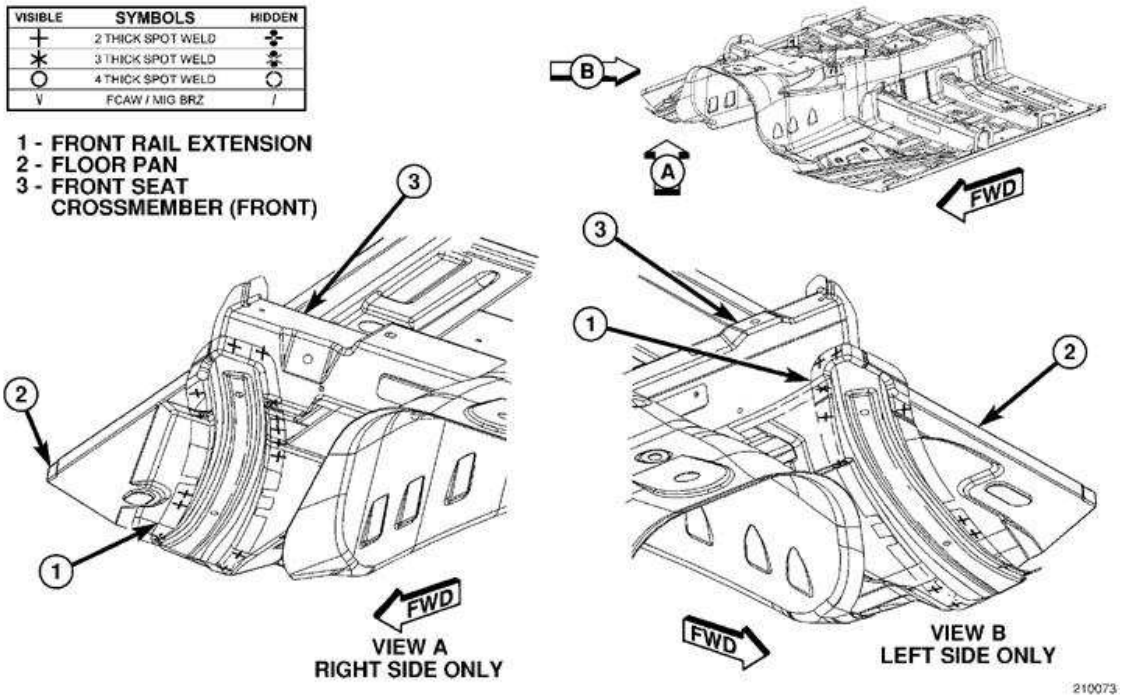

Fig. 100: Front Floor (10 of 19)
Courtesy of CHRYSLER LLC

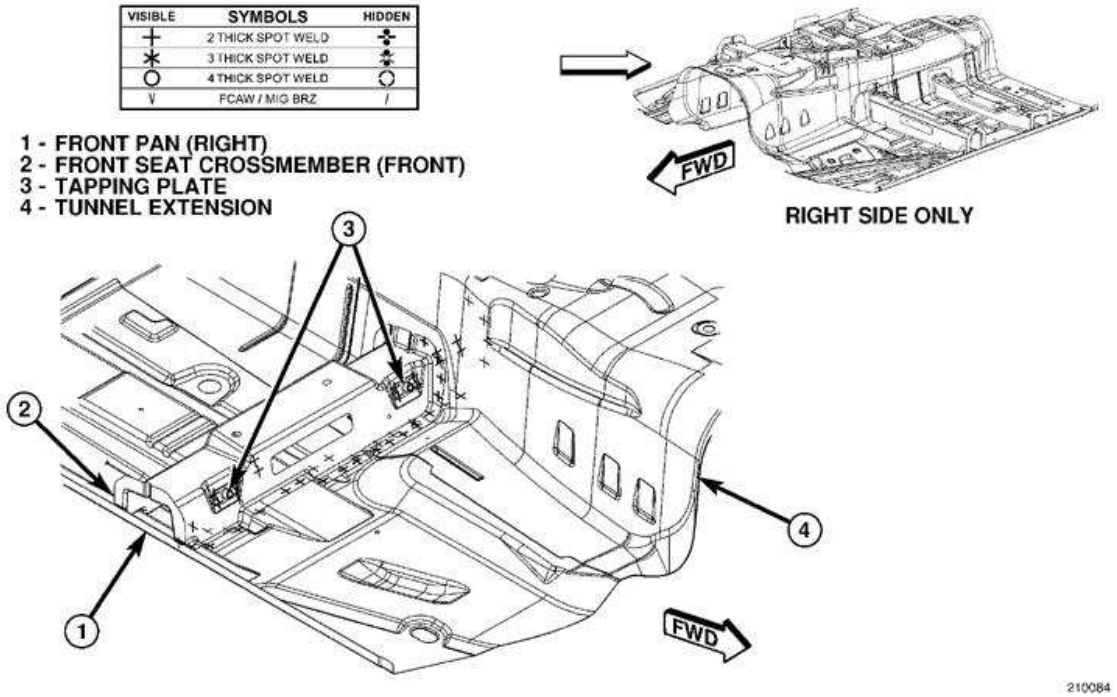

Fig. 101: Front Floor (11 of 19)
Courtesy of CHRYSLER LLC

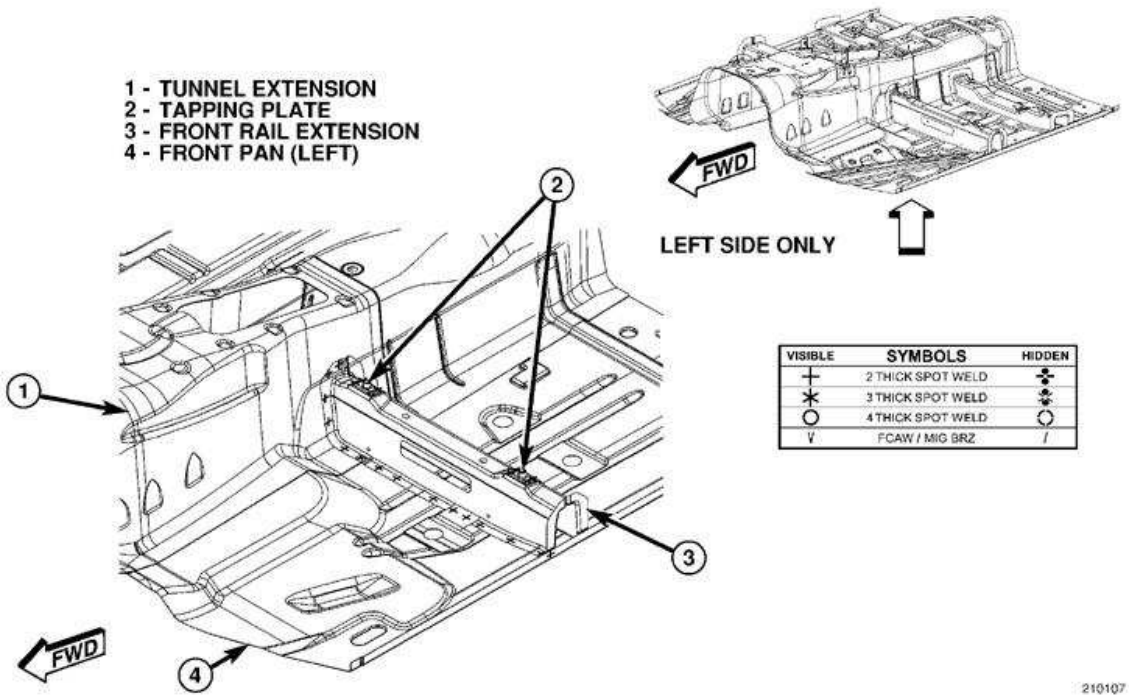

Fig. 102: Front Floor (12 of 19)
Courtesy of CHRYSLER LLC

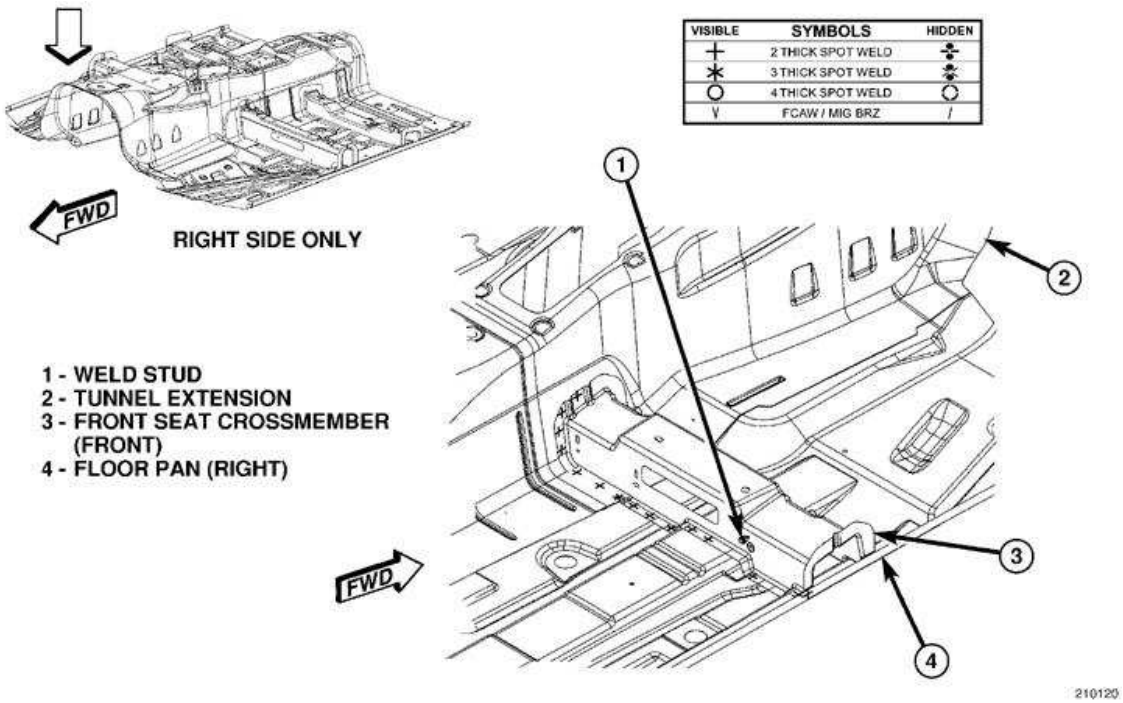

Fig. 103: Front Floor (13 of 19)
Courtesy of CHRYSLER LLC

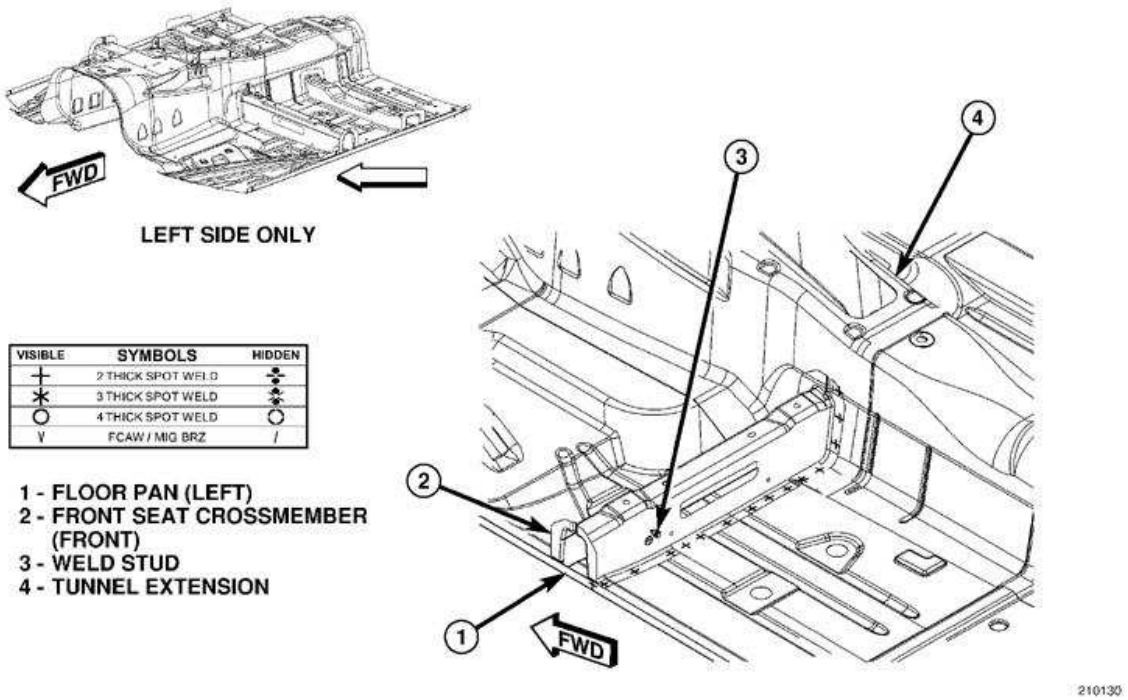

Fig. 104: Front Floor (14 of 19)
Courtesy of CHRYSLER LLC

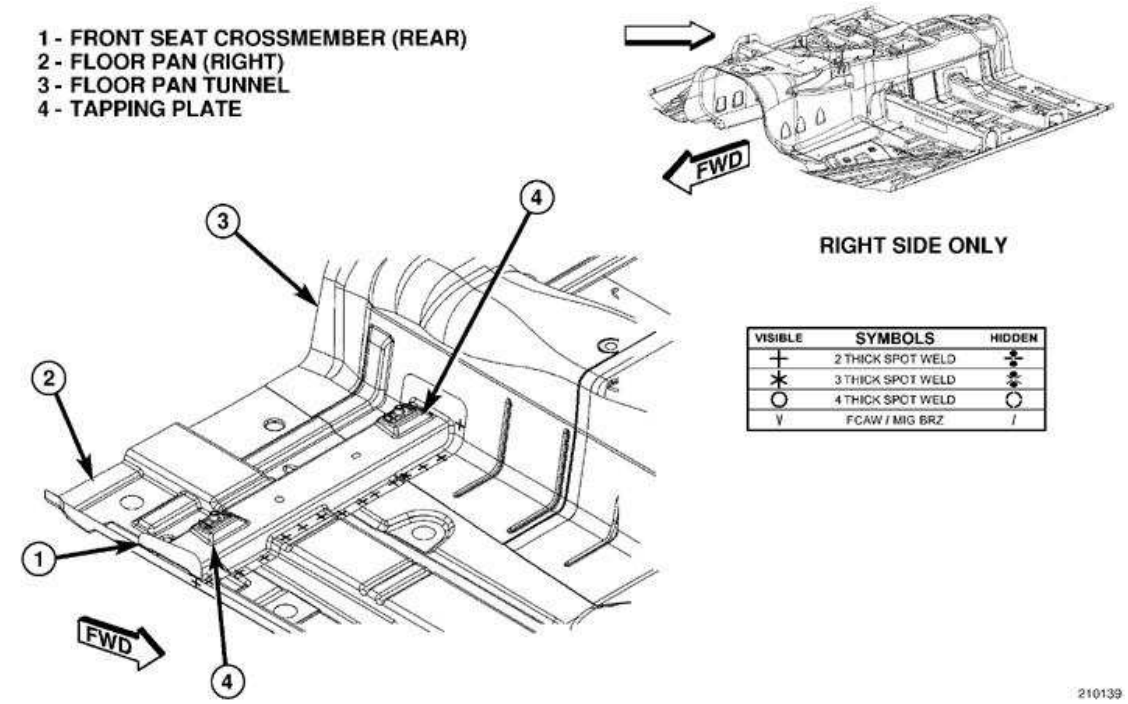

Fig. 105: Front Floor (15 of 19)
Courtesy of CHRYSLER LLC

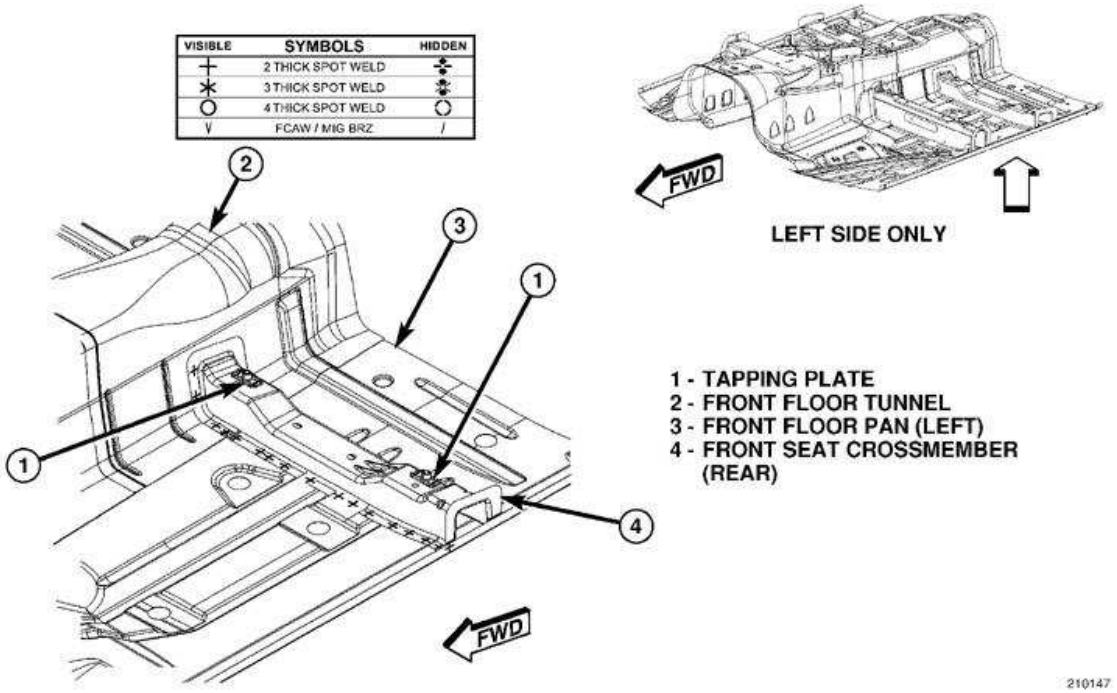

Fig. 106: Front Floor (16 of 19)
Courtesy of CHRYSLER LLC

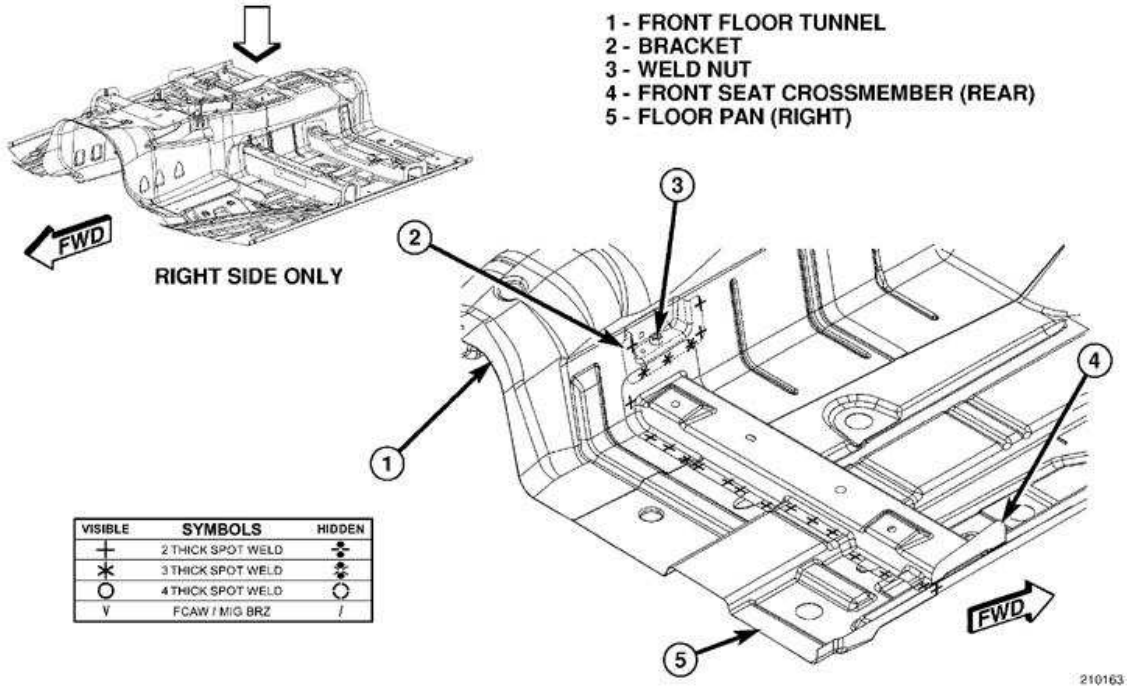

Fig. 107: Front Floor (17 of 19)
Courtesy of CHRYSLER LLC

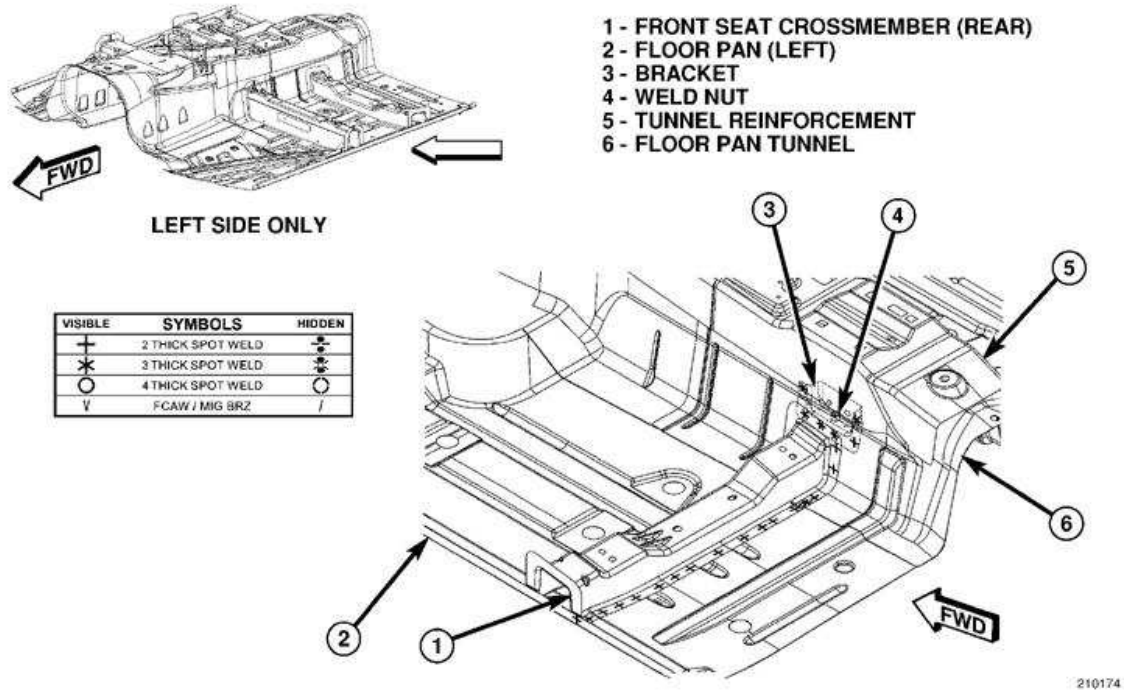

Fig. 108: Front Floor (18 of 19)
Courtesy of CHRYSLER LLC

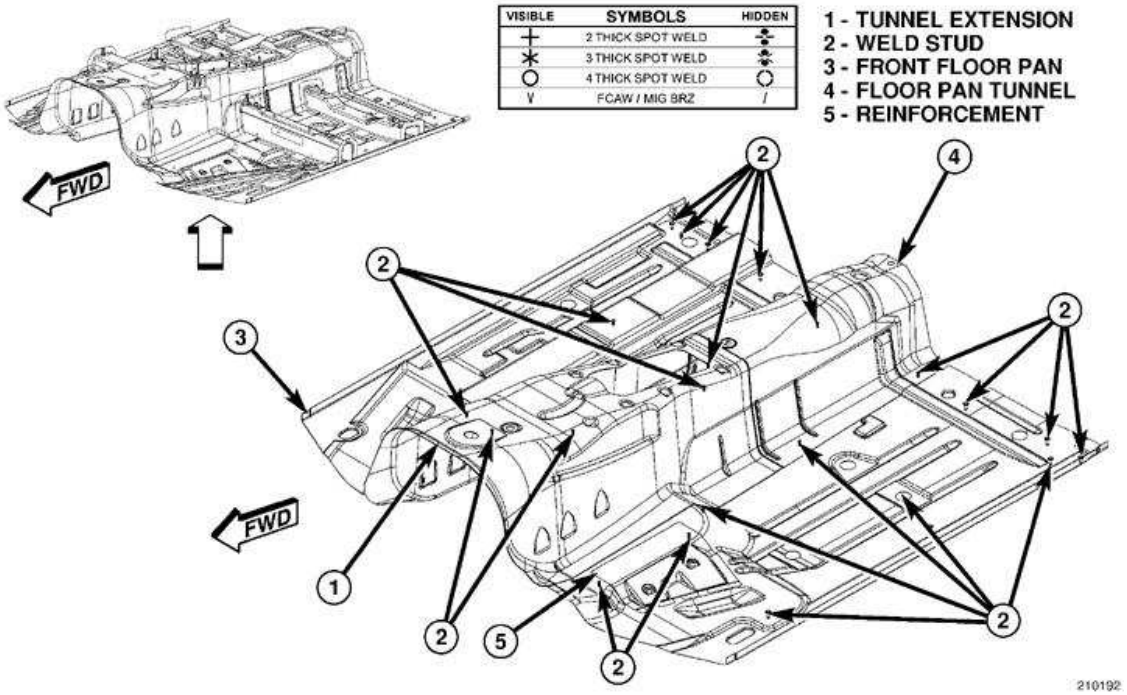

Fig. 109: Front Floor (19 of 19)
Courtesy of CHRYSLER LLC

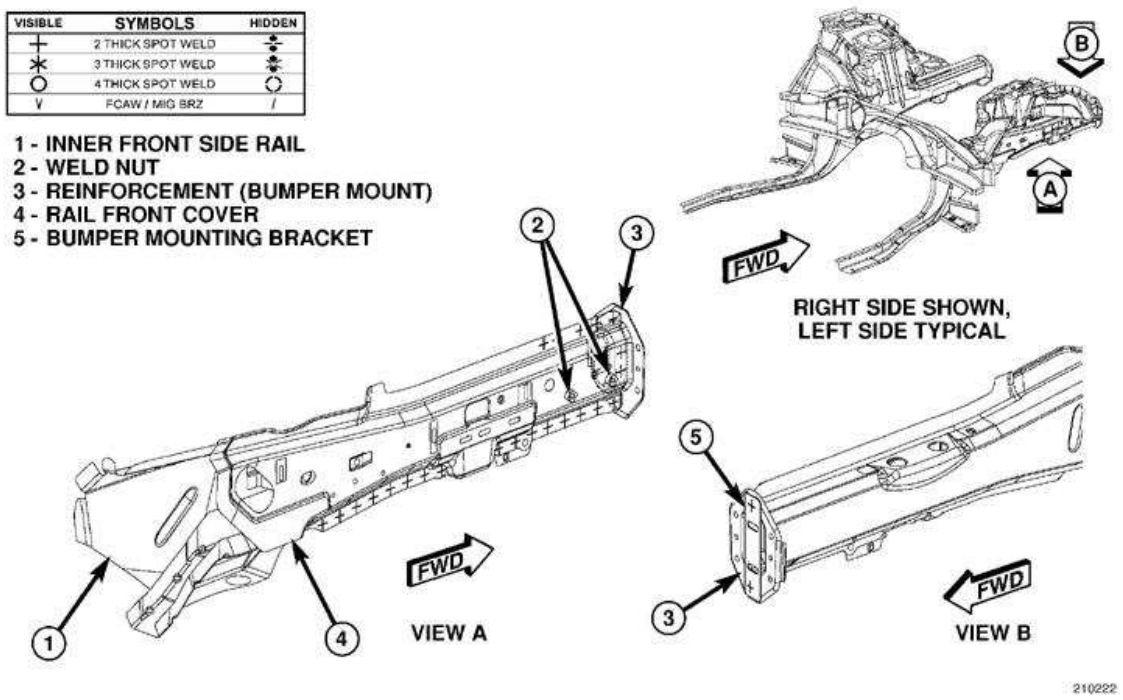

Fig. 110: Front Ladder, Rails and Wheelhouse (1 of 5)
Courtesy of CHRYSLER LLC

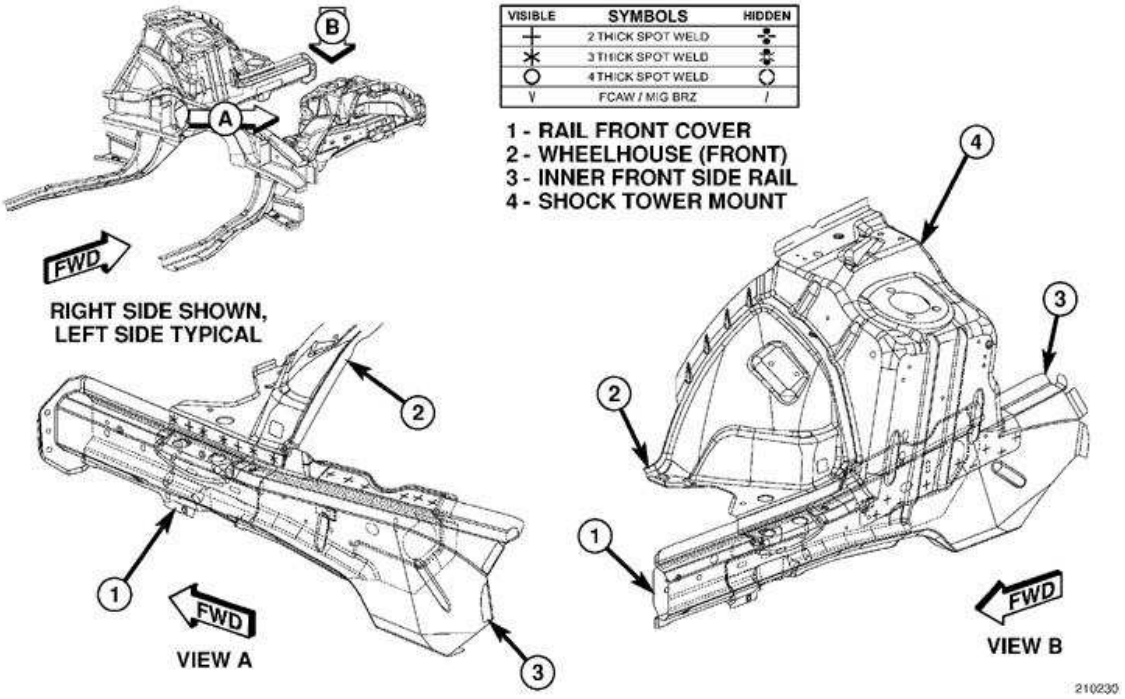

Fig. 111: Front Ladder, Rails and Wheelhouse (2 of 5)
Courtesy of CHRYSLER LLC

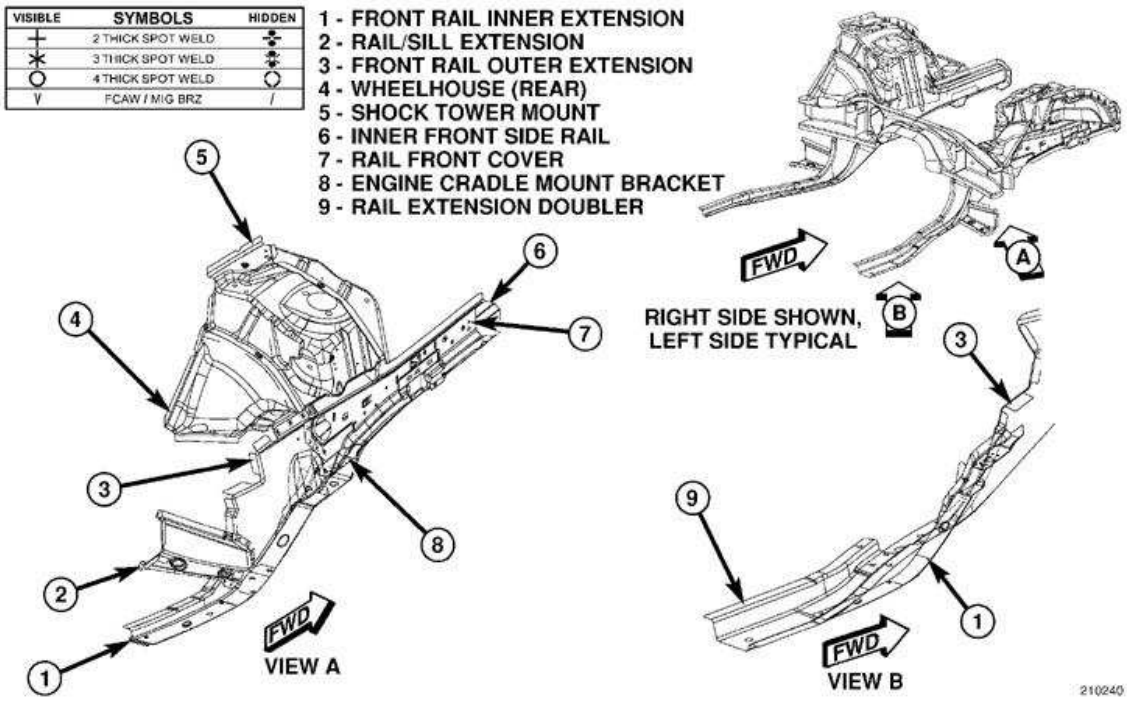

Fig. 112: Front Ladder, Rails and Wheelhouse (3 of 5)
Courtesy of CHRYSLER LLC

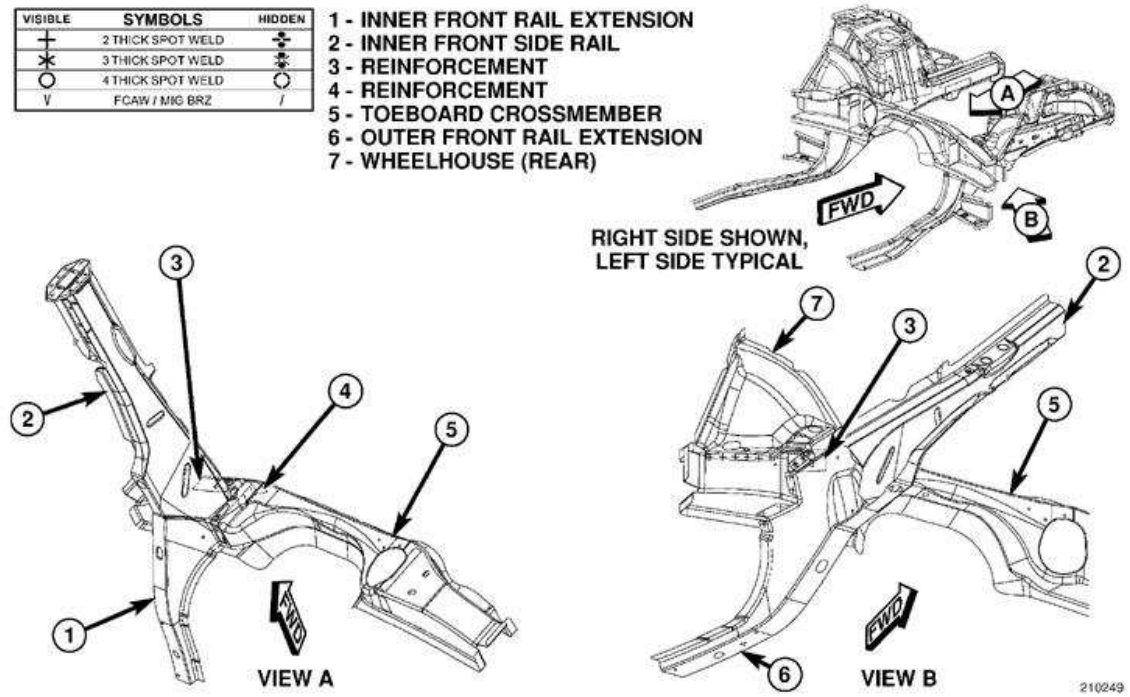

Fig. 113: Front Ladder, Rails and Wheelhouse (4 of 5)
Courtesy of CHRYSLER LLC

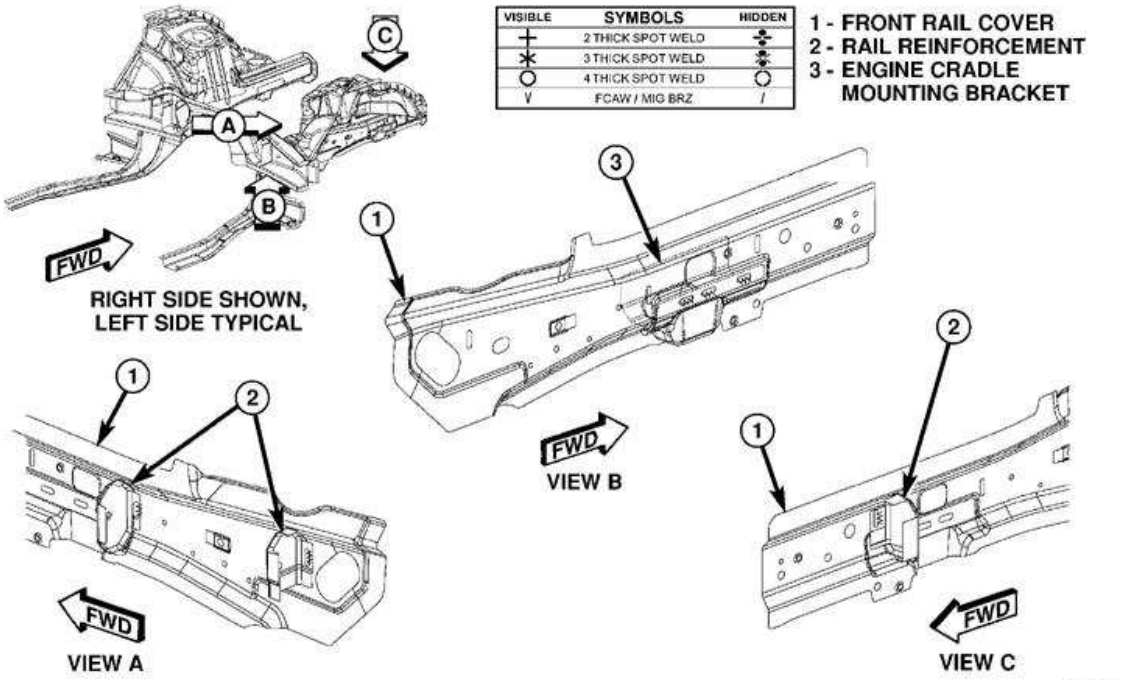

Fig. 114: Front Ladder, Rails and Wheelhouse (5 of 5)
Courtesy of CHRYSLER LLC

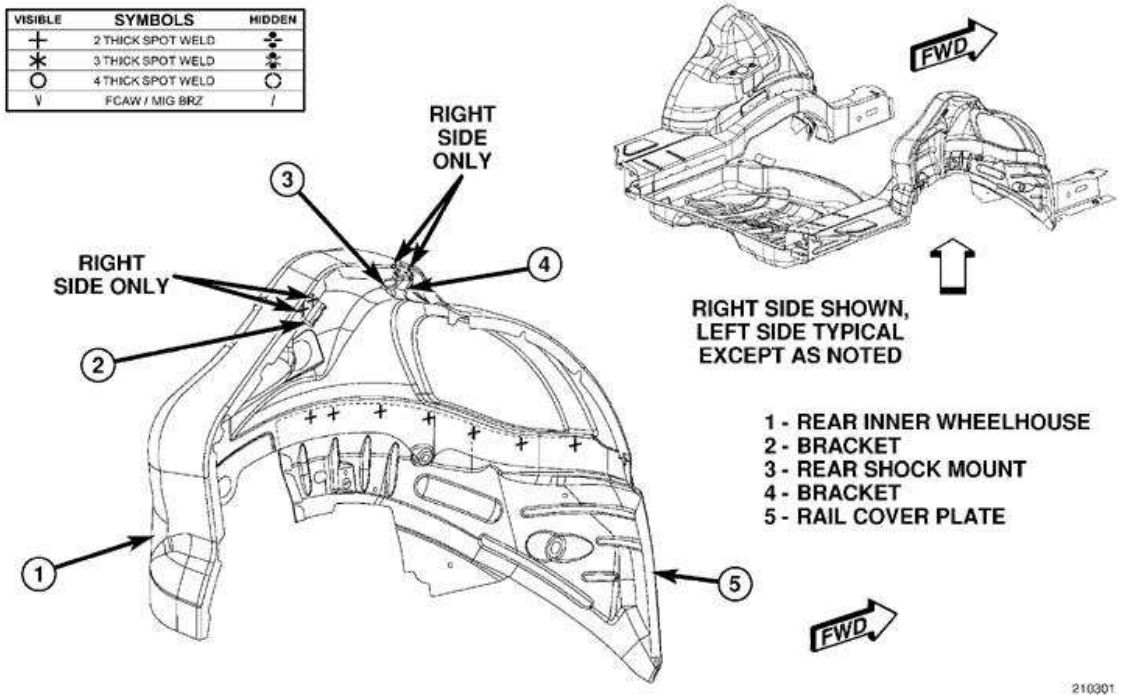

Fig. 115: Rear Floor, Ladder, and Wheelhouse (1 of 8)
Courtesy of CHRYSLER LLC

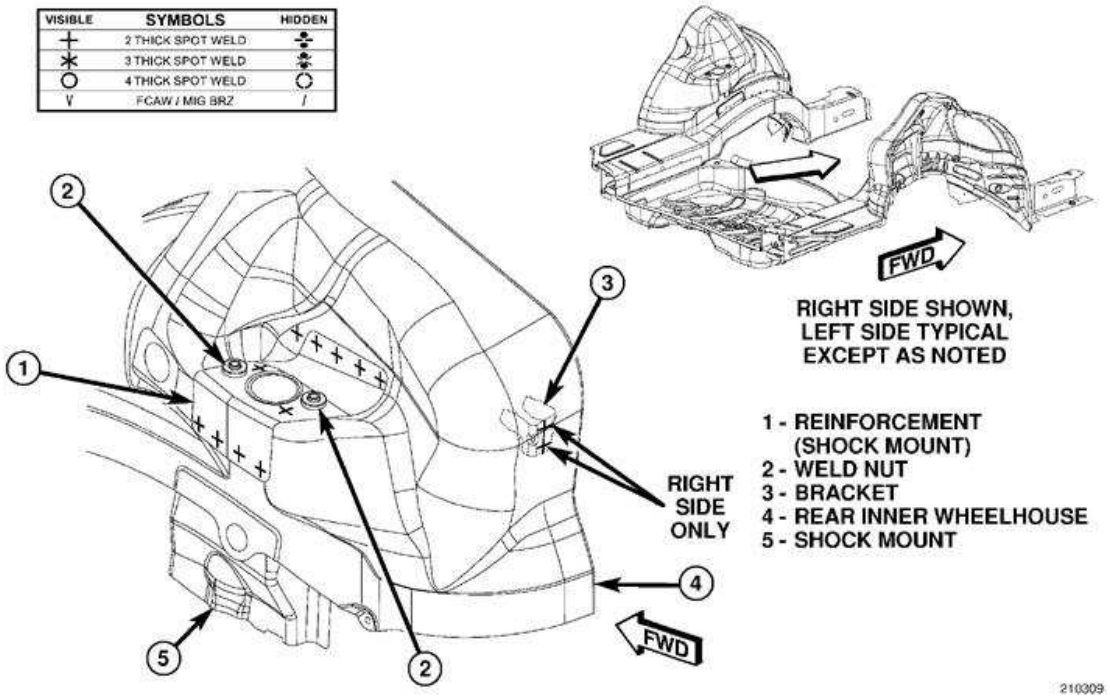

Fig. 116: Rear Floor, Ladder, and Wheelhouse (2 of 8)
Courtesy of CHRYSLER LLC

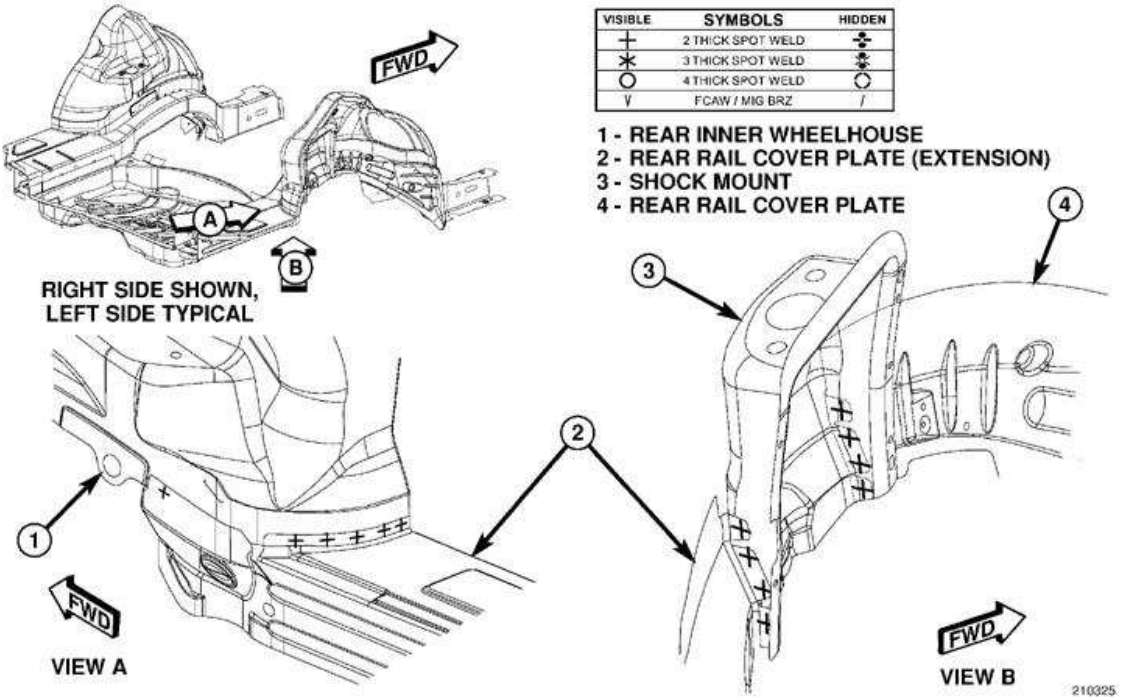

Fig. 117: Rear Floor, Ladder, and Wheelhouse (3 of 8)
Courtesy of CHRYSLER LLC

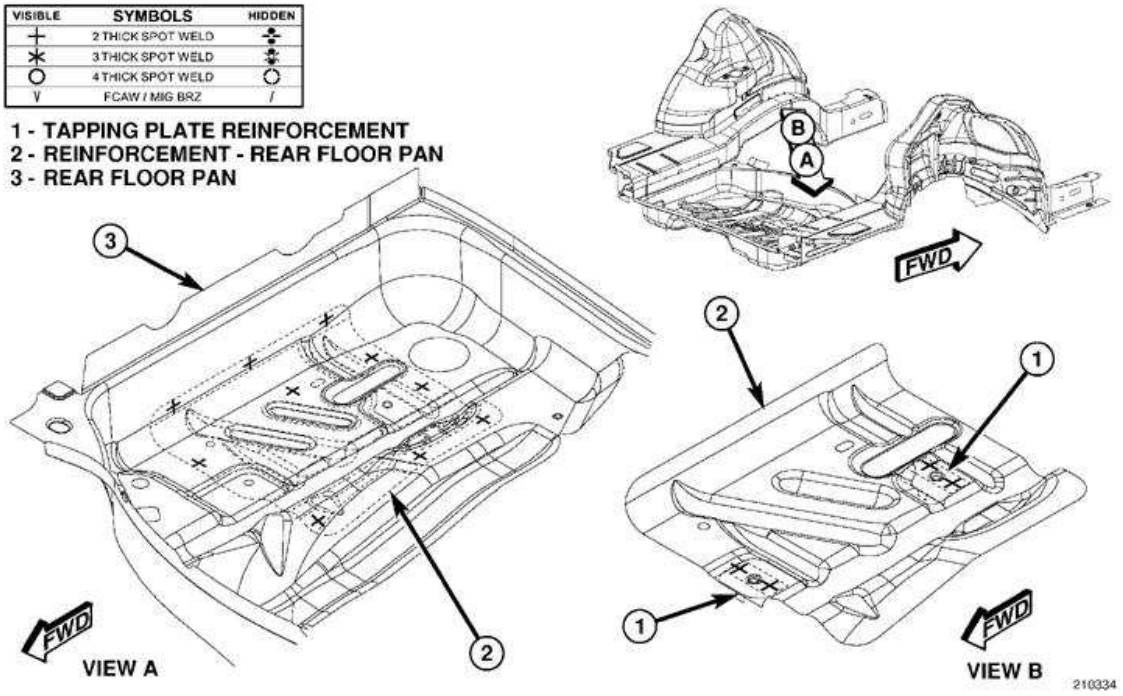

Fig. 118: Rear Floor, Ladder, and Wheelhouse (4 of 8)
Courtesy of CHRYSLER LLC

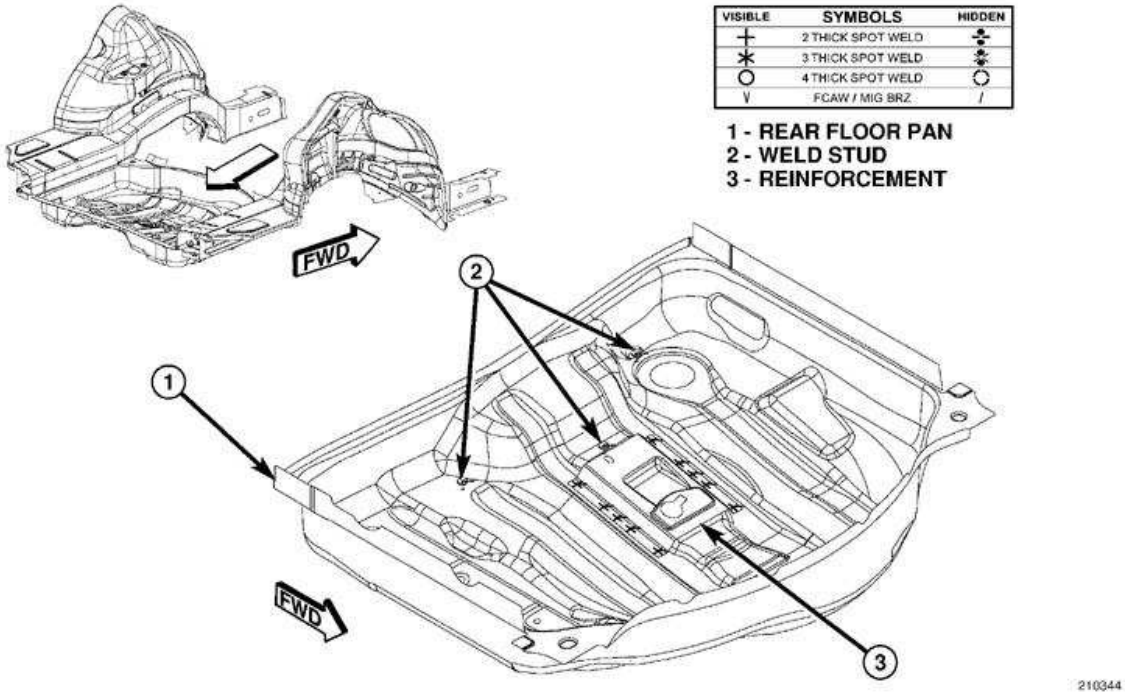

Fig. 119: Rear Floor, Ladder, and Wheelhouse (5 of 8)
Courtesy of CHRYSLER LLC

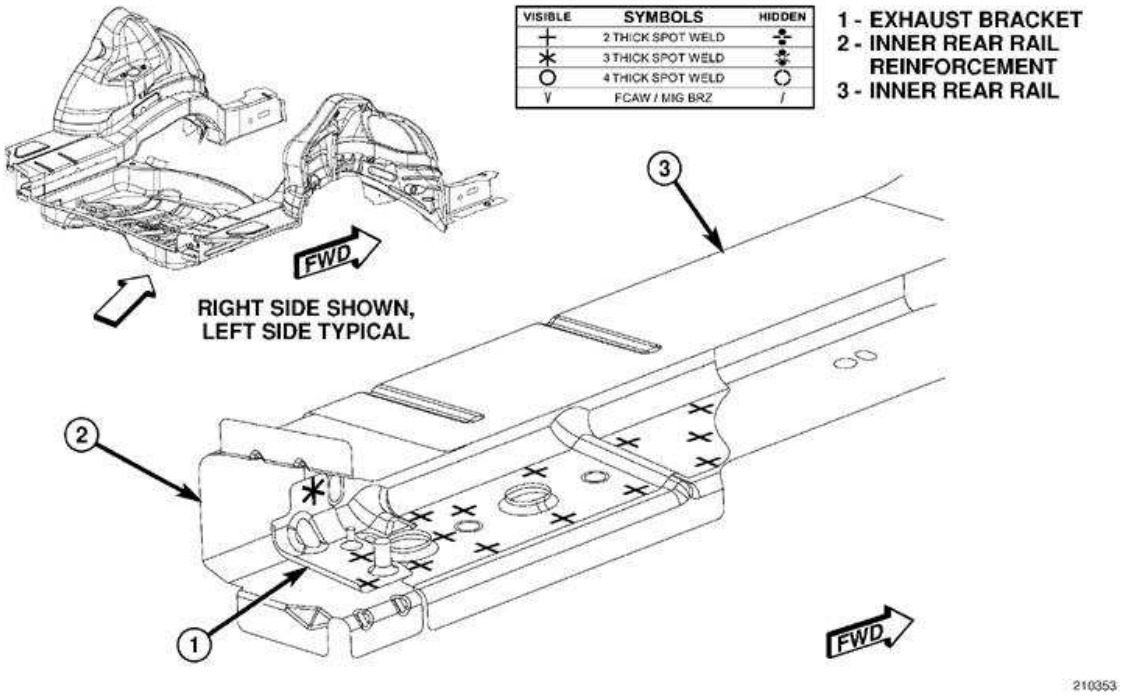

Fig. 120: Rear Floor, Ladder, and Wheelhouse (6 of 8)
Courtesy of CHRYSLER LLC

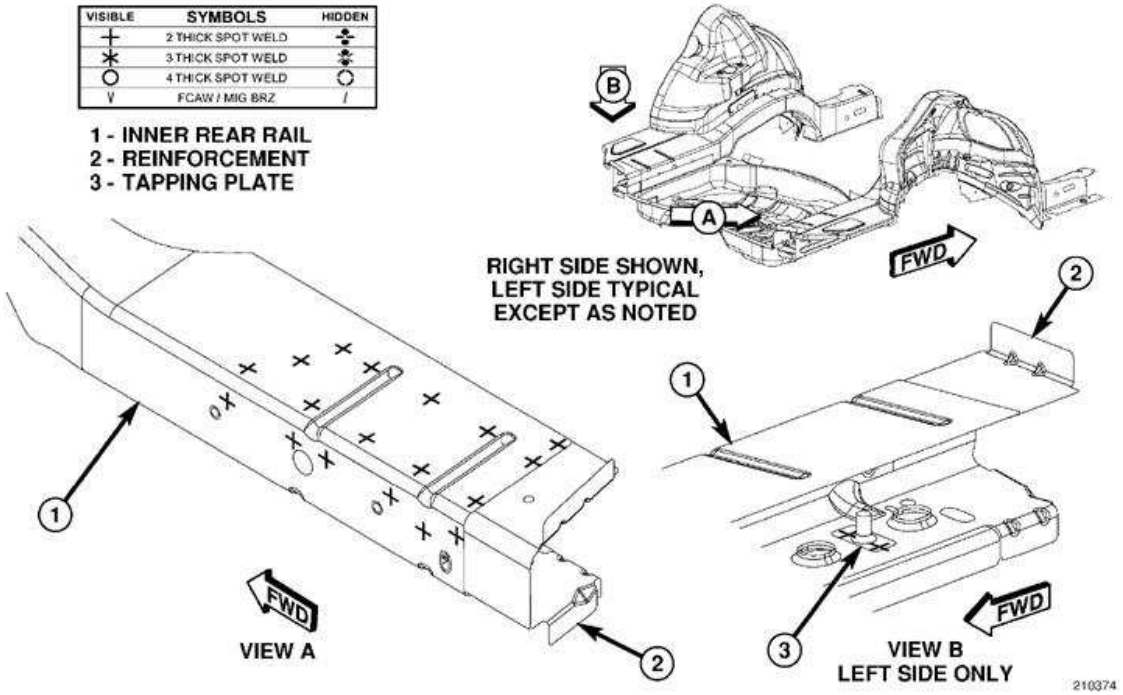

Fig. 121: Rear Floor, Ladder, and Wheelhouse (7 of 8)
Courtesy of CHRYSLER LLC

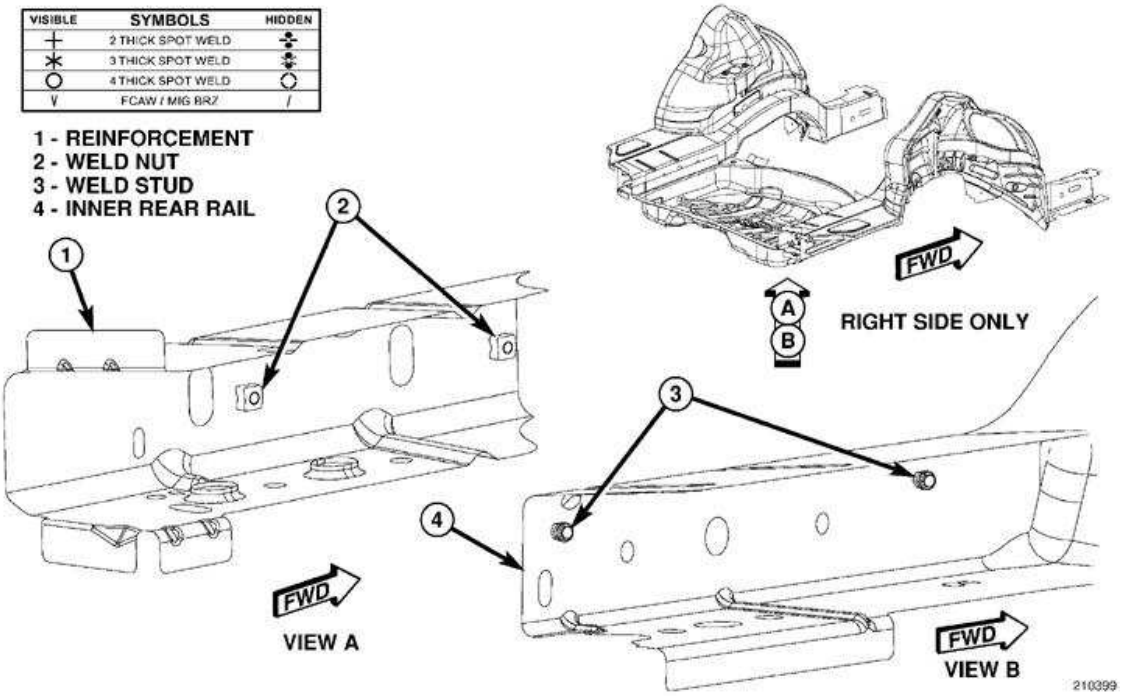

Fig. 122: Rear Floor, Ladder, and Wheelhouse (8 of 8)
Courtesy of CHRYSLER LLC

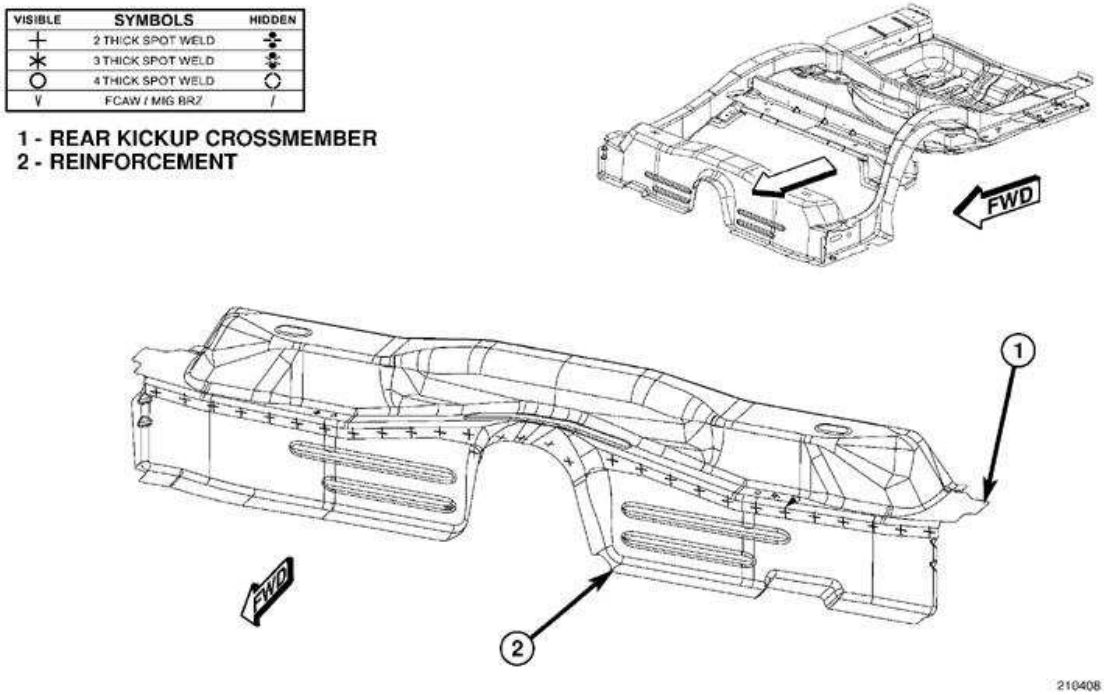

Fig. 123: Rear Ladder (1 of 6)
Courtesy of CHRYSLER LLC

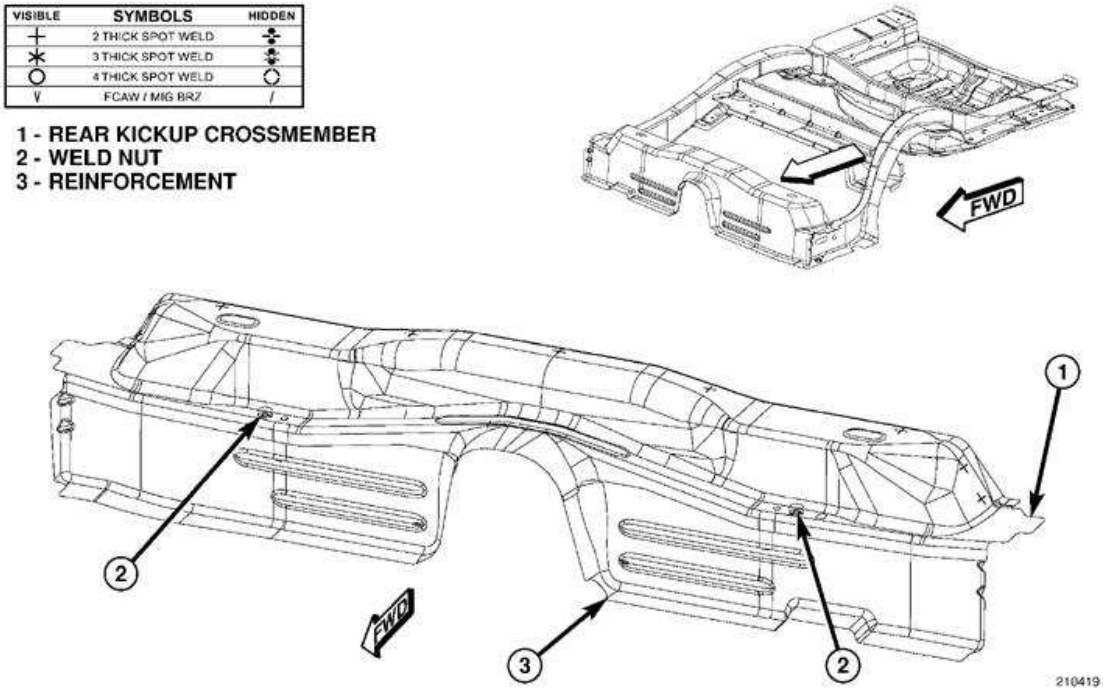

Fig. 124: Rear Ladder (2 of 6)
Courtesy of CHRYSLER LLC

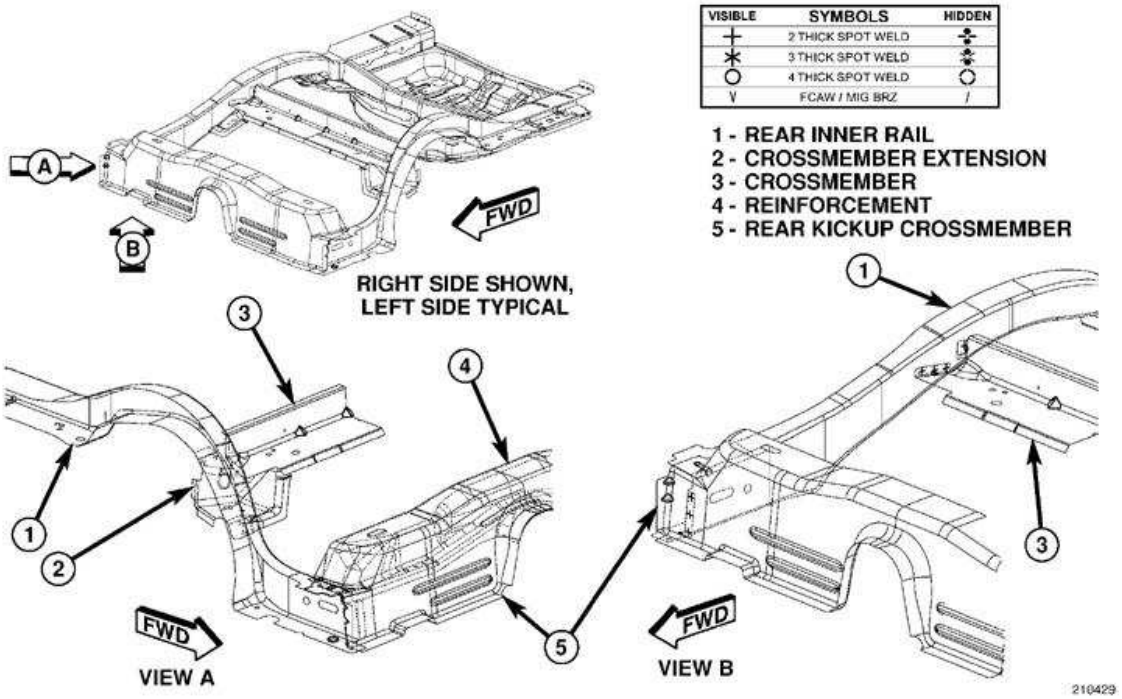

Fig. 125: Rear Ladder (3 of 6)
Courtesy of CHRYSLER LLC

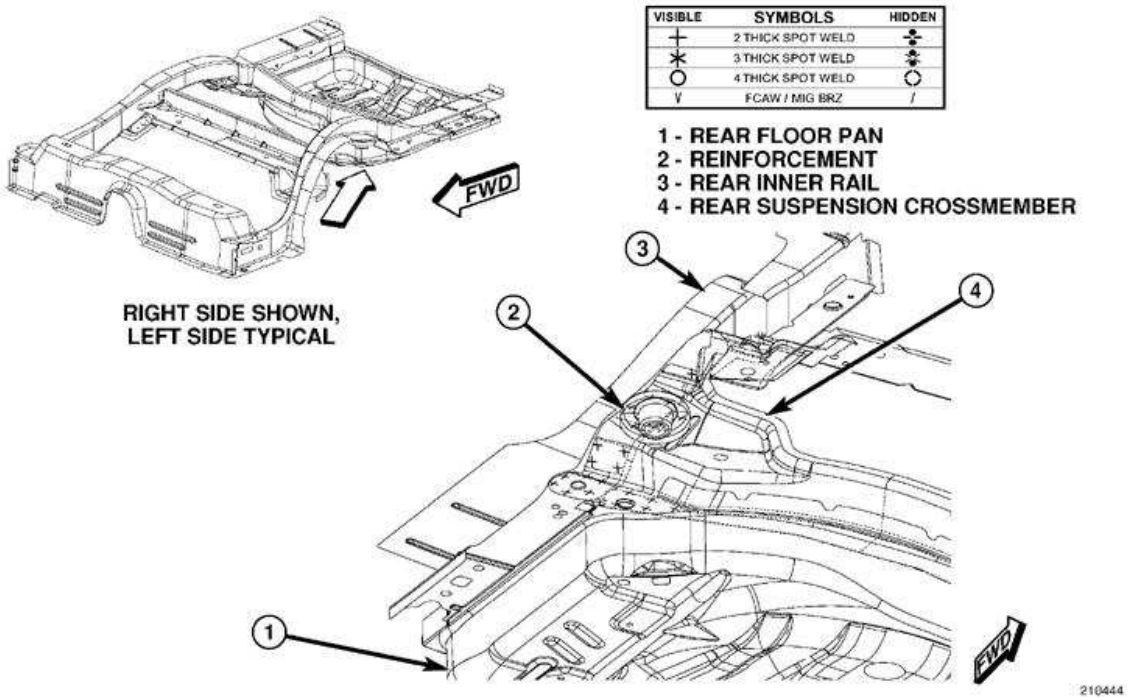

Fig. 126: Rear Ladder (4 of 6)
Courtesy of CHRYSLER LLC

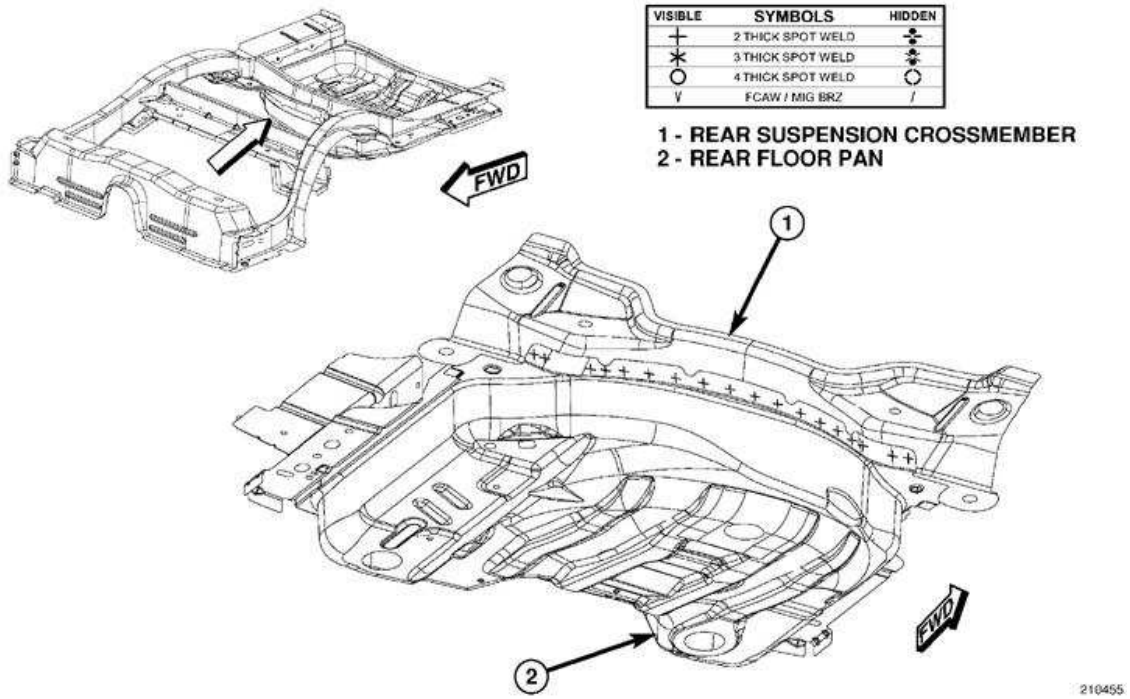

Fig. 127: Rear Ladder (5 of 6)
Courtesy of CHRYSLER LLC

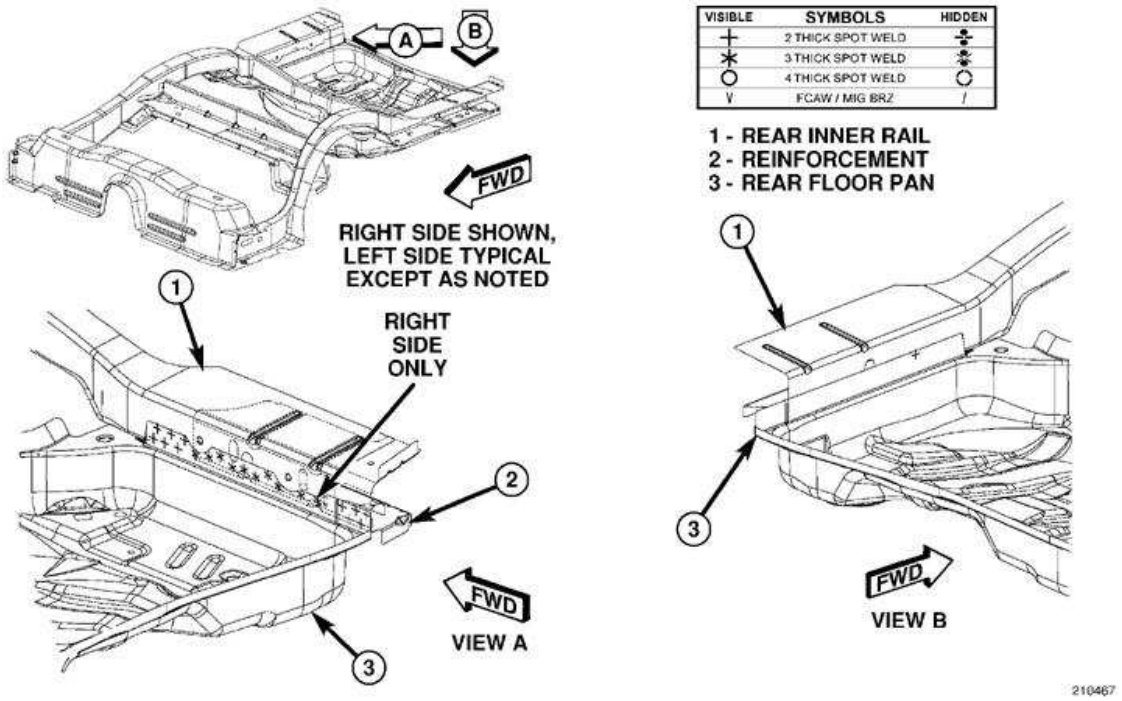

Fig. 128: Rear Ladder (6 of 6)
Courtesy of CHRYSLER LLC

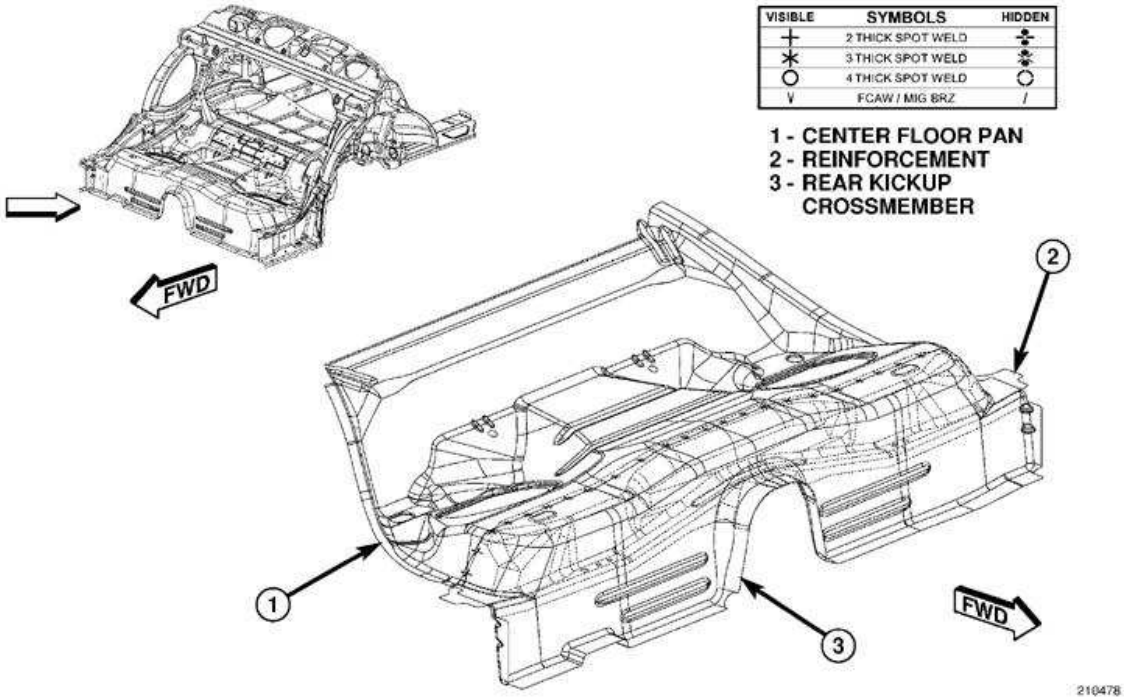

Fig. 129: Rear Ladder and Floor (1 of 13)
Courtesy of CHRYSLER LLC

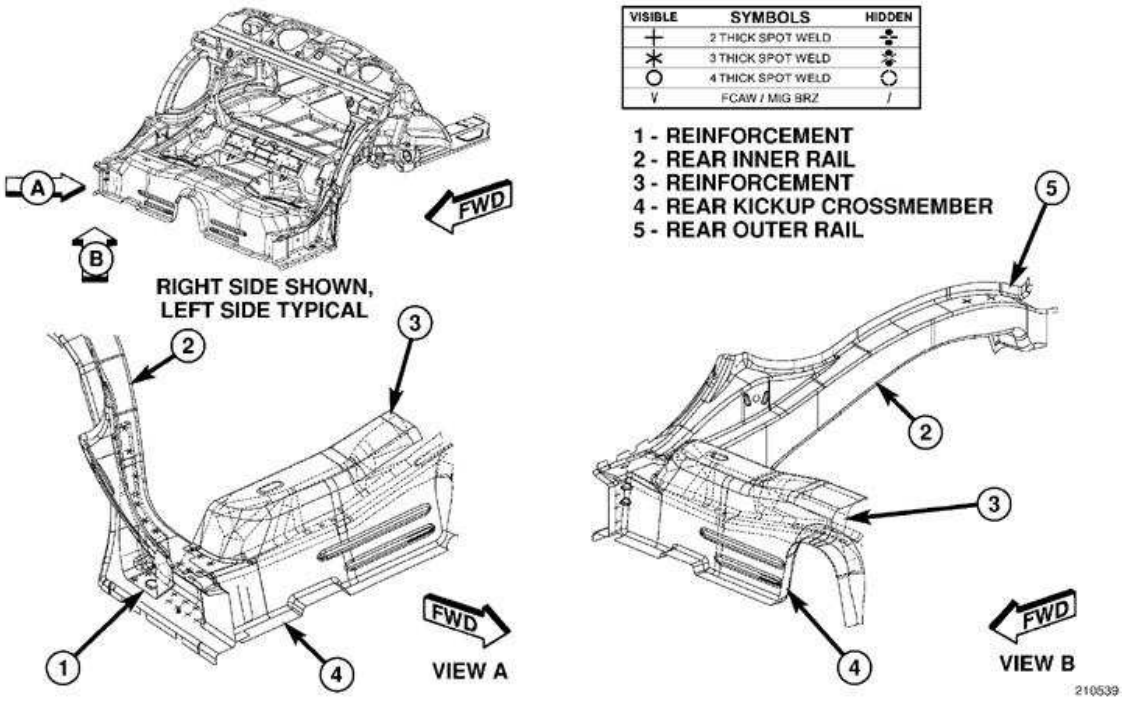

Fig. 130: Rear Ladder and Floor (2 of 13)
Courtesy of CHRYSLER LLC

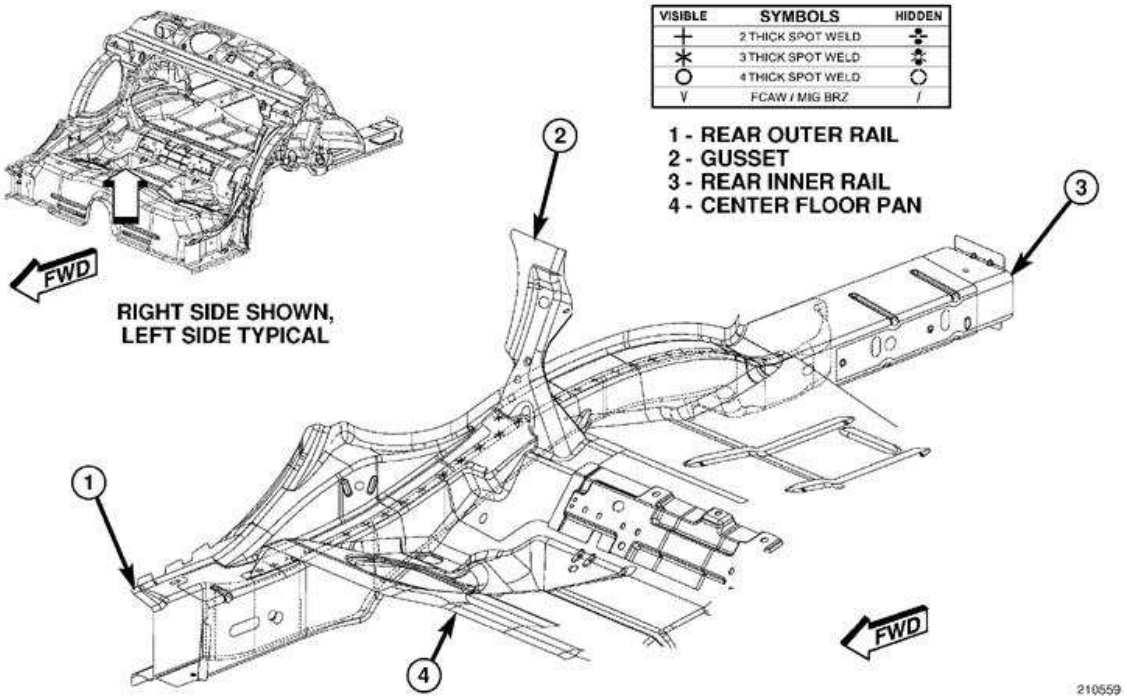

Fig. 131: Rear Ladder and Floor (3 of 13)
Courtesy of CHRYSLER LLC

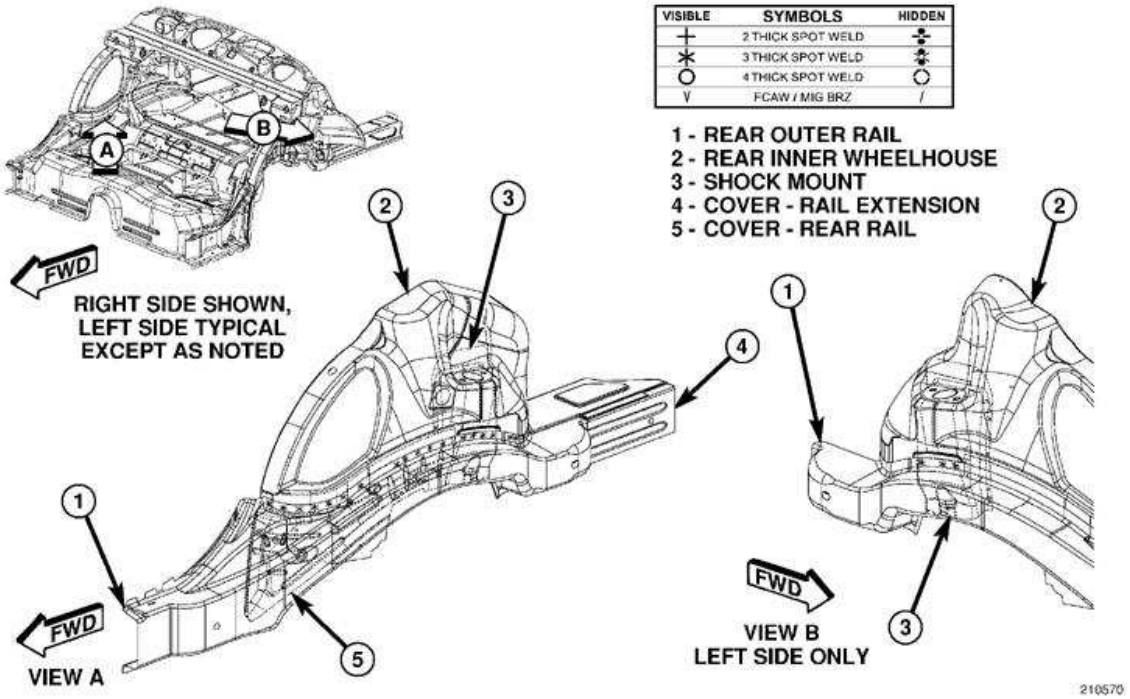

Fig. 132: Rear Ladder and Floor (4 of 13)
Courtesy of CHRYSLER LLC

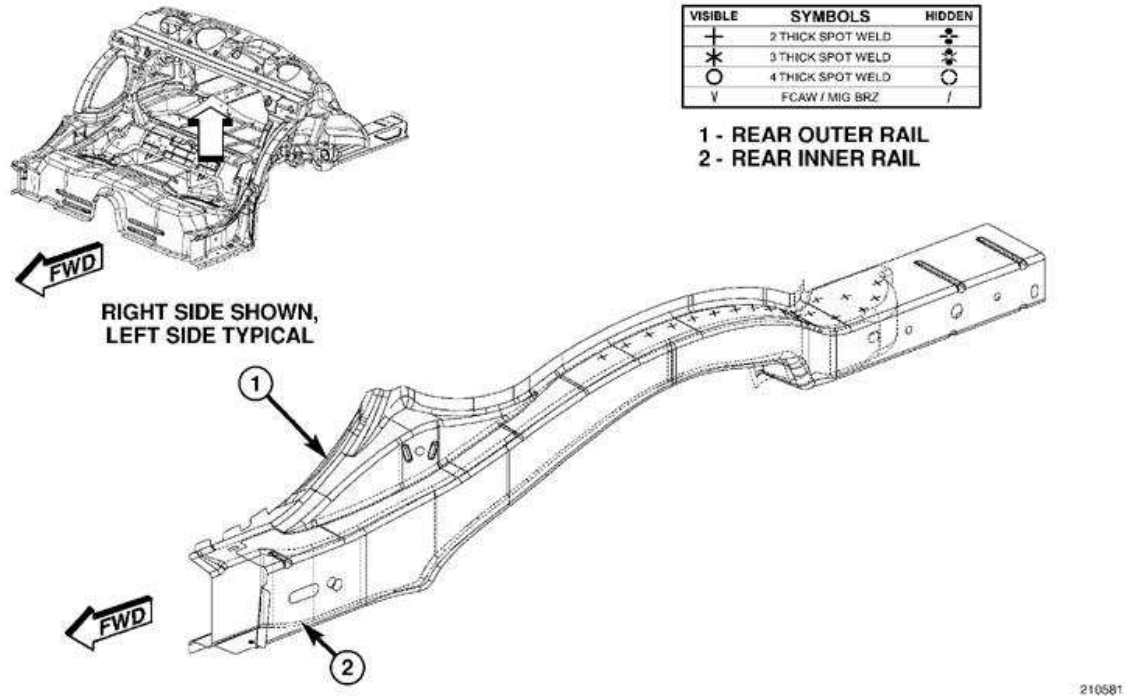

Fig. 133: Rear Ladder and Floor (5 of 13)
Courtesy of CHRYSLER LLC

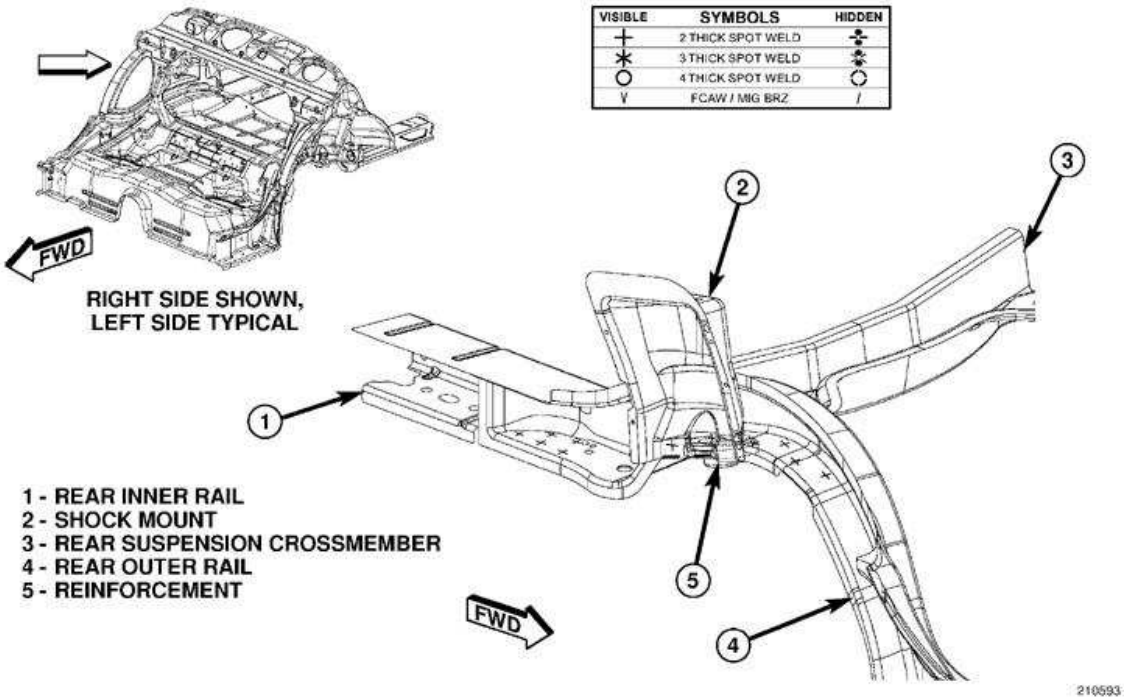

Fig. 134: Rear Ladder and Floor (6 of 13)
Courtesy of CHRYSLER LLC

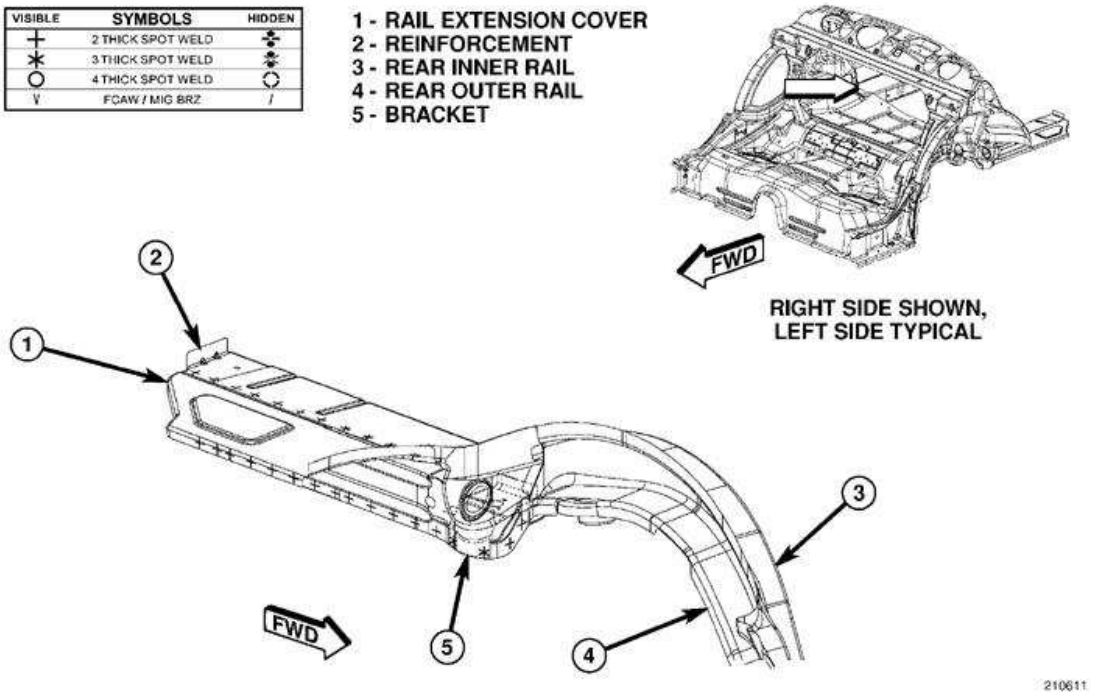

Fig. 135: Rear Ladder and Floor (7 of 13)
Courtesy of CHRYSLER LLC

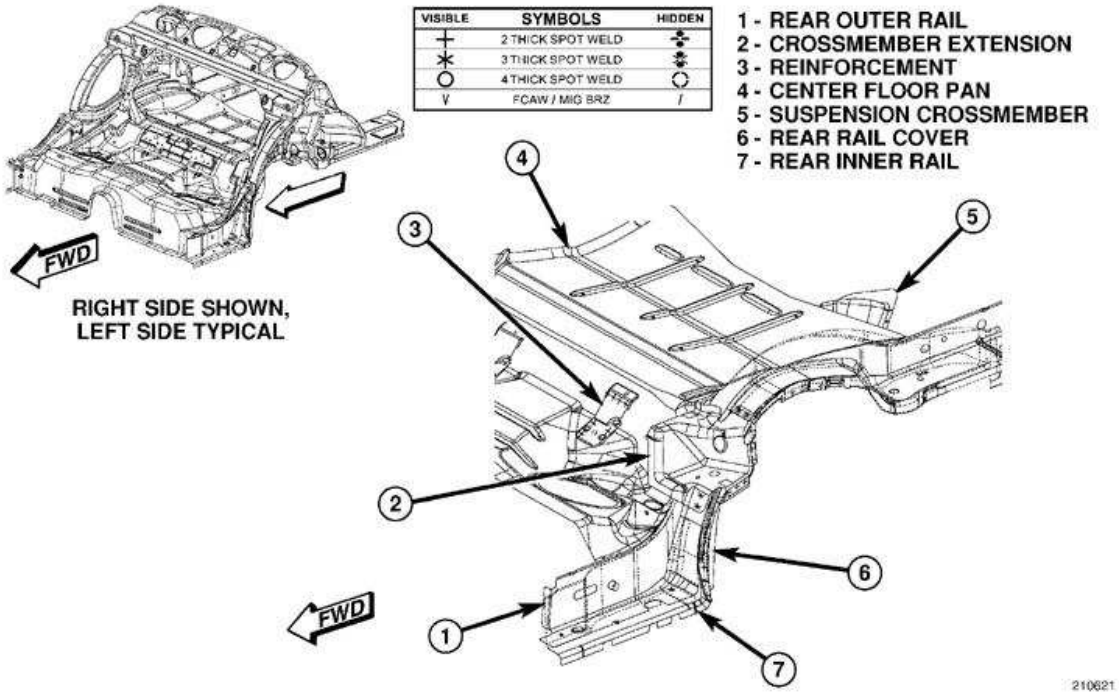

Fig. 136: Rear Ladder and Floor (8 of 13)
Courtesy of CHRYSLER LLC

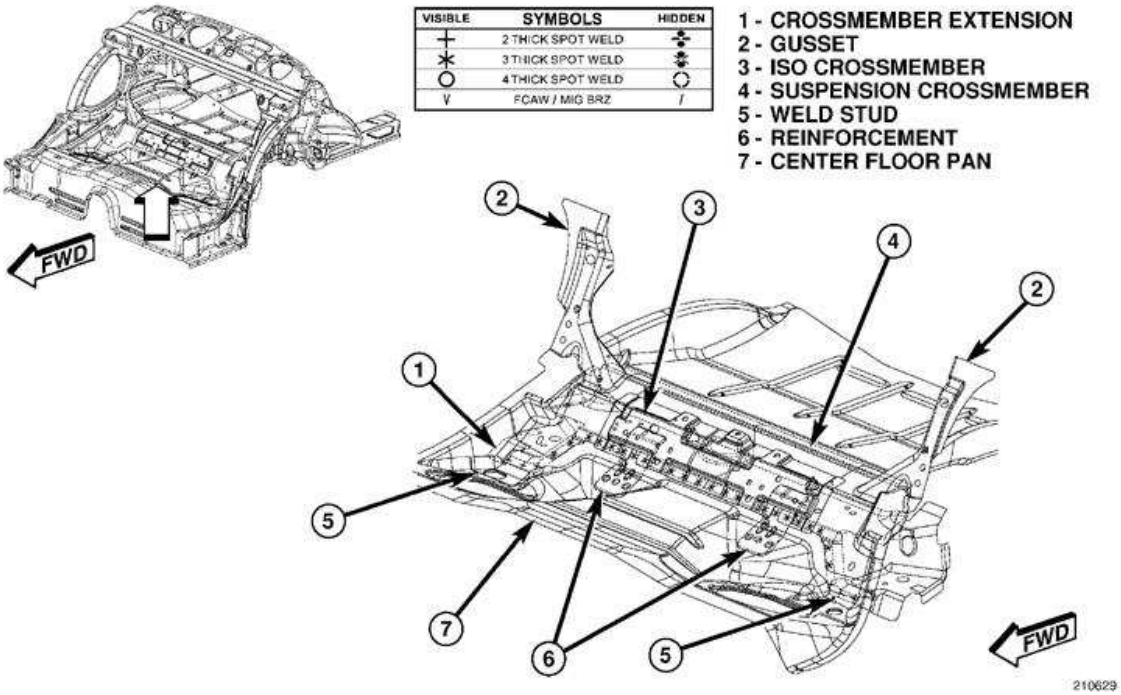

Fig. 137: Rear Ladder and Floor (9 of 13)
Courtesy of CHRYSLER LLC

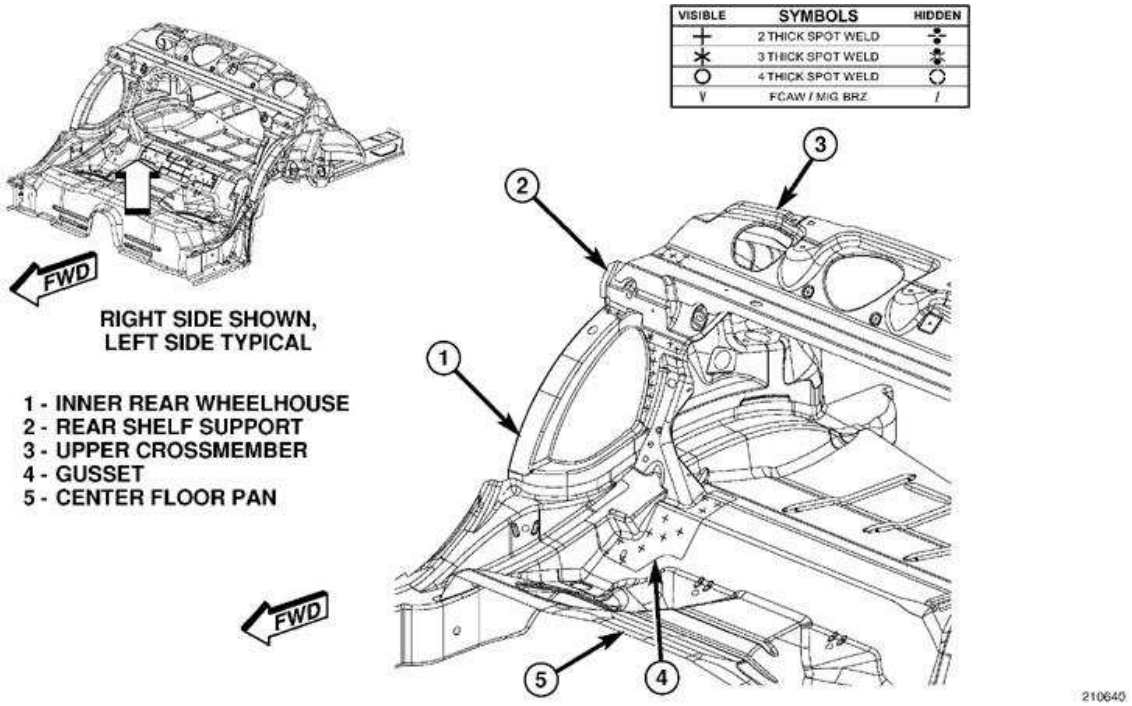

Fig. 138: Rear Ladder and Floor (10 of 13)
Courtesy of CHRYSLER LLC

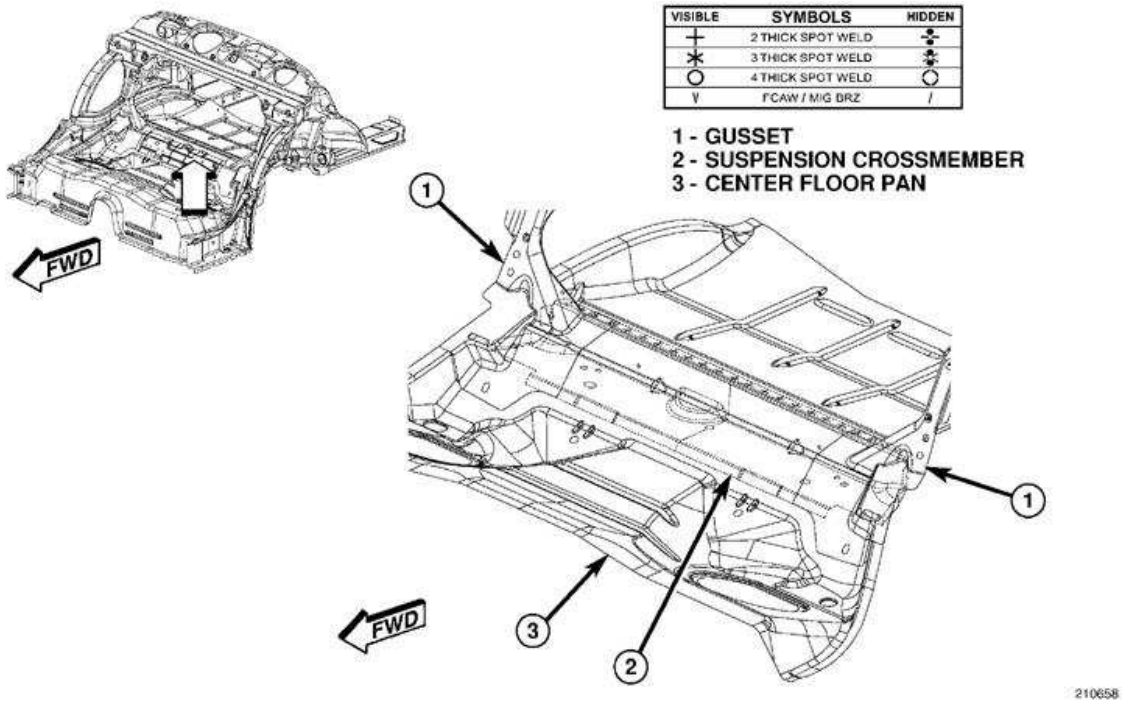

Fig. 139: Rear Ladder and Floor (11 of 13)
Courtesy of CHRYSLER LLC

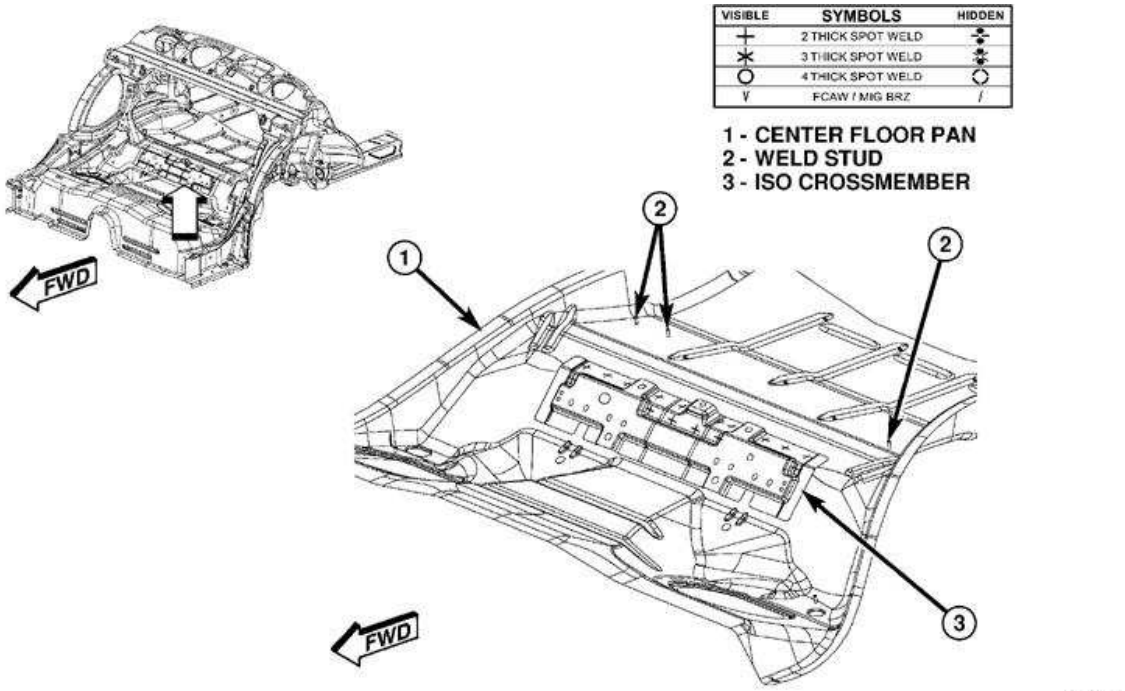

Fig. 140: Rear Ladder and Floor (12 of 13)
Courtesy of CHRYSLER LLC

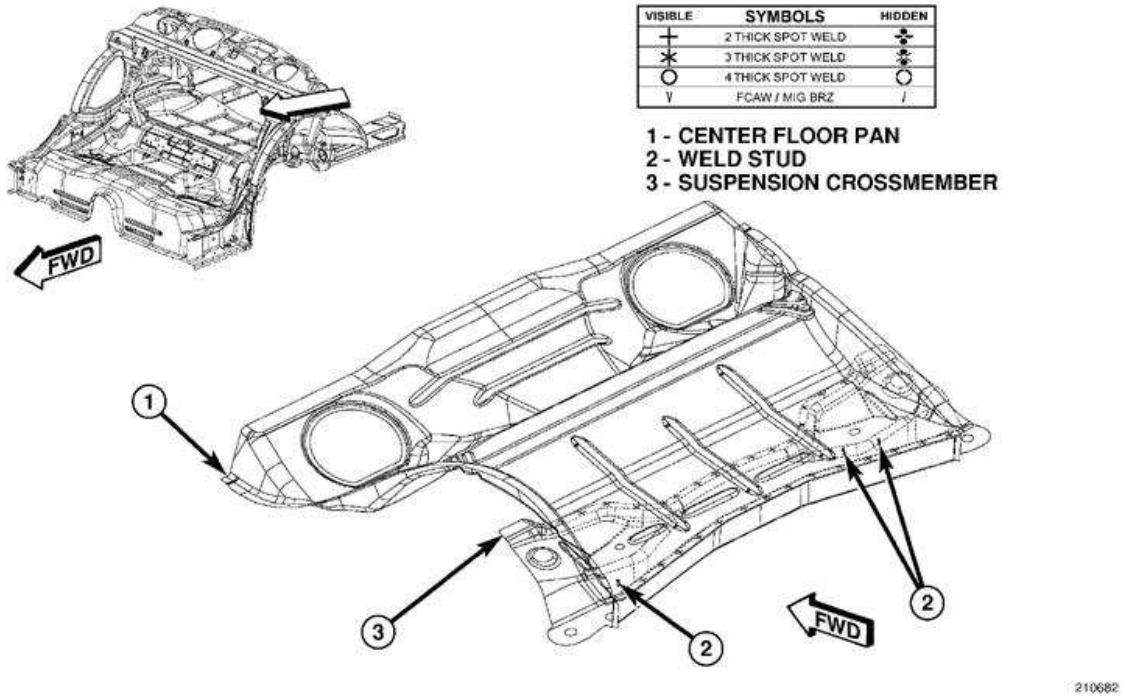

Fig. 141: Rear Ladder and Floor (13 of 13)
Courtesy of CHRYSLER LLC

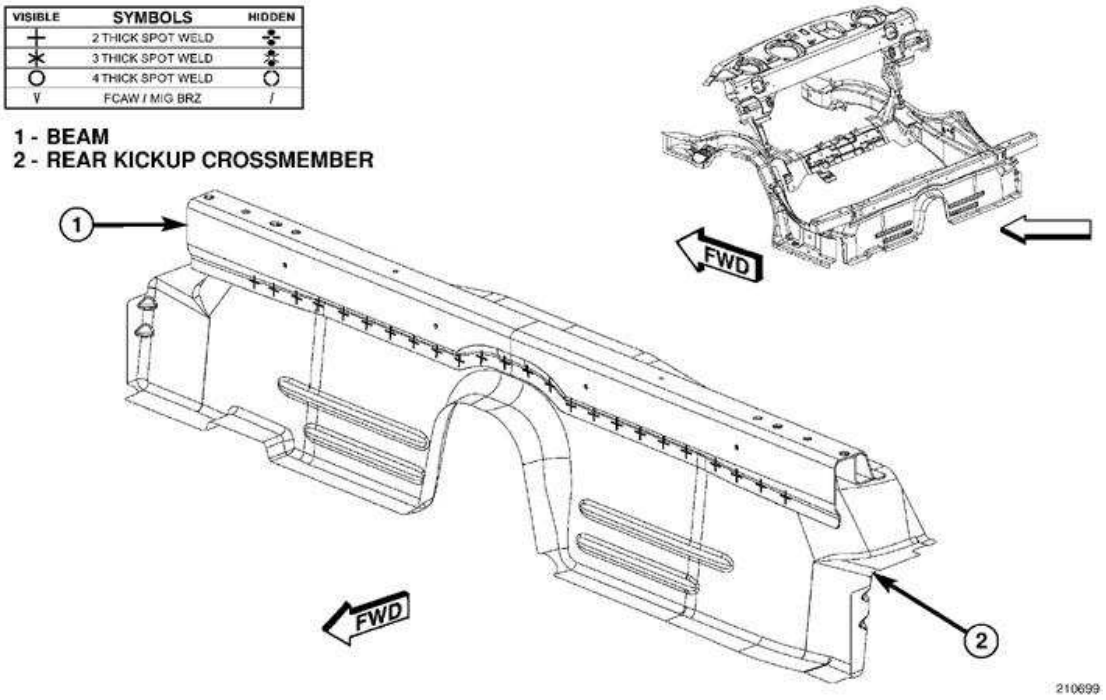

Fig. 142: Underbody (1 of 10)
Courtesy of CHRYSLER LLC

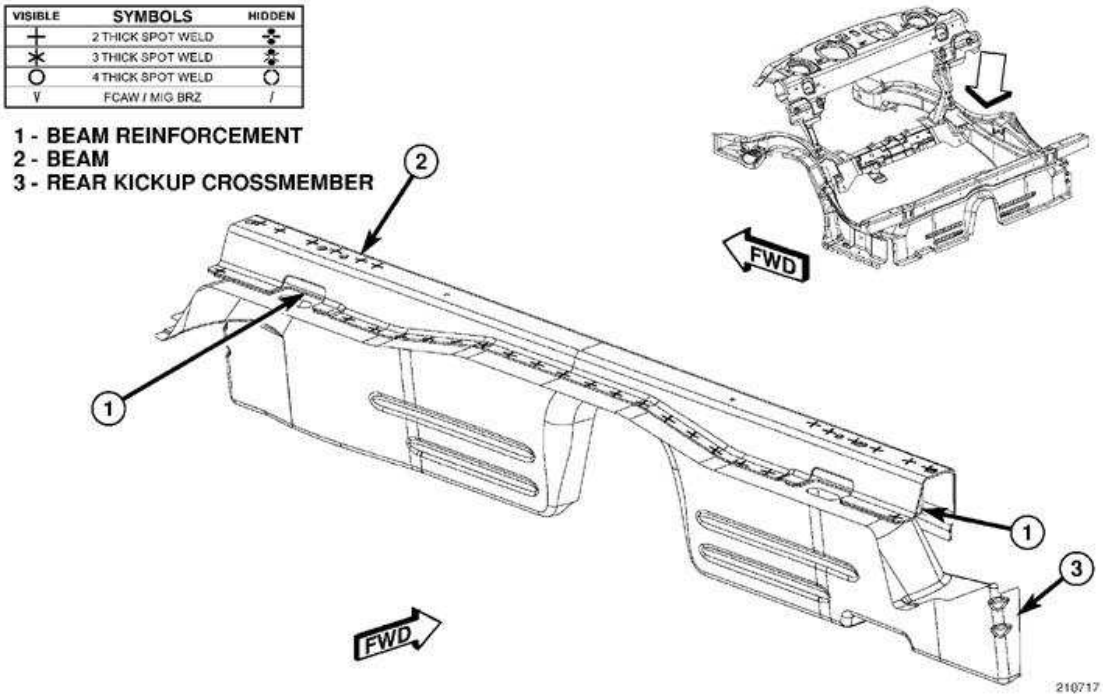

Fig. 143: Underbody (2 of 10)
Courtesy of CHRYSLER LLC

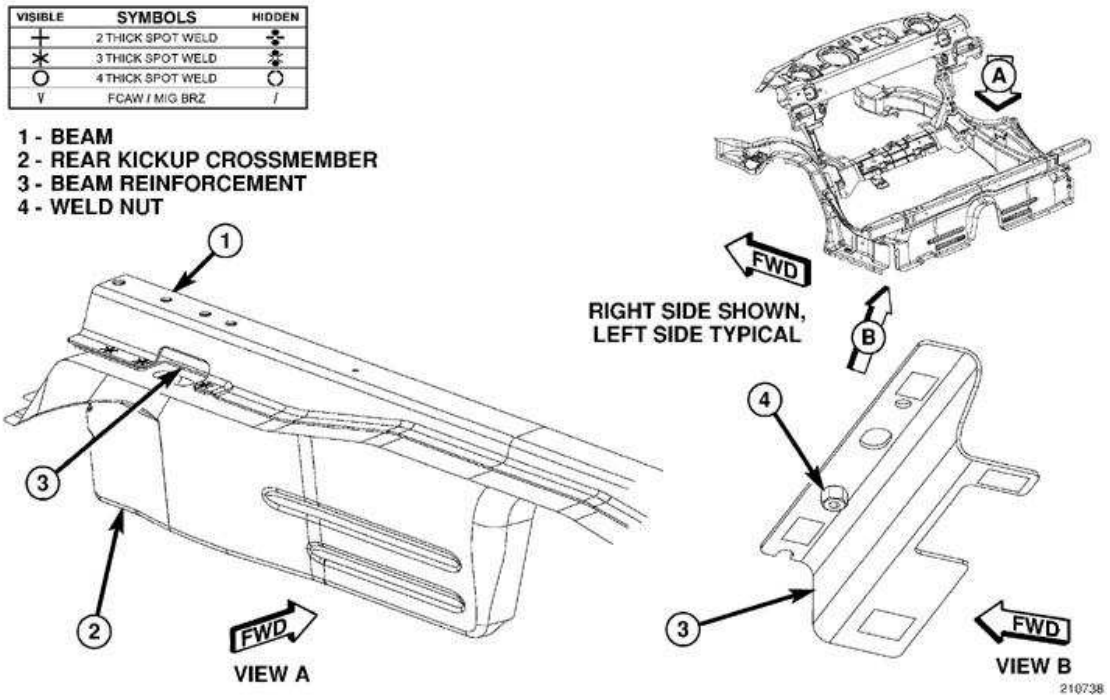

Fig. 144: Underbody (3 of 10)
Courtesy of CHRYSLER LLC

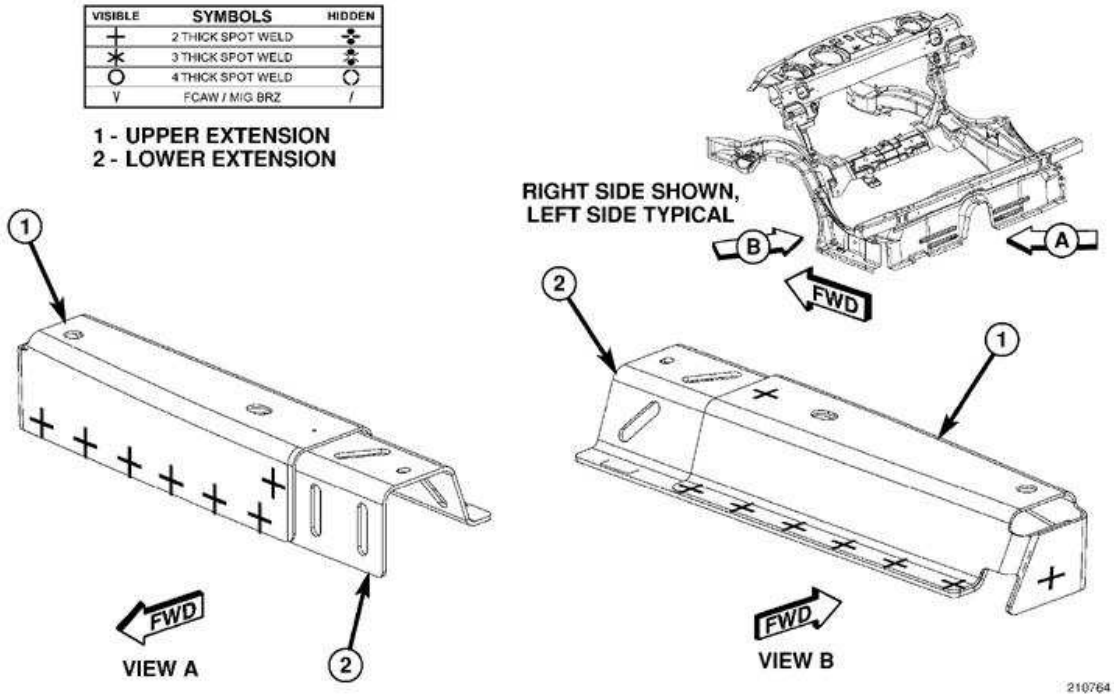

Fig. 145: Underbody (4 of 10)
Courtesy of CHRYSLER LLC

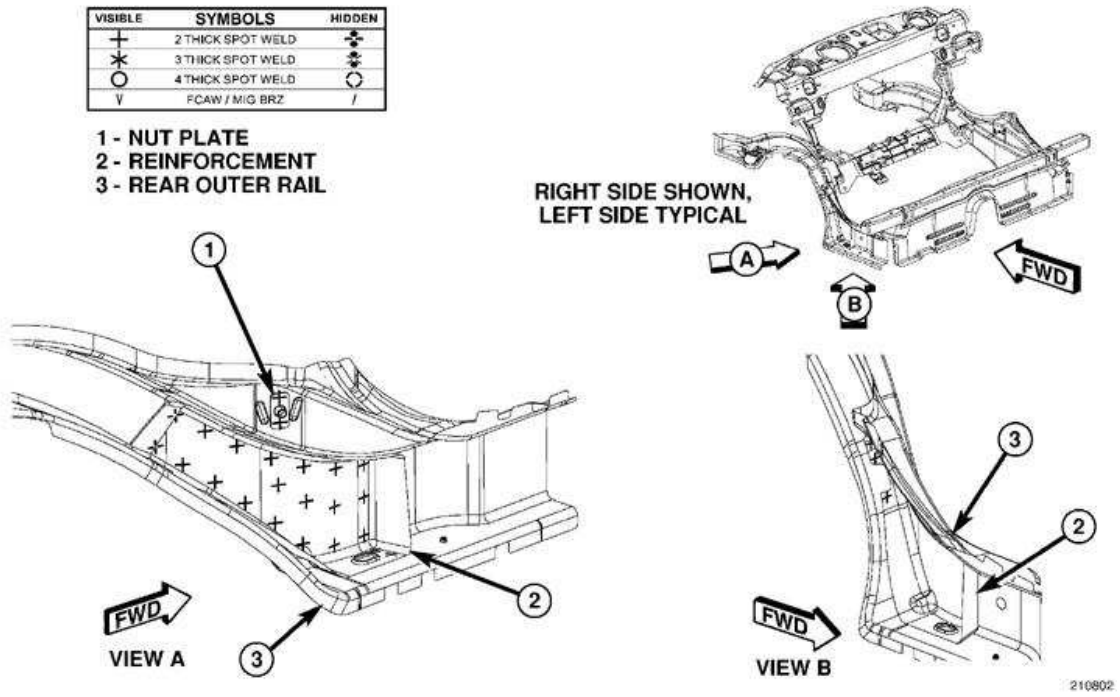

Fig. 146: Underbody (5 of 10)
Courtesy of CHRYSLER LLC

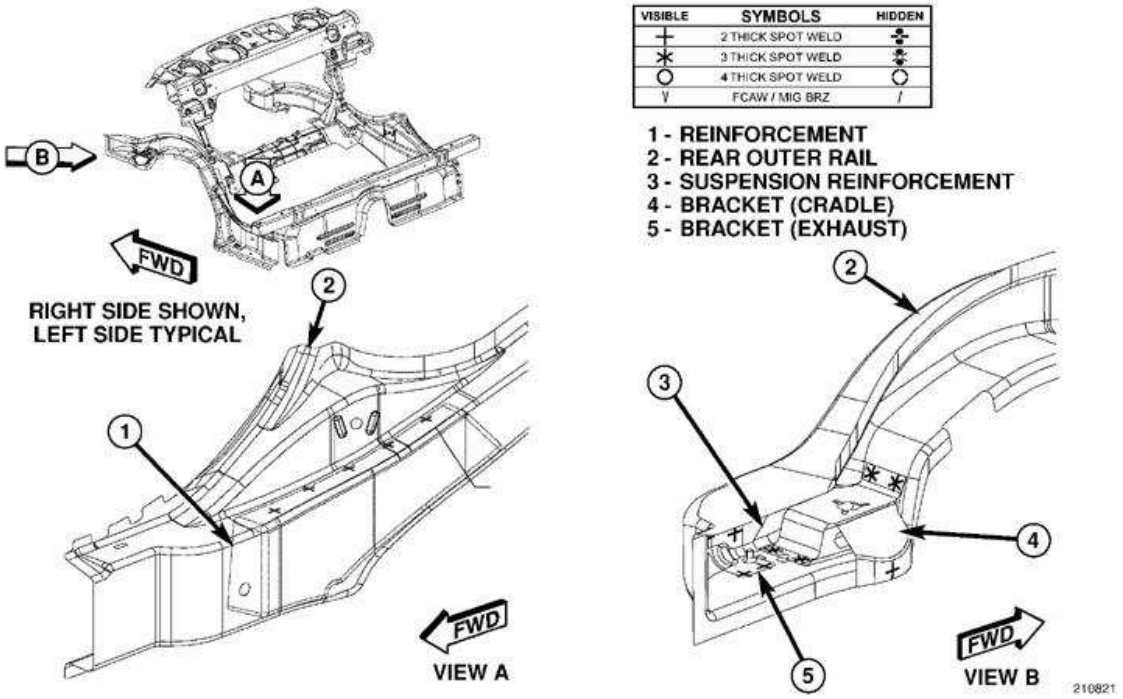

Fig. 147: Underbody (6 of 10)
Courtesy of CHRYSLER LLC

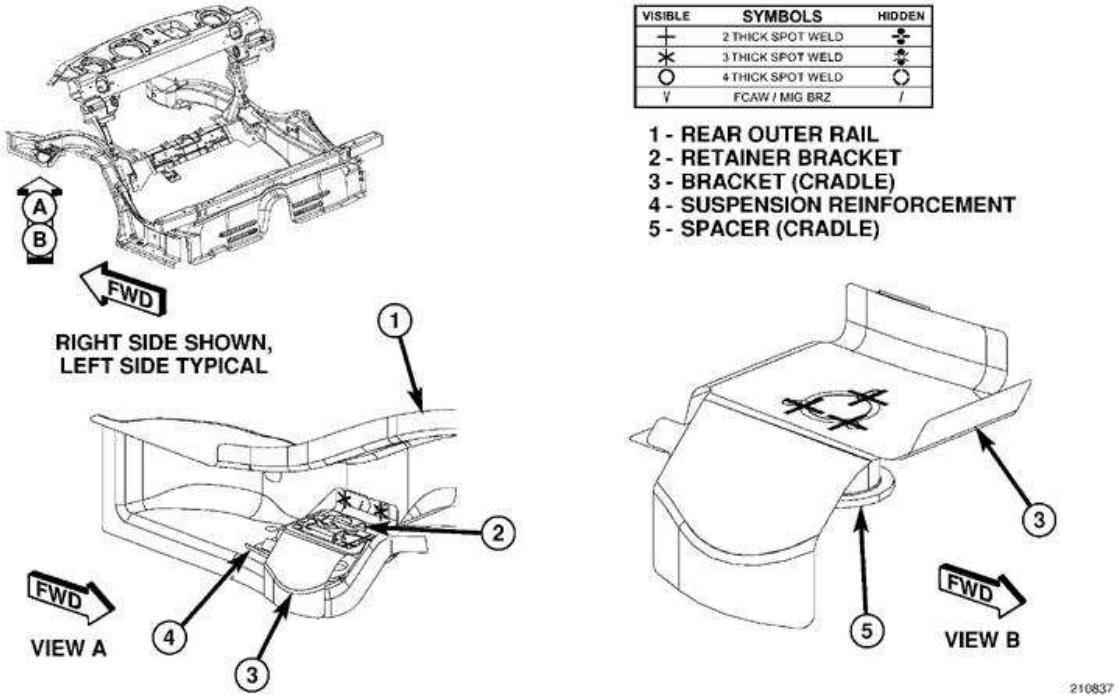

Fig. 148: Underbody (7 of 10)
Courtesy of CHRYSLER LLC

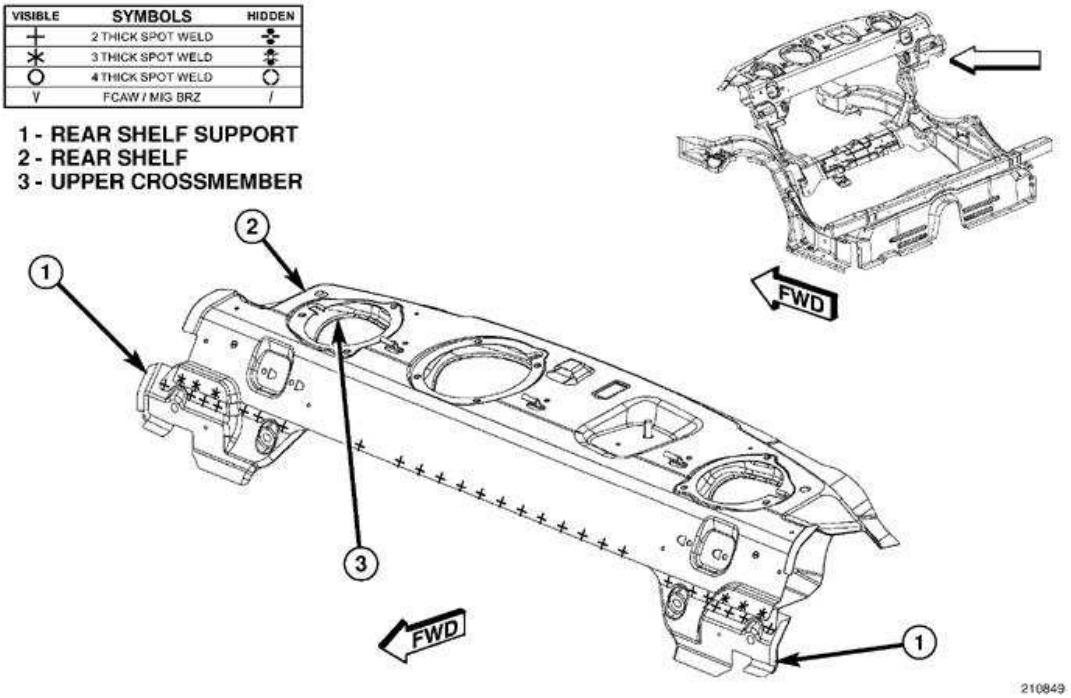

Fig. 149: Underbody (8 of 10)
Courtesy of CHRYSLER LLC

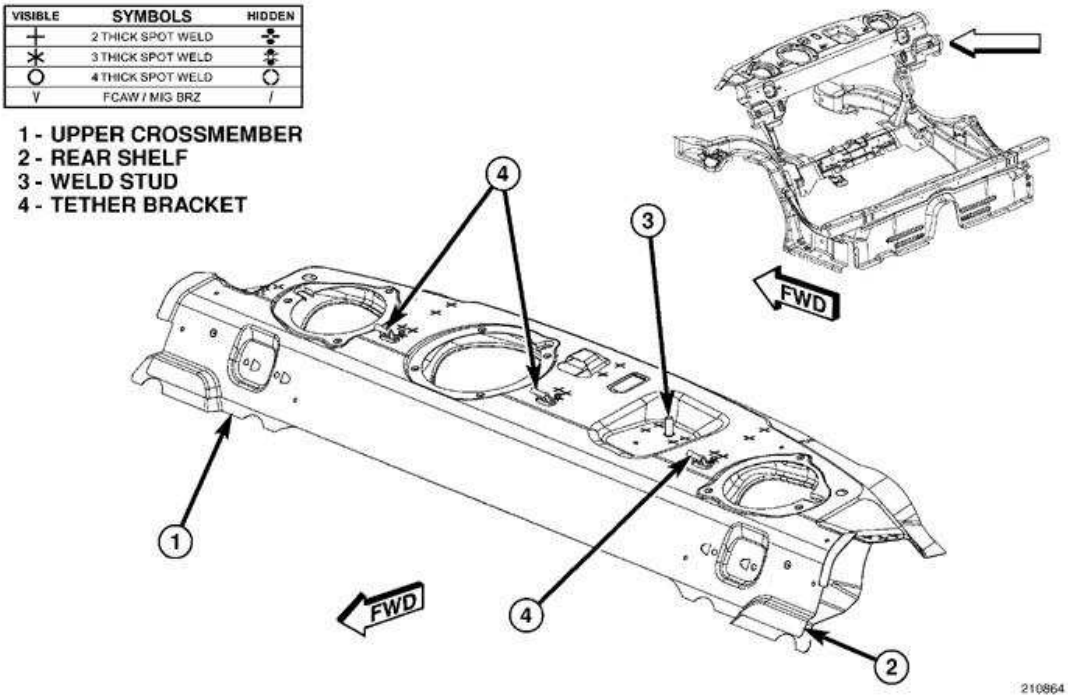

Fig. 150: Underbody (9 of 10)
Courtesy of CHRYSLER LLC

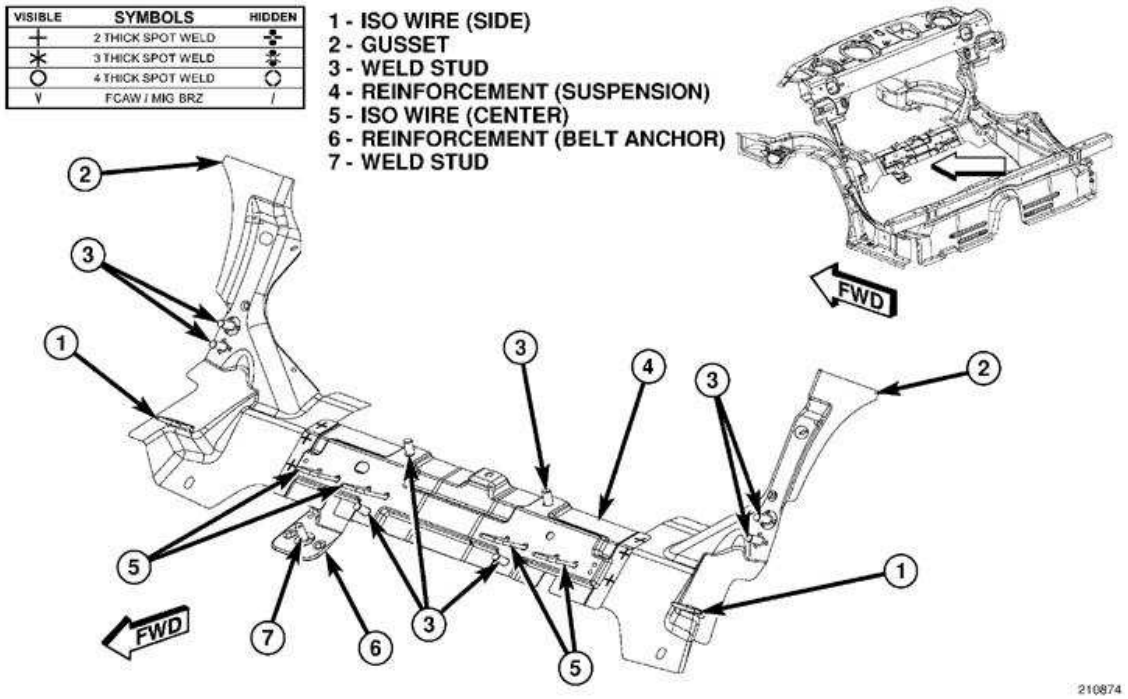

Fig. 151: Underbody (10 of 10)
Courtesy of CHRYSLER LLC

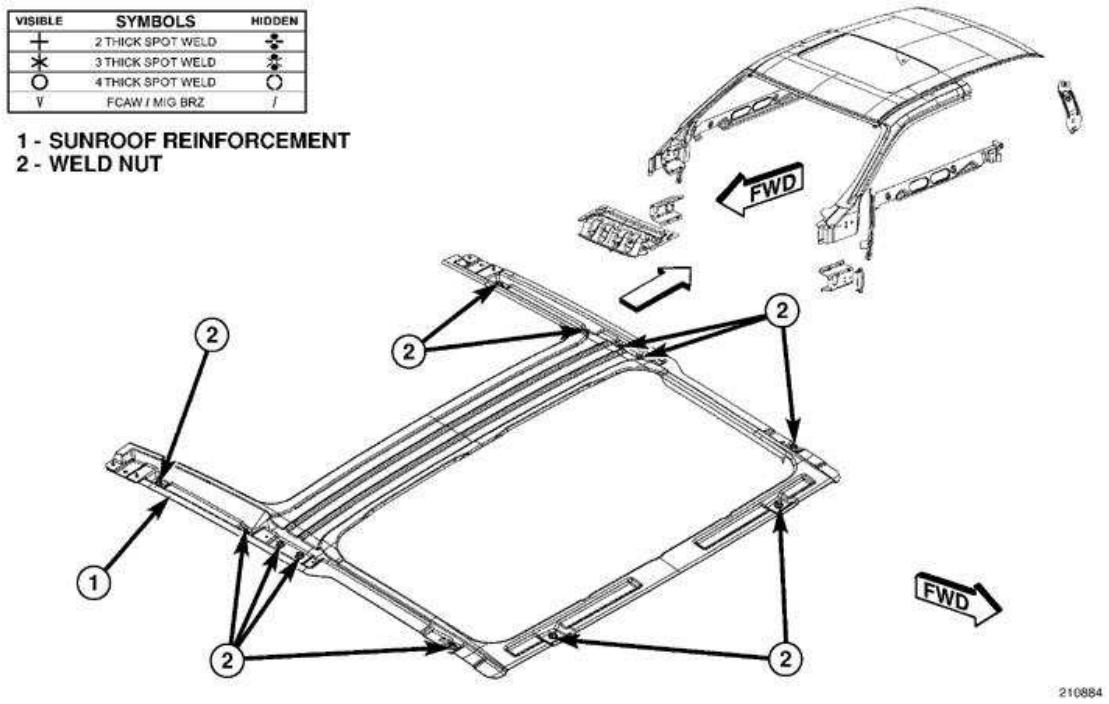

Fig. 152: Miscellaneous Body (1 of 7)
Courtesy of CHRYSLER LLC

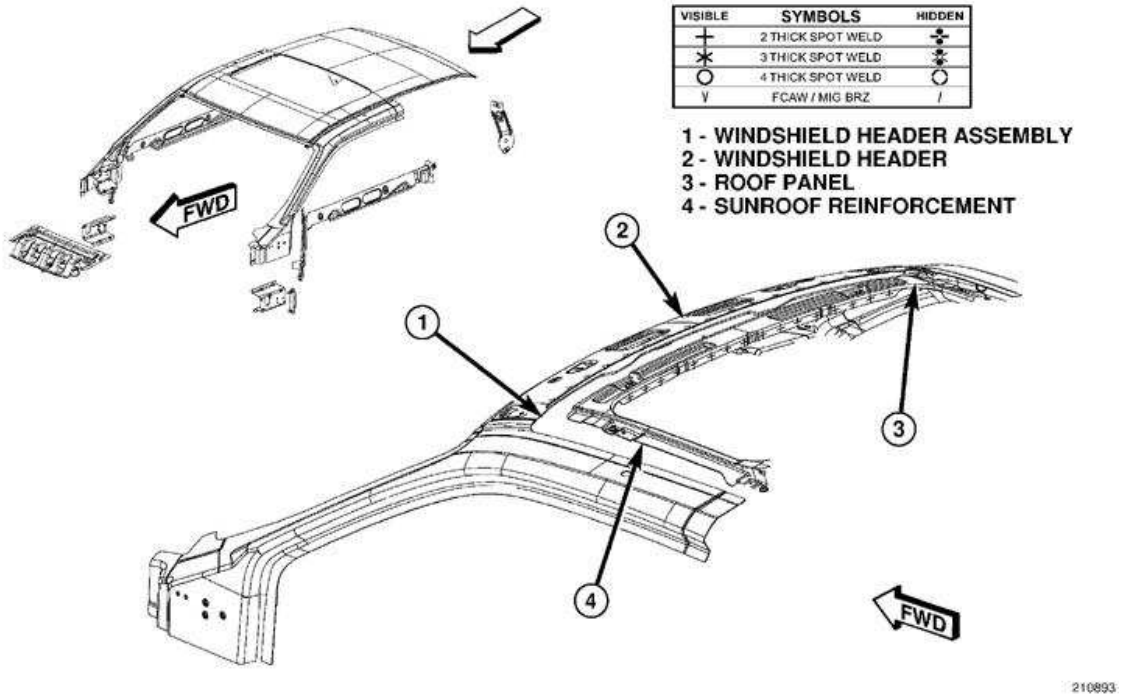

Fig. 153: Miscellaneous Body (2 of 7)
Courtesy of CHRYSLER LLC

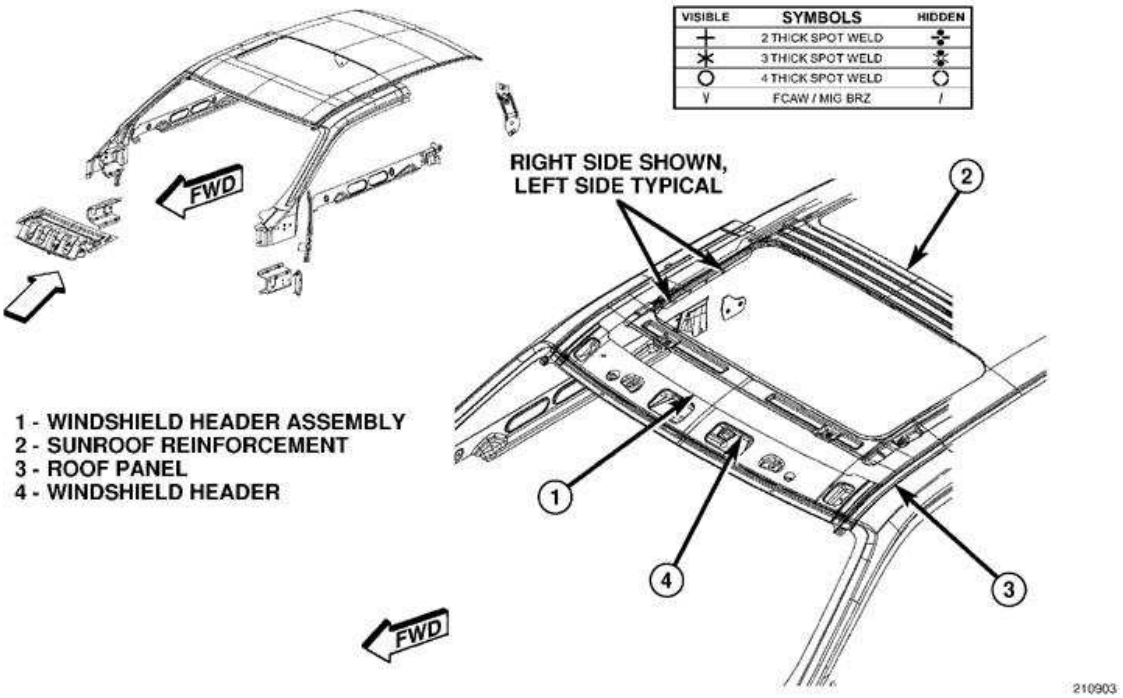

Fig. 154: Miscellaneous Body (3 of 7)
Courtesy of CHRYSLER LLC

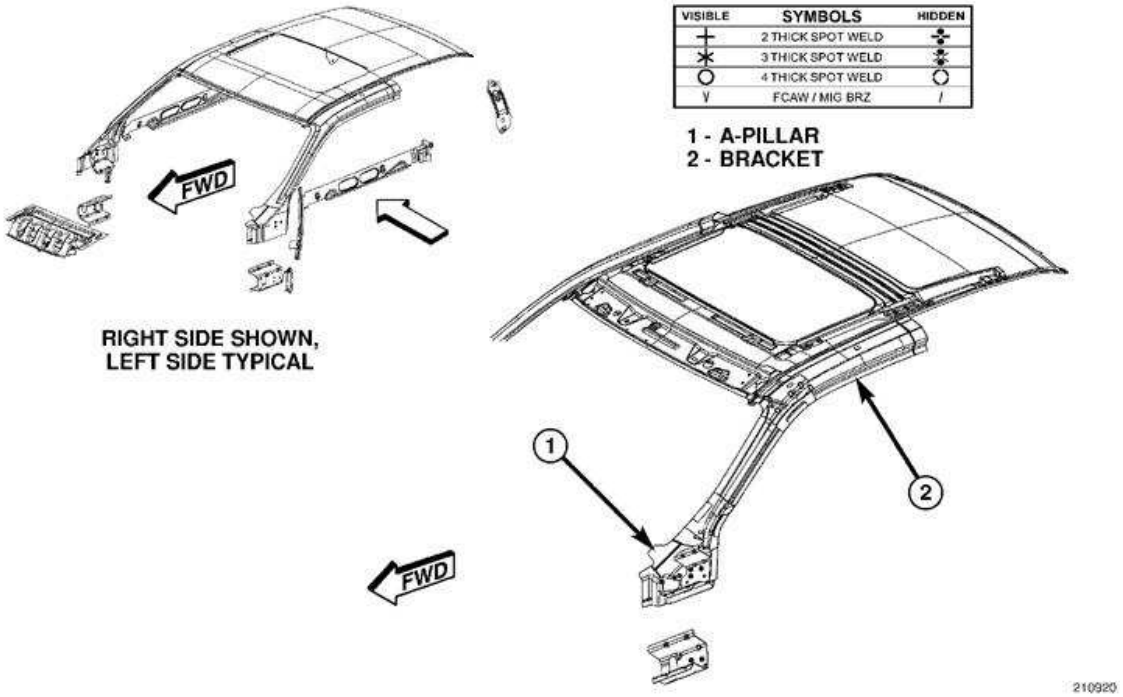

Fig. 155: Miscellaneous Body (4 of 7)
Courtesy of CHRYSLER LLC

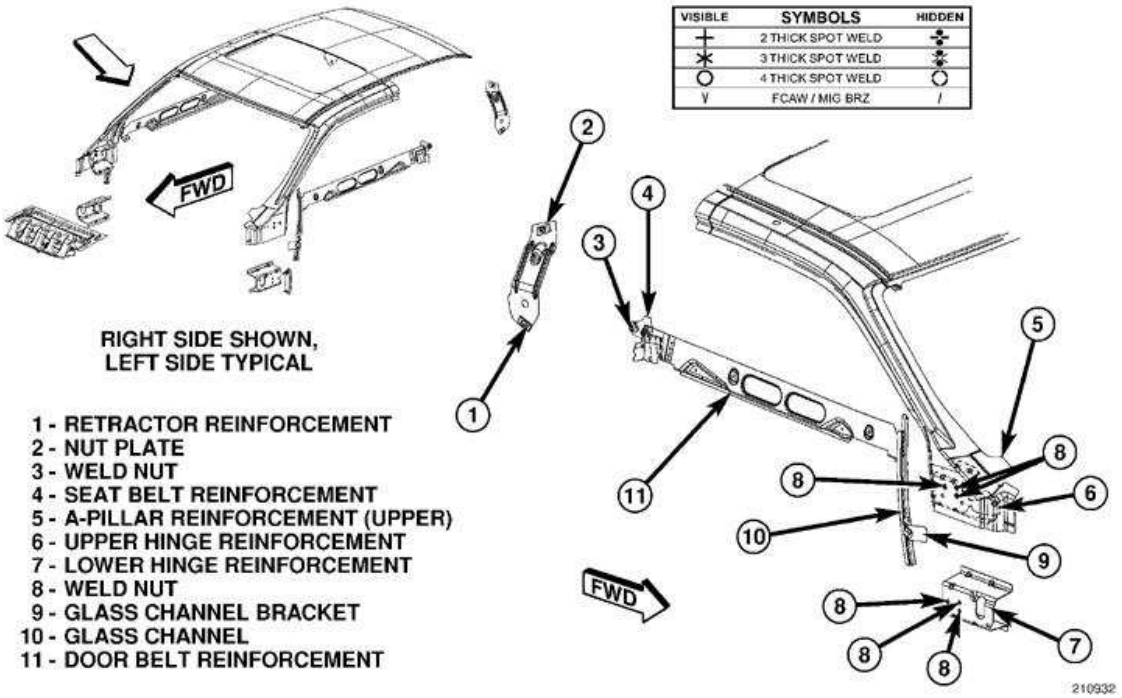

Fig. 156: Miscellaneous Body (5 of 7)
Courtesy of CHRYSLER LLC

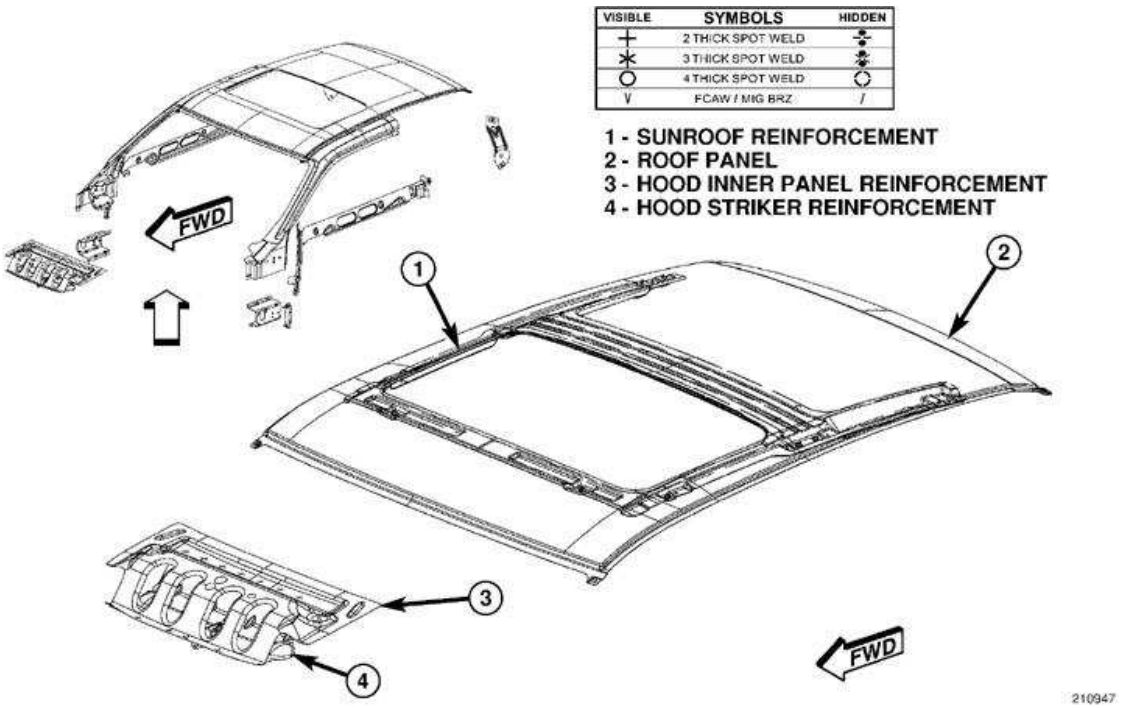

Fig. 157: Miscellaneous Body (6 of 7)
Courtesy of CHRYSLER LLC

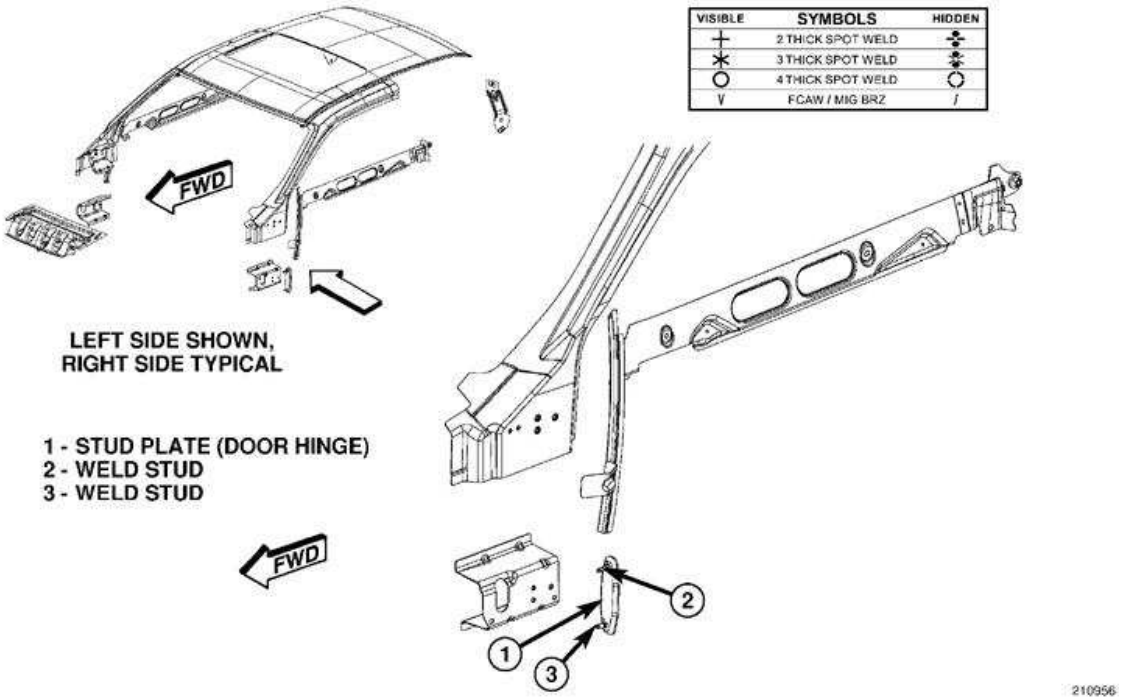

Fig. 158: Miscellaneous Body (7 of 7)
Courtesy of CHRYSLER LLC

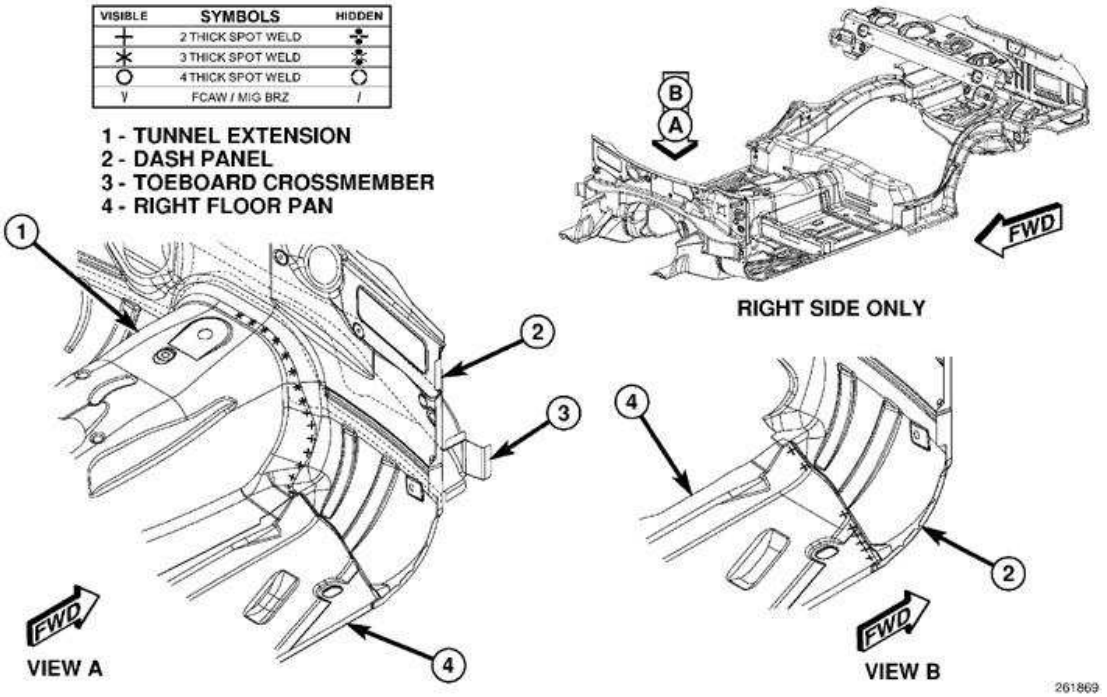

Fig. 159: Underbody Complete (1 of 10)
Courtesy of CHRYSLER LLC

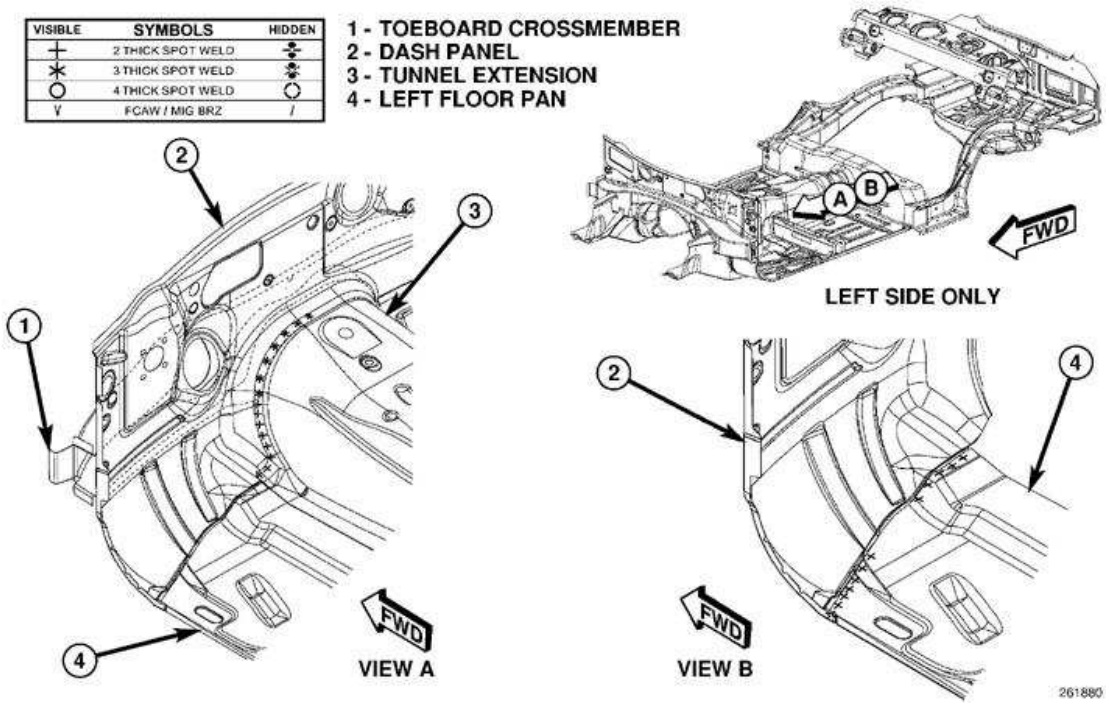

Fig. 160: Underbody Complete (2 of 10)
Courtesy of CHRYSLER LLC

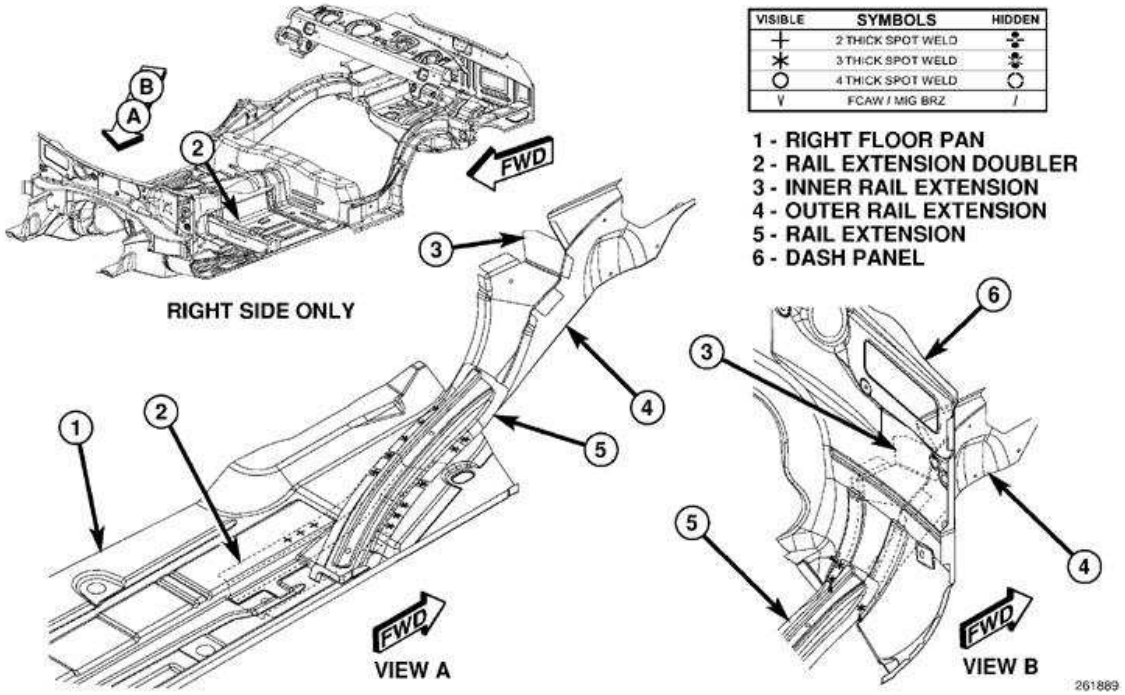

Fig. 161: Underbody Complete (3 of 10)
Courtesy of CHRYSLER LLC

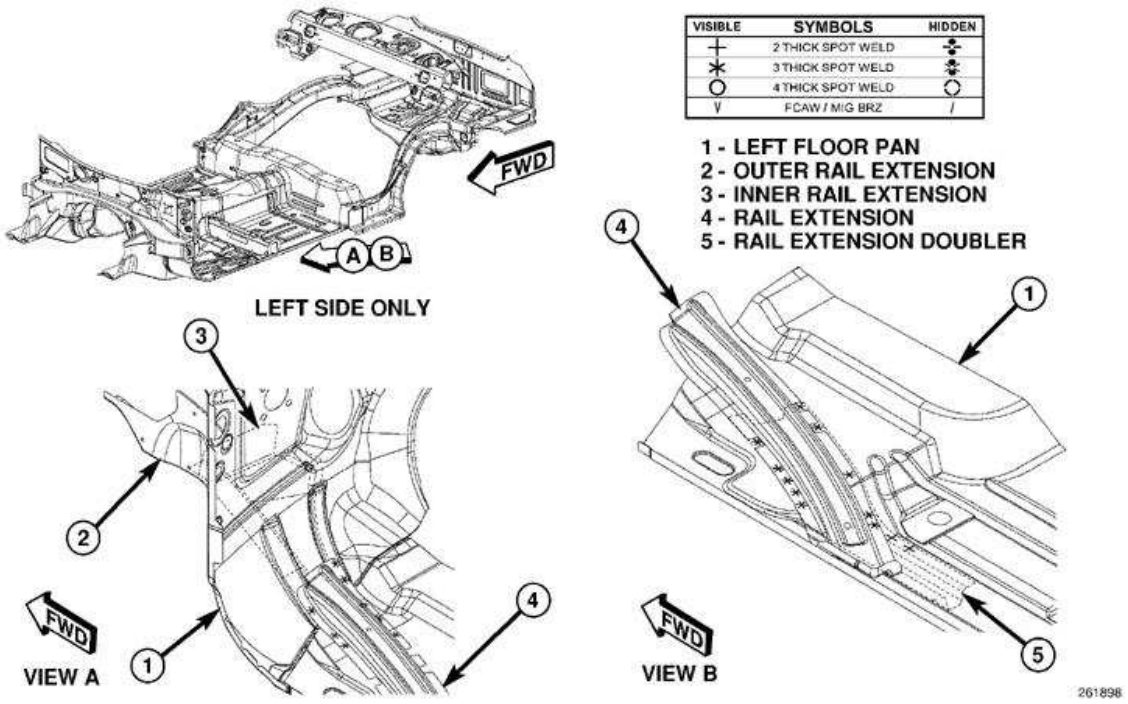

Fig. 162: Underbody Complete (4 of 10)
Courtesy of CHRYSLER LLC

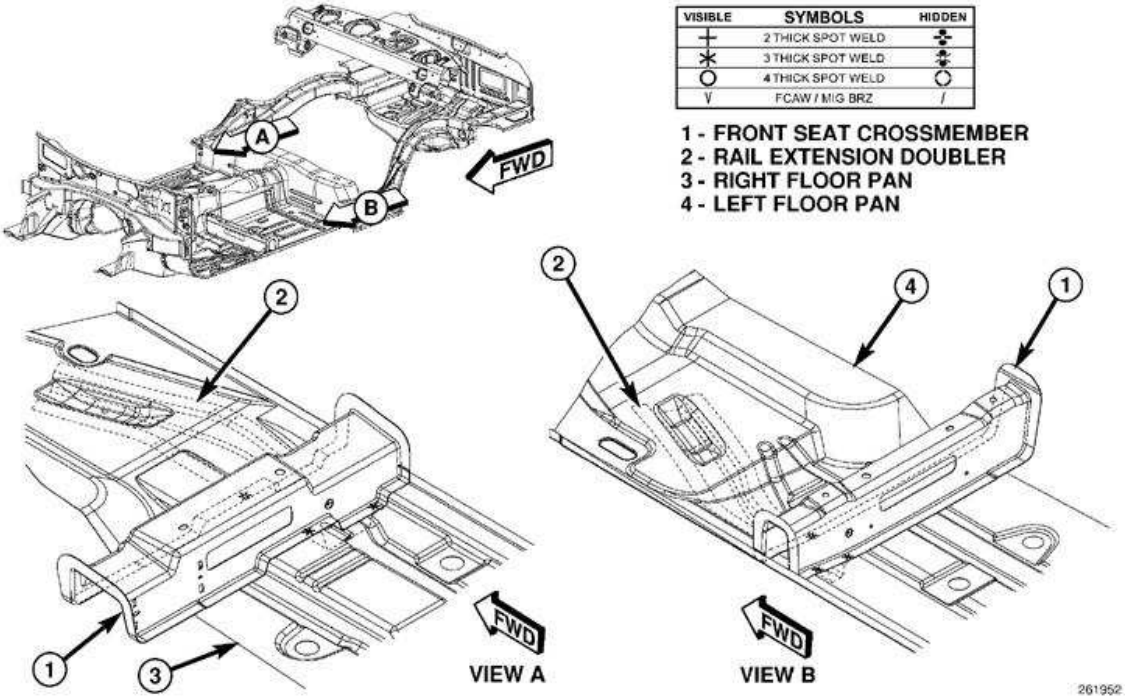

Fig. 163: Underbody Complete (5 of 10)
Courtesy of CHRYSLER LLC

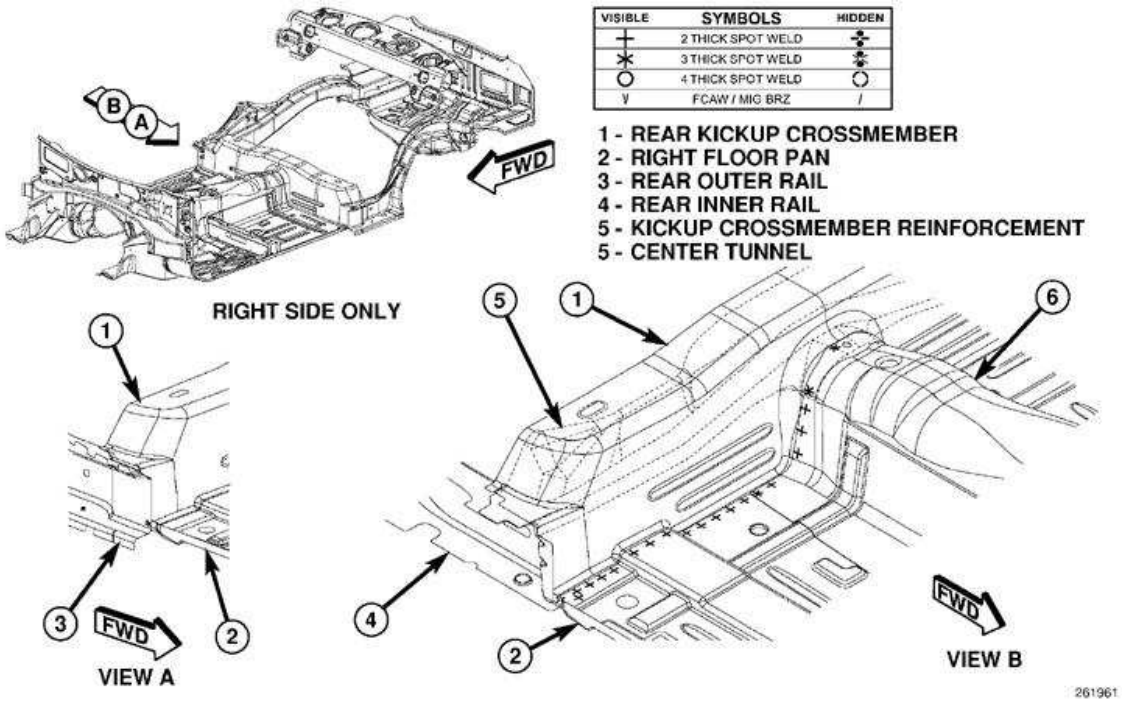

Fig. 164: Underbody Complete (6 of 10)
Courtesy of CHRYSLER LLC

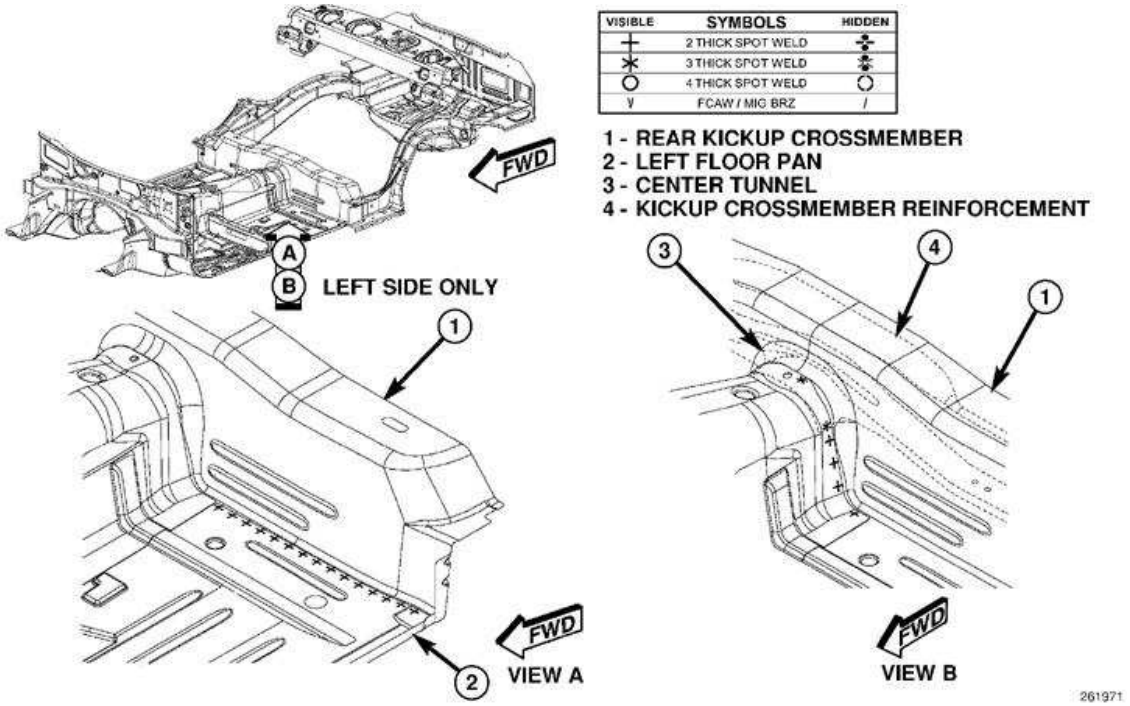

Fig. 165: Underbody Complete (7 of 10)
Courtesy of CHRYSLER LLC

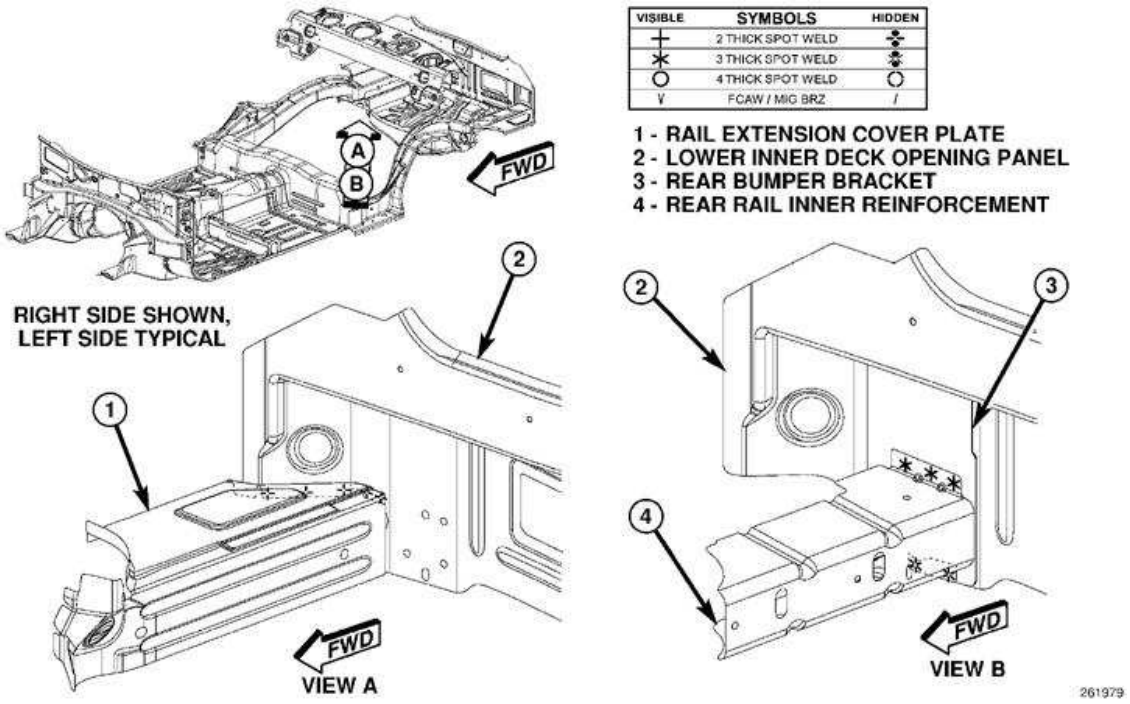

Fig. 166: Underbody Complete (8 of 10)
Courtesy of CHRYSLER LLC

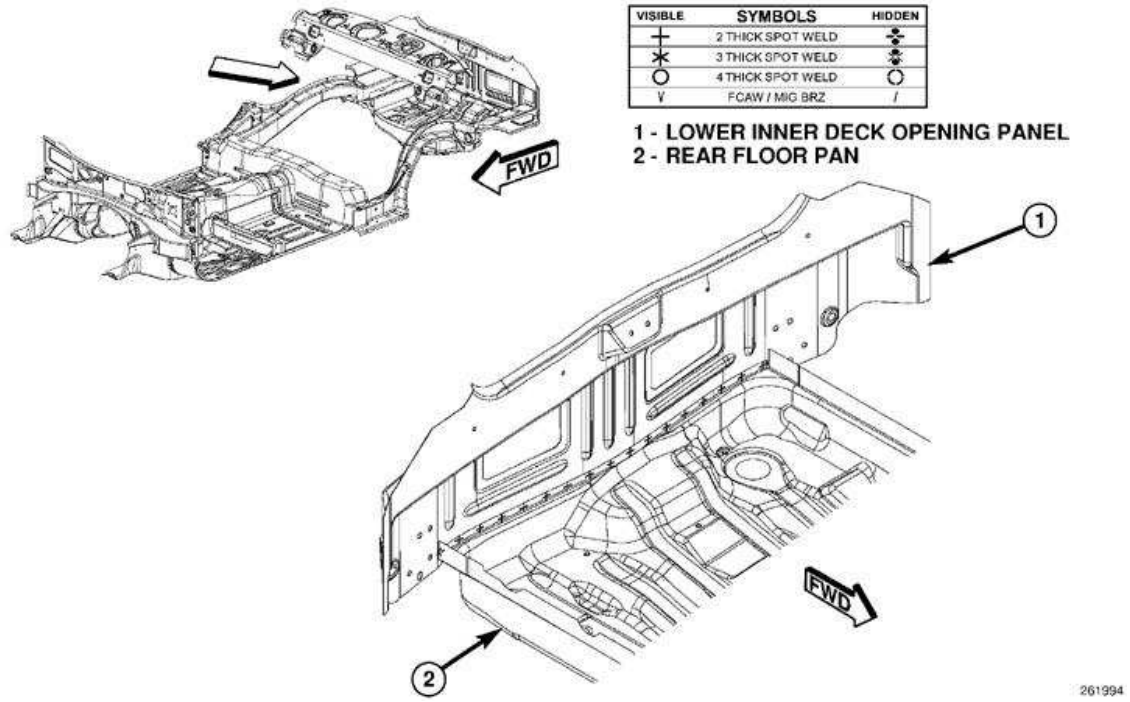

Fig. 167: Underbody Complete (9 of 10)
Courtesy of CHRYSLER LLC

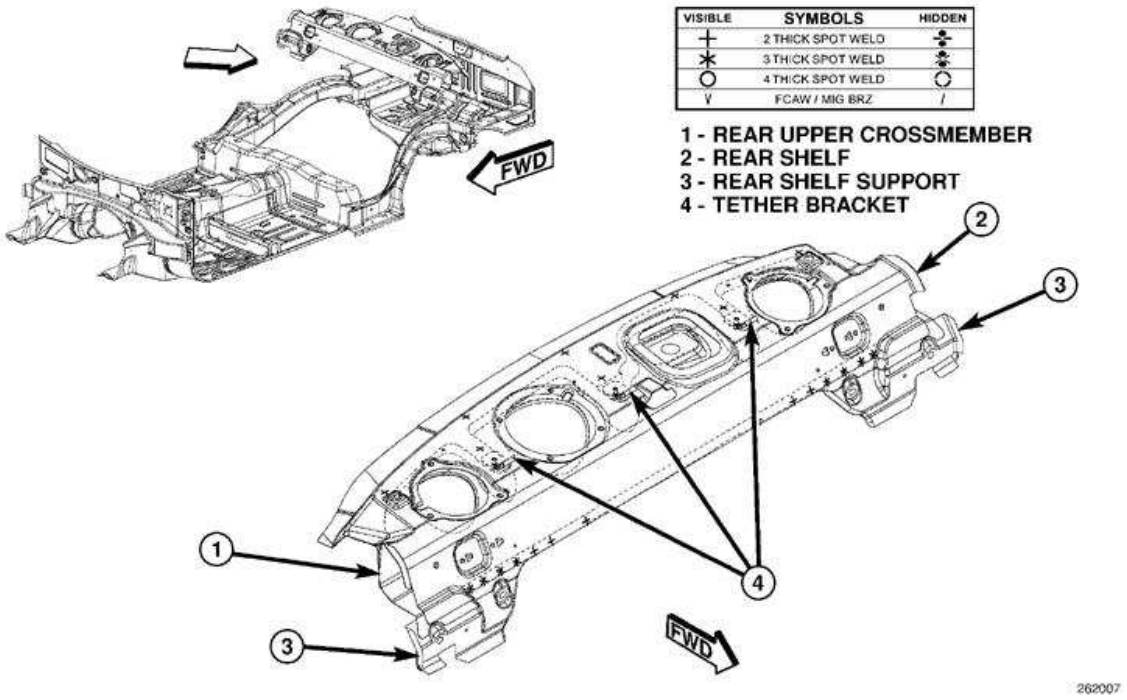

Fig. 168: Underbody Complete (10 of 10)
Courtesy of CHRYSLER LLC

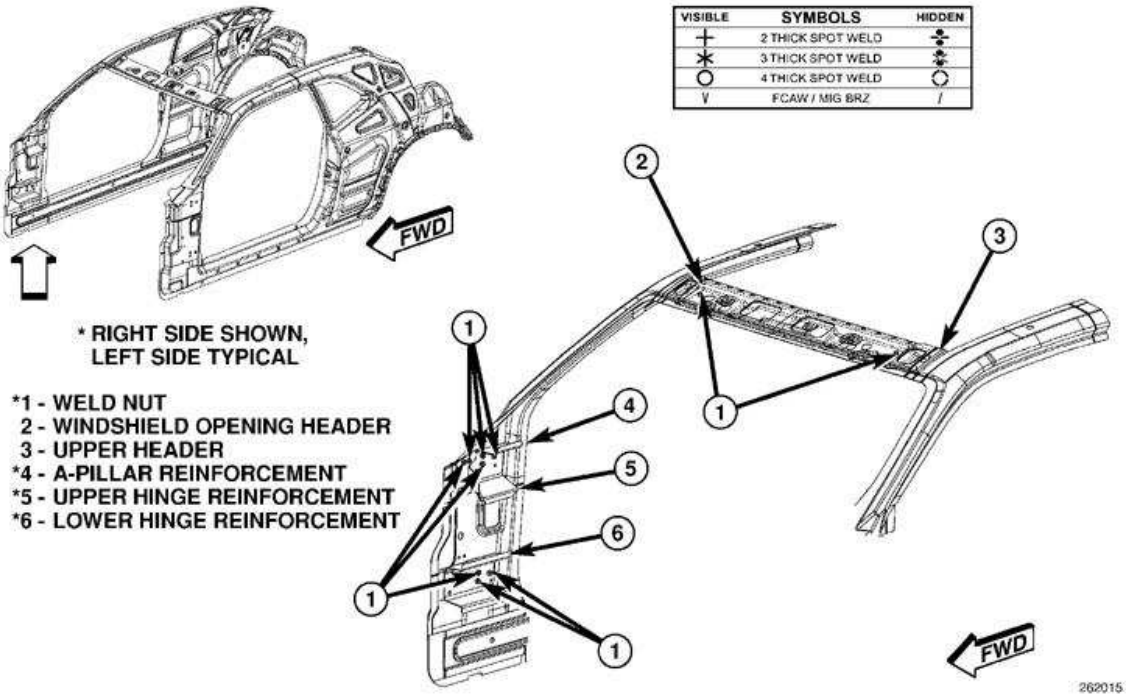

Fig. 169: Body Side Aperture (1 of 2)
Courtesy of CHRYSLER LLC

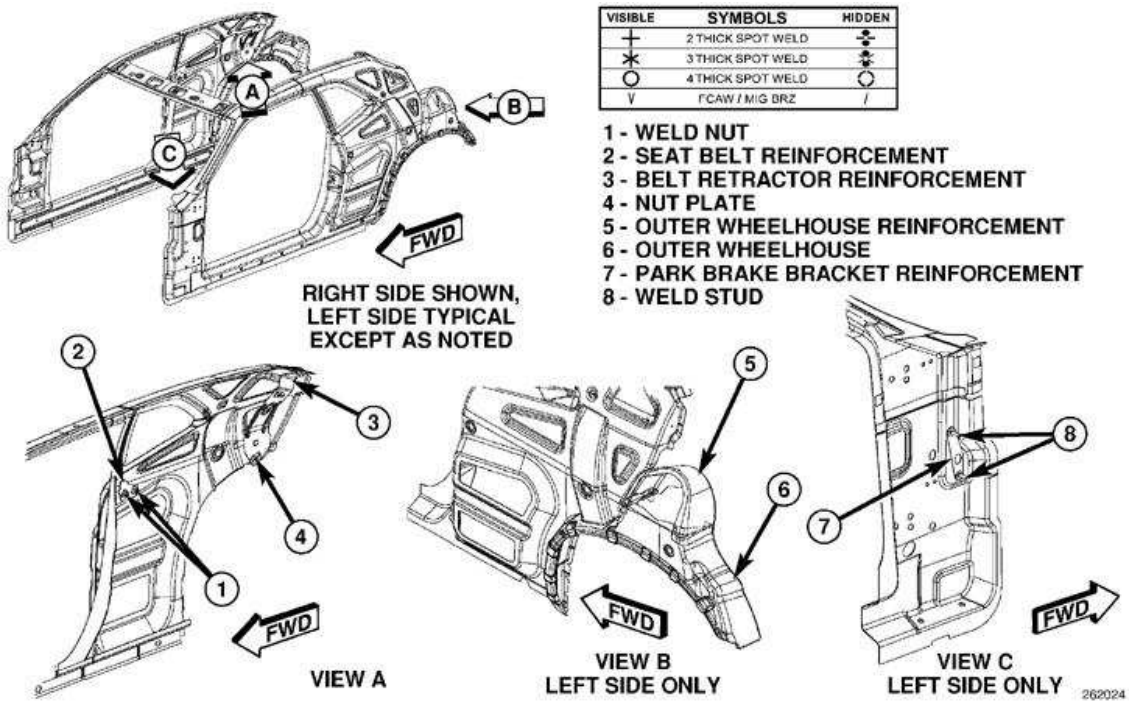

Fig. 170: Body Side Aperture (2 of 2)
Courtesy of CHRYSLER LLC

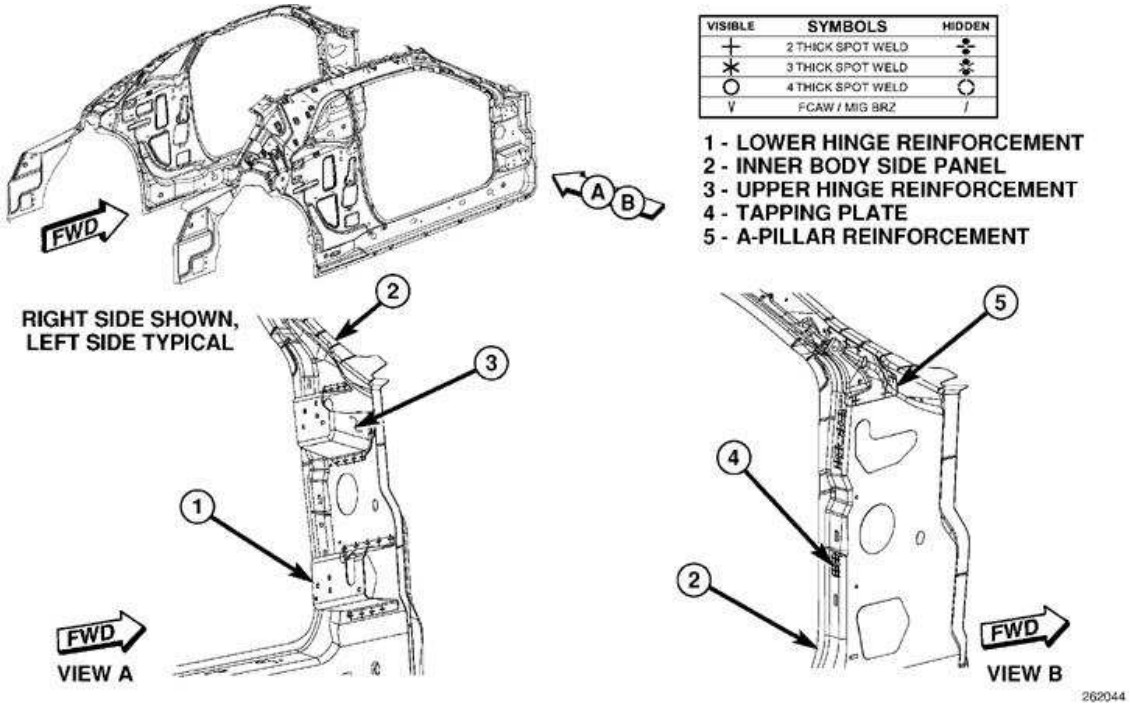

Fig. 171: Body Side Aperture Inner (1 of 3)
Courtesy of CHRYSLER LLC

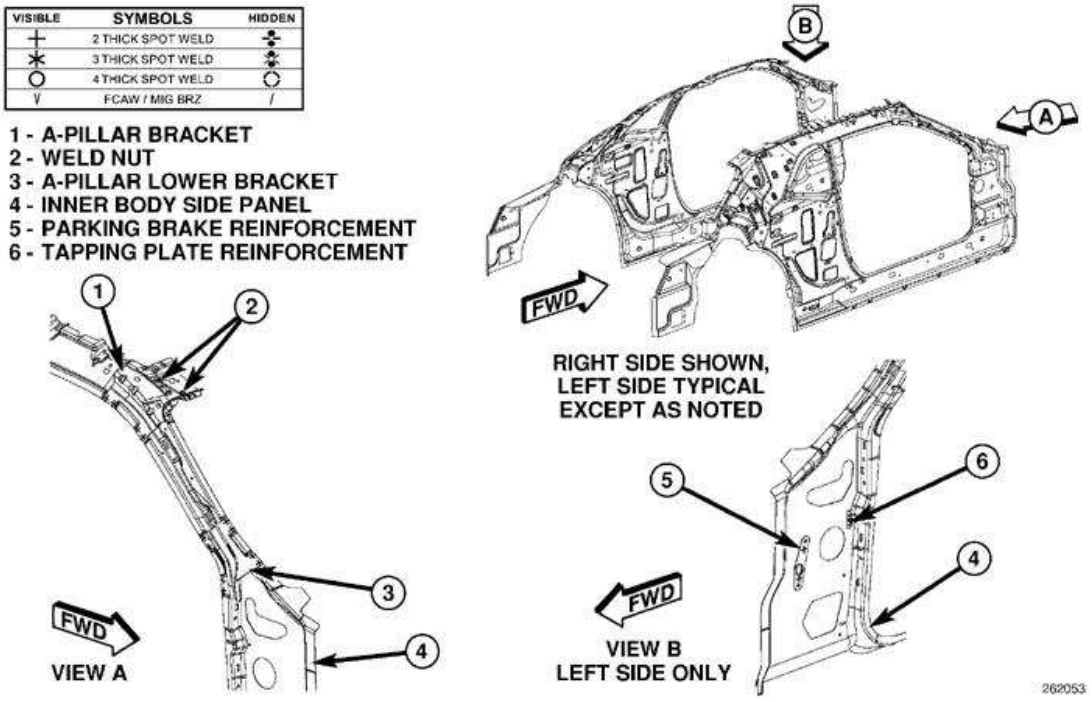

Fig. 172: Body Side Aperture Inner (2 of 3)
Courtesy of CHRYSLER LLC

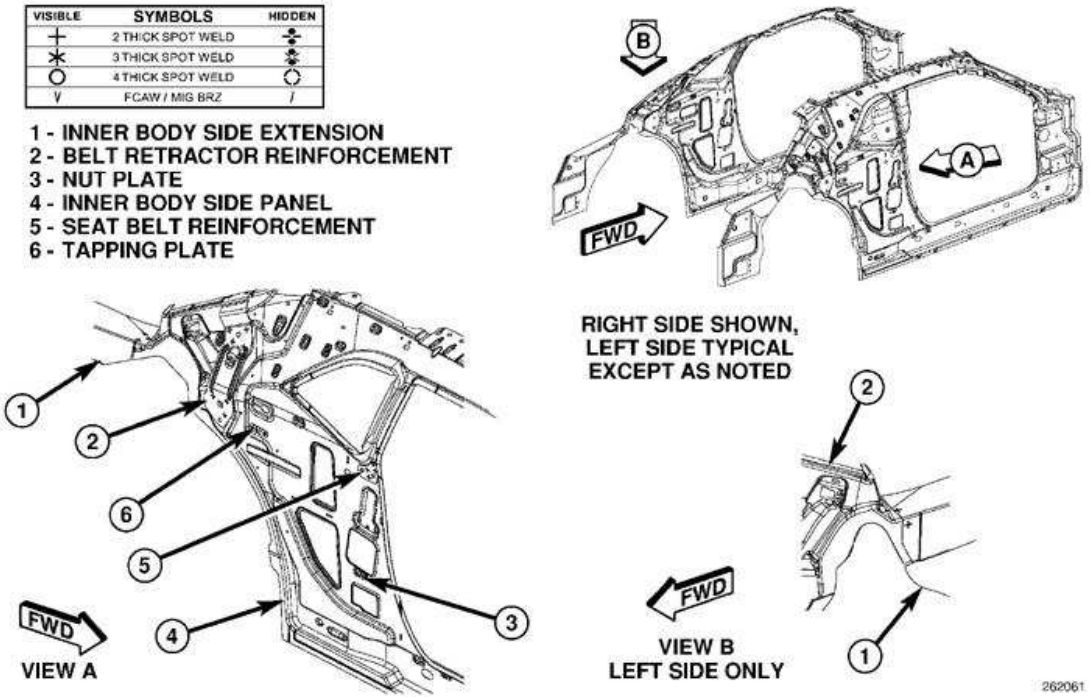

Fig. 173: Body Side Aperture Inner (3 of 3)
Courtesy of CHRYSLER LLC

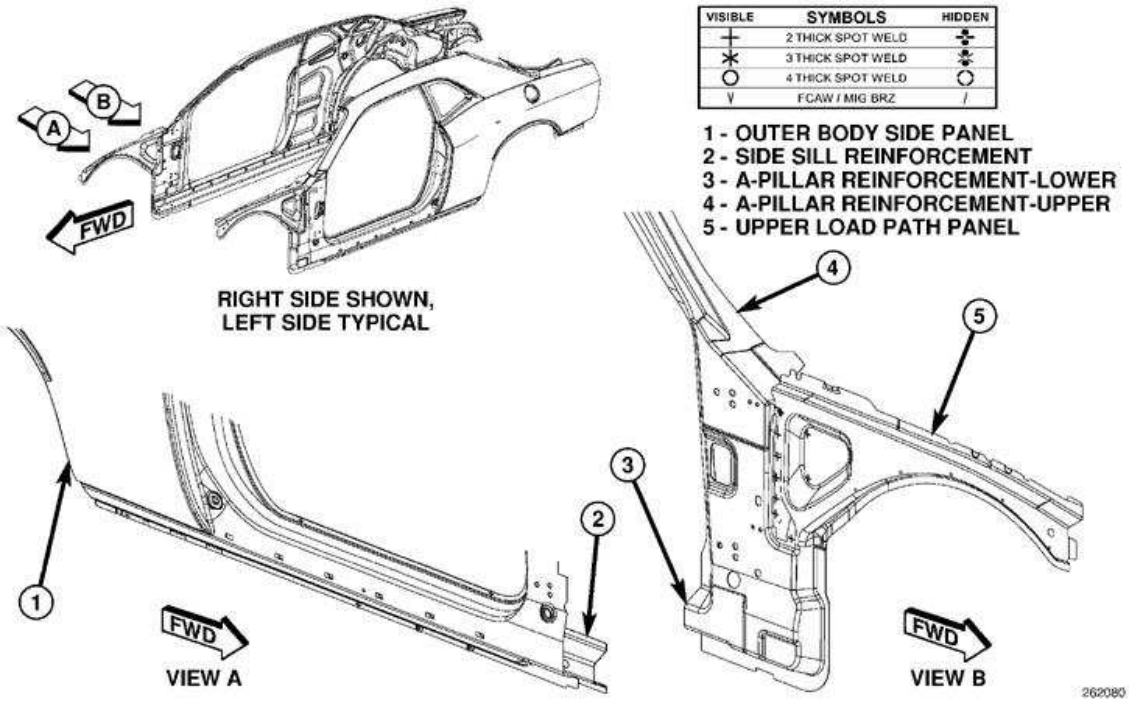

Fig. 174: Body Side Aperture Outer (1 of 7)
Courtesy of CHRYSLER LLC

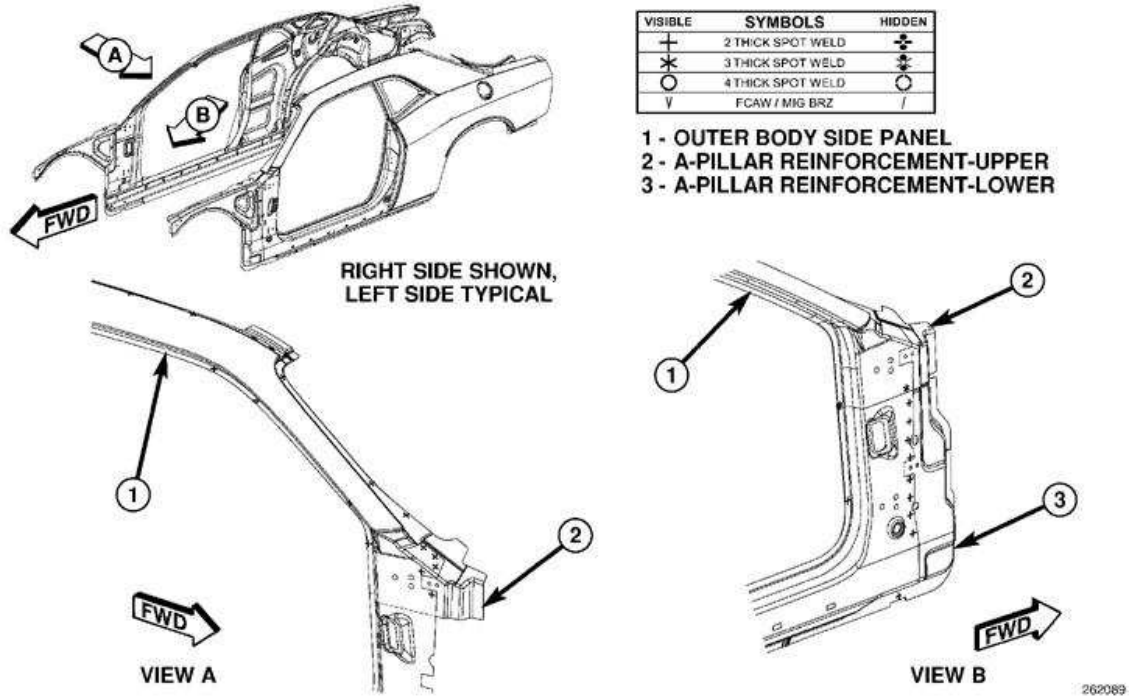

Fig. 175: Body Side Aperture Outer (2 of 7)
Courtesy of CHRYSLER LLC

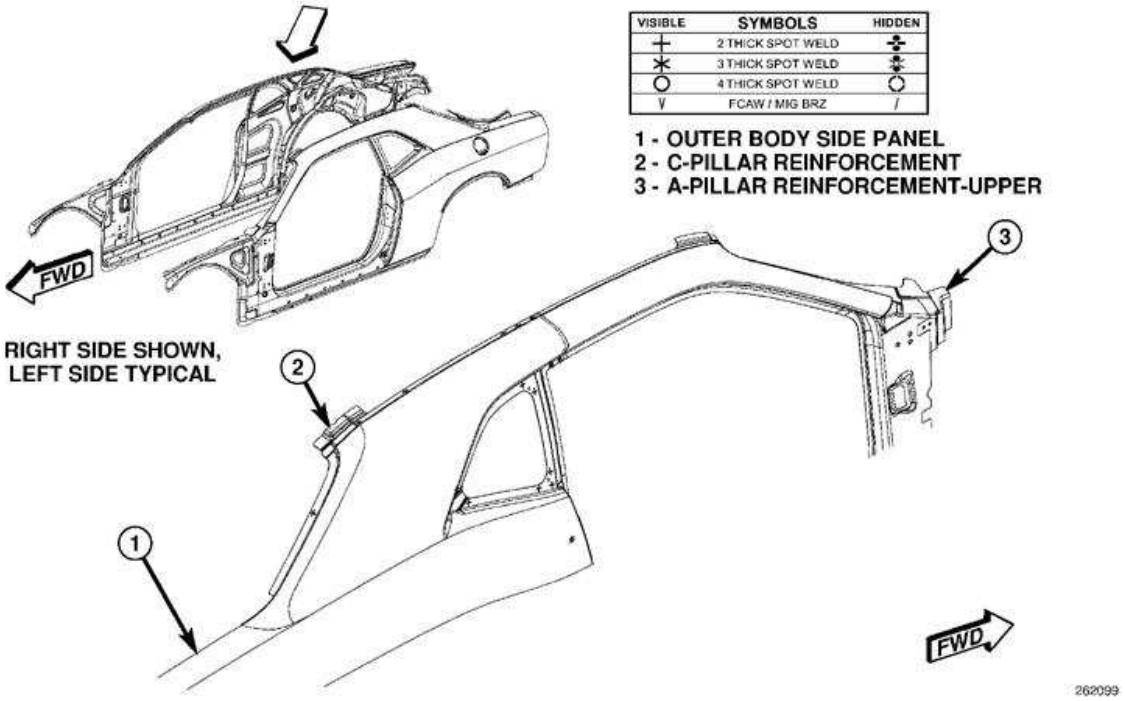

Fig. 176: Body Side Aperture Outer (3 of 7)
Courtesy of CHRYSLER LLC

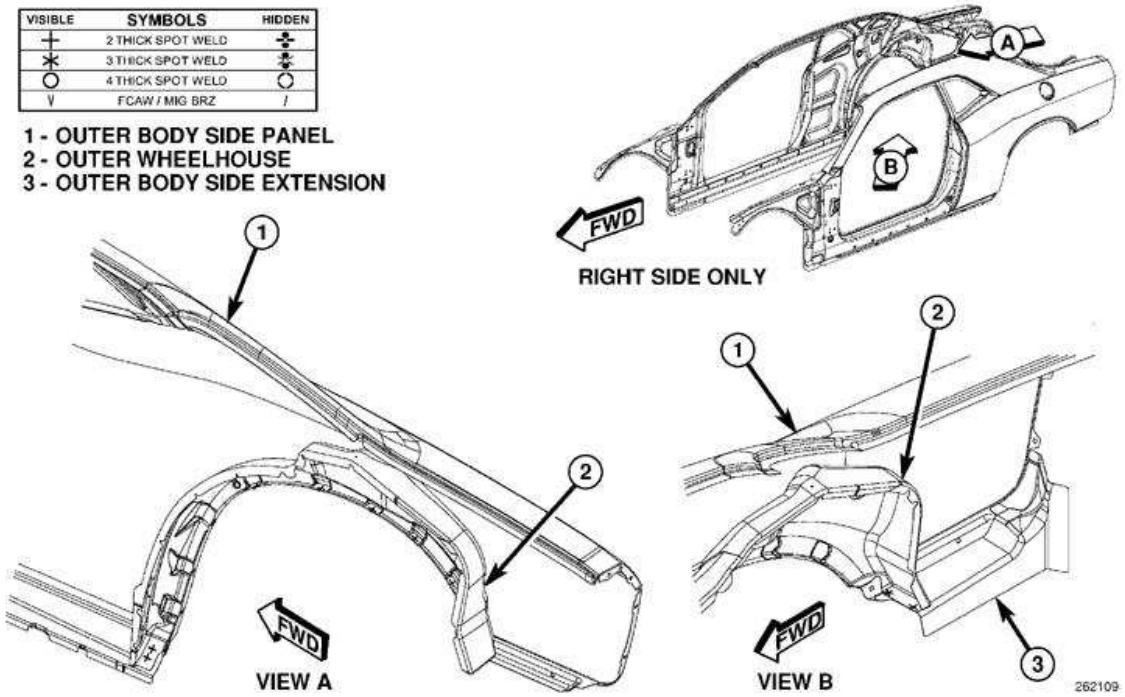

Fig. 177: Body Side Aperture Outer (4 of 7)
Courtesy of CHRYSLER LLC

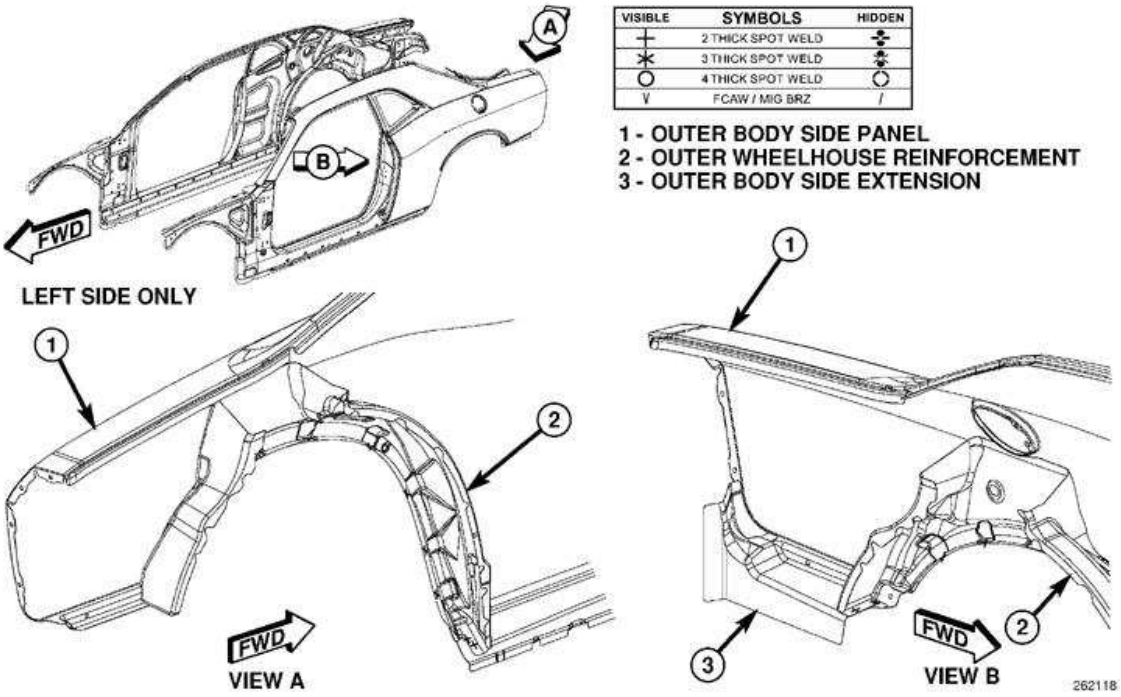

Fig. 178: Body Side Aperture Outer (5 of 7)
Courtesy of CHRYSLER LLC

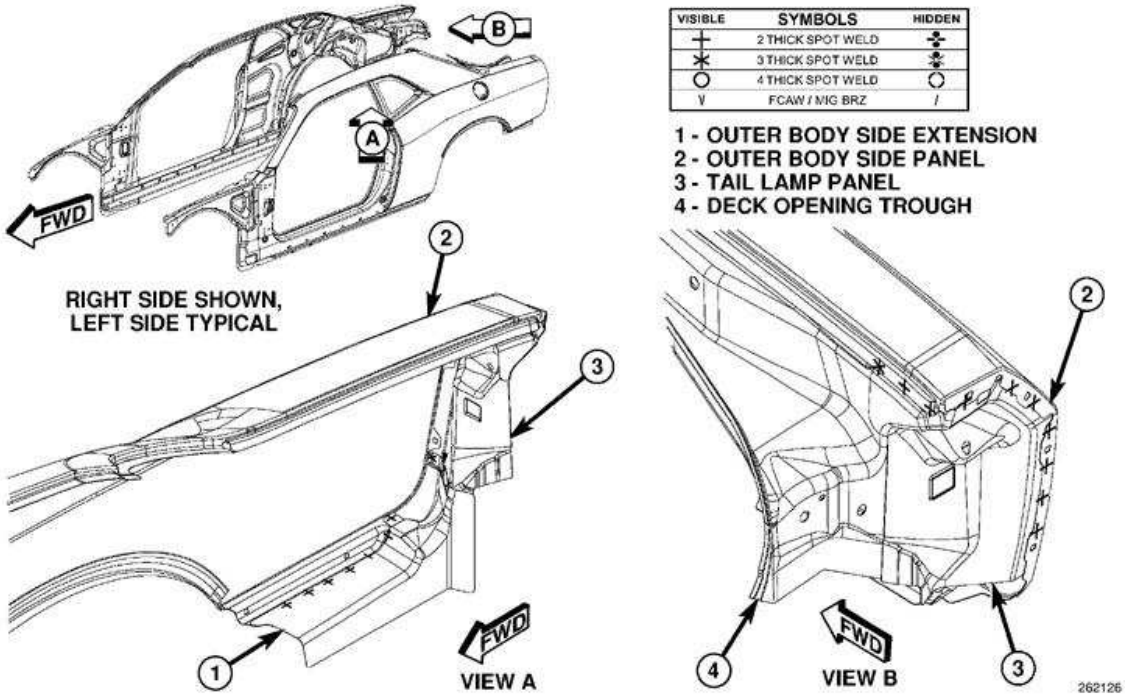

Fig. 179: Body Side Aperture Outer (6 of 7)
Courtesy of CHRYSLER LLC

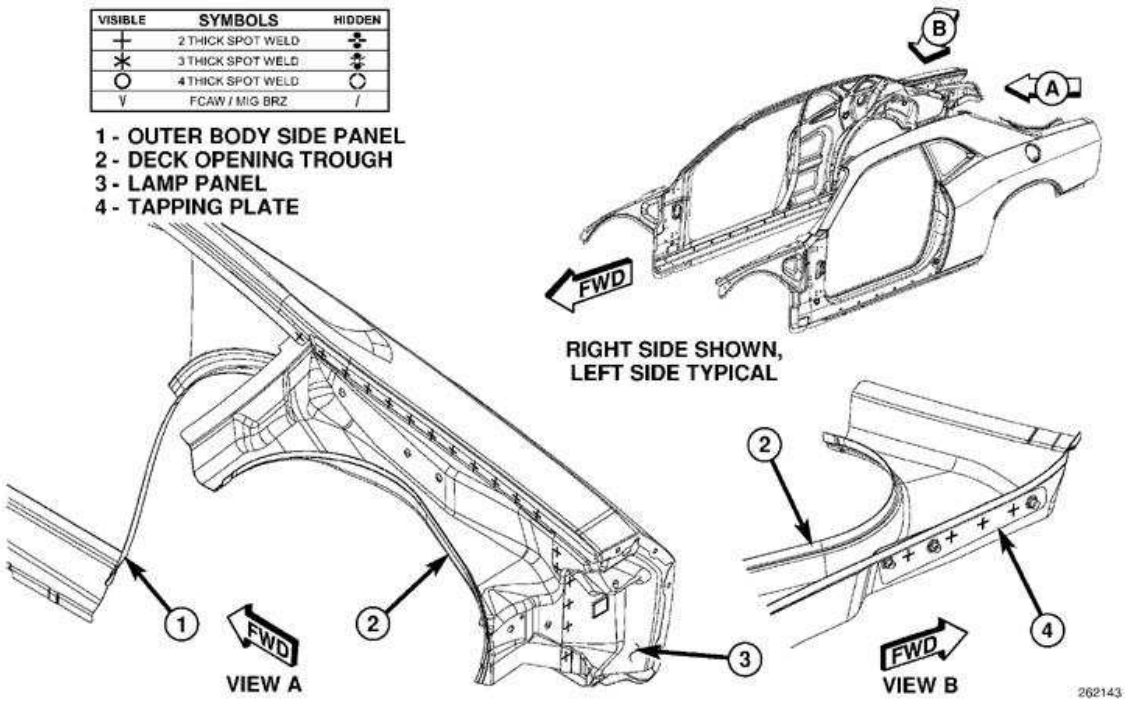

Fig. 180: Body Side Aperture Outer (7 of 7)
Courtesy of CHRYSLER LLC

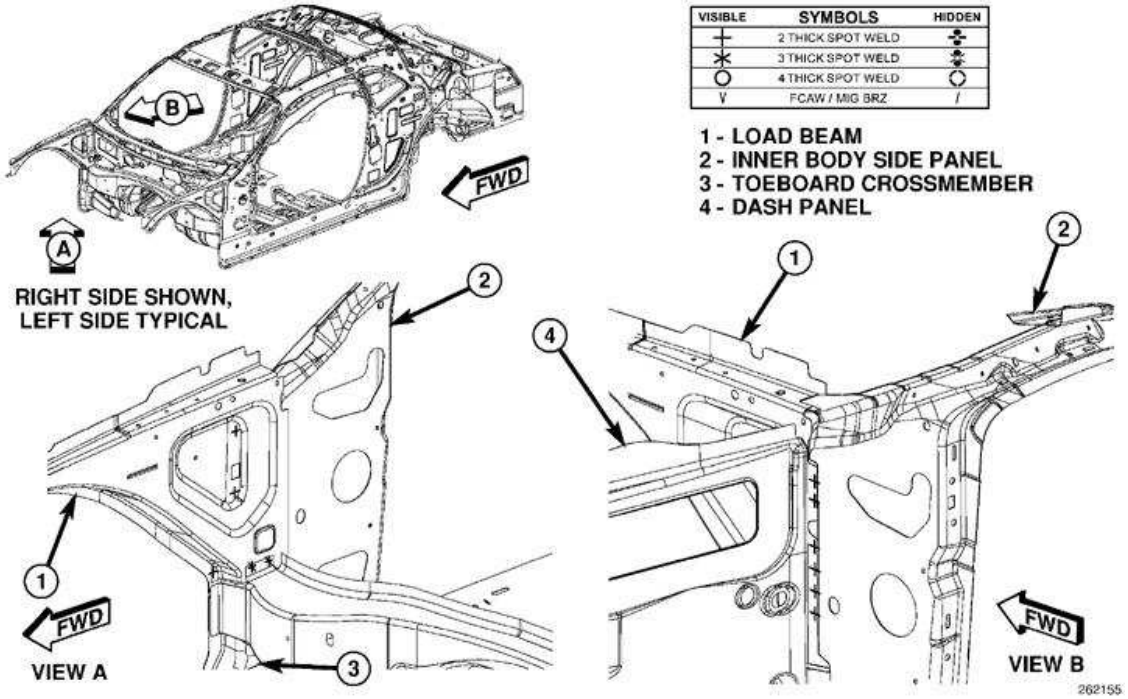

Fig. 181: Framed Body In White Without Body Side Aperture (1 of 7)
Courtesy of CHRYSLER LLC

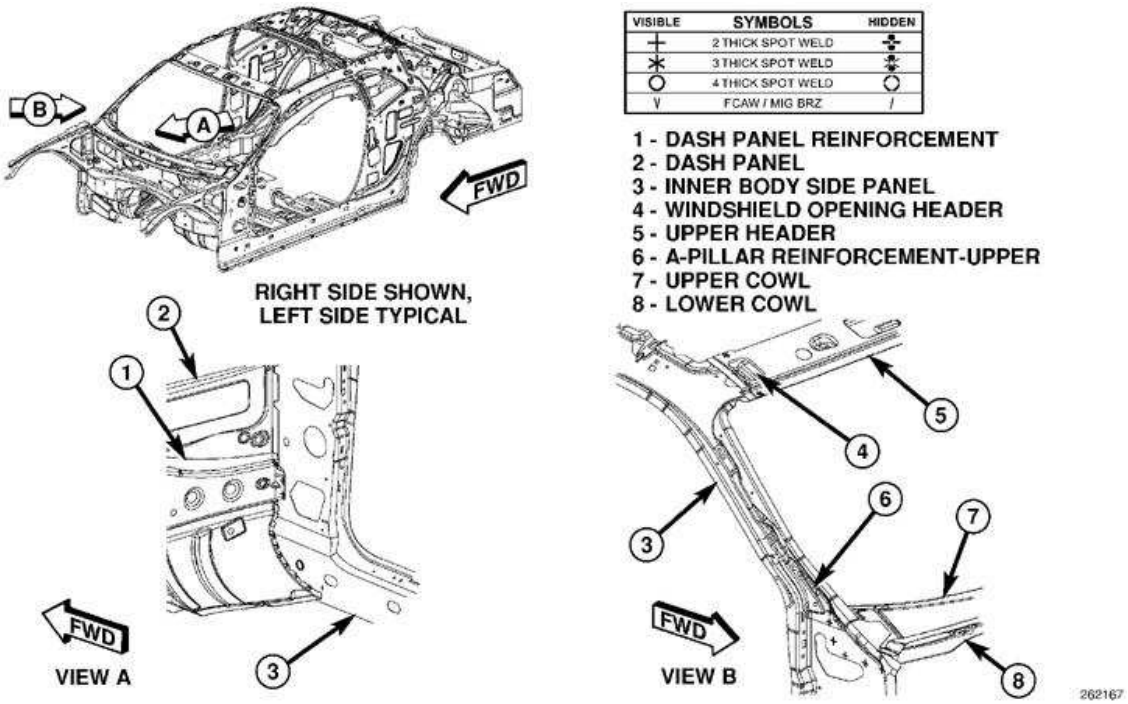

Fig. 182: Framed Body In White Without Body Side Aperture (2 of 7)
Courtesy of CHRYSLER LLC

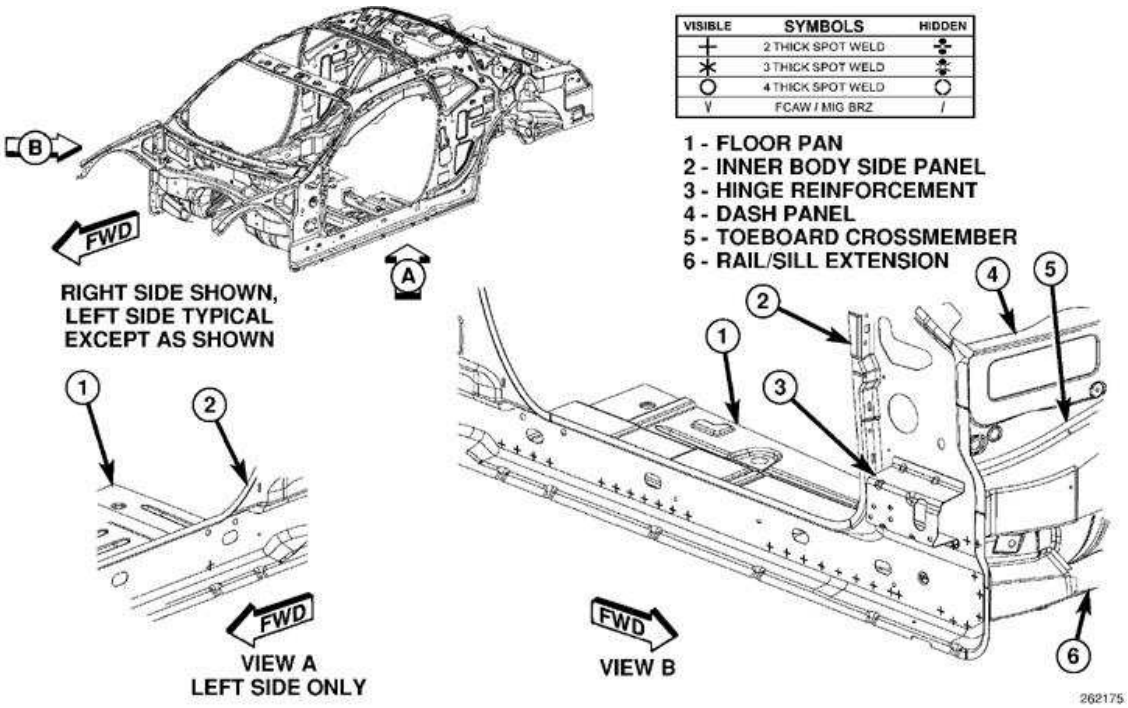

Fig. 183: Framed Body In White Without Body Side Aperture (3 of 7)
Courtesy of CHRYSLER LLC

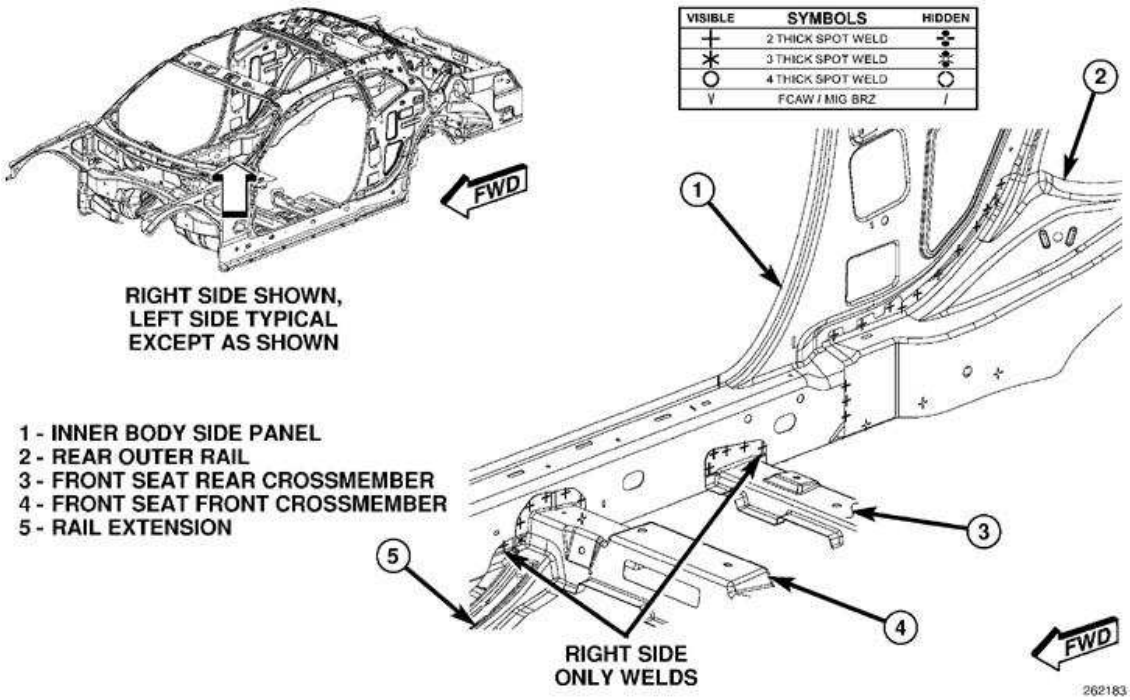

Fig. 184: Framed Body In White Without Body Side Aperture (4 of 7)
Courtesy of CHRYSLER LLC

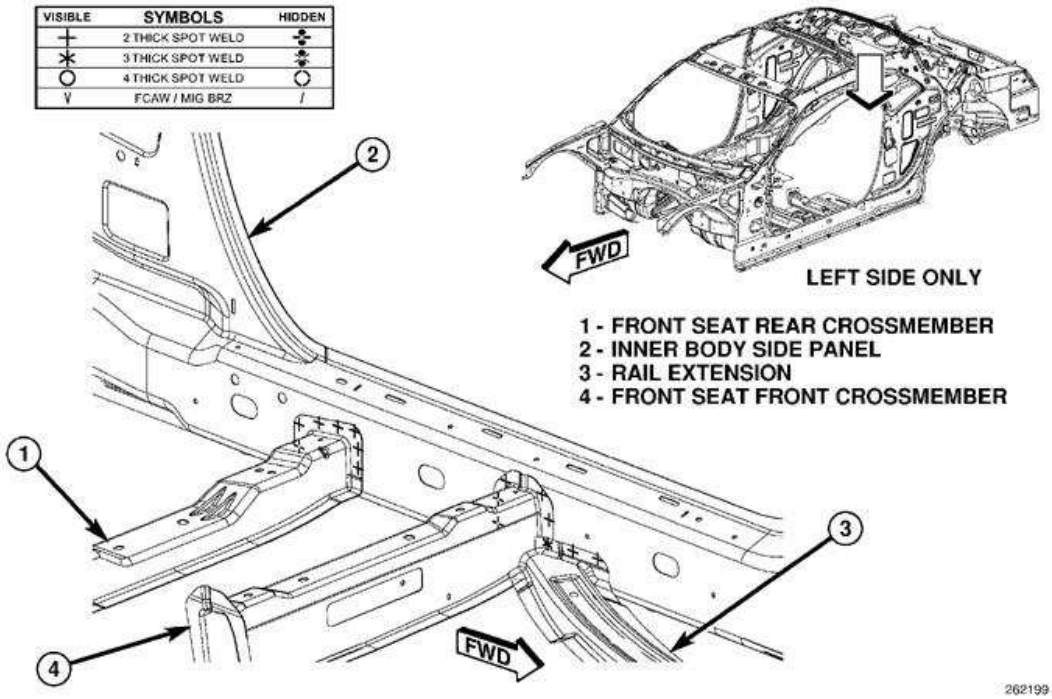

Fig. 185: Framed Body In White Without Body Side Aperture (5 of 7)
Courtesy of CHRYSLER LLC

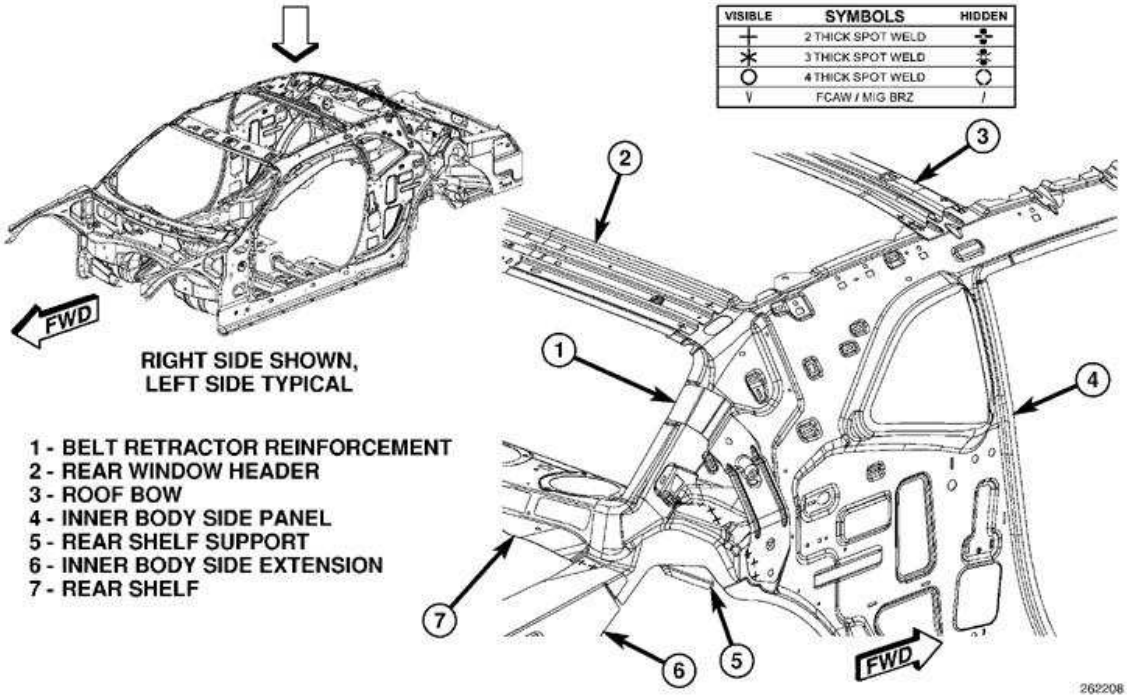

Fig. 186: Framed Body In White Without Body Side Aperture (6 of 7)
Courtesy of CHRYSLER LLC

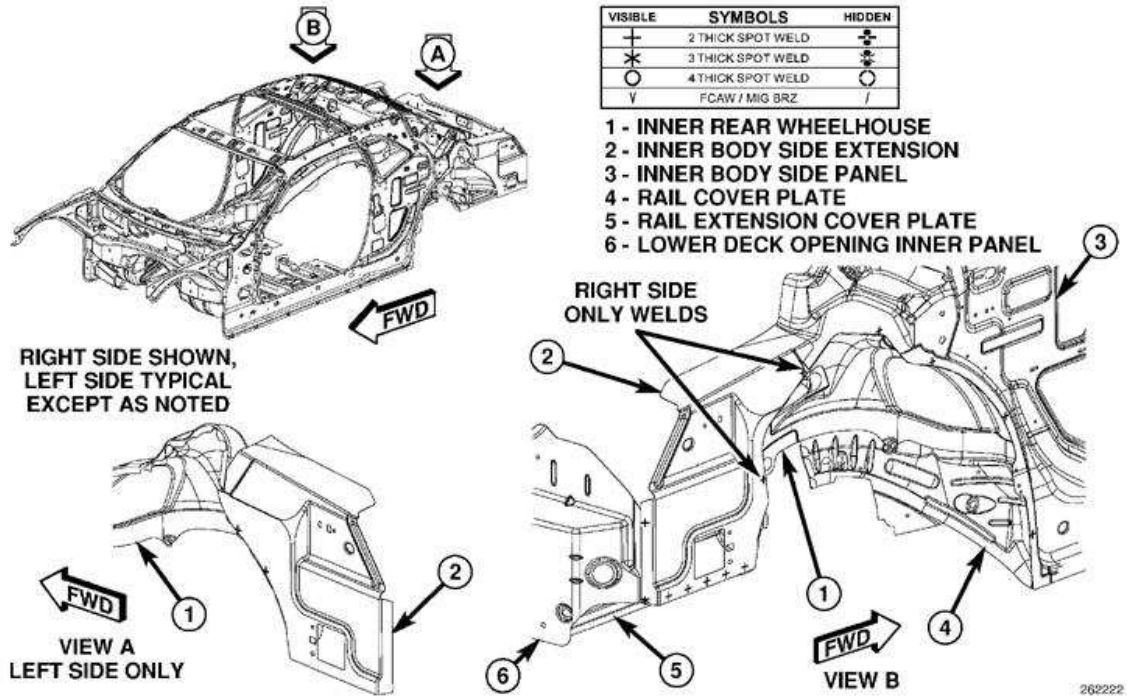

Fig. 187: Framed Body In White Without Body Side Aperture (7 of 7)
Courtesy of CHRYSLER LLC

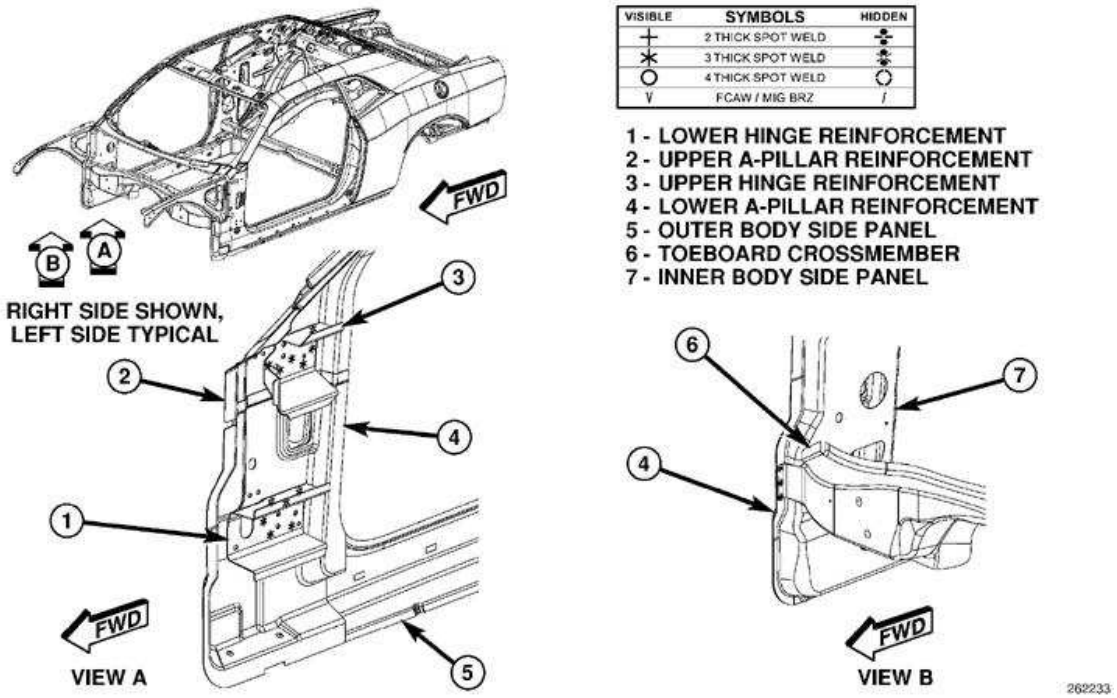

Fig. 188: Body In White Before Roof (1 of 13)
Courtesy of CHRYSLER LLC

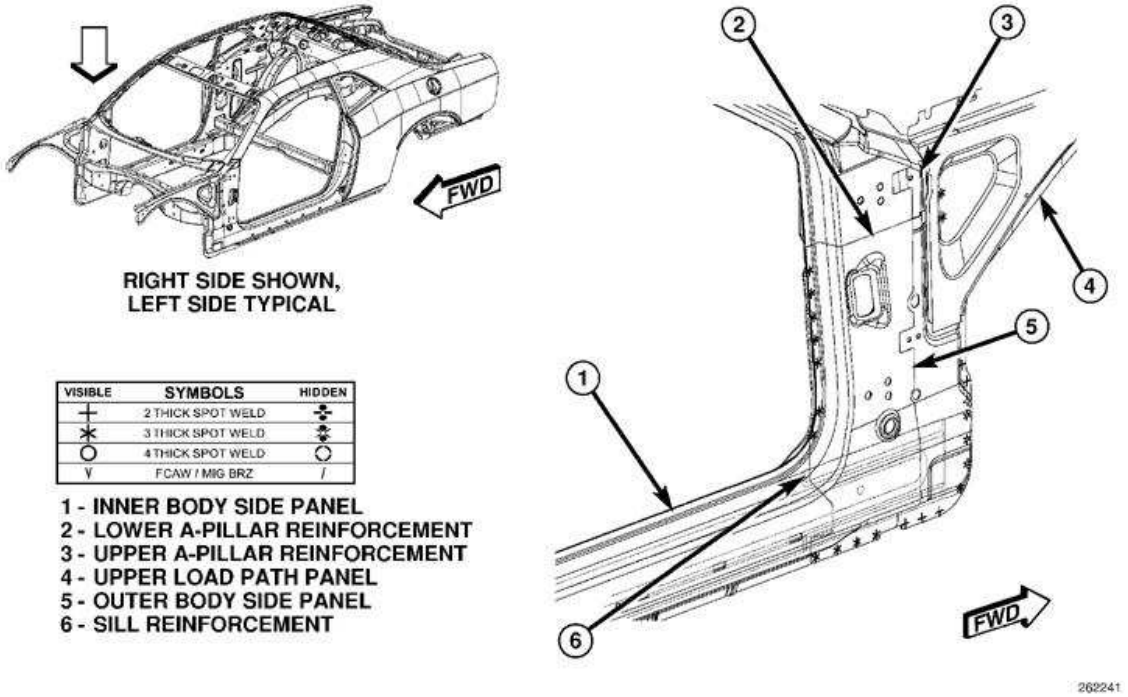

Fig. 189: Body In White Before Roof (2 of 13)
Courtesy of CHRYSLER LLC

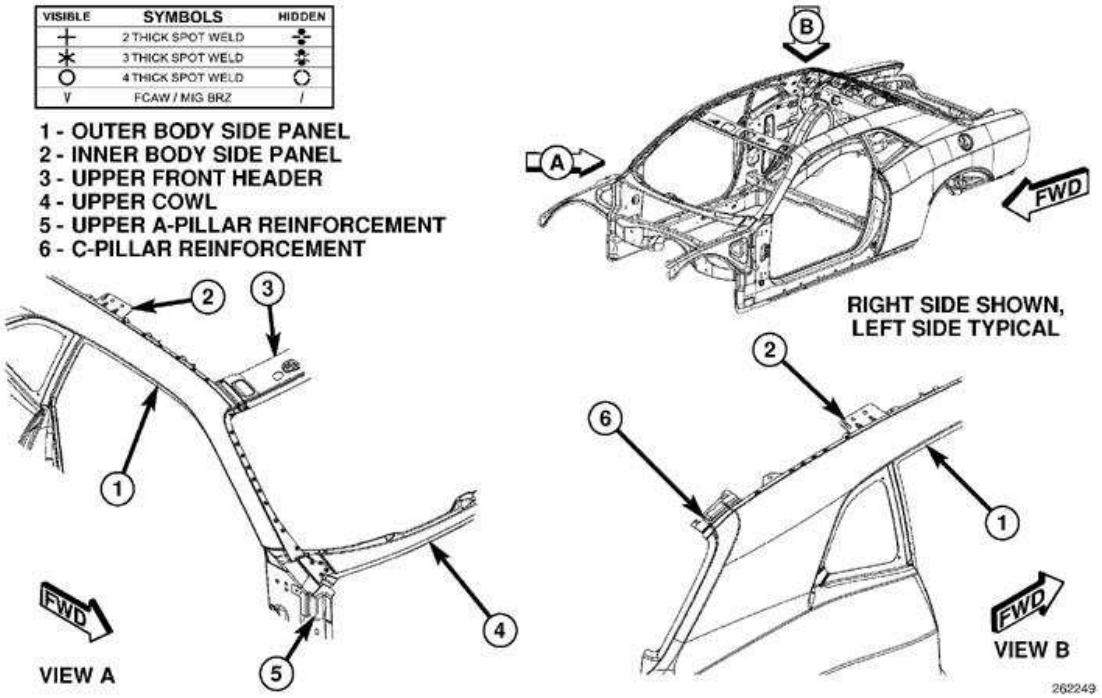

Fig. 190: Body In White Before Roof (3 of 13)
Courtesy of CHRYSLER LLC

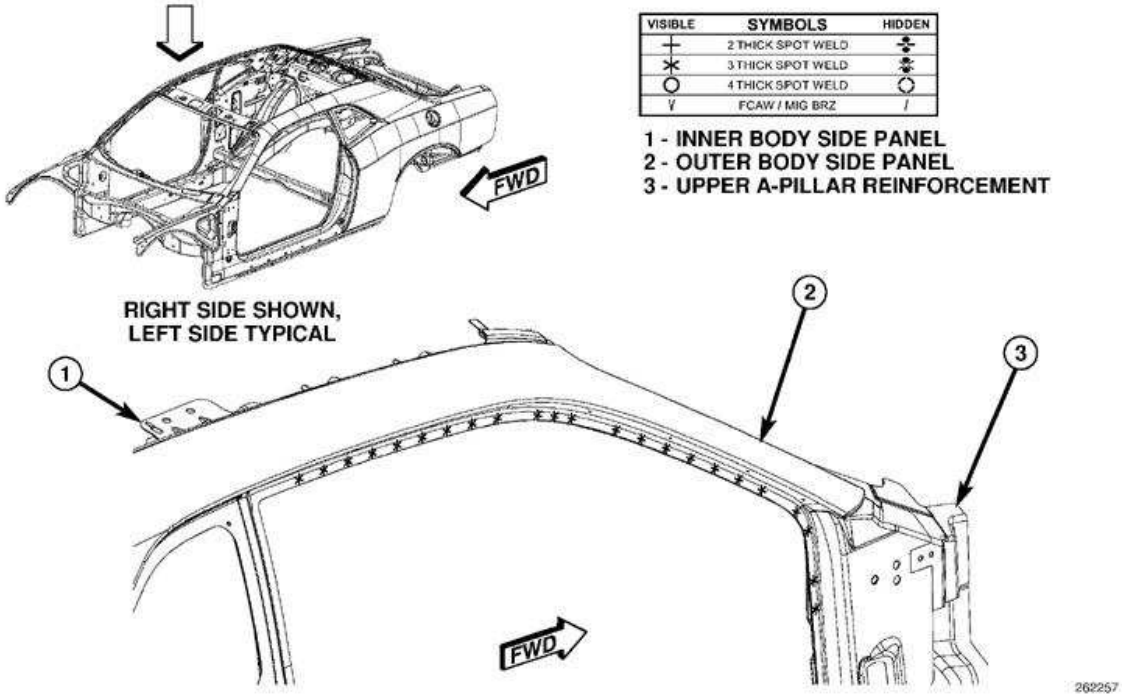

Fig. 191: Body In White Before Roof (4 of 13)
Courtesy of CHRYSLER LLC

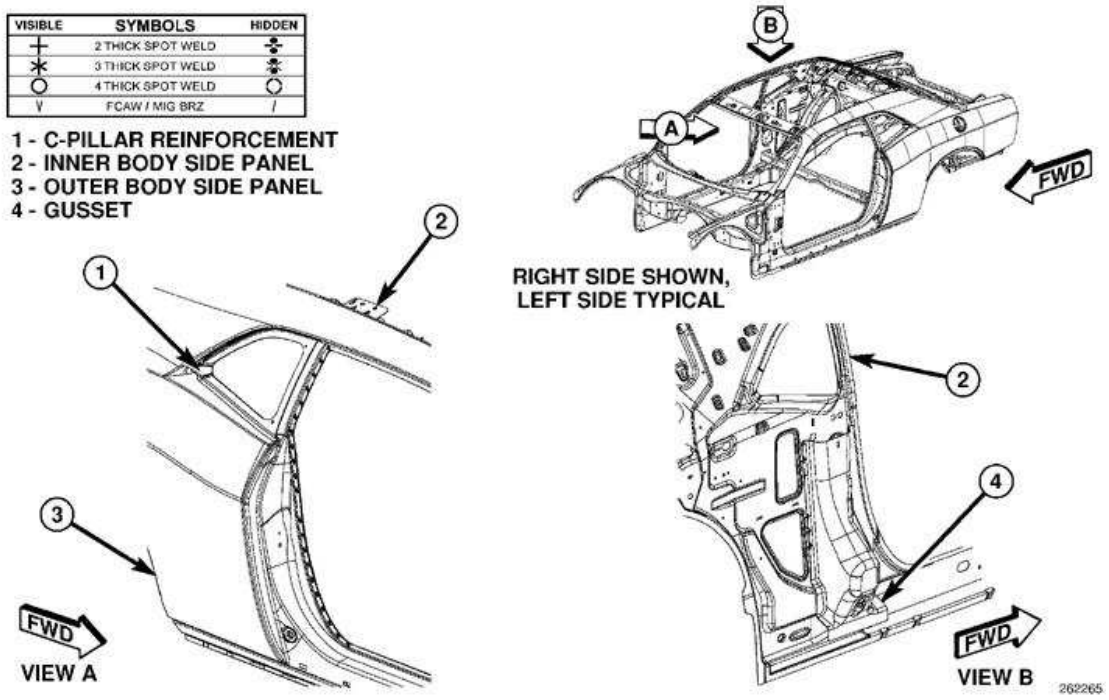

Fig. 192: Body In White Before Roof (5 of 13)
Courtesy of CHRYSLER LLC

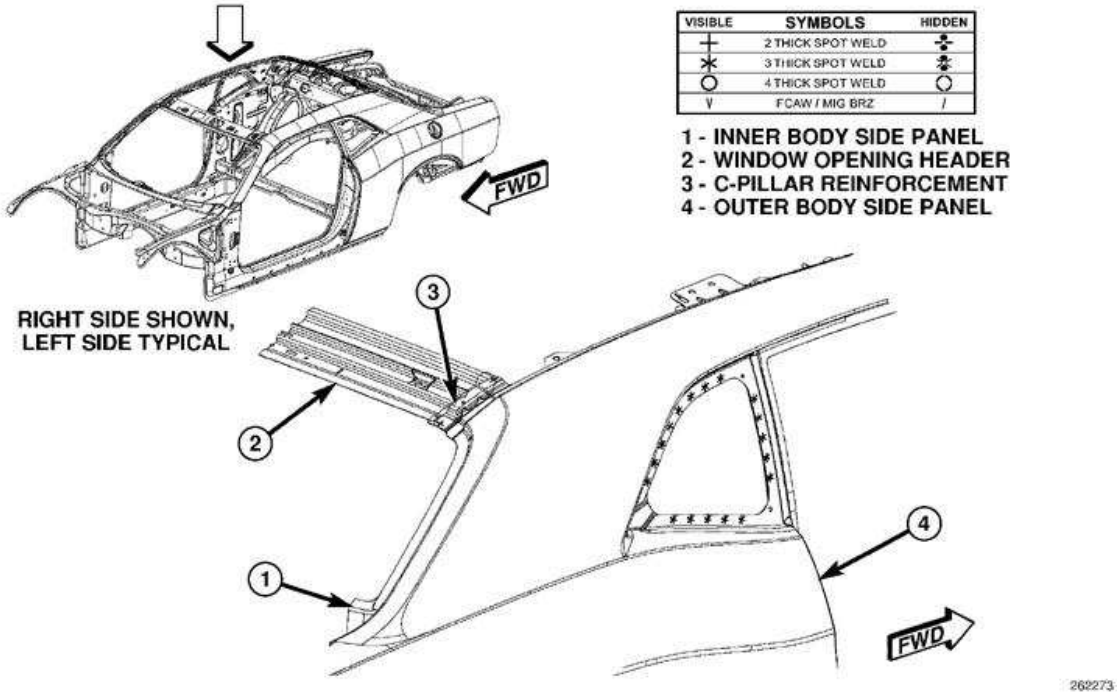

Fig. 193: Body In White Before Roof (6 of 13)
Courtesy of CHRYSLER LLC

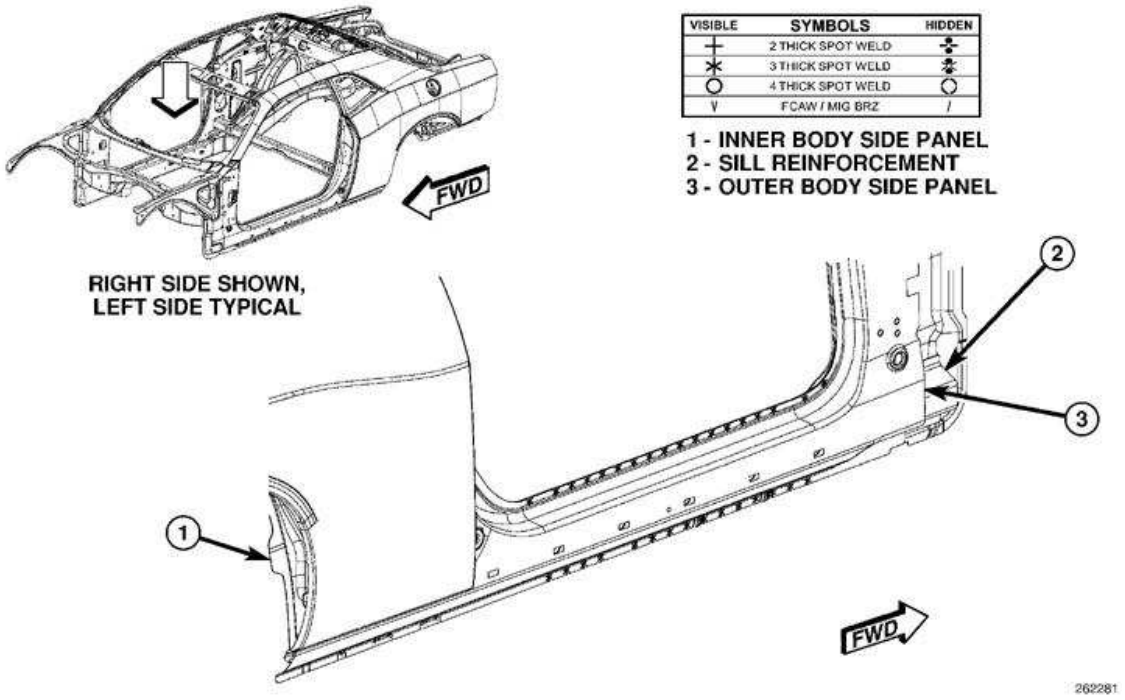

Fig. 194: Body In White Before Roof (7 of 13)
Courtesy of CHRYSLER LLC

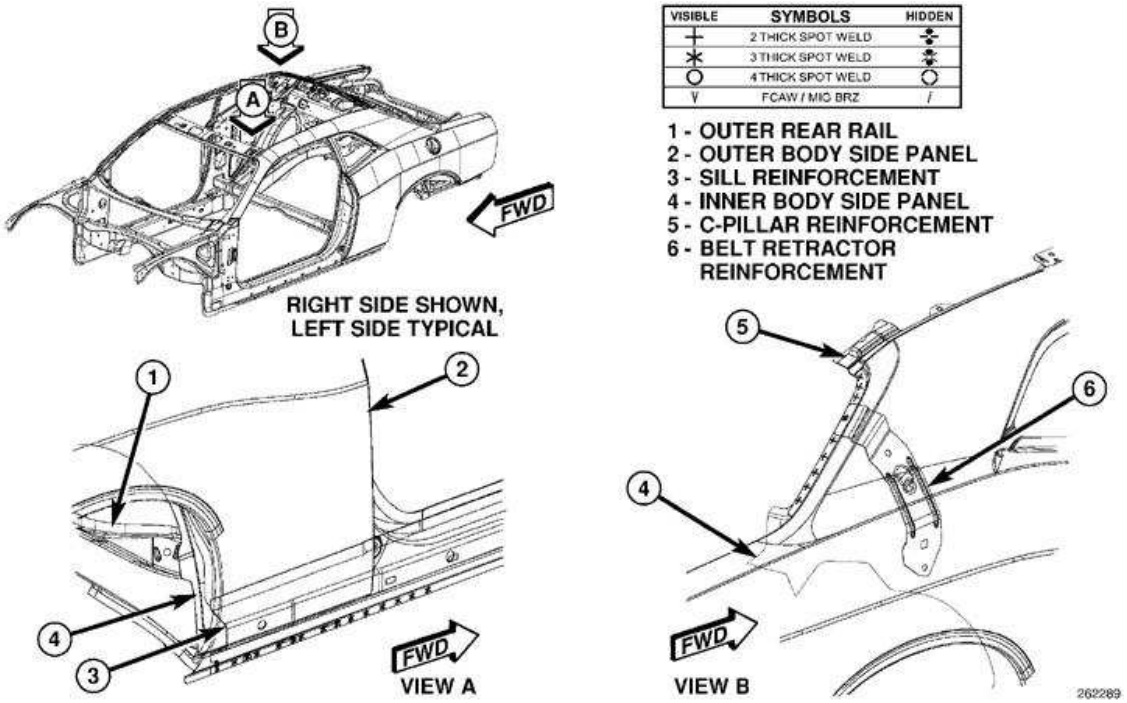

Fig. 195: Body In White Before Roof (8 of 13)
Courtesy of CHRYSLER LLC

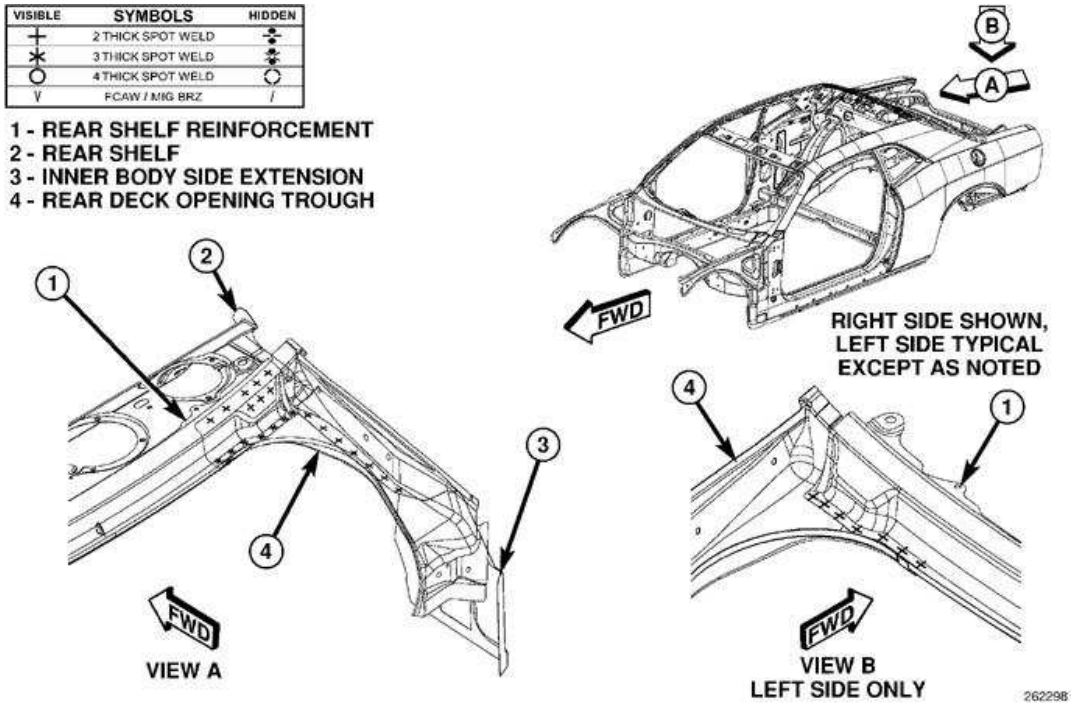

Fig. 196: Body In White Before Roof (9 of 13)
Courtesy of CHRYSLER LLC

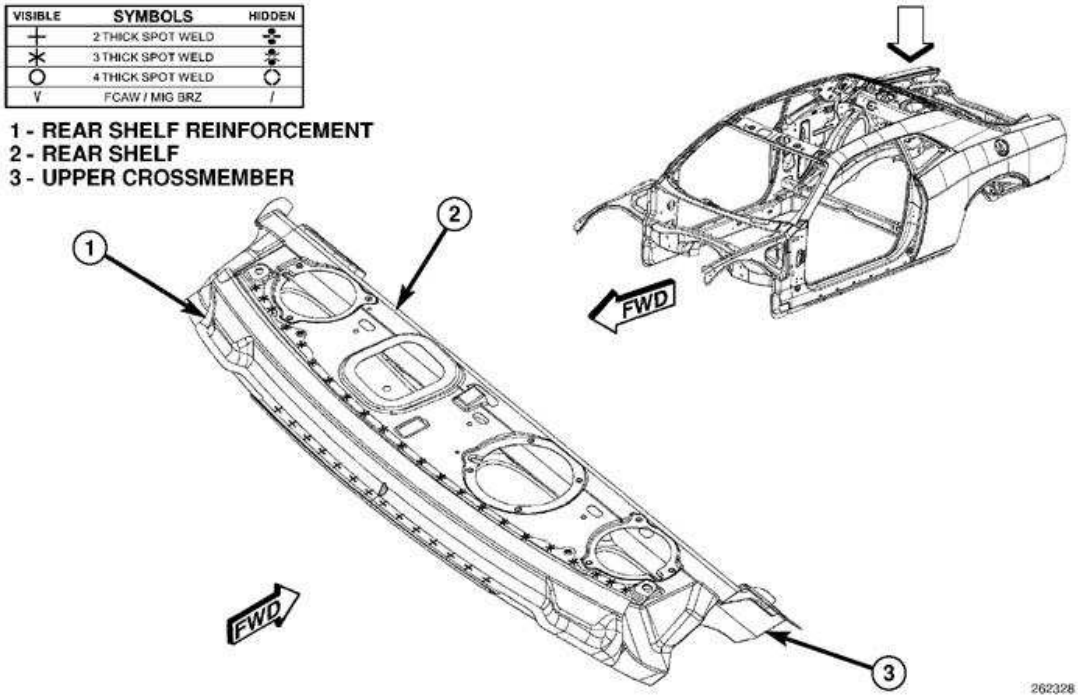

Fig. 197: Body In White Before Roof (10 of 13)
Courtesy of CHRYSLER LLC

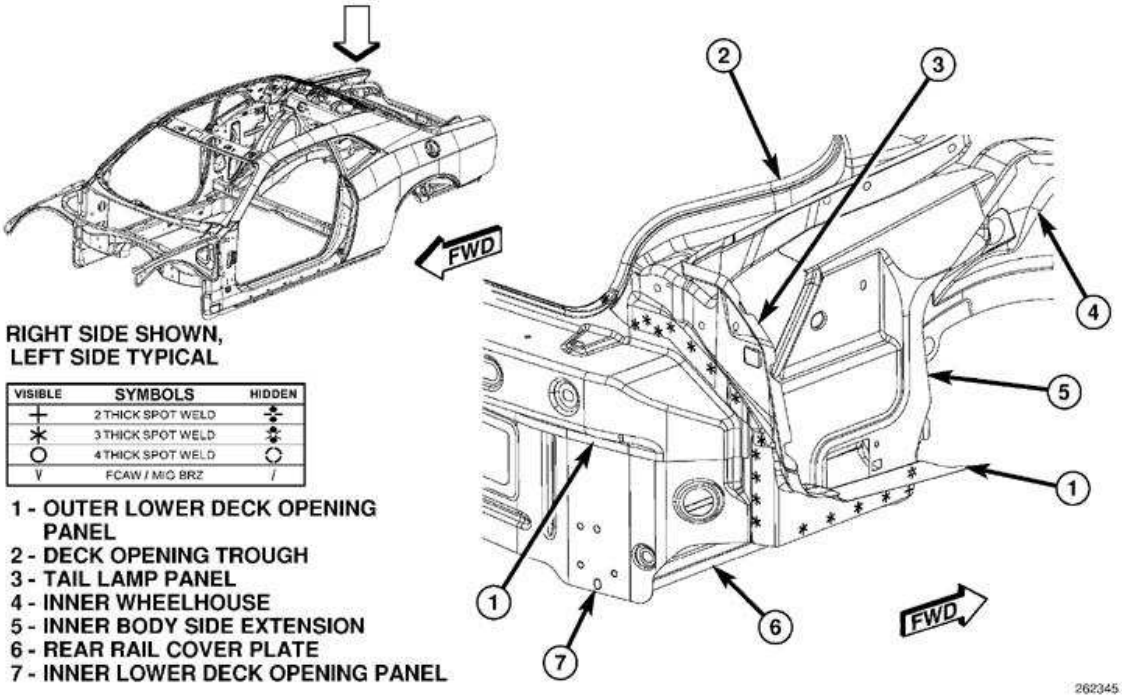

Fig. 198: Body In White Before Roof (11 of 13)
Courtesy of CHRYSLER LLC

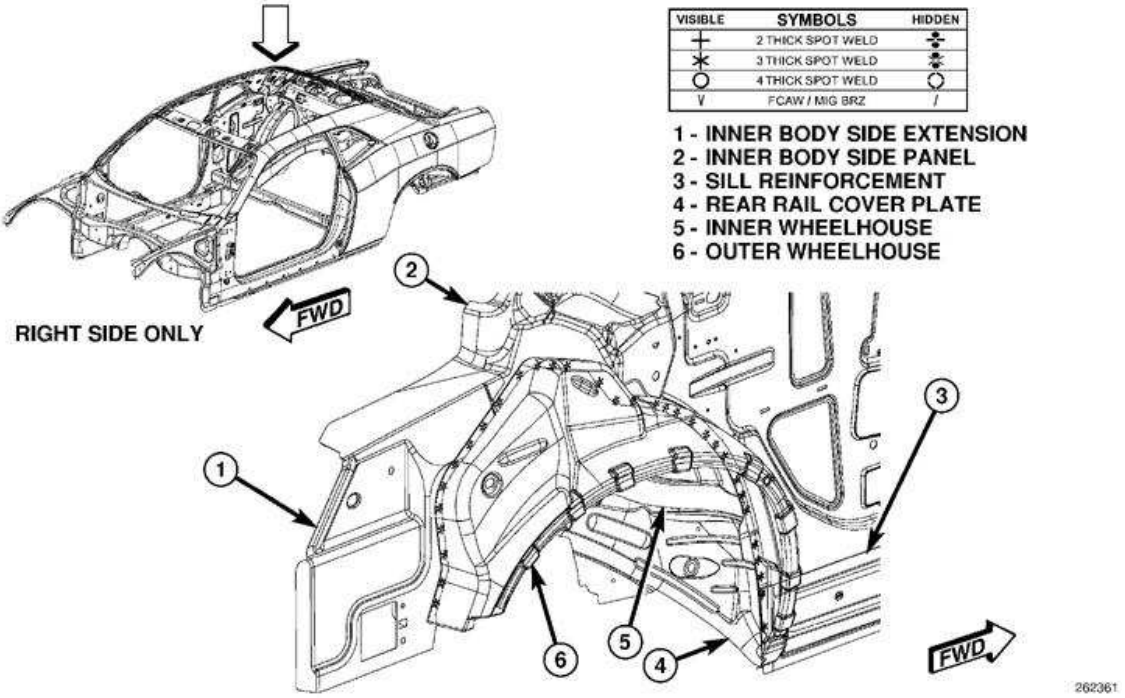

Fig. 199: Body In White Before Roof (12 of 13)
Courtesy of CHRYSLER LLC

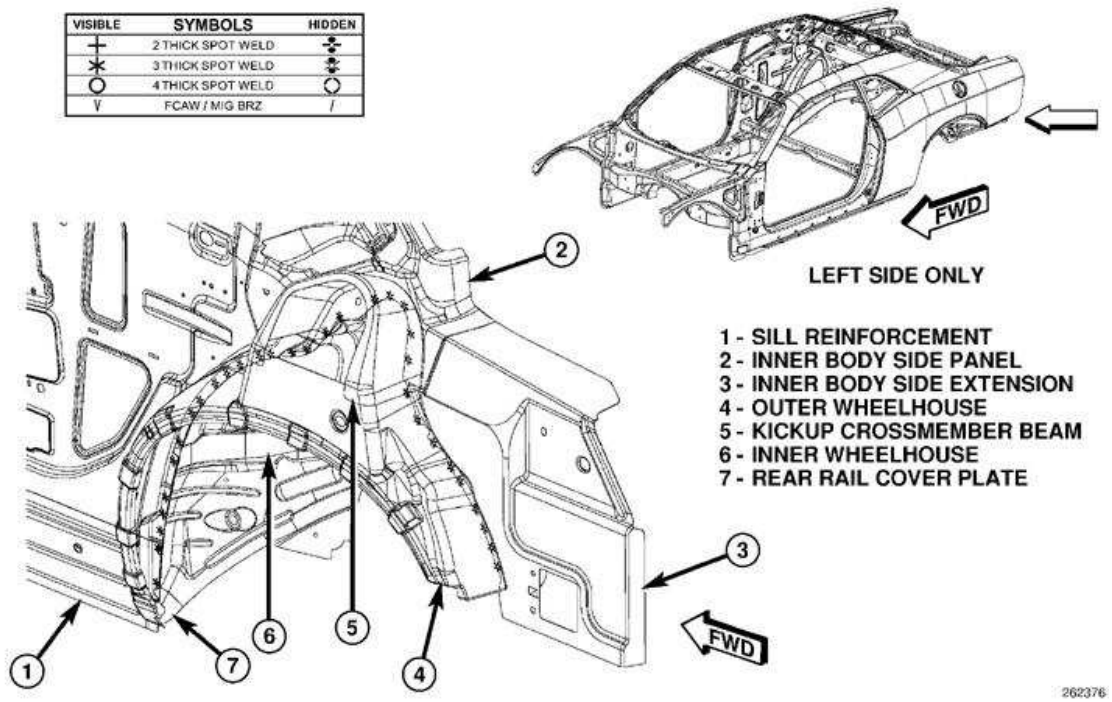

Fig. 200: Body In White Before Roof (13 of 13)
Courtesy of CHRYSLER LLC

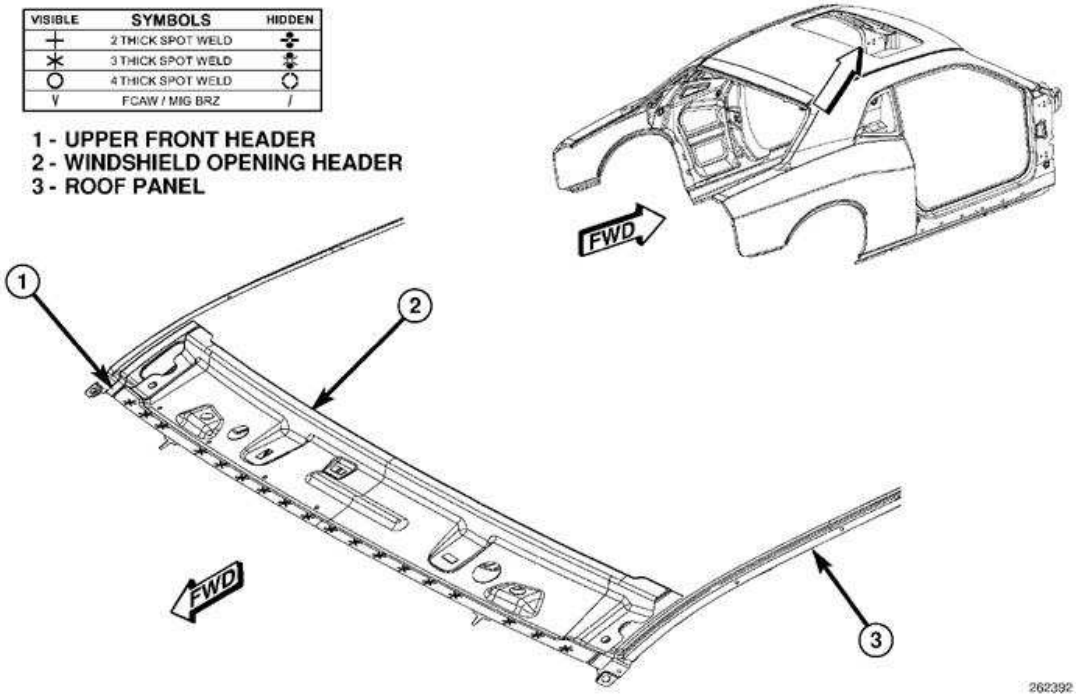

Fig. 201: Framed Body In White Without Closures With Sun Roof (1 of 3)
Courtesy of CHRYSLER LLC

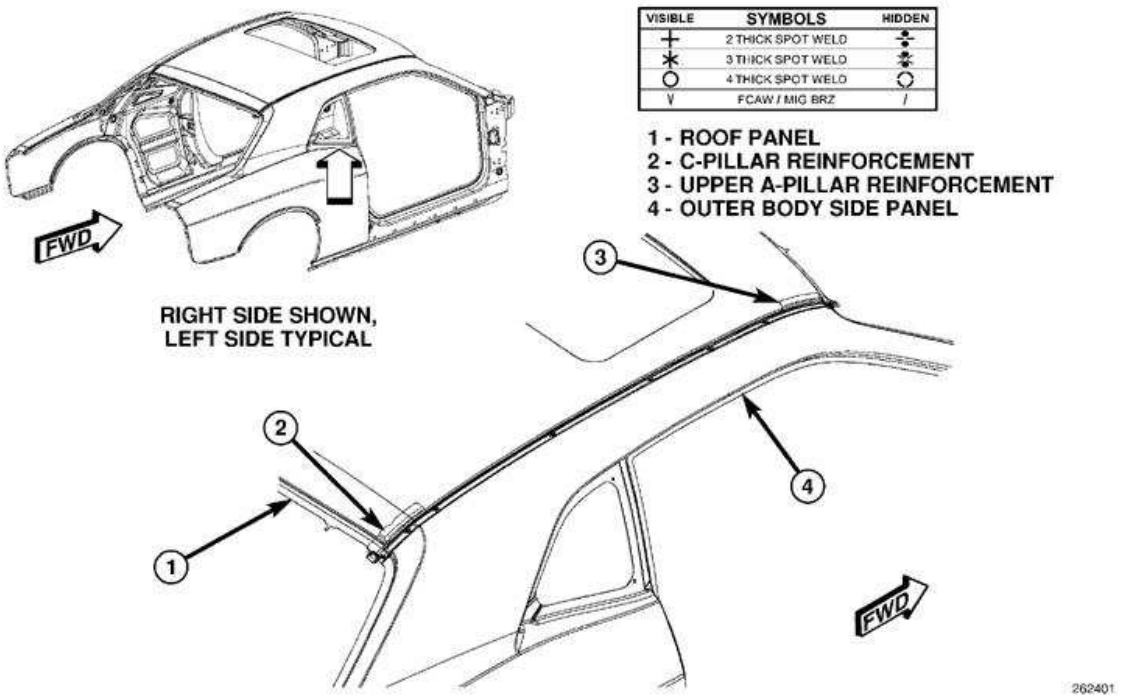

Fig. 202: Framed Body In White Without Closures With Sun Roof (2 of 3)
Courtesy of CHRYSLER LLC

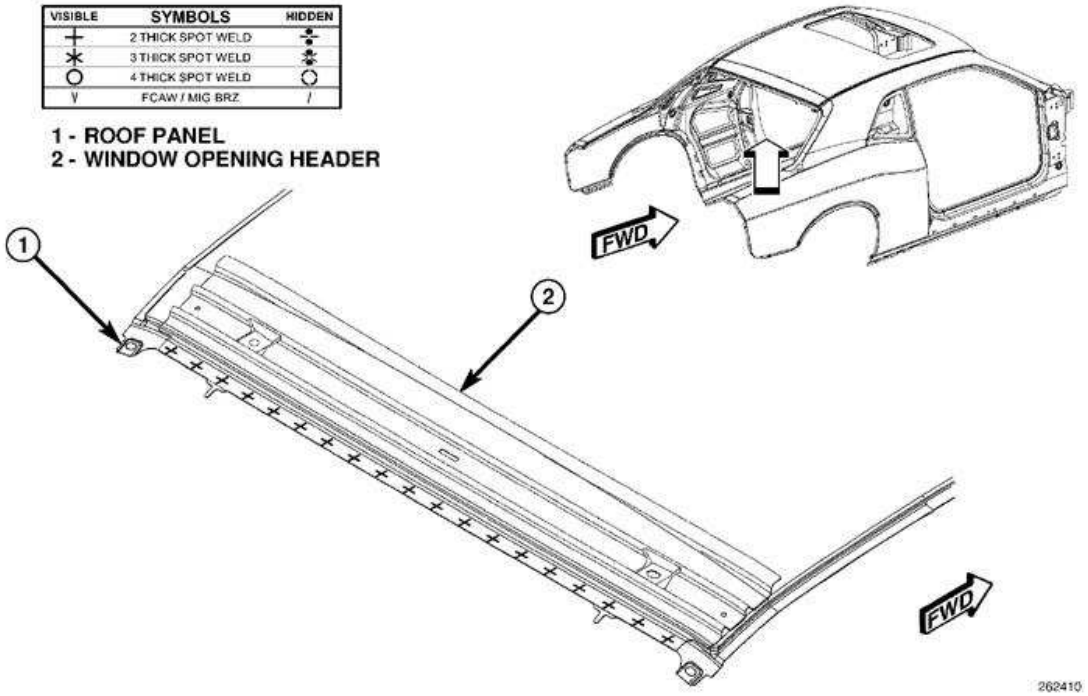

Fig. 203: Framed Body In White Without Closures With Sun Roof (3 of 3)
Courtesy of CHRYSLER LLC

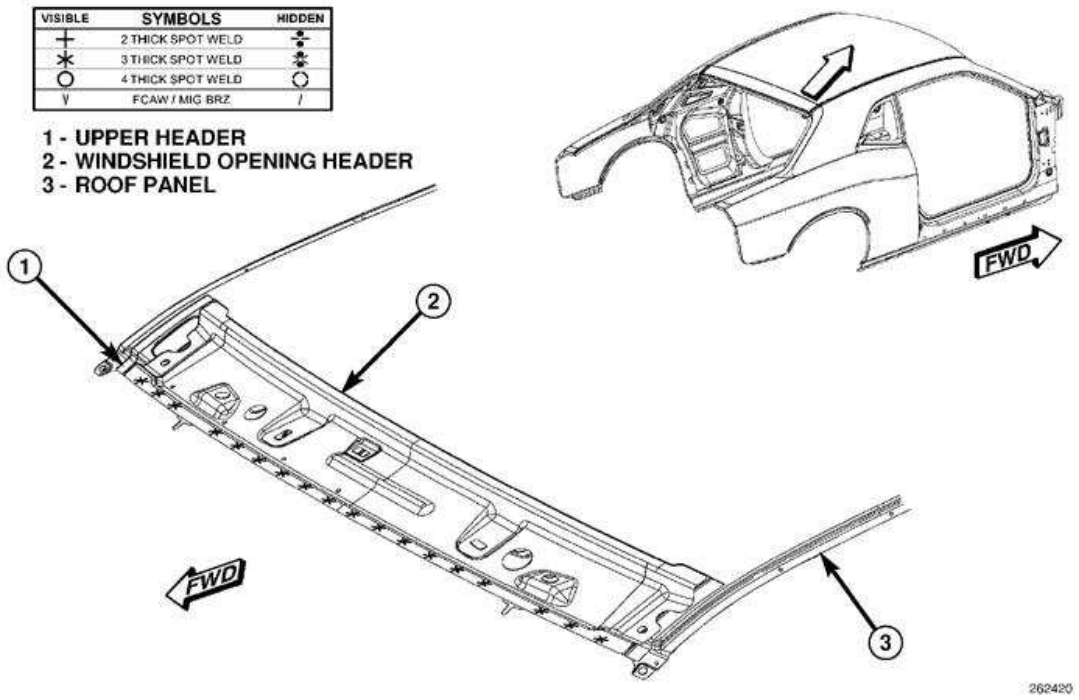

Fig. 204: Framed Body In White Without Closures Without Sun Roof (1 of 3)
Courtesy of CHRYSLER LLC

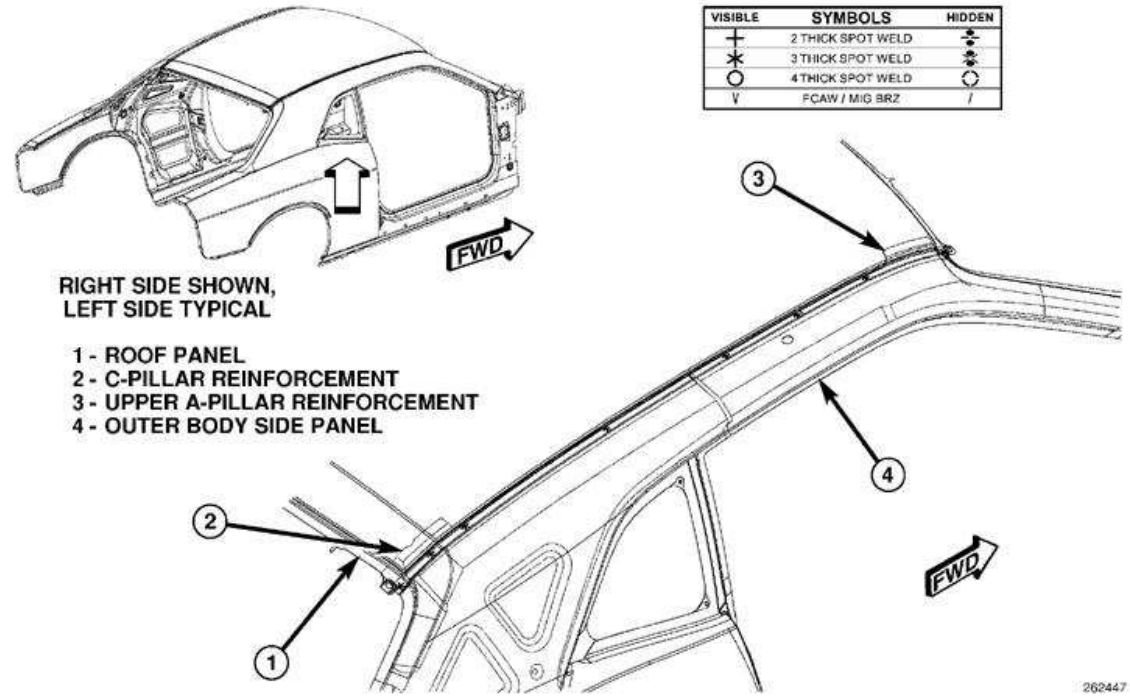

Fig. 205: Framed Body In White Without Closures Without Sun Roof (2 of 3)
Courtesy of CHRYSLER LLC

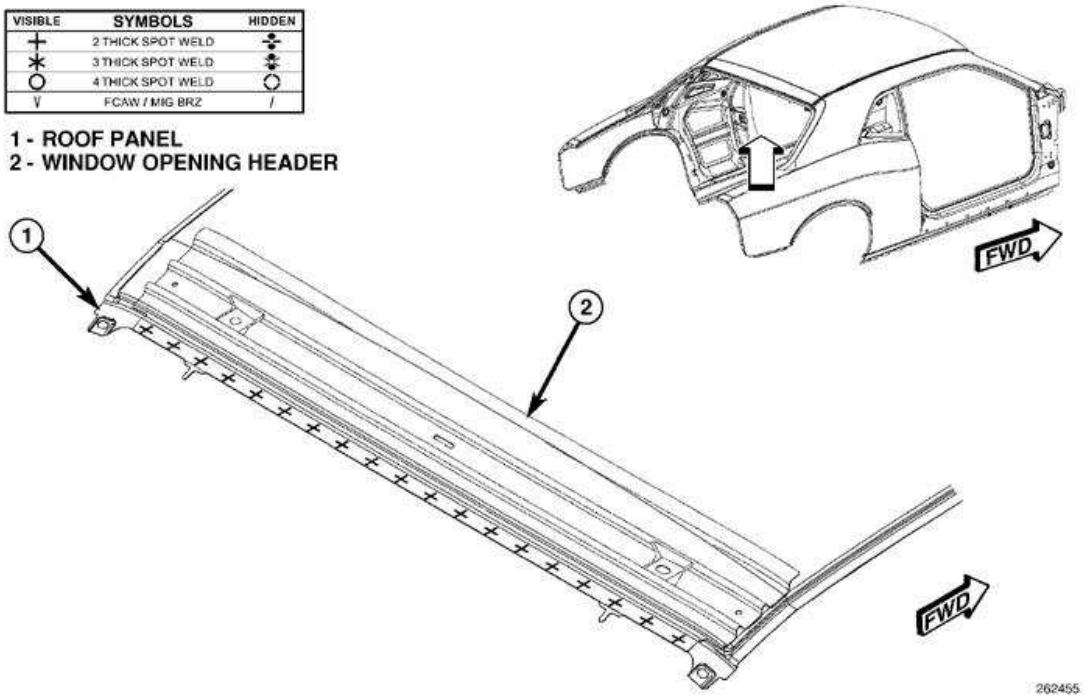

Fig. 206: Framed Body In White Without Closures Without Sun Roof (3 of 3)
Courtesy of CHRYSLER LLC

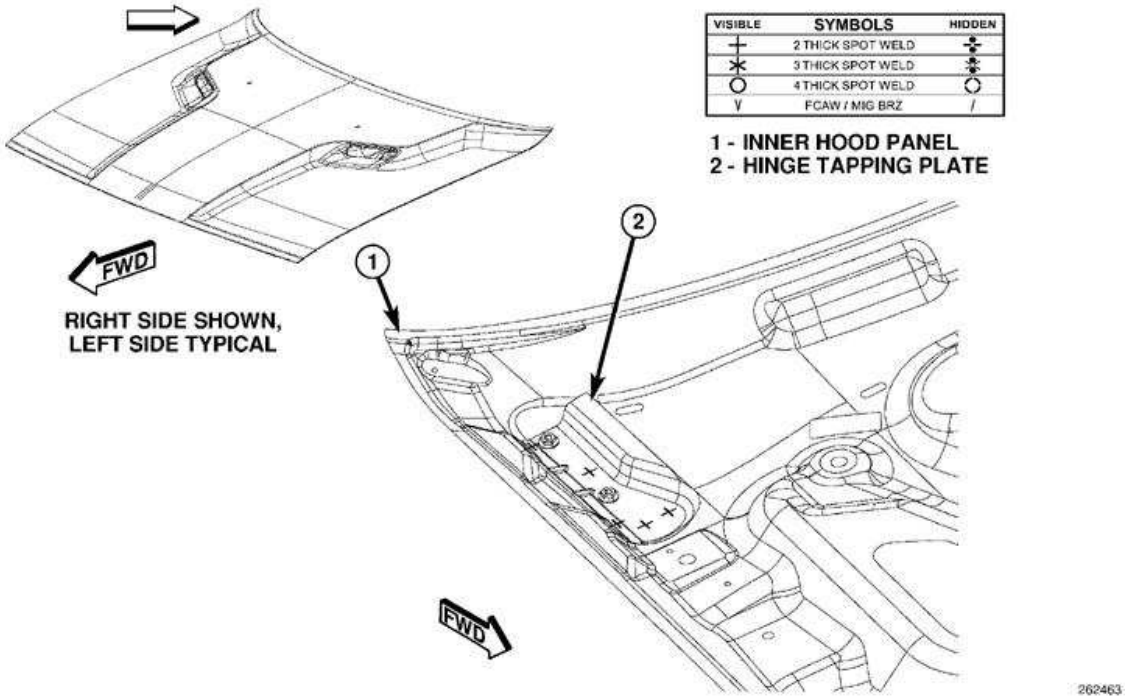

Fig. 207: Hood (1 of 3)
Courtesy of CHRYSLER LLC

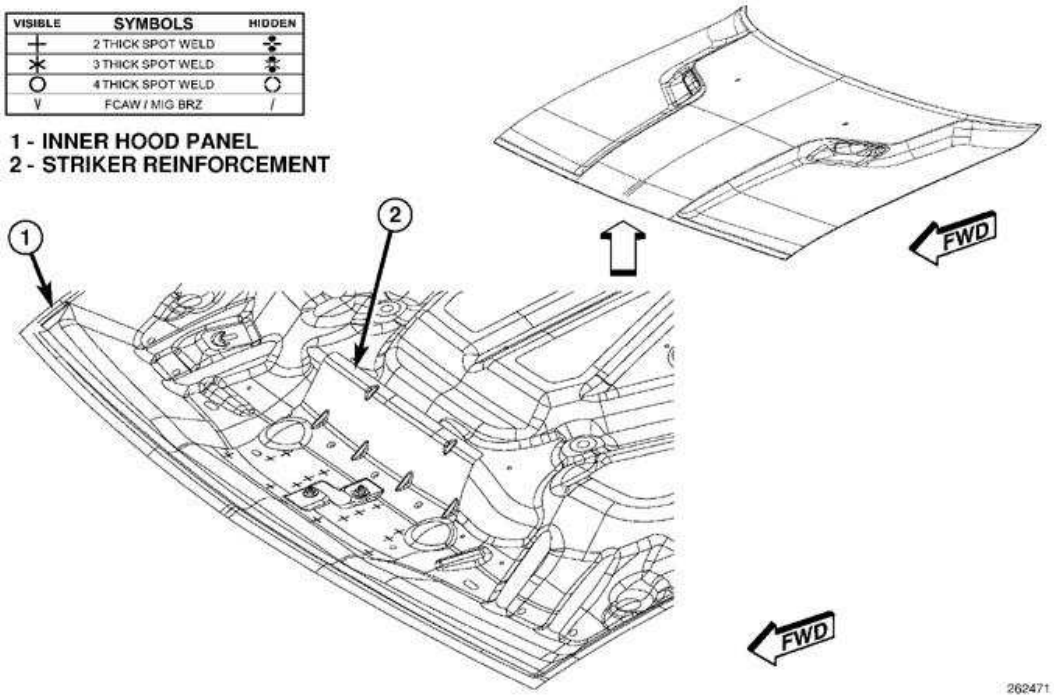

Fig. 208: Hood (2 of 3)
Courtesy of CHRYSLER LLC

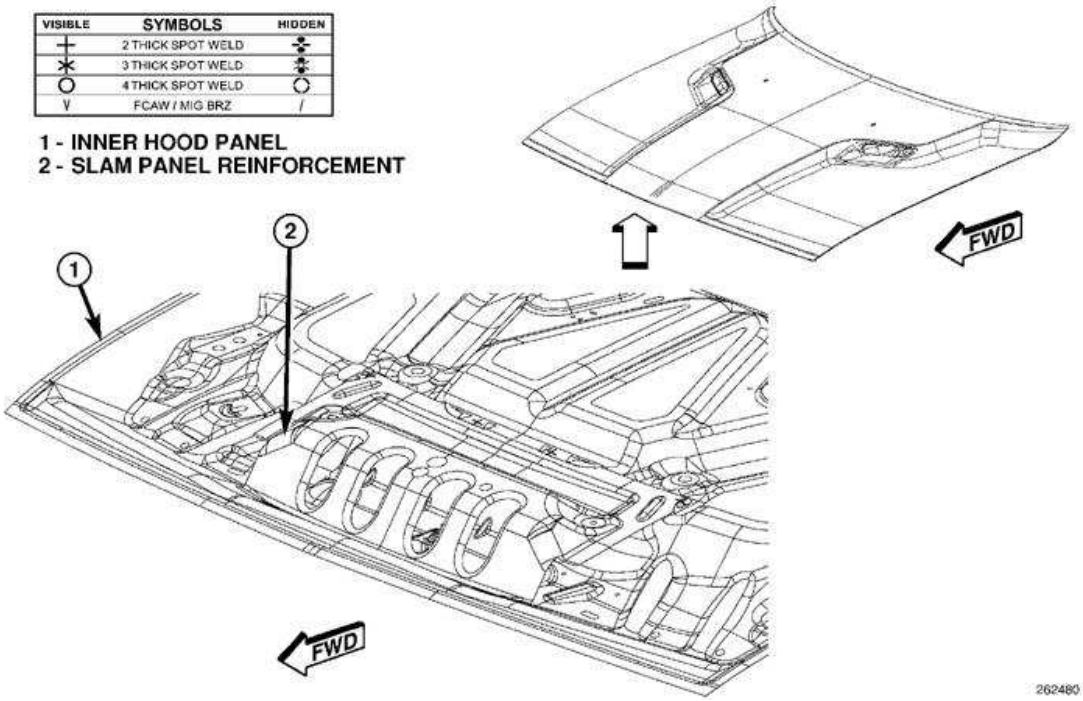

Fig. 209: Hood (3 of 3)
Courtesy of CHRYSLER LLC

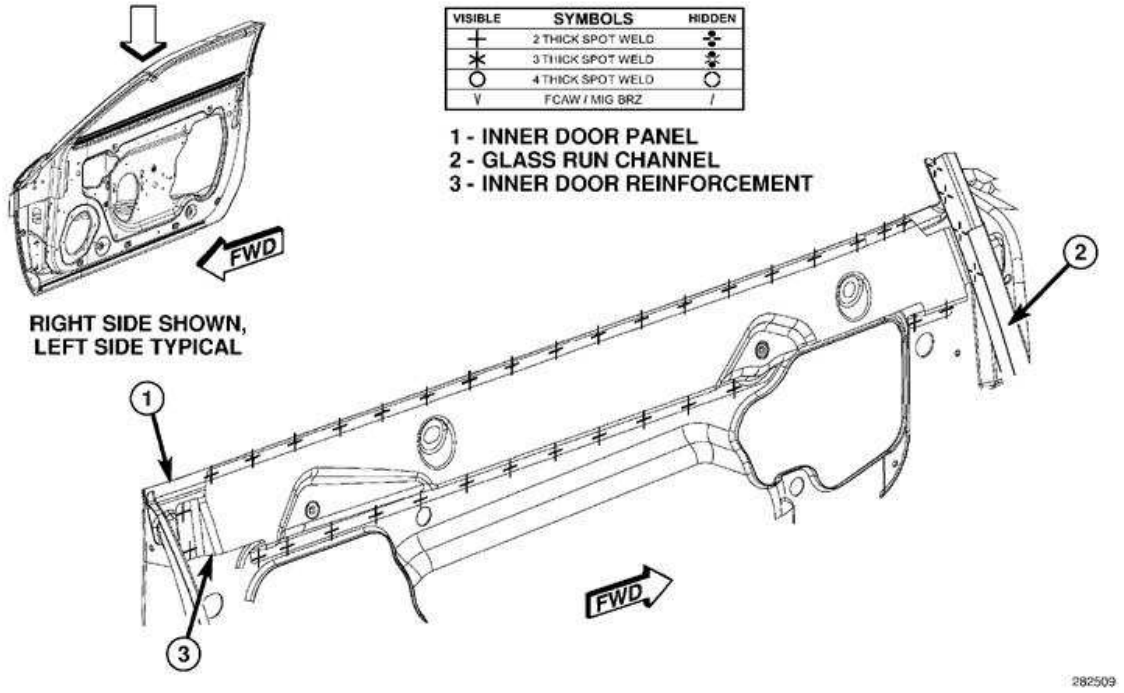

Fig. 210: Doors (1 of 3)
Courtesy of CHRYSLER LLC

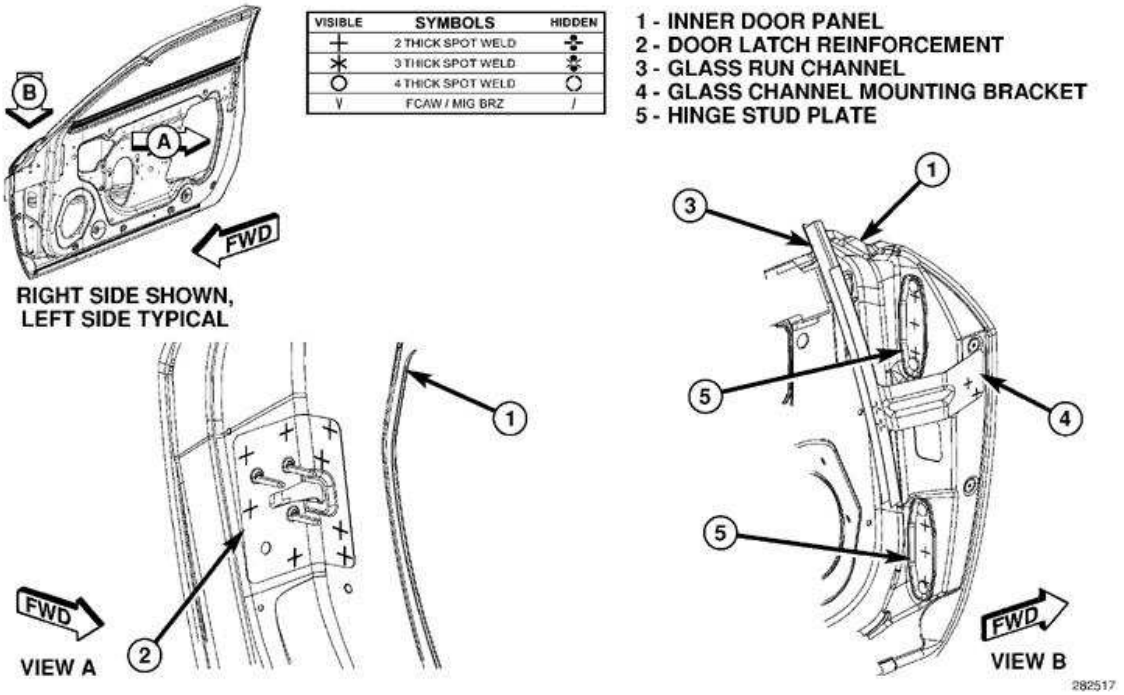

Fig. 211: Doors (2 of 3)
Courtesy of CHRYSLER LLC

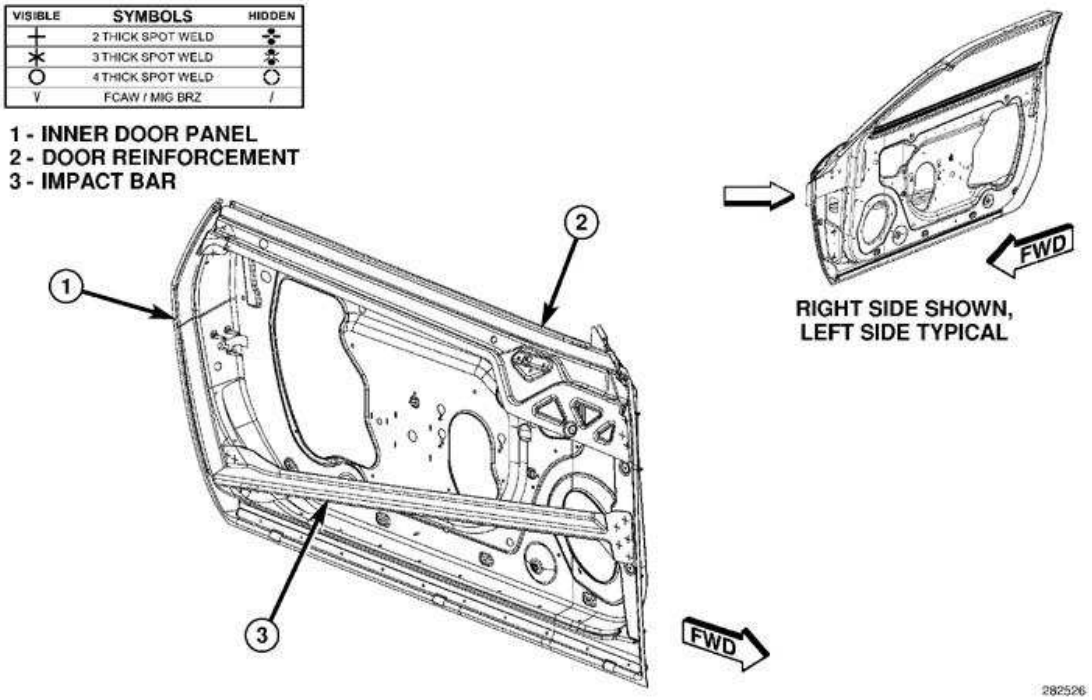

Fig. 212: Doors (3 of 3)
Courtesy of CHRYSLER LLC

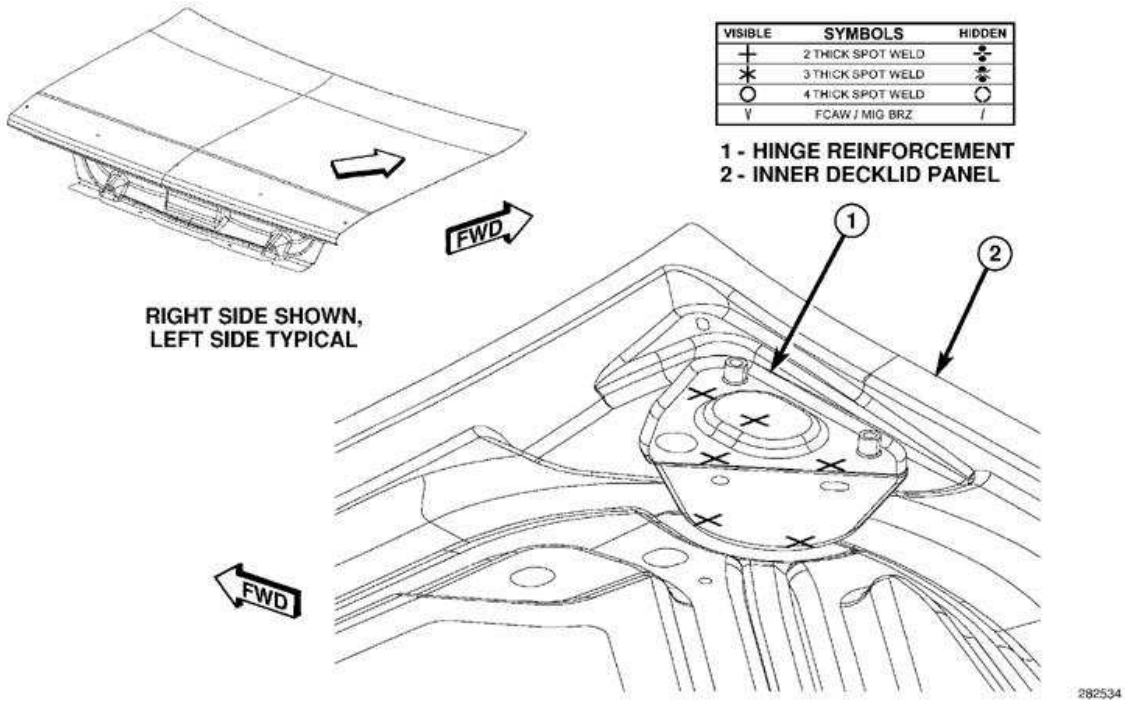

Fig. 213: Decklid (1 of 4)
Courtesy of CHRYSLER LLC

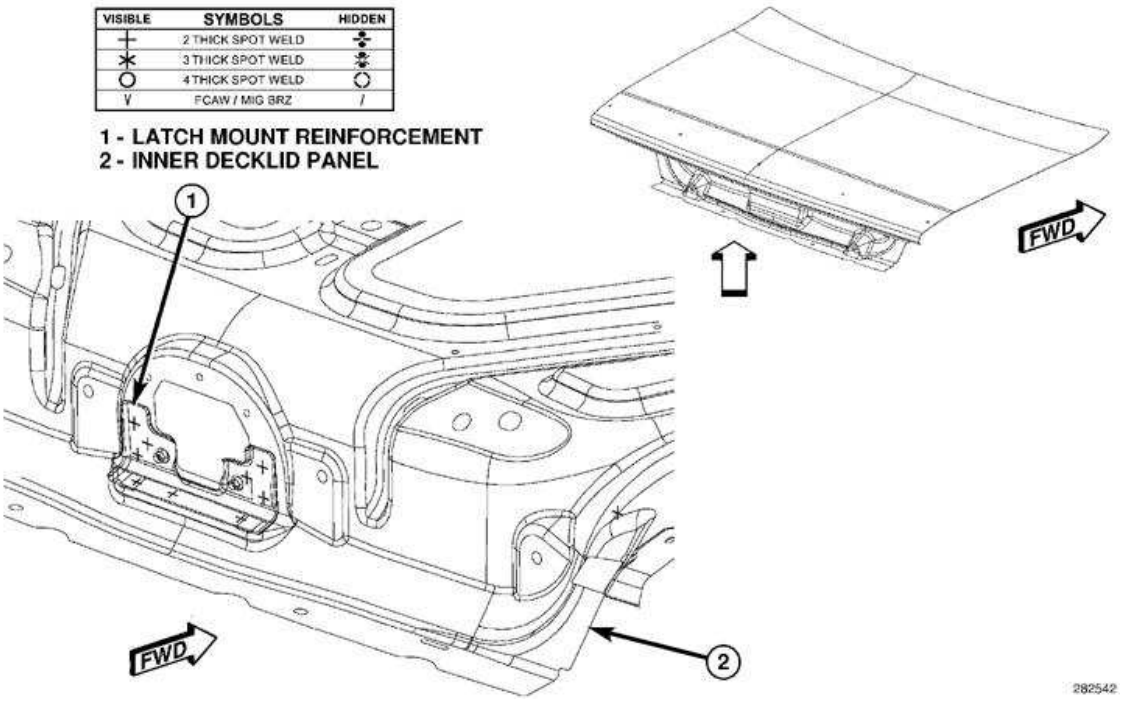

Fig. 214: Decklid (2 of 4)
Courtesy of CHRYSLER LLC

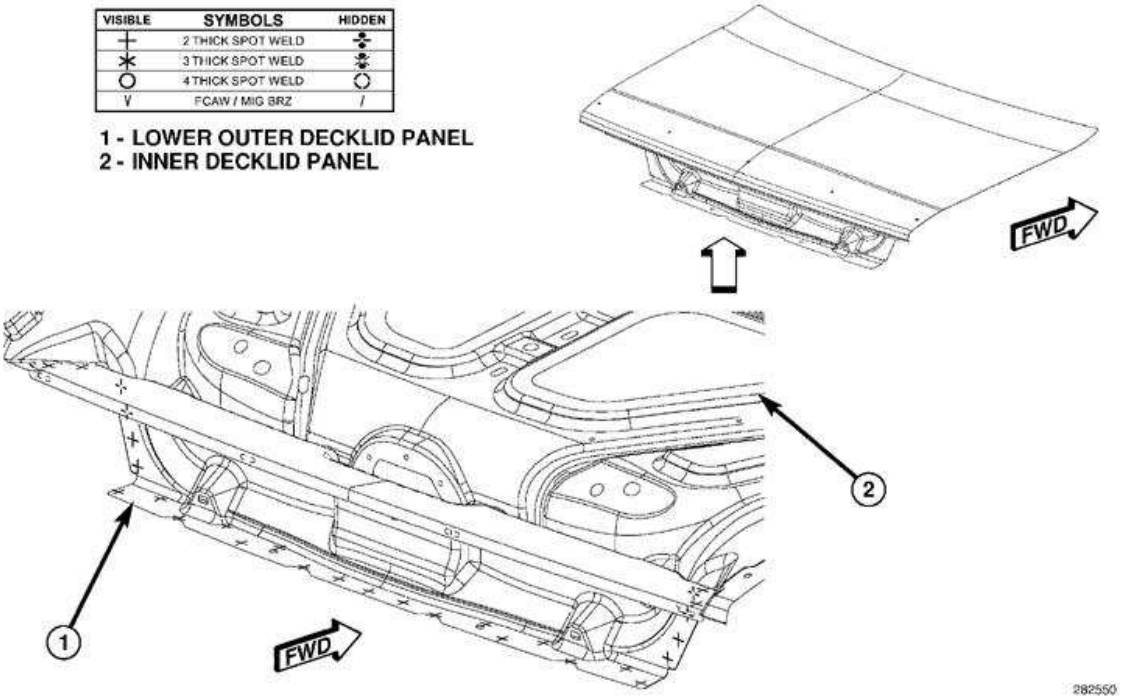

Fig. 215: Decklid (3 of 4)
Courtesy of CHRYSLER LLC

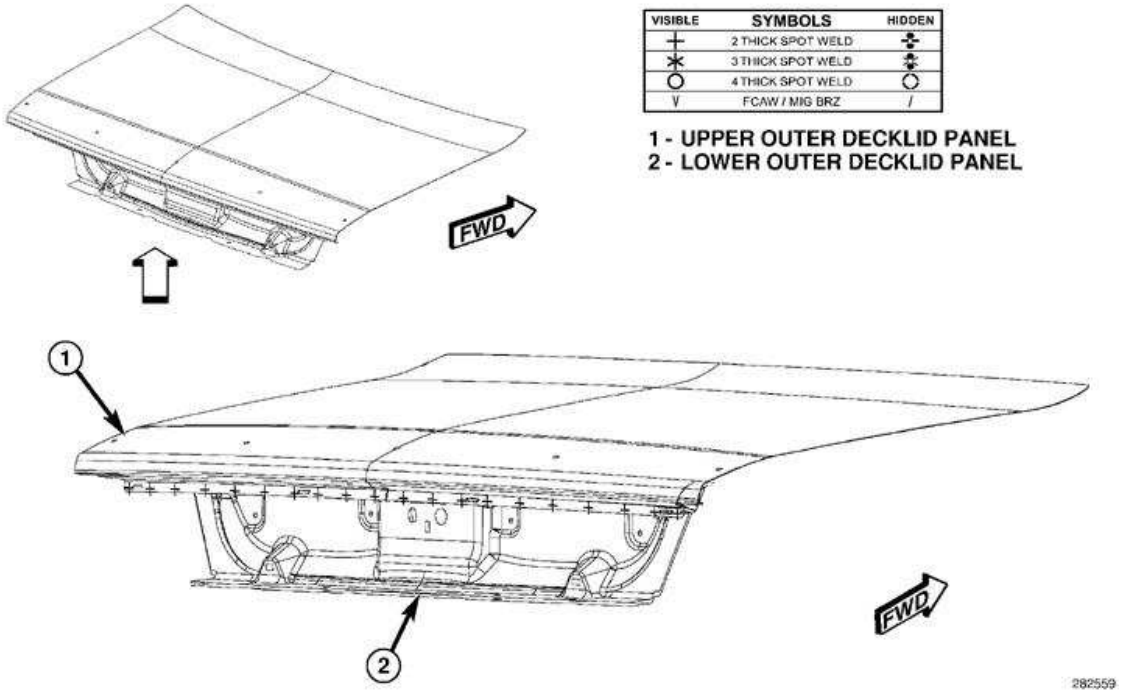

Fig. 216: Decklid (4 of 4)
Courtesy of CHRYSLER LLC

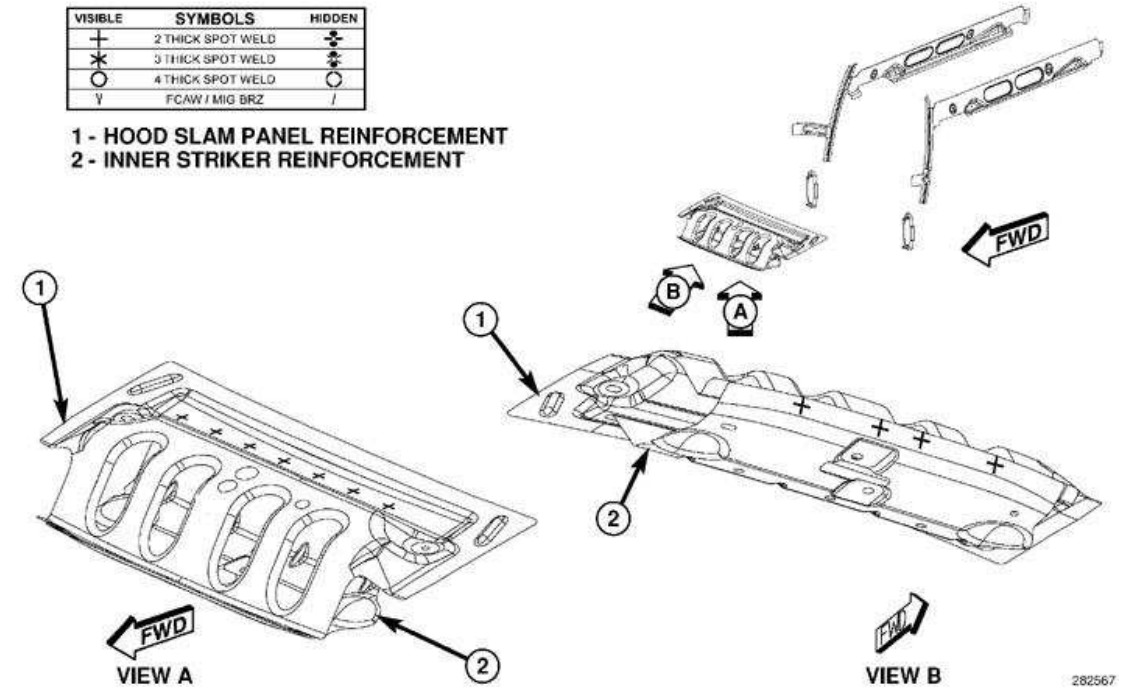

Fig. 217: Miscellaneous Closures (1 of 2)
Courtesy of CHRYSLER LLC

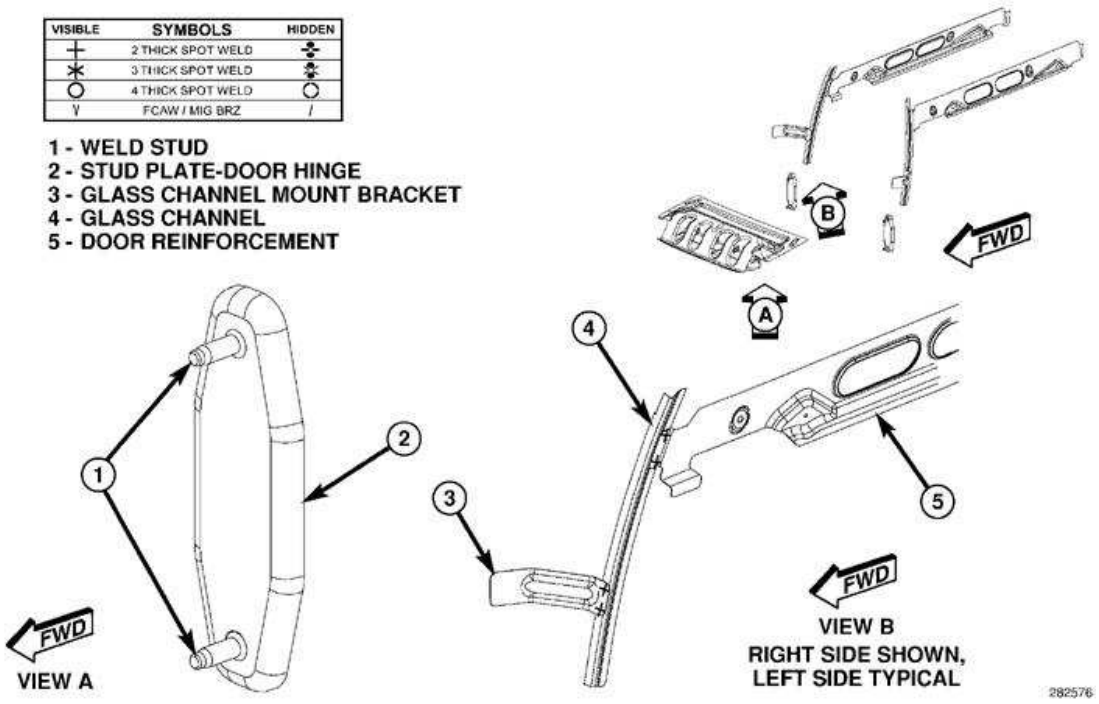

Fig. 218: Miscellaneous Closures (2 of 2)
Courtesy of CHRYSLER LLC

DECKLID/HATCH/LIFTGATE/TAILGATE

BUMPER

Removal

REMOVAL

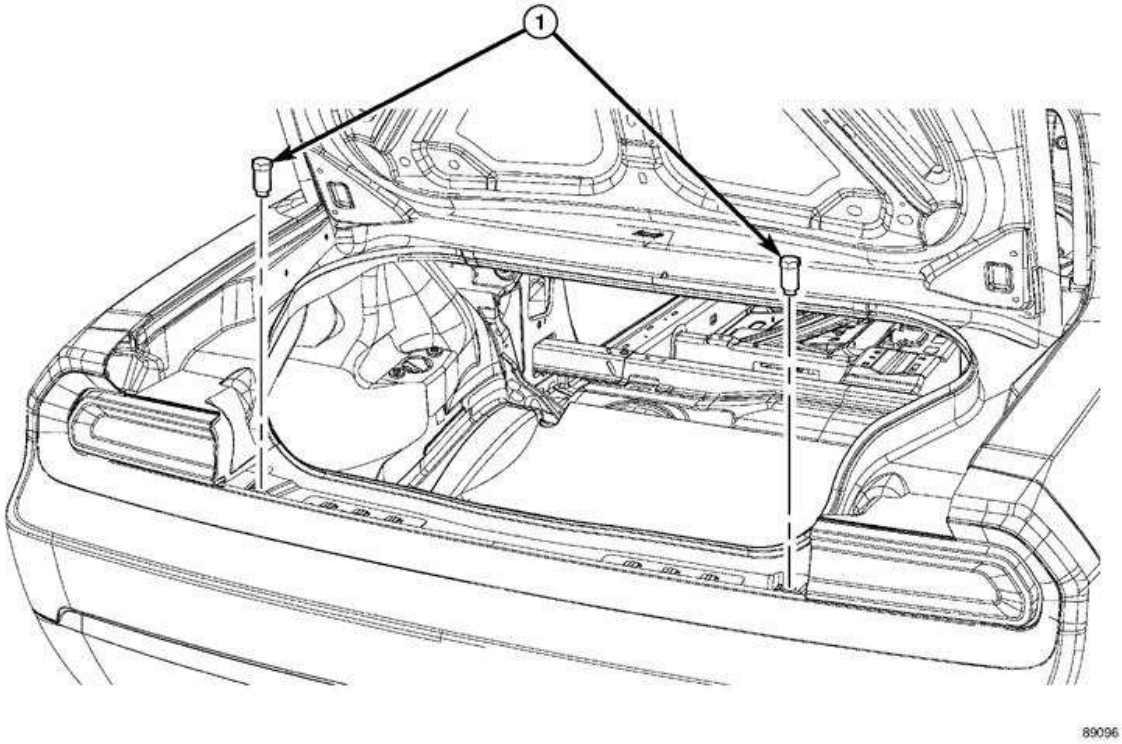

Fig. 219: Fascia Overslam Bumper
Courtesy of CHRYSLER LLC

1. Open the decklid.
2. Remove the overslam bumper (1) from the rear fascia flange that extends over the deck opening lower panel.
3. Remove the bumper from the vehicle.

Installation

INSTALLATION

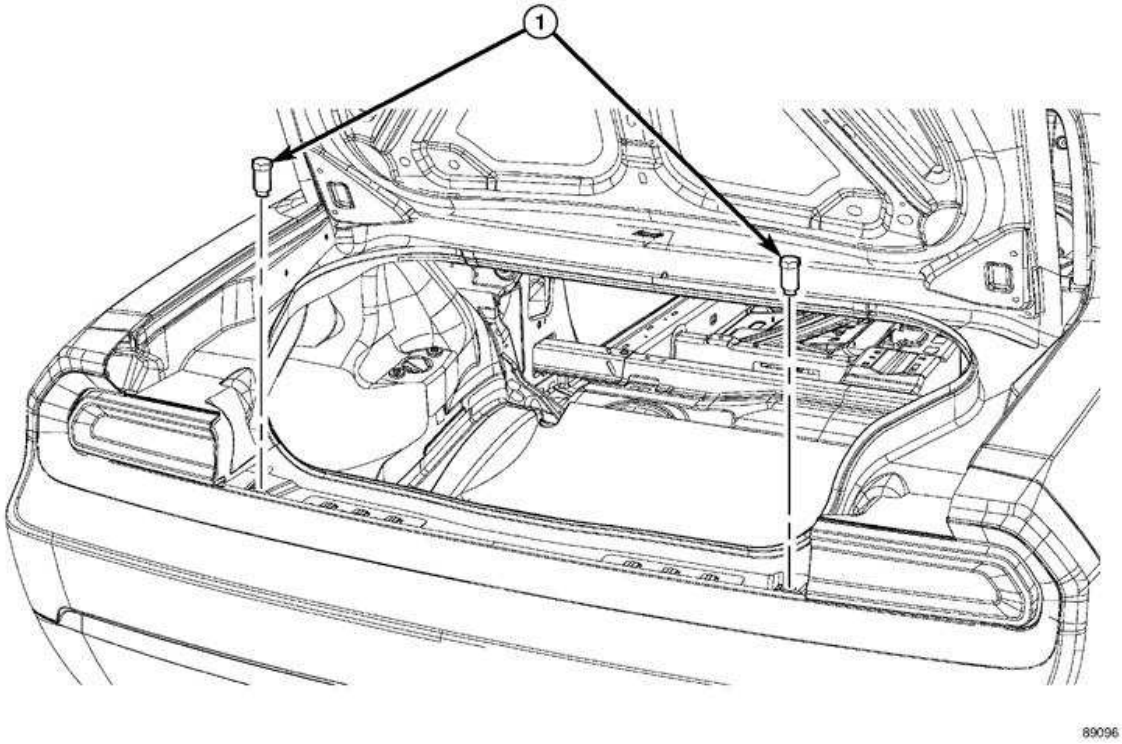

Fig. 220: Fascia Overslam Bumper
Courtesy of CHRYSLER LLC

1. Install the overslam bumper (1) to the rear fascia flange that extends over the deck opening lower panel.
2. Close the decklid.

DECKLID

Removal

REMOVAL

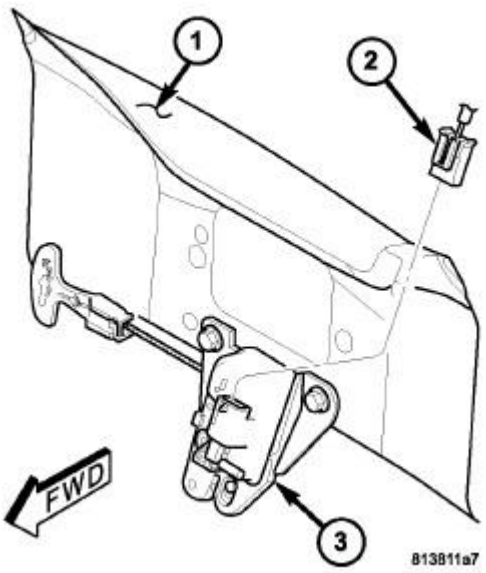

Fig. 221: Deck Lid
Courtesy of CHRYSLER LLC

1. Open the decklid.
2. Disconnect and isolate the battery negative cable.
3. Disconnect the connector (2) of the body wire harness take out for the decklid (1) from the latch connector receptacle (3).
4. Remove the wire harness from the decklid.

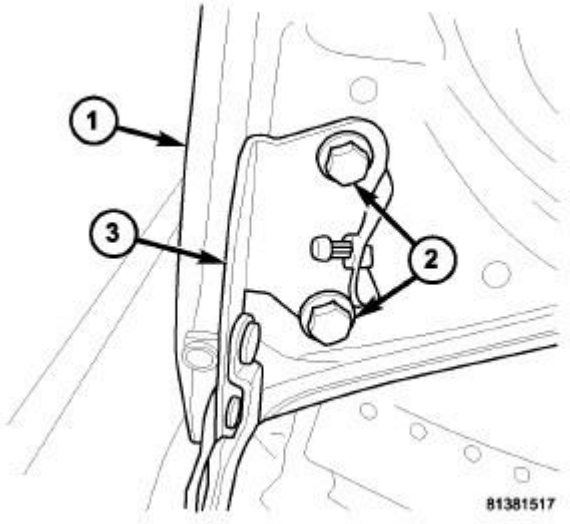

Fig. 222: Deck Lid

Courtesy of CHRYSLER LLC

5. Mark both upper hinge bracket (3) locations on the decklid inner panel (1) to aid in installation.
6. With the aid of an assistant, support the decklid while removing the two fasteners (2) that secure each upper hinge bracket to the decklid.
7. Remove the decklid from the vehicle.

Installation

INSTALLATION

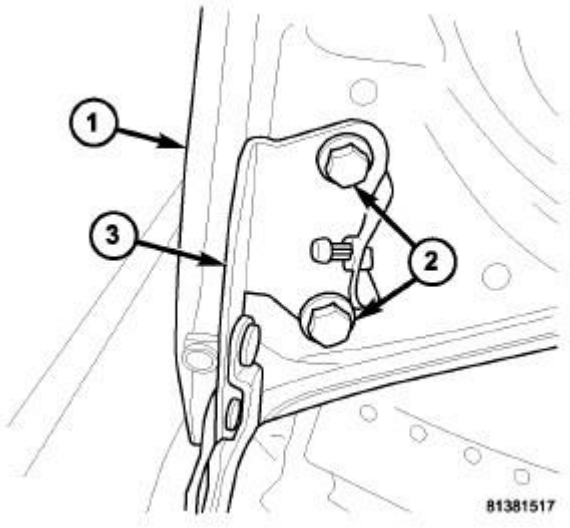

Fig. 223: Deck Lid
Courtesy of CHRYSLER LLC

1. With the aid of an assistant, support and position the decklid (1) to the two upper hinge brackets (3) on the vehicle.
2. Install and tighten the two screws (2) that secure each upper hinge bracket to the decklid. Tighten the screws to 28 N.m (21 ft. lbs.).
3. Install the wire harness to the decklid.

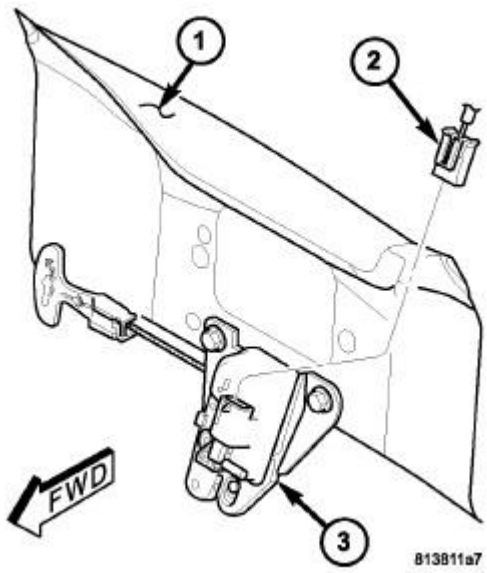

Fig. 224: Deck Lid
Courtesy of CHRYSLER LLC

4. Connect the connector (2) of the body wire harness (1) to the latch connector receptacle (3).
5. Connect the battery negative cable.
6. Close the decklid.
7. Adjust the decklid hinge positions and upper overslam bumpers as necessary to achieve proper spacing and operation.

HINGE

Removal

REMOVAL

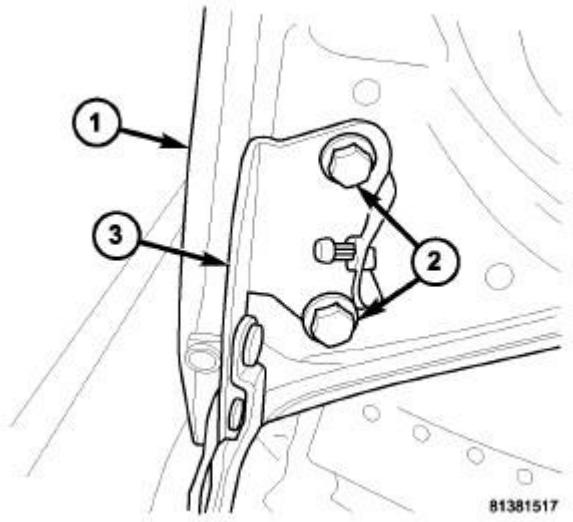

Fig. 225: Deck Lid
Courtesy of CHRYSLER LLC

1. Open and support the deck lid (1) with a suitable prop or block.
2. Remove the support cylinder from the deck lid hinge. See **Body/Decklid/Hatch/Liftgate/Tailgate/PROP, Gas - Removal**.
3. Mark the upper hinge bracket (3) location on the deck lid inner panel to aid reinstallation.
4. Remove the fasteners (2) that secure the hinge to the deck lid.

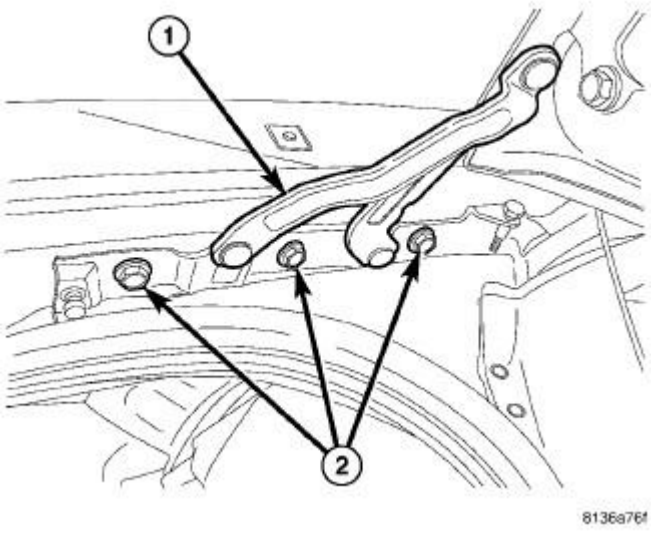

Fig. 226: Hinge
Courtesy of CHRYSLER LLC

5. Mark the lower hinge bracket (1) location on the deck lid opening drain trough to aid

reinstallation.

6. Remove the fasteners (2) that secure the hinge to the drain trough.
7. Remove the deck lid hinge from the vehicle.

Installation

INSTALLATION

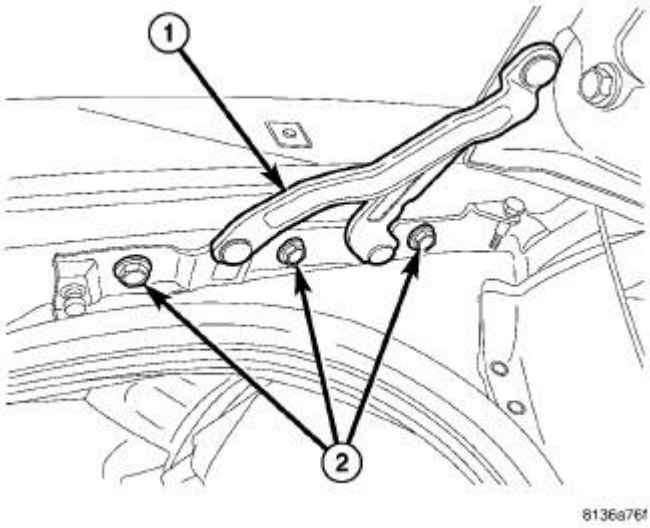

Fig. 227: Hinge
Courtesy of CHRYSLER LLC

1. Position the lower bracket of the decklid hinge (1) to the drain trough on the vehicle.
2. Install and tighten the fasteners (2) that secure the hinge to the drain trough. Tighten to 28 N.m (21 ft. lbs.).

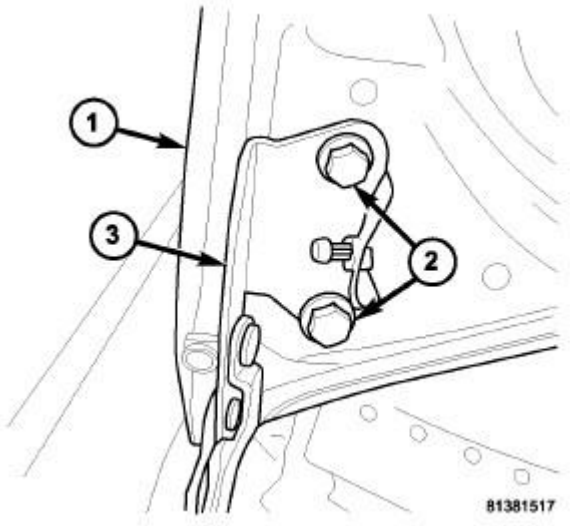

Fig. 228: Deck Lid
Courtesy of CHRYSLER LLC

3. Position the decklid (1) to the upper hinge bracket (3) on the vehicle.
4. Install and tighten the fasteners (2) that secure the hinge to the decklid. Tighten to 28 N.m (21 ft. lbs.).
5. Install the support cylinder onto the decklid hinge. See **Body/Decklid/Hatch/Liftgate/Tailgate/PROP, Gas - Installation**.
6. Remove the fixture being used to support the decklid for service and close the decklid.
7. Adjust the decklid hinge position as necessary to achieve proper spacing and operation.

LATCH

Removal

REMOVAL

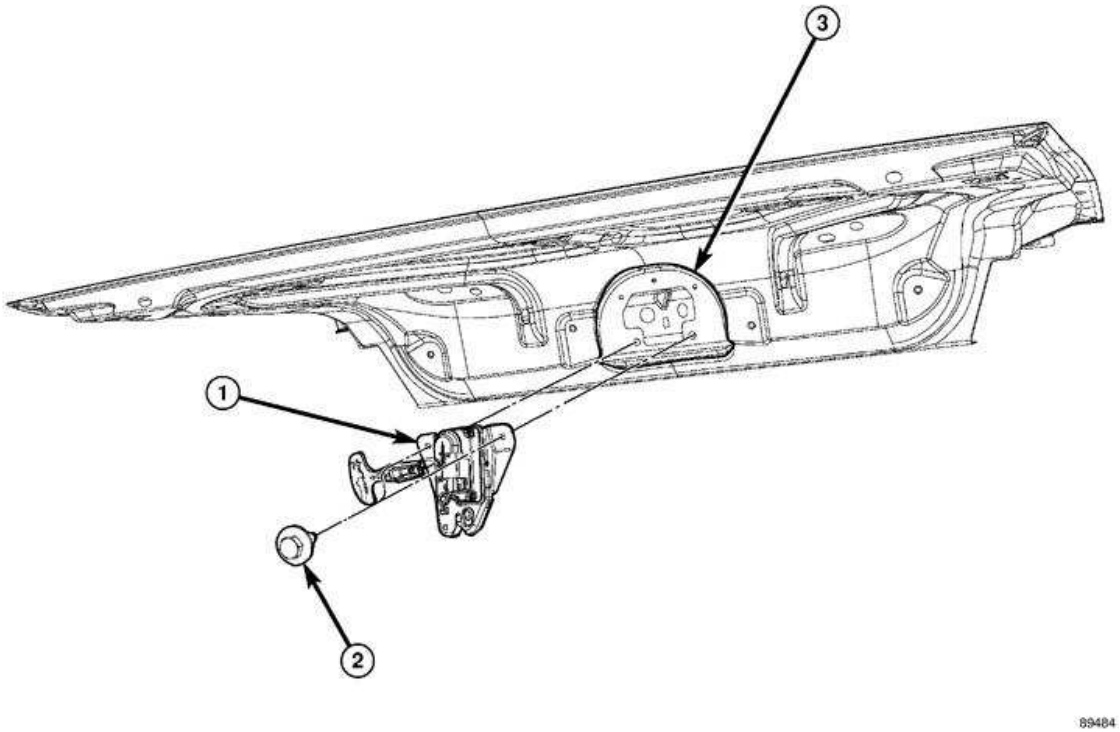

Fig. 229: Decklid Latch
Courtesy of CHRYSLER LLC

1. Open the decklid.
2. Disconnect and isolate the battery negative cable.
3. Disconnect the connector of the body wire harness take out for the decklid from the latch connector.
4. Remove the fasteners (2) that secure the latch (1) to the inside of the decklid (3).
5. Remove the latch from the inside of the decklid.

Installation

INSTALLATION

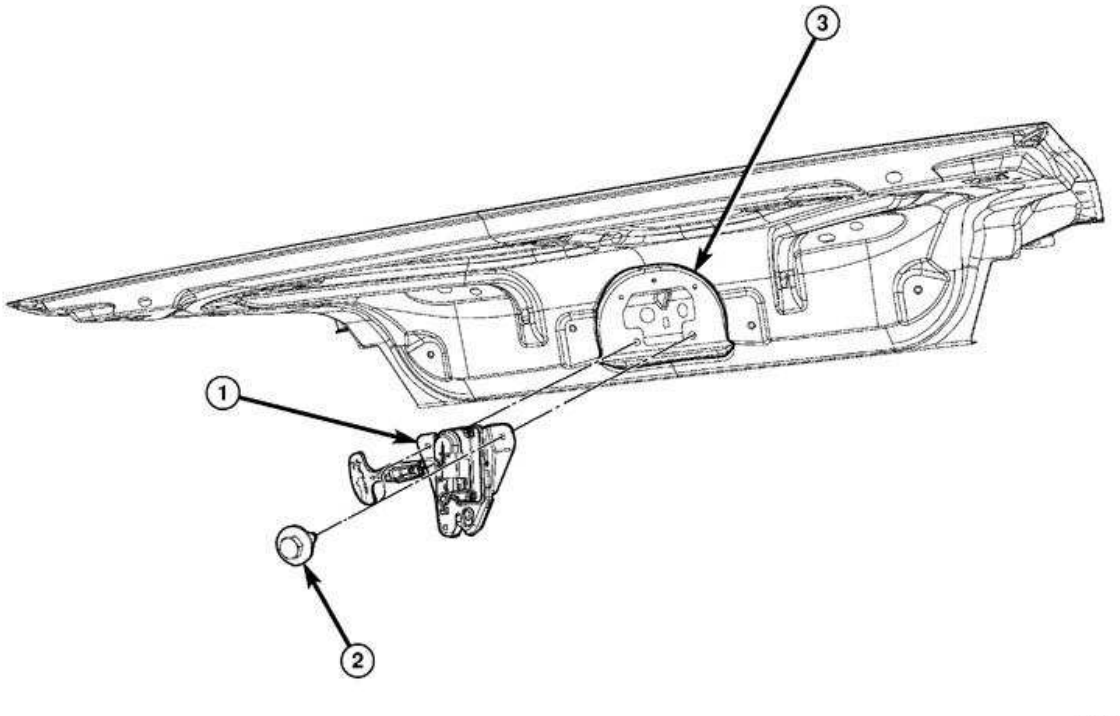

Fig. 230: Decklid Latch
Courtesy of CHRYSLER LLC

1. Position the latch (1) to the inside of the decklid (3).
2. Install the fasteners (2) that secure the latch to the inside of the decklid. Tighten to 8 N.m (71 in. lbs.).
3. Connect the connector of the body wire harness take out for the decklid to the latch connector.
4. Connect the battery negative cable. Follow the battery reconnection procedure. Refer to **Electrical - Engine Systems/Battery System - Standard Procedure**
5. Close the decklid.

PROP, GAS

Removal

REMOVAL

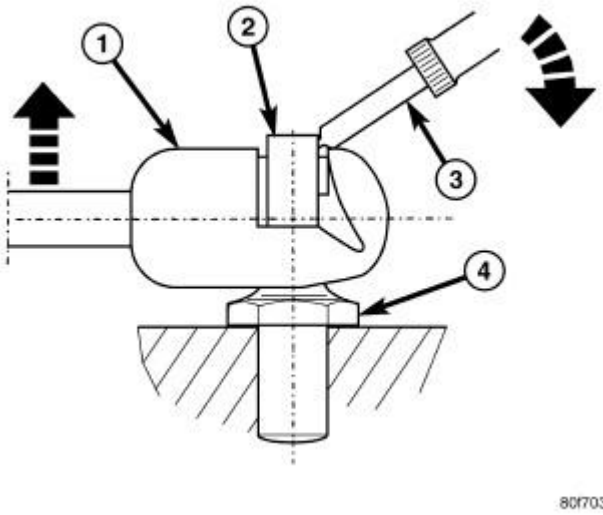

Fig. 231: Decklid Gas Prop (Support Cylinder)
Courtesy of CHRYSLER LLC

1. Open and support the decklid with a suitable prop or block.

> **WARNING: During service lift the ball socket end retaining clip only far enough to release the socket from the ball stud. Excessive prying or removal of the clip may result in improper clip spring tension. Improper clip tension may result in the support cylinder separating from the ball stud causing sudden, unexpected loss of decklid support. Failure to do so may result in serious or fatal injury.**

2. Insert a small flat-bladed tool (3) into the notch on the outer face of one ball socket end (1) of the support cylinder and carefully pry the retaining clip (2) outward while pulling the ball socket away from the ball stud (4) on the decklid hinge.
3. Release the retaining clip to its installed position.
4. Repeat 2 and 3 for the opposite end of the support cylinder.

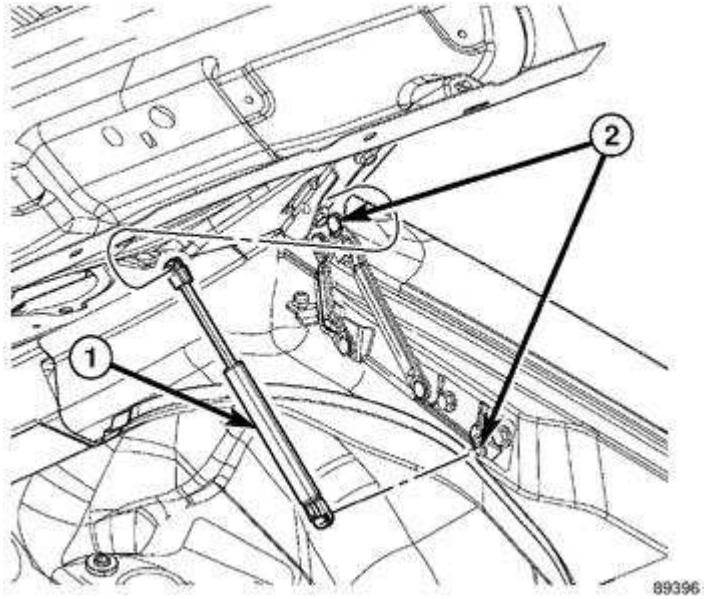

Fig. 232: Removing/Installing Decklid Support Cylinder
Courtesy of CHRYSLER LLC

5. Remove the support cylinder (1) from the decklid hinge (2).

Installation

INSTALLATION

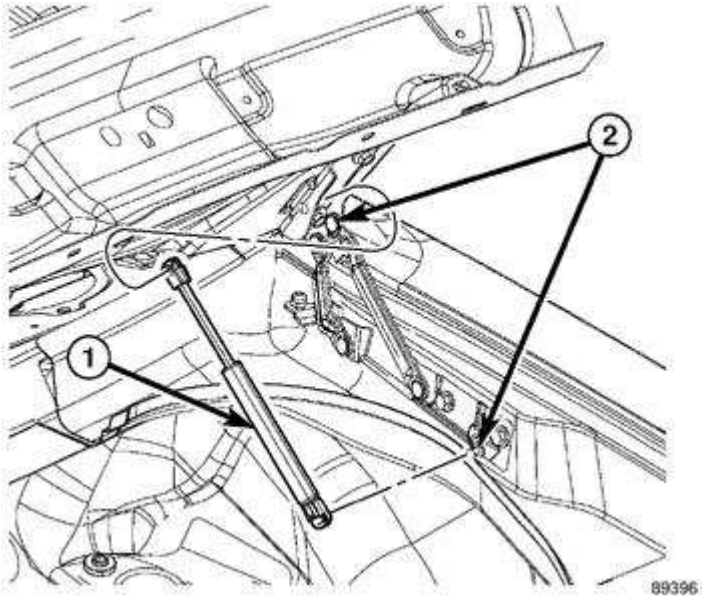

Fig. 233: Removing/Installing Decklid Support Cylinder
Courtesy of CHRYSLER LLC

1. Position the ball socket on the cylinder end of the support cylinder (1) to the ball stud on the upper bracket of the decklid hinge (2).

2. Using hand pressure, press the ball socket onto the ball stud until the retainer clip snaps into place.
3. Position the ball socket on the rod end of the support cylinder to the ball stud on the lower bracket of the decklid hinge.
4. Using hand pressure, press the ball socket onto the ball stud until the retainer clip snaps into place.
5. Inspect to be certain that the retaining clip on each of the support cylinder ball socket ends is fully seated.
6. Remove the support prop or block and close the decklid.

STRIKER, LATCH

Removal

REMOVAL

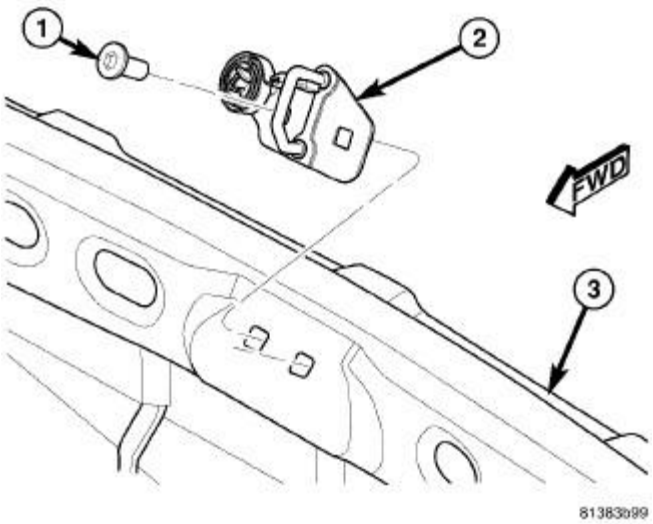

Fig. 234: Latch Striker
Courtesy of CHRYSLER LLC

1. Open the decklid.
2. Remove the trunk rear trim panel. See **Body/Interior/PANEL, Trunk Trim - Removal**
3. Mark the decklid latch striker (2) location on the inside of the deck opening lower panel to aid reinstallation.
4. Remove the fasteners (1) that secure the latch striker to the inside of the deck opening lower panel (3).
5. Remove the latch striker from the vehicle.

Installation

INSTALLATION

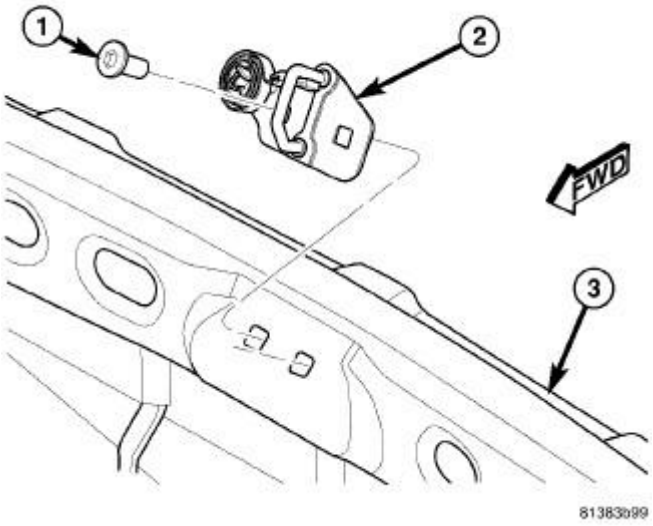

Fig. 235: Latch Striker
Courtesy of CHRYSLER LLC

1. Position the decklid latch striker (2) to the inside of the deck opening lower panel (3).
2. Install the fasteners (1) that secure the latch striker to the deck opening lower panel. Tighten to 28 N.m (21 ft. lbs.).
3. Adjust the latch striker position as necessary to achieve proper deck lid latch operation.
4. Install the trunk rear trim panel. See **Body/Interior/PANEL, Trunk Trim - Installation**
5. Close the decklid.

DOOR - FRONT

DESCRIPTION

DESCRIPTION

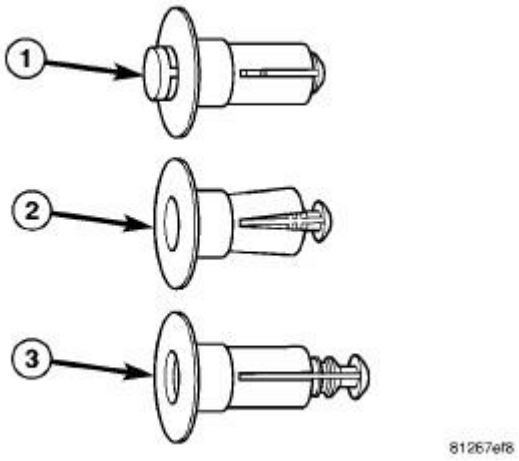

Fig. 236: Push Pin Fastener
Courtesy of CHRYSLER LLC

1 - OPEN POSITION 2 - LOCK POSITION 3 - RELEASE POSITION

1. The push pin fastener is in the open position (1) when the center pin is pull outward approximately 2 mm. Then the push pin fastener is ready to be used.
2. To install push pin place it into position, and push the center pin in flush with the head of the push pin to lock it into position (2).
3. To remove the push pin fastener, push the center pin inward approximately 2 mm to release push pin fastener (3).

CYLINDER, DOOR LOCK

Removal

REMOVAL

1. Remove the handle from the outside of the driver side front door. See **Body/Door - Front/HANDLE - Removal**.
2. Using hand pressure, push on the face of the lock cylinder until it pops out of the cavity in the back of the door handle.

Installation

INSTALLATION

1. Insert the lock cylinder into the cavity on the back of the door handle.
2. Align the lock cylinder in the handle by engaging the tab on the outer circumference of the cylinder in the slot of the tab on the wall of the handle cavity.

3. Install the handle onto the outside of the driver side front door. See **Body/Door - Front/HANDLE - Installation**.

DOOR

Removal

REMOVAL

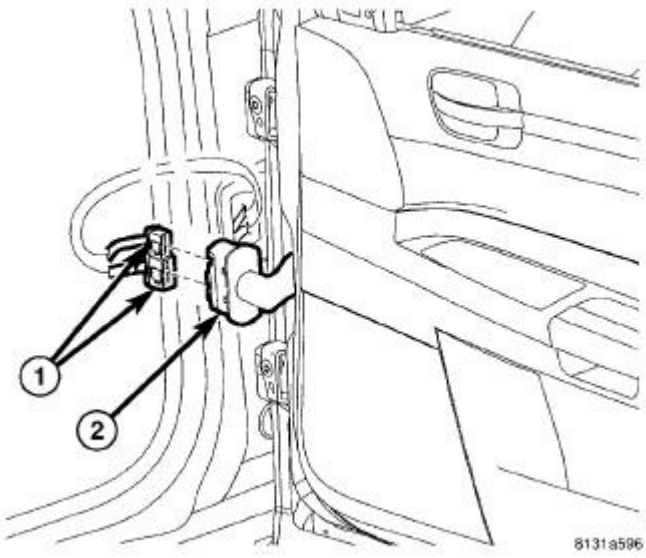

Fig. 237: Door Wire Harness Boot & Connector
Courtesy of CHRYSLER LLC

1. Disconnect and isolate the battery negative cable.
2. Open the front door.
3. Disengage the front door wire harness boot and connector (1) from the outside of the lower A-pillar.
4. Carefully pull the door wire harness boot and connector out from the A-pillar far enough to access and disconnect the body wire harness connector(s) (1).
5. Open the door to the full open position.
6. Support the door with a suitable lifting device.

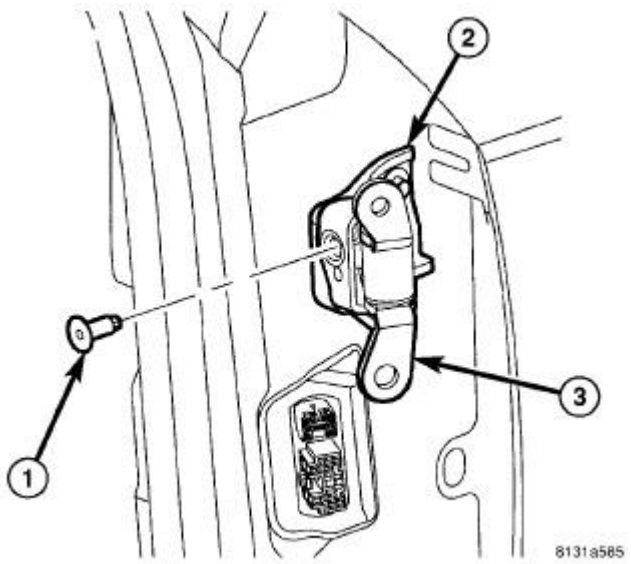

Fig. 238: Door Hinge Bracket
Courtesy of CHRYSLER LLC

7. Remove the screw (1) from both the upper and lower front door hinges that secures the door hinge bracket (3) to the body hinge bracket (2).
8. While still supporting the door, close the door to the intermediate detent position (one detent from the full open position).

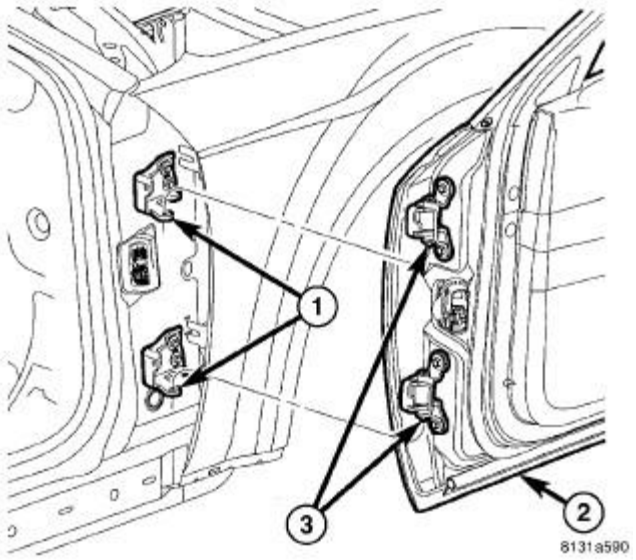

Fig. 239: Upper & Lower Hinge Pins & Pivots
Courtesy of CHRYSLER LLC

9. Raise the front door (2) upward far enough to disengage the upper and lower hinge pins (3) from the pivots (1) on the upper and lower body hinge brackets.

10. Remove the front door from the vehicle.

Installation

INSTALLATION

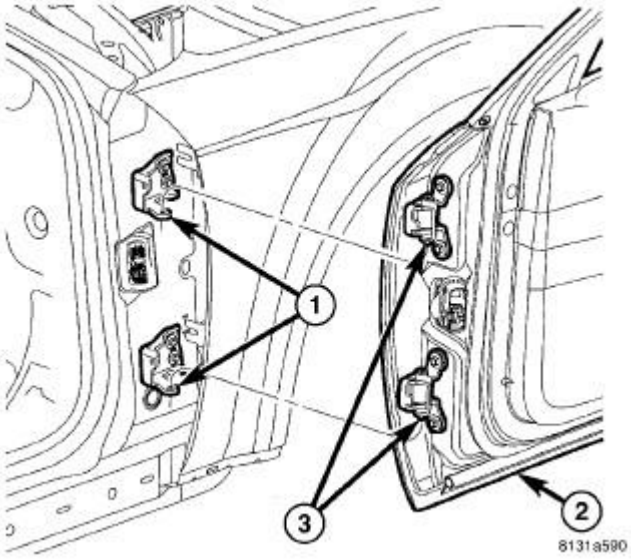

Fig. 240: Upper & Lower Hinge Pins & Pivots
Courtesy of CHRYSLER LLC

1. Support the front door (2) with a suitable lifting device.
2. Position the door with the upper and lower hinge pins (3) aligned over the pivots (1) on the upper and lower body hinge brackets.
3. Lower the door far enough to engage the hinge pins into the pivot holes.
4. While still supporting the door, open the door to the full open position.

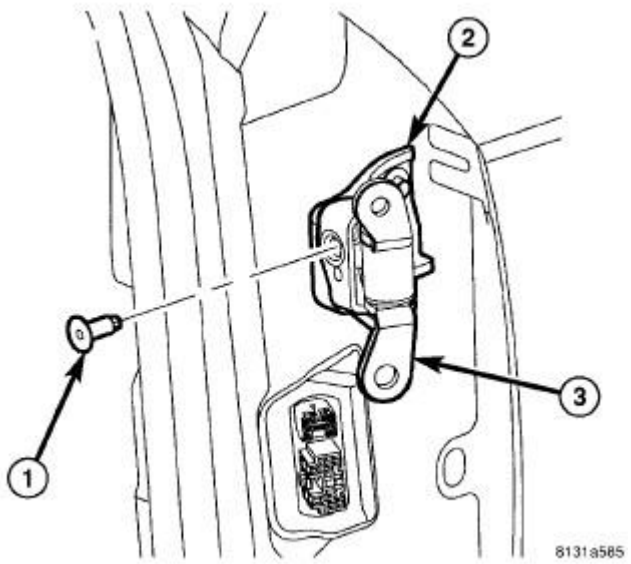

Fig. 241: Door Hinge Bracket
Courtesy of CHRYSLER LLC

5. Align the holes in the upper and lower front door hinge brackets (3) with those in the body hinge brackets (2).
6. Install and tighten the fastener (1) into both the upper and lower front door hinge to secure the door hinge brackets to the body hinge brackets. Tighten the fasteners to 42 N.m (31 ft. lbs.).
7. Remove the lifting device supporting the door.

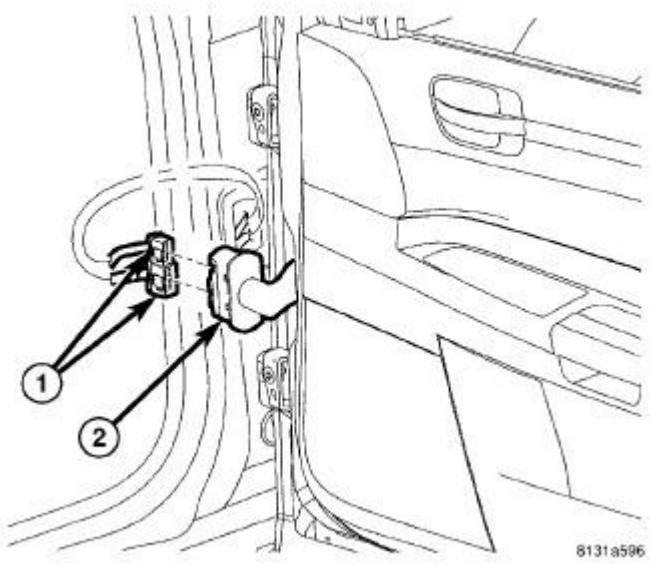

Fig. 242: Door Wire Harness Boot & Connector
Courtesy of CHRYSLER LLC

8. Carefully pull the body wire harness connector(s) (1) out from the A-pillar far enough to

reconnect them to the door wire harness boot and connector (2).

9. Engage the front door wire harness boot and connector into the wiring clearance hole on the outside of the lower A-pillar.
10. Reconnect the battery negative cable.

NOTE: **For vehicles equipped with the optional Automatic Express Up power window feature, recalibration of this feature is required whenever power to the door module is disrupted. Refer to Electrical - Engine Systems/Battery System - Standard Procedure .**

11. Adjust the door hinge positions as necessary to achieve proper door spacing and operation.

Adjustments

ADJUSTMENT

NOTE:

- **Door adjustment measurements should be taken from stationary or welded body panels like the roof, rocker or quarter panels.**
- **During adjustment procedures, it is recommended that all the hinge fasteners be loosened except for the upper most fasteners. Adjustments can be made using the upper bolts to hold the door with final torque of the fasteners occurring after correct door positioning is achieved.**
- **A suitable body sealant should be used when removing or moving the hinges.**

FORE/AFT

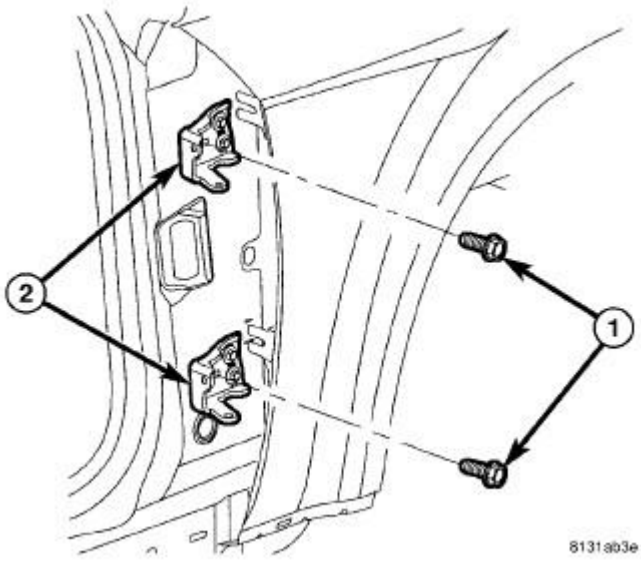

Fig. 243: Hinge Bracket
Courtesy of CHRYSLER LLC

NOTE: **Fore/aft (lateral) door adjustment is done by loosening the hinge to the hinge pillar fasteners one hinge at a time and moving the door to the correct position.**

1. Support the door with a suitable lifting device.
2. Loosen the upper and lower (2) hinge to hinge pillar fasteners (1). See **Body/Door - Front/HINGE, Door - Removal**
3. Adjust the door to the correct position. See **Body/Body Structure/Gap and Flush - Specifications**
4. Tighten the upper most hinge bolt to hinge pillar to 30 N.m (22 ft. lbs.).
5. Tighten the lower most hinge bolt to hinge pillar to 30 N.m (22 ft. lbs.).
6. Tighten the remaining hinge to hinge pillar bolts to 30 N.m (22 ft. lbs.).

UP/DOWN

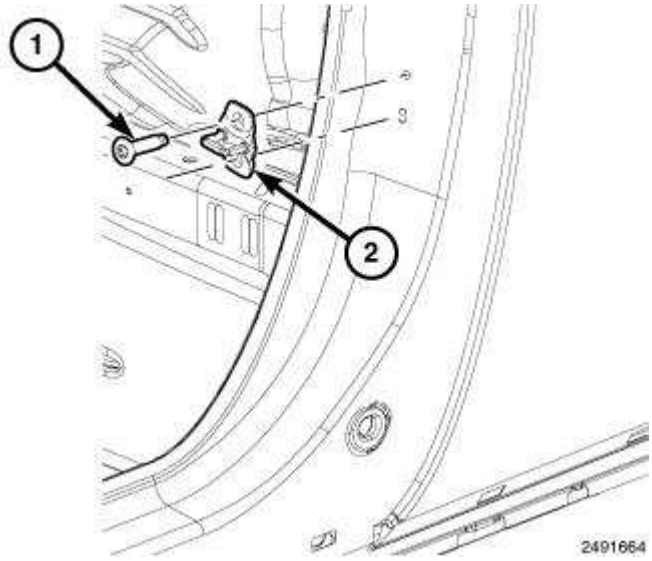

Fig. 244: Door Latch Striker
Courtesy of CHRYSLER LLC

NOTE: **Up/down door adjustment is done by loosening either the hinge to the hinge pillar fasteners or the hinge to door fasteners and moving the door to the correct position.**

1. Support the door with a suitable lifting device.
2. Loosen the latch striker bolts (1). See **Body/Door - Front/STRIKER, Door Latch - Removal**

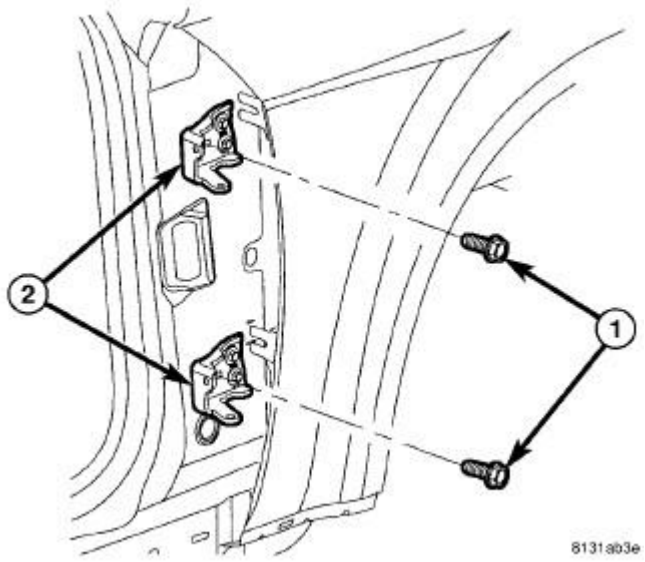

Fig. 245: Hinge Bracket
Courtesy of CHRYSLER LLC

3. If necessary, loosen the hinge to hinge pillar fasteners (1). See **Body/Door - Front/HINGE, Door - Removal**

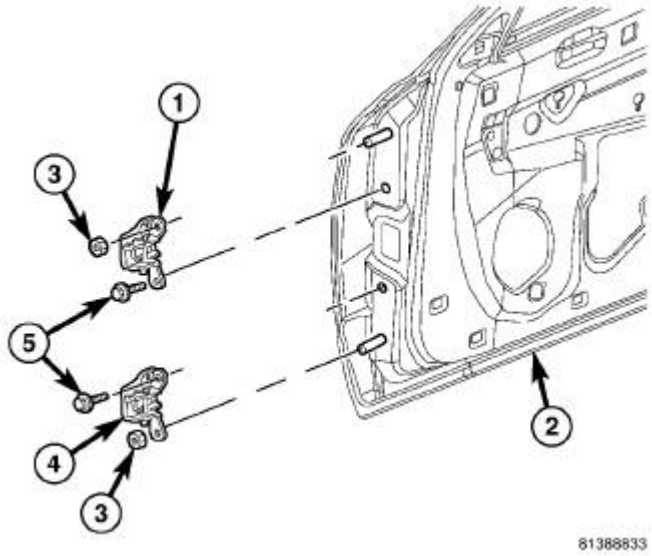

Fig. 246: Door Hinge
Courtesy of CHRYSLER LLC

4. If necessary, loosen the hinge to door fasteners (1). See **Body/Door - Front/DOOR - Removal**
5. Adjust the door to the correct position. See **Body/Body Structure/Gap and Flush - Specifications**
6. Tighten the door to hinges fasteners to 28 N.m (21 ft. lbs.).

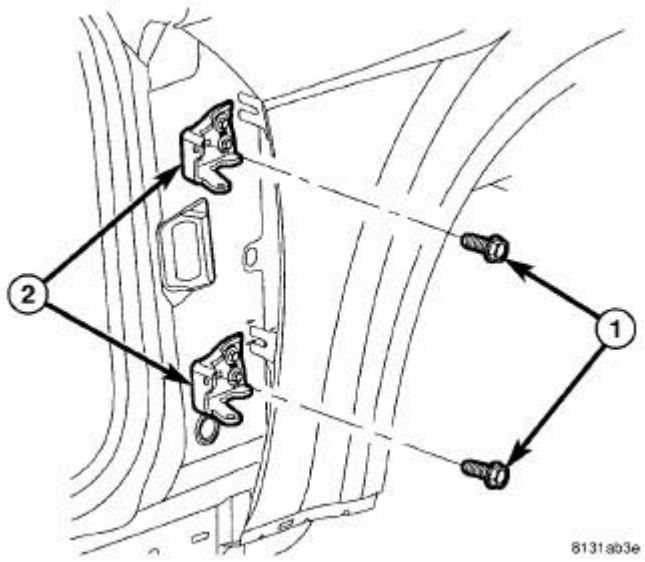

Fig. 247: Hinge Bracket
Courtesy of CHRYSLER LLC

7. Tighten the upper most hinge bolt (1) to hinge pillar to 30 N.m (22 ft. lbs.).
8. Tighten the lower most hinge bolt (4) to hinge pillar to 30 N.m (22 ft. lbs.).
9. Tighten the remaining hinge to hinge pillar bolts to 30 N.m (22 ft. lbs.).

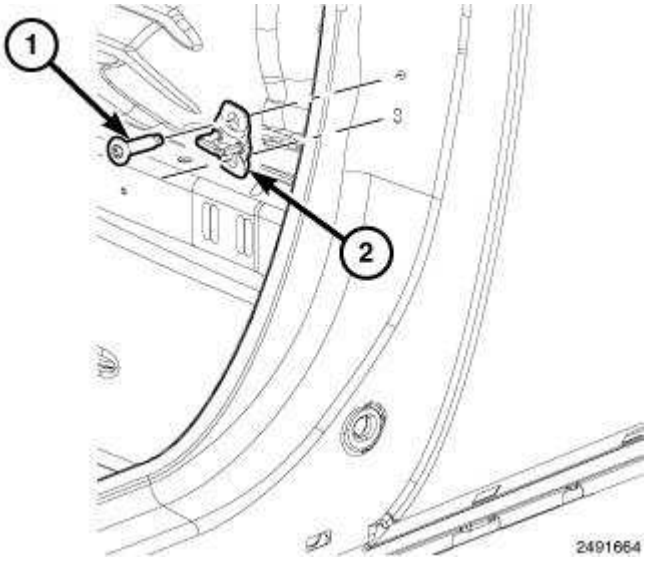

Fig. 248: Door Latch Striker
Courtesy of CHRYSLER LLC

10. Tighten the latch striker bolts (1) 33 N.m (24 ft. lbs.). See **Body/Door - Front/STRIKER, Door Latch - Installation**

IN/OUT

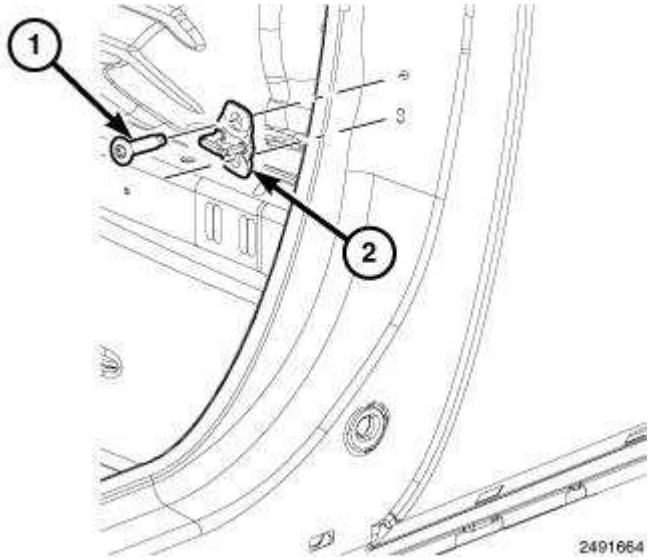

Fig. 249: Door Latch Striker
Courtesy of CHRYSLER LLC

NOTE: In/out door adjustment is done by loosening the hinge to door fasteners one hinge at a time and moving the door to the correct position.

1. Support the door with a suitable lifting device.
2. Loosen the latch striker bolts (2). See **Body/Door - Front/STRIKER, Door Latch - Removal**

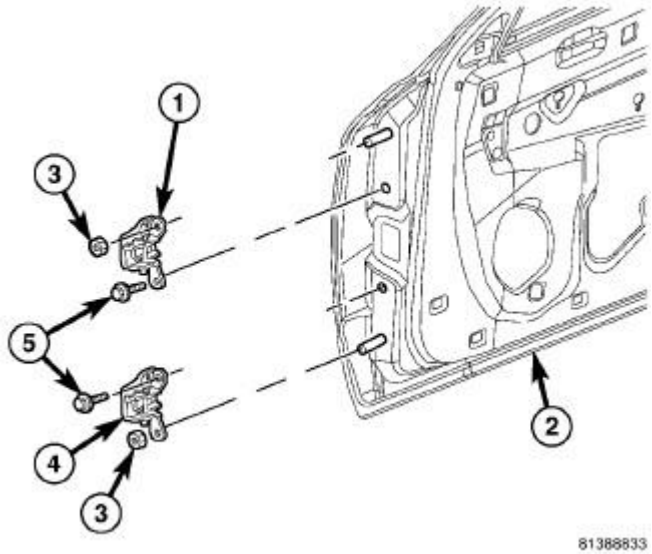

Fig. 250: Door Hinge
Courtesy of CHRYSLER LLC

3. Loosen the hinge to door fasteners (1). See **Body/Door - Front/DOOR - Removal**
4. Adjust the door to the correct position. See **Body/Body Structure/Gap and Flush -**

Specifications

5. Tighten the door to hinges fasteners to 28 N.m (21 ft. lbs.).

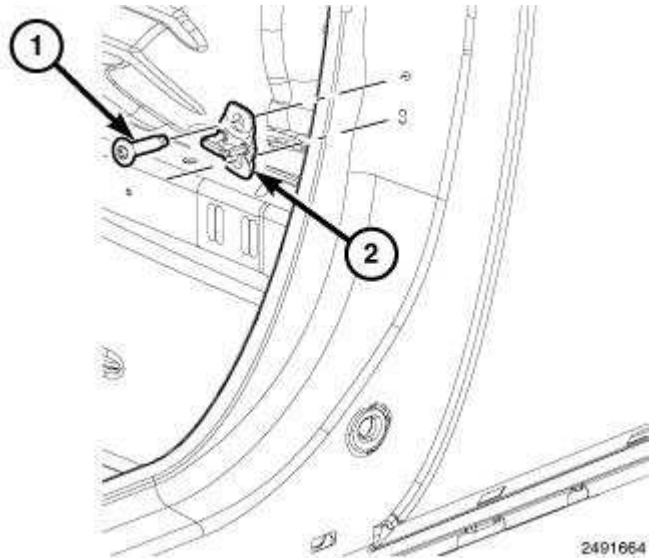

Fig. 251: Door Latch Striker
Courtesy of CHRYSLER LLC

6. Tighten the latch striker bolts (2) to 33 N.m (24 ft. lbs.). See **Body/Door - Front/STRIKER, Door Latch - Installation**

GLASS, DOOR

Removal

REMOVAL

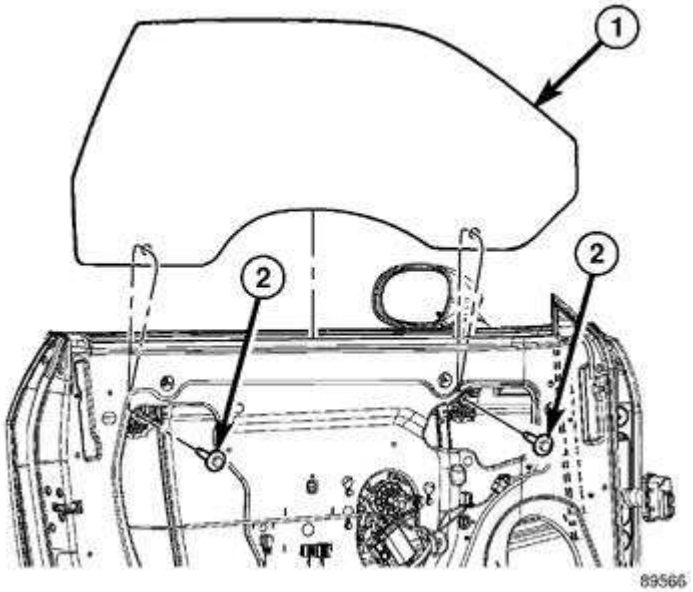

Fig. 252: Removing/Installing Front Door Glass
Courtesy of CHRYSLER LLC

1. Remove the trim panel from the inside of the front door. See **Body/Door - Front/PANEL, Door Trim - Removal**.
2. Remove the inner belt weatherstrip from the front door.
3. Remove the watershield from the inside of the front door. See **Body/Door - Front/WATERSHIELD - Removal**.
4. Adjust the front door glass (1) position up or down as required for access to the two window regulator glass clamps.
5. Remove the door glass fasteners (2).
6. Carefully lift the glass up and out of the door.

Installation

INSTALLATION

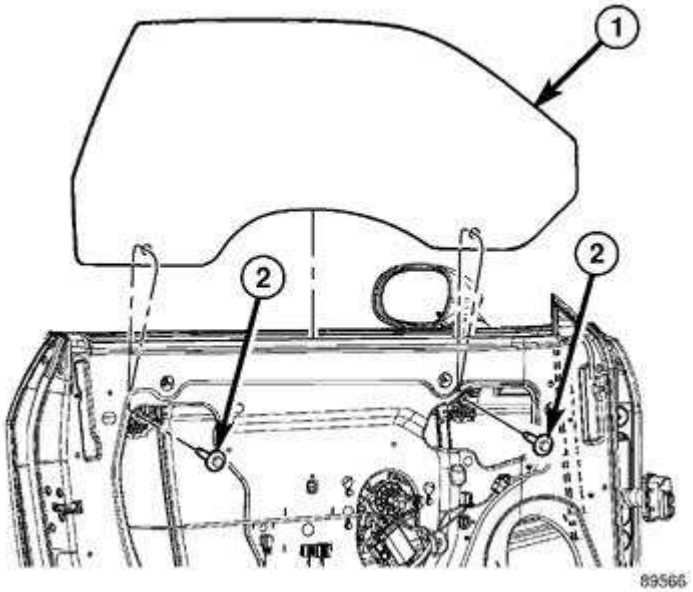

Fig. 253: Removing/Installing Front Door Glass
Courtesy of CHRYSLER LLC

1. From the outside of the front door, insert the glass (1) into the top of the door shell and load the glass into the door.
2. Install the door glass fasteners (2). Tighten to 10 N.m (89 in. lbs.).
3. Install the watershield onto the inside of the front door. See **Body/Door - Front/WATERSHIELD - Installation**.
4. Install the inner belt weatherstrip onto the front door.
5. Install the trim panel onto the inside of the front door. See **Body/Door - Front/PANEL, Door Trim - Installation**.

Adjustments

ADJUSTMENTS

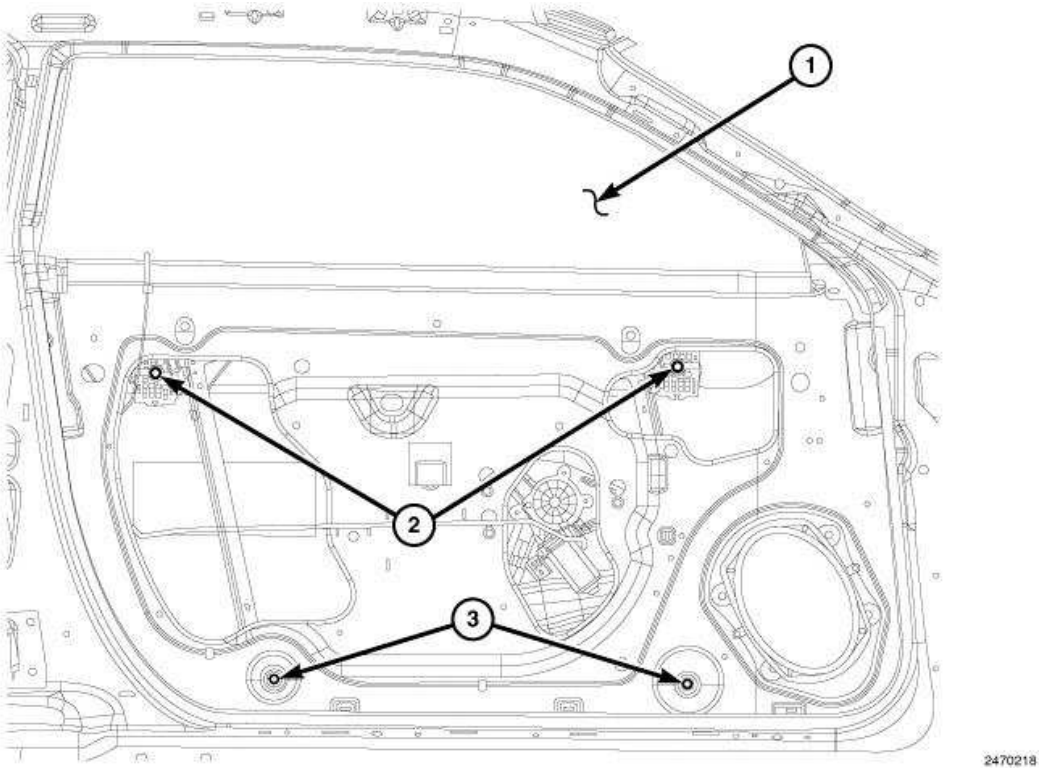

Fig. 254: Front Door Glass Adjustments
Courtesy of CHRYSLER LLC

1 - DOOR GLASS
2 - REGULATOR GLASS ATTACHEMENT FASTENERS
3 - JACK SCREWS

NOTE: All measurements are in millimeters.

1. Check and adjust the door if necessary. See **Body/Door - Front/DOOR - Adjustments**
2. Remove the door trim panel and watershield to gain access to the regulator mechanism. See **Body/Door - Front/WATERSHIELD - Removal**

   NOTE: Partially loosening the glass attachment fasteners (2) allows the glass to stay in place while the glass is being adjusted. If the fasteners are too loose, the glass will lose all position adjustments completely.

3. With the glass (1) in the full up position, partially loosen the regulator glass clamp fasteners (2).

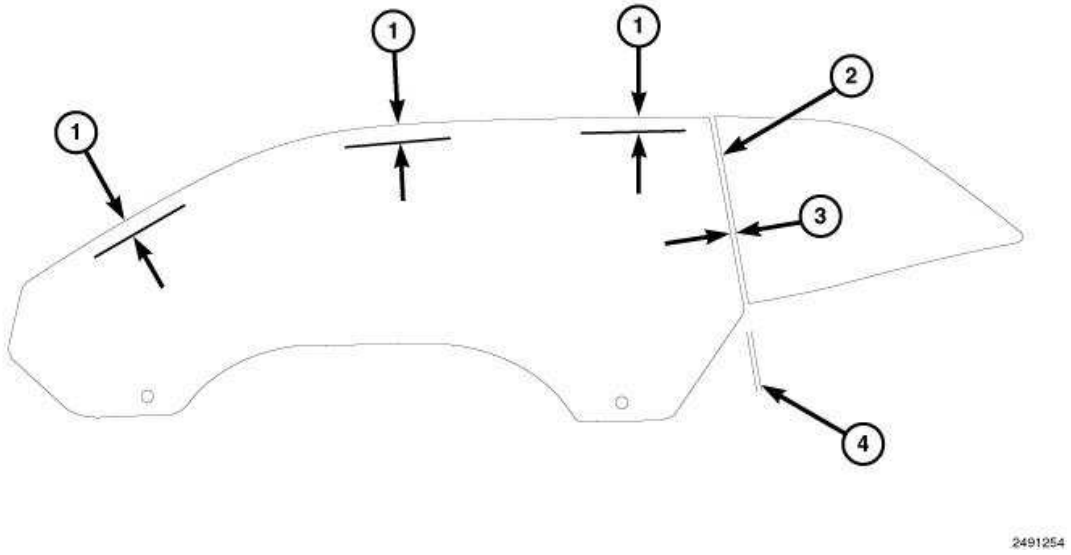

Fig. 255: Door Glass Alignment
Courtesy of CHRYSLER LLC

1 - SEAL ENGAGEMENT 7.5 mm +/- 2.0 mm
2 - DOOR GLASS TO QUARTER GLASS FLUSH 0 mm - 3.0 mm
3 - DOOR GLASS TO QUARTER GLASS GAP 6.0 mm +/- 2.0 mm
4 - DOOR GLASS TO QUARTER GLASS PARALLEL WITHIN 2.0 mm

4. Place a piece of tape onto the glass and mark a line 7.5 mm (0.30 in.) minimum down from the upper edge in the three places shown in illustration (1).
5. From the outside of the vehicle, with the door closed, use a suction cup or equivalent and simultaneously slide the glass to achieve the three minimum glass engagement tape marks (1) and the door glass to quarter glass gap (3) and parallel measurements (4).

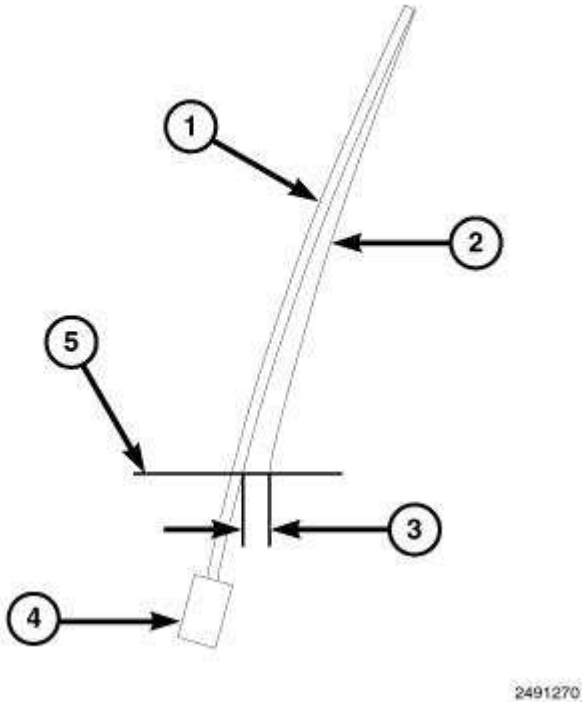

Fig. 256: Door Glass Alignment
Courtesy of CHRYSLER LLC

1 - DOOR GLASS
2 - SASH SEAL
3 - OBSERVED BELT LINE PRE-LOAD 6.0 mm
4 - LIFT PLATE PIVOT
5 - BELT LINE

NOTE: It is sometimes helpful to snug or unsnug the rear glass attach fastener during this process.

NOTE: The jack screws work for minor crosscar adjustments and should only be used if there is a minimal adjustment crosscar required.

6. Open the door and then carefully close the door until the B-pillar top of glass (1) just touches the quarter glass sash seal (2) and check the B-pillar glass to sash seal gap near the belt line (3). This gap (3) should be adjusted to 6 mm (0.24 in.) to put a cross car pre-load on the door glass. To adjust the gap open the door and push the top edge of the glass inboard or outboard as needed. Close the door and re-check the gap as needed. Check that the door glass to quarter glass is flush to +3 mm (0.11 in.) overflush.

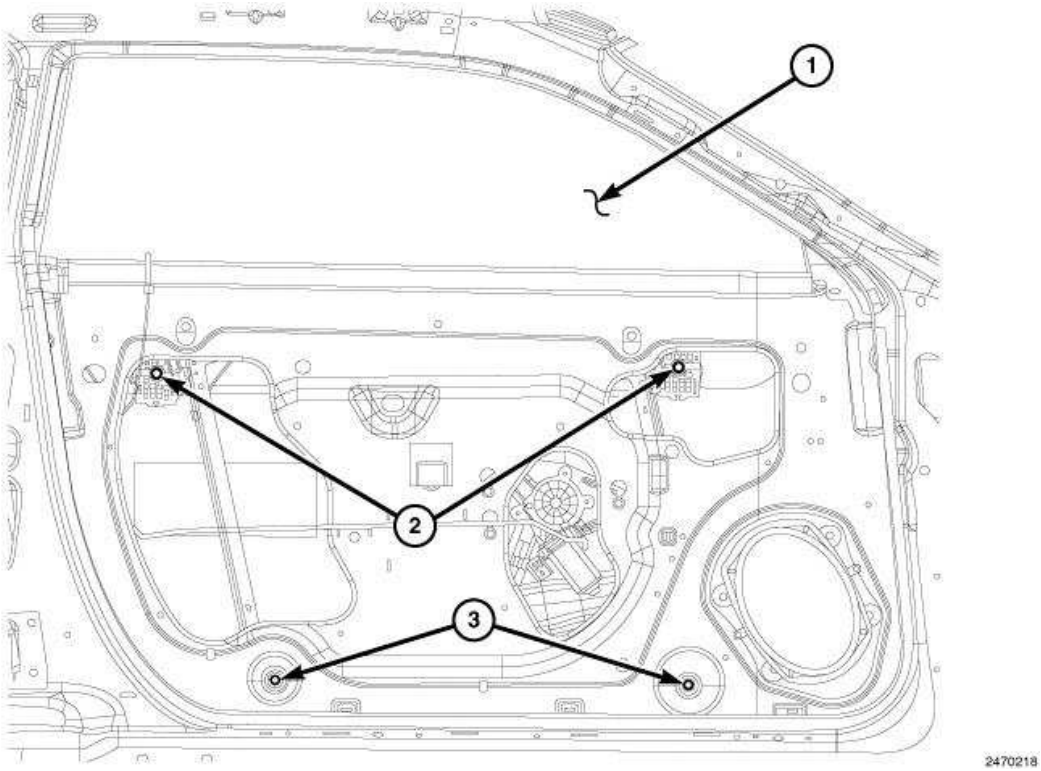

Fig. 257: Front Door Glass Adjustments
Courtesy of CHRYSLER LLC

1 - DOOR GLASS
2 - REGULATOR GLASS ATTACHEMENT FASTENERS
3 - JACK SCREWS

7. Tighten the regulator glass clamp fasteners (2) to 10 N.m (89 in. lbs.).
8. From inside the vehicle with the door closed, run the glass full down and then jog it upwards to insure the door glass does not scissor and travel inboard of the quarter glass sash seal or crush the seal and dislodge it from the retainer. If the door glass travels inboard of the sash seal, you will need to reduce the door glass pre-load.
9. From outside the vehicle , open and close the door and make sure the A-pillar section of the glass travels properly into the A-pillar seal. If the door glass crushes or pinches the A-pillar seal, the door glass will need more preload and/or shifted rearward.
10. Install the watershield and trim panel. See **Body/Door - Front/WATERSHIELD - Installation**

HANDLE, EXTERIOR

Removal

REMOVAL

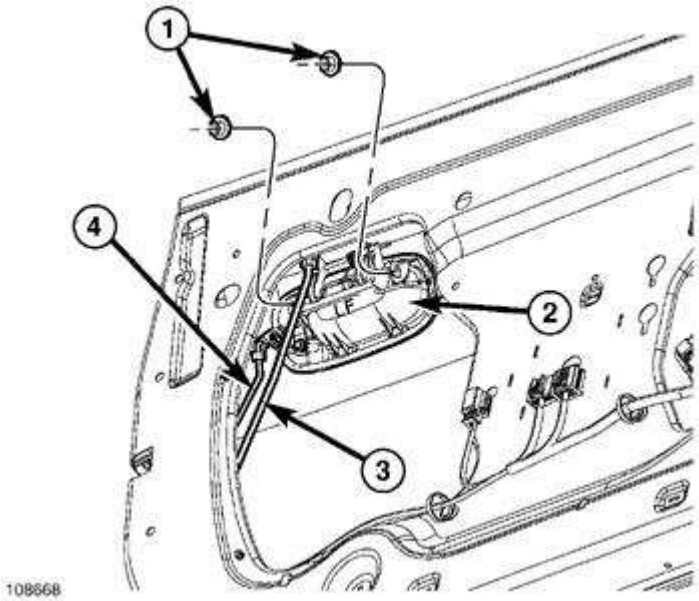

Fig. 258: Removing/Installing Exterior Door Handle
Courtesy of CHRYSLER LLC

1. Remove the trim panel. See **Body/Door - Front/PANEL, Door Trim - Removal**.
2. Remove the speaker. Refer to **Electrical - Audio and Video/Audio and Video/SPEAKER - Removal** .
3. Remove the watershield. See **Body/Door - Front/WATERSHIELD - Removal**.
4. Disengage the plastic clip that secures the end of the latch release link (3) to the exterior door handle (2) and remove the latch release link from the handle.
5. For the driver side handle only, disengage the plastic clip that secures the end of the lock actuator link (4) to the lock cylinder and remove the link from the lock cylinder.
6. Remove the mounting fasteners from the exterior door handle (1).
7. Remove the handle from the outside of the door.

Installation

INSTALLATION

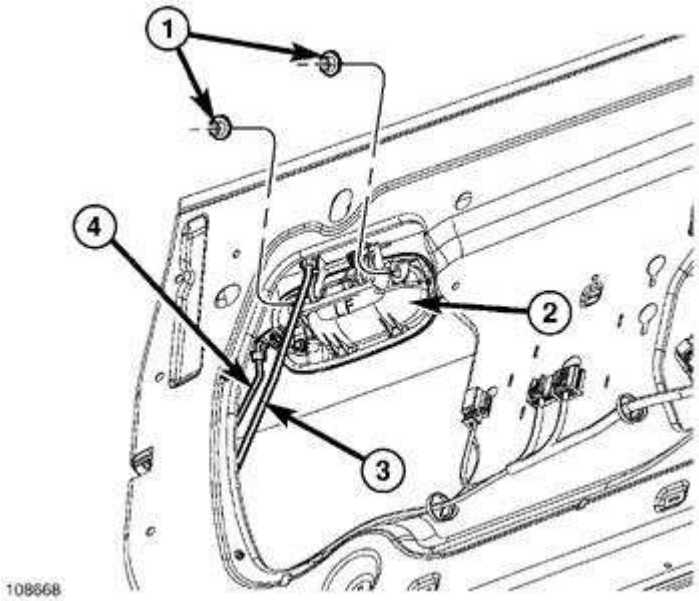

Fig. 259: Removing/Installing Exterior Door Handle
Courtesy of CHRYSLER LLC

1. Position the exterior handle to the door.
2. Install the exterior handle mounting fasteners (1). Tighten to 5 N.m (44 in. lbs.).
3. For the driver side handle only, install the lock cylinder link (4) and engage the plastic link retainer.
4. Install the door handle release link (3) and engage the plastic link retainer.
5. Install the watershield. See **Body/Door - Front/WATERSHIELD - Installation**.
6. Install the speaker. Refer to **Electrical - Audio and Video/Audio and Video/SPEAKER - Installation**
7. Install the trim panel. See **Body/Door - Front/PANEL, Door Trim - Installation**.

NOTE: **For vehicles equipped with the optional Automatic Express Up power window feature, recalibration of this feature is required whenever power to the door module is disrupted. Refer to Electrical - Engine Systems/Battery System - Standard Procedure**

HINGE, DOOR

Removal

REMOVAL

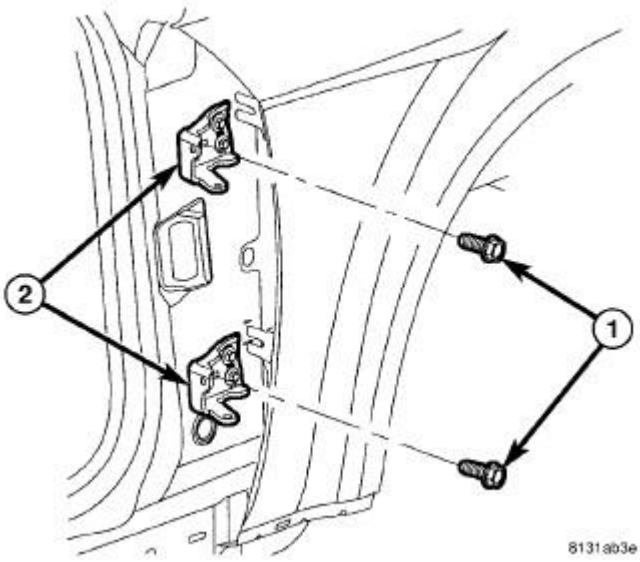

Fig. 260: Hinge Bracket
Courtesy of CHRYSLER LLC

1. Remove the front door from the vehicle. See **Body/Door - Front/DOOR - Removal**.
2. Mark the upper or lower hinge bracket (2) location on the outside of the lower A-pillar to aid installation.
3. Remove the fasteners (1) that secure the hinge bracket to the outside of the lower A-pillar.
4. Remove the hinge bracket from the A-pillar.

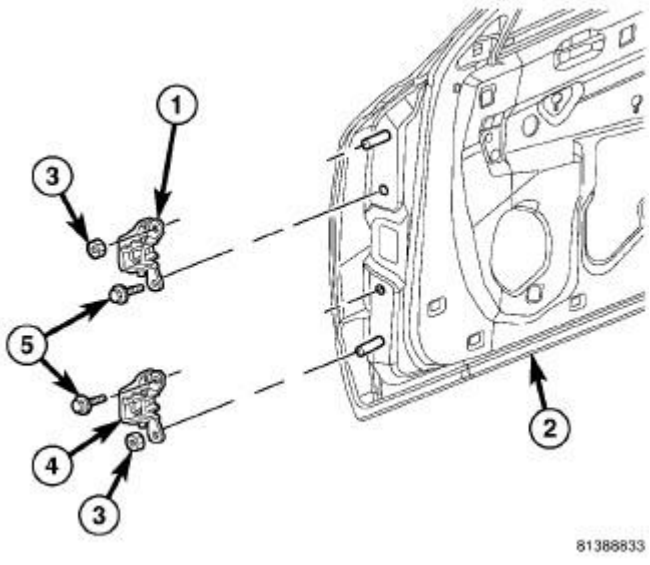

Fig. 261: Door Hinge
Courtesy of CHRYSLER LLC

5. Mark the upper (1) or lower (4) door hinge location on the hinge face of the front door (2) to aid

installation.

6. Remove the fastener (5) that secures the hinge to the door.
7. Remove the nut (3) that secures the hinge to the stud on the door.
8. Remove the upper or lower hinge from the hinge face of the door.

Installation

INSTALLATION

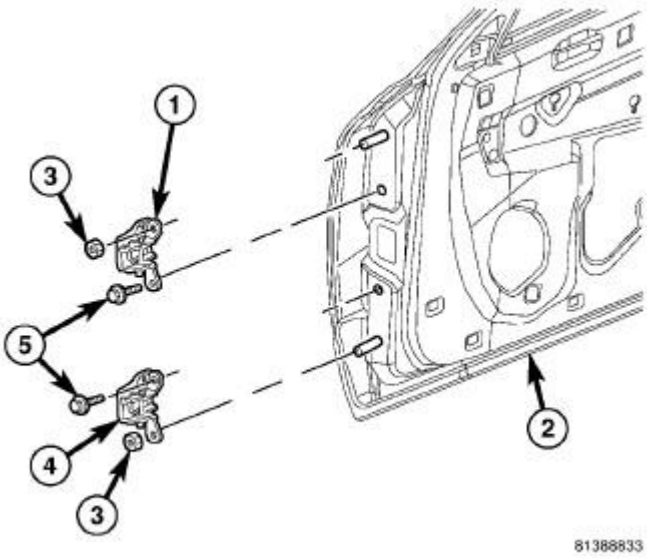

Fig. 262: Door Hinge
Courtesy of CHRYSLER LLC

1. Position the upper (1) or lower (4) hinge to the hinge face of the front door.
2. Install and tighten the nut (3) that secures the hinge to the stud on the door. Tighten the nut to 28 N.m (21 ft. lbs.).
3. Install and tighten the fastener (5) that secures the hinge to the door. Tighten the fastener to 28 N.m (21 ft. lbs.).

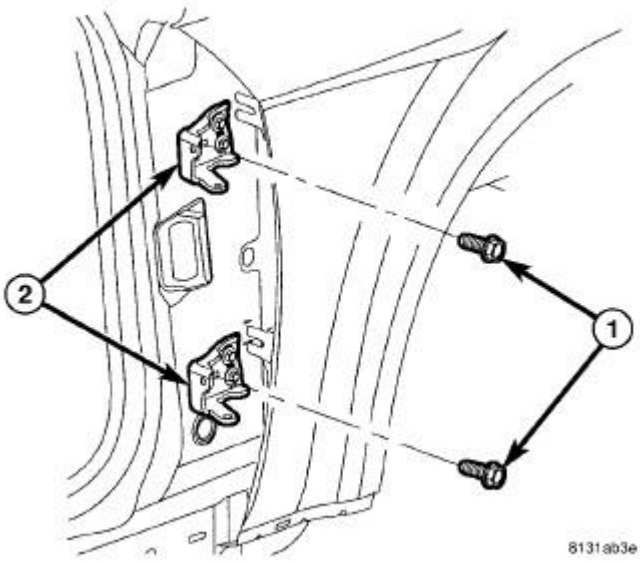

Fig. 263: Hinge Bracket
Courtesy of CHRYSLER LLC

4. Position the upper or lower hinge bracket (2) onto the outside of the lower A-pillar.
5. Install and tighten the fasteners (1) that secure the hinge bracket to the outside of the lower A-pillar. Tighten the fasteners to 30 N.m (22 ft. lbs.).
6. Install the front door onto the vehicle. See **Body/Door - Front/DOOR - Installation**.

LATCH, DOOR

Removal

REMOVAL

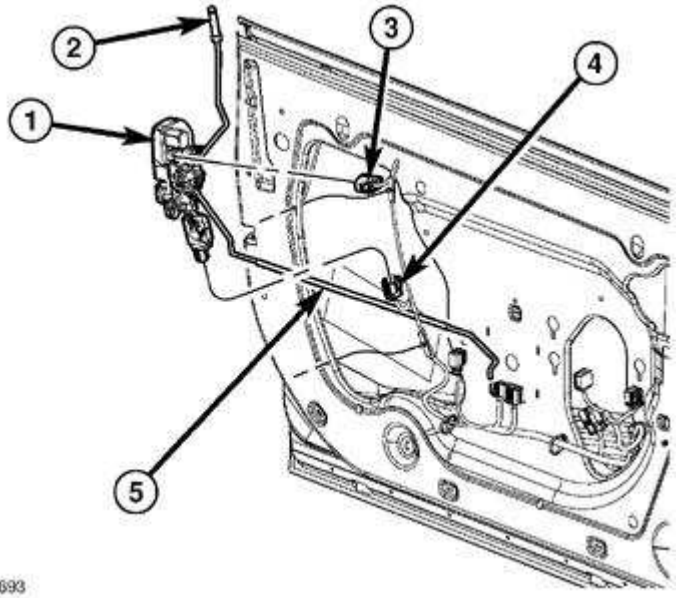

Fig. 264: Removing/Installing Door Latch
Courtesy of CHRYSLER LLC

1. Remove front door trim panel. See **Body/Door - Front/PANEL, Door Trim - Removal**.
2. Remove the door speaker. Refer to **Electrical - Audio and Video/Audio and Video/SPEAKER - Removal**
3. Remove the watershield. See **Body/Door - Front/WATERSHIELD - Removal**.
4. Reach into the back of the door shell to unsnap the plastic clip that secures the end of the interior door latch lock link (2) to the latch lever and disengage the link from the latch (1).
5. Remove the interior door latch lock link and knob unit from the front door.
6. Reach into the back of the door shell to unsnap the plastic clip that secures the end of the interior door handle latch release link (5) to the latch lever and disengage the link from the latch.
7. Reach into the back of the door shell to unsnap the plastic clip that secures the end of the exterior door handle latch release link to the latch lever and disengage the link from the latch.
8. For the driver side front door only, reach into the back of the door shell to unsnap the plastic clip that secures the end of the lock cylinder lock actuator link to the latch lever and disengage the link from the latch.
9. Remove the three fasteners that secure the latch to the outer latch face of the front door.
10. Disconnect the electrical connectors (3 and 4).
11. Remove the latch from the interior of the door shell.

Installation

INSTALLATION

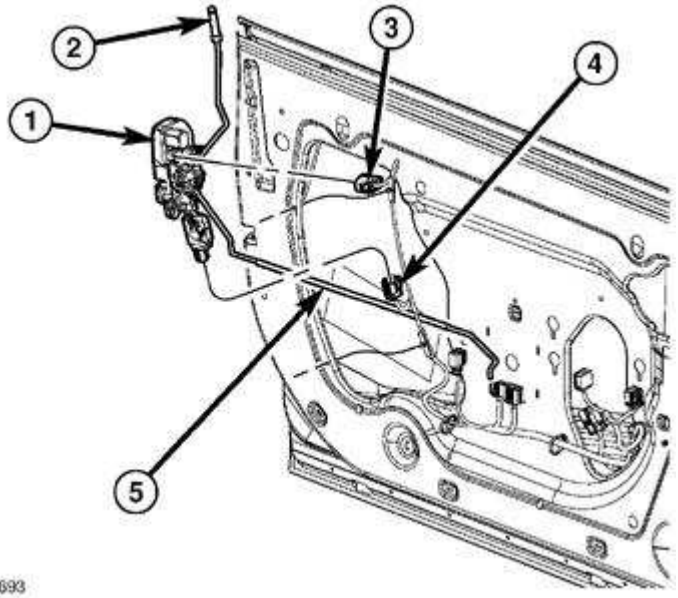

Fig. 265: Removing/Installing Door Latch
Courtesy of CHRYSLER LLC

1. Connect the door wire harness connectors (3 and 4) to the door latch (1).
2. Position the latch to the latch face on the interior of the front door shell.
3. Install and tighten the three fasteners that secure the latch to the outer latch face of the front door. Tighten the fasteners to 12 N.m (106 in. lbs.).
4. For the driver side front door only, reach into the back of the door shell to engage the lock cylinder actuator link to the latch lever and snap the plastic clip over the link to secure it to the latch.
5. Reach into the back of the door shell to engage the exterior door handle latch release link to the latch lever and snap the plastic clip over the link to secure it to the latch.
6. Reach into the back of the door shell to engage the end of the interior door handle latch release link (5) to the latch lever and snap the plastic clip over the link to secure it to the latch.
7. Position the interior door latch lock link (2) and knob unit into the front door.
8. Reach into the back of the door shell to engage the end of the interior door latch lock link to the latch lever and snap the plastic clip over the link to secure it to the latch.
9. Install the watershield. See **Body/Door - Front/WATERSHIELD - Installation**.
10. Install the speaker. Refer to **Electrical - Audio and Video/Audio and Video/SPEAKER - Installation**
11. Install the trim panel. See **Body/Door - Front/PANEL, Door Trim - Installation**.
12. Using a wrench inserted through the access slot on the outer latch face of the front door shell, loosen the hex socket latch release adjusting screw on the latch.
13. Cycle the door outside latch release handle through its full travel two or three times.
14. Tighten the adjusting screw.

MOLDING

Removal

REMOVAL

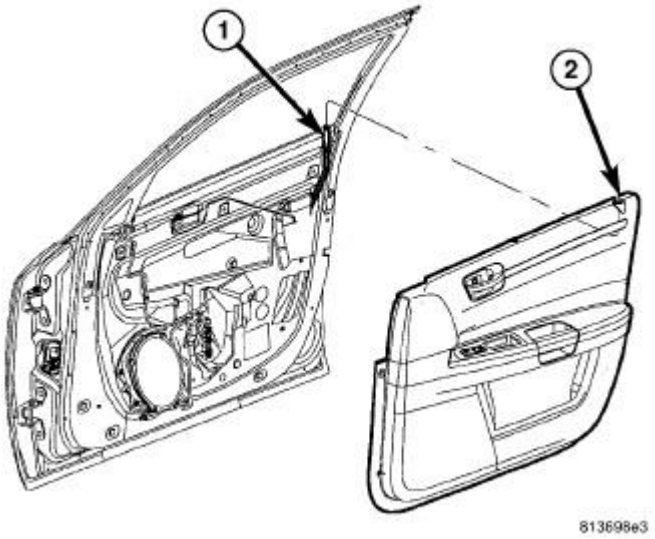

Fig. 266: Door Trim Panel
Courtesy of CHRYSLER LLC

NOTE: Challenger shown in illustration, 300/Charger similar.

1. Disconnect and isolate the negative battery cable.
2. Remove the front door trim panel. See **Body/Door - Front/PANEL, Door Trim - Removal**.

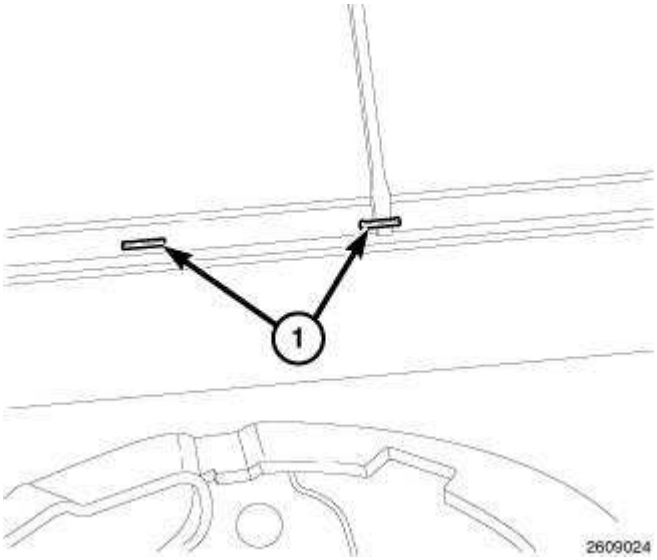

Fig. 267: Removing Staples From Belt Line Molding
Courtesy of CHRYSLER LLC

3. Using a suitable tool remove the staples from the belt line molding at the top of the trim panel.
4. Remove the belt line molding.

REMOVAL

MOLDING-INNER BELT

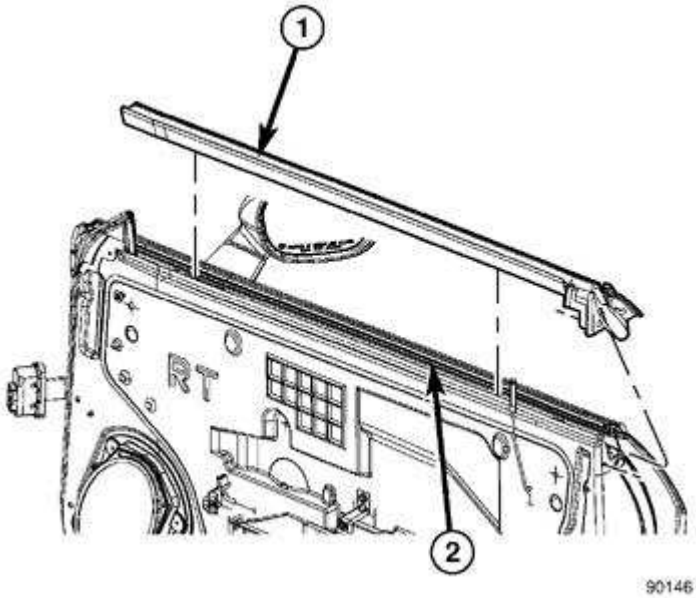

Fig. 268: Removing/Installing Inner Belt Molding - Door
Courtesy of CHRYSLER LLC

1. Remove the door trim panel as necessary. See **Body/Door - Front/PANEL, Door Trim - Removal**
2. From the front of the inner belt molding, carefully pry up on the molding and work towards the rear of the door.
3. Remove the inner belt molding (1) from the top of the door (2).

MOLDING-OUTER BELT

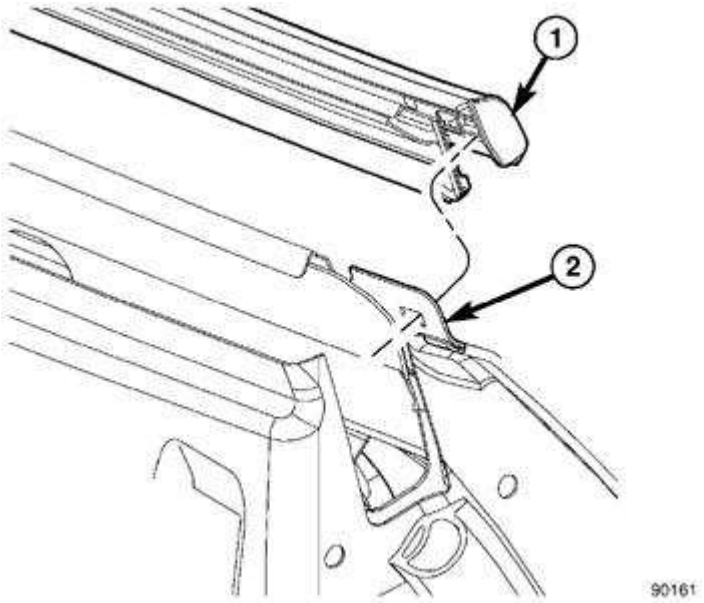

Fig. 269: Removing/Installing Outer Belt Molding - Door
Courtesy of CHRYSLER LLC

1. Remove the door trim panel as necessary. See **Body/Door - Front/PANEL, Door Trim - Removal**
2. From the front of the outer belt molding (1), carefully pry up on the molding and work towards the rear of the door.
3. Carefully remove the outer belt molding from the flange (2) at the rear of the door.
4. Remove the outer belt molding from the top of the door.

Installation

INSTALLATION

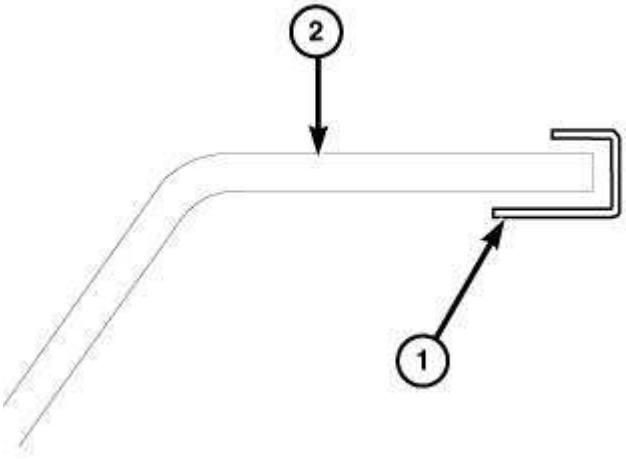

Fig. 270: Positioning Belt Line Molding
Courtesy of CHRYSLER LLC

NOTE: Challenger shown in illustration, 300/Charger similar.

1. Install the belt line molding with longer lip (1) towards the inside of the door trim panel (2).
2. Install the new belt line molding.
3. Push the belt line molding all the way down to prevent it from becoming wavy.

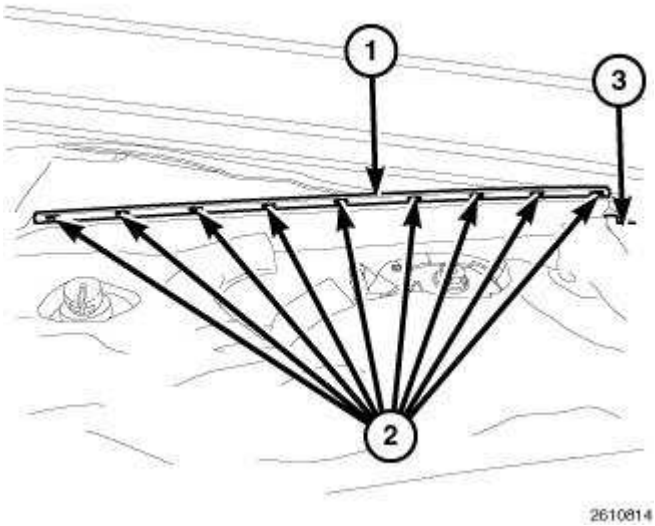

Fig. 271: Identifying Location Of Staples On Belt Line Molding
Courtesy of CHRYSLER LLC

NOTE: If the staple is not seated correctly, remove the staple and retry.

4. Staple every three inches and at each end of the belt line molding.

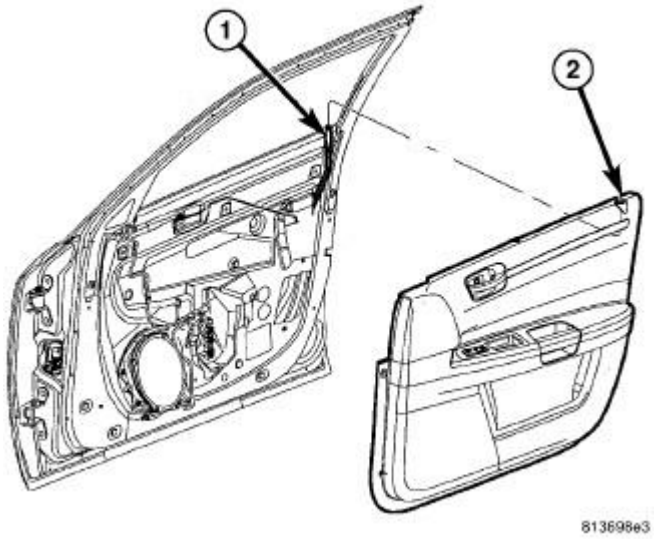

Fig. 272: Door Trim Panel
Courtesy of CHRYSLER LLC

5. Instal the front door trim panel. See **Body/Door - Front/PANEL, Door Trim - Installation**.
6. Connect and install the negative battery cable.

INSTALLATION

MOLDING-INNER BELT

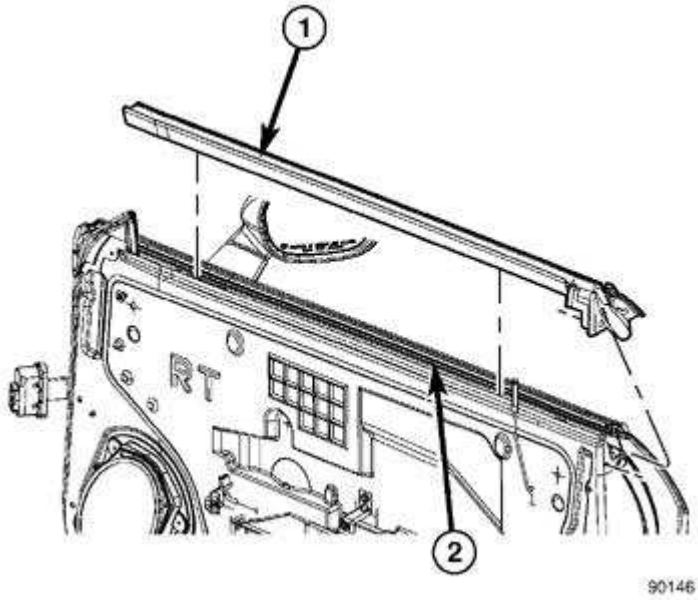

Fig. 273: Removing/Installing Inner Belt Molding - Door
Courtesy of CHRYSLER LLC

1. Starting from the rear of the door, install the belt molding (1) to the door (2).

2. Continue to firmly press down and install the molding, working towards the front of the door.
3. Install the door trim panel. See **Body/Door - Front/PANEL, Door Trim - Installation**

MOLDING-OUTER BELT

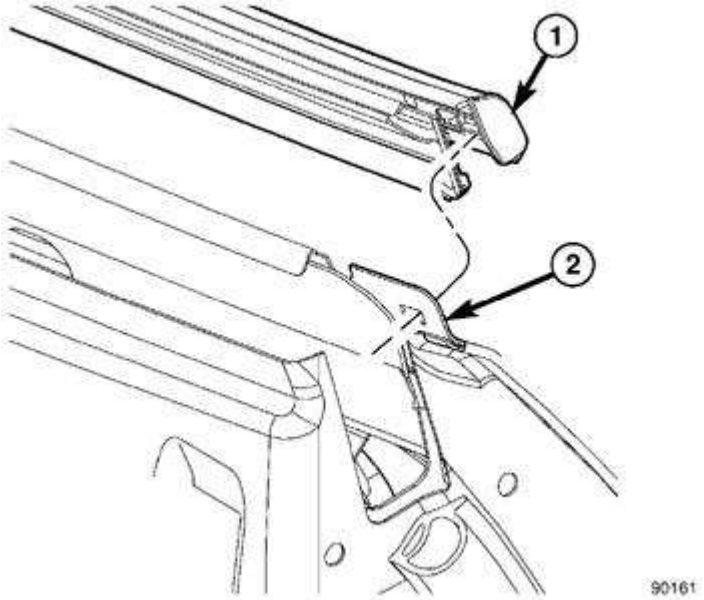

Fig. 274: Removing/Installing Outer Belt Molding - Door
Courtesy of CHRYSLER LLC

1. Starting from the rear of the door, install the outer belt molding (1) to the door flange (2) by firmly pressing down on the molding.
2. Continue to frimly press down and install the molding, working towards the front of the door.
3. Install the door trim panel. See **Body/Door - Front/PANEL, Door Trim - Installation**

PANEL, DOOR TRIM

Removal

REMOVAL

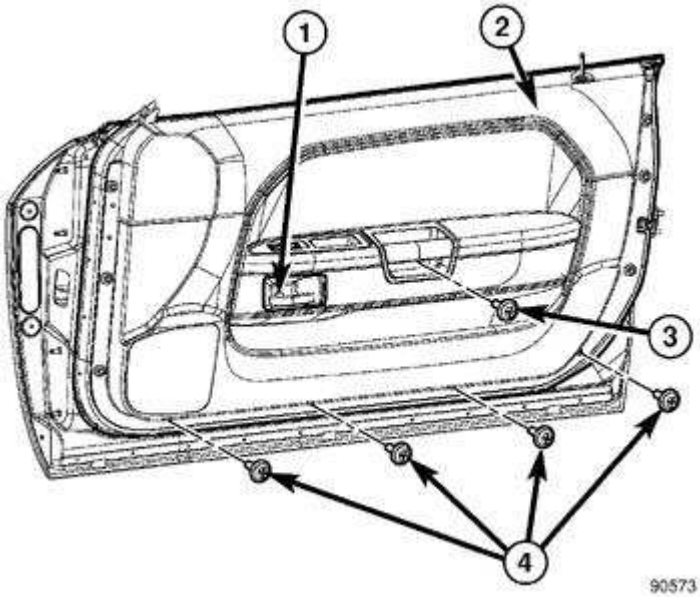

Fig. 275: Removing/Installing Door Trim Panel
Courtesy of CHRYSLER LLC

1. Disconnect and isolate the battery negative cable. Refer to **Electrical - Engine Systems/Battery System - Standard Procedure** .
2. Unsnap and fold back the screw cap behind the interior handle and remove the screw (1).
3. Unsnap and fold back the screw cap below the trim panel (2) pull handle to access and remove the screw (3).
4. Remove the screws (4) that secure the trim panel to the inside of the door.

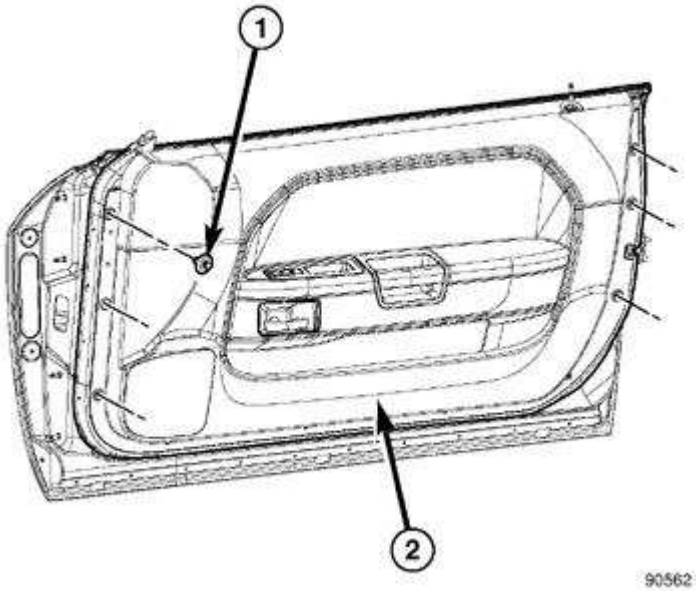

Fig. 276: Location Of Door Trim Panel Fasteners
Courtesy of CHRYSLER LLC

5. Remove the push pins (1) that secure the trim panel (2) to the door.
6. Carefully pull the bottom of the trim panel out and pull up on the panel to remove the door lock.
7. Disconnect all cables and connectors.
8. Remove the trim panel from the vehicle.

Installation

INSTALLATION

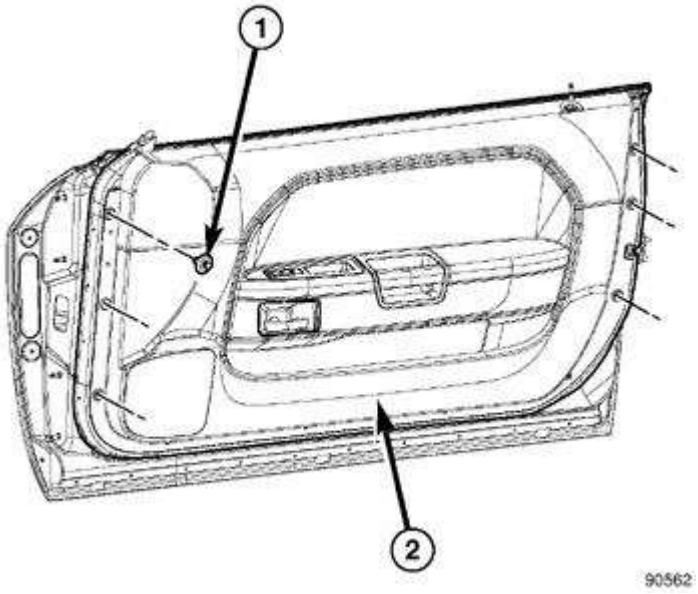

Fig. 277: Location Of Door Trim Panel Fasteners
Courtesy of CHRYSLER LLC

1. Position the top of the door trim panel (2) to the door, ensuring the door lock is inserted through the door trim panel.
2. Connect the electrical connectors and door latch cable to the door trim panel.
3. Firmly seat the top of the door trim panel in position and seat the trim panel to the door from the top to bottom.
4. Install the pushpin fasteners (1) to the door trim panel.

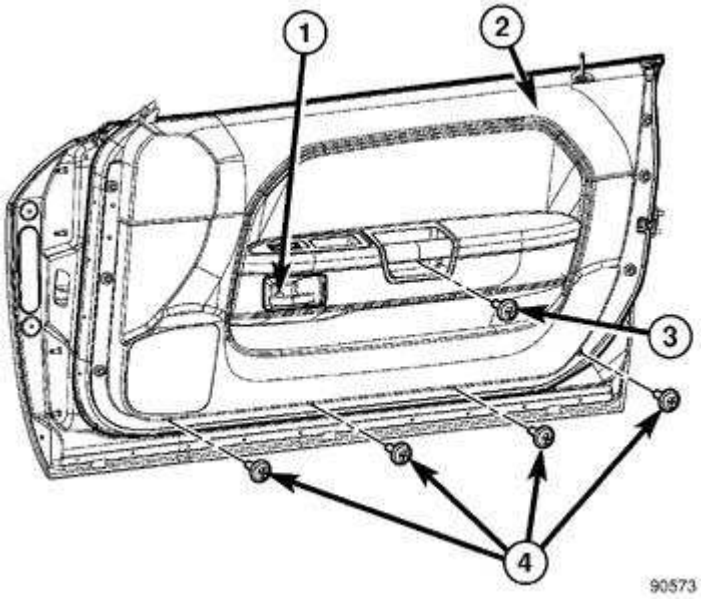

Fig. 278: Removing/Installing Door Trim Panel
Courtesy of CHRYSLER LLC

5. Install the screws (4) to the outer edge of the door trim panel (2).
6. Install the screw (3) to the inside pull handle and close the plastic cover.
7. Install the screw (1) to the inside of the interior door handle and close the plastic cover.
8. Connect the battery negative cable.

NOTE: **For vehicles equipped with the optional Automatic Express Up power window feature, recalibration of this feature is required whenever power to the door module is disrupted. Refer to Electrical - Engine Systems/Battery System - Standard Procedure**

REGULATOR, WINDOW

Removal

REMOVAL

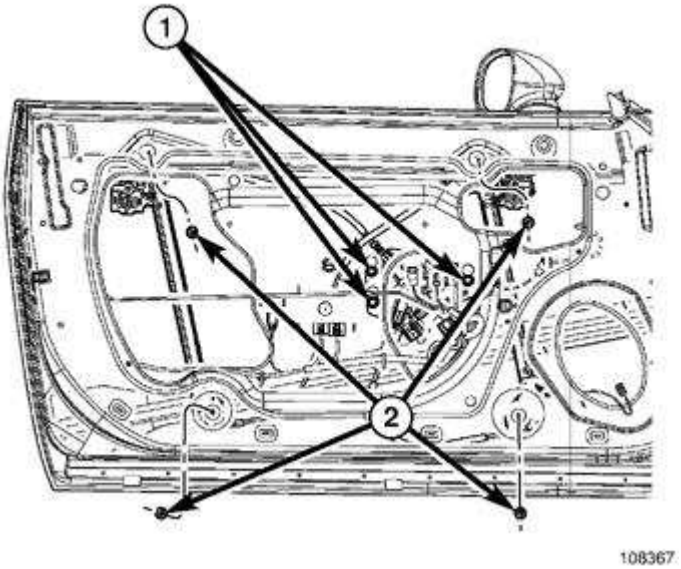

Fig. 279: Removing/Installing Window Glass At Regulator
Courtesy of CHRYSLER LLC

1. Remove the trim panel. See **Body/Door - Front/PANEL, Door Trim - Removal**.
2. Remove the speaker. Refer to **Electrical - Audio and Video/Audio and Video/SPEAKER - Removal**
3. Remove the watershield. See **Body/Door - Front/WATERSHIELD - Removal**.
4. Adjust the front door glass position up or down as required for access to the two window regulator glass clamps.
5. Loosen the screw in each of the glass clamps far enough to release the glass.
6. Lift the glass out of the regulator clamps and into its full up position, then tape the glass securely into place.
7. Remove the power window motor fasteners (1) and disengage the motor bracket from the door.
8. Remove the window regulator mounting fasteners (2).
9. Disconnect the electrical connectors.

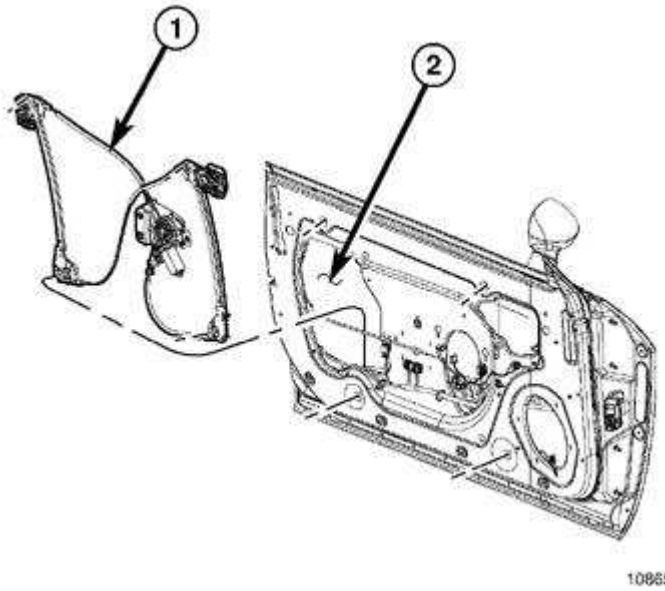

Fig. 280: Removing/Installing Window Regulator
Courtesy of CHRYSLER LLC

10. Carefully remove the regulator (1) through the large access hole (2) at the rear of the door.

Installation

INSTALLATION

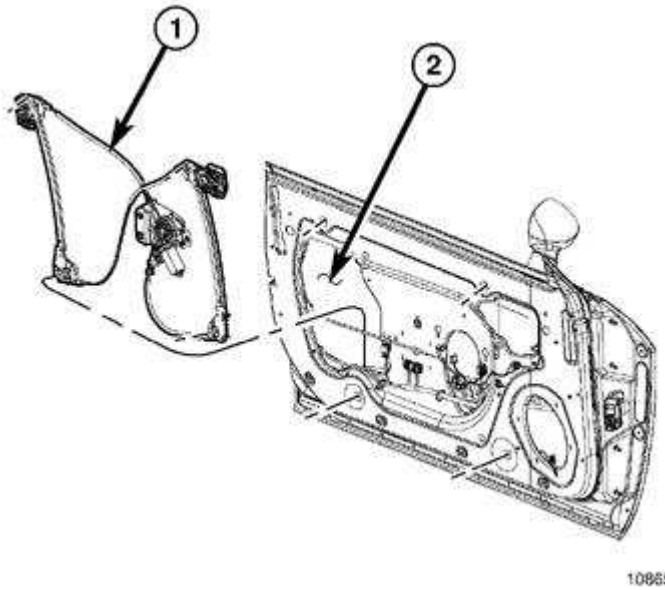

Fig. 281: Removing/Installing Window Regulator
Courtesy of CHRYSLER LLC

1. Load the regulator (1) into the door through the large access hole (2) at the rear of the door.

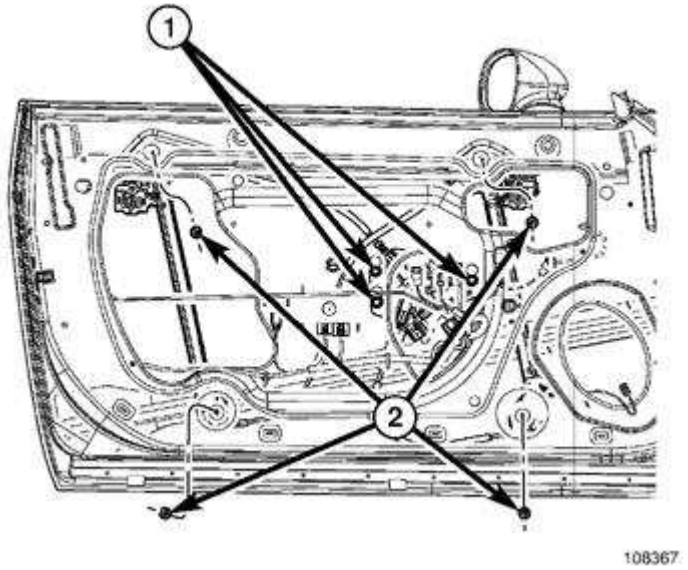

Fig. 282: Removing/Installing Window Glass At Regulator
Courtesy of CHRYSLER LLC

2. Position the regulator in place and install the regulator mounting fasteners (2). Tighten the screws to 10 N.m (89 in. lbs.).
3. Align the power window motor and install mounting fasteners (1). Tighten the screws to 10 N.m (89 in. lbs.).
4. Remove the tape securing the door glass in its full up position, then lower the glass to engage it into the two window regulator glass clamps.
5. Using the regulator, lower the glass far enough to access the two window regulator glass clamp screws.
6. Tighten the screw in each of the glass clamps. Tighten the screws to 10 N.m (89 in. lbs.).
7. Install the watershield onto the inside of the front door. See **Body/Door - Front/WATERSHIELD - Installation**.
8. Install the speaker onto the inside of the front door. Refer to **Electrical - Audio and Video/Audio and Video/SPEAKER - Installation**
9. Install the trim panel onto the inside of the front door. See **Body/Door - Front/PANEL, Door Trim - Installation**.

STRIKER, DOOR LATCH

Removal

REMOVAL

1. Open the front door.
2. Mark the front door latch striker location on the face of the outer B-pillar to aid reinstallation.
3. Remove the two screws that secure the striker to the B-pillar.

4. Remove the striker from the B-pillar.

Installation

INSTALLATION

1. Position the front door latch striker on the face of the outer B-pillar.
2. Install and tighten the two screws that secure the striker to the B-pillar. Tighten the screws to 33 N.m (24 ft. lbs.).
3. Adjust the latch striker position as necessary to achieve proper door spacing and latch operation.

WATERSHIELD

Removal

REMOVAL

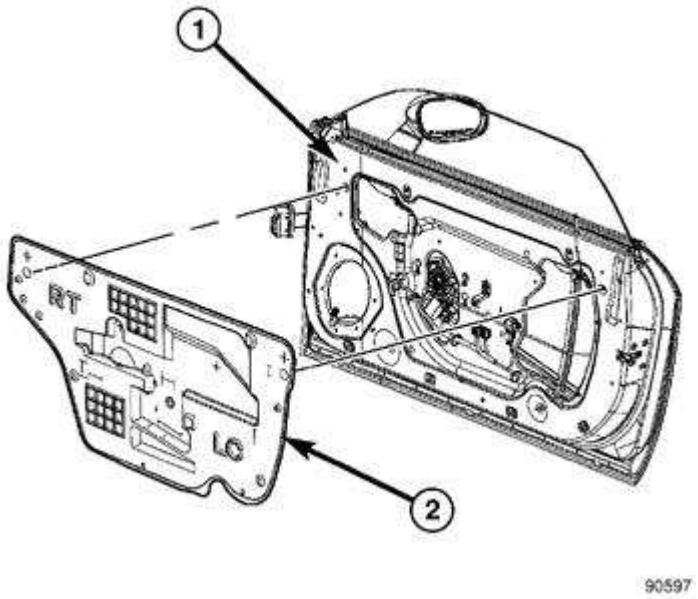

Fig. 283: Door Trim Panel Watershield
Courtesy of CHRYSLER LLC

CAUTION: Do not allow the watershield or adhesive to become contaminated with dirt or other foreign substances.

Do not damage the watershield during removal and installation.

If the watershield becomes contaminated or damaged, replace the watershield.

1. Remove the trim panel from the front door (1). See **Body/Door - Front/PANEL, Door Trim -**

Removal.

2. Remove the watershield (2) from the door.

Installation

INSTALLATION

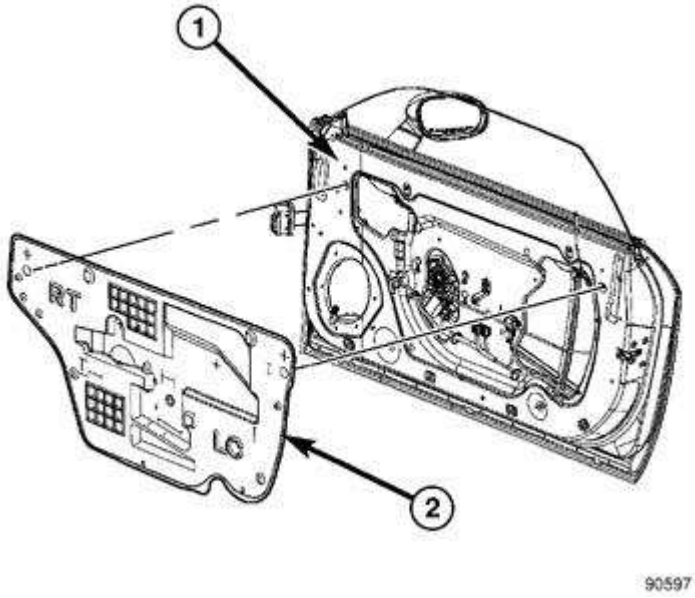

Fig. 284: Door Trim Panel Watershield
Courtesy of CHRYSLER LLC

CAUTION: Do not allow the watershield or adhesive to become contaminated with dirt or other foreign substances.

Do not damage the watershield during removal and installation.

If the watershield becomes contaminated or damaged, replace the watershield.

1. Install the water shield (2) to the door (1).
2. Apply firm and even pressure to the adhesive bead along the remaining edges of the watershield to seal it to the inside of the door. Be certain that the watershield is sealed to the inside of the door.
3. Install the door trim panel. See **Body/Door - Front/PANEL, Door Trim - Installation**.

EXTERIOR

BELLY PAN

Removal

REMOVAL

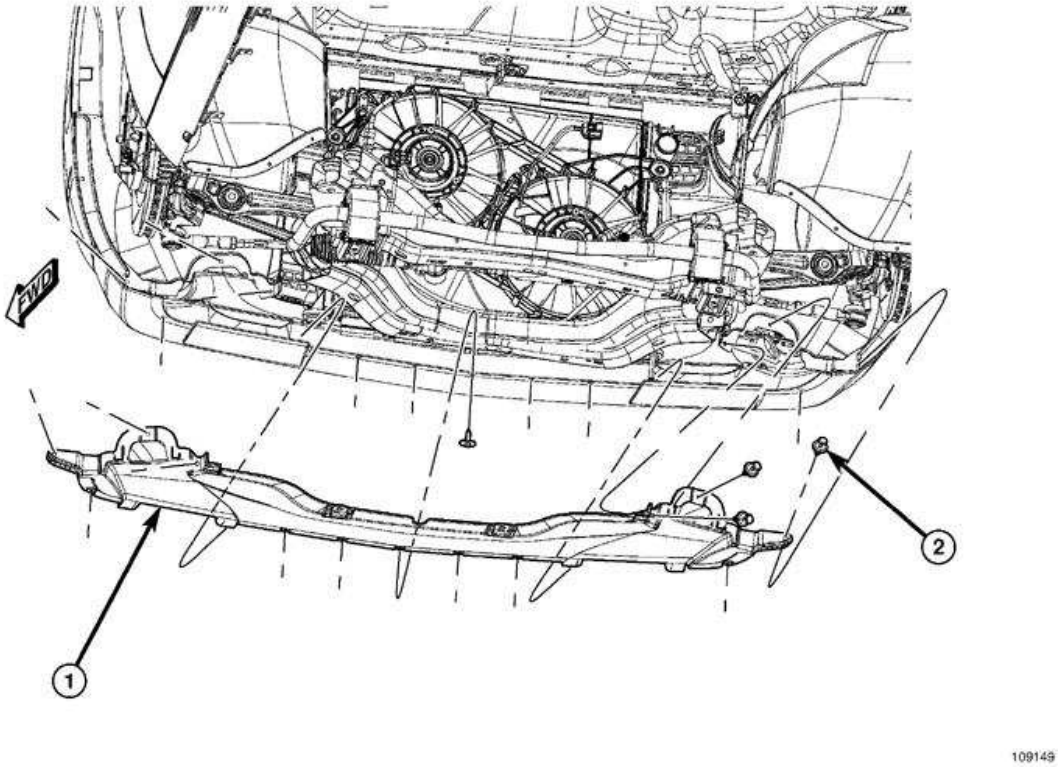

Fig. 285: Removing/Installing Front Belly Pan
Courtesy of CHRYSLER LLC

1. Raise and support the vehicle.
2. Remove the fasteners that secure the front belly pan to the front fascia.
3. Remove the fasteners (2) that secure the front belly pan (1) to the underside of the vehicle.
4. Remove the push pins that connect the front belly pan to the front splash shields.
5. Remove the front belly pan from the underside of the vehicle.

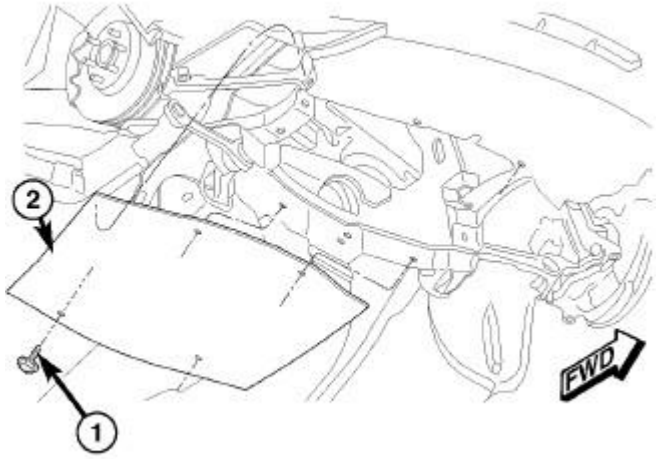

Fig. 286: Rear Belly Pan
Courtesy of CHRYSLER LLC

6. Remove the fasteners (1) that secure the rear belly pan (2) to the underside of the vehicle.
7. Remove the rear belly pan from the underside of the vehicle.

Installation

INSTALLATION

NOTE: During installation, ensure rear belly pan is shingled underneath front belly pan. Failure to do so may result in damage to belly pan.

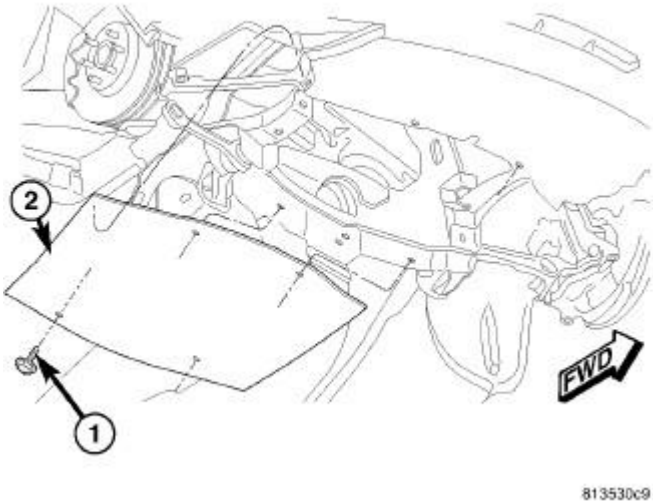

Fig. 287: Rear Belly Pan
Courtesy of CHRYSLER LLC

1. Position the rear belly pan (2) to the underside of the vehicle.
2. Install the fasteners (1) that secure the rear belly pan to the underside of the vehicle.

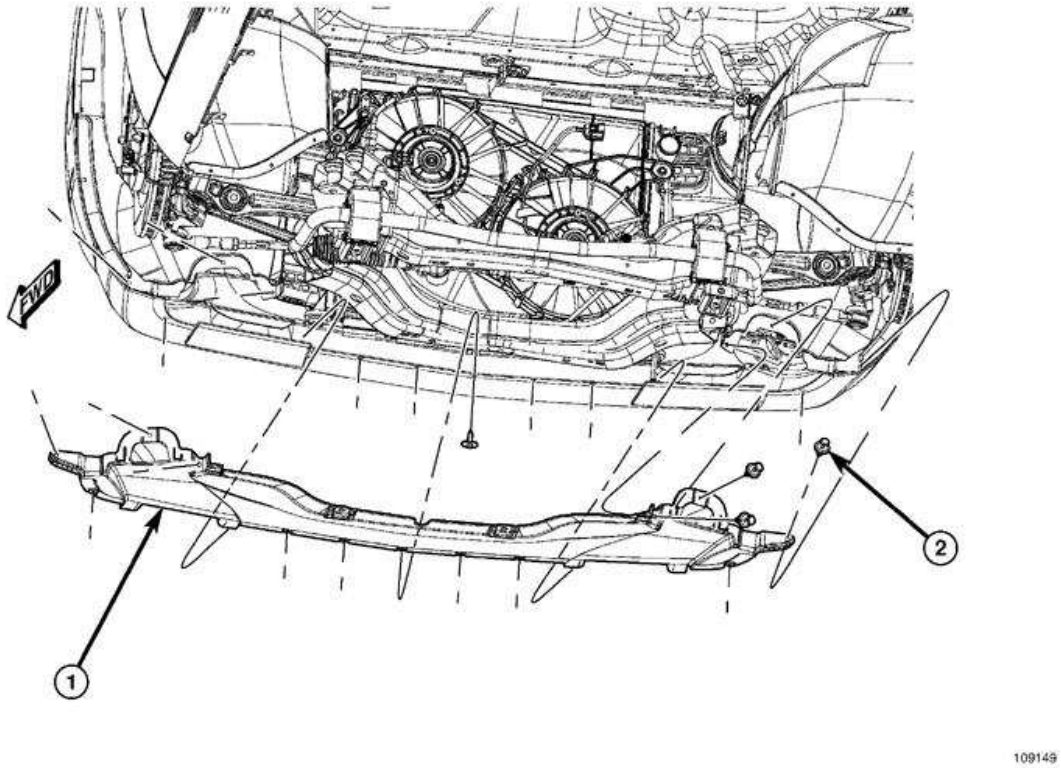

Fig. 288: Removing/Installing Front Belly Pan
Courtesy of CHRYSLER LLC

3. Position the front belly pan (1) to the underside of the vehicle.
4. Install the fasteners (2) that secure the front belly pan to the underside of the vehicle.
5. Install the fasteners that secure the front belly pan to the front fascia.
6. Install the push pins that connect the front belly pan to the front splash shields.
7. Lower the vehicle.

CLADDING, BODY

Removal

REMOVAL

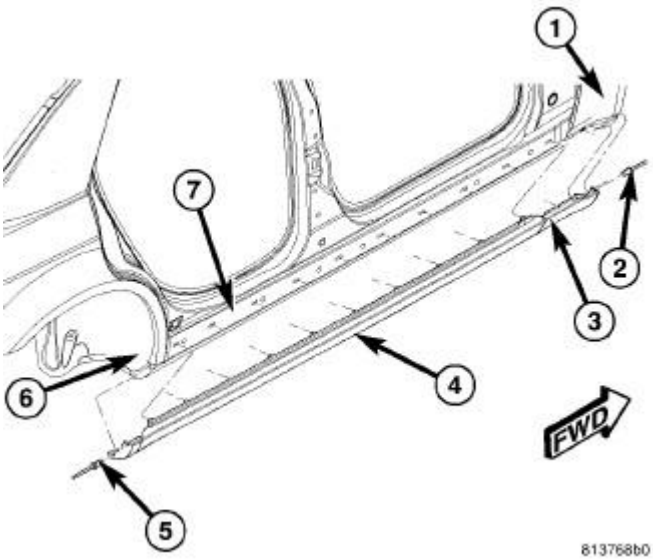

Fig. 289: Body Side Cladding
Courtesy of CHRYSLER LLC

1. Raise and support the vehicle.
2. Remove the wheels from the side of the vehicle being serviced. Refer to **Tires and Wheels - Removal** .
3. Remove the pop rivets (2 and 5) from the front fender (1) and rear quarter panel (6).
4. Remove the rear body side cladding (4) by disengaging the cladding retaining clips from the rocker panel (7).
5. Remove the front body side cladding (3) by disengaging the retaining clip from the front fender.

Installation

INSTALLATION

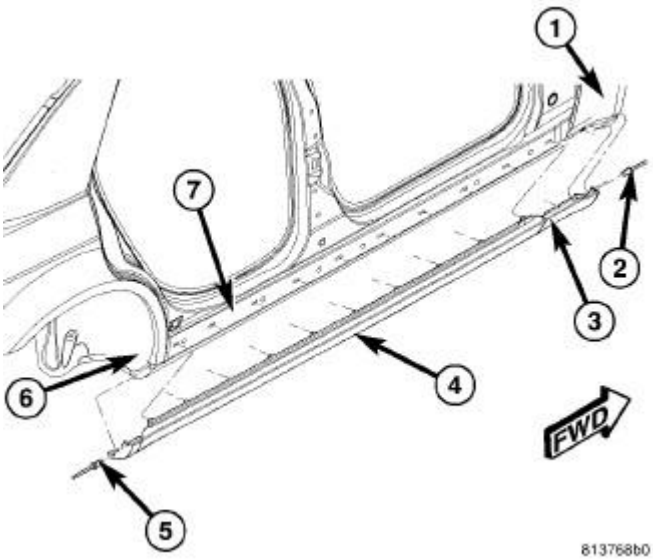

Fig. 290: Body Side Cladding
Courtesy of CHRYSLER LLC

1. Position the front body side cladding (3) to the front fender (1).
2. Engaging the front cladding retaining clip to the front fender.
3. Position the rear body side cladding (4) to the rocker panel (6).
4. Engaging the rear cladding retaining clips to the rocker panel.
5. Install the pop rivets (2 and 5).
6. Install the wheels. Refer to **Tires and Wheels - Installation** .
7. Lower the vehicle.

COVER, COWL PANEL

Removal

REMOVAL

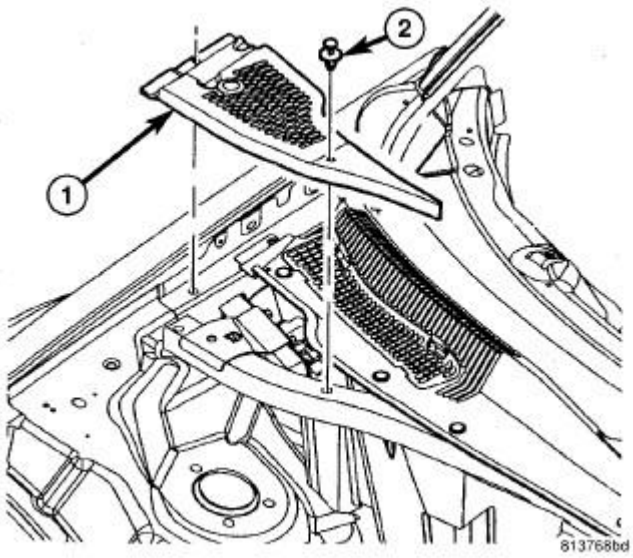

Fig. 291: Cowl Panel 1
Courtesy of CHRYSLER LLC

1. Remove the two push pins (2) that secure the front cowl top panel (1) to the right rear corner of the engine compartment
2. Remove the front cowl top panel.

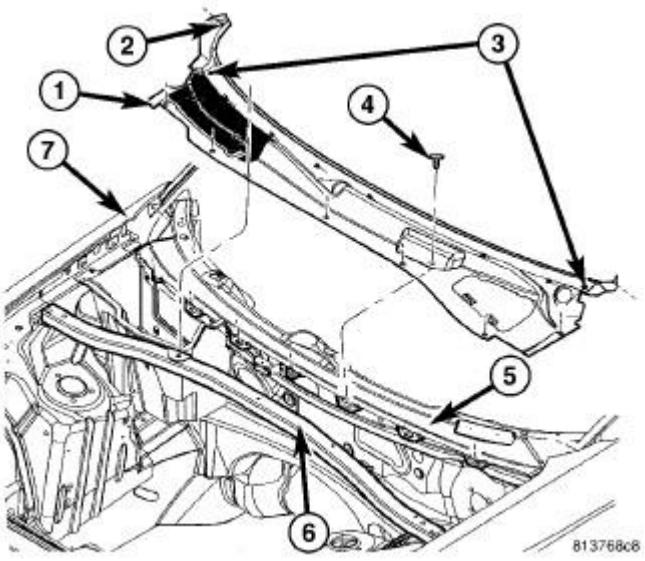

Fig. 292: Cowl Panel 2
Courtesy of CHRYSLER LLC

3. Remove the windshield wiper arms. Refer to **Electrical - Wipers/Washers/Wipers/Washers/ARM, Wiper - Removal** .
4. Remove the push-pin (2) that secures each end of the cowl top panel (1) to each front fender

(7).

5. Disengage the two 1/4-turn fasteners (3) that secure the cowl top panel to the dash panel (5).
6. Remove the six push-pins (4) that secure the cowl top panel to the strut tower support (6).
7. Disengage the integral retaining clips that secure the cowl top panel to the dash panel and remove the cowl panel from the engine compartment.

Installation

INSTALLATION

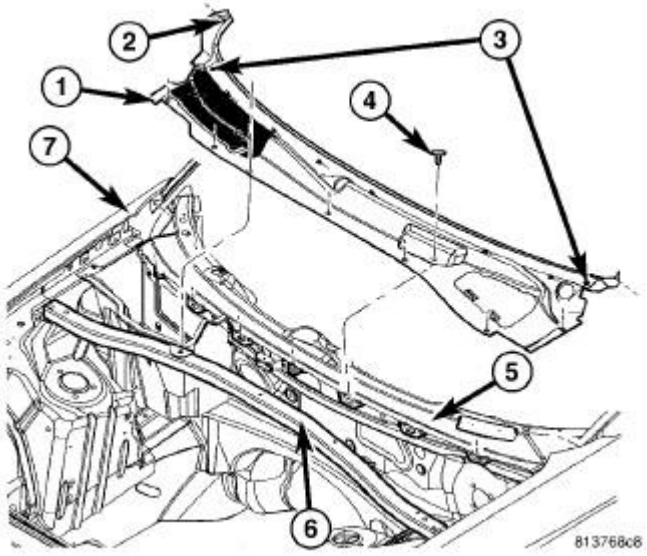

Fig. 293: Cowl Panel 2
Courtesy of CHRYSLER LLC

1. Position the cowl top panel (1) into the engine compartment.
2. Engage the integral retaining clips that secure the cowl top panel to the dash panel (5).
3. Install the six push-pins (4) that secure the cowl top panel to the strut tower support (6).
4. Engage the 1/4-turn fasteners (3) that secure cowl top panel to the dash panel.
5. Install the push-pin (2) that secures each end of the cowl top panel to each front fender (7).
6. Install the windshield wiper arms. Refer to **Electrical - Wipers/Washers/Wipers/Washers/ARM, Wiper - Installation** .

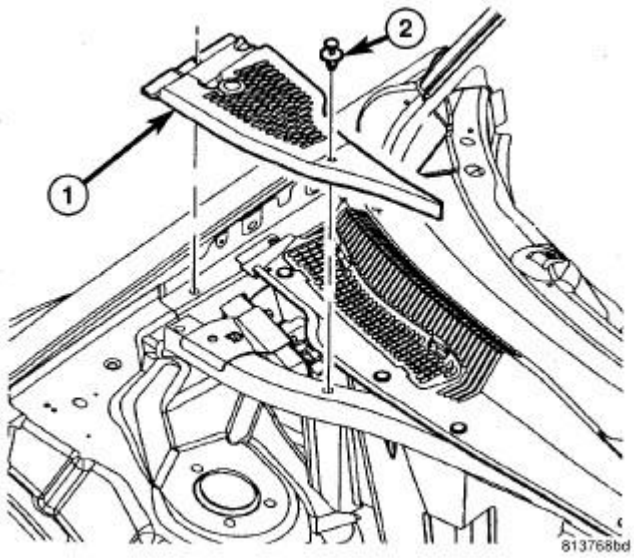

Fig. 294: Cowl Panel 1
Courtesy of CHRYSLER LLC

7. Position the front cowl top panel (1) to the right rear corner of the engine compartment.
8. Install the two push-pins (2) that secure the front cowl top panel.

CROSSMEMBER, HEADLAMP MOUNTING

Removal

REMOVAL

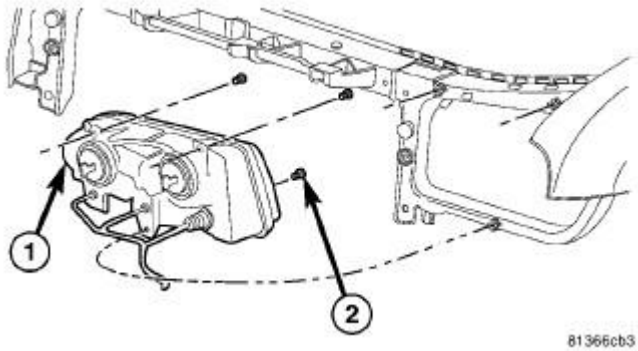

Fig. 295: Headlamp Attaching Screws
Courtesy of CHRYSLER LLC

1. Disconnect and isolate the negative battery cable.
2. Remove the front fascia. Refer to **Frame and Bumpers/Bumpers/FASCIA, Front - Removal** .
3. Remove the headlamp units (1). Refer to **Electrical - Lamps and Lighting/Lamps/Lighting - Exterior/UNIT, Front Lamp - Removal** .

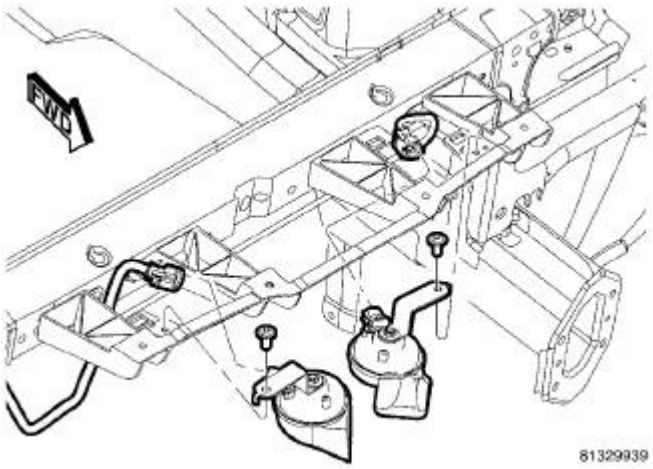

Fig. 296: Horn Mounting
Courtesy of CHRYSLER LLC

4. Disconnect the headlamp wire harness from the horns.
5. Remove the bolts that secure the horns to the headlamp mounting crossmember and remove the horns.

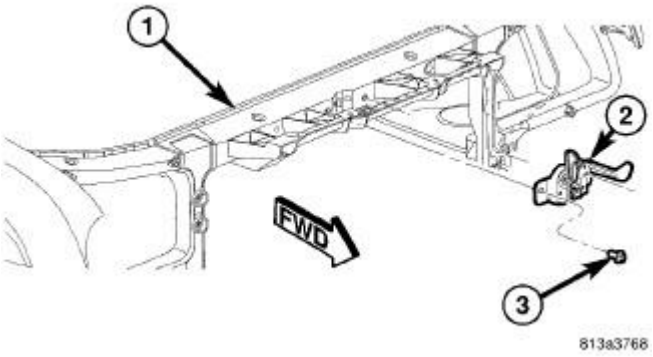

Fig. 297: Removing/Installing Hood Latch
Courtesy of CHRYSLER LLC

6. Mark the location of the hood latch (2) on the front of the headlamp mounting crossmember (1) to aid in reinstallation.
7. Remove the two bolts (3) that secure the hood latch to the headlamp mounting crossmember and position the hood latch and cable out of the way.

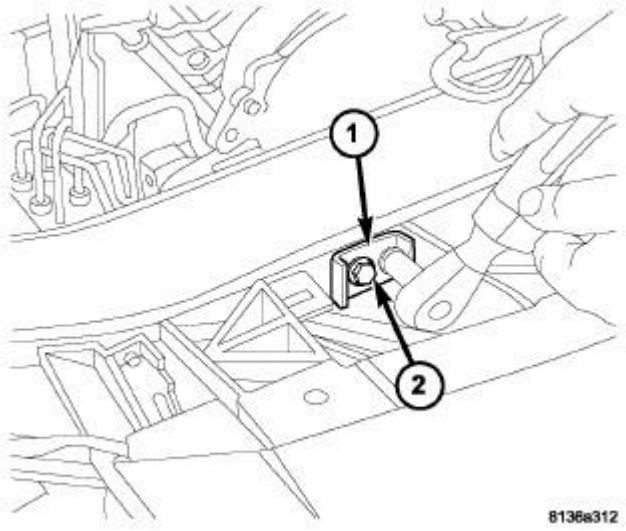

Fig. 298: Radiator Mounting Bracket
Courtesy of CHRYSLER LLC

8. Remove the bolts (2) the secure the radiator mounting brackets (1) to the headlamp mounting crossmember.

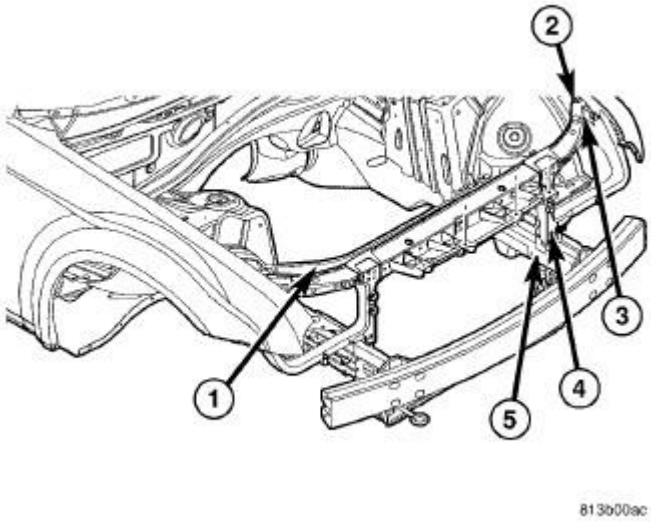

Fig. 299: Headlamp Mounting Crossmember
Courtesy of CHRYSLER LLC

NOTE: Mark the location of the headlamp mounting crossmember to the other body components prior to removal of the crossmember to aid in reinstallation.

9. Mark the location of the headlamp mounting crossmember (1) to the front fenders.
10. Remove the bolts (2 and 3) that secure the headlamp mounting crossmember to the front fenders.
11. Remove the bolts (4) that secure the headlamp mounting crossmember to the front frame rails (5).
12. Remove the headlamp mounting crossmember from the engine compartment.

Installation

INSTALLATION

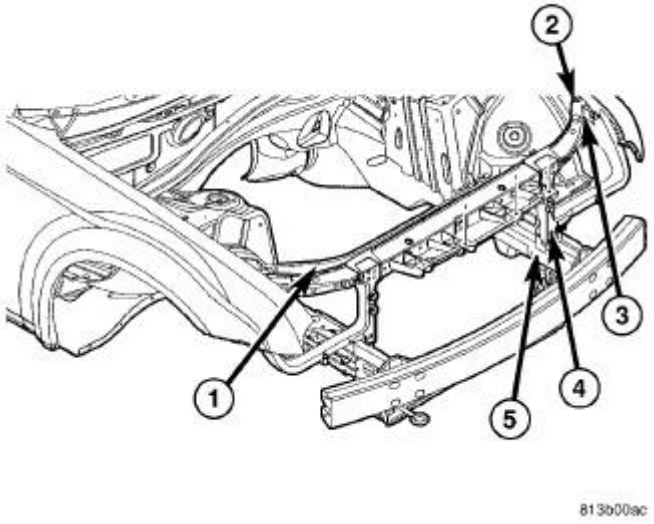

Fig. 300: Headlamp Mounting Crossmember
Courtesy of CHRYSLER LLC

NOTE: The Vehicle Emission Control Information (VECI) label(s) must be in place for the life of the vehicle. When replacing the component in which the VECI label is adhered, a new VECI label must also be adhered to the new component.

1. Position the headlamp mounting crossmember (1) into the engine compartment.
2. Loosely install the bolts (2 and 3) that secure the headlamp mounting crossmember to the front fenders.
3. Loosely install the bolts (4) that secure the headlamp mounting crossmember to the front frame rails (5).
4. Align the headlamp mounting crossmember using the alignment marks previously indicated and tighten all of the retaining bolts to 28 N.m (21 ft. lbs.).

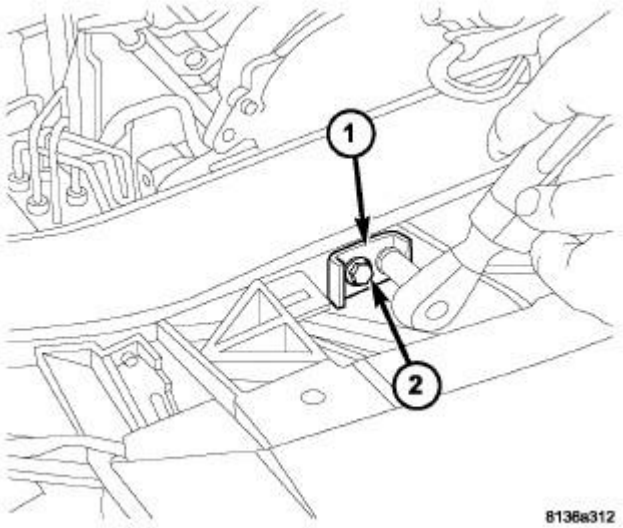

Fig. 301: Radiator Mounting Bracket
Courtesy of CHRYSLER LLC

5. Install the bolts (2) that secure the radiator mounting bracket (1) to the headlamp mounting crossmember. Tighten the bolts to 5 N.m (45 in. lbs.).

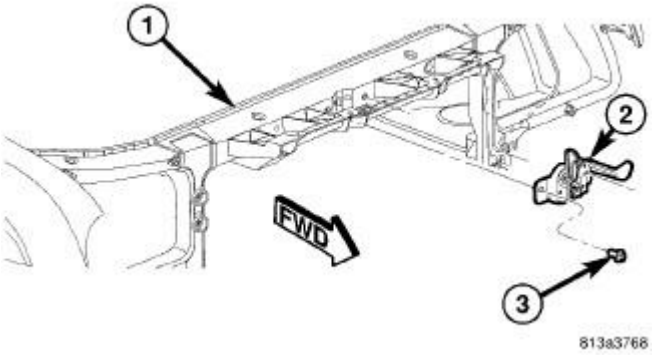

Fig. 302: Removing/Installing Hood Latch
Courtesy of CHRYSLER LLC

6. Position the latch (2) to the front of the crossmember (1).
7. Loosely install the two bolts (3) that secure the hood latch to the headlamp mounting crossmember.
8. Align the hood latch using the alignment marks previously indicated and tighten the hood latch bolts to 28 N.m (21 ft. lbs.).

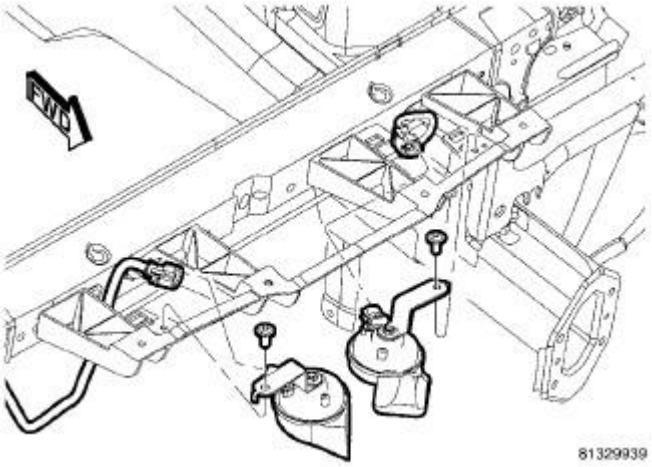

Fig. 303: Horn Mounting
Courtesy of CHRYSLER LLC

9. Install the horns onto the headlamp mounting crossmember. Tighten the bolts to 28 N.m (21 ft. lbs.).
10. Connect the headlamp wire harness to the horns.

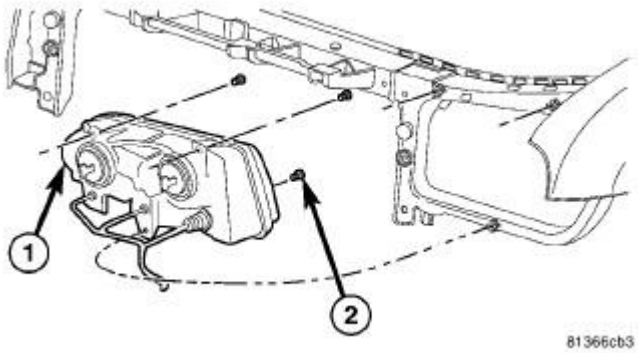

Fig. 304: Headlamp Attaching Screws
Courtesy of CHRYSLER LLC

11. Install the headlamp units (1). Refer to **Electrical - Lamps and Lighting/Lamps/Lighting - Exterior/UNIT, Front Lamp - Installation**
12. Install the front fascia. Refer to **Frame and Bumpers/Bumpers/FASCIA, Front - Installation** .
13. Reconnect the negative battery cable.

NOTE: For vehicles equipped with the optional Automatic Express Up power window feature, recalibration of this feature is required whenever power to the door module is disrupted. Refer to Electrical - Engine Systems/Battery System - Standard Procedure

14. Carefully close the hood and verify hood latch and panel alignment. Adjust as necessary.

GRILLE

Removal

REMOVAL

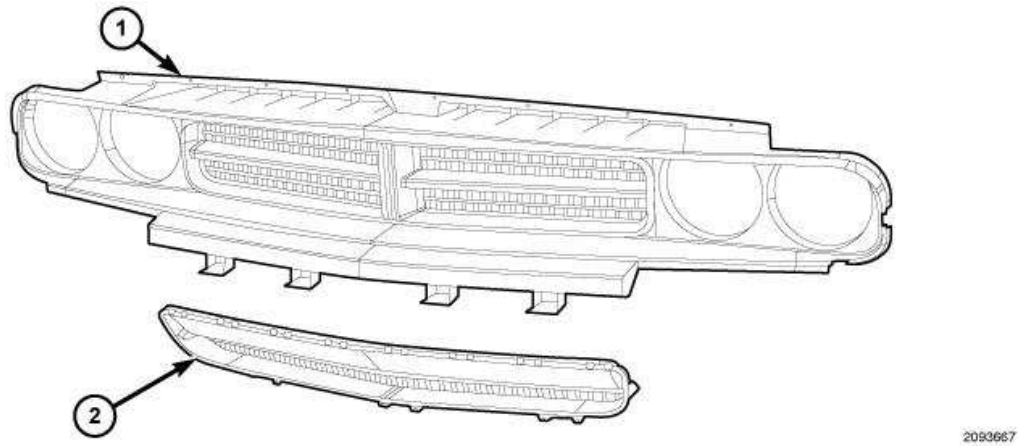

Fig. 305: Upper & Lower Grille Inserts
Courtesy of CHRYSLER LLC

1. Remove the front fascia from the vehicle. Refer to **Frame and Bumpers/Bumpers/FASCIA, Front - Removal** .
2. If required, remove the retainers that secure the lower grille insert (2) to the fascia.
3. Carefully remove the lower insert from the fascia.
4. If required, remove the retainers that secure the upper grille insert assembly (1) to the fascia.
5. Carefully remove the assembly from the fascia.

Installation

INSTALLATION

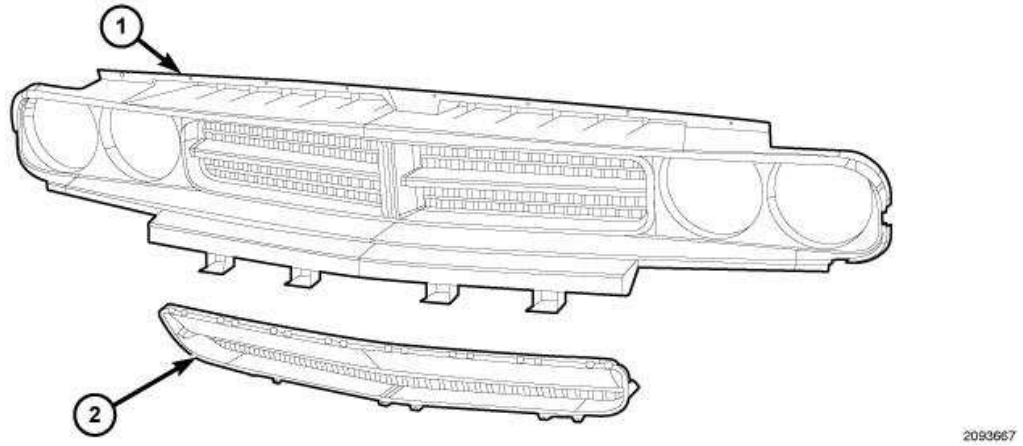

Fig. 306: Upper & Lower Grille Inserts
Courtesy of CHRYSLER LLC

1. Place the upper grille assembly (1) into position to the fascia.
2. Install the retainers that secure the assembly to the fascia.
3. Place the lower grille insert (2) into position to the fascia.
4. Install the retainers that secure the lower grille insert to the fascia.
5. Install the front fascia to the vehicle. Refer to **Frame and Bumpers/Bumpers/FASCIA, Front - Installation** .

MIRROR, OUTSIDE REARVIEW

Removal

REMOVAL

1. Disconnect and isolate the negative battery cable.
2. Remove the door trim panel. See **Body/Door - Front/PANEL, Door Trim - Removal**.
3. Remove the water shield.
4. Disconnect the door wire harness connector from the mirror electrical connector.
5. Remove the three nuts that secure the outside rearview mirror to the front door.
6. Remove the outside rearview mirror from the front door.

Installation

INSTALLATION

1. Position the outside rearview mirror to the front door.
2. Install the three nuts that secure the mirror to the front door. Tighten the nuts to 7 N.m (62 in. lbs.).
3. Connect the door wire harness connector to the mirror electrical connector.
4. Install the water shield.
5. Install the trim panel to the inside of the front door. See **Body/Door - Front/PANEL, Door Trim - Installation**.
6. Reconnect the negative battery cable.

NOTE: **For vehicles equipped with the optional Automatic Express Up power window feature, recalibration of this feature is required whenever power to the door module is disrupted. Refer to Electrical - Engine Systems/Battery System - Standard Procedure**

MIRROR, OUTSIDE REARVIEW, GLASS

Removal

REMOVAL

WARNING: Always wear eye and hand protection when servicing the mirror glass. Failure to observe these warnings may result in personal injury from broken glass.

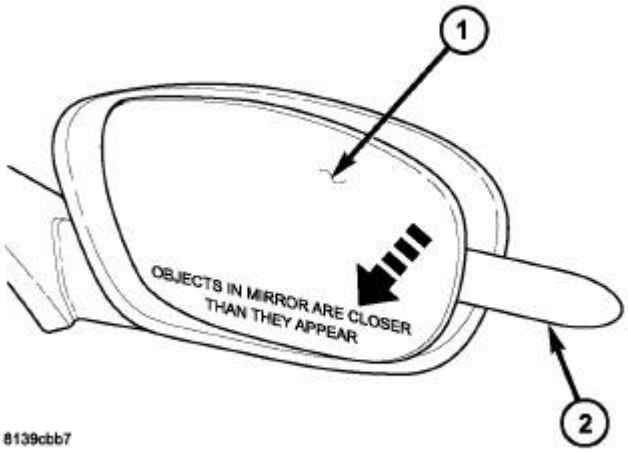

Fig. 307: Removing Glass-Outside Rearview Mirror
Courtesy of CHRYSLER LLC

1. Position the mirror glass (1) so that it is facing in toward the vehicle as far as possible.
2. Disconnect and isolate the negative battery cable.
3. Using a trim stick C-4755 or equivalent flat bladed tool (2), release the two outer mirror glass holder retaining clips from the mirror motor by inserting the trim stick between the mirror glass holder and the mirror motor.

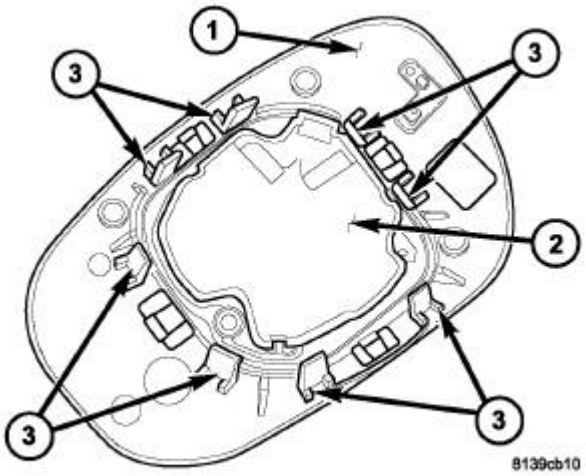

Fig. 308: Mirror Glass Retaining Clips
Courtesy of CHRYSLER LLC

4. Carefully pull/pry the outside edges of the mirror glass holder (1) away from the mirror motor (2) to disengage the remaining six mirror glass retaining clips (3) from the mirror motor.
5. Separate the mirror glass holder from the mirror motor and disconnect the mirror wire harness from the heated glass electrical connector, if equipped.

Installation

INSTALLATION

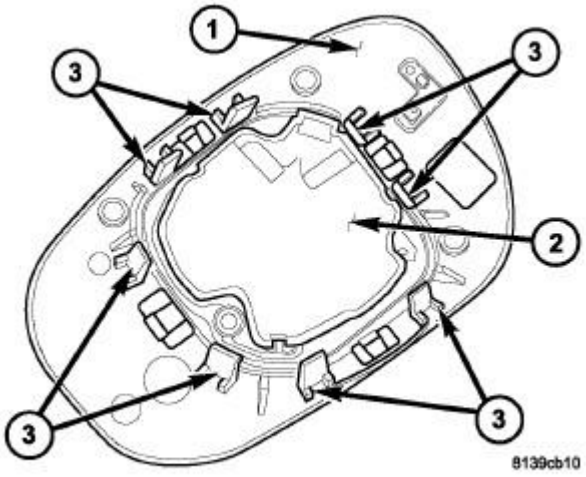

Fig. 309: Mirror Glass Retaining Clips
Courtesy of CHRYSLER LLC

1. Connect the mirror wire harness to the heated glass electrical connector, if equipped.
2. Position the mirror glass holder (1) to the mirror assembly and align the eight mirror glass retaining clips (3) to the mirror motor (2).

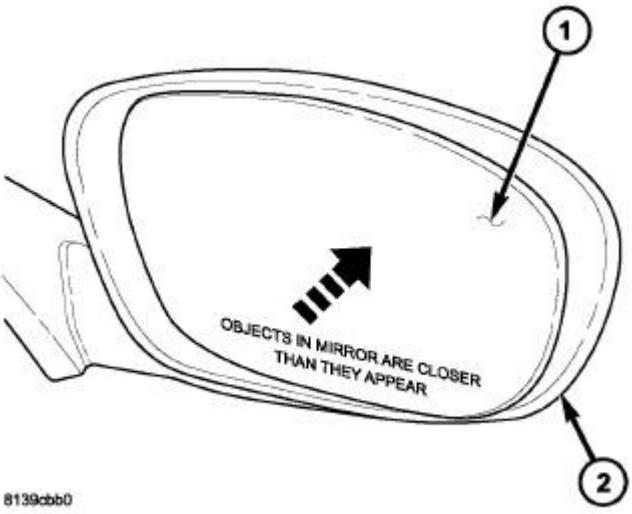

Fig. 310: Glass- Outside Rearview Mirror - Install
Courtesy of CHRYSLER LLC

NOTE: Pressure must be applied equally over the center portion of the mirror glass to fully engage the mirror glass retaining clips to the mirror motor.

3. Using one hand, carefully push the mirror glass holder (1) onto the mirror motor, while at the same time supporting the mirror housing (2) from the backside with the other hand. Firmly push on the mirror glass holder until all eight mirror glass retaining clips are fully engaged.
4. Verify retention of the mirror glass holder by gently pulling outward on the glass.
5. Reconnect the negative battery cable.

NOTE: For vehicles equipped with the optional Automatic Express Up power window feature, recalibration of this feature is required whenever power to the door module is disrupted. Refer to Electrical - Engine Systems/Battery System - Standard Procedure

SHIELD, SPLASH, FRONT WHEELHOUSE

Removal

REMOVAL

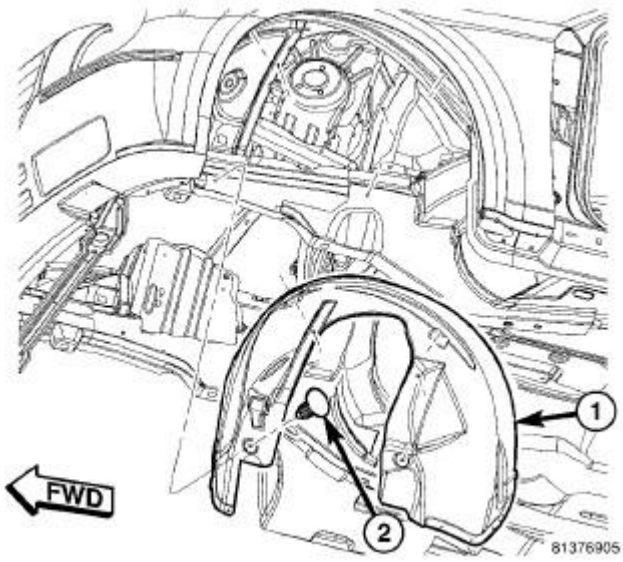

Fig. 311: Removing/Installing Front Wheelhouse Splash Shield
Courtesy of CHRYSLER LLC

1. Raise and support the vehicle.
2. Remove the wheel from the side of the vehicle being serviced. Refer to **Tires and Wheels - Removal** .
3. Remove the push-pins (2) that secure the front wheelhouse shield (1) to the body.
4. Remove the plastic rivets from the splash shield and discard.
5. Remove the front wheelhouse shield from the vehicle.

Installation

INSTALLATION

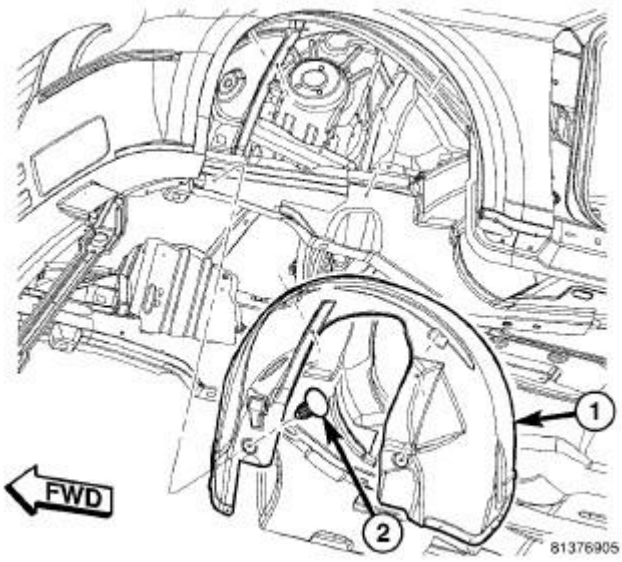

Fig. 312: Removing/Installing Front Wheelhouse Splash Shield
Courtesy of CHRYSLER LLC

1. Position the front wheelhouse shield (1) into the front fenderwell.
2. Install the push-pin (2) that secure the front wheelhouse shield to the body.
3. Install the new plastic rivets to the splash shield.
4. Install the front wheel. Refer to **Tires and Wheels - Installation** .
5. Lower the vehicle.

SHIELD, SPLASH, REAR WHEELHOUSE

Removal

REMOVAL

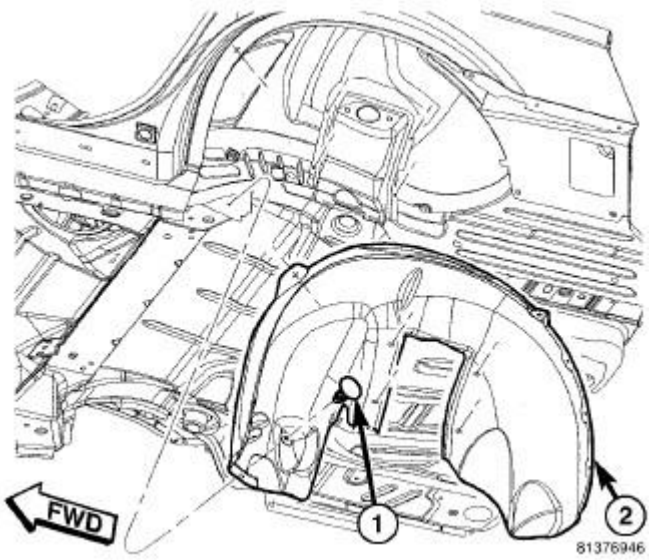

Fig. 313: Removing/Installing Rear Wheelhouse Splash Shield
Courtesy of CHRYSLER LLC

1. Raise and support the vehicle.
2. Remove the rear wheel from the side of the vehicle being serviced. Refer to **Tires and Wheels - Removal** .
3. Remove the push-pins (1) that secure the rear wheelhouse shield (2) to the body.
4. Remove the plastic rivets from the splash shield and discard.
5. Remove the rear wheelhouse shield from the vehicle.

Installation

INSTALLATION

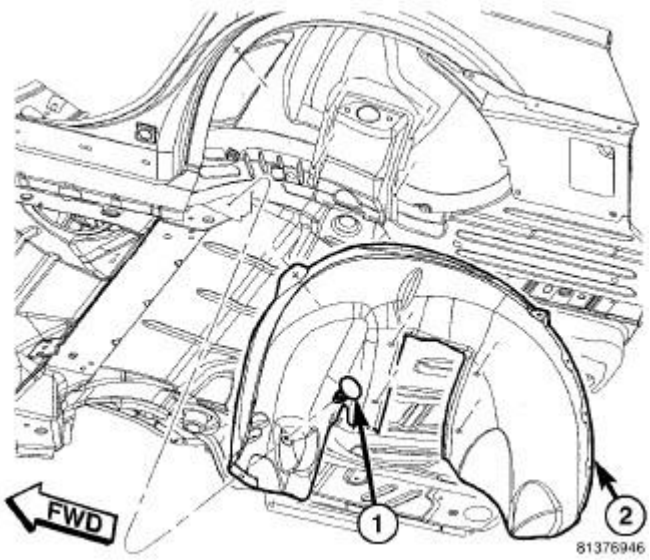

Fig. 314: Removing/Installing Rear Wheelhouse Splash Shield
Courtesy of CHRYSLER LLC

1. Position the rear splash shield (2) into the rear wheelhouse.
2. Install the push-pins (1) that secure the rear wheelhouse shield to the body.
3. Install the new plastic rivets to the splash shield.
4. Install the rear wheel. Refer to **Tires and Wheels - Installation** .
5. Lower the vehicle.

TRIM, COWL EXTENSION

Removal

REMOVAL

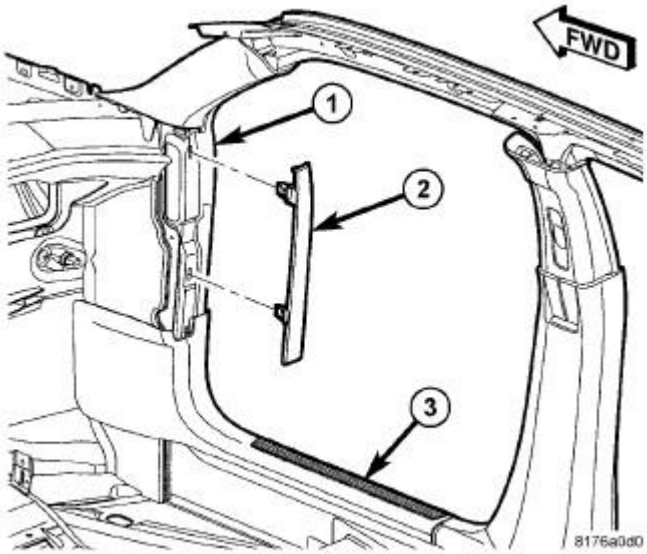

Fig. 315: Cowl Trim Extension
Courtesy of CHRYSLER LLC

1. Insert special tool C-4755 (from the outside in the direction of arrow 2) under the middle of the trim extension (2).
2. Slide trim stick up to the upper spring clip retainer, and pry to disengage clip.
3. Slide the trim stick down to the lower spring clip retainer, and pry to disengage clip.

Installation

INSTALLATION

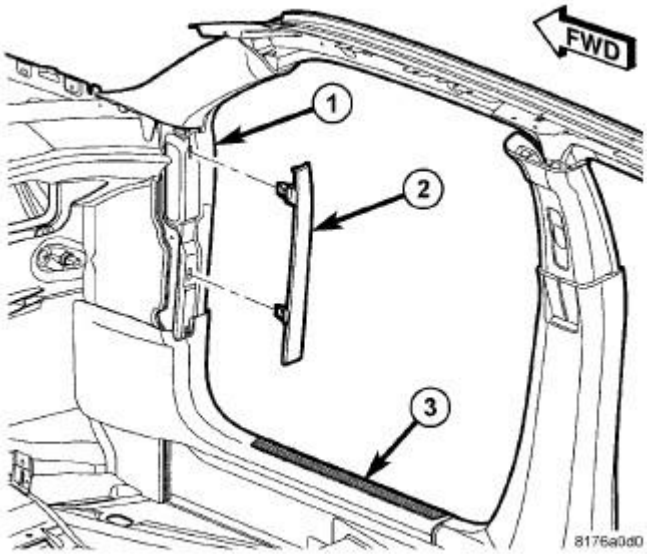

Fig. 316: Cowl Trim Extension
Courtesy of CHRYSLER LLC

1. Place trim extension (2) against cowl (1) and align spring clips with holes on cowl.
2. Tap trim extension on to cowl (1) ensuring trim extension (2) is properly seated.

HOOD

BEZEL, HOOD

Removal

REMOVAL

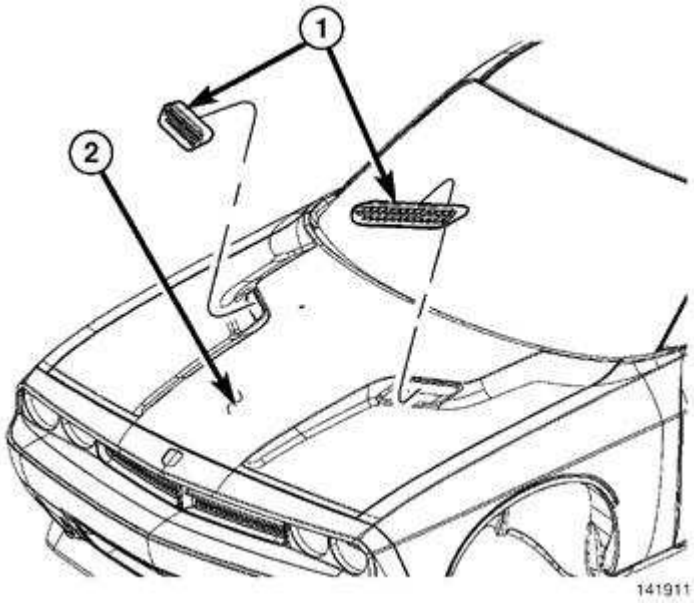

Fig. 317: Removing/Installing Hood Bezel
Courtesy of CHRYSLER LLC

1. Using trim stick C-4755 or equivalent, release tabs securing bezel (1) to hood (2).
2. Remove bezel.

Installation

INSTALLATION

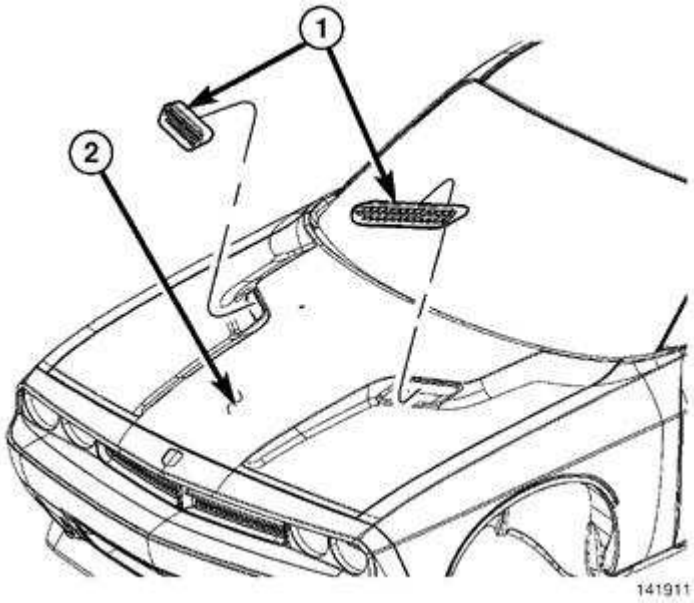

Fig. 318: Removing/Installing Hood Bezel
Courtesy of CHRYSLER LLC

1. Insert top of hood bezel (1) to hood (2).
2. Insert bottom of hood bezel to hood ensuring bezel clips fasten.

BUMPER, HOOD

Removal

REMOVAL

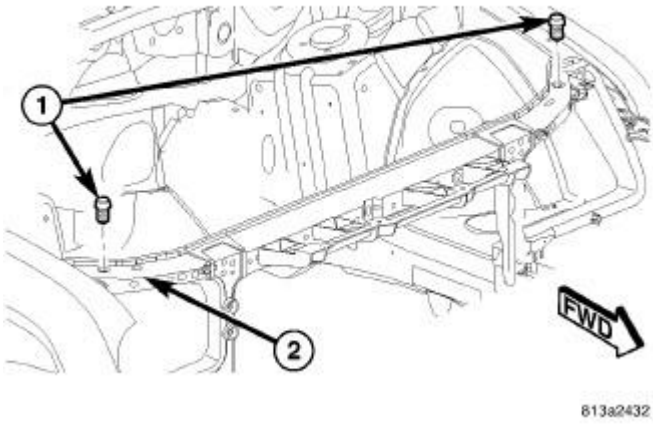

Fig. 319: Hood Adjuster Bumpers
Courtesy of CHRYSLER LLC

1. Open and support the hood.

2. Unscrew the hood adjustement bumper(s) (1) from the mounting hole(s) in the top of the headlamp mounting crossmember (2).
3. Remove the adjustment bumper(s) from the vehicle.

Installation

INSTALLATION

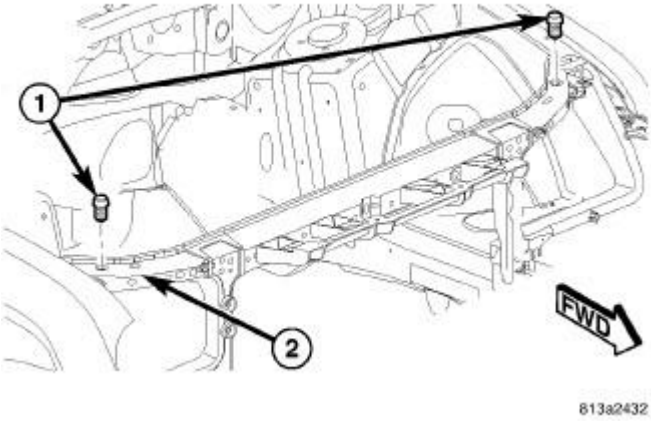

Fig. 320: Hood Adjuster Bumpers
Courtesy of CHRYSLER LLC

1. Install the hood adjustment bumper(s) (1) into the mounting hole(s) located in the top of the headlamp mounting crossmember (2).
2. Adjust the adjustment bumper(s) in or out of the crossmember as necessary to achieve proper hood alignment.

CABLE, HOOD RELEASE

Removal

REMOVAL

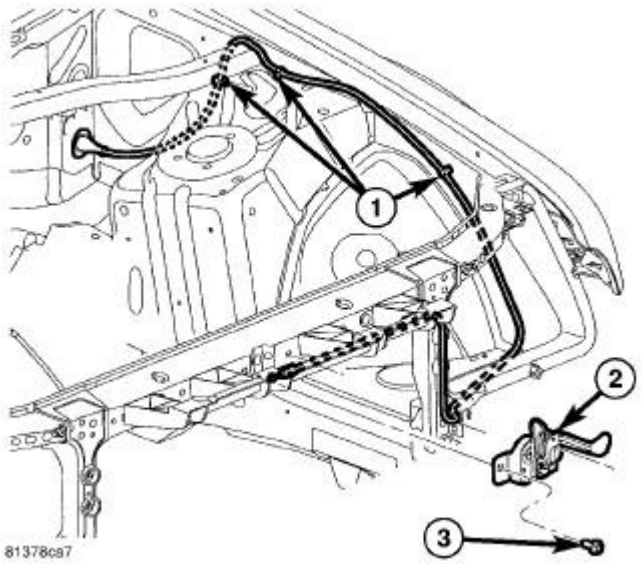

Fig. 321: Latch Release Cable
Courtesy of CHRYSLER LLC

1. Remove the hood latch (2) from the vehicle. See **Body/Hood/LATCH, Hood - Removal**.
2. Remove the left headlamp unit from the vehicle. Refer to **Electrical - Lamps and Lighting/Lamps/Lighting - Exterior/UNIT, Front Lamp - Removal**
3. Disengage the hood latch release cable from the integral routing clips on the headlamp mounting crossmember and the routing clips (1) along the left side of the engine compartment.

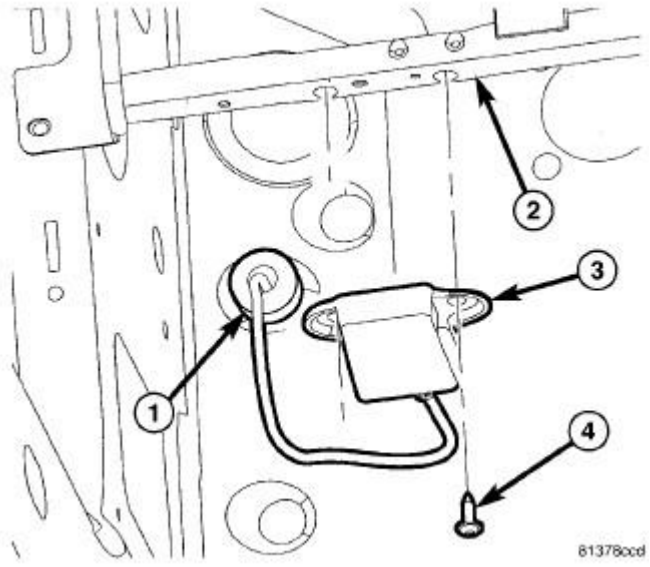

Fig. 322: Hood Latch Release Handle
Courtesy of CHRYSLER LLC

4. From the passenger compartment, remove the closeout panel from beneath the left side of the

instrument panel. See **Body/Instrument Panel/PANEL, Silencer - Removal**.

5. Unseat the hood latch release cable grommet (1) from the dash panel.
6. Remove the two screws (4) that secure the hood latch release handle (3) to the lower instrument panel reinforcement (2).
7. Remove the hood latch release handle and cable through the passenger compartment of the vehicle.

Installation

INSTALLATION

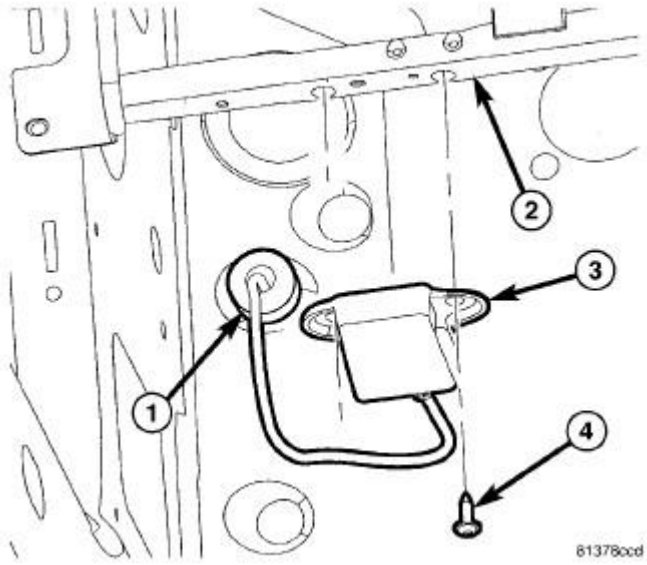

Fig. 323: Hood Latch Release Handle
Courtesy of CHRYSLER LLC

1. Position the hood latch release handle and cable (3) under the left side of the instrument panel in the passenger compartment of the vehicle.
2. Thread the cable through the appropriate hole in the dash panel far enough to seat the cable grommet (1) into the hole.
3. Position the hood latch release handle to the lower instrument panel reinforcement (2).
4. Install and tighten the two screws (4) that secure the handle to the reinforcement. Tighten the screws to 5 N.m (45 in. lbs.).
5. Reinstall the closeout panel beneath the left side of the instrument panel. See **Body/Instrument Panel/PANEL, Silencer - Installation**.

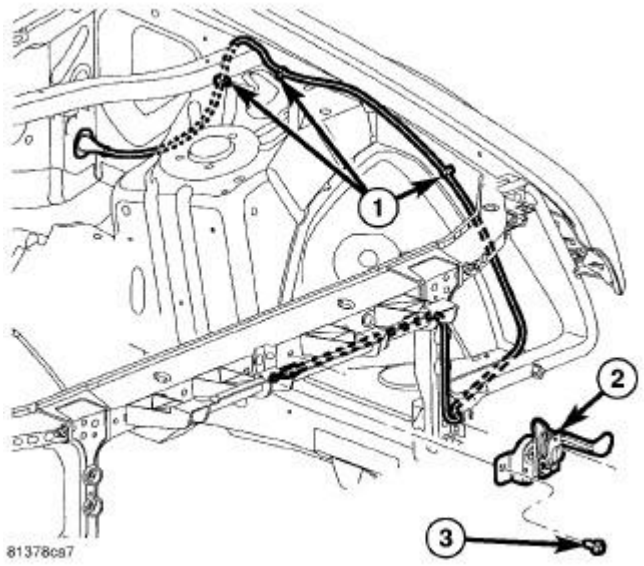

Fig. 324: Latch Release Cable
Courtesy of CHRYSLER LLC

6. Route the hood latch release cable from the dash panel along the left side of the engine compartment to the center of the headlamp mounting crossmember as shown in illustration.
7. Fully engage the cable into the integral routing clips on the headlamp mounting crossmember and the routing clips (1) along the left side of the engine compartment.
8. Reinstall the left headlamp unit to the vehicle. Refer to **Electrical - Lamps and Lighting/Lamps/Lighting - Exterior/UNIT, Front Lamp - Installation**
9. Reinstall the hood latch (2) to the vehicle. See **Body/Hood/LATCH, Hood - Installation**.

HINGE, HOOD

Removal

REMOVAL

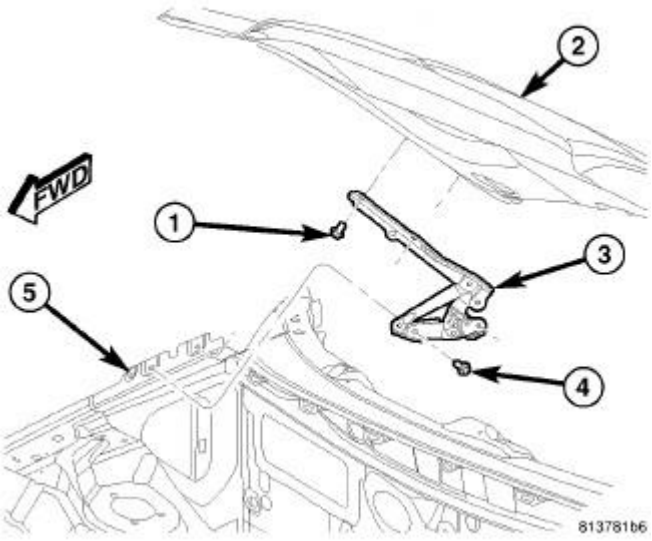

Fig. 325: Hood Hinge
Courtesy of CHRYSLER LLC

1. Open and support the hood (2) with a suitable prop or block.
2. If the vehicle is so equipped, disconnect the upper end of the gas support cylinder from the upper bracket of the hood hinge (3).
3. Mark the location of the hood hinge upper bracket on the hood (2) inner panel to aid reinstallation.
4. Remove the two screws (1) that secure the hinge to the hood.
5. Mark the hinge lower bracket location on the inside of the front fender ledge (5) to aid reinstallation.
6. Remove the two screws (4) that secure the hinge to the fender.
7. Remove the hood hinge from the vehicle.

Installation

INSTALLATION

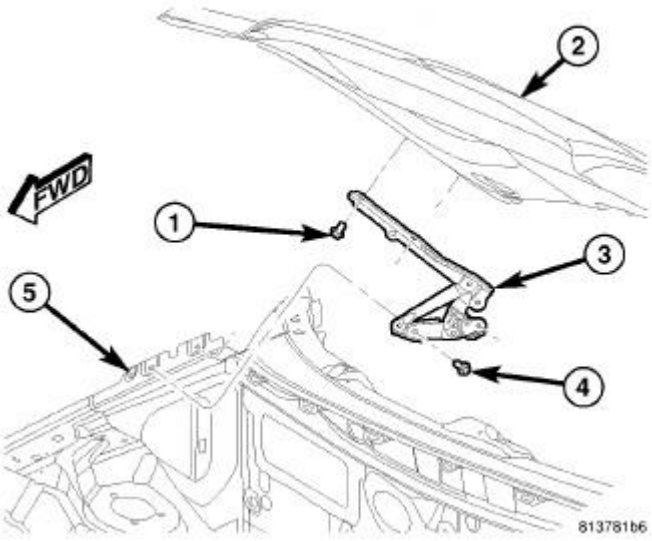

Fig. 326: Hood Hinge
Courtesy of CHRYSLER LLC

1. Position the lower bracket of the hood hinge (3) to the inside of the front fender ledge (5) on the vehicle.
2. Install and tighten the two screws (4) that secure the hinge to the fender. Tighten the screws to 28 N.m (21 ft. lbs.).
3. Position the hood panel (2) to the upper hinge bracket on the vehicle.
4. Install and tighten the two screws (2) that secure the hinge to the hood. Tighten the screws to 28 N.m (21 ft. lbs.).
5. If the vehicle is so equipped, reinstall the upper end of the gas support cylinder to the upper hinge bracket.
6. Remove the fixture being used to support the hood for service and close the hood.
7. Adjust the hood hinge position as necessary to achieve proper spacing and operation.

HOOD

Removal

REMOVAL

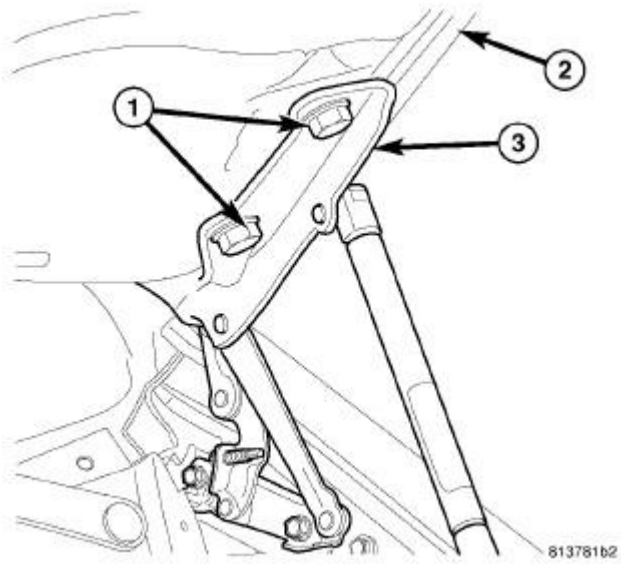

Fig. 327: Upper Hinge Bracket
Courtesy of CHRYSLER LLC

1. Open and support the hood (2).
2. Disconnect the washer supply hose between the body and the two washer nozzles on the underside of the hood.
3. Mark both upper hinge bracket (3) locations on the hood inner panel to aid reinstallation.
4. With the aid of an assistant, support the hood while removing the two screws (1) that secure each upper hinge bracket to the hood.
5. Remove the hood from the vehicle.

Installation

INSTALLATION

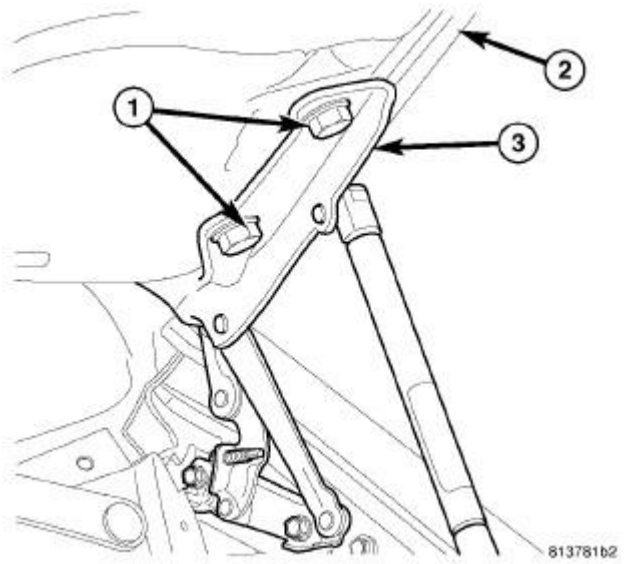

Fig. 328: Upper Hinge Bracket
Courtesy of CHRYSLER LLC

1. With the aid of an assistant, support and position the hood panel (2) to the two upper hinge brackets (3) on the vehicle.
2. Install and tighten the two screws (1) that secure each upper hinge bracket to the hood. Tighten the screws to 28 N.m (21 ft. lbs.).
3. Reconnect the washer supply hose between the body and the two washer nozzles on the underside of the hood.
4. Close the hood.
5. Adjust the hood hinge positions and the hood adjuster bumpers as necessary to achieve proper spacing and operation.

LATCH, HOOD

Removal

REMOVAL

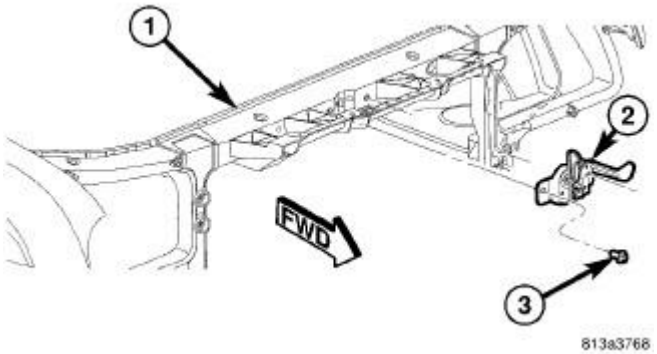

Fig. 329: Removing/Installing Hood Latch
Courtesy of CHRYSLER LLC

1. Disconnect and isolate the battery negative cable.
2. Unsnap the left underhood appearance cover from the headlamp mounting crossmember.
3. Disengage the interlocking feature on the inboard end of the left underhood appearance cover from the inboard end of the right cover and remove it from the vehicle.
4. Unsnap the right underhood appearance cover from the headlamp mounting crossmember and remove it from the vehicle.
5. Mark the location of the hood latch (2) on the front of the headlamp mounting crossmember (1) to aid reinstallation.
6. Remove the two screws (3) that secure the latch to the front of the crossmember.

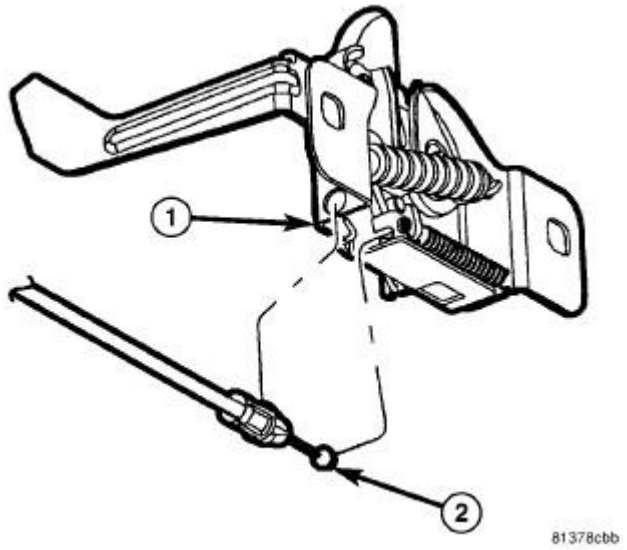

Fig. 330: Hood Latch Release Cable
Courtesy of CHRYSLER LLC

7. Pull the latch (1) away from the front of the crossmember far enough to access and disengage the hood latch release cable housing from the latch and the cable ball end (2) from the latch lever.
8. Remove the hood latch from the vehicle.

Installation

INSTALLATION

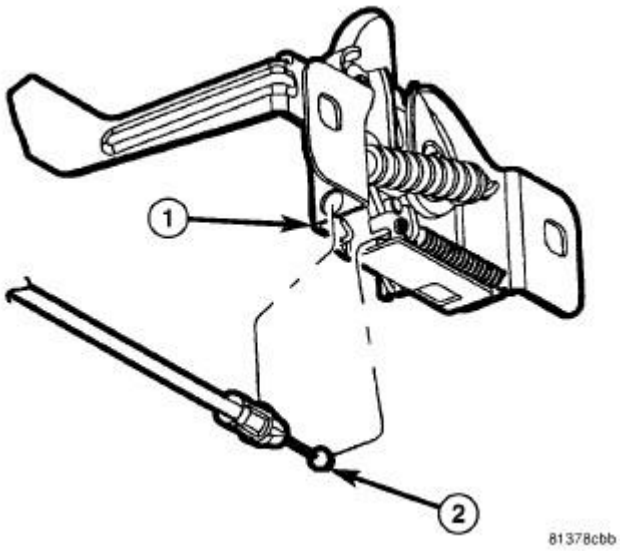

Fig. 331: Hood Latch Release Cable
Courtesy of CHRYSLER LLC

1. Position the hood latch (1) close enough to the front of the headlamp mounting crossmember to access and engage the hood latch release cable ball end (2) to the latch lever and the cable housing to the latch.

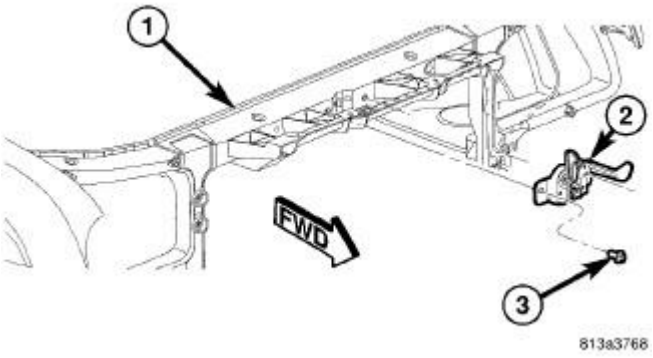

Fig. 332: Removing/Installing Hood Latch
Courtesy of CHRYSLER LLC

2. Position the latch (2) to the front of the crossmember (1).
3. Install and tighten the two screws (3) that secure the latch to the crossmember. Tighten the screws to 28 N.m (21 ft. lbs.).
4. Adjust the latch position as necessary to achieve proper hood latch operation.
5. Position the right underhood appearance cover to the headlamp mounting crossmember.
6. Using hand pressure, press the right appearance cover downward until each of the integral clips snaps into the receptacles in the headlamp mounting crossmember.
7. Engage the interlocking feature on the inboard end of the left appearance cover with the inboard

end of the right cover and position it to the headlamp mounting crossmember.

8. Using hand pressure, press the left appearance cover downward until each of the integral clips snaps into the receptacles in the headlamp mounting crossmember.
9. Reconnect the battery negative cable.

NOTE: For vehicles equipped with the optional Automatic Express Up power window feature, recalibration of this feature is required whenever power to the door module is disrupted. Refer to Electrical - Engine Systems/Battery System - Standard Procedure

ROD, HOOD PROP

Removal

REMOVAL

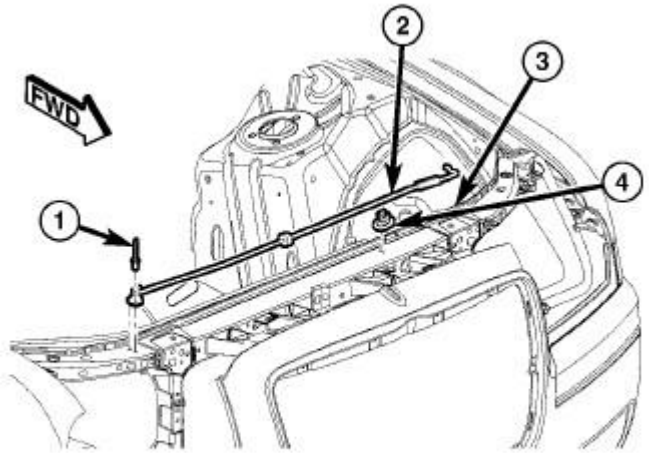

Fig. 333: Hood Prop Rod
Courtesy of CHRYSLER LLC

1. Open and support the hood.
2. Remove the blind rivet (1) that secures the hood prop rod (2) pivot bracket to the right side of the headlamp mounting crossmember (3).
3. Disengage the prop rod from the rod clip (4) on the left side of the headlamp mounting crossmember.
4. Remove the hood prop rod from the vehicle.

Installation

INSTALLATION

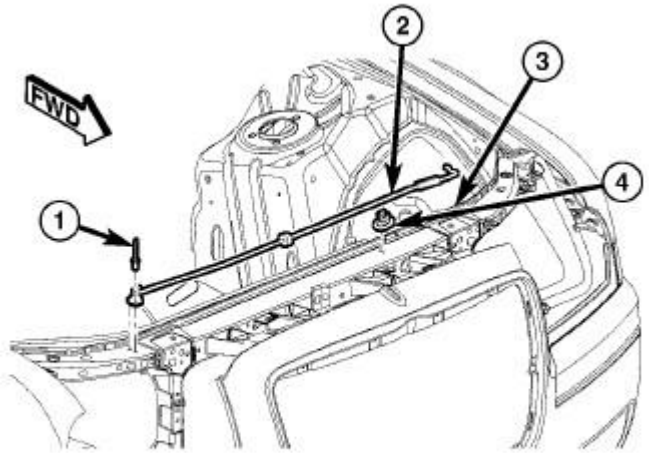

Fig. 334: Hood Prop Rod
Courtesy of CHRYSLER LLC

1. Position the hood prop rod (2) pivot bracket to the right side of the headlamp mounting crossmember (3).
2. Secure the pivot bracket to the headlamp mounting crossmember with a new blind rivet (1).
3. Engage the prop rod into the rod clip (4) on the left side of the headlamp mounting crossmember.
4. Close the hood.

STRIKER, HOOD

Removal

REMOVAL

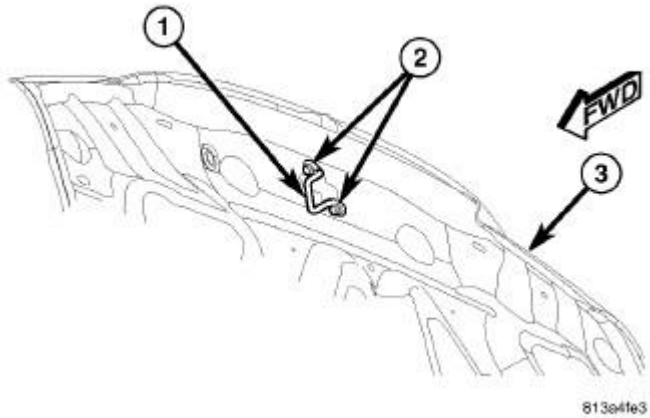

Fig. 335: Removing/Installing Hood Latch Striker
Courtesy of CHRYSLER LLC

1. Open and support the hood (3).
2. Remove the two screws (2) that secure the latch striker (1) to the hood inner reinforcement.
3. Remove the striker from the vehicle.

Installation

INSTALLATION

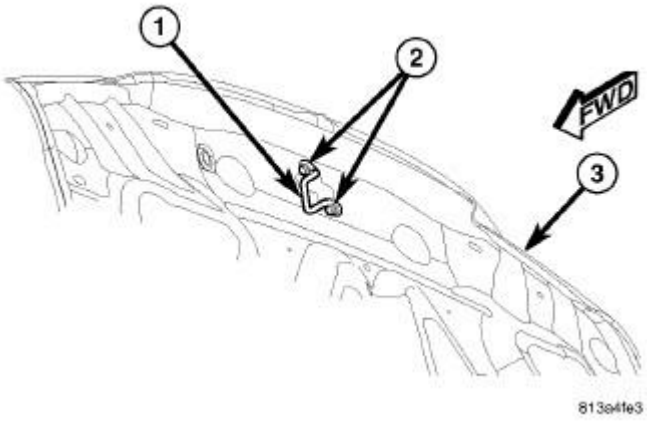

Fig. 336: Removing/Installing Hood Latch Striker
Courtesy of CHRYSLER LLC

1. Position the latch striker (1) to the underside of the hood (3).
2. Install and tighten the two screws (2) that secure the striker to the hood inner reinforcement. Tighten the screws to 28 N.m (21 ft. lbs.).
3. Close the hood.

INSTRUMENT PANEL

BEZEL, INSTRUMENT CLUSTER

Removal

REMOVAL

1. Before proceeding with the following repair procedure, review all warnings and cautions.
2. Remove the steering column opening cover. See **Body/Instrument Panel/COVER, Steering Column Opening - Removal**.
3. Remove the cluster bezel mounting fastener.
4. Using Trim Stick C-4755 or equivalent, carefully remove the cluster bezel.

Installation

INSTALLATION

1. Install the cluster bezel and firmly seat into position.
2. Install the cluster bezel mounting fastener.
3. Install the steering column opening cover. See **Body/Instrument Panel/COVER, Steering Column Opening - Installation**.

BEZEL, INSTRUMENT PANEL, CENTER

Removal

REMOVAL

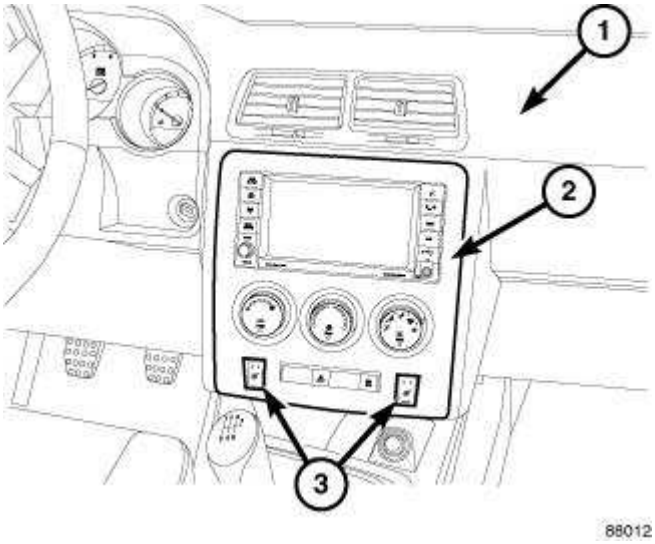

Fig. 337: Instrument Panel Cover & Center Bezel
Courtesy of CHRYSLER LLC

1. Before proceeding with the following repair procedure, review all warnings and cautions.
2. Using trim stick C-4755 or equivalent, remove the center bezel (2) from the instrument panel (1) by releasing the snapretainers from the instrument panel.
3. Disconnect the electrical connectors.
4. Remove the center bezel from the vehicle.

Installation

INSTALLATION

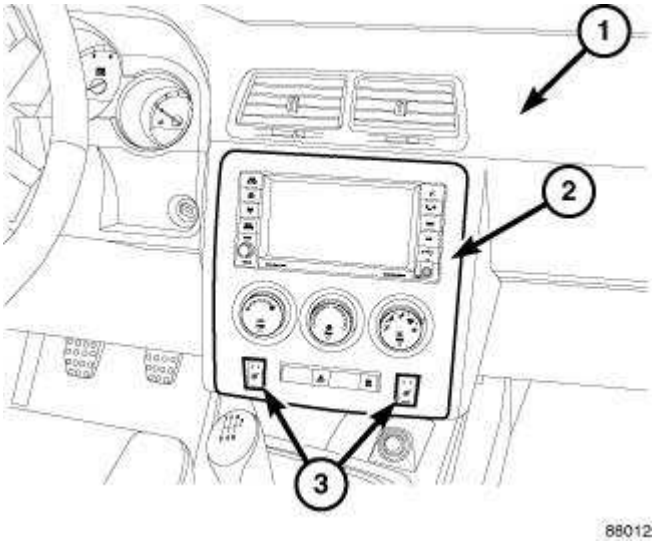

Fig. 338: Instrument Panel Cover & Center Bezel
Courtesy of CHRYSLER LLC

1. Before proceeding with the following repair procedure, review all warnings and cautions.
2. Position the center bezel (2) near the instrument panel (1).
3. Connect the electrical connectors.
4. Install the center bezel onto the instrument panel and carefully push on the outside edges of the center bezel to fully seat the snap clip retainers.

COVER, INSTRUMENT PANEL

Removal

REMOVAL

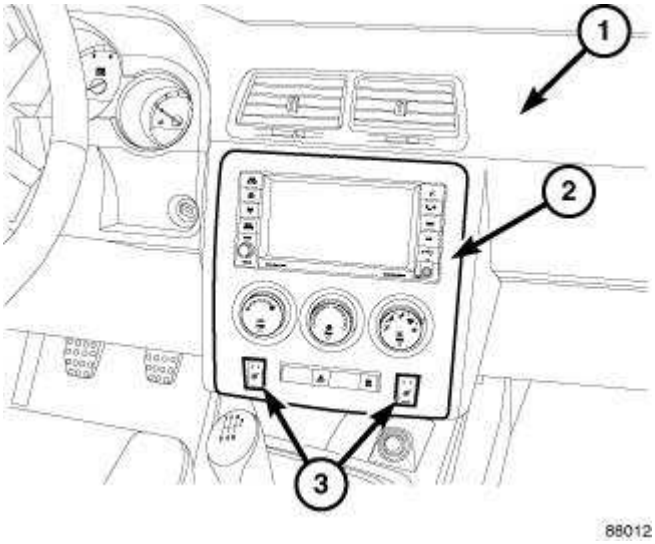

Fig. 339: Instrument Panel Cover & Center Bezel
Courtesy of CHRYSLER LLC

1. Remove the instrument panel from the vehicle. See **Body/Instrument Panel/PANEL, Instrument - Removal**
2. Remove the headlamp switch.
3. Remove the Wireless Ignition Node (WIN). Refer to **Electrical - Electronic Control Modules/Electronic Control Modules/RECEIVER, Wireless Ignition Node - Removal** .
4. Remove the instrument panel speakers. Refer to **Electrical - Audio and Video/Audio and Video/SPEAKER - Removal** .
5. Using Trim Stick C-4755 or equivalent, remove the center bezel (2) from the instrument panel (1) by releasing the snap retainers from the instrument panel.
6. Disconnect the electrical connectors and remove the center bezel from the vehicle.
7. Remove the radio. Refer to **Electrical - Audio and Video/Audio and Video/RADIO - Removal** .

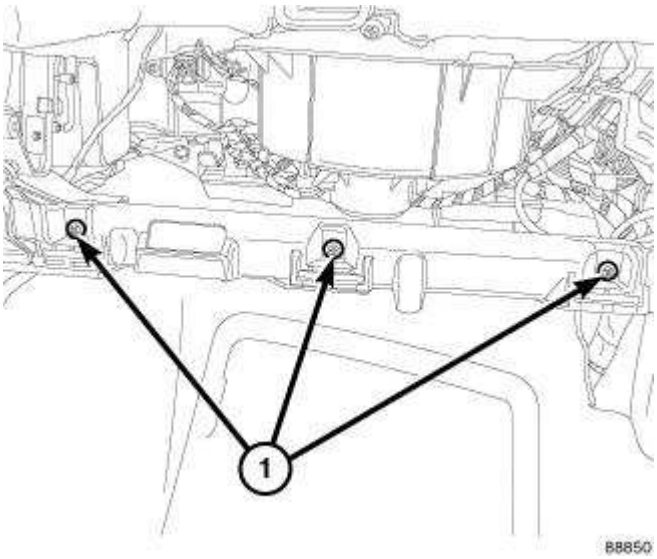

Fig. 340: Glove Box Opening Front Fasteners
Courtesy of CHRYSLER LLC

8. Remove the passenger airbag. Refer to **Restraints/AIR BAG, Passenger - Removal** .
9. Disconnect the light sensor and remove.
10. Remove the glove box opening front fasteners (1).

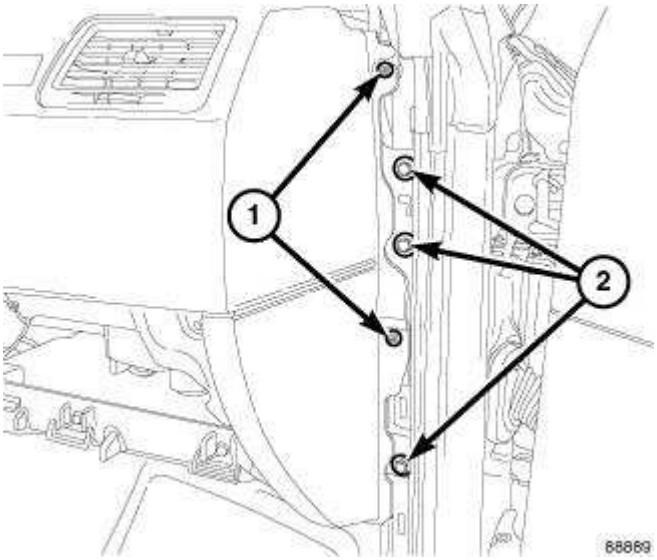

Fig. 341: Top Cover End Fasteners
Courtesy of CHRYSLER LLC

11. Remove left and right top cover fasteners (1).

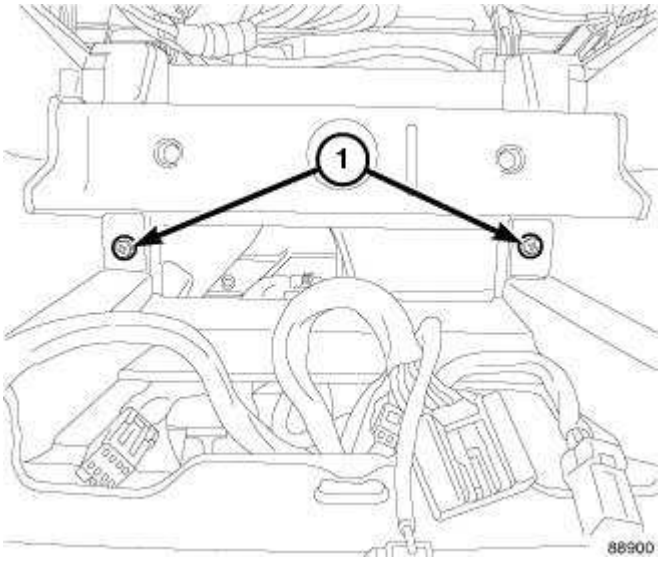

Fig. 342: Center Stack Lower Mounting Fasteners
Courtesy of CHRYSLER LLC

12. Remove the lower mounting fasteners (1) located in the center stack.

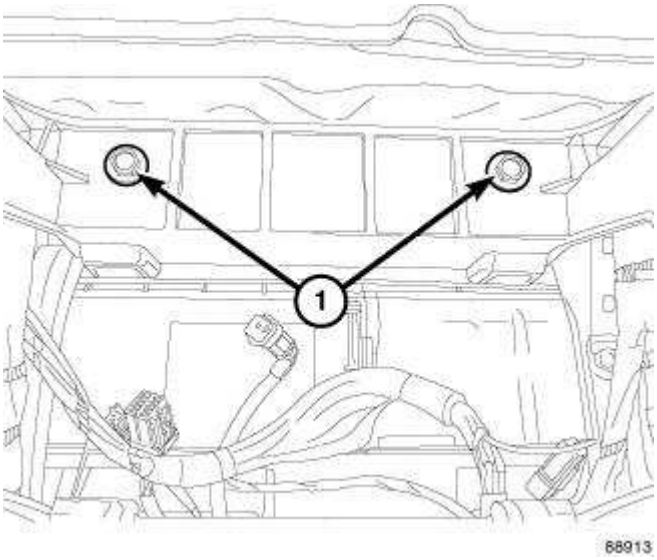

Fig. 343: Center Stack Upper Mounting Fasteners
Courtesy of CHRYSLER LLC

13. Remove the upper mounting fasteners (1) located in the center stack.

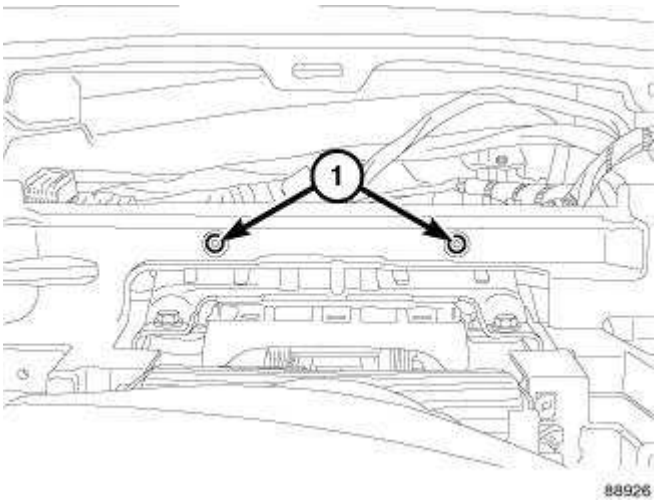

Fig. 344: Cluster Opening Mounting Fasteners
Courtesy of CHRYSLER LLC

14. Remove the mounting fasteners (1) located in the cluster opening.
15. Remove the fasteners securing the HVAC ducts to the top cover.
16. Remove the remaining fasteners.
17. Remove the wire harness from the instrument panel.
18. Separate the top cover from the instrument panel frame.

Installation

INSTALLATION

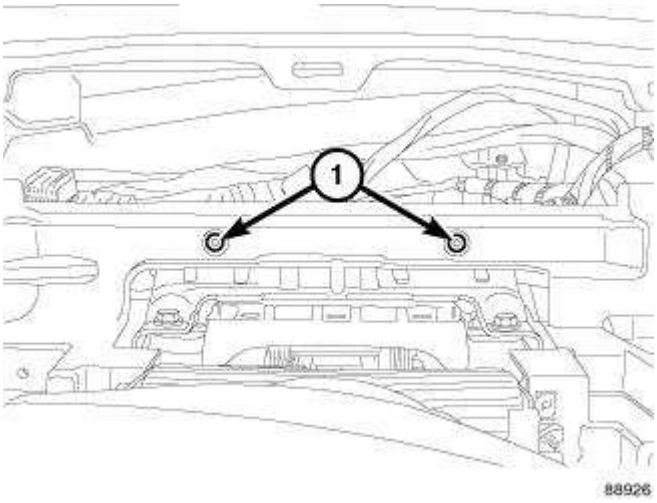

Fig. 345: Cluster Opening Mounting Fasteners
Courtesy of CHRYSLER LLC

1. Position the top cover to the instrument panel frame.
2. Install the wire harness to the instrument panel.
3. Install the fasteners securing the HVAC ducts to the top cover.
4. Install the mounting fasteners (1) located in the cluster opening.

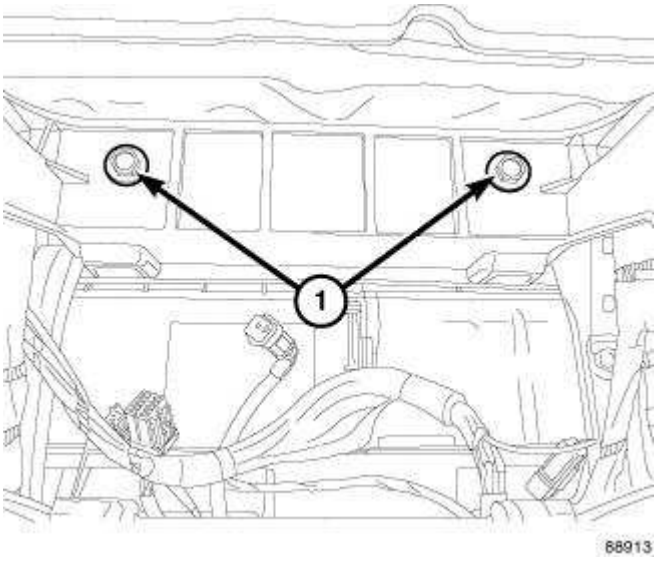

Fig. 346: Center Stack Upper Mounting Fasteners
Courtesy of CHRYSLER LLC

5. Install the upper mounting fasteners (1) located in the center stack.

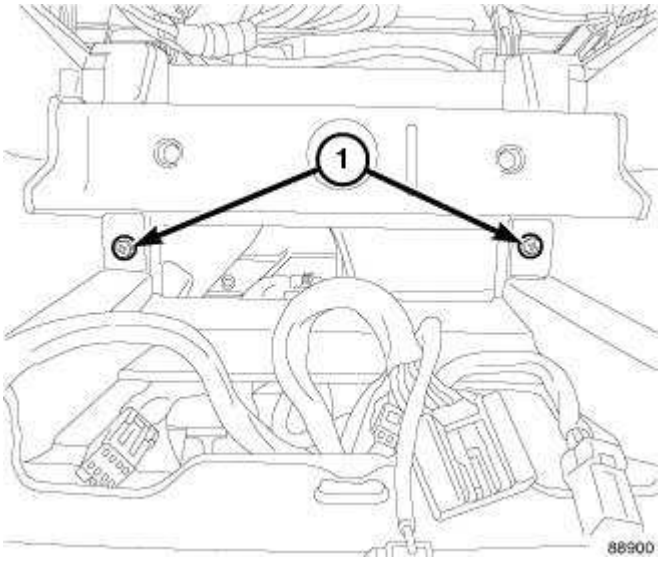

Fig. 347: Center Stack Lower Mounting Fasteners
Courtesy of CHRYSLER LLC

6. Install the lower mounting fasteners (1) located in the center stack.

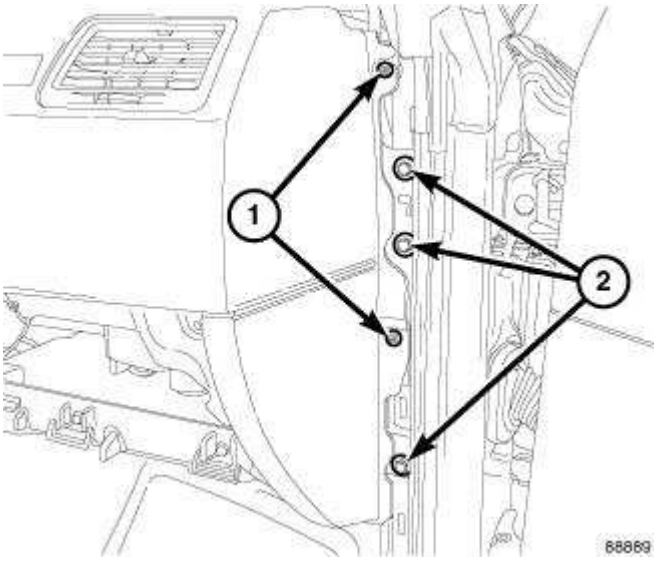

Fig. 348: Top Cover End Fasteners
Courtesy of CHRYSLER LLC

7. Install the left and right top cover fasteners (1).

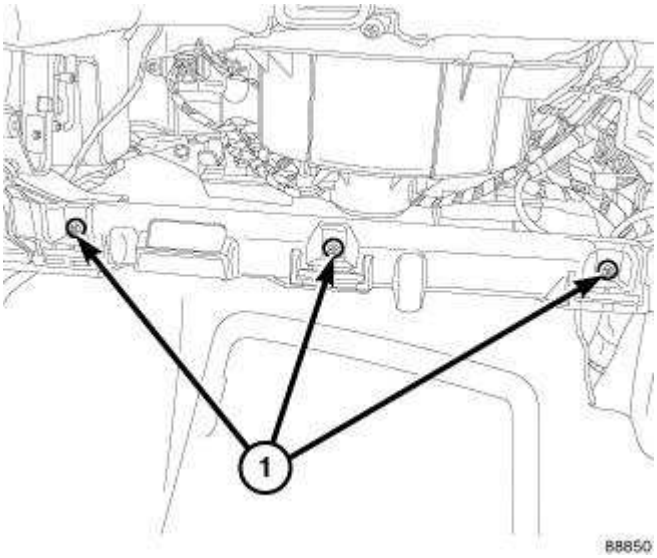

Fig. 349: Glove Box Opening Front Fasteners
Courtesy of CHRYSLER LLC

8. Install the glove box opening front fasteners (1).
9. Install the remaining fasteners.
10. Install the passenger airbag. Refer to **Restraints/AIR BAG, Passenger - Installation**
11. Connect the light sensor and install.

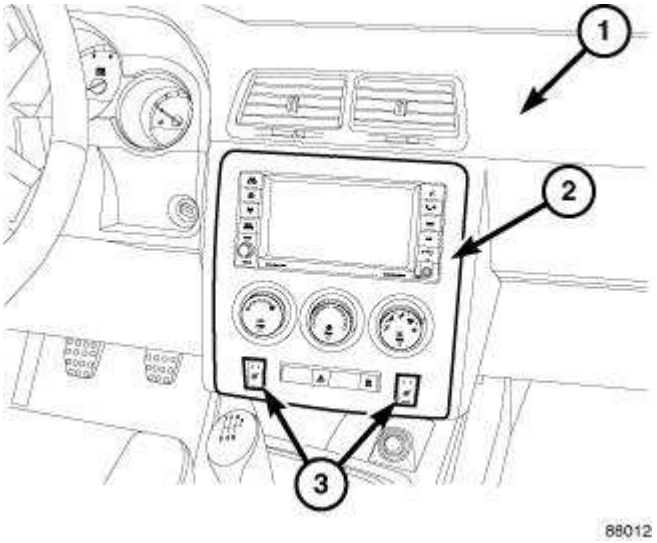

Fig. 350: Instrument Panel Cover & Center Bezel
Courtesy of CHRYSLER LLC

12. Install the radio. Refer to **Electrical - Audio and Video/Audio and Video/RADIO - Installation** .
13. Connect the electrical connectors and install the center bezel. See **Body/Instrument Panel/BEZEL, Instrument Panel - Installation**

14. Install the instrument panel speakers. Refer to **Electrical - Audio and Video/Audio and Video/SPEAKER - Installation** .
15. Install the Wireless Ignition Node (WIN). Refer to **Electrical - Electronic Control Modules/Electronic Control Modules/RECEIVER, Wireless Ignition Node - Installation** .
16. Install the headlamp switch.
17. Install the instrument panel to the vehicle. See **Body/Instrument Panel/PANEL, Instrument - Installation**

COVER, STEERING COLUMN OPENING

Removal

REMOVAL

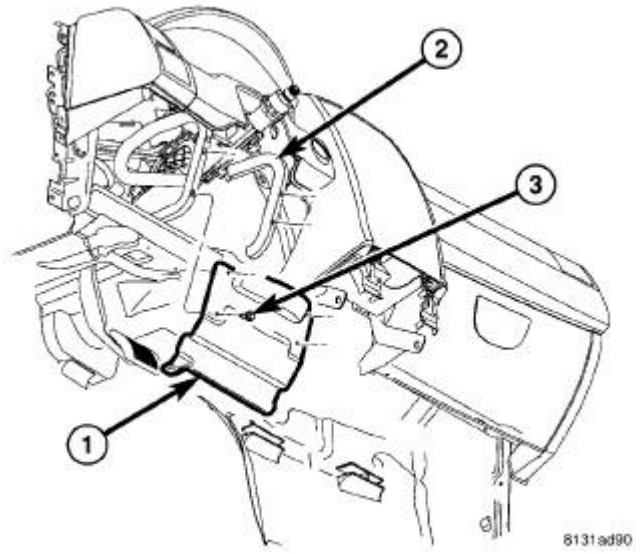

Fig. 351: Reinforcement I/P Steering Column
Courtesy of CHRYSLER LLC

1. Disconnect and isolate the battery negative cable.
2. Remove the screws that secure the steering column cover to the instrument panel.
3. Pull the steering column cover rearward at the top and right side of the cover to release the snap retainers from the instrument panel.
4. Disconnect the wire harness connector from the trunk release switch, if equipped.
5. If required, remove the screws (3) that secures the instrument panel steering column cover reinforcement (1) to the bracket (2) and remove the reinforcement from the vehicle.

Installation

INSTALLATION

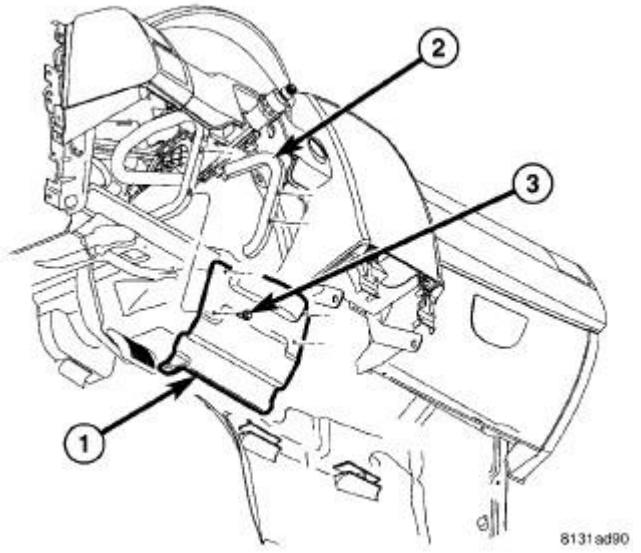

Fig. 352: Reinforcement I/P Steering Column
Courtesy of CHRYSLER LLC

1. If removed, position the instrument panel steering column cover reinforcement (1) onto the bracket (2).
2. Install the screws (3) that secure the instrument panel steering column cover reinforcement to the bracket. Tighten the screws securely.

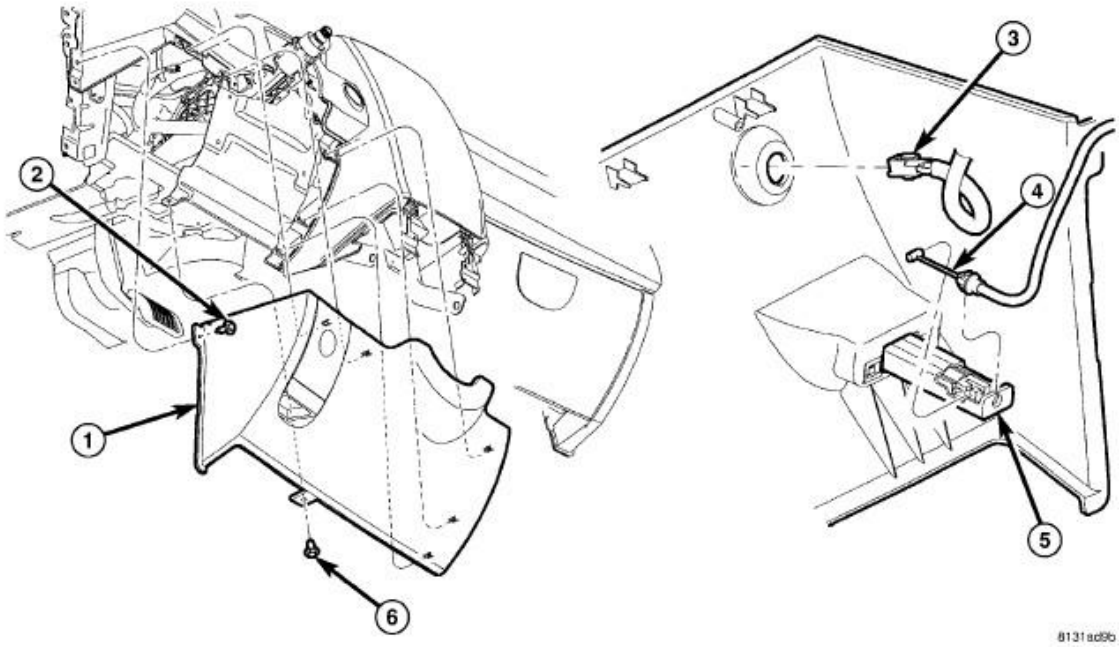

Fig. 353: Steering Column Cover
Courtesy of CHRYSLER LLC

3. Position the steering column cover (1) into the vehicle.
4. Connect the release cable (4) to the emergency brake release handle (5).
5. Connect the wire harness connector (3) to the trunk release switch, if equipped.
6. Install the steering column cover onto the instrument panel and carefully push on the top and right side of the cover to fully seat the snap clip retainers into the instrument panel.
7. Install the screws (2 and 6) that secure the steering column cover (1) to the instrument panel. Tighten the screws securely.
8. Connect the negative battery cable.

NOTE: **For vehicles equipped with the optional Automatic Express Up power window feature, recalibration of this feature is required whenever power to the door module is disrupted. Refer to Electrical - Engine Systems/Battery System - Standard Procedure**

CYLINDER, GLOVE BOX LOCK

Removal

REMOVAL

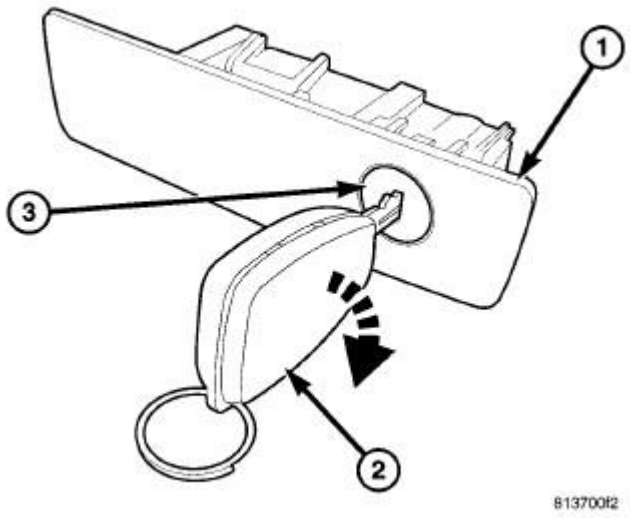

Fig. 354: Lock-Glove Box Removal No. 1
Courtesy of CHRYSLER LLC

1. Remove the glove box latch (1) from the glove box door and place it on a workbench. See **Body/Instrument Panel/LATCH, Glove Box Door - Removal**.
2. Insert the ignition key (2) into the glove box lock cylinder (3) and rotate the ignition key 90 degrees clockwise.

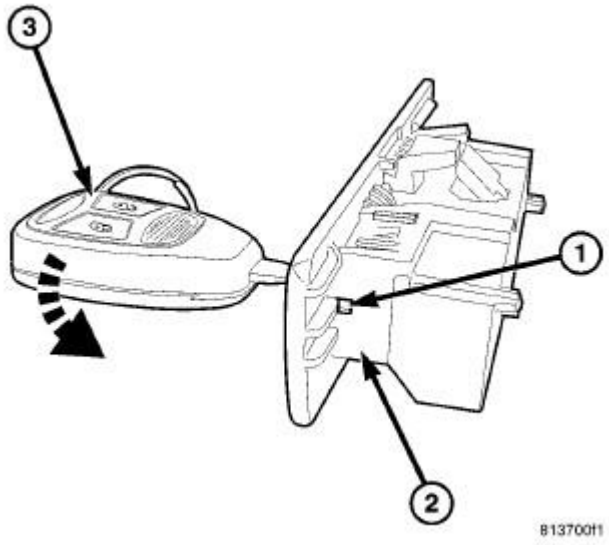

Fig. 355: Lock-Glove Box Removal No. 2
Courtesy of CHRYSLER LLC

3. Using a small pointed tool, press in on the lock pin (1) showing through the opening in the glove box latch housing (2) and rotate the ignition key (3) an additional 45 degrees clockwise.

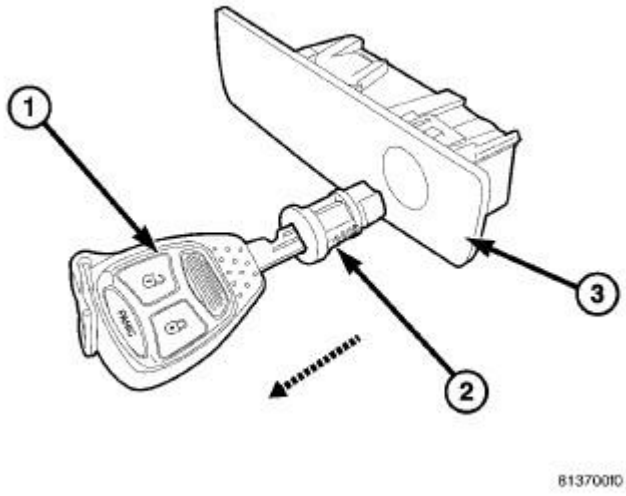

Fig. 356: Lock-Glove Box Removal No. 3
Courtesy of CHRYSLER LLC

4. Pull the ignition key (1) and the glove box lock cylinder (2) out of the glove box latch (3) as an assembly.

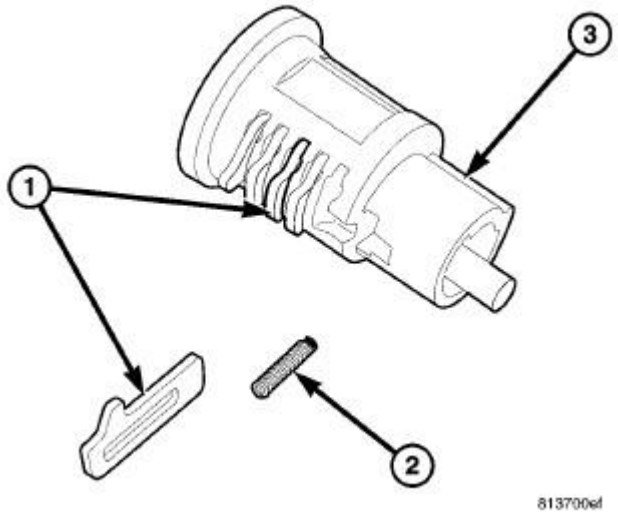

Fig. 357: Removing/Installing Tumblers-Glove Box Lock
Courtesy of CHRYSLER LLC

NOTE: For reinstallation purposes, when removing the tumblers from the glove box lock, be sure to make note of the location of each tumbler within the lock cylinder.

5. If required, remove the tumblers (1) and the springs (2) from the glove box lock cylinder (3). Note the location of each tumbler within the lock.

Installation

INSTALLATION

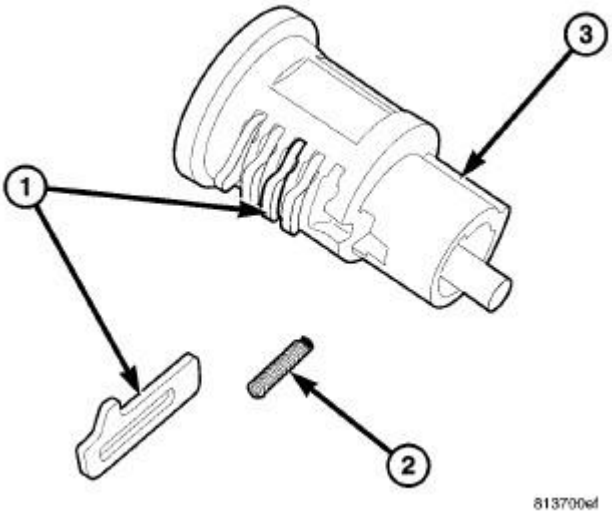

Fig. 358: Removing/Installing Tumblers-Glove Box Lock
Courtesy of CHRYSLER LLC

NOTE: Be sure to install each tumble into their correct location within the lock cylinder.

1. If removed, install the springs (2) and the tumblers (1) into the glove box lock cylinder (3) in the order in which they were removed.

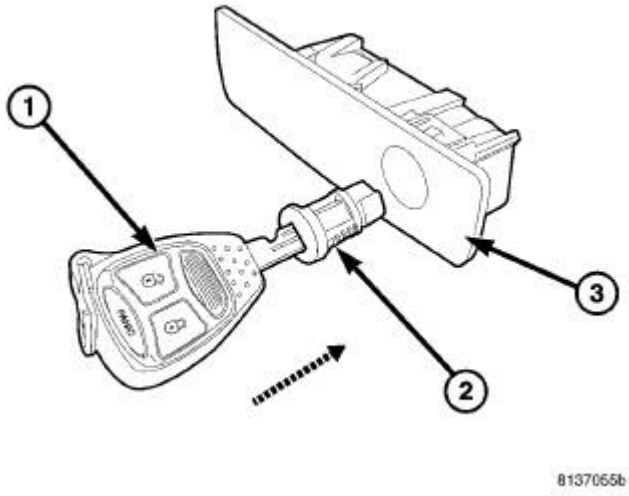

Fig. 359: Lock-Glove Box Installing No. 1
Courtesy of CHRYSLER LLC

2. Install the ignition key (1) and the glove box lock cylinder (2) into the glove box latch (3) as an assembly.

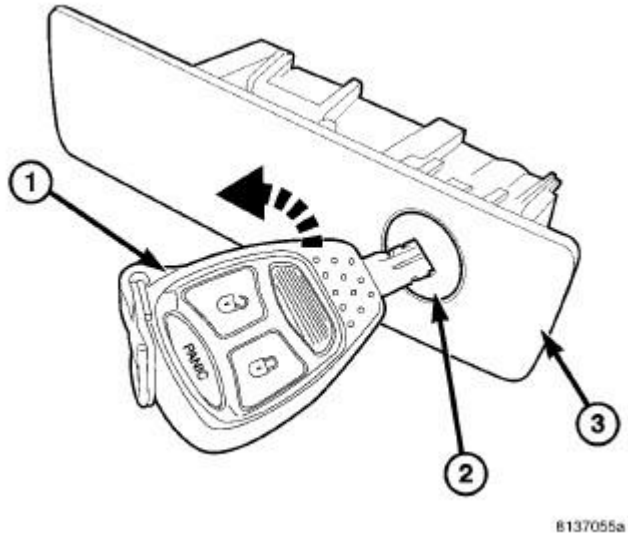

Fig. 360: Lock-Glove Box Installing No. 2
Courtesy of CHRYSLER LLC

3. Rotate the ignition key (1) counterclockwise until the lock cylinder (2) is fully retained in the glove box latch (3).
4. Install the glove box latch onto the glove box door. See **Body/Instrument Panel/LATCH, Glove Box Door - Installation**.

GLOVE BOX, INSTRUMENT PANEL

Removal

REMOVAL

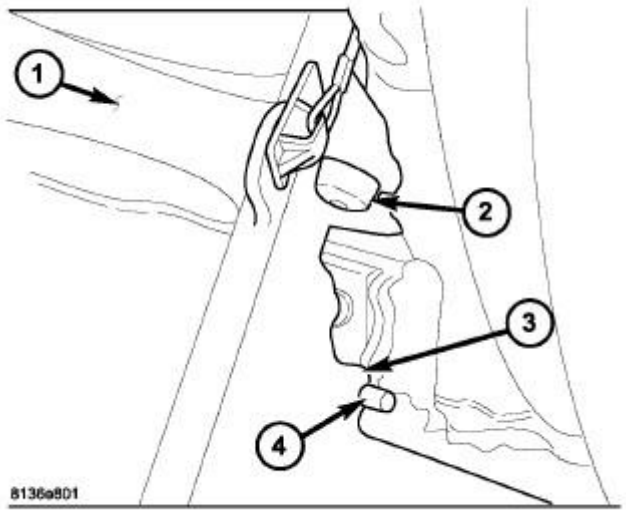

Fig. 361: Removing/Installing Bin-Glove Box
Courtesy of CHRYSLER LLC

1. Open the glove box bin (1).
2. Push in on both sides of glove box bin to disengage the glove box stops (2) and lower the bin.
3. Pivot the glove box bin downward and disengage the glove box hinge hooks (3) from the instrument panel hinge brackets (4) located at each end of the bin.

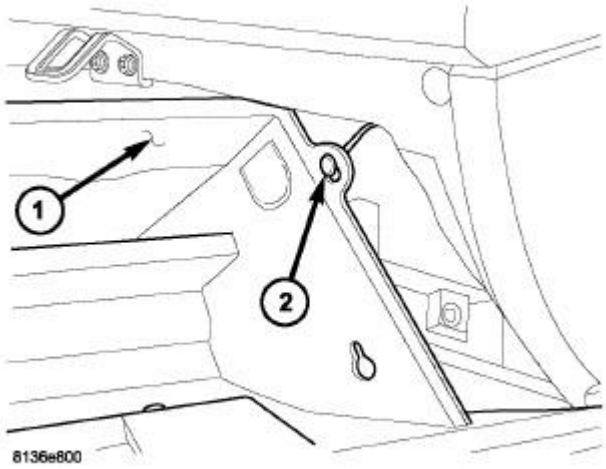

Fig. 362: Bin-Glove Box Support Strap
Courtesy of CHRYSLER LLC

4. Turn the glove box bin (1) sideways and remove the support strap and retainer assembly (2) from the outboard end of the bin.
5. Remove the glove box bin from the vehicle.

Installation

INSTALLATION

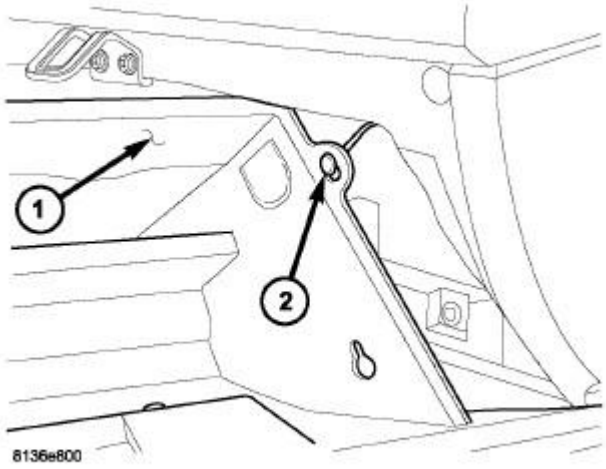

Fig. 363: Bin-Glove Box Support Strap
Courtesy of CHRYSLER LLC

1. Position the glove box bin (1) into the vehicle.
2. Turn the glove box bin sideways and install the support strap and retainer assembly (2) onto the outboard end of the bin.

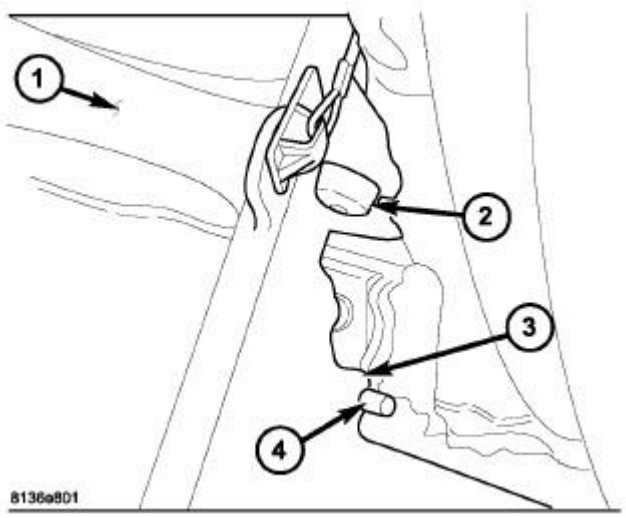

Fig. 364: Removing/Installing Bin-Glove Box
Courtesy of CHRYSLER LLC

3. Engage the glove box bin hinge hooks (3) onto the instrument panel hinge brackets (4) located at each end of the glove box bin (1) and pivot the bin upward.
4. To engage the glove box stops (2), push inward on both sides of the glove box bin and pivot the glove box into the instrument panel.
5. Close the glove box bin.

GRILLE, DEFROSTER

Removal

REMOVAL

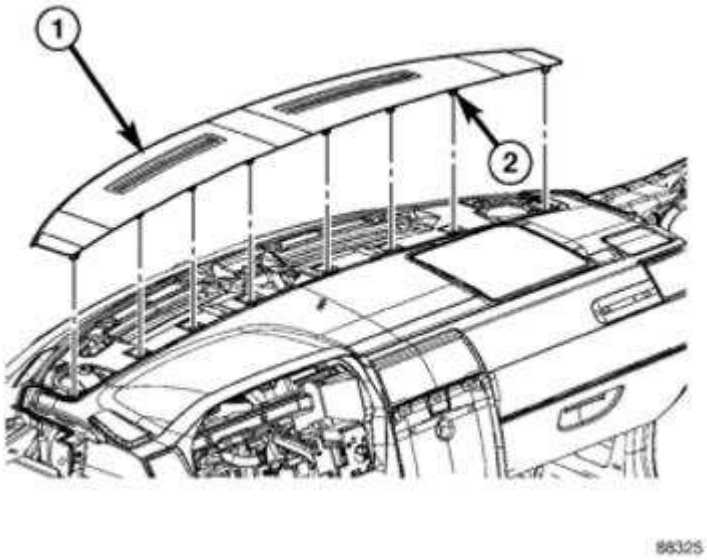

Fig. 365: Removing/Installing Defroster Grille
Courtesy of CHRYSLER LLC

1. Using Trim Stick C-4755 or equivalent, gently pry between the instrument panel top cover and the rear of the defroster grille (1) to release the snap clip retainers (2) that secure the defroster grille.
2. Carefully pull the defroster grille rearward disengaging the front spring clips.
3. Remove the defroster grille from the vehicle.

Installation

INSTALLATION

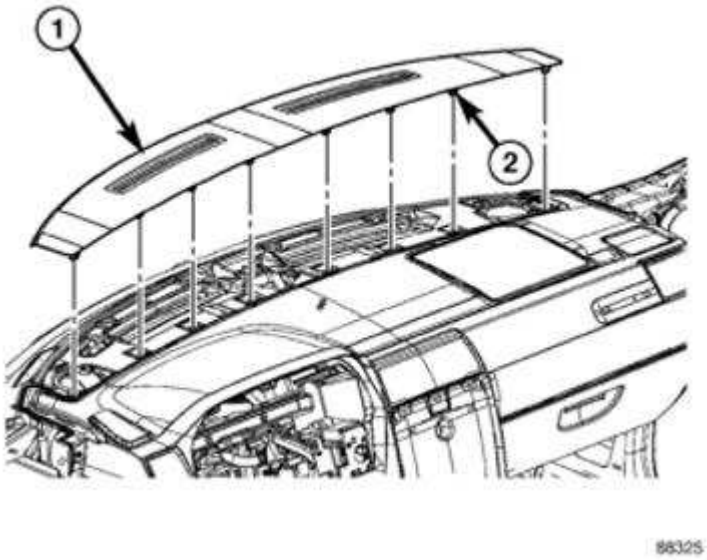

Fig. 366: Removing/Installing Defroster Grille
Courtesy of CHRYSLER LLC

1. Position the defroster grille (1) onto the top of the instrument panel.
2. Position the defroster grille front spring clips and gently press down on the rear of the defroster grille to engage the clips.
3. Carefully push down on the defroster grille to fully seat the snap clip retainers (2) into the instrument panel top cover.

LATCH, GLOVE BOX DOOR

Removal

REMOVAL

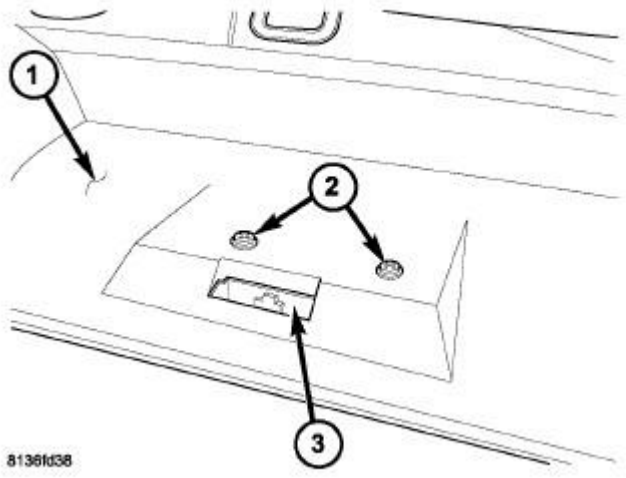

Fig. 367: Removing/Installing Glove Box Door Latch
Courtesy of CHRYSLER LLC

1. Open the glove box.
2. Remove the two screws (2) that secure the latch assembly (3) to the glove box door (1) and remove the latch assembly.
3. If required, remove the glove box lock cylinder from the latch. See **Body/Instrument Panel/CYLINDER, Glove Box Lock - Removal**.

Installation

INSTALLATION

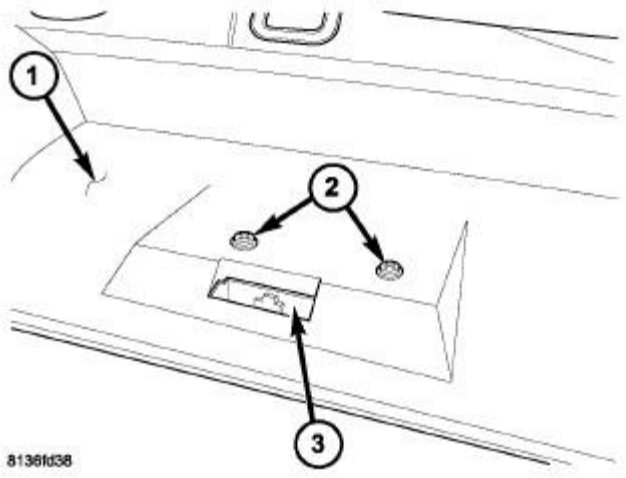

Fig. 368: Removing/Installing Glove Box Door Latch

Courtesy of CHRYSLER LLC

1. If removed, install the glove box lock cylinder into the latch. See **Body/Instrument Panel/CYLINDER, Glove Box Lock - Installation**.
2. Install the latch assembly (3) into the glove box door (1).
3. Install the two screws (2) that secure the latch assembly to the glove box door. Tighten the screws firmly.
4. Close the glove box.

PANEL, INSTRUMENT

Removal

REMOVAL

WARNING: Disable the supplemental restraint system before attempting any steering wheel, steering column, airbag, Occupant Classification System (OCS), seat belt tensioner, impact sensor, or instrument panel component diagnosis or service. Disconnect and isolate the battery negative (ground) cable, then wait two minutes for the system capacitor to discharge before performing further diagnosis or service. This is the only sure way to disable the Supplemental Restraint System (SRS). Failure to take the proper precautions could result in accidental airbag deployment and serious or fatal injury.

WARNING: Never strike or drop the Occupant Restraint Controller (ORC), as it can damage the impact sensor or affect its calibration. The occupant restraint controller contains the impact sensor, which enables the system to deploy the supplemental restraints. If an airbag control module is accidentally dropped during service, the module must be scrapped and replaced with a new unit. Failure to observe this warning could result in accidental, incomplete, or improper supplemental restraint deployment and serious or fatal injury.

CAUTION: On vehicles equipped with the Occupant Classification System (OCS), never replace both the Occupant Restraint Controller (ORC) and the Occupant Classification Module (OCM) at the same time. If both require replacement, replace one. Then perform the supplemental restraint verification test before replacing the other. Both the ORC and the OCM store OCS calibration data, which they transfer to one another when one of them is replaced. If both are replaced at the same time, an irreversible fault will be set in both modules.

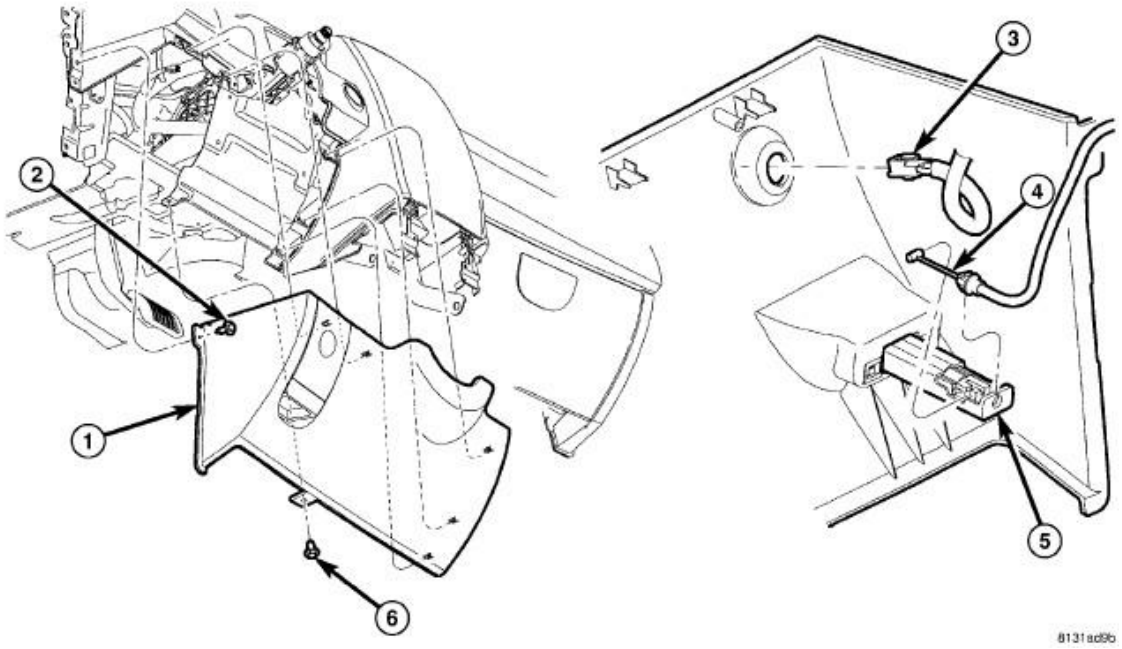

Fig. 369: Steering Column Cover
Courtesy of CHRYSLER LLC

1. Before proceeding with the following repair procedure, review all warnings and cautions.
2. Disconnect and isolate the negative battery cable.
3. Raise and support the vehicle.
4. Disconnect the steering column from the steering coupling. Refer to **Steering/Column/COUPLING, Steering Column - Removal**
5. Lower the vehicle.
6. Remove steering column as necessary. Refer to **Steering/Column - Removal** .
7. Remove the glove box. See **Body/Instrument Panel/GLOVE BOX, Instrument Panel - Removal**
8. Remove the left and right side instrument panel silencers. See **Body/Instrument Panel/PANEL, Silencer - Removal**.
9. Remove the screws (2 and 6) that secure the steering column cover (1) to the instrument panel.
10. Disconnect the electrical connector (3) from the trunk release switch.
11. Disconnect the hood release cable (4) from the hood release handle (5) and remove the steering column cover from the vehicle.

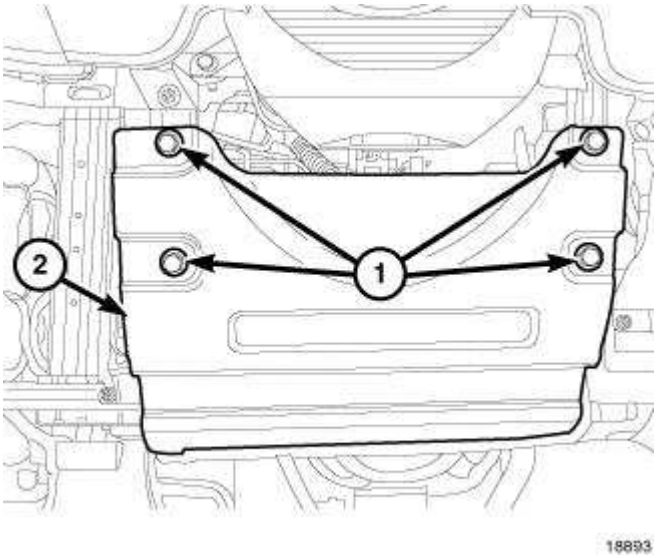

Fig. 370: Steering Column Cover Reinforcement
Courtesy of CHRYSLER LLC

12. Remove the screws (1) that secure the instrument panel steering column cover reinforcement (2) to the bracket and remove the reinforcement from the vehicle.

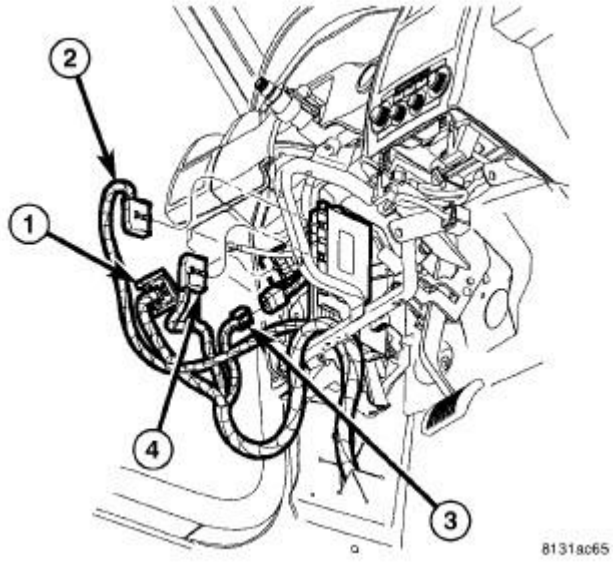

Fig. 371: Wiring Connections Left Side I/P
Courtesy of CHRYSLER LLC

13. Disconnect the body wire harness connectors (1 and 3) from the instrument panel wire harness connectors.
14. Disconnect the body wire harness connectors (2 and 4) from the transmission control module.
15. Remove the center floor console. See **Body/Interior/CONSOLE, Floor - Removal**.

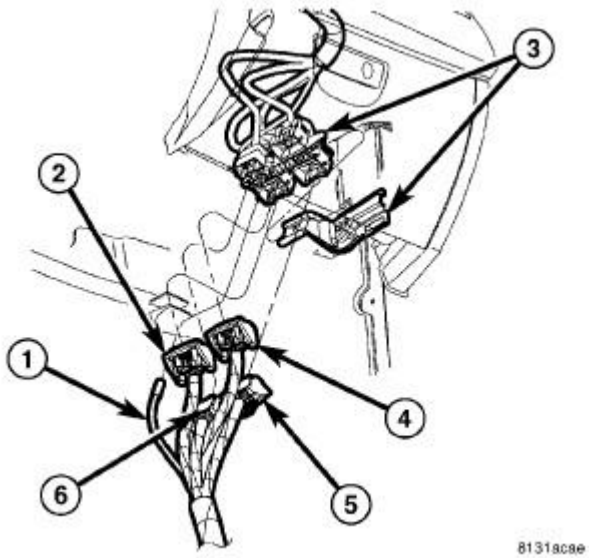

Fig. 372: Connections Right Side I/P
Courtesy of CHRYSLER LLC

16. Disconnect the antenna coax (1) from the instrument panel coax extension.
17. Disconnect the wire harness connectors (2, 4, 5 and 6) from the instrument panel wire harness connectors (3).

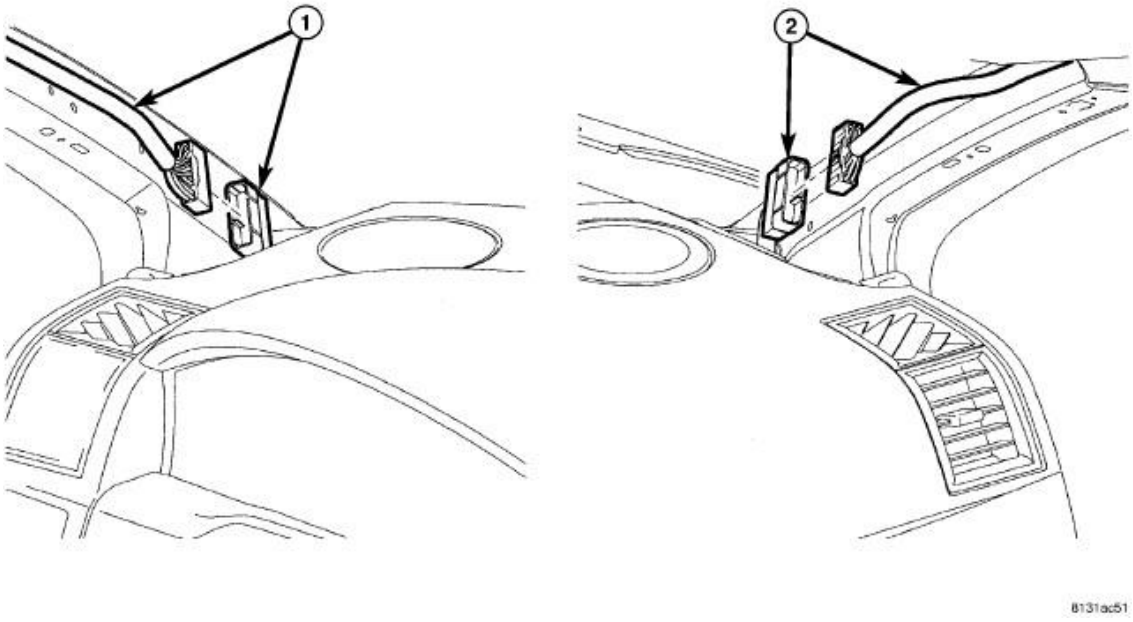

Fig. 373: I/P To Headliner Connectors
Courtesy of CHRYSLER LLC

18. Remove the A-pillar trim panels. See **Body/Interior/PANEL, A-Pillar Trim - Removal**

19. Disconnect the wire harness connectors (1 and 2) located on the A-pillars.

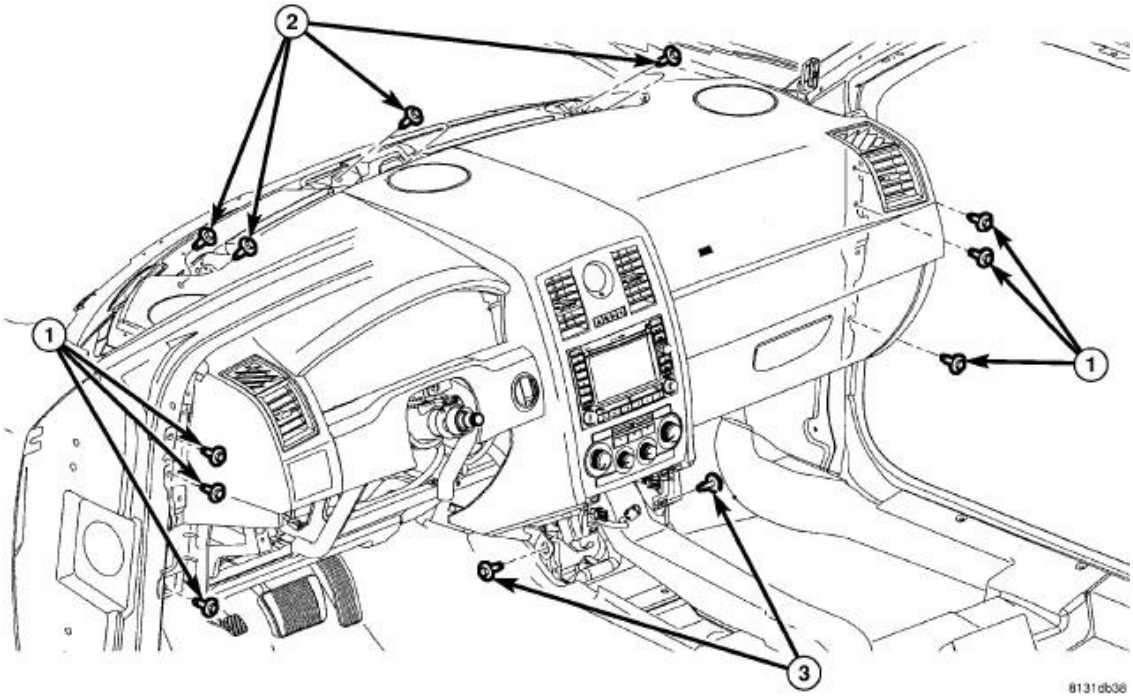

Fig. 374: I/P Attaching Screws
Courtesy of CHRYSLER LLC

20. Remove the end caps from the left and right side of the instrument panel to access the instrument panel side support bolts (1) and remove the bolts.
21. Remove the defroster grille to access the instrument panel top retaining bolts (2) and remove the bolts. See **Body/Instrument Panel/GRILLE, Defroster - Removal**.
22. Remove the bolts (3) that secure the bottom of the instrument panel.

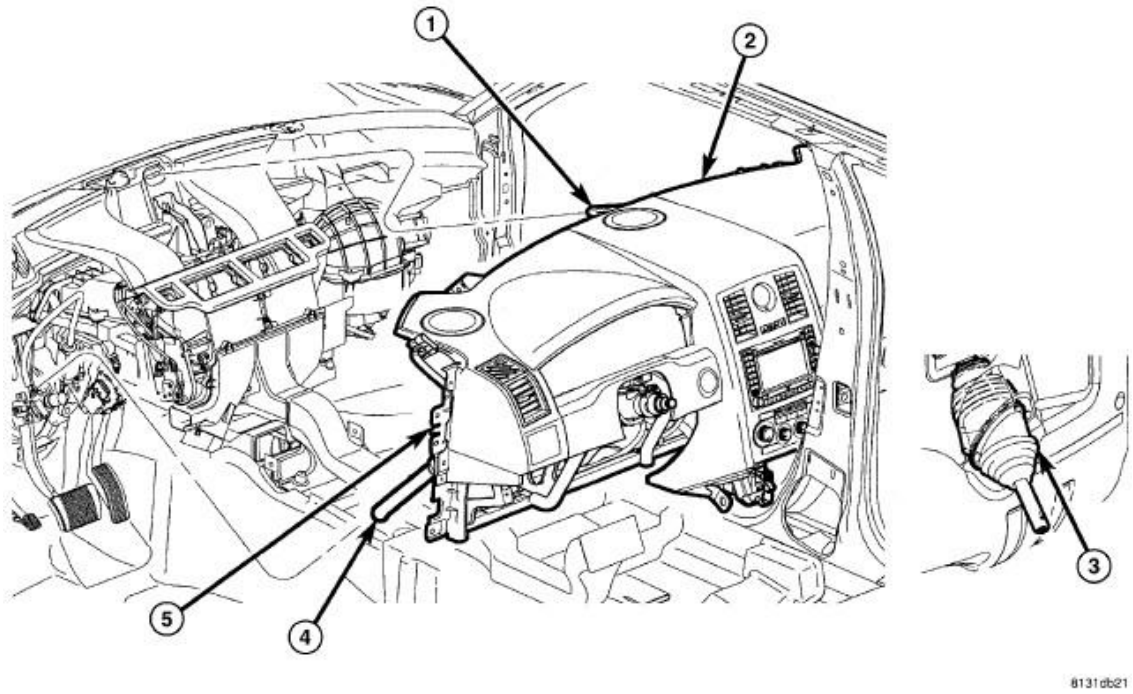

Fig. 375: Position I/P Into Body
Courtesy of CHRYSLER LLC

23. Lift the instrument panel assembly (2) off of the supports (1 and 5). Guide the steering column end (4) through the opening in the dash panel (3) and remove the instrument panel through the passenger door.

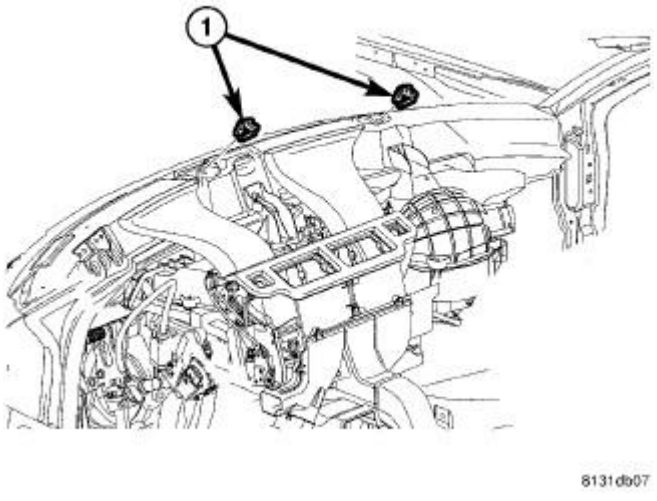

Fig. 376: I/P Spring Nuts To Cowl
Courtesy of CHRYSLER LLC

24. If required, remove the spring nuts (1) from the dash panel.

Installation

INSTALLATION

WARNING: Disable the supplemental restraint system before attempting any steering wheel, steering column, airbag, Occupant Classification System (OCS), seat belt tensioner, impact sensor, or instrument panel component diagnosis or service. Disconnect and isolate the battery negative (ground) cable, then wait two minutes for the system capacitor to discharge before performing further diagnosis or service. This is the only sure way to disable the Supplemental Restraint System (SRS). Failure to take the proper precautions could result in accidental airbag deployment and serious or fatal injury.

WARNING: Never strike or drop the Occupant Restraint Controller (ORC), as it can damage the impact sensor or affect its calibration. The occupant restraint controller contains the impact sensor, which enables the system to deploy the supplemental restraints. If an airbag control module is accidentally dropped during service, the module must be scrapped and replaced with a new unit. Failure to observe this warning could result in accidental, incomplete, or improper supplemental restraint deployment and serious or fatal injury.

CAUTION: On vehicles equipped with the Occupant Classification System (OCS), never replace both the Occupant Restraint Controller (ORC) and the Occupant Classification Module (OCM) at the same time. If both require replacement, replace one. Then perform the supplemental restraint verification test before replacing the other. Both the ORC and the OCM store OCS calibration data, which they transfer to one another when one of them is replaced. If both are replaced at the same time, an irreversible fault will be set in both modules.

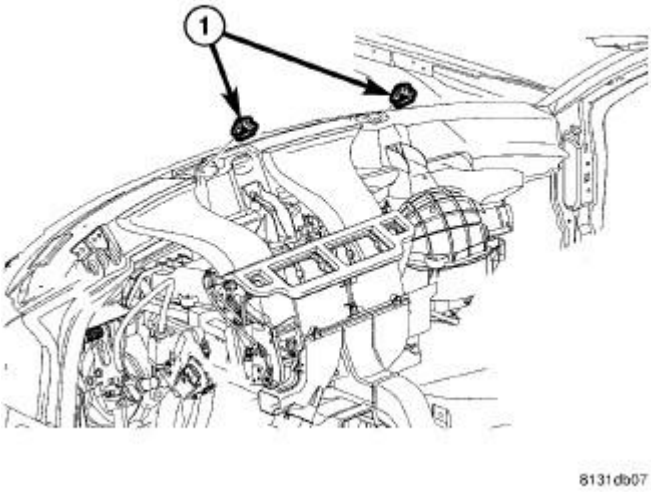

Fig. 377: I/P Spring Nuts To Cowl
Courtesy of CHRYSLER LLC

1. Before proceeding with the following repair procedure, review all warnings and cautions.
2. If required, install new spring nuts (1) into the dash panel.

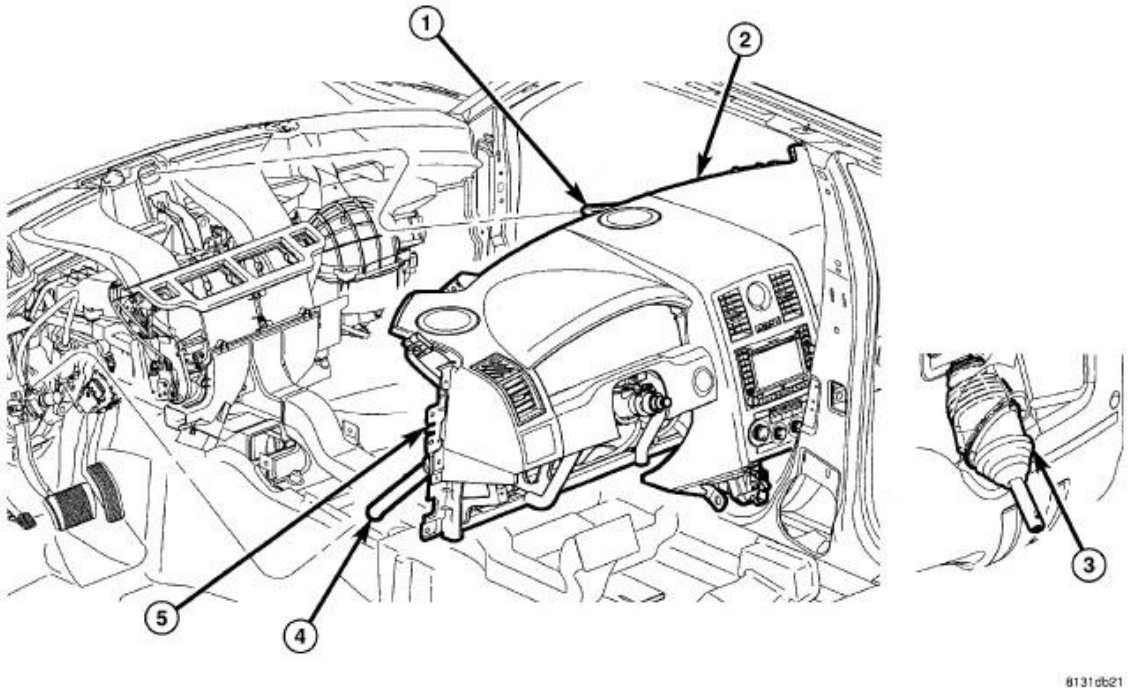

Fig. 378: Position I/P Into Body
Courtesy of CHRYSLER LLC

3. Position the instrument panel assembly (2) into the vehicle through the drivers side door. Guide the steering column end (4) through the opening in the dash panel (3) and install the instrument

panel onto the supports (1 and 5).

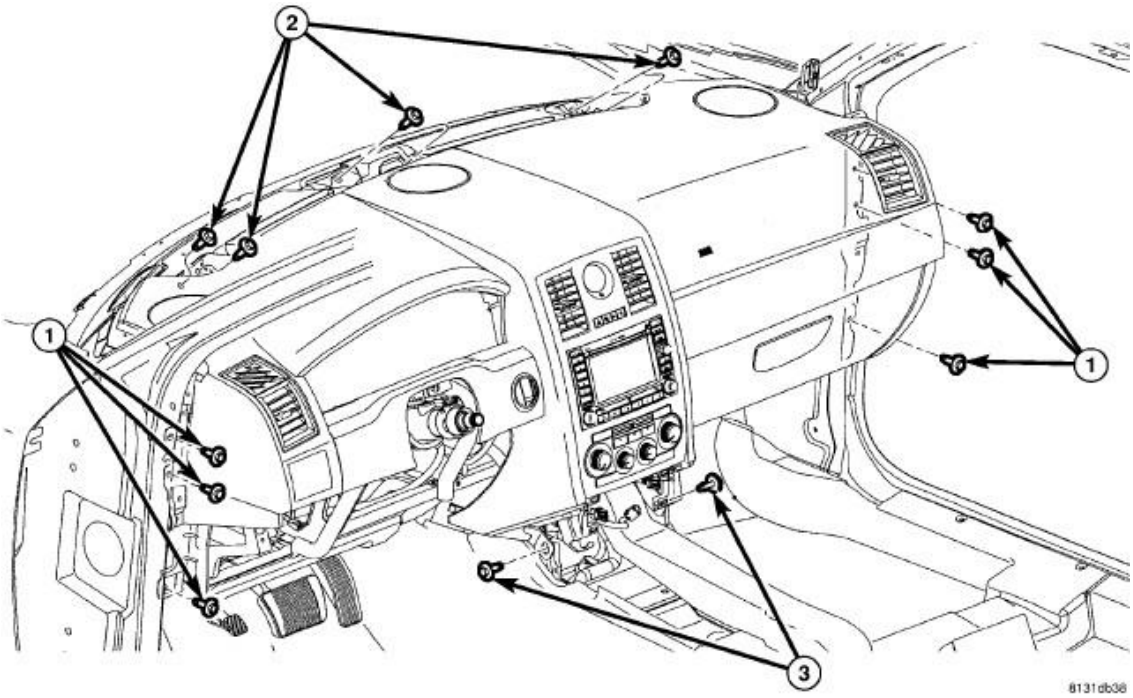

Fig. 379: I/P Attaching Screws
Courtesy of CHRYSLER LLC

4. Loosely install all the bolts that secure the instrument panel to the body. Tighten the bolts in the following order:
    - Top of instrument panel (2) to 8 N.m (70 in. lbs.).
    - Side support bolts (1) to 27 N.m (20 ft. lbs.).
    - Bottom of instrument panel (3) to 6 N.m (53 in. lbs.).
5. Install the end caps to the left and right side of the instrument panel.
6. Install the defroster grille to the top of the instrument panel. See **Body/Instrument Panel/GRILLE, Defroster - Installation**.

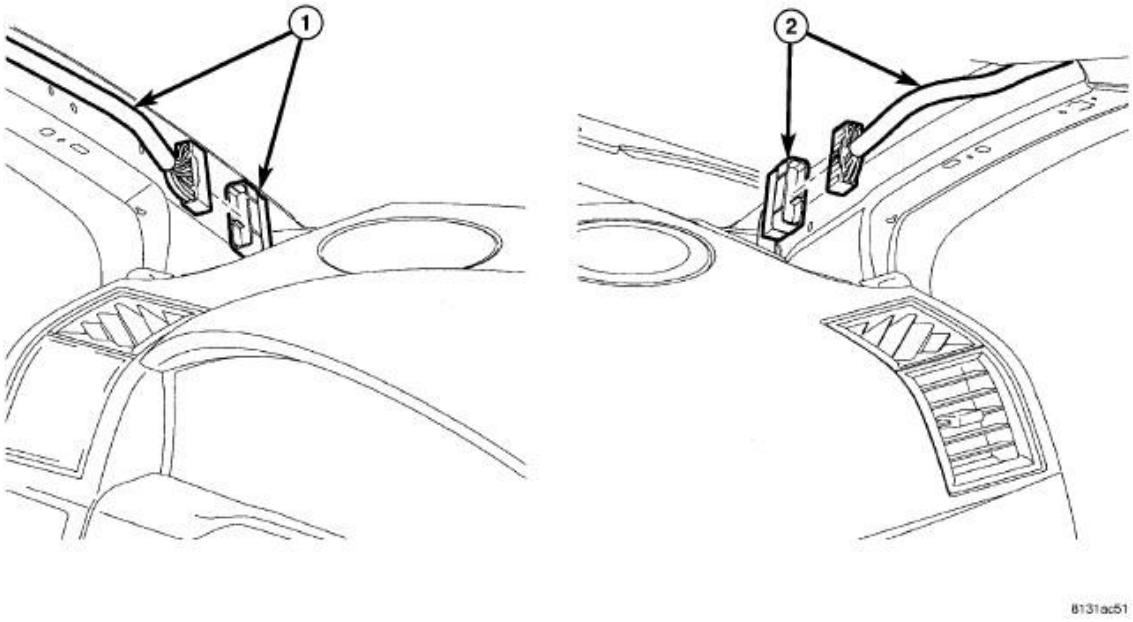

Fig. 380: I/P To Headliner Connectors
Courtesy of CHRYSLER LLC

7. Connect the wire harness connectors (1 and 2) located on the A-pillars.
8. Install the A-pillar trim panels. See **Body/Interior/PANEL, A-Pillar Trim - Installation**

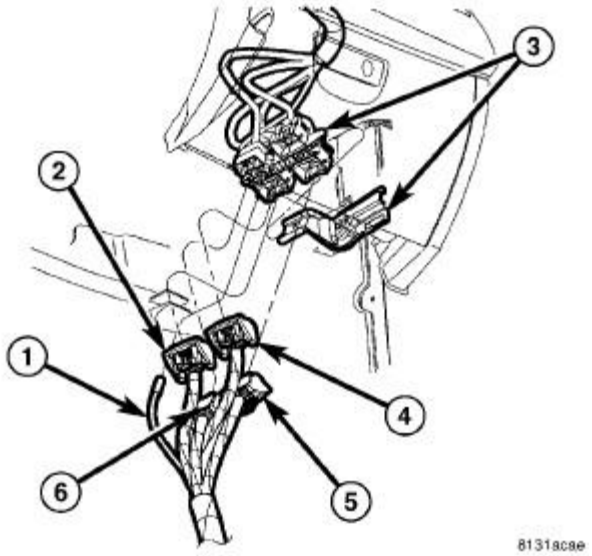

Fig. 381: Connections Right Side I/P
Courtesy of CHRYSLER LLC

9. Connect the wire harness connectors (2, 4, 5 and 6) to the instrument panel wire harness connector (3).

10. Connect the antenna coax (1) to the instrument panel coax extension.
11. Install the center floor console. See **Body/Interior/CONSOLE, Floor - Installation**.

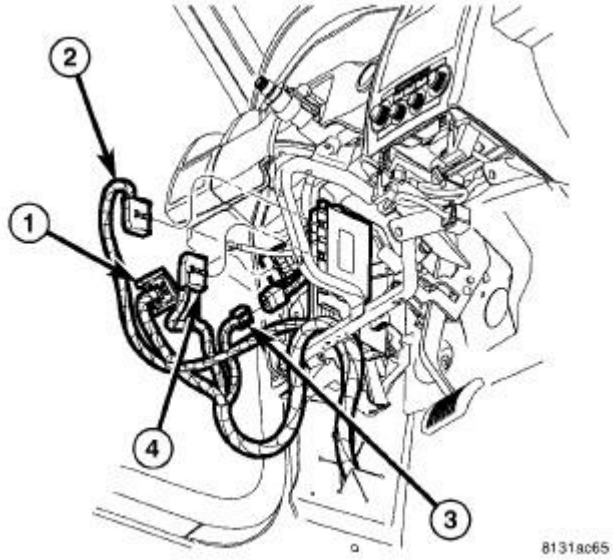

Fig. 382: Wiring Connections Left Side I/P
Courtesy of CHRYSLER LLC

12. Connect the body wire harness connectors (2 and 4) to the transmission control module.
13. Connect the body wire harness connectors (1 and 3) to the instrument panel wire harness connectors.
14. Install steering column as necessary. Refer to **Steering/Column - Installation** .

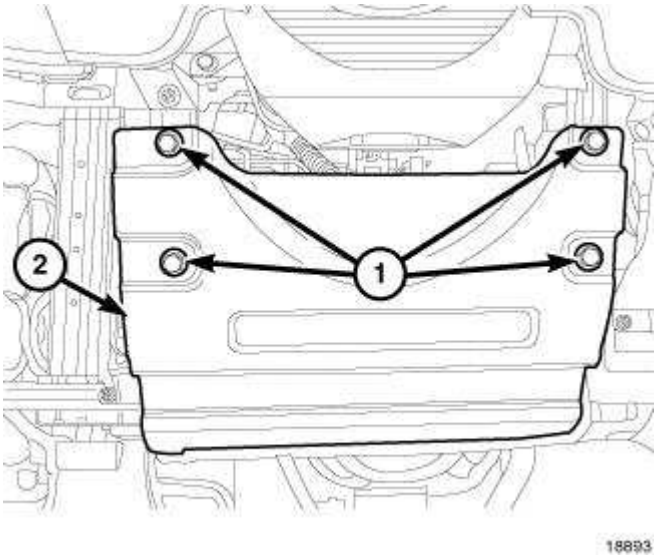

Fig. 383: Steering Column Cover Reinforcement
Courtesy of CHRYSLER LLC

15. Position the instrument panel steering column cover reinforcement (2) onto the bracket.
16. Install the screws (1) that secure the instrument panel steering column cover reinforcement to the bracket. Tighten the screws securely.

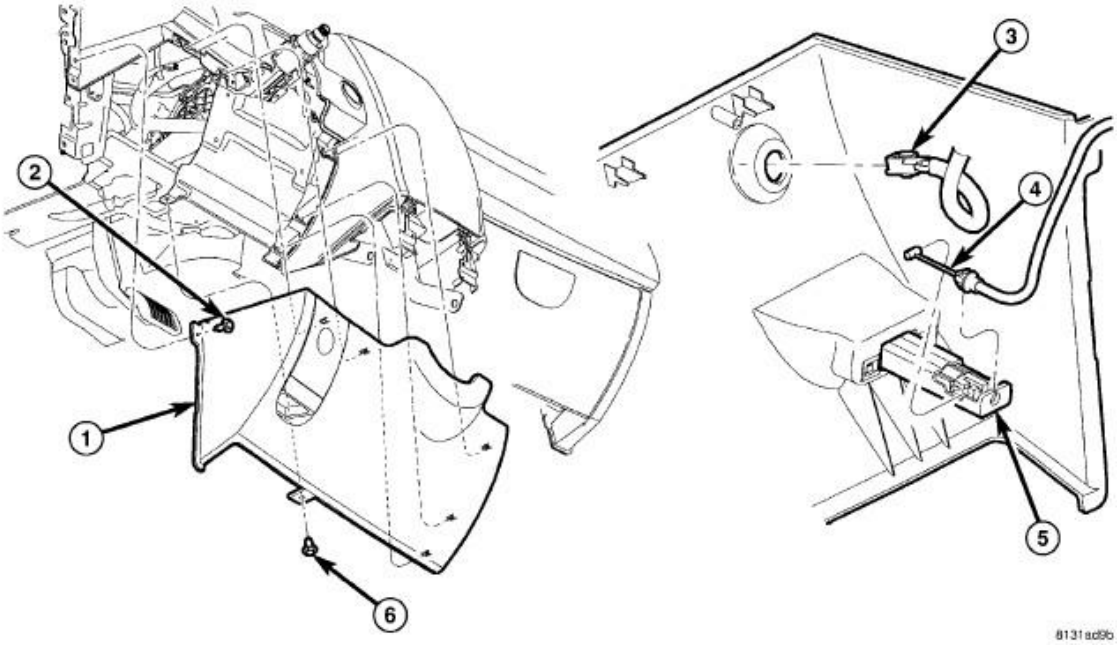

Fig. 384: Steering Column Cover
Courtesy of CHRYSLER LLC

17. Position the steering column cover (1) into the vehicle.
18. Connect the hood release cable (4) to the hood release handle (5).
19. Connect the wire harness connector (3) to the trunk release switch.
20. Install the screws (2 and 6) that secure the steering column cover (1) to the instrument panel. Tighten the screws securely.
21. Install the left and right side instrument panel silencers. See **Body/Instrument Panel/PANEL, Silencer - Installation**
22. Install the glove box. See **Body/Instrument Panel/GLOVE BOX, Instrument Panel - Installation**
23. Raise and support the vehicle.
24. Connect the steering column to the steering coupling. Refer to **Steering/Column/COUPLING, Steering Column - Installation** .
25. Lower the vehicle.

PANEL, SILENCER

Removal

REMOVAL

DRIVER SIDE

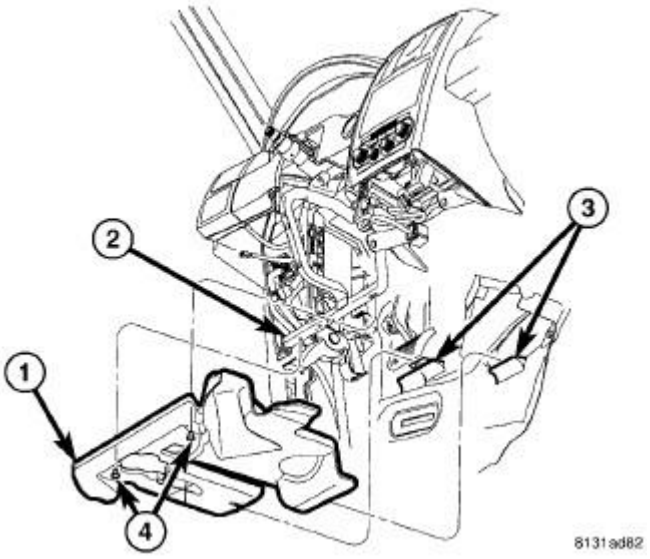

Fig. 385: Left I/P Closeout Panel
Courtesy of CHRYSLER LLC

1. Remove the two pushpins (4) that secure the instrument panel silencer (1) to the instrument panel bracket (2).
2. Pull the instrument panel silencer rearward to disengage it from the brackets (3) located near the dash panel.
3. Remove the instrument panel silencer from the vehicle.

PASSENGER SIDE

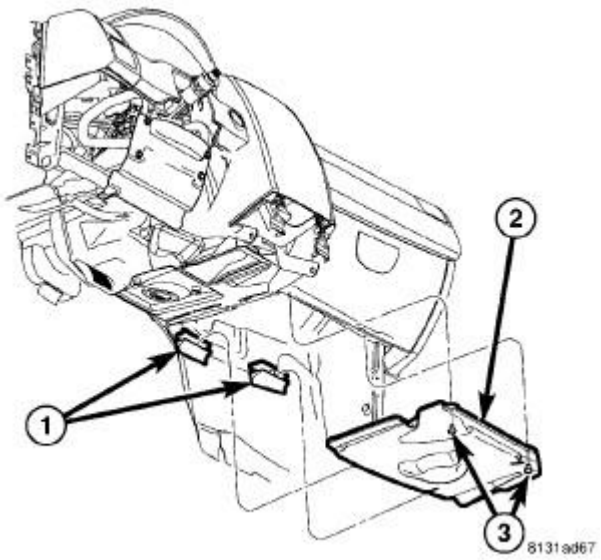

Fig. 386: Right I/P Closeout Panel
Courtesy of CHRYSLER LLC

1. Remove the two pushpins (3) that secure the instrument panel silencer (2) to the instrument panel.
2. Pull the instrument panel silencer rearward to disengage it from the brackets (1) located near the dash panel.
3. Remove the instrument panel silencer from the vehicle.

Installation

INSTALLATION

DRIVER SIDE

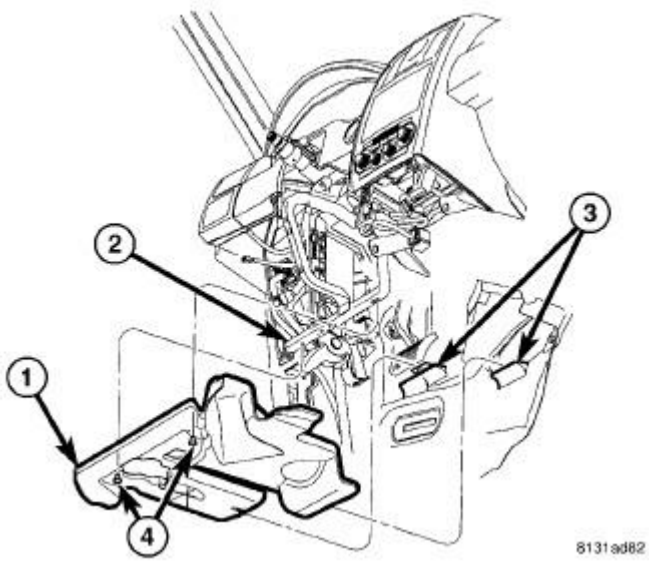

Fig. 387: Left I/P Closeout Panel
Courtesy of CHRYSLER LLC

1. Position the instrument panel silencer (1) into the vehicle.
2. Install the instrument panel silencer above the brackets (3) located near the dash panel.
3. Install the two push-pins (4) that secure the instrument panel silencer to the instrument panel bracket (2).

PASSENGER SIDE

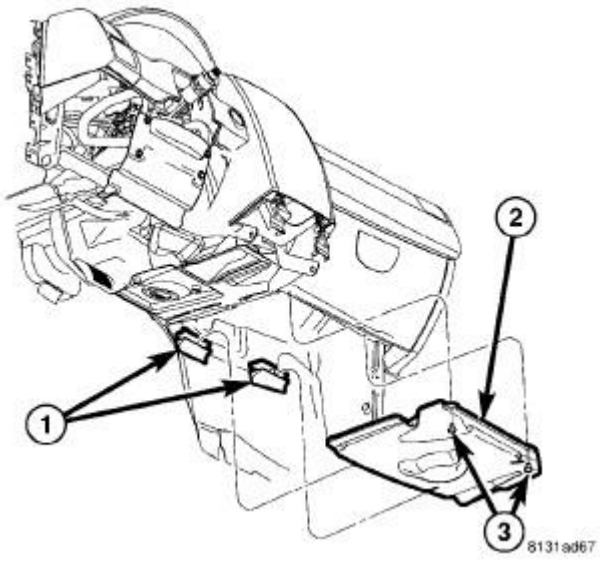

Fig. 388: Right I/P Closeout Panel
Courtesy of CHRYSLER LLC

1. Position the instrument panel silencer (2) into the vehicle.
2. Install the instrument panel silencer above the brackets (1) located near the dash panel.
3. Install the two push-pins (3) that secure the instrument panel silencer to the instrument panel.

STRIKER, GLOVE BOX DOOR LATCH

Removal

REMOVAL

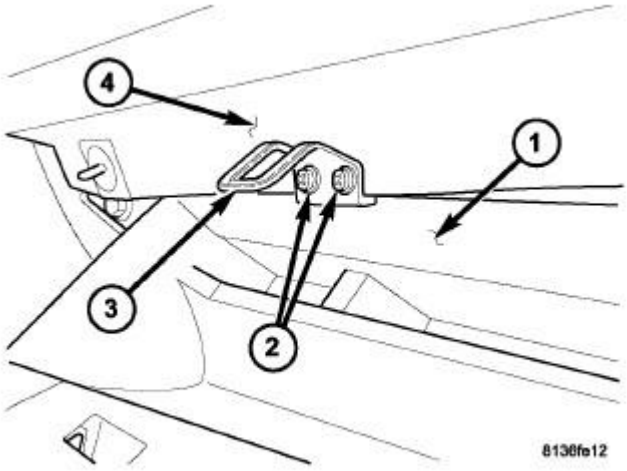

Fig. 389: Removing/Installing Striker-Latch-Glove Box
Courtesy of CHRYSLER LLC

1. Open the glove box door (1).
2. Remove the two screws (2) that secure the glove box latch striker (3) to the instrument panel (4).
3. Remove the glove box latch striker from the instrument panel.

Installation

INSTALLATION

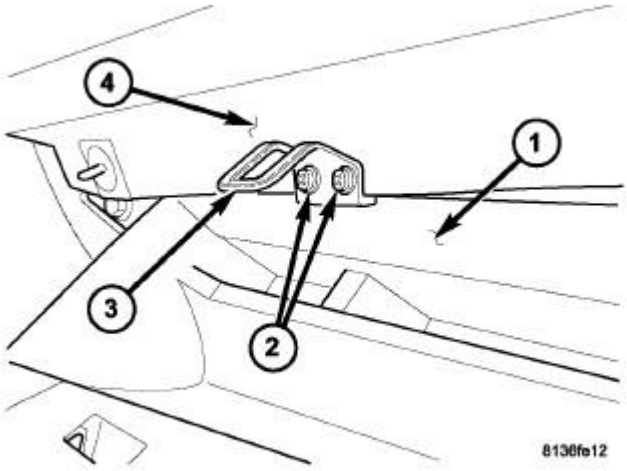

Fig. 390: Removing/Installing Striker-Latch-Glove Box
Courtesy of CHRYSLER LLC

1. Position the glove box latch striker (3) onto the instrument panel (4).
2. Install the two screws (2) that secure the glove box latch striker onto the instrument panel. Tighten the screws securely.
3. Close glove box door (1).

INTERIOR

CARPET

Removal

REMOVAL

1. Remove the driver and passenger front seats from the vehicle. See **Body/Seats/SEAT - Removal**.
2. Remove the center console from the front floor panel transmission tunnel. See **Body/Interior/CONSOLE, Floor - Removal**.
3. Remove the rear seat cushion from the vehicle. See **Body/Seats/COVER, Seat Cushion - Removal**.
4. Remove the lower quarter trim panel. See **Body/Interior/PANEL, Quarter Trim - Removal**.
5. Remove the sill plates.
6. Remove the push-pin fasteners that secure the rear carpet.
7. Lift the rear carpet from the floor panel far enough to extract the body wire harness take outs and connectors through the appropriate slits in the carpeting.
8. Remove the rear carpet from the vehicle.

FRONT

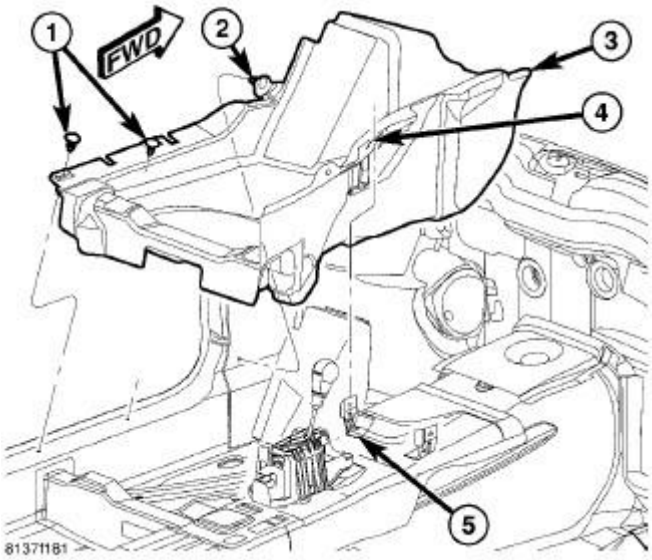

Fig. 391: Removing/Installing Center Console
Courtesy of CHRYSLER LLC

NOTE: The front carpet consists of two individual carpets, one for the driver side and one for the passenger side. These carpets can be removed from and installed into the vehicle individually.

1. Remove the driver and/or passenger front seat from the vehicle as appropriate. See **Body/Seats/SEAT - Removal**.
2. Remove the center console from the front floor panel transmission tunnel. See **Body/Interior/CONSOLE, Floor - Removal**.
3. Remove the trim from the driver or passenger side lower cowl side inner panel as appropriate. See **Body/Interior/PANEL, Cowl Trim - Removal**.
4. Remove the two push-pin fasteners (1) that secure the outboard edge of the front carpet (3) to the front door opening sill.
5. On the driver side only, remove the push-pin fastener (2) that secures the front carpet to the cowl side inner panel above the foot rest.

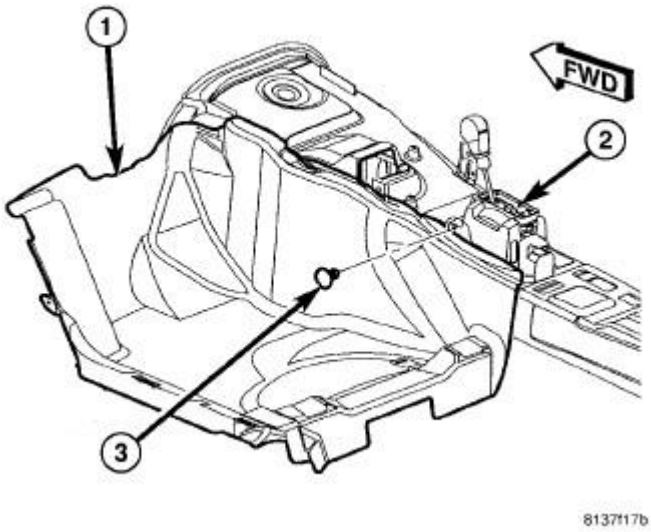

Fig. 392: Front Carpet Push-Pin Fastener (Driverside Only)
Courtesy of CHRYSLER LLC

6. On the driver side only, remove the push-pin fastener (3) that secures the inboard edge of the front carpet (1) to the transmission shifter bracket (2).
7. Remove the front carpet from the floor panel.

Installation

INSTALLATION

1. Position the rear carpet into the vehicle.
2. Pull the body wire harness take outs and connectors through the appropriate slits in the rear carpet.
3. Fit the rear carpet to the floor panel.
4. Install the push-pin fasteners that secure the rear carpet.
5. Install the sill plates.
6. Install the lower quarter trim panel. See **Body/Interior/PANEL, Quarter Trim - Installation**.
7. Install the rear seat cushion. See **Body/Seats/COVER, Seat Cushion - Installation**.
8. Install the center console. See **Body/Interior/CONSOLE, Floor - Installation**.
9. Install the driver and passenger front seats. See **Body/Seats/SEAT - Installation**.

FRONT

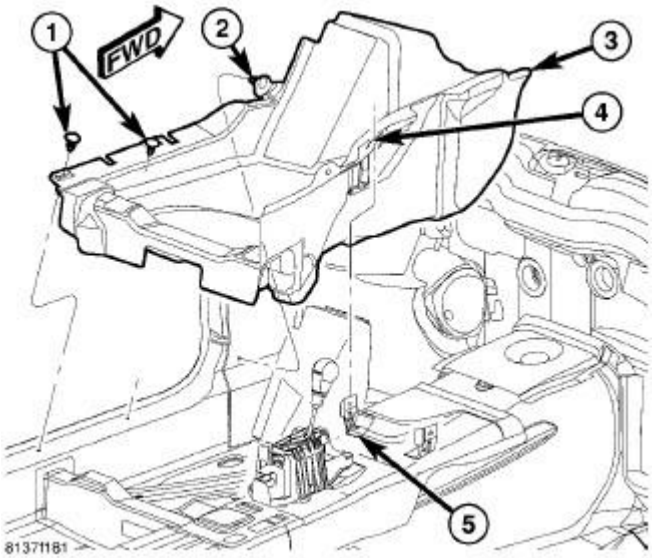

Fig. 393: Removing/Installing Center Console
Courtesy of CHRYSLER LLC

NOTE: The front carpet consists of two individual carpets, one for the driver side and one for the passenger side. These carpets can be removed from and installed into the vehicle individually.

1. Position and fit the front carpet (3) onto the floor panel. Be certain that the rear of the front carpet is fitted over the floor panel front crossmember and butts up against the front of the rear carpet without interference with the rear floor air duct opening. Be certain that the front of the front carpet is fitted to the dash panel without interference with the steering column, the accelerator or the heater and air conditioner unit. On the driver side only, be certain the slit (4) on the inboard edge of the carpet is engaged around the left instrument panel support bracket (5) on the top of the floor panel transmission tunnel.
2. Install the two push-pin fasteners (1) that secure the outboard edge of the front carpet to the front door opening sill.
3. On the driver side only, install the push-pin fastener (2) that secures the front carpet to the cowl side inner panel above the foot rest.

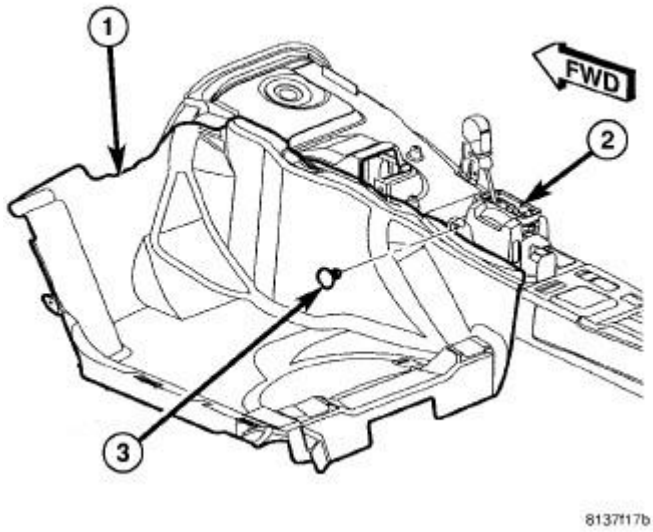

Fig. 394: Front Carpet Push-Pin Fastener (Driverside Only)
Courtesy of CHRYSLER LLC

4. On the driver side only, install the push-pin fastener (3) that secures the inboard edge of the front carpet (1) to the transmission shifter bracket (2).
5. Reinstall the trim onto the driver or passenger side lower cowl side inner panel as appropriate. See **Body/Interior/PANEL, Cowl Trim - Installation**.
6. Reinstall the center console onto the front floor panel transmission tunnel. See **Body/Interior/CONSOLE, Floor - Installation**.
7. Reinstall the driver and/or passenger front seat into the vehicle as appropriate. See **Body/Seats/SEAT - Installation**.

CONSOLE, FLOOR

Removal

REMOVAL

1. Apply the parking brake.
2. Turn the ignition switch to the On position, apply the service brakes and place the gear selector lever into the Neutral position.
3. Turn the ignition switch to the Off position and release the service brakes.
4. Disconnect and isolate the battery negative cable.

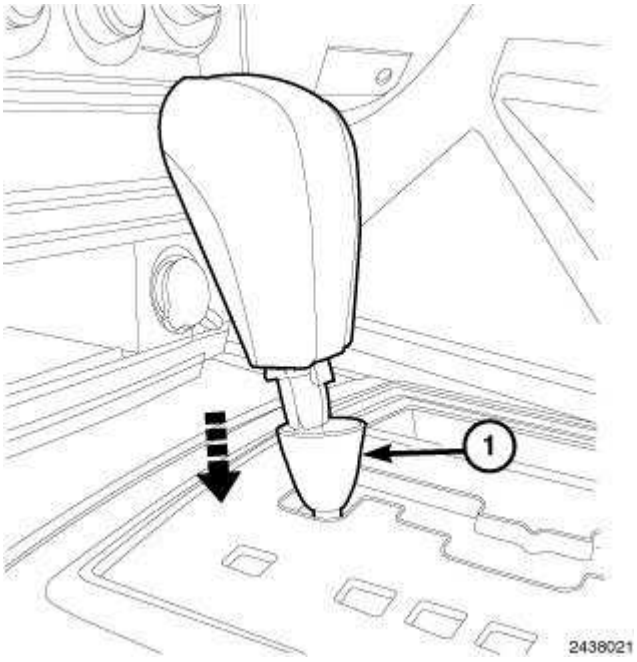

Fig. 395: Separate Retaining Ring From Shifter Knob
Courtesy of CHRYSLER LLC

5. Using a small flat bladed tool or equivalent, separate the retaining ring (1) and slide down the shifter shaft.

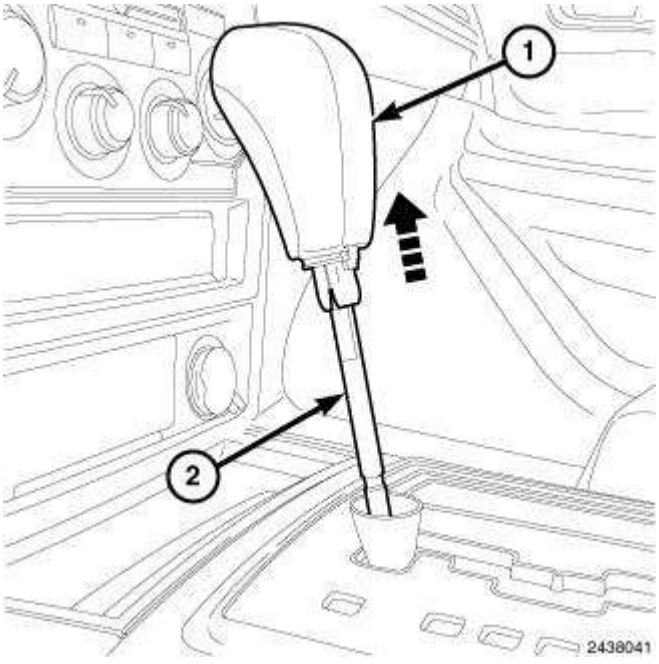

Fig. 396: Removing Shifter Knob
Courtesy of CHRYSLER LLC

6. Pull up on the shifter knob (1) and remove from the shifter shaft (2).

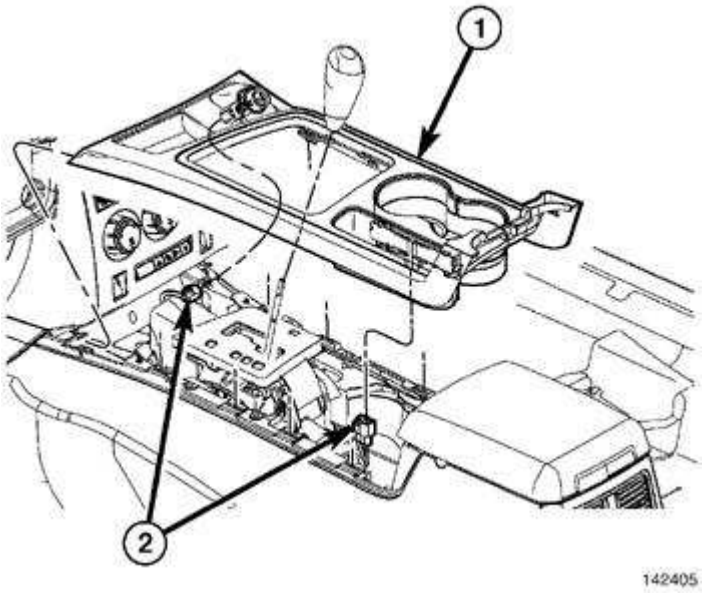

Fig. 397: Removing/Installing Console Shifter Bezel
Courtesy of CHRYSLER LLC

7. Remove the shifter bezel and shifter boot.
8. Open the lid of the console rear bin and remove the mat from the rear bin.
9. Using a trim stick, unsnap the console bezel (1) from the console.
10. Disconnect the electrical connectors (2).

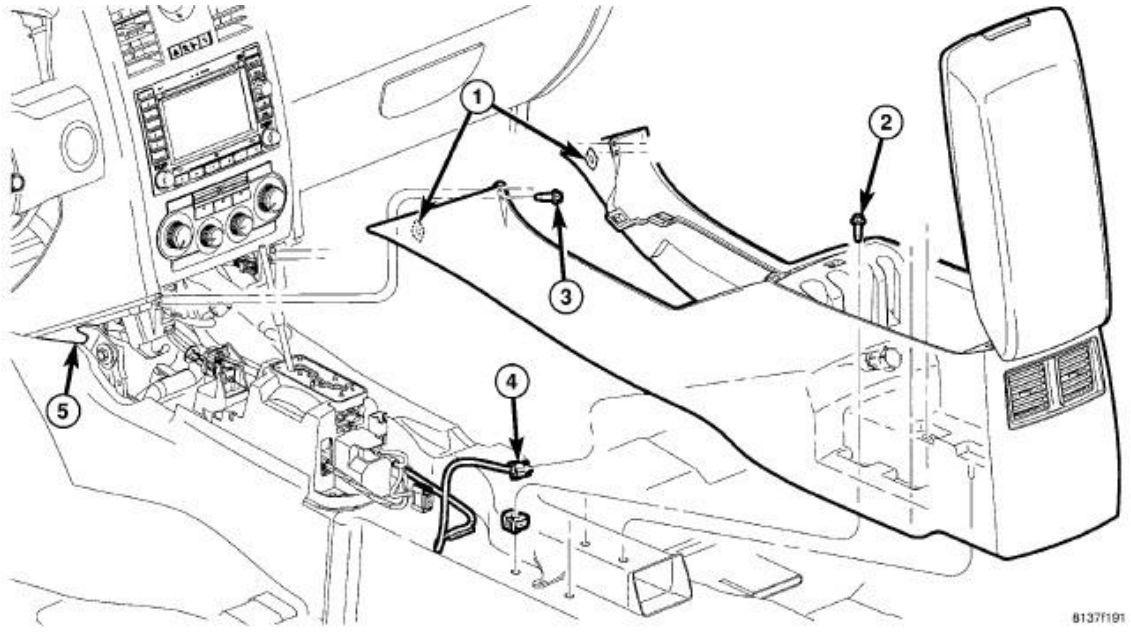

Fig. 398: Removing/Installing Center Floor Console
Courtesy of CHRYSLER LLC

11. Remove the fasteners (2) from the rear bin that secure the console to the floor panel

transmission tunnel.

12. Remove the fasteners (3) that secure the front of the console to the instrument panel.
13. Slide the console rearward and disconnect the electrical connectors.
14. Remove the floor console from the vehicle.

Installation

INSTALLATION

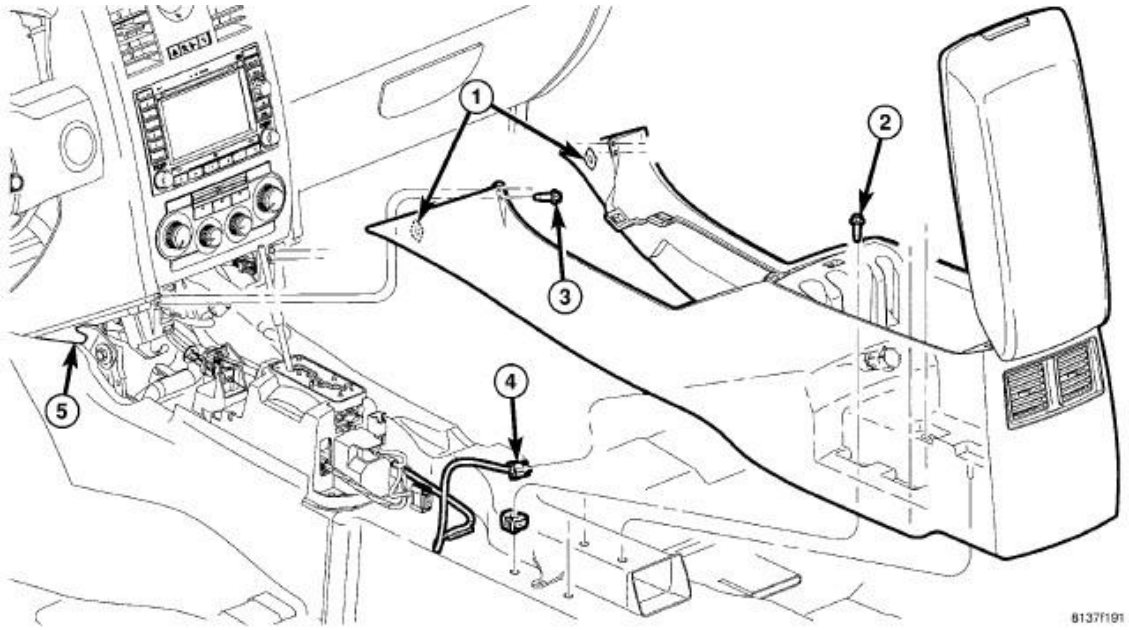

Fig. 399: Removing/Installing Center Floor Console
Courtesy of CHRYSLER LLC

1. Position the floor console into the vehicle and connect the electrical connectors.
2. Install the fasteners (3) at the front of the center console. Tighten the screws to 3 N.m (27 in. lbs.).
3. Install the fasteners (2) into the rear bin. Tighten the bolts to 5 N.m (44 in. lbs.).

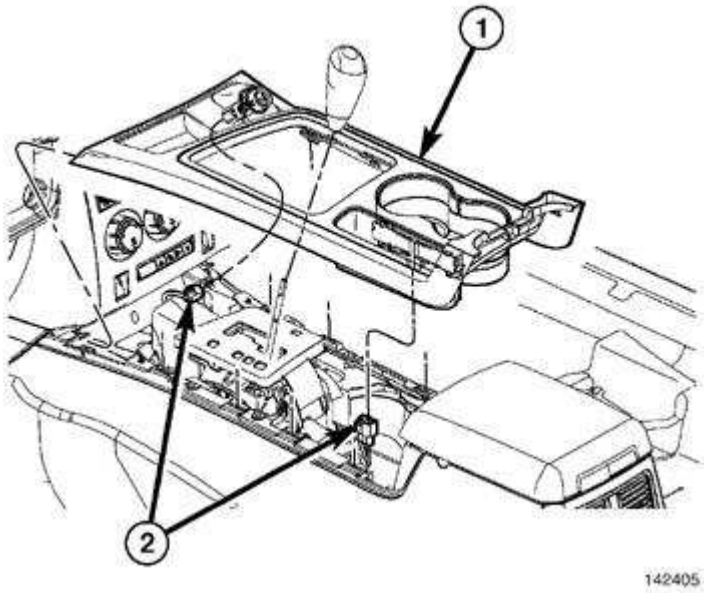

Fig. 400: Removing/Installing Console Shifter Bezel
Courtesy of CHRYSLER LLC

4. Position the console shifter bezel (1) into the vehicle.
5. Connect the electrical connectors.
6. Position the mat (5) into the console rear bin.
7. Install the shifter boot and bezel.

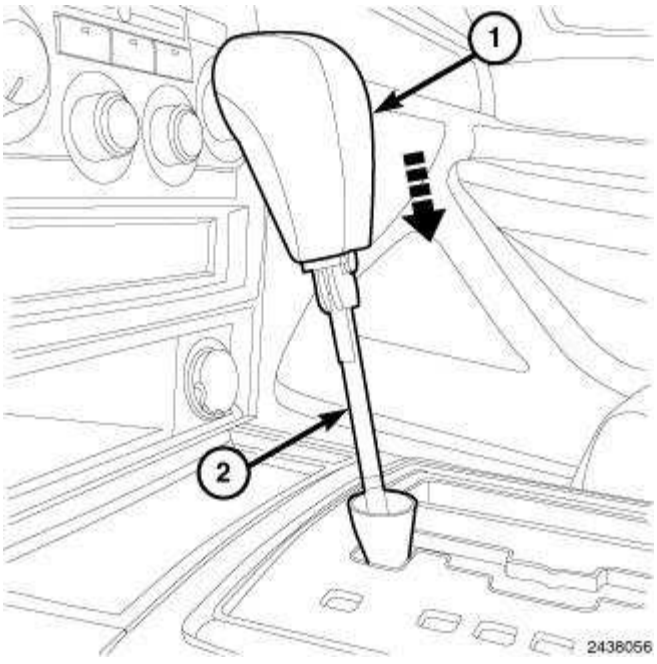

Fig. 401: Installing Shift Knob
Courtesy of CHRYSLER LLC

8. Place the gear selector lever into the Park position.
9. Slide the retaining ring over the shifter shaft (2) and slide the shift knob (1) onto the shaft (2) and slide down into place fully.

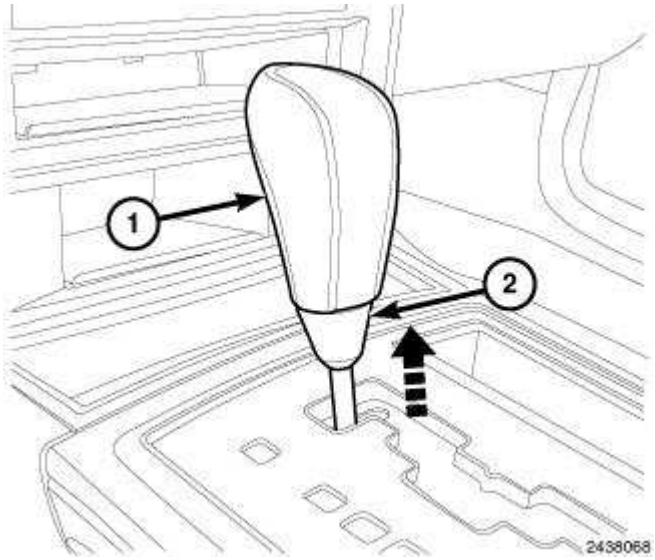

Fig. 402: Seating Retaining Ring Up Onto Shifter Knob
Courtesy of CHRYSLER LLC

10. Seat the retaining ring (2) up onto the shifter knob (2) and seat fully.
11. Connect the battery negative cable.

FOOT REST, FLOOR, FRONT

Removal

REMOVAL

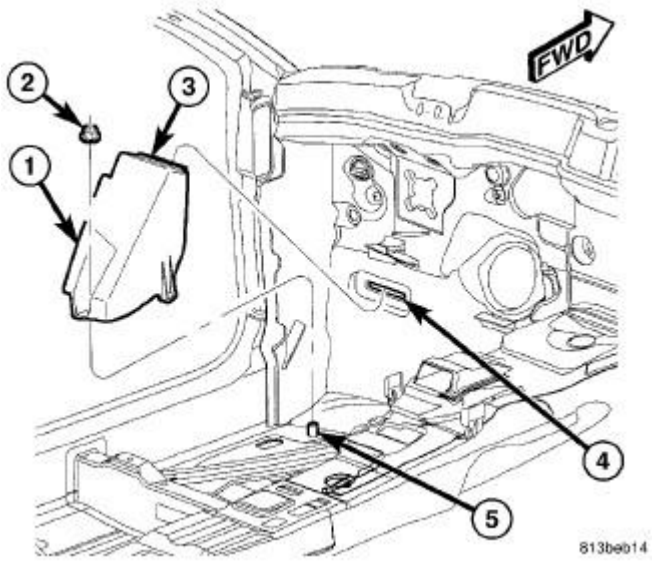

Fig. 403: Front Floor Foot Rest
Courtesy of CHRYSLER LLC

1. Remove the trim from the driver side lower cowl side inner panel. See **Body/Interior/PANEL, Cowl Trim - Removal**.
2. Remove the three push-pin fasteners that secure the driver side front carpet to the cowl side inner panel and the front door opening sill.
3. Pull the front floor carpet up and away from the foot rest (1) far enough to access and remove the nut (2) that secures the foot rest to the weld stud (5) on the front floor panel.
4. Lift the base of the foot rest upward far enough to disengage the tab (3) at the top of the foot rest from the slot (4) in the dash panel.
5. Remove the foot rest from the vehicle.

Installation

INSTALLATION

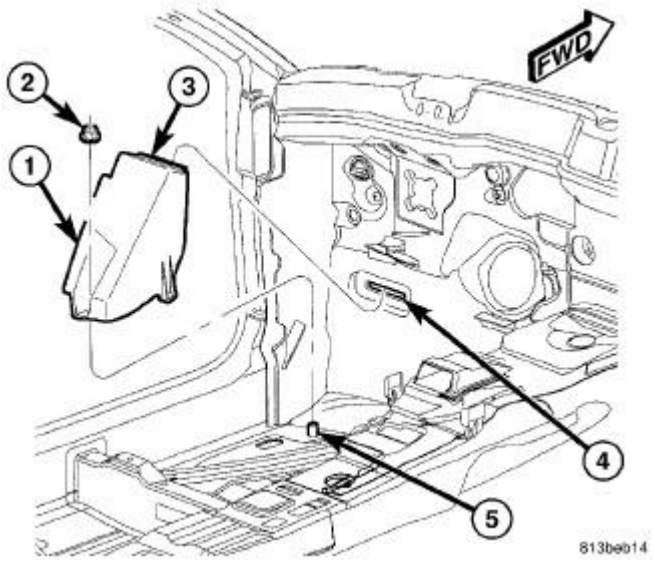

Fig. 404: Front Floor Foot Rest
Courtesy of CHRYSLER LLC

1. Pull the outboard edge of the driver side front floor carpet up and away from the floor far enough to position the foot rest (1) between the front floor panel and the carpet.
2. Engage the tab (3) at the top of the foot rest into the slot (4) in the dash panel.
3. Position the hole at the base of the foot rest over the weld stud (5) on the front floor panel.
4. Install and tighten the nut (2) that secures the foot rest to the weld stud. Tighten the nut to 16 N.m (12 ft. lbs.).
5. Reposition the driver side front carpet to the cowl side inner panel and the front door opening sill and secure with three push-pin fasteners.
6. Reinstall the trim onto the driver side lower cowl side inner panel. See **Body/Interior/PANEL, Cowl Trim - Installation**.

HEADLINER

Removal

REMOVAL

NOTE: Do not remove the headliner from the vehicle unless replacing with a new headliner.

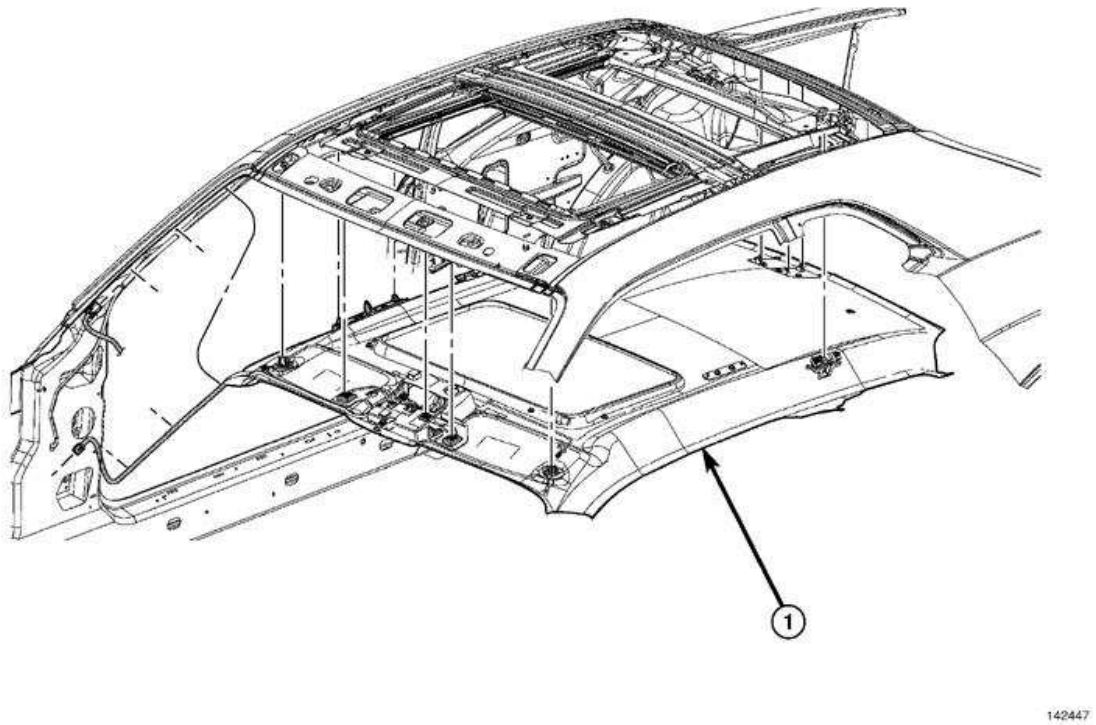

Fig. 405: Removing/Installing Headliner
Courtesy of CHRYSLER LLC

1. Disconnect and isolate the battery negative cable.
2. Remove A-pillar trim panels. See **Body/Interior/PANEL, A-Pillar Trim - Removal**.
3. Disengage the headliner wire harnesses from the retainers on each inner A-pillar and disconnect the connectors from the body wire harness connectors near the base of each A-pillar.
4. Remove the upper quarter trim panels. See **Body/Interior/PANEL, Quarter Trim - Removal**.
5. Remove the rear header trim panel.
6. If equipped, remove the overhead console from the center of the headliner near the windshield header. Refer to **Electrical - Message Systems/Overhead Console - Removal** .
7. If equipped, disconnect the electrochromic (automatic dimming) and/or the telematic (hands-free phone) mirror takeout(s) and connector(s) of the headliner wire harness from the connector receptacle(s) on the back (windshield side) of the inside rear view mirror housing.
8. Remove both sun visors and both visor receptacles from the headliner near the windshield header.
9. Remove both grab handle/coat hook/rear dome/reading lamp units from the headliner at the inner rear roof side rails.
10. If equipped, remove the trim welt from the headliner sunroof opening.
11. Recline both front seat backs.
12. Remove the passenger door. See **Body/Door - Front/DOOR - Removal**.

13. Carefully pull the headliner downward at the windshield header far enough to disengage the spring clip retainers.
14. Carefully pull the headliner downward at the inner rear roof side rails far enough to disengage the spring clip retainers.
15. Carefully pull the headliner downward near the center of the rear roof header far enough to disengage the rear spring clip retainer.
16. Disconnect the electrical connectors.
17. Carefully remove the headliner through the passenger door opening.

Installation

INSTALLATION

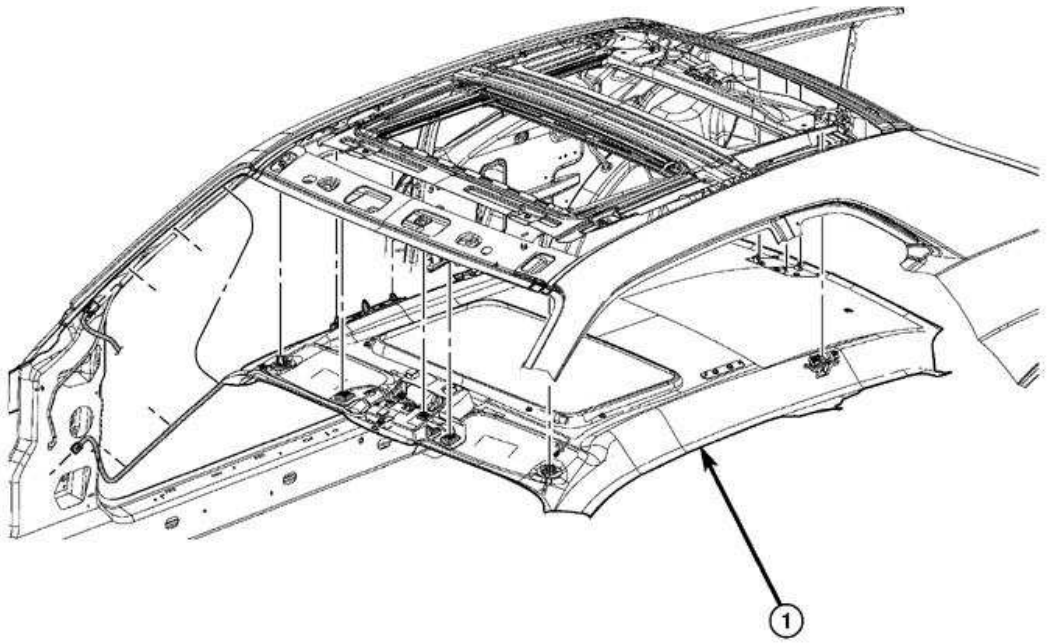

Fig. 406: Removing/Installing Headliner
Courtesy of CHRYSLER LLC

1. Carefully insert the headliner (1) through the passenger door opening.
2. Position the headliner into position.
3. Connect the electrical connectors.
4. Firmly press the headliner into position ensuring the spring clip retainers engage.
5. If equipped, install the trim welt onto the headliner sunroof opening.
6. Install both grab handle/coat hook/rear dome/reading lamp units into the headliner at the inner rear roof side rails.

7. Install both sun visors and both visor receptacles onto the headliner near the windshield header.
8. If equipped, connect the electrochromic (automatic dimming) and/or the telematic (hands-free phone) mirror takeout and connector of the headliner wire harness to the connector receptacle (s) on the back (windshield side) of the inside rear view mirror housing.
9. If equipped, install the overhead console to the center of the headliner near the windshield header. Refer to **Electrical - Message Systems/Overhead Console - Installation** .
10. Install the upper quarter trim panel. See **Body/Interior/PANEL, Quarter Trim - Installation**.
11. Connect the electrical connectors at the A-pillars.
12. Install A-pillar trim panels. See **Body/Interior/PANEL, A-Pillar Trim - Installation**.
13. Install the passenger door and adjust as necessary. See **Body/Door - Front/DOOR - Installation**.
14. Connect the battery negative cable.

MIRROR, REARVIEW

Removal

REMOVAL

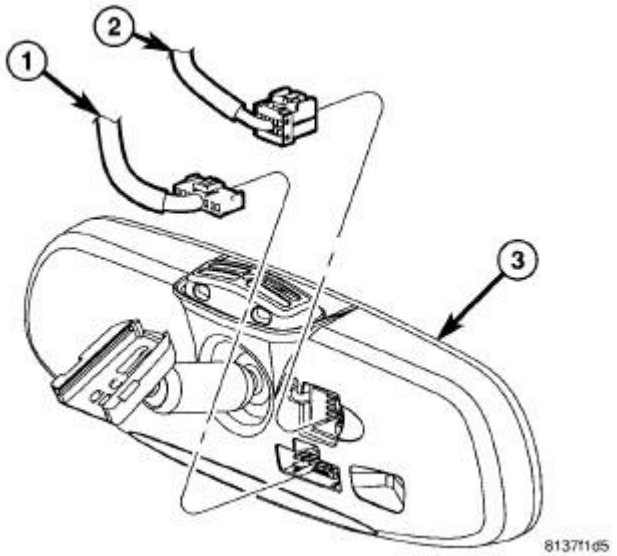

Fig. 407: Inside Rearview Mirror
Courtesy of CHRYSLER LLC

1. If the vehicle is equipped with either the electrochromic (automatic dimming) or the telematic (hands-free phone) mirror option, disconnect and isolate the battery negative cable.
2. If the vehicle is so equipped, disconnect the electrochromic mirror takeout and connector (1) and/or the telematic mirror takeout and connector (2) of the headliner wire harness from the connector receptacle on the back (windshield side) of the mirror housing (3).

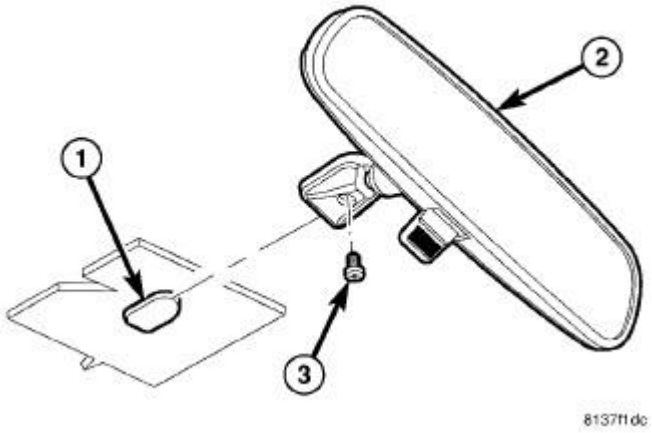

Fig. 408: Removing/Installing Inside Rearview Mirror
Courtesy of CHRYSLER LLC

3. Remove the set screw (3) that secures the rear view mirror (2) to the support bracket/button (1) on the inside of the windshield glass.
4. Slide the rear view mirror upward far enough to disengage it from the support bracket/button.

Installation

MIRROR

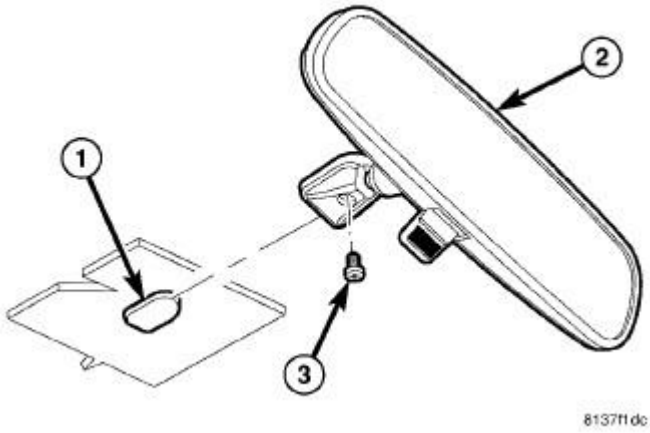

Fig. 409: Removing/Installing Inside Rearview Mirror
Courtesy of CHRYSLER LLC

1. Position and slide the rear view mirror (2) downward over the support bracket/button (1) on the inside of the windshield glass.
2. Install and tighten the set screw (3) that secures the rear view mirror to the support bracket/button. Tighten the screw to 2 N.m (17 in. lbs.).

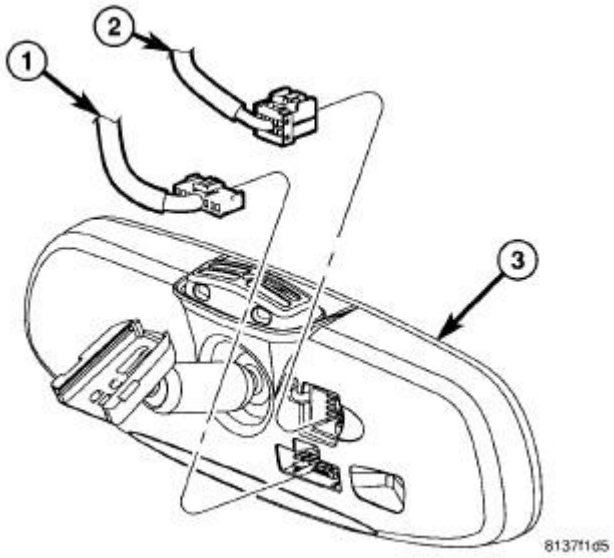

Fig. 410: Inside Rearview Mirror
Courtesy of CHRYSLER LLC

3. If the vehicle is so equipped, route the electrochromic (automatic dimming) mirror takeout and connector (1) and/or the telematic (hands-free phone) mirror takeout and connector (2) of the headliner wire harness to the left of the mirror support bracket and reconnect it to the connector receptacle on the back (windshield side) of the mirror housing (3).
4. If the vehicle is equipped with either the electrochromic or the telematic mirror option, reconnect the battery negative cable.

SUPPORT BRACKET

NOTE: The rear view mirror support bracket (or button) is permanently bonded to the inside of the windshield glass. If the bracket should become separated from the glass, it may be re-bonded using the following procedure. This procedure requires the use of a Rear View Mirror Adhesive kit that is available through Mopar® in single application packages that include a two-part adhesive and an accelerant with applicator.

1. Mark the proper position for the mirror bracket on the outside of the windshield glass with a wax pencil. The residual adhesive on the inside of the glass from the prior mirror bracket installation can be used as a guide.
2. Clean the bracket contact area on the inside of the glass. Use a mild powdered cleanser on a cloth saturated with isopropyl (rubbing) alcohol. Finally, clean the glass with a paper towel dampened with alcohol.
3. Sand the bonding surface (the smaller side) of the support bracket with fine grit-sandpaper. Wipe the bracket surface clean with a paper towel.
4. Apply accelerant to the bonding surface of the bracket according to the following instructions:
    - Crush the accelerant vial to saturate the felt applicator.

- Remove the paper sleeve.
- Apply accelerant to the bonding surface of the bracket.
- Allow the accelerant to dry for five minutes.
- Do not touch the bracket bonding surface after the accelerant has been applied.

5. Apply adhesive accelerant to the bracket contact area on the inside of the windshield glass. Allow the accelerant to dry for one minute. Do not touch the bracket contact area of the glass after the accelerant has been applied.
6. Install the bracket according to the following instructions:
   - Apply one drop of adhesive at the center of the bracket contact area on the inside of the windshield glass.
   - Apply an even coat of adhesive to the bonding surface of the bracket.
   - Align the bracket with the marked position on the windshield glass.
   - Press and hold the bracket in place for at least one minute.

NOTE: Verify that the mirror support bracket is correctly aligned, because the adhesive will cure rapidly.

7. Allow the adhesive to cure for 8-10 minutes. Remove any excess adhesive with an alcohol-dampened cloth.
8. Allow the adhesive to cure for an additional 8-10 minutes before reinstalling the mirror.

PANEL, A-PILLAR TRIM

Removal

REMOVAL

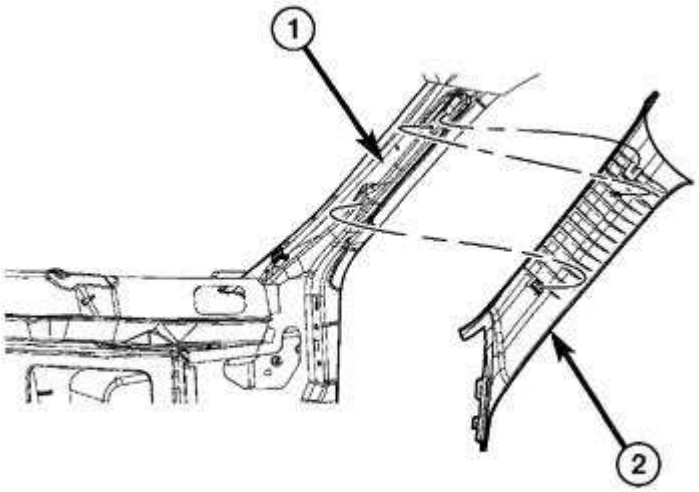

141893

Fig. 411: Removing/Installing A-Pillar Trim Panel
Courtesy of CHRYSLER LLC

1. Using a trim stick or another suitable wide flat-bladed tool, carefully pry the upper end of the A-pillar trim (2) rearward from the inside of the A-pillar far enough to disengage the two spring clip retainers that secure the trim to the slots in the pillar.
2. Disconnect the A-pillar tether from the body side A-pillar (1).
3. Disengage the base of the A-pillar trim from the end of the instrument panel top cover.
4. Remove the A-pillar trim from the vehicle.

Installation

INSTALLATION

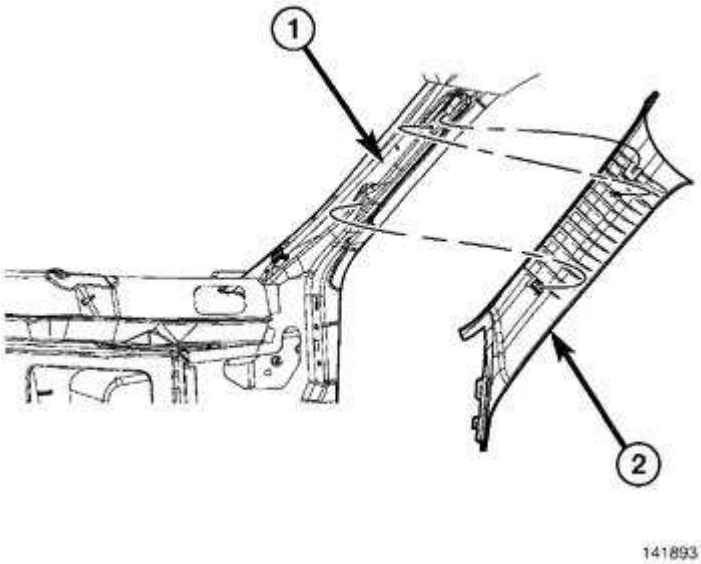

Fig. 412: Removing/Installing A-Pillar Trim Panel
Courtesy of CHRYSLER LLC

1. Position the A-pillar trim (2) and connect the tether to the body side A-pillar (1) mounting bracket.
2. Engage the base of the A-pillar trim to the end of the instrument panel top cover.
3. Align the two spring clip retainers on the trim with the slots in the inner A-pillar.
4. Using hand pressure, press firmly and evenly forward on the trim over each of the spring clip locations until the retainers snap into place.

PANEL, COWL TRIM

Removal

UPPER

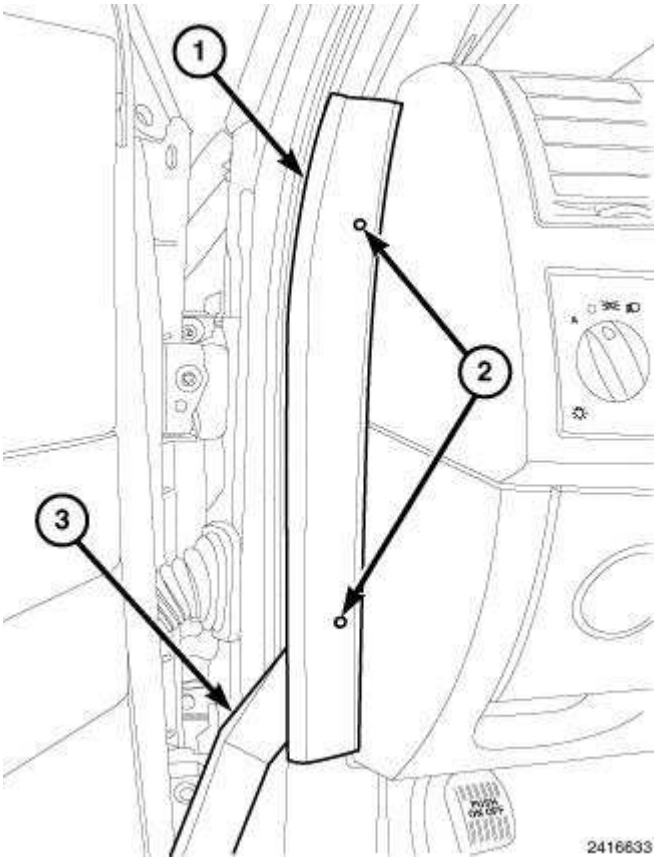

Fig. 413: Removing Upper Cowl Trim Panel - Lower Retaining Clip
Courtesy of CHRYSLER LLC

1. Using trim tool C-4829A or equivalent (3), directly below the lower retaining clip (2), release the clip.

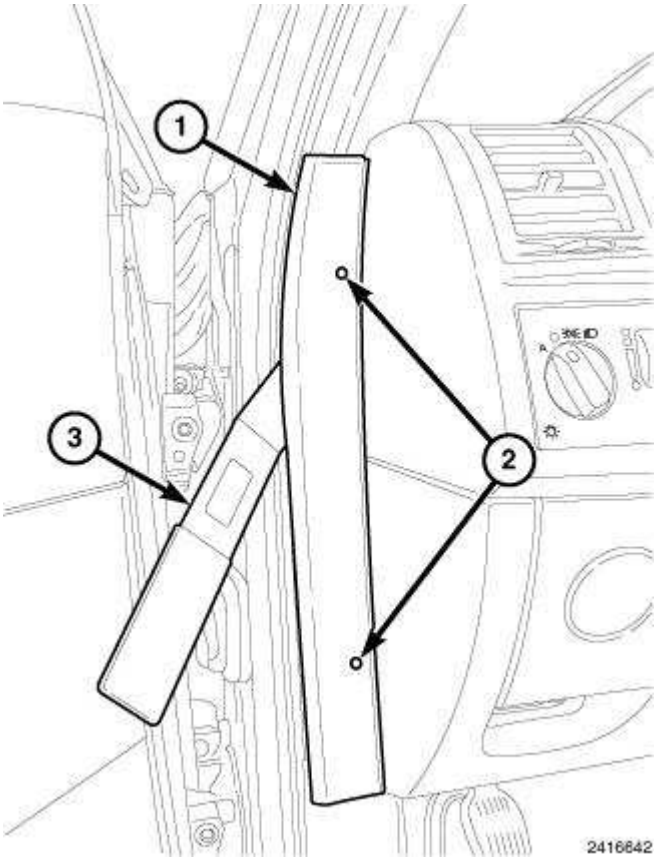

Fig. 414: Removing Upper Cowl Trim Panel - Upper Retaining Clip
Courtesy of CHRYSLER LLC

2. Using trim tool C-4829A or equivalent (3), directly below the upper retaining clip (2), release the clip and remove the upper cowl trim panel (1).

LOWER

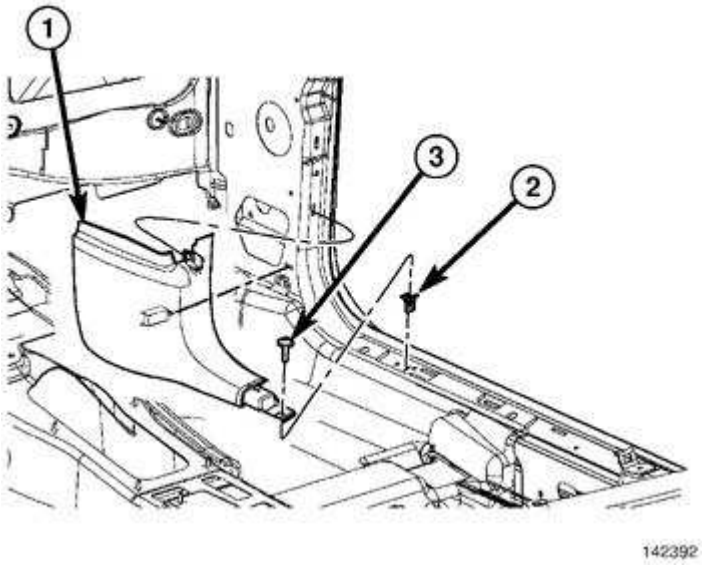

Fig. 415: Removing/Installing Lower Cowl Trim Panel
Courtesy of CHRYSLER LLC

1. Remove the upper cowl trim from the front of the front door opening. See **Body/Interior/PANEL, Cowl Trim - Removal**.
2. Remove the sill plate, as neccassary.
3. Remove the pushpin retainer (3) at the rear of the cowl trim panel (1).
4. Using a trim stick or equilavent, carefully pry the cowl trim far enough to disengage the spring clip retainers.
5. Remove the cowl trim from the vehicle.

Installation

UPPER

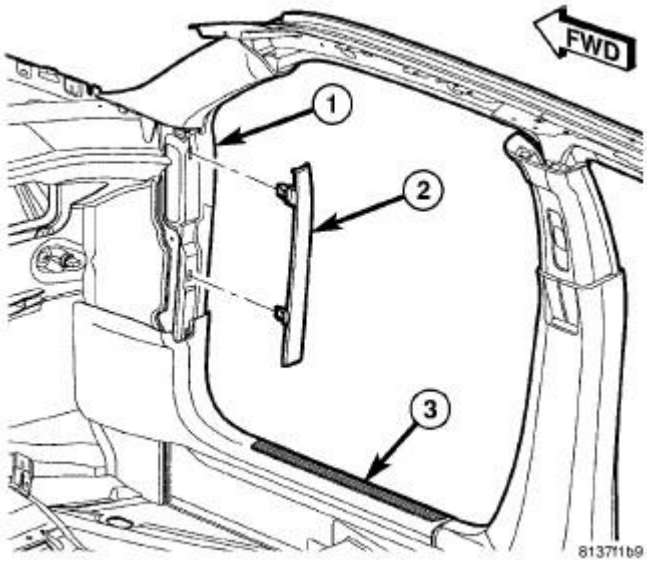

Fig. 416: Upper Cowl Trim
Courtesy of CHRYSLER LLC

1. Position the upper cowl trim (2) to the cowl (1) at the front of the front door opening and the lower cowl trim (3).
2. Align the two spring clip retainers on the trim with the slots in the cowl.
3. Using hand pressure, press firmly and evenly downward on the trim over each of the spring clip locations until the retainers snap into place.

LOWER

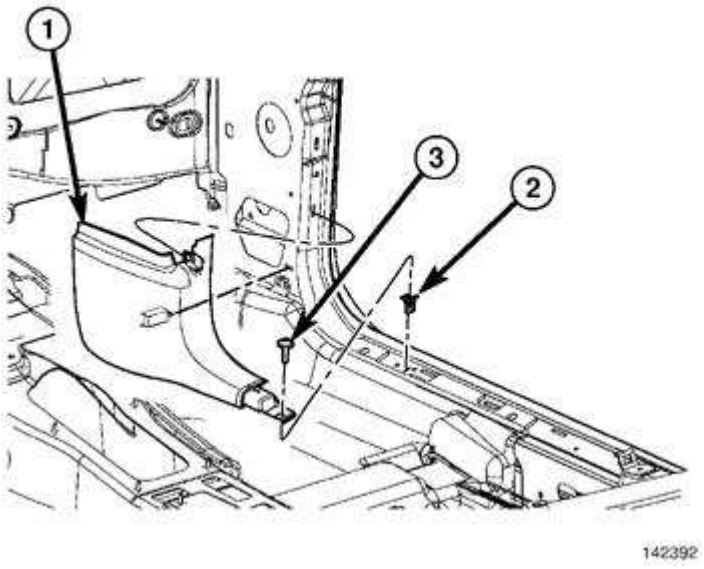

Fig. 417: Removing/Installing Lower Cowl Trim Panel
Courtesy of CHRYSLER LLC

1. Install the cowl trim (1) to the vehicle.
2. Engage the spring clip retainers.
3. Install the push pin (3) at the rear of the cowl trim panel.
4. Install the sill plate.
5. Install the upper cowl trim to the front of the front door opening. See **Body/Interior/PANEL, Cowl Trim - Installation**.

PANEL, QUARTER TRIM

Removal

REMOVAL

QUARTER TRIM - UPPER

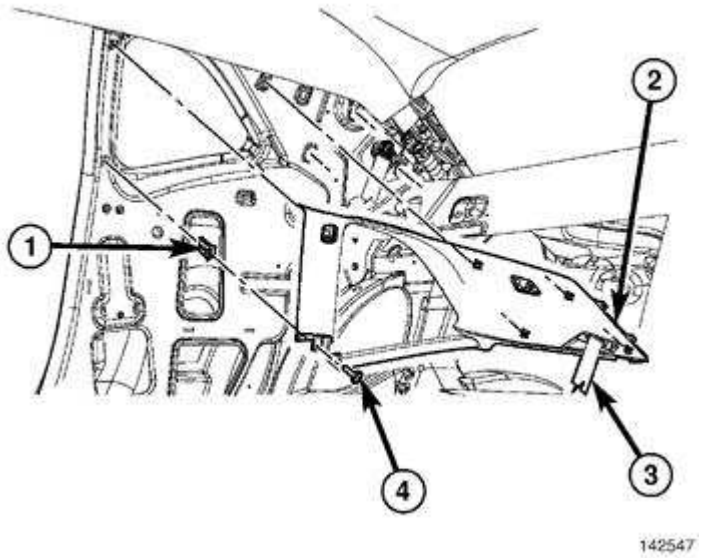

Fig. 418: Removing/Installing Quarter Window Trim Panel
Courtesy of CHRYSLER LLC

1. Remove the lower quarter trim panel. **QUARTER TRIM - LOWER**
2. Remove the mounting fasteners (4).
3. Carefully pry the upper quarter trim panel (2) disengaging the spring slip retainers.
4. Remove the rear seat belt anchor.
5. Route the seat belt (3) through the upper quarter trim panel.
6. Remove the upper quarter trim panel from the vehicle.

QUARTER TRIM - LOWER

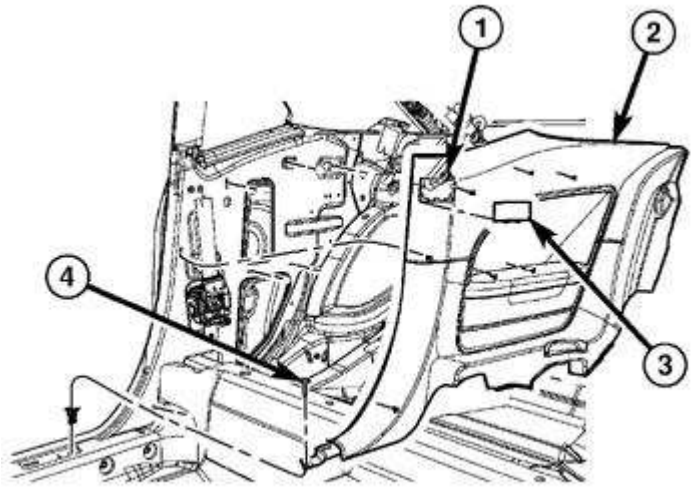

Fig. 419: Removing/Installing Lower Quarter Trim Panel
Courtesy of CHRYSLER LLC

1. Remove the sill plate by carefully prying up and disengaging the retainers.
2. Remove the lower seat belt anchor.
3. Remove the fasteners (1 and 4).
4. Remove the seat belt opening cover (3).
5. Carefully pry the lower quarter trim panel (2) disengaging the retainers.
6. Route the seat belt through the opening in the trim panel and remove the lower quarter trim panel from the vehicle.

Installation

INSTALLATION

QUARTER TRIM - UPPER

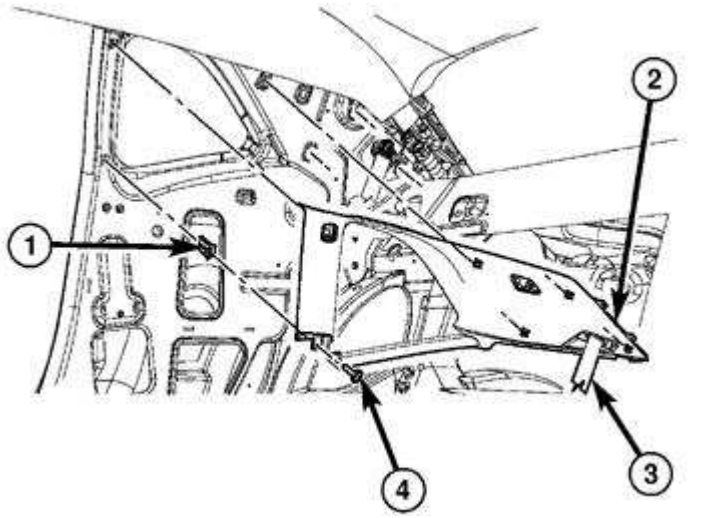

Fig. 420: Removing/Installing Quarter Window Trim Panel
Courtesy of CHRYSLER LLC

1. Install the upper quarter trim panel to the vehicle.
2. Route the seat belt (3) through the upper quarter trim panel.
3. Install the rear seat belt anchor.
4. Carefully seat upper quarter trim panel (2) engaging the spring slip retainers.
5. Install the mounting fasteners (4).
6. Install the lower quarter trim panel. **QUARTER TRIM - LOWER**

QUARTER TRIM - LOWER

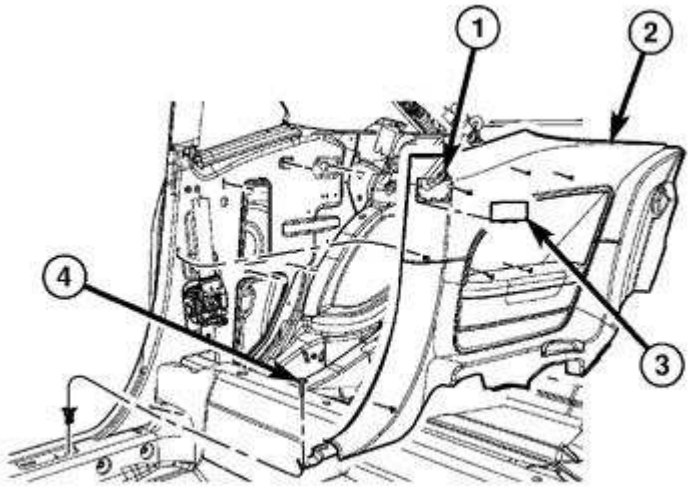

Fig. 421: Removing/Installing Lower Quarter Trim Panel
Courtesy of CHRYSLER LLC

1. Route the seat belt through the opening in the trim panel and Install the lower quarter trim panel to the vehicle.
2. Carefully seat the lower quarter trim panel (2) engaging the retainers.
3. Install the seat belt opening cover (3).
4. Install the fasteners (1 and 4).
5. Install the lower seat belt anchor.
6. Install the sill plate.

PANEL, REAR SHELF

Removal

REMOVAL

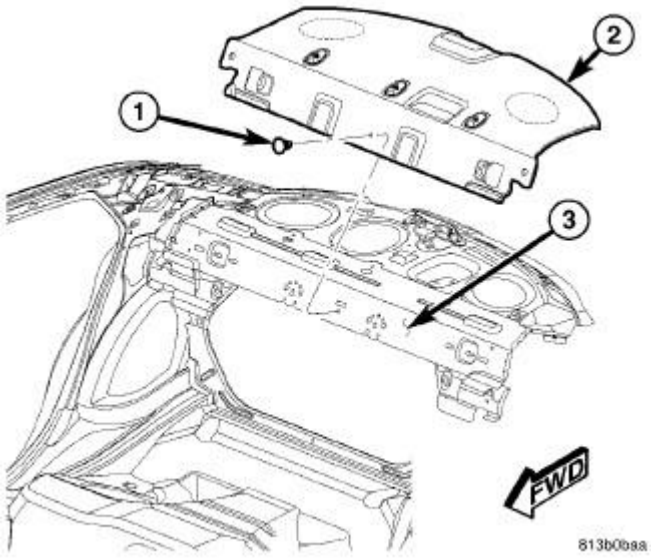

Fig. 422: Rear Shelf Trim Panel
Courtesy of CHRYSLER LLC

1. Disconnect and isolate the battery negative cable.
2. Remove the quarter trim panels. See **Body/Interior/PANEL, Quarter Trim - Removal**.
3. Remove the nut that secures the center rear seat belt lower anchor to the stud on the floor panel and feed the seat belt webbing back through the opening in the top of the rear shelf panel trim (2) to the retractor.
4. Remove the push-pin fastener (1) that secures the trim to the rear shelf panel (3).
5. Slide the trim forward to disengage the S-clip that secures the underside of the trim to the center of the shelf panel.

6. Remove the trim from the rear shelf panel.

Installation

INSTALLATION

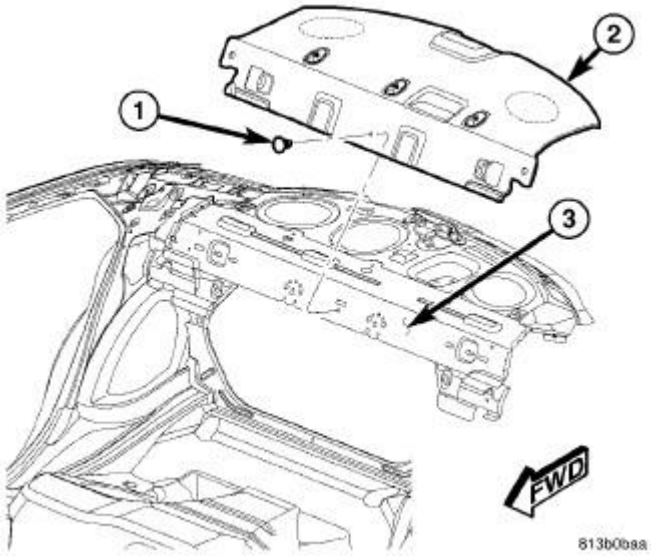

Fig. 423: Rear Shelf Trim Panel
Courtesy of CHRYSLER LLC

1. Position the trim (2) onto the rear shelf panel (3).
2. Slide the rear edge of the trim rearward to engage the lens bezel of the center high-mounted stop lamp and far enough to engage the S-clip that secures the underside of the trim to the center of the shelf panel.
3. Install the push-pin fastener (1) that secures the trim to the rear shelf panel.
4. Pull the center rear seat belt lower anchor and belt webbing from the retractor through the opening in the top of the rear shelf panel trim and back down to the stud on the floor panel.
5. Install and tighten the nut that secures the seat belt lower anchor to the stud on the floor panel. Tighten the nut to 34 N.m (25 ft. lbs.).
6. Install the quarter trim panel. See **Body/Interior/PANEL, Quarter Trim - Installation**.
7. Reconnect the battery negative cable.

PANEL, TRUNK TRIM, REAR

Removal

REMOVAL

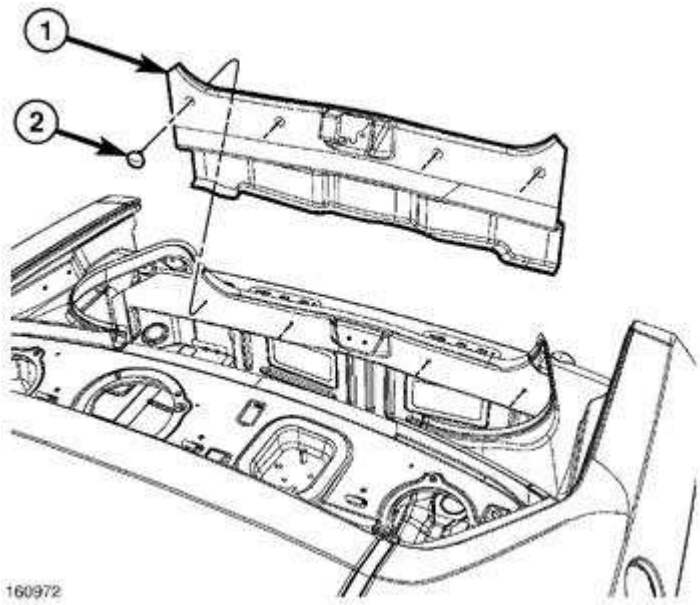

Fig. 424: Removing/Installing Trunk Rear Trim Panel
Courtesy of CHRYSLER LLC

1. Remove the four push-pin fasteners (2) that secure the trunk rear trim panel (1) to the inside of the deck opening lower panel.
2. Remove the trim panel from the vehicle.

Installation

INSTALLATION

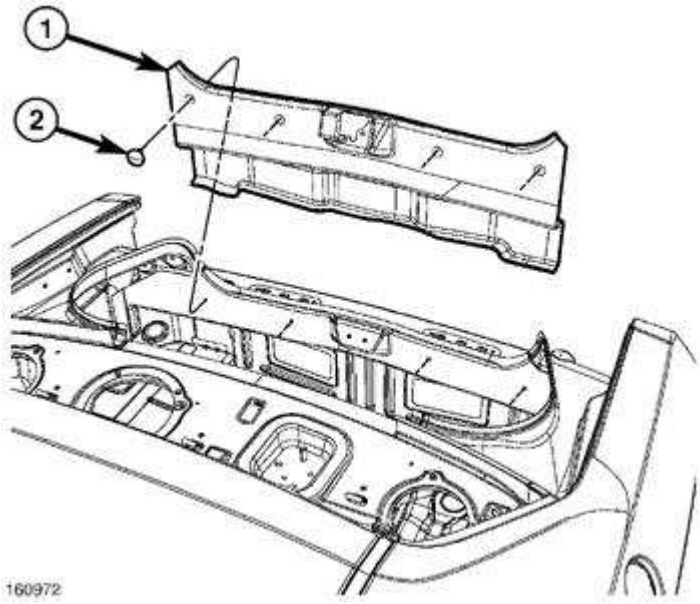

Fig. 425: Removing/Installing Trunk Rear Trim Panel
Courtesy of CHRYSLER LLC

1. Position the trunk rear trim panel (1) to the inside of the deck opening lower panel.
2. Install the four push-pin fasteners (2) that secure the trim panel to the deck opening lower panel.

SUPPORT, VISOR

Removal

REMOVAL

1. Disengage sun visor from center support.
2. Remove mounting fasteners attaching support to roof header,
3. Remove support from vehicle.

Installation

INSTALLATION

1. Place support into position.
2. Install mounting fasteners attaching support to roof header,
3. Engage sun visor to center support.

VISOR

Removal

REMOVAL

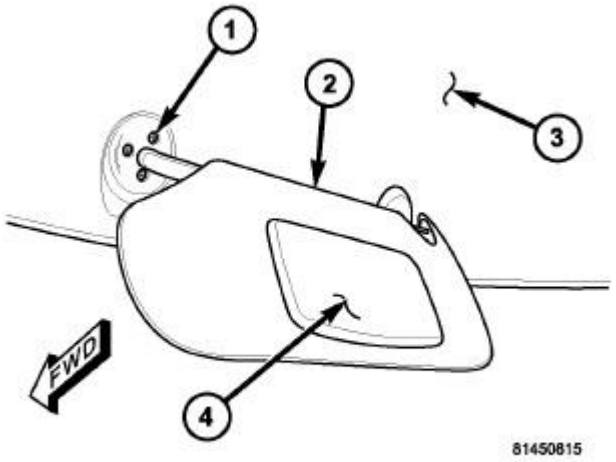

Fig. 426: Sun Visor
Courtesy of CHRYSLER LLC

CAUTION: When removing or installing the screws (1), be certain to avoid any wiring or drain tube interference.

1. Remove the three screws (1) that secure each sun visor (2) to the roof panel and remove the visor from the headliner (3).
2. If equipped, disconnect the wire harness connector for the illuminated vanity mirror (4).

Installation

INSTALLATION

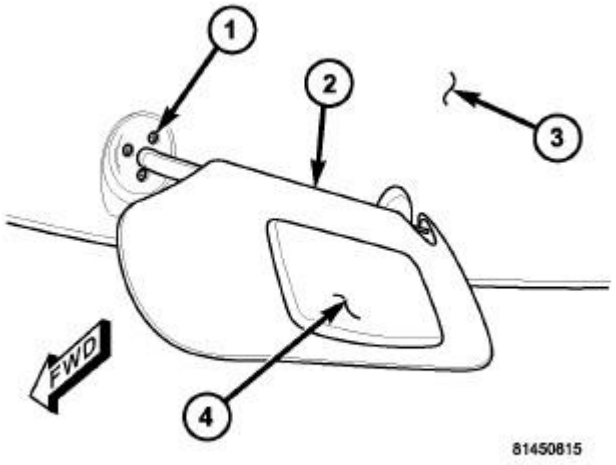

Fig. 427: Sun Visor
Courtesy of CHRYSLER LLC

CAUTION: When removing or installing the screws (1), be certain to avoid any wiring or drain tube interference.

1. If equipped, connect the wire harness connector for the illuminated vanity mirror (4).
2. Position the sun visor (2) onto the headliner (3).
3. Install the three screws (1) that secure each sun visor to the roof panel. Tighten the screws to 2.2 N.m (20 in. lbs.).

WELT, TRUNK

Removal

REMOVAL

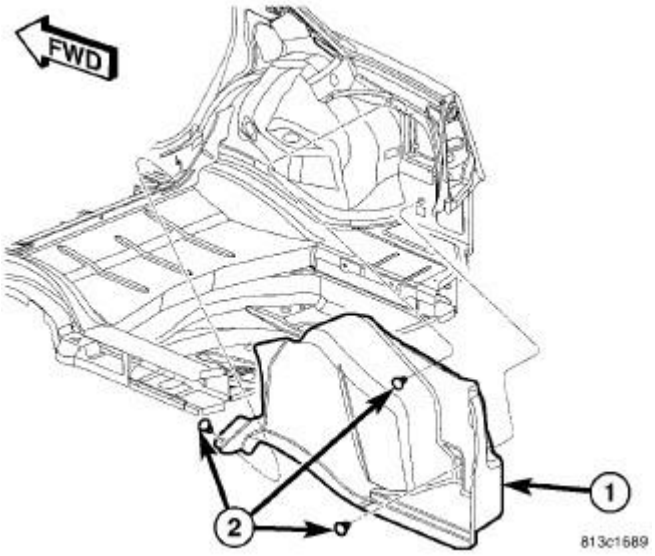

Fig. 428: Trunk Lining
Courtesy of CHRYSLER LLC

1. Remove the spare tire cover/trunk floor carpet from over the spare tire well. See **Body/Interior/CARPET - Removal**.
2. Remove the trunk rear trim panel from the luggage compartment. See **Body/Interior/PANEL, Trunk Trim - Removal**
3. Remove the three push-pin fasteners (2) that secure the right or the left trunk side trim (1) to the appropriate locations within the luggage compartment.
4. Remove the trunk side trim from the luggage compartment.

Installation

INSTALLATION

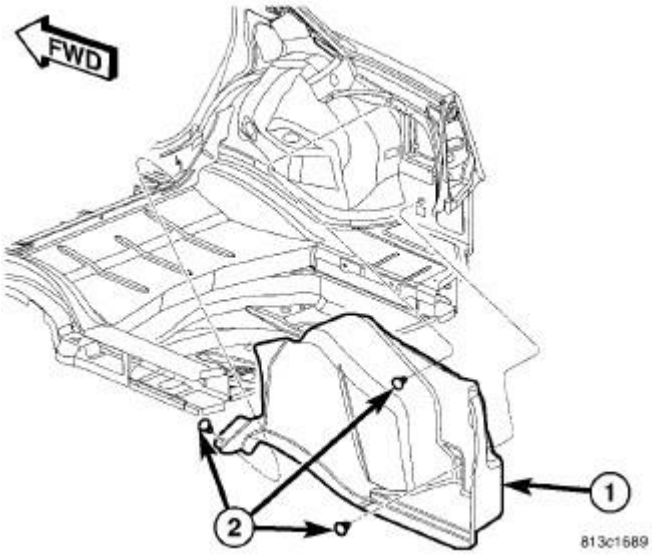

Fig. 429: Trunk Lining
Courtesy of CHRYSLER LLC

1. Position and fit the right or the left trunk side trim (1) within the luggage compartment.
2. Install the three push-pin fasteners (2) that secure side trim to the appropriate locations within the luggage compartment.
3. Reinstall the trunk rear trim panel into the luggage compartment. See **Body/Interior/PANEL, Trunk Trim - Installation**
4. Reinstall the spare tire cover/trunk floor carpet over the spare tire well in the luggage compartment. See **Body/Interior/CARPET - Installation**.

PAINT

SPECIFICATIONS

PAINT CODES

EXTERIOR COLORS

EXTERIOR COLOR	CHRYSLER CODE
Inferno Red Crystal Pearlcoat	ARH
Brilliant Black Pearlcoat	AXR
Dark Titanium Metallic Clearcoat	FDT
Hemi Orange Pearlcoat	FLC
B-5 Blue Pearlcoat	FQD
Deep Water Blue Pearlcoat	GBS
Bright Silver Metallic Clearcoat	WS2
Stone White Clearcoat	SW1
Torred Clearcoat	ZR3

INTERIOR COLORS

INTERIOR COLOR	CHRYSLER CODE
V = Dark Slate Gray	DV

BASECOAT/CLEARCOAT FINISH

Description

DESCRIPTION

The original equipment paint finish is a multi step process that involves cleaning, applying electro de-position (E-coat), anti-chip primer, basecoat, and clearcoat steps.

CAUTION: Do not use abrasive chemicals, abrasive compounds or harsh alkaline based cleaning solvents on the painted surfaces of a vehicle. Failure to follow this caution can result in damage to vehicle finish.

On most vehicles a two-part paint application (basecoat/clearcoat) is used. Color paint that is applied to primer is called basecoat. A clear coat paint is then applied to protect the basecoat from ultraviolet light and to provide a durable high-gloss finish.

FINESSE SANDING, BUFFING, AND POLISHING

Description

DESCRIPTION

CAUTION: Do not remove more than 0.5 mils of clearcoat finish when sanding, hand buffing or polishing. Basecoat paint must retain clearcoat for durability.

CAUTION: If the finish has been finesse sanded in the past, it cannot be repeated. Failure to follow this caution can result in damage to vehicle finish.

NOTE: Finesse sanding should only be performed by a trained automotive paint technician.

Minor acid etching, orange peel, or smudging in a clearcoat or single-stage finish can be reduced with light finesse sanding, hand buffing and polishing. Use a Paint Thickness Gauge #PR-ETG-2X or equivalent to determine clearcoat or single-stage paint thickness before and after the repair.

PAINT CODE

Description

DESCRIPTION

Exterior vehicle body colors are identified on the Vehicle Certification Label. Refer to **Vehicle Data/Vehicle Information/Vehicle Certification Label - Description** . The first digit of the paint code listed on the vehicle indicates the sequence of application, i.e.: P = primary coat, Q = secondary coat. The color names provided in the Paint and Trim Code Description chart are the color names used on most repair product containers.

PAINT TOUCH-UP

Description

DESCRIPTION

When a painted metal surface has been scratched or chipped, it should be touched-up as soon as possible to avoid corrosion. For best results, use MOPAR® Scratch Filler/Primer, Touch-Up Paints and Clear Top Coat.

WARNING: Use an osha approved respirator and safety glasses when spraying paint or solvents in a confined area. Personal injury can result.

Standard Procedure

STANDARD PROCEDURE

1. Scrape loose paint and corrosion from inside scratch or chip.
2. Clean affected area with MOPAR® Tar/Road Oil Remover or equivalent, and allow to dry.
3. Fill the inside of the scratch or chip with a coat of filler/primer. Do not overlap primer onto good surface finish. The applicator brush should be wet enough to puddle-fill the scratch or chip without running. Do not stroke brush applicator on body surface. Allow the filler/primer to dry hard.
4. Cover the filler/primer with color touch-up paint. Do not overlap touch-up color onto the original color coat around the scratch or chip. Butt the new color to the original color, if possible. Do not stroke applicator brush on body surface. Allow touch-up paint to dry hard.
5. On vehicles without clearcoat, the touch-up color can be lightly finesse sanded (1500 grit) and polished with rubbing compound.
6. On vehicles with clearcoat, apply clear top coat to touch-up paint with the same technique as described in 4. Allow clear top coat to dry hard. If desired, 5 can be performed on clear top coat.

WARNING: Avoid prolonged skin contact with petroleum or alcohol - based cleaning solvents. Personal injury can result.

SEATS, FRONT

WARNING

RESTRAINT SYSTEM

WARNING: **During and following any seat belt or child restraint anchor service, carefully inspect all seat belts, buckles, mounting hardware, retractors, tether straps, and anchors for proper installation, operation, or damage. Replace any belt that is cut, frayed, or torn. Straighten any belt that is twisted. Tighten any loose fasteners. Replace any belt that has a damaged or inoperative buckle or retractor. Replace any belt that has a bent or damaged latch plate or anchor plate. Replace any child restraint anchor or the unit to which the anchor is integral that has been bent or damaged. Never attempt to repair a seat belt or child restraint component. Always replace damaged or faulty seat belt and child restraint components with the correct, new and unused replacement parts listed in the Chrysler Mopar® parts catalog. Failure to follow these instructions may result in personal injury or death.**

WARNING: **On vehicles equipped with airbags, disable the supplemental restraint system before attempting any steering wheel, steering column, airbag, occupant classification system, seat belt tensioner, impact sensor, or instrument panel component diagnosis or service. Disconnect and isolate the battery negative (ground) cable, then wait two minutes for the system capacitor to discharge before performing further diagnosis or service. This is the only sure way to disable the supplemental restraint system. Failure to take the proper precautions could result in accidental airbag deployment. Failure to follow these instructions may result in personal injury or death.**

WARNING: **On vehicles equipped with airbags, before performing any welding operations disconnect and isolate the battery negative (ground) cable and disconnect all wire harness connectors from the Airbag Control Module (ACM). Failure to take the proper precautions could result in accidental airbag deployment and other possible damage to the supplemental restraint system circuits and components. Failure to follow these instructions may result in personal injury or death.**

WARNING: **Replace all restraint system components only with parts specified in the DaimlerChrysler Mopar® parts catalog. Substitute parts may appear interchangeable, but internal differences may result in inferior occupant protection. Failure to follow these instructions may result in personal injury or death.**

WARNING: **The fasteners, screws, and bolts originally used for the restraint system components must never be replaced with any substitutes. These fasteners have special coatings and are specifically designed for the restraint system. Any time a new fastener is needed, replace it with the correct fasteners provided in the service package or specified in the DaimlerChrysler Mopar® parts catalog. Failure to follow these instructions may result in personal injury or death.**

WARNING: On vehicles equipped with the Occupant Classification System (OCS) do not hang any after market devices from the front passengers seat back. Do not install a front drivers seat back cover with map pocket onto the passenger seat. Failure to follow these instructions may result in personal injury or death.

WARNING: The Seat Weight Sensor is a sensitive, calibrated unit and must be handled carefully. Do not drop or handle roughly. If dropped or damaged, replace with another sensor. Failure to follow these instructions may result in personal injury or death.

WARNING: The front passenger seat must be handled carefully as well. When removing the seat, be careful when setting on floor not to drop. If dropped, the sensor may be inoperative. Failure to follow these instructions may result in personal injury or death.

WARNING: When the seat is on the floor, no one should sit in the front passenger seat. This uneven force may damage the sensing ability of the seat weight sensors. If sat on and damaged, the sensor may be inoperative. Failure to follow these instructions may result in personal injury or death.

COVER, SEAT CUSHION, FRONT

Removal

REMOVAL

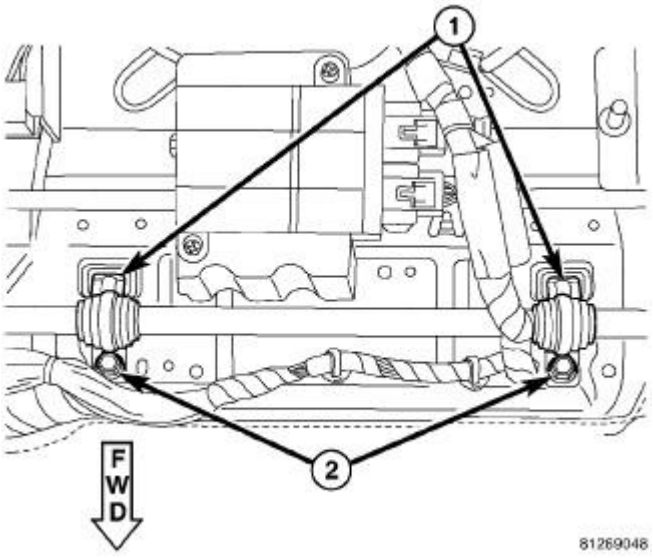

Fig. 430: Cushion Nuts
Courtesy of CHRYSLER LLC

1. Before proceeding with the following repair procedure, review all warnings and cautions. See **Body/Seats - Warning**.
2. Remove the seat from the vehicle. See **Body/Seats/SEAT - Removal**.
3. Remove the wiring harness from the seat pan and disconnect electrical connectors as required.
4. Remove the seat pan mounting fasteners and remove the seat cushion from the seat frame.

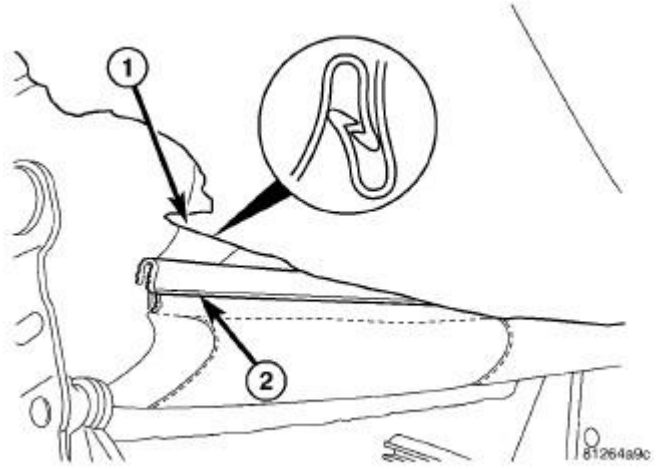

Fig. 431: J-Straps
Courtesy of CHRYSLER LLC

5. Disengage the J-clips and carefully remove the seat cover, cutting any hog rings and discarding.
6. Remove the foam from the seat pan, if required.

Installation

INSTALLATION

1. Before proceeding with the following repair procedure, review all warnings and cautions. See **Body/Seats - Warning**
2. Install the foam to the seat pan, if required.
3. Carefully install the seat cover to the seat foam installing hog rings as required.
4. Engage the seat cover J-clips.

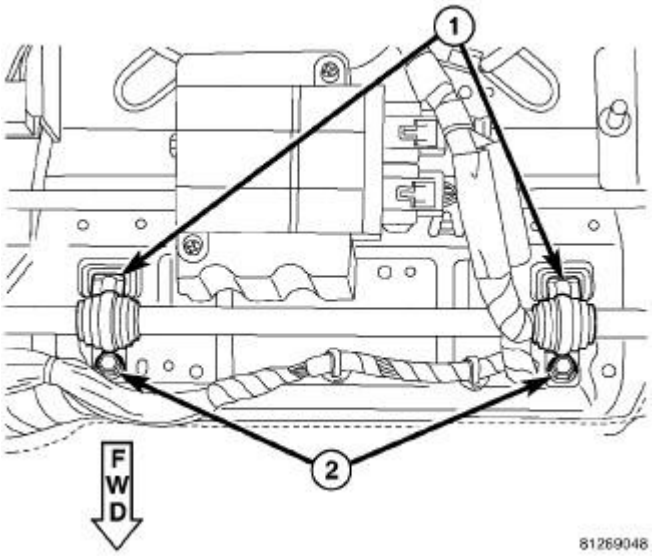

Fig. 432: Cushion Nuts
Courtesy of CHRYSLER LLC

5. Position the seat cushion assembly onto the seat frame and install the clamps (1).
6. Connect the wire harness to the seat cushion pan, if equipped.
7. Install the bolts (2) and tighten to 10 N.m (89 in. lbs.).
8. Install the seat to the vehicle. See **Body/Seats/SEAT - Installation**.

COVER, SEAT CUSHION, FRONT

Removal

REMOVAL

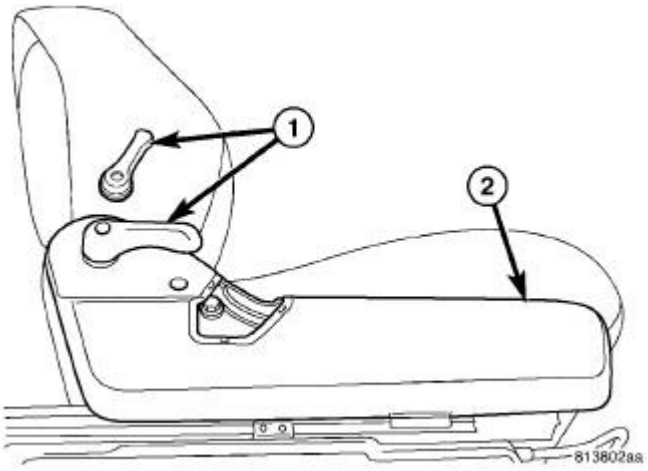

Fig. 433: Lumbar And Recliner Handles & Shields
Courtesy of CHRYSLER LLC

1. Before proceeding with the following repair procedure, review all warnings and cautions. See **Body/Seats - Warning**.
2. Remove the front seat. See **Body/Seats/SEAT - Removal**.
3. Remove the lumbar and recliner handles (1).
4. Remove the screws and remove the side shields (2).

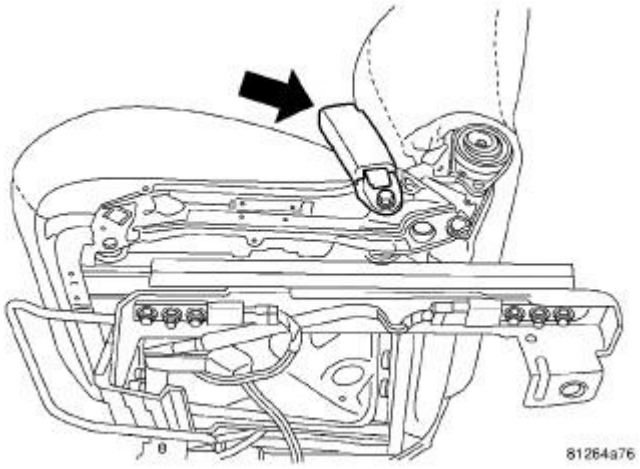

Fig. 434: Seat Belt Buckle
Courtesy of CHRYSLER LLC

5. Remove the belt buckle.

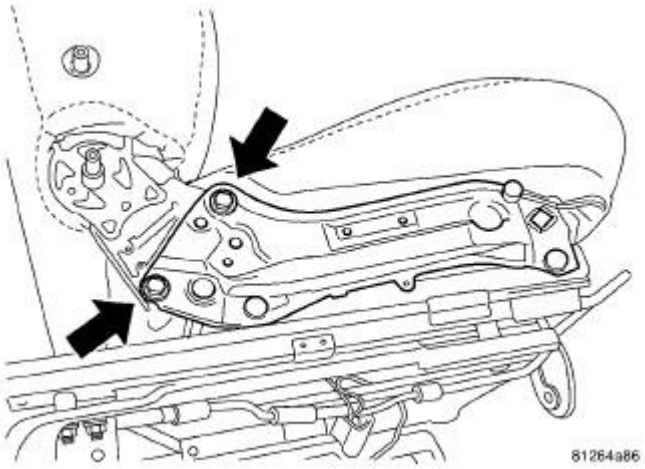

Fig. 435: Seat Back Bolts
Courtesy of CHRYSLER LLC

6. Remove the seat back bolts from both sides.

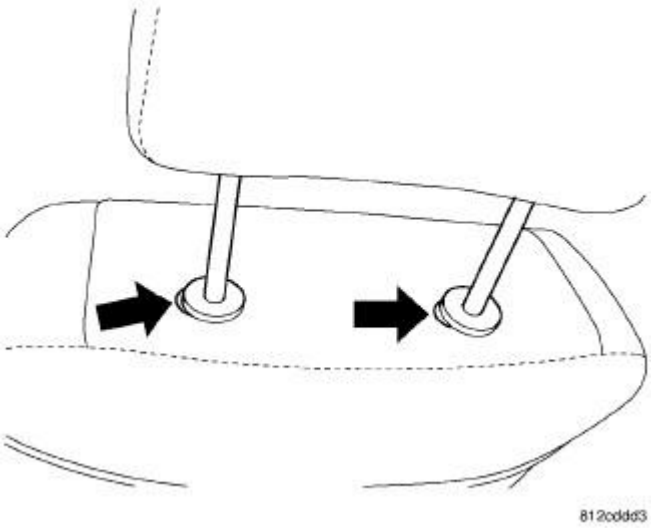

Fig. 436: Removing Head Rest
Courtesy of CHRYSLER LLC

7. Push in the buttons on both headrest sleeves, pull the headrest up and remove.

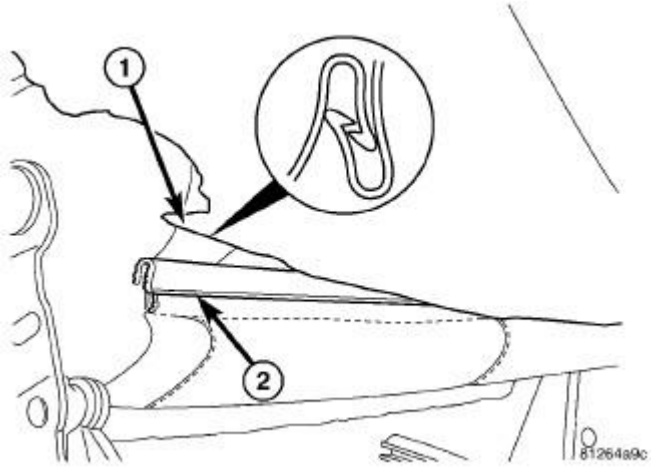

Fig. 437: Zip Strip
Courtesy of CHRYSLER LLC

8. Separate the j-straps (1 AND 2) and pull cover up to gain access to the headrest guides, cutting any hog rings and discarding.
9. Pinch both headrest guides ribs from inside the seat back frame with pliers or equivalent.
10. Strike the bottom of the sleeve with a rubber mallet or equivalent, and remove the headrest guides.
11. Remove the seat cover from the seat back.

Installation

INSTALLATION

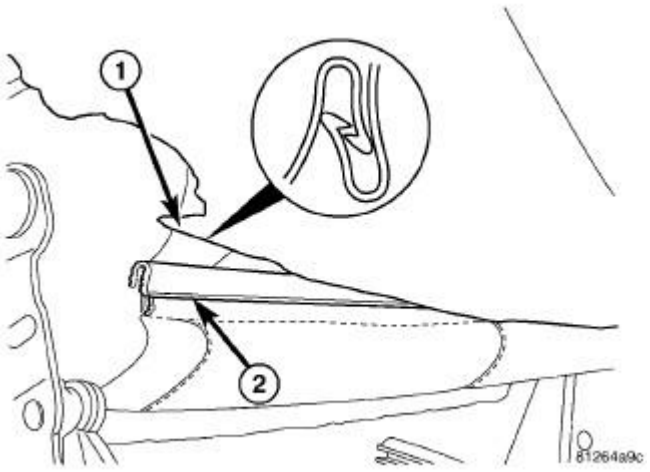

Fig. 438: Zip Strip
Courtesy of CHRYSLER LLC

1. Before proceeding with the following repair procedure, review all warnings and cautions. See **Body/Seats - Warning**
2. Position the seat back cover over the seat back frame and install the headrest sleeves.
3. Position the seat back cushion on the frame and install the cover over the cushion installing hog rings as required.
4. Connect the j-straps (1 AND 2).

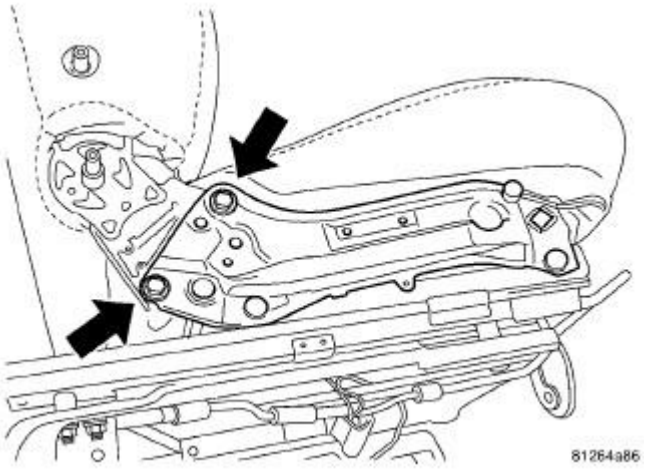

Fig. 439: Seat Back Bolts
Courtesy of CHRYSLER LLC

5. Install the seat back to the seat frame.
6. Install the seat back bolts and tighten to 40 N.m (30 ft. lbs.).

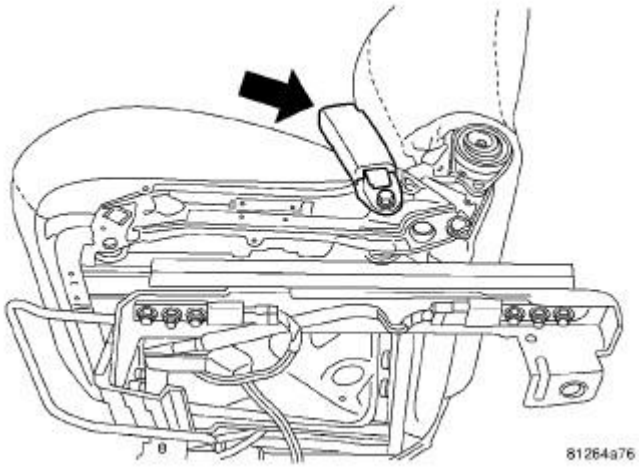

Fig. 440: Seat Belt Buckle
Courtesy of CHRYSLER LLC

7. Position the front seat belt buckle lower anchor onto the stud near the rear of the inboard seat cushion frame. Be certain the anti-rotation tab on the anchor is engaged in the clearance hole of the frame.
8. Tighten the nut to 43 N.m (32 ft. lbs.)

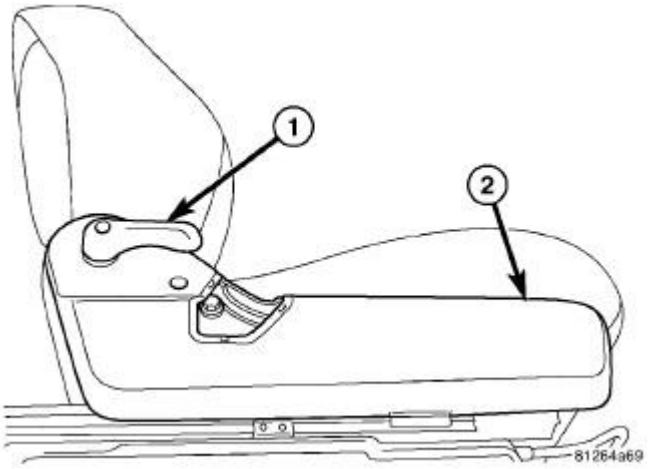

Fig. 441: Lumbar And Recliner Handles & Shields
Courtesy of CHRYSLER LLC

9. Install the side shields (2) and install the screws.
10. Install the lumbar and recliner handles.

SEAT BACK, FRONT

Removal

REMOVAL

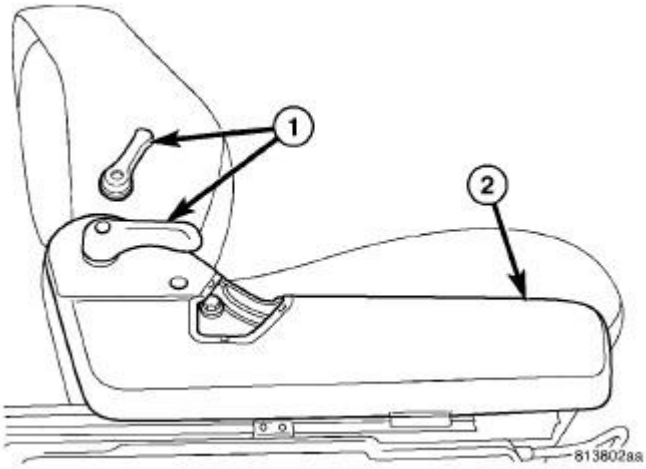

Fig. 442: Lumbar And Recliner Handles & Shields
Courtesy of CHRYSLER LLC

1. Before proceeding with the following repair procedure, review all warnings and cautions. See **Body/Seats - Warning**
2. Remove the front seat. See **Body/Seats/SEAT - Removal**
3. Remove the lumbar and recliner handles (1).
4. Remove the screws and remove the side shields (2).

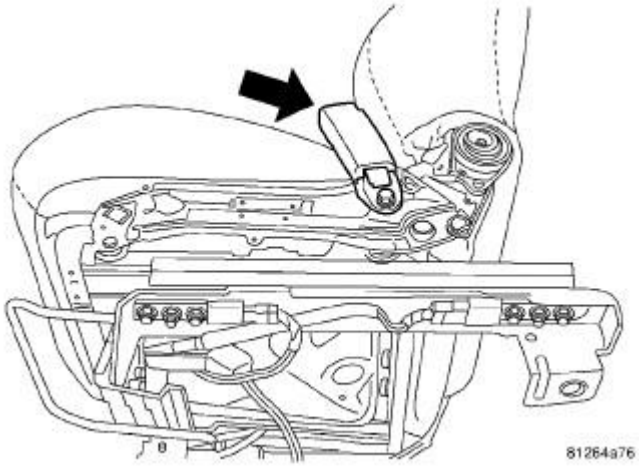

Fig. 443: Seat Belt Buckle
Courtesy of CHRYSLER LLC

5. Remove the belt buckle.

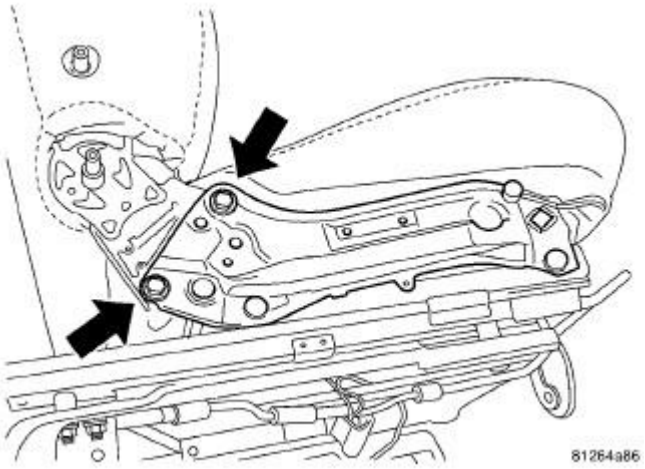

Fig. 444: Seat Back Bolts
Courtesy of CHRYSLER LLC

6. Remove the seat back bolts from both sides and remove the seat back from the seat frame.

Installation

INSTALLATION

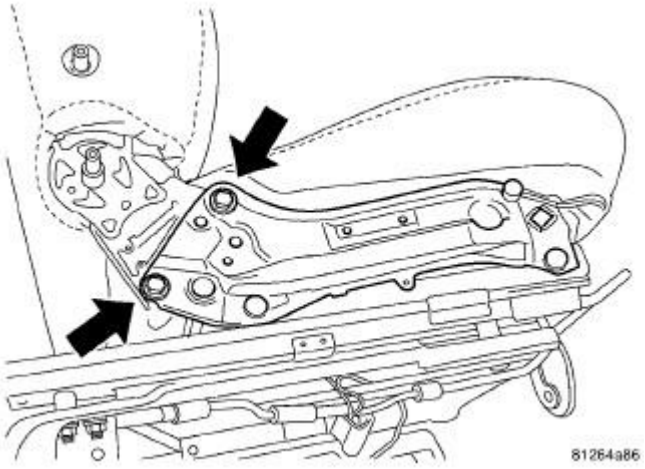

Fig. 445: Seat Back Bolts
Courtesy of CHRYSLER LLC

1. Install the seat back to the seat frame.
2. Install the seat back bolts and tighten to 40 N.m (30 ft. lbs.).

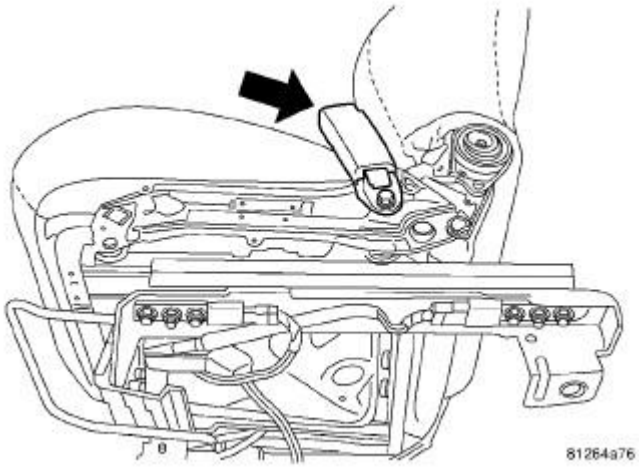

Fig. 446: Seat Belt Buckle
Courtesy of CHRYSLER LLC

3. Position the front seat belt buckle lower anchor onto the stud near the rear of the inboard seat cushion frame. Be certain the anti-rotation tab on the anchor is engaged in the clearance hole of the frame.
4. Tighten the nut to 43 N.m (32 ft. lbs.)

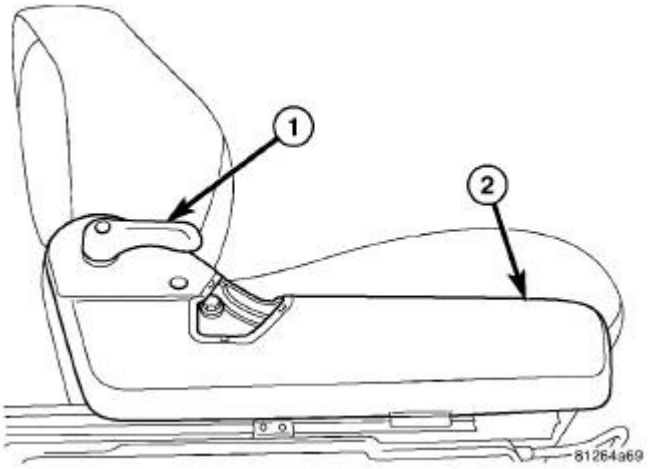

Fig. 447: Lumbar And Recliner Handles & Shields
Courtesy of CHRYSLER LLC

5. Install the side shields (2) and install the screws.
6. Install the lumbar and recliner handles.
7. Install the seat. See **Body/Seats/SEAT - Installation**.

SEAT, FRONT

Removal

REMOVAL

1. Before proceeding with the following repair procedure, review all warnings and cautions. See **Body/Seats - Warning**.
2. Move the seat rearward to gain access to the front bolts.
3. Remove the front attaching bolts.
4. Move the seat forward to gain access to the rear bolts.
5. Remove the rear attaching bolts.
6. Disconnect and isolate battery negative cable.
7. Disconnect the electrical connectors.
8. Remove the seat from the vehicle.

Installation

INSTALLATION

1. Before proceeding with the following repair procedure, review all warnings and cautions. See **Body/Seats - Warning**

   WARNING: The front passenger seat must be handled carefully as well. When removing the seat, be careful when setting on floor not to drop. If dropped, the sensor may be inoperative. Failure to follow these instructions may result in serious or fatal injury.

   WARNING: When the seat is on the floor, no one should sit in the front passenger seat. This uneven force may damage the sensing ability of the seat weight sensors. If sat on and damaged, the sensor may be inoperative. Failure to follow these instructions may result in serious or fatal injury.

2. Place seat into position in vehicle.
3. Connect the electrical connectors.
4. Connect battery negative cable.
5. Move the seat forward to gain access to the rear bolts.
6. Install the front seat attaching rear bolts. Tighten bolts to 65 N.m (48 ft. lbs.).
7. Move the seat rearward to gain access to the front bolts.
8. Install the front seat front attaching bolts. Tighten bolts to 65 N.m (48 ft. lbs.).
9. The supplemental restraint system verification test procedure should be performed following service of any supplemental restraint system component. Refer to **DTC-Based Diagnostics/CONTROLLER, Occupant Restraint (ORC) - Standard Procedure** .

SIDE SHIELDS, SEAT CUSHION, FRONT

Removal

REMOVAL

1. Remove the seat from vehicle. See **Body/Seats/SEAT - Removal**
2. Remove the recliner and lumbar handles as necessary.
3. Remove the seat buckle, as necessary.
4. Remove the side shield mounting fastener.
5. Carefully pry the side shield away from the seat frame, disengaging the retainers.
6. Disconnect the power seat switch connector, as necessary.
7. Remove the seat side shield from the seat frame.

Installation

INSTALLATION

1. Postion the side shield to the seat frame.
2. Connect the power seat switch connector, if equipped.
3. Carefully install the side shield to the seat frame, engaging the retainers.
4. Install the mounting fastener.
5. Install the seat buckle, as necessary.
6. Install the recliner and lumbar handles, as necessary.

SEATS, REAR

COVER, SEAT BACK, REAR

Removal

REMOVAL

1. Remove the rear seat cushion. See **Body/Seats/COVER, Seat Cushion - Removal**
2. Remove the seat back. See **Body/Seats/SEAT BACK - Removal**
3. Disengage the J-clip from the seat back.
4. Unzip the seat back cover.
5. Carefully pull the seat cover off, cutting any hog rings and discarding.
6. Remove the seat cover from the seat back.

Installation

INSTALLATION

1. Install the seat cover to the seat back.
2. Carefully pull the seat cover over the seat foam, installing any hog rings as necessary.
3. Zip the seat back cover.

4. Engage the J-clip to the seat back.
5. Install the seat back. See **Body/Seats/SEAT BACK - Installation**
6. Install the rear seat cushion. See **Body/Seats/COVER, Seat Cushion - Installation**

COVER, SEAT CUSHION, REAR

Removal

REMOVAL

1. Carefully pull up on the front of the seat, disengaging the seat retainers.
2. Lift up on front of seat and pull seat cushion towards the front of the vehicle.
3. Remove the seat cushion from the vehicle.

Installation

INSTALLATION

1. Position the rear seat in the vehicle.
2. Place rear of seat cushion under the seat back.
3. Push down on the front of the seat cushiong ensuring the retainers engage.

COVER, SEAT CUSHION, REAR

Removal

REMOVAL

1. Remove the seat cushion from the vehicle. See **Body/Seats/COVER, Seat Cushion - Removal**
2. Disengage the seat cover J-clips.
3. Carefully remove the seat cover, cutting any hog rings and discarding.
4. Remove seat cushion foam, if required.

Installation

INSTALLATION

1. Install seat cushion foam, if required.
2. Carefully install the seat cover, installing any hog rings as necessary.
3. Engage the seat cover J-clips.
4. Install the seat cushion to the vehicle. See **Body/Seats/COVER, Seat Cushion - Installation**

SEAT BACK, REAR

Removal

REMOVAL

1. Remove the seat cushion from the vehicle. See **Body/Seats/COVER, Seat Cushion - Removal**
2. Fold both seat backs to full down position.
3. Remove the outboard fastner on the 40 split seat back.
4. Pull the outboard side of the 40 split seat back out and slide the inboard side off from guide post.
5. Remove the 40 split seat back from the vehicle.
6. Remove the outboard and inboard mounting fasteners from the 60 split seat back.
7. Remove the 60 split seat back from the vehicle.

Installation

INSTALLATION

1. Place the 60 split seat back into position.
2. Install the inboard and outboard mounting fasteners. Tighten bolts to 65 N.m (48 ft. lbs.).
3. Place the 40 split seat back into positon.
4. Install the seat back by guiding the inboard side onto the guide post attached to the 60 split seat back.
5. Install the outboard mounting fastners. Tighten bolts to 65 N.m (48 ft. lbs.).
6. Place both seat backs in the full up position and ensure seats lock into place.
7. Install the rear seat cushion. See **Body/Seats/COVER, Seat Cushion - Installation**

STATIONARY GLASS

WARNING

WINDSHIELD SAFETY PRECAUTIONS

WARNING: Do not operate the vehicle within 24 hours of windshield installation. It takes at least 24 hours for urethane adhesive to cure. If it is not cured, the windshield may not perform properly in an accident.

- **urethane adhesives are applied as a system. Use glass cleaner, glass prep solvent, glass primer, pvc (vinyl) primer and pinch weld (fence) primer provided by the adhesive manufacturer. If not, structural integrity could be compromised.**
- **DaimlerChrysler does not recommend glass adhesive by brand. Technicians should review product labels and technical data sheets, and use only adhesives that their manufactures warrant will restore a vehicle to the requirements of FMVSS 212. Technicians should also insure that primers and cleaners are compatible with the particular adhesive used.**

- **be sure to refer to the urethane manufacturer's directions for curing time specifications, and do not use adhesive after its expiration date.**
- **vapors that are emitted from the urethane adhesive or primer could cause personal injury. Use them in a well-ventilated area.**
- **skin contact with urethane adhesive should be avoided. Personal injury may result.**
- **always wear eye and hand protection when working with glass.**

CAUTION: Protect all painted and trimmed surfaces from coming in contact with urethane or primers.

Be careful not to damage painted surfaces when removing moldings or cutting urethane around windshield.

BACKLITE

Removal

REMOVAL

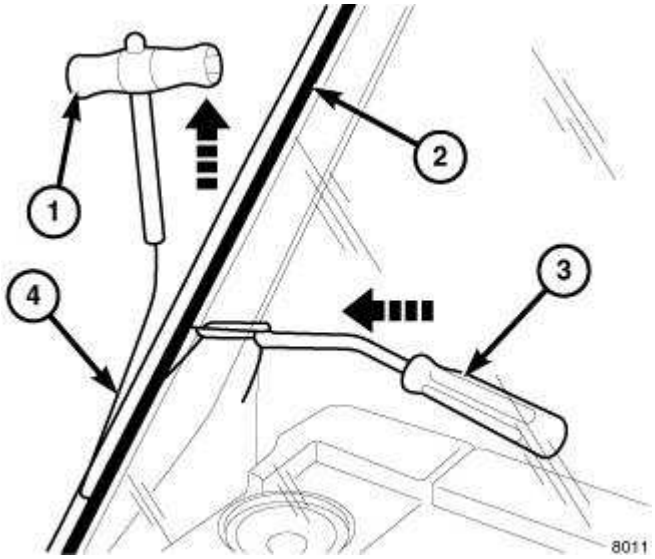

Fig. 448: Adhesive Separation
Courtesy of CHRYSLER LLC

NOTE: Windshield removal shown in illustration, backlite similar.

1. Before proceeding with the following repair procedure, review all warnings and cautions. See **Body/Stationary Glass - Warning**.
2. Remove quarter trim panels. See **Body/Interior/PANEL, Quarter Trim - Removal**.
3. Remove the trim panel from the rear shelf. See **Body/Interior/PANEL, Rear Shelf - Removal**.

4. Disconnect the wire connectors from rear window defogger terminals and, rear window mounted radio antenna, if equipped.

CAUTION: Be careful not to damage painted surfaces when cutting urethane around the backlight.

5. Using an assistant and a wire-type windshield cut-out tool (1, 3 and 4), cut and separate the urethane adhesive (2) securing the backlite to the backlite fence.
6. Carefully remove the backlite from the vehicle.

Installation

INSTALLATION

CAUTION: To help prevent water leaks, partially roll down the left and right door glass before installing the backlite. This avoids pressurizing the passenger compartment if a door is slammed before the urethane is cured.

CAUTION: Protect all painted and trimmed surfaces from coming in contact with urethane or primers.

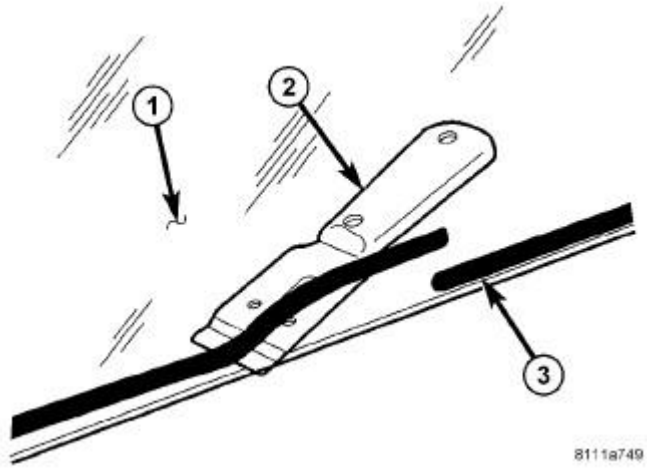

Fig. 449: Glass Adhesive Preparation
Courtesy of CHRYSLER LLC

1. If the backlite (1) is being reused, remove the as much original urethane (3) as possible from the glass surface using a razor knife (2).

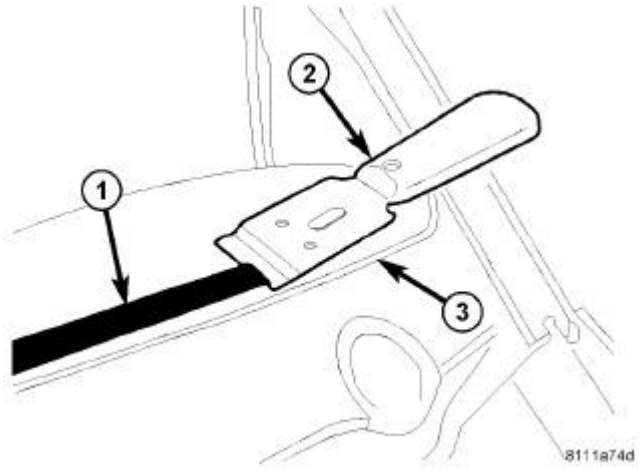

Fig. 450: Windshield Opening Preparation
Courtesy of CHRYSLER LLC

NOTE: **To prevent corrosion, do not damage paint on the backlite fence when removing original urethane.**

NOTE: **The backlite fence should be cleaned of most of its old urethane adhesive. A small amount of old urethane, approximately 1 mm in height should remain on the fence. Do not completely remove all old urethane from the fence, the paint finish and bonding strength will be adversely affected. Replace any missing or damaged spacers around the perimeter of the backlite fence.**

2. Using a razor knife (2), level the original bead of urethane (1) on the backlite fence (3) to a thickness of approximately 1 mm (0.04 in.) and remove the loose adhesive.

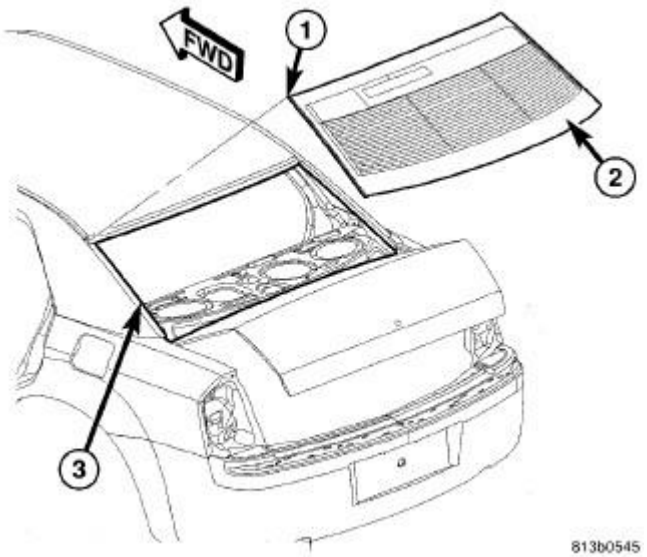

Fig. 451: Installing Backlight
Courtesy of CHRYSLER LLC

3. Install a new rubber seal (1) around the top and side edges of backlite (2).
4. Using an assistant, position the backlite into the backlite opening and against the backlite fence (3).
5. Verify the backlite lays evenly against the fence at the top, bottom and sides of the opening. If not, the fence must be formed to the shape of the backlite.
6. Mark the backlite and fence with a grease pencil or pieces of masking tape to use as a reference for installation.
7. Using an assistant, remove the backlite from the backlite opening and place it on a suitable padded work surface.

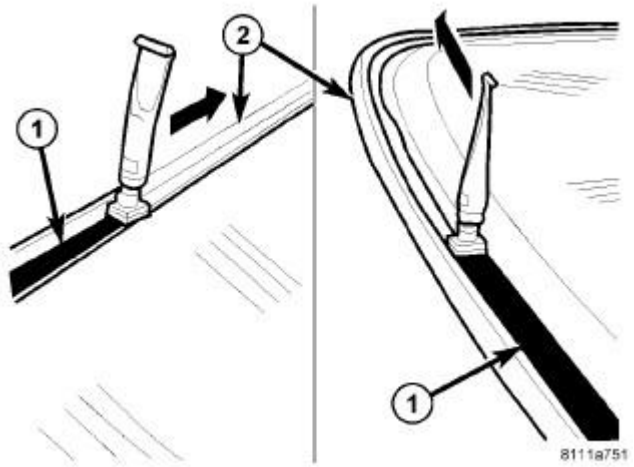

Fig. 452: Windshield Primer
Courtesy of CHRYSLER LLC

WARNING: Do not use solvent based glass cleaners to clean the backlite before applying glass prep and primer or poor glass adhesion may result.

8. Clean the inside of the backlite with an ammonia based glass cleaner and a lint-free cloth.
9. Apply glass prep adhesion promoter 25 mm (1 in.) wide (1) around the perimeter of the backlight (2) and 5 mm (0.2 in.) from the edge of the glass and wipe dry with a clean lint-free cloth until no streaks are visible.
10. Apply glass primer 25 mm (1 in.) wide around the perimeter of the backlight and 5 mm (0.2 in.) from the edge of the glass. Allow at least three minutes drying time.
11. Using a flashlight, verify that the primer is completely and evenly installed along the perimeter of the backlite.
12. Re-prime any area that is not fully and evenly primed.

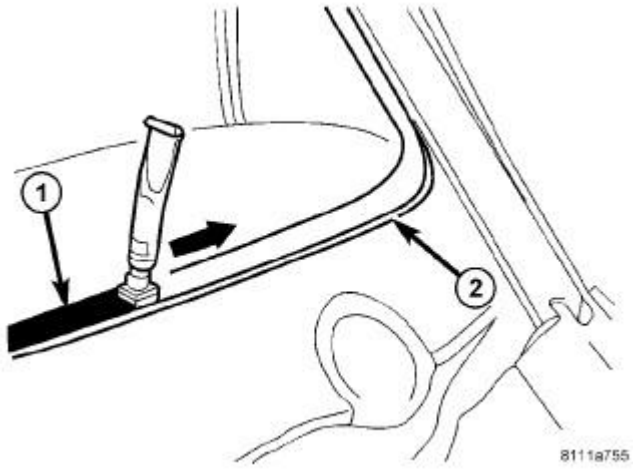

Fig. 453: WINDSHIELD OPENING PRIMER
Courtesy of CHRYSLER LLC

13. Clean the backlite fence with an ammonia based glass cleaner and a lint-free cloth.
14. Apply pinch weld primer 15 mm (0.75 in.) wide (1) around the backlite fence (2). Allow at least three minutes drying time.
15. Using a flashlight, verify that the primer is completely and evenly installed along the backlite fence.
16. Re-prime any area that is not fully and evenly primed.

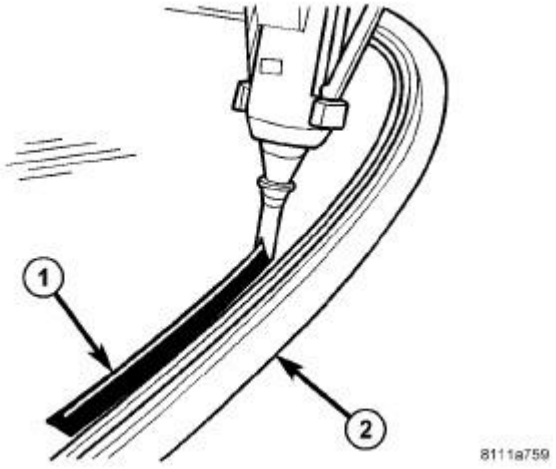

Fig. 454: WINDSHIELD ADHESIVE APPLICATION
Courtesy of CHRYSLER LLC

CAUTION: Always apply the bead of adhesive to the backlite. Always install the backlite within 5 minutes after applying the adhesive.

NOTE: If the original urethane adhesive has been exposed for more than 12

hours, the entire adhesive area will need to be re-primed prior to installing new adhesive.

17. Apply approximately a 10 mm (0.4 in.) wide bead of adhesive (1) with a triangular nozzle approximately 6 mm (0.230 in.) from the edge of the glass (2) starting at the bottom center of the backlite.

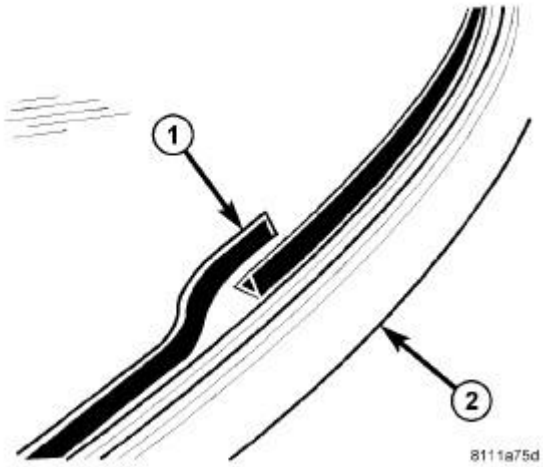

Fig. 455: Windshield Adhesive Overlap
Courtesy of CHRYSLER LLC

18. Run the end of the adhesive bead (1) on the backlite (2) parallel to the start of the bead and smooth the ends flush.

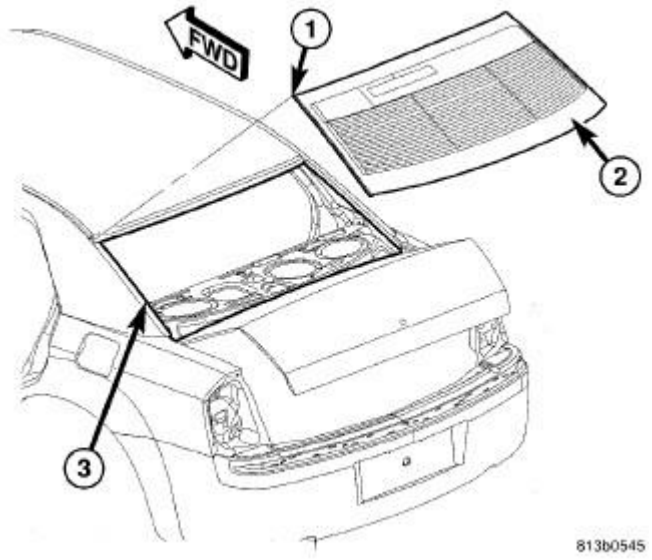

Fig. 456: Installing Backlight
Courtesy of CHRYSLER LLC

19. Using an assistant, position the backlite (2) over the backlite opening.
20. Using the grease pencil marks or tape as reference points, align the backlite to the opening.
21. Carefully lower the backlite onto the backlite fence (3). Guide the backlite and the rubber seal (1) around the backlite into its proper location.

CAUTION: It is not possible to move the backlite after installation. The backlite should never be pressed into place by more than one person, because the backlite can break if pressed simultaneously on both sides.

22. Push the backlite inward until the backlite comes into contact with the spacers located on each side of the backlite fence.
23. Connect the wire connectors to the rear window defogger terminals and, rear window mounted radio antenna, if equipped.
24. Install the trim panel to the rear shelf. See **Body/Interior/PANEL, Rear Shelf - Installation**.
25. Install the quarter trim panels. See **Body/Interior/PANEL, Quarter Trim - Installation**.

GLASS, QUARTER

Removal

REMOVAL

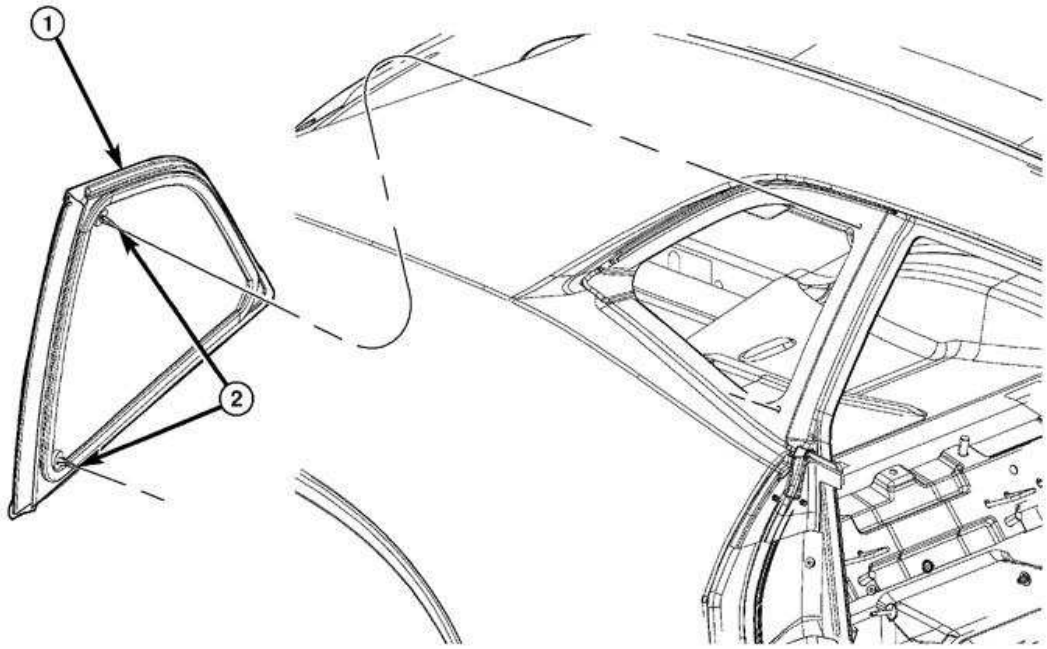

161077

Fig. 457: Removing/Installing Quarter Glass

Courtesy of CHRYSLER LLC

1. Before proceeding with the following repair procedure, review all warnings and cautions. See **Body/Stationary Glass - Warning**.
2. Remove the upper and lower quarter panel trim from the side of the vehicle being serviced. See **Body/Interior/PANEL, Quarter Trim - Removal**.
3. Using razor knife, cut urethane between the quarter glass (1) and window fence.
4. Carefully push the quarter window glass from the opening.

Installation

INSTALLATION

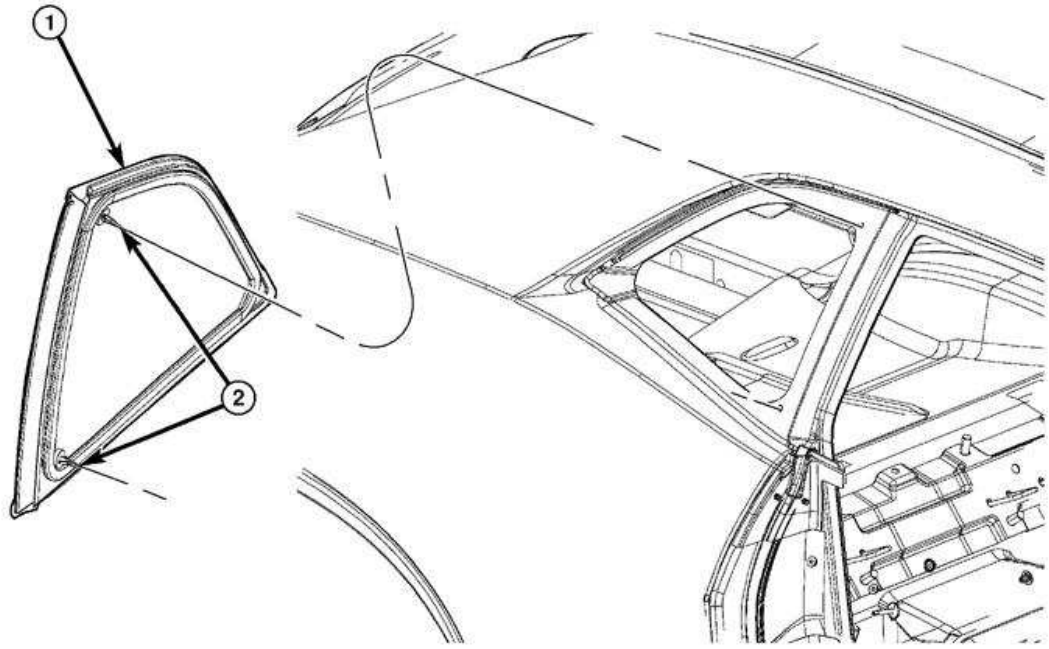

Fig. 458: Removing/Installing Quarter Glass
Courtesy of CHRYSLER LLC

CAUTION: Roll down the left and right front door glass before installing quarter glass to avoid pressurizing the passenger compartment if a door is slammed before urethane is cured. Water leaks can result.

1. Apply 6 mm (0.25 in.) wide urethane around perimeter of the quarter glass approximately 5 mm (0.2 in.) from the edge of the glass. Ensure the urethane is wrapped around the mounting studs.
2. Place the quarter glass (1) into the window opening and insert mounting studs (2) through the holes in the window fence.

3. Install the upper and lower quarter panel trims. See **Body/Interior/PANEL, Quarter Trim - Installation**.

WINDSHIELD

Description

DESCRIPTION

The windshield is attached to the window frame (fence) with urethane adhesive. The urethane adhesive is applied cold and seals the surface area between the window opening and the glass. The primer adheres the urethane adhesive to the windshield.

It is difficult to salvage a windshield during the removal operation. The windshield is part of the structural support for the roof. The urethane bonding used to secure the windshield to the fence is difficult to cut or clean from any surface. If the rubber seals are set in urethane, it would also be unlikely they could be salvaged. Before removing the windshield, check the availability of the windshield and seals from the parts supplier.

Removal

REMOVAL

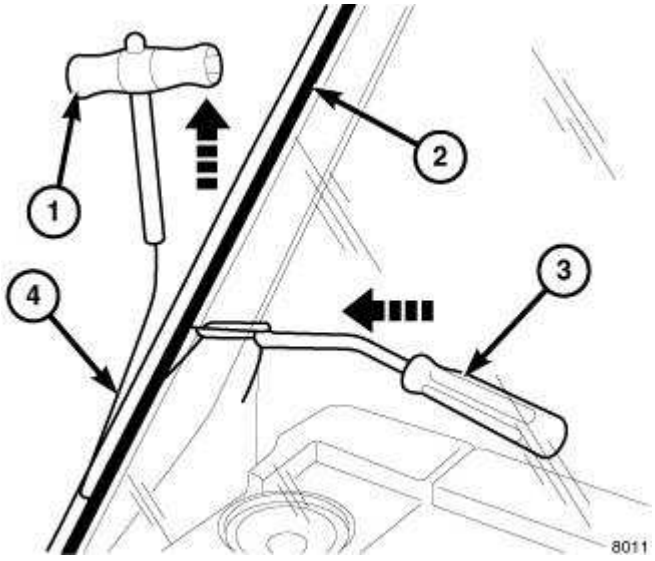

Fig. 459: Adhesive Separation
Courtesy of CHRYSLER LLC

1. Before proceeding with the following repair procedure, review all warnings and cautions. See **Body/Stationary Glass - Warning**.
2. Remove the rear view mirror. See **Body/Interior/MIRROR, Rearview - Removal**.
3. Remove the cowl grille. See **Body/Exterior/COVER, Cowl Panel - Removal**

CAUTION: Be careful not to damage painted surfaces when removing moldings or cutting urethane around the windshield.

4. Remove the windshield side moldings.
5. Using an assistant and a wire-type windshield cut-out tool (1, 3 and 4), cut and separate the urethane adhesive (2) securing the windshield to the windshield fence.
6. Carefully remove the windshield from the vehicle.

Installation

INSTALLATION

WARNING: Do not operate the vehicle within 24 hours of windshield installation. It takes at least 24 hours for urethane adhesive to cure. If it is not cured, the windshield may not perform properly if the vehicle is in an accident.

CAUTION: To help prevent water leaks, partially roll down the left and right door glass before installing the windshield. This avoids pressurizing the passenger compartment if a door is slammed before the urethane is cured.

CAUTION: Protect all painted and trimmed surfaces from coming in contact with urethane or primers.

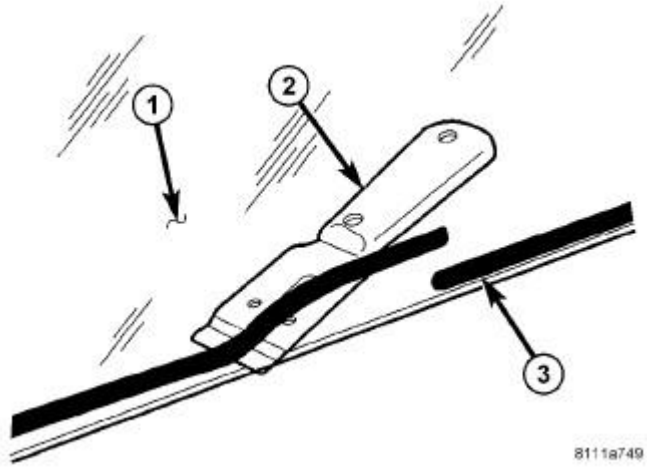

Fig. 460: Glass Adhesive Preparation
Courtesy of CHRYSLER LLC

1. If the windshield (1) is being reused, remove the as much original urethane (3) as possible from the glass surface using a razor knife (2).

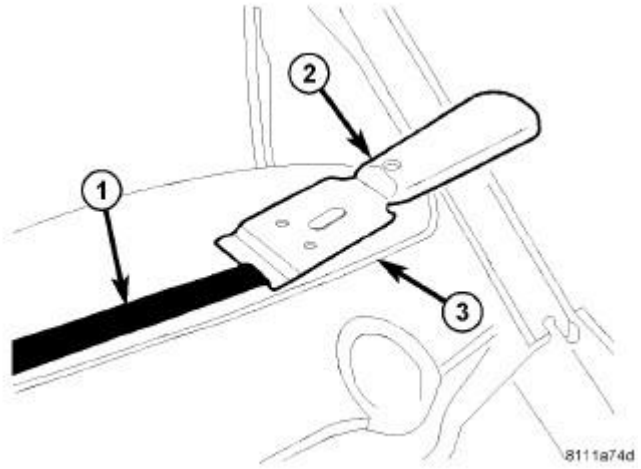

Fig. 461: WINDSHIELD OPENING PREPARATION
Courtesy of CHRYSLER LLC

NOTE: **To prevent corrosion, do not damage paint on windshield fence when removing original urethane.**

NOTE: **The windshield fence should be cleaned of most of its old urethane adhesive. A small amount of old urethane, approximately 1 mm in height should remain on the fence. Do not completely remove all old urethane from the fence, the paint finish and bonding strength will be adversely affected. Support spacers located near the cowl at the bottom of the windshield fence should be replaced with new spacers. Replace any missing or damaged spacers around the perimeter of the windshield fence.**

2. Using a razor knife (2), level the original bead of urethane (1) on the windshield fence (3) to a thickness of approximately 1 mm (0.04 in.) and remove the loose adhesive.

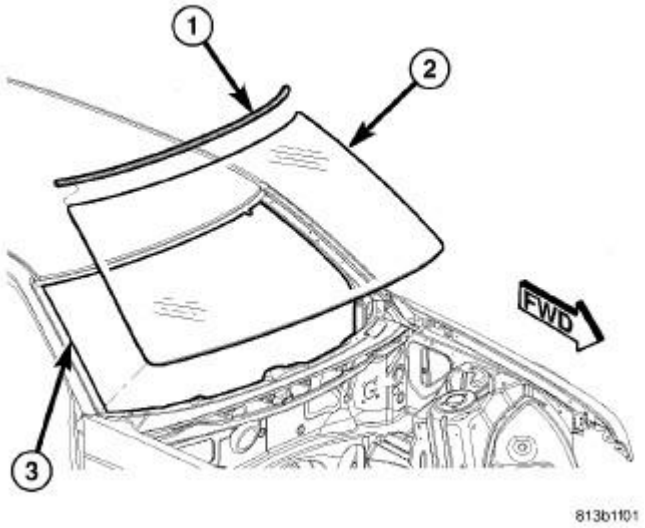

Fig. 462: Installing Windshield
Courtesy of CHRYSLER LLC

3. Install a new rubber seal (1) along the top of the windshield (2).
4. Using an assistant, position the windshield into the windshield opening and against the windshield fence (3).
5. Verify the windshield lays evenly against the fence at the top, bottom and sides of the opening. If not, the fence must be formed to the shape of the windshield.
6. Mark the windshield and the windshield fence with a grease pencil or pieces of masking tape to use as a reference for installation.
7. Using an assistant, remove the windshield from the windshield opening and place it on a suitable padded work surface.

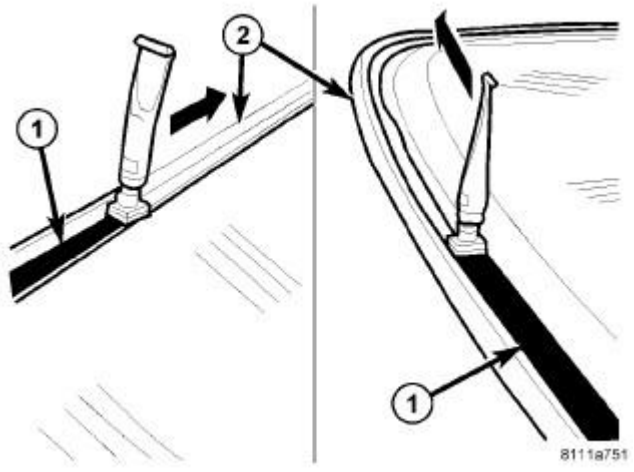

Fig. 463: WINDSHIELD PRIMER
Courtesy of CHRYSLER LLC

WARNING: Do not use solvent based glass cleaners to clean the windshield before applying glass prep and primer or poor glass adhesion may result.

8. Clean the inside of the windshield with an ammonia based glass cleaner and a lint-free cloth.
9. Apply glass prep adhesion promoter 25 mm (1 in.) wide (1) around the perimeter of the windshield (2) and 5 mm (0.2 in.) from the edge of the glass and wipe dry with a clean lint-free cloth until no streaks are visible.
10. Apply glass primer 25 mm (1 in.) wide (1) around the perimeter of the windshield (2) and 5 mm (0.2 in.) from the edge of the glass. Allow at least three minutes drying time.
11. Using a flashlight, verify that the primer is completely and evenly installed along the perimeter of the windshield.
12. Re-prime any area that is not fully and evenly primed.

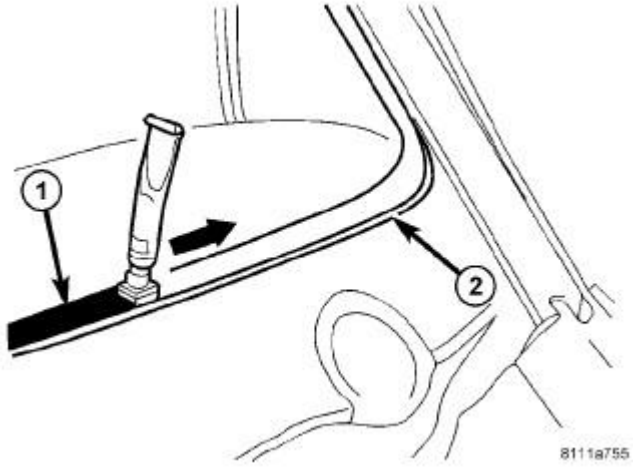

Fig. 464: WINDSHIELD OPENING PRIMER
Courtesy of CHRYSLER LLC

13. Clean the windshield fence with an ammonia based glass cleaner and a lint-free cloth.
14. Apply pinch weld primer 15 mm (0.75 in.) wide (1) around the windshield fence (2). Allow at least three minutes drying time.
15. Using a flashlight, verify that the primer is completely and evenly installed along the windshield fence.
16. Re-prime any area that is not fully and evenly primed.

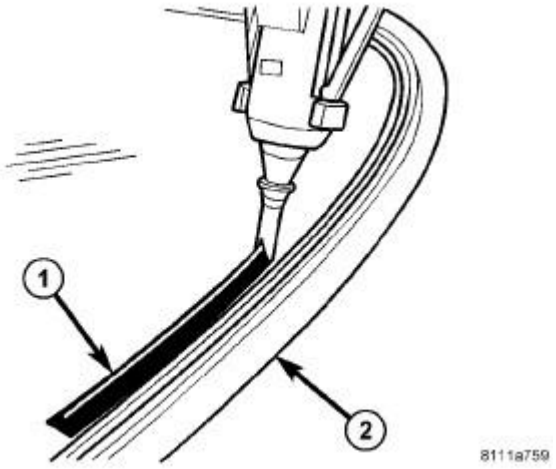

Fig. 465: WINDSHIELD ADHESIVE APPLICATION
Courtesy of CHRYSLER LLC

CAUTION: Always apply the bead of adhesive to the windshield. Always install the windshield within 5 minutes after applying the adhesive.

NOTE: If the original urethane adhesive has been exposed for more than 12 hours, the entire adhesive area will need to be re-primed prior to installing new adhesive.

17. Apply approximately a 10 mm (0.4 in.) wide bead of adhesive (1) with a triangular nozzle approximately 6 mm (0.230 in.) from the edge of the glass (2) starting at the bottom center of the windshield.

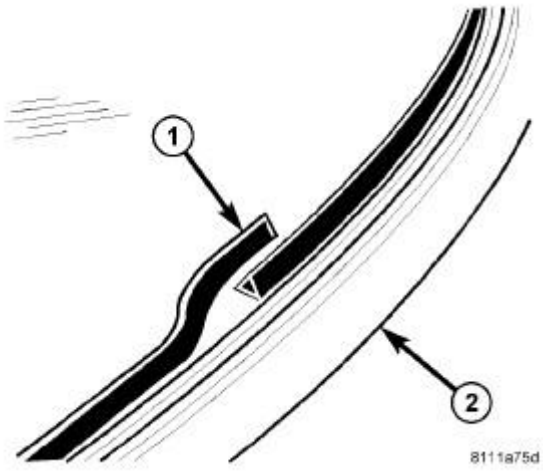

Fig. 466: Windshield Adhesive Overlap
Courtesy of CHRYSLER LLC

18. Run the end of the adhesive bead (1) on the windshield (2) parallel to the start of the bead and

smooth the ends flush.

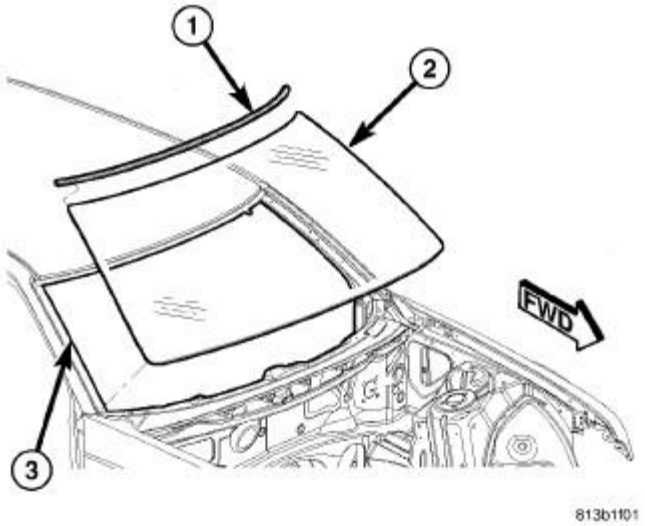

Fig. 467: Installing Windshield
Courtesy of CHRYSLER LLC

19. Using an assistant, position the windshield (2) over the windshield opening.
20. Using the grease pencil marks or tape as reference points, align the windshield to the opening.
21. Carefully lower the windshield onto the windshield fence. Guide the windshield and the rubber seal at the top the windshield into its proper location.

CAUTION: It is not possible to move the windshield after installation. The windshield should never be pressed into place by more than one person, because the windshield can break if pressed simultaneously on both sides.

22. Push the windshield inward until the windshield comes into contact with the spacers located on each side of the windshield fence (2).
23. Install the windshield side moldings.
24. Install the cowl grille. See **Body/Exterior/COVER, Cowl Panel - Removal**.
25. Install the rear view mirror. See **Body/Interior/MIRROR, Rearview - Installation**.

SUNROOF

DESCRIPTION

DESCRIPTION

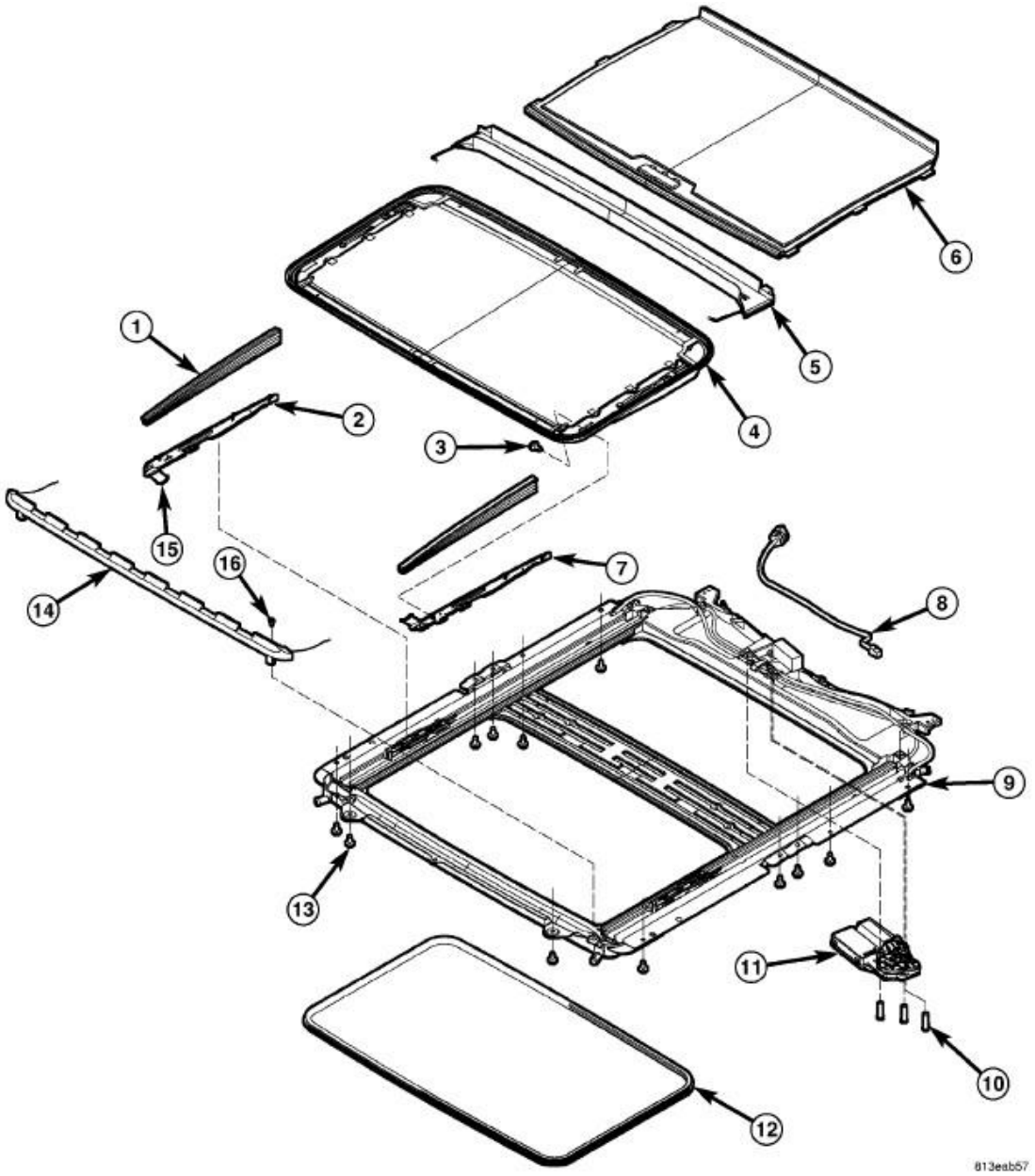

Fig. 468: Sunroof Exploded View
Courtesy of CHRYSLER LLC

1 - MECHANISM COVERS (2)	9 - SUNROOF ASSEMBLY
2 - RIGHT HAND GLASS GUIDE	10 - MOTOR FASTENERS (3)
3 - GLASS FASTENERS (4)	11 - SUNROOF MOTOR/MODULE ASSEMBLY
4 - GLASS ASSEMBLY	12 - TRIM LACE
5 - DRAIN CHANNEL	13 - ASSEMBLY FASTENERS (12)
6 - SUNSHADE	14 - WIND DEFLECTOR
7 - LEFT SUNROOF GLASS GUIDE	15 - RIGHT SUNROOF GLASS GUIDE
8 - WIRE HARNESS	16 - WIND DEFLECTOR STRAP SCREWS (2)

The power sunroof system allows the sunroof to be opened, closed or placed in the vent position electrically by actuating a switch in the overhead console. The sunroof system receives battery feed through a fuse in the Power Distribution Center (PDC). The sunroof will operate normally with the key in any position while the Accessory Delay system is active.

The sunroof glass panel tilts upward at the rear for ventilation and slides rearward under the roof when open. The panel seals flush with the roof in the closed position to eliminate wind noise. The sunroof includes a manual-sliding sunshade to cover the deep-tinted glass panel.

In addition to the standard power sunroof operation, this vehicle offers several additional features. There is an express (one-touch) opening and closing feature as well as Excessive Force Limitation (EFL). The EFL function detects obstacles trapped between the glass and the vehicle roof during a closing motion. Upon sensing an obstacle the EFL function will reverse direction of the glass to allow removal of the obstacle.

The main components of the power sunroof system are:

- The motor/module assembly
- The power sunroof glass and frame assembly
- The power sunroof switch
- The manual-sliding sunshade

OPERATION

OPERATION

This vehicle has a vent, tilt and slide power sunroof system with express (one-touch) open and closing feature. The sunroof system receives constant battery feed through a fuse in the Power Distribution Center (PDC). The sunroof will operate normally with the key in any position while the Accessory Delay system is active. If the sunroof is moving when the key is turned to the START position (crank engine), all motions stop until the key is released, then the previously requested sunroof motion will resume. The sunroof will also complete a requested motion if the Accessory Delay system goes inactive while the motion is in progress.

A combination push-button and rocker switch module mounted in the overhead console controls sunroof operation. The sunroof switch is a rocker design with a push button in the center of the two halves of the rocker. Pressing the rocker towards the front of the car commands the sunroof closed. Pressing the rocker towards the rear of the car commands the sunroof open. Pressing the center push button commands the sunroof up into the vent position (Rear of sunroof glass raises above the vehicle roof with glass still covering the sunroof opening). All switch commands operate with the glass starting in any position. for additional information. Refer to **Electrical - Power Systems/Power Top - Operation**

An electronic control system, integral to the motor/module assembly, provides the express open and close functions. Pressing the "open" or "close" end of the rocker switch moves the sunroof glass panel to the full open or full closed position, respectively. During express closing, anytime an obstacle is detected in the way of the glass, the motor will stop and reverse travel to avoid pinching an

occupant's finger, ice in the track, etc. This function is called Excessive Force Limitation (EFL). There are two methods of overriding the EFL function.

1. When three EFL events occur without the glass being allowed to fully close, the next close attempt will only move while the close switch is continuously actuated. This allows the sunroof to be forced closed if multiple close attempts fail.
2. If the sunroof close switch is continuously actuated during an EFL event, through the reversal, and during a two second wait time, then continuing to hold the close switch will cause the roof to move towards close with the EFL protection disabled. This allows the sunroof to be forced closed if it is known that a reversal will occur.

While in EFL override, the closing motion will cease if the sunroof switch is released at any time.

The motor/module is programmed to learn the speed required to drive the panel based on position and recalibrates itself as needed. If the sunroof becomes uncalibrated, it will only respond to the vent switch. If the vent switch is pressed, the glass will move toward vent; if the switch is released, all motion stops. In the event that the sunroof system becomes uncalibrated perform the sunroof position calibration procedure. Refer to **Electrical - Power Systems/Power Top/MOTOR, Sunroof - Standard Procedure** .

DIAGNOSIS AND TESTING

POWER TOP - SUNROOF

Any diagnosis of the power sunroof system should begin with the use of a scan tool and the proper Diagnostic Procedures Information. The scan tool can provide confirmation that the Controller Area Network (CAN) Data Bus is functional, that all of the electronic modules are sending and receiving the proper messages on the CAN Data Bus, and that the power sunroof motor is being sent the proper hard wired output by the sunroof switch.

For complete circuit diagrams, refer to the appropriate wiring information. The wiring information includes wiring diagrams, proper wire and connector repair procedures, details of wire harness routing and retention, connector pin-out information and location views for the various wire harness connectors, splices and grounds.

SUNROOF

Refer to **SUNROOF DIAGNOSIS CHART** for possible causes. Before beginning sunroof diagnostics verify that all other power accessories are in proper operating condition. If not, a common electrical problem may exist. Refer to Wiring Diagrams, in this publication for circuit, splice and component descriptions. Check the condition of the circuit protection (20 amp circuit breaker in the Junction Block). Inspect all wiring connector pins for proper engagement and continuity. Check for battery voltage at the power sunroof controller, refer to Wiring Diagrams, for circuit information. If battery voltage of more than 10 volts is detected at the controller, proceed with the following tests (the controller will not operate at less than 10 volts).

Before beginning diagnosis for wind noise or water leaks, verify that the problem was not caused by

releasing the control switch before the sunroof was fully closed. The sunroof module has a water-management system. If however, the sunroof glass is in a partial closed position, high pressure water may be forced beyond the water management system boundaries and onto the headlining.

Every time the sunroof module loses power it must be initialized. This is done by connecting power to the sunroof and moving the sunroof toward the closed position. When initialization occurs a slight "kick" in the sunroof module will be seen and heard. This is the indication that the sunroof module is initialized

SUNROOF DIAGNOSIS CHART

SYMPTOM	POSSIBLE CAUSE
Sunroof motor inoperative.	Faulty control switch. Faulty circuit ground between sunroof module, control switch, and body harness. Faulty power circuit between sunroof module, control switch, and body harness. Faulty sunroof drive motor. Faulty sunroof module.
Audible whine when switch is depressed, sunroof does not operate.	Faulty sunroof drive motor. Binding cable.
Audible clicking or ratcheting when switch is pressed, sunroof does not operate.	Broken or worn drive cable. Worn drive motor gear. Mechanisms not synchronized.
Sunroof vents and opens, but does not close.	Broken or disengaged trough guide Binding cable. Faulty circuit. Faulty control switch. Faulty sunroof module. Faulty drive motor.
Sunroof vents, but does not open.	Binding cable or mechanism. Faulty circuit. Faulty switch. Faulty sunroof module.
Sunroof does not vent	Binding cable or mechanism. Faulty circuit. Faulty control switch. Faulty sunroof module.
Sunroof water leak.	Drain tubes clogged or kinked or disconnected from the sunroof. Glass panel improperly adjusted. Faulty glass panel seal.
Gurgling sound from sunroof	Low spot in drain hose routing, allowing water to stand.
Wind noise from sunroof.	Glass panel compression to the roof opening not

	consistent. Wind deflector not deploying properly. Glass not installed or adjusted properly. Faulty glass panel seal.
Buzz, Squeak, Rattles from sunroof	Loose or broken attaching hardware. No lubrication in track. Worn or broken mechanism. Cables bunched or kinked.
Sunshade will not function or does not operate smoothly	Sunshade feet are broken. Sunshade feet are in the wrong track. Track obstructions or interference. Trim lace incorrectly installed in track.
Glass movement not consistent or glass does not operate smoothly	Glass and Track timing. Glass and Track alignment. Cables and Guide alignment.
Broken or jammed guide mechanism	Mechanism cover was not installed correctly.

WATER DRAINAGE AND WIND NOISE DIAGNOSIS

The sliding glass panel is designed to seal water entry with a snug fit between the roof and the seal. The fit can be checked by inserting a business card or equivalent, between the roof and the seal. The piece of paper should have some resistance when pulled out when the glass panel is in the closed position. The sunroof housing will drain off a minimum amount of water. Excessive wind noise could result if the gap clearances are exceeded. The sunroof glass panel may need to be adjusted. See **Body/Sunroof/GLASS, Sunroof - Adjustments**

Adequate drainage is provided by a drain trough in the sunroof housing which encircles the sliding glass panel and leads to drain hoses. If a wet headliner or other water leak complaints are encountered, before performing any adjustments, first ensure that the drainage system is not plugged or disconnected. Use a pint container to pour water into the sunroof housing drain trough. If water flow is restricted, use compressed air to blow out any material plugging the drain system. Retest system again.

To further check for a disconnected drain hose:

NOTE: Care must be taken not to fold or kink the headliner upon removal.

1. Lower headliner as necessary to gain access to sunroof housing drain tubes. See **Body/Interior/HEADLINER - Removal**
2. Repair as necessary.

CHANNEL, SUNROOF DRAIN

Removal

REMOVAL

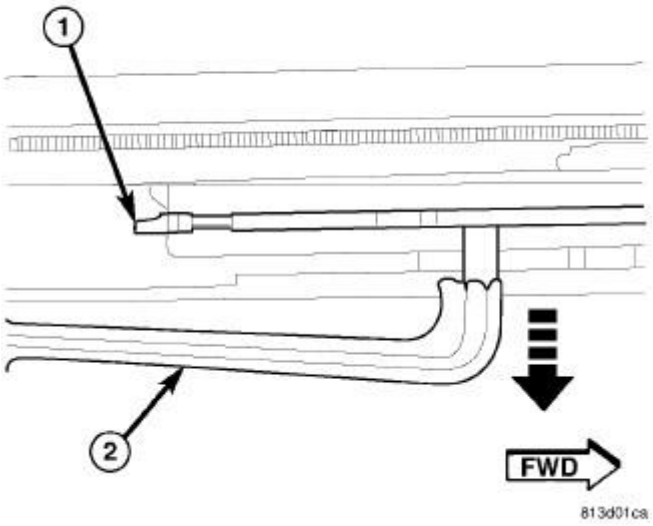

Fig. 469: Channel Arm
Courtesy of CHRYSLER LLC

1. Remove glass panel (2). See **Body/Sunroof/GLASS, Sunroof - Removal**.
2. Separate the drain channel arms (2) from the guide mechanisms (1) one at a time.

CAUTION: Do not pry the channel arms apart at the same time or you could break the drain channel.

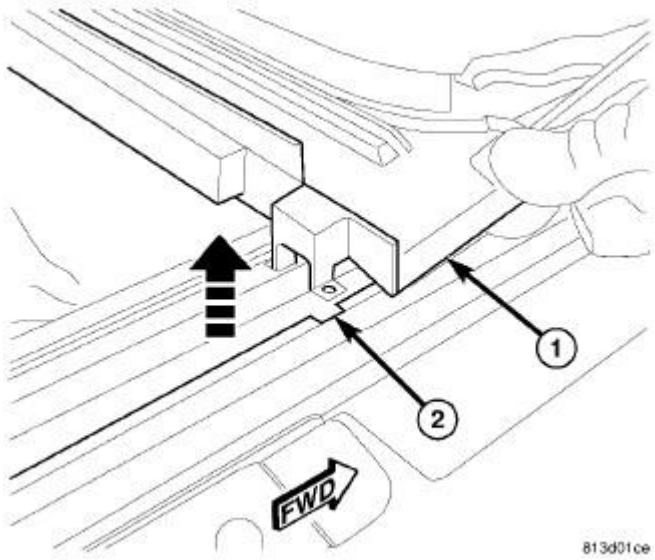

Fig. 470: Removing Channel
Courtesy of CHRYSLER LLC

3. Carefully slide the drain channel (1) forward to the notches (2) in the frame and remove from the vehicle.

Installation

INSTALLATION

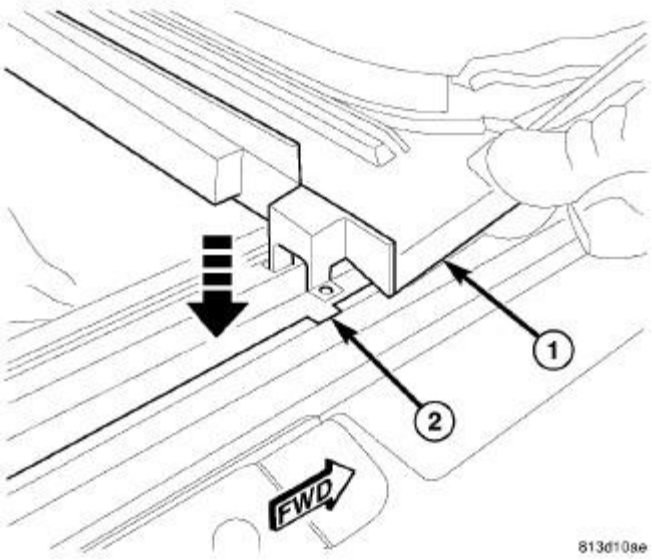

Fig. 471: Installing Channel
Courtesy of CHRYSLER LLC

1. Carefully position the drain channel (1) into the notches (2) in the frame and slide rearward.

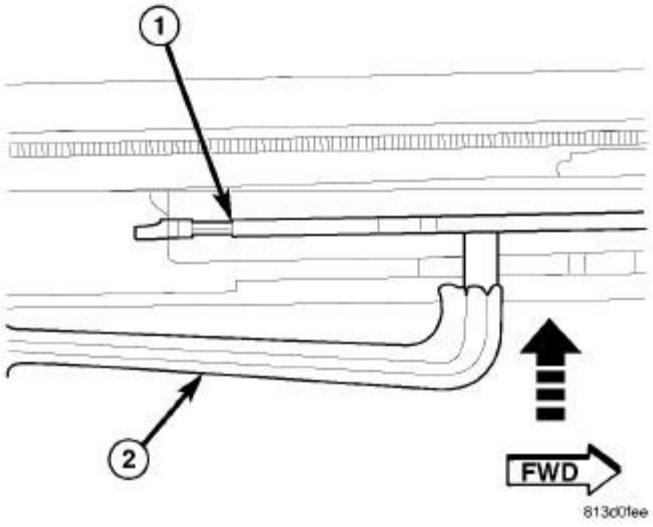

Fig. 472: Installing Arm
Courtesy of CHRYSLER LLC

2. Install the drain channel arms (2) into the mechanism (1) holes one at a time with the reinforcements on the inside of mechanism arms.

CAUTION: Do not pry the channel arms apart at the same time or you could break the drain channel.

3. Install the sunroof glass. See **Body/Sunroof/GLASS, Sunroof - Installation**

COVER, SUNROOF MECHANISM

Removal

REMOVAL

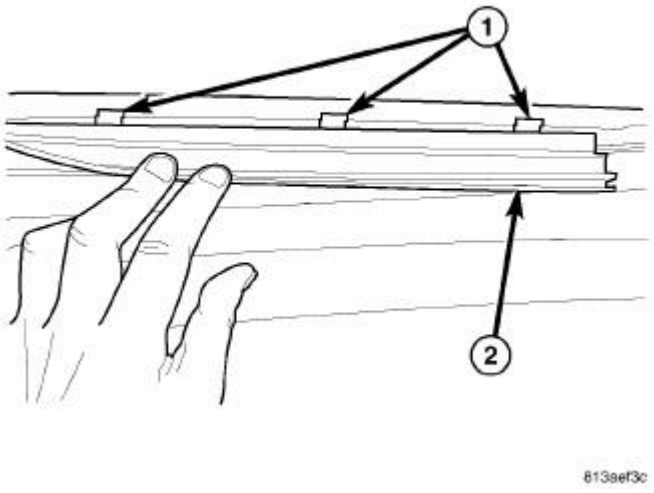

Fig. 473: Removing/Installing Mechanism Covers At Glass Panel
Courtesy of CHRYSLER LLC

1. Move the glass panel to the full closed position.
2. Slide sunshade rearward to the open position.
3. Separate the mechanism covers (2) from the tabs (1) on the glass panel.

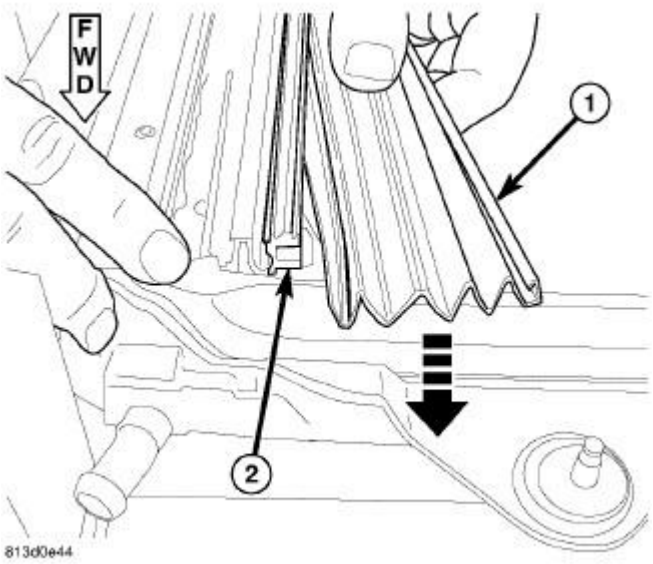

Fig. 474: Removing Mechanism Covers From Guide
Courtesy of CHRYSLER LLC

4. Hold both mechanism covers down and open the sunroof fully.
5. Slide the mechanism covers (1) out the front of the guide in the frame (2).

Installation

INSTALLATION

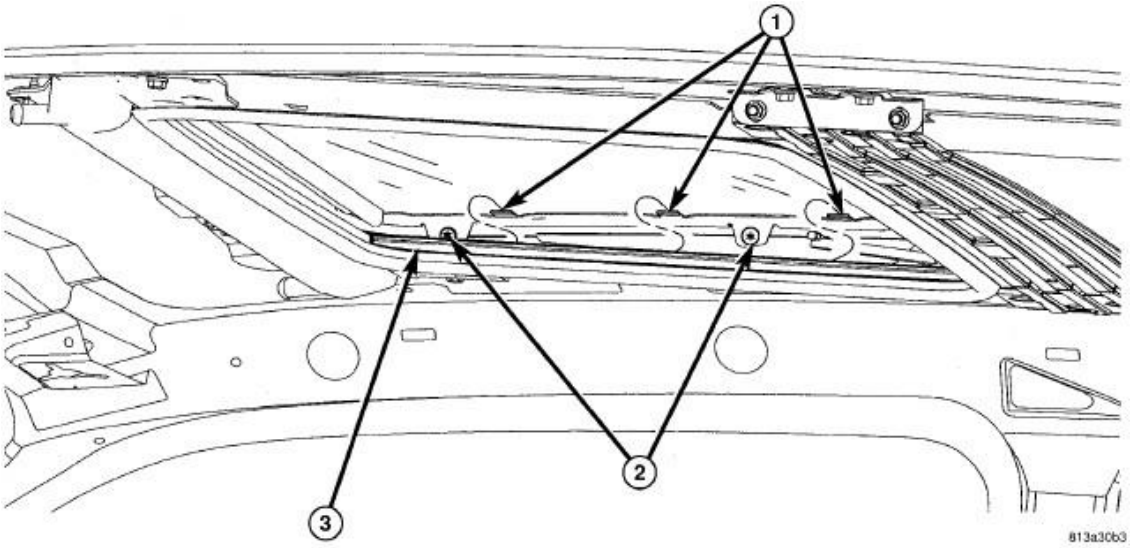

Fig. 475: Glass Fasteners
Courtesy of CHRYSLER LLC

1. With the sunroof in the open position, snap the mechanism cover into the lower guide channel.
2. Hold down each cover and close the sunroof.

3. Snap the upper portion of the cover into the retaining clips (1) on the glass panel between the locating features.

DEFLECTOR, WIND

Removal

REMOVAL

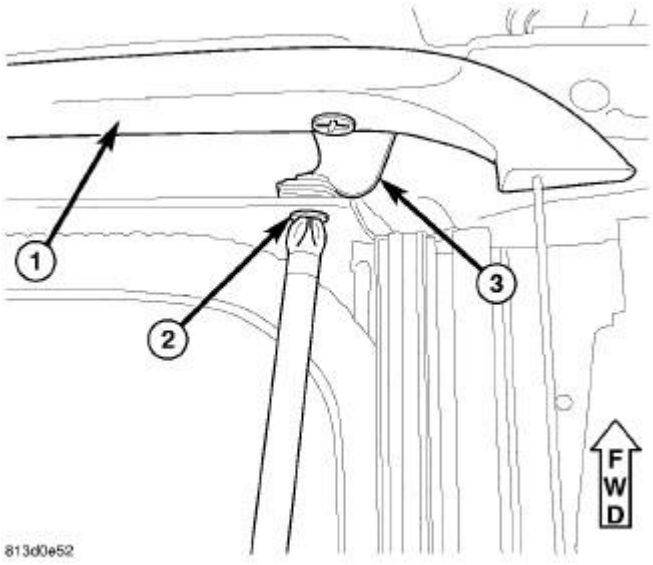

Fig. 476: Deflector Strap
Courtesy of CHRYSLER LLC

1. Open the sunroof fully.
2. Remove the strap screws (2) from the beam area release the strap (3).

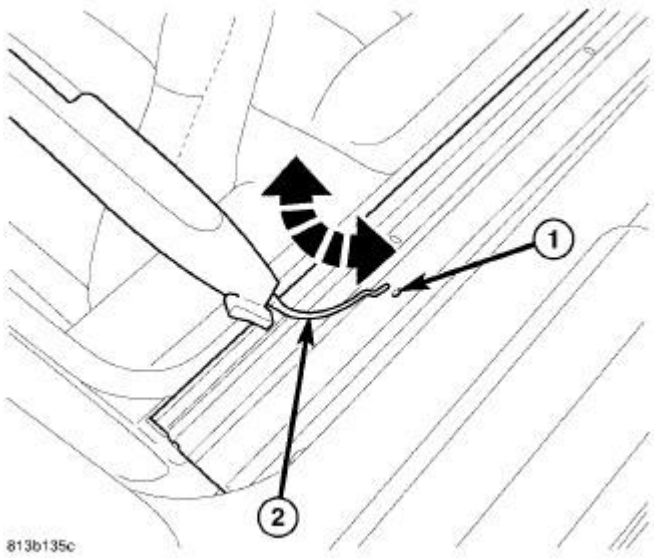

Fig. 477: Wind Deflector
Courtesy of CHRYSLER LLC

3. Rotate the deflector up and remove springs (2) from the holes in the frame (1).

Installation

INSTALLATION

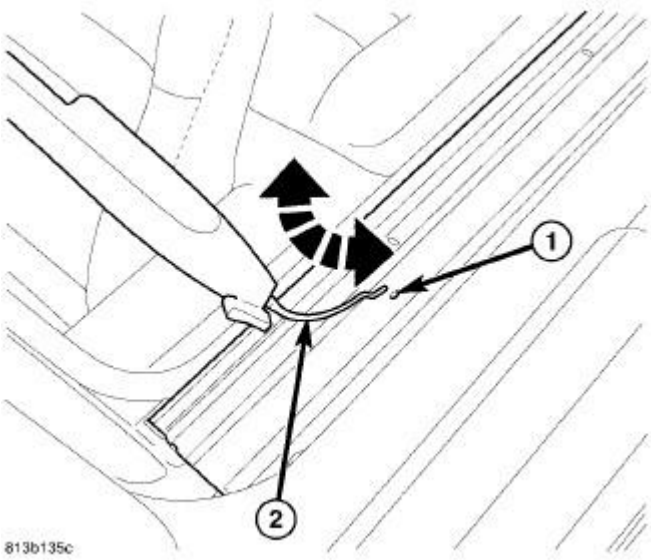

Fig. 478: Wind Deflector
Courtesy of CHRYSLER LLC

1. Position the deflector spring arms (2) into the holes of the frame (1).

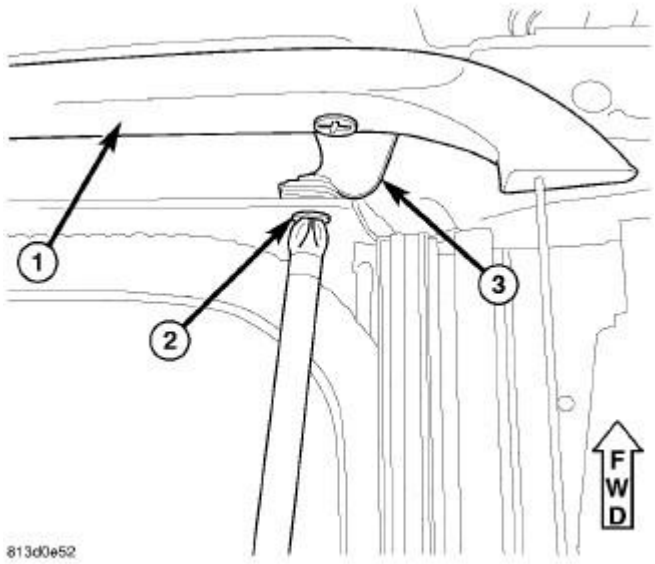

Fig. 479: Deflector Strap
Courtesy of CHRYSLER LLC

2. Rotate the deflector down, attach the straps (3) and install the strap screws (2) into the front beam.
3. Verify sunroof operation and alignment.

GLASS, SUNROOF

Removal

REMOVAL

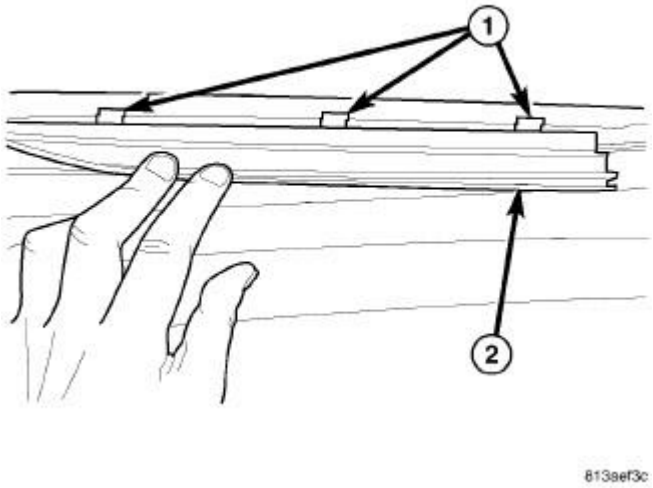

Fig. 480: Removing/Installing Mechanism Covers At Glass Panel

Courtesy of CHRYSLER LLC

1. Move the glass panel (2) to the full closed position.
2. Slide sunshade rearward to the open position.
3. Separate the mechanism covers (2) from the tabs (1) on the glass panel.

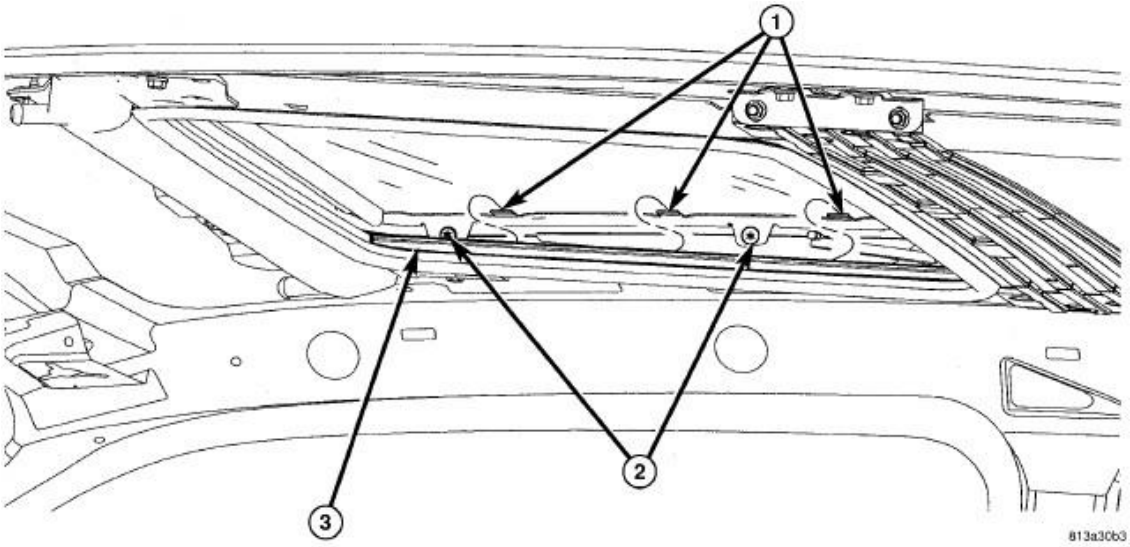

Fig. 481: Glass Fasteners
Courtesy of CHRYSLER LLC

4. Remove the glass panel screws (2).
5. Lift off glass panel and remove from vehicle.

Installation

INSTALLATION

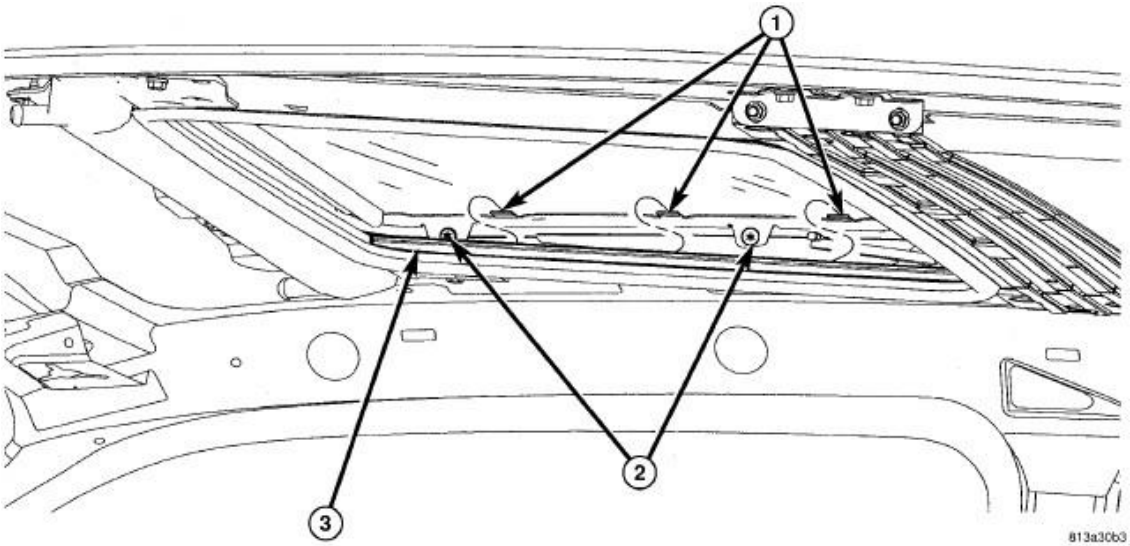

Fig. 482: Glass Fasteners
Courtesy of CHRYSLER LLC

CAUTION: Charger sunglass seal is serviceable. 300 / Magnum seal is not serviceable.

Position glass panel on to mechanism lift arms.

CAUTION: Verify that the retaining tabs are located on the INSIDE of the guide mechanism arms.

1. Start the attaching screws (2).
2. Connect a 12v power supply and verify that the sunroof is in the closed position.
3. Adjust sunroof glass to fit flush with roof line. See **Body/Sunroof/GLASS, Sunroof - Adjustments**.
4. Tighten the screws to 5.5 N.m (49 in. lbs.).

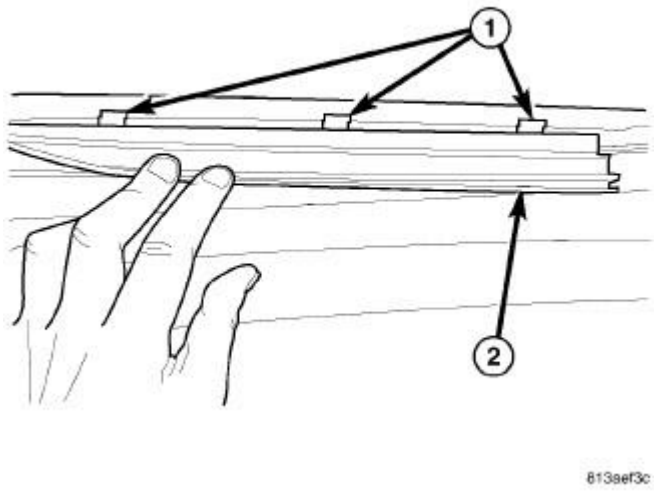

Fig. 483: Removing/Installing Mechanism Covers At Glass Panel
Courtesy of CHRYSLER LLC

5. Position the mechanism covers (2) over the glass tabs (1) between the locating features and seat fully.
6. Verify sunroof operation and alignment.

Adjustments

ADJUSTMENT

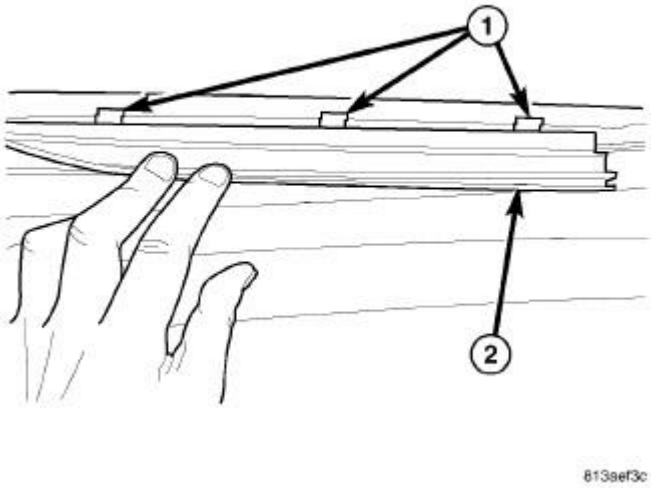

Fig. 484: Removing/Installing Mechanism Covers At Glass Panel
Courtesy of CHRYSLER LLC

1. Move the sunshade rearward to the open position.
2. Separate the mechanism covers (2) from the tabs (1) on the glass panel.

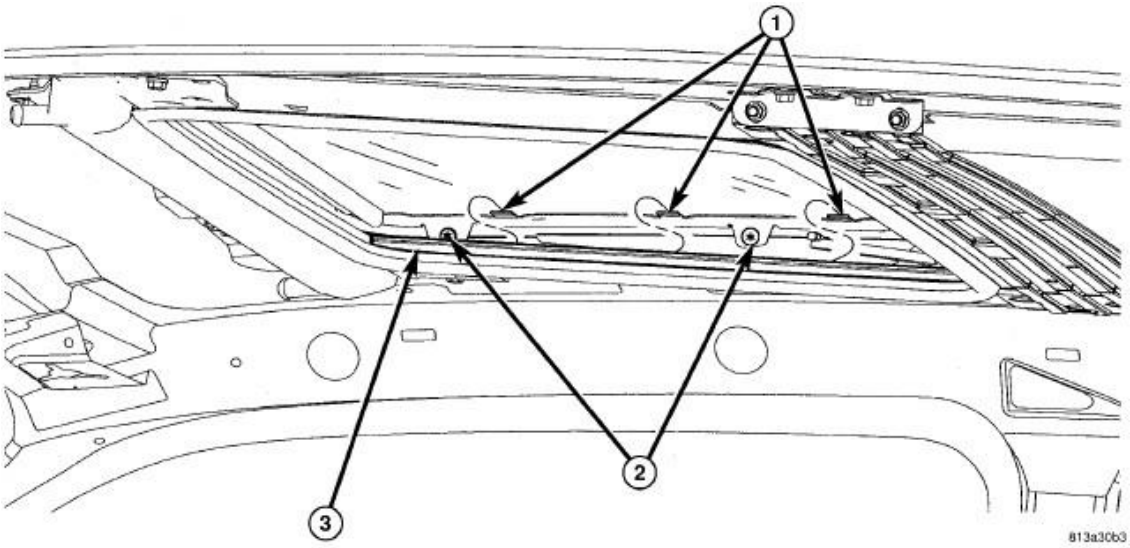

Fig. 485: Glass Fasteners
Courtesy of CHRYSLER LLC

3. Verify the sunroof glass panel is in the fully closed position.
4. Loosen the forward attaching screws (2) on each side enough to permit the front of the glass to adjust up or down.
5. Adjust the front surface of the sunroof glass panel 0.00 mm to 2 mm (0.00 in. to 0.08 in.) **below** the top surface of the roof.

6. Tighten the front glass panel attaching screws to 5.5 N.m (49 in. lbs.).
7. Loosen the rear screws (2) on each side enough to make the rear adjustment.
8. Adjust the rear surface of the sunroof glass panel 0.00 mm to 2 mm (0.00 in. to 0.08 in.) **above** the top surface of the roof.
9. Tighten the rear glass panel attaching screws to 5.5 N.m (49 in. lbs.).
10. Check for proper fit. If not OK, repeat glass panel adjustment.

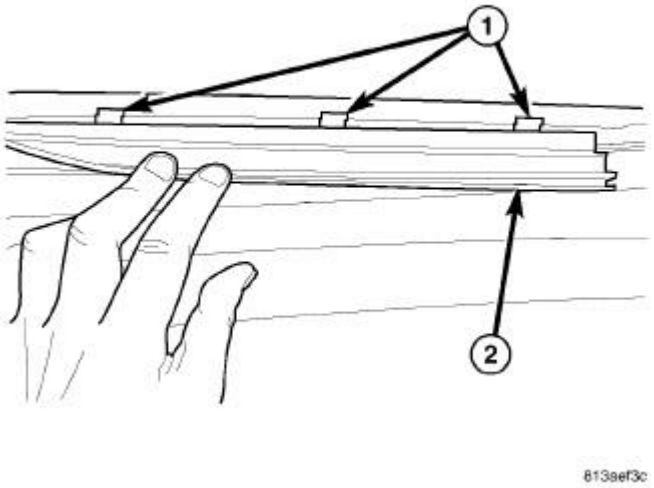

Fig. 486: Removing/Installing Mechanism Covers At Glass Panel
Courtesy of CHRYSLER LLC

11. Position the mechanism covers (2) over the glass tabs (1) between the locating features and seat fully.
12. Verify sunroof operation and alignment.

GUIDE, SUNROOF, GLASS

Removal

REMOVAL

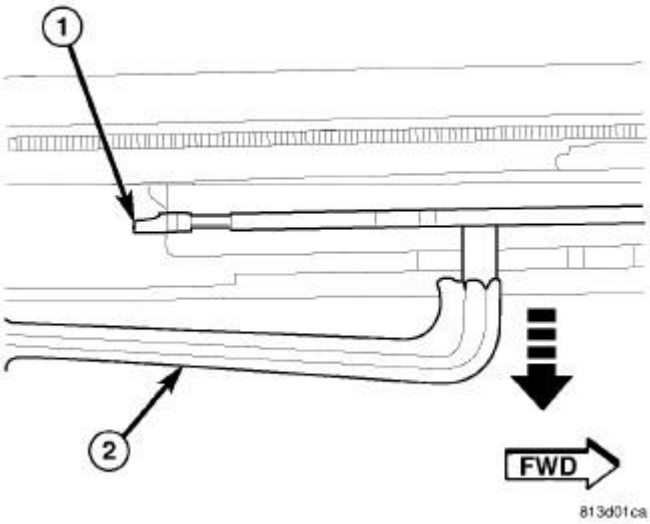

Fig. 487: Channel Arm
Courtesy of CHRYSLER LLC

1. Remove the sunroof assembly. See **Body/Sunroof/SUNROOF - Removal**
2. Remove the motor. Refer to **Electrical - Power Systems/Power Top/MOTOR, Sunroof - Removal**
3. Remove the glass. See **Body/Sunroof/GLASS, Sunroof - Removal**
4. Remove the wind deflector. See **Body/Sunroof/DEFLECTOR, Wind - Removal**
5. Separate the drain channel arms (2) from the guide mechanisms (1) one at a time.

CAUTION: Do not pry the channel arms apart at the same time or you could break the drain channel.

6. Slide the drain channel rearward out of the way.

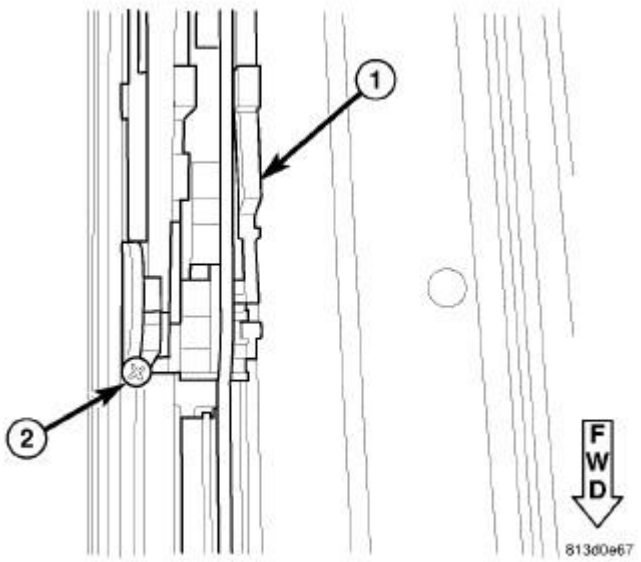

Fig. 488: Hard Stop Screw
Courtesy of CHRYSLER LLC

7. Remove the hard stop screw from the frame.

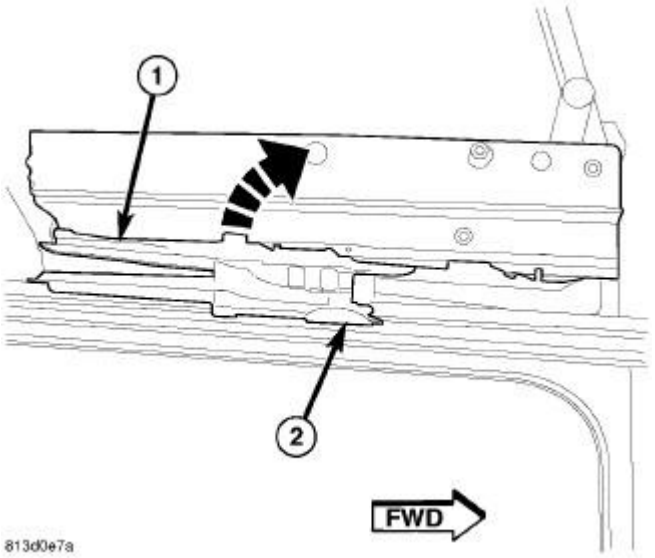

Fig. 489: Pushing Drive Cable & Guide Plate Forward
Courtesy of CHRYSLER LLC

8. Push the drive cable and guide plate forward past the hard stop screw location until the glass guide comes loose.

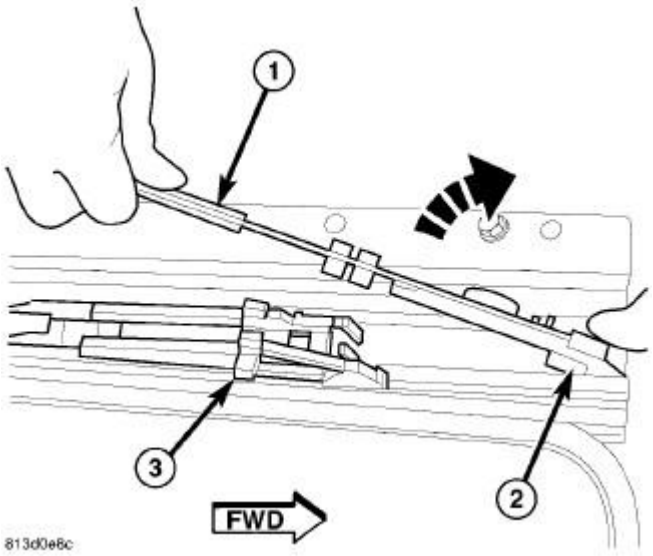

Fig. 490: Rotating Guide Plate Upward
Courtesy of CHRYSLER LLC

9. Rotate the guide (1) up and out of the front beam (3) and release the front foot (2) from the channel guide.

Installation

INSTALLATION

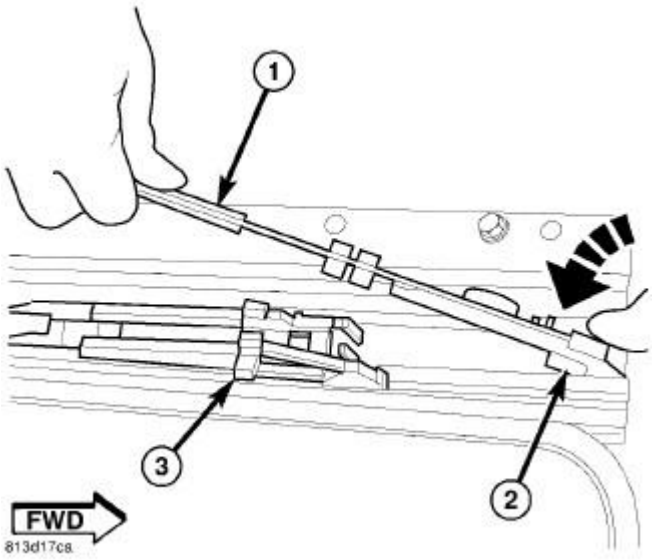

Fig. 491: Engaging Feet With Front Beam
Courtesy of CHRYSLER LLC

1. With the drive cable plate aligned insert the front foot (2) into the guide channel and engage the

feet with the front beam (3).

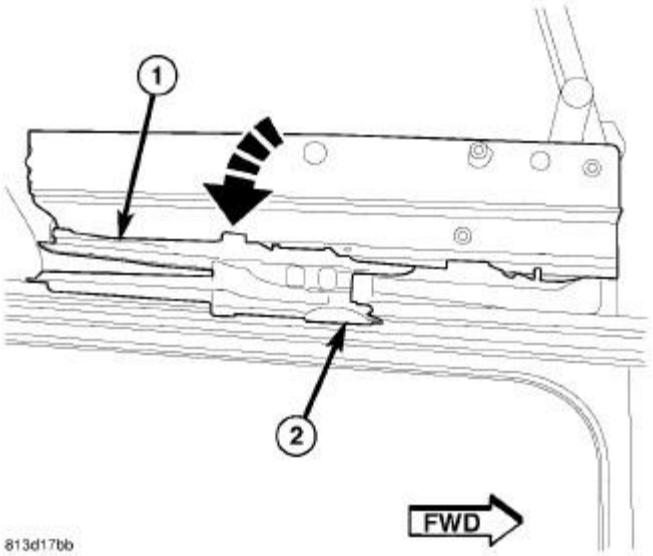

Fig. 492: Rotating Guide Plate Downward
Courtesy of CHRYSLER LLC

2. Rotate the guide plate (1) inboard until the feet of the guide are engaged into the front beam (2).

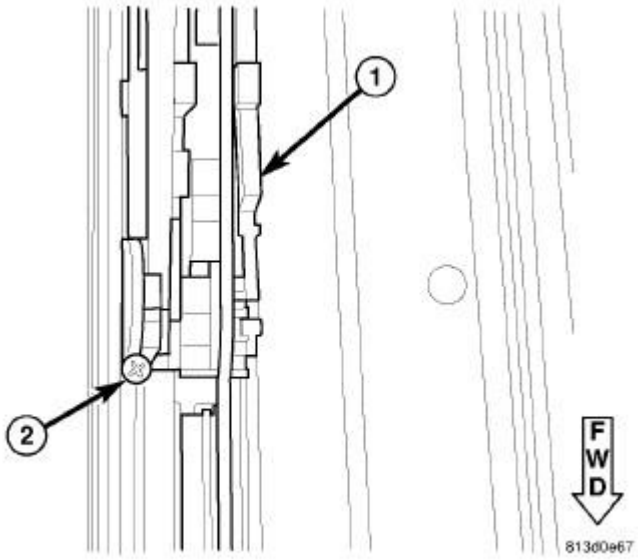

Fig. 493: Hard Stop Screw
Courtesy of CHRYSLER LLC

3. Push the guide assembly (1) and drive cable rearward past the hard stop location.
4. Install the hard stop screw (2) and push the drive cable and guide assembly (1) up against the hard stop screw (2).

5. Verify that the opposite guide assembly is also positioned up against the hard stop screw.
6. Install the wind deflector as necessary. See **Body/Sunroof/DEFLECTOR, Wind - Installation**
7. Install the motor as necessary. Refer to **Electrical - Power Systems/Power Top/MOTOR, Sunroof - Installation**

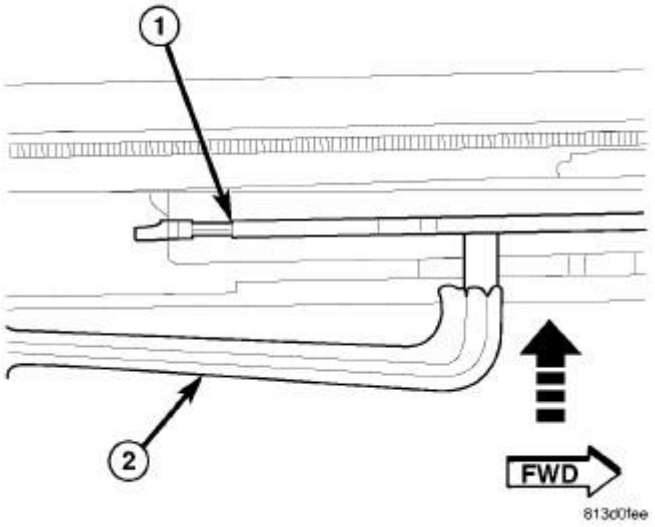

Fig. 494: Installing Arm
Courtesy of CHRYSLER LLC

8. Install the drain channel arms (2) into the mechanism (1) holes one at a time with the reinforcements on the inside of mechanism arms.

CAUTION: Do not pry the channel arms apart at the same time or you could break the drain channel.

9. Install the sunroof assembly into the vehicle. See **Body/Sunroof/SUNROOF - Installation**
10. Perform the sunroof position calibration. Refer to **Electrical - Power Systems/Power Top/MOTOR, Sunroof - Standard Procedure** .
11. Perform the Excessive Force Limitation (EFL) calibration. Refer to **Electrical - Power Systems/Power Top/MOTOR, Sunroof - Standard Procedure** .
12. Install the glass as necessary. See **Body/Sunroof/GLASS, Sunroof - Installation**
13. Adjust sunroof glass to fit flush with roof line. See **Body/Sunroof/GLASS, Sunroof - Adjustments**.
14. Verify proper operation of the power sunroof system.

MOTOR, SUNROOF

Description

DESCRIPTION

For service information refer to. Refer to **Electrical - Power Systems/Power Top - Diagnosis and Testing** .

SUNROOF

Removal

REMOVAL

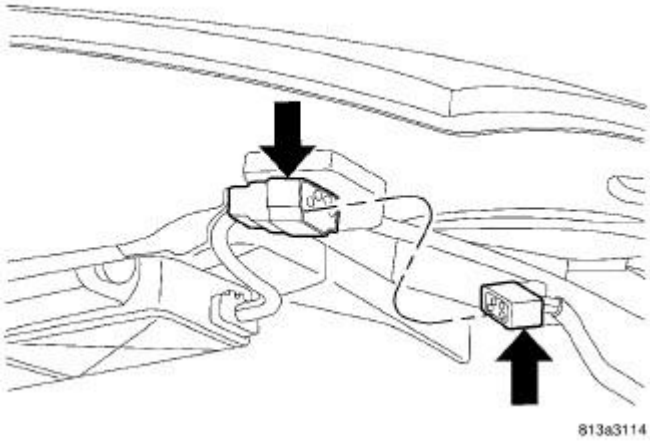

Fig. 495: Electrical Connector
Courtesy of CHRYSLER LLC

WARNING: The excessive force limitation (efl) feature must be calibrated any time a sunroof motor/module is replaced with a new component. Failure to perform this procedure could result in vehicle damage and/or personal injury. Refer to Electrical - Power Systems/Power Top/MOTOR, Sunroof - Standard Procedure calibration) for the appropriate procedure.

1. Move glass panel to the fully closed position.
2. Disconnect and isolate the battery negative cable.
3. Lower the headliner. See **Body/Interior/HEADLINER - Removal**.
4. Disconnect the sunroof wire harness electrical connector.

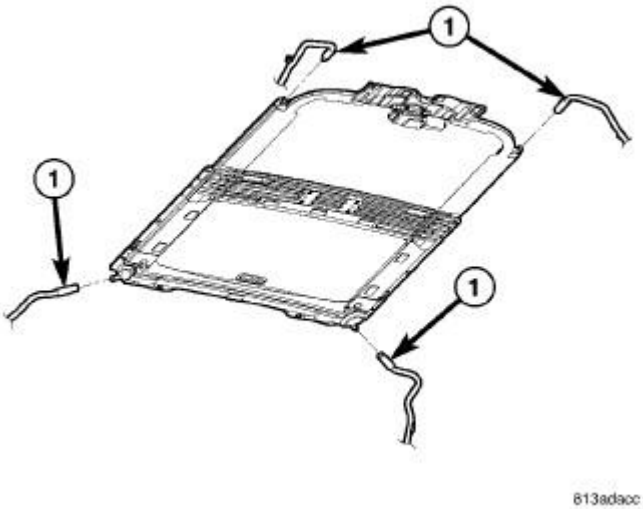

Fig. 496: Connecting Drain Tubes
Courtesy of CHRYSLER LLC

5. Disconnect the four drain tubes (1) from sunroof housing.

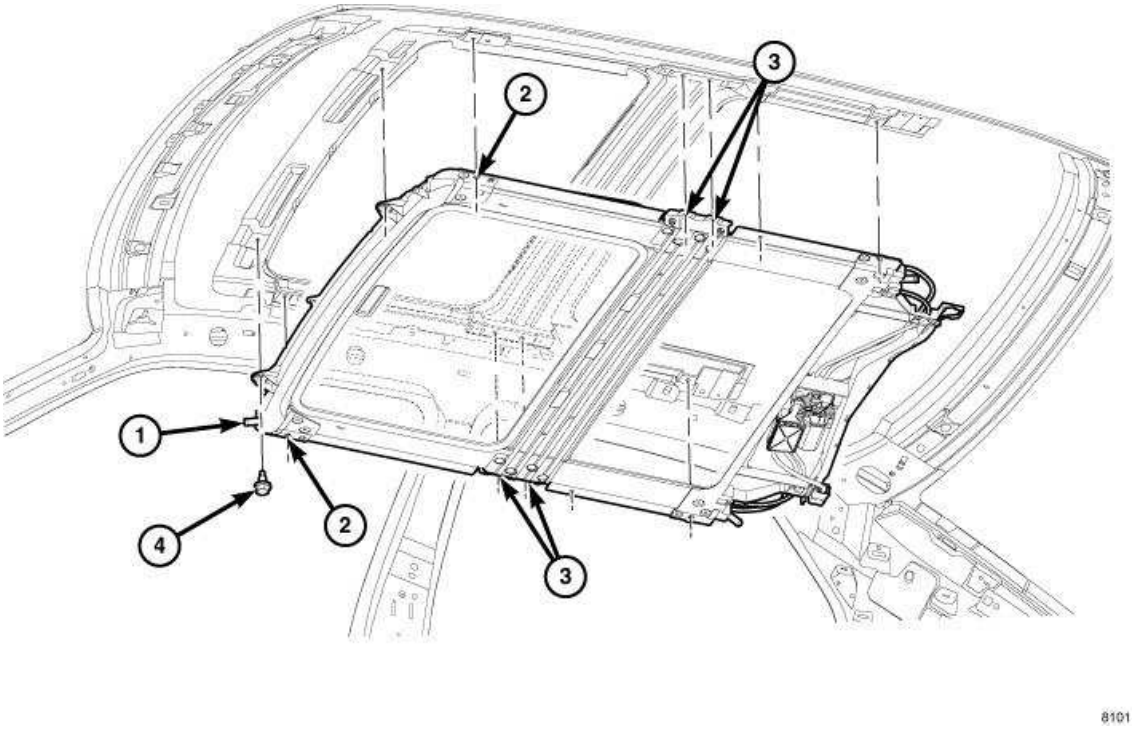

Fig. 497: Removing/Installing Sunroof
Courtesy of CHRYSLER LLC

6. Remove the eight fasteners (3) attaching sunroof assembly.
7. With the aid of a helper, support the sunroof and remove the fasteners (2) attaching sunroof

assembly (1) to roof panel.

8. Remove the sunroof (1) from vehicle.

Installation

INSTALLATION

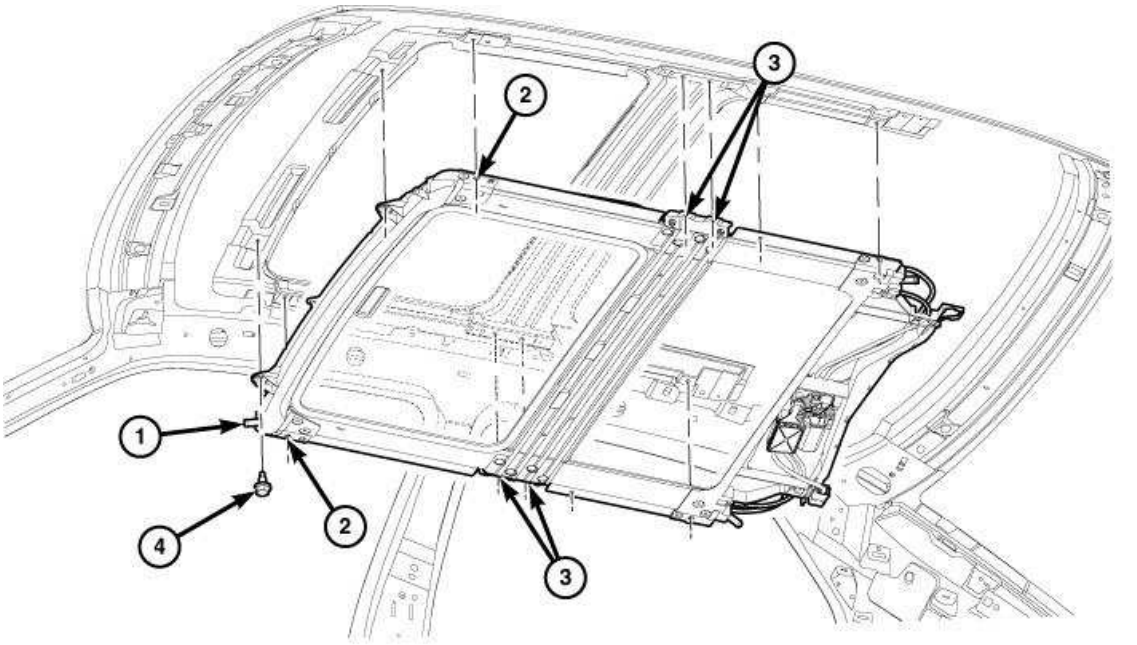

Fig. 498: Removing/Installing Sunroof
Courtesy of CHRYSLER LLC

WARNING: The excessive force limitation (efl) feature must be calibrated any time a sunroof motor/module is replaced with a new component. Failure to perform this procedure could result in vehicle damage and/or personal injury. Refer to Electrical - Power Systems/Power Top/MOTOR, Sunroof - Standard Procedure for the appropriate procedure.

1. Verify that glass panel is loose and slightly retracted.
2. Raise sunroof module assembly (1) and guide it carefully into position.

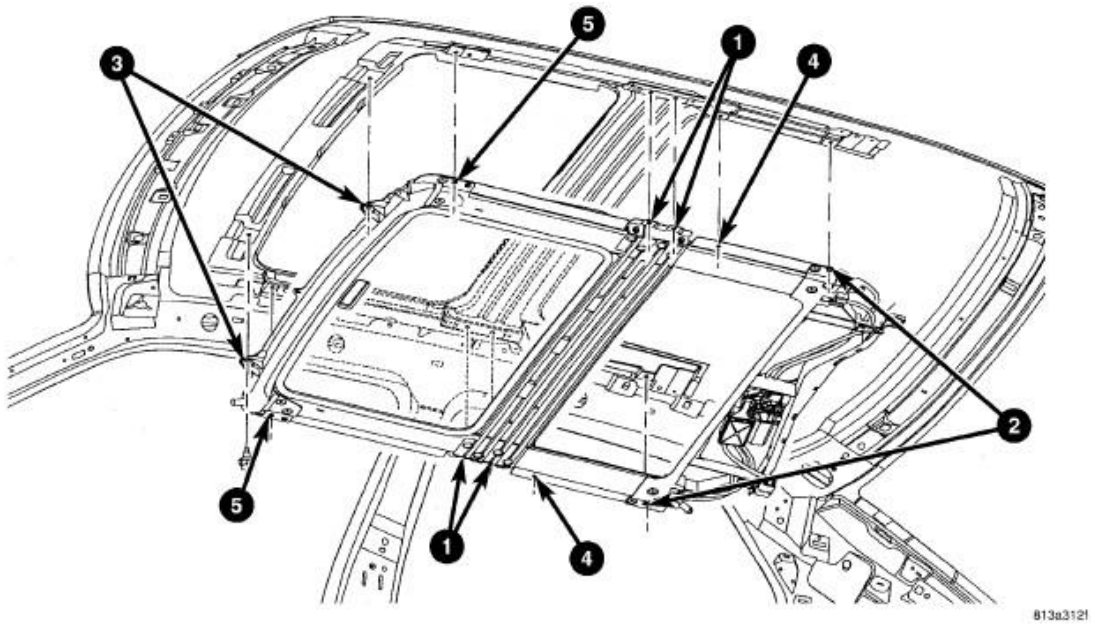

Fig. 499: Tightening Sequence
Courtesy of CHRYSLER LLC

3. While supporting the sunroof assembly start the 12 attaching screws and tighten the attaching screws to 9 N.m (80 in. lbs.) using the sequence shown in illustration.

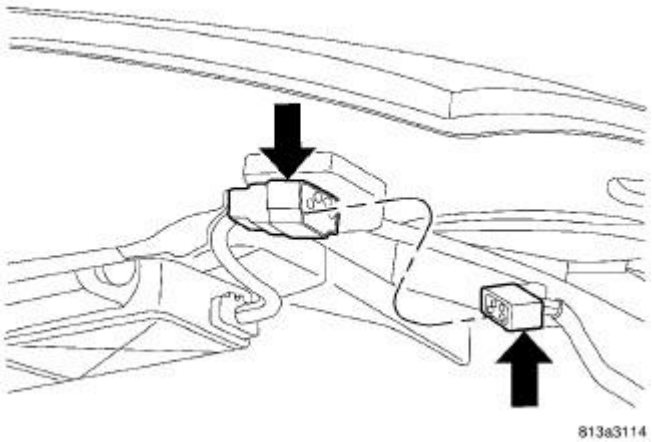

Fig. 500: Electrical Connector
Courtesy of CHRYSLER LLC

4. Connect the electrical connector.

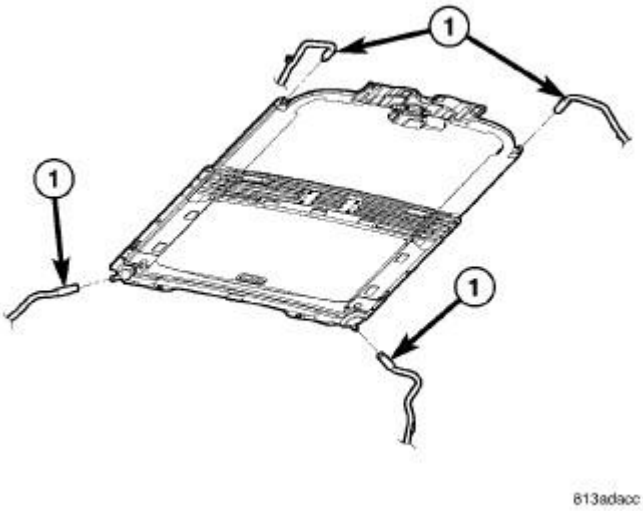

Fig. 501: Connecting Drain Tubes
Courtesy of CHRYSLER LLC

5. Connect the drain tubes to the sunroof (1).
6. Adjust the sunroof glass. See **Body/Sunroof/GLASS, Sunroof - Adjustments**
7. Connect battery negative cable.
8. Install the vehicle headliner. See **Body/Interior/HEADLINER - Installation**.
9. Perform the sunroof position calibration. Refer to **Electrical - Power Systems/Power Top/MOTOR, Sunroof - Standard Procedure** .
10. Perform the Excessive Force Limitation (EFL) calibration. Refer to **Electrical - Power Systems/Power Top/MOTOR, Sunroof - Standard Procedure** CALIBRATION).
11. Verify proper operation of the power sunroof system.

SUNSHADE, SUNROOF

Removal

REMOVAL

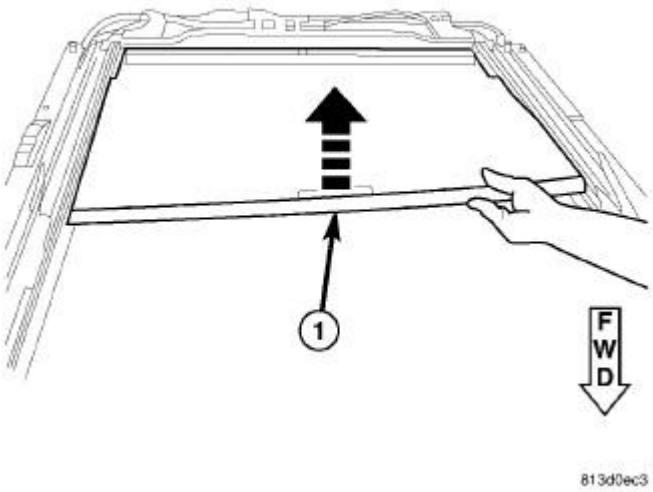

Fig. 502: Removing Sunroof Sunshade No. 1
Courtesy of CHRYSLER LLC

1. Remove the drain channel. See **Body/Sunroof/CHANNEL, Sunroof Drain - Removal**.
2. Push up the front center of the sunshade (1) to pop out the front two feet.

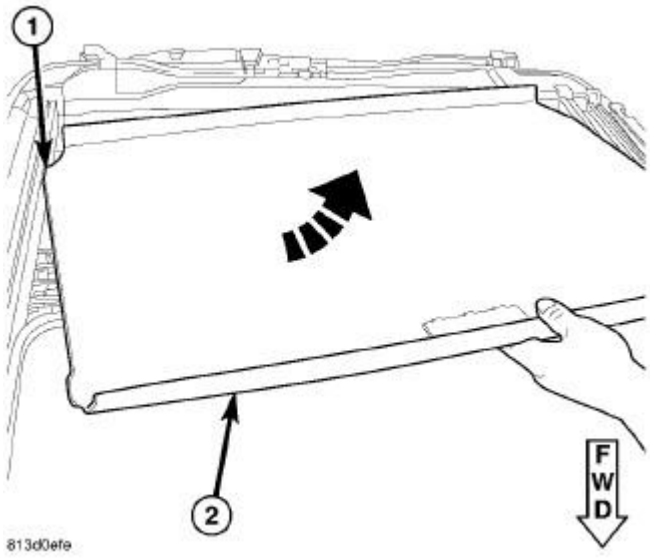

Fig. 503: Removing Sunroof Sunshade No. 2
Courtesy of CHRYSLER LLC

3. Rotate the sunshade (2) so that the other feet (1) are removed from the guide track.

Installation

INSTALLATION

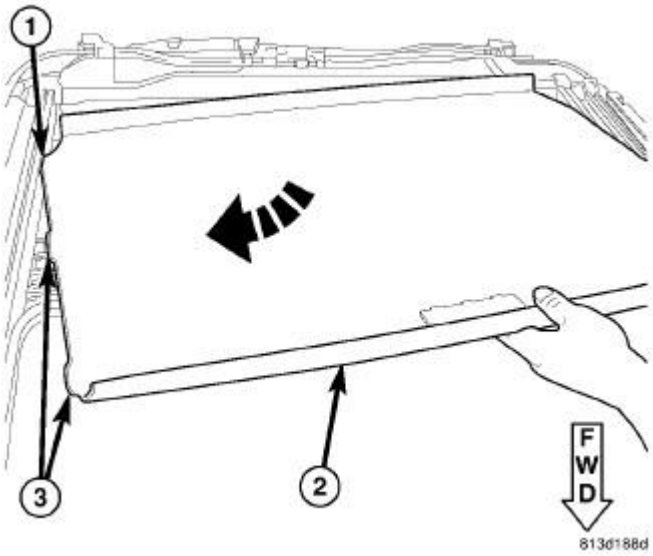

Fig. 504: Installing Sunroof Sunshade No. 1
Courtesy of CHRYSLER LLC

1. Verify the sunshade track is free of obstructions like the trim lace.
2. Start with sunshade (2) at an angle with one foot (1) in the track.
3. Rotate the sunshade so the other rear foot is in the track as well as the 2 other feet (3) on the same side as the first foot.

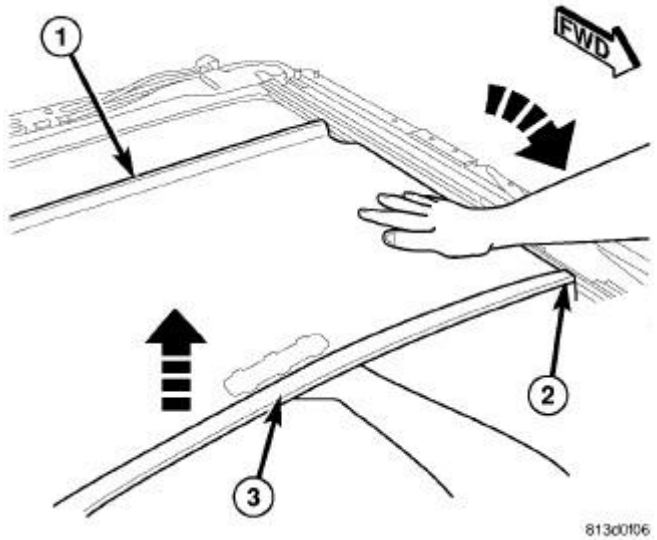

Fig. 505: Installing Sunroof Sunshade No. 2
Courtesy of CHRYSLER LLC

4. To insert the remaining two feet (2) apply force to the middle front of sunshade (3) and guide them into the track.

5. Check that all the feet are in the right track and verify sunshade operation.
6. Install the drain channel. See **Body/Sunroof/CHANNEL, Sunroof Drain - Installation**.

SWITCH, SUNROOF

Description

DESCRIPTION

For service information refer to. Refer to **Electrical - Power Systems/Power Top/SWITCH, Sunroof - Diagnosis and Testing** .

TRIM LACE, SUNROOF

Removal

REMOVAL

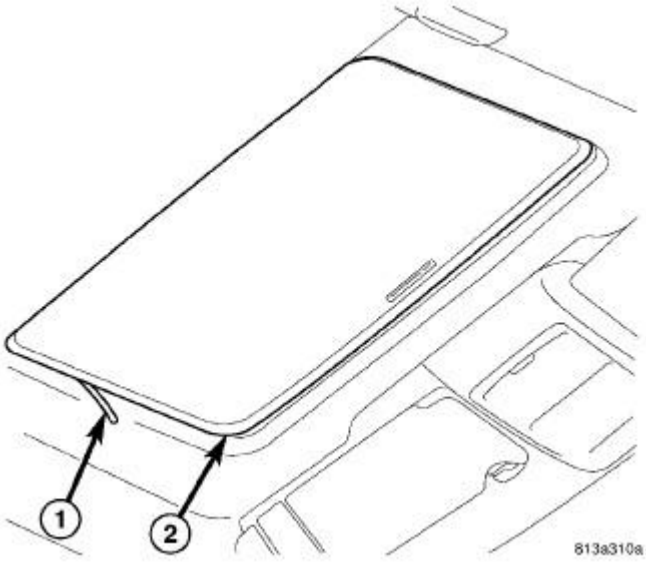

Fig. 506: Trim Lace
Courtesy of CHRYSLER LLC

1. Remove trim lace (2) by holding one end of the trim lace at the butt joint and pulling horizontally into the opening until lace is completely loose from the headliner/sunroof joint.

Installation

INSTALLATION

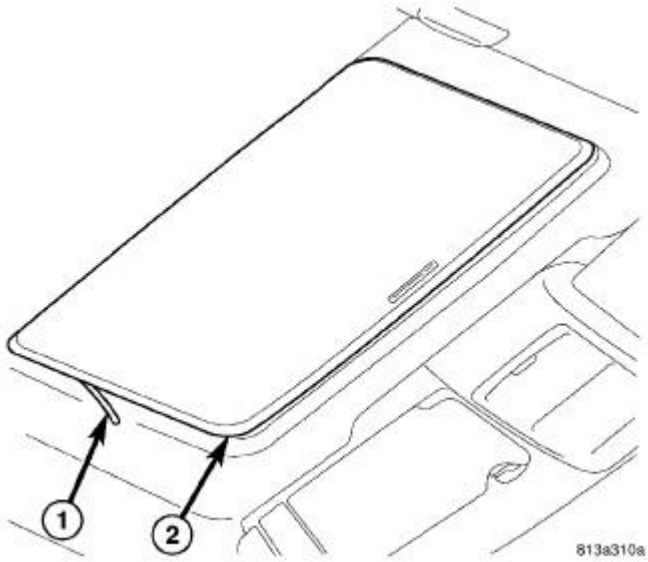

Fig. 507: Trim Lace
Courtesy of CHRYSLER LLC

1. Place butt joint of trim lace into position starting at the drivers side middle of the opening at the butt joint notch in the u-frame.
2. Push lace into position.
3. Ensure that the corner radii is fully engage.
4. Once the trim lace is attached to sunroof module using a trim stick C-4755 or equivalent, begin tucking the headliner under the lip on the trim lace working all the way around the opening. When installing a new trim lace, begin tucking the headliner under the lip as the tear cord (1) is removed working all the way around the opening.

TUBE, SUNROOF DRAIN

Removal

REMOVAL

FRONT HOSES

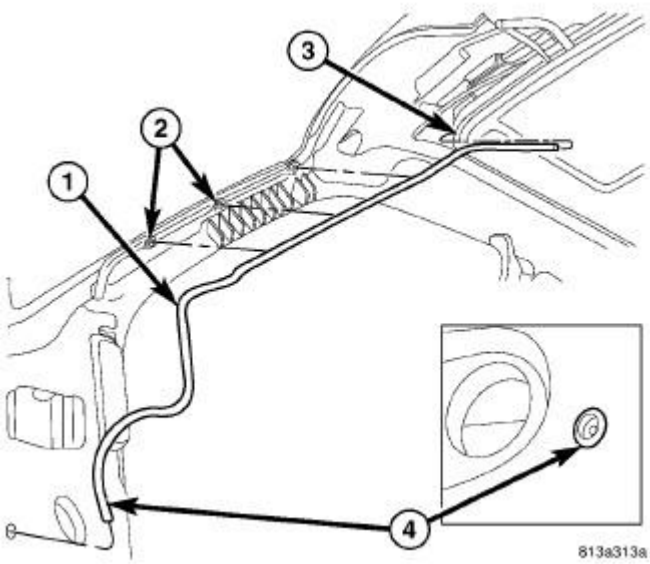

Fig. 508: Front Tube
Courtesy of CHRYSLER LLC

1. Remove headliner. See **Body/Interior/HEADLINER - Removal**.
2. Disconnect the drain hose from the sunroof housing (3).
3. Separate the lower tube from the grommet in the body (4).
4. Drain any liquid from hose connection, if necessary.
5. Release the clips (2) and remove the tube (1).

REAR HOUSING HOSE

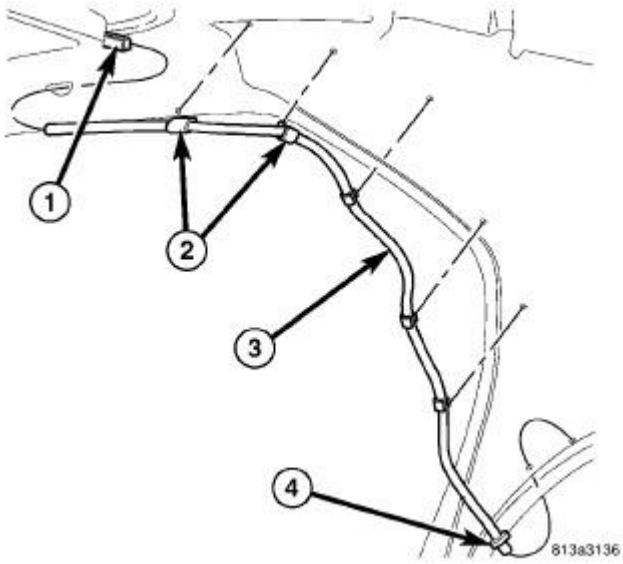

Fig. 509: Rear Tube
Courtesy of CHRYSLER LLC

1. Remove headliner. See **Body/Interior/HEADLINER - Removal**.
2. Disconnect the drain hose from the sunroof housing (1).
3. Drain any liquid from hose connection, if necessary.
4. Release the push pin fasteners (2) and separate the lower tube from the grommet in the body (4).

Installation

INSTALLATION

FRONT HOSES

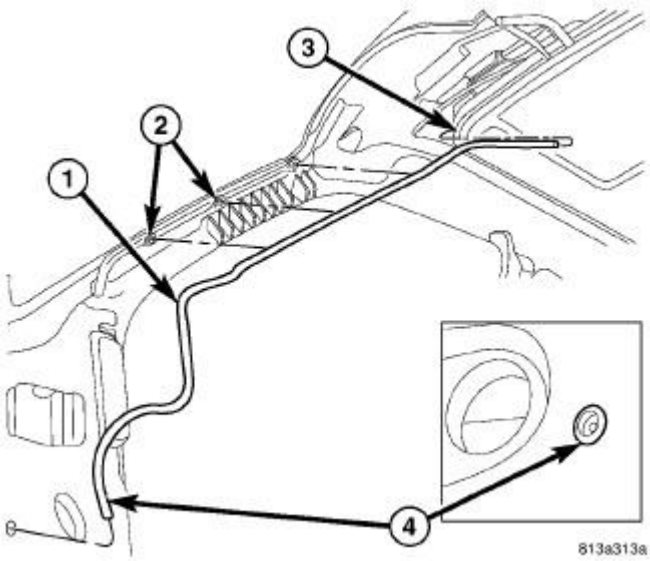

Fig. 510: Front Tube
Courtesy of CHRYSLER LLC

1. Position the lower portion through the grommet in the body (4).
2. Connect the new drain hose (1) to the sunroof housing (3) and test drainage.
3. Position the hose (1) into the support clips (2).
4. Install headliner. See **Body/Interior/HEADLINER - Installation**.

REAR HOUSING HOSE

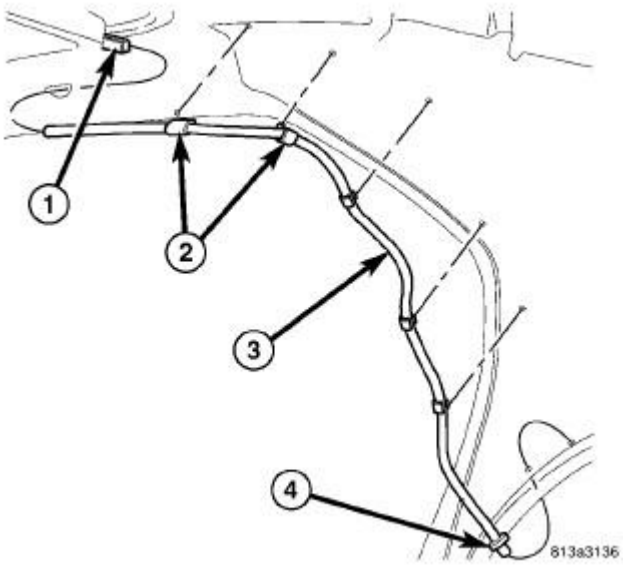

Fig. 511: Rear Tube
Courtesy of CHRYSLER LLC

1. Install the rear hose (3) and seat the push pin fasteners (2) fully.
2. Position the lower portion through the grommet in the body (4).
3. Connect the new drain hose (3) to the sunroof housing (1) and test drainage.
4. Install headliner. See **Body/Interior/HEADLINER - Installation**.

BRAKES

Base - Service Information - Challenger

DESCRIPTION

DESCRIPTION

The base brake system consists of the following components:

- Brake pedal
- Master cylinder
- Power brake booster
- Brake tubes and hoses
- Disc brakes (front and rear)
- Brake lamp switch
- Brake fluid level sensor
- Parking brake

All brakes are power assist type through the use of a vacuum operated power brake booster.

The hydraulic brake system is front/rear split. This means the front brakes are on one hydraulic circuit from the master cylinder and the rear brakes are on the other.

Front disc brakes control the braking of the front wheels; rear braking is controlled by rear disc brakes.

This vehicle is equipped with an Antilock Brake System (ABS) with traction control and an Electronic Stability Program (ESP). This system shares most base brake hardware. All components differing from the base brake hardware are described in detail in the Antilock Brake System service information.

The parking brake on this vehicle is pedal-operated.

For more information on the description of any individual base brake component, refer to that component elsewhere in this service information. For information on the brake lamp switch. Refer to **Electrical - Lamps and Lighting/Lamps/Lighting - Exterior/SWITCH, Stop Lamp - Description** .

WARNING

WARNING

WARNING: Chrysler LLC does not manufacture any vehicles or replacement parts that contain asbestos. Aftermarket products may or may not contain

asbestos. Refer to aftermarket product packaging for product information.

Whether the product contains asbestos or not, dust and dirt can accumulate on brake parts during normal use. Follow practices prescribed by appropriate regulations for the handling, processing and disposing of dust and debris.

CAUTION

CAUTION

CAUTION: Use only Mopar® brake fluid or an equivalent from a tightly sealed container. Brake fluid must conform to DOT 3 specifications. Do not use petroleum-based fluid because seal damage in the brake system will result.

CAUTION: Brake fluid will damage painted surfaces. If brake fluid is spilled on any painted surfaces, wash it off immediately with water.

CAUTION: Never use gasoline, kerosene, alcohol, motor oil, transmission fluid, or any fluid containing mineral oil to clean system components. These fluids damage rubber cups and seals.

CAUTION: During service procedures, grease or any other foreign material must be kept off the caliper assembly, brake linings, brake rotor and external surfaces of the hub.

CAUTION: Disc brake calipers are made of aluminum. They are anodized and appear black in color. When handling the calipers or brake rotors, be careful to avoid damaging them, and avoid scratching or nicking the brake pad lining.

CAUTION: Anytime the battery has been disconnected and is reconnected it is important that this be performed properly. The vehicle may be equipped with systems that require special calibration processes. Refer to Electrical - Engine Systems/Battery System - Standard Procedure

STANDARD PROCEDURE

BASE BRAKE BLEEDING

CAUTION: Before removing the master cylinder cover, wipe it clean to prevent dirt and other foreign matter from dropping into the master cylinder.

CAUTION: Use only Mopar® brake fluid or an equivalent from a fresh, tightly sealed container. Brake fluid must conform to DOT 3 specifications.

NOTE: For bleeding the antilock brake hydraulic system. See Brakes - Standard Procedure.

NOTE: Do not pump the brake pedal at any time while having a bleeder screw open during the bleeding process. This will only increase the amount of air in the system and make additional bleeding necessary.

NOTE: Do not allow the master cylinder reservoir to run out of brake fluid while bleeding the system. An empty reservoir will allow additional air into the brake system. Check the fluid level frequently and add fluid as needed.

The following wheel circuit sequence for bleeding the brake hydraulic system should be used to ensure adequate removal of all trapped air from the brake hydraulic system.

- Right rear wheel
- Left rear wheel
- Right front wheel
- Left front wheel

NOTE: Pressure bleeding is highly recommended to bleed this brake system to ensure all air is removed from system. Manual bleeding may also be used, but additional time is needed to remove all air from system.

The base brake system can be bled using the pressure method or the manual method. Both methods are presented in this text.

PRESSURE BLEEDING METHOD

NOTE: Follow pressure bleeder manufacturer's instructions for use of pressure bleeding equipment.

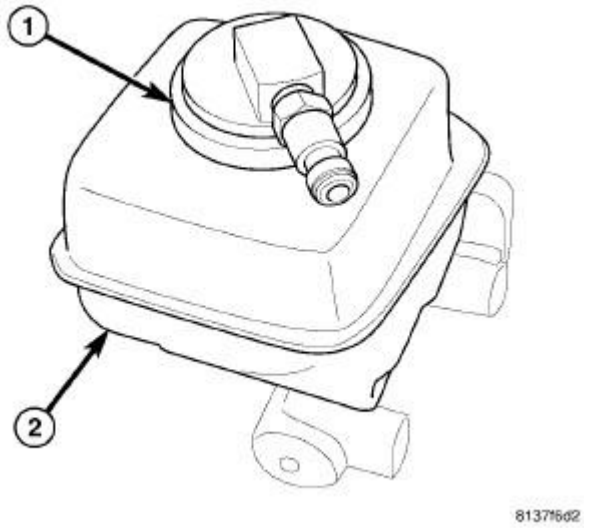

Fig. 1: Special Tool 6921
Courtesy of CHRYSLER LLC

1. Remove filler cap from the top of fluid reservoir (2) on master cylinder.
2. Install Adapter (1), Special Tool 6921, in the caps place on the reservoir (2).
3. Attach Bleeder Tank, Special Tool C-3496-B, or equivalent, to Adapter 6921 (1). Pressurize the system following the pressure bleeder manufacturer's instructions.

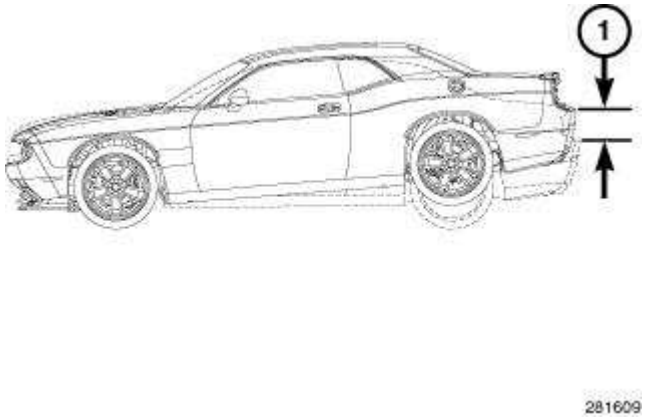

Fig. 2: Raising Rear Bumper
Courtesy of CHRYSLER LLC

NOTE: To ensure all air is bled from the ICU or junction block in a timely manner, it is recommended to raise the rear of the vehicle approximately 5° higher than the front or approximately 10-12 inches as measured at the rear bumper (1).

4. Raise and support vehicle placing rear of vehicle approximately 5° higher than the front or if measured at the rear bumper (1), approximately 10-12 inches above level. It will be necessary

to add extra support stands under vehicle to support this angle.

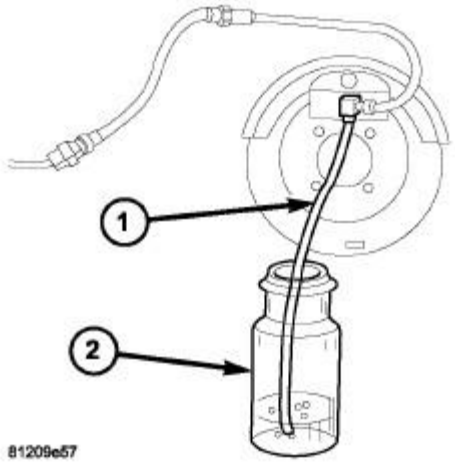

Fig. 3: BLEED HOSE SET UP
Courtesy of CHRYSLER LLC

5. If installed, remove rubber dust caps from all four bleeder screws on calipers.
6. Starting at the first wheel circuit as listed earlier, attach a clear hose (1) to the bleeder screw at that wheels brake caliper and feed the other end of hose into a clear jar (2) containing enough fresh brake fluid to submerge the end of the hose.

CAUTION: Open the bleeder screw at least one full turn when instructed. Some air may be trapped in the brake lines or valves far upstream, as far as ten feet or more from the bleeder screw. If the bleeder screw is not opened sufficiently, fluid flow is restricted causing a slow, weak fluid discharge. This will NOT get all the air out. Therefore, it is essential to open the bleeder screw at least one full turn to allow a fast, large volume discharge of brake fluid.

7. Open bleeder screw at least one full turn or more to obtain an adequate flow of brake fluid.
8. After 4 to 8 ounces of brake fluid has been bled through the brake hydraulic circuit, and an air-free flow (no bubbles) is maintained in the clear plastic hose (1) and jar (2), close the bleeder screw.
9. Bleed the remaining wheel circuits in the same manner until all air is removed from the brake hydraulic system.
10. Check brake pedal travel. If pedal travel is excessive or has not improved, some air may still be trapped in the hydraulic system. Re-bleed the brake system as necessary.
11. If equipped with antilock brakes, the hydraulic control unit may need to be bled, then re-bleed base brakes. See **Brakes - Standard Procedure**.
12. Reinstall all 4 bleeder screw dust caps.
13. Test drive vehicle to ensure brakes are operating properly and pedal feel is correct.

MANUAL BLEEDING METHOD

NOTE: To bleed the base brake system manually, an assistants help is required.

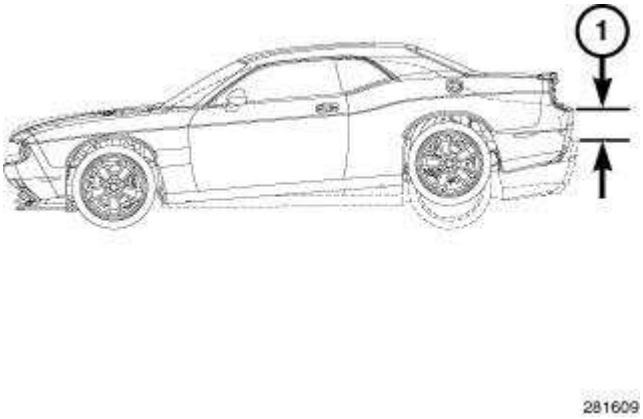

Fig. 4: Raising Rear Bumper
Courtesy of CHRYSLER LLC

NOTE: To ensure all air is bled from the ICU or junction block in a timely manner, it is recommended to raise the rear of the vehicle approximately 5° higher than the front or approximately 10-12 inches as measured at the rear bumper (1).

1. Raise and support vehicle placing rear of vehicle approximately 5° higher than the front or if measured at the rear bumper (1), approximately 10-12 inches above level. It will be necessary to add extra support stands under vehicle to support this angle.

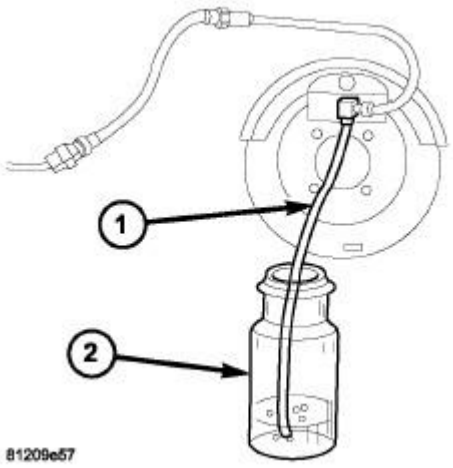

Fig. 5: BLEED HOSE SET UP
Courtesy of CHRYSLER LLC

2. Remove rubber duct caps from all 4 bleeder screws.
3. Attach a clear hose (1) to the bleeder screw at one wheel and feed the other end of the hose into a clear jar (2) containing fresh brake fluid.

4. Have an assistant pump the brake pedal three or four times and hold it down before the bleeder screw is opened.

CAUTION: Open the bleeder screw at least one full turn when instructed. Some air may be trapped in the brake lines or valves far upstream, as far as ten feet or more from the bleeder screw. If the bleeder screw is not opened sufficiently, fluid flow is restricted causing a slow, weak fluid discharge. This will NOT get all the air out. Therefore, it is essential to open the bleeder screw at least one full turn to allow a fast, large volume discharge of brake fluid.

5. While the pedal is being held down, open the bleeder screw at least 1 full turn. When the bleeder screw opens the brake pedal will drop all the way to the floor. Continue to hold the pedal all the way down.
6. Once the brake pedal has dropped, close the bleeder screw. The pedal can then be released.
7. Repeat steps One through Five until all trapped air is removed from that wheel circuit (usually four or five times). This should pass a sufficient amount of fluid to expel all the trapped air from the brakes hydraulic system. Be sure to monitor brake fluid level in master cylinder fluid reservoir making sure it stays at a proper level. This will ensure air does not reenter brake hydraulic system through master cylinder.

NOTE: Monitor the brake fluid level in the fluid reservoir periodically to make sure it does not go too low. This will ensure that air does not reenter the brake hydraulic system.

8. Bleed the remaining wheel circuits in the same manner until all air is removed from the brake hydraulic system.
9. Check brake pedal travel. If pedal travel is excessive or has not improved, some air may still be trapped in the hydraulic system. Re-Bleed the brake system as necessary.
10. If equipped with antilock brakes, the hydraulic control unit may need to be bled, then Re-Bleed base brakes. See **Brakes - Standard Procedure**.
11. Reinstall all 4 bleeder screw dust caps.
12. Test drive vehicle to ensure brakes are operating properly and pedal feel is correct.

BASE BRAKE BLEEDING - SRT8

Use the following procedure to bleed the rear brake calipers of this vehicle. The front brake calipers may be bled using the same procedure as the standard model.

CAUTION: Before removing the master cylinder cover, wipe it clean to prevent dirt and other foreign matter from dropping into the master cylinder.

CAUTION: Use only Mopar® brake fluid or an equivalent from a fresh, tightly sealed container. Brake fluid must conform to DOT 3 specifications.

NOTE: **For bleeding the antilock-brake hydraulic system. See Brakes - Standard Procedure.**

NOTE: **Do not pump the brake pedal at any time with a bleeder screw open during the bleeding process. This only increases the amount of air in the system and makes additional bleeding necessary.**

NOTE: **Do not allow the master cylinder reservoir to run out of brake fluid while bleeding the system. An empty reservoir allows additional air into the brake system. Check the fluid level frequently and add fluid as needed.**

NOTE: **Pressure bleeding is highly recommended to bleed this brake system to make sure all air is removed from system. Manual bleeding may also be used, but additional time is needed to remove all air from system.**

Although the **pressure method** is recommended for bleeding the base brake system, the manual method can also be performed. Both methods are presented in this text.

PRESSURE BLEEDING METHOD

NOTE: **Follow pressure bleeder manufacturer's instructions for use of pressure bleeding equipment.**

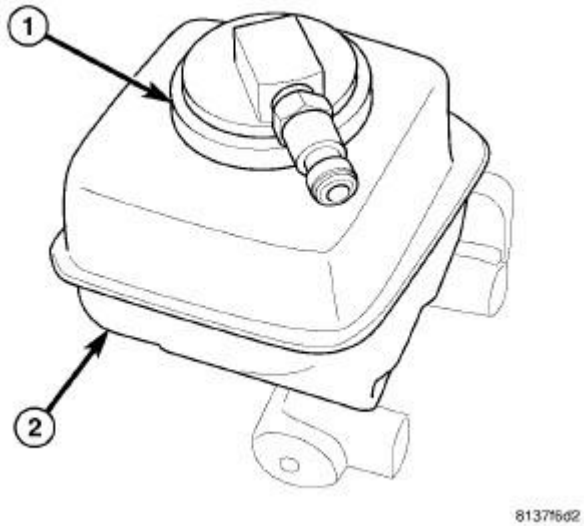

Fig. 6: Special Tool 6921
Courtesy of CHRYSLER LLC

1. Remove the filler cap from the top of the fluid reservoir (2) on the master cylinder.

2. Install Adapter (1) 6921, in the caps place on the reservoir (2).
3. Attach Bleeder Tank C-3496-B, or equivalent, to Adapter 6921 (1). Pressurize the system following the pressure bleeder manufacturer's instructions.

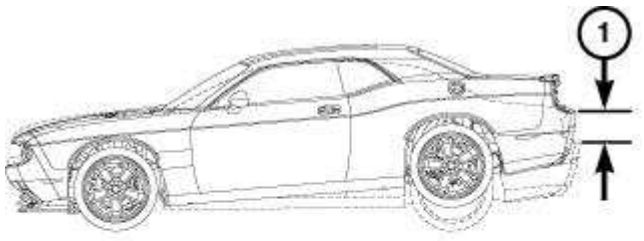

Fig. 7: Raising Rear Bumper
Courtesy of CHRYSLER LLC

NOTE: To make sure all air is bled from the ICU or junction block in a timely manner, it is recommended to raise the rear of the vehicle approximately 5° higher than the front or approximately 254-305 mm(10-12 inches) as measured at the rear bumper (1).

4. Raise and support vehicle placing rear of vehicle approximately 5° higher than the front or if measured at the rear bumper (1), approximately 10-12 inches above level. It will be necessary to add extra support stands under vehicle to support this angle.

NOTE: Use the following wheel circuit sequence for bleeding the brake hydraulic system to adequately remove all trapped air from the brake hydraulic system.

- **Right rear wheel**
- **Left rear wheel**
- **Right front wheel**
- **Left front wheel**

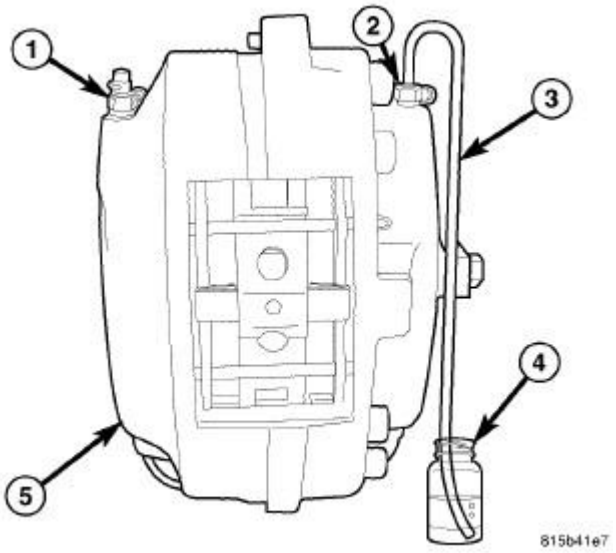

Fig. 8: Bleeding Caliper Inboard Half
Courtesy of CHRYSLER LLC

CAUTION: Open the bleeder screw at least one full turn when instructed. Some air may be trapped in the brake lines or valves far upstream, as far as ten feet or more from the bleeder screw. If the bleeder screw is not opened sufficiently, fluid flow is restricted causing a slow, weak fluid discharge. This will NOT get all the air out. Therefore, it is essential to open the bleeder screw at least one full turn to allow a fast, large volume discharge of brake fluid.

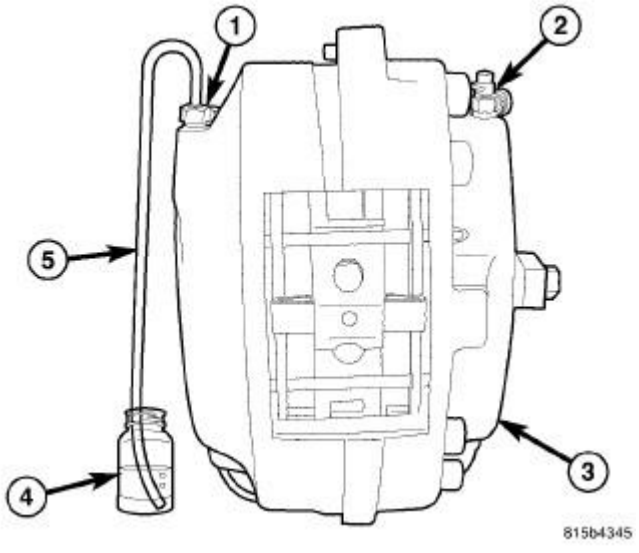

Fig. 9: Bleeding Caliper Outboard Half
Courtesy of CHRYSLER LLC

CAUTION: Open the bleeder screw at least one full turn when instructed. Some air may be trapped in the brake lines or valves far upstream, as far as ten feet or more from the bleeder screw. If the bleeder screw is not opened sufficiently, fluid flow is restricted causing a slow, weak fluid discharge. This will NOT get all the air out. Therefore, it is essential to open the bleeder screw at least one full turn to allow a fast, large volume discharge of brake fluid.

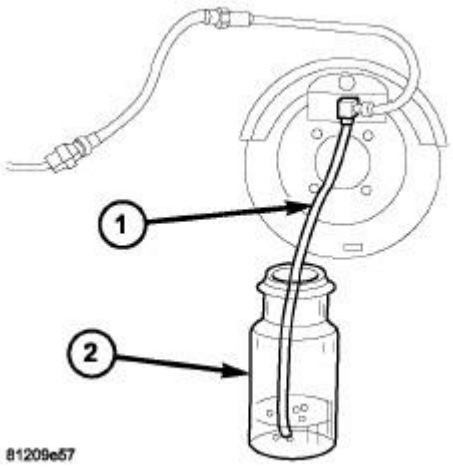

Fig. 10: BLEED HOSE SET UP
Courtesy of CHRYSLER LLC

CAUTION: Open the bleeder screw at least one full turn when instructed. Some air may be trapped in the brake lines or valves far upstream, as far as ten feet or more from the bleeder screw. If the bleeder screw is not opened sufficiently, fluid flow is restricted causing a slow, weak fluid discharge. This will NOT get all the air out. Therefore, it is essential to open the bleeder screw at least one full turn to allow a fast, large volume discharge of brake fluid.

REAR BRAKES

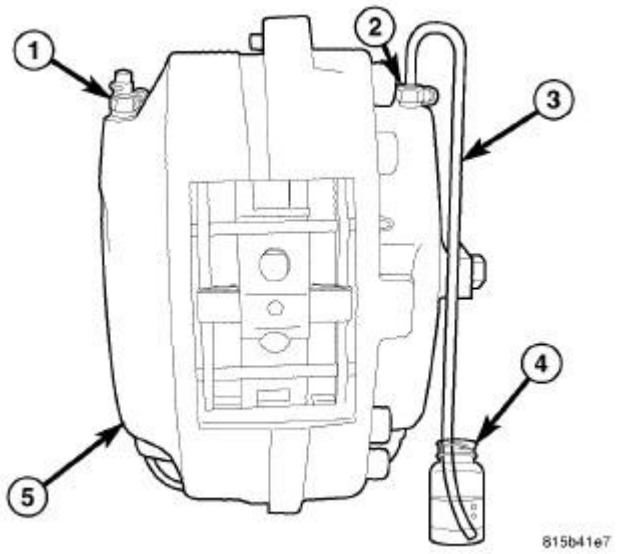

Fig. 11: Bleeding Caliper Inboard Half
Courtesy of CHRYSLER LLC

1. If installed, remove the rubber dust caps from both bleeder screws on each caliper.
2. Start at the first wheel circuit that needs to be bled (See list in above note). Attach a clear hose (3) to the inboard bleeder screw (2) at the wheels brake caliper and feed the other end of hose into a clear jar (4) containing enough fresh brake fluid to submerge the end of the hose.

CAUTION: Open the bleeder screw at least one full turn when instructed. Some air may be trapped in the brake lines or valves far upstream, as far as ten feet or more from the bleeder screw. If the bleeder screw is not opened sufficiently, fluid flow is restricted causing a slow, weak fluid discharge. This will NOT get all the air out. Therefore, it is essential to open the bleeder screw at least one full turn to allow a fast, large volume discharge of brake fluid.

3. Open the inboard bleeder screw (2) one full turn to obtain an adequate flow of brake fluid.
4. After bleeding 118-237 ml. (4-8 oz.) of brake fluid through the brake hydraulic circuit, and maintaingan air-free flow (no bubbles) is in the clear plastic hose (3) and jar (4), close the bleeder screw (2).
5. Remove the clear hose and install the bleeder screw dust cap.

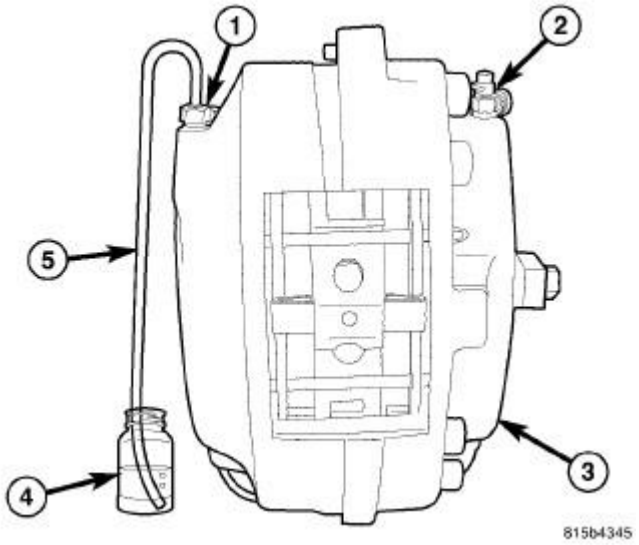

Fig. 12: Bleeding Caliper Outboard Half
Courtesy of CHRYSLER LLC

6. Attach a clear hose (5) to the outboard bleeder screw (1) at the same brake caliper and feed the other end of those into a clear jar (4) containing enough fresh brake fluid to submerge the end of the hose.

CAUTION: Open the bleeder screw at least one full turn when instructed. Some air may be trapped in the brake lines or valves far upstream, as far as ten feet or more from the bleeder screw. If the bleeder screw is not opened sufficiently, fluid flow is restricted causing a slow, weak fluid discharge. This will NOT get all the air out. Therefore, it is essential to open the bleeder screw at least one full turn to allow a fast, large volume discharge of brake fluid.

7. Open the outboard bleeder screw (1) one full turn to obtain an adequate flow of brake fluid.
8. After bleeding 118-237 ml. (4-8 oz.) of brake fluid through the brake hydraulic circuit, and maintaingan air-free flow (no bubbles) is in the clear plastic hose (5) and jar (4), close the bleeder screw (1).
9. Remove the clear hose and install the bleeder screw dust cap.
10. Bleed the opposite rear brake wheel circuits as necessary in the same manner until all air is removed from the brake hydraulic system, then proceed to the front brakes.

FRONT BRAKES

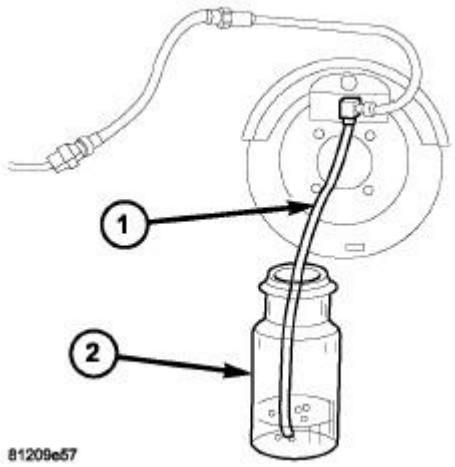

Fig. 13: BLEED HOSE SET UP
Courtesy of CHRYSLER LLC

1. If installed, remove the rubber dust cap from bleeder screw on each front brake caliper.
2. Start at the first wheel circuit that needs to be bled (See list in above note), attach a clear hose (1) to the bleeder screw at that wheels brake caliper and feed the other end of hose into a clear jar (2) containing enough fresh brake fluid to submerge the end of the hose.

CAUTION: Open the bleeder screw at least one full turn when instructed. Some air may be trapped in the brake lines or valves far upstream, as far as ten feet or more from the bleeder screw. If the bleeder screw is not opened sufficiently, fluid flow is restricted causing a slow, weak fluid discharge. This will NOT get all the air out. Therefore, it is essential to open the bleeder screw at least one full turn to allow a fast, large volume discharge of brake fluid.

3. Open bleeder screw one full turn to obtain an adequate flow of brake fluid.
4. After bleeding 118-237 ml. (4-8 oz.) of brake fluid through the brake hydraulic circuit, and maintaining an air-free flow (no bubbles) is in the clear plastic hose (1) and jar (2), close the bleeder screw.
5. Install the bleeder screw dust cap.
6. Bleed the opposite front brake wheel circuit as necessary in the same manner until all air is removed from the brake hydraulic system.
7. If equipped with anti-lock brakes, and the hydraulic control unit needs to be bled, then Re-Bleed the base brakes. See **Brakes - Standard Procedure**.
8. Once all brakes are bled, check brake pedal travel. If pedal travel is excessive or has not improved, some air may still be trapped in the brake hydraulic system. Re-Bleed the brake system as necessary.
9. Test drive vehicle to make sure the brakes are operating properly and pedal feel is correct.

MANUAL BLEEDING METHOD

NOTE: **To bleed the base brake system manually, an assistant's help is required.**

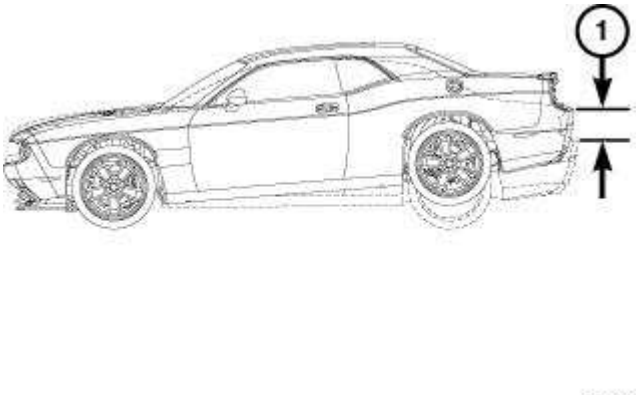

Fig. 14: Raising Rear Bumper
Courtesy of CHRYSLER LLC

NOTE: **To make sure all air is bled from the ICU or junction block in a timely manner, it is recommended to raise the rear of the vehicle approximately 5° higher than the front or approximately 254-305 mm (10-12 inches) as measured at the rear bumper (1).**

1. Raise and support vehicle placing rear of vehicle approximately 5° higher than the front or if measured at the rear bumper (1), approximately 10-12 inches above level. It will be necessary to add extra support stands under vehicle to support this angle.

NOTE: **Use the following wheel circuit sequence for bleeding the brake hydraulic system to adequately remove all trapped air from the brake hydraulic system.**

- **Right rear wheel**
- **Left rear wheel**
- **Right front wheel**
- **Left front wheel**

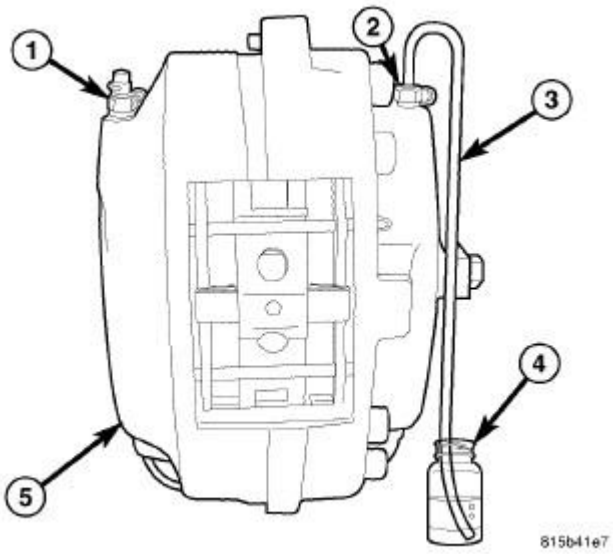

Fig. 15: Bleeding Caliper Inboard Half
Courtesy of CHRYSLER LLC

CAUTION: Open the bleeder screw at least one full turn when instructed. Some air may be trapped in the brake lines or valves far upstream, as far as ten feet or more from the bleeder screw. If the bleeder screw is not opened sufficiently, fluid flow is restricted causing a slow, weak fluid discharge. This will NOT get all the air out. Therefore, it is essential to open the bleeder screw at least one full turn to allow a fast, large volume discharge of brake fluid.

NOTE: Monitor the brake fluid level in the fluid reservoir periodically to make sure it does not go too low. This makes sure that air does not reenter the brake hydraulic system.

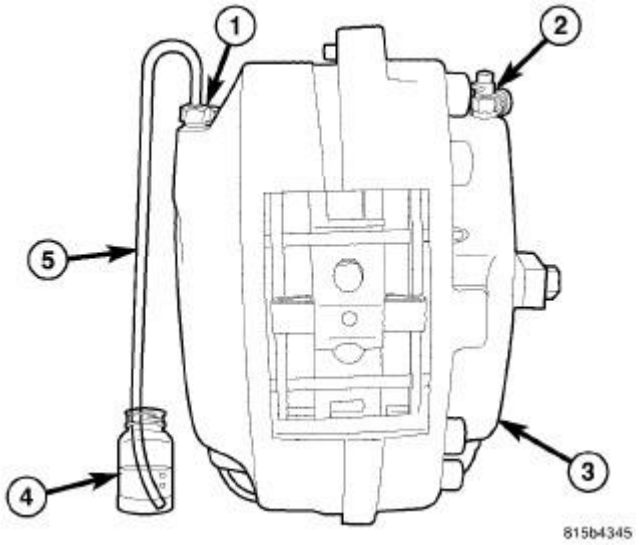

Fig. 16: Bleeding Caliper Outboard Half
Courtesy of CHRYSLER LLC

CAUTION: Open the bleeder screw at least one full turn when instructed. Some air may be trapped in the brake lines or valves far upstream, as far as ten feet or more from the bleeder screw. If the bleeder screw is not opened sufficiently, fluid flow is restricted causing a slow, weak fluid discharge. This will NOT get all the air out. Therefore, it is essential to open the bleeder screw at least one full turn to allow a fast, large volume discharge of brake fluid.

NOTE: Monitor the brake fluid level in the fluid reservoir periodically to make sure it does not go too low. This will ensure that air does not reenter the brake hydraulic system.

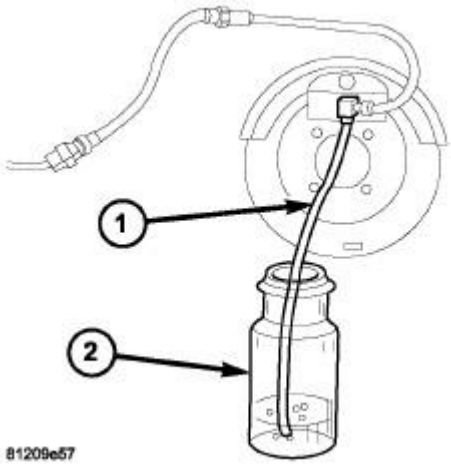

Fig. 17: BLEED HOSE SET UP

Courtesy of CHRYSLER LLC

CAUTION: Open the bleeder screw at least one full turn when instructed. Some air may be trapped in the brake lines or valves far upstream, as far as ten feet or more from the bleeder screw. If the bleeder screw is not opened sufficiently, fluid flow is restricted causing a slow, weak fluid discharge. This will NOT get all the air out. Therefore, it is essential to open the bleeder screw at least one full turn to allow a fast, large volume discharge of brake fluid.

NOTE: Monitor the brake fluid level in the fluid reservoir periodically to make sure it does not go too low. This makes sure that air does not reenter the brake hydraulic system.

REAR BRAKES

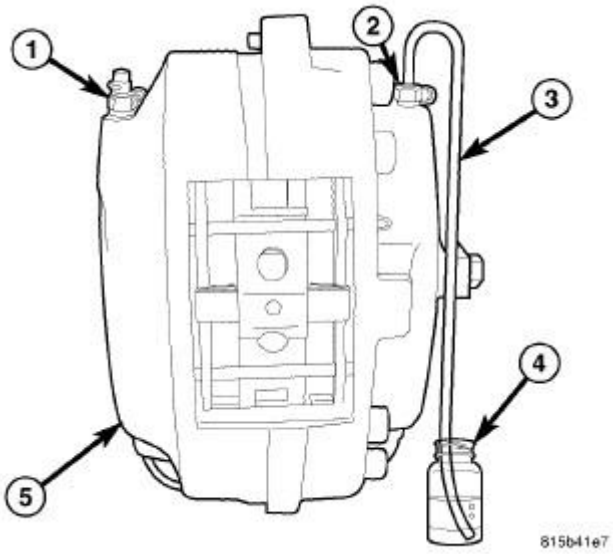

Fig. 18: Bleeding Caliper Inboard Half
Courtesy of CHRYSLER LLC

1. If installed, remove the rubber dust caps from both bleeder screws on each caliper.
2. Start at the first wheel circuit that needs to be bled (See list in above note), attach a clear hose (3) to the inboard bleeder screw at that the brake caliper and feed the other end of hose into a clear jar (4) containing enough fresh brake fluid to submerge the end of the hose.
3. Have an assistant pump the brake pedal three or four times, then hold it down before the bleeder screw is opened.

CAUTION: Open the bleeder screw at least one full turn when instructed. Some air may be trapped in the brake lines or valves far upstream, as far as ten feet or more from the bleeder screw. If the bleeder screw is not

opened sufficiently, fluid flow is restricted causing a slow, weak fluid discharge. This will NOT get all the air out. Therefore, it is essential to open the bleeder screw at least one full turn to allow a fast, large volume discharge of brake fluid.

4. While holding down the brake pedal, open the inboard bleeder screw (2) at least one full turn. When the bleeder screw opens the brake pedal will drops all the way to the floor. Continue holding the pedal all the way down.
5. Once the brake pedal drops, close the bleeder screw. Release the pedal.
6. Repeat the previous three steps until all trapped air is removed from that wheel circuit (usually four or five times). This should pass a sufficient amount of fluid to expel all the trapped air from the brake hydraulic system. **Be sure to monitor brake fluid level in master cylinder fluid reservoir making sure it stays at a proper level.** This will ensure air does not reenter brake hydraulic system through master cylinder.

NOTE: Monitor the brake fluid level in the fluid reservoir periodically to make sure it does not go too low. This makes sure that air does not reenter the brake hydraulic system.

7. Remove the clear hose and install the bleeder screw dust cap.

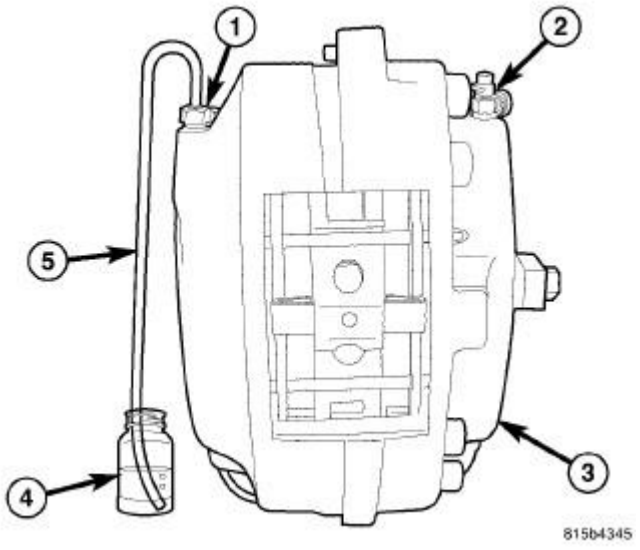

Fig. 19: Bleeding Caliper Outboard Half
Courtesy of CHRYSLER LLC

8. Attach a clear hose (5) to the outboard bleeder screw (1) at the brake caliper and feed the other end of hose into a clear jar (4) containing enough fresh brake fluid to submerge the end of the hose.
9. Have an assistant pump the brake pedal three or four times, then hold it down before the bleeder screw is opened.

CAUTION: Open the bleeder screw at least one full turn when instructed. Some air may be trapped in the brake lines or valves far upstream, as far as ten feet or more from the bleeder screw. If the bleeder screw is not opened sufficiently, fluid flow is restricted causing a slow, weak fluid discharge. This will NOT get all the air out. Therefore, it is essential to open the bleeder screw at least one full turn to allow a fast, large volume discharge of brake fluid.

10. While holding down the brake pedal, open the outboard bleeder screw (2) at least one full turn. When the bleeder screw opens the brake pedal drops all the way to the floor. Continue holding the pedal all the way down.
11. Once the brake pedal drops, close the bleeder screw. Release the pedal.
12. Repeat the previous three steps until all trapped air is removed from that wheel circuit (usually four or five times). This passes a sufficient amount of fluid to expel all the trapped air from the brake hydraulic system. **Be sure to monitor brake fluid level in master cylinder fluid reservoir making sure it stays at a proper level.** This will ensure air does not reenter brake hydraulic system through master cylinder.

NOTE: Monitor the brake fluid level in the fluid reservoir periodically to make sure it does not go too low. This will ensure that air does not reenter the brake hydraulic system.

13. Remove the clear hose and install the bleeder screw dust cap.
14. Bleed the opposite rear brake wheel circuits as necessary in the same manner until all air is removed from the brake hydraulic system, then proceed to the front brakes.

FRONT BRAKES

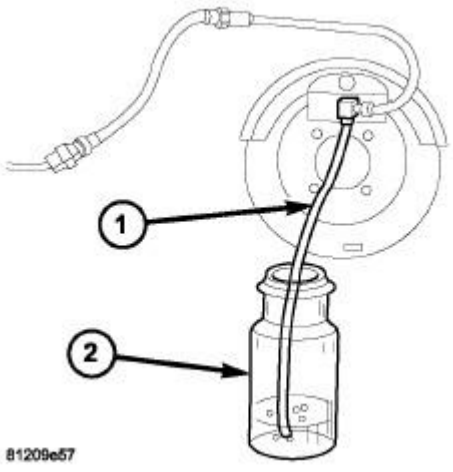

Fig. 20: BLEED HOSE SET UP
Courtesy of CHRYSLER LLC

1. If installed, remove the rubber dust cap from the bleeder screw on each front brake caliper.

2. Start at the first wheel circuit that needs to be bled (See list in above note), attach a clear hose (1) to the bleeder screw at that the brake caliper and feed the other end of hose into a clear jar (2) containing enough fresh brake fluid to submerge the end of the hose.
3. Have an assistant pump the brake pedal three or four times and hold it down before the bleeder screw is opened.

CAUTION: Open the bleeder screw at least one full turn when instructed. Some air may be trapped in the brake lines or valves far upstream, as far as ten feet or more from the bleeder screw. If the bleeder screw is not opened sufficiently, fluid flow is restricted causing a slow, weak fluid discharge. This will NOT get all the air out. Therefore, it is essential to open the bleeder screw at least one full turn to allow a fast, large volume discharge of brake fluid.

4. While holding down the brake pedal open the bleeder screw at least one full turn. When the bleeder screw opens the brake pedal drops all the way to the floor. Continue holding the pedal all the way down.
5. Once the brake pedal drops, close the bleeder screw. Release the pedal.
6. Repeat the previous five steps until all trapped air is removed from that wheel circuit (usually four or five times). This passes a sufficient amount of fluid to expel all the trapped air from the brake hydraulic system. Be sure to monitor brake fluid level in master cylinder fluid reservoir making sure it stays at a proper level. This will ensure air does not reenter brake hydraulic system through master cylinder.

NOTE: Monitor the brake fluid level in the fluid reservoir periodically to make sure it does not go too low. This makes sure that air does not reenter the brake hydraulic system.

7. Install the bleeder screw dust cap.
8. Bleed the opposite front brake wheel circuit as necessary in the same manner until all air is removed from the brake hydraulic system.
9. If equipped with anti-lock brakes, and the hydraulic control unit needs to be bled, then Re-Bleed the base brakes. See **Brakes - Standard Procedure**.
10. Once all brakes are bled, check brake pedal travel. If pedal travel is excessive or has not improved, some air may still be trapped in the brake hydraulic system. Re-Bleed the brake system as necessary.
11. Test drive the vehicle to make sure the brakes are operating properly and pedal feel incorrect.

SPECIFICATIONS

BRAKE FASTENER TORQUE

BRAKE FASTENER TORQUE SPECIFICATIONS

DESCRIPTION	N.m	Ft. Lbs.	In. Lbs.

ABS ICU Mounting Bolts To Bracket	11	8	97
ABS ABM-To-HCU Mounting Screws	2	-	17
ABS Wheel Speed Sensor Head Mounting Screw - Front	11	8	97
ABS Wheel Speed Sensor Head Mounting Screw - Rear	11	8	97
Adjustable Pedal Position Sensor Mounting Screws	7.5	5.5	66
Brake Pedal Mounting Nuts	25	18	221
Brake Tube Nuts	20	15	177
Brake Hose-to-Front knuckle Bracket Screw	11	8	97
Brake Hose Caliper Banjo Bolt	50	37	-
Brake Hose Caliper Banjo Bolt - SRT8	33	24	__
Disc Brake Caliper Adapter Mounting Bolts - Front	95	70	-
Disc Brake Caliper Adapter Mounting Bolts - Rear	115	85	-
Disc Brake Caliper Guide Pin Bolts - Front	60	44	-
Disc Brake Caliper Guide Pin Bolts - Rear	31	23	275
Disc Brake Caliper Mounting Bolts - Front - SRT8	190	140	-
Disc Brake Caliper Mounting Bolts - Rear - SRT8	130	96	-
Disc Brake Caliper Bleeder Screw	11	8	97
Master Cylinder Mounting Nuts - MK25	25	18	221
Master Cylinder Mounting Nuts - MK25E	15	11	133
Power Brake Booster Mounting Nuts	25	18	221
Parking Brake Cable Knuckle Mounting Screw	8	6	71
Parking Brake Lever (Pedal) Mounting Bolt And Nuts	26	19	230
Wheel Mounting (Lug) Nuts	150	110	-

SPECIAL TOOLS

SPECIAL TOOLS

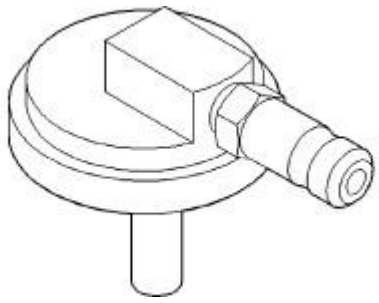

Fig. 21: Adapter, Master Cylinder Pressure Bleed Cap 6921
Courtesy of CHRYSLER LLC

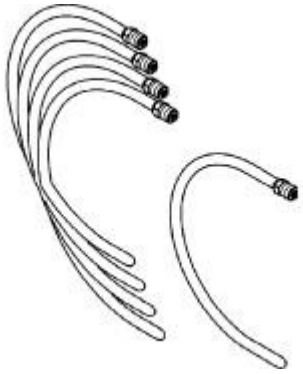

Fig. 22: Tubes, Master Cylinder Bleed 8358
Courtesy of CHRYSLER LLC

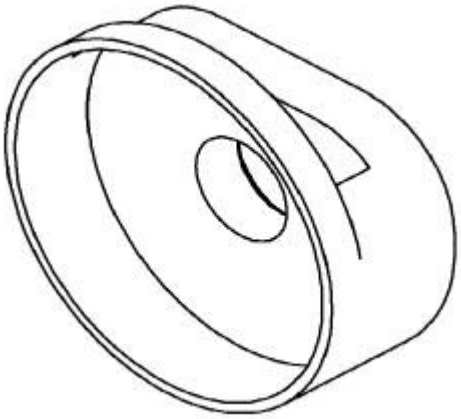

Fig. 23: Installer, Dust Boot 9314
Courtesy of CHRYSLER LLC

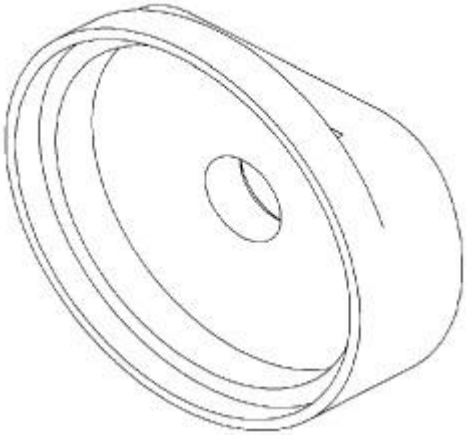

Fig. 24: Installer, Dust Boot 9315
Courtesy of CHRYSLER LLC

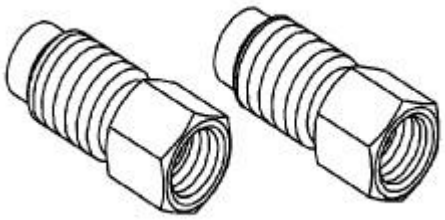

Fig. 25: Adapters, Master Cylinder 9748
Courtesy of CHRYSLER LLC

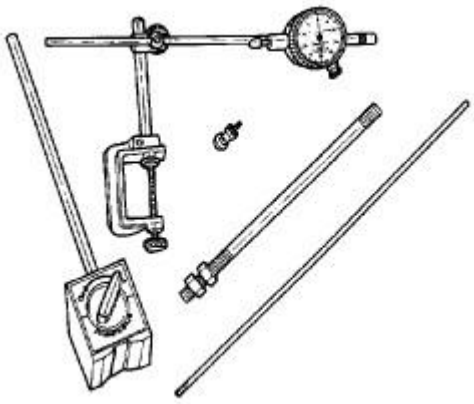

Fig. 26: Dial Indicator C-3339A
Courtesy of CHRYSLER LLC

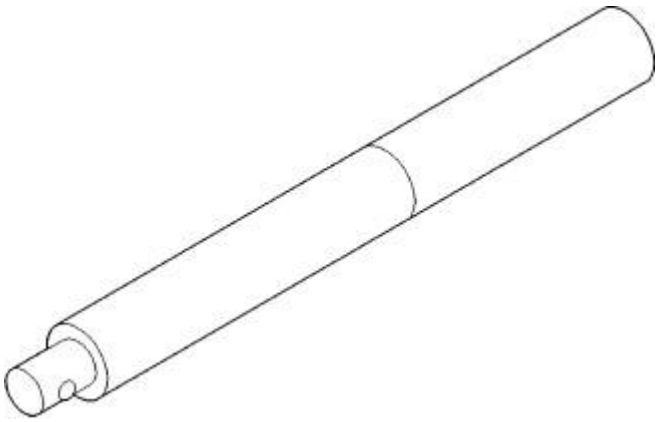

Fig. 27: Handle, Universal C-4171
Courtesy of CHRYSLER LLC

ELECTRICAL

SWITCH, BRAKE FLUID LEVEL

Removal

REMOVAL

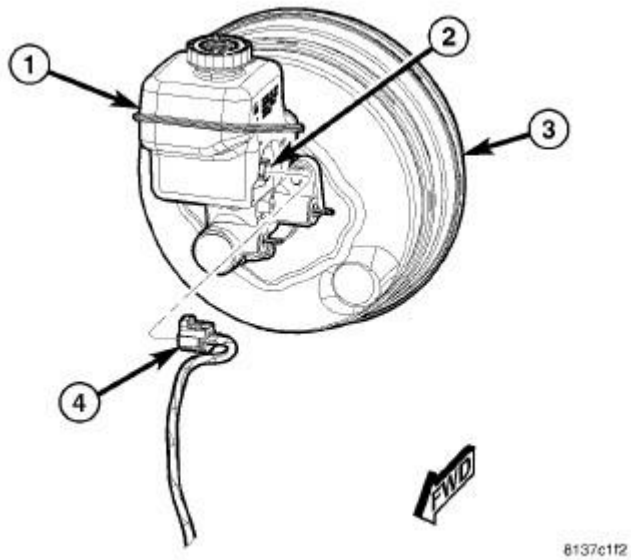

Fig. 28: BRAKE FLUID LEVEL SENSOR CONNECTION
Courtesy of CHRYSLER LLC

The brake fluid level sensor (2) is an integral part of the master cylinder fluid reservoir (1). See **Brakes/Hydraulic/Mechanical/RESERVOIR, Brake Master Cylinder - Removal**.

Installation

INSTALLATION

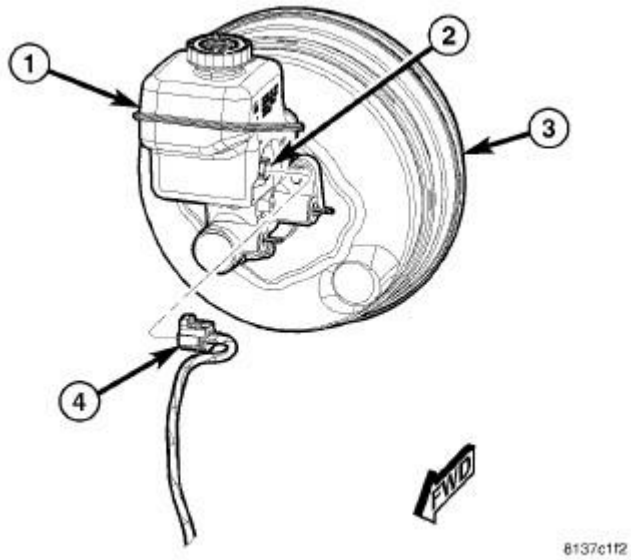

Fig. 29: BRAKE FLUID LEVEL SENSOR CONNECTION
Courtesy of CHRYSLER LLC

The brake fluid level sensor (2) is an integral part of the master cylinder fluid reservoir (1). See **Brakes/Hydraulic/Mechanical/RESERVOIR, Brake Master Cylinder - Installation**.

HYDRAULIC/MECHANICAL

DESCRIPTION

DISC BRAKES

Four-wheel disc brakes are standard on this vehicle. There are two four-wheel disc brake systems available, a standard and a premium. The standard disc brake system is referred to as "Seventeen-Inch." The premium disc brake system is referred to as "Eighteen-Inch."

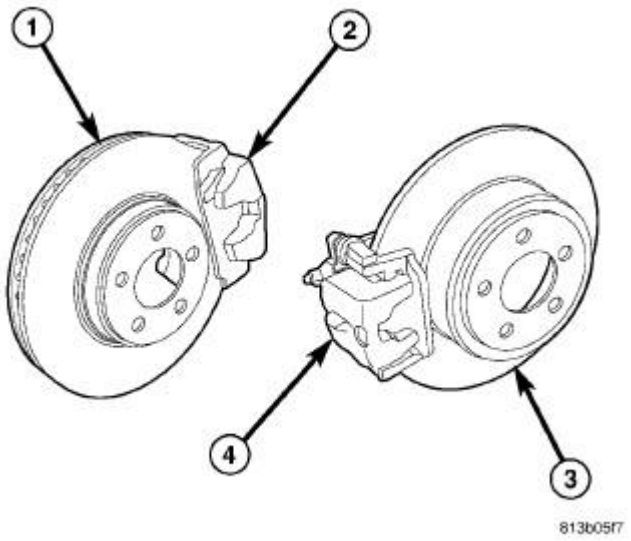

Fig. 30: 17 INCH BRAKES
Courtesy of CHRYSLER LLC

"Seventeen-inch" four-wheel disc brakes (so called because they are designed to fit inside 17-inch wheels) are standard on rear-wheel drive models with V6 engines. They feature single-piston aluminum calipers (2) and vented rotors (1) in the front and single-piston aluminum calipers (4) with solid rotors (3) in the rear.

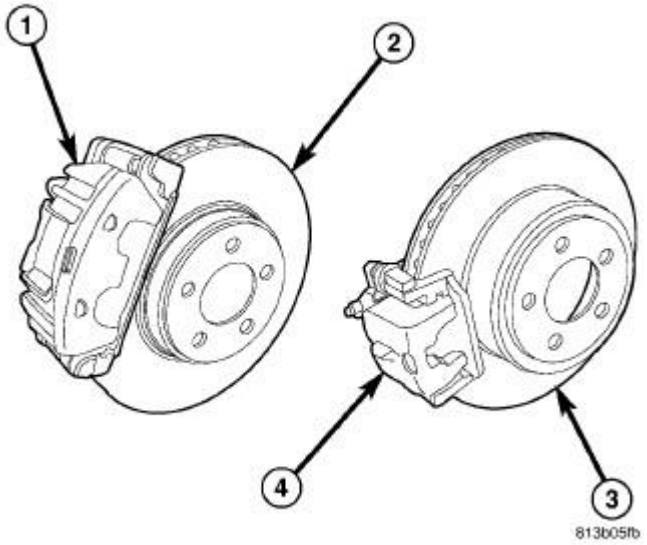

Fig. 31: 18 INCH BRAKES
Courtesy of CHRYSLER LLC

The premium system features twin-piston aluminum calipers (1) and vented rotors (2) in the front and single-piston aluminum calipers (4) with vented rotors (3) in the rear. Although the rear calipers appear the same as the 17-inch system, the rear calipers used with this system feature a wider jaw to compensate for the wider, vented brake rotors used.

Although the twin-piston caliper used is the same, Rear-Wheel-Drive (RWD) models mount the caliper to the rear (trailing end) of the knuckle.

All calipers are aluminum construction and are the low-drag type. New-technology caliper construction allows minimal drag of the pads on the discs with low clearance to the rotors to maintain maximum pedal feel and responsiveness.

All calipers are anodized, giving them an off-black appearance. This coating offers corrosion protection and a long-term neat appearance.

Phenolic pistons are used in all calipers. The premium twin caliper pistons have stainless steel caps for protection against damage due to contact with the brake pads.

All brake rotors are fully coated with Geomet™, a water-soluble, environmental friendly corrosion preventive or Zinc Dust. Both the friction surfaces and the vents are coated. During initial brake applications of a new rotor, the brake pads scrub the coating off the friction surfaces, ensuring that the remainder will be rust free. Coating the vents also ensures that there will not be a loss of heat capacity over time.

DISC BRAKES - SRT8

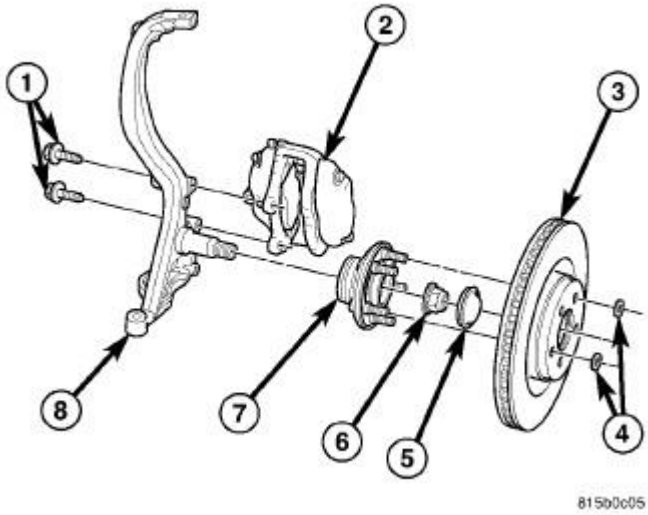

Fig. 32: FRONT DISC BRAKES
Courtesy of CHRYSLER LLC

The SRT8 vehicle utilizes four-wheel disc brakes. All brake calipers (2) are four-piston opposed fixed design manufactured by Brembo™.

All brake rotors (3) are the internal vented type. There are no dust shields behind the front brake rotors.

Each front brake caliper features four 42 mm pistons, two in each outer half of the caliper. The two outer halves of this caliper connect hydraulically using internal passageways. These calipers are not serviceable. Do not attempt disassembly.

Each rear brake caliper features four pistons also, two in each half of the caliper. Each half has one 28 mm and one 32 mm piston. When mounted, the smaller size (28 mm) piston is located at the top while the larger size (32 mm) piston is located at the bottom. The two halves of the caliper are connected hydraulically by means of an external brake tube located on the bottom of the caliper assembly. Each caliper half has its own bleeder screw at the top and must be bled individually when bleeding is required. These calipers are not serviceable. Do not attempt disassembly.

All SRT8 calipers mount directly to the knuckle (8). They do not use brake caliper adapters.

The SRT8 rear brake rotors have integrated parking brake drums like the standard rear disc brake system.

BOOSTER, POWER BRAKE

Removal

REMOVAL

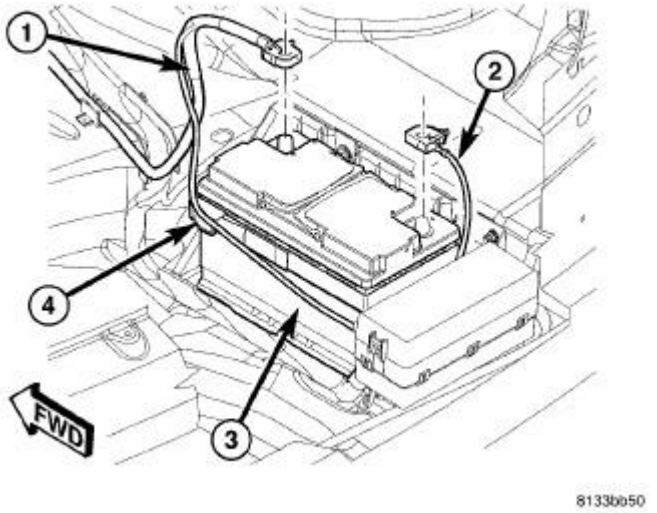

Fig. 33: BATTERY AND CABLES
Courtesy of CHRYSLER LLC

1. Move driver seat to full rearward position.
2. Disconnect and isolate negative battery cable (2).
3. Remove windshield wiper module. Refer to **Electrical - Wipers/Washers/Wipers/Washers/LINKAGE, Wiper Arm - Removal** .
4. Remove master cylinder. See **Brakes/Hydraulic/Mechanical/MASTER CYLINDER, Brake - Removal**.

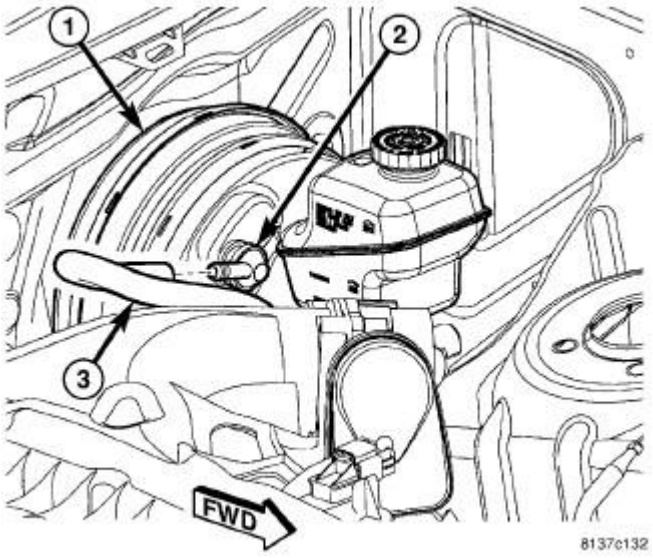

Fig. 34: VACUUM HOSE CONNECTION
Courtesy of CHRYSLER LLC

5. Disconnect vacuum hose (3) from check valve (2) on face of booster (1). **Do not remove check valve from booster.**

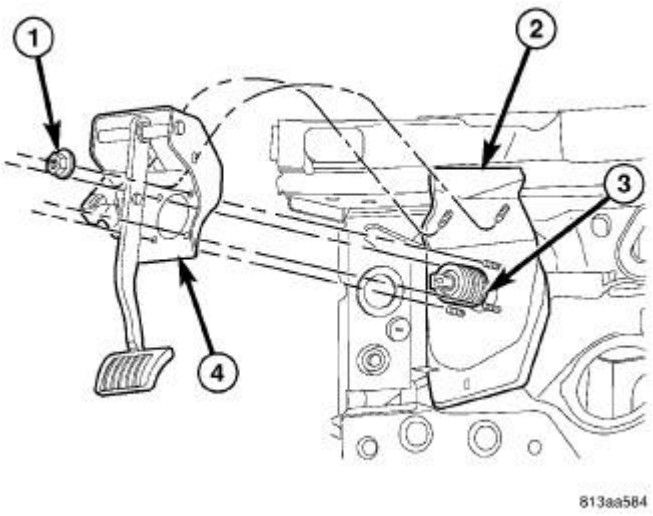

Fig. 35: Brake Pedal Mounting
Courtesy of CHRYSLER LLC

6. Remove brake lamp switch. Refer to **Electrical - Lamps and Lighting/Lamps/Lighting - Exterior/SWITCH, Stop Lamp - Removal** .
7. Remove booster push rod from pin on brake pedal. (3) To do so:
   a. Position small screwdriver between center tang on power brake booster brake pedal pin retaining clip.
   b. Rotate screwdriver enough to allow retaining clip center tang to pass over end of brake pedal pin, then slide retaining clip off brake pedal pin.
   c. **Discard retaining clip. It is not to be reused. Install NEW retaining clip when assembling.**
8. Slide booster push rod (3) off brake pedal pin.
9. Remove four power brake booster mounting nuts (1).
10. Slide power brake booster forward out of dash panel (2) and remove through opening between cross-brace and windshield.

Installation

INSTALLATION

NOTE: Make sure there is a NEW booster seal placed over push rod and mounting studs on rear of booster prior to installation. Failure to do so may result in a leak and possible premature failure of the brake booster.

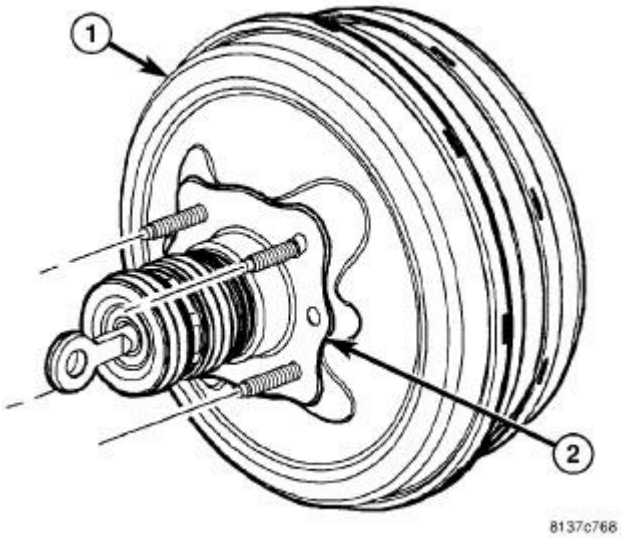

Fig. 36: BOOSTER SEAL
Courtesy of CHRYSLER LLC

1. Install a NEW booster seal (2) over push rod and mounting studs on rear of booster (1).

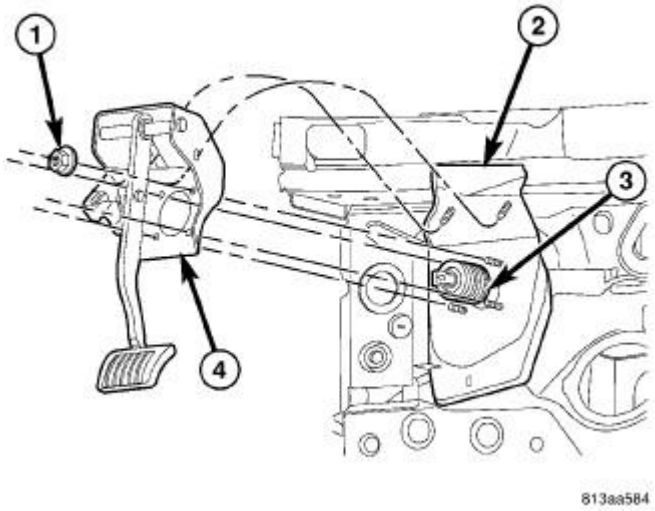

Fig. 37: Brake Pedal Mounting
Courtesy of CHRYSLER LLC

2. Install power brake booster through opening between cross-brace and windshield. Guide booster (3) push rod and mounting studs through dash panel (2).

NOTE: Be sure to tighten all four booster mounting nuts to specifications or a vacuum leak can result.

3. Install four power brake booster mounting nuts (1). Tighten nuts to 25 N.m (18 ft. lbs.).
4. Slide booster push rod (3) onto brake pedal pin. Install NEW retaining clip securing push rod to brake pedal.
5. Install and adjust brake lamp switch. Refer to **Electrical - Lamps and Lighting/Lamps/Lighting - Exterior/SWITCH, Stop Lamp - Installation** .

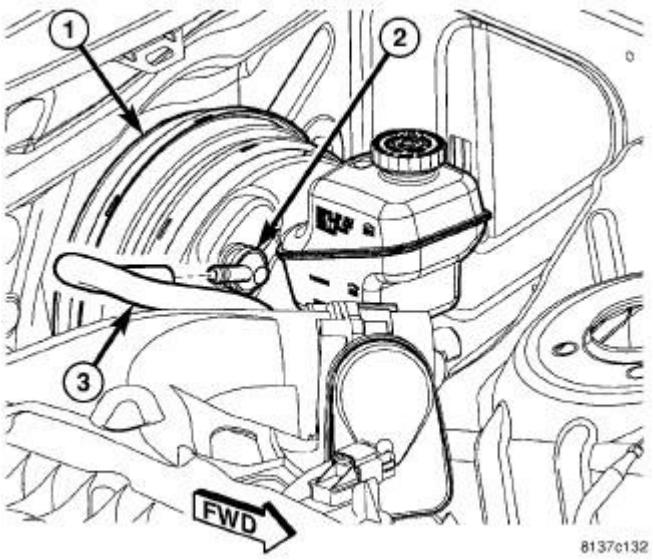

Fig. 38: VACUUM HOSE CONNECTION
Courtesy of CHRYSLER LLC

6. Connect vacuum hose (3) to check valve (2) on face of booster (1). **Do not remove check valve from booster.**
7. Install master cylinder (1). See **Brakes/Hydraulic/Mechanical/MASTER CYLINDER, Brake - Installation**.
8. Install windshield wiper module. Refer to **Electrical - Wipers/Washers/Wipers/Washers/LINKAGE, Wiper Arm - Installation** .

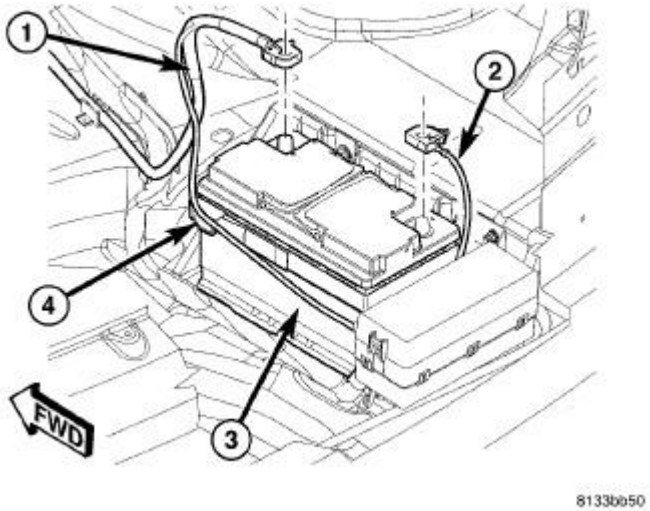

Fig. 39: BATTERY AND CABLES
Courtesy of CHRYSLER LLC

9. Connect negative battery cable (2).
10. Fill and bleed brakes as necessary. See **Brakes - Standard Procedure**.

CALIPER, DISC BRAKE, FRONT SRT8

Removal

REMOVAL

NOTE: Before proceeding. See Brakes - Warning. See Brakes - Caution.

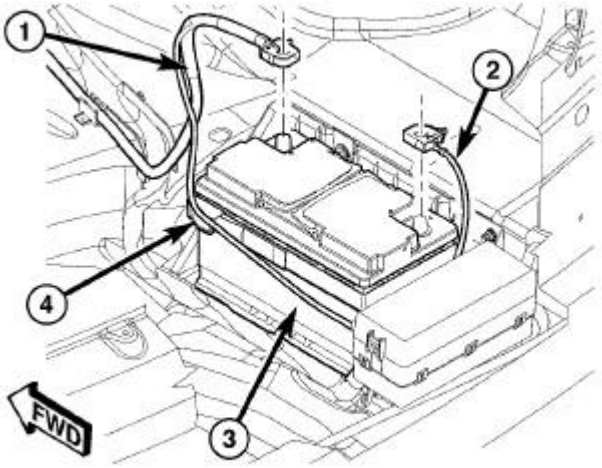

Fig. 40: BATTERY AND CABLES
Courtesy of CHRYSLER LLC

1. Disconnect and isolate battery negative cable (2) from battery post.
2. Using a brake pedal holding tool, depress brake pedal past its first inch of travel and hold it in this position. Holding pedal in this position will isolate master cylinder from hydraulic brake system and will not allow brake fluid to drain out of brake fluid reservoir while brake lines are open.
3. Raise and support vehicle. Refer to **Vehicle Quick Reference/Hoisting - Standard Procedure**

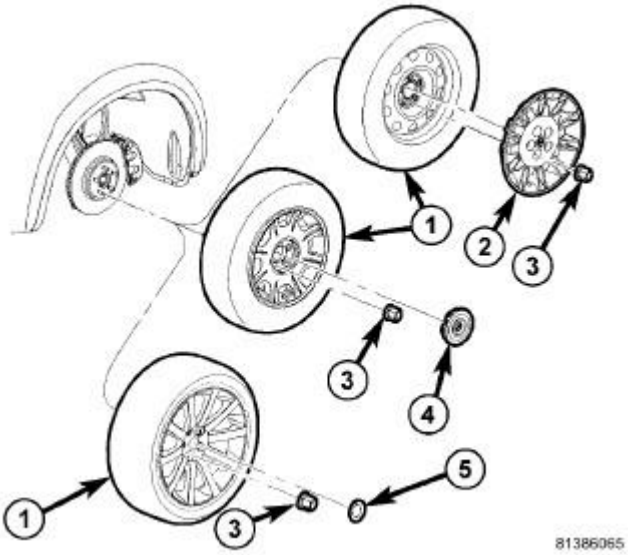

Fig. 41: TIRE AND WHEEL MOUNTING
Courtesy of CHRYSLER LLC

4. Remove wheel mounting nuts (3), then tire and wheel assembly (1).

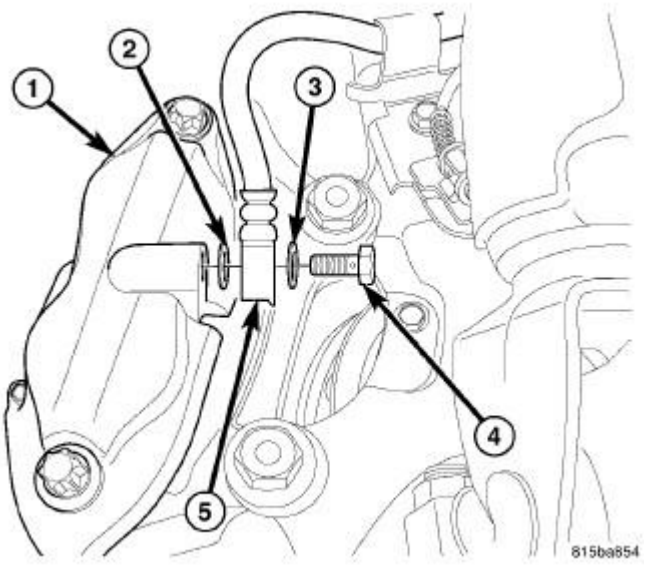

Fig. 42: FLEX HOSE CONNECTION AT CALIPER
Courtesy of CHRYSLER LLC

5. Remove banjo bolt (4) connecting flexible brake hose (5) to caliper (1). There are two sealing washers (2, 3) (one one each side of hose fitting) that will come off when bolt is removed. Discard these washers; use NEW washers upon installation.

CAUTION: When pushing pistons back into caliper bores, use only a trim stick as shown in illustration or other suitable soft tool. Never use a screwdriver or other metal pry bar due to potential damage to braking surface of rotor, caliper, pistons or dust boots.

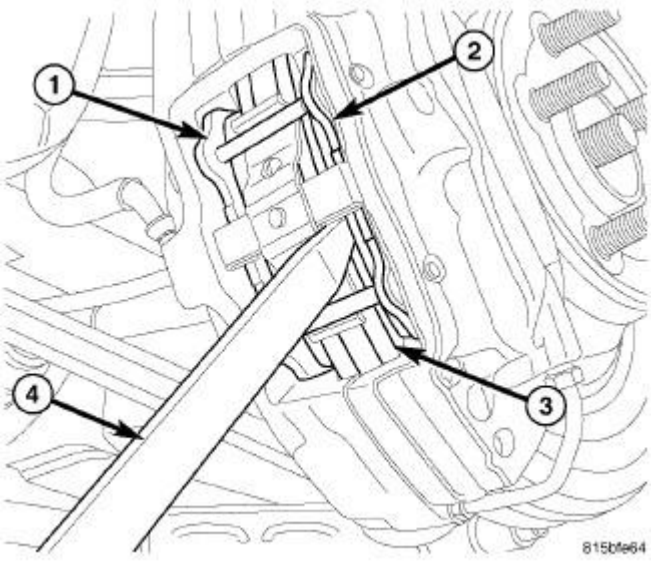

Fig. 43: PUSHING BACK PISTONS IN BORE

Courtesy of CHRYSLER LLC

6. Place trim stick (4) between brake pad (2) and outer edge of rotor (3).
7. Using trim stick, slowly apply pressure against brake pad (2) until both pistons (on that side of caliper) are completely bottomed in bores of caliper half.

NOTE: Repeat above procedure to opposite brake pad (1) and pistons as necessary.

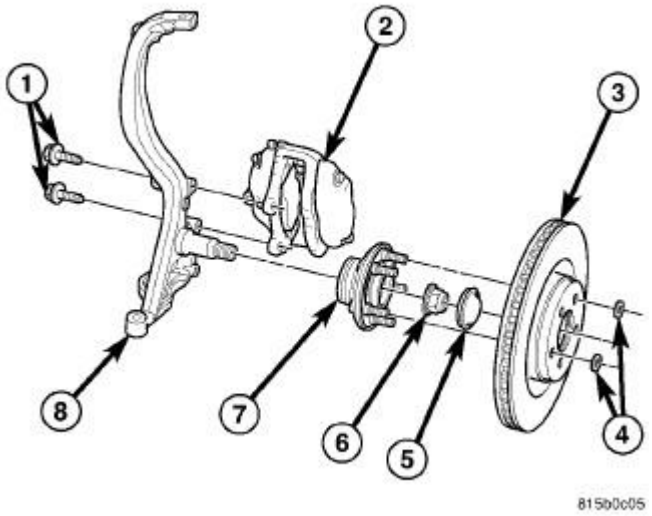

Fig. 44: FRONT DISC BRAKES
Courtesy of CHRYSLER LLC

8. Remove caliper mounting bolts (1).
9. Remove brake caliper (2) with pads from knuckle (3) and brake rotor (3).
10. If brake pads need to be removed from caliper.

NOTE: These calipers are not serviceable. Do not attempt disassembly.

Installation

INSTALLATION

CAUTION: Always inspect brake pads before installing disc brake caliper and replace as necessary. See Brakes/Hydraulic/Mechanical/PADS, Brake - Inspection.

1. Completely retract caliper pistons back into bores of caliper. Use hand pressure or a C-clamp may also be used to retract pistons, first placing a wood block or used brake pad (not to be reused) over pistons before installing C-clamp to avoid damaging piston.

2. If brake pads need to be installed in caliper before installation. See **Brakes/Hydraulic/Mechanical/PADS, Brake - Installation**.

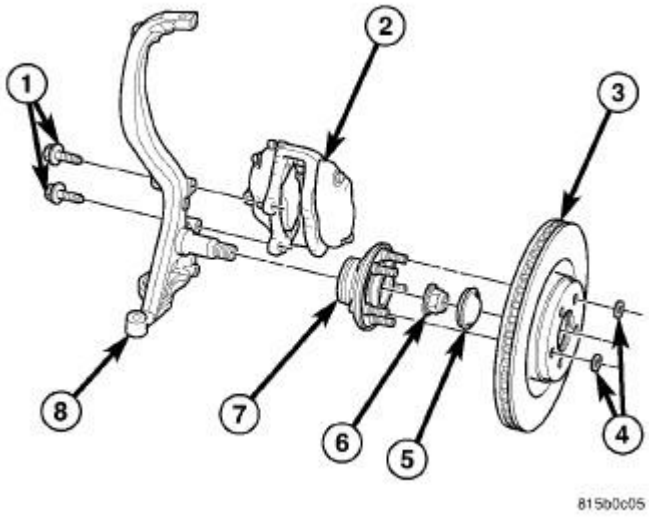

Fig. 45: FRONT DISC BRAKES
Courtesy of CHRYSLER LLC

3. Slide caliper with pads (2) over brake rotor (3) and align with knuckle (8).
4. Install caliper mounting bolts (1). Tighten bolts to 190 N.m (140 ft. lbs.) torque.

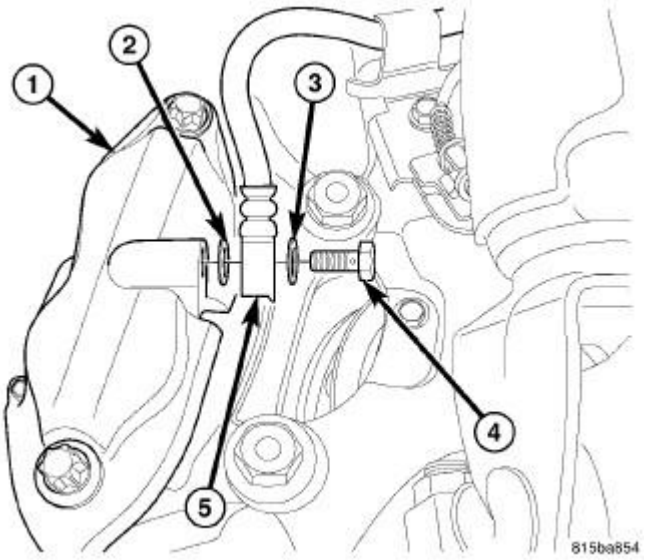

Fig. 46: FLEX HOSE CONNECTION AT CALIPER
Courtesy of CHRYSLER LLC

5. Install banjo bolt (4) attaching brake hose (5) to caliper (1). Install NEW washers (2, 3) on each

side of hose fitting as banjo bolt is placed through banjo fitting. Thread banjo bolt into caliper and tighten to 33 N.m (24 ft. lbs.) torque.

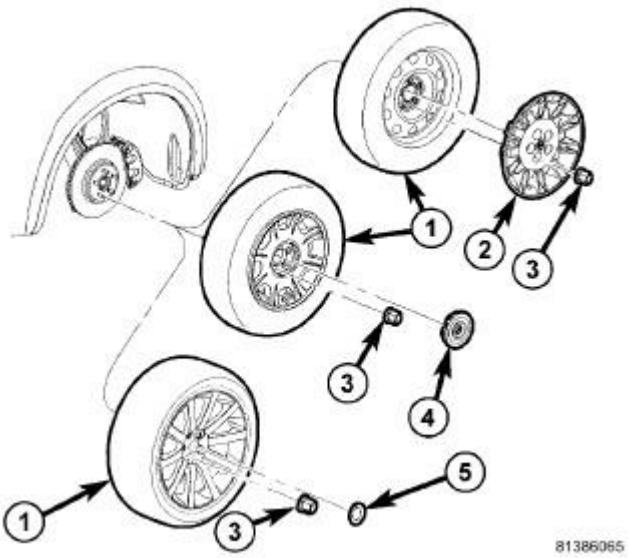

Fig. 47: TIRE AND WHEEL MOUNTING
Courtesy of CHRYSLER LLC

6. Install tire and wheel assembly (1). Tighten wheel mounting nuts (3) to 150 N.m (110 ft. lbs.) torque. Refer to **Tires and Wheels - Installation** .
7. Lower vehicle.
8. Remove brake pedal holding tool.

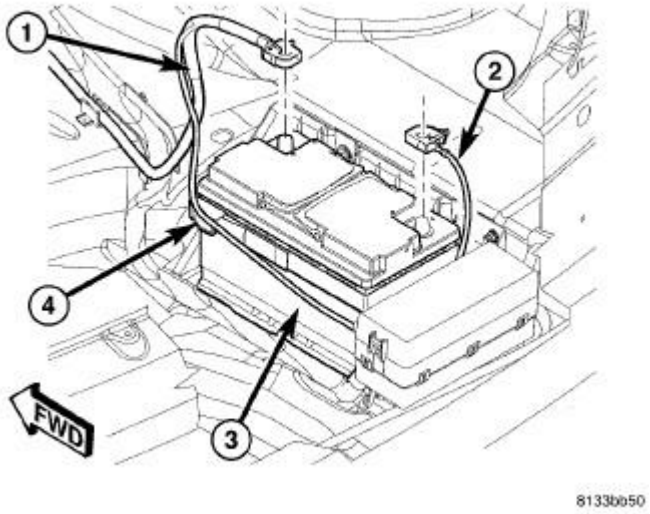

Fig. 48: BATTERY AND CABLES
Courtesy of CHRYSLER LLC

9. Connect battery negative cable (2) to battery post. It is important that this is performed properly. Refer to **Electrical - Engine Systems/Battery System - Standard Procedure** .

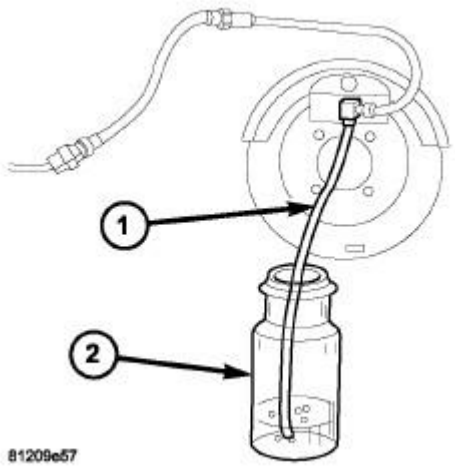

Fig. 49: BLEED HOSE SET UP
Courtesy of CHRYSLER LLC

10. Bleed (1) the area of repair for the brake system. **If a proper pedal is not felt during bleeding an area of repair then a base bleed system must be performed.** . See **Brakes - Standard Procedure**.

    CAUTION: If NEW brake pads have been installed, keep in mind that braking effectiveness might be somewhat reduced during the first brake applications.

11. Road test vehicle making several stops to wear off any foreign material on brakes and to seat brake pads. If NEW brake pads are installed, they need to be properly burnished. See **Brakes/Hydraulic/Mechanical/PADS, Brake - Standard Procedure**.

CALIPER, DISC BRAKE, REAR

Removal

REMOVAL

NOTE: Before proceeding. See Brakes - Warning. See Brakes - Caution.

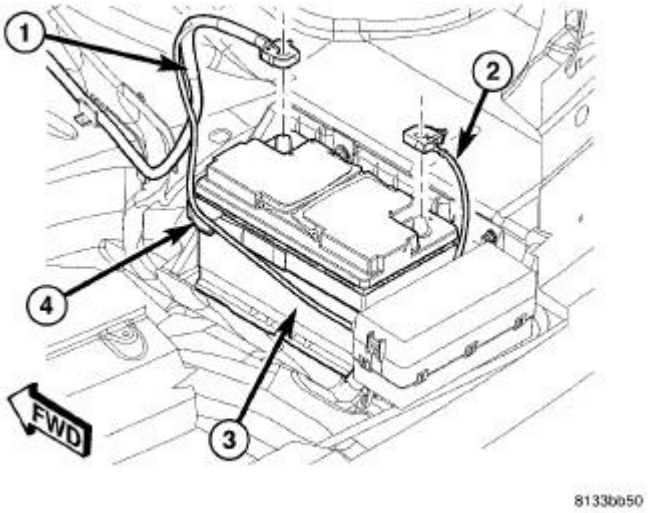

Fig. 50: BATTERY AND CABLES
Courtesy of CHRYSLER LLC

1. Disconnect and isolate battery negative cable (2) from battery post.
2. Using a brake pedal holding tool, depress brake pedal past its first inch of travel and hold it in this position. Holding pedal in this position will isolate master cylinder from hydraulic brake system and will not allow brake fluid to drain out of brake fluid reservoir while brake lines are open.
3. Raise and support vehicle. Refer to **Vehicle Quick Reference/Hoisting - Standard Procedure** .

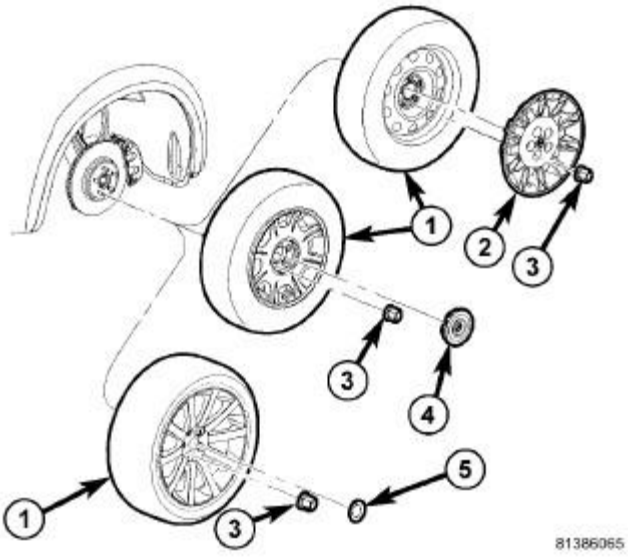

Fig. 51: TIRE AND WHEEL MOUNTING
Courtesy of CHRYSLER LLC

4. Remove wheel mounting nuts (3), then tire and wheel assembly (1).

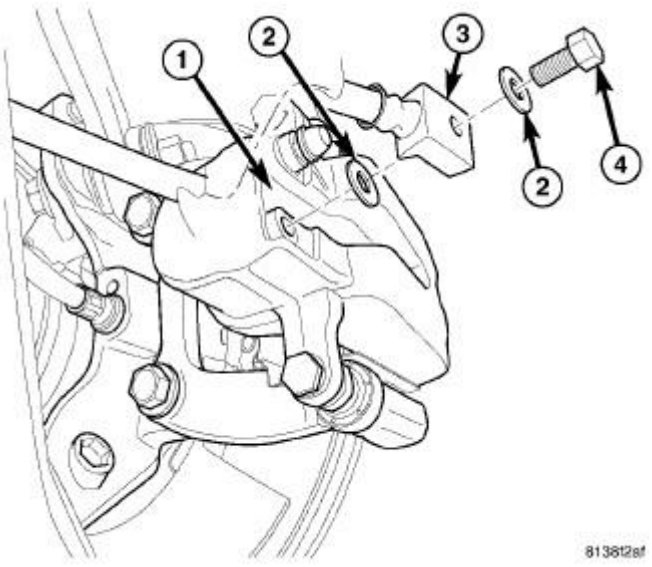

Fig. 52: FLEX HOSE CONNECTION AT REAR CALIPER
Courtesy of CHRYSLER LLC

5. Remove banjo bolt (4) connecting flexible brake hose (3) to caliper (1). There are two sealing washers (2) (one one each side of hose fitting) that will come off when bolt is removed. Discard these washers; install NEW washers on installation.

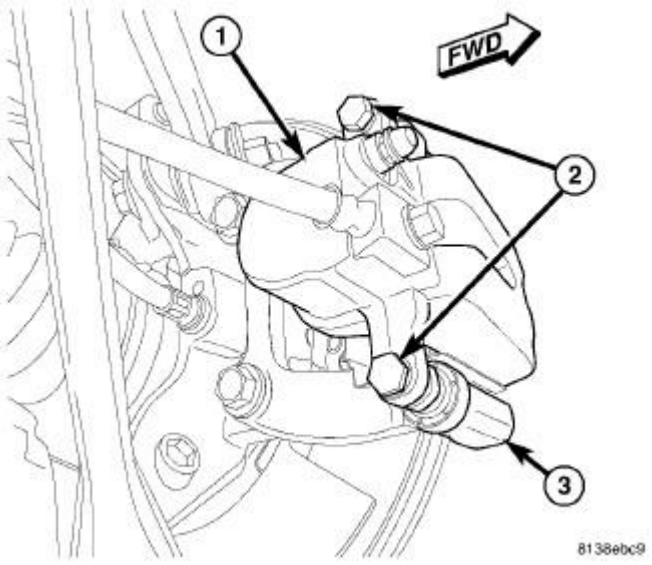

Fig. 53: REAR CALIPER MOUNTING
Courtesy of CHRYSLER LLC

6. While holding guide pins from turning, remove caliper guide pin bolts (2).

7. Remove brake caliper (1) from brake adapter (3) and pads.

Disassembly

DISASSEMBLY

NOTE: Before disassembling brake caliper, clean and inspect it. See Brakes/Hydraulic/Mechanical/CALIPER, Disc Brake - Cleaning. See Brakes/Hydraulic/Mechanical/CALIPER, Disc Brake - Inspection.

WARNING: Under no condition should high pressure air ever be used to remove a piston from a caliper bore. Personal injury could result from such a practice.

CAUTION: Do not use excessive force when clamping caliper in vise. Excessive vise pressure will cause bore distortion.

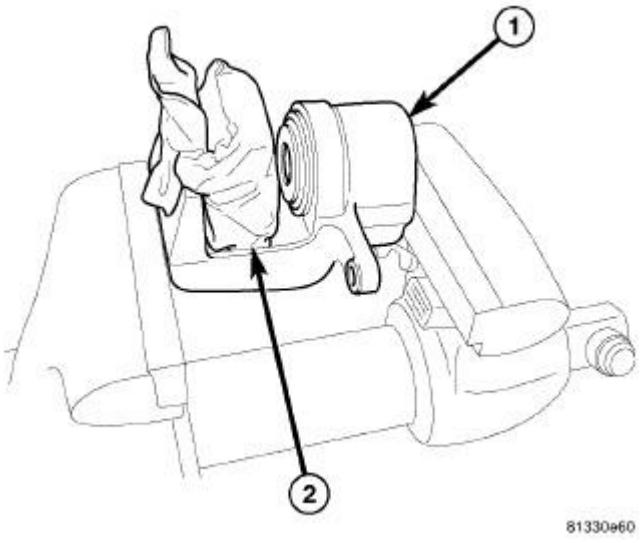

Fig. 54: REAR CALIPER IN VISE
Courtesy of CHRYSLER LLC

1. Drain brake fluid from caliper.
2. Mount caliper in a vise equipped with protective jaws.
3. Place a wooden block (2) (padded with approximately one-inch thickness of shop towels) in front of caliper (1) piston as shown in illustration. Padded block should be sized to allow piston to push out of bore far enough to be removed by hand after being loosened by air pressure, yet large enough to keep piston from coming completely out. This will cushion and protect caliper piston during removal.

WARNING: Do not place face or hands near caliper and piston if using compressed air pressure to remove piston. Do not use high pressure.

4. Apply low pressure compressed air to caliper fluid inlet in **short spurts** to ease piston out of bore.
5. Remove piston from caliper (1).

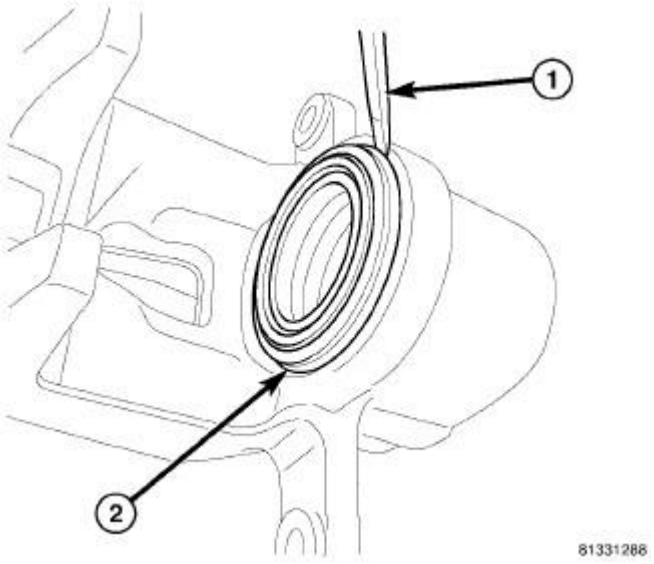

Fig. 55: REAR CALIPER DUST BOOT REMOVAL**
Courtesy of CHRYSLER LLC

CAUTION: When working on disc brake caliper, always use care and suitable tools to avoid damaging the aluminum housing.

6. Using a suitable tool (1), carefully remove dust boot (2) and discard it.

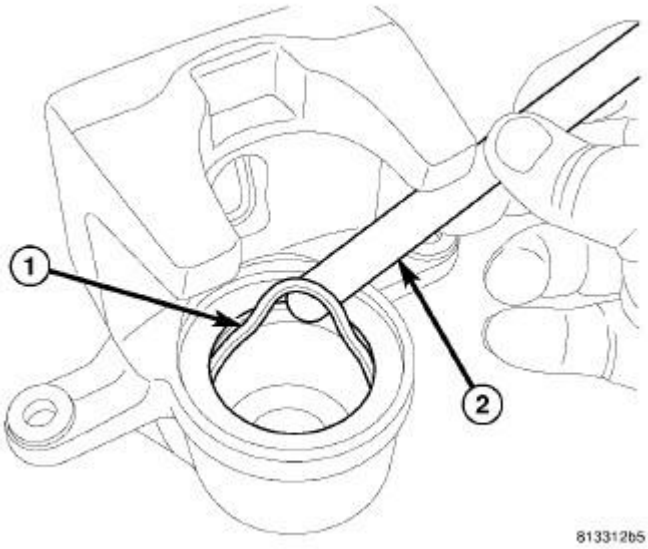

Fig. 56: REAR CALIPER PISTON SEAL REMOVAL
Courtesy of CHRYSLER LLC

CAUTION: Do not use a screw driver or other metal tool for seal removal. Using such tools can scratch bore or leave burrs on seal groove edges.

7. Using a soft tool such as a plastic trim stick (2), work piston seal (1) out of its groove in caliper piston bore. Discard used seal.

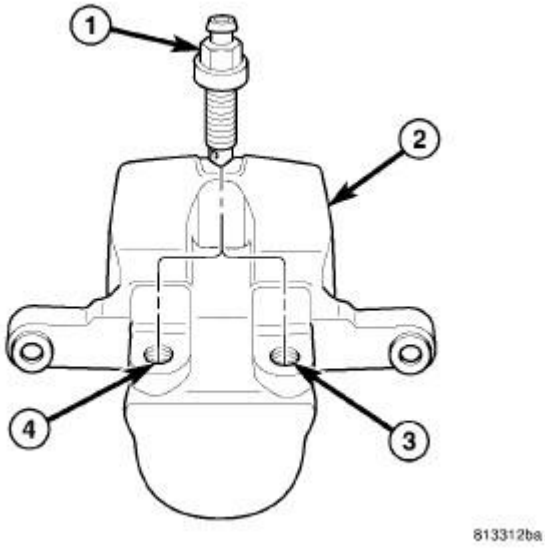

Fig. 57: REAR CALIPER BLEEDER SCREW
Courtesy of CHRYSLER LLC

8. Remove caliper bleeder screw (1) from caliper housing (2).

9. Clean piston bore and drilled passage ways with alcohol or a suitable solvent. Wipe it dry using only a lint-free cloth.
10. Inspect both piston and bore for scoring or pitting.

NOTE: It is not recommended to hone caliper bore. The anodized coating would be compromised.

Cleaning

CLEANING

WARNING: Chrysler LLC does not manufacture any vehicles or replacement parts that contain asbestos. Aftermarket products may or may not contain asbestos. Refer to aftermarket product packaging for product information.

Whether the product contains asbestos or not, dust and dirt can accumulate on brake parts during normal use. Follow practices prescribed by appropriate regulations for the handling, processing and disposing of dust and debris.

To clean or flush the internal passages of the brake caliper, use fresh brake fluid or Mopar® Non-Chlorinated Brake Parts Cleaner. Never use gasoline, kerosene, alcohol, oil, transmission fluid or any fluid containing mineral oil to clean the caliper. These fluids will damage rubber cups and seals.

Inspection

INSPECTION

Inspect the disc brake caliper for the following:

- Cracked or damaged housing
- Brake fluid leaks in and around boot area
- Ruptures, brittleness or damage to the piston dust boot

If caliper fails inspection, disassemble and recondition caliper, replacing the seals and dust boots or replace caliper.

Assembly

ASSEMBLY

CAUTION: Dirt, oil, and solvents can damage caliper seals. Ensure assembly area is clean and dry.

NOTE: Always use new, clean Mopar® DOT 3 Motor Vehicle Brake Fluid or equivalent

when assembling brake caliper.

NOTE: Never use used or old piston seals or boots for reassembly.

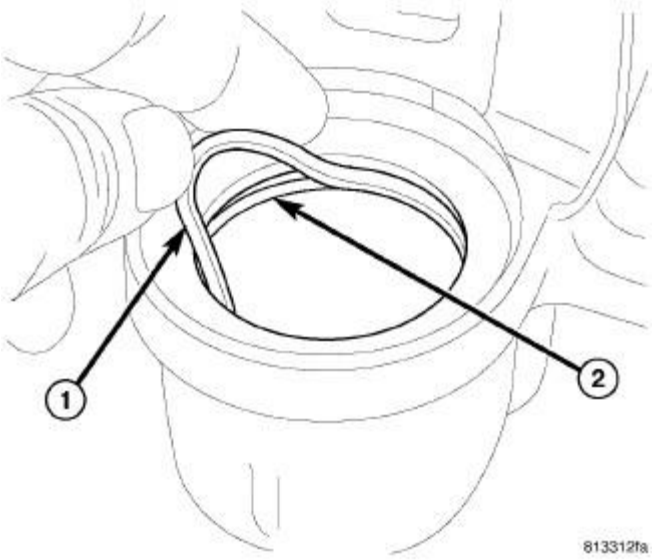

Fig. 58: REAR CALIPER PISTON SEAL INSTALLATION
Courtesy of CHRYSLER LLC

1. Lubricate caliper piston, piston seal (1) and piston bore (2) with clean, fresh brake fluid.
2. Install NEW piston seal (1) in groove of caliper bore (2). Seal should be started at one area of groove and gently worked around and into the groove using only your clean fingers to seat it.

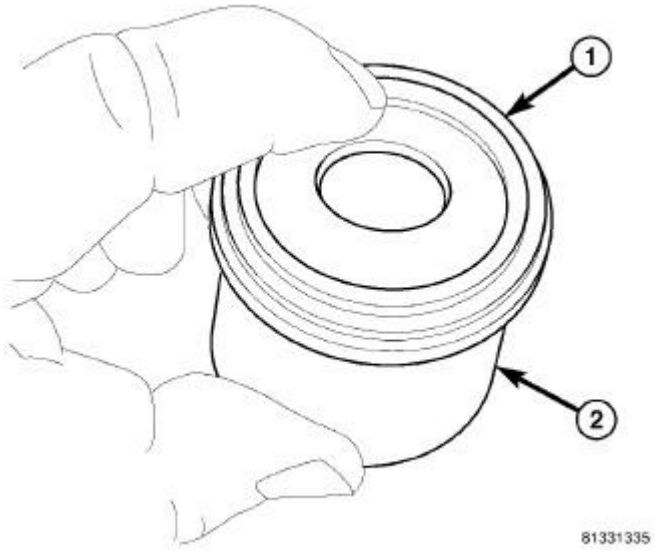

Fig. 59: INSTALL BOOT ON CALIPER PISTON
Courtesy of CHRYSLER LLC

3. Install NEW dust boot (1) on piston (2) and work boot lip into groove at top of piston. Stretch boot downward, straightening boot folds, then move boot back upward as necessary until folds snap uniformly into place.

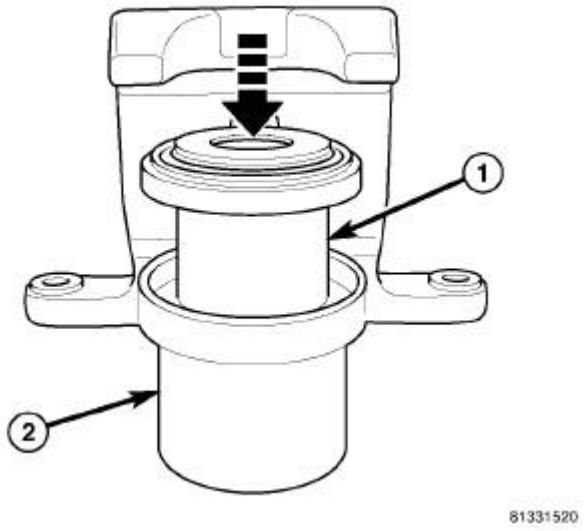

Fig. 60: INSTALL PISTON IN REAR CALIPER
Courtesy of CHRYSLER LLC

4. Install piston (1) into caliper piston (2) bore, pressing piston down to bottom of bore using hand-pressure. Using a piece of wood or wooden hammer handle may also suffice as long as piston and boot damage can be avoided.

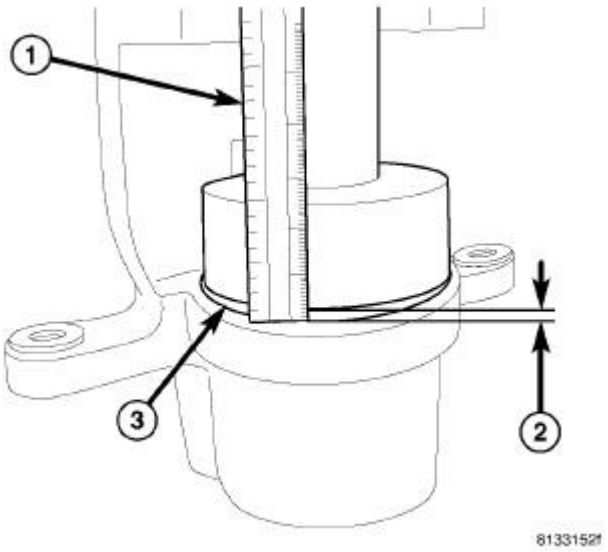

Fig. 61: MEASURING DUST BOOT HEIGHT
Courtesy of CHRYSLER LLC

CAUTION: When installing dust boot in following step, use care not to over-install boot or damage will occur. The boot (3) will bottom in the counterbore before the top of the boot reaches the surface of the caliper. The boot will bottom with approximately 2 mm (1/16 inch) (2) of boot still showing above caliper housing.

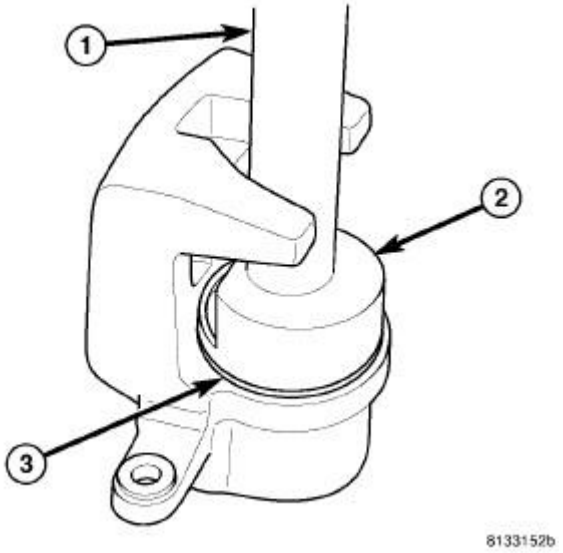

Fig. 62: INSTALLING DUST BOOT USING TOOL
Courtesy of CHRYSLER LLC

5. Seat dust boot (3) in caliper counterbore using Installer, Special Tool 9314, with Handle, Special Tool C-4171. Install dust boot until it bottoms. Do not over-seat dust boot or damage will occur.

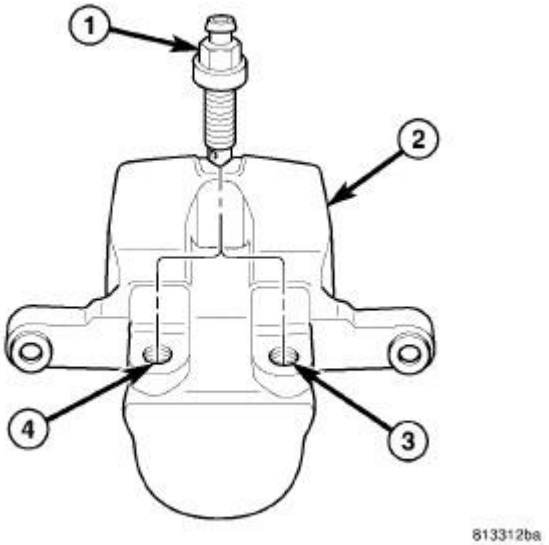

Fig. 63: REAR CALIPER BLEEDER SCREW

Courtesy of CHRYSLER LLC

6. Install bleeder screw in correct threaded hole. Caliper housing is not side-specific, so it is important to install bleeder screw in threaded hole that will be uppermost once caliper is installed on vehicle. Tighten bleeder screw to 15 N.m (125 in. lbs.) torque.
7. Install caliper on vehicle. See **Brakes/Hydraulic/Mechanical/CALIPER, Disc Brake - Installation**.

Installation

INSTALLATION

CAUTION: Always inspect brake pads before installing disc brake caliper and replace as necessary. See Brakes/Hydraulic/Mechanical/PADS, Brake - Inspection.

1. Completely retract caliper piston back into bore of caliper. Use hand pressure or a C-clamp may be used to retract piston, first placing a wood block over piston before installing C-clamp to avoid damaging piston.

CAUTION: Use care when installing caliper onto disc brake adapter to avoid damaging boots on caliper guide pins.

2. Push caliper guide pins into caliper adapter to clear caliper mounting bosses when installing.

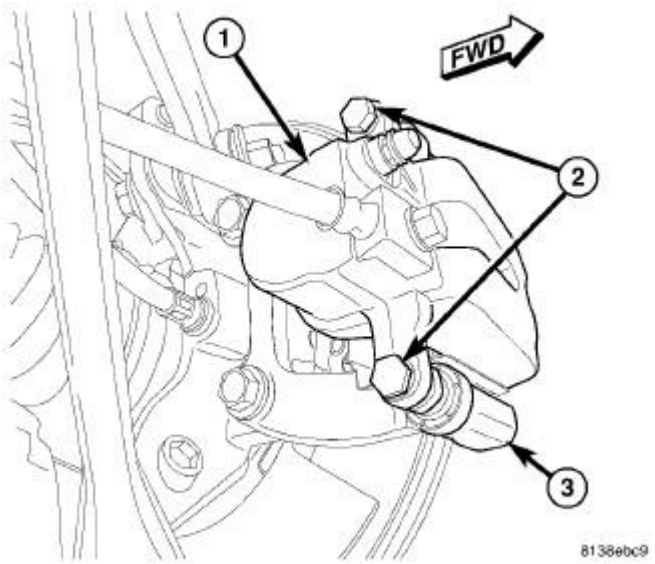

Fig. 64: REAR CALIPER MOUNTING
Courtesy of CHRYSLER LLC

3. Slide caliper over brake pads and onto caliper adapter (3).

CAUTION: Extreme caution should be taken not to crossthread caliper guide pin bolts (2) when they are installed.

NOTE: Before installing caliper guide pin bolts, clean guide pin bolt threads and apply Mopar® Lock AND Seal Adhesive or equivalent.

4. Align caliper mounting holes with guide pins, then install guide pin bolts (2). While holding guide pins from turning, tighten bolts to 31 N.m (23 ft. lbs.).

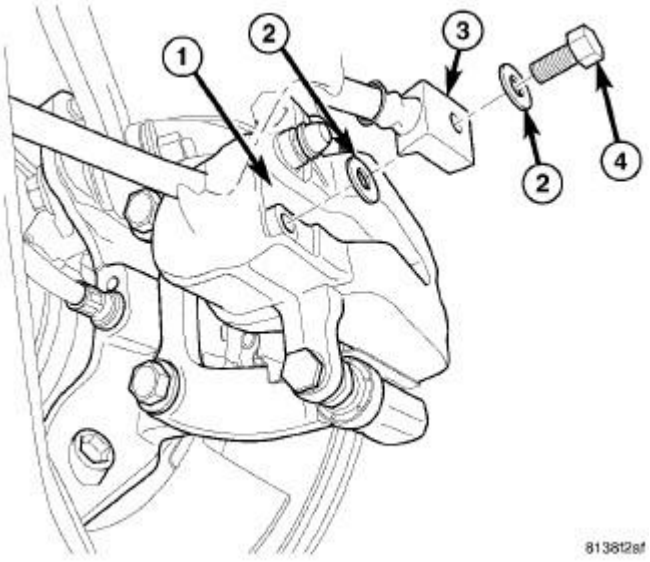

Fig. 65: FLEX HOSE CONNECTION AT REAR CALIPER
Courtesy of CHRYSLER LLC

5. Install banjo bolt (4) attaching brake hose (3) to caliper (1). Install NEW washers (2) on each side of hose fitting as banjo bolt is placed through fitting. Thread banjo bolt into caliper and tighten to 50 N.m (37 ft. lbs.).

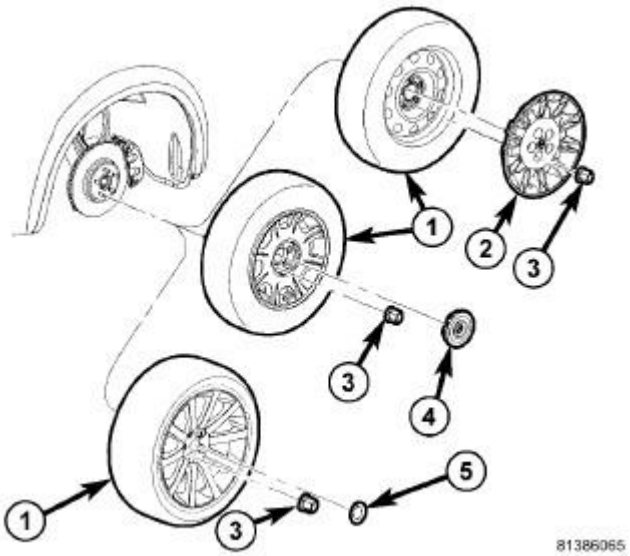

Fig. 66: TIRE AND WHEEL MOUNTING
Courtesy of CHRYSLER LLC

6. Install tire and wheel assembly (1). Tighten wheel mounting nuts (3) to 150 N.m (110 ft. lbs.) (Police - 190 N.m (140 ft. lbs.)). Refer to **Tires and Wheels - Installation** .
7. Lower vehicle.
8. Remove brake pedal holding tool.

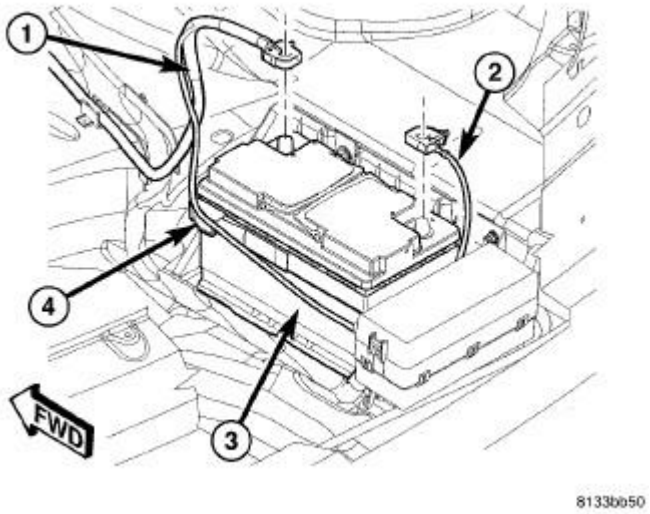

Fig. 67: BATTERY AND CABLES
Courtesy of CHRYSLER LLC

9. Connect battery negative cable (2) to battery post. It is important that this is performed properly. Refer to **Electrical - Engine Systems/Battery System - Standard Procedure** .

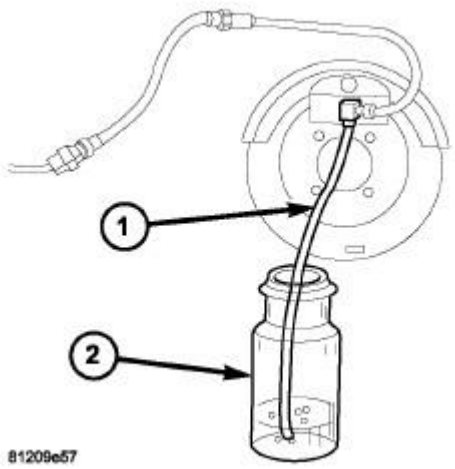

Fig. 68: BLEED HOSE SET UP
Courtesy of CHRYSLER LLC

10. Bleed (1) the area of repair for the brake system. **If a proper pedal is not felt during bleeding an area of repair then a base bleed system must be performed.** . See **Brakes - Standard Procedure**.
11. Road test vehicle making several stops to wear off any foreign material on brakes and to seat brake shoes.

CALIPER, DISC BRAKE, REAR SRT8

Removal

REMOVAL

NOTE: Before proceeding. See Brakes - Warning. See Brakes - Caution.

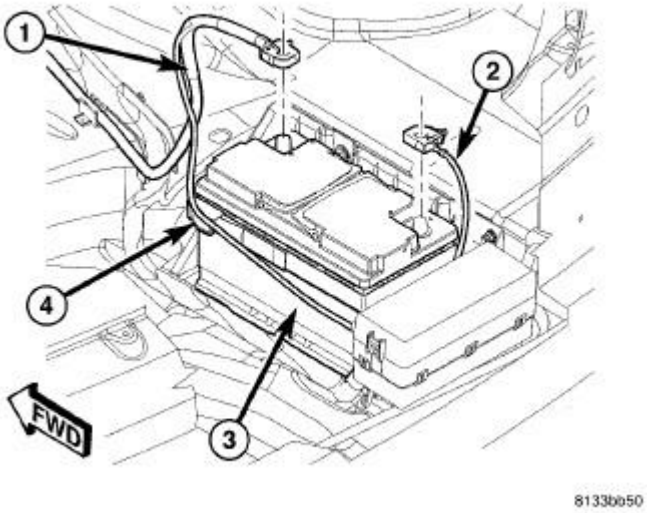

Fig. 69: BATTERY AND CABLES
Courtesy of CHRYSLER LLC

1. Disconnect and isolate battery negative cable (2) from battery post.
2. Using a brake pedal holding tool, depress brake pedal past its first inch of travel and hold it in this position. Holding pedal in this position will isolate master cylinder from hydraulic brake system and will not allow brake fluid to drain out of brake fluid reservoir while brake lines are open.
3. Raise and support vehicle. Refer to **Vehicle Quick Reference/Hoisting - Standard Procedure** .

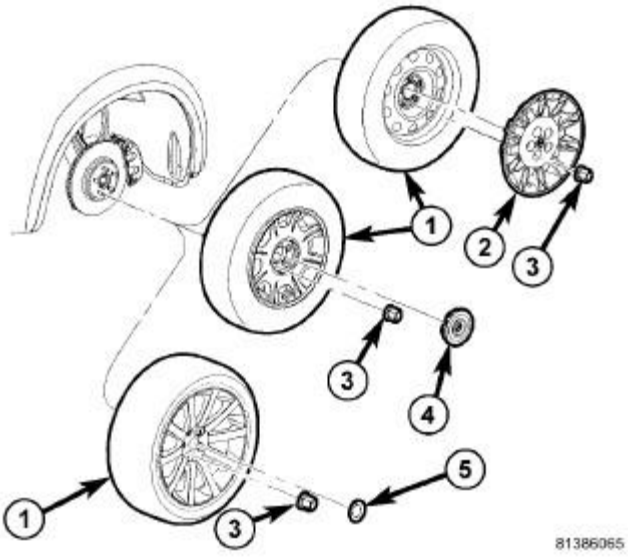

Fig. 70: TIRE AND WHEEL MOUNTING
Courtesy of CHRYSLER LLC

4. Remove wheel mounting nuts (3), then tire and wheel assembly (1).

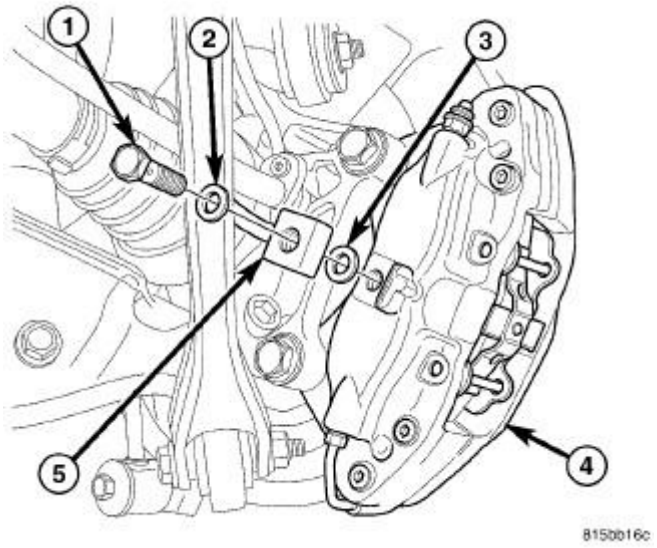

Fig. 71: REAR FLEX HOSE CONNECTION - SRT8
Courtesy of CHRYSLER LLC

5. Remove banjo bolt (1) connecting flexible brake hose (5) to caliper (4). There are two sealing washers (2, 3) (one one each side of hose fitting) that will come off when bolt is removed. Discard these washers; install NEW washers on installation.

CAUTION: When pushing pistons back into caliper bores, use only a trim stick as shown in illustration or other suitable soft tool. Never use a screwdriver or other metal pry bar due to potential damage to braking surface of rotor, caliper, pistons or dust boots.

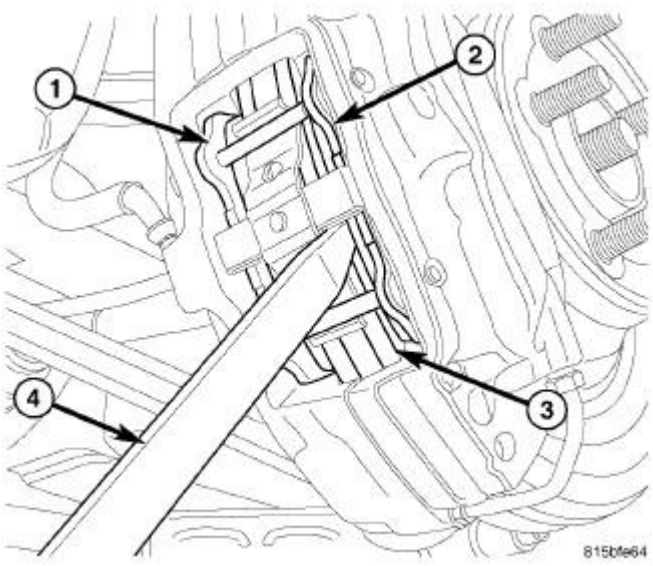

Fig. 72: PUSHING BACK PISTONS IN BORE
Courtesy of CHRYSLER LLC

6. Place trim stick (4) between brake pad (2) and outer edge of rotor (3).
7. Using trim stick, slowly apply pressure against brake pad (2) until both pistons (on that side of caliper) are completely bottomed in bores of caliper half.

NOTE: Repeat above procedure to opposite brake pad (1) and pistons as necessary.

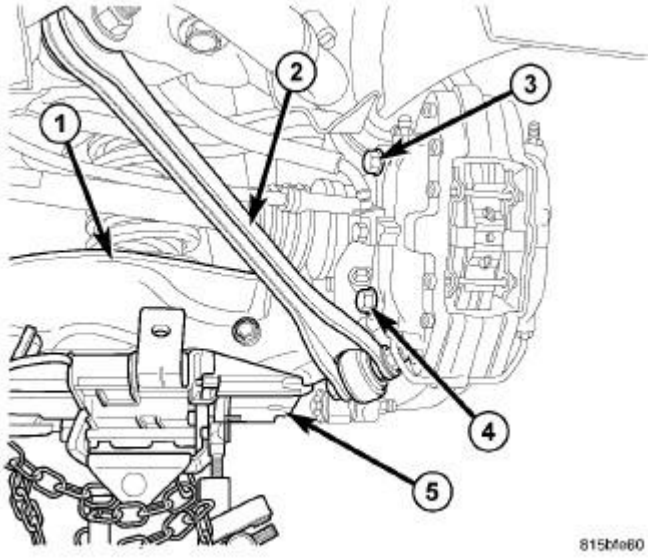

Fig. 73: ACCESSING REAR CALIPER MOUNTING BOLTS
Courtesy of CHRYSLER LLC

8. Support spring link (1) using a transmission jack (5) or other appropriate jack. Raise spring link just enough to access brake caliper lower mounting bolt (4) from above compression link (2).

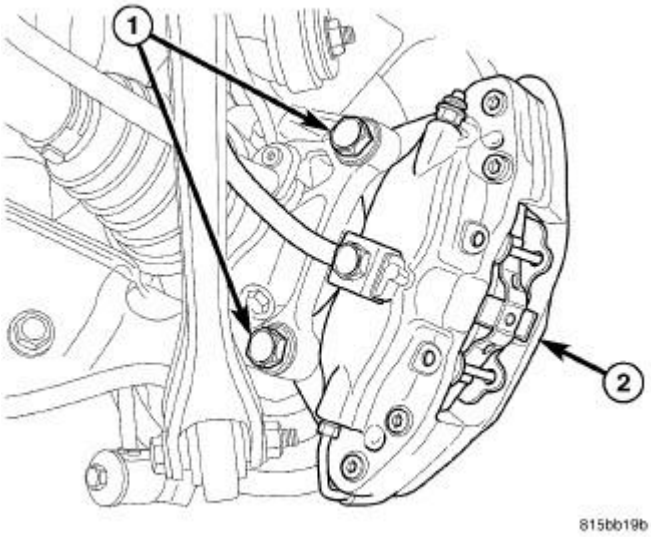

Fig. 74: REAR CALIPER MOUNTING - SRT8
Courtesy of CHRYSLER LLC

9. Remove the lower and upper caliper mounting bolts (1).
10. Remove brake caliper (2) with pads from knuckle and brake rotor.
11. If brake pads need to be removed from caliper.

NOTE: These calipers are not serviceable. Do not attempt disassembly.

Installation

INSTALLATION

CAUTION: Always inspect brake pads before installing disc brake caliper and replace as necessary. See Brakes/Hydraulic/Mechanical/PADS, Brake - Inspection.

1. Completely retract caliper pistons back into bores of caliper. Use hand pressure or a C-clamp may also be used to retract pistons, first placing a wood block or used brake pad (not to be reused) over piston before installing C-clamp to avoid damaging piston.
2. If brake pads need to be installed in caliper before installation. See **Brakes/Hydraulic/Mechanical/PADS, Brake - Installation**.

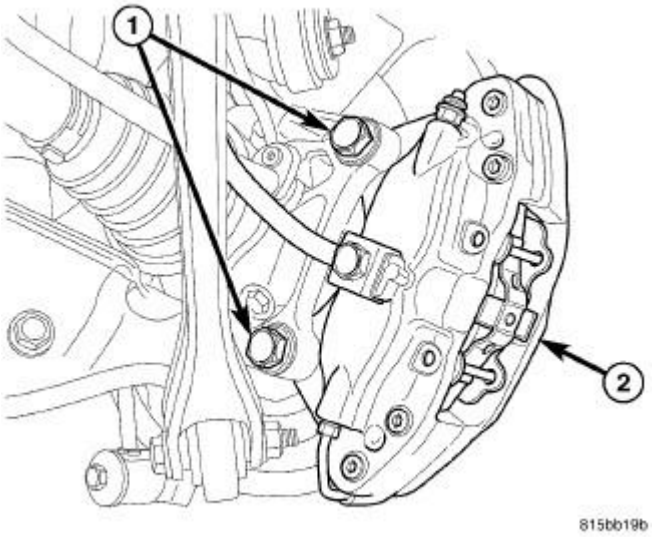

Fig. 75: REAR CALIPER MOUNTING - SRT8
Courtesy of CHRYSLER LLC

3. Slide caliper with pads (2) over brake rotor and align with knuckle.
4. Install caliper mounting bolts (1). Tighten bolts to 130 N.m (96 ft. lbs.) torque.
5. Remove jack from under spring link.

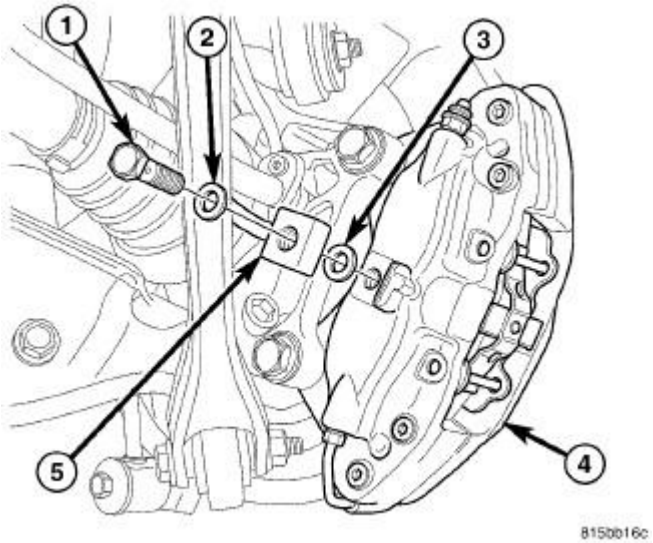

Fig. 76: REAR FLEX HOSE CONNECTION - SRT8
Courtesy of CHRYSLER LLC

6. Install banjo bolt (1) attaching brake hose (5) to caliper (4). Install NEW washers (2, 3) on each side of hose fitting as banjo bolt is placed through banjo fitting. Thread banjo bolt into caliper and tighten to 33 N.m (24 ft. lbs.) torque.

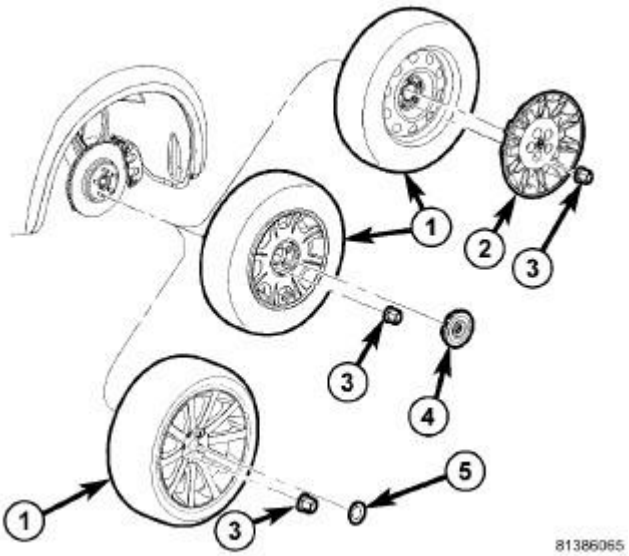

Fig. 77: TIRE AND WHEEL MOUNTING
Courtesy of CHRYSLER LLC

7. Install tire and wheel assembly (1). Tighten wheel mounting nuts (3) to 150 N.m (110 ft. lbs.) torque. Refer to **Tires and Wheels - Installation** .
8. Lower vehicle.
9. Remove brake pedal holding tool.

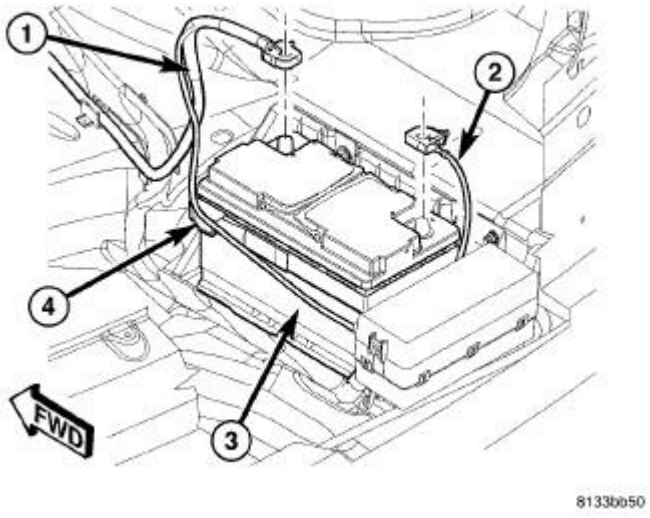

Fig. 78: BATTERY AND CABLES
Courtesy of CHRYSLER LLC

10. Connect battery negative cable (2) to battery post. It is important that this is performed properly. Refer to **Electrical - Engine Systems/Battery System - Standard Procedure** .

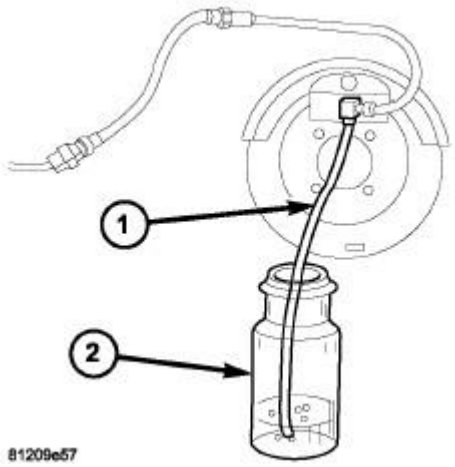

Fig. 79: BLEED HOSE SET UP
Courtesy of CHRYSLER LLC

11. Bleed (1) the area of repair for the brake system. **If a proper pedal is not felt during bleeding an area of repair then a base bleed system must be performed.** . See **Brakes - Standard Procedure**.

    CAUTION: If NEW brake pads have been installed, keep in mind that braking effectiveness might be somewhat reduced during the first brake applications.

12. Road test vehicle making several stops to wear off any foreign material on brakes and to seat brake pads. If NEW brake pads are installed, they need to be properly burnished. See **Brakes/Hydraulic/Mechanical/PADS, Brake - Standard Procedure**.

CALIPER, DISC BRAKE, SINGLE PISTON

Removal

REMOVAL

NOTE: Before proceeding. See Brakes - Warning. See Brakes - Caution.

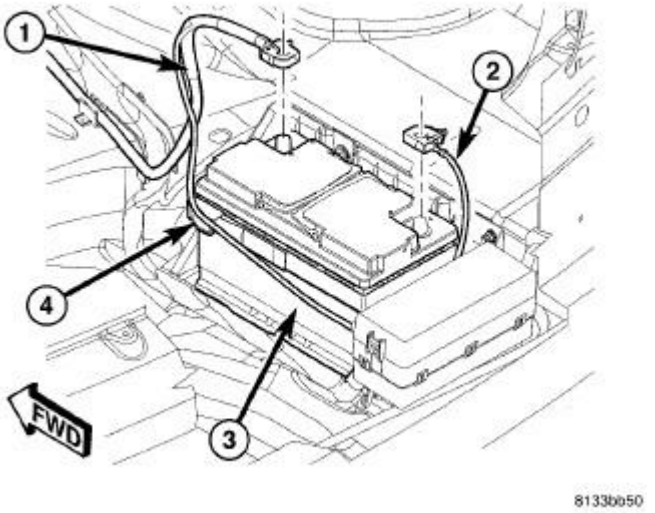

Fig. 80: BATTERY AND CABLES
Courtesy of CHRYSLER LLC

1. Disconnect and isolate battery negative cable (2) from battery post.
2. Using a brake pedal holding tool, depress brake pedal past its first inch of travel and hold it in this position. Holding pedal in this position will isolate master cylinder from hydraulic brake system and will not allow brake fluid to drain out of brake fluid reservoir while brake lines are open.
3. Raise and support vehicle. Refer to **Vehicle Quick Reference/Hoisting - Standard Procedure** .

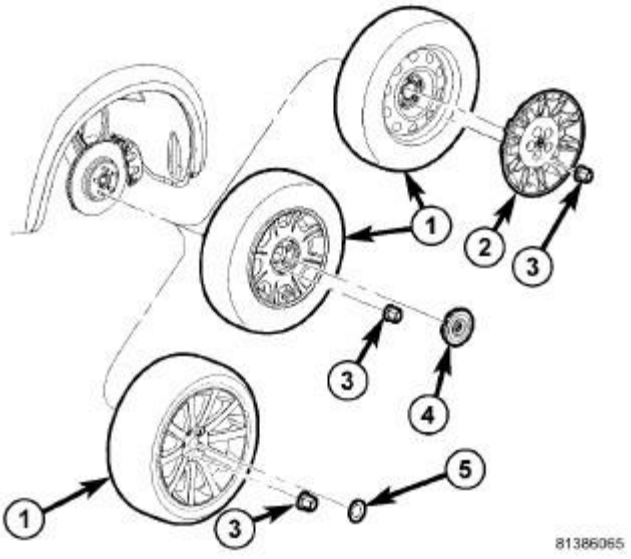

Fig. 81: TIRE AND WHEEL MOUNTING
Courtesy of CHRYSLER LLC

4. Remove wheel mounting nuts (3), then tire and wheel assembly (1).

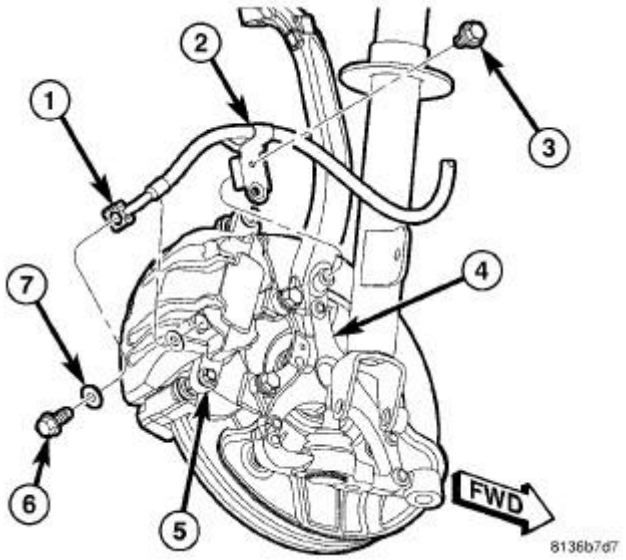

Fig. 82: FRONT BRAKE FLEX HOSE AT CALIPER
Courtesy of CHRYSLER LLC

5. Remove banjo bolt (6) connecting flexible brake hose (1) to caliper (5). There are two sealing washers (7) (one one each side of hose fitting) that will come off when bolt is removed. Discard these washers; install NEW washers on installation.

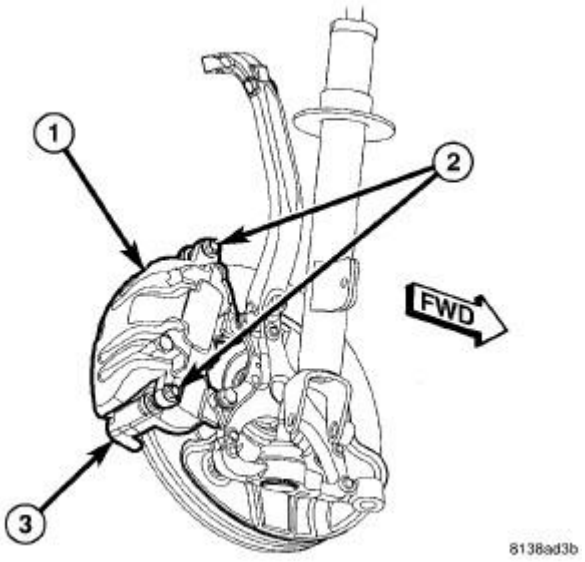

Fig. 83: FRONT CALIPER MOUNTING
Courtesy of CHRYSLER LLC

6. While holding guide pins from turning, remove caliper guide pin bolts (2).

7. Remove brake caliper (1) from brake adapter (3) and pads.

Disassembly

DISASSEMBLY

NOTE: Before disassembling brake caliper, clean and inspect it. See Brakes/Hydraulic/Mechanical/CALIPER, Disc Brake - Cleaning. See Brakes/Hydraulic/Mechanical/CALIPER, Disc Brake - Inspection.

WARNING: Under no condition should high pressure air ever be used to remove a piston from a caliper bore. Personal injury could result from such a practice.

CAUTION: Do not use excessive force when clamping caliper in vise. Excessive vise pressure will cause bore distortion.

1. Drain brake fluid from caliper.

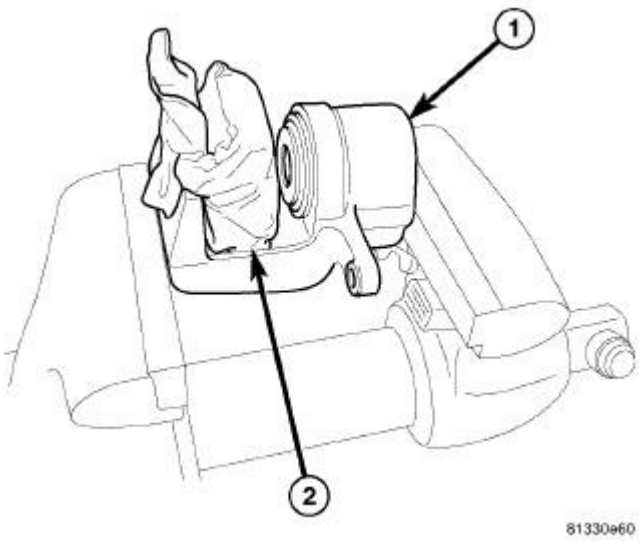

Fig. 84: REAR CALIPER IN VISE
Courtesy of CHRYSLER LLC

2. Mount caliper in a vise equipped with protective jaws.
3. Place a wooden block (2) (padded with approximately one-inch thickness of shop towels) in front of caliper (1) piston as in illustration. Padded block should be sized to allow piston to push out of bore far enough to be removed by hand after being loosened by air pressure, yet large enough to keep piston from coming completely out. This will cushion and protect caliper piston during removal.

WARNING: Do not place face or hands near caliper and piston if using compressed air pressure to remove piston. Do not use high pressure.

4. Apply low pressure compressed air to caliper fluid inlet in **short spurts** to ease piston out of bore.
5. Remove piston from caliper (1).

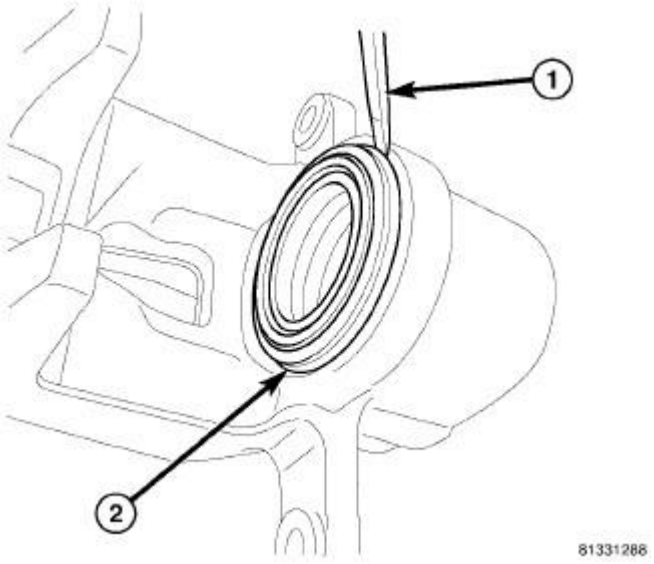

Fig. 85: REAR CALIPER DUST BOOT REMOVAL
Courtesy of CHRYSLER LLC

CAUTION: When working on disc brake caliper, always use care and suitable tools to avoid damaging the aluminum housing.

6. Using a suitable tool (1), carefully remove dust boot (2) and discard it.

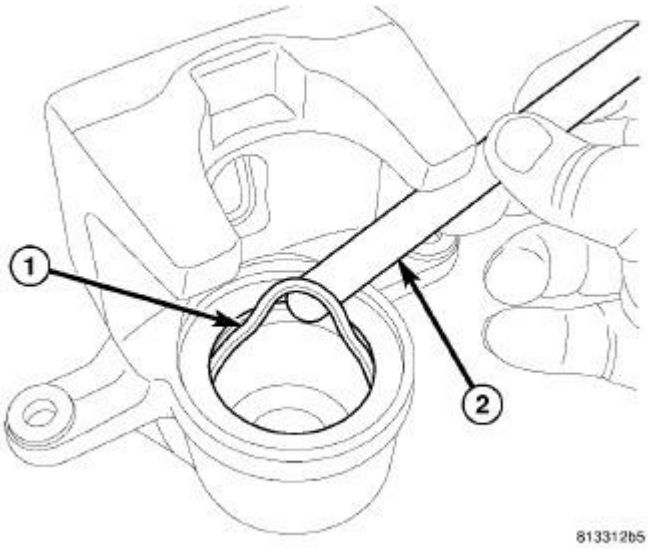

Fig. 86: REAR CALIPER PISTON SEAL REMOVAL
Courtesy of CHRYSLER LLC

CAUTION: Do not use a screw driver or other metal tool for seal removal. Using such tools can scratch bore or leave burrs on seal groove edges.

7. Using a soft tool such as a plastic trim stick (2), work piston seal (1) out of its groove in caliper piston bore. Discard used seal.

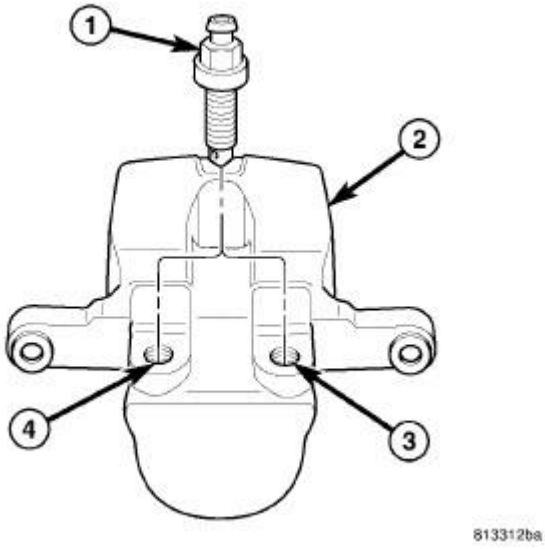

Fig. 87: REAR CALIPER BLEEDER SCREW
Courtesy of CHRYSLER LLC

8. Remove caliper bleeder screw (1) from caliper housing (2).

9. Clean piston bore and drilled passage ways with alcohol or a suitable solvent. Wipe it dry using only a lint-free cloth.
10. Inspect both piston and bore for scoring or pitting.

NOTE: It is not recommended to hone caliper bore. The anodized coating would be compromised.

Cleaning

CLEANING

WARNING: Chrysler does not manufacture any vehicles or replacement parts that contain asbestos. Aftermarket products may or may not contain asbestos. Refer to aftermarket product packaging for product information.

Whether the product contains asbestos or not, dust and dirt can accumulate on brake parts during normal use. Follow practices prescribed by appropriate regulations for the handling, processing and disposing of dust and debris.

To clean or flush the internal passages of the brake caliper, use fresh brake fluid or Mopar® Non-Chlorinated Brake Parts Cleaner. Never use gasoline, kerosene, alcohol, oil, transmission fluid or any fluid containing mineral oil to clean the caliper. These fluids will damage rubber cups and seals.

Inspection

INSPECTION

Inspect the disc brake caliper for the following:

- Cracked or damaged housing
- Brake fluid leaks in and around boot area
- Ruptures, brittleness or damage to the piston dust boot

If caliper fails inspection, disassemble and recondition caliper, replacing the seals and dust boots or replace caliper.

Assembly

ASSEMBLY

CAUTION: Dirt, oil, and solvents can damage caliper seals. Ensure assembly area is clean and dry.

NOTE: Always use new, clean Mopar® DOT 3 Motor Vehicle Brake Fluid or equivalent

when assembling brake caliper.

NOTE: Never use used or old piston seals or boots for reassembly.

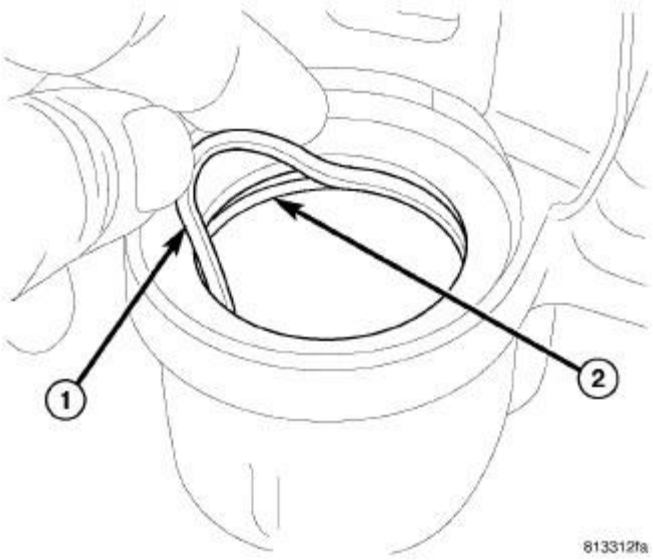

Fig. 88: REAR CALIPER PISTON SEAL INSTALLATION
Courtesy of CHRYSLER LLC

1. Lubricate caliper piston, piston seal (1) and piston bore (2) with clean, fresh brake fluid.
2. Install NEW piston seal (1) in groove of caliper bore (2). Seal should be started at one area of groove and gently worked around and into the groove using only your clean fingers to seat it.

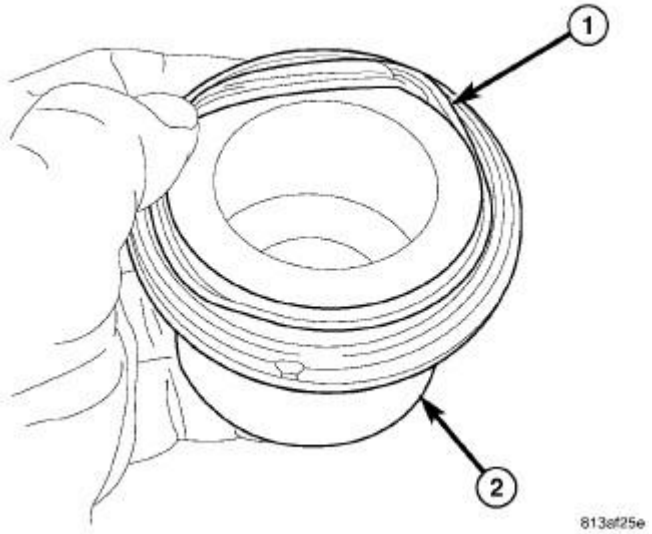

Fig. 89: INSTALLING BOOT ON PISTON
Courtesy of CHRYSLER LLC

3. Install NEW dust boot (1) on piston (2) and work boot lip into groove at top of piston. Stretch boot downward, straightening boot folds, then move boot back upward as necessary until folds snap uniformly into place.

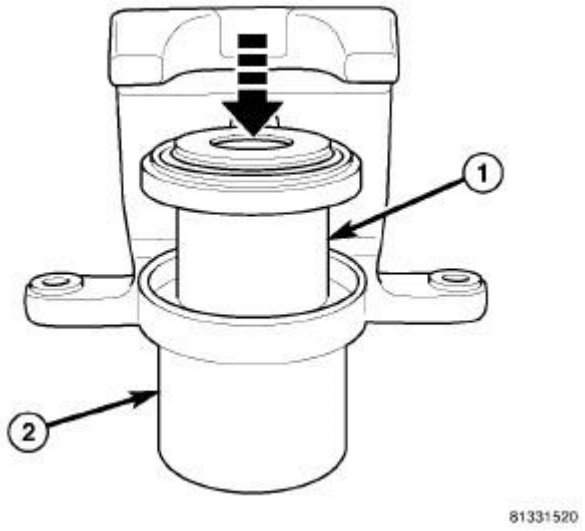

Fig. 90: INSTALL PISTON IN REAR CALIPER
Courtesy of CHRYSLER LLC

4. Install piston (1) into caliper piston (2) bore, pressing piston down to bottom of bore using hand-pressure. Using a piece of wood or wooden hammer handle may also suffice as long as piston and boot damage can be avoided. **The dust boot will not seat at this time. Refer to the following step.**

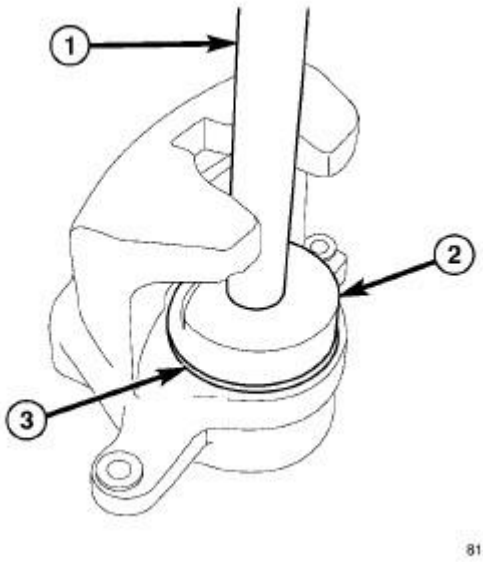

Fig. 91: INSTALL DUST BOOT USING TOOL 9315 AND C-4171
Courtesy of CHRYSLER LLC

5. Seat dust boot (3) in caliper counterbore using Installer (2), Special Tool 9315, with Handle (1), Special Tool C-4171. Install dust boot until it bottoms. Do not over-seat dust boot or damage will occur.

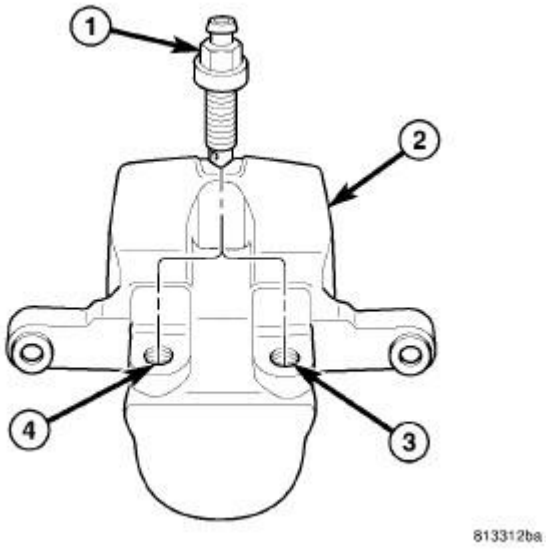

Fig. 92: REAR CALIPER BLEEDER SCREW
Courtesy of CHRYSLER LLC

6. Install bleeder screw in correct threaded hole. Caliper housing is not side-specific, so it is important to install bleeder screw in threaded hole that will be uppermost once caliper is installed on vehicle. Tighten bleeder screw to 15 N.m (125 in. lbs.) torque.
7. Install caliper on vehicle. See **Brakes/Hydraulic/Mechanical/CALIPER, Disc Brake - Installation**.

Installation

INSTALLATION

CAUTION: Always inspect brake pads before installing disc brake caliper and replace as necessary. See Brakes/Hydraulic/Mechanical/PADS, Brake - Inspection.

1. Completely retract caliper piston back into bore of caliper. Use hand pressure or a C-clamp may be used to retract piston, first placing a wood block over piston before installing C-clamp to avoid damaging piston.

CAUTION: Use care when installing caliper onto disc brake adapter to avoid damaging boots on caliper guide pins.

2. Push caliper guide pins into caliper adapter to clear caliper mounting bosses when installing.

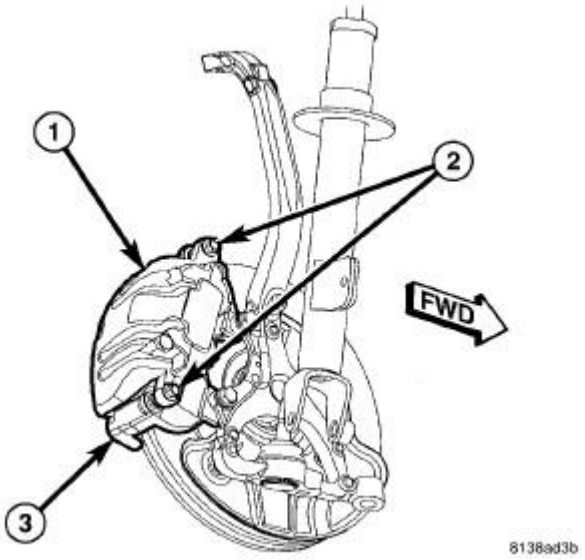

Fig. 93: FRONT CALIPER MOUNTING
Courtesy of CHRYSLER LLC

3. Slide caliper over brake pads and onto caliper adapter (3).

CAUTION: Extreme caution should be taken not to crossthread caliper guide pin bolts (2) when they are installed.

4. Align caliper mounting holes with guide pins, then install guide pin bolts (2). While holding guide pins from turning, tighten bolts to 60 N.m (44 ft. lbs.).

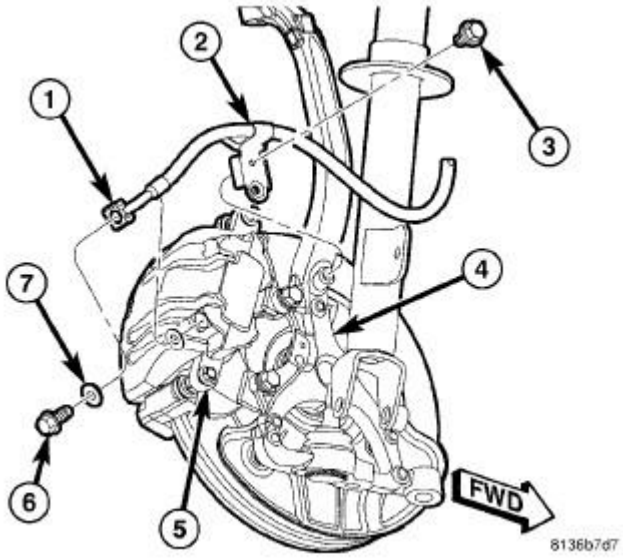

Fig. 94: FRONT BRAKE FLEX HOSE AT CALIPER
Courtesy of CHRYSLER LLC

5. Install banjo bolt (6) attaching brake hose (1) to caliper (5). Install NEW washers (7) on each side of hose fitting as banjo bolt is placed through fitting. Thread banjo bolt into caliper and tighten to 50 N.m (37 ft. lbs.).

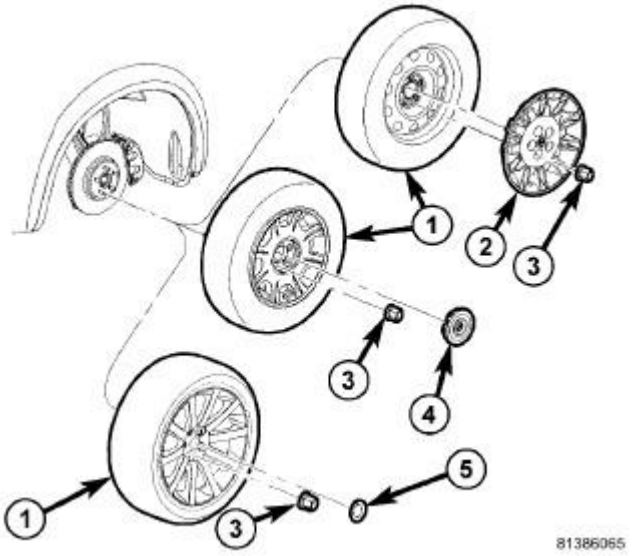

Fig. 95: TIRE AND WHEEL MOUNTING
Courtesy of CHRYSLER LLC

6. Install tire and wheel assembly (1). Tighten wheel mounting nuts (3) to 150 N.m (110 ft. lbs.). Refer to **Tires and Wheels - Installation** .
7. Lower vehicle.
8. Remove brake pedal holding tool.

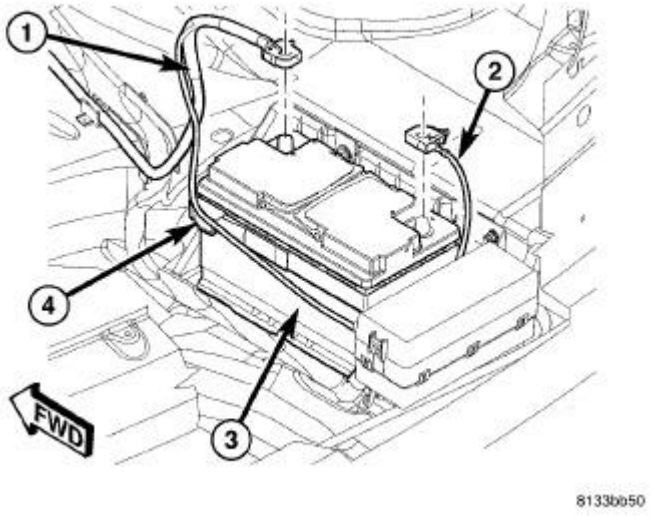

Fig. 96: BATTERY AND CABLES

Courtesy of CHRYSLER LLC

9. Connect battery negative cable (2) to battery post. It is important that this is performed properly. Refer to **Electrical - Engine Systems/Battery System - Standard Procedure** .

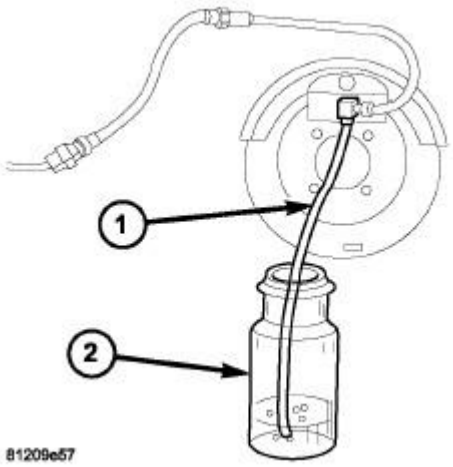

Fig. 97: BLEED HOSE SET UP
Courtesy of CHRYSLER LLC

10. Bleed (1) the area of repair for the brake system. **If a proper pedal is not felt during bleeding an area of repair then a base bleed system must be performed.** . See **Brakes - Standard Procedure**.
11. Road test vehicle making several stops to wear off any foreign material on brakes and to seat brake shoes.

CALIPER, DISC BRAKE, TWIN PISTON

Removal

REAR-WHEEL-DRIVE

NOTE: **Before proceeding. See Brakes - Warning. See Brakes - Caution.**

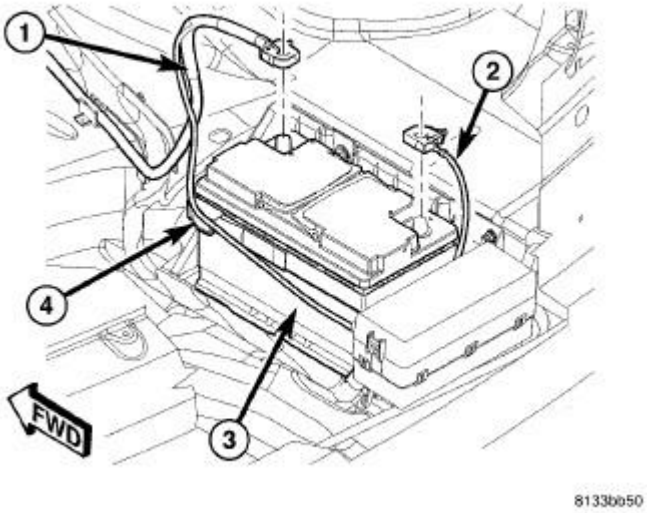

Fig. 98: BATTERY AND CABLES
Courtesy of CHRYSLER LLC

1. Disconnect and isolate battery negative cable (2) from battery post.
2. Using a brake pedal holding tool, depress brake pedal past its first inch of travel and hold it in this position. Holding pedal in this position will isolate master cylinder from hydraulic brake system and will not allow brake fluid to drain out of brake fluid reservoir while brake lines are open.
3. Raise and support vehicle. Refer to **Vehicle Quick Reference/Hoisting - Standard Procedure** .

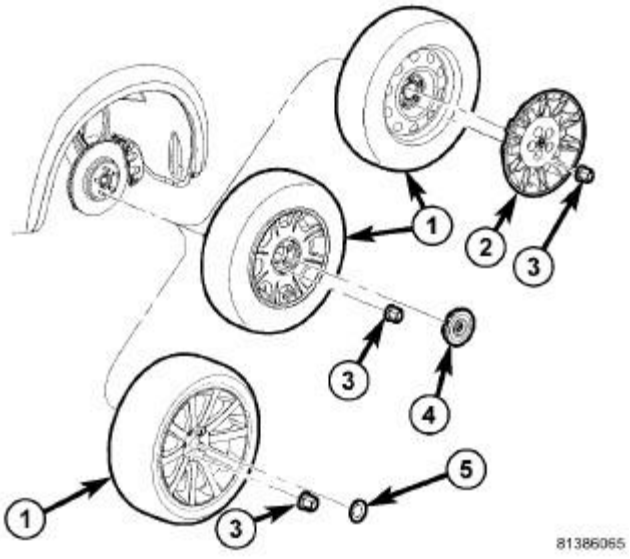

Fig. 99: TIRE AND WHEEL MOUNTING
Courtesy of CHRYSLER LLC

4. Remove wheel mounting nuts (3), then tire and wheel assembly (1).

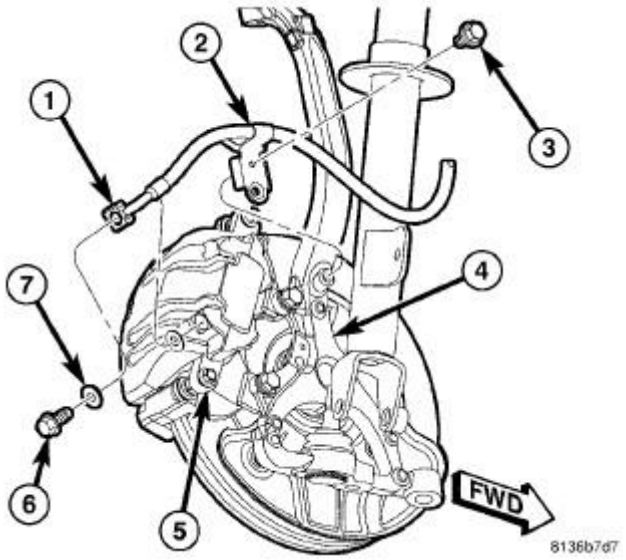

Fig. 100: FRONT BRAKE FLEX HOSE AT CALIPER
Courtesy of CHRYSLER LLC

5. Remove banjo bolt (6) connecting flexible brake hose (1) to caliper (5). There are two sealing washers (7) (one one each side of hose fitting) that will come off when bolt is removed. Discard these washers; install NEW washers on installation.

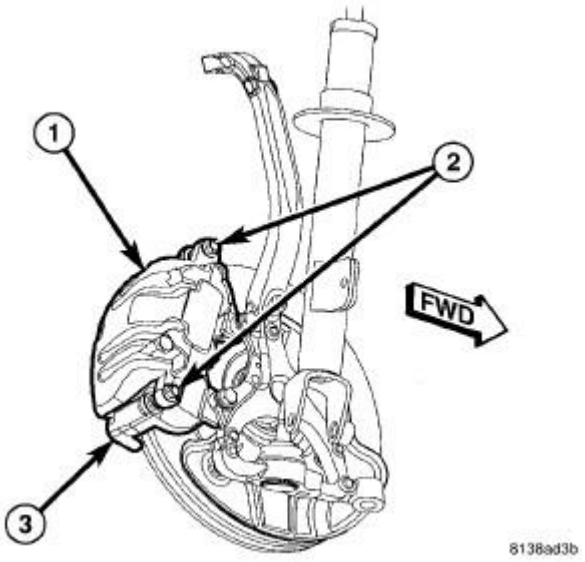

Fig. 101: FRONT CALIPER MOUNTING
Courtesy of CHRYSLER LLC

6. While holding guide pins from turning, remove caliper guide pin bolts (2).

7. Remove brake caliper (1) from brake adapter (3) and pads.

Disassembly

DISASSEMBLY

NOTE: Before disassembling the brake caliper, clean and inspect it. See Brakes/Hydraulic/Mechanical/CALIPER, Disc Brake - Cleaning. See Brakes/Hydraulic/Mechanical/CALIPER, Disc Brake - Inspection.

WARNING: Under no condition should high pressure air ever be used to remove a piston from a caliper bore. Personal injury could result from such practice.

1. Drain brake fluid from caliper.

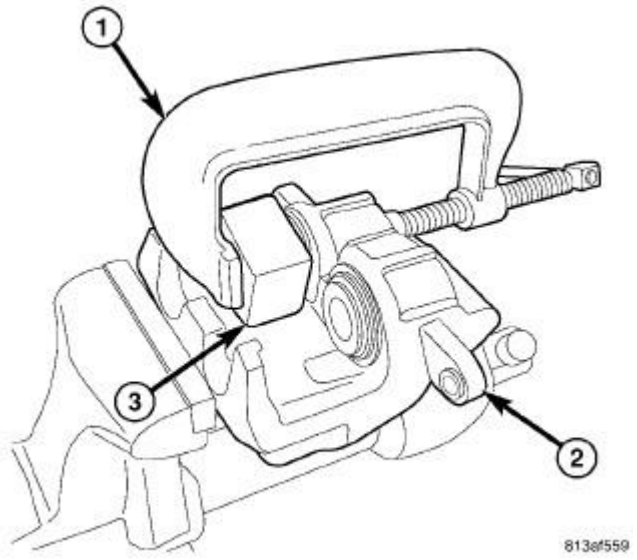

Fig. 102: C-CLAMP
Courtesy of CHRYSLER LLC

CAUTION: Do not use excessive force when clamping caliper (2) in vise. Caliper housing is made of aluminum. Excessive vise pressure will cause bore distortion.

2. Mount caliper (2) in vise equipped with protective jaws.
3. C-clamp (1) a block of wood (3) over one piston.

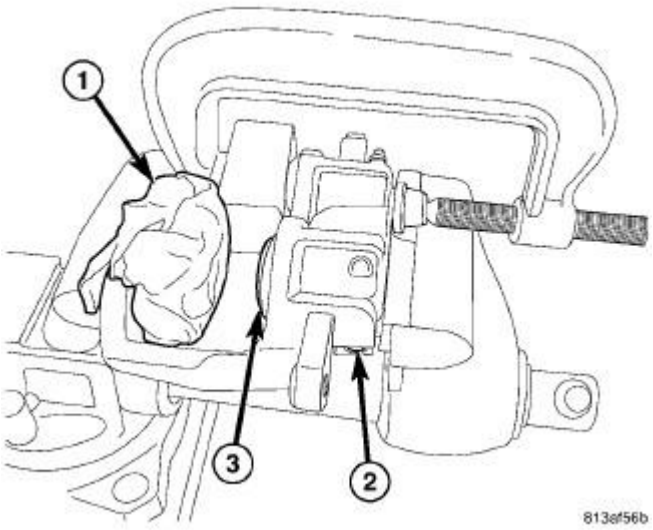

Fig. 103: PISTON
Courtesy of CHRYSLER LLC

4. Take another block of wood and pad it with one-inch thickness of shop towels. Padded block should be sized to allow piston to push out of bore far enough to be removed by hand after being loosened by air pressure, yet large enough to keep piston from coming completely out.
5. Place the padded block of wood (1) in outboard shoe side of caliper (2) in front of exposed piston (3). This will cushion and protect caliper piston during removal.

WARNING: Do not place face or hands near caliper and piston if using compressed air to remove piston. Do not use high pressure.

WARNING: Never attempt to catch piston as it leaves bore. This could result in personal injury.

CAUTION: Do not blow piston out of bore with sustained air pressure. This could result in a cracked piston. Use only short spurts of air.

6. Apply **short spurts of low pressure air** with a rubber tipped blow gun through caliper brake hose port. Use only enough air pressure to ease piston out of bore.
7. Remove piston from caliper (2).
8. Remove C-clamp and block of wood.

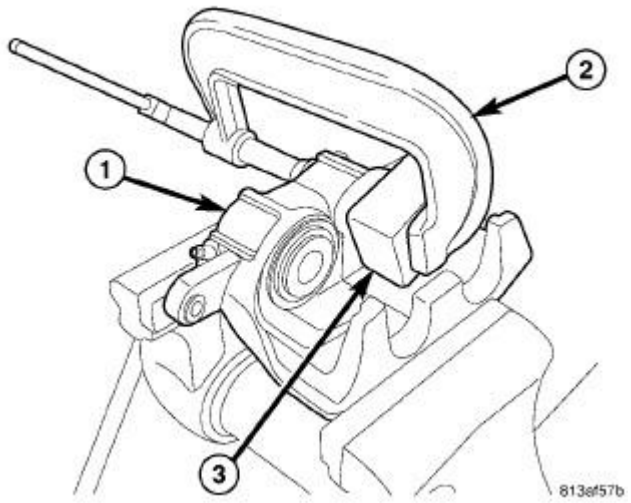

Fig. 104: C-CLAMP
Courtesy of CHRYSLER LLC

9. C-clamp (1) the block of wood (3) over dust boot of first piston removed. This will seal empty piston bore.

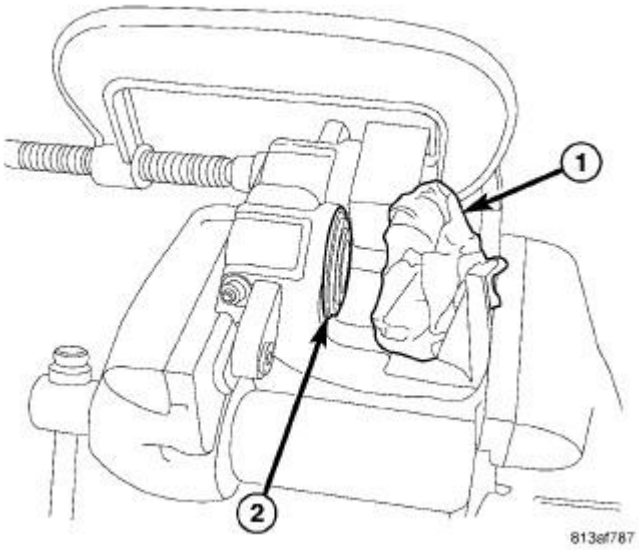

Fig. 105: PISTON
Courtesy of CHRYSLER LLC

10. Move padded piece of wood (1) in front of piston (2) yet to be removed.
11. Remove second piston using same procedure with **short spurts of low pressure air** .
12. Remove C-clamp and block of wood from caliper.

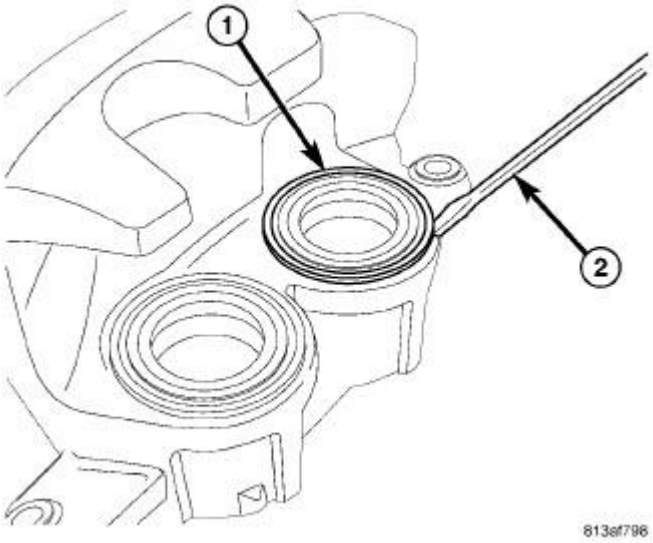

Fig. 106: REMOVING DUST BOOTS
Courtesy of CHRYSLER LLC

13. Remove piston dust boots (1) (over each bore) with an appropriate pry tool (2). **Use care not to damage aluminum housing.**

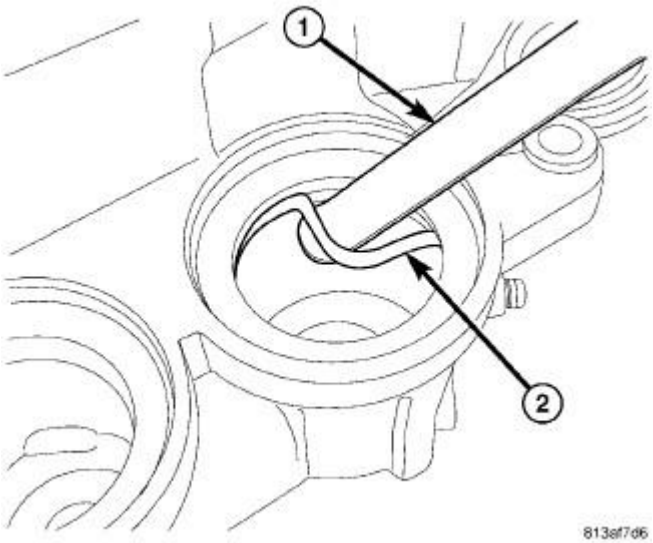

Fig. 107: REMOVING PISTON SEALS
Courtesy of CHRYSLER LLC

CAUTION: Use an appropriate tool (1) to remove piston seals (2) to avoid scratching piston bore. Do not use a screwdriver or other metal tool to remove seals.

14. Using a soft tool such as a plastic trim stick (1), remove piston seals (2) from caliper bores.

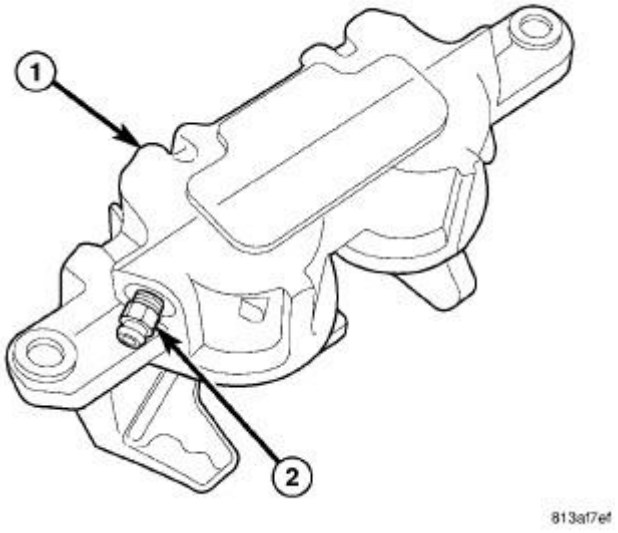

Fig. 108: TWIN PISTON CALIPER BLEEDER SCREW
Courtesy of CHRYSLER LLC

15. Remove caliper bleeder screw (2) from caliper housing (1).
16. Clean piston bore and drilled passage ways with alcohol or a suitable solvent. Wipe it dry using only a lint-free cloth.
17. Inspect both piston and bore for scoring or pitting.

NOTE: It is not recommended to hone caliper bore. The anodized coating would be compromised.

Cleaning

CLEANING

WARNING: Chrysler does not manufacture any vehicles or replacement parts that contain asbestos. Aftermarket products may or may not contain asbestos. Refer to aftermarket product packaging for product information.

Whether the product contains asbestos or not, dust and dirt can accumulate on brake parts during normal use. Follow practices prescribed by appropriate regulations for the handling, processing and disposing of dust and debris.

To clean or flush the internal passages of the brake caliper, use fresh brake fluid or Mopar® Non-Chlorinated Brake Parts Cleaner. Never use gasoline, kerosene, alcohol, oil, transmission fluid or any fluid containing mineral oil to clean the caliper. These fluids will damage rubber cups and seals.

Inspection

INSPECTION

Inspect the disc brake caliper for the following:

- Cracked or damaged housing
- Brake fluid leaks in and around boot area
- Ruptures, brittleness or damage to the piston dust boot

If caliper fails inspection, disassemble and recondition caliper, replacing the seals and dust boots or replace caliper.

Assembly

ASSEMBLY

CAUTION: Dirt, oil, and solvents can damage caliper seals. Ensure assembly area is clean and dry.

NOTE: Always use new, clean Mopar® DOT 3 Motor Vehicle Brake Fluid when assembling brake caliper.

NOTE: Never use old or used piston seals or boots for assembly.

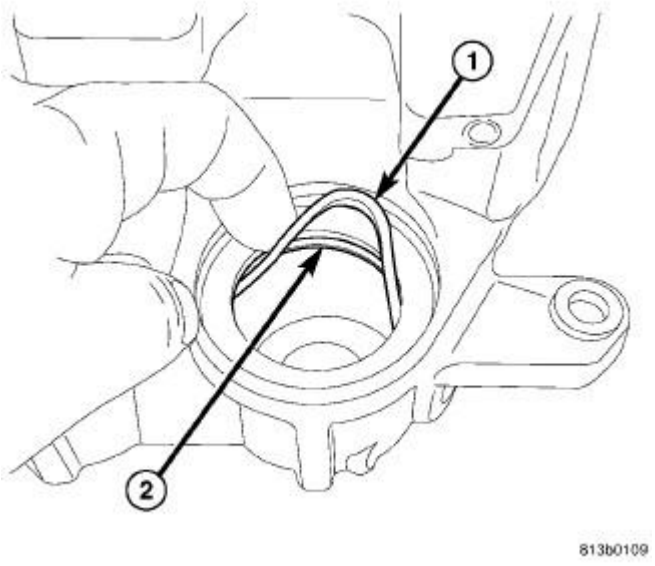

Fig. 109: INSTALLING PISTON SEALS
Courtesy of CHRYSLER LLC

1. Lubricate caliper pistons, piston seals (1) and piston bores (2) with clean, fresh brake fluid.

2. Install NEW piston seal (1) into groove of each caliper piston bore (2).

NOTE: Make sure seal is fully seated and not twisted in groove.

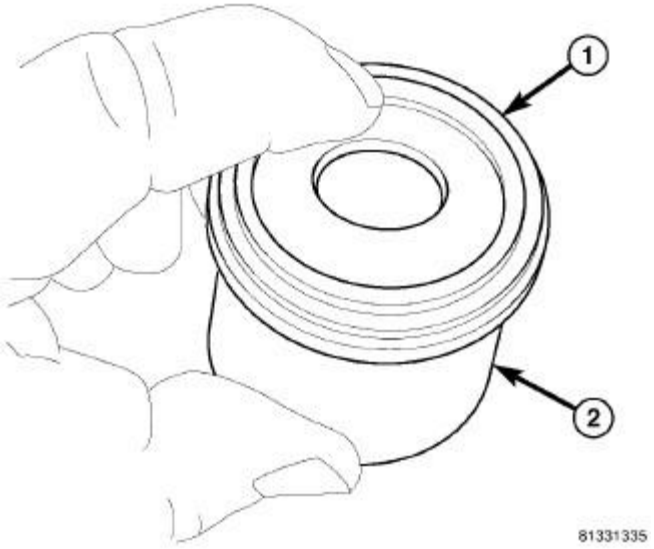

Fig. 110: INSTALL BOOT ON CALIPER PISTON
Courtesy of CHRYSLER LLC

3. Install NEW boot (1) on each piston (2) and work boot lip into groove at top of piston. Stretch boot rearward straightening boot folds, then move boot forward as necessary until folds snap uniformly into place.

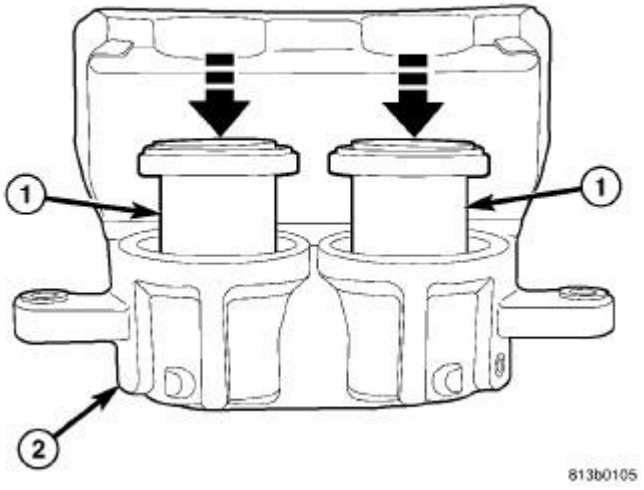

Fig. 111: INSTALLING PISTONS IN CALIPER
Courtesy of CHRYSLER LLC

4. Install each piston (1), one at a time, into its caliper piston (2) bore, pressing piston down to bottom of bore using hand-pressure. Using a piece of wood or wooden hammer handle may also suffice as long as piston and boot damage is avoided.

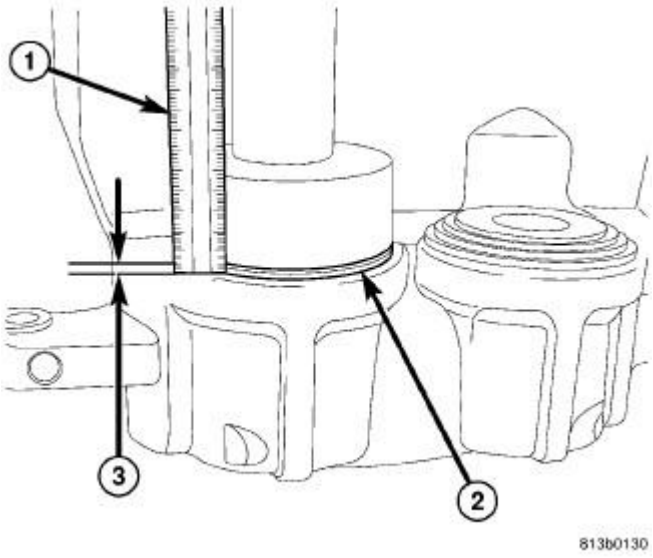

Fig. 112: MEASURING DUST BOOT HEIGHTS
Courtesy of CHRYSLER LLC

CAUTION: When seating dust boots in following step, use care not to over-install boots or damage will occur. Each boot (2) will bottom in the counterbore before the top of the boot reaches the surface of the caliper. The boot will bottom with approximately 2 mm (1/16 inch) (3) of boot still showing above caliper housing.

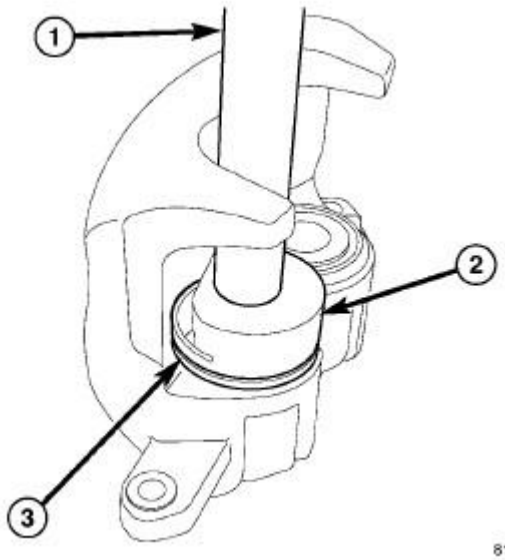

Fig. 113: SEATING BOOTS USING TOOLS 9315 AND C-4171
Courtesy of CHRYSLER LLC

5. Seat dust boots (3) in caliper counterbores using Installer 9315 (2) with Handle C-4171 (1). Install each dust boot until it bottoms. Do not over-seat dust boot or damage will occur.

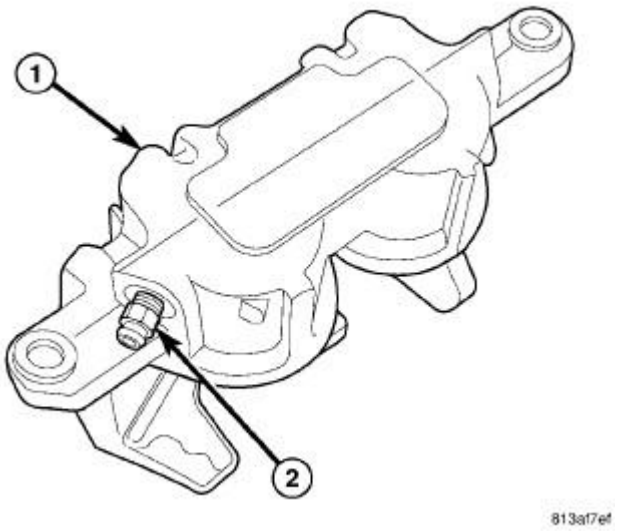

Fig. 114: TWIN PISTON CALIPER BLEEDER SCREW
Courtesy of CHRYSLER LLC

6. Install caliper bleeder screw (2) in caliper housing (1). Tighten bleeder screw to 15 N.m (125 in. lbs.) torque.
7. Install caliper on vehicle. See **Brakes/Hydraulic/Mechanical/CALIPER, Disc Brake - Installation**.

Installation

REAR-WHEEL-DRIVE

CAUTION: Always inspect brake pads before installing disc brake caliper and replace as necessary. See Brakes/Hydraulic/Mechanical/PADS, Brake - Inspection.

1. Completely retract caliper pistons back into bores of caliper. Use hand pressure or a C-clamp may also be used to retract pistons, first placing a wood block over piston before installing C-clamp to avoid damaging piston.

CAUTION: Use care when installing caliper onto disc brake adapter to avoid damaging boots on caliper guide pins.

2. Push caliper guide pins into caliper adapter to clear caliper mounting bosses when installing.

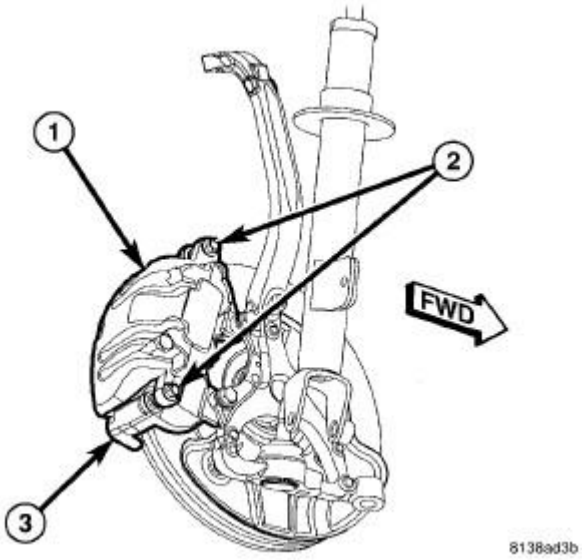

Fig. 115: FRONT CALIPER MOUNTING
Courtesy of CHRYSLER LLC

3. Slide caliper over brake pads and onto caliper adapter (3).

CAUTION: Extreme caution should be taken not to crossthread caliper guide pin bolts (2) when they are installed.

4. Align caliper mounting holes with guide pins, then install guide pin bolts (2). While holding guide pins from turning, tighten bolts to 60 N.m (44 ft. lbs.).

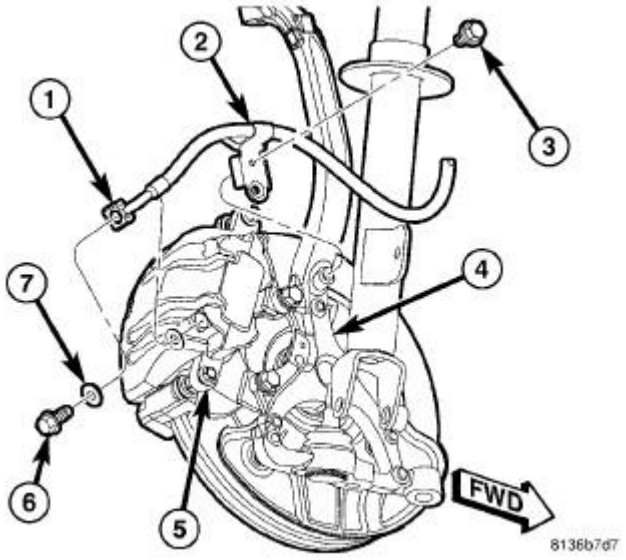

Fig. 116: FRONT BRAKE FLEX HOSE AT CALIPER
Courtesy of CHRYSLER LLC

5. Install banjo bolt (6) attaching brake hose (1) to caliper (5). Install NEW washers (7) on each side of hose fitting as banjo bolt is placed through fitting. Thread banjo bolt into caliper and tighten to 50 N.m (37 ft. lbs.).

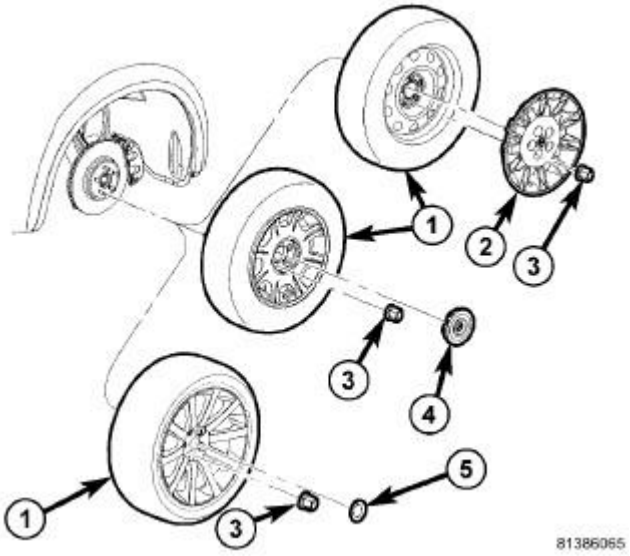

Fig. 117: TIRE AND WHEEL MOUNTING
Courtesy of CHRYSLER LLC

6. Install tire and wheel assembly (1). Tighten wheel mounting nuts (3) to 150 N.m (110 ft. lbs.) (Police - 190 N.m (140 ft. lbs.)). Refer to **Tires and Wheels - Installation**
7. Lower vehicle.
8. Remove brake pedal holding tool.

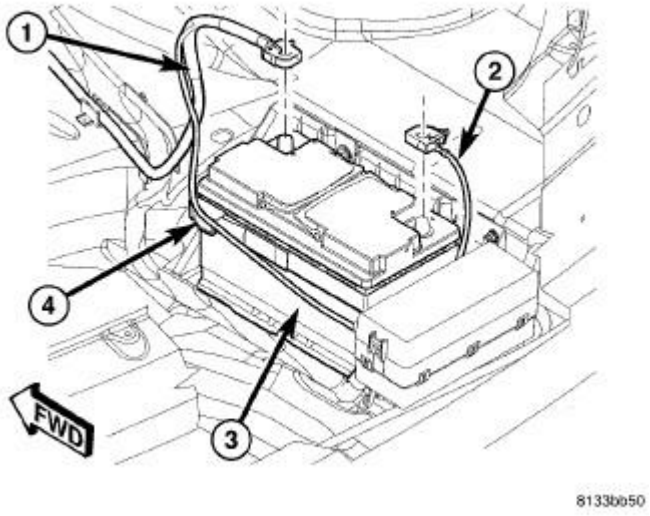

Fig. 118: BATTERY AND CABLES

Courtesy of CHRYSLER LLC

9. Connect battery negative cable (2) to battery post. It is important that this is performed properly. Refer to **Electrical - Engine Systems/Battery System - Standard Procedure** .

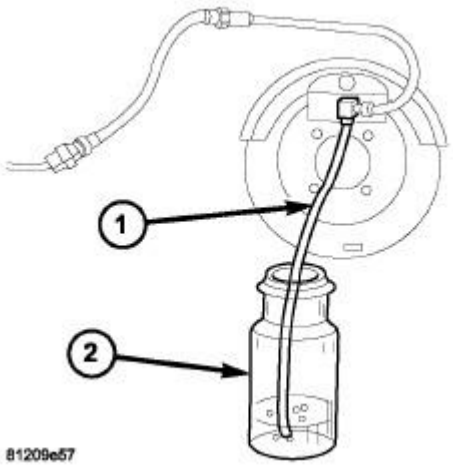

Fig. 119: BLEED HOSE SET UP
Courtesy of CHRYSLER LLC

10. Bleed (1) the area of repair for the brake system. **If a proper pedal is not felt during bleeding an area of repair then a base bleed system must be performed.** . See **Brakes - Standard Procedure**.
11. Road test vehicle making several stops to wear off any foreign material on brakes and to seat brake shoes.

FLUID

Diagnosis and Testing

BRAKE FLUID CONTAMINATION

Indications of fluid contamination are swollen or deteriorated rubber parts.

Swollen rubber parts indicate the presence of petroleum in the brake fluid.

To test for contamination, put a small amount of drained brake fluid in clear glass jar. If fluid separates into layers, there is mineral oil or other fluid contamination of the brake fluid.

If brake fluid is contaminated, drain and thoroughly flush system. Replace master cylinder, proportioning valve, caliper seals, wheel cylinder seals, Antilock Brake hydraulic unit and all hydraulic fluid hoses.

Standard Procedure

BRAKE FLUID LEVEL CHECKING

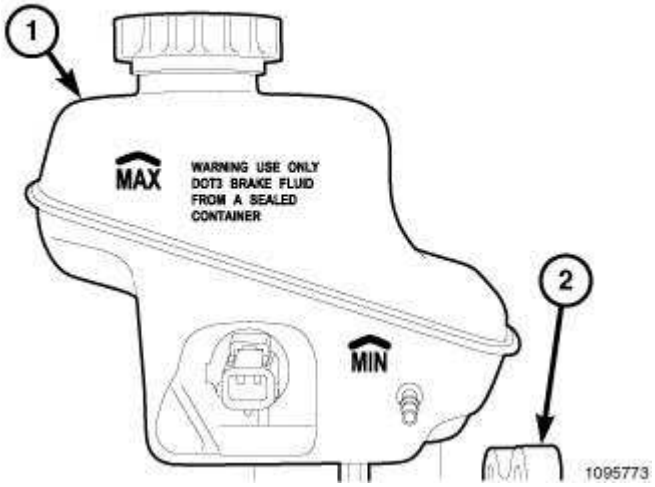

Fig. 120: RESERVOIR FLUID LEVEL MARKINGS
Courtesy of CHRYSLER LLC

Check master cylinder reservoir fluid level a minimum of twice annually.

Fluid reservoirs (1) are marked with the words MAX and MIN to indicate proper brake fluid fill level of the master cylinder.

If necessary, add brake fluid to bring the level to the bottom of the MAX mark on the side of the master cylinder fluid reservoir (1).

Use only Mopar® brake fluid or equivalent from a sealed container. Brake fluid must conform to DOT 3 specifications. See **Brakes/Hydraulic/Mechanical/FLUID - Specifications**.

DO NOT use brake fluid with a lower boiling point, as brake failure could result during prolonged hard braking.

Use only brake fluid that was stored in a tightly-sealed container.

DO NOT use petroleum-based fluid because seal damage will result. Petroleum based fluids would be items such as engine oil, transmission fluid, power steering fluid etc.

Specifications

BRAKE FLUID

The brake fluid used in this vehicle must conform to DOT 3 specifications and SAE J1703 standards. No other type of brake fluid is recommended or approved for usage in the vehicle brake system. Use only Mopar® Brake Fluid DOT 3 Motor Vehicle or equivalent from a tightly sealed container.

CAUTION: Never use reclaimed brake fluid or fluid from an container which has been left open. An open container of brake fluid will absorb moisture from the

air and contaminate the fluid.

CAUTION: Never use any type of a petroleum-based fluid in the brake hydraulic system. Use of such type fluids will result in seal damage of the vehicle brake hydraulic system causing a failure of the vehicle brake system. Petroleum based fluids would be items such as engine oil, transmission fluid, power steering fluid, etc.

MASTER CYLINDER, BRAKE

Description

DESCRIPTION

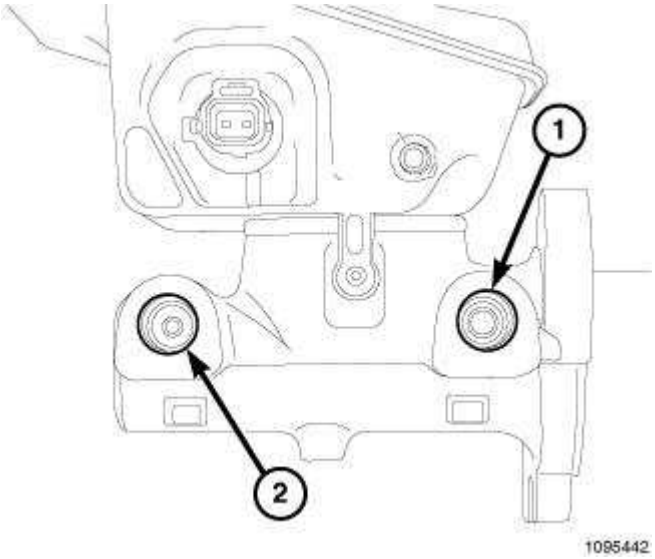

Fig. 121: PRIMARY AND SECONDARY PORTS - MK25E
Courtesy of CHRYSLER LLC

The master cylinder has a cast aluminum housing with a top mounted reservoir. The dual outlet port design housing features a primary port (1) machined for 8 mm (5/16 inch) tubing and a secondary port (2) machined for 6.25 mm (1/4 in) tubing.

The master cylinder has a 27 mm bore.

Standard Procedure

MASTER CYLINDER BLEEDING

CAUTION: When clamping master cylinder in vise, only clamp master cylinder by its mounting flange. Do not clamp master cylinder piston rod, reservoir, seal or body.

1. Clamp master cylinder in a vise.

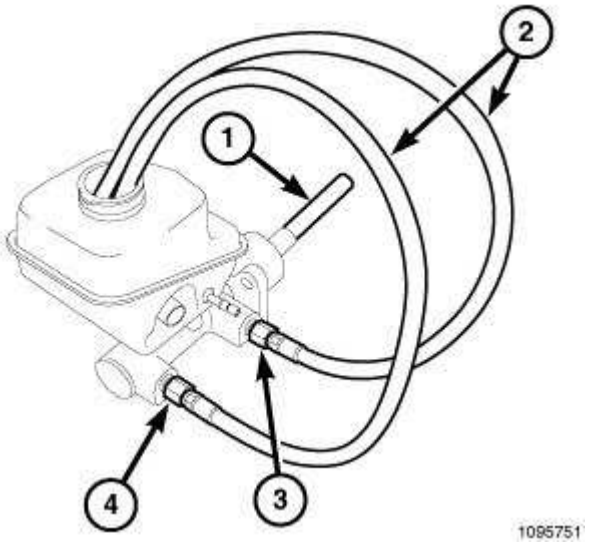

Fig. 122: BLEEDING TOOLS ON MASTER CYLINDER
Courtesy of CHRYSLER LLC

CAUTION: When installing Adapters in master cylinder, do not overtighten. Damage to master cylinder could occur.

NOTE: Bleeder Adapters 9748-1 and 9748-2 are not interchangeable. To avoid mix-up, Bleeder Adapter 9748-1 is silver while Bleeder Adapter 9748-2 is black.

2. Attach special tools for bleeding master cylinder in following fashion:
   a. Thread Bleeder Adapter 9748-2 (3), into primary outlet port. Tighten to 14 N.m (124 in. lbs.).
   b. Thread Bleeder Adapter 9748-1 (4), into secondary outlet port. Tighten to 14 N.m (124 in. lbs.).
   c. Thread a Bleeder Tube 9358A-1 (2), into each Adapter. Tighten each tube to 14 N.m (124 in. lbs.). Flex each bleeder tube and place open end into mouth of fluid reservoir as far down as possible.

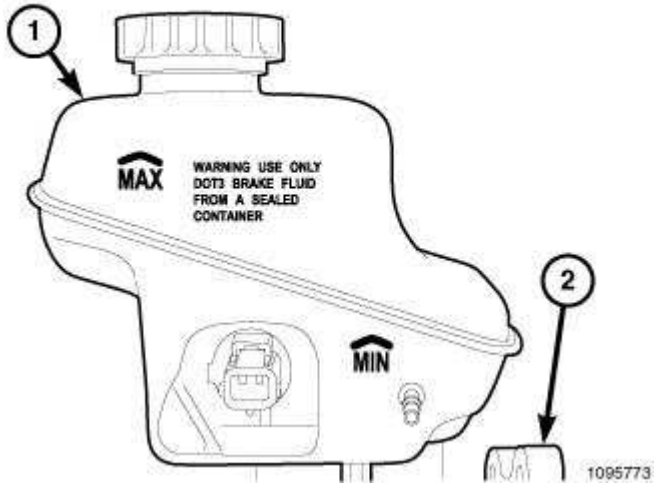

Fig. 123: RESERVOIR FLUID LEVEL MARKINGS
Courtesy of CHRYSLER LLC

NOTE: Make sure open ends of bleeder tubes stay below surface of brake fluid once reservoir is filled to proper level.

3. Fill brake fluid reservoir (1) to the MAX level with Mopar® brake fluid or equivalent conforming to DOT 3 specifications. Make sure fluid level is above tips of bleeder tubes in reservoir to ensure no air is ingested during bleeding.

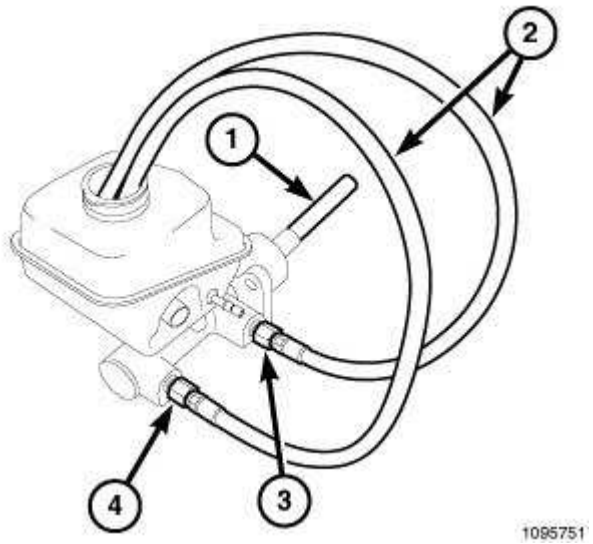

Fig. 124: BLEEDING TOOLS ON MASTER CYLINDER
Courtesy of CHRYSLER LLC

4. Using a wooden dowel as a pushrod (1), slowly depress master cylinder pistons, then release pressure, allowing pistons to return to released position. Repeat several times until all air bubbles are expelled. Make sure fluid level stays above tips of bleeder tubes in reservoir while

bleeding.

5. Remove bleeder tubes (2) and adapters (3, 4) from master cylinder outlet ports, then plug outlet ports and install fill cap on reservoir.
6. Remove master cylinder from vise.
7. Install master cylinder on vehicle. See **Brakes/Hydraulic/Mechanical/MASTER CYLINDER, Brake - Installation**.

Removal

REMOVAL

CAUTION: Vacuum in power brake booster must be pumped down (removed) before removing master cylinder from power brake booster. This is necessary to prevent power brake booster from sucking in any contamination as master cylinder is removed. This can be done simply by pumping brake pedal, with vehicle's engine not running, until a firm feeling brake pedal is achieved.

1. With the engine not running, pump the brake pedal until a firm pedal is achieved (4-5 strokes).

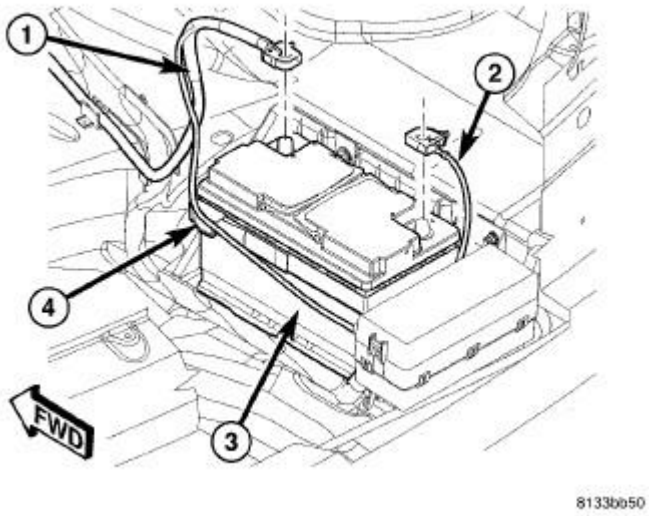

Fig. 125: BATTERY AND CABLES
Courtesy of CHRYSLER LLC

2. Disconnect and isolate the battery negative cable (2) from the battery post.

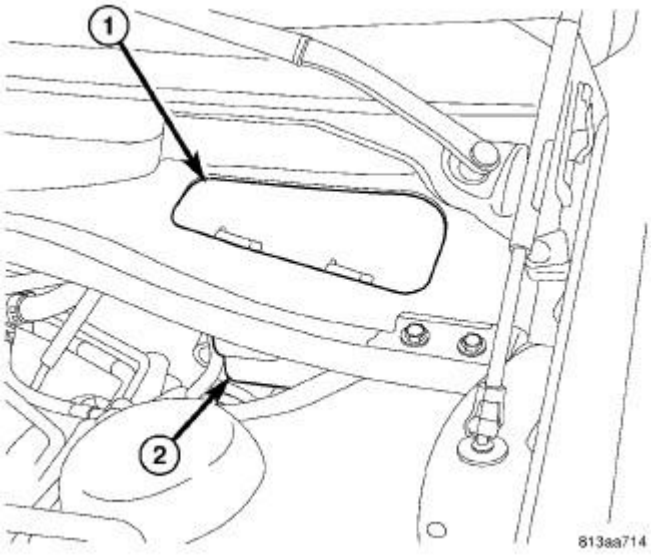

Fig. 126: COWL ACCESS PANEL
Courtesy of CHRYSLER LLC

3. Remove the access panel (1) in the cowl area to expose the master cylinder (2).
4. Thoroughly clean all surfaces of the brake fluid reservoir and master cylinder. Use only Mopar® Brake Parts Cleaner or equivalent.

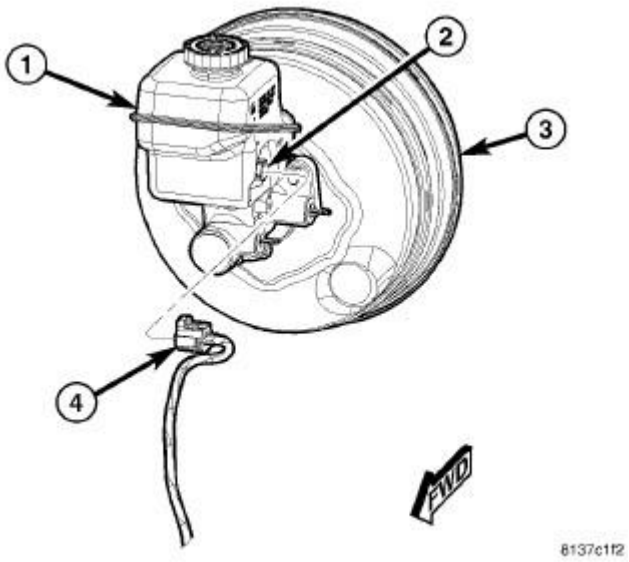

Fig. 127: BRAKE FLUID LEVEL SENSOR CONNECTION
Courtesy of CHRYSLER LLC

5. Disconnect the wiring harness connector (4) from the brake fluid level sensor (2) in the master cylinder brake fluid reservoir (1).

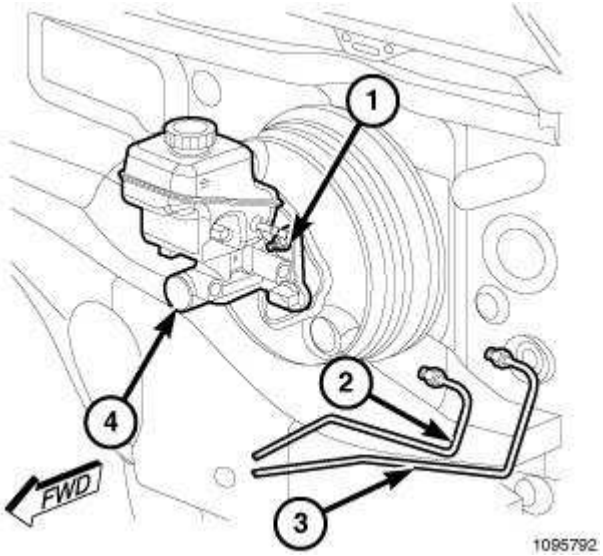

Fig. 128: BRAKE TUBES AT MASTER CYLINDER
Courtesy of CHRYSLER LLC

6. Disconnect the primary (3) and secondary (2) brake tubes from the master cylinder (4). Install sealing plugs in the open brake tube outlet ports.

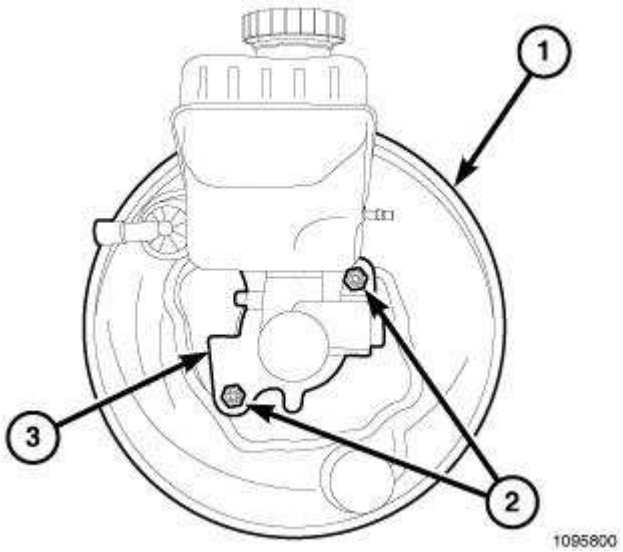

Fig. 129: MASTER CYLINDER MOUNTING NUTS
Courtesy of CHRYSLER LLC

CAUTION: Before removing master cylinder from power brake vacuum booster, master cylinder and vacuum booster must be thoroughly cleaned. This must be done to prevent dirt particles from falling into power brake vacuum booster. Use only Mopar® Brake Parts Cleaner or equivalent.

7. Remove the two nuts (2) attaching the master cylinder (3) to the power brake booster (1).

8. Slide the master cylinder (3) straight out of the power brake booster (1).

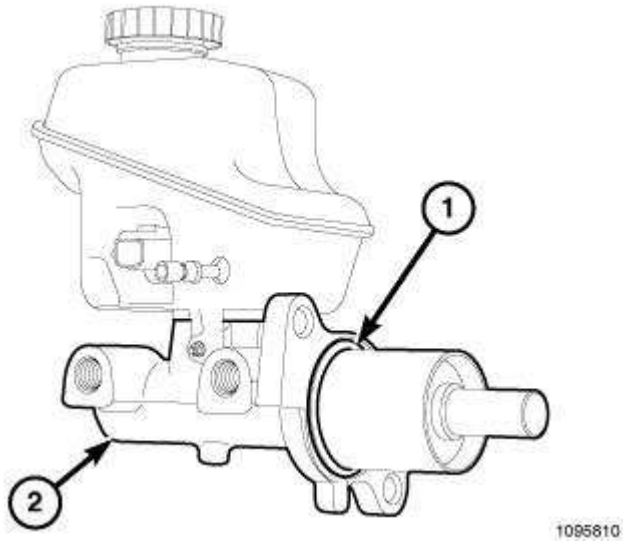

Fig. 130: VACUUM SEAL ON REAR OF MASTER CYLINDER
Courtesy of CHRYSLER LLC

CAUTION: Vacuum seal (1) on rear of master cylinder (2) is used to allow vacuum ability in power brake vacuum booster. Vacuum seal MUST be replaced whenever master cylinder is removed from power brake vacuum booster.

9. Remove the vacuum seal (1) located on the mounting flange of the master cylinder (2). The vacuum seal is removed by **carefully** pulling it off the rear of master cylinder. **Do not attempt to pry the seal off the master cylinder by inserting a sharp tool between seal and the master cylinder casting. Damage can occur.**

Disassembly

DISASSEMBLY

1. Clean master cylinder housing and brake fluid reservoir. Use only Mopar® Brake Parts Cleaner or equivalent.

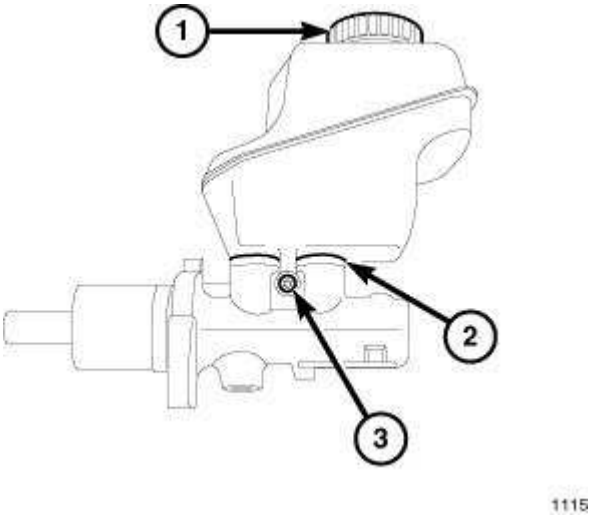

Fig. 131: FLUID RESERVOIR MOUNTING
Courtesy of CHRYSLER LLC

2. Remove brake fluid reservoir cap (1). Using a syringe or equivalent type tool, empty as much brake fluid as possible from the reservoir.

> **CAUTION: When removing fluid reservoir from the master cylinder, do not pry off using any type of tool. This can damage the fluid reservoir or master cylinder housing.**

3. Remove screw (3) fastening fluid reservoir to master cylinder housing.
4. Rock the brake fluid reservoir side-to-side while pulling up to remove it from seal grommets in master cylinder housing.

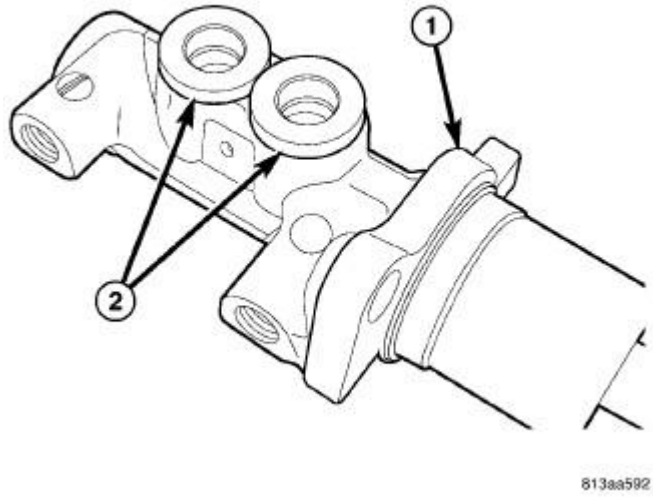

Fig. 132: RESERVOIR SEAL GROMMETS
Courtesy of CHRYSLER LLC

5. Remove two brake fluid reservoir seal grommets (2) from master cylinder housing (1).

Assembly

ASSEMBLY

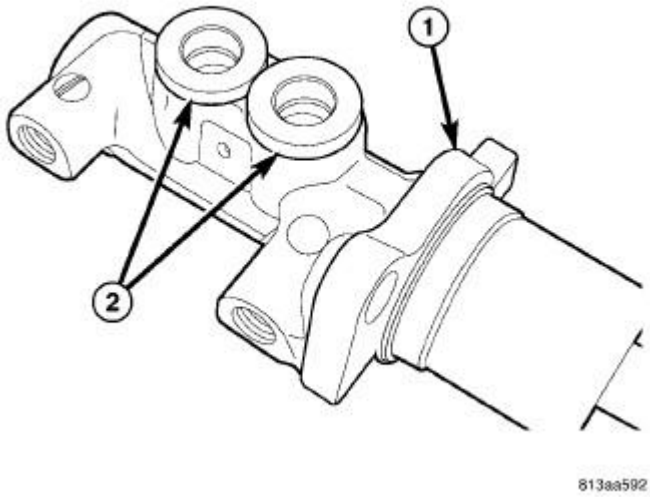

Fig. 133: RESERVOIR SEAL GROMMETS
Courtesy of CHRYSLER LLC

1. Install NEW brake fluid reservoir sealing grommets (2) in master cylinder housing (1).

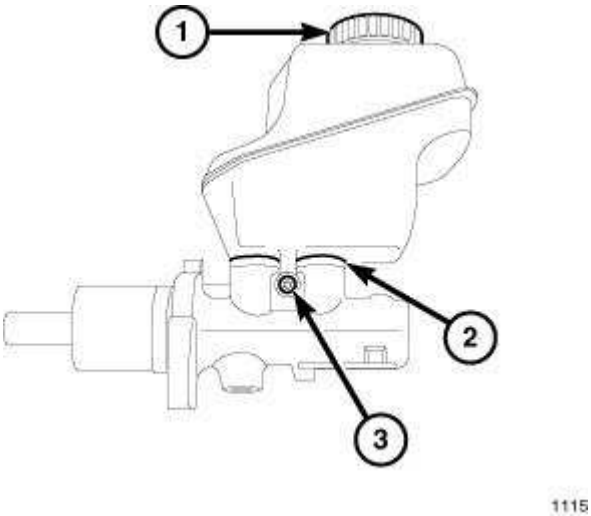

Fig. 134: FLUID RESERVOIR MOUNTING
Courtesy of CHRYSLER LLC

2. Lubricate reservoir mounting area with fresh clean brake fluid. Place reservoir in position over sealing grommets. Seat reservoir into sealing grommets using a rocking motion while firmly

pressing down on fluid reservoir. Once installed, make sure fluid reservoir is touching the top of both sealing grommets (2) or reservoir is not properly installed.

3. Install fluid reservoir mounting screw (3). Tighten screw to 28 N.m (250 in. lbs.).
4. Thoroughly bleed master cylinder before installing it on vehicle. See **Brakes/Hydraulic/Mechanical/MASTER CYLINDER, Brake - Standard Procedure**.

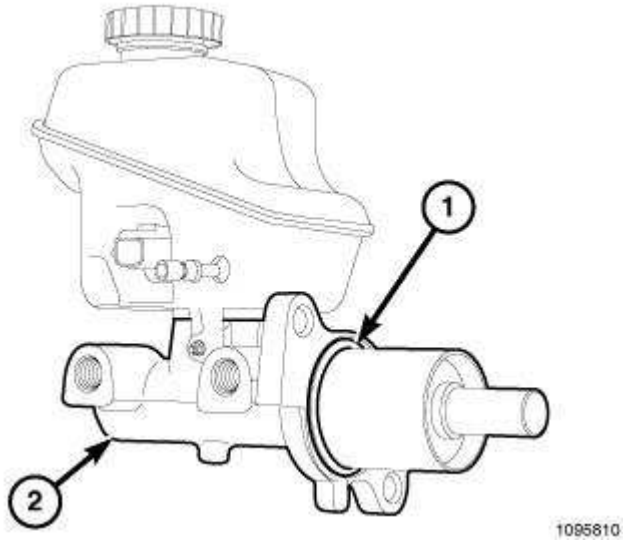

Fig. 135: VACUUM SEAL ON REAR OF MASTER CYLINDER
Courtesy of CHRYSLER LLC

5. Install master cylinder on power brake booster. Upon installation, vacuum seal (1) on rear of master cylinder must be replaced. See **Brakes/Hydraulic/Mechanical/MASTER CYLINDER, Brake - Installation**.

Installation

INSTALLATION

1. Thoroughly bleed master cylinder before installing it on vehicle. See **Brakes/Hydraulic/Mechanical/MASTER CYLINDER, Brake - Standard Procedure**.

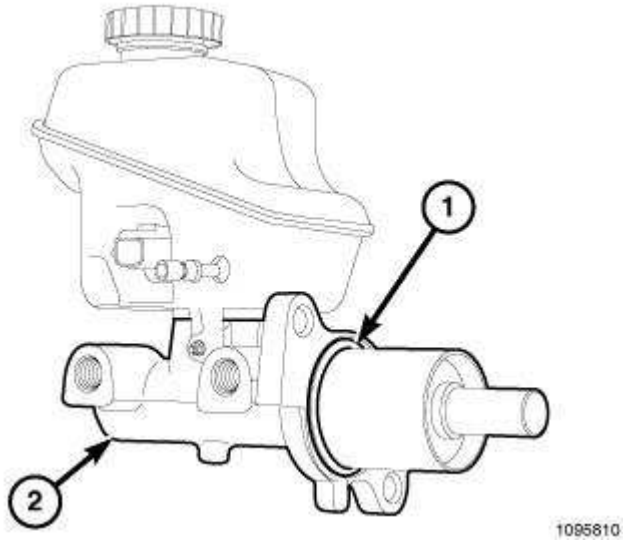

Fig. 136: VACUUM SEAL ON REAR OF MASTER CYLINDER
Courtesy of CHRYSLER LLC

CAUTION: When replacing master cylinder on vehicle, a NEW vacuum seal (1) MUST be installed on master cylinder.

2. Install new vacuum seal (1) on rear of master cylinder (2) making sure seal fits squarely in mounting groove.

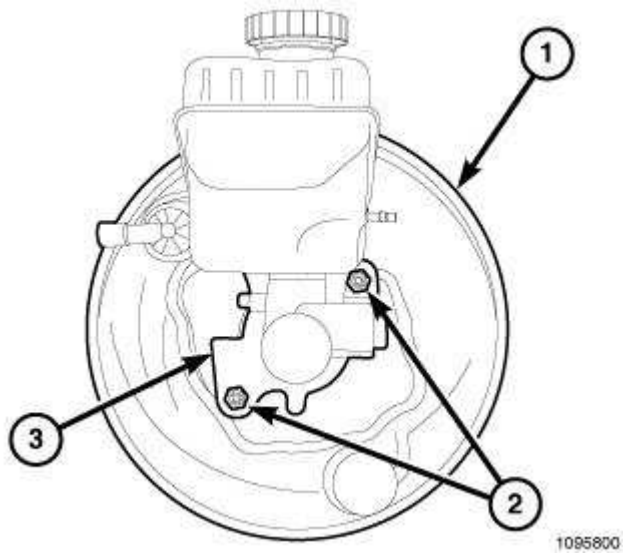

Fig. 137: MASTER CYLINDER MOUNTING NUTS
Courtesy of CHRYSLER LLC

3. Position master cylinder (3) on studs of power brake booster, aligning booster push rod with master cylinder piston.
4. Install two master cylinder mounting nuts (2). Tighten mounting nuts to 15 N.m (133 in. lbs.).

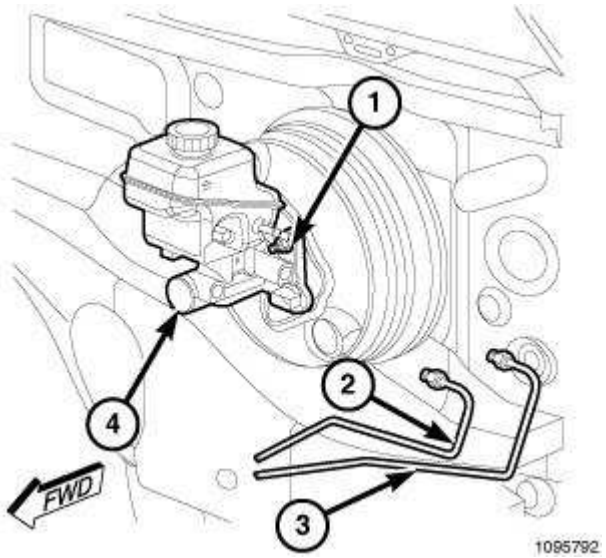

Fig. 138: BRAKE TUBES AT MASTER CYLINDER
Courtesy of CHRYSLER LLC

5. Thread primary (3) and secondary (2) brake tubes into master cylinder primary and secondary ports. Tighten tube nuts to 20 N.m (177 in. lbs.).

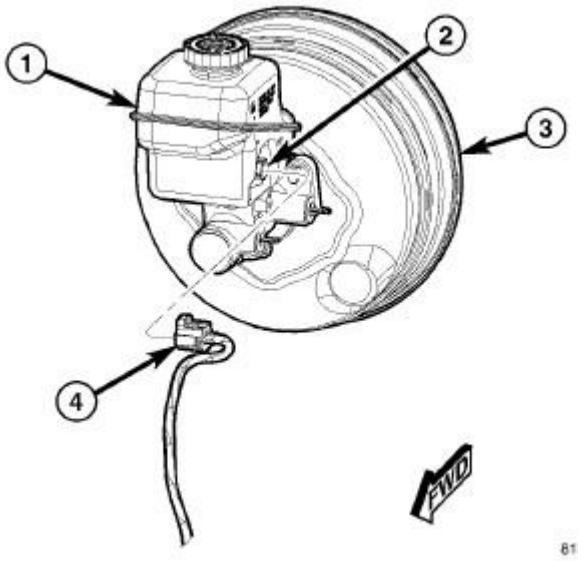

Fig. 139: BRAKE FLUID LEVEL SENSOR CONNECTION
Courtesy of CHRYSLER LLC

6. Connect wiring harness connector (4) to brake fluid level sensor (2) mounted in brake fluid reservoir (1).

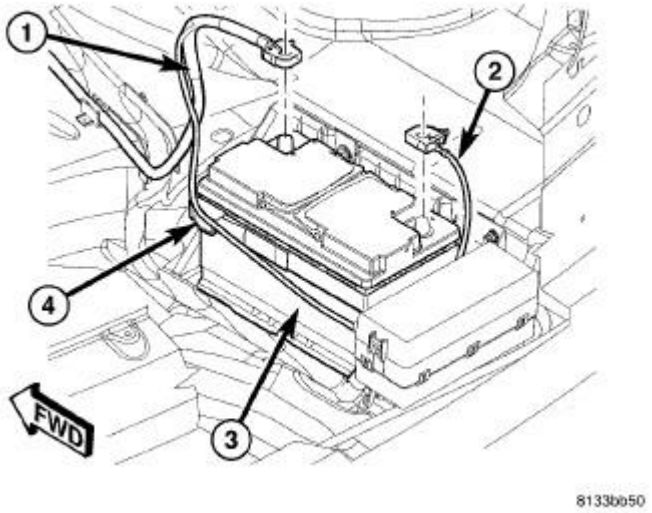

Fig. 140: BATTERY AND CABLES
Courtesy of CHRYSLER LLC

7. Connect negative battery cable (2) to battery post. It is important that this is performed properly. Refer to **Electrical - Engine Systems/Battery System - Standard Procedure** .

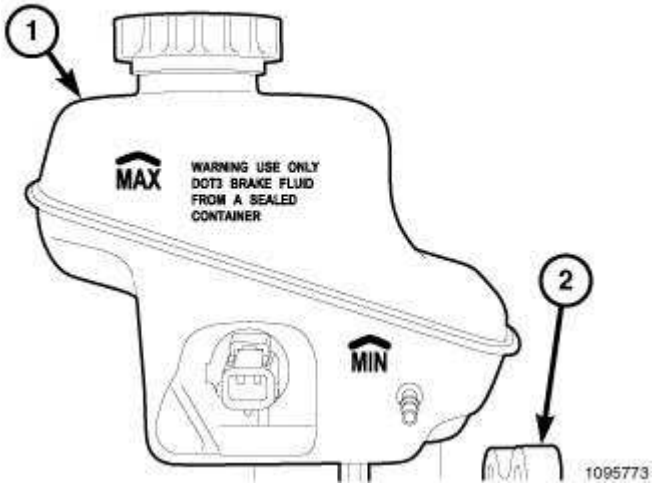

Fig. 141: RESERVOIR FLUID LEVEL MARKINGS
Courtesy of CHRYSLER LLC

8. Fill master cylinder fluid reservoir (1) with clean, fresh Mopar® Brake Fluid or equivalent.
9. Install access panel in cowl area.

WARNING: Be certain a firm brake pedal is achieved prior to attempting vehicle operation. If a firm brake pedal cannot be achieved, bleed entire

brake hydraulic system and check for leaks. See Brakes - Standard Procedure.

10. Road test vehicle to ensure proper operation of brakes.

PADS, BRAKE

Standard Procedure

BRAKE PAD BURNISHING - SRT8

CAUTION: After installing NEW brake pads, keep in mind that braking effectiveness might be somewhat reduced during the first brake applications.

When NEW brake pads are installed on a vehicle, this procedure must be used to correctly burnish (seat) the brake linings to the brake rotor discs.

1. Accelerate the vehicle to a steady speed of about 40 mph (65 km/h).
2. Using light brake pedal pressure, slow the vehicle from 40 mph to 0 mph in approximately 6 seconds.
3. Accelerate back up to 40 mph for approximately one minute to allow the brakes to cool down.
4. Repeat this procedure 15 to 20 times to correctly seat the brake lining material.

Removal

REAR (EXCEPT SRT8)

NOTE: Before proceeding. See Brakes - Warning. See Brakes - Caution.

1. Raise and support vehicle. Refer to **Vehicle Quick Reference/Hoisting - Standard Procedure** .

NOTE: Perform steps 2 through 6 on each side of the vehicle.

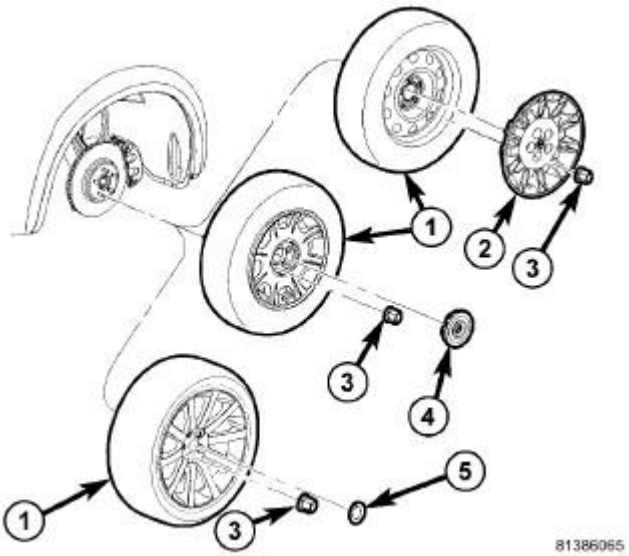

Fig. 142: TIRE AND WHEEL MOUNTING
Courtesy of CHRYSLER LLC

2. Remove wheel mounting nuts (3), then tire and wheel assembly (1).

NOTE: **In some cases, it may be necessary to retract caliper piston in its bore a small amount in order to provide sufficient clearance between shoes and rotor to easily remove caliper from knuckle. This can usually be accomplished before guide pin bolts are removed by grasping rear of caliper and pulling outward working with guide pins, thus retracting piston. Never push on piston directly as it may get damaged.**

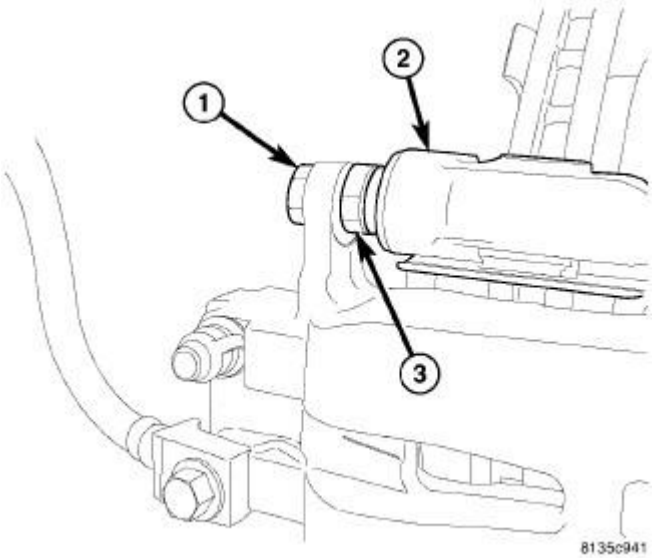

Fig. 143: CALIPER GUIDE PIN AND BOLT

Courtesy of CHRYSLER LLC

3. Remove Upper caliper guide pin bolt (1). To do so, hold the guide pin (3) stationary while turning bolt.

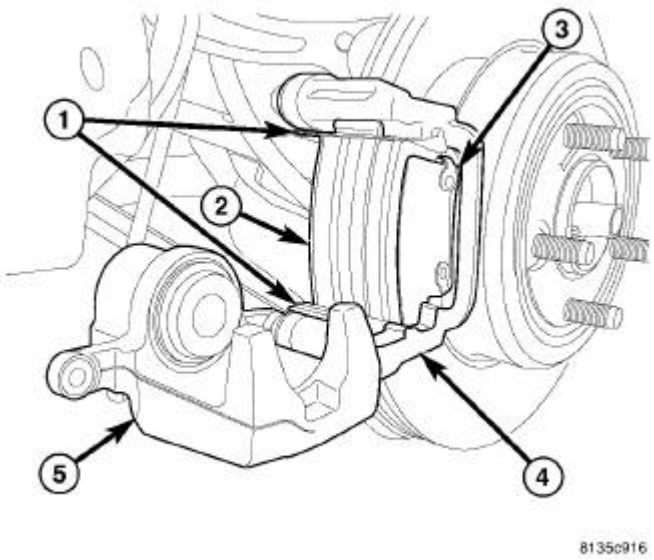

Fig. 144: ACCESS TO REAR BRAKE PADS
Courtesy of CHRYSLER LLC

4. Rotate caliper downward (5), exposing brake pads (2 and 3). **Use care not to overextend brake hose when doing this or damage may occur.**
5. Remove inboard (2) and outboard (3) brake pads from caliper adapter (4).
6. If necessary, remove anti-rattle clips (1) from upper and lower abutments of adapter (4).

FRONT (EXCEPT SRT8)

NOTE: Before proceeding. See Brakes - Warning. See Brakes - Caution.

1. Raise and support vehicle. Refer to **Vehicle Quick Reference/Hoisting - Standard Procedure** .

NOTE: Perform steps 2 through 6 on each side of the vehicle.

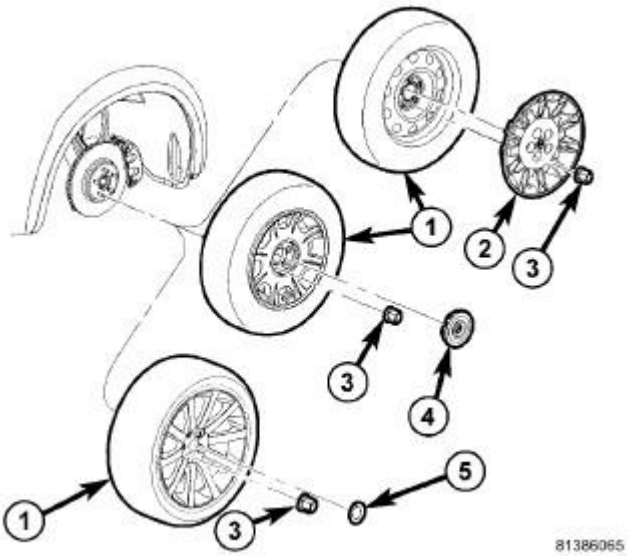

Fig. 145: TIRE AND WHEEL MOUNTING
Courtesy of CHRYSLER LLC

2. Remove wheel mounting nuts (3), then tire and wheel assembly (1).

NOTE: **In some cases, it may be necessary to retract caliper piston in its bore a small amount in order to provide sufficient clearance between shoes and rotor to easily remove caliper from knuckle. This can usually be accomplished before guide pin bolts are removed by grasping rear of caliper and pulling outward working with guide pins, thus retracting piston. Never push on piston directly as it may get damaged.**

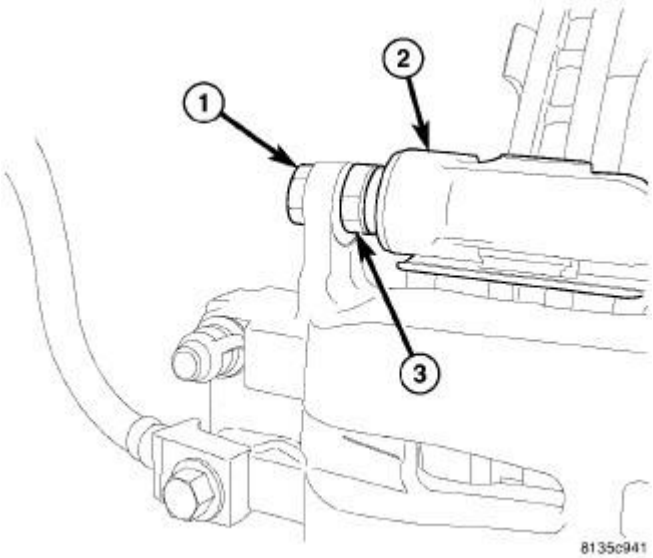

Fig. 146: CALIPER GUIDE PIN AND BOLT

Courtesy of CHRYSLER LLC

3. Remove lower caliper guide pin bolt. To do so, hold the guide pin (3) stationary while turning bolt (1).

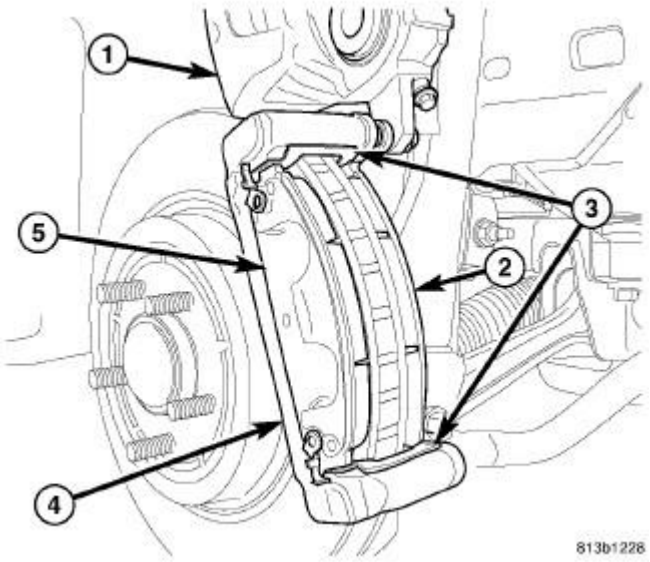

Fig. 147: ACCESS TO FRONT PADS
Courtesy of CHRYSLER LLC

4. Rotate caliper upward (1), exposing brake pads (2 and 5). **Use care not to overextend brake hose when doing this or damage may occur.**
5. Remove inboard (2) and outboard (5) brake pads from caliper adapter (4).
6. If necessary, remove anti-rattle clips (3) from upper and lower abutments of adapter (4).

SRT8

NOTE: Review all Warnings and Cautions. See Brakes - Warning.

1. Raise and support vehicle. Refer to **Vehicle Quick Reference/Hoisting - Standard Procedure** .

NOTE: Perform 2 through 8 on each side of vehicle to complete pad set removal.

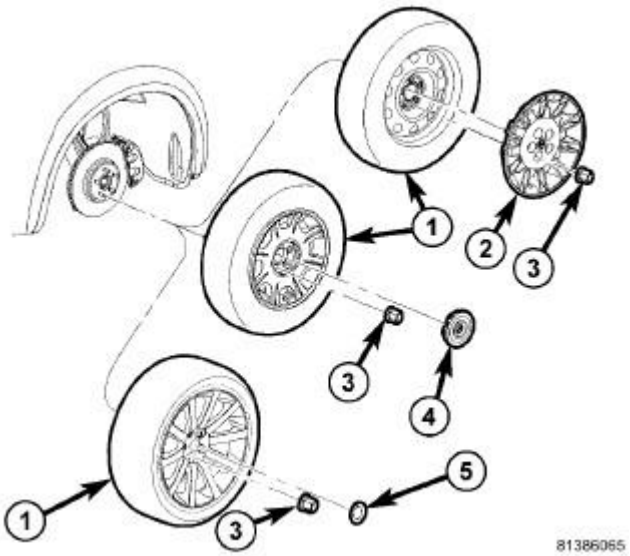

Fig. 148: TIRE AND WHEEL MOUNTING
Courtesy of CHRYSLER LLC

2. Remove wheel mounting nuts (3), then tire and wheel assembly (1).

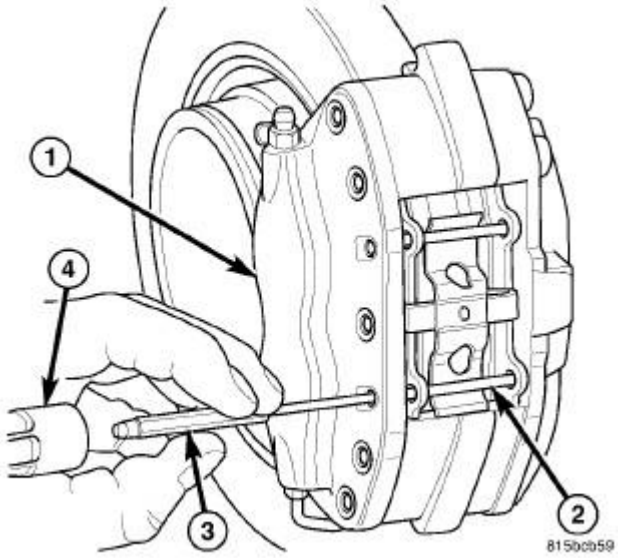

Fig. 149: REMOVING LOWER SUPPORT PIN
Courtesy of CHRYSLER LLC

3. Using hammer (4) and pin punch (3) on outboard end, tap lower brake pad support pin (2) out of caliper (1).

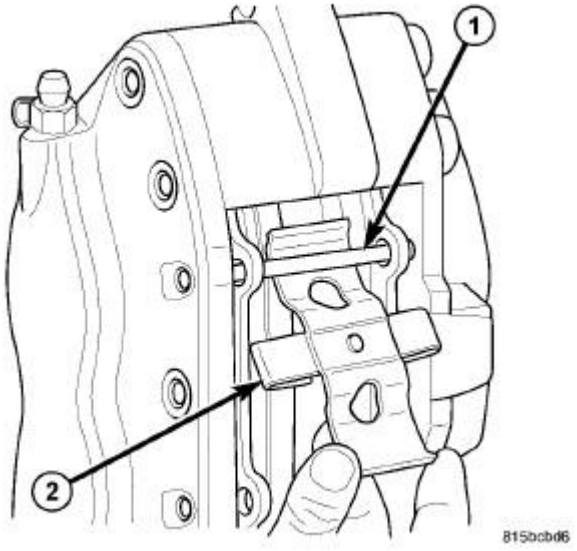

Fig. 150: REMOVING/INSTALLING SPRING CLIP
Courtesy of CHRYSLER LLC

4. Remove brake pad spring clip (2) out from under the upper support pin (1) still in caliper.

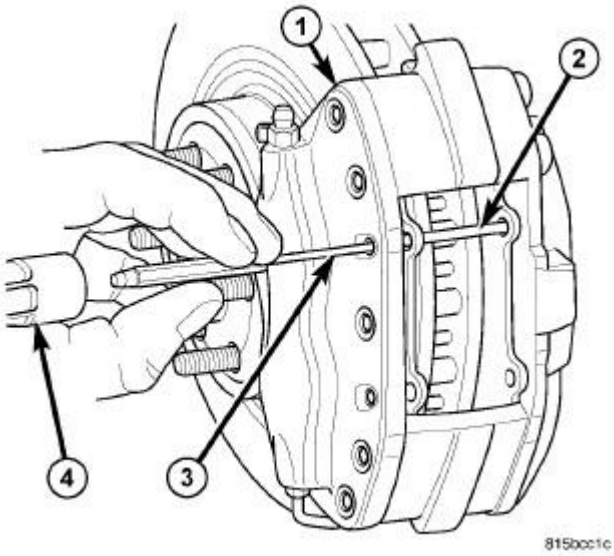

Fig. 151: REMOVING UPPER SUPPORT PIN
Courtesy of CHRYSLER LLC

5. Using pin punch (3) and hammer (4), remove upper brake pad support pin (2) in same manner used on lower support pin.

CAUTION: When pushing pistons back into caliper bores, if hand pressure is not sufficient, use only a trim stick as shown in illustration or other

suitable soft tool to do so. Never use a screwdriver or other metal pry bar due to potential damage to braking surface of rotor or pads.

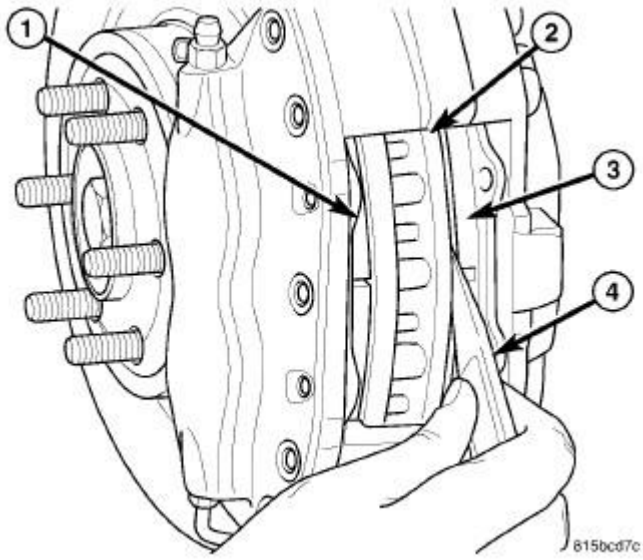

Fig. 152: PUSHING BACK PISTONS INTO BORES
Courtesy of CHRYSLER LLC

6. Using hand pressure, pull pads back to seat caliper pistons into bores if possible. If not possible, perform the following to do this correctly without damaging the caliper, pistons, dust boots or brake rotor disc.
    a. Place trim stick (3) between inboard brake pad and outer edge of rotor (1).
    b. Using trim stick (3), apply pressure against the inboard brake pad until both pistons are completely bottomed in bores of inboard caliper half. Leave trim stick in place to hold pistons in place.
    c. Place second trim stick between outboard brake pad and rotor, then repeat above step on outboard pad and pistons.

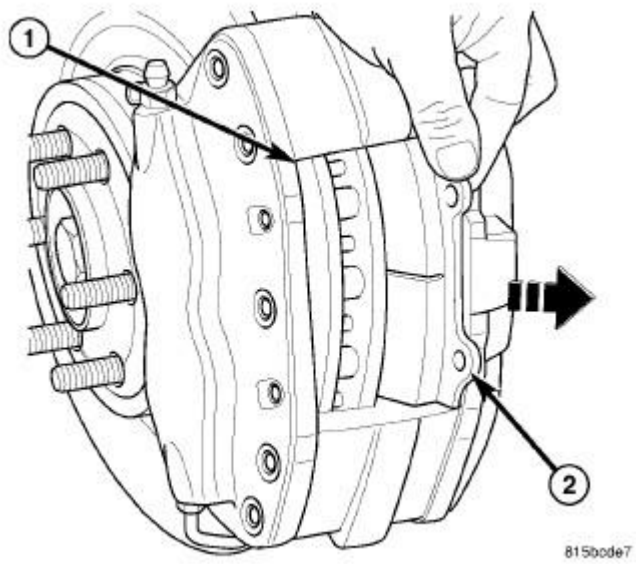

Fig. 153: BRAKE PAD REMOVAL
Courtesy of CHRYSLER LLC

7. Remove inboard brake pad (2) through opening in caliper (1). Remove outboard brake pad in same manner.

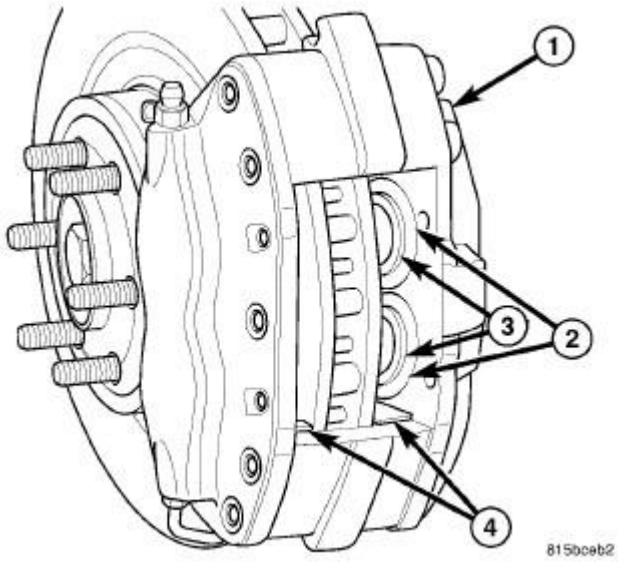

Fig. 154: PISTON AND SEAL INSPECTION
Courtesy of CHRYSLER LLC

8. Once brake pads are removed from caliper (1), inspect all four caliper pistons (3) and dust boots (2) for evidence of brake fluid leakage. Also inspect dust boots on all caliper pistons for any cuts, tears or heat cracks and brake pad supports (4) (if equipped) for excess wear or damage. If caliper fails inspection, it should be replaced.

Cleaning

CLEANING

WARNING: Chrysler LLC does not manufacture any vehicles or replacement parts that contain asbestos. Aftermarket products may or may not contain asbestos. Refer to aftermarket product packaging for product information.

Whether the product contains asbestos or not, dust and dirt can accumulate on brake parts during normal use. Follow practices prescribed by appropriate regulations for the handling, processing and disposing of dust and debris.

Inspection

INSPECTION

Visually inspect brake pads for uneven lining wear. Also inspect for excessive lining deterioration. Check the clearance between the tips of the wear indicators (if equipped) on the pads and the brake rotors.

If a visual inspection does not adequately determine the condition of the lining, a physical check will be necessary. To check the amount of lining wear, remove the disc brake pads from the vehicle.

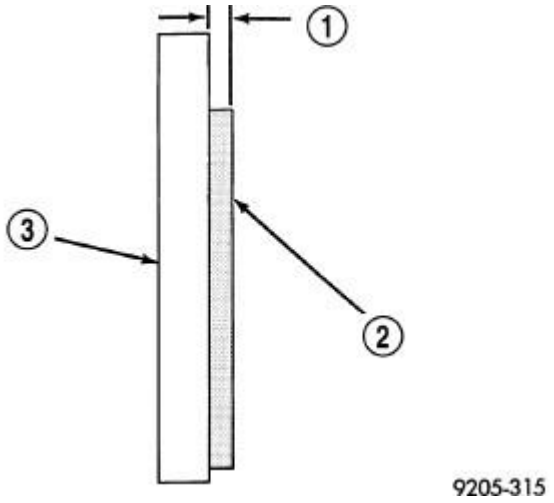

Fig. 155: Brake pad Friction Material Thickness Measurement
Courtesy of CHRYSLER LLC

1 - BRAKE SHOE ASSEMBLY FRICTION MATERIAL THICKNESS IS TO BE MEASURED AT THE THINNEST POINT.
2 - BRAKE SHOE ASSEMBLY FRICTION MATERIAL
3 - BRAKE SHOE ASSEMBLY BACKING PLATE

Measure brake pad minimum thickness (1). Brake pads must be replaced when usable material on a

brake pad lining (2) measured at its **thinnest point** measures one millimeter (0.04 inches) or less.

If a brake pad fails inspection, replace **both** disc brake pads (inboard and outboard) at each caliper. It is also necessary to replace the pads on the opposite side of the vehicle as well as the pads failing inspection to maintain proper braking characteristics.

If the brake pad assemblies do not require replacement, be sure to reinstall the brake pads in the original position they were removed from.

NOTE: It is important to inspect both front and rear brake pads during the same inspection.

Installation

REAR (EXCEPT SRT8)

NOTE: Perform steps 1 through 7 on each side of the vehicle.

1. Completely retract caliper piston back into bore of caliper. To do so:
   a. Remove fluid reservoir cap.
   b. Use hand pressure or a C-clamp may be used to retract piston, first placing a wood block over piston before installing C-clamp to avoid damaging piston.
   c. Install fluid reservoir cap.

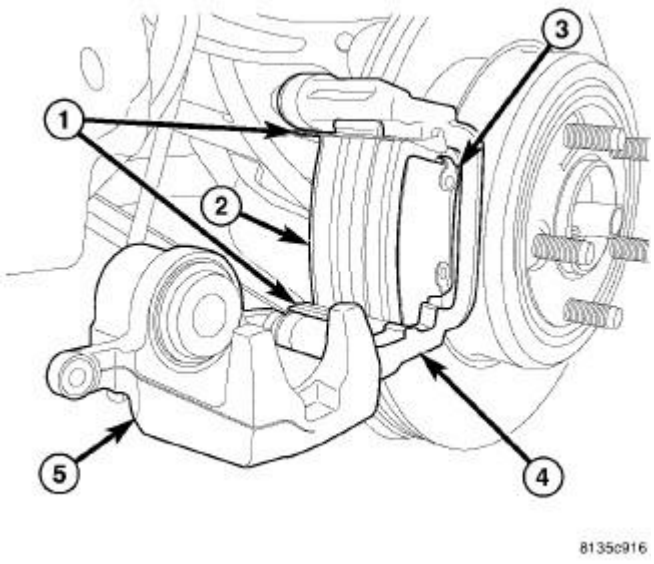

Fig. 156: ACCESS TO REAR BRAKE PADS
Courtesy of CHRYSLER LLC

2. If removed, attach anti-rattle clips (1) to upper and lower abutments of adapter (4).
3. If equipped, remove the film from the brake pad double sticky isolator.

4. Install NEW inboard (2) and outboard (3) brake pads on caliper adapter (4). NEW Inboard and outboard pads are interchangeable.
5. Push caliper guide pins into caliper adapter to clear caliper mounting bosses when installing.
6. Rotate caliper upward, aligning upper mounting boss with upper guide pin.

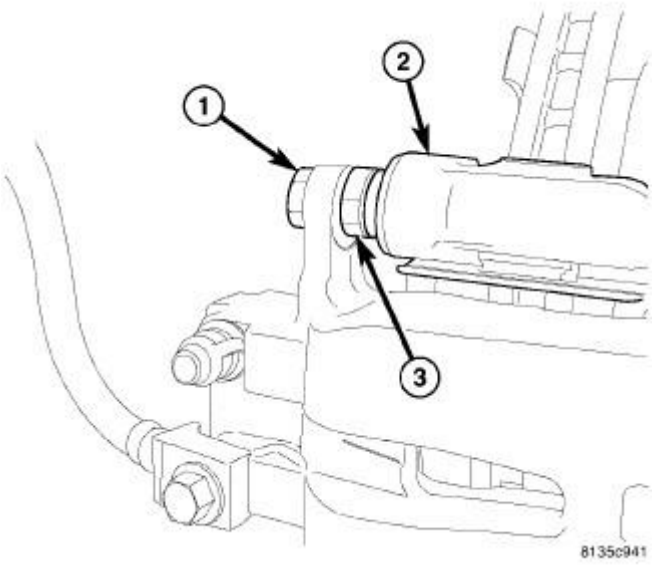

Fig. 157: CALIPER GUIDE PIN AND BOLT
Courtesy of CHRYSLER LLC

NOTE: Before installing caliper guide pin bolts, clean guide pin bolt threads and apply Mopar® Lock AND Seal Adhesive or equivalent.

7. Install upper caliper guide pin bolt (1). While holding guide pin (3) stationary tighten bolt to 31 N.m (23 ft. lbs.).

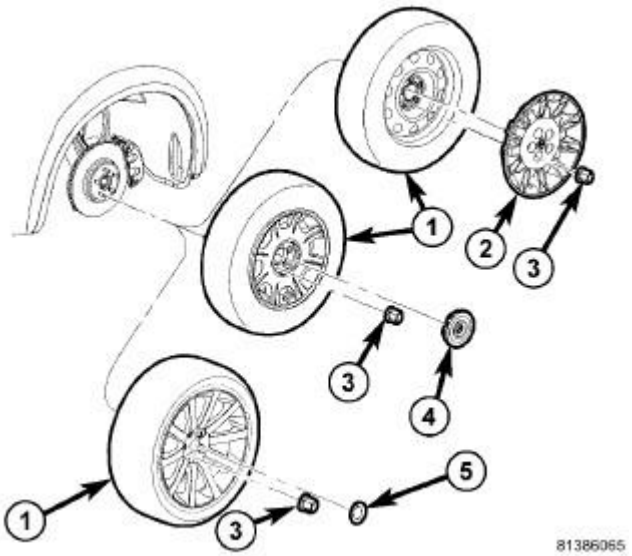

Fig. 158: TIRE AND WHEEL MOUNTING
Courtesy of CHRYSLER LLC

8. Install tire and wheel assembly (1). Tighten wheel mounting nuts (3) to 150 N.m (110 ft. lbs.) (Police - 190 N.m (140 ft. lbs.)). Refer to **Tires and Wheels - Installation** .
9. Lower vehicle.
10. Pump brake pedal several times to set pads to caliper and brake rotor.

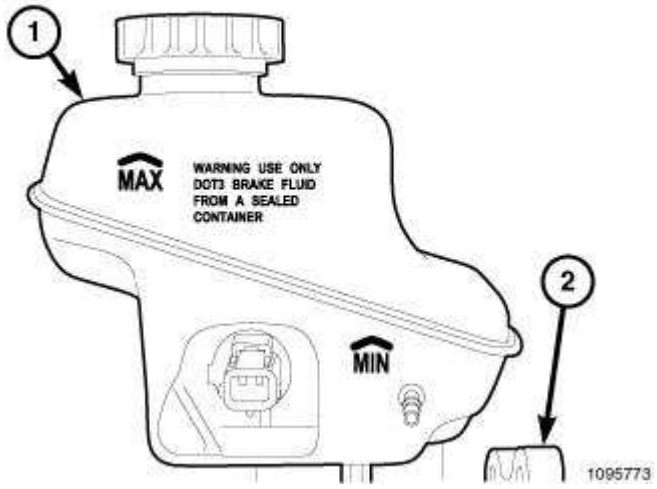

Fig. 159: RESERVOIR FLUID LEVEL MARKINGS
Courtesy of CHRYSLER LLC

11. Check and adjust brake fluid level in reservoir (1). See **Brakes/Hydraulic/Mechanical/FLUID - Standard Procedure**.

CAUTION: When NEW brake pads have been installed, keep in mind that braking effectiveness might be somewhat reduced during the first brake applications following installation.

CAUTION: A burnish procedure must be performed anytime NEW brake pads or rotors are installed on a vehicle equipped with the Police Package. This procedure is particularly important in situations where high speed pursuit is a possibility. It is recommended that the procedure be performed by the Police agency operating the vehicle so it can be performed in a safe controlled environment. This information is covered in the Police Package Owners Manual Supplement which was supplied when the vehicle was originally delivered.

12. Road test vehicle making several stops to wear off any foreign material on brakes and to seat brake shoes. If the vehicle is equipped with the Police Package, a burnish procedure must be followed (Refer to preceeding Caution).

FRONT (EXCEPT SRT8)

NOTE: Perform steps 1 through 7 on each side of the vehicle.

1. Completely retract caliper piston(s) back into bore(s) of caliper. To do so:
   a. Remove fluid reservoir cap.
   b. Use hand pressure or a C-clamp may be used to retract piston, first placing a wood block over piston(s) before installing C-clamp to avoid damaging piston(s).
   c. Install fluid reservoir cap.

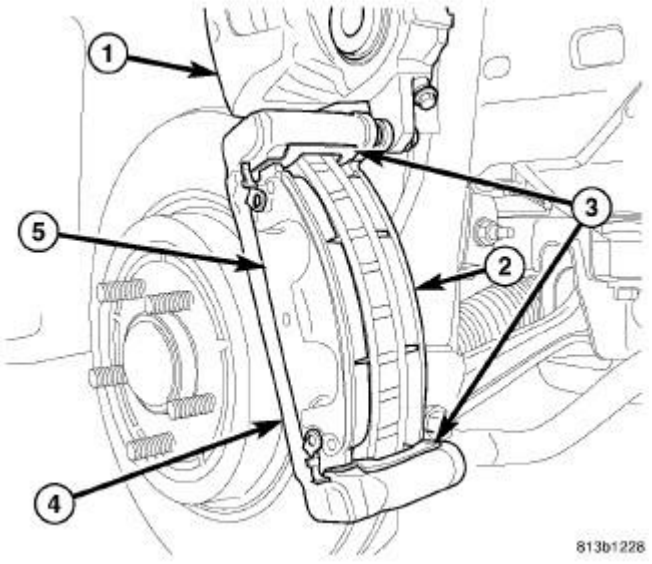

Fig. 160: ACCESS TO FRONT PADS
Courtesy of CHRYSLER LLC

2. If removed, attach anti-rattle clips (3) to upper and lower abutments of adapter (4).
3. If equipped, remove the film from the brake pad double sticky isolator.
4. Install NEW inboard (2) and outboard (5) brake pads on caliper adapter (4). NEW Inboard and outboard pads are interchangeable.
5. Push caliper guide pins into caliper adapter to clear caliper mounting bosses when installing.
6. Rotate caliper downward, aligning upper mounting boss with lower guide pin.

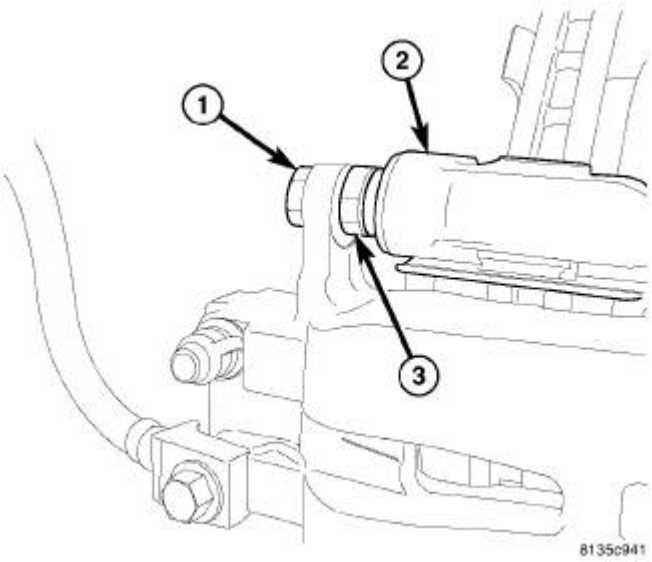

Fig. 161: CALIPER GUIDE PIN AND BOLT
Courtesy of CHRYSLER LLC

7. Install Upper caliper guide pin bolt (1). While holding guide pin (3) stationary tighten bolt to 60 N.m (44 ft. lbs.).

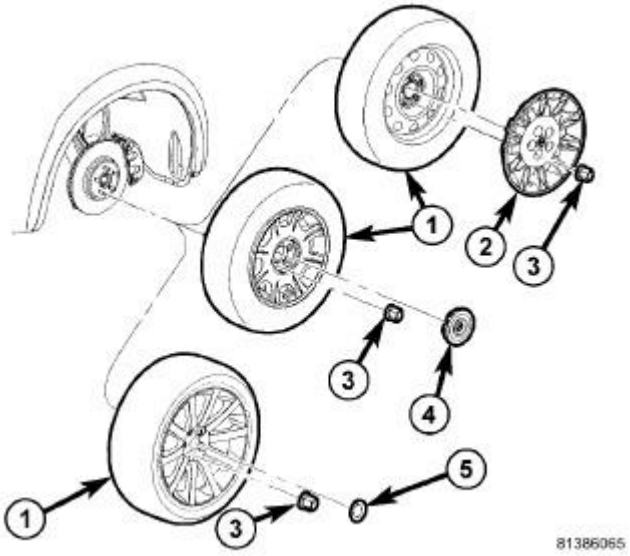

Fig. 162: TIRE AND WHEEL MOUNTING
Courtesy of CHRYSLER LLC

8. Install tire and wheel assembly (1). Tighten wheel mounting nuts (3) to 150 N.m (110 ft. lbs.) (Police - 190 N.m (140 ft. lbs.)). Refer to **Tires and Wheels - Installation** .
9. Lower vehicle.
10. Pump brake pedal several times to set pads to caliper and brake rotor.

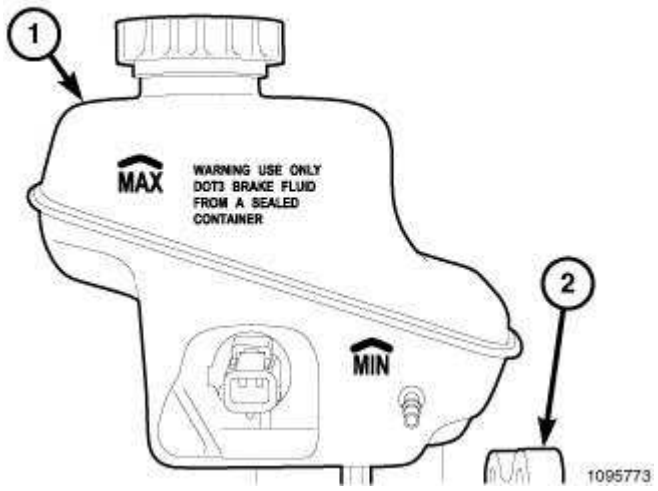

Fig. 163: RESERVOIR FLUID LEVEL MARKINGS
Courtesy of CHRYSLER LLC

11. Check and adjust brake fluid level in reservoir (1). See **Brakes/Hydraulic/Mechanical/FLUID - Standard Procedure**.

CAUTION: When NEW brake pads have been installed, keep in mind that braking effectiveness might be somewhat reduced during the first brake applications following installation.

CAUTION: A burnish procedure must be performed anytime NEW brake pads or rotors are installed on a vehicle equipped with the Police Package. This procedure is particularly important in situations where high speed pursuit is a possibility. It is recommended that the procedure be performed by the Police agency operating the vehicle so it can be performed in a safe controlled environment. This information is covered in the Police Package Owner's Manual Supplement which was supplied when the vehicle was originally delivered.

12. Road test vehicle making several stops to wear off any foreign material on brakes and to seat brake shoes. If the vehicle is equipped with the Police Package, a burnish procedure must be followed (Refer to preceeding Caution).

NOTE: Perform 1 through 11 on each side of vehicle to complete pad set installation before proceeding with 12.

1. Make sure all caliper pistons are fully seated (bottomed) in bores.

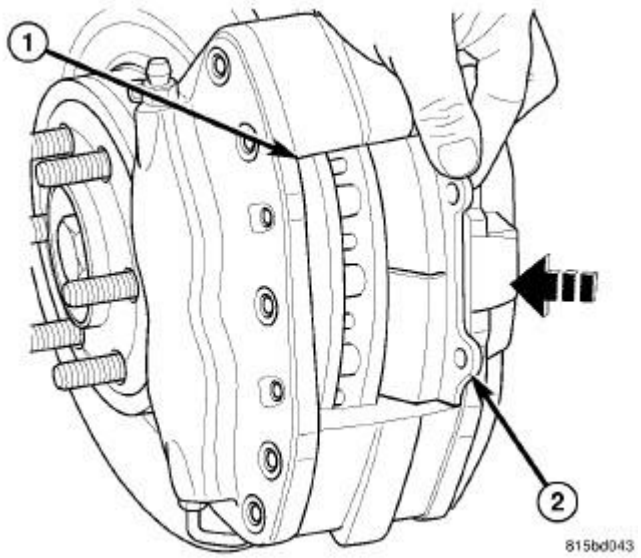

Fig. 164: BRAKE PAD INSTALLATION
Courtesy of CHRYSLER LLC

2. If equipped, remove the film from the brake pad double sticky isolator.
3. Slide NEW inboard (2) and outboard brake pads into opening (1) in disc brake caliper. **If installing rear brake pads, make sure beveled end of each pad lining is directed against the direction the rotor is rotating in when vehicle is moving forward, in other words, the rear pads need to have beveled end facing upward.**

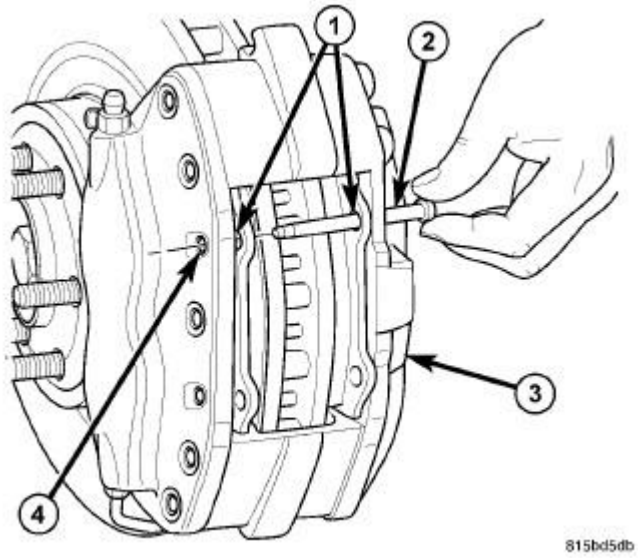

Fig. 165: INSTALLING UPPER SUPPORT PIN
Courtesy of CHRYSLER LLC

4. From inboard side, slide upper brake pad support pin (2) through caliper (3) and upper holes in both brake pads (1). Ensure that small end of support pin is in hole (4) in outboard half of caliper.

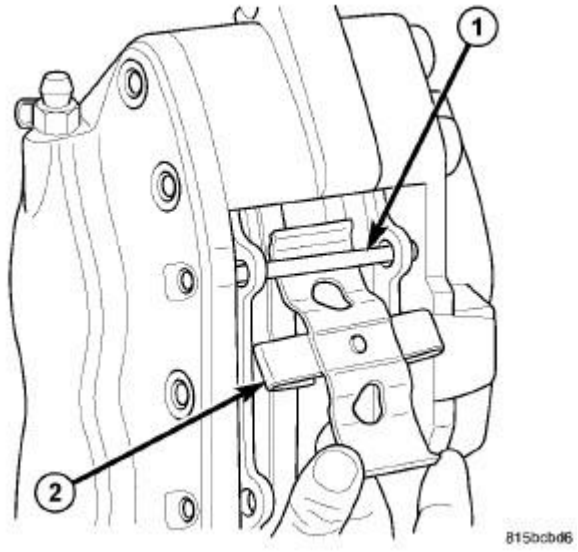

Fig. 166: REMOVING/INSTALLING SPRING CLIP
Courtesy of CHRYSLER LLC

5. Install upper end of brake pad spring clip (2) under upper brake pad support pin (1).

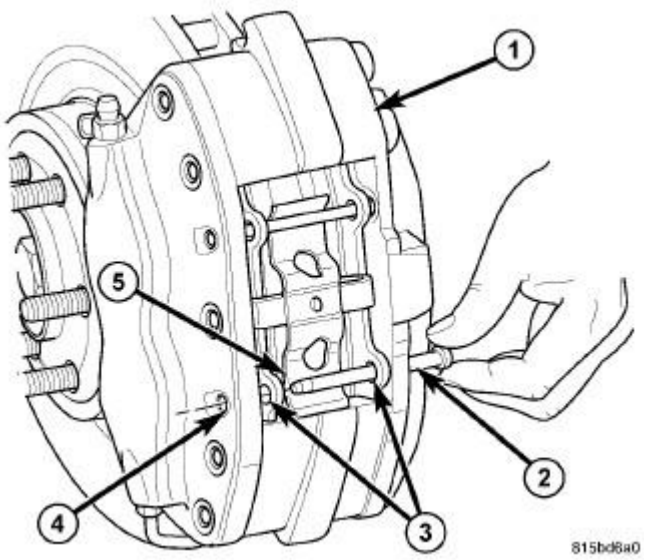

Fig. 167: INSTALLING LOWER SUPPORT PIN
Courtesy of CHRYSLER LLC

6. Press on lower end of spring clip (5) until it touches brake rotor.
7. Slide lower brake pad support pin (2) through caliper (1) and lower holes in both brake pads (3) in the same manner the upper pin was installed. Ensure small end of support pin is in hole (4) in outboard half of caliper.
8. Release the spring clip allowing it to engage lower support pin.

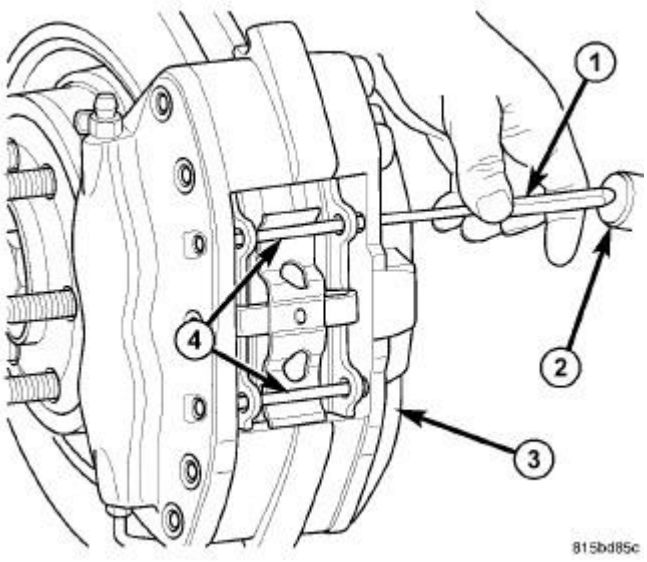

Fig. 168: SEATING SUPPORT PINS
Courtesy of CHRYSLER LLC

9. From inboard side, seat upper and lower support pins (4) into caliper (3) using pin punch (1)

and hammer (2). Support pins must be driven into caliper until support pin retaining rings are locked into place.

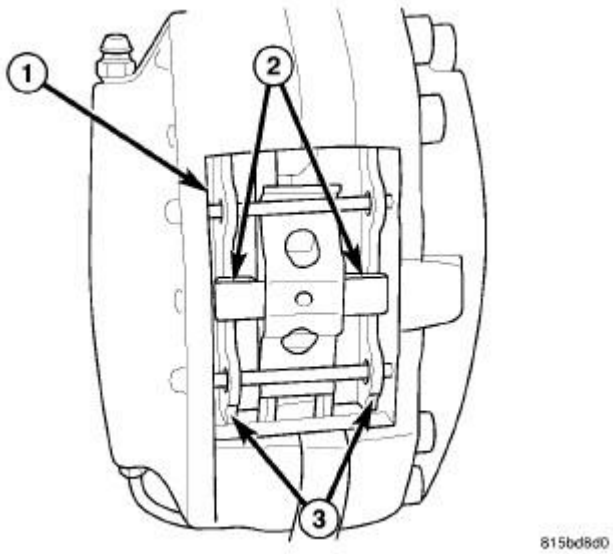

Fig. 169: CORRECTLY ASSEMBLED PADS IN CALIPER
Courtesy of CHRYSLER LLC

10. Once support pins are fully installed into caliper, inspect assembled caliper to make sure spring clip (2) is centered in opening (1) of caliper, correctly engaging upper and lower support pins, and is resting against both brake pads (3).

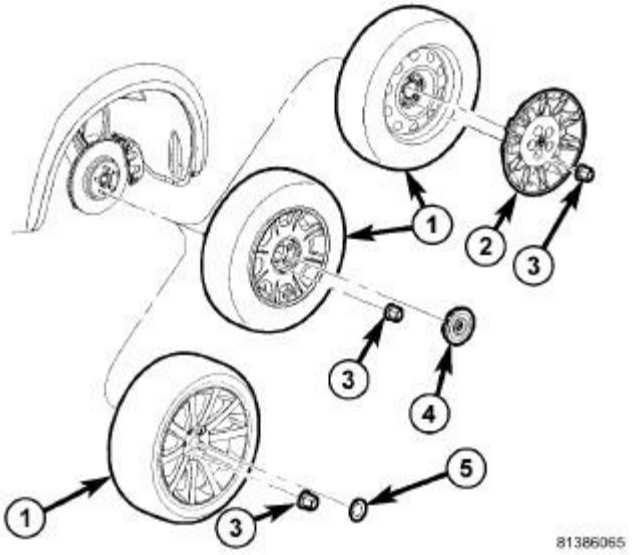

Fig. 170: TIRE AND WHEEL MOUNTING
Courtesy of CHRYSLER LLC

11. Install tire and wheel assembly (1). Tighten wheel mounting nuts (3) to 150 N.m (110 ft. lbs.)

torque. Refer to **Tires and Wheels - Installation** .

12. Lower vehicle.
13. Pump brake pedal several times to set pads to caliper and brake rotor.

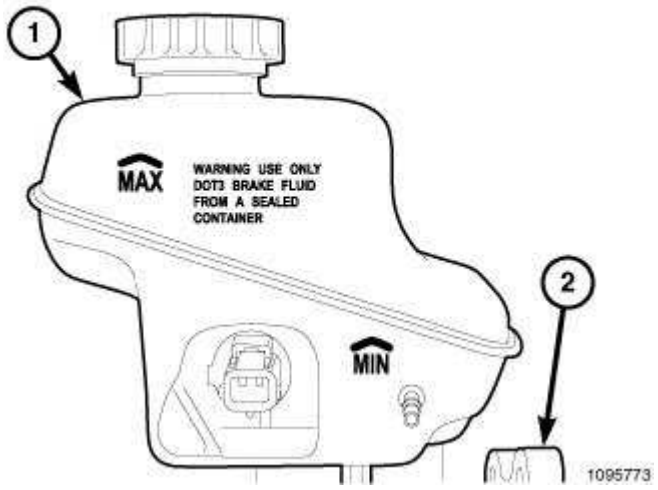

Fig. 171: RESERVOIR FLUID LEVEL MARKINGS
Courtesy of CHRYSLER LLC

14. Check and adjust brake fluid level in reservoir (1). See **Brakes/Hydraulic/Mechanical/FLUID - Standard Procedure**.

CAUTION: When NEW brake pads have been installed, keep in mind that braking effectiveness might be somewhat reduced during the first brake applications following installation.

NOTE: When NEW brake pads are installed, they must be burnished (seated) to the rotor. This must be done to ensure the proper performance of the replacement brake pads.

15. Road test vehicle making several stops to wear off any foreign material on brakes and to seat brake pad linings. NEW brake pads need to be burnished properly. See **Brakes/Hydraulic/Mechanical/PADS, Brake - Standard Procedure**.

PEDAL(S), BRAKE AND/OR ACCELERATOR

Removal

PEDAL

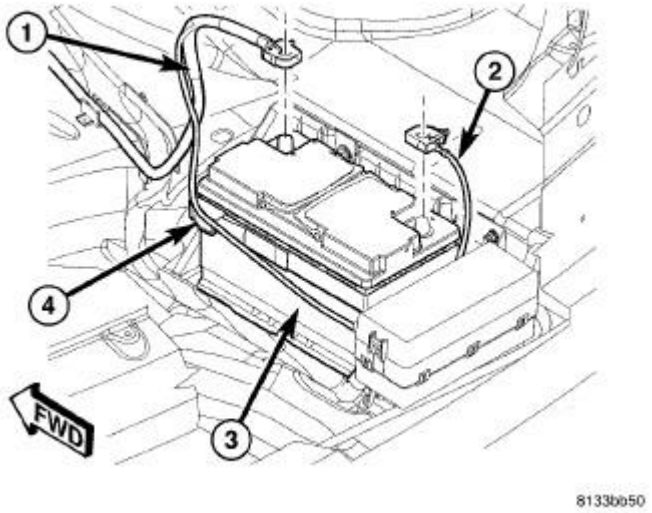

Fig. 172: BATTERY AND CABLES
Courtesy of CHRYSLER LLC

1. Disconnect and isolate negative battery cable (2) from battery post.
2. Remove driver side silencer under instrument panel. Refer to **Body/Instrument Panel/PANEL, Silencer - Installation** .
3. Remove steering column opening cover. Refer to **Body/Instrument Panel/COVER, Steering Column Opening - Installation** .

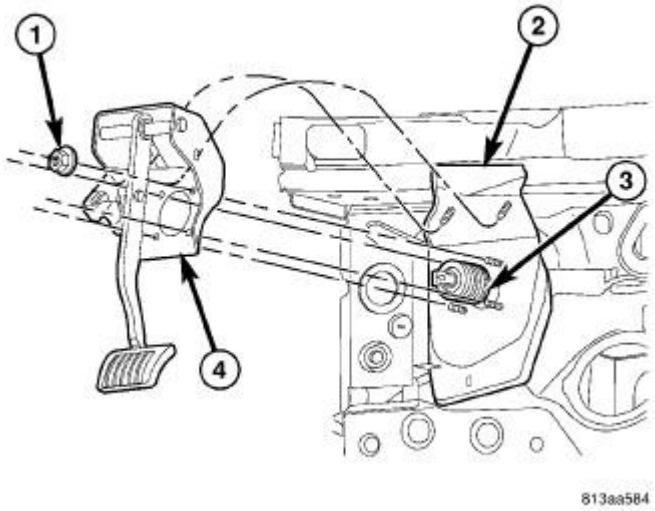

Fig. 173: Brake Pedal Mounting
Courtesy of CHRYSLER LLC

4. Remove brake lamp switch. Refer to **Electrical - Lamps and Lighting/Lamps/Lighting -**

Exterior/SWITCH, Stop Lamp - Removal .

5. Remove booster push rod from pin on brake pedal. To do so:
   a. Position small screwdriver between center tang on power brake booster brake pedal pin retaining clip.
   b. Rotate screwdriver enough to allow retaining clip center tang to pass over end of brake pedal pin, then slide retaining clip off brake pedal pin.
   c. **Discard retaining clip. It is not to be reused. Install NEW retaining clip when assembling.**
6. Slide booster push rod (3) off brake pedal pin.
7. Remove four power brake booster (3) mounting nuts (1).
8. Remove two nuts (1) fastening pedal bracket to upper dash panel (2).
9. Push power brake booster (3) forward into engine compartment as far as possible by hand. Do not force it.
10. Remove brake pedal (4).

Installation

INSTALLATION

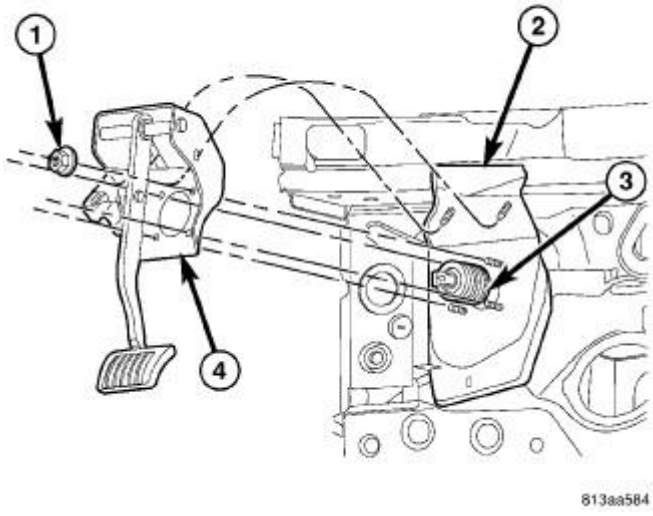

Fig. 174: Brake Pedal Mounting
Courtesy of CHRYSLER LLC

1. Install the brake pedal assembly (4) under instrument panel and slide over booster push rod.
2. From engine compartment side, push power brake booster (3) mounting studs back through dash panel (2) and brake pedal bracket.
3. Install two upper mounting nuts (1) fastening pedal bracket to upper dash panel (2). **Do not tighten at this time.**
4. Install four power brake booster mounting nuts (1). Tighten nuts to 25 N.m (18 ft. lbs.).

5. Tighten two upper mounting nuts (1) to 25 N.m (18 ft. lbs.) torque.
6. Slide booster push rod (3) onto brake pedal pin. Install NEW retaining clip securing push rod to brake pedal.
7. Install and adjust brake lamp switch. Refer to **Electrical - Lamps and Lighting/Lamps/Lighting - Exterior/SWITCH, Stop Lamp - Installation** .
8. Install steering column opening cover. Refer to **Body/Instrument Panel/COVER, Steering Column Opening - Installation** .
9. Install driver side silencer under instrument panel. Refer to **Body/Instrument Panel/PANEL, Silencer - Installation** .

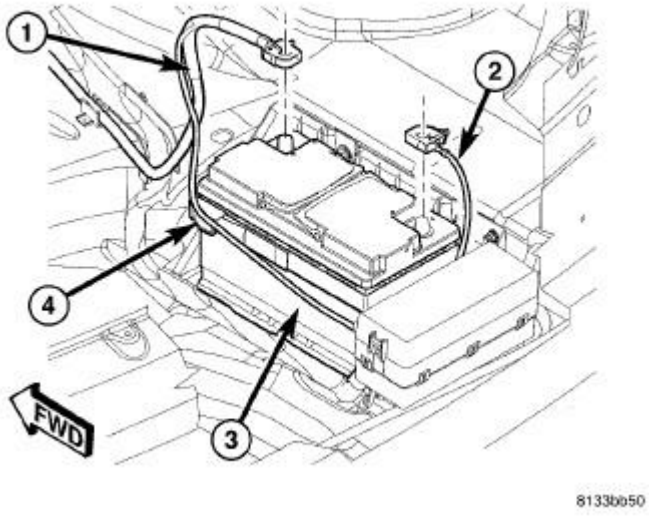

Fig. 175: BATTERY AND CABLES
Courtesy of CHRYSLER LLC

10. Connect negative battery cable (2) to battery post. It is important that this is performed properly. Refer to **Electrical - Engine Systems/Battery System - Standard Procedure** .
11. Road test vehicle testing operation of brakes.

RESERVOIR, BRAKE MASTER CYLINDER

Removal

REMOVAL

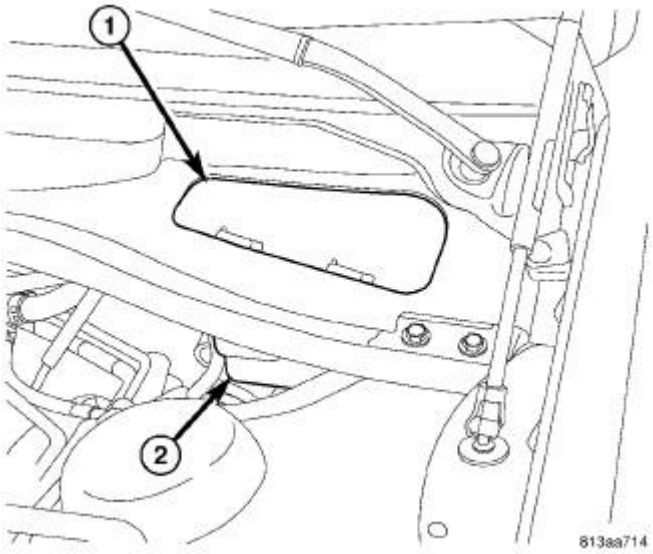

Fig. 176: COWL ACCESS PANEL
Courtesy of CHRYSLER LLC

1. Remove access panel (1) in cowl area to expose master cylinder (2).
2. Thoroughly clean all surfaces of brake fluid reservoir and master cylinder. Use only Mopar® Brake Parts Cleaner or equivalent.

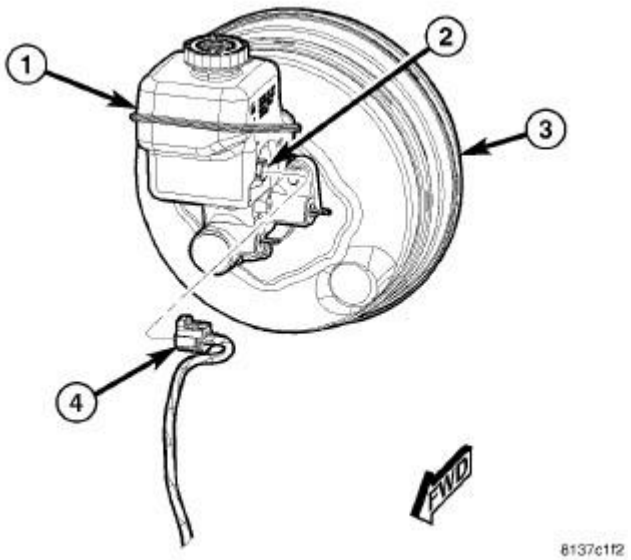

Fig. 177: BRAKE FLUID LEVEL SENSOR CONNECTION
Courtesy of CHRYSLER LLC

3. Disconnect wiring harness connector (4) from brake fluid level sensor (2) in master cylinder brake fluid reservoir (1).

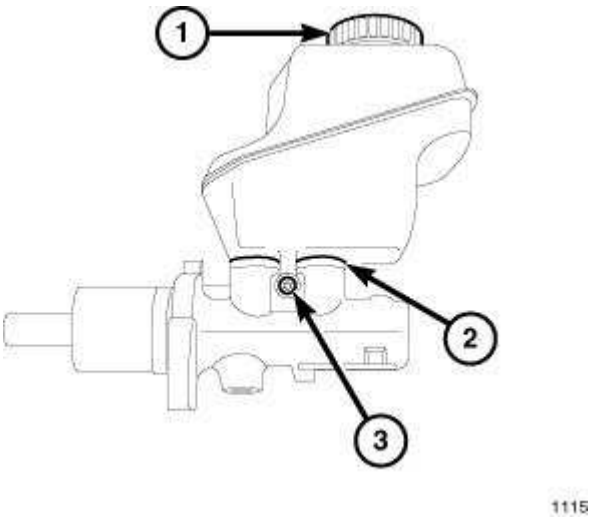

Fig. 178: FLUID RESERVOIR MOUNTING
Courtesy of CHRYSLER LLC

4. Remove brake fluid reservoir cap (1). Using a clean syringe or equivalent type tool, empty as much brake fluid as possible from the reservoir.

CAUTION: When removing fluid reservoir from the master cylinder, do not pry off using any type of tool. This can damage the fluid reservoir or master cylinder housing.

5. Remove screw (3) fastening fluid reservoir to master cylinder housing.
6. Rock the brake fluid reservoir side-to-side while pulling up to remove it from seal grommets in master cylinder housing.

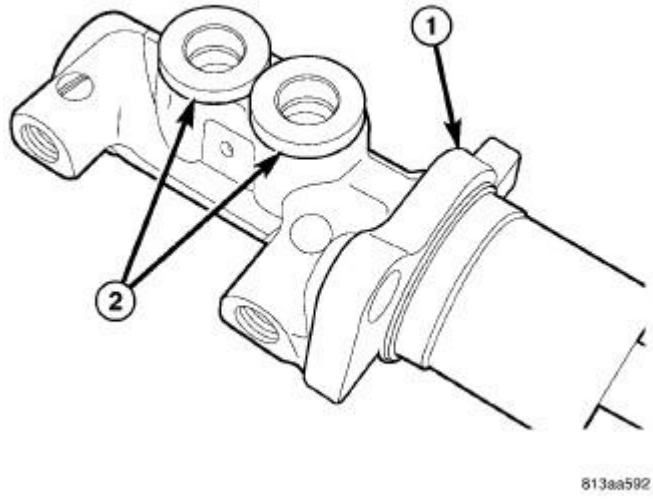

Fig. 179: RESERVOIR SEAL GROMMETS
Courtesy of CHRYSLER LLC

7. Remove two brake fluid reservoir seal grommets (2) from master cylinder housing (1).

Installation

INSTALLATION

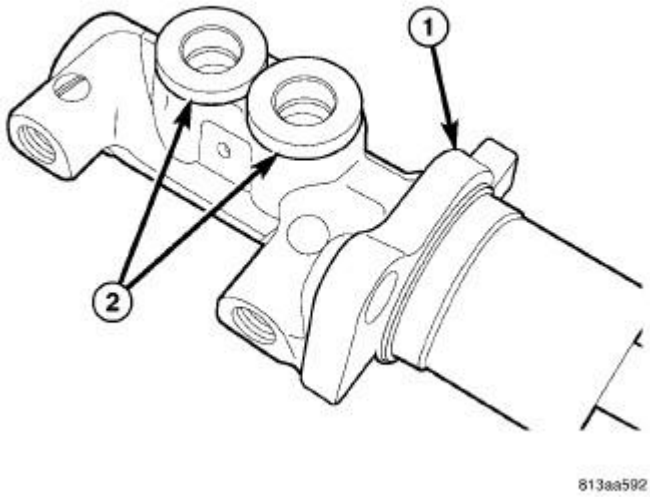

Fig. 180: RESERVOIR SEAL GROMMETS
Courtesy of CHRYSLER LLC

1. Install NEW brake fluid reservoir sealing grommets (2) in master cylinder housing (1).

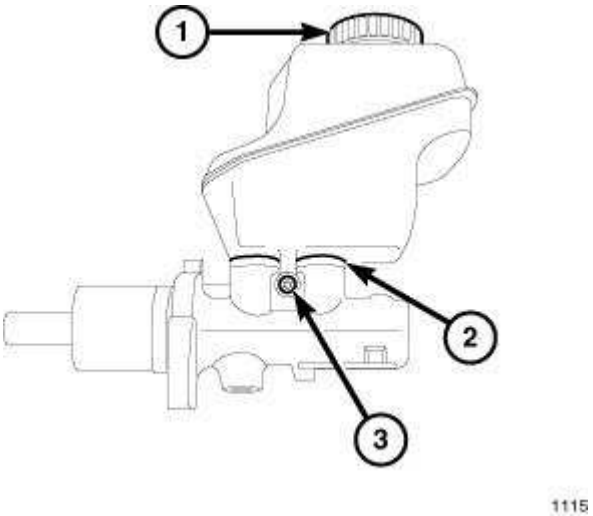

Fig. 181: FLUID RESERVOIR MOUNTING
Courtesy of CHRYSLER LLC

2. Lubricate reservoir mounting area with fresh clean brake fluid. Place reservoir in position over sealing grommets. Seat reservoir into sealing grommets using a rocking motion while firmly

pressing down on fluid reservoir. Once installed, make sure fluid reservoir is touching the top of both sealing grommets (2) or reservoir is not properly installed.

3. Install fluid reservoir mounting screw (3). Tighten screw to 28 N.m (250 in. lbs.) torque.

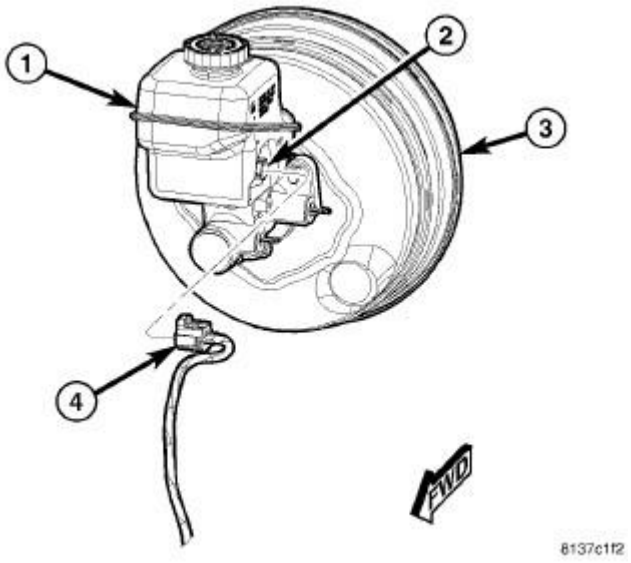

Fig. 182: BRAKE FLUID LEVEL SENSOR CONNECTION
Courtesy of CHRYSLER LLC

4. Connect wiring harness connector (4) to brake fluid level sensor (2) mounted in brake fluid reservoir (1).

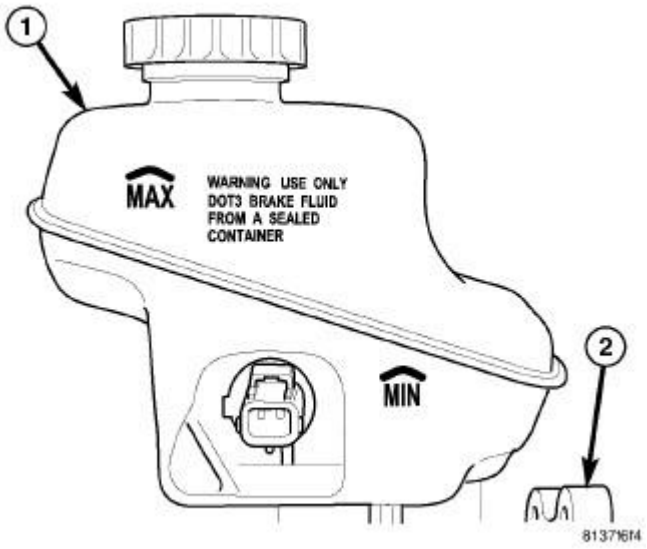

Fig. 183: RESERVOIR FLUID LEVEL MARKINGS
Courtesy of CHRYSLER LLC

5. Fill master cylinder fluid reservoir (1) with clean, fresh Mopar® Brake Fluid or equivalent.
6. Install access panel in cowl area.

WARNING: Be certain a firm brake pedal is achieved prior to attempting vehicle operation. If a firm brake pedal cannot be achieved, bleed entire brake hydraulic system and check for leaks. See Brakes - Standard Procedure.

7. Road test vehicle to ensure proper operation of brakes.

ROTOR, BRAKE

Diagnosis and Testing

BRAKE ROTOR

Any servicing of the rotor requires extreme care to maintain the rotor within service tolerances to ensure proper brake action.

Excessive runout or wobble in a rotor can increase pedal travel due to piston knock-back. This increases guide pin sleeve wear due to the tendency of the caliper to follow the rotor wobble.

When diagnosing a brake noise or pulsation, the machined disc braking surface should be inspected.

BRAKING SURFACE INSPECTION

Light braking surface scoring and wear is acceptable. If heavy scoring or warping is evident, the rotor must be refaced or replaced. See **Brakes/Hydraulic/Mechanical/ROTOR, Brake - Standard Procedure**.

Excessive wear and scoring of the rotor can cause improper lining contact on the rotor's braking surface. If the ridges on the rotor are not removed before new brake shoes are installed, improper wear of the shoes will result.

If a vehicle has not been driven for a period of time, the rotor's braking surface will rust in the areas not covered by the brake shoes at that time. Once the vehicle is driven, noise and chatter from the disc brakes can result when the brakes are applied.

Some discoloration or wear of the rotor surface is normal and does not require resurfacing when linings are replaced. If cracks or burned spots are evident, the rotor must be replaced.

ROTOR MINIMUM THICKNESS

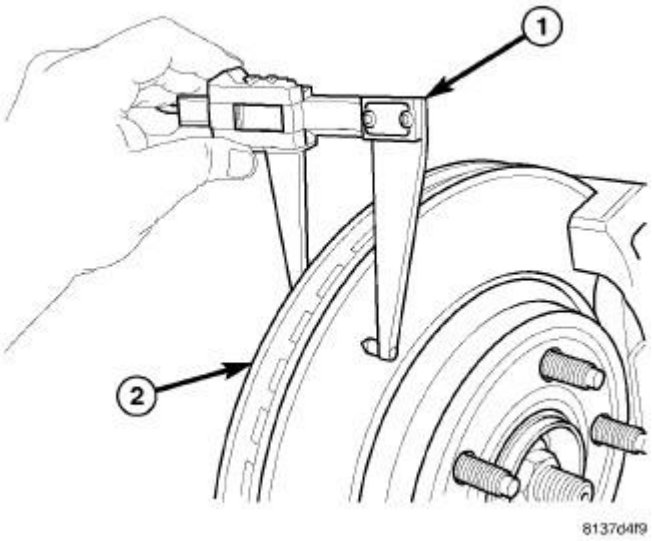

Fig. 184: MEASURING ROTOR THICKNESS
Courtesy of CHRYSLER LLC

Measure rotor thickness (1) at the center of the brake shoe contact surface. Replace the rotor if it is worn below minimum thickness or if machining the rotor will cause its thickness to fall below specifications.

CAUTION: Do not machine the rotor if it will cause the rotor to fall below minimum thickness.

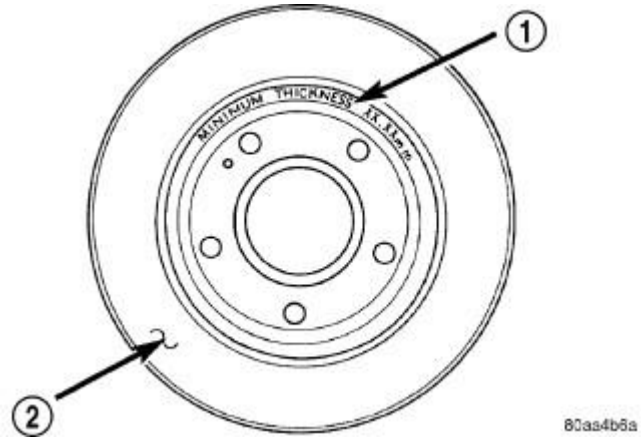

Fig. 185: Minimum Brake Rotor Thickness Markings (Typical)
Courtesy of CHRYSLER LLC

1 - ROTOR MINIMUM THICKNESS MARKING
2 - ROTOR

Most minimum thickness specifications (1) are cast into the rotor's un-machined surface (2). Some

brake rotors have the minimum thickness specification located elsewhere. Refer to the following paragraph. Limits can also be found in this component's specification table. See **Brakes/Hydraulic/Mechanical/ROTOR, Brake - Specifications**.

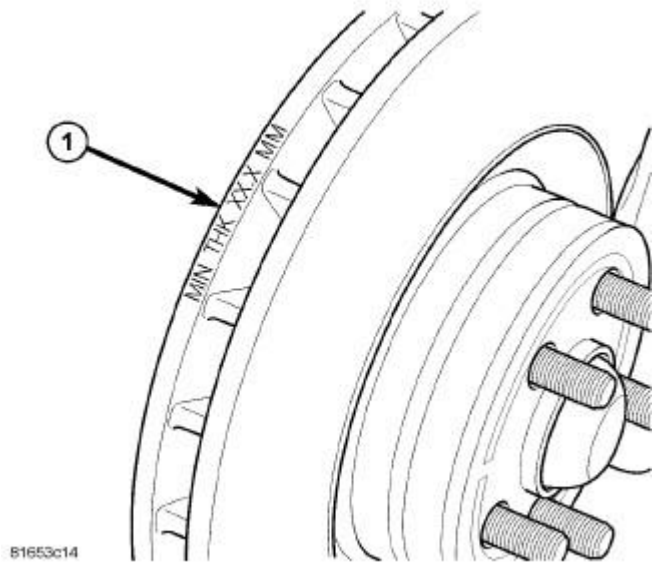

Fig. 186: MINIMUM THICKNESS MARKINGS ON ROTORS EDGE
Courtesy of CHRYSLER LLC

The minimum thickness specification is stamped into the outer diameter edge (1) (along vented end) of the disc.

ROTOR THICKNESS VARIATION

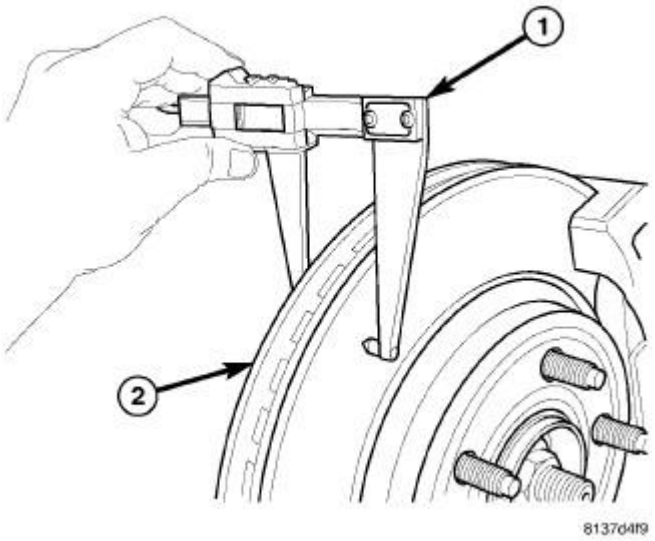

Fig. 187: MEASURING ROTOR THICKNESS
Courtesy of CHRYSLER LLC

Thickness variation in a rotor's braking surface can result in pedal pulsation, chatter and surge. This can also be caused by excessive runout in the rotor or the hub.

Rotor thickness variation measurements should be made in conjunction with measuring runout. Measure thickness of the brake rotor (2) at 12 equal points around the rotor braking surface with a micrometer (1) at a radius approximately 25 mm (1 inch) from edge of rotor. If thickness measurements vary beyond the specification listed in the specification table. See **Brakes/Hydraulic/Mechanical/ROTOR, Brake - Specifications**, the rotor should be refaced or replaced. See **Brakes/Hydraulic/Mechanical/ROTOR, Brake - Standard Procedure**.

ROTOR RUNOUT

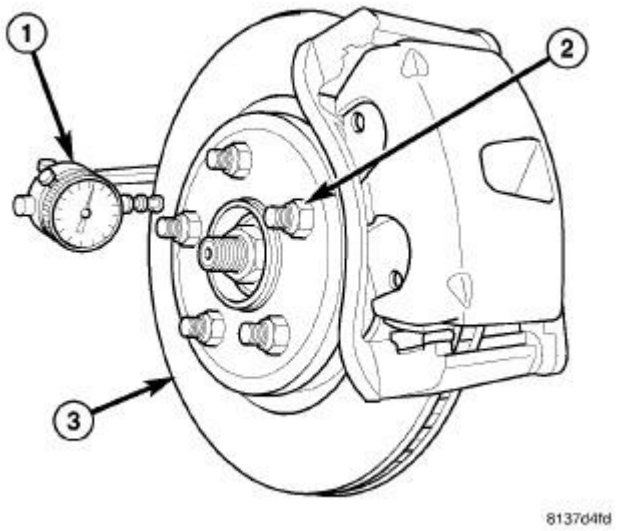

Fig. 188: MEASURING ROTOR RUNOUT
Courtesy of CHRYSLER LLC

On-vehicle rotor runout is the combination of the individual runout of the hub face and the runout of the brake rotor (hub runout can be measured separately). To measure rotor runout on the vehicle:

1. Raise and support vehicle. Refer to **Vehicle Quick Reference/Hoisting - Standard Procedure** .
2. Remove tire and wheel assembly. Refer to **Tires and Wheels - Removal** .
3. Install standard wheel mounting nuts, flat side to rotor, on all studs (2). Progressively tighten nuts to 150 N.m (110 ft. lbs.).
4. Mount Dial Indicator C-3339A (1), with Wheel 25w, or equivalent, to knuckle. Position Dial Indicator Wheel to contact rotor braking surface approximately ten millimeters from outer edge of rotor (3).
5. Slowly rotate brake rotor checking lateral runout, marking the low and high spots. Record these measurements.
6. Check and record runout of opposite side of rotor in same fashion, marking the low and high

spots.

7. Compare runout measurement to specifications. See **Brakes/Hydraulic/Mechanical/ROTOR, Brake - Specifications**.

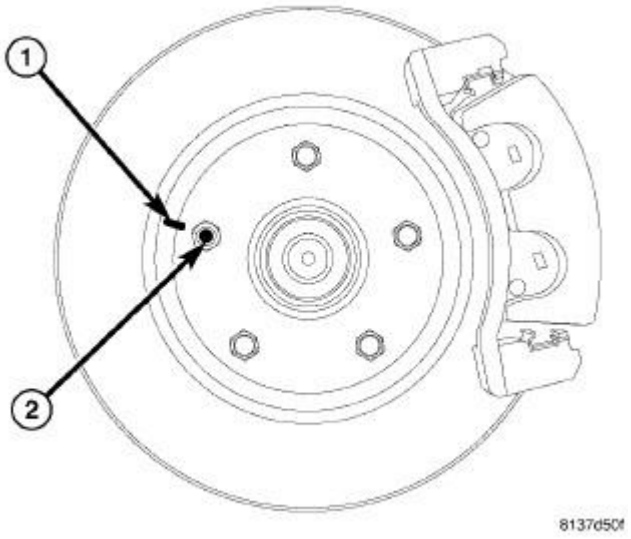

Fig. 189: WHEEL STUD AND ROTOR INDEX MARKED
Courtesy of CHRYSLER LLC

If runout is in excess of specifications, check the lateral runout of the hub face. Before removing the rotor from the hub, place a chalk mark across both the rotor (1) and the one wheel stud (2) closest to where the high runout measurement was taken. This way, the original mounting spot of the rotor on the hub is indexed.

8. Remove the rotor from the hub. See **Brakes/Hydraulic/Mechanical/ROTOR, Brake - Removal**.

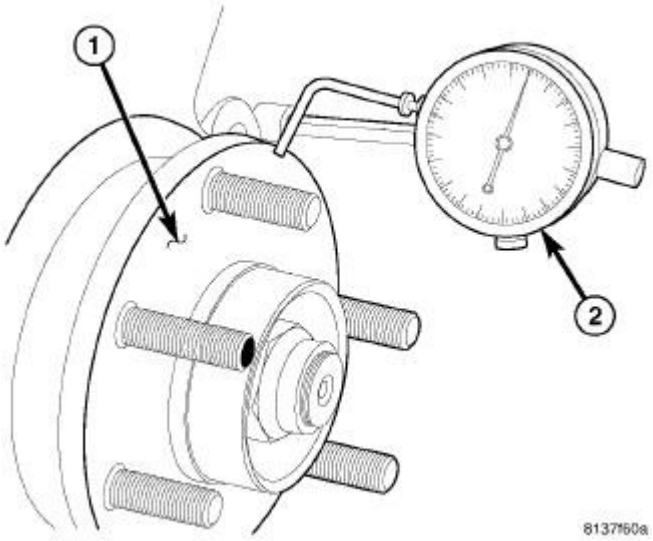

Fig. 190: MEASURING HUB RUNOUT
Courtesy of CHRYSLER LLC

NOTE: Before measuring hub runout, clean the hub face surface with an appropriate cleaner. This provides a clean surface to get an accurate indicator reading.

9. Mount Dial Indicator C-3339A (2), to the knuckle. Position Dial Indicator stem so it contacts hub face (1) near outer diameter. Care must be taken to position stem outside of stud circle, but inside of chamfer on the hub rim.
10. Slowly rotate hub measuring runout. Hub runout should not exceed 0.01 mm (0.0004 inch). If runout exceeds this specification, the hub must be replaced. Refer to **Front Suspension/Front/HUB AND BEARING - Removal** .

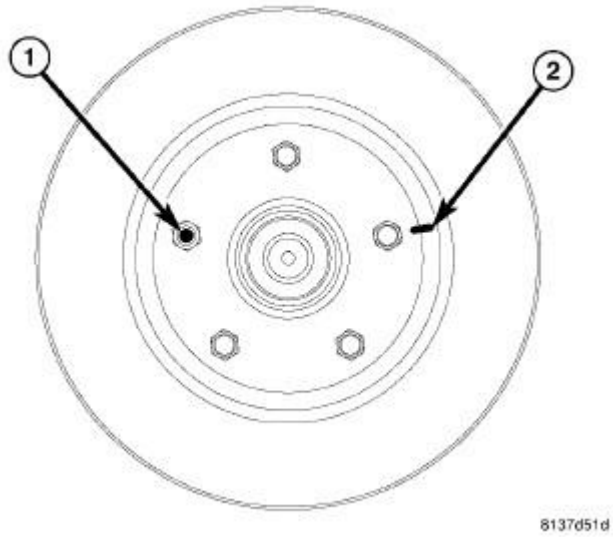

Fig. 191: ROTOR REINDEXED ON WHEEL STUDS
Courtesy of CHRYSLER LLC

11. If hub runout does not exceed this specification, install original rotor back on hub, aligning chalk mark on rotor (2) with a wheel mounting stud, two studs apart from original stud (1).

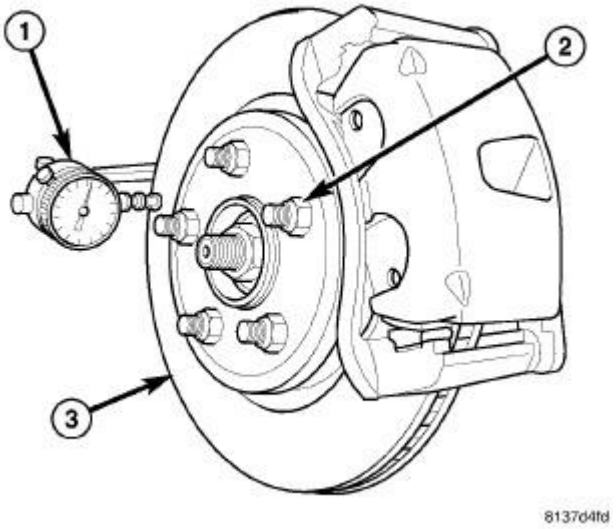

Fig. 192: MEASURING ROTOR RUNOUT
Courtesy of CHRYSLER LLC

12. Install standard wheel mounting nuts, flat side to rotor, on all studs (2). Progressively tighten nuts to 150 N.m (110 ft. lbs.).
13. Mount Dial Indicator (1) and re-measure runout on both sides of the brake rotor as explained in earlier steps to see if runout is now within specifications. See **Brakes/Hydraulic/Mechanical/ROTOR, Brake - Specifications**.

14. If runout is still not within specifications, reface or replace brake rotor. See **Brakes/Hydraulic/Mechanical/ROTOR, Brake - Standard Procedure**.

Standard Procedure

BRAKE ROTOR MACHINING

NOTE: Refacing the rotor is not required each time the brake pads are replaced, only when the need is foreseen.

Any servicing of the rotor requires extreme care to maintain the rotor within service tolerances to ensure proper brake action.

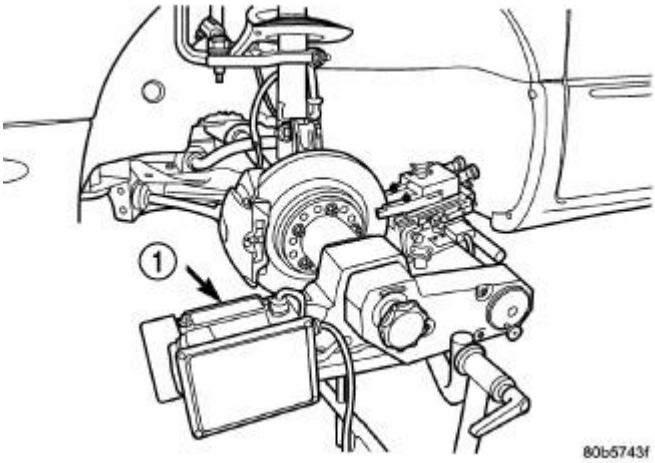

Fig. 193: On-Car Brake Lathe
Courtesy of CHRYSLER LLC

1 - ON-CAR BRAKE LATHE

If the rotor surface is deeply scored or warped, or there is a complaint of brake roughness or brake pedal pulsation, the rotor should be refaced using a hub-mounted on-car brake lathe (1), or replaced.

The use of a hub-mounted on-car brake lathe (1) is highly recommended to eliminate the possibility of excessive runout. It trues the brake rotor to the vehicle's hub and bearing.

Minimum allowable thickness is the minimum thickness to which the brake rotor machined surface may be cut.

CAUTION: Do not machine the rotor if it will cause the rotor to fall below minimum thickness.

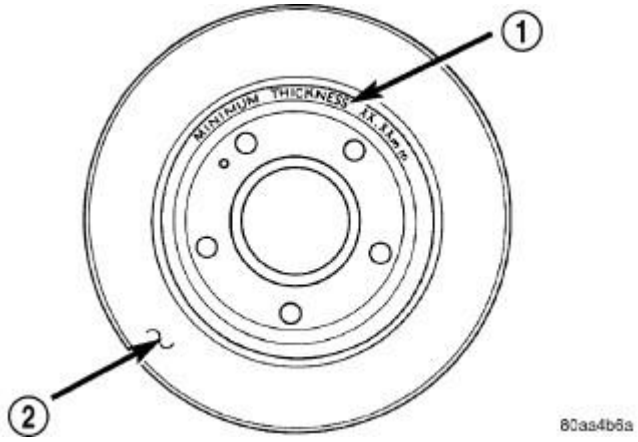

Fig. 194: Minimum Brake Rotor Thickness Markings (Typical)
Courtesy of CHRYSLER LLC

1 - ROTOR MINIMUM THICKNESS MARKING
2 - ROTOR

NOTE: **Most brake rotors (2) have markings for minimum allowable thickness specification cast into an un-machined surface of the rotor or stamped into the hat section (1). Some brake rotors have the minimum thickness specification located elsewhere. Refer to the following paragraph. Minimum thickness specifications can also be found in this component's specification table. See Brakes/Hydraulic/Mechanical/ROTOR, Brake - Specifications.**

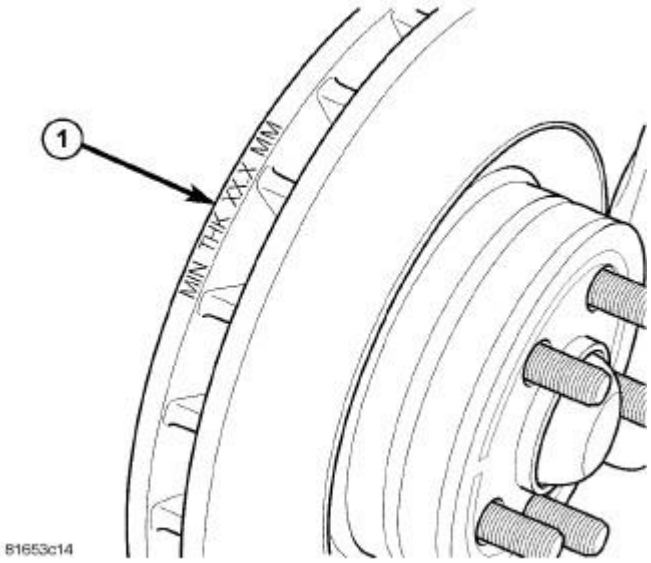

Fig. 195: MINIMUM THICKNESS MARKINGS ON ROTORS EDGE
Courtesy of CHRYSLER LLC

NOTE: **The minimum thickness specification is stamped into the outer diameter edge**

(1) (along vented end) of the disc.

Before lathe installation, verify the brake rotor face and the hub adapters are free of any chips, rust, or contamination.

When mounting and using the brake lathe, strict attention to the brake lathe manufacturer's operating instructions is required.

Machine both sides of the brake rotor at the same time. Cutting both sides at the same time minimizes the possibility of a tapered or uneven cut.

When refacing a rotor, the required TIR (Total Indicator Reading) and thickness variation limits MUST BE MAINTAINED. Extreme care in the operation of rotor turning equipment is required. Specifications for brake rotor machining can be found in this service information specification table. See **Brakes/Hydraulic/Mechanical/ROTOR, Brake - Specifications**.

Removal

FRONT

NOTE: Before proceeding. See Brakes - Warning. See Brakes - Caution.

1. Raise and support vehicle. Refer to **Vehicle Quick Reference/Hoisting - Standard Procedure** .
2. Remove wheel mounting nuts, then tire and wheel assembly.

CAUTION: When pushing pistons back into caliper bores, use only a trim stick as shown in illustration or other suitable soft tool. Never use a screwdriver or other metal pry bar due to potential damage to braking surface of rotor, caliper, pistons or dust boots.

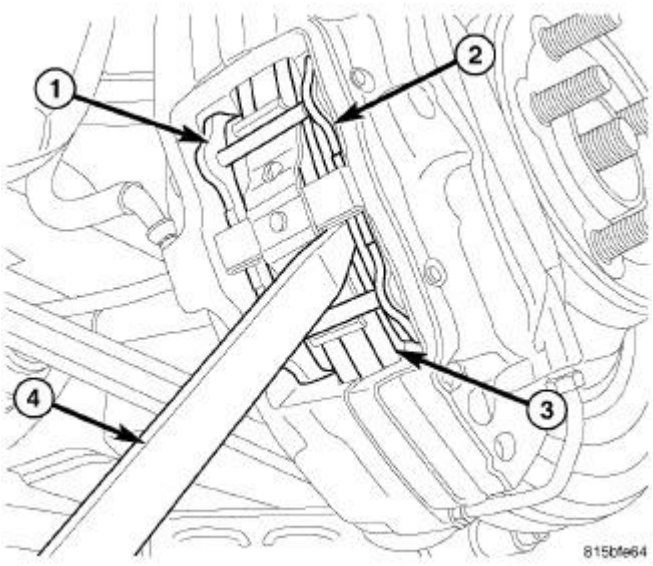

Fig. 196: PUSHING BACK PISTONS IN BORE
Courtesy of CHRYSLER LLC

3. Place trim stick (4) between brake pad (2) and outer edge of rotor (3).
4. Using trim stick, slowly apply pressure against brake pad (2) until both pistons on that side of caliper are completely bottomed in bores of caliper half.

NOTE: Repeat above procedure to opposite brake pad (1) and pistons as necessary.

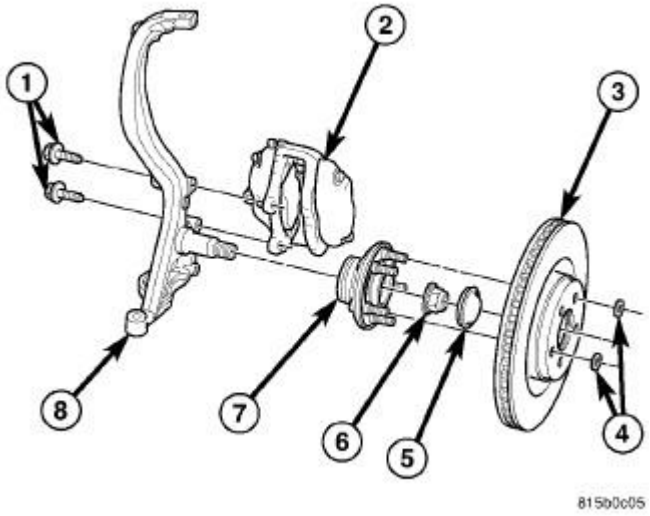

Fig. 197: FRONT DISC BRAKES
Courtesy of CHRYSLER LLC

5. Remove caliper mounting bolts (1).
6. Remove brake caliper (2) with pads from knuckle (8) and brake rotor (3). Hang assembly out of way using wire or a bungee cord. Use care not to overextend brake hose when doing this.
7. Remove any clips (4) retaining brake rotor (3) to wheel studs.
8. Slide brake rotor (3) off hub and bearing (7).

REAR

NOTE: Before proceeding. See Brakes - Warning. See Brakes - Caution.

1. Raise and support vehicle. Refer to **Vehicle Quick Reference/Hoisting - Standard Procedure** .
2. Remove wheel mounting nuts, then tire and wheel assembly.

CAUTION: When pushing pistons back into caliper bores, use only a trim stick as shown in illustration or other suitable soft tool. Never use a screwdriver or other metal pry bar due to potential damage to braking surface of rotor, caliper, pistons or dust boots.

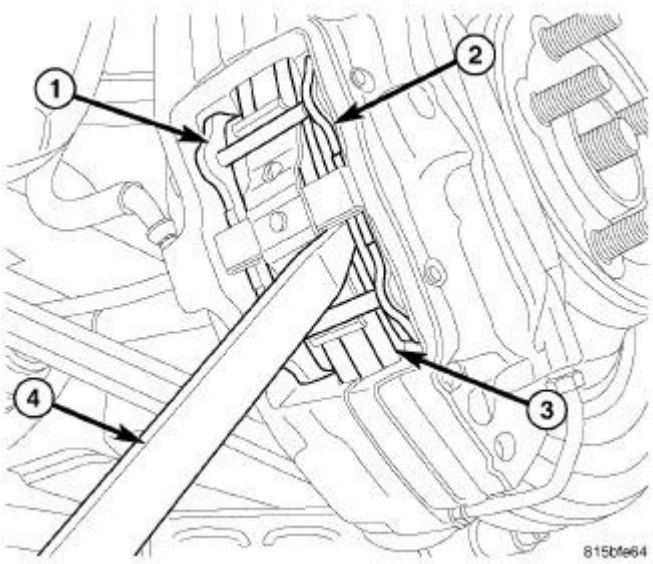

Fig. 198: PUSHING BACK PISTONS IN BORE
Courtesy of CHRYSLER LLC

3. Place trim stick (4) between brake pad (2) and outer edge of rotor (3).
4. Using trim stick, slowly apply pressure against brake pad (2) until both pistons on that side of caliper are completely bottomed in bores of caliper half.

NOTE: Repeat above procedure to opposite brake pad (1) and pistons as necessary.

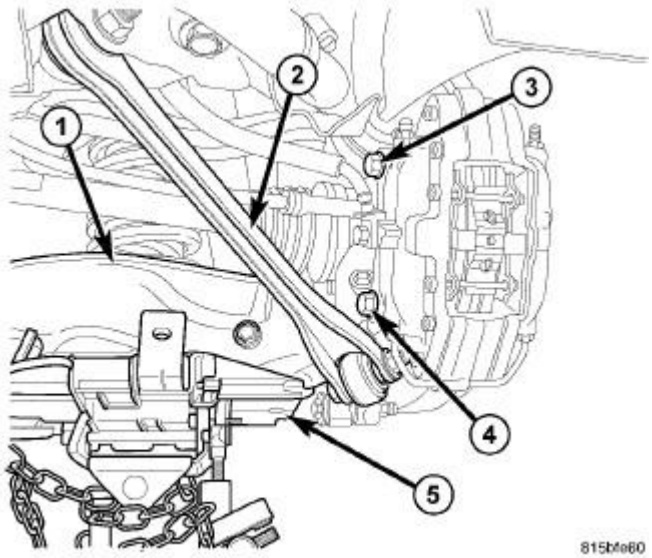

Fig. 199: ACCESSING REAR CALIPER MOUNTING BOLTS
Courtesy of CHRYSLER LLC

5. Support spring link (1) using a transmission jack (5) or other appropriate jack. Raise spring link just enough to access brake caliper lower mounting bolt (4) from above compression link (2).

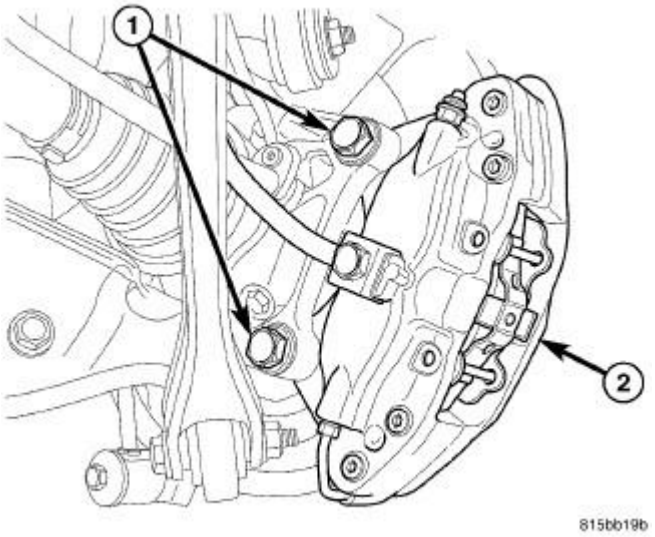

Fig. 200: REAR CALIPER MOUNTING - SRT8
Courtesy of CHRYSLER LLC

6. Remove the lower and upper caliper mounting bolts (1).
7. Remove brake caliper (2) with pads from knuckle and brake rotor. Hang assembly out of way using wire or a bungee cord. Use care not to overextend brake hose when doing this.

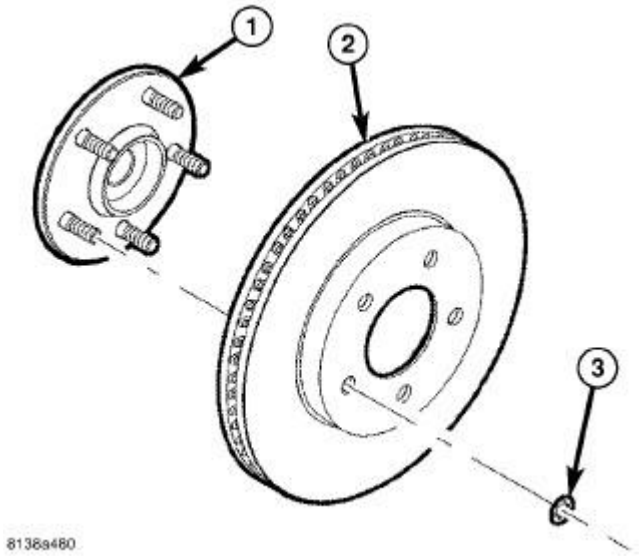

Fig. 201: VENTED BRAKE ROTOR MOUNTING
Courtesy of CHRYSLER LLC

8. Remove any clips (3) retaining brake rotor (2) to wheel mounting studs.
9. Slide brake rotor (2) off hub and bearing (1).

Installation

FRONT

NOTE: Inspect brake pads before installation. See Brakes/Hydraulic/Mechanical/PADS, Brake - Inspection.

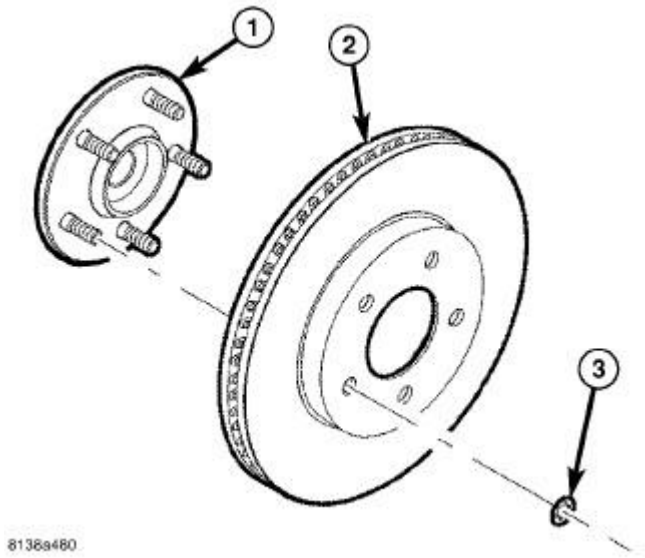

Fig. 202: VENTED BRAKE ROTOR MOUNTING
Courtesy of CHRYSLER LLC

1. Clean hub face (1) to remove any dirt or corrosion where rotor mounts.

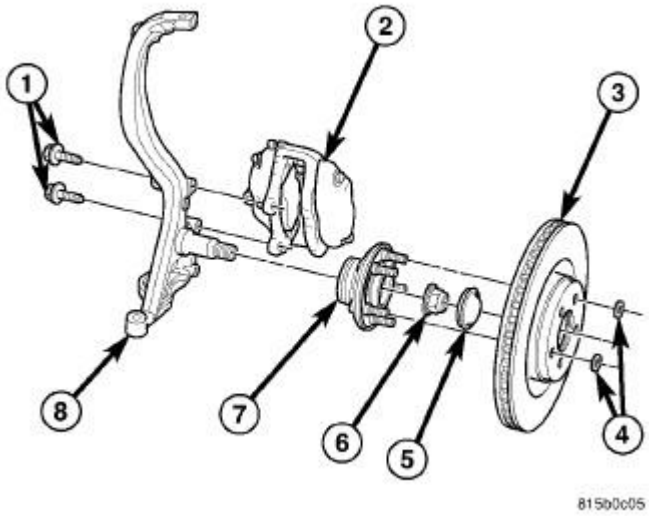

Fig. 203: FRONT DISC BRAKES
Courtesy of CHRYSLER LLC

2. Install brake rotor (3) over studs on hub and bearing (7).
3. Slide caliper with pads (2) over brake rotor (3) and align with knuckle (8).
4. Install caliper mounting bolts (1). Tighten bolts to 190 N.m (140 ft. lbs.).
5. Install tire and wheel assembly. Tighten wheel mounting nuts to 150 N.m (110 ft. lbs.) torque. Refer to **Tires and Wheels - Installation** .
6. Lower vehicle.
7. Pump brake pedal several times to ensure vehicle has a firm brake pedal before moving vehicle.

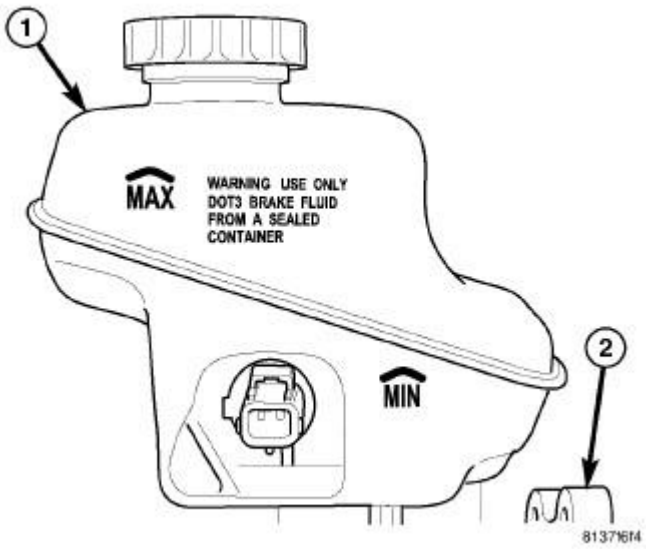

Fig. 204: RESERVOIR FLUID LEVEL MARKINGS
Courtesy of CHRYSLER LLC

8. Check and adjust brake fluid level in reservoir (1) as necessary.

CAUTION: If NEW brake rotors or pads have been installed, keep in mind that braking effectiveness might be somewhat reduced during the first brake applications following installation.

9. Road test vehicle making several stops to wear off any foreign material on brakes and to seat brake pads. If new brake pads are installed, they need to be properly burnished. See **Brakes/Hydraulic/Mechanical/PADS, Brake - Standard Procedure**.

REAR

NOTE: Inspect brake pads and parking brake shoes before installation. See Brakes/Hydraulic/Mechanical/PADS, Brake - Inspection.

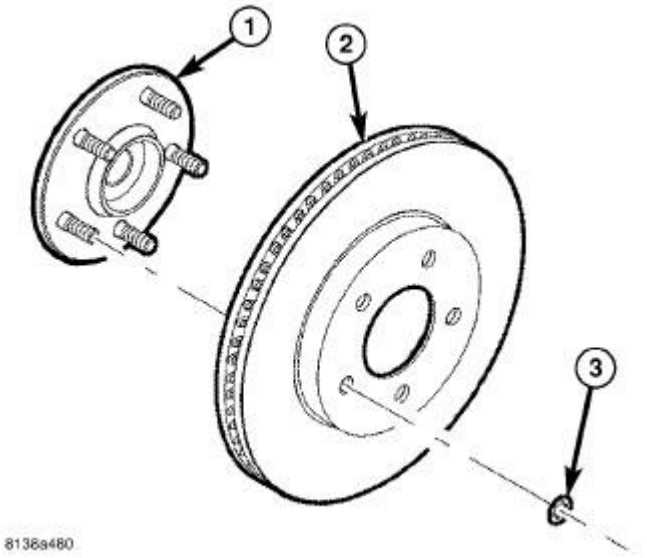

Fig. 205: VENTED BRAKE ROTOR MOUNTING
Courtesy of CHRYSLER LLC

1. Clean hub face (1) to remove any dirt or corrosion where rotor mounts.
2. Install brake rotor (2) over studs on hub and bearing (1).

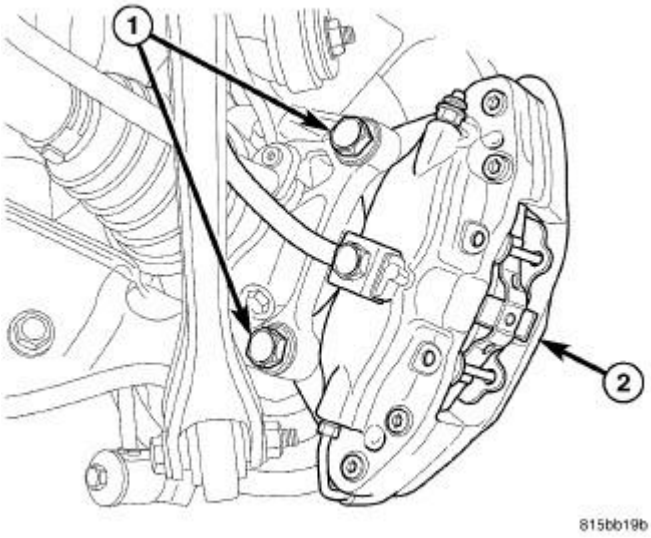

Fig. 206: REAR CALIPER MOUNTING - SRT8
Courtesy of CHRYSLER LLC

3. Slide caliper with pads (2) over brake rotor and align with knuckle.
4. Install caliper mounting bolts (1). Tighten bolts to 130 N.m (96 ft. lbs.).
5. Remove jack from under spring link.
6. Install tire and wheel assembly. Tighten wheel mounting nuts to 150 N.m (110 ft. lbs.) torque.

Refer to **Tires and Wheels - Installation** .

7. Lower vehicle.
8. Pump brake pedal several times to ensure vehicle has a firm brake pedal before moving vehicle.

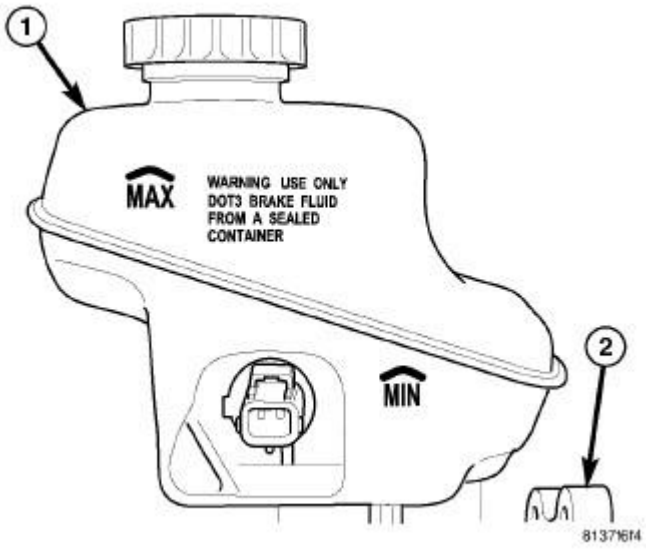

Fig. 207: RESERVOIR FLUID LEVEL MARKINGS
Courtesy of CHRYSLER LLC

9. Check and adjust brake fluid level in reservoir (1) as necessary.

CAUTION: If NEW brake rotors or pads have been installed, keep in mind that braking effectiveness might be somewhat reduced during the first brake applications following installation.

10. Road test vehicle making several stops to wear off any foreign material on brakes and to seat brake pads. If new brake pads are installed, they need to be properly burnished. See **Brakes/Hydraulic/Mechanical/PADS, Brake - Standard Procedure**.

Specifications

BRAKE ROTOR

NOTE: When refacing a rotor, the required TIR (Total Indicator Reading) and thickness variation limits MUST BE MAINTAINED. Extreme care in the operation of rotor turning (machining) equipment is required.

LIMITS/SPECIFICATIONS - 17 INCH BRAKES (BASE)

Brake Rotor	Rotor Thickness	Minimum Rotor Thickness	Rotor Thickness Variation	Rotor Runout *

Front	27.87-28.13 mm 1.097-1.107 in.	26.5 mm 1.040 in.	0.010 mm 0.0004 in.	0.035 mm 0.0014 in.
Rear	9.87-10.13 mm 0.389-0.399 in.	8.5 mm 0.335 in.	0.010 mm 0.0004 in.	0.035 mm 0.0014 in.
* TIR Total Indicator Reading (Measured On Vehicle)				

LIMITS/SPECIFICATIONS - 18 INCH BRAKES (PREMIUM)

Brake Rotor	Rotor Thickness	Minimum Rotor Thickness	Rotor Thickness Variation	Rotor Runout *
Front	27.87-28.13 mm 1.097-1.107 in.	26.5 mm 1.040 in.	0.010 mm 0.0004 in.	0.035 mm 0.0014 in.
Rear	21.87-22.13 mm 0.861-0.871 in.	20.5 mm 0.807 in.	0.010 mm 0.0004 in.	0.035 mm 0.0014 in.
* TIR Total Indicator Reading (Measured On Vehicle)				

LIMITS/SPECIFICATIONS - SRT8 BRAKES

Brake Rotor	Rotor Thickness	Minimum Rotor Thickness	Rotor Thickness Variation	Rotor Runout *
Front	31.90-32.10 mm 1.256-1.264 in.	30.00 mm 1.181 in.	0.040 mm 0.0016 in.	0.030 mm 0.0012 in.
Rear	27.90-28.10 mm 1.098-1.106 in.	26.00 mm 1.024 in.	0.040 mm 0.0016 in.	0.030 mm 0.0012 in.
* TIR Total Indicator Reading (Measured On Vehicle)				

TUBES AND HOSES, BRAKE

Description

DESCRIPTION

The brake tubes are steel. The external surfaces of the two steel brake tubes that go from the HCU to the rear brake hoses are coated with a corrosion-resistant nylon coating.

The flex hoses used at each wheel brake are made of reinforced rubber with fittings at each end. The fitting at each brake caliper is the banjo-type and requires a special banjo bolt and copper washers.

Inspection

INSPECTION

Brake tubing should be inspected periodically for evidence of physical damage or contact with moving or hot components.

Flexible rubber hose is used at both the front and rear wheel brakes. Inspection of the flexible brake hoses should be performed whenever the brake system is serviced and every 12,000 km (7,500

miles) or 12 months, whichever comes first. Inspect hydraulic brake hoses for surface cracking, scuffing, or worn spots. If the fabric casing of the hose becomes exposed due to cracks or abrasions in the hose cover, the hose should be replaced immediately. Eventual deterioration of the hose can take place with possible burst failure. Faulty installation can cause twisting, resulting in wheel, tire, or chassis interference.

NOTE: **This vehicle is equipped with more than one size (diameter) brake tube depending on location on the vehicle. If a brake tube must be replaced, always use the same size brake tubing as that being replaced. Never use under-size brake tubing.**

PARKING BRAKE

DESCRIPTION

DESCRIPTION

This vehicle uses drum-in-hat style parking brakes at each rear wheel. The system is actuated using a foot-operated mechanism and three parking brake cables.

CABLE, PARKING BRAKE, FRONT

Removal

REMOVAL

NOTE: **Before proceeding. See Brakes - Warning. See Brakes - Caution.**

1. Raise and support vehicle. Refer to **Vehicle Quick Reference/Hoisting - Standard Procedure** .

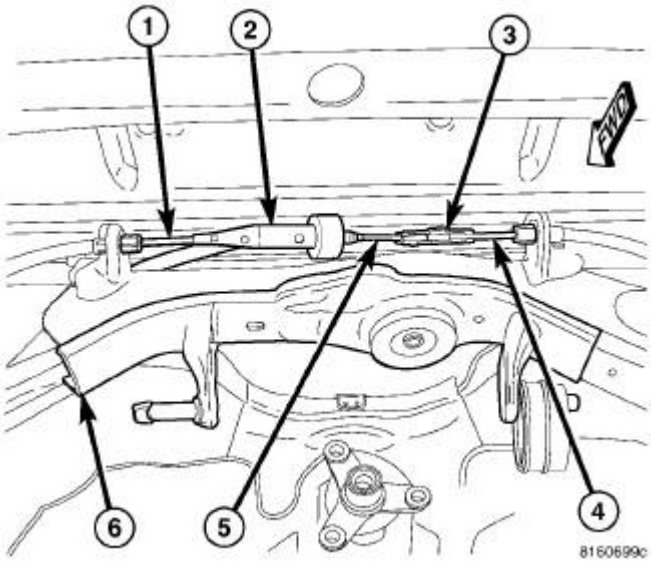

Fig. 208: Parking Brake Cable
Courtesy of CHRYSLER LLC

NOTE: Due to short travel and low spring tension, it is not necessary to lock-out parking brake lever to service parking brake components.

2. Disconnect front parking brake cable (5) at connector (3) to right rear parking brake cable (4) above axle differential (not shown in illustration).

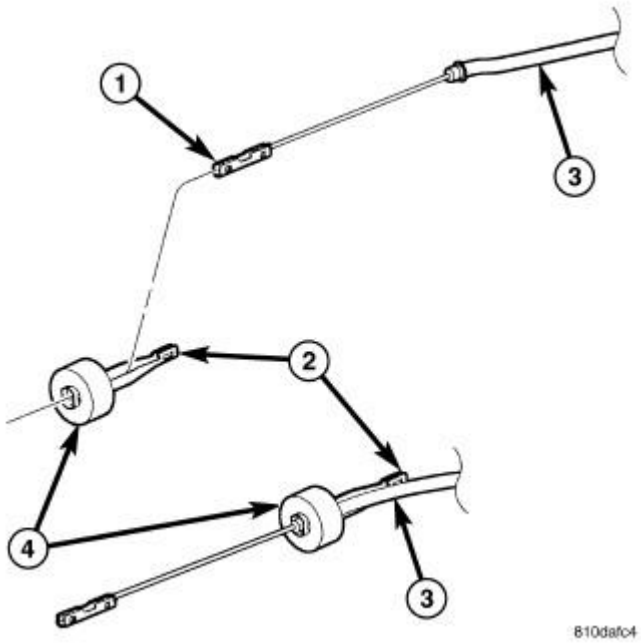

Fig. 209: FRONT CABLE AND EQUALIZER

Courtesy of CHRYSLER LLC

3. Remove front cable (3) from equalizer (2).

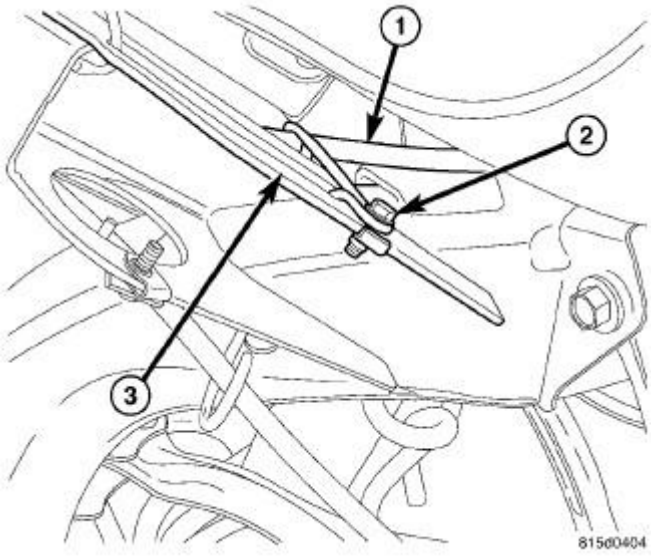

Fig. 210: CROSSMEMBER FRONT FLANGE
Courtesy of CHRYSLER LLC

4. Remove screw (2) fastening cable (1) routing bracket to rear crossmember front flange (3).

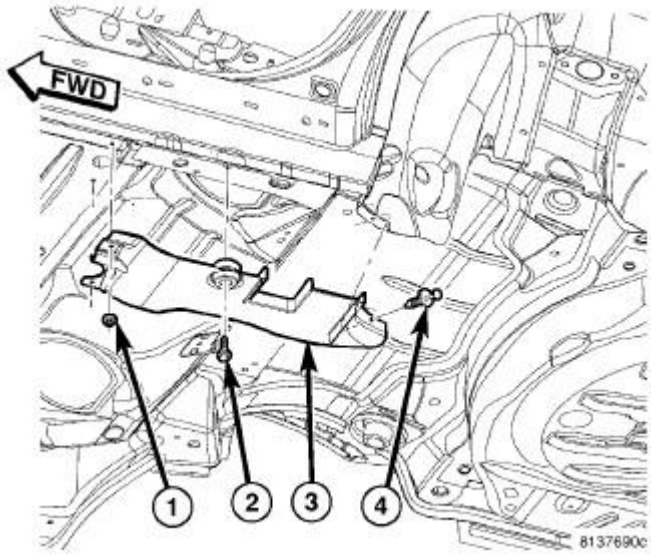

Fig. 211: Lower Rear Wheelhouse Shield
Courtesy of CHRYSLER LLC

5. Remove nuts (1), bolt (2) and push-pins (4), securing lower rear wheelhouse shield (3) to body of vehicle. Remove lower rear wheelhouse shield.

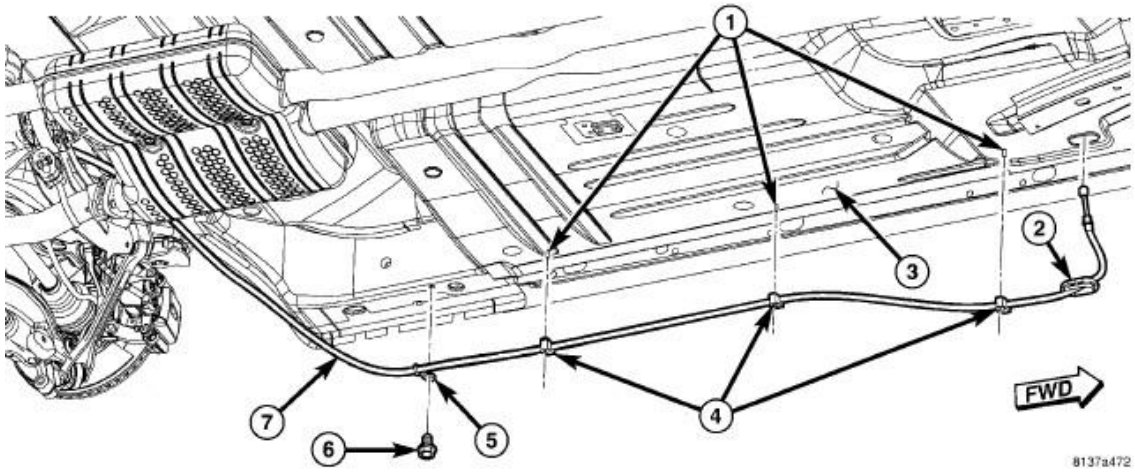

Fig. 212: FRONT PARKING BRAKE CABLE
Courtesy of CHRYSLER LLC

6. Remove screw (6) and routing clip (4) nuts fastening cable (7) to underside of body (3).
7. Lower vehicle.
8. Remove driver door opening sill scuff plate and cowl side trim.
9. Remove clip and roll back carpet away from front cable.

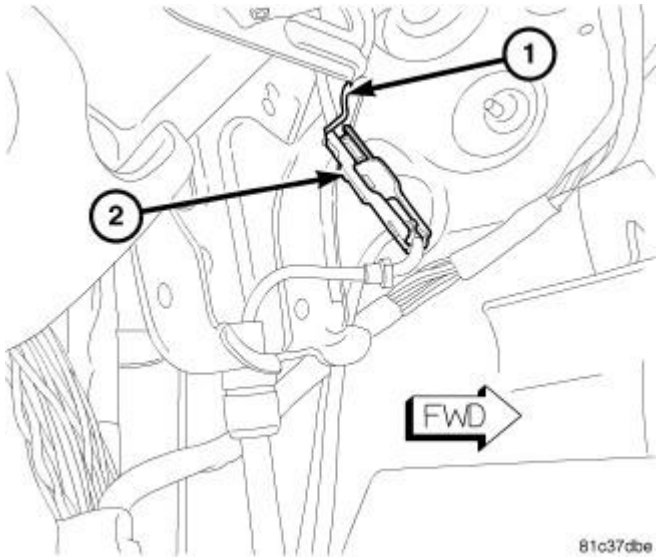

Fig. 213: CABLE CONNECTOR SECURED IN FORK
Courtesy of CHRYSLER LLC

CAUTION: Do not remove front parking brake cable from cable connector at lever without securing connector first. If not secured, cable connector will wind up inside lever assembly making it most difficult to retrieve and reconnect to front cable upon installation.

10. Using pliers, reach up inside parking brake lever assembly and pull downward on parking brake

cable connector. Secure cable connector (2) in retaining fork (1) formed into parking brake lever bracket as shown in illustration.

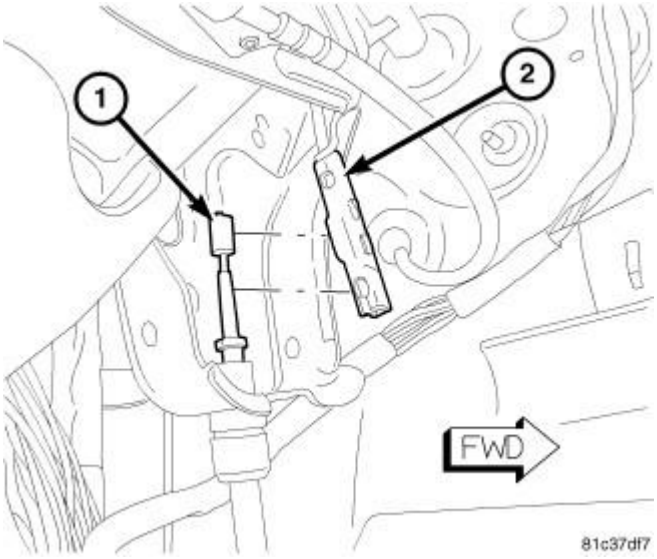

Fig. 214: FRONT CABLE AT LEVER CONNECTOR
Courtesy of CHRYSLER LLC

11. Disengage and remove front parking brake cable strand (1) from cable connector (2), leaving cable connector secured in retaining fork.

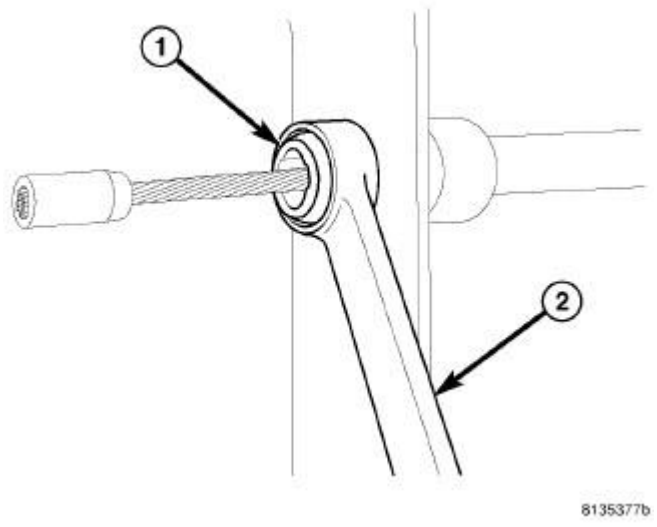

Fig. 215: Cable Retainer
Courtesy of CHRYSLER LLC

1 - CABLE RETAINER
2 - 12-POINT BOX WRENCH

12. Place 13 mm 12-point box wrench (2) over cable retainer (1) at lever bracket as shown in illustration to collapse retainer fingers. Pull cable from bracket.

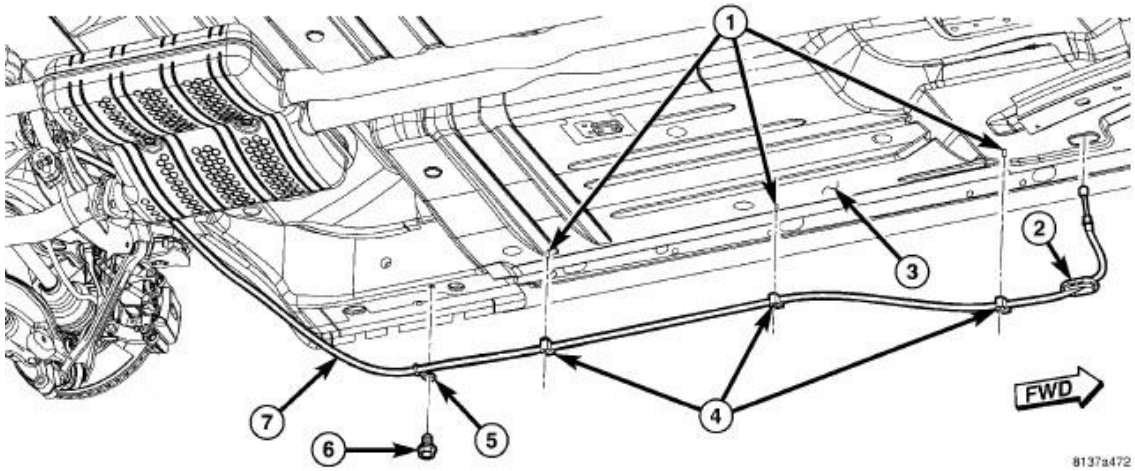

Fig. 216: FRONT PARKING BRAKE CABLE
Courtesy of CHRYSLER LLC

13. Remove parking brake cable grommet (2) from floor pan (3).
14. Remove parking brake cable (7) through hole in floor pan.

Installation

INSTALLATION

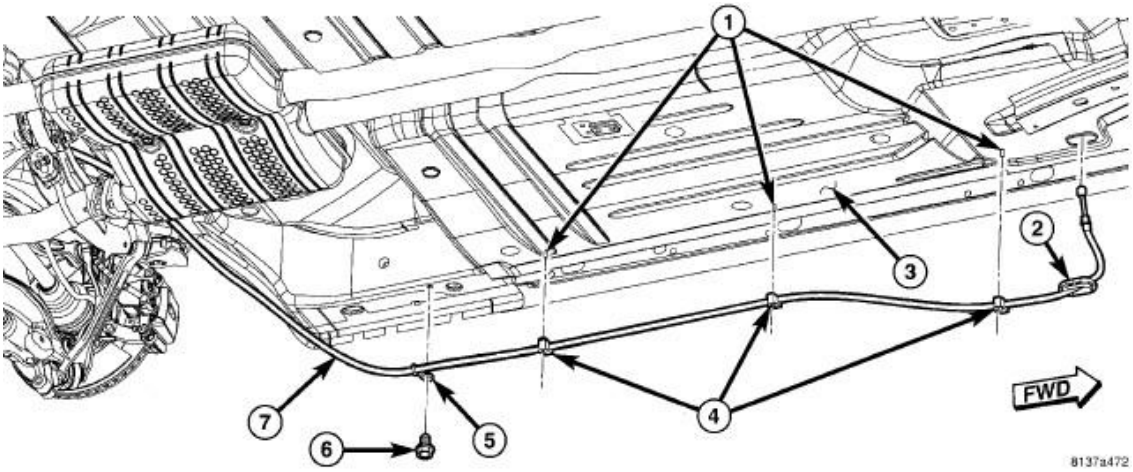

Fig. 217: FRONT PARKING BRAKE CABLE
Courtesy of CHRYSLER LLC

1. Guide parking brake cable (7) down through hole in floor pan.
2. Install parking brake cable grommet (2) in hole of floor pan (3).

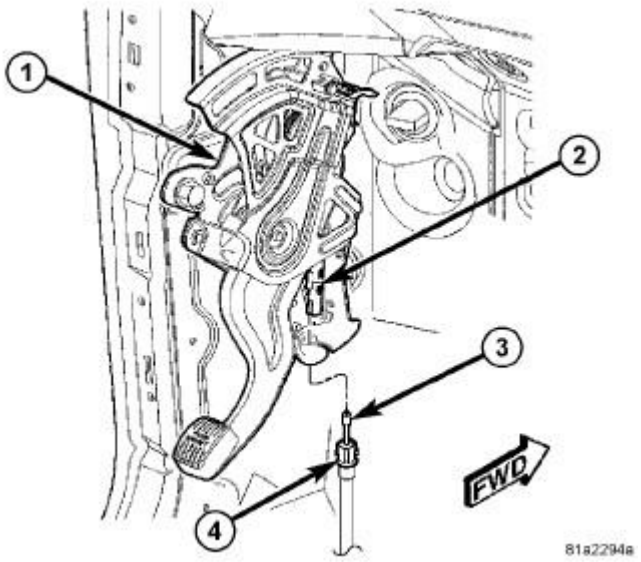

Fig. 218: FRONT CABLE AT LEVER
Courtesy of CHRYSLER LLC

3. Guide cable strand (3) up through lever bracket and press cable housing retainer (4) into bracket allowing retainer fingers to lock cable in place.

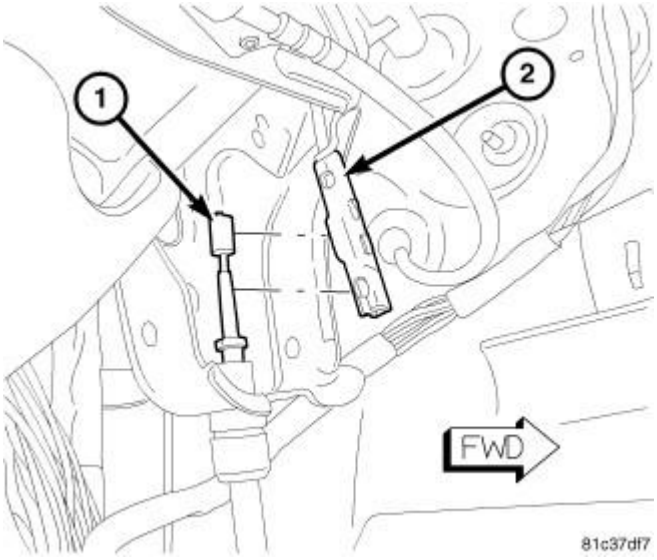

Fig. 219: FRONT CABLE AT LEVER CONNECTOR
Courtesy of CHRYSLER LLC

4. Connect front parking brake cable strand (1) to cable connector (2) secured in retaining fork.
5. Once front parking brake cable strand is completely seated in cable connector (2), lift cable connector out of retaining fork using pliers and slowly allow lever mechanism to take up slack in cable.
6. Lay carpet back into place and install retaining clip.

7. Install driver door opening sill scuff plate and cowl side trim.
8. Raise and support vehicle.

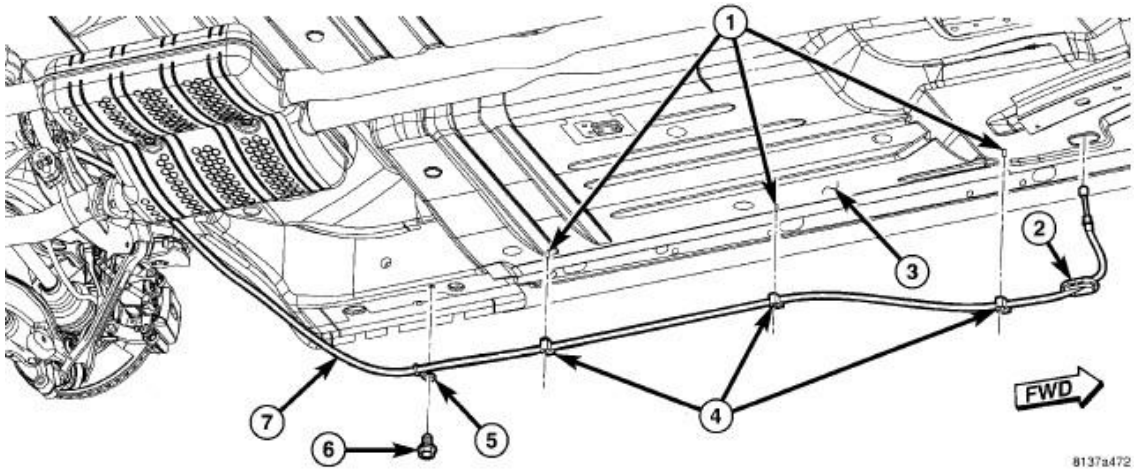

Fig. 220: FRONT PARKING BRAKE CABLE
Courtesy of CHRYSLER LLC

9. Install screw (6) and routing clip (4) nuts fastening cable (7) to underside of body (3).

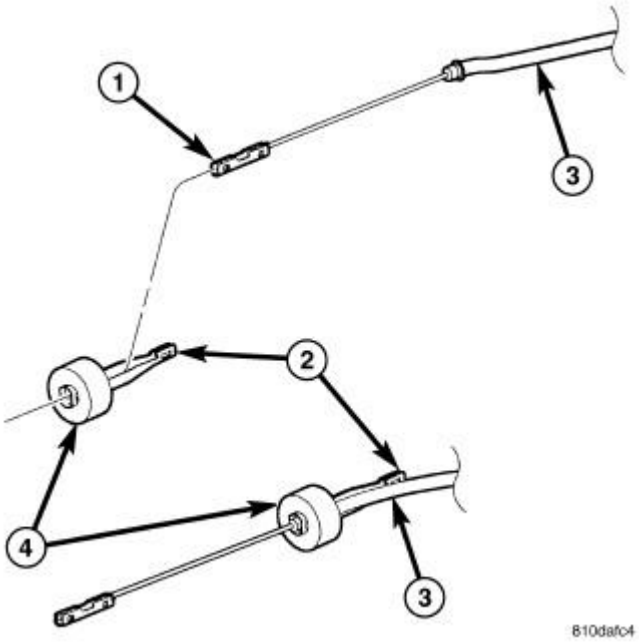

Fig. 221: FRONT CABLE AND EQUALIZER
Courtesy of CHRYSLER LLC

10. Route cable above rear crossmember, then slide cable end (1) (shown in illustration with connector) and housing (3) through equalizer (2) above rear axle differential.

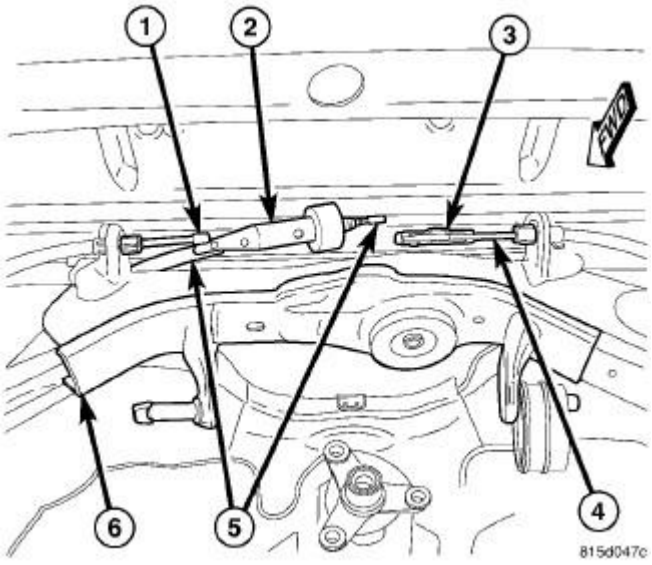

Fig. 222: PARKING BRAKE CABLES AT REAR CROSSMEMBER
Courtesy of CHRYSLER LLC

NOTE: Due to short travel and low spring tension, it is not necessary to lock-out parking brake lever to service parking brake components.

11. Connect front parking brake cable (5) at connector (3) to right rear parking brake cable (4) (axle differential not shown in illustration).

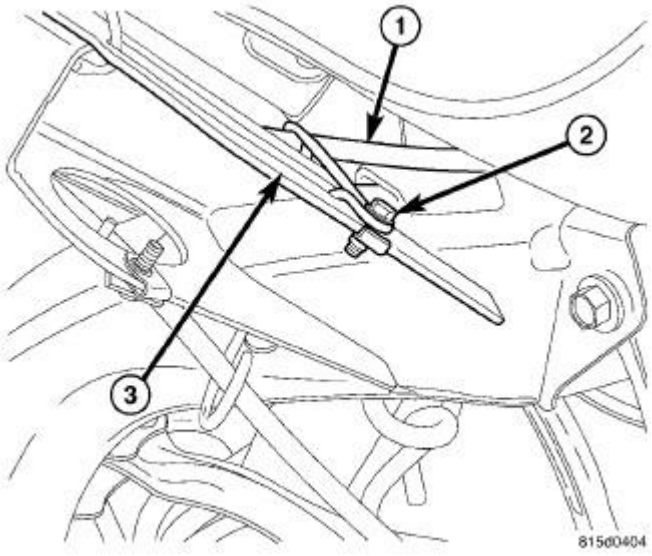

Fig. 223: CROSSMEMBER FRONT FLANGE
Courtesy of CHRYSLER LLC

12. Install screw (2) fastening cable (1) routing bracket to rear crossmember front flange (3).

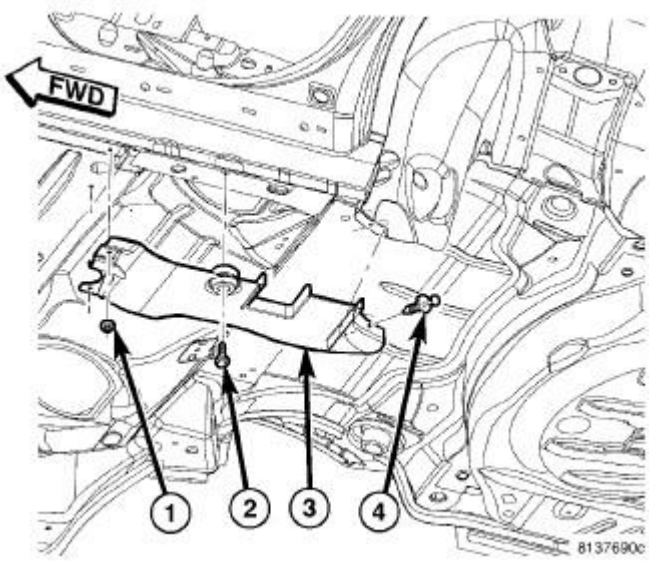

Fig. 224: Lower Rear Wheelhouse Shield
Courtesy of CHRYSLER LLC

13. Position lower rear wheelhouse shield (3) onto body of vehicle. Install nuts (1), bolt (2) and push-pins (4) securing lower rear wheelhouse shield to body. Tighten nuts and bolt securely.
14. Lower vehicle until rear wheels are just above floor level.
15. Apply parking brake lever. Release lever, then reapply.
16. Check to make sure rear wheels will not rotate with lever applied.
17. Release parking brake lever, then check to make sure rear wheels rotate without excessive drag.
18. Apply parking brake lever.
19. Lower vehicle.

CABLE, PARKING BRAKE, REAR

Removal

REMOVAL

NOTE: Before proceeding. See Brakes - Warning. See Brakes - Caution.

1. Raise and support vehicle. Refer to **Vehicle Quick Reference/Hoisting - Standard Procedure** .

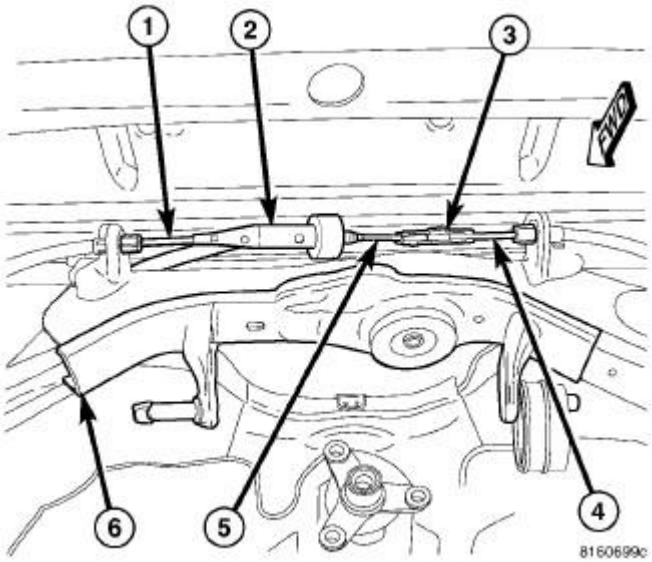

Fig. 225: Parking Brake Cable
Courtesy of CHRYSLER LLC

NOTE: Due to short travel and low spring tension, it is not necessary to lock-out parking brake lever to service parking brake components.

2. Disconnect rear parking brake cable near front cable as follows:
   - If removing left rear cable, disconnect cable (1) at equalizer (2) above rear axle differential (not shown in illustration) and rear crossmember (6).
   - If removing right rear cable, disconnect cable (4) at connector (3) above rear axle differential (not shown in illustration) and rear crossmember (6).
3. Remove parking brake shoes on side of cable service. See **Brakes/Parking Brake/SHOES, Parking Brake - Removal**.

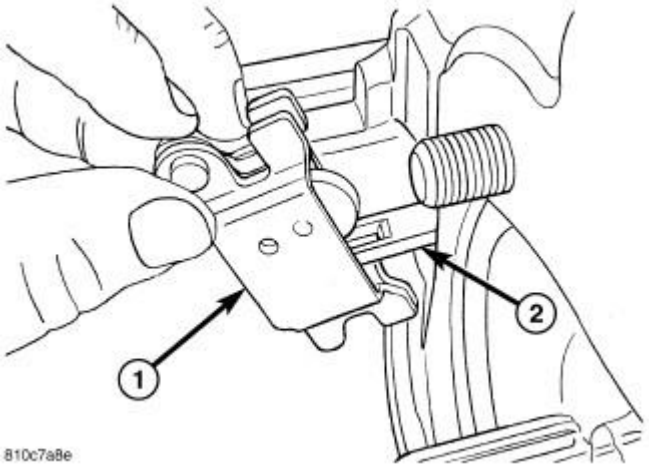

Fig. 226: Actuator Removal/Installation

Courtesy of CHRYSLER LLC

1 - PARKING BRAKE SHOE ACTUATOR 2 - CABLE END

4. Remove shoe actuator lever (1) from end of cable (2) and support.

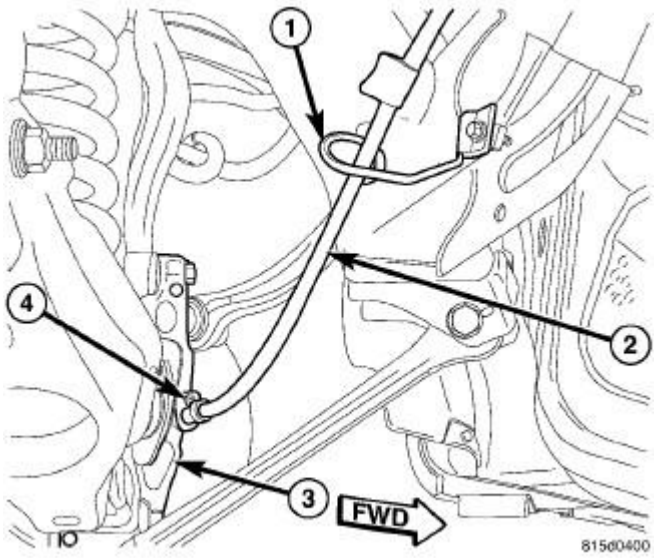

Fig. 227: REAR CABLE ROUTING TO KNUCKLE
Courtesy of CHRYSLER LLC

5. Remove screw (4) fastening cable (2) to knuckle (3). Remove cable from knuckle.
6. Remove cable (2) from routing guide (1).

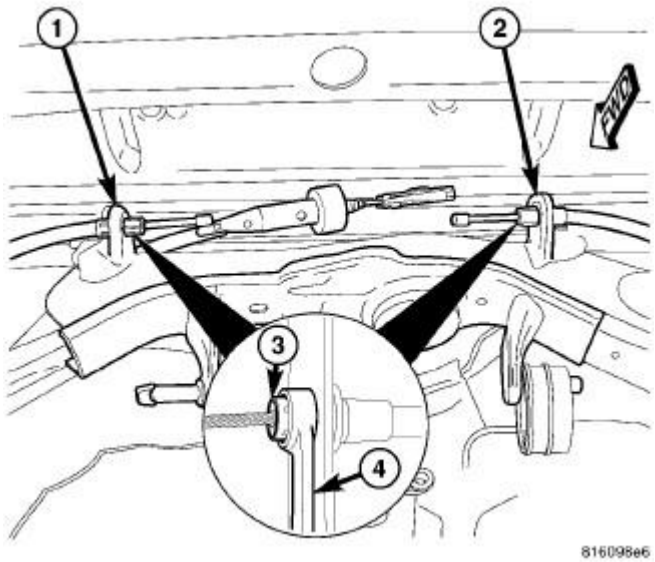

Fig. 228: CABLES AT CROSSMEMBER BRACKET
Courtesy of CHRYSLER LLC

7. Place 13 mm 12-point box wrench (4) over cable strand and completely onto cable retainer (3) as shown in illustration at crossmember bracket (1 - left) (2 - right). It may be necessary to wiggle wrench around somewhat to collapse retainer fingers. With wrench in place, pull cable from bracket.
8. Remove parking brake cable from vehicle.

Installation

INSTALLATION

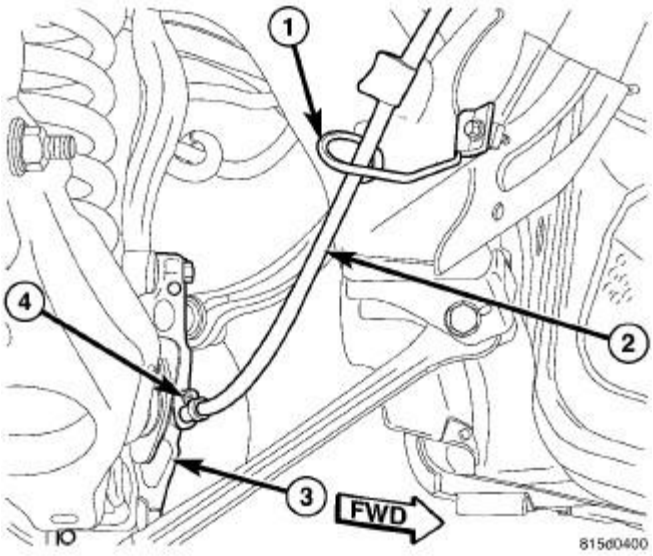

Fig. 229: REAR CABLE ROUTING TO KNUCKLE
Courtesy of CHRYSLER LLC

1. Route leading end of rear parking brake cable (2) up through cable guide (1) on crossmember.

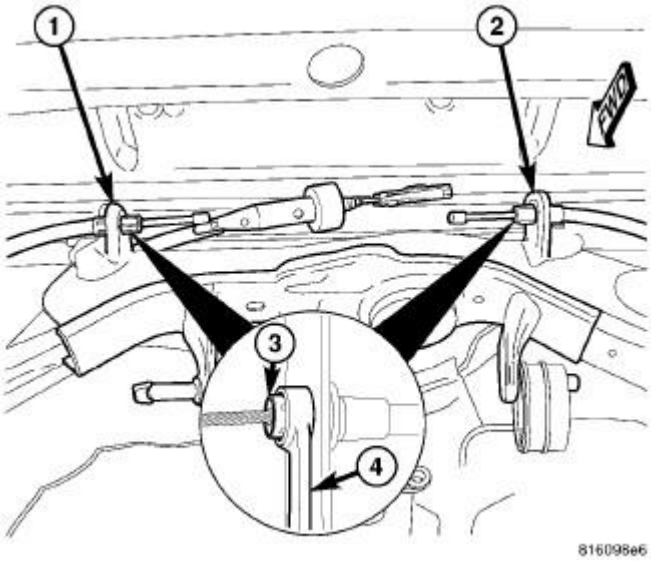

Fig. 230: CABLES AT CROSSMEMBER BRACKET
Courtesy of CHRYSLER LLC

2. Guide cable leading end through crossmember bracket (1 - left) (2 - right) near equalizer and press cable housing retainer into bracket allowing retainer fingers to lock cable in place.

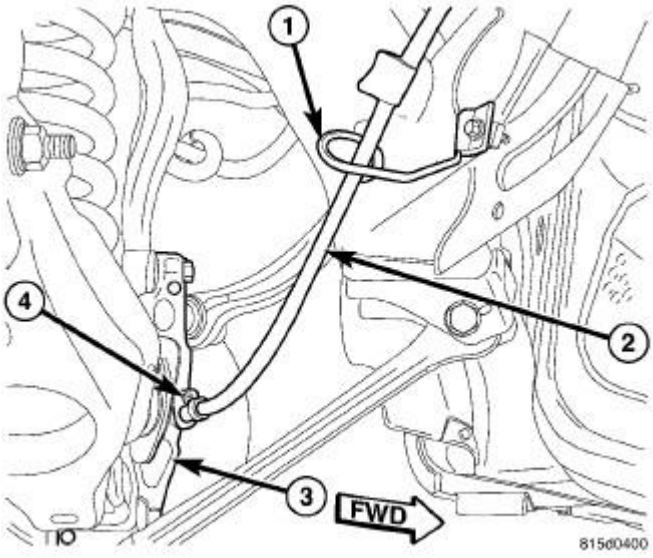

Fig. 231: REAR CABLE ROUTING TO KNUCKLE
Courtesy of CHRYSLER LLC

3. Insert opposite end of cable (2) through rear knuckle (3) and install mounting screw (4). Tighten screw to 8 N.m (71 in. lbs.) torque.

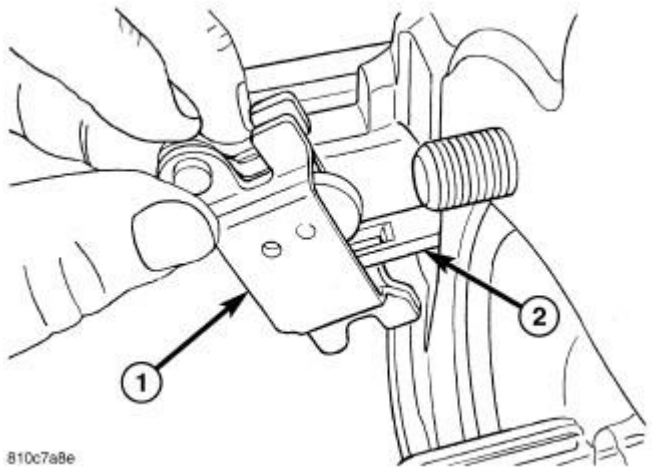

Fig. 232: Actuator Removal/Installation
Courtesy of CHRYSLER LLC

1 - PARKING BRAKE SHOE ACTUATOR 2 - CABLE END

4. Install shoe actuator lever (1) on end of parking brake cable (2). Make sure actuator lever is positioned with word "UP" facing outward.
5. Install parking brake shoes as well as all components necessary to access them. See **Brakes/Parking Brake/SHOES, Parking Brake - Installation**.

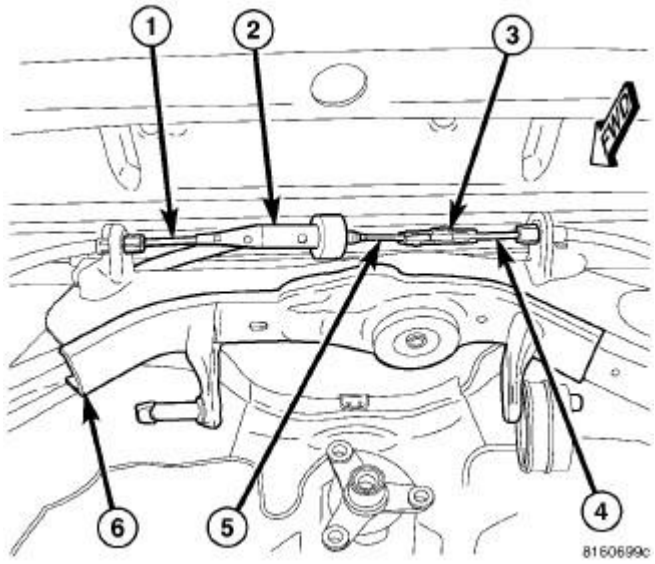

Fig. 233: Parking Brake Cable
Courtesy of CHRYSLER LLC

NOTE: Due to short travel and low spring tension, it is not necessary to lock out

parking brake lever to service parking brake components.

6. Connect rear parking brake cable at equalizer/front cable as follows:
   - If installing left rear cable, connect cable (1) at equalizer (2) above rear axle differential (not shown in illustration) and rear crossmember (6).
   - If installing right rear cable, connect cable (4) at connector (3) above rear axle differential (not shown in illustration) and rear crossmember (6).
7. Lower vehicle until rear wheels are just above floor level.
8. Apply parking brake lever. Release lever, then reapply.
9. Check to make sure rear wheels will not rotate with lever applied.
10. Release parking brake lever, then check to make sure rear wheels rotate without excessive drag.
11. Adjust parking brake shoes as necessary. See **Brakes/Parking Brake/SHOES, Parking Brake - Adjustments**.
12. Lower vehicle.

LEVER, PARKING BRAKE

Removal

LEVER

NOTE: Before proceeding. See Brakes - Warning. See Brakes - Caution.

1. Raise and support vehicle. Refer to **Vehicle Quick Reference/Hoisting - Standard Procedure** .

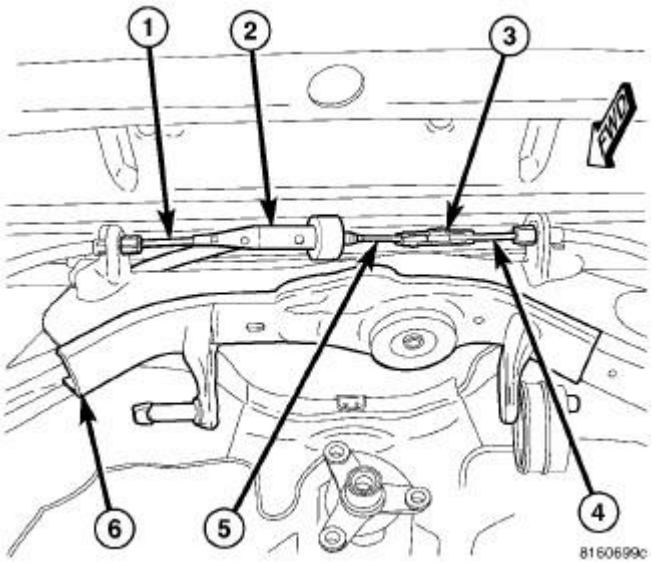

Fig. 234: Parking Brake Cable

Courtesy of CHRYSLER LLC

NOTE: Due to short travel and low spring tension, it is not necessary to lock-out parking brake lever to service parking brake components.

2. Disconnect front parking brake cable (5) at connector (3) to right rear parking brake cable.
3. Lower vehicle.
4. Remove steering column opening cover. Refer to **Body/Instrument Panel/COVER, Steering Column Opening - Removal** .

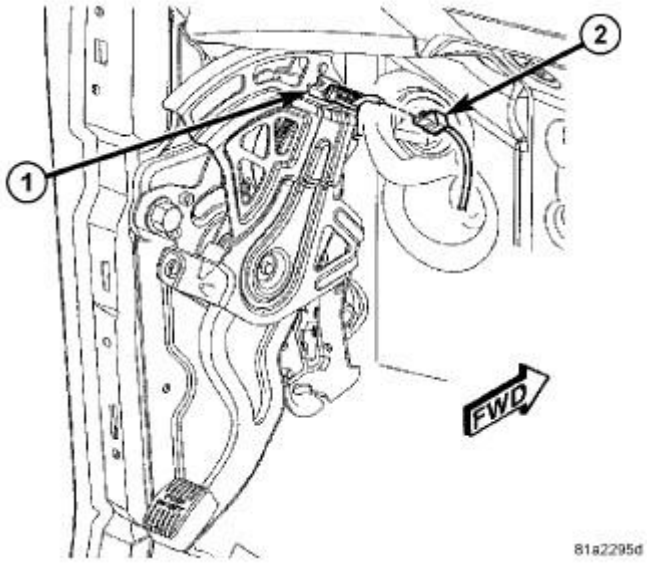

Fig. 235: PARKING BRAKE SWITCH CONNECTOR
Courtesy of CHRYSLER LLC

5. Disconnect wiring connector (2) at parking brake switch (1).

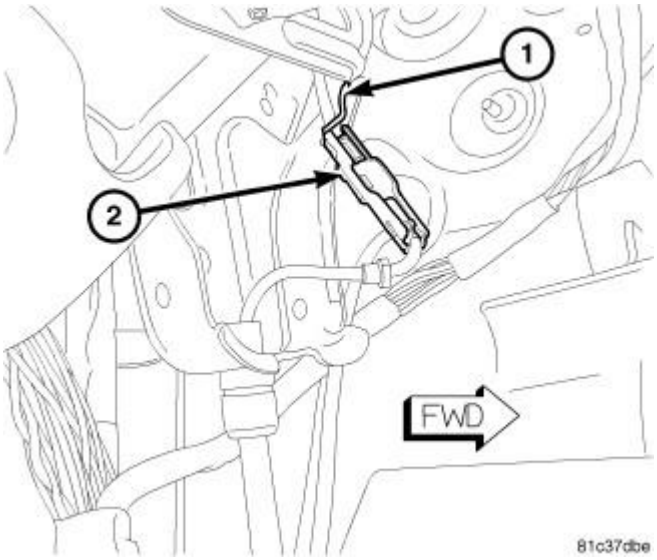

Fig. 236: CABLE CONNECTOR SECURED IN FORK
Courtesy of CHRYSLER LLC

CAUTION: Do not remove front parking brake cable from cable connector at lever without securing connector first. If not secured, cable connector will wind up inside lever assembly making it most difficult to retrieve and reconnect to front cable upon installation.

6. Using pliers, reach up inside parking brake lever assembly and pull downward on parking brake cable connector. Secure cable connector (2) in retaining fork (1) formed into parking brake lever bracket as shown in illustration.

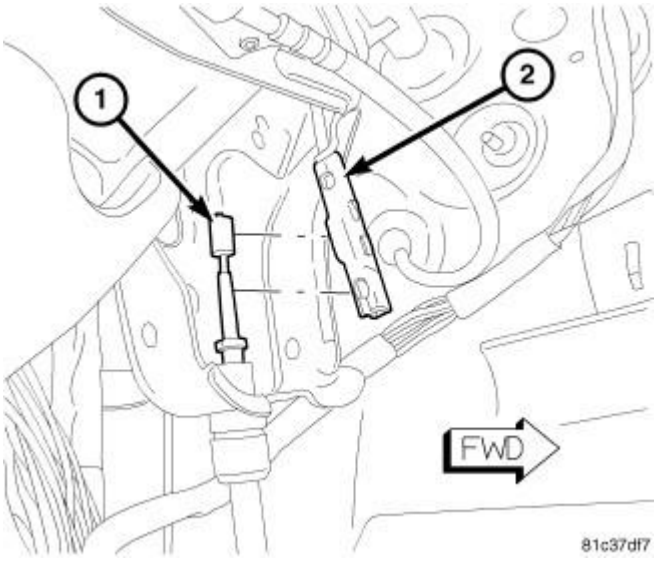

Fig. 237: FRONT CABLE AT LEVER CONNECTOR
Courtesy of CHRYSLER LLC

7. Disengage and remove front parking brake cable strand (1) from cable connector (2), leaving

cable connector secured in retaining fork.

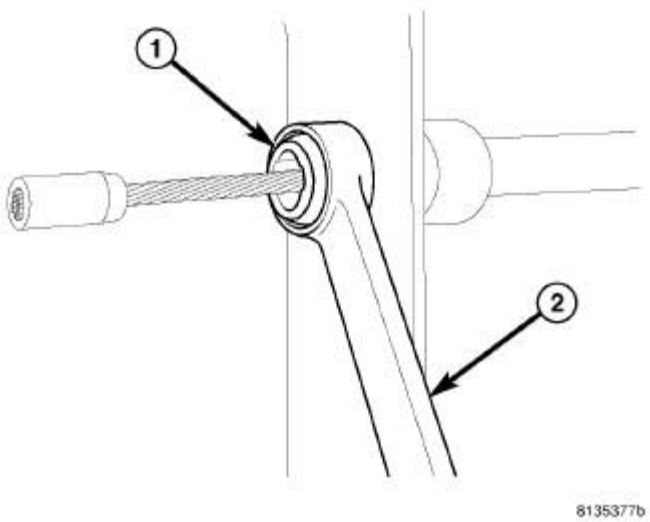

Fig. 238: Cable Retainer
Courtesy of CHRYSLER LLC

1 - CABLE RETAINER 2 - 12-POINT BOX WRENCH

8. Place 13 mm 12-point box wrench (2) over cable retainer (1) at lever bracket as shown in illustration to collapse retainer fingers. Pull cable from bracket.

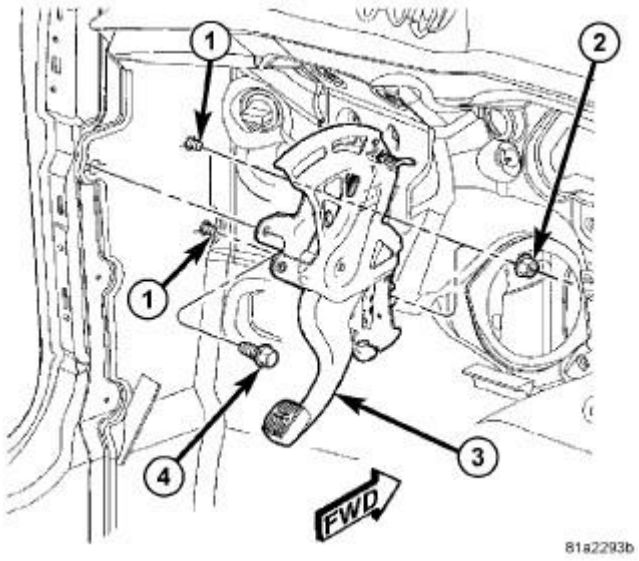

Fig. 239: LEVER MOUNTING
Courtesy of CHRYSLER LLC

9. Remove bolt (4) and two nuts (2) mounting parking brake lever (3) to body.
10. Remove parking brake lever (3).

Installation

INSTALLATION

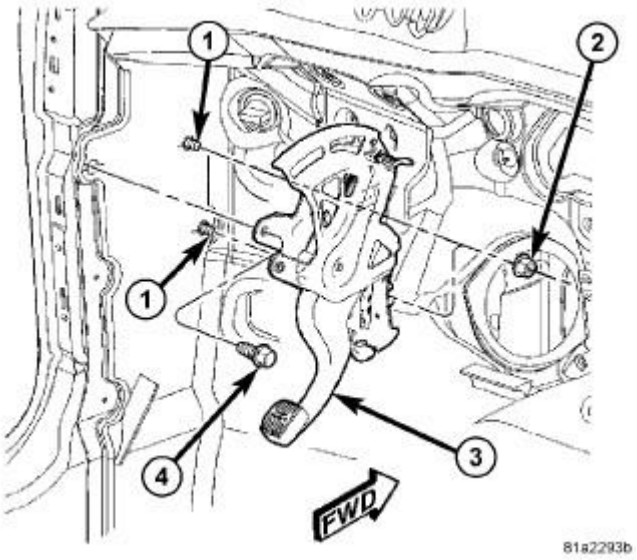

Fig. 240: LEVER MOUNTING
Courtesy of CHRYSLER LLC

1. Install parking brake lever (3) over mounting studs (1).
2. Install bolt (4) and two nuts (2) mounting parking brake lever to body. Tighten bolt and nuts to 26 N.m (19 ft. lbs.).

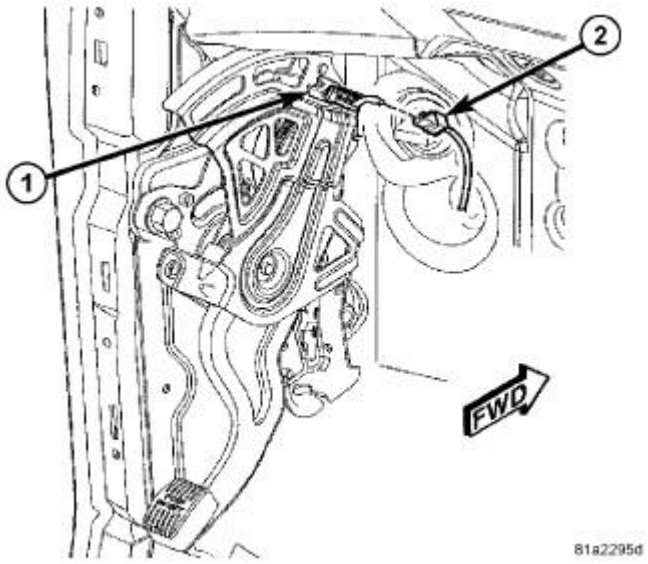

Fig. 241: PARKING BRAKE SWITCH CONNECTOR
Courtesy of CHRYSLER LLC

3. Connect wiring connector (2) at parking brake switch (1).

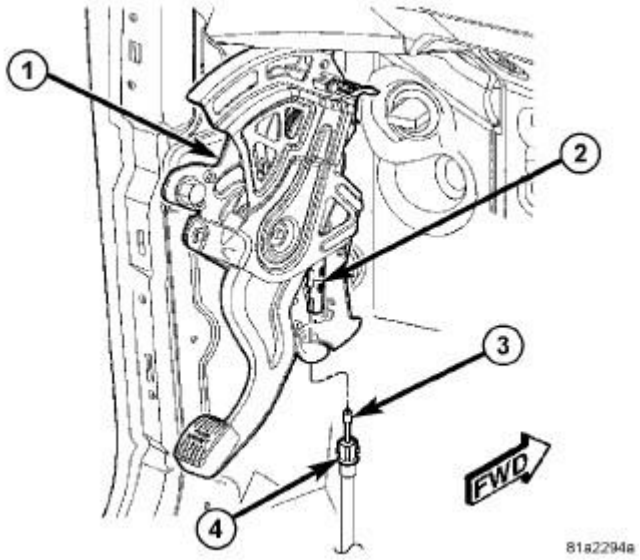

Fig. 242: FRONT CABLE AT LEVER
Courtesy of CHRYSLER LLC

4. Guide cable strand (3) up through lever bracket and press cable housing retainer (4) into bracket allowing retainer fingers to lock cable in place.

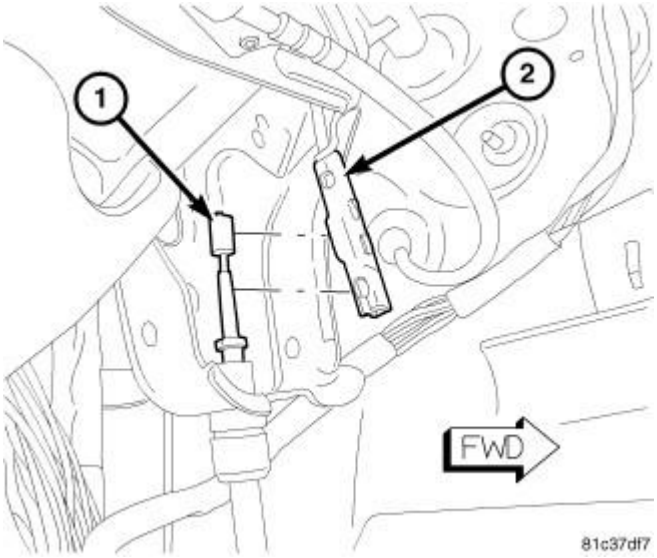

Fig. 243: FRONT CABLE AT LEVER CONNECTOR
Courtesy of CHRYSLER LLC

5. If original parking brake lever is being installed:
   a. Connect front parking brake cable strand (1) to cable connector (2) secured in retaining fork.
   b. Once front parking brake cable strand is completely seated in cable connector (2), lift cable connector out of retaining fork using pliers and slowly allow lever mechanism to take up slack in cable.

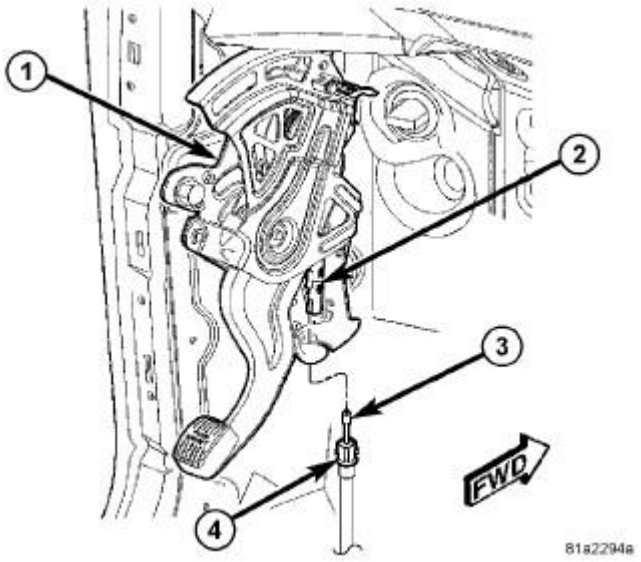

Fig. 244: FRONT CABLE AT LEVER
Courtesy of CHRYSLER LLC

6. If NEW parking brake lever is being installed:

a. Connect front parking brake cable strand (3) at lever connector (2).
b. Once front parking brake cable strand is completely seated in cable connector (2), remove pin locking out automatic tensioning spring.

7. Install steering column opening cover. Refer to **Body/Instrument Panel/COVER, Steering Column Opening - Installation** .
8. Raise and support vehicle.

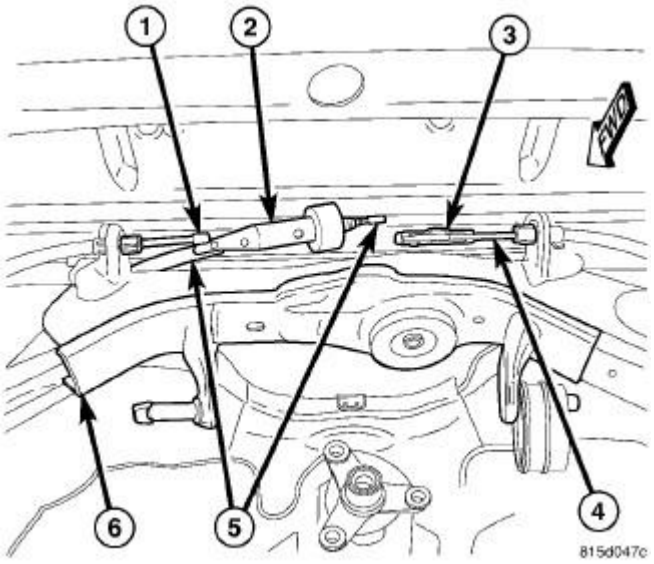

Fig. 245: PARKING BRAKE CABLES AT REAR CROSSMEMBER
Courtesy of CHRYSLER LLC

NOTE: Due to short travel and low spring tension, it is not necessary to lock-out parking brake lever to service parking brake components.

9. Connect front parking brake cable (5) at connector (3) to right rear parking brake cable (4).
10. Lower vehicle until rear wheels are just above floor level.
11. Apply parking brake lever. Release lever to test release cable and handle. Reapply lever. While doing this, check to make sure the red indicator lamp in the cluster turns on and off properly.
12. Check to make sure rear wheels will not rotate with lever applied.
13. Release parking brake lever, then check to make sure rear wheels rotate without excessive drag.
14. Apply parking brake lever.
15. Lower vehicle.

SHOES, PARKING BRAKE

Removal

REMOVAL

NOTE: The following procedure may be used to remove shoes on either side of the vehicle.

1. Raise and support vehicle. Refer to **Vehicle Quick Reference/Hoisting - Standard Procedure** .
2. Access and remove rear hub and bearing. Refer to **Rear Suspension/HUB AND BEARING - Removal** .

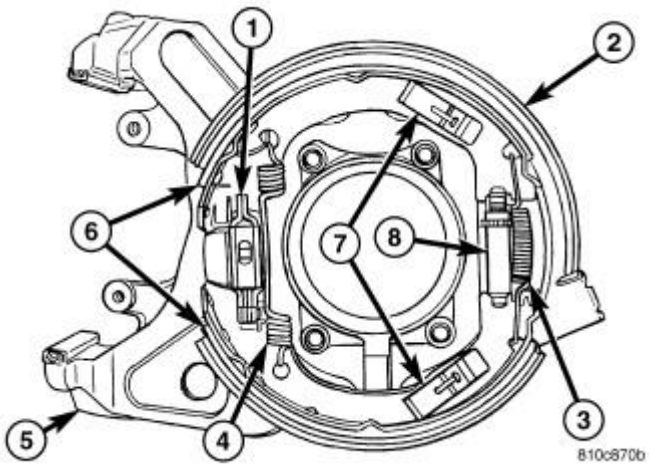

Fig. 246: Parking Brake Shoes
Courtesy of CHRYSLER LLC

1 - ACTUATOR
2 - SUPPORT
3 - ADJUSTER SPRING
4 - RETURN SPRING
5 - CALIPER ADAPTER
6 - SHOES
7 - HOLD-DOWN CLIPS AND PINS
8 - ADJUSTER

3. Completely back off parking brake shoe adjustment (8).
4. Remove parking brake shoe adjuster spring (3).
5. Remove shoe adjuster (8).
6. Remove upper brake shoe hold-down clip and pin (7).
7. Remove upper shoe (6) from return spring (4) and shoe actuator lever (1).
8. Remove return spring (4) from lower shoe (6).

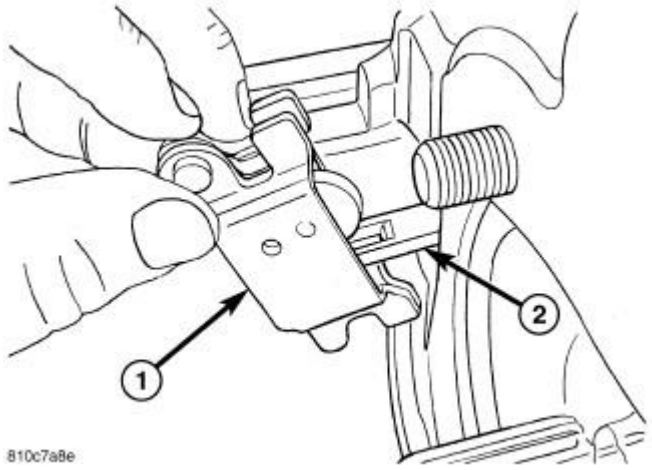

Fig. 247: Actuator Removal/Installation
Courtesy of CHRYSLER LLC

1 - PARKING BRAKE SHOE ACTUATOR 2 - CABLE END

9. Remove shoe actuator lever (1) from end of cable (2).

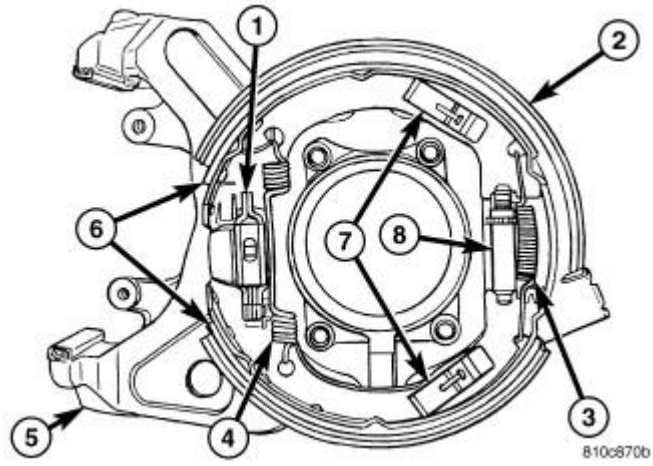

Fig. 248: Parking Brake Shoes
Courtesy of CHRYSLER LLC

1 - ACTUATOR 2 - SUPPORT 3 - ADJUSTER SPRING 4 - RETURN SPRING 5 - CALIPER ADAPTER 6 - SHOES 7 - HOLD-DOWN CLIPS AND PINS

8 - ADJUSTER

10. Remove lower brake shoe hold-down clip and pin (7).
11. Remove lower shoe (6).
12. Inspect springs, adjuster, lever and aluminum shoe anchor pin for wear or damage. Replace as necessary.

Installation

INSTALLATION

NOTE: The following procedure may be used to install shoes on either side of the vehicle.

NOTE: Inspect springs, adjuster, lever and aluminum shoe anchor pin for wear or damage prior to installation. Replace as necessary.

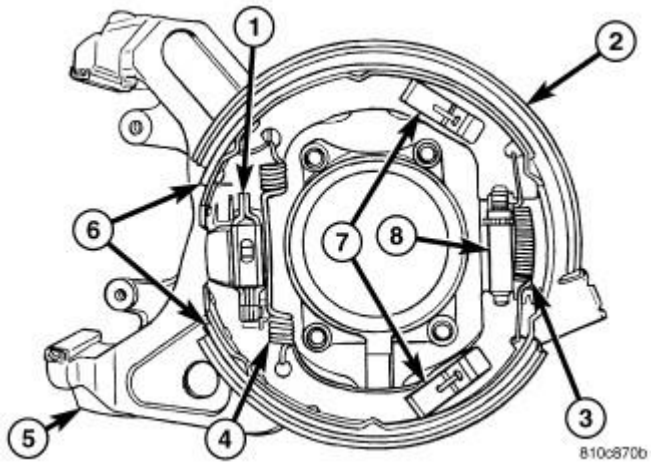

Fig. 249: Parking Brake Shoes
Courtesy of CHRYSLER LLC

1 - ACTUATOR
2 - SUPPORT
3 - ADJUSTER SPRING
4 - RETURN SPRING
5 - CALIPER ADAPTER
6 - SHOES
7 - HOLD-DOWN CLIPS AND PINS
8 - ADJUSTER

1. Install lower brake shoe hold-down pin (7) through rear of support (2).

2. Install lower shoe (6) against support plate (2).
3. Install lower brake shoe hold-down clip (7).

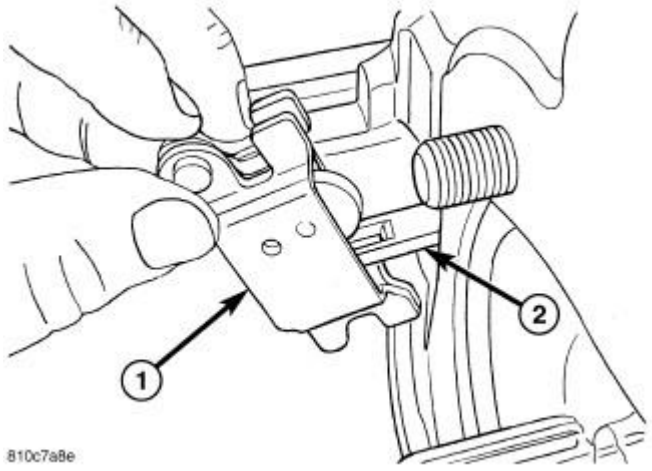

Fig. 250: Actuator Removal/Installation
Courtesy of CHRYSLER LLC

1 - PARKING BRAKE SHOE ACTUATOR 2 - CABLE END

4. Install shoe actuator lever (1) on end of parking brake cable (2). Make sure actuator lever is positioned with word "UP" facing outward.

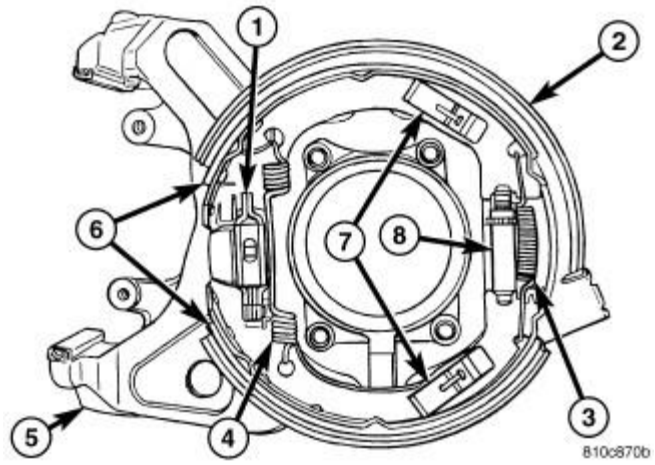

Fig. 251: Parking Brake Shoes
Courtesy of CHRYSLER LLC

1 - ACTUATOR 2 - SUPPORT

3 - ADJUSTER SPRING
4 - RETURN SPRING
5 - CALIPER ADAPTER
6 - SHOES
7 - HOLD-DOWN CLIPS AND PINS
8 - ADJUSTER

5. Install return spring (4) to lower shoe (6).
6. Install upper shoe (6) against support plate and onto shoe actuator lever.
7. Install upper brake shoe hold-down pin (7) through rear of support and upper shoe.
8. Install upper brake shoe hold-down clip (7).
9. Attach return spring (4) to upper shoe (6).
10. Install shoe adjuster (8). Place end of adjuster with star wheel upward.
11. Install parking brake shoe adjuster spring (3).

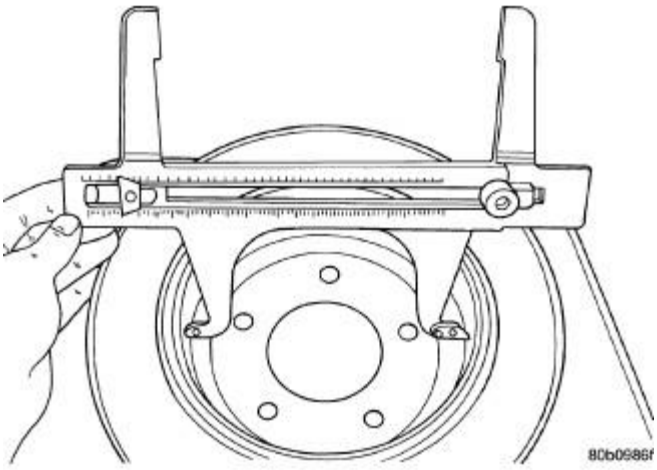

Fig. 252: Measuring Parking Brake Drum Diameter
Courtesy of CHRYSLER LLC

12. Using Brake Shoe Gauge, C-3919, or equivalent, measure inside diameter of parking brake drum portion of rotor. Set gauge.

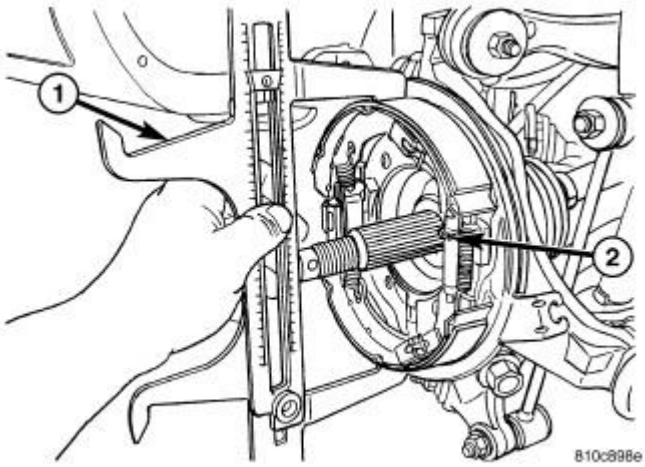

Fig. 253: Measuring Parking Brake Shoes
Courtesy of CHRYSLER LLC

1 - BRAKE SHOE GAUGE 2 - ADJUSTER STAR WHEEL

13. Place Gauge (1) over parking brake shoes at widest point.
14. Using adjuster star wheel (2), adjust parking brake shoes until linings on both park brake shoes just touch jaws on gauge. This will give a good preliminary adjustment of parking brake shoes, before a final adjustment is made at end of this procedure.
15. Install hub and bearing with wheel speed sensor as well as all components necessary to access it. Refer to **Rear Suspension/HUB AND BEARING - Installation** .
16. Lower vehicle.
17. Perform final adjustment of parking brake shoes. See **Brakes/Parking Brake/SHOES, Parking Brake - Adjustments**.

Adjustments

PARKING BRAKE SHOE ADJUSTMENT

While most vehicles require only a fine adjustment of the parking brake shoes, some vehicles may require a preliminary adjustment before a fine adjustment can be made. If a preliminary adjustment must be made, refer to**PRELIMINARY ADJUSTMENT** following the fine adjustment procedure listed below.

1. Place parking brake lever in "full released" position.
2. Raise and support vehicle. Refer to **Vehicle Quick Reference/Hoisting - Standard Procedure** .

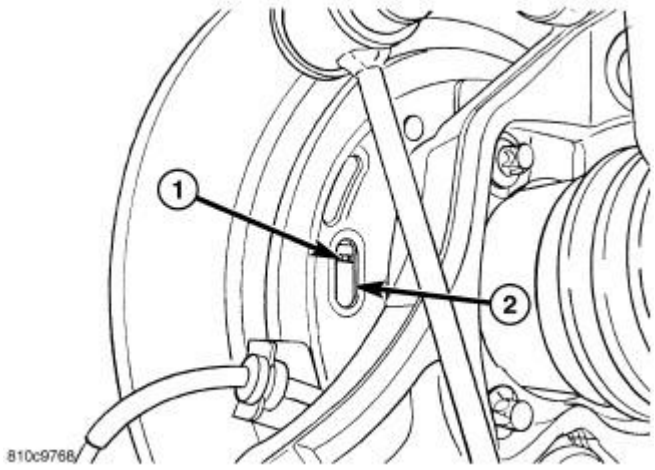

Fig. 254: Access To Shoe Adjuster Star-Wheel
Courtesy of CHRYSLER LLC

1 - ADJUSTER STAR WHEEL 2 - ACCESS HOLE

3. Remove plug in parking brake shoe support to access adjuster star-wheel (1).

NOTE: Through the access hole (2), rotate the adjuster star wheel (1) in the following direction to expand the shoes outward against the drum.

- **Left brake - Rotate star-wheel toward rear of vehicle.**
- **Right brake - Rotate star-wheel toward front of vehicle.**

4. Using an appropriate tool, turn adjuster star wheel (1) until wheel will not rotate (dead lock).
5. Back off adjuster six detents (teeth).
6. Rotate wheel, checking for light drag. If drag is too heavy, continue to back off adjuster one detent at a time until light drag is present. **Do not back off star-wheel more than 17 detents from wheel lock.**
7. Install access plug.
8. Adjust opposite wheel parking brake shoes using same method.
9. Lower vehicle.
10. Apply and release parking brake lever once to ensure proper operation of parking brakes.

PRELIMINARY ADJUSTMENT

1. Remove rear brake rotor. See **Brakes/Hydraulic/Mechanical/ROTOR, Brake - Removal**.

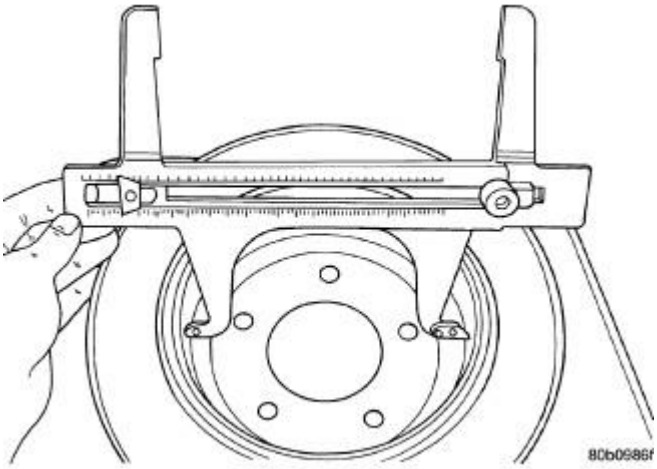

Fig. 255: Measuring Parking Brake Drum Diameter
Courtesy of CHRYSLER LLC

2. Using Brake Shoe Gauge, Special Tool C-3919, or equivalent, measure inside diameter of parking brake drum portion of rotor. Set Gauge.

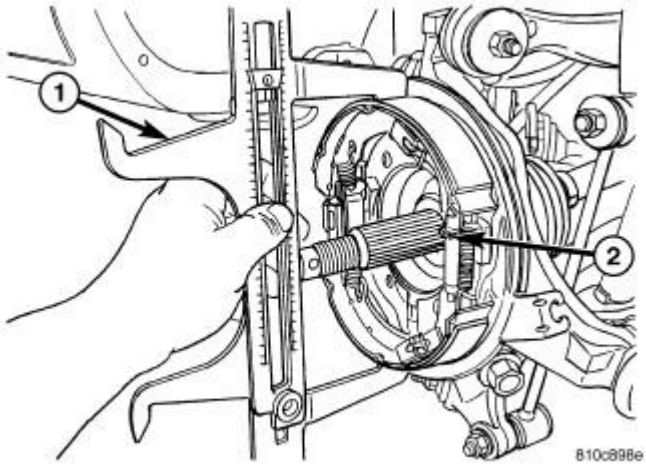

Fig. 256: Measuring Parking Brake Shoes
Courtesy of CHRYSLER LLC

1 - BRAKE SHOE GAUGE 2 - ADJUSTER STAR WHEEL

3. Place Gauge (1) over parking brake shoes at widest point.
4. Using adjuster star wheel (2), adjust parking brake shoes until linings on both park brake shoes just touch jaws on gauge.
5. Install rear brake rotor. See **Brakes/Hydraulic/Mechanical/ROTOR, Brake - Installation**.
6. Perform fine adjustment of parking brake shoes.

ACCESSORIES AND EQUIPMENT

Chime/Buzzer - Service Information - Challenger

DESCRIPTION

DESCRIPTION

CHIME WARNING SYSTEM

The chime warning system uses an electromechanical transducer and an electromechanical relay that are soldered onto the electronic circuit board inside of the Cab Compartment Node (CCN). The system provides an audible indication of various vehicle conditions that may require the attention of the vehicle operator or occupants. The CCN also includes the hardware and software necessary to serve as the electronic body control module and is sometimes referred to as the Cab Compartment Node or CCN.

The electromechanical transducer generates beep tones and chime tones, while the electromechanical relay generates click tones to emulate the sounds associated with conventional turn signal and hazard warning flasher operation. The microprocessor-based CCN utilizes electronic chime request messages received from other modules in the vehicle over the Controller Area Network (CAN) data bus along with hardwired inputs to monitor many sensors and switches throughout the vehicle. In response to those inputs, the circuitry and programming of the CCN allow it to control the audible outputs that are produced through its on-board transducer and relay.

OPERATION

OPERATION

CHIME WARNING SYSTEM

The chime warning system operates on battery voltage received through a fuse in the Junction Block (JB) on a non-switched fused B(+) circuit so that the system may operate regardless of the ignition switch position. The chime warning system also monitors the ignition switch position so that some chime features are functional only with the ignition switch in the On position, while others are functional regardless of the ignition switch position.

The chime warning system provides an audible indication to the vehicle operator or occupants under the following conditions:

- **Airbag Indicator Warning** - The Instrument Cluster also known as the Cab Compartment Node (CCN) transducer will generate one short chime when the ignition switch is in the On position, and an electronic message is received over the Controller Area Network (CAN) data bus from the Occupant Restraint Controller (ORC) requesting "Airbag" indicator illumination. This warning will only occur following completion of the "Airbag" indicator bulb test, and will only occur once during any ignition cycle.
- **Compass Mini-Trip Computer Global Reset** - The CCN transducer will generate one short

chime when the ignition switch is in the On position, and an electronic message is received over the CAN data bus from the optional Compass Mini-Trip Computer (CMTC) requesting that the CMTC average fuel economy, trip odometer and distance to empty data be reset. The CMTC monitors hard wired inputs from the U.S./Metric and Reset button switches to determine the proper reset messages to send to the CCN.

- **Door Ajar Indicator Warning** - The CCN transducer will generate one short chime when the ignition switch is in the On position, a hardwired input is received indicating that the status of any door ajar switch has changed, and an electronic message is received over the CAN data bus indicating that the vehicle is moving.
- **Fasten Seat Belt Indicator Warning** - The CCN transducer will generate repetitive chimes at a slow rate to announce that a hardwired input from the seat belt switch indicates that the driver side front seat belt is not fastened with the ignition switch in the On position. The chime warning system also supports the enhanced seat belt reminder (beltminder) when this feature is enabled.
- **Gate Ajar Indicator Warning** - The CCN transducer will generate one short chime when the ignition switch is in the On position, a hardwired input is received indicating that the status of the liftgate ajar switch has changed, and an electronic message is received over the CAN data bus indicating that the vehicle is moving.
- **Head/Park Lamps-On Warning** - The CCN transducer will generate repetitive chimes at a fast rate to indicate that hardwired inputs from the driver door ajar switch, the headlamp switch, and the ignition switch indicate that the exterior lamps are turned On with the driver side front door opened and the ignition switch in the Off position. The chimes will continue to sound until the exterior lamps are turned Off, the driver side front door is closed, or the ignition switch is turned to the On position, whichever occurs first.
- **Key-In-Ignition Warning** - The CCN transducer will generate repetitive chimes at a fast rate to indicate that hardwired inputs from the driver door ajar switch, the ignition switch, and the key-in ignition switch circuitry of the ignition switch indicate that the key is in the ignition lock cylinder with the driver side front door open and the ignition switch in the Off position. The chimes will continue to sound until the key is removed from the ignition lock cylinder, the driver side front door is closed, or the ignition switch is turned to the On position, whichever occurs first.
- **Low Fuel Indicator Warning** - The CCN transducer will generate one short chime when the low fuel indicator is illuminated by the instrument cluster circuitry. This chime will only occur once during any ignition cycle.
- **Low Wash Indicator Warning** - The CCN transducer will generate one short chime when the low washer fluid indicator is illuminated by the instrument cluster circuitry. This chime will only occur once during any ignition cycle.
- **Overspeed Warning** - The CCN transducer will generate repetitive chimes at a slow rate to indicate that the vehicle speed is over a pre-programmed speed value. The CCN monitors electronic vehicle speed messages received over the CAN data bus. This feature is only enabled on an CCN that has been programmed with a Middle East Gulf Coast Country (GCC) code.
- **Park Brake Reminder** - The CCN transducer will generate one short chime to announce that the hardwired input from the park brake switch and a vehicle speed message input received over the CAN data bus indicate that the park brake is applied and the vehicle is moving. This chime will repeat each time the input conditions are met.

- **Sentry Key "Customer Learn" Mode Announcement** - The CCN transducer will generate one short chime to confirm that an electronic "Customer Learn" mode message has been received over the CAN data bus to indicate that the Sentry Key Remote Entry Module (SKREEM) is prepared for programming additional sentry key transponders. This chime feature is only active on vehicles equipped with the optional Sentry Key system, and sold in a market where "Customer Learn" programming is an allowed feature.
- **Trans Overtemp Indicator Warning** - The CCN transducer will generate repetitive chimes at a slow rate when the transmission overtemp indicator is illuminated by the instrument cluster for a high or critical transmission fluid temperature condition. This chime will repeat each time the trans overtemp indicator is cycled from Off to On.
- **Turn Signal/Hazard Warning Flasher Emulation** - The CCN relay will generate repetitive clicks at a slow rate to emulate an electromechanical flasher when the turn signal or hazard warning system are operating. The CCN relay will generate repetitive clicks at a fast rate to indicate that the right or left turn signal are operating with one or more bulbs inoperative. In either case, the clicks will continue until the turn signal and hazard warning systems are turned off.
- **Turn Signal On Warning** - The CCN transducer will generate repetitive chimes at a slow rate to indicate that a turn signal has been active continuously for 1.6 kilometers (1 mile) with the vehicle speed greater than 22 kilometers-per-hour (15 miles-per hour). Vehicles built for markets other than the United States and Canada have a revised distance threshold of 4 kilometers for this feature. The chime will continue until the turn signal input becomes inactive or until the vehicle speed message indicates that the speed is less than 22 kilometers-per-hour (15 miles-per-hour), whichever occurs first. The hazard warning flashers will not activate this chime feature.
- **Warning Indicator Announcement** - The CCN transducer will generate one short chime each time the check gauges indicator is illuminated by the instrument cluster circuitry. The check gauges indicator may be illuminated when any critical engine or transmission systems are operating outside of their normal parameters. The instrument cluster monitors electronic messages received over the CAN data bus to determine when to illuminate the check gauges indicator.

The CCN provides chime service for all available features in the chime warning system. The CCN relies upon its internal programming, numerous hardwired inputs, and electronic message inputs received from other modules over the CAN data bus network to provide the chime warning system features. The internal programming of the CCN determines the priority of each chime request input that is received, as well as the rate and duration of each chime that is to be generated.

The hardwired chime warning system inputs to the CCN may be diagnosed and tested using conventional diagnostic tools and procedures. However, conventional diagnostic methods may not prove conclusive in the diagnosis of the CCN, the CAN data bus, or the electronic messages received by the CCN from other modules. The most reliable, efficient and accurate means to diagnose the CCN, the CAN data bus, or the electronic message inputs used for the chime warning system requires the use of a diagnostic scan tool. Refer to the appropriate diagnostic information.

CABIN AIR FILTER

Chrysler - 300, Charger & Magnum

REMOVAL & INSTALLATION

CABIN AIR FILTER

NOTE: Manufacturer's terminology for this filter is Particulate Air Filter.

Removal

1. Remove front air inlet grille (1) from the wiper module screen (2) located under the dash panel in the engine compartment. Refer to **Fig. 1**.
2. Open the filter door (3) on the top of the particulate air filter housing (4) located inside of the dash panel plenum (5). Refer to **Fig. 1**.

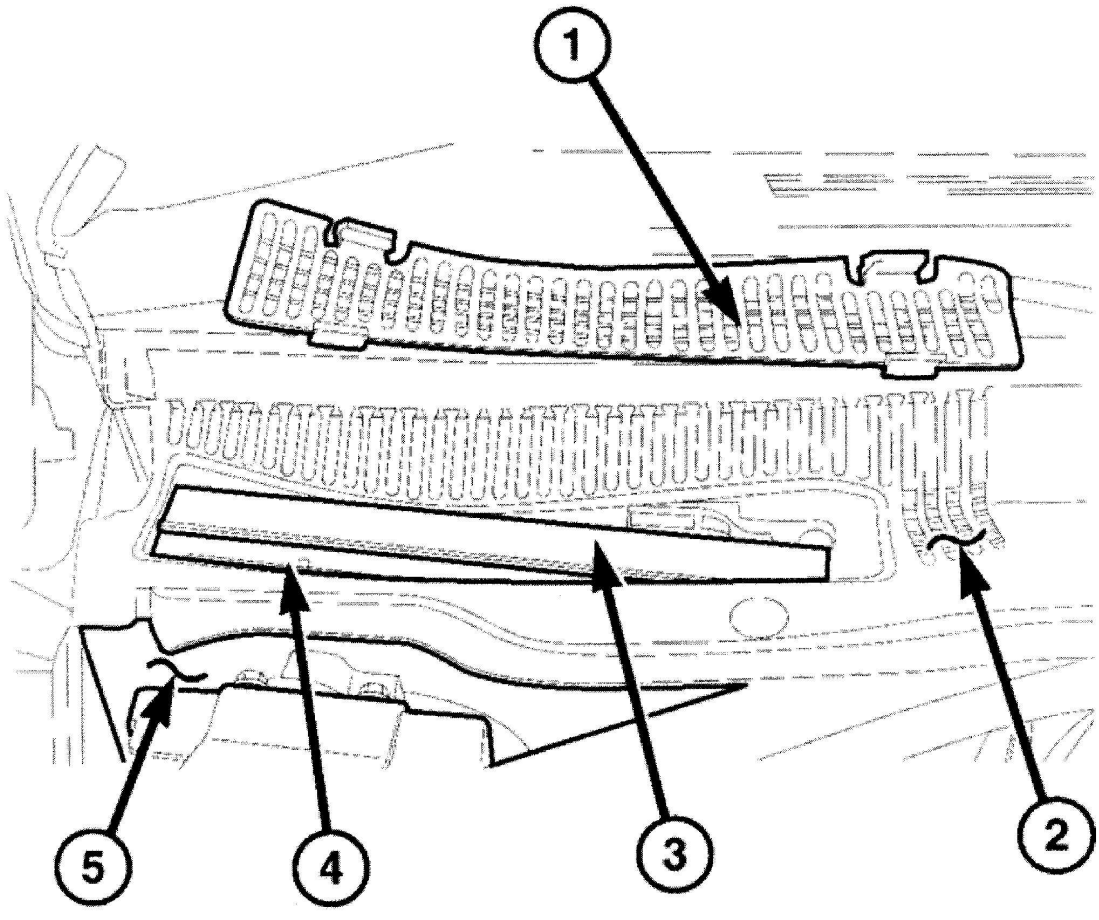

Fig. 1: Underhood Dash Panel Components

Courtesy of DAIMLERCHRYSLER CORPORATION

NOTE: To aid in reinstallation, note the installed position of the particulate air filter prior to removal of the filter.

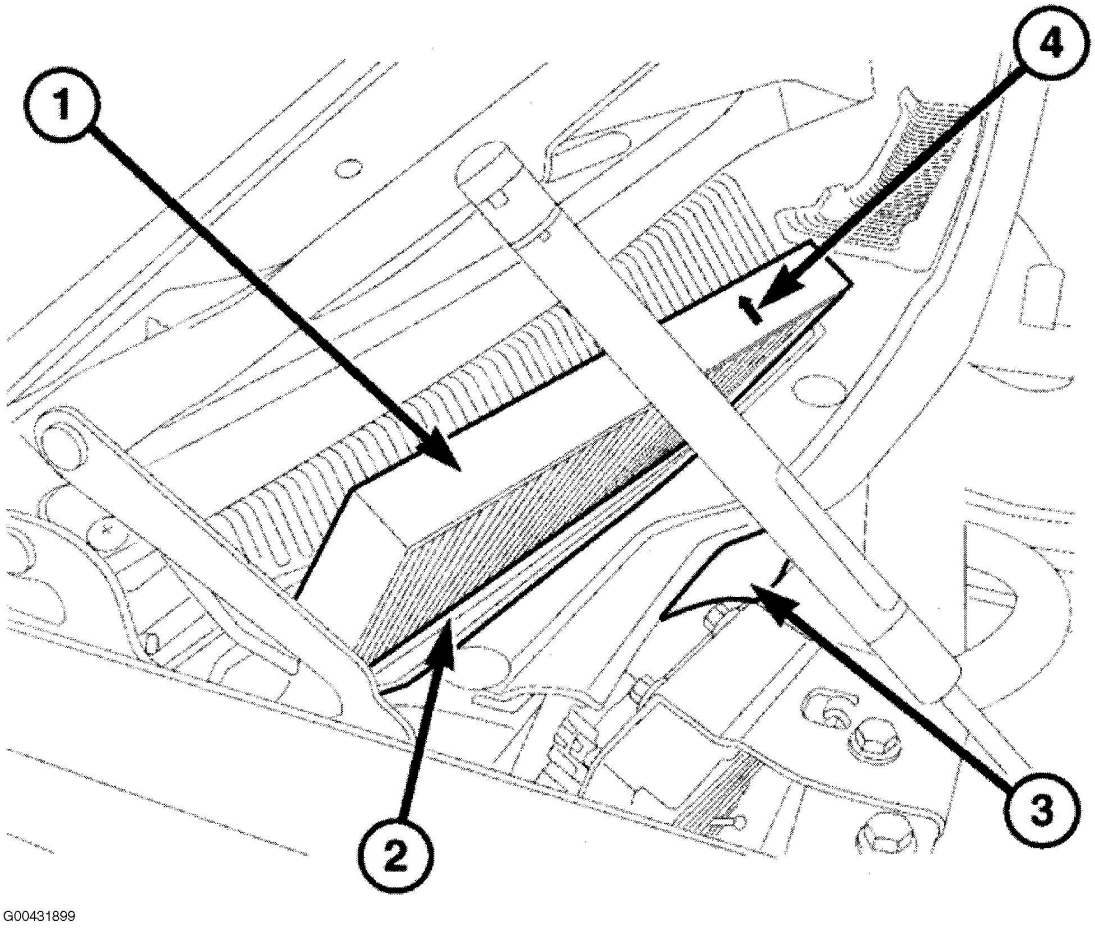

Fig. 2: Particulate Air Filter Position & Location
Courtesy of DAIMLERCHRYSLER CORPORATION

3. Remove the particulate air filter (1) from the particulate air filter housing (2) located inside of the dash panel plenum (3). Note the direction of air flow indicated by an arrow (4) on the filter. Refer to **Fig. 2**.

Installation

NOTE: The particulate air filter is labeled with "REAR OF VEHICLE" and an arrow to indicate air flow direction through the filter. Make sure to properly install the particulate air filter. Failure to properly install the filter will result in the need to replace the filter sooner than required by design.

1. Install the particulate air filter (1) into the particulate air filter housing (2) located inside of the dash panel plenum (3). Insert the particulate air filter down directly into the filter housing with the arrow (4) on the filter pointing to the rear of the vehicle. The particulate air filter is held in place by friction between the filter element and the filter housing, so no fasteners are required. Refer to **Fig. 2**.
2. Close the filter door (3) on the top of the particulate air filter housing (4) located inside of the dash panel plenum (5). Refer to **Fig. 1**.
3. Install the air inlet grille (1) onto the wiper module screen (2). Refer to **Fig. 1**.

ELECTRICAL

Charging - Service Information - Challenger

DIAGNOSIS AND TESTING

ON-BOARD DIAGNOSTIC SYSTEM

The Powertrain Control Module (PCM) monitors critical input and output circuits of the charging system, making sure they are operational. A Diagnostic Trouble Code (DTC) is assigned to each input and output circuit monitored by the OBD system. Some circuits are checked continuously and some are checked only under certain conditions.

If the OBD system senses that a monitored circuit is bad, it will put a DTC into electronic memory. The DTC will stay in electronic memory as long as the circuit continues to be bad. The PCM is programmed to clear the memory after 40 good trip if the problem does not occur again.

DIAGNOSTIC TROUBLE CODES

A DTC description can be read using the scan tool. Refer to the appropriate Powertrain Diagnostic article for information.

A DTC does not identify which component in a circuit is bad. Thus, a DTC should be treated as a symptom, not as the cause for the problem. In some cases, because of the design of the diagnostic test procedure, a DTC can be the reason for another DTC to be set. Therefore, it is important that the test procedures be followed in sequence, to understand what caused a DTC to be set.

ERASING DIAGNOSTIC TROUBLE CODES

The Scan Tool must be used to erase a DTC.

The following procedures may be used to diagnose the charging system if:

- the check gauges lamp or battery lamp is illuminated with the engine running
- the voltmeter (if equipped) does not register properly
- an undercharged or overcharged battery condition occurs.

Remember that an undercharged battery is often caused by:

- accessories being left on with the engine not running
- a faulty or improperly adjusted switch that allows a lamp to stay on. Refer to **Electrical/Battery System/BATTERY - Standard Procedure**
- loose generator belt.

INSPECTION

The Powertrain Control Module (PCM) monitors critical input and output circuits of the charging system, making sure they are operational. A Diagnostic Trouble Code (DTC) is assigned to each input and output circuit monitored by the On-Board Diagnostic (OBD) system. Some charging system circuits are checked continuously, and some are checked only under certain conditions.

To perform a complete test of the charging system, refer to the appropriate Powertrain Diagnostic Procedures service manual and the scan tool. Perform the following inspections before attaching the scan tool.

1. Inspect the battery condition. Refer to **Electrical/Battery System - Diagnosis and Testing** for procedures.
2. Inspect condition of battery cable terminals, battery posts, connections at engine block, starter solenoid and relay. They should be clean and tight. Repair as required.
3. Inspect all fuses in both the fuseblock and Power Distribution Center (PDC) or IPM (if equipped) for tightness in receptacles. They should be properly installed and tight. Repair or replace as required.
4. Inspect generator mounting bolts for tightness. Replace or tighten bolts if required. Refer to **GENERATOR** for torque specifications. See **Electrical/Charging - Specifications**.
5. Inspect generator drive belt condition and tension.
6. Inspect decoupler pulley (if equipped). Ensure decoupler pulley is driving the alternator rotor.
7. Inspect automatic belt tensioner (if equipped). Refer to **COOLING** for more information.
8. Inspect generator electrical connections at generator field, battery output, and ground terminal (if equipped). Also check generator ground wire connection at engine (if equipped). They should all be clean and tight. Repair as required.

SPECIFICATIONS

GENERATOR

GENERATOR

MANUFACTURER	ENGINE	NOMINAL RATING (AMPS)	MINIMUM OUTPUT (AMPS) (@ SPECIFIED TEST CONDITIONS)
Denso	6.1L	160A	110A
TEST CONDITIONS			
1. Engine RPM: 2500 RPM (ENGINE HOT)			
2. Voltage Output: 13.0 - 16.0 V			

TORQUE

TORQUE SPECIFICATIONS

DESCRIPTION	N.m	Ft. Lbs.	In. Lbs.
Battery Terminal Nut	5	-	44
Generator Mounting			

Bolts - 6.1L	65	48	-
Generator Support Bracket Bolt - 6.1L	65	48	-
Generator Support Bracket Nut - 6.1L	28	21	-
Generator B+ Output Cable Terminal Nut	13	10	-

GENERATOR

REMOVAL

3.5L

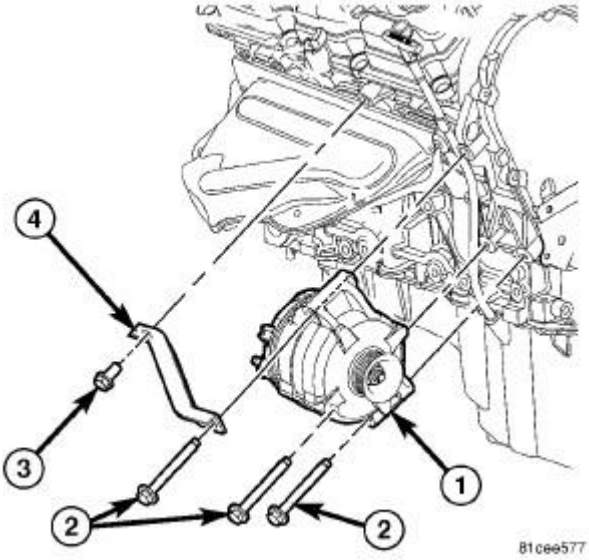

Fig. 1: GENERATOR 3.5L
Courtesy of CHRYSLER LLC

WARNING: DISCONNECT NEGATIVE CABLE FROM BATTERY BEFORE REMOVING BATTERY OUTPUT WIRE (B+ WIRE) FROM GENERATOR. FAILURE TO DO SO CAN RESULT IN INJURY OR DAMAGE TO ELECTRICAL SYSTEM.

1. Disconnect and isolate negative battery cable at battery.
2. Remove generator drive belt. Refer to **Cooling/Accessory Drive/BELT, Serpentine - Removal** .
3. Remove upper most mounting bolt (2) from generator (1).
4. Remove generator bracket bolt (3) and remove bracket (4).

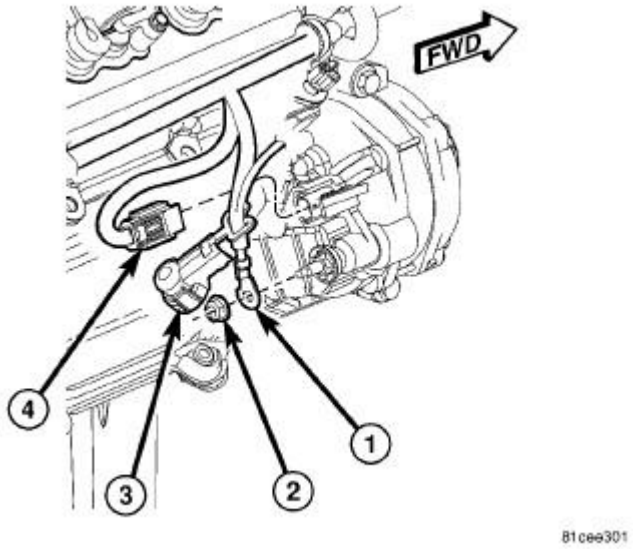

Fig. 2: ALTERNATOR ELECTRICAL CONNECTION
Courtesy of CHRYSLER LLC

5. Unsnap plastic protective cover (3) from B+ mounting stud.
6. Remove B+ terminal mounting nut (2) and B+ terminal (1) at rear of generator.
7. Disconnect field wire electrical connector (4) by pushing on connector tab.

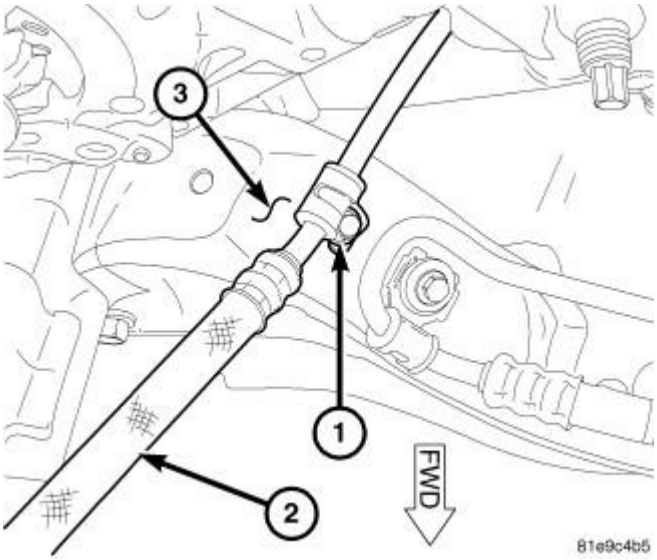

Fig. 3: TRANS COOLER LINE CLAMP
Courtesy of CHRYSLER LLC

8. Raise and support vehicle.
9. Remove middle splash shield.
10. Remove bolt (1) from transmission cooler line clamp at right crossmember (3) and reposition transmission cooler line (2).

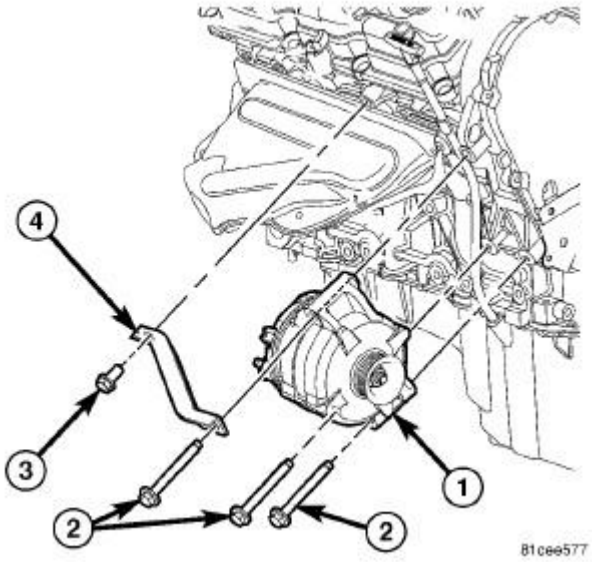

Fig. 4: GENERATOR 3.5L
Courtesy of CHRYSLER LLC

11. Remove lower mounting bolts (2) from generator (1).
12. Remove generator from engine compartment.

5.7L

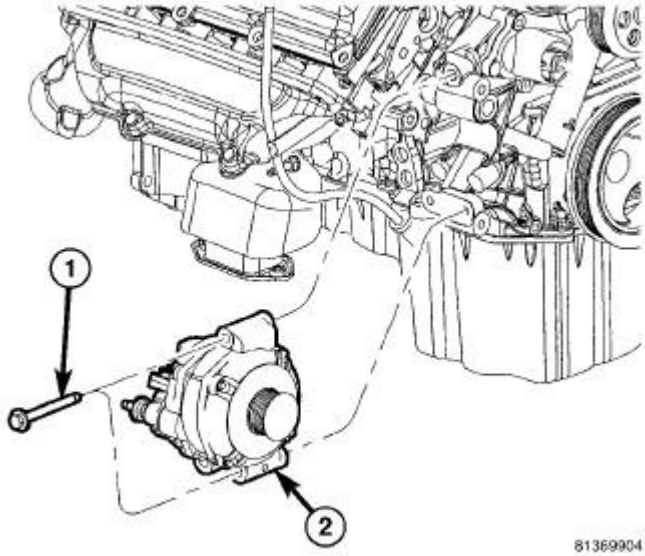

Fig. 5: Generator - 5.7L
Courtesy of CHRYSLER LLC

WARNING: DISCONNECT NEGATIVE CABLE FROM BATTERY BEFORE REMOVING BATTERY OUTPUT WIRE (B+ WIRE) FROM GENERATOR. FAILURE TO

DO SO CAN RESULT IN INJURY OR DAMAGE TO ELECTRICAL SYSTEM.

1. Disconnect and isolate negative battery cable at battery.
2. Remove generator drive belt. Refer to **Cooling/Accessory Drive/BELT, Serpentine - Removal** .
3. Remove upper generator mounting bolt (1).

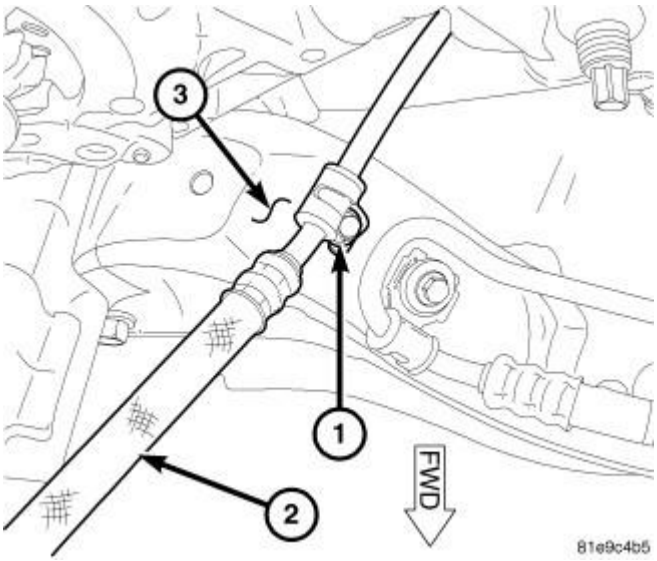

Fig. 6: TRANS COOLER LINE CLAMP
Courtesy of CHRYSLER LLC

4. Raise and support vehicle.
5. Remove lower splash shield.
6. Remove bolt (1) from transmission cooler line clamp at right crossmember (3) and reposition transmission cooler line (2).

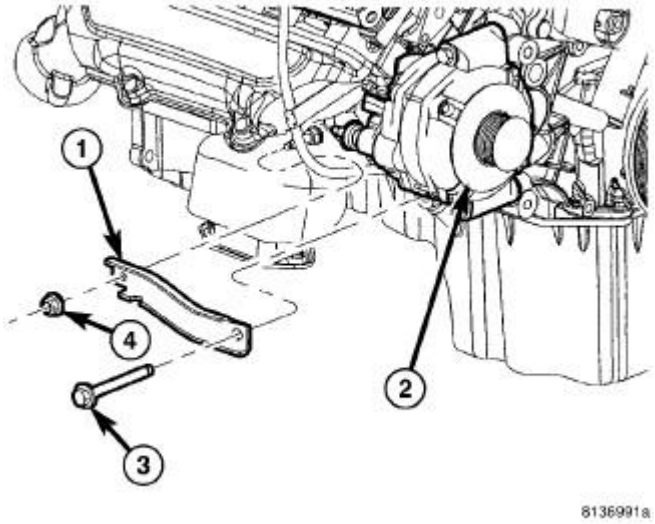

Fig. 7: GENERATOR SUPPORT BRACKET-5.7L
Courtesy of CHRYSLER LLC

7. Remove generator support bracket nut (4) and bolt (3). Remove support bracket (1).
8. Unsnap plastic insulator cap from B+ output terminal.
9. Remove B+ terminal mounting nut at rear of generator. Disconnect terminal from generator.
10. Disconnect field wire connector at rear of generator by pushing on connector tab.

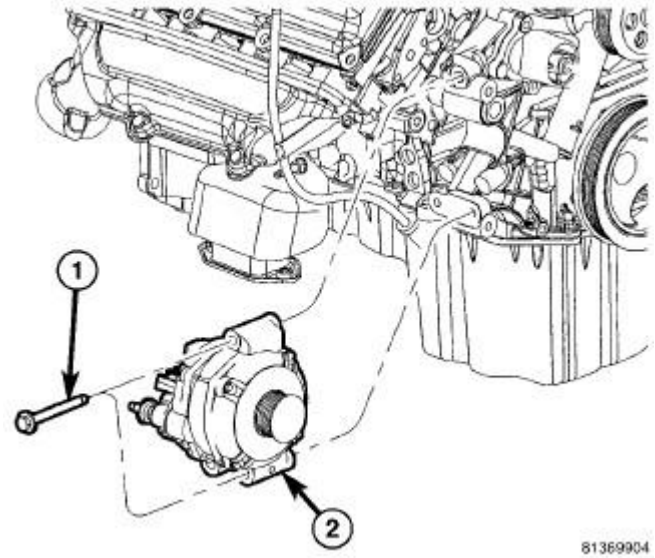

Fig. 8: Generator - 5.7L
Courtesy of CHRYSLER LLC

11. Remove lower generator mounting bolt (1).
12. Remove generator from vehicle.

REMOVAL

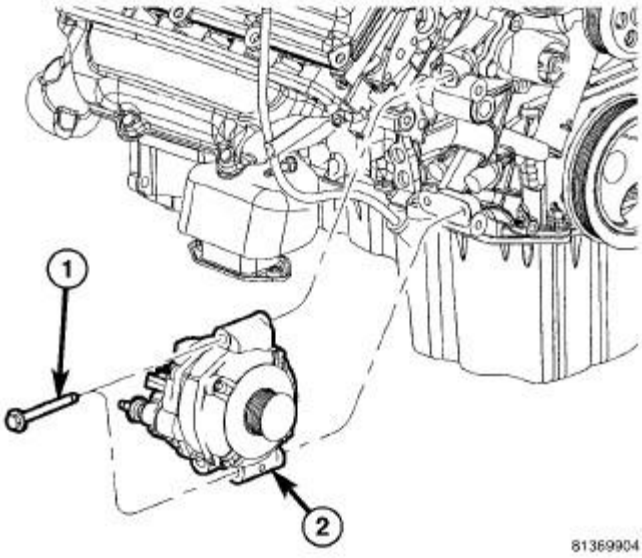

Fig. 9: Generator - 5.7L
Courtesy of CHRYSLER LLC

WARNING: DISCONNECT NEGATIVE CABLE FROM BATTERY BEFORE REMOVING BATTERY OUTPUT WIRE (B+ WIRE) FROM GENERATOR. FAILURE TO DO SO CAN RESULT IN INJURY OR DAMAGE TO ELECTRICAL SYSTEM.

1. Disconnect and isolate the negative battery cable at battery.
2. Remove the generator drive belt. Refer to **Cooling/Accessory Drive/BELT, Serpentine - Removal**
3. Remove the upper generator mounting bolt (1).

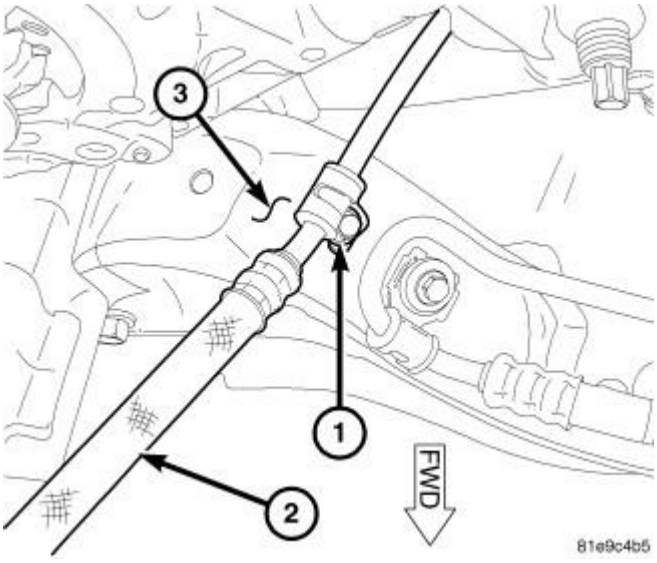

Fig. 10: Trans Cooler Line Clamp
Courtesy of CHRYSLER LLC

4. Raise and support the vehicle.
5. Remove the lower splash shield.
6. Remove the bolt (1) from transmission cooler line clamp at right the crossmember (3) and reposition the transmission cooler line (2).

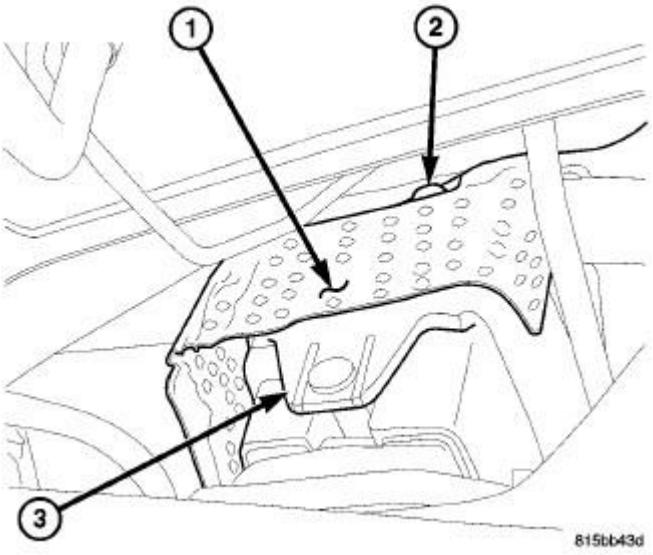

Fig. 11: Engine Mount Heat Shield
Courtesy of CHRYSLER LLC

7. A heat shield (1) is used over the right engine mount (3). The heat shield must be removed to gain access to the generator support bracket nut. Remove the two heat shield mounting bolts (2).

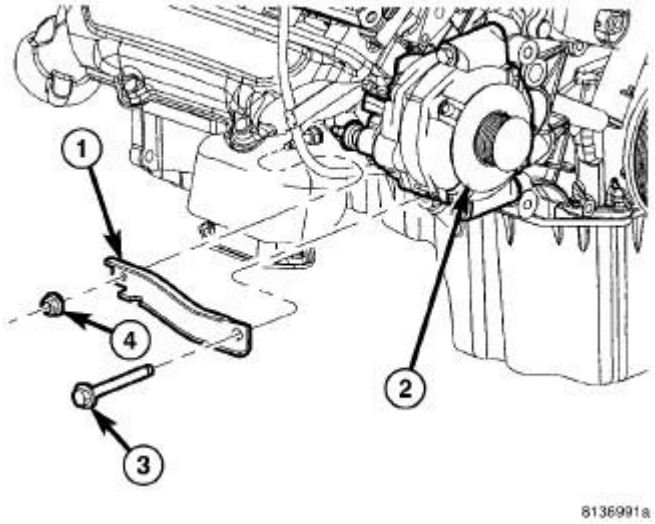

Fig. 12: Generator Support Bracket - 5.7L
Courtesy of CHRYSLER LLC

8. Loosen, but do not remove the generator support bracket nut (4).
9. Remove the bolt (3).
10. Unsnap the plastic insulator cap from the B+ output terminal.
11. Remove the B+ terminal mounting nut at the rear of the generator. Disconnect the terminal from the generator.
12. Disconnect the field wire connector at the rear of the generator by pushing on the connector tab.

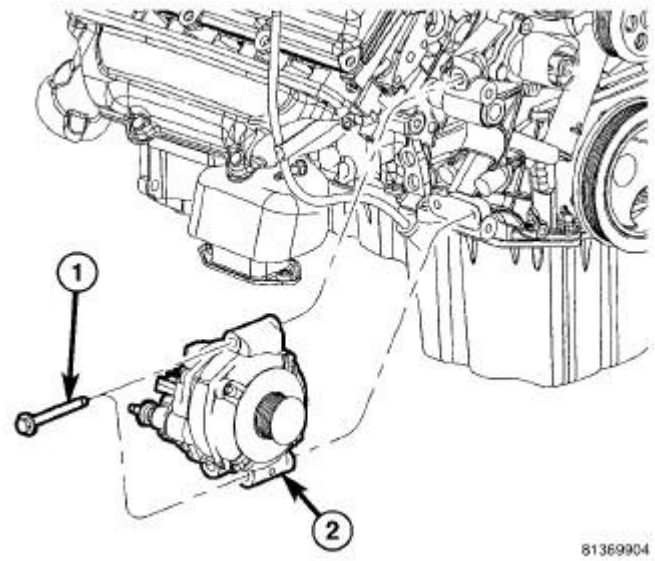

Fig. 13: Generator - 5.7L
Courtesy of CHRYSLER LLC

13. Remove the lower generator mounting bolt (1).
14. Remove the generator from the vehicle.

INSTALLATION

3.5L

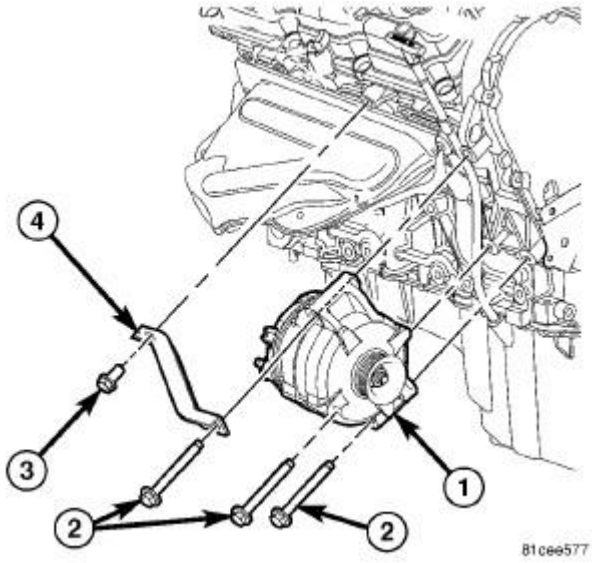

Fig. 14: GENERATOR 3.5L
Courtesy of CHRYSLER LLC

NOTE: Position generator, bracket and all bolts to engine compartment. Hand tightening all fasteners. Then torque all fasteners to specifications.

1. Position generator (1) to engine and loosely install lower mounting bolts (2).
2. Position generator bracket (4) and loosely install bracket bolt (3) and upper generator mounting bolt (2).
3. Tighten generator mounting bolts (2) to 65 N.m (48 ft. lbs.). Tighten generator bracket bolt (3) to 54 N.m (40 ft. lbs.).

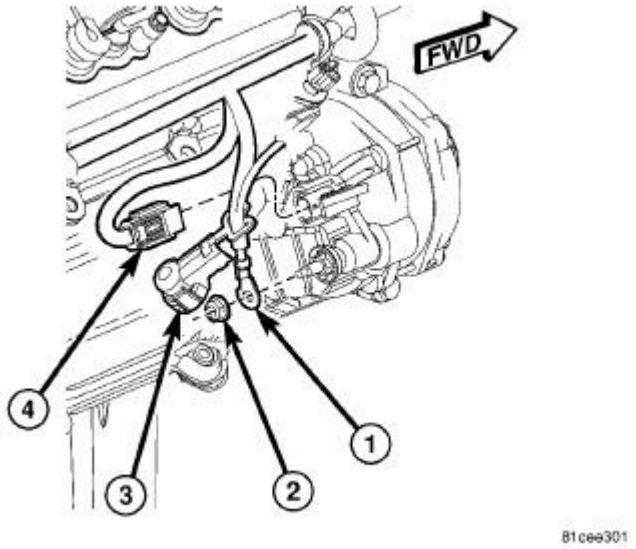

Fig. 15: ALTERNATOR ELECTRICAL CONNECTION
Courtesy of CHRYSLER LLC

4. Connect field wire connector (4) into generator.
5. Install B+ terminal (1) and nut (2) to generator mounting stud. Tighten nut to 13 N.m (115 in. lbs.)
6. Snap plastic protective cover (3) to B+ terminal.

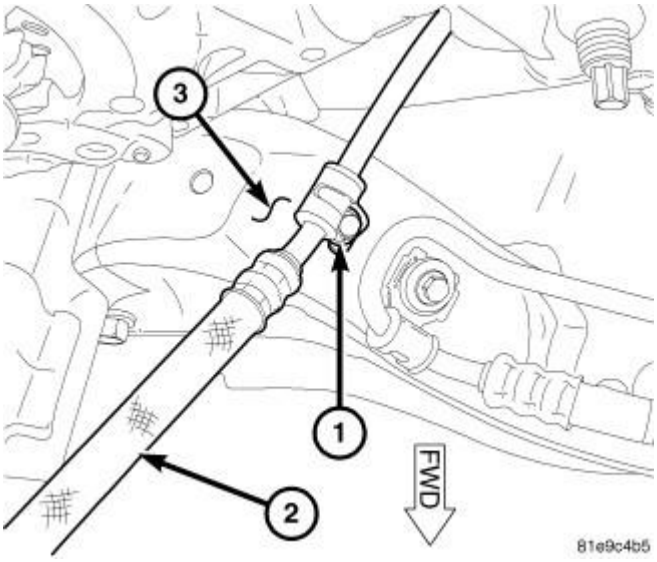

Fig. 16: TRANS COOLER LINE CLAMP
Courtesy of CHRYSLER LLC

7. Position transmission cooler line (2) and install transmission cooler line clamp bolt (1) to right crossmember (3).
8. Install middle splash shield.

9. Lower vehicle.

CAUTION: When installing a serpentine accessory drive belt, the belt MUST be routed correctly. The water pump will be rotating in the wrong direction if the belt is installed incorrectly, causing the engine to overheat.

10. Install drive belt. Refer to **Cooling/Accessory Drive/BELT, Serpentine - Installation** .
11. Connect the negative battery cable and tighten nut to 5 N.m (45 in. lbs.).

5.7L

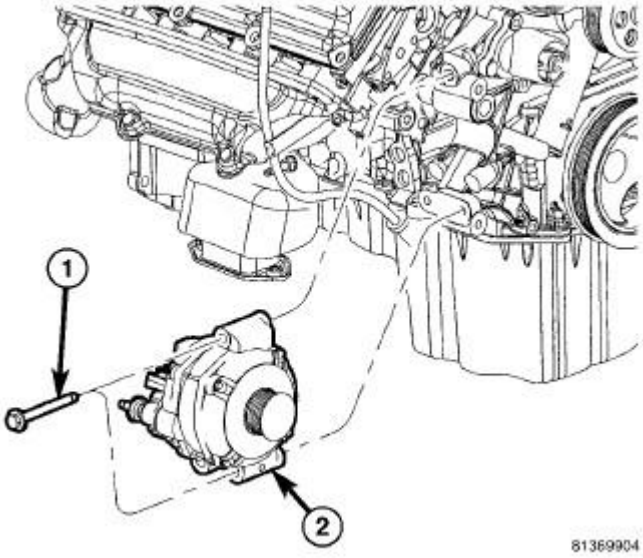

Fig. 17: Generator - 5.7L
Courtesy of CHRYSLER LLC

1. Position generator (2) to engine and loosely install 2 mounting bolts (1).

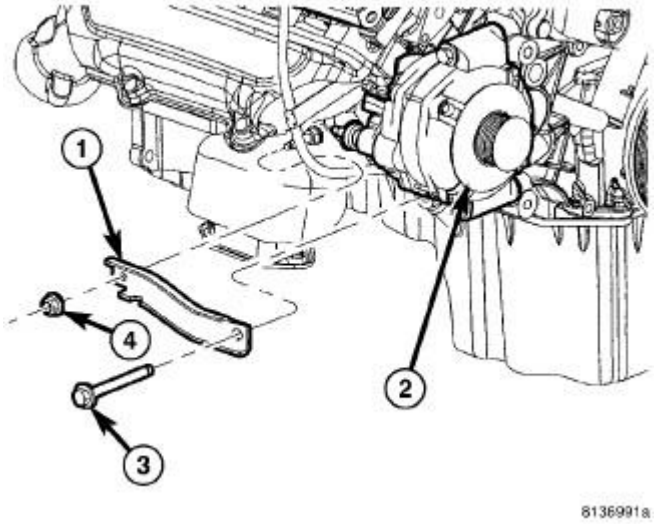

Fig. 18: GENERATOR SUPPORT BRACKET-5.7L
Courtesy of CHRYSLER LLC

2. Position support bracket (1) to generator and loosely install bolt (3) and nut (4).
3. Tighten generator mounting bolts to 65 N.m (48 ft. lbs.).
4. Tighten bracket nut (4) to 28 N.m (20.5 ft. lbs.).
5. Snap field wire connector into rear of generator.
6. Install B+ terminal eyelet to generator output stud. Tighten nut to 13 N.m (115 in. lbs.).

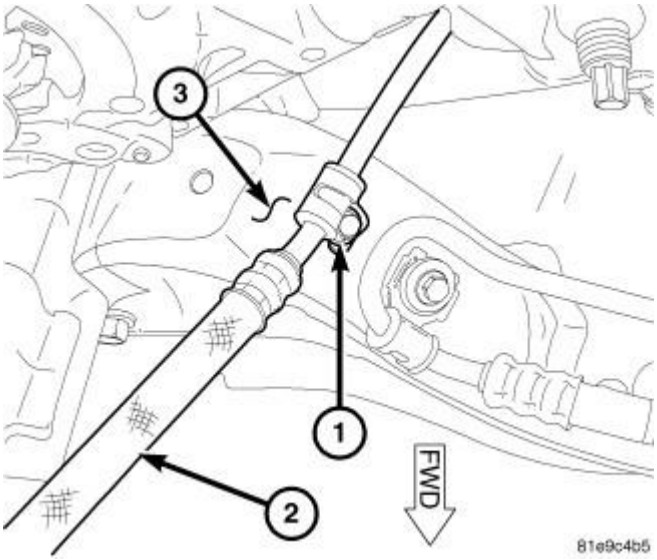

Fig. 19: TRANS COOLER LINE CLAMP
Courtesy of CHRYSLER LLC

7. Position transmission cooler line (2) and install transmission cooler line clamp bolt (1) to right crossmember (3).

8. Install lower splash shield.
9. Lower vehicle.

CAUTION: When installing a serpentine accessory drive belt, the belt MUST be routed correctly. The water pump may be rotating in the wrong direction if the belt is installed incorrectly, causing the engine to overheat.

10. Install generator drive belt. Refer to **Cooling/Accessory Drive/BELT, Serpentine - Installation** .
11. Connect the negative battery cable and tighten nut to 5 N.m (45 in. lbs.).

INSTALLATION

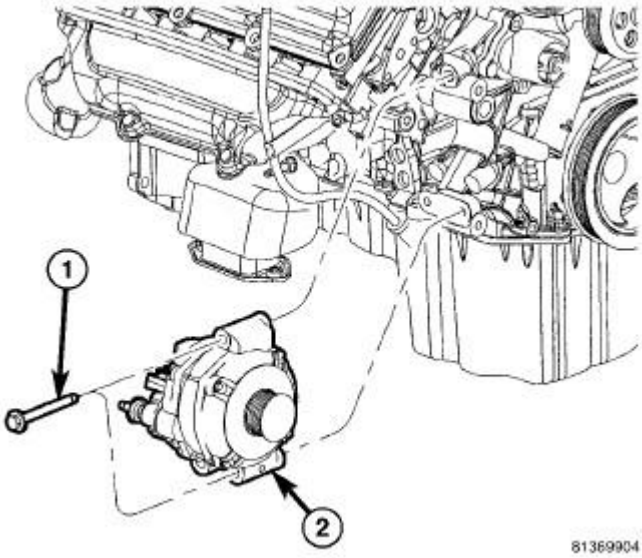

Fig. 20: Generator - 5.7L
Courtesy of CHRYSLER LLC

1. Position the generator (2) to the engine and loosely install the two generator mounting bolts (1).

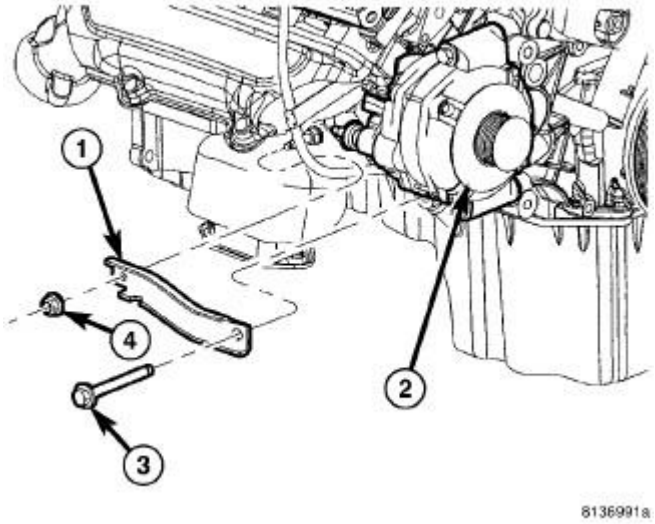

Fig. 21: Generator Support Bracket - 5.7L
Courtesy of CHRYSLER LLC

2. Position the support bracket (1) to the generator and loosely install the bolt (3) and the nut (4).
3. Tighten the generator mounting bolts to 65 N.m (48 ft. lbs.).
4. Tighten the bracket nut (4) to 28 N.m (21 ft. lbs.).

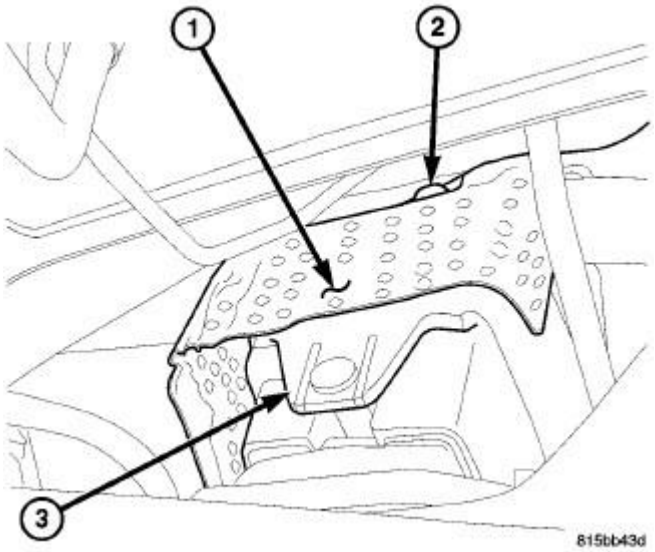

Fig. 22: Engine Mount Heat Shield
Courtesy of CHRYSLER LLC

5. Install the heat shield (1) and the two heat shield mounting bolts (2).
6. Snap the field wire connector into the rear of the 'generator.
7. Install the generator B+ terminal eyelet to the generator output stud. Tighten to 13 N.m (10 ft.

lbs.).

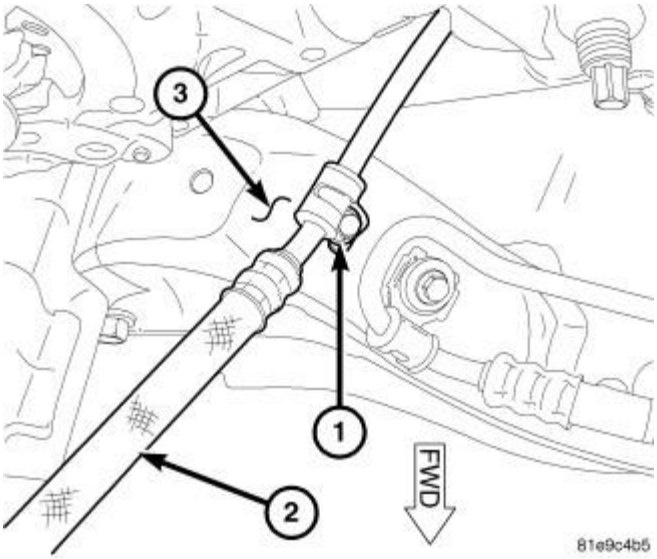

Fig. 23: TRANS COOLER LINE CLAMP
Courtesy of CHRYSLER LLC

8. Position the transmission cooler line (2) and install the transmission cooler line bracket bolt (1) to the right crossmember (3).
9. Install the lower splash shield.
10. Lower the vehicle.

CAUTION: When installing a serpentine accessory drive belt, the belt MUST be routed correctly. The water pump may be rotating in the wrong direction if the belt is installed incorrectly, causing the engine to overheat.

11. Install the generator drive belt. Refer to **Cooling/Accessory Drive/BELT, Serpentine - Installation** .
12. Connect the negative battery cable. Follow the battery reconnection procedure. Refer to **Electrical/Battery System - Standard Procedure**

CLUTCH

Clutch - Challenger

WARNING

WARNING

WARNING: EXERCISE CARE WHEN SERVICING CLUTCH COMPONENTS. FACTORY INSTALLED CLUTCH DISCS DO NOT CONTAIN ASBESTOS FIBERS. DUST AND DIRT ON CLUTCH PARTS MAY CONTAIN ASBESTOS FIBERS FROM AFTERMARKET COMPONENTS. BREATHING EXCESSIVE CONCENTRATIONS OF THESE FIBERS CAN CAUSE SERIOUS BODILY HARM. WEAR A RESPIRATOR DURING SERVICE AND NEVER CLEAN CLUTCH COMPONENTS WITH COMPRESSED AIR OR WITH A DRY BRUSH. EITHER CLEAN THE COMPONENTS WITH A WATER DAMPENED RAGS OR USE A VACUUM CLEANER SPECIFICALLY DESIGNED FOR REMOVING ASBESTOS FIBERS AND DUST. DO NOT CREATE DUST BY SANDING A CLUTCH DISC. REPLACE THE DISC IF THE FRICTION MATERIAL IS DAMAGED OR CONTAMINATED. DISPOSE OF ALL DUST AND DIRT CONTAINING ASBESTOS FIBERS IN SEALED BAGS OR CONTAINERS. THIS WILL HELP MINIMIZE EXPOSURE TO YOURSELF AND TO OTHERS. FOLLOW ALL RECOMMENDED SAFETY PRACTICES PRESCRIBED BY THE OCCUPATIONAL SAFETY AND HEALTH ADMINISTRATION (OSHA) AND THE ENVIRONMENTAL SAFETY AGENCY (EPA), FOR THE HANDLING AND DISPOSAL OF PRODUCTS CONTAINING ASBESTOS.

DIAGNOSIS AND TESTING

CLUTCH

ROAD TEST

Road test the vehicle and inspect components to determine the clutch problem.

During a road test, drive the vehicle at normal speeds. Shift the transmission through all gear ranges and observe clutch action. If the clutch chatters, grabs, slips or does not release properly, remove and inspect the clutch components. If the problem is noise or hard shifting further diagnosis may be needed as the transmission or another driveline component may be at fault.

CLUTCH CONTAMINATION

Clutch contamination can be caused by oil, water or clutch fluid on the clutch discs and pressure plate surfaces. This will cause chatter, slip and grab. Inspect the clutch components and verify the contaminate.

Oil contamination indicates a leak at either the rear main seal or transmission input shaft causing an oil residue on the housing interior and clutch cover and flywheel. Heat buildup caused by slippage between the pressure plate, discs and flywheel can bake the oil residue onto the components. A glaze-like residue ranges in color from amber to black will be noticed.

Road splash contamination, dirt/water can enter the clutch housing due to loose bolts, housing cracks or through hydraulic line openings. Driving through deep water puddles can force water/road splash into the housing through such openings.

IMPROPER RELEASE OR CLUTCH ENGAGEMENT

Clutch release or engagement problems are caused by wear or damage to one or more clutch components.

Release problems can result in hard shifting and noise. Inspect the clutch cylinders/interconnecting line, slave cylinder, release bearing, clutch discs and pressure plate. Inspect these components for loose, worn and damaged mounting bolts or components.

Normal condensation in vehicles that are stored or out of service for long periods of time can generate enough corrosion to make the discs stick to the flywheel, or pressure plate. If this condition is experienced loosen the disc manually through the inspection plate opening if equipped.

Engagement problems can result in slip, chatter/shudder and noisy operation. Inspect the clutch discs and pressure plate for contamination, wear, misalignment and distortion.

CLUTCH MISALIGNMENT

Clutch components must be in proper alignment with the crankshaft and transmission input shaft. Misalignment caused by excessive runout or warpage of any clutch component will cause grab, chatter and improper clutch release.

PRESSURE PLATE

Check pressure plate for flatness with a straightedge. Pressure plate friction area must be flat within 0.50 mm (0.020 in.). Attaching bolt holes should be in contact with surface plate within 0.38 mm (0.015 in.). Inspect friction faces of the flywheel and pressure plate for:

- Flywheel Dowel Pin Fit
- Excessive Discoloration
- Burned Areas
- Small Cracks
- Deep Grooves
- Ridges

CLUTCH DISC

Replace clutch discs and pressure plate if discs are worn within 0.38 mm (0.015 in.) of the rivet heads. Inspect clutch discs for:

- Discoloration
- Burned Areas
- Cracks
- Worn Disc Hub Splines
- Broken Springs
- Lose Rivets
- Oil Soaked

DIAGNOSIS CHART

The DIAGNOSIS CHART describe common clutch problems, possible causes and correction.

DIAGNOSIS CHART

CONDITION	POSSIBLE CAUSES	CORRECTION
Discs facing worn out	1. Normal wear.	1. Replace pressure plate and discs.
	2. Driver frequently rides (slips) the clutch. Results in rapid overheating and wear.	2. Replace pressure plate and discs.
	3. Insufficient pressure plate diaphragm spring tension.	3. Replace pressure plate and discs.
Clutch disc facing contaminated with oil, grease, or clutch fluid.	1. Leak at rear main engine seal or transmission input shaft seal.	1. Replace appropriate seal.
	2. Excessive amount of grease applied to the input shaft splines.	2. Remove grease and apply the correct amount of grease.
	3. Road splash, water entering housing.	3. Replace clutch disc. Clean pressure plate and reuse if in good condition.
	4. Slave cylinder leaking.	4. Replace hydraulic clutch linkage.
Clutch is running partially disengaged.	1. Release bearing sticking or binding and does not return to the normal running position.	1. Verify failure. Replace the release bearing and transmission front bearing retainer as necessary.
Flywheel below minimum thickness specification.	1. Improper flywheel machining. Flywheel has excessive taper or excessive material removal.	1. Replace flywheel.
Pressure plate or diaphragm	1. Rough handling. Impact	1. Replace discs and pressure

spring warped or distorted.	bent cover, spring, or disc. 2. Improper bolt tightening procedure.	plate as necessary. 2. Tighten clutch cover using proper procedure.
Facing on flywheel side of disc torn, gouged, or worn.	1. Flywheel surface scored or nicked. 2. Clutch disc sticking or binding on transmission input shaft.	1. Correct surface condition if possible. Replace flywheel, discs and pressure plate as necessary. 2. Inspect components and correct/replace as necessary.
Clutch discs facing burnt. Flywheel and pressure plate surfaces glazed.	1. Frequent operation under high loads or hard acceleration conditions. 2. Driver frequently rides (slips) clutch. Results in rapid wear and overheating of disc and cover.	1. Correct condition of flywheel and pressure plate surface. Replace discs and pressure plate. 2. Correct condition of flywheel surface. Replace clutch discs and pressure plate.
Clutch discs binds on input shaft splines.	1. Clutch discs hub splines damaged during installation. 2. Input shaft splines rough, damaged, or corroded.	1. Clean, smooth, and lubricate hub splines if possible. Replace discs and pressure plate if necessary. 2. Clean, smooth, and lubricate shaft splines if possible. Replace input shaft if necessary.
Clutch discs rusted to flywheel and/or pressure plate.	1. Clutch not used for and extended period of time (e.g. long term vehicle storage).	1. Sand rusted surfaces with 180 grit sanding paper. Replace discs, pressure plate and flywheel if necessary.
Pilot bearing seized, loose, or rollers are worn.	1. Bearing cocked during installation. 2. Bearing defective. 3. Bearing not lubricated. 4. Clutch misalignment.	1. Install and lubricate a new bearing. 2. Install and lubricate a new bearing. 3. Install and lubricate a new bearing. 4. Inspect clutch and correct as necessary. Install and lubricate a new bearing.
Clutch will not disengage properly.	1. Low clutch fluid level. 2. Clutch cover loose. 3. Clutch disc bent or distorted.	1. Replace hydraulic linkage assembly. 2. Follow proper bolt tightening procedure. 3. Replace discs and pressure plate.

	4. Pressure plate diaphragm spring bent or warped. 5. Clutch disc installed backwards. 6. Clutch master or slave cylinder failure.	4. Replace discs and pressure plate. 5. Remove and install clutch disc correctly. 6. Replace hydraulic linkage assembly.
Clutch pedal squeak.	1. Pivot pin loose. 2. Master cylinder bushing not lubricated. 3. Pedal bushings worn out or cracked.	1. Tighten pivot pin if possible. Replace clutch pedal if necessary. 2. Lubricate master cylinder bushing. 3. Replace and lubricate bushings.
Clutch master or slave cylinder plunger dragging and\or binding	1. Master or slave cylinder components worn or corroded.	1. Replace clutch hydraulic linkage assembly.
Release bearing is noisy.	1. Release bearing defective or damaged.	1. Replace release bearing.
Contact surface of release bearing damaged.	1. Pressure plate release fingers bent or distorted. 2. Release bearing defective or damaged. 3. Release bearing misaligned.	1. Replace pressure plate and release bearing. 2. Replace the release bearing. 3. Check and correct runout of clutch components. Check front bearing sleeve for damage/alignment. Repair as necessary.
Partial engagement of clutch discs. One side of disc is worn and the other side is glazed and lightly worn.	1. Clutch pressure plate position incorrect. 2. Pressure plate release fingers bent or distorted. 3. Clutch disc damaged or distorted. 4. Clutch misalignment.	1. Replace clutch discs and pressure plate. 2. Replace clutch discs and pressure plate. 3. Replace clutch discs and pressure plate 4. Check alignment and runout of flywheel, disc, pressure plate, and\or clutch housing. Correct as necessary.

STANDARD PROCEDURE

CLUTCH SYSTEM BLEED

NOTE: Be certain the clutch pedal returns to the upper most position while bleeding the clutch system.

NOTE: **It may take as many as two hundred strokes of the clutch pedal to properly bleed the clutch system.**

1. Check the fluid level in the brake master cylinder reservoir. If the brake fluid level is not up to the step in the reservoir, add DOT 4 brake fluid.
2. Slowly depress the clutch pedal.
   a. If pedal feels hard in a short distance, air is present in the clutch slave cylinder.
   b. If pedal feels spongy, air is present in the clutch master cylinder.
3. Continue checking the fluid level while depressing and releasing the clutch pedal. Depress and release the clutch pedal until an appropriate clutch pedal response and feel is achieved.

SPECIFICATIONS

CLUTCH

TORQUE SPECIFICATIONS

DESCRIPTION	N.m	Ft. Lbs.	In. Lbs.
Pressure Plate Bolts	75	55	-
Clutch Release Bearing	25	19	-
Flywheel Bolts	75	55	-
Clutch / Brake Pedal Nuts	25	19	-

SPECIAL TOOLS

CLUTCH

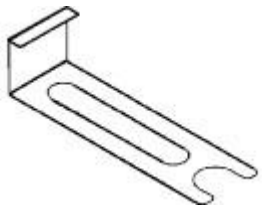

Fig. 1: HYDRAULIC LINE DISCONNECT 6638
Courtesy of CHRYSLER LLC



Fig. 2: CLUTCH ALIGNMENT 10018
Courtesy of CHRYSLER LLC

BEARING, CLUTCH RELEASE

REMOVAL

REMOVAL

NOTE: **The clutch release bearing and slave cylinder are serviced as an assembly.**

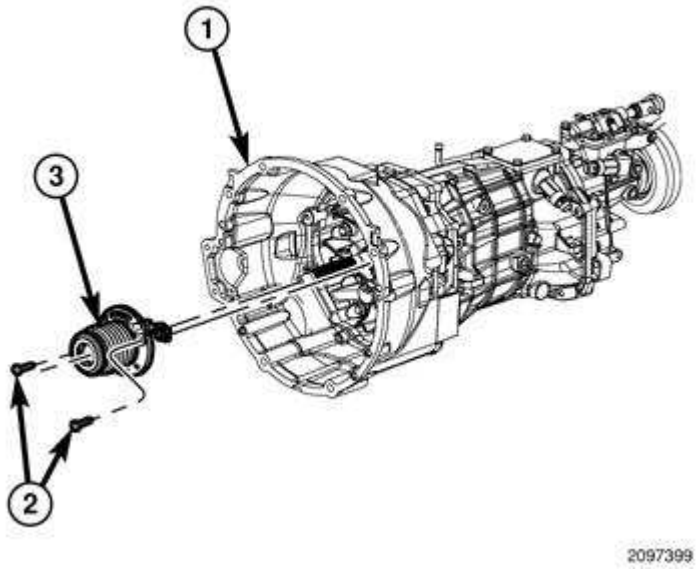

Fig. 3: View Of Clutch Release Bearing And Slave Cylinder
Courtesy of CHRYSLER LLC

1. Raise and support the vehicle.
2. Remove the transmission (1) and place it on a workbench. Refer to **Transmission and**

Transfer Case/Manual - Removal .

3. Remove the two bolts (2) that secure the release bearing/slave cylinder (3) to the transmission and remove the release bearing/slave cylinder.

INSTALLATION

INSTALLATION

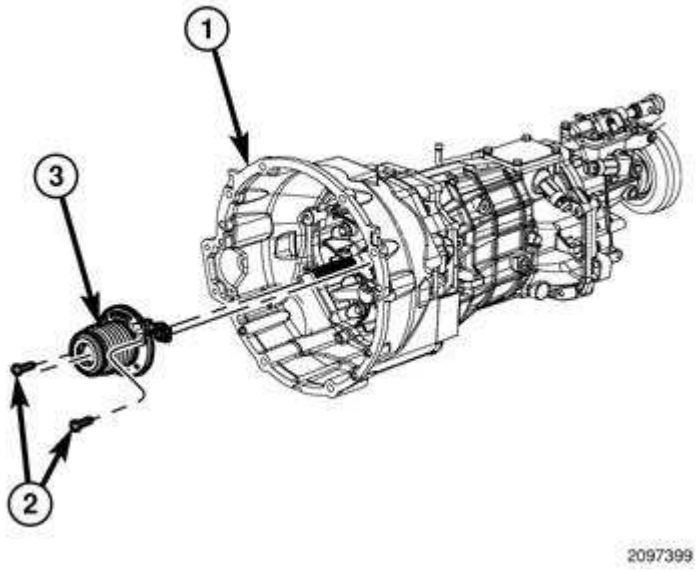

Fig. 4: View Of Clutch Release Bearing And Slave Cylinder
Courtesy of CHRYSLER LLC

1. Position the clutch release bearing/slave cylinder (3) onto input shaft.
2. Install the two bolts (2) that secure the clutch release bearing/slave cylinder to the transmission (1). Tighten the bolts to 20 N.m (15 ft. lbs.).
3. Install the transmission. Refer to **Transmission and Transfer Case/Manual - Installation** .
4. Lower the vehicle.

NOTE: While bleeding the clutch system be certain the clutch pedal returns to the most upright position. It may take as many as two hundred clutch strokes to bleed the system.

5. Bleed the clutch system. See **Clutch - Standard Procedure**.

BEARING, PILOT

REMOVAL

REMOVAL

1. Remove transmission and clutch housing. Refer to **Transmission and Transfer Case/Manual - Removal** .
2. Remove clutch cover and disc. See **Clutch/DISC, Clutch - Removal**.
3. Using a suitable blind hole puller, remove pilot bearing.

INSTALLATION

INSTALLATION

1. Clean bearing bore with solvent and wipe dry with shop towel.

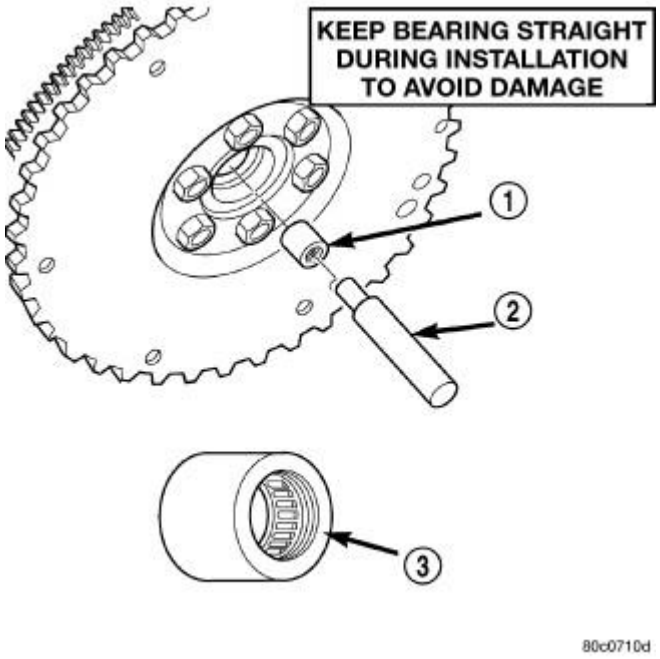

Fig. 5: PILOT BEARING
Courtesy of CHRYSLER LLC

2. Install new bearing (1) with clutch alignment tool (2). Keep bearing straight during installation. Do not allow bearing to become cocked. Tap bearing into place until flush with edge of bearing bore. Do not recess bearing.

NOTE: Letter side of bearing (3) must face transmission.

3. Install clutch cover and disc. See **Clutch/DISC, Clutch - Installation**.
4. Install clutch housing and transmission. Refer to **Transmission and Transfer Case/Manual - Installation** .

CYLINDER, CLUTCH MASTER

REMOVAL

REMOVAL

NOTE: The clutch master cylinder and clutch starter interlock switch are serviced as an assembly.

NOTE: Place towels or rags on the floor below the clutch master cylinder to prevent brake fluid from coming into contact with the carpet.

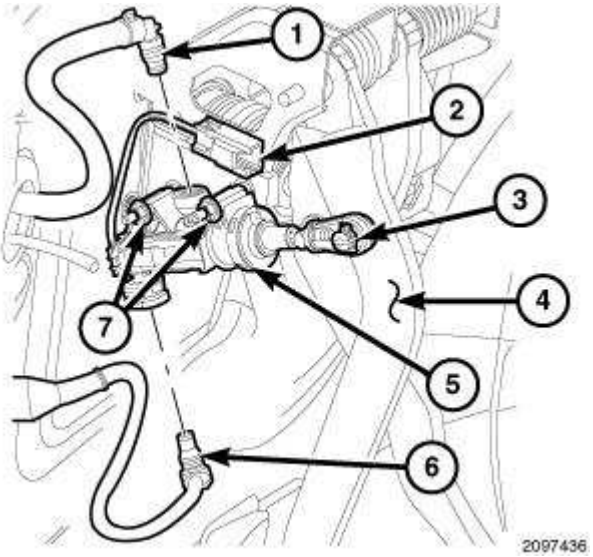

Fig. 6: View Of Clutch Master Cylinder And Clutch Starter Interlock Switch
Courtesy of CHRYSLER LLC

1. Disconnect and isolate the negative battery cable.
2. Remove the driver side silencer from under the instrument panel. Refer to **Body/Instrument Panel/PANEL, Silencer - REMOVAL** .
3. Remove the instrument panel steering column cover and reinforcement. Refer to **Body/Instrument Panel/COVER, Steering Column Opening - REMOVAL** .

WARNING: When removed, discard the original clutch master cylinder pushrod retainer clip. Use a new retainer clip for reassembly. Failure to install a new retainer clip may result in loss of vehicle control and serious or fatal injury.

4. Remove and discard the retainer clip (3) that secures the pushrod of the clutch master cylinder (5) to the clutch pedal lever (4).
5. Disconnect the clutch master cylinder pushrod from the clutch pedal lever.
6. Disconnect the clutch starter interlock switch harness connector (2).
7. Disconnect the brake/clutch fluid reservoir supply line (1) and plug the line to prevent excessive leakage/loss of brake fluid from the brake master cylinder reservoir.

8. Disconnect the clutch slave cylinder hydraulic line (6).
9. Remove the two nuts (7) that secure the clutch master cylinder to the clutch/brake pedal assembly and remove the clutch master cylinder.

INSTALLATION

INSTALLATION

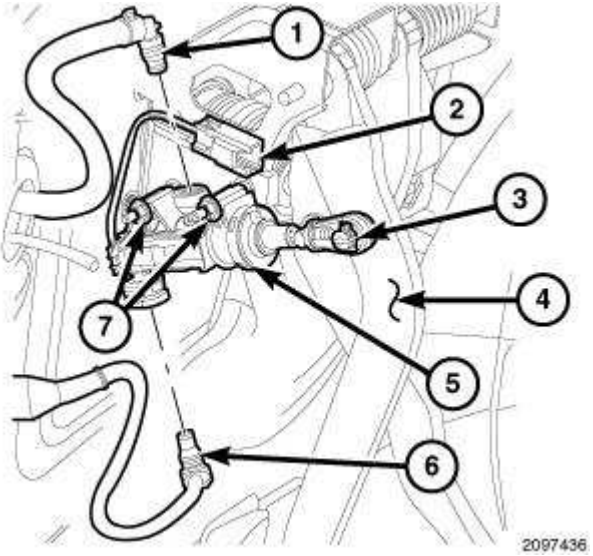

Fig. 7: View Of Clutch Master Cylinder And Clutch Starter Interlock Switch
Courtesy of CHRYSLER LLC

1. Position the clutch master cylinder (5) onto the clutch/brake pedal assembly and install the two nuts (7). Tighten the nuts securely.
2. Connect the clutch slave cylinder hydraulic line (6).
3. Remove the previously installed plug and connect the brake/clutch fluid reservoir supply line (1).
4. Connect the clutch starter interlock switch harness connector (2).

> **WARNING: Always install a new clutch master cylinder pushrod retainer clip during installation of the clutch master cylinder. Failure to install a new retainer clip may result in loss of vehicle control and serious or fatal injury.**

5. Connect the clutch master cylinder pushrod to the clutch pedal lever (4) and install a new retainer clip (3).
6. Install the instrument panel reinforcement and steering column cover. Refer to **Body/Instrument Panel/COVER, Steering Column Opening - Installation** .
7. Install the driver side instrument panel silencer. Refer to **Body/Instrument Panel/PANEL, Silencer - Installation** .
8. Reconnect the negative battery cable.

NOTE: **While bleeding the clutch system be certain the clutch pedal returns to the most upright position. It may take as many as two hundred clutch strokes to bleed the system.**

9. Bleed the clutch system. See **Clutch - Standard Procedure**.

DISC, CLUTCH

DESCRIPTION

DESCRIPTION

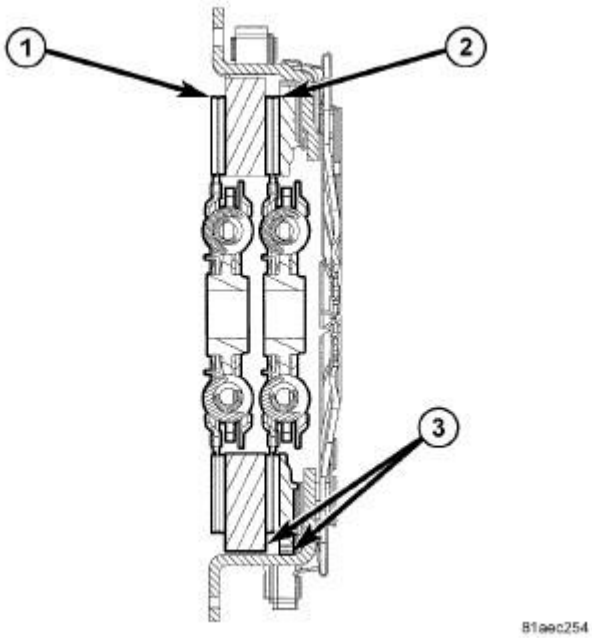

Fig. 8: DUAL DISC CLUTCH
Courtesy of CHRYSLER LLC

The clutch is a dual disc design. One disc (1) is independent of the pressure plate, located between the pressure plate and flywheel. The second disc (2) is an internal component located between the pressure plates (3) and can not be serviced separately.

NOTE: **If either clutch discs or pressure plate is worn or damaged, the independent disc and pressure plate must be replaced as an assembly.**

REMOVAL

REMOVAL

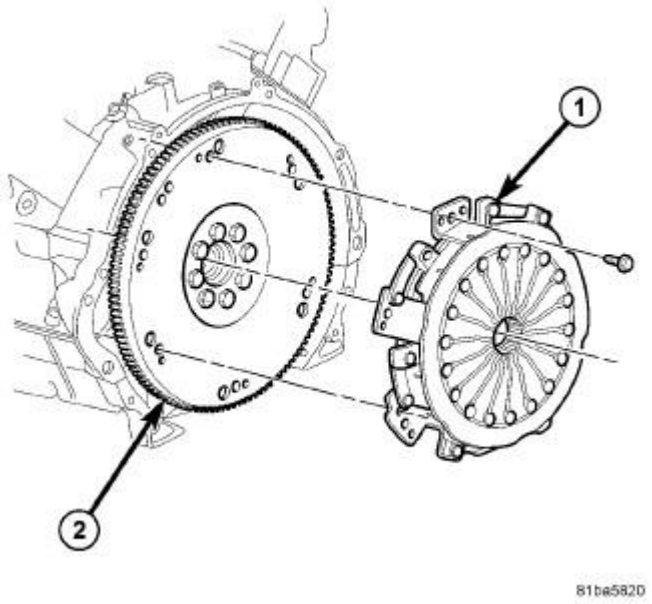

Fig. 9: PRESSURE PLATE AND FLYWHEEL
Courtesy of CHRYSLER LLC

1. Remove transmission.
2. Mark pressure plate (1) and flywheel (2) for installation reference.
3. Insert Clutch Tool 10018 through the clutch discs (1) into the pilot bearing.
4. Loosen pressure plate (1) bolts evenly in a crisscross pattern. This will release spring pressure evenly and avoid pressure plate damage.
5. Remove pressure plate (1) assembly and independent disc from flywheel (2).

CLEANING

CLEANING

Clean flywheel face with crocus cloth or 400-600 grade sandpaper, then wipe surface with mineral spirits.

NOTE: If flywheel is severely scored, heat checked or warped replace flywheel.

Wipe friction surface of the pressure plate with mineral spirits.

INSTALLATION

INSTALLATION

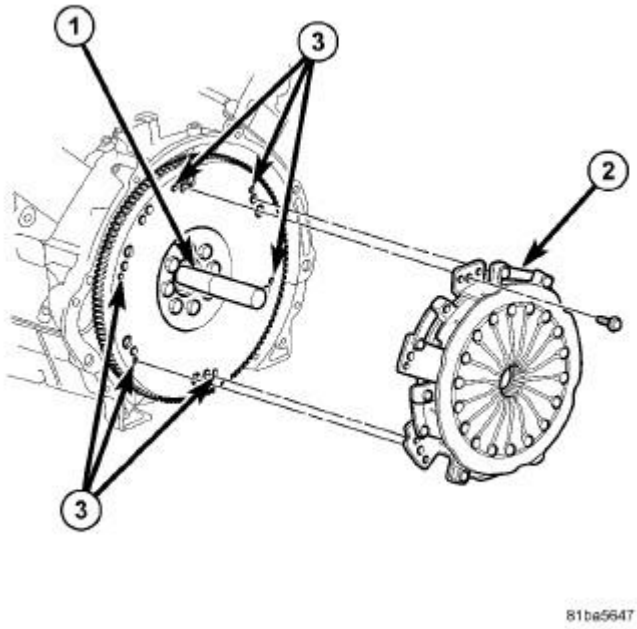

Fig. 10: PRESSURE PLATE ASSEMBLY
Courtesy of CHRYSLER LLC

NOTE: If flywheel is replaced or removed apply thread sealer to the flywheel retaining bolts. This will prevent engine oil from leaking onto the clutch.

1. Insert Clutch Tool 10018 (1) into pilot bearing.
2. Install independent clutch disc over clutch tool up against flywheel.
3. Install pressure plate assembly (2) over clutch tool up against flywheel and onto the dowel pins (3).
4. If new clutch or flywheel is installed, align cover balance spot as close as possible to flywheel balance orange spot.
5. Tighten **new** pressure plate bolts a few turns at a time in a star pattern until bolts are seated. Then tighten bolts in star pattern to 75 N.m (55 ft. lbs.). Remove clutch disc alignment tool.
6. Install the transmission. Refer to **Transmission and Transfer Case/Manual - Installation** .

FLYWHEEL

DIAGNOSIS AND TESTING

FLYWHEEL

Common flywheel problems:

- Incorrect bolt tightening
- Mounting flywheel on dirty crankshaft flange

- Improper seating on crankshaft flange shoulder
- Heat warped
- Loose flywheel bolts

The flywheel should be replaced if warped or overheated. **Do not machine flywheel to correct a warped or overheated condition.**

Clean crankshaft flange and its mating surface on the flywheel before assembling. Dirt in this area could cause the flywheel to mis-align when installing.

Apply Mopar Lock AND Seal or equivalent to **new** flywheel bolts. Tighten flywheel bolts to specified torque. Over tightening bolts can distort flywheel.

REMOVAL

REMOVAL

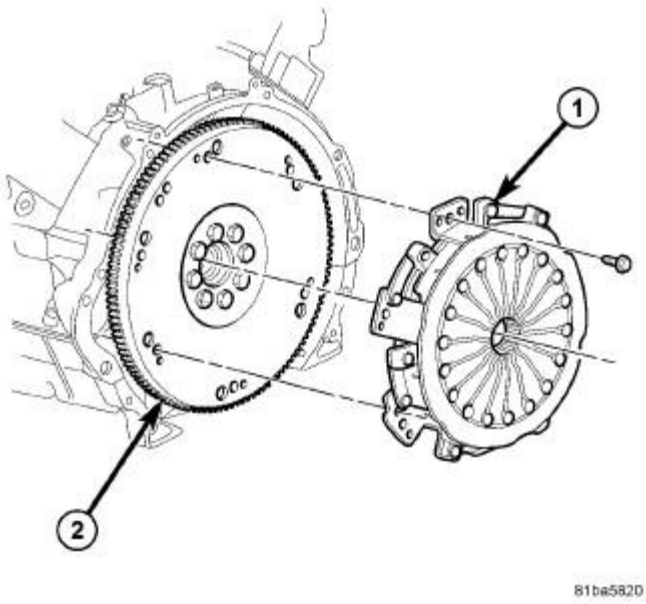

Fig. 11: PRESSURE PLATE AND FLYWHEEL
Courtesy of CHRYSLER LLC

1. Remove transmission assembly. Refer to **Transmission and Transfer Case/Manual - Removal** .
2. Remove clutch assembly (1) from flywheel (2).

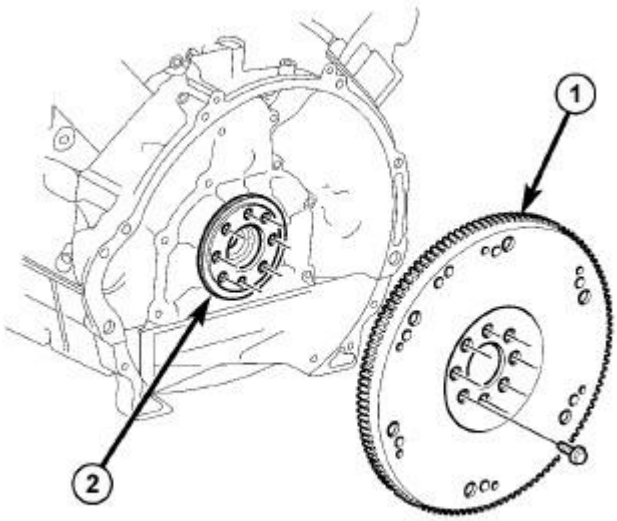

Fig. 12: FLYWHEEL
Courtesy of CHRYSLER LLC

3. Remove flywheel (1) bolts and remove flywheel from crankshaft (2).

INSTALLATION

INSTALLATION

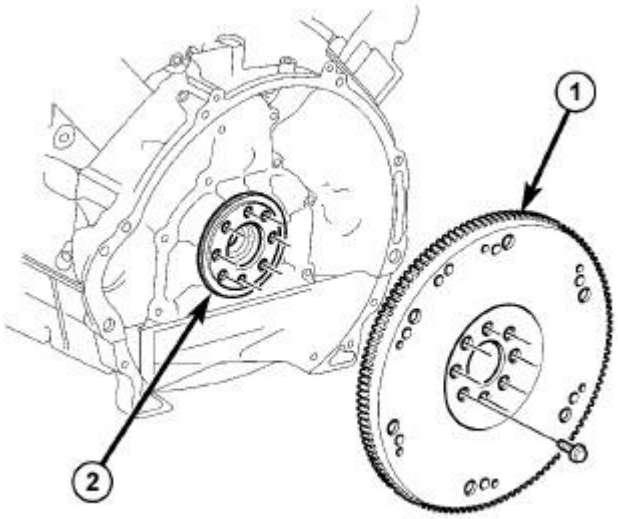

Fig. 13: FLYWHEEL
Courtesy of CHRYSLER LLC

1. Apply Mopar Lock AND Seal or equivalent to new flywheel bolts.
2. Install flywheel (1) on engine crankshaft (2) and install flywheel bolts.

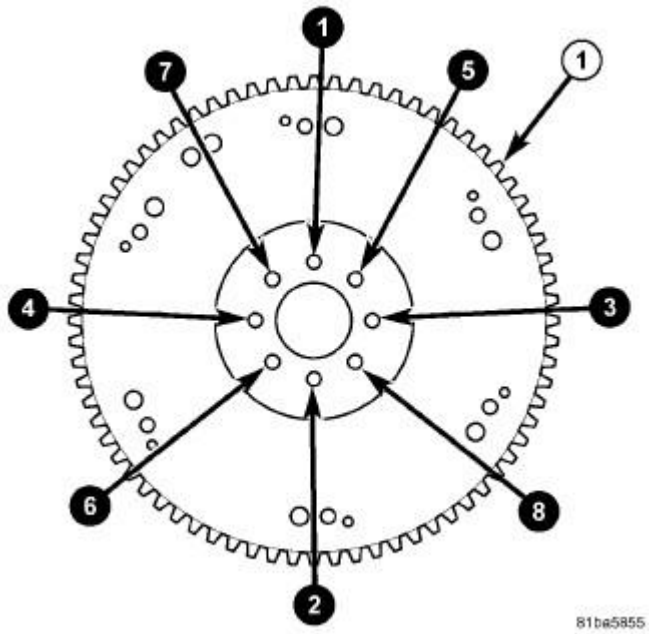

Fig. 14: TORQUE PATTERN
Courtesy of CHRYSLER LLC

3. Tighten flywheel (1) bolts in sequence to 75 N.m (55 ft. lbs.).

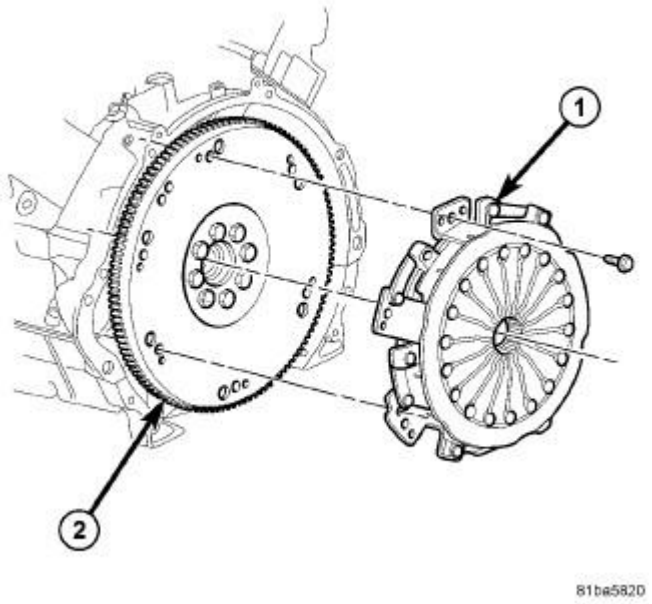

Fig. 15: PRESSURE PLATE AND FLYWHEEL
Courtesy of CHRYSLER LLC

4. Install clutch assembly (1) onto the flywheel (2). Install clutch housing and transmission. Refer to **Transmission and Transfer Case/Manual - Installation** .

PEDAL AND PAD, CLUTCH

REMOVAL

REMOVAL

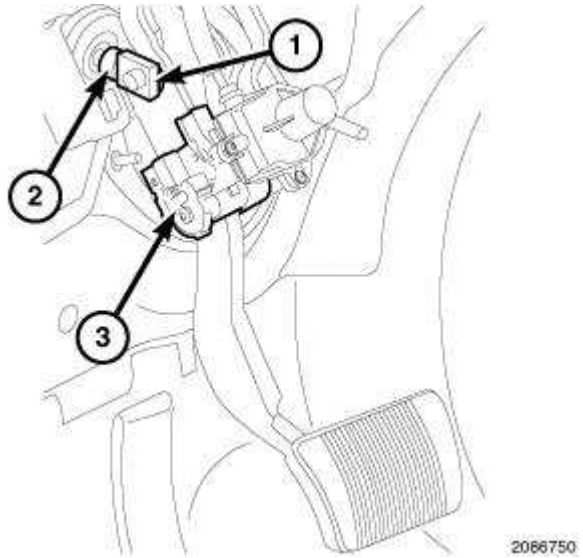

Fig. 16: Brake Booster Push Rod And Clip
Courtesy of CHRYSLER LLC

1. Disconnect and isolate negative battery cable.
2. Remove the knee bolster.
3. Remove driver side silencer under instrument panel. Refer to **Body/Instrument Panel/PANEL, Silencer - REMOVAL** .
4. Remove steering column opening cover. Refer to **Body/Instrument Panel/COVER, Steering Column Opening - REMOVAL** .

NOTE: When removed, discard the original clip (1). Use a new clip for reassembly.

5. Remove the clip (1), and disconnect the brake booster push rod (2).

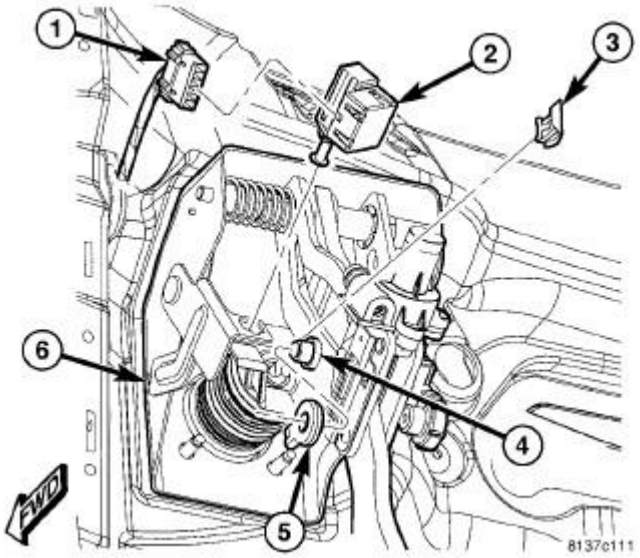

Fig. 17: STOP LAMP SWITCH AND PEDAL ROD
Courtesy of CHRYSLER LLC

6. Disconnect the stop lamp switch harness connector (1).

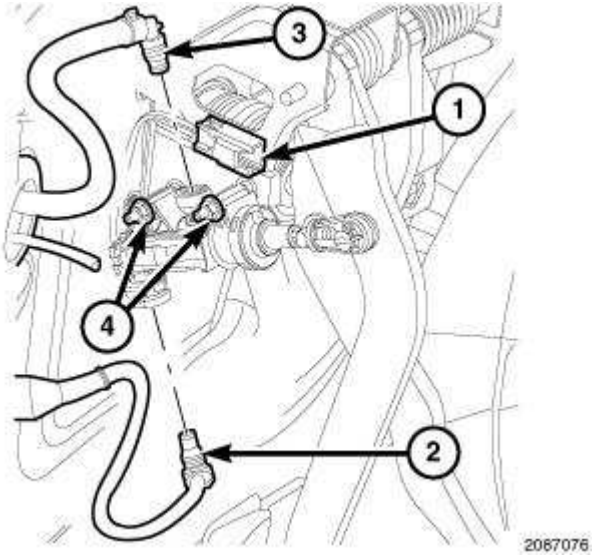

Fig. 18: Clutch Starter Interlock Switch Harness Connector
Courtesy of CHRYSLER LLC

7. Disconnect the clutch starter interlock switch harness connector (1).
8. Disconnect the brake/clutch fluid reservoir tube (3).
9. Disconnect the clutch hydraulic line (2).

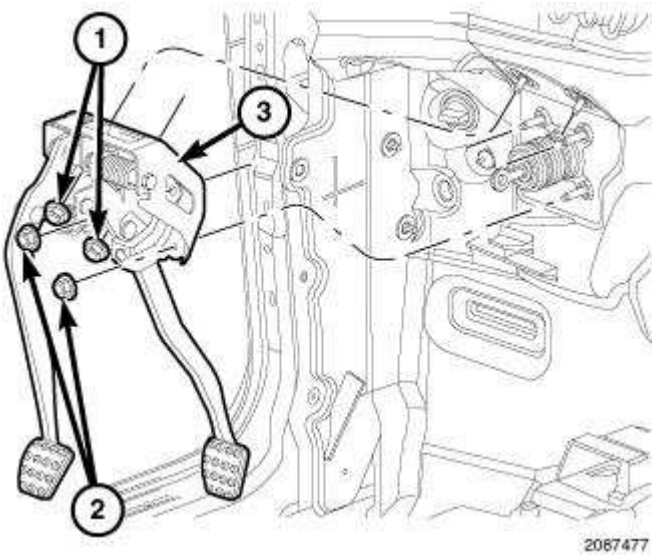

Fig. 19: Remove/Install Clutch/Brake Pedal Assembly & Mounting Nuts
Courtesy of CHRYSLER LLC

10. Remove the clutch/brake pedal assembly mounting nuts (1) and (2), then remove the clutch/brake pedal assembly (3).

INSTALLATION

INSTALLATION

NOTE: **While bleeding the clutch system be certain the clutch pedal returns to the most upright position. It may take as many as two hundred clutch strokes to bleed the system. Do not let the brake/clutch fluid reservoir to empty out while bleeding the hydraulic system.**

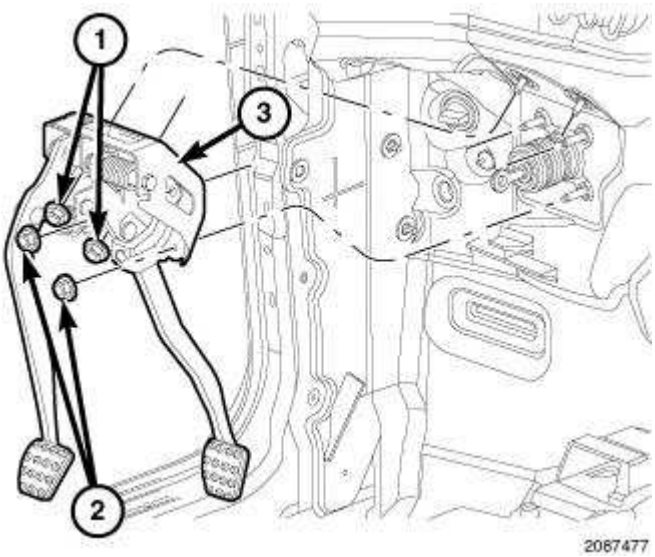

Fig. 20: Remove/Install Clutch/Brake Pedal Assembly & Mounting Nuts
Courtesy of CHRYSLER LLC

1. Install the clutch/brake pedal assembly (3), and the clutch/brake pedal assembly mounting fasteners (1) and (2). Tighten the fasteners to to 25 N.m (19 ft.lbs.).

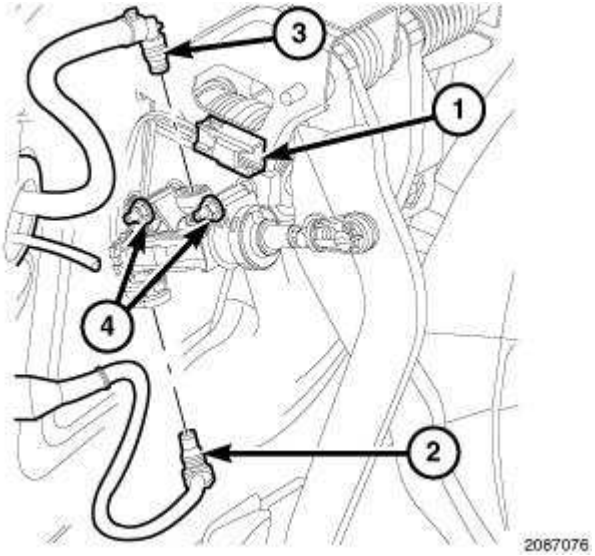

Fig. 21: Clutch Starter Interlock Switch Harness Connector
Courtesy of CHRYSLER LLC

2. Reconnect the clutch hydraulic line (2).
3. Reconnect the brake/clutch fluid reservoir tube (3).

4. Reconnect the clutch starter interlock switch harness connector (1).

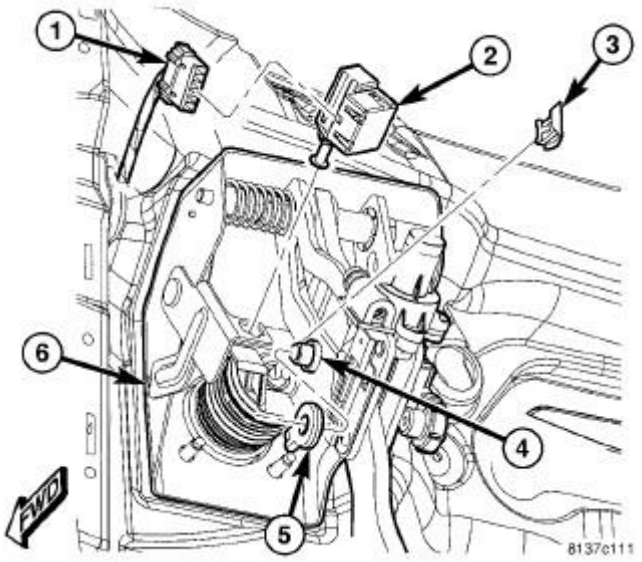

Fig. 22: STOP LAMP SWITCH AND PEDAL ROD
Courtesy of CHRYSLER LLC

5. Reconnect the stop lamp switch harness connector (1).

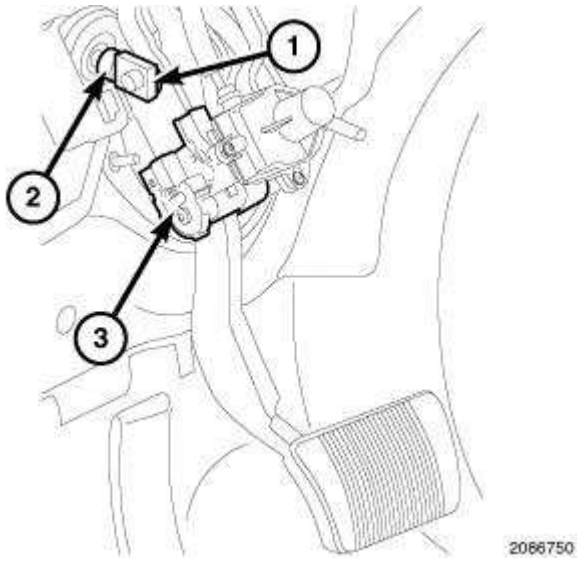

Fig. 23: Brake Booster Push Rod And Clip
Courtesy of CHRYSLER LLC

NOTE: Use a new clip for reassembly.

6. Reconnect the brake booster push rod (2), and install a new clip (1).
7. If necessary bleed the hydraulic system. See **Clutch - Standard Procedure**.

8. Install steering column opening cover. Refer to **Body/Instrument Panel/COVER, Steering Column Opening - Installation** .
9. Install driver side silencer under instrument panel. Refer to **Body/Instrument Panel/PANEL, Silencer - Installation** .
10. Install the driver side knee bolster.
11. Connect negative battery cable to battery post. Refer to **Electrical/Battery System - Standard Procedure** .

SWITCH, CLUTCH STARTER INTERLOCK

REMOVAL

REMOVAL

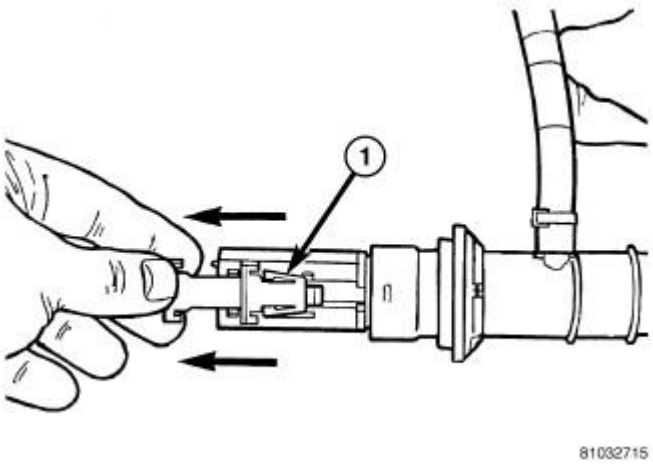

Fig. 24: SWITCH RETAINER CLIP
Courtesy of CHRYSLER LLC

1. Remove clutch master cylinder.
2. Remove white clutch pedal position switch retaining clip (1).

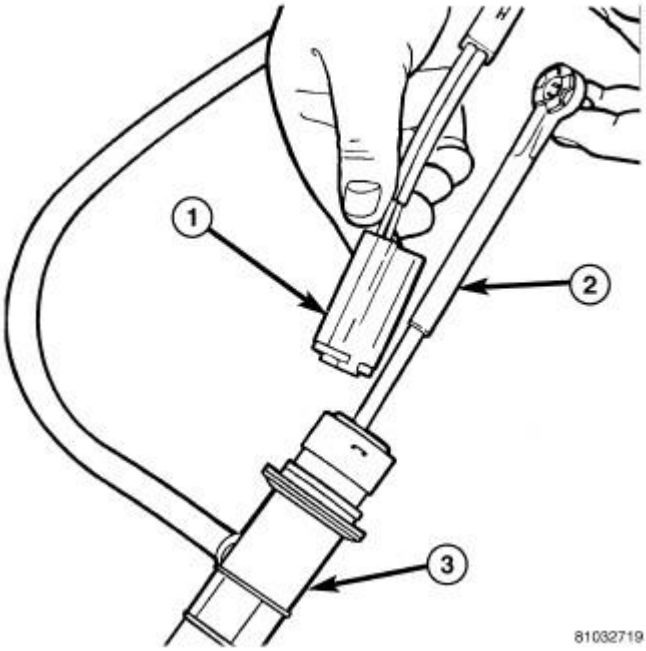

Fig. 25: SWITCH REMOVAL
Courtesy of CHRYSLER LLC

3. Push clutch switch (1) up actuator rod (2) slightly. Then pull the bottom of the clutch switch (1) outward.

INSTALLATION

INSTALLATION

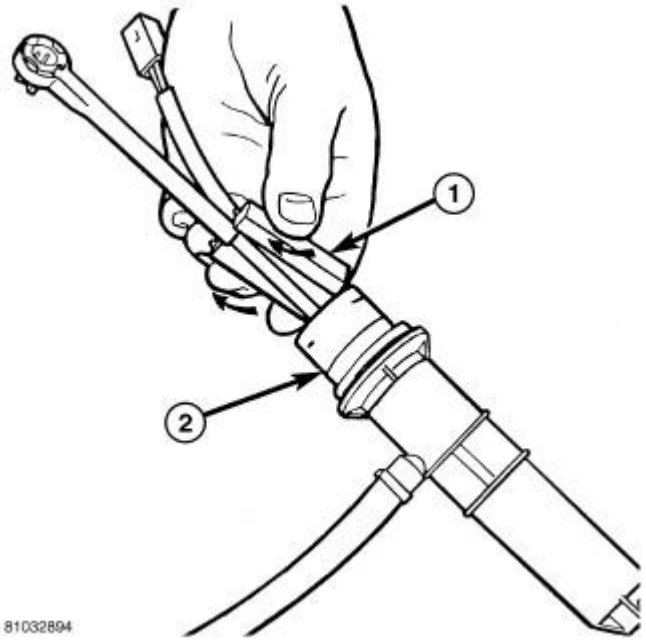

Fig. 26: SWITCH INSTALLATION
Courtesy of CHRYSLER LLC

1. Position plunger inside the switch (1) on the narrow section of the clutch master cylinder (2) actuation rod.
2. Place the top of the switch against the rod, then push the switch up slightly. This will compress the plunger.
3. Push the bottom of the switch against the rod.

CAUTION: Failure to follow these instruction will result in forcing the switch onto the rod and cracking the switch.

4. Install new white plastic retaining clip.
5. Install clutch master cylinder in vehicle.
6. Test clutch position switch operation.

HALF SHAFT

DESCRIPTION

DESCRIPTION

The inner joints of both halfshaft assemblies are cross-groove joints and are splined to the differential side gears. The outer joints of both assemblies are Rzeppa Joints. On vehicles equipped with the limited slip Getrag differential, the halfshafts have cross-groove joints on both ends. The cross-groove joints are true constant velocity (CV) joint assemblies, allowing for the changes in halfshaft length through the jounce and rebound travel of the rear suspension.

DIAGNOSIS AND TESTING

DIAGNOSIS AND TESTING

VEHICLE INSPECTION

Check for grease in the vicinity of both the inboard and outboard joints. This is a sign of inner or outer joint seal boot or seal boot clamp damage.

NOISE AND/OR VIBRATION IN TURNS

A clicking noise and/or a vibration in turns could be caused by one of the following conditions:

- Damaged outer CV or inner cross-groove joint seal boot or seal boot clamps. This will result in the loss and/or contamination of the joint grease, resulting in inadequate lubrication of the joint.
- Noise may also be caused by another component of the vehicle coming in contact with the half shafts.

CLUNKING NOISE DURING ACCELERATION

This noise may be a result of one of the following conditions:

- A torn seal boot on the inner or outer joint of the half shaft assembly.
- A loose or missing clamp on the inner or outer joint of the half shaft assembly.
- A damaged or worn half shaft CV joint.

SHUDDER OR VIBRATION DURING ACCELERATION

This problem could be a result of:

- A worn or damaged half shaft inner cross-groove joint.

- Improper wheel alignment. Refer to **Front Suspension/Wheel Alignment - Standard Procedure**

VIBRATION AT HIGHWAY SPEEDS

This problem could be a result of:

- Foreign material (mud, etc.) packed on the backside of the wheel(s).
- Out of balance tires or wheels. Refer to **Tires and Wheels - Standard Procedure**
- Improper tire and/or wheel runout. Refer to **Tires and Wheels - Diagnosis and Testing**

REMOVAL

198 RII AND 215 RII AXLES

NOTE: This procedure requires the compression of the rear suspension to ride height. A drive-on hoist should be used. If a drive-on hoist is not used, screw-style under-hoist jack stands are required to compress the rear suspension, facilitating rear halfshaft removal.

NOTE: Halfshaft inner and outer boots are not serviceable separately. Boot replacement requires entire shaft assembly replacement.

CAUTION: Unequal-length halfshafts are used. The right halfshaft is shorter than the left, and it is necessary to identify and tag halfshafts upon removal to ensure proper installation.

CAUTION: Never grasp halfshaft assembly by the inner or outer boots. Doing so may cause the boot to pucker or crease, reducing the service life of the boot and joint. Avoid over angulating or stroking the C/V joints when handling the halfshaft.

1. With vehicle in neutral, position and raise vehicle on hoist.

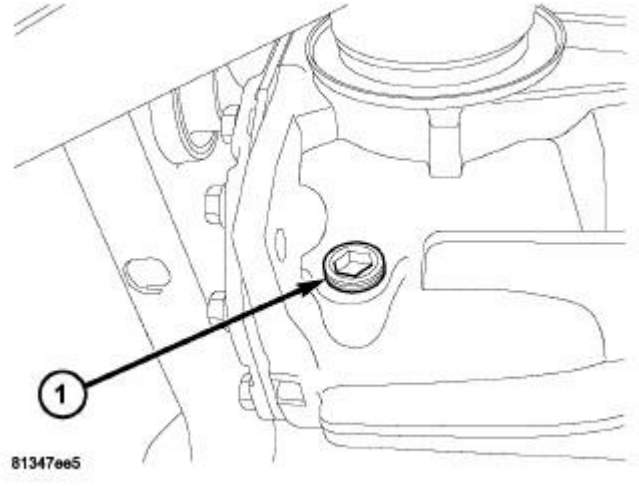

Fig. 1: Rear Axle Drain Plug
Courtesy of CHRYSLER LLC

2. Using 14mm hex, remove axle drain plug (1) and drain rear axle fluid into container suitable for fluid reuse.
3. Install drain plug (1) and torque to 50 N.m (37 ft.lbs.)

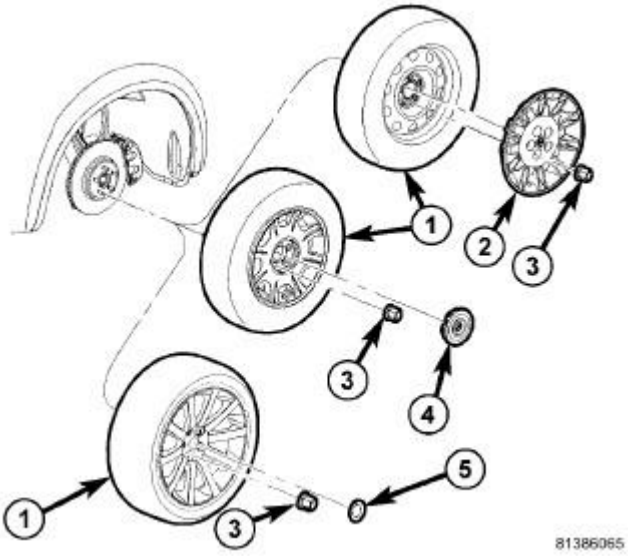

Fig. 2: Tire And Wheel Mounting
Courtesy of CHRYSLER LLC

4. Remove rear exhaust system. Refer to **Exhaust System/MUFFLER, Exhaust - Removal** .
5. Remove wheel/tire assembly (1) from sides that shaft is to be removed.

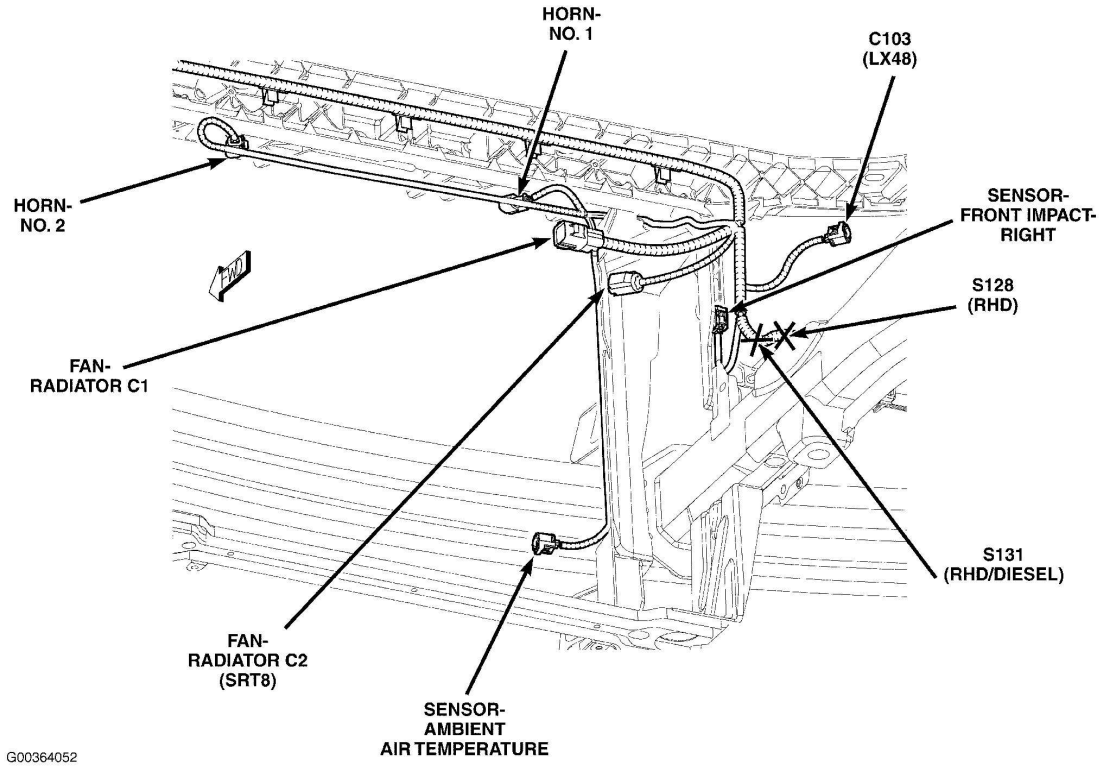

Fig. 3: Hub Nut
Courtesy of CHRYSLER LLC

6. Remove wheel hub nut (1) and discard.

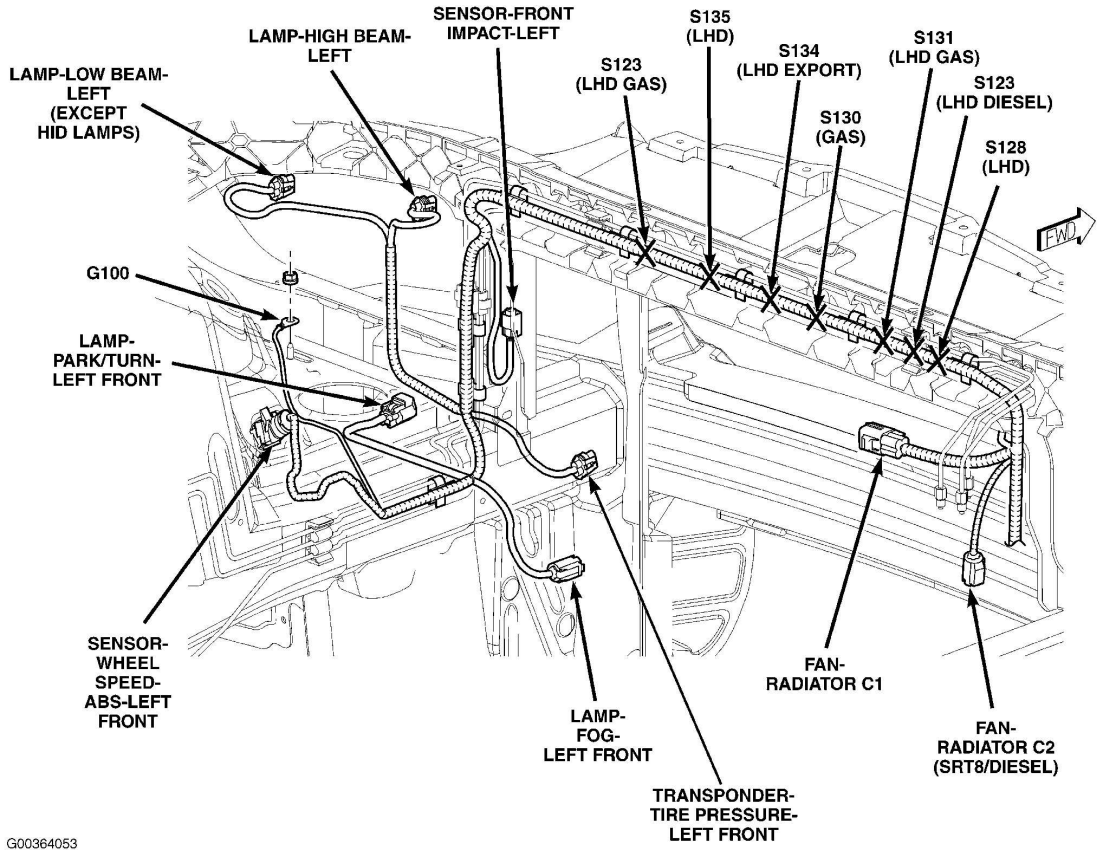

Fig. 4: Alignment Marks - Axle End Shown
Courtesy of CHRYSLER LLC

7. Apply alignment index marks (3) to the propeller shaft rubber coupler (1) and axle flange (2).

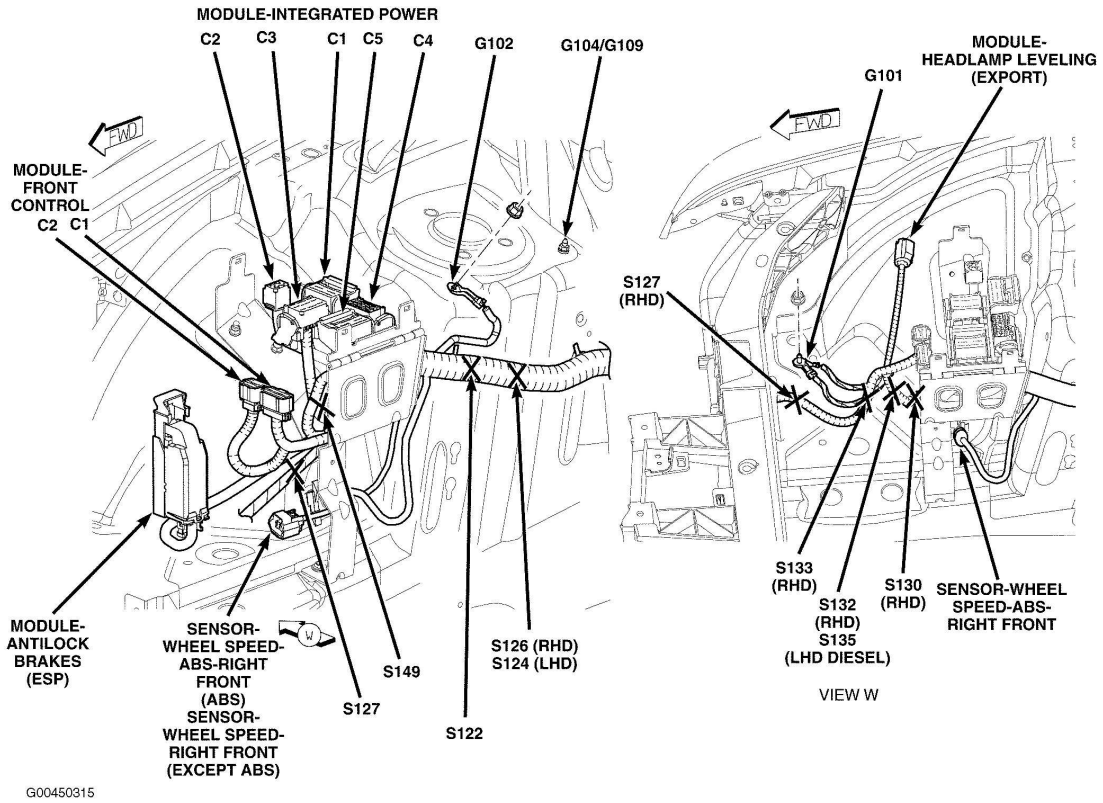

Fig. 5: Propeller Shaft At Rear Axle
Courtesy of CHRYSLER LLC

8. Remove three propeller shaft coupler-to-axle flange bolt/nuts.

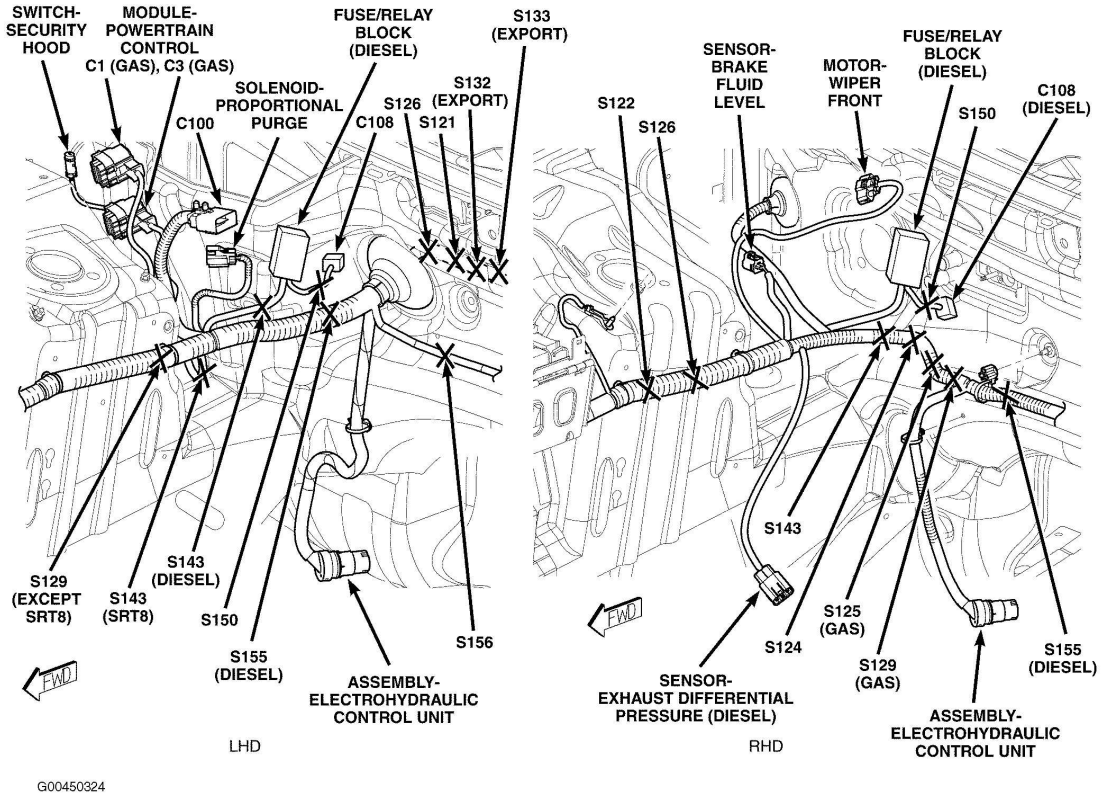

Fig. 6: Halfshaft Removal (V6 Models)
Courtesy of CHRYSLER LLC

9. Using suitable screwdriver (1), partially disengage halfshaft(s) (2) from axle assembly.

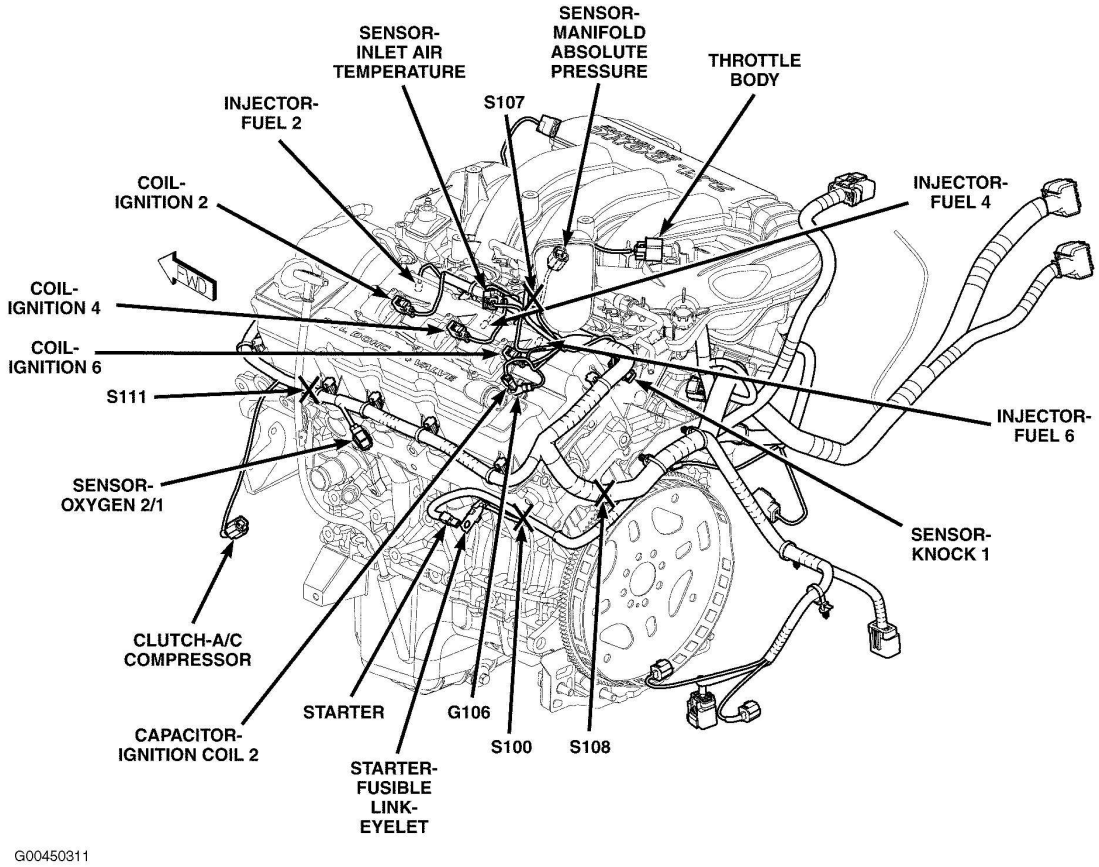

Fig. 7: Transmission Jack At Rear Axle
Courtesy of CHRYSLER LLC

10. If a drive-on hoist is used, position transmission jack (1) to rear axle assembly. If a drive-on hoist is not used, compress rear suspension using screw-style under-hoist jack stands (2), then position transmission jack to rear axle assembly.

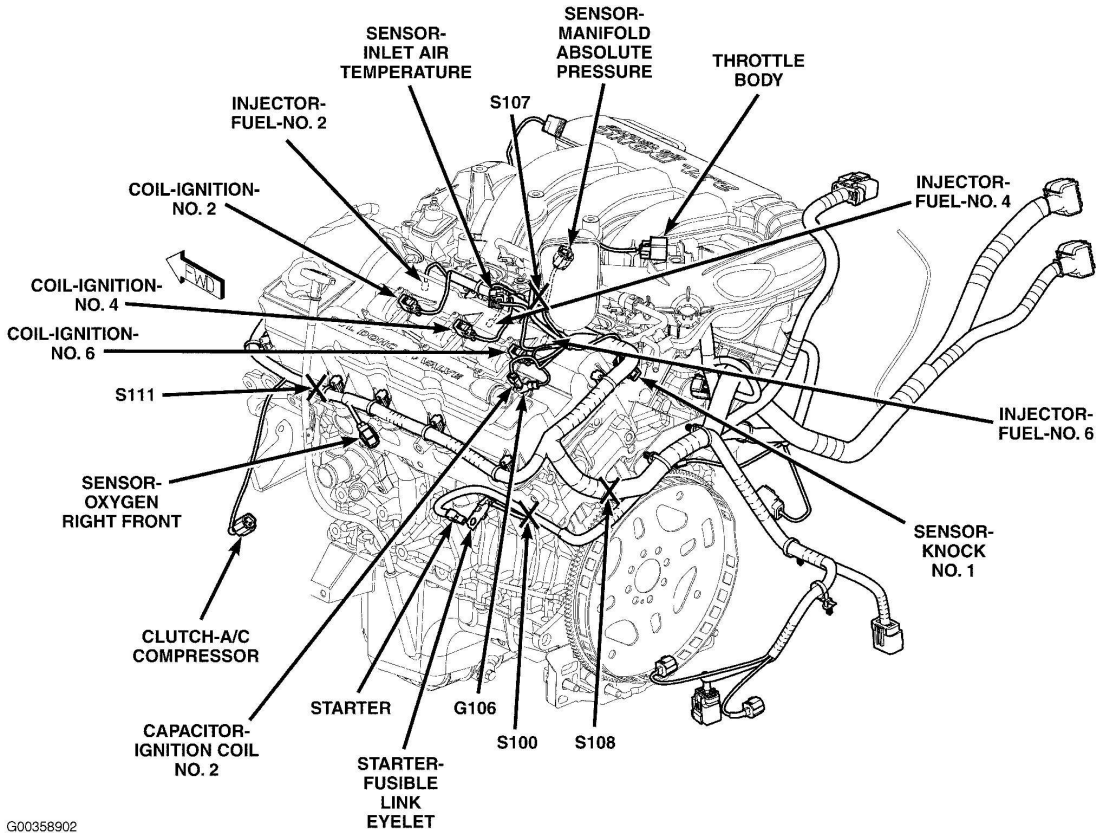

Fig. 8: Rear Axle Front Isolator
Courtesy of CHRYSLER LLC

11. Remove rear axle forward mount isolator (1) bolt/nut (2).

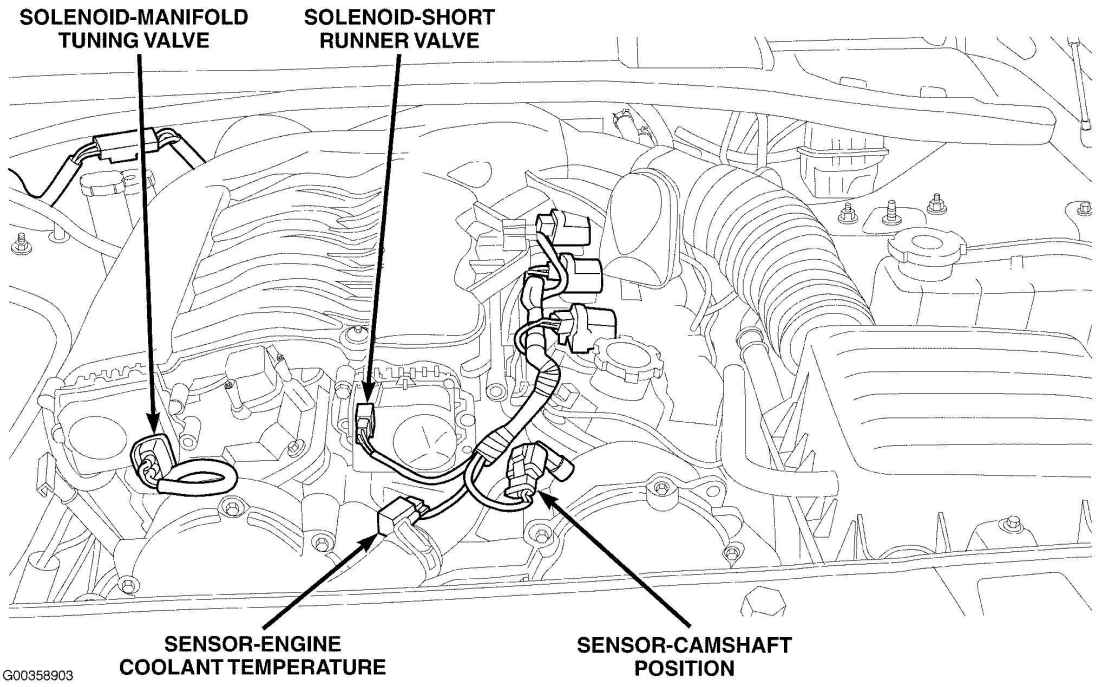

Fig. 9: Rear Axle To Crossmember Bolts
Courtesy of CHRYSLER LLC

CAUTION: Access to rear axle-to-crossmember bolts is best achieved by use of short socket and a flexible-head ratchet.

12. Remove two rear axle-to-crossmember bolts (1).

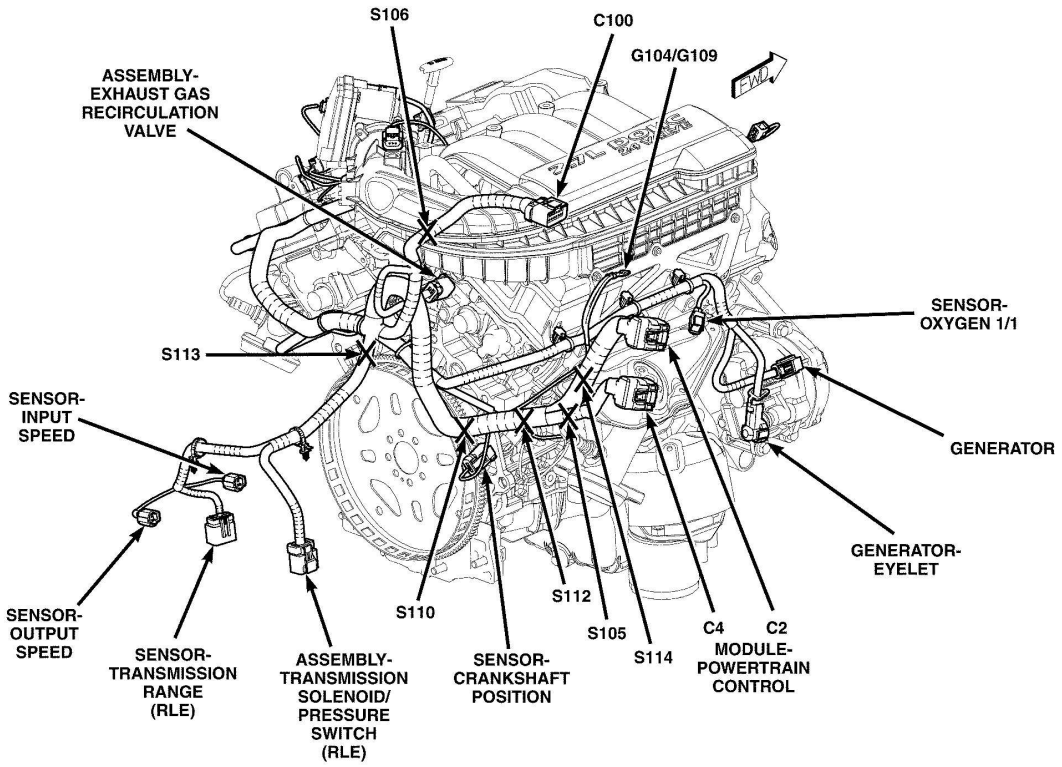

Fig. 10: Propeller Shaft Supported
Courtesy of CHRYSLER LLC

13. Carefully lower rear axle. While lowering axle, separate propeller shaft from axle and support with suitable rope or wire (1).

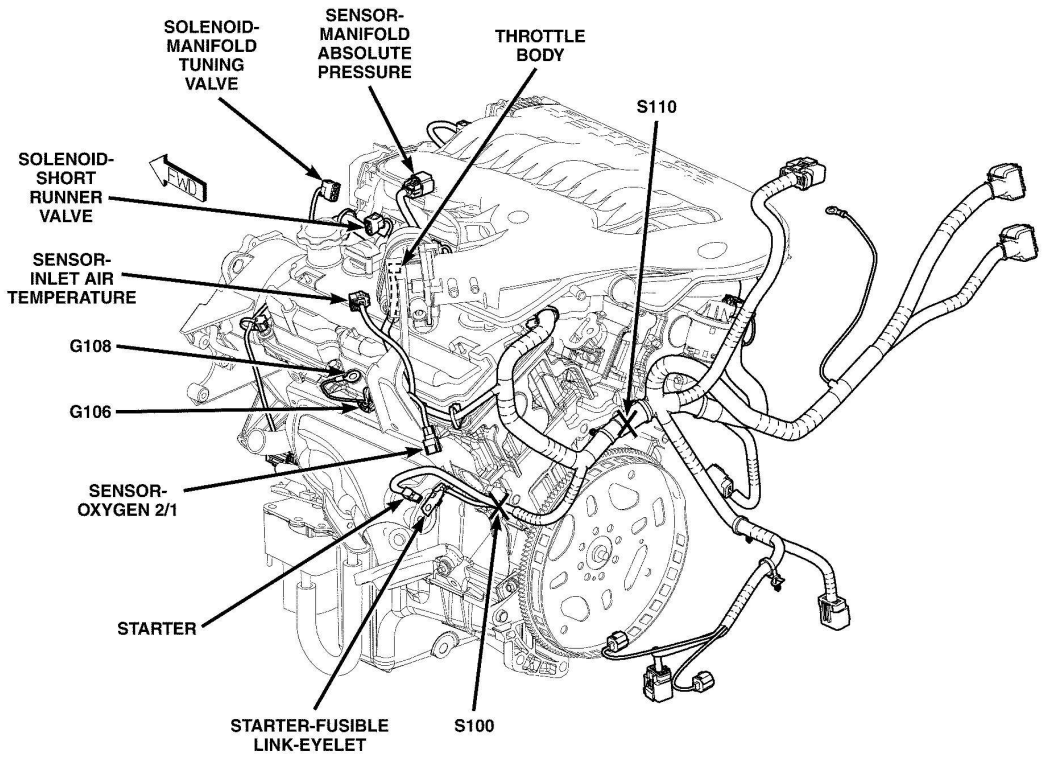

Fig. 11: Remove/Install Halfshaft
Courtesy of CHRYSLER LLC

CAUTION: Unequal-length halfshafts are used. The right halfshaft is shorter than the left, and it is necessary to identify and tag halfshafts upon removal to ensure proper installation.

14. Lower axle just enough to remove halfshafts one at a time. Shift axle assembly in one direction, compressing one halfshaft while removing the other (1). Use caution to protect axle seal and journal.

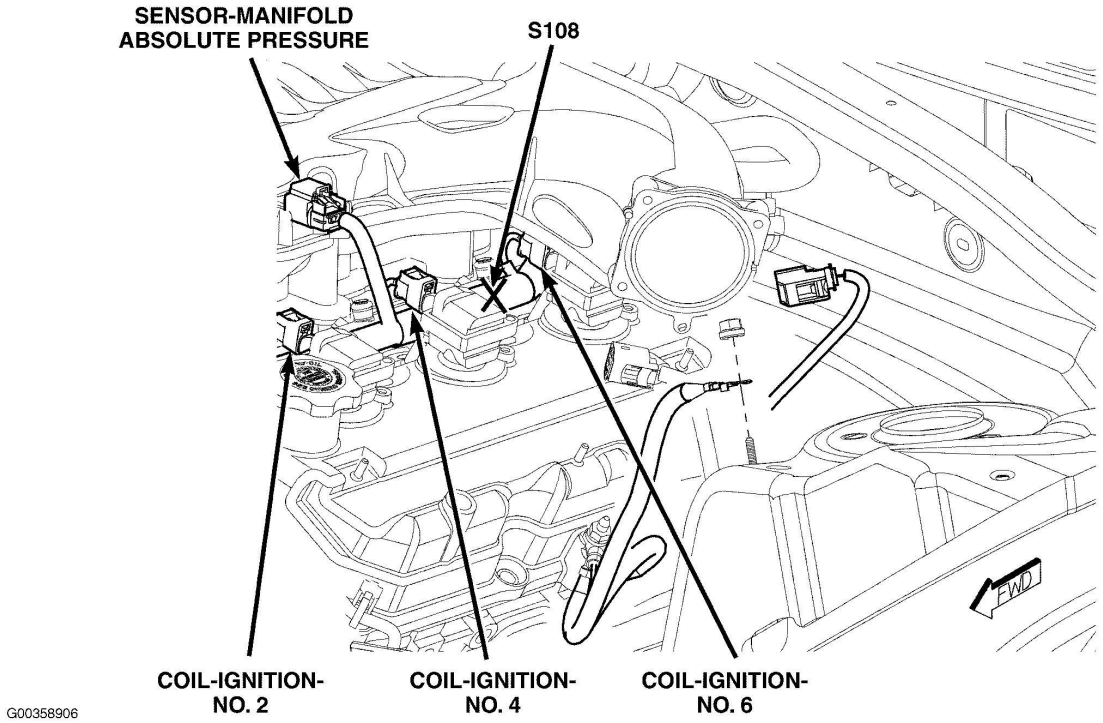

Fig. 12: Halfshaft Isolation Washer
Courtesy of CHRYSLER LLC

CAUTION: Never grasp halfshaft assembly by the inner or outer boots. Doing so may cause the boot to pucker or crease, reducing the service life of the boot and joint. Avoid over angulating or stroking the C/V joints when handling the halfshaft.

CAUTION: Use care while handling/storing halfshaft assembly. Damage to the slinger can result from improper handling. If slinger gets bent or damaged, straighten slinger to avoid contact with axle seal assembly.

15. Remove halfshaft from hub. Remove and inspect rubber isolation washer (1). Discard washer if rubber surfaces are worn away. Repeat on other side if necessary.

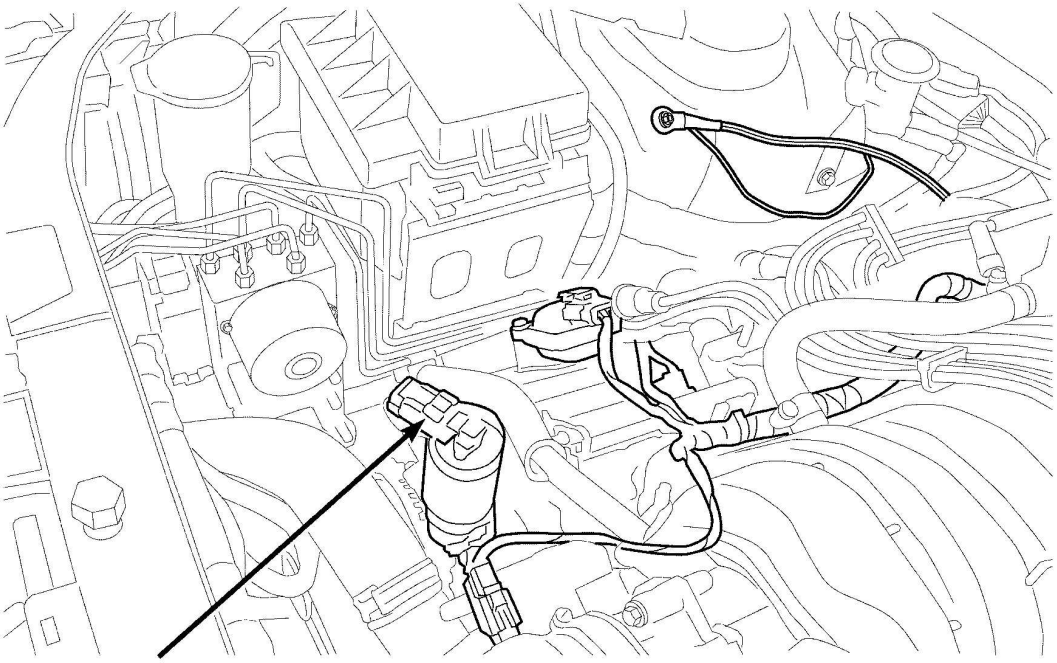

Fig. 13: Axle Seal Removal
Courtesy of CHRYSLER LLC

16. Remove axle seals (2) using suitable screwdriver.

G648 REAR AXLE

NOTE: This procedure requires the compression of the rear suspension to ride height. A drive-on hoist should be used. If a drive-on hoist is not used, screw-style under-hoist jack stands are required to compress the rear suspension, facilitating rear halfshaft removal.

CAUTION: Never grasp halfshaft assembly by the inner or outer boots. Doing so may cause the boot to pucker or crease, reducing the service life of the boot and joint. Avoid over angulating or stroking the C/V joints when handling the halfshaft.

1. With vehicle in neutral, position and raise vehicle on hoist.
2. Remove the wheel(s). Refer to **Tires and Wheels - Removal** .

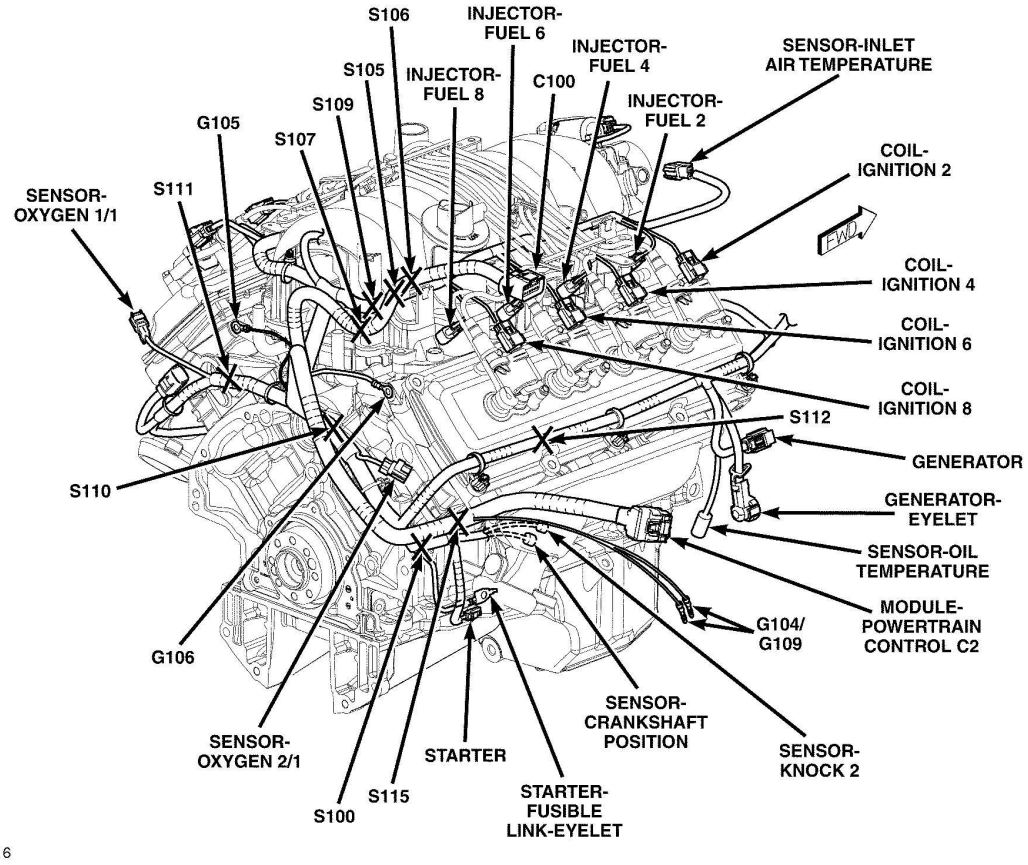

Fig. 14: Hub Nut
Courtesy of CHRYSLER LLC

3. Remove wheel hub nut (1) and discard.
4. Remove the muffler. Refer to **Exhaust System/MUFFLER, Exhaust - Removal** .

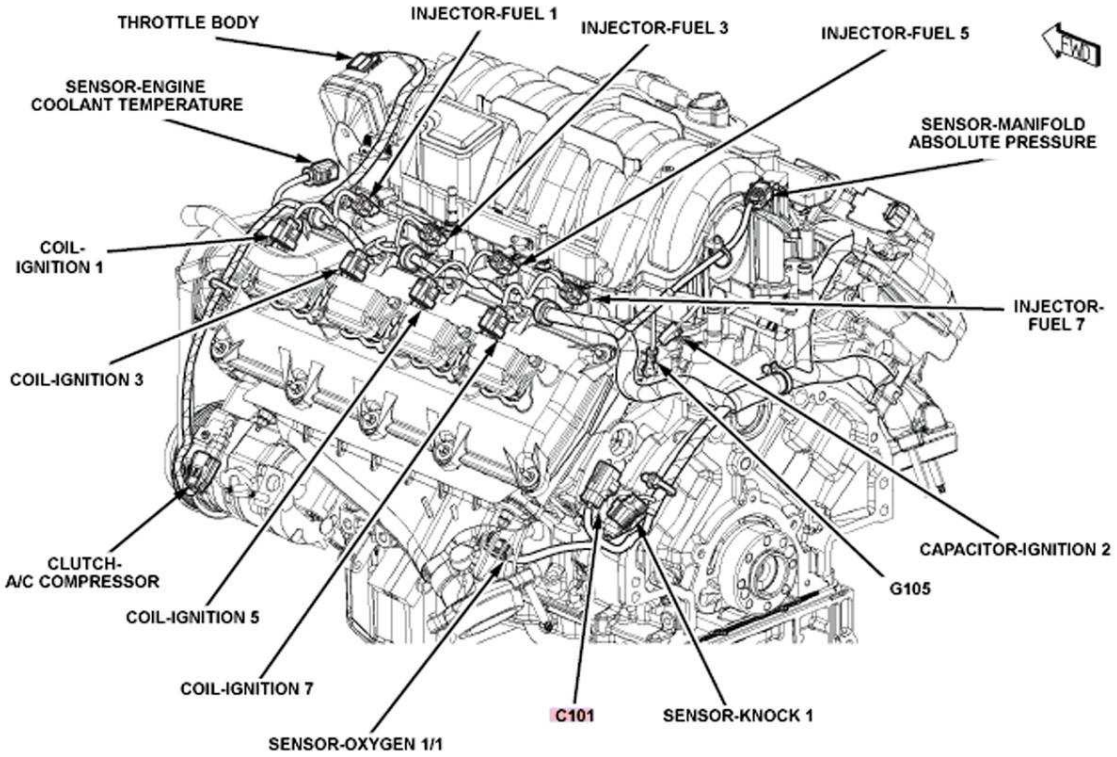

Fig. 15: Applying Alignment Index Marks To Rear Axle Flange
Courtesy of CHRYSLER LLC

5. Apply alignment index marks (3) to the propeller shaft rubber coupler (1) and axle flange (2).

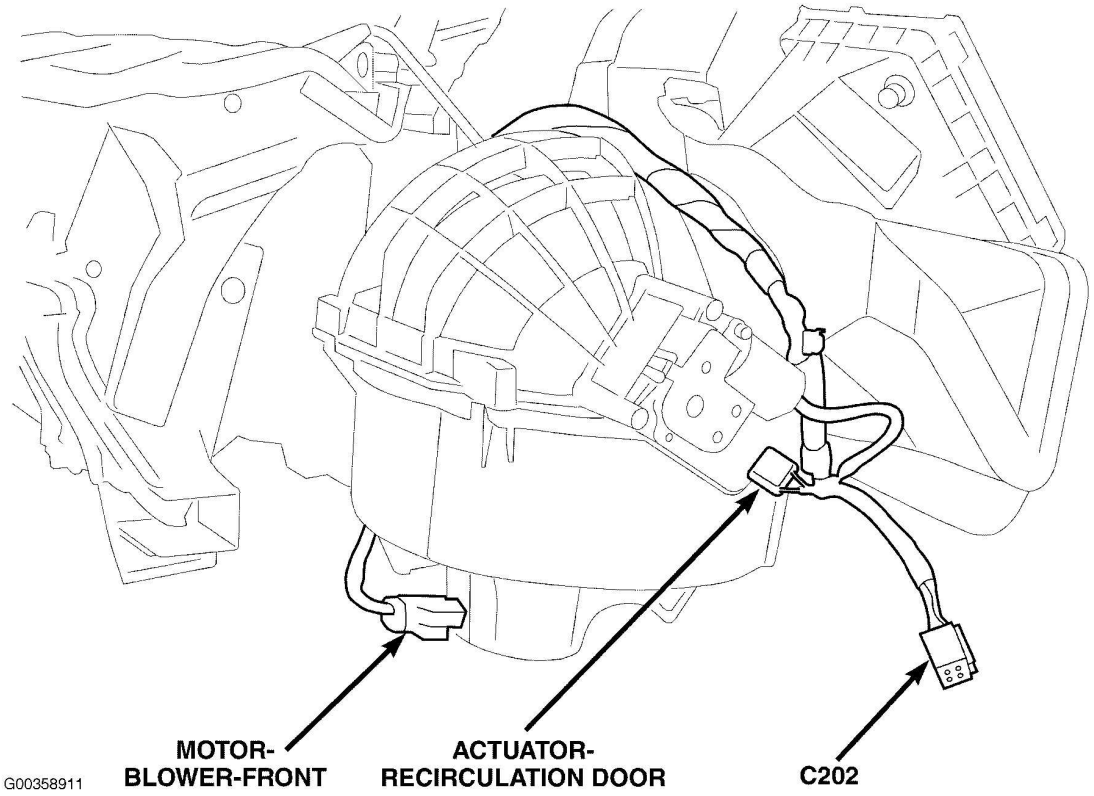

Fig. 16: Propeller Shaft Rear Coupler To Axle Flange
Courtesy of CHRYSLER LLC

NOTE: If re-using the propeller shaft coupler-to-axle flange fasteners, save the washers.

6. Remove three propeller shaft coupler (2) -to-axle flange (1) fasteners.

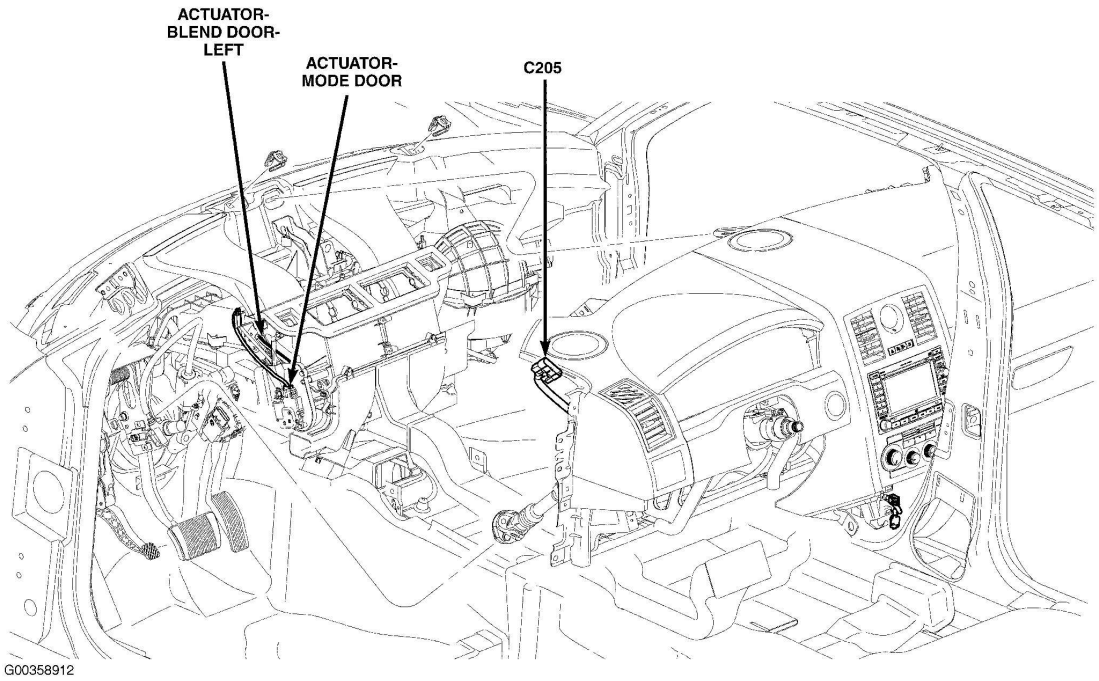

Fig. 17: Disengaging Halfshaft Using Suitable Pry Bar
Courtesy of CHRYSLER LLC

NOTE: Do not pry on the slinger (2).

7. Using suitable pry bar (1) in the location shown on illustration, partially disengage halfshaft(s) from axle assembly.

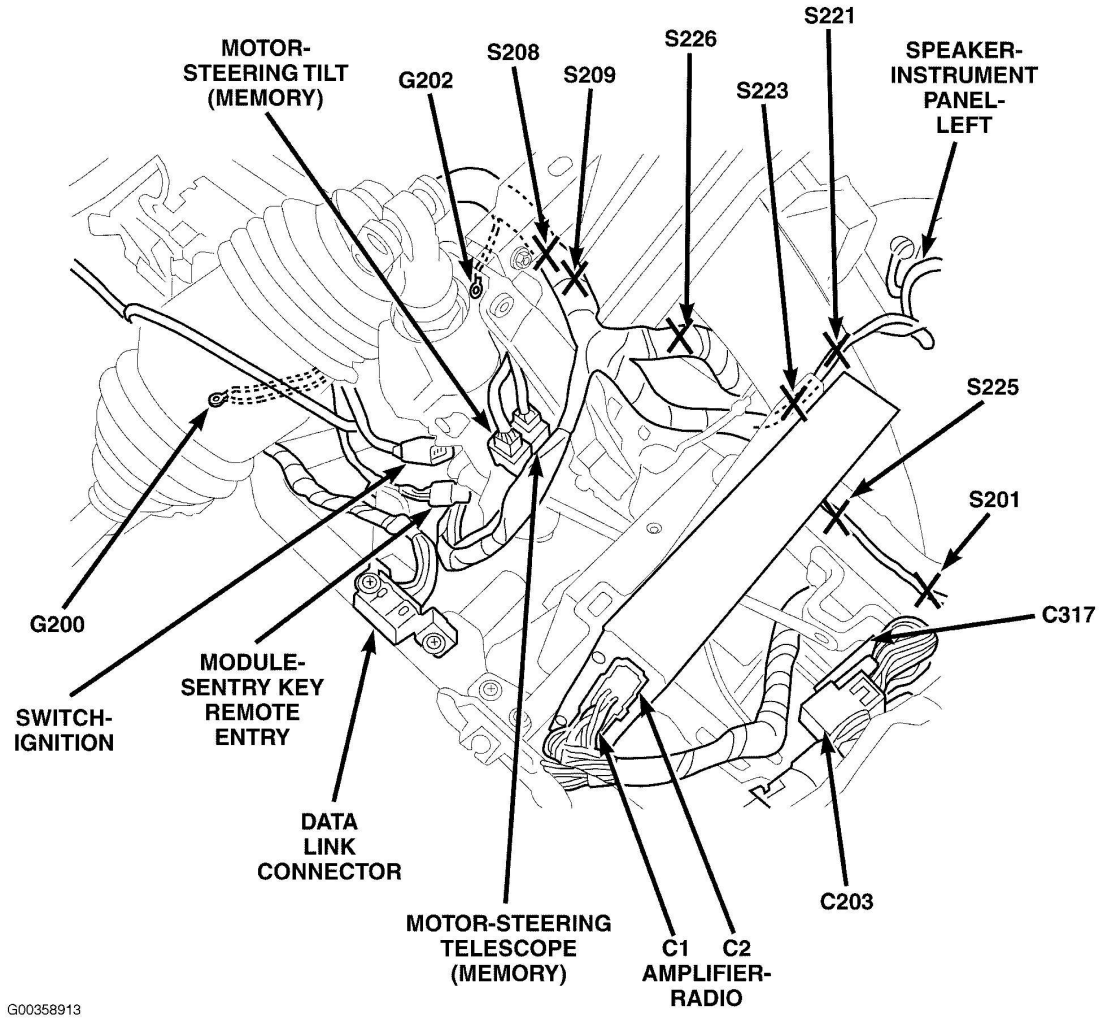

Fig. 18: Transmission Jack At Rear Axle
Courtesy of CHRYSLER LLC

8. If a drive-on hoist is used, position transmission jack (1) to rear axle assembly. If a drive-on hoist is not used, compress rear suspension using screw-style under-hoist jack stands (2), then position transmission jack to rear axle assembly.

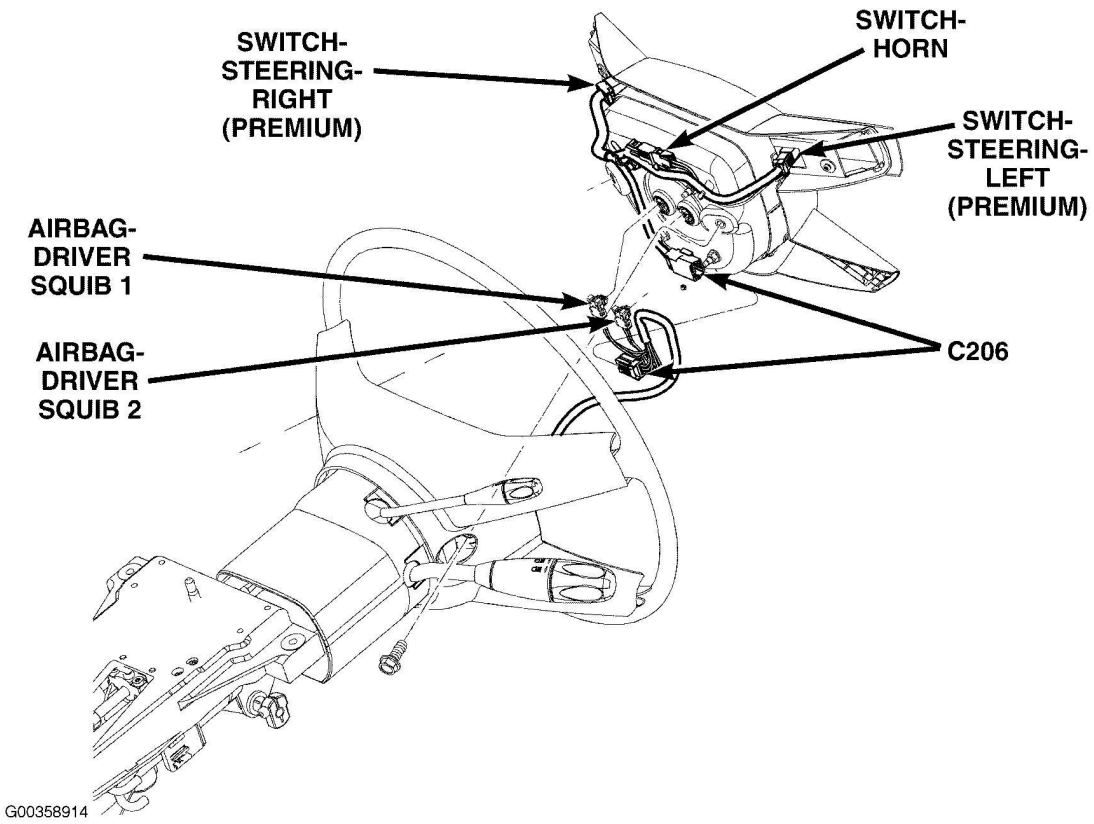

Fig. 19: Front Mount Bolt Cover
Courtesy of CHRYSLER LLC

9. Remove the front mount bolt cover (1) located at the top of the axle carrier (2).

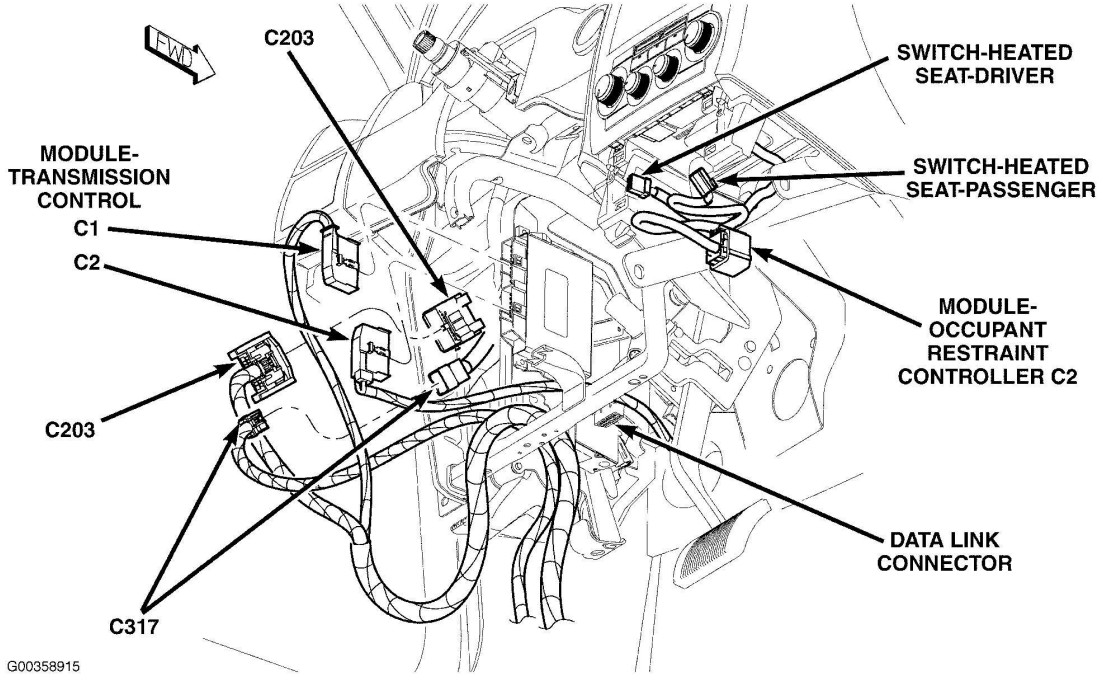

Fig. 20: Locating Rear Axle Front Mount Bolt
Courtesy of CHRYSLER LLC

NOTE: The nut will turn free at the at the top of the axle carrier, it will need to be held with a deep socket during removal.

10. Remove rear axle front mount bolt (1) and nut (3).

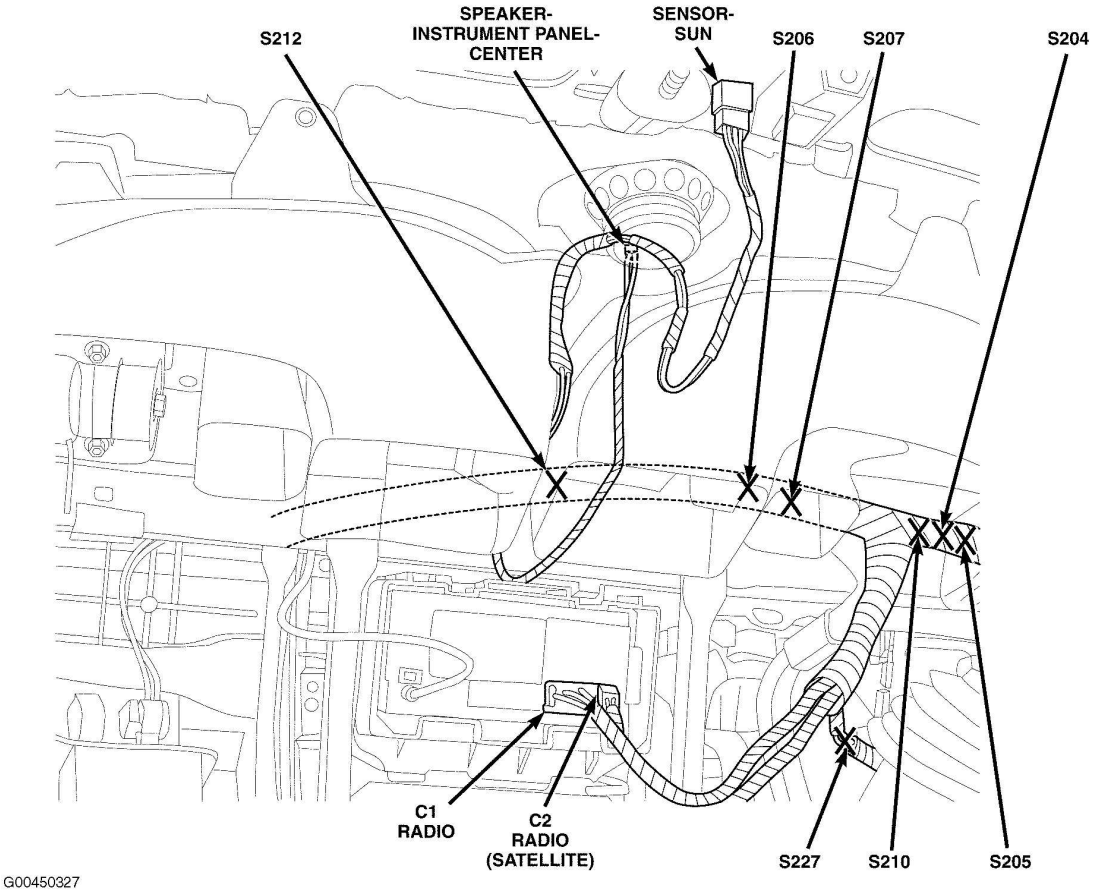

Fig. 21: Locating Right Rear Axle To Crossmember Bolts
Courtesy of CHRYSLER LLC

11. Remove right rear axle-to-crossmember bolts (1).

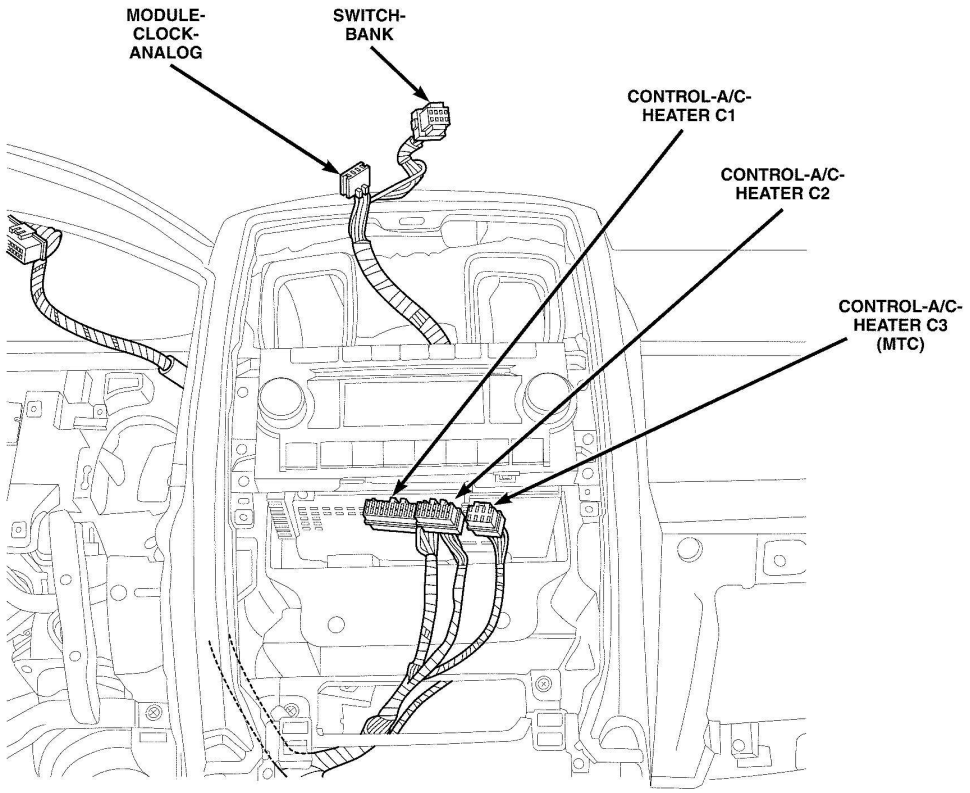

Fig. 22: Left Rear Bolt
Courtesy of CHRYSLER LLC

12. Remove the left rear bolt.

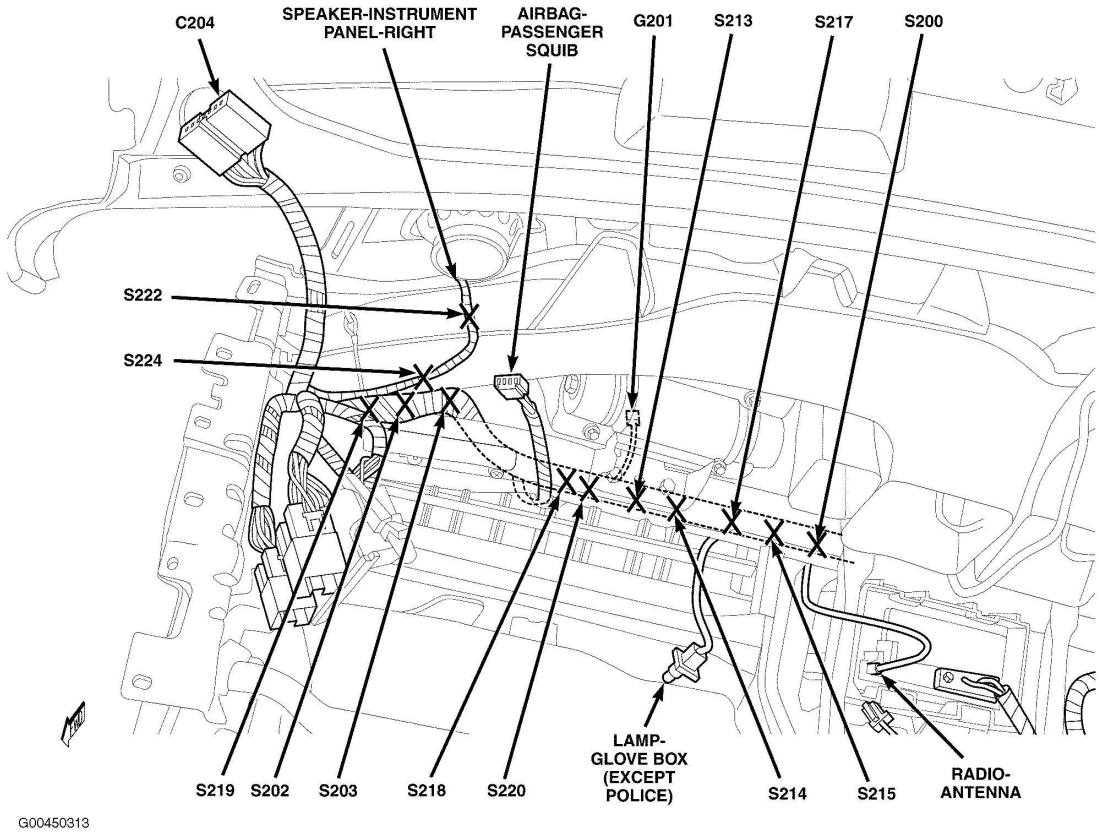

Fig. 23: Lowering Rear Axle Assembly
Courtesy of CHRYSLER LLC

NOTE: Do not pry on the axle halfshaft slinger.

13. Carefully lower rear axle. While lowering axle, separate right halfshaft (1) from axle and remove it.

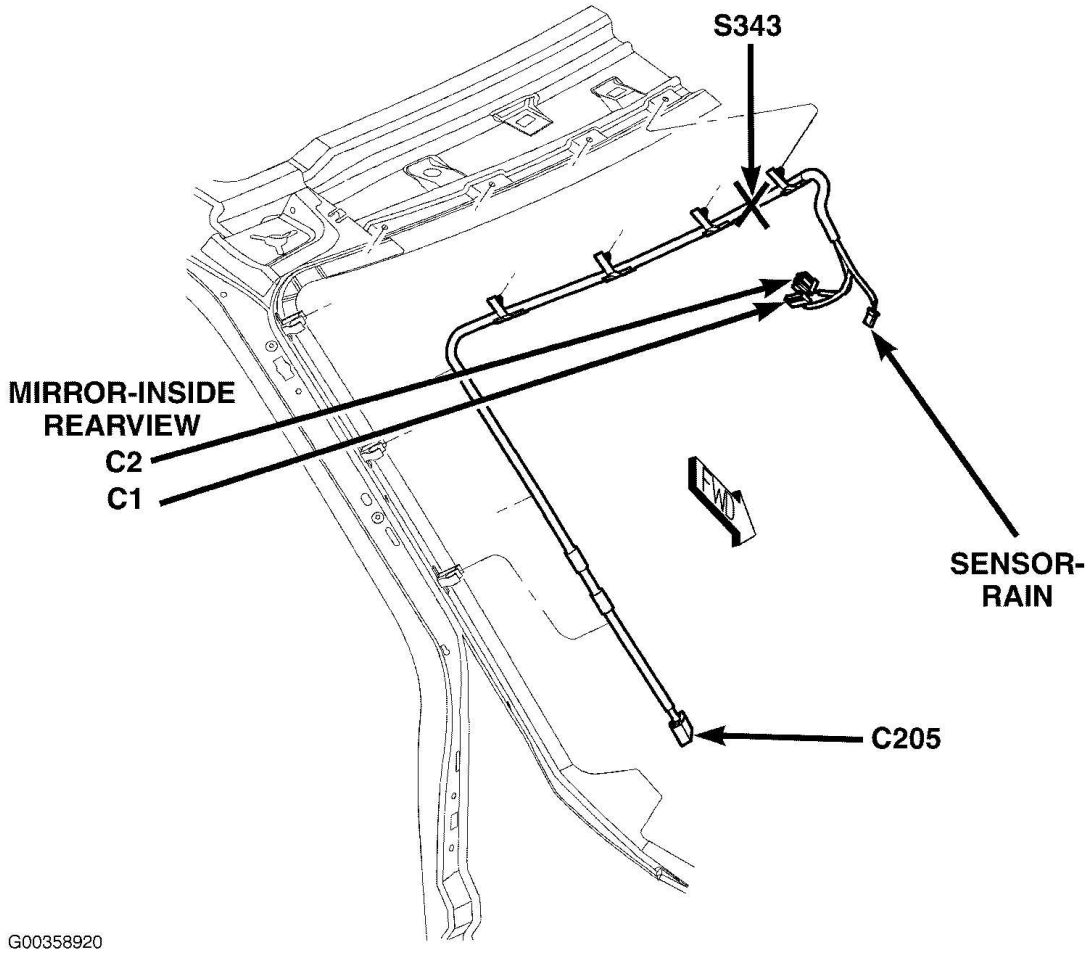

Fig. 24: Identifying Rear Axle Assembly, Lt. Side Halfshaft & Hydraulic Jack
Courtesy of CHRYSLER LLC

14. Remove left halfshaft (2).

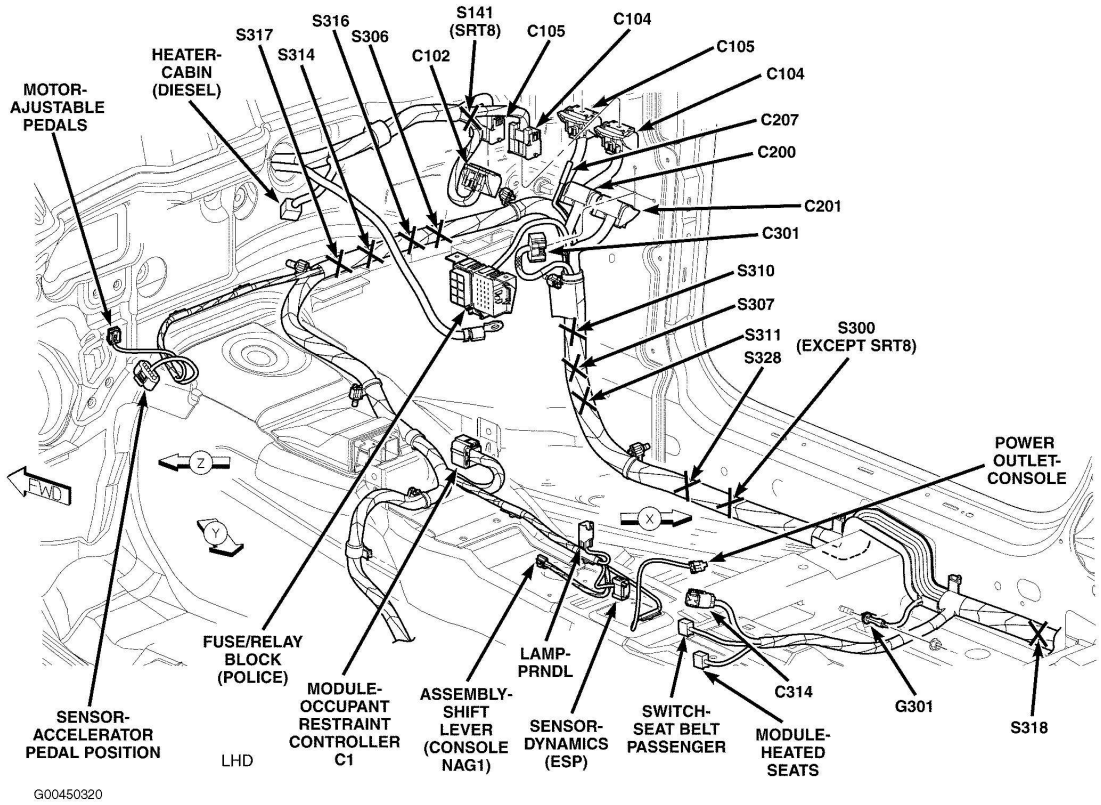

Fig. 25: Halfshaft Isolation Washer
Courtesy of CHRYSLER LLC

CAUTION: Never grasp halfshaft assembly by the inner or outer boots. Doing so may cause the boot to pucker or crease, reducing the service life of the boot and joint. Avoid over angulating or stroking the C/V joints when handling the halfshaft.

CAUTION: Use care while handling/storing halfshaft assembly. Damage to the slinger can result from improper handling. If slinger gets bent or damaged, straighten slinger to avoid contact with axle seal assembly.

15. Remove halfshaft from hub. Remove and inspect rubber isolation washer (1). Discard washer if rubber surfaces are worn away. Repeat on other side if necessary.

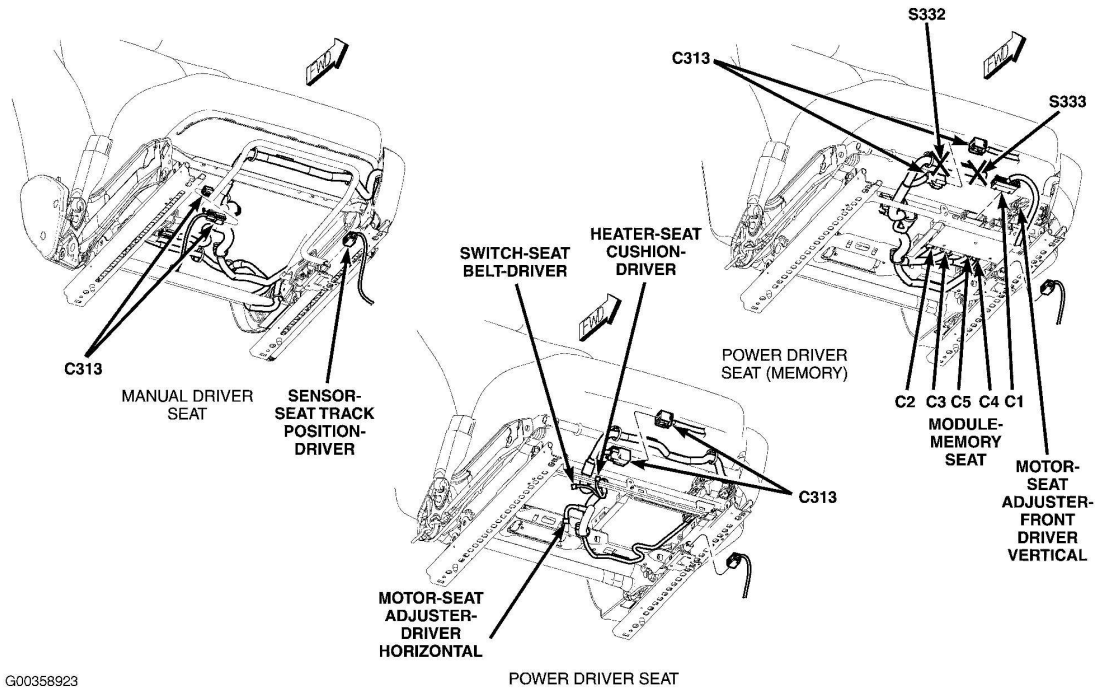

Fig. 26: Removing Left Side Seal
Courtesy of CHRYSLER LLC

16. Remove axle seals (3) using suitable seal removal tool.

INSTALLATION

198 RII AND 215 RII AXLES

NOTE: Halfshaft inner and outer boots are not serviceable separately. Boot replacement requires entire shaft assembly replacement.

CAUTION: Unequal-length halfshafts are used. The right halfshaft is shorter than the left, and it is necessary to identify and tag halfshafts upon removal to ensure proper installation.

CAUTION: Never grasp halfshaft assembly by the inner or outer boots. Doing so may cause the boot to pucker or crease, reducing the service life of the boot and joint. Avoid over angulating or stroking the C/V joints when handling the halfshaft.

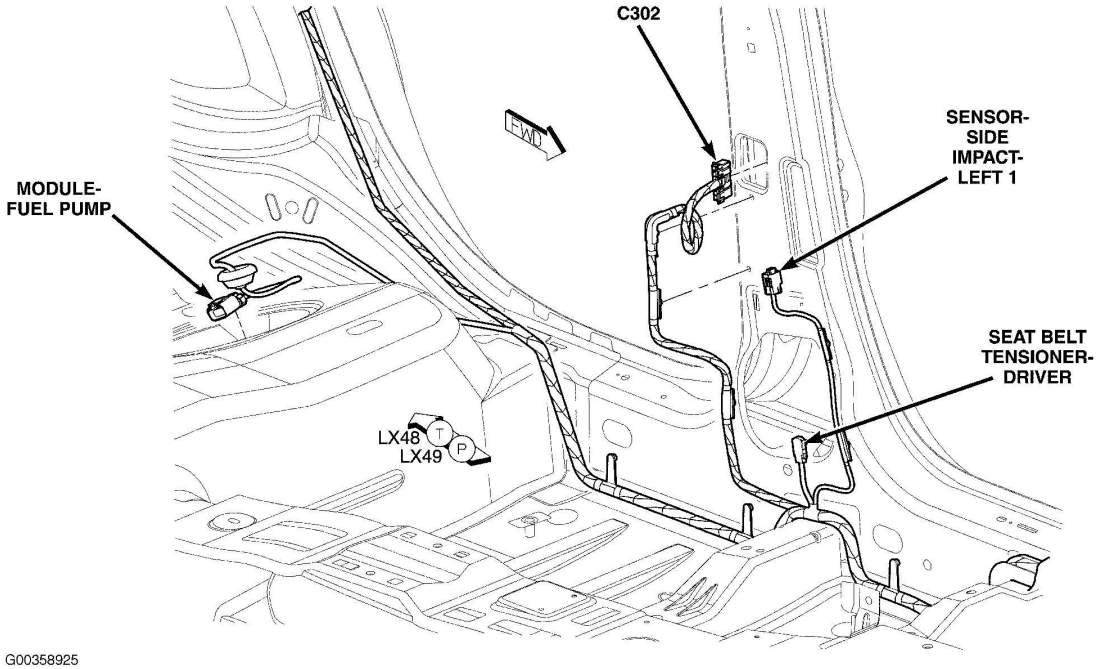

Fig. 27: Axle Seal Installation
Courtesy of CHRYSLER LLC

1. Install new axle seals(1) using Installer 9223 (2).

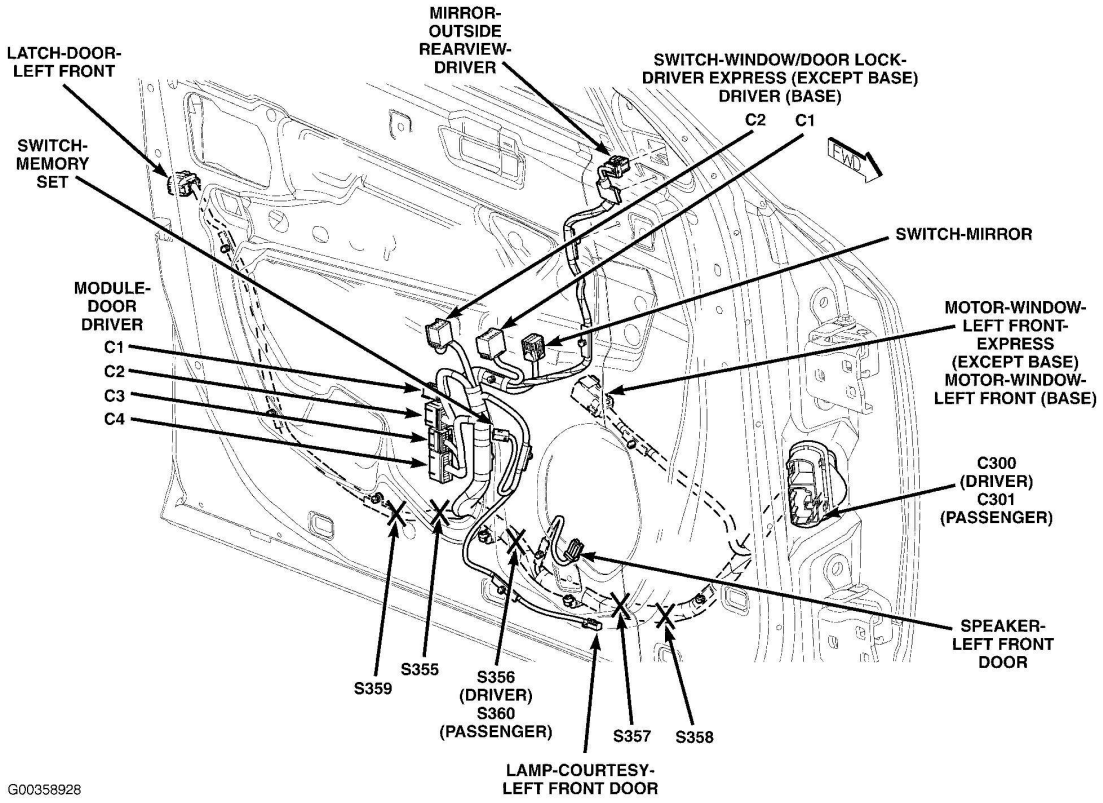

Fig. 28: Halfshaft Isolation Washer
Courtesy of CHRYSLER LLC

2. Install halfshaft isolation washer (1). Washer is bi-directional, and can be installed in either direction.

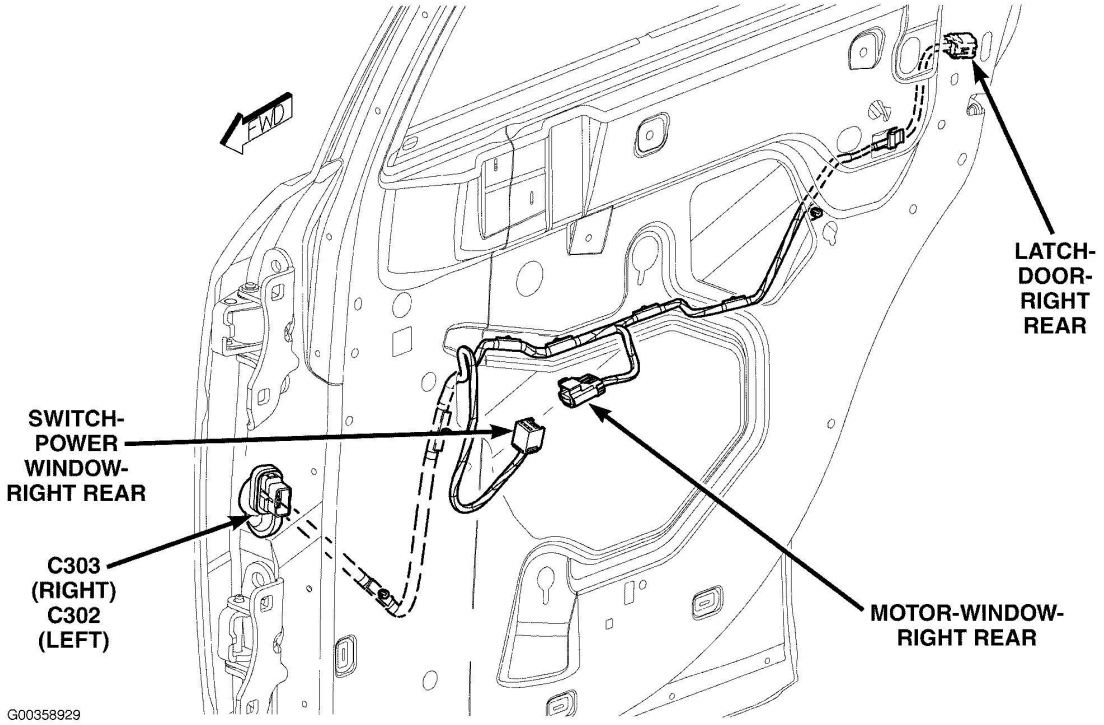

Fig. 29: Hub Nut
Courtesy of CHRYSLER LLC

NOTE: Always install a new hub nut. The original hub nut is one-time use only and should be discarded when removed.

3. Install halfshaft (2) to wheel hub/knuckle assembly. Install **NEW** hub nut (1) by hand.

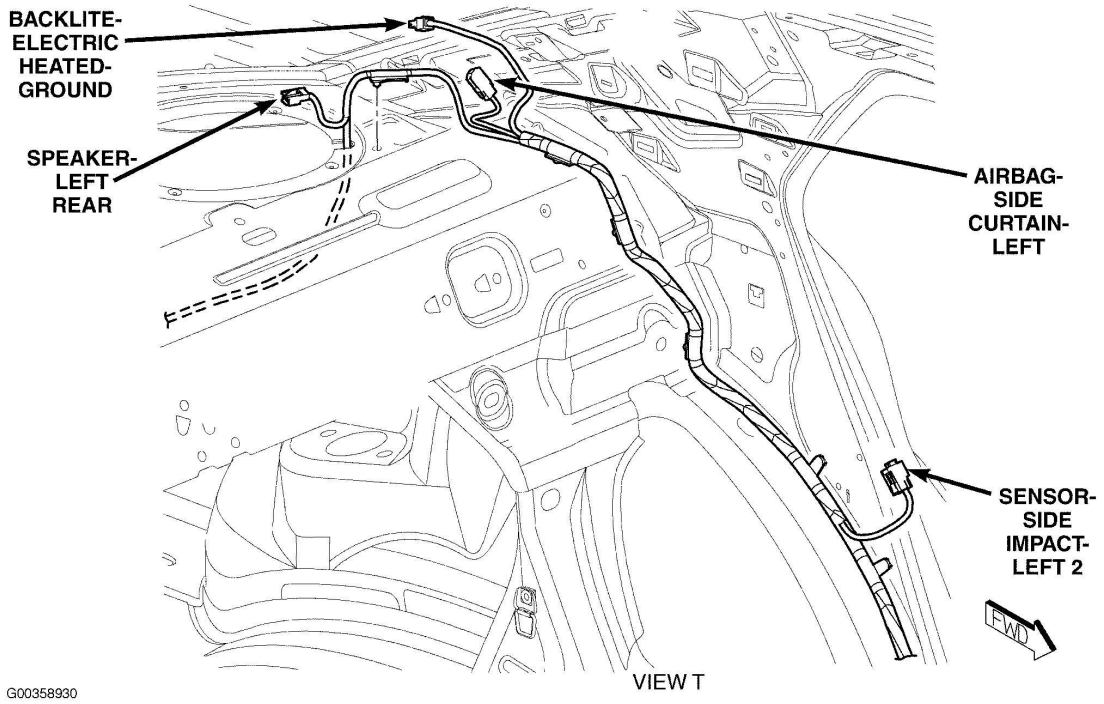

Fig. 30: Remove/Install Halfshaft
Courtesy of CHRYSLER LLC

NOTE: Inspect slinger(s) for handling damage. Straighten as necessary to avoid contact with axle seal.

NOTE: Use care when installing halfshaft to axle assembly. The halfshaft installation angle should be minimized to avoid damage to seal upon installation.

4. Lubricate halfshaft inner joint bearing journal (3) with Mopar® Gear and Axle Lubricant (75-140W). Using new circlip(s), install halfshaft (1) to rear axle assembly. Use care not to damage axle seals (2). Verify proper installation by pulling outward on joint by hand.

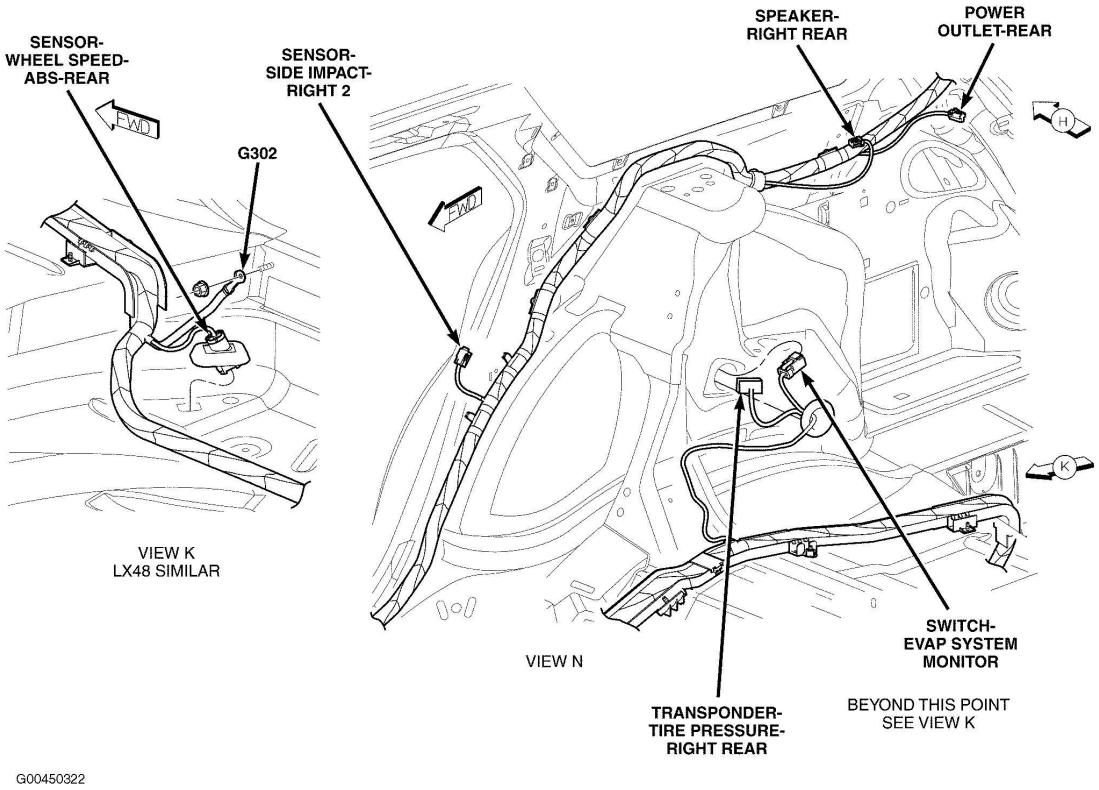

Fig. 31: Alignment Marks - Axle End Shown
Courtesy of CHRYSLER LLC

5. Raise rear axle assembly into position. Align propeller shaft index marks (3) and start propeller shaft coupler-to-axle bolt/nuts by hand.

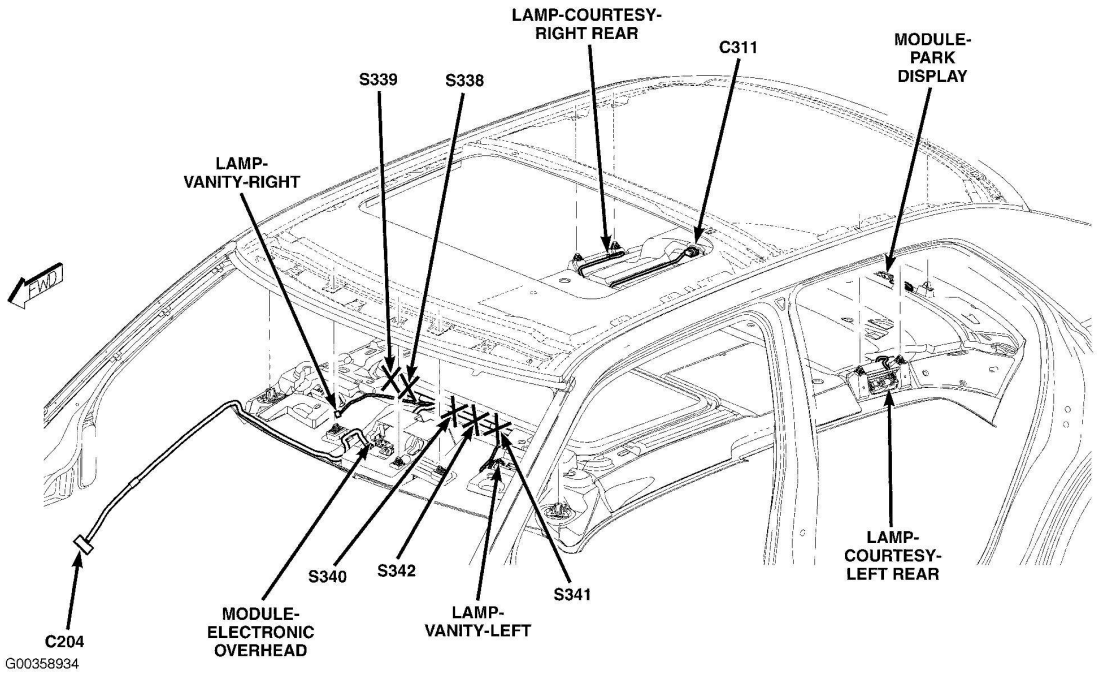

Fig. 32: Rear Axle To Crossmember Bolts
Courtesy of CHRYSLER LLC

6. Install two rear axle-to-crossmember bolts (1) and torque to 220 N.m (162 ft. lbs.).

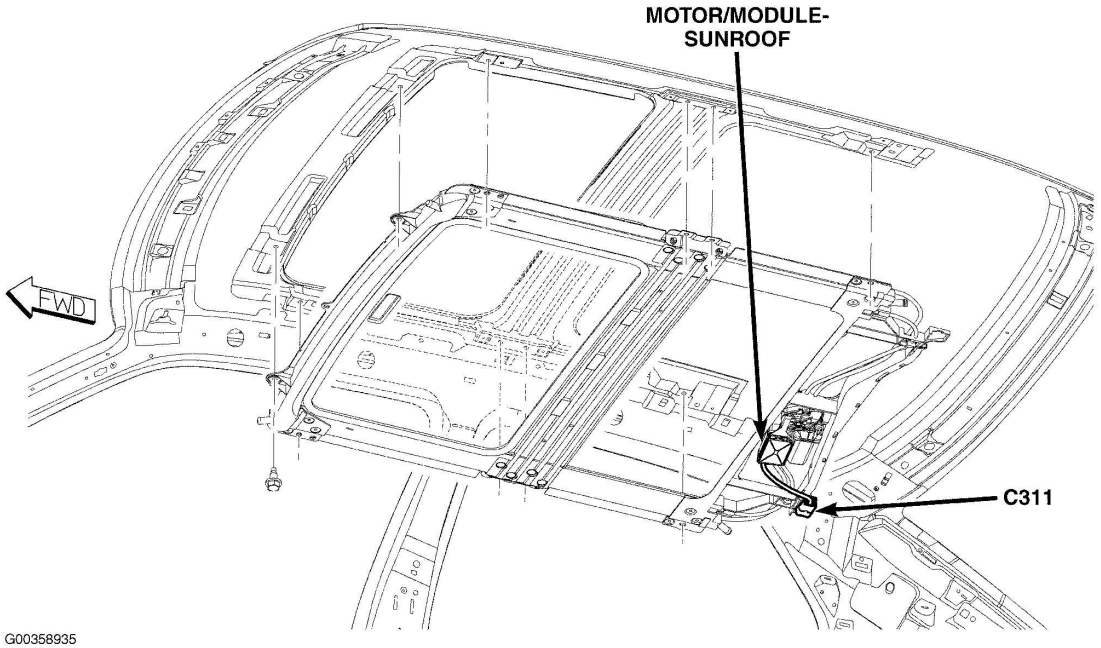

Fig. 33: Rear Axle Front Isolator

Courtesy of CHRYSLER LLC

7. Install rear axle front mount isolator (1) as shown on illustration and torque bolt/nut to 65 N.m (48 ft. lbs.).

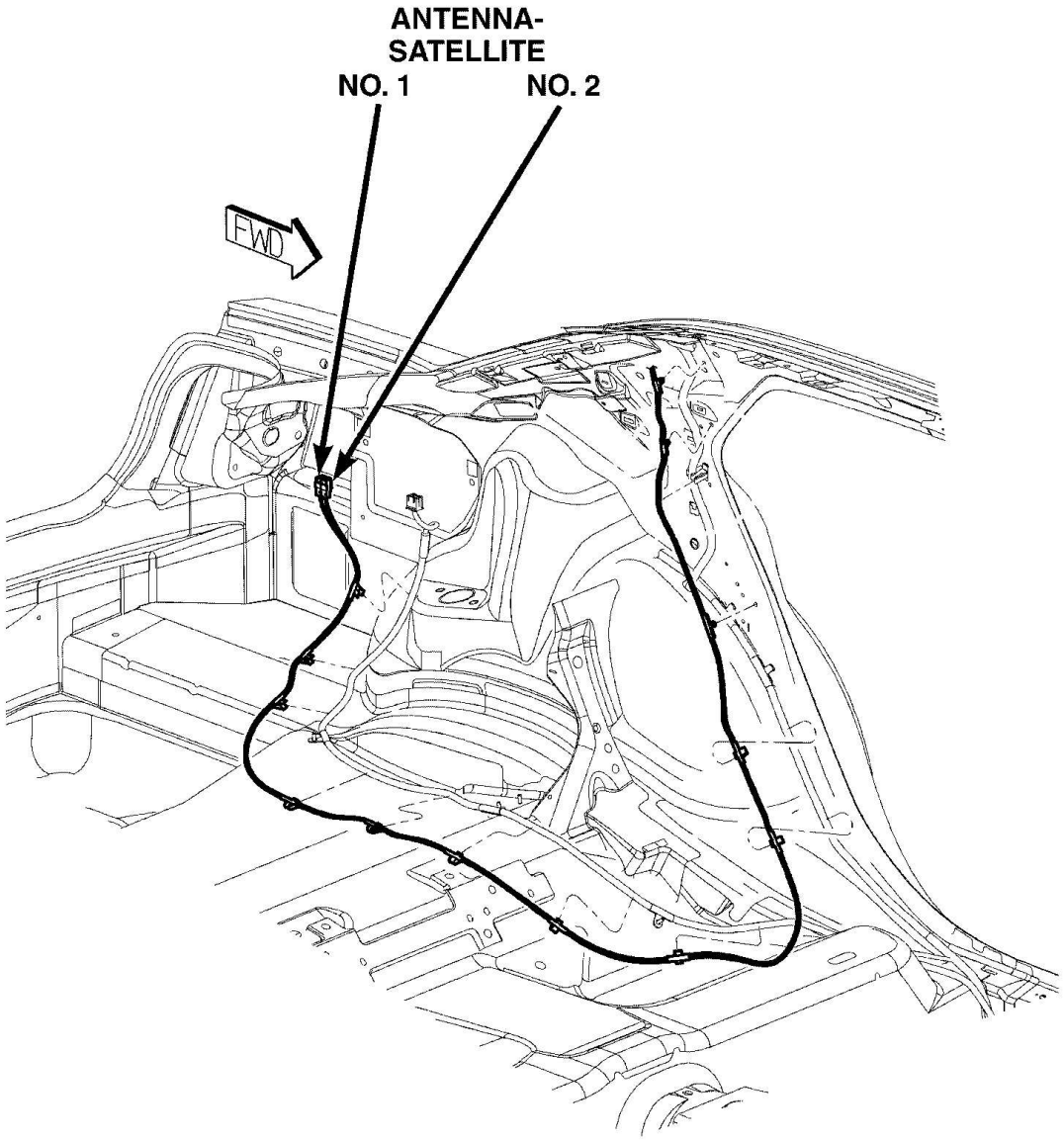

Fig. 34: Transmission Jack At Rear Axle
Courtesy of CHRYSLER LLC

8. Again verify halfshaft inner joints are fully engaged to axle assembly.
9. Remove transmission jack (1).

10. If used, remove screw-type under-hoist jack stands (2).

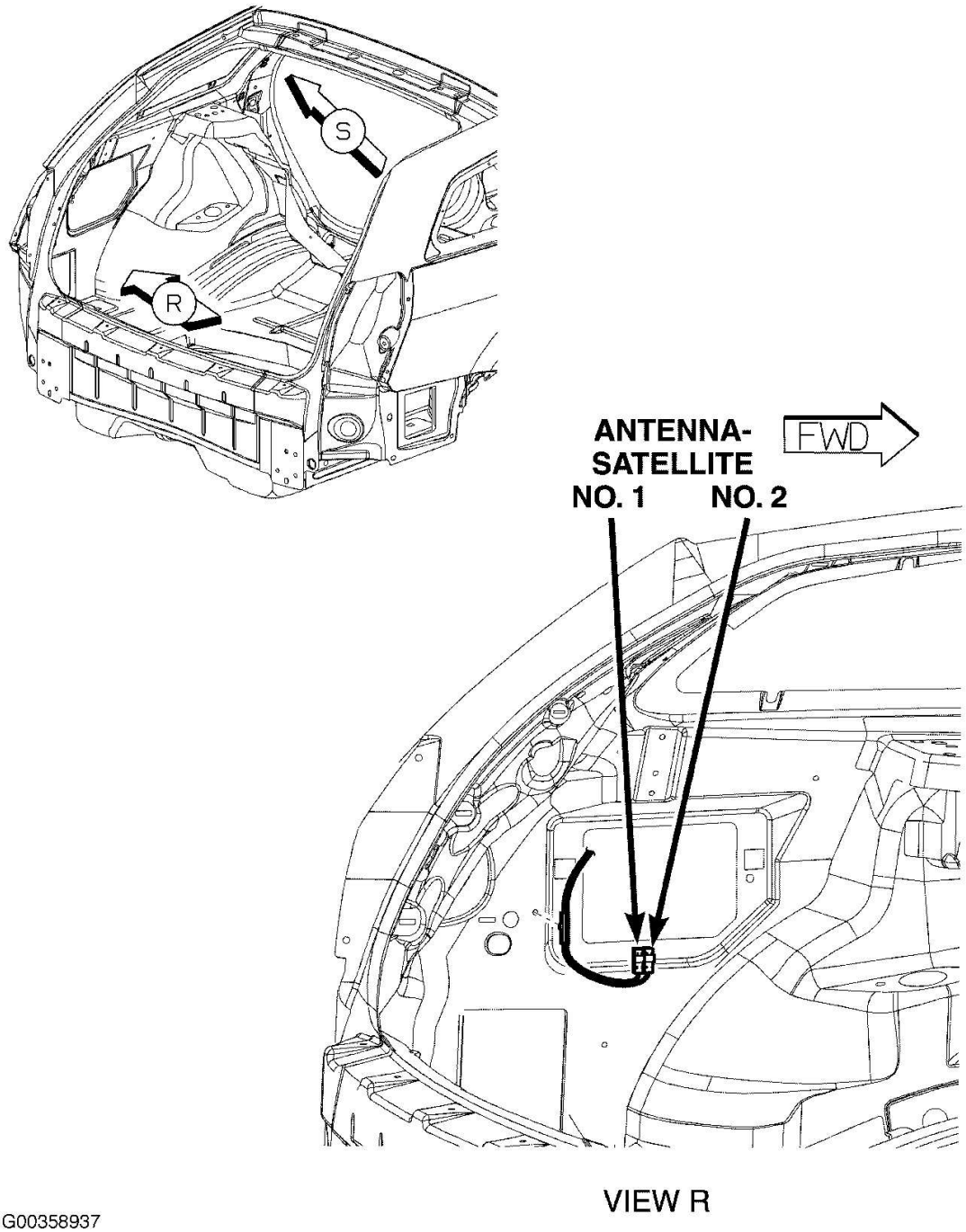

Fig. 35: Propeller Shaft At Rear Axle
Courtesy of CHRYSLER LLC

11. Torque propeller shaft coupler-to-axle flange bolt/nuts to 58 N.m (43 ft. lbs.).

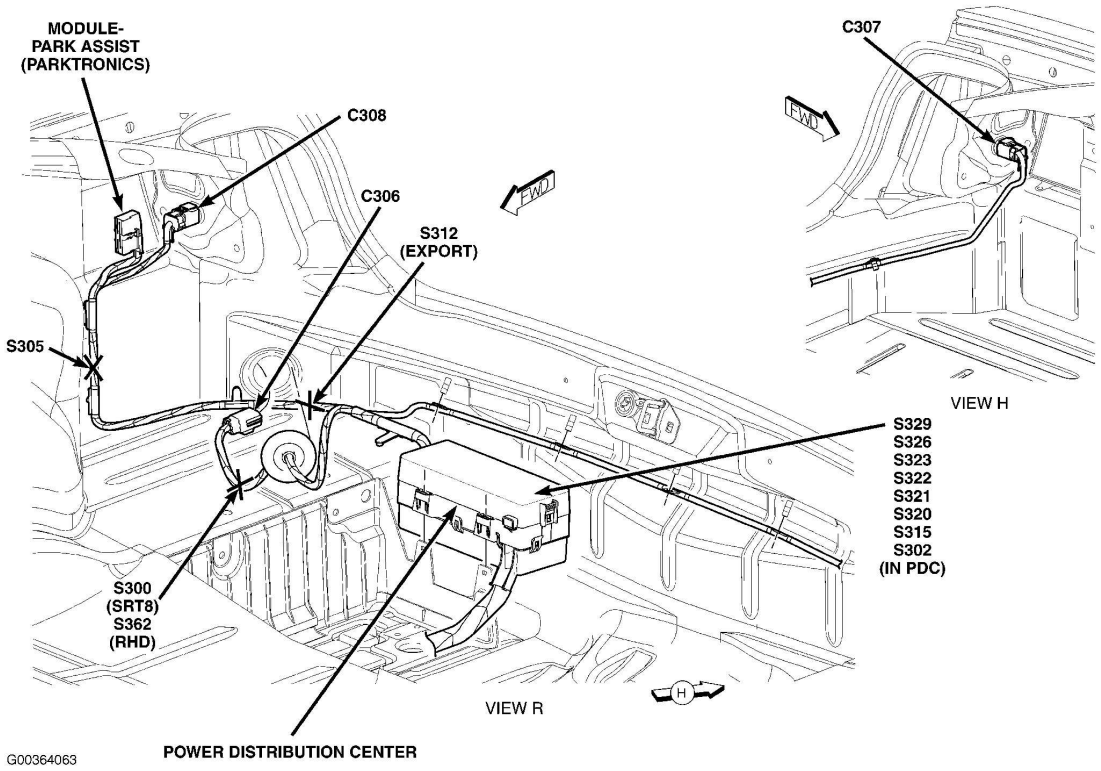

Fig. 36: Rear Axle Fill Plug
Courtesy of CHRYSLER LLC

12. Using a 14mm hex, remove rear axle fill plug (1). Fill axle with Mopar® with 1.2L (1.3 qts) of 75W-140 Synthetic Gear AND Axle Lubricant.

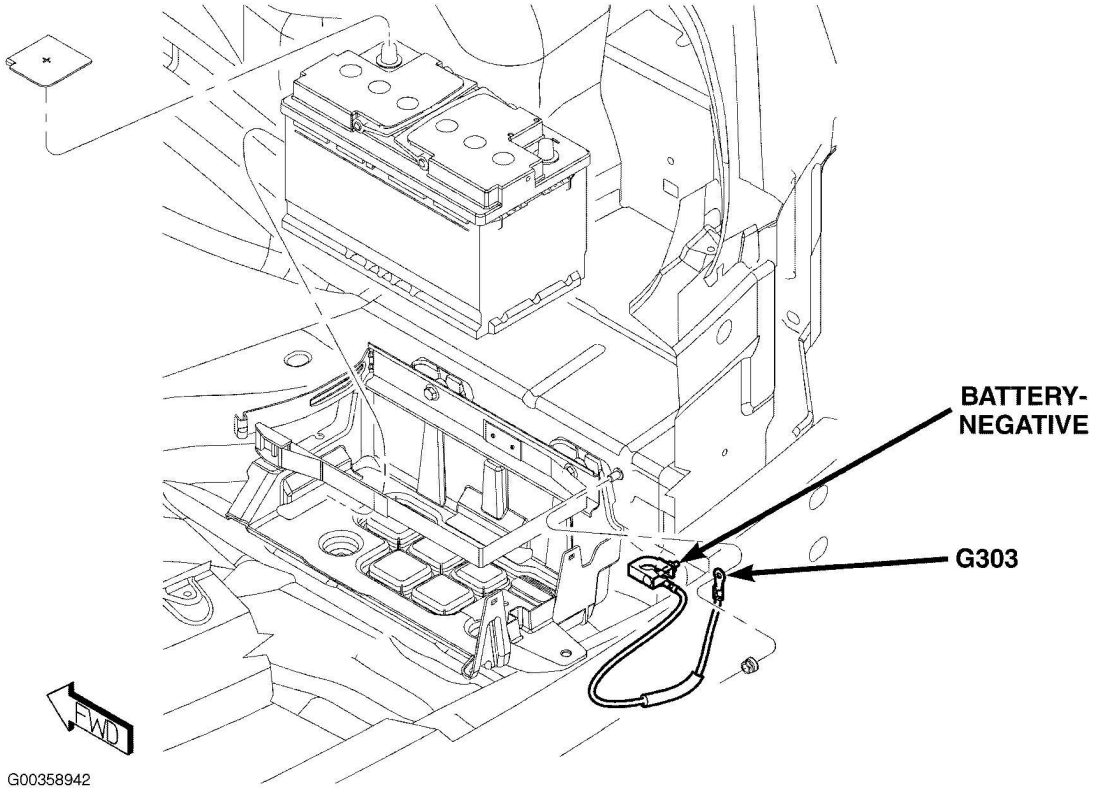

Fig. 37: Rear Axle Fill Plug
Courtesy of CHRYSLER LLC

13. Install and torque fill plug (1) and torque to 50 N.m (37 ft. lbs.)
14. Install exhaust system. Refer to **Exhaust System/MUFFLER, Exhaust - Installation**

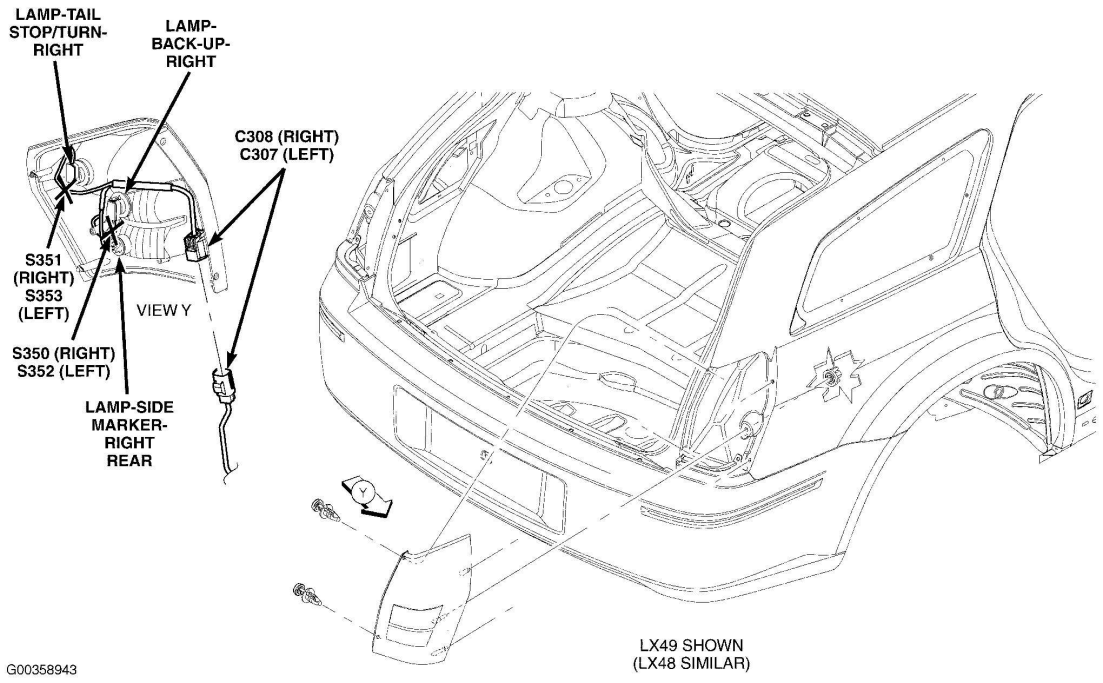

Fig. 38: Hub Nut
Courtesy of CHRYSLER LLC

15. Lower vehicle. Torque halfshaft hub nut (1) to 213 N.m (157 ft. lbs.). Install wheel center cap.

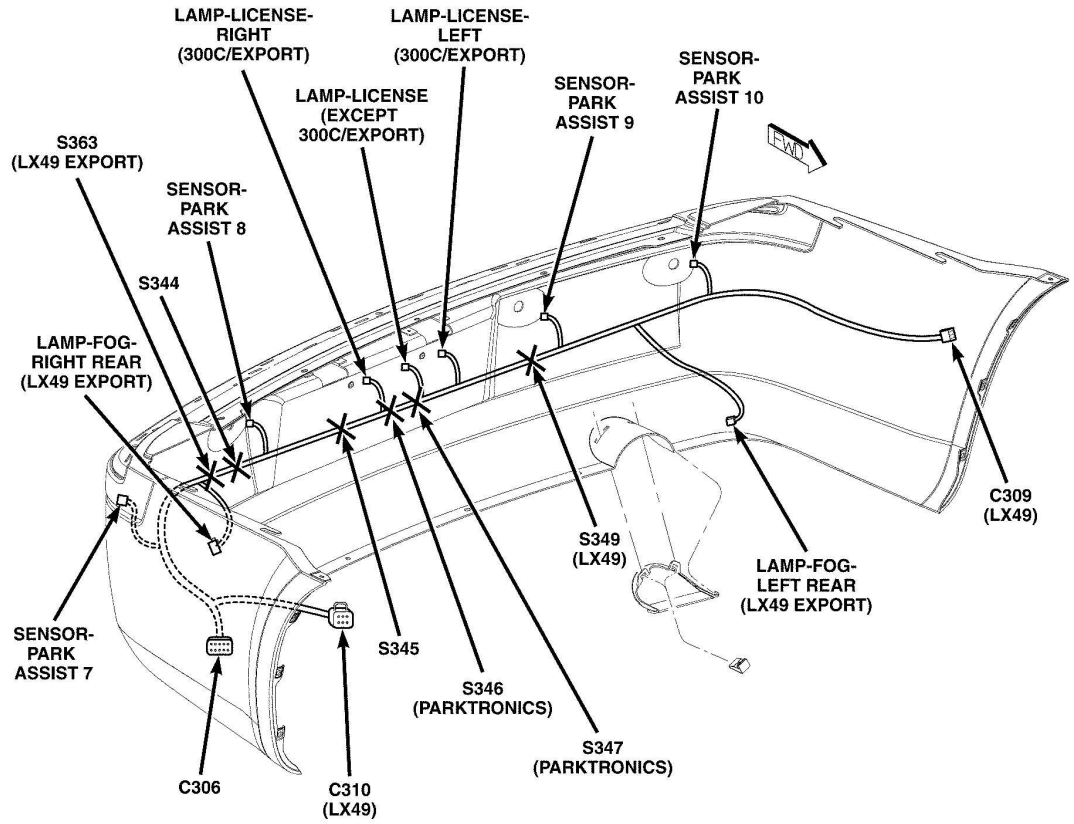

Fig. 39: Tire And Wheel Mounting
Courtesy of CHRYSLER LLC

16. Install wheel/tire assembly (1) and torque lug nuts to 150 N.m (110 ft. lbs.).
17. Lower the vehicle.

G648 REAR AXLE

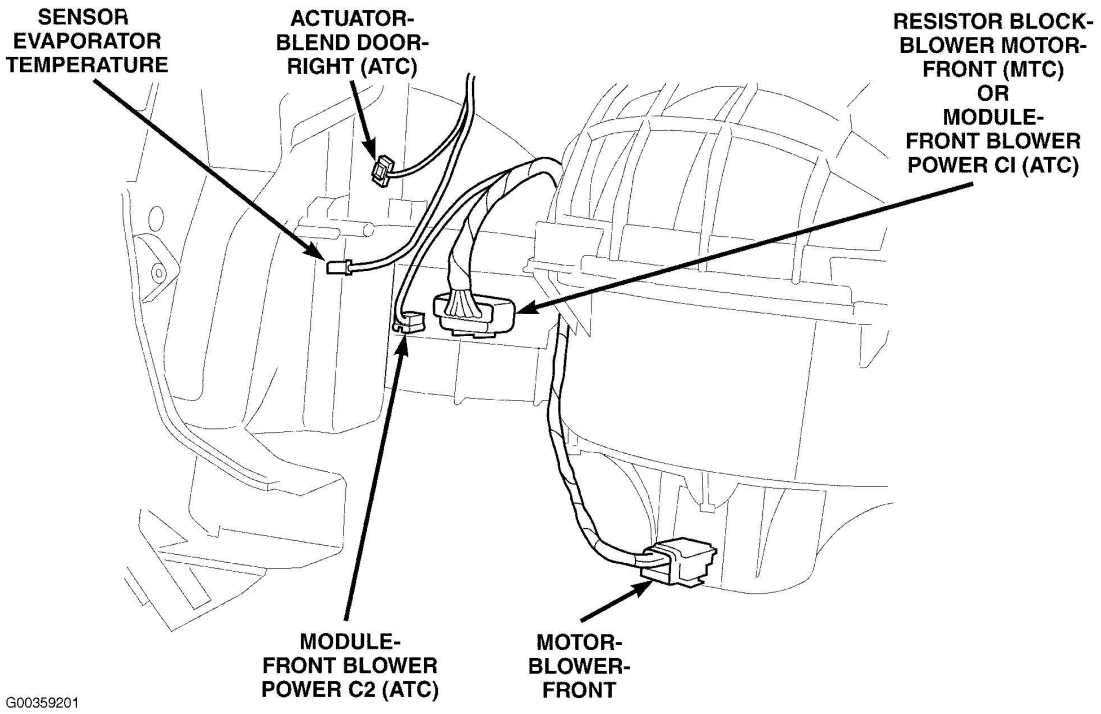

Fig. 40: Installing Right Side Seal
Courtesy of CHRYSLER LLC

NOTE: Lubricate the inside diameter with Mopar® Gear and Axle Lubricant 75W-90 to protect seal during halfshaft installation.

1. If removed, install **NEW** axle shaft seals using Installer 9919 (2) and Handle C-4171 (3).

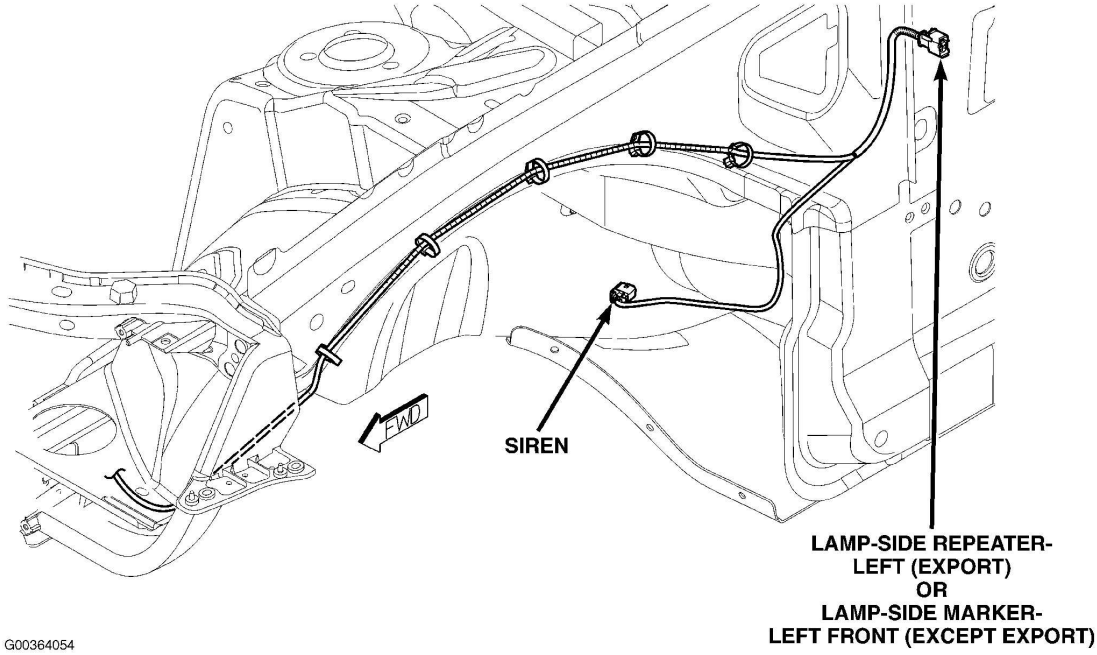

Fig. 41: Halfshaft Isolation Washer
Courtesy of CHRYSLER LLC

2. Install halfshaft isolation washer (1). Washer is bi-directional, and can be installed in either direction.

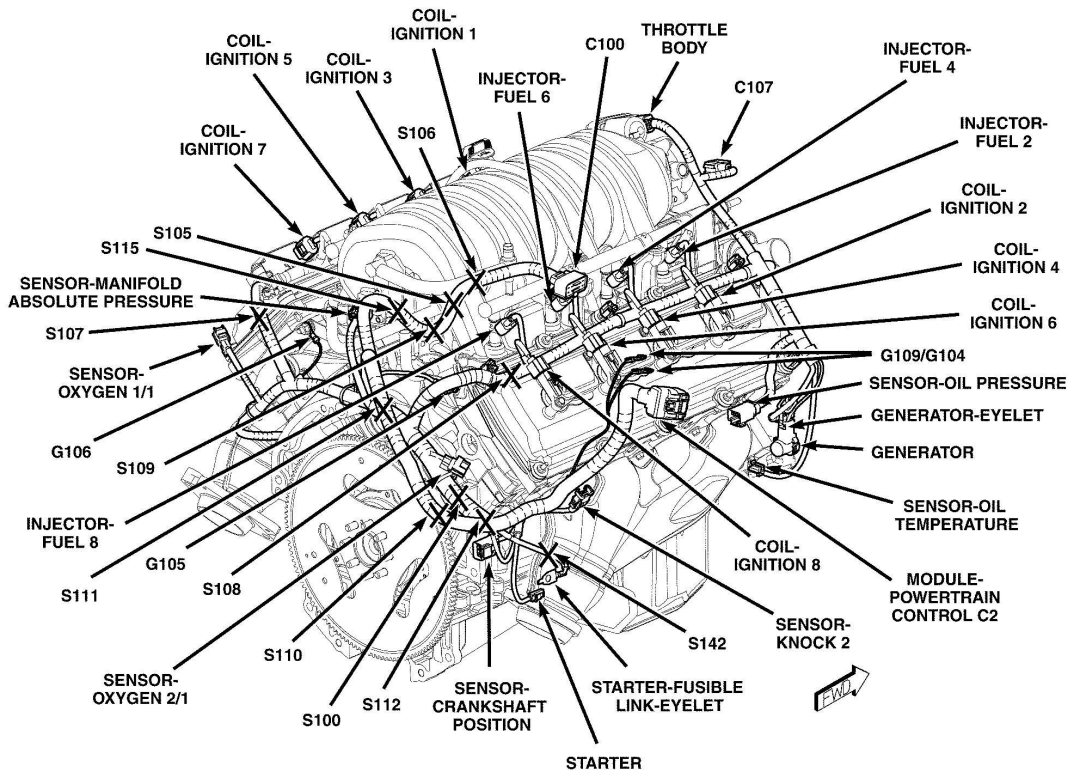

G00450318

Fig. 42: Hub Nut
Courtesy of CHRYSLER LLC

NOTE: Always install a new hub nut. The original hub nut is one-time use only and should be discarded when removed.

3. Install halfshaft (2) to wheel hub/knuckle assembly. Install **new** hub nut (1) by hand.

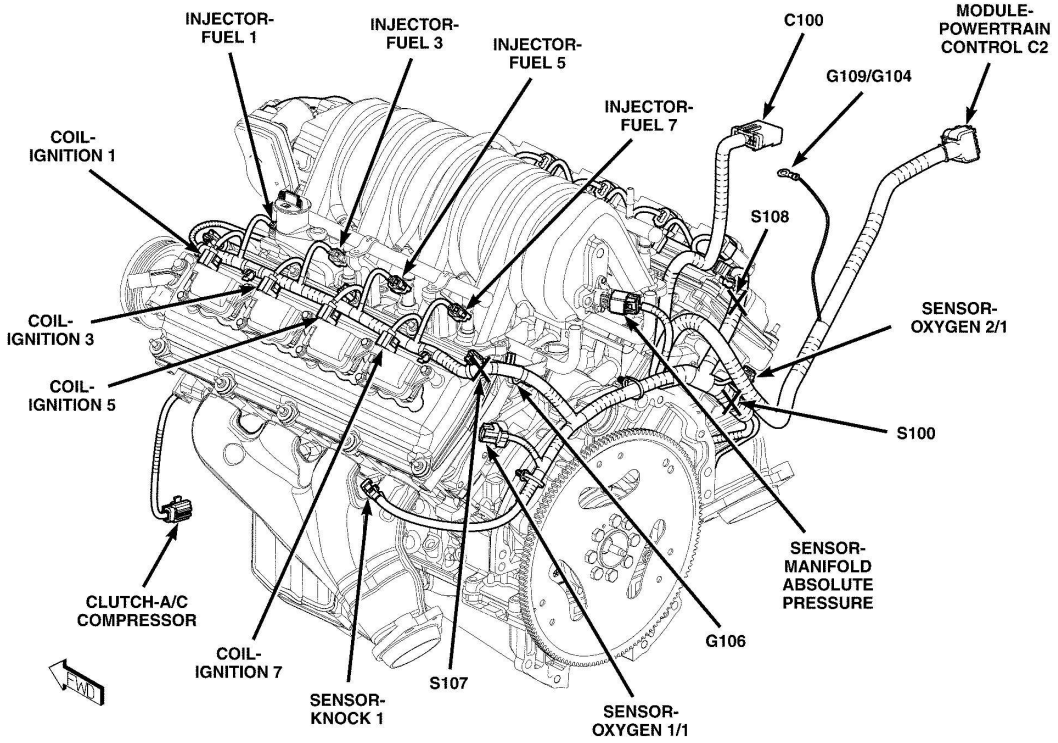

Fig. 43: Identifying Rear Axle Assembly, Lt. Side Halfshaft & Hydraulic Jack
Courtesy of CHRYSLER LLC

NOTE: Use care when installing halfshaft to axle assembly. The halfshaft installation angle should be minimized to avoid damage to seal upon installation.

4. Using new circlip(s), install left halfshaft (2) to rear axle assembly. Do not damage axle seals. Verify proper installation by pulling outward on joint by hand.

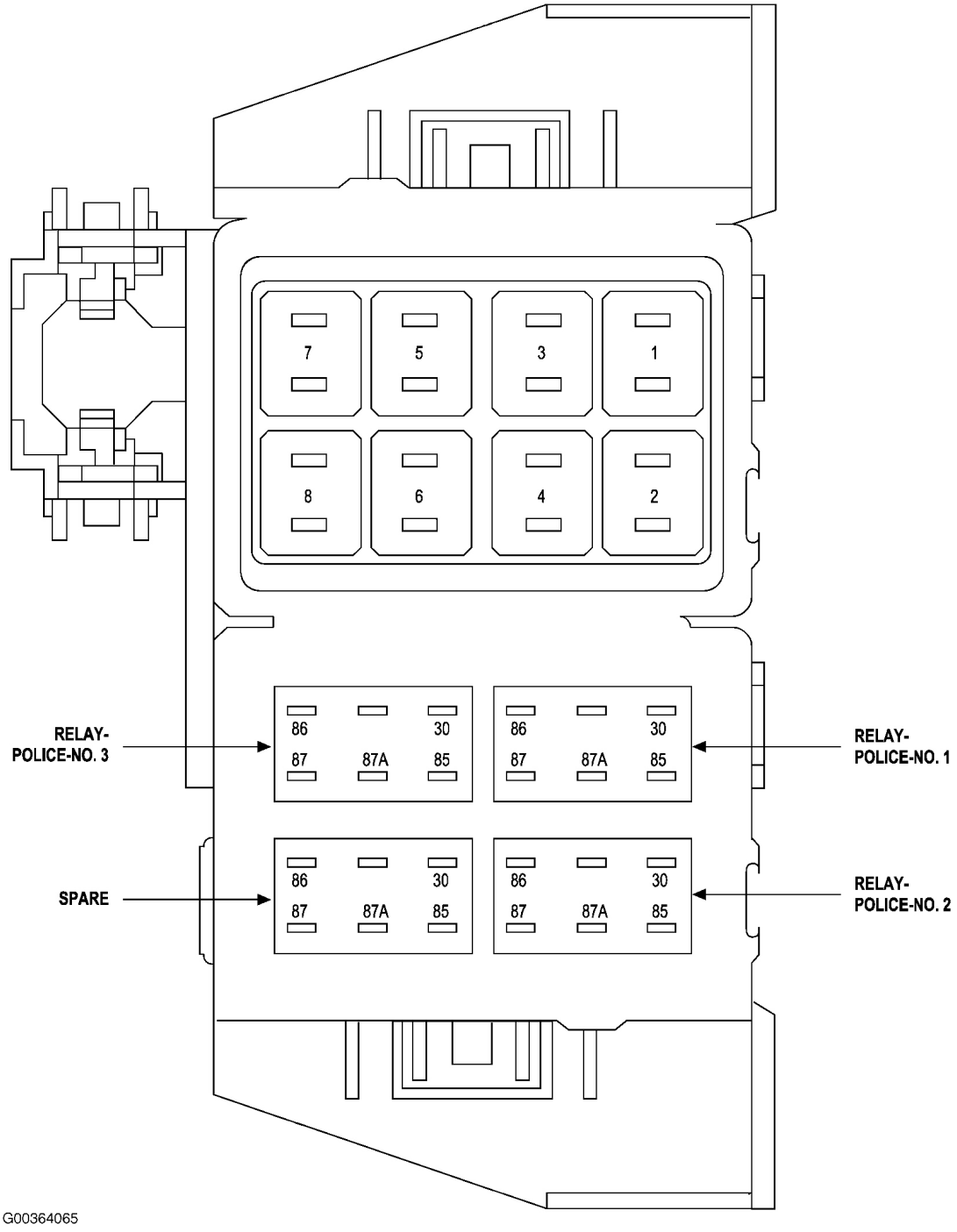

Fig. 44: Installing Right Halfshaft Into Axle Using Seal Protector
Courtesy of CHRYSLER LLC

5. Using Seal Protector 9099 (3) install the right halfshaft (1) into axle (2).

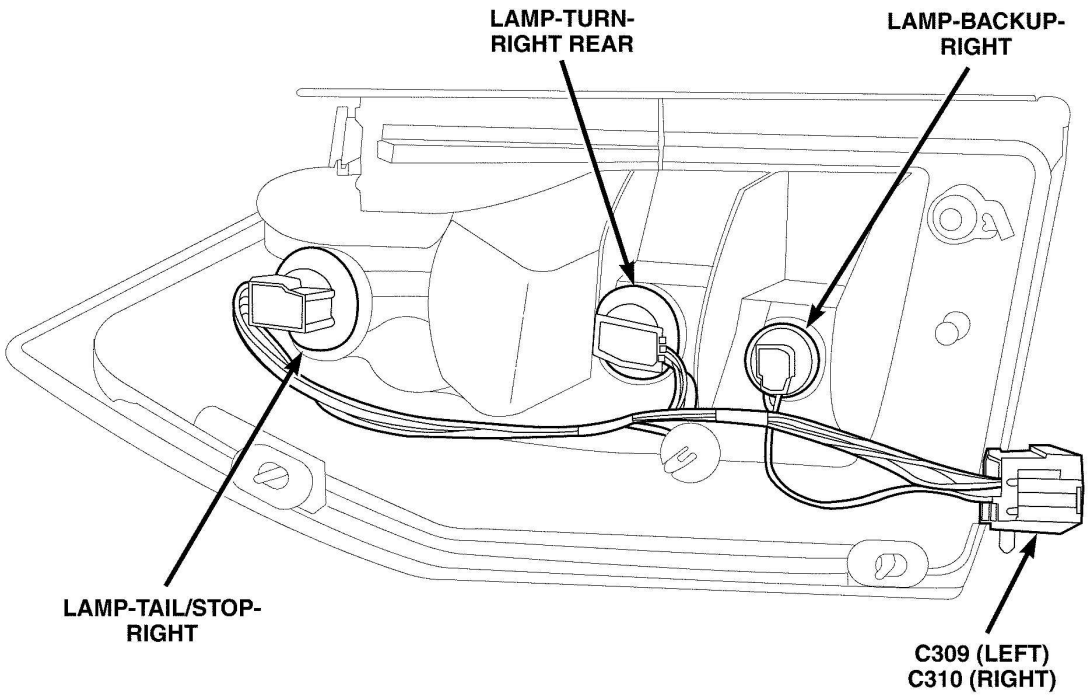

Fig. 45: Applying Alignment Index Marks To Rear Axle Flange
Courtesy of CHRYSLER LLC

NOTE: To prevent damage or imbalance, washers must be placed on fasteners that attach rubber coupler to the pinion yoke.

NOTE: To prevent damage or imbalance, washers must be installed between fastener heads and the rubber coupler.

6. Raise rear axle assembly into position. Align propeller shaft index marks (3) and start propeller shaft coupler-to-axle bolt/nuts by hand.

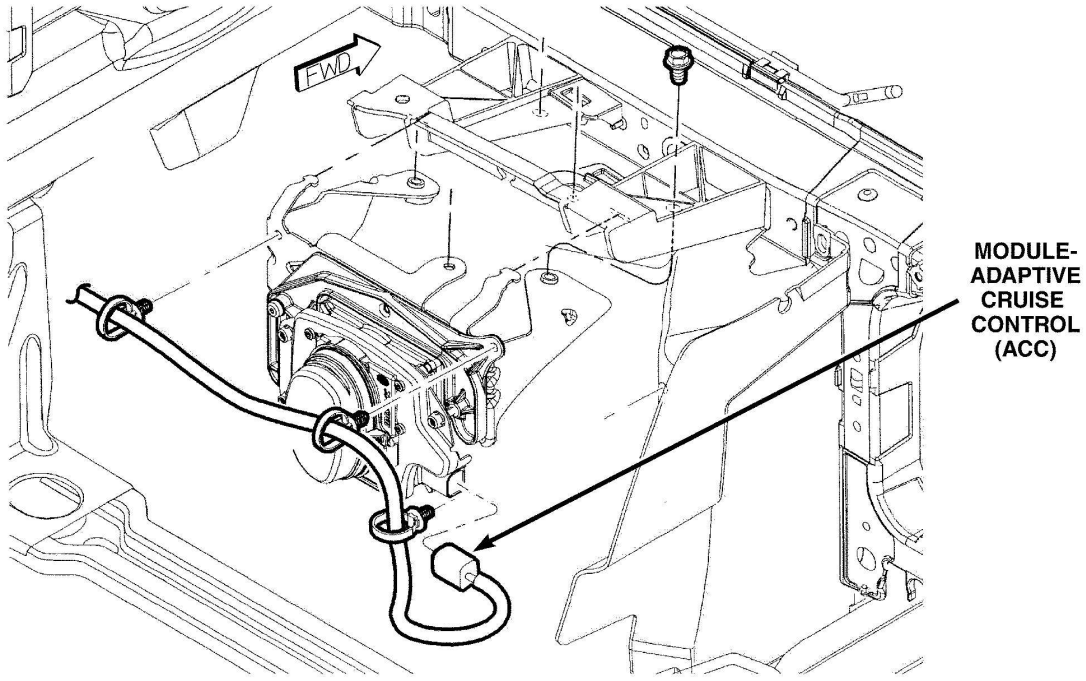

Fig. 46: Locating Right Rear Axle To Crossmember Bolts
Courtesy of CHRYSLER LLC

NOTE: If re-using the original rear axle-to-crossmember bolts, clean the rear axle-to-crossmember bolts and apply a patch of blue MOPAR® Lock & Seal medium strength thread locker to the rear axle-to-crossmember bolts. New bolts have a thread lock patch, and do not require application of blue MOPAR® Lock & Seal medium strength thread locker

7. Install right rear axle-to-crossmember bolt (1) and tighten to 220 N.m (162 ft. lbs.).

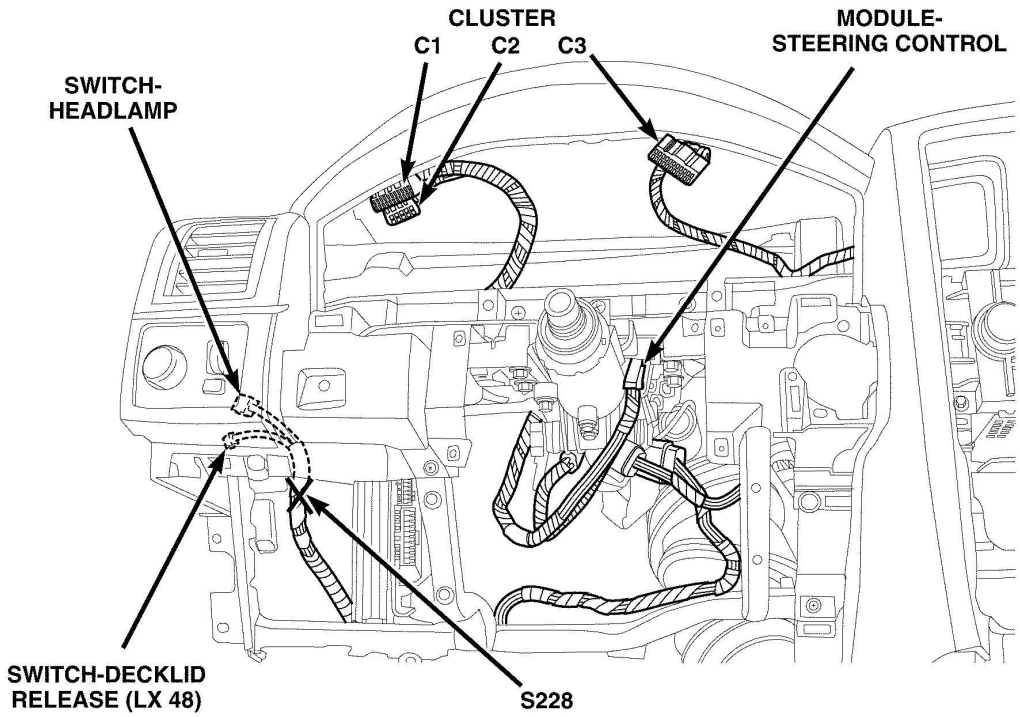

Fig. 47: Left Rear Bolt
Courtesy of CHRYSLER LLC

NOTE: If re-using the original rear axle-to-crossmember bolts, clean the rear axle-to-crossmember bolts and apply a patch of blue MOPAR® Lock & Seal medium strength thread locker to the rear axle-to-crossmember bolts. New bolts have a thread lock patch, and do not require application of blue MOPAR® Lock & Seal medium strength thread locker

8. Install left rear axle-to-crossmember bolt (1) and tighten to 220 N.m (162 ft. lbs.).

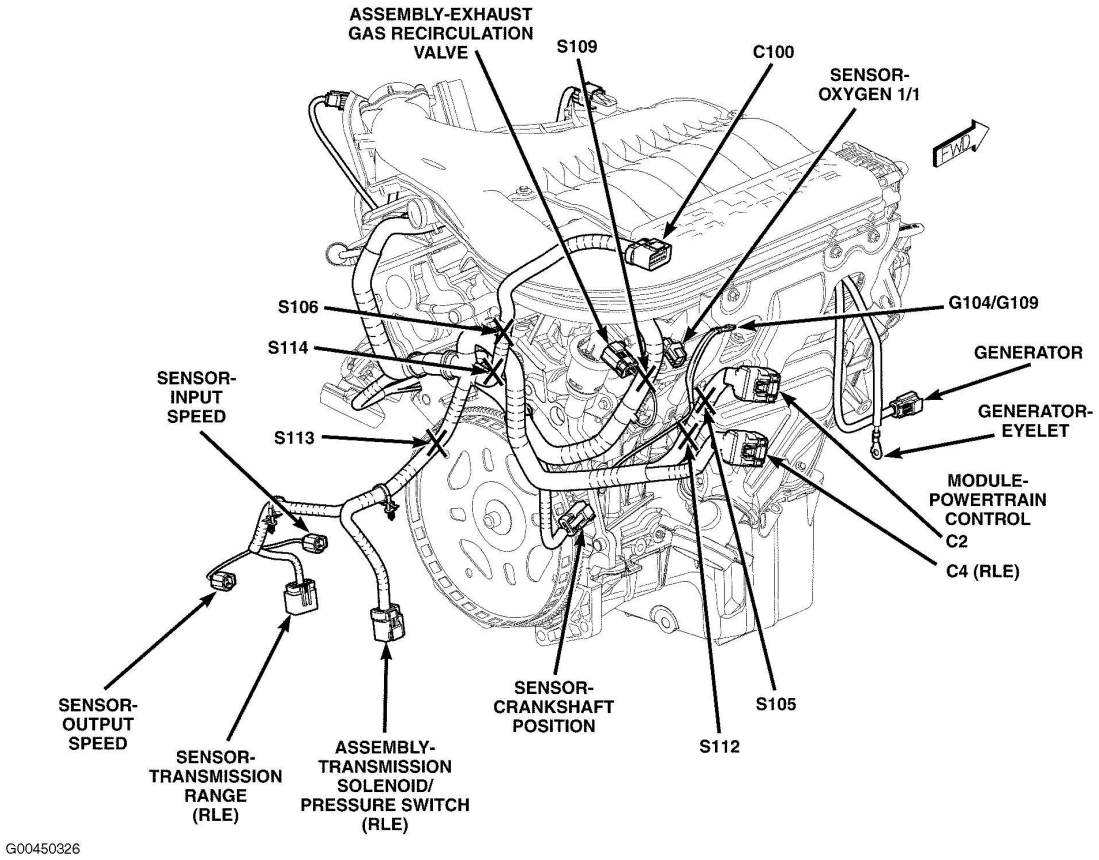

Fig. 48: Locating Rear Axle Front Mount Bolt
Courtesy of CHRYSLER LLC

NOTE: The rubber part of the axle isolator must face toward the cradle.

9. Install rear axle front mount isolator (3) as shown on illustration and torque fastener to 65 N.m (48 ft. lbs.).

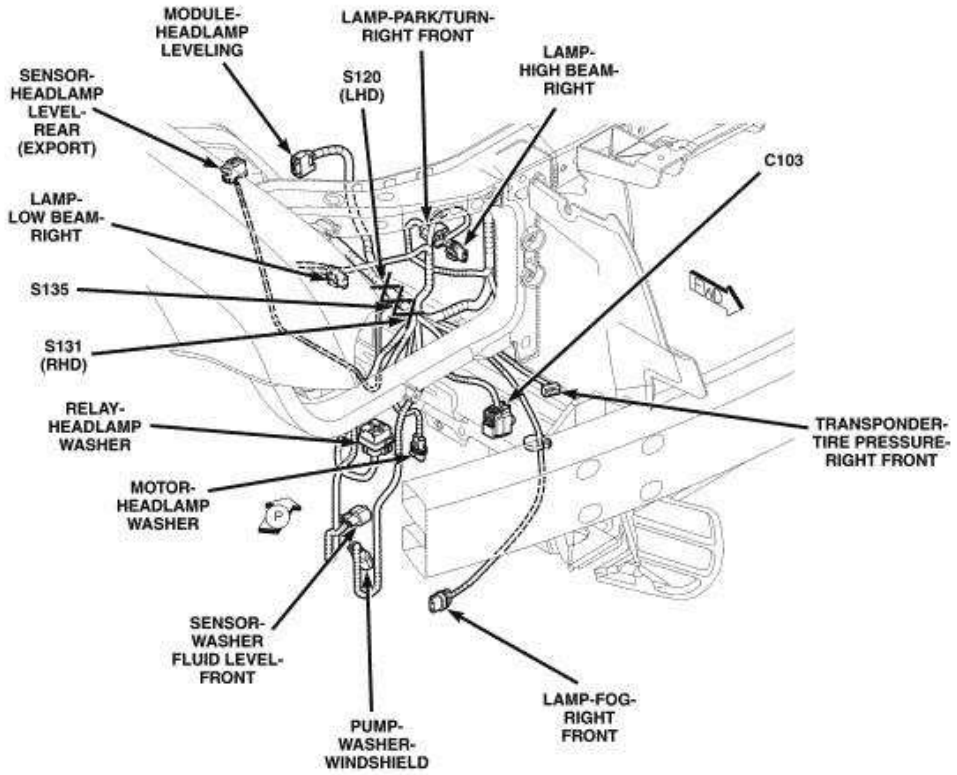

Fig. 49: Front Mount Bolt Cover
Courtesy of CHRYSLER LLC

10. Install the front mount bolt cover (1).

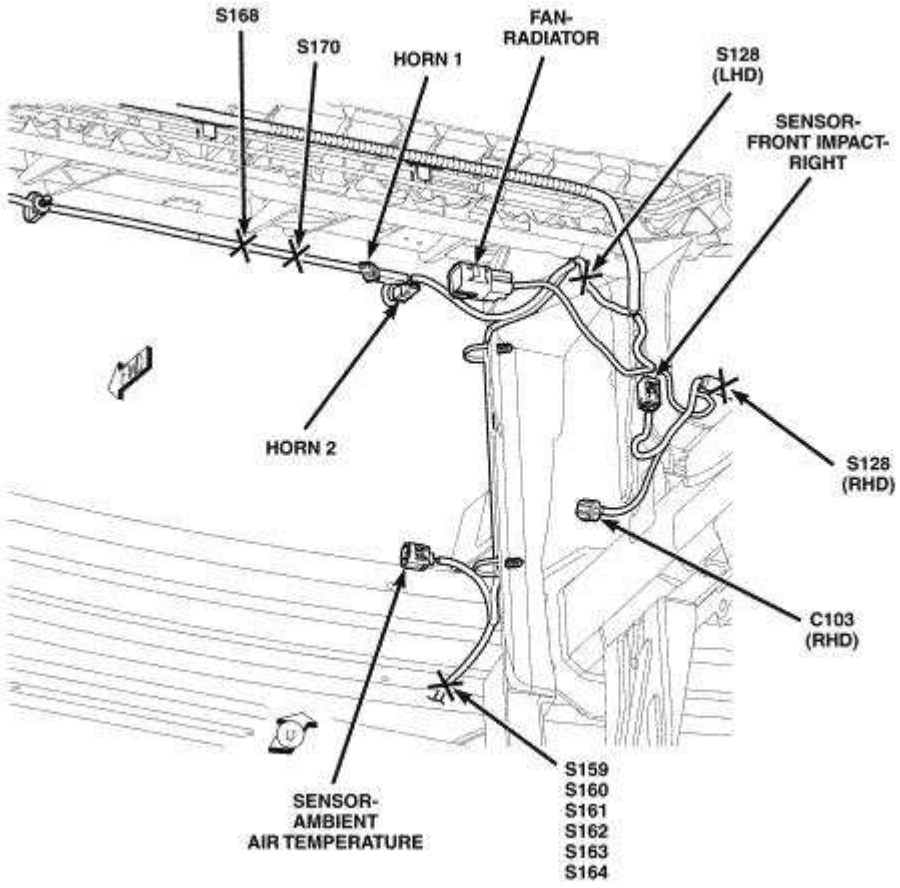

Fig. 50: Transmission Jack At Rear Axle
Courtesy of CHRYSLER LLC

11. Again verify halfshaft inner joints are fully engaged to axle assembly.
12. Remove transmission jack (1).
13. If used, remove screw-type under-hoist jack stands (2).

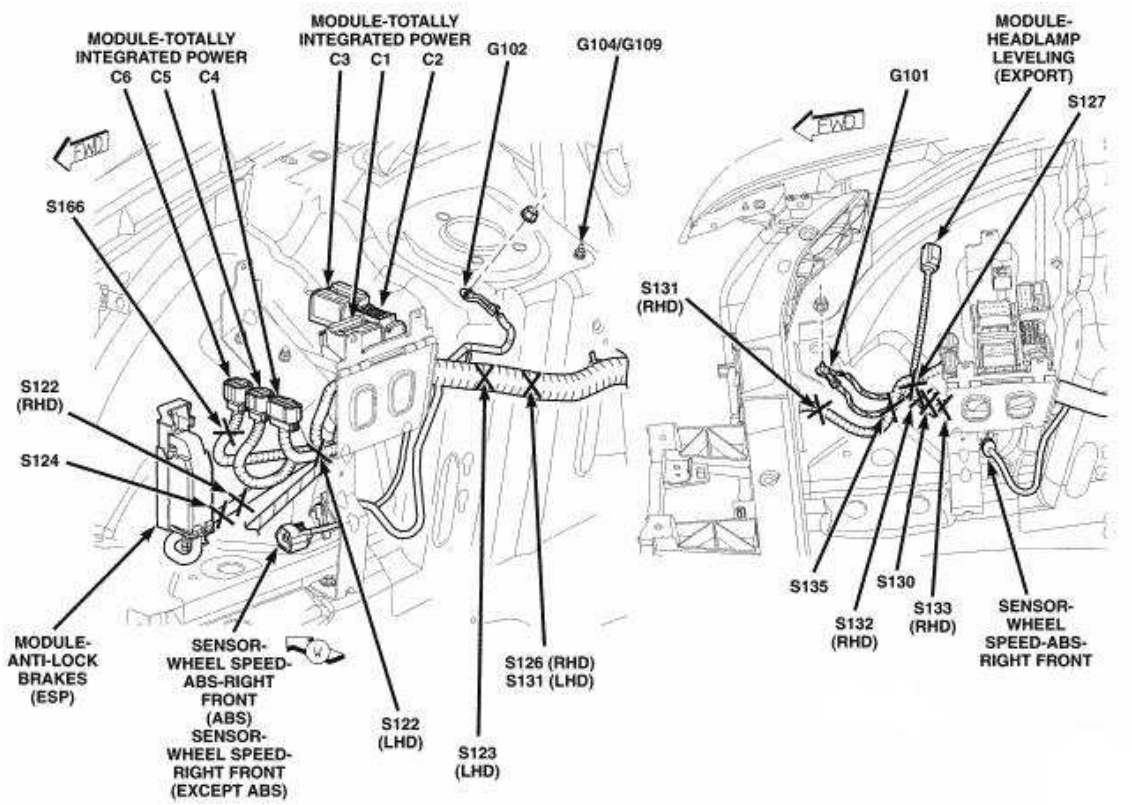

Fig. 51: Propeller Shaft Rear Coupler To Axle Flange
Courtesy of CHRYSLER LLC

NOTE: If re-using original fasteners, apply a patch of blue MOPAR® Lock & Seal medium strength thread locker to the propeller shaft coupler-to-axle flange fasteners. New fasteners have a thread lock patch, and do not require application of blue MOPAR® Lock & Seal medium strength thread locker.

14. Install the propeller shaft coupler-to-axle flange fasteners. Tighten the propeller shaft coupler-to-axle flange fasteners (2) to 122 N.m (89 ft. lbs.).

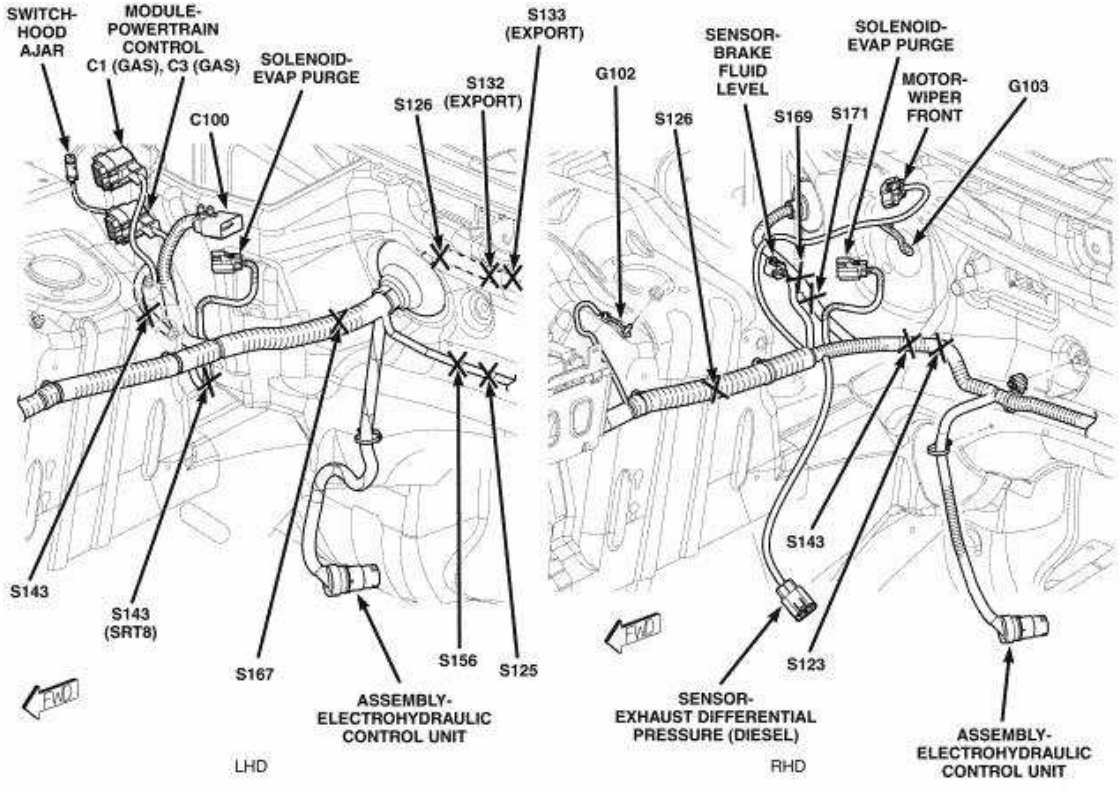

Fig. 52: Drain And Fill Plug
Courtesy of CHRYSLER LLC

15. Remove fill plug (2) to check and adjust rear axle fluid level. Top off axle with Mopar® Gear and Axle Lubricant 75W-90. Reinstall fill plug and torque to 35 N.m (25 ft. lbs.) torque.

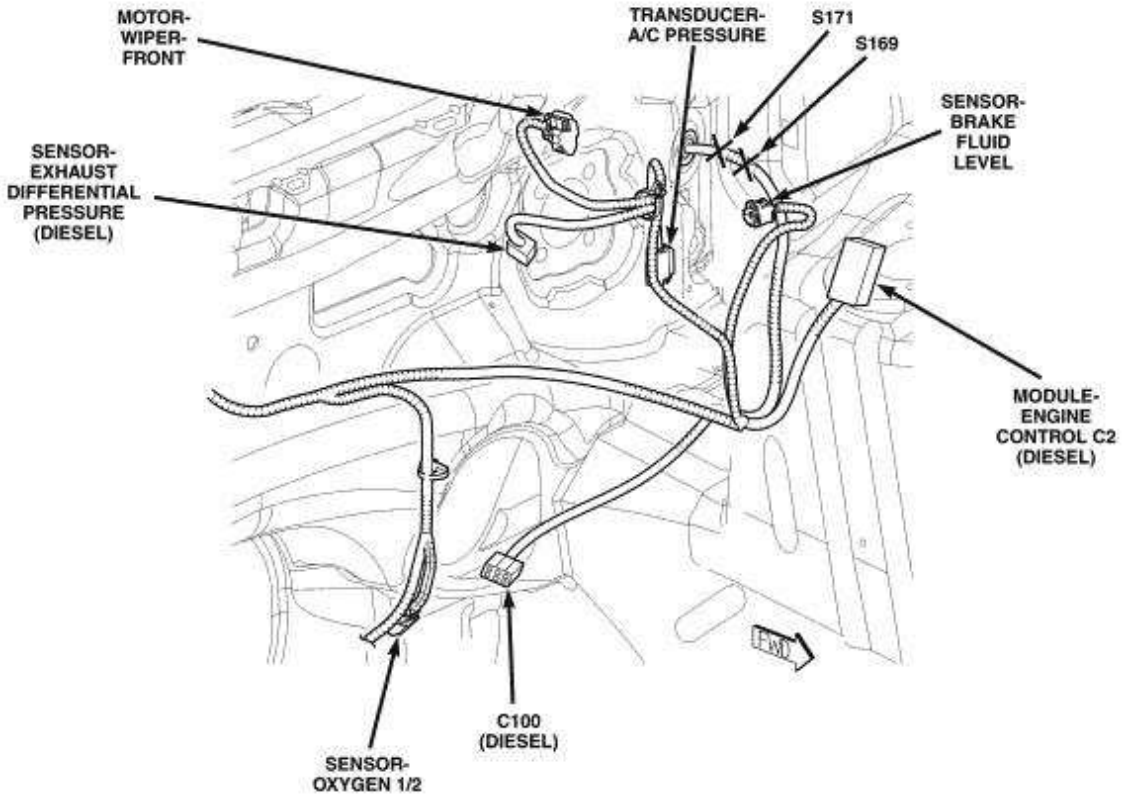

Fig. 53: Hub Nut
Courtesy of CHRYSLER LLC

16. Lower vehicle. Torque halfshaft hub nut (1) to 213 N.m (157 ft. lbs.). Install wheel center cap.
17. Install wheel(s). Refer to **Tires and Wheels - Installation**

SPECIFICATIONS

TORQUE

TORQUE

DESCRIPTION	N.m	Ft. Lbs.	In. Lbs.
Bolt, Axle Housing-to-Crossmember	220	162	-
Bolt/Nut, Axle Front Isolator	65	48	-
Clamp, Exhaust System Band	61	45	-
Nut, Axle Hub	213	157	-
Nut/Bolt, Propeller Shaft Coupler-to-Axle Flange	58	43	-
Propeller shaft coupler-			

to-axle flange	50	37	-
Nuts, Wheels	150	110	-

SPECIAL TOOLS

SPECIAL TOOLS

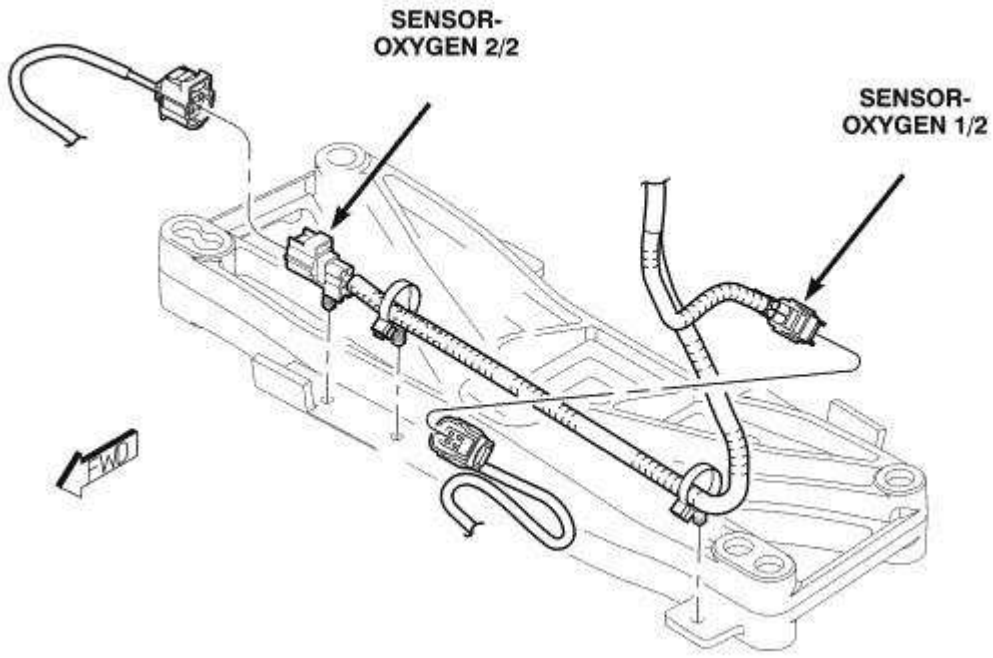

Fig. 54: Installer, 9223
Courtesy of CHRYSLER LLC

PROPELLER SHAFT

DESCRIPTION

DESCRIPTION

> **WARNING: Due to propeller shaft imbalance concerns, rear propeller shaft service is limited to center support bearing and coupler replacement only. The rear segment single-cardan universal joint is not serviceable.**

Rear wheel drive utilizes a "two-piece" rear propeller shaft design to transmit torque to the rear axle assembly. This two-piece design consists of:

- Rear shaft segments
- Center support bearing/bracket assembly
- Single-cardan u-joint at rear segment/bearing interface

- Rubber couplers at transmission and rear axle flanges

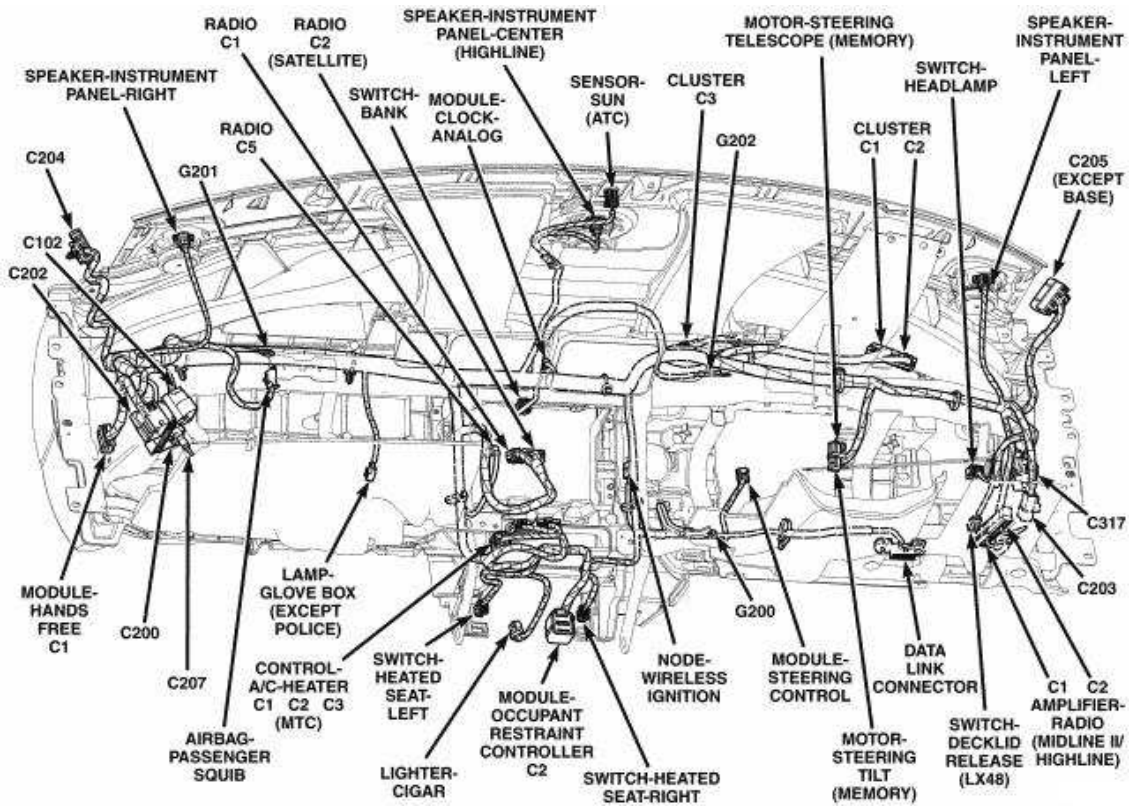

Fig. 55: Rear Propeller Shaft Assembly
Courtesy of CHRYSLER LLC

1 - FRONT COUPLER
2 - FRONT SEGMENT
3 - BEARING/BRACKET ASSEMBLY
4 - SINGLE-CARDAN U-JOINT
5 - REAR COUPLER
6 - REAR SEGMENT

REMOVAL

AUTOMATIC TRANSMISSION - NON-SRT

CAUTION: Propeller shaft removal is a two-man operation. Never allow propeller shaft to hang from the center bearing, or while only connected to the transmission or rear axle flanges. A helper is required. If a propeller shaft section is hung unsupported, damage may occur to the shaft, coupler, and/or center bearing from over-angulation. This may result in driveline vibrations and/or component failure.

1. With vehicle in neutral, position on hoist.

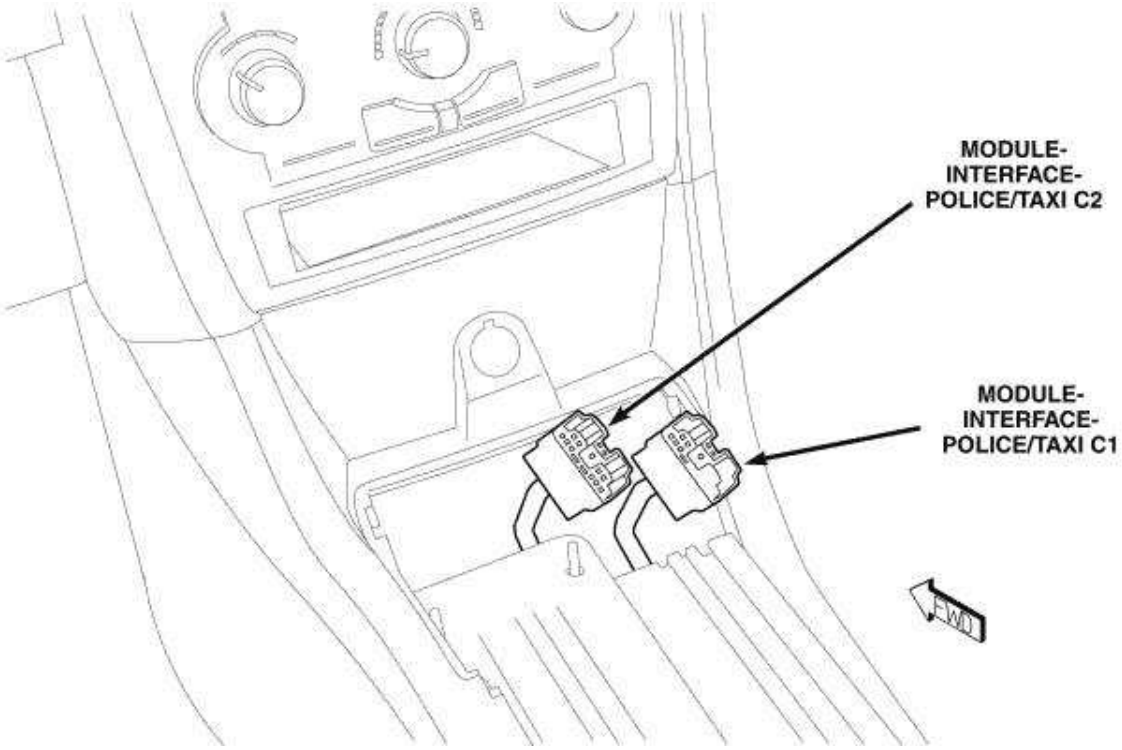

Fig. 56: Applying Alignment Index Marks To Transmission & Axle Flanges
Courtesy of CHRYSLER LLC

2. Apply alignment index marks (3) on the transmission and axle flanges (2) and rubber couplers (1).

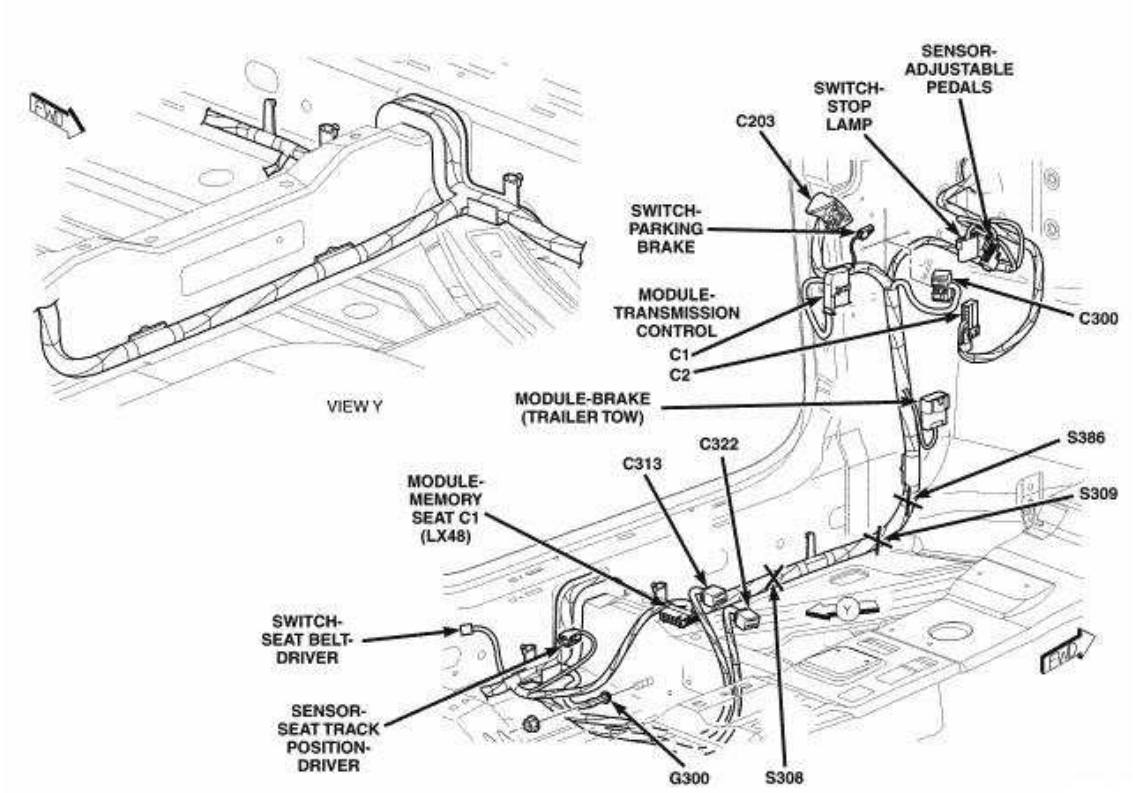

Fig. 57: Heat Shield
Courtesy of CHRYSLER LLC

3. Remove rear exhaust system. Refer to **Exhaust System/MUFFLER, Exhaust - Removal** .
4. Remove heat shield retainers (2) and remove the heat shield (1).

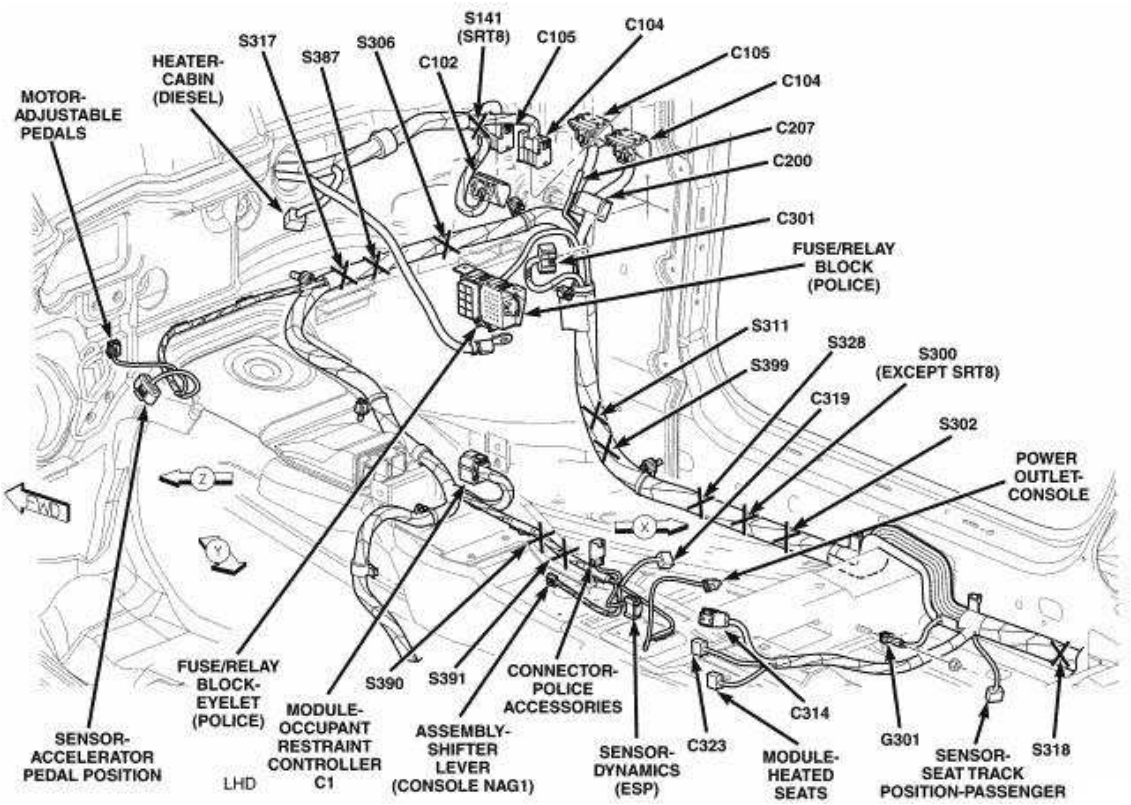

Fig. 58: Propeller Shaft At Transmission
Courtesy of CHRYSLER LLC

5. Remove propeller shaft front coupler-to-flange bolts.

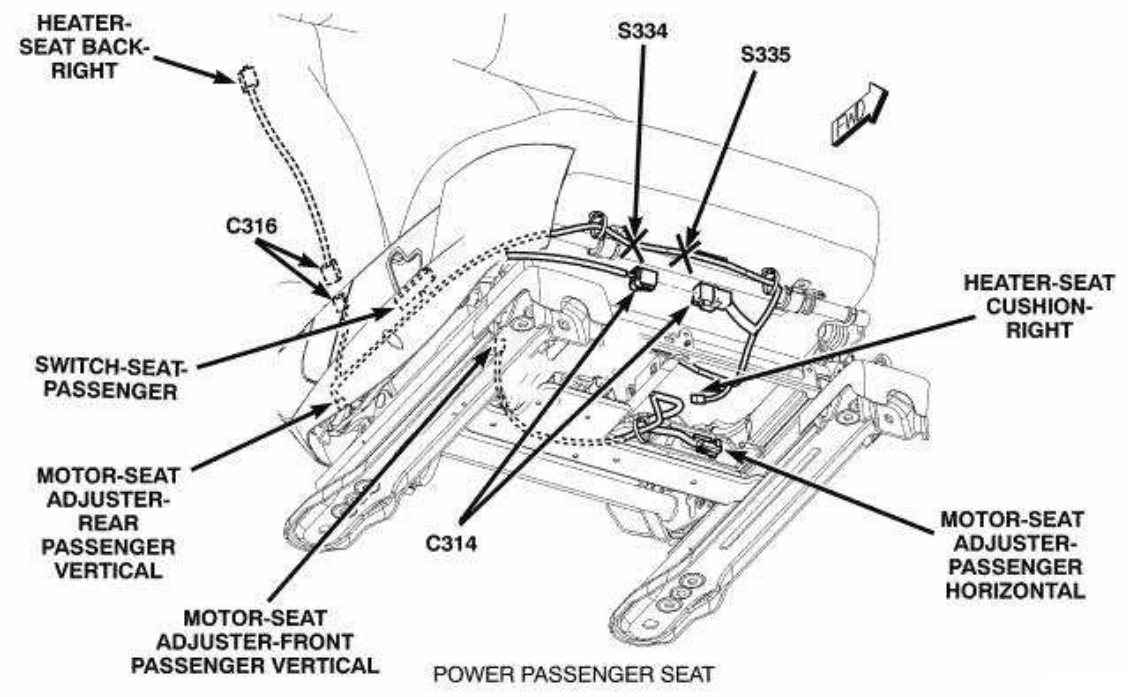

Fig. 59: Propeller Shaft Rear Coupler & Rear Axle Flange
Courtesy of CHRYSLER LLC

6. Remove propeller shaft rear coupler-to-flange bolts.

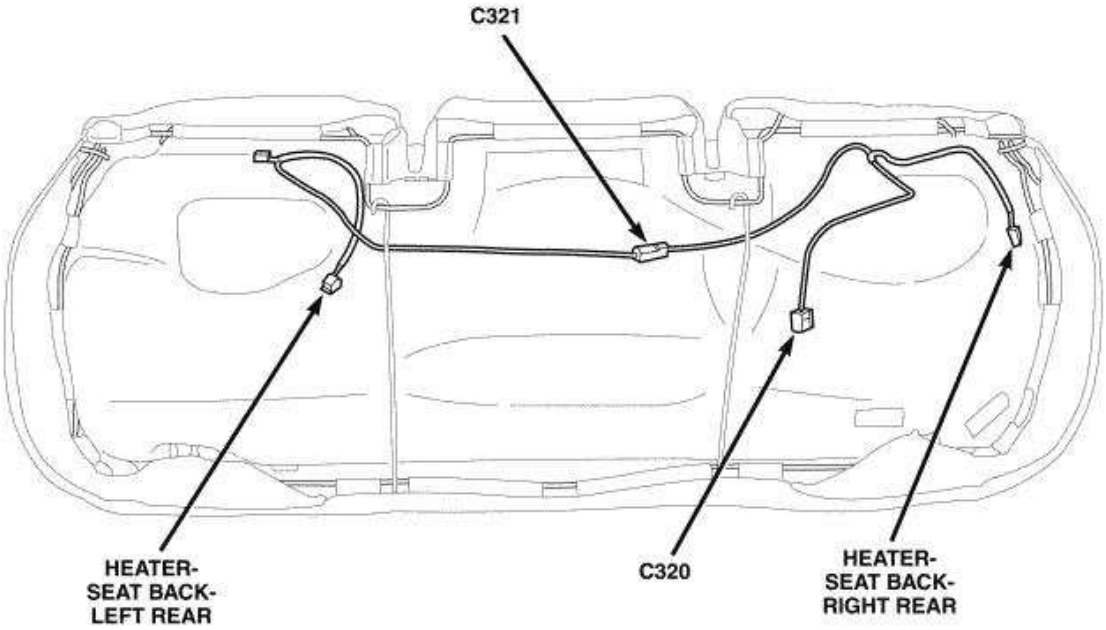

Fig. 60: Center Bearing To Body
Courtesy of CHRYSLER LLC

7. Remove center bearing (1) mounting bolts.
8. With the aid of a helper, remove propeller shaft assembly (3).

COUPLER/DAMPER SERVICE

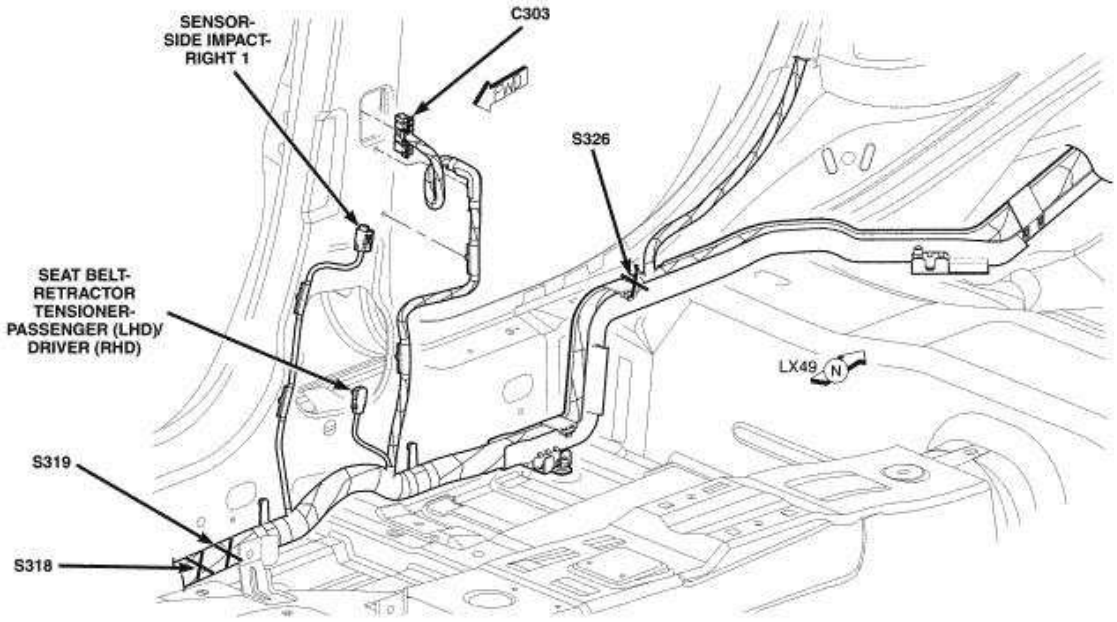

Fig. 61: Remove/Install Damper
Courtesy of CHRYSLER LLC

1. Remove three coupler-to-propeller shaft bolt/nuts.
2. Separate coupler (1) and damper (3) (if equipped) from propeller shaft. Note orientation and direction of components. It is imperative that they are properly reinstalled.

AUTOMATIC TRANSMISSION - SRT

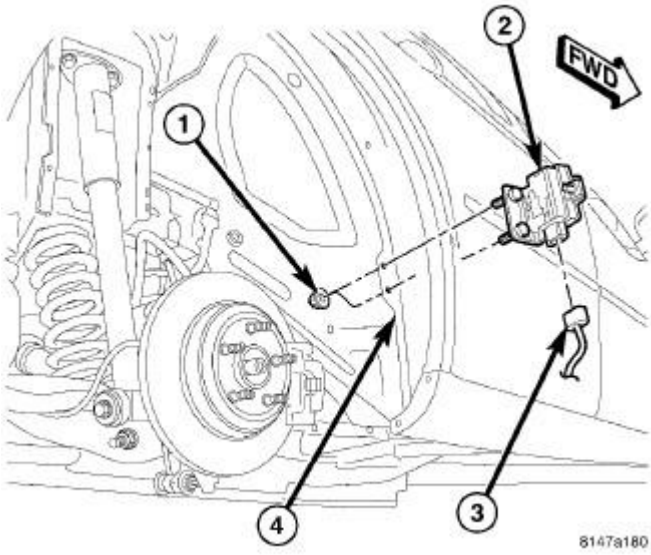

Fig. 62: Applying Alignment Index Marks To Rear Axle Flange
Courtesy of CHRYSLER LLC

1. With vehicle in neutral, position on hoist.

2. Apply alignment index marks (3) on the transmission and axle flanges (2) and rubber couplers (1).

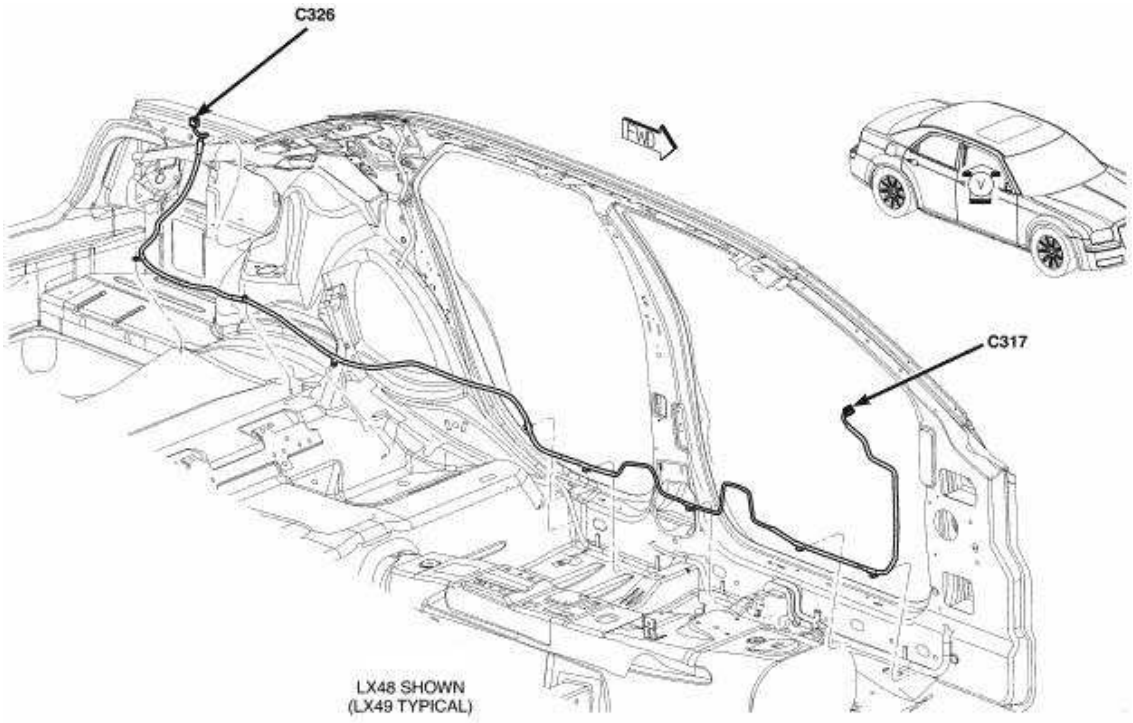

Fig. 63: Heat Shield
Courtesy of CHRYSLER LLC

3. Remove rear exhaust system. Refer to **Exhaust System/MUFFLER, Exhaust - Removal** .
4. Remove heat shield retainers (2) and remove the heat shield (1).

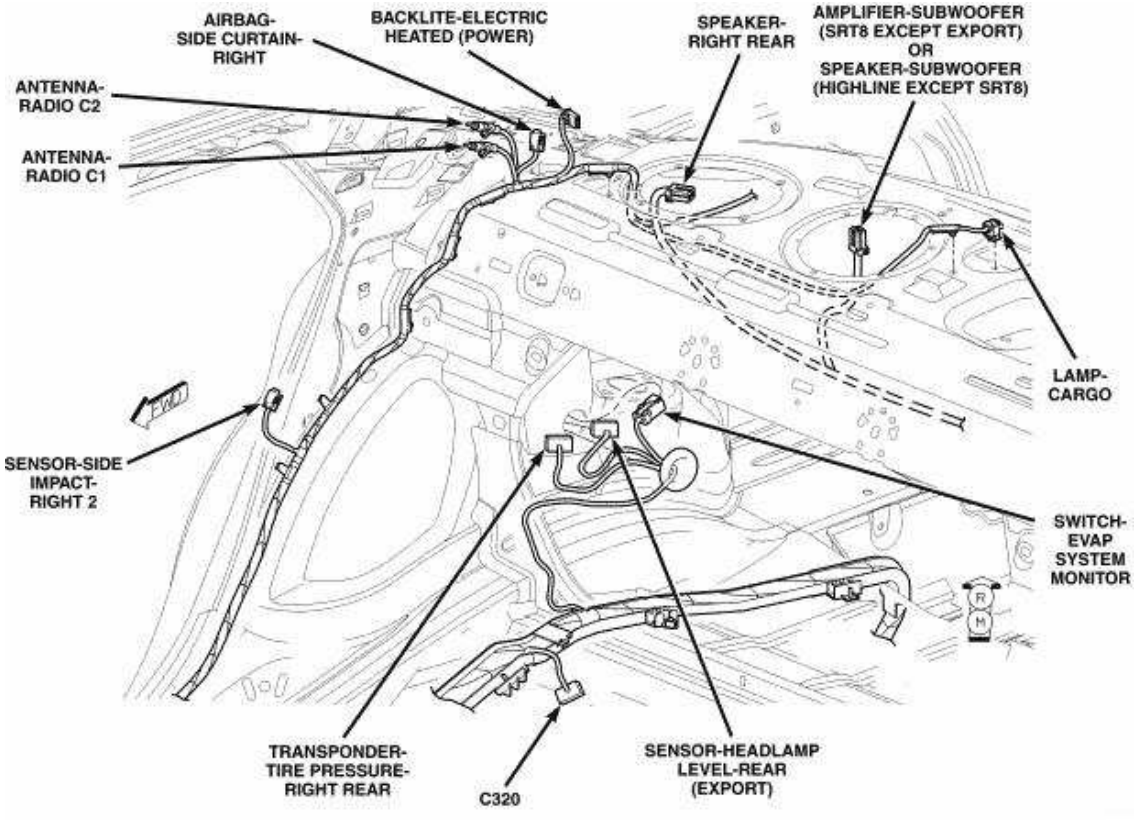

Fig. 64: Propeller Shaft At Transmission
Courtesy of CHRYSLER LLC

5. Remove propeller shaft front coupler-to-flange bolts.

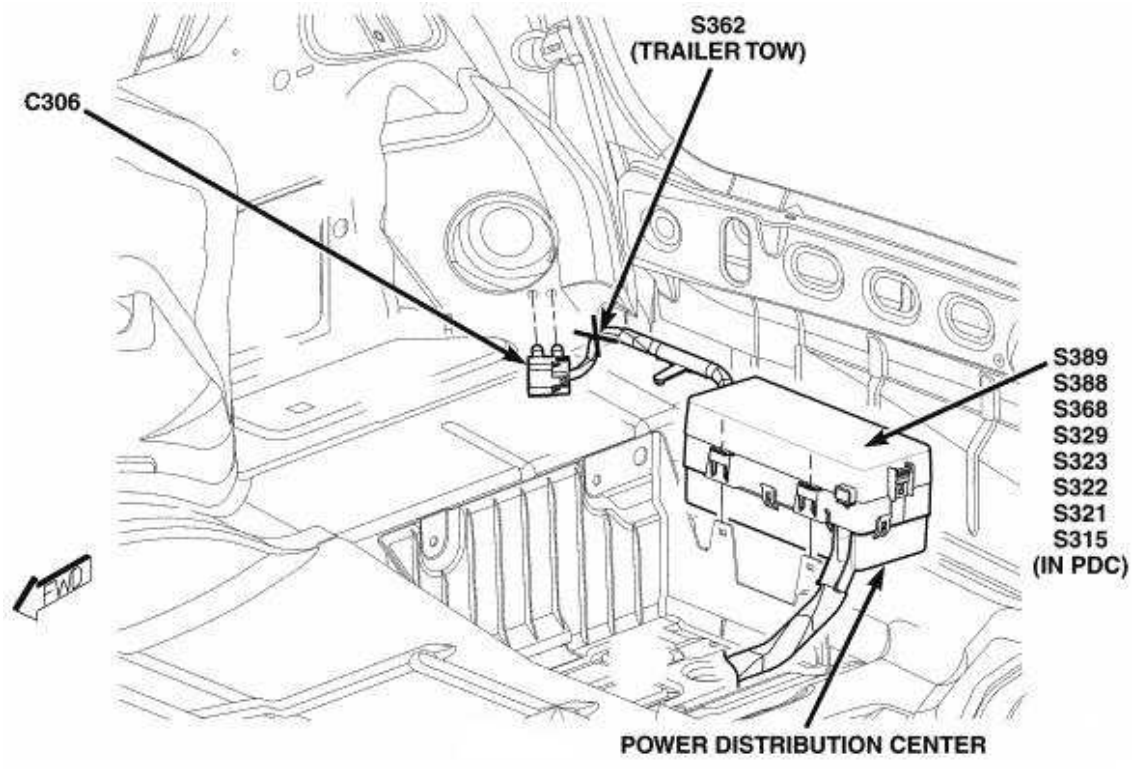

Fig. 65: Propeller Shaft Rear Coupler To Axle Flange
Courtesy of CHRYSLER LLC

6. Remove propeller shaft rear coupler-to-flange bolts.

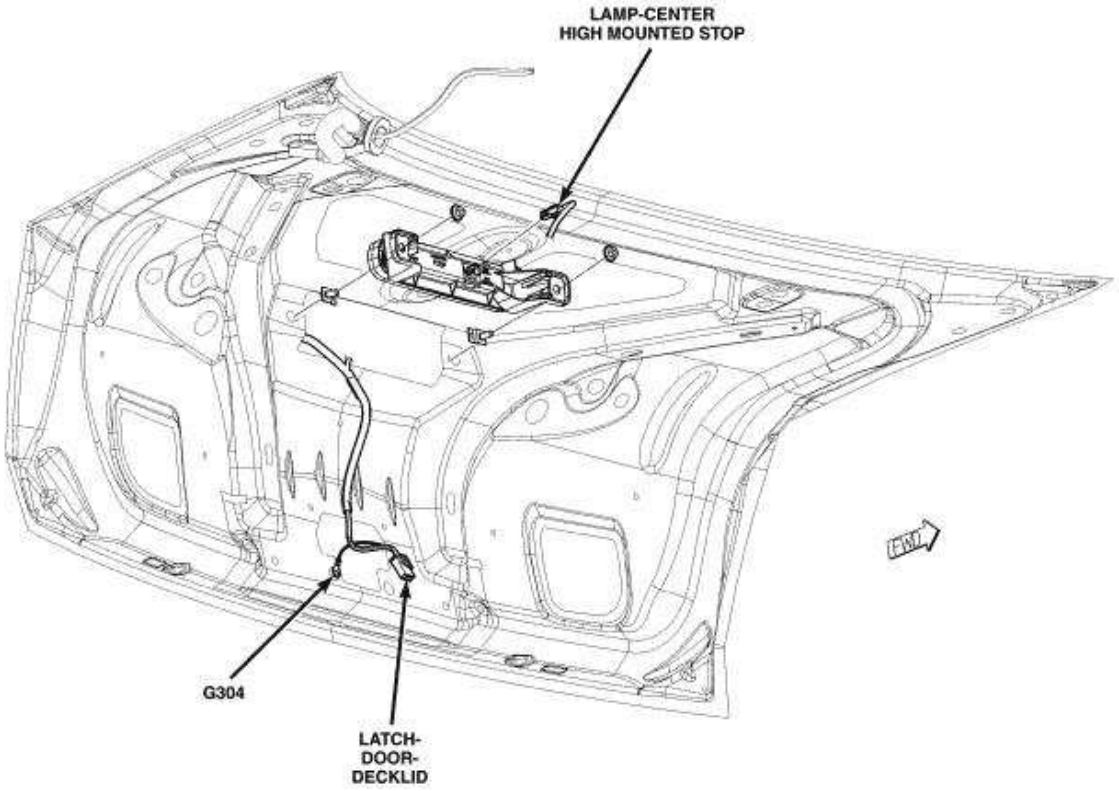

Fig. 66: Remove/Install Damper
Courtesy of CHRYSLER LLC

7. Remove three coupler-to-propeller shaft bolt/nuts. Note orientation and direction of components during disassembly. To avoid driveline vibration or damage, it is critical that all components are reinstalled in their original orientations
8. Separate coupler (1) and damper (3) (if equipped) from propeller shaft. Note orientation and direction of components during disassembly. To avoid driveline vibration or damage, it is critical that all components are reinstalled in their original orientations.

MANUAL TRANSMISSION

CAUTION: Propeller shaft removal is a two-man operation. Never allow propeller shaft to hang from the center bearing, or while only connected to the transmission or rear axle flanges. A helper is required. If a propeller shaft section is hung unsupported, damage may occur to the shaft, coupler, and/or center bearing from over-angulation. This may result in driveline vibrations and/or component failure.

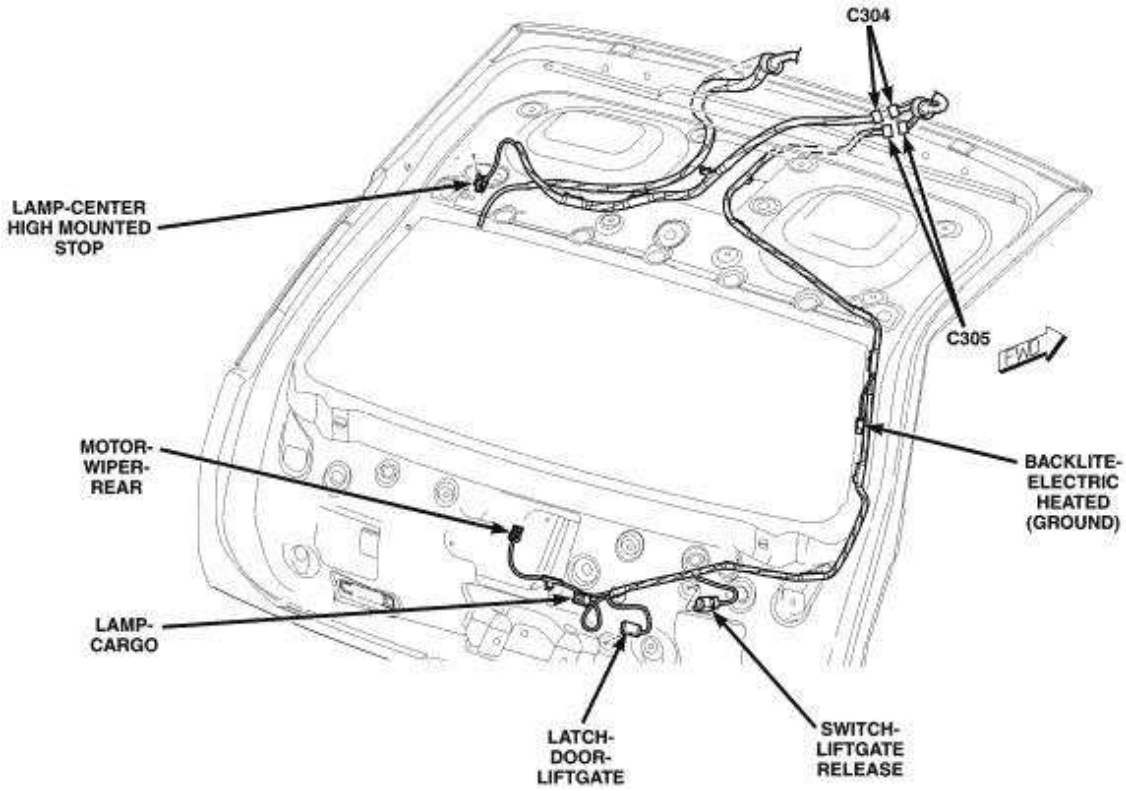

Fig. 67: Applying Alignment Index Marks To Rear Axle Flange
Courtesy of CHRYSLER LLC

1. With vehicle in neutral, position on hoist.
2. Apply alignment index marks (3) on the transmission and axle flanges (2) and rubber couplers (1).

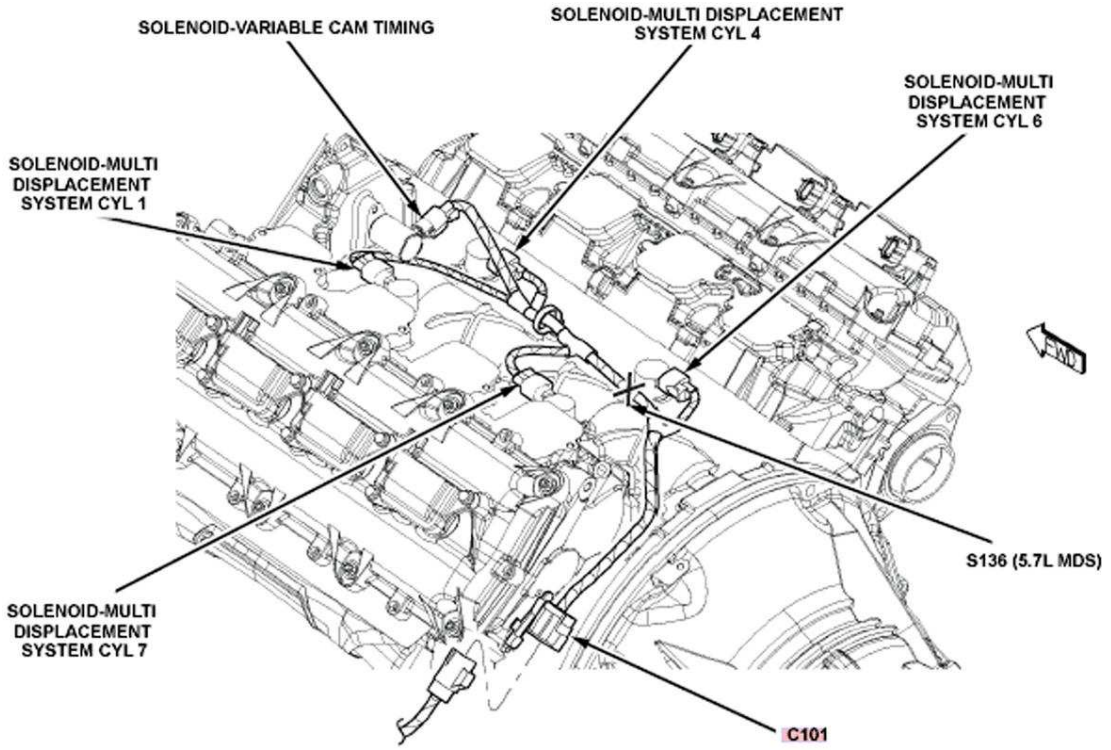

Fig. 68: Heat Shield
Courtesy of CHRYSLER LLC

3. Remove rear exhaust system. Refer to **Exhaust System/MUFFLER, Exhaust - Removal** .
4. Remove heat shield retainers (2) and remove the heat shield (1).

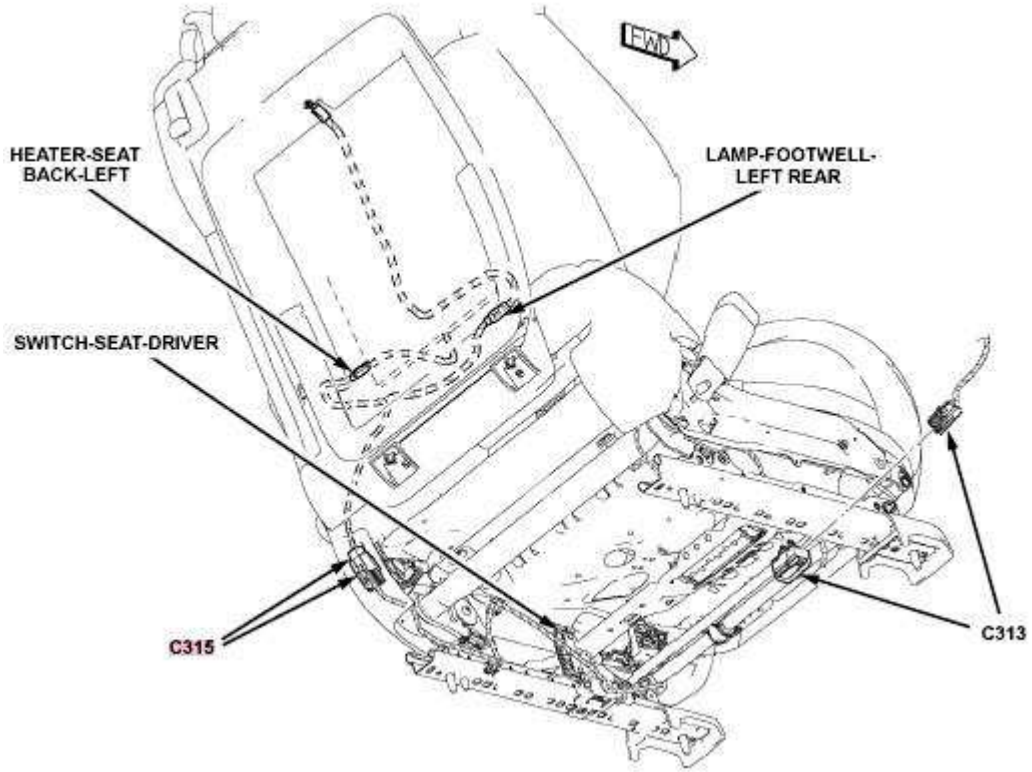

Fig. 69: Propeller Shaft Front Coupler & Transmission Flange
Courtesy of CHRYSLER LLC

5. Remove propeller shaft front coupler-to-flange bolts (3).

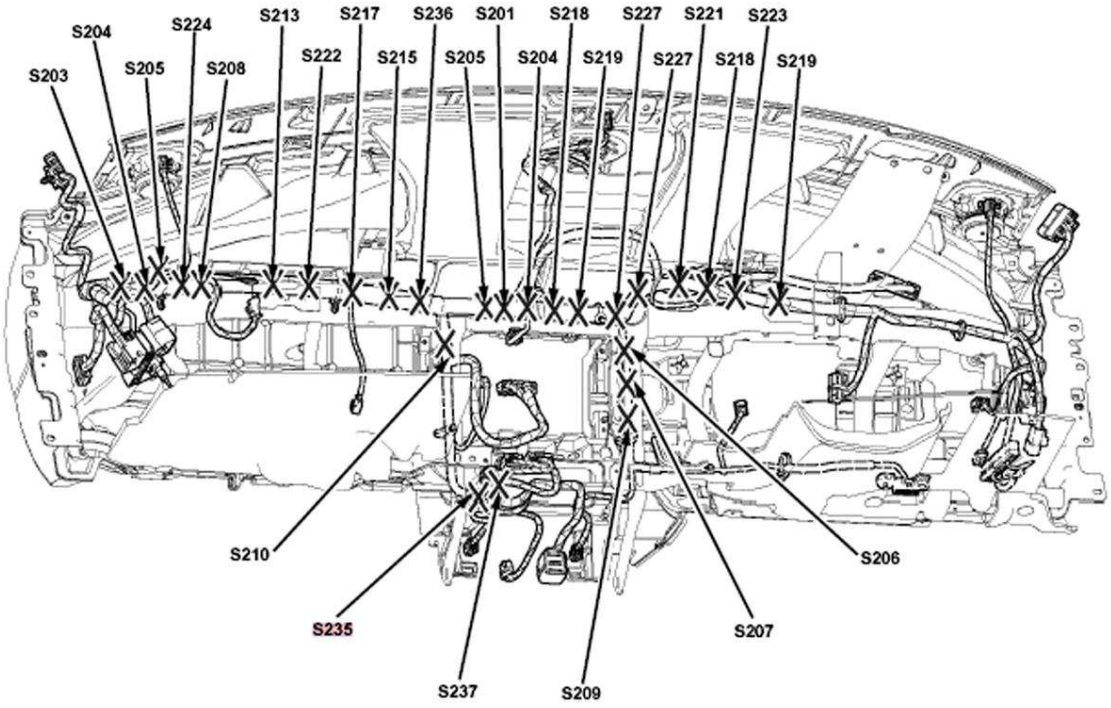

Fig. 70: Propeller Shaft Rear Coupler To Axle Flange
Courtesy of CHRYSLER LLC

6. Remove propeller shaft rear coupler-to-flange bolts.

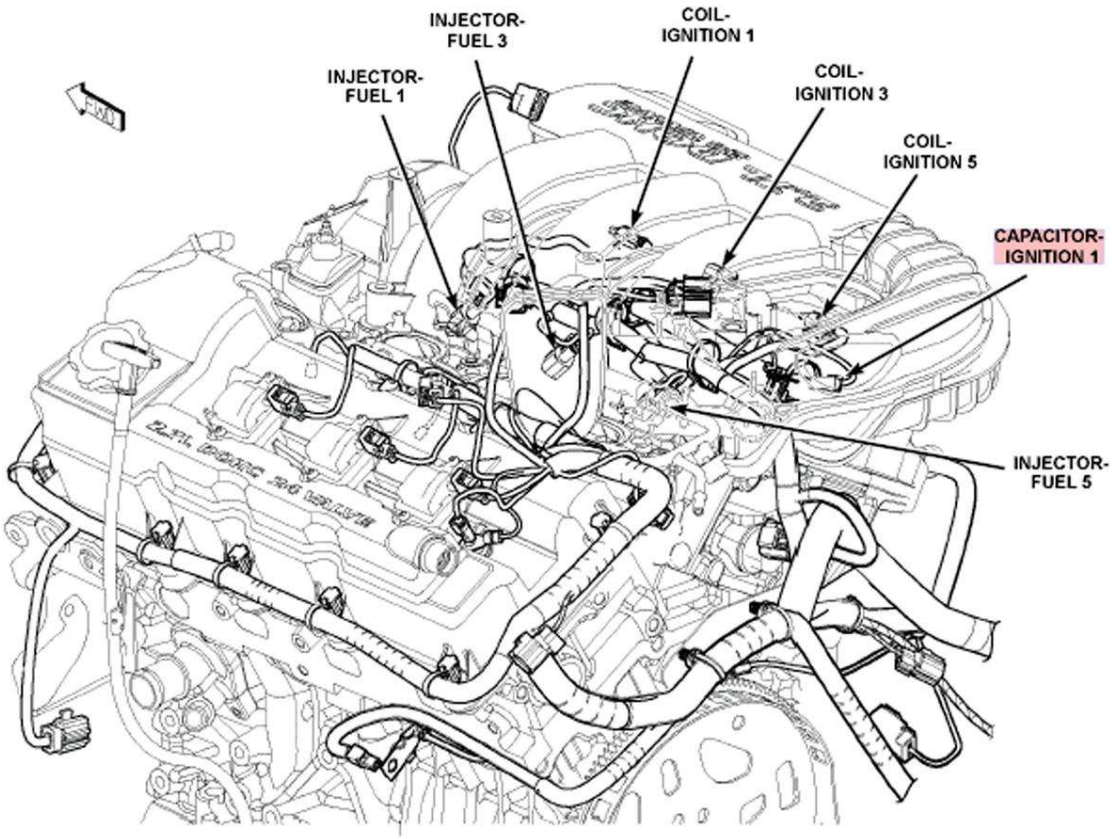

Fig. 71: Center Bearing To Body
Courtesy of CHRYSLER LLC

7. Remove center bearing (1) mounting bolts.
8. With the aid of a helper, remove propeller shaft assembly (3).

COUPLER/DAMPER SERVICE

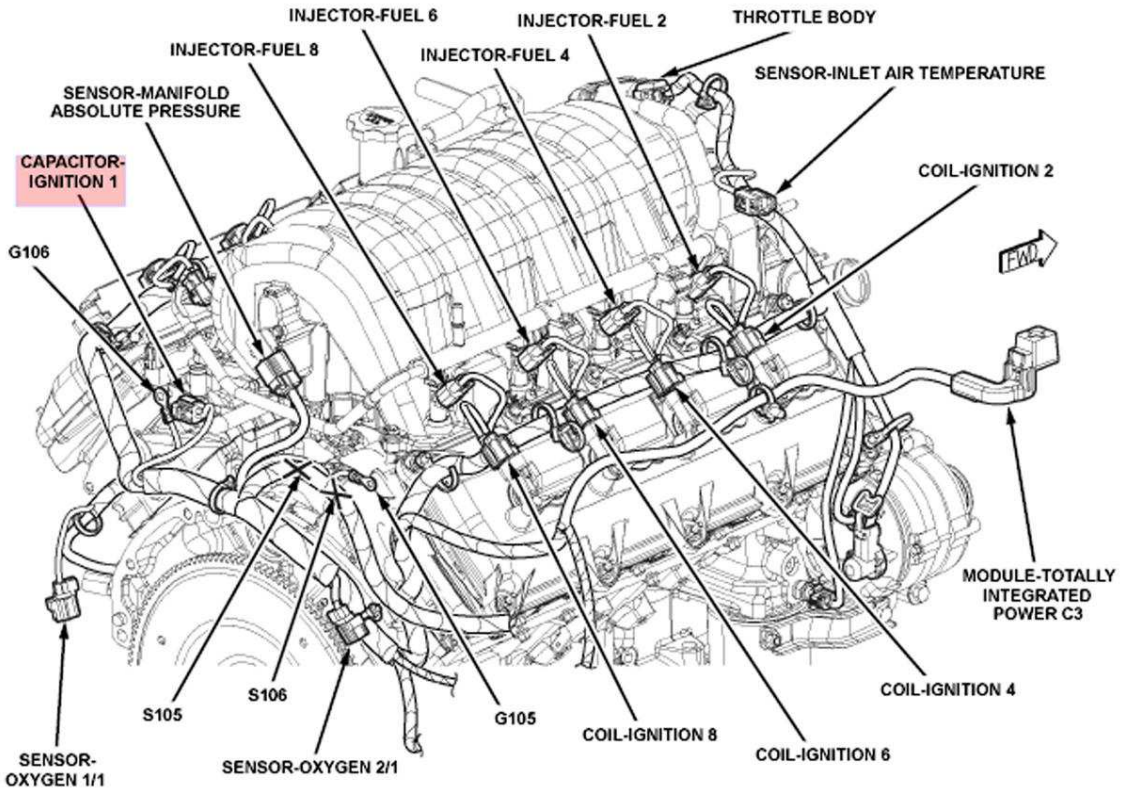

Fig. 72: Remove/Install Damper
Courtesy of CHRYSLER LLC

1. Remove three coupler-to-propeller shaft bolt/nuts. Note orientation and direction of components during disassembly. To avoid driveline vibration or damage, it is critical that all components are reinstalled in their original orientations
2. Separate coupler (1) and damper (3) (if equipped) from propeller shaft. Note orientation and direction of components during disassembly. To avoid driveline vibration or damage, it is critical that all components are reinstalled in their original orientations.

INSTALLATION

AUTOMATIC TRANSMISSION - NON-SRT

CAUTION: Propeller shaft installation is a two-man operation. Never allow propeller shaft to hang from the center bearing, or while only connected to the transmission or rear axle flanges. A helper is required. If a propeller shaft section is hung unsupported, damage may occur to the shaft, coupler, and/or center bearing from over-angulation. This may result in driveline vibrations and/or component failure.

COUPLER/DAMPER SERVICE

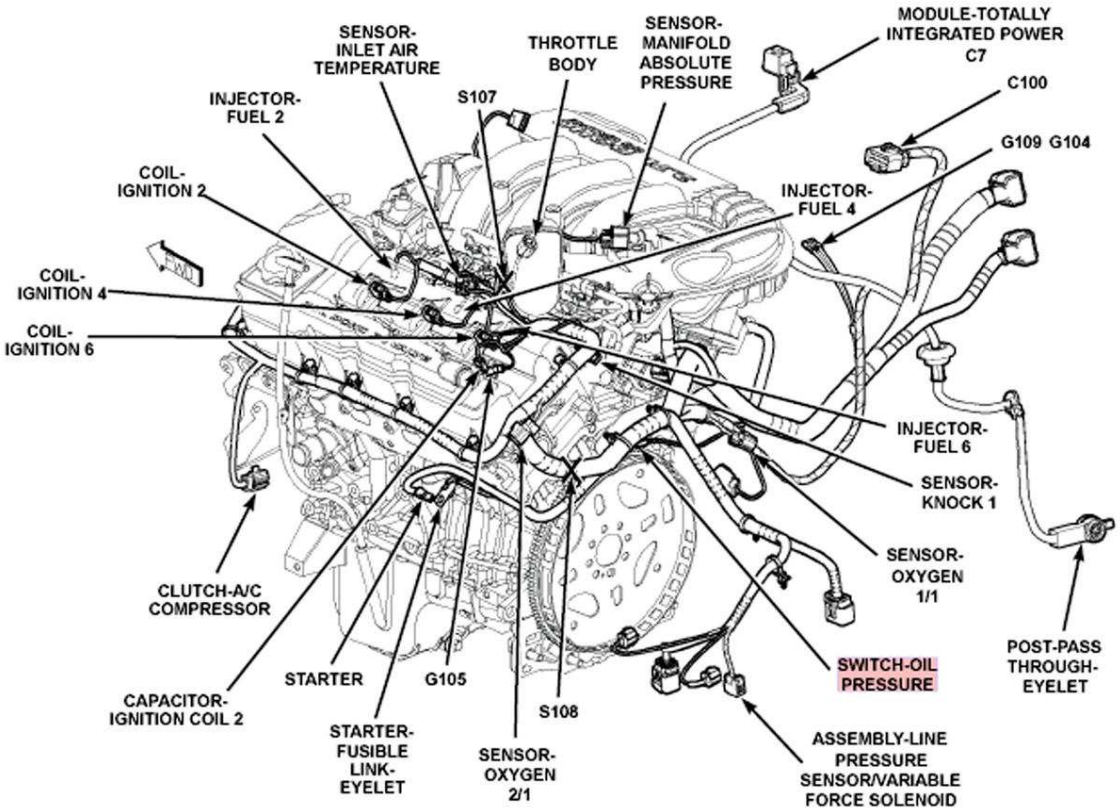

Fig. 73: Remove/Install Damper
Courtesy of CHRYSLER LLC

1. Install the coupler (1) and the damper (3) if equipped. Install three bolts with washers and nuts and torque to 68 N.m (50 ft. lbs.) torque.

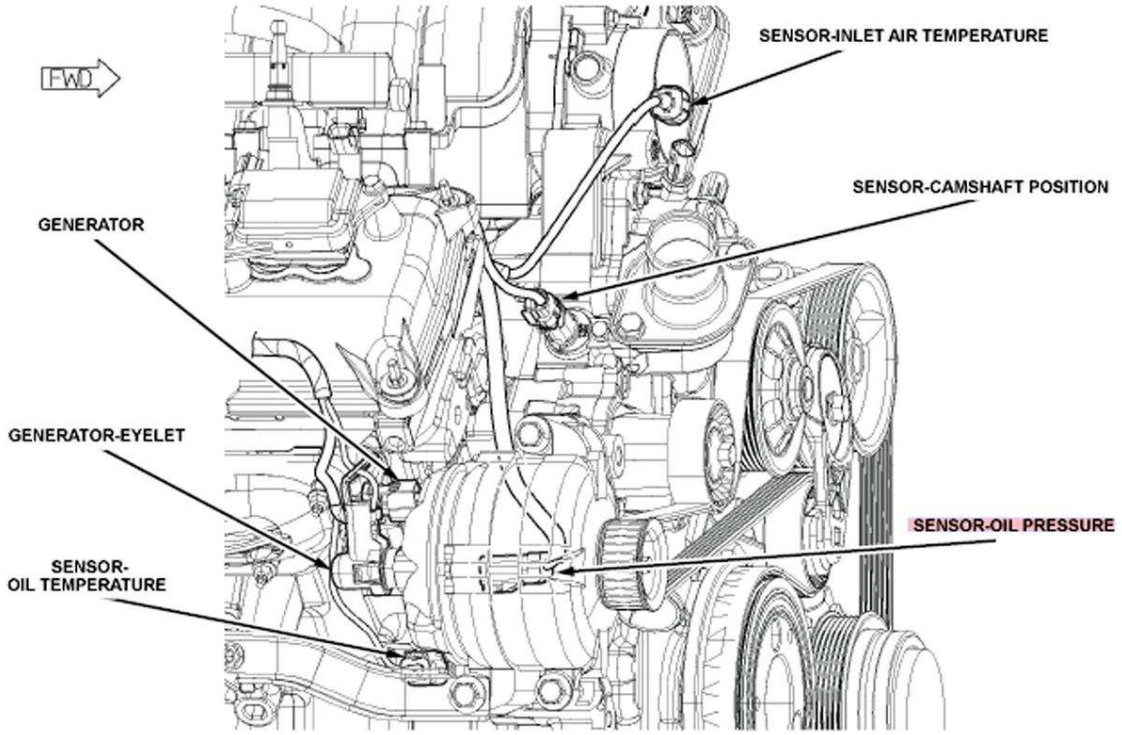

Fig. 74: Propeller Shaft Rear Coupler & Rear Axle Flange
Courtesy of CHRYSLER LLC

2. Obtain a helper and install propeller shaft into position at axle. Align index marks placed upon removal. Install propeller shaft rear coupler-to-axle flange bolt/nuts by hand. Do not torque at this time.

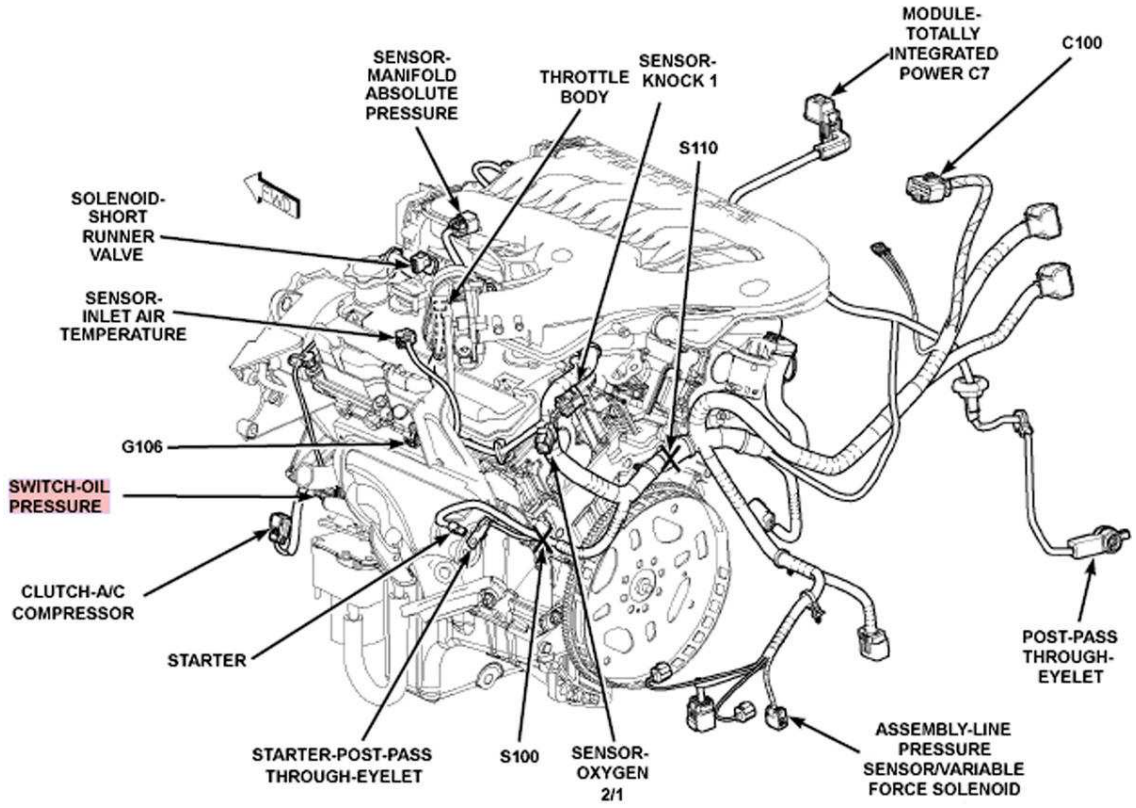

Fig. 75: Propeller Shaft At Transmission
Courtesy of CHRYSLER LLC

3. Install propeller shaft into position at transmission flange. Align index marks placed upon removal. Install propeller shaft front coupler-to-transmission flange bolt/nuts by hand. Do not torque at this time.

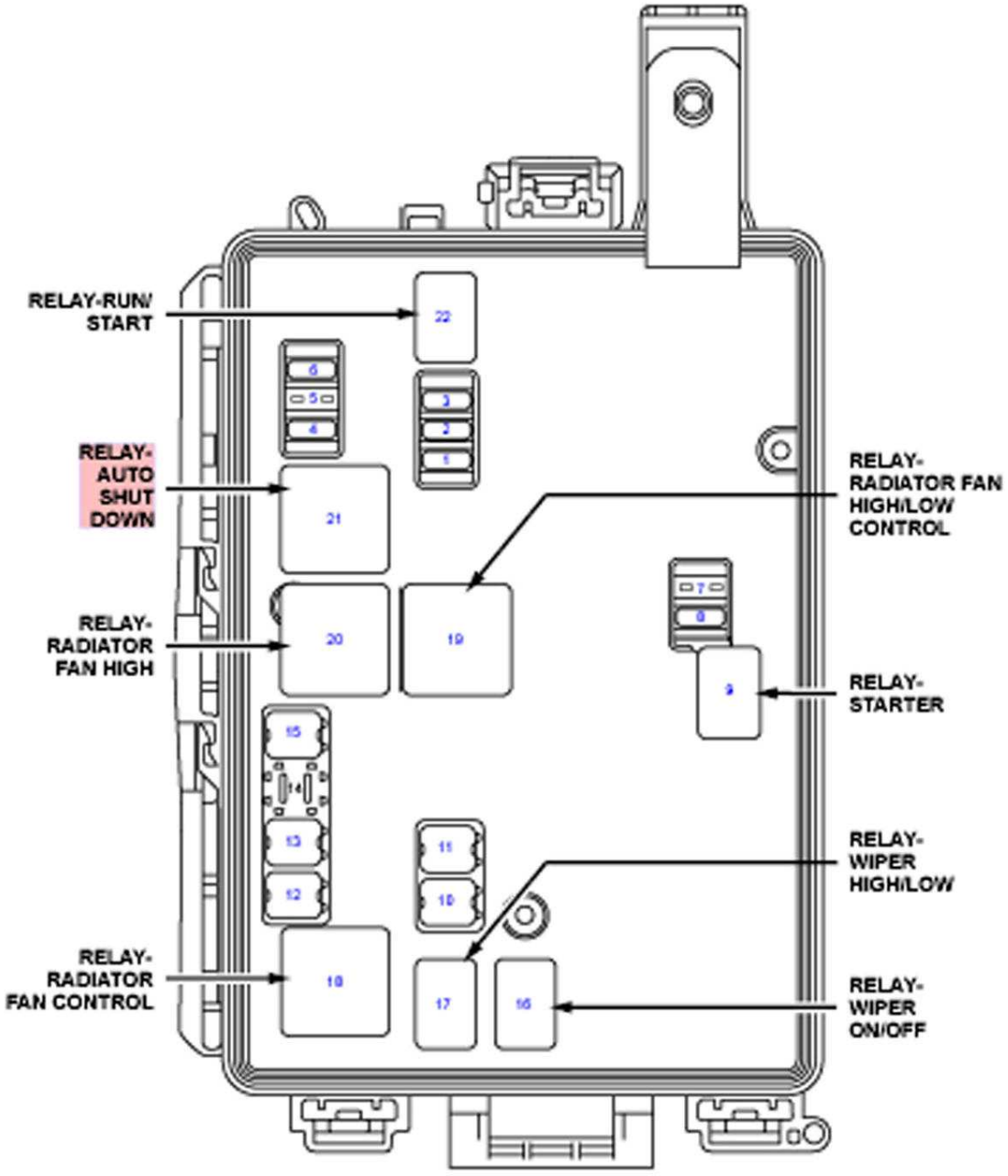

Fig. 76: Center Bearing To Body
Courtesy of CHRYSLER LLC

4. Loosely install center bearing-to-body bolts. Do not torque at this time.

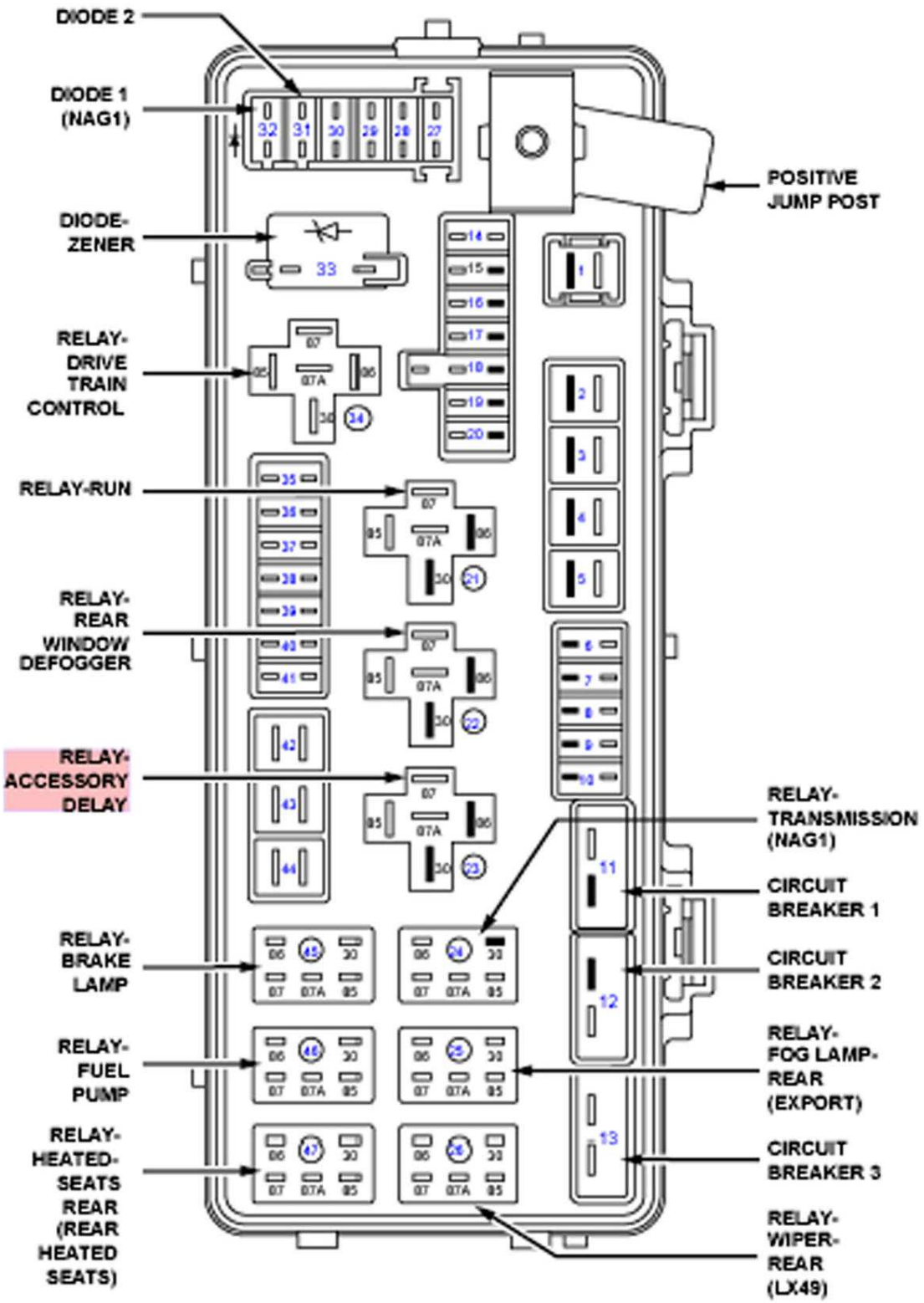

Fig. 77: Propeller Shaft At Transmission
Courtesy of CHRYSLER LLC

5. Torque propeller shaft front coupler-to-transmission flange bolt/nuts to 68 N.m (50 ft. lbs.)

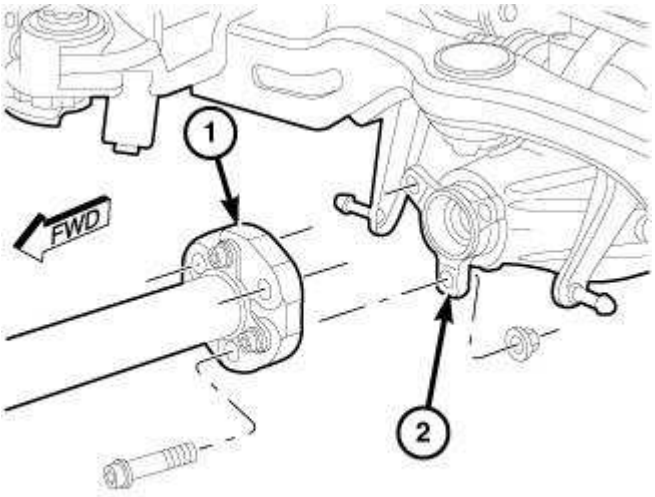

Fig. 78: Propeller Shaft Rear Coupler & Rear Axle Flange
Courtesy of CHRYSLER LLC

6. Torque propeller shaft rear coupler-to-axle flange bolt/nuts to 68 N.m (50 ft. lbs.)

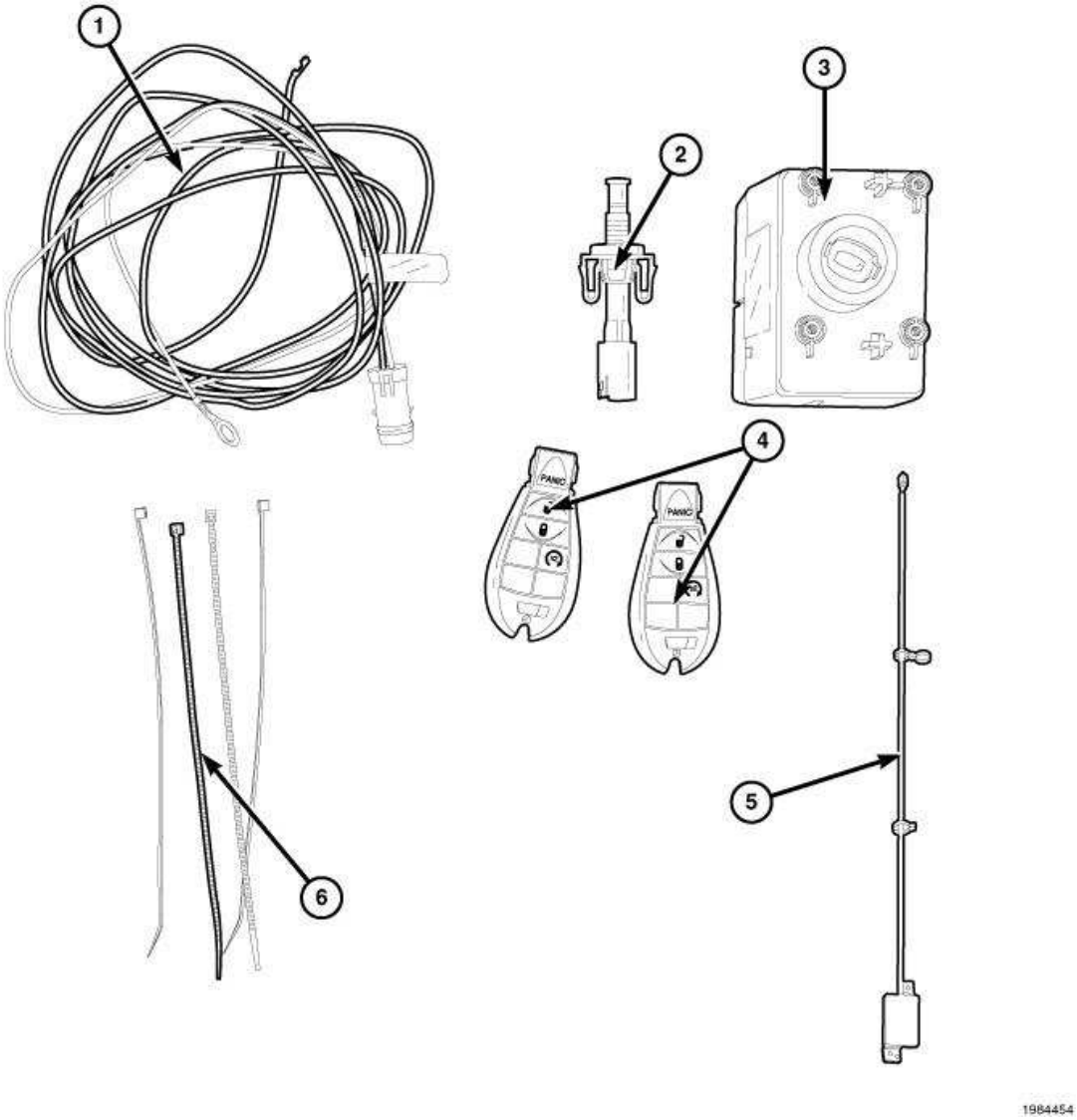

Fig. 79: Transmission Jack At Rear Axle
Courtesy of CHRYSLER LLC

NOTE: **Note: It is necessary to compress rear suspension to ride height before securing center bearing to body. Failure to compress suspension may result in objectionable noise and premature bearing wear.**

7. Compress rear suspension with suitable jack stands (2).

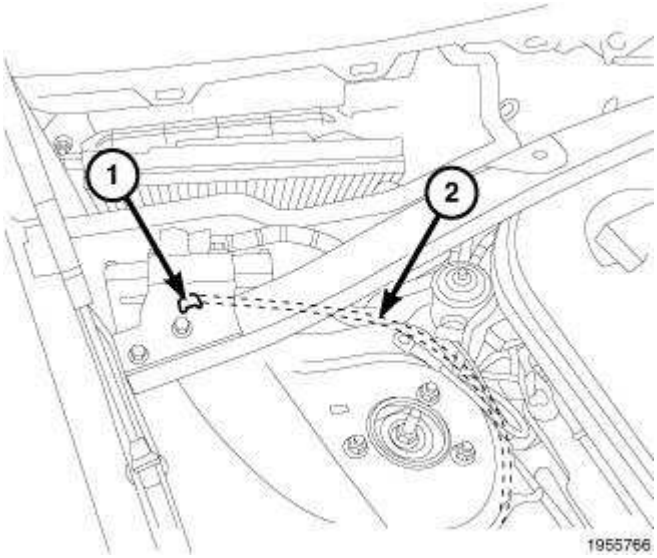

Fig. 80: Center Bearing To Body
Courtesy of CHRYSLER LLC

8. Torque center bearing-to-body bolts to 27 N.m (20 ft. lbs.).

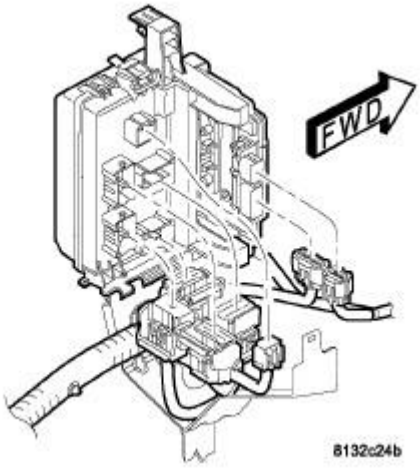

Fig. 81: Heat Shield
Courtesy of CHRYSLER LLC

9. Install heat shield (1).
10. Install rear exhaust system. Refer to **Exhaust System/MUFFLER, Exhaust - Installation**

AUTOMATIC TRANSMISSION - SRT

CAUTION: Propeller shaft installation is a two-man operation. Never allow propeller shaft to hang from the center bearing, or while only connected to the transmission or rear axle flanges. A helper is required. If a propeller shaft section is hung unsupported, damage may occur to the shaft, coupler,

and/or center bearing from over-angulation. This may result in driveline vibrations and/or component failure.

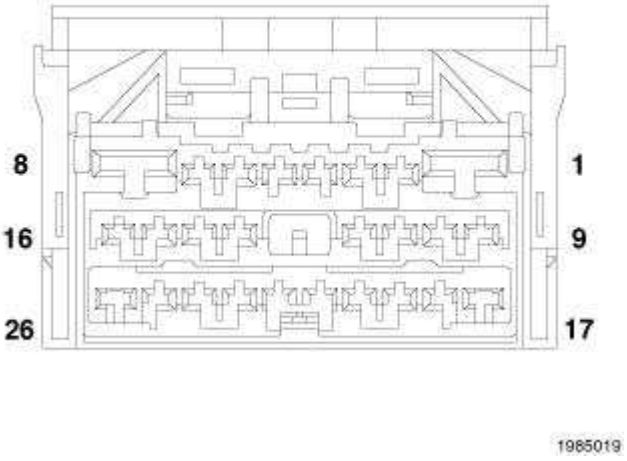

Fig. 82: Remove/Install Damper
Courtesy of CHRYSLER LLC

1. Install coupler (1) and damper (3) (if equipped) in the same orientation noted before disassembly. To avoid driveline vibration or damage, it is critical that all components are reinstalled in their original orientations.
2. Install three coupler-to-propeller shaft bolt/nuts in the same orientation noted before disassembly. To avoid driveline vibration or damage, it is critical that all components are reinstalled in their original orientations. Do not tighten at this time.

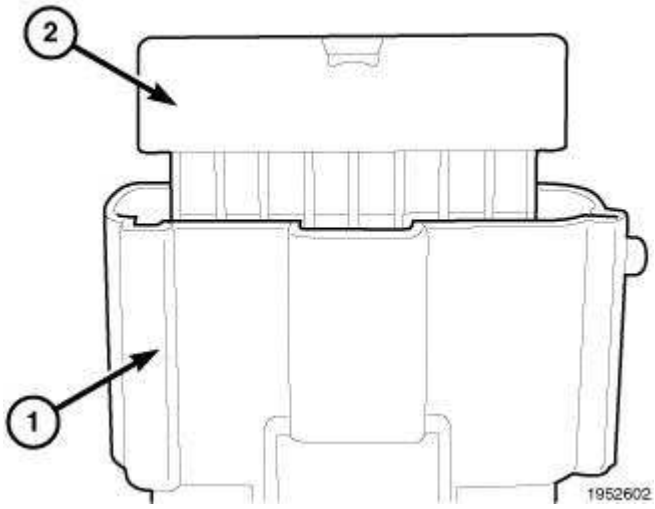

Fig. 83: Propeller Shaft Rear Coupler To Axle Flange
Courtesy of CHRYSLER LLC

3. Obtain a helper and install propeller shaft into position at axle. Align index marks placed upon removal. Install propeller shaft rear coupler-to-axle flange bolt/nuts by hand. Do not tighten at this time.

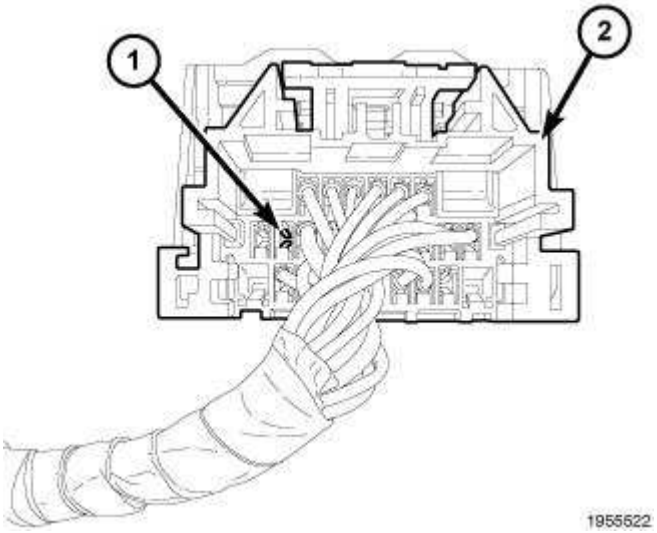

Fig. 84: Propeller Shaft At Transmission
Courtesy of CHRYSLER LLC

4. Install propeller shaft into position at transmission flange. Align index marks placed upon removal. Install propeller shaft front coupler-to-transmission flange bolt/nuts by hand. Do not tighten at this time.

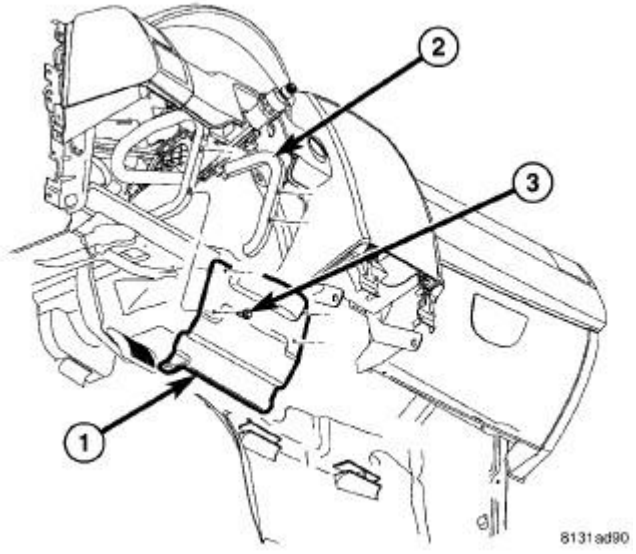

Fig. 85: Center Bearing To Body
Courtesy of CHRYSLER LLC

5. Loosely install center bearing-to-body bolts. Do not torque at this time.

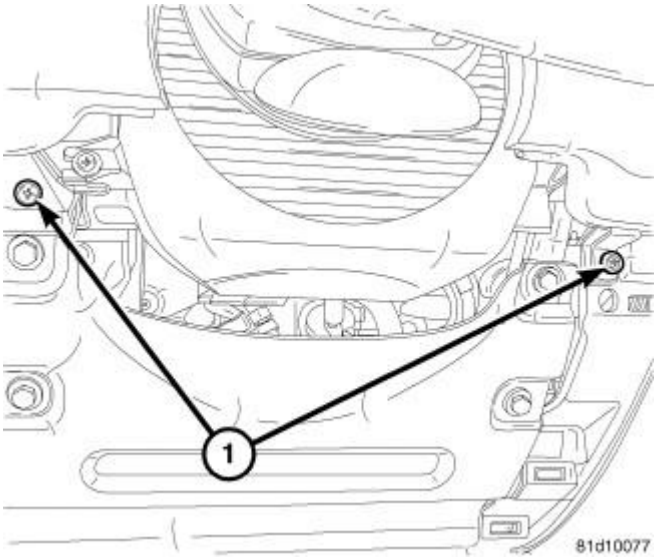

Fig. 86: Propeller Shaft At Transmission
Courtesy of CHRYSLER LLC

6. Torque propeller shaft front coupler-to-transmission flange bolt/nuts to 68 N.m (50 ft. lbs.)

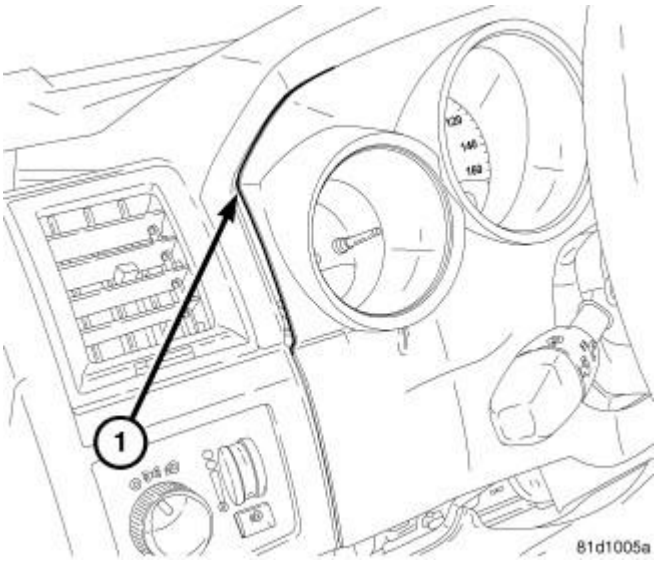

Fig. 87: Propeller Shaft Rear Coupler To Axle Flange
Courtesy of CHRYSLER LLC

7. Torque propeller shaft rear coupler-to-axle flange bolt/nuts to 122 N.m (89 ft. lbs.)

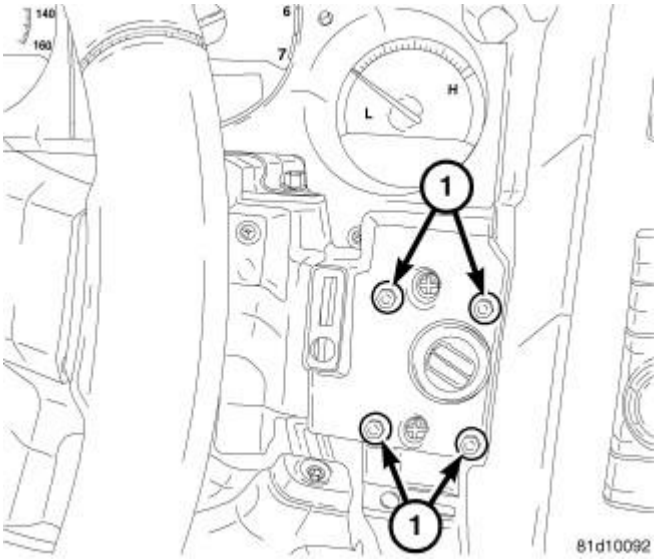

Fig. 88: Transmission Jack At Rear Axle
Courtesy of CHRYSLER LLC

NOTE: **Note: It is necessary to compress rear suspension to ride height before securing center bearing to body. Failure to compress suspension may result in objectionable noise and premature bearing wear.**

8. Compress rear suspension with suitable jack stands (2).

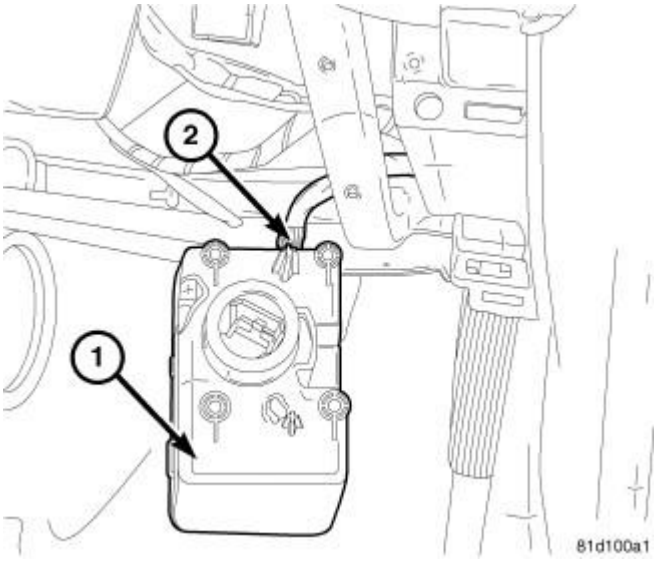

Fig. 89: Center Bearing To Body
Courtesy of CHRYSLER LLC

9. Torque center bearing-to-body bolts to 27 N.m (20 ft. lbs.).

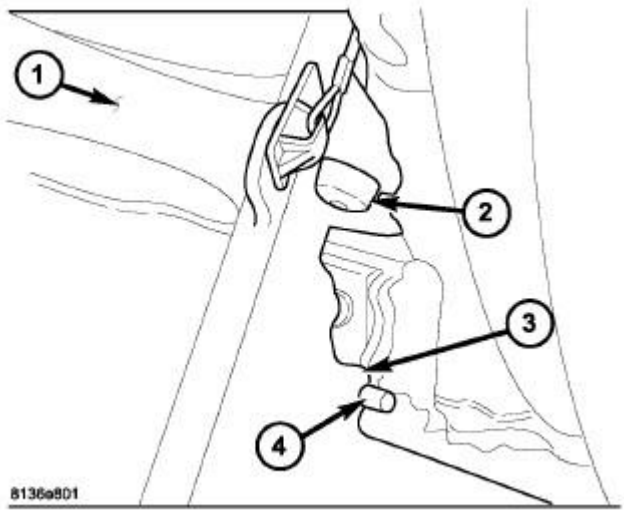

Fig. 90: Heat Shield
Courtesy of CHRYSLER LLC

10. Install heat shield (1).
11. Install rear exhaust system. Refer to **Exhaust System/MUFFLER, Exhaust - Installation**

MANUAL TRANSMISSION

CAUTION: Propeller shaft installation is a two-man operation. Never allow propeller shaft to hang from the center bearing, or while only connected to the transmission or rear axle flanges. A helper is required. If a propeller shaft section is hung unsupported, damage may occur to the shaft, coupler, and/or center bearing from over-angulation. This may result in driveline vibrations and/or component failure.

COUPLER/DAMPER SERVICE

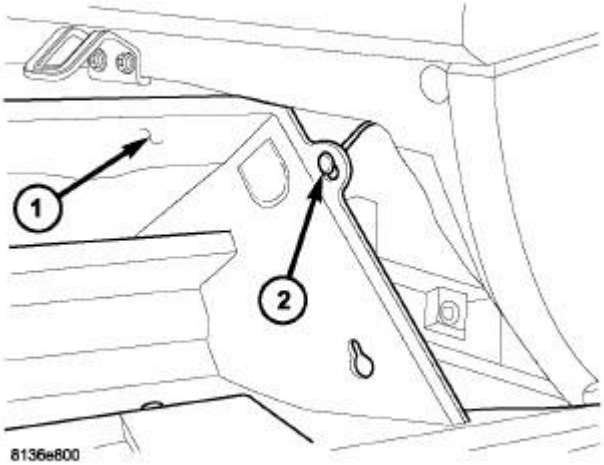

Fig. 91: Remove/Install Damper
Courtesy of CHRYSLER LLC

1. Install three bolts with washers and nuts and torque to 91 N.m (67 ft. lbs.) torque.

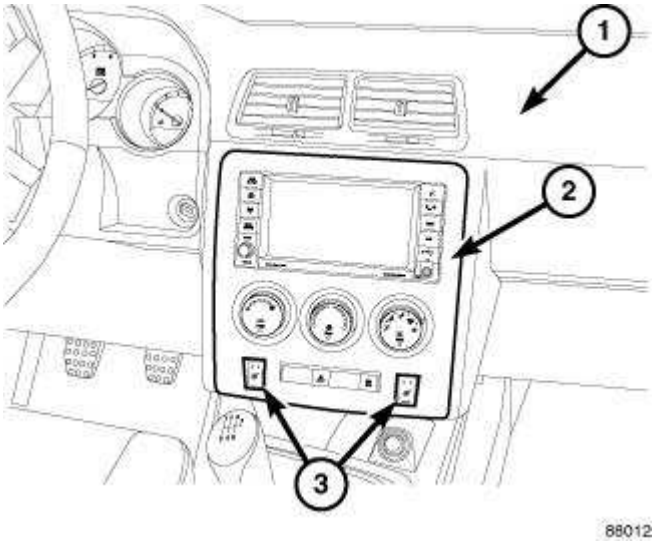

Fig. 92: Propeller Shaft Rear Coupler To Axle Flange
Courtesy of CHRYSLER LLC

2. Obtain a helper and install propeller shaft into position at axle. Align index marks placed upon removal. Install propeller shaft rear coupler-to-axle flange bolt/nuts by hand. Do not torque at this time.

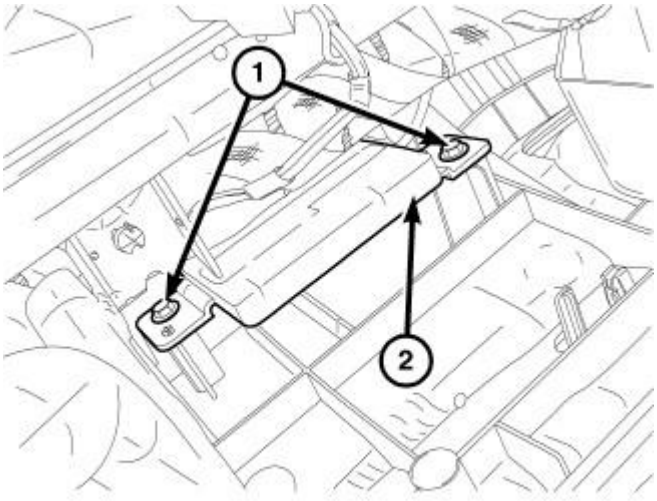

Fig. 93: Propeller Shaft Front Coupler & Transmission Flange
Courtesy of CHRYSLER LLC

3. Install propeller shaft into position at transmission flange. Align index marks placed upon removal. Install propeller shaft front coupler-to-transmission flange bolt/nuts by hand. Do not torque at this time.

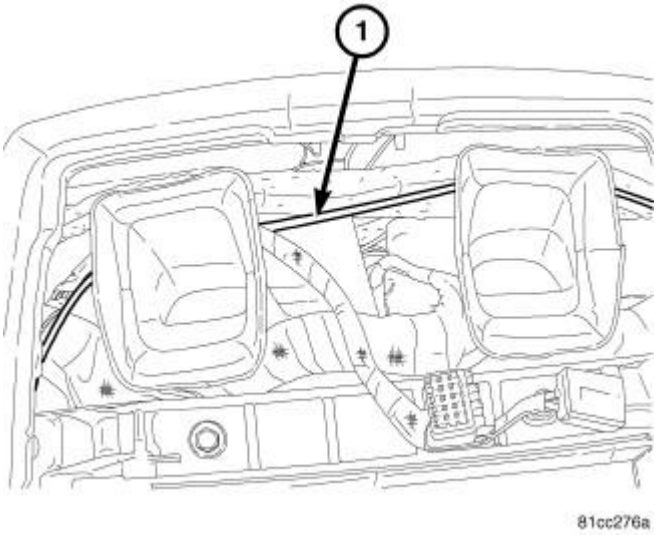

Fig. 94: Center Bearing To Body
Courtesy of CHRYSLER LLC

4. Loosely install center bearing-to-body bolts. Do not torque at this time.

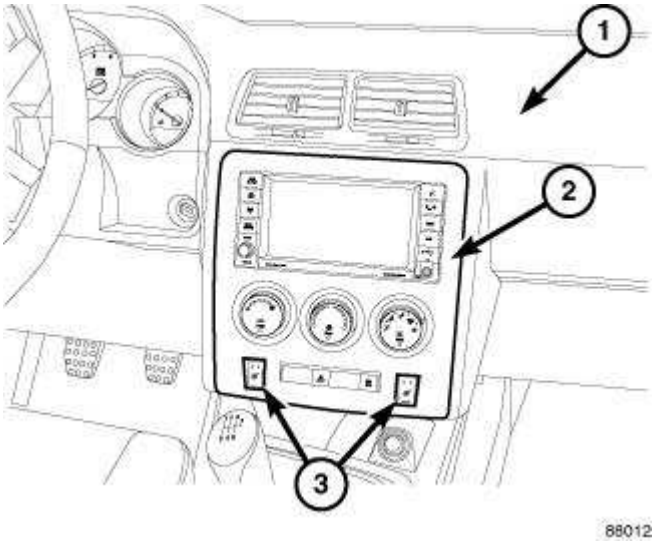

Fig. 95: Propeller Shaft Front Coupler & Transmission Flange
Courtesy of CHRYSLER LLC

5. Torque propeller shaft front coupler-to-transmission flange bolt/nuts to 91 N.m (67 ft. lbs.)

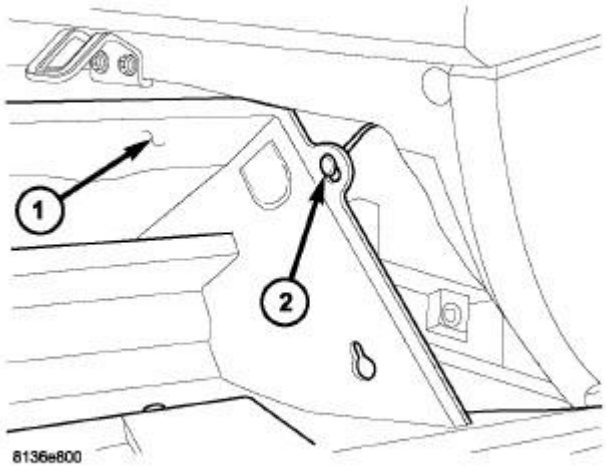

Fig. 96: Propeller Shaft Rear Coupler To Axle Flange
Courtesy of CHRYSLER LLC

6. Torque propeller shaft rear coupler-to-axle flange bolt/nuts to 122 N.m (89 ft. lbs.)

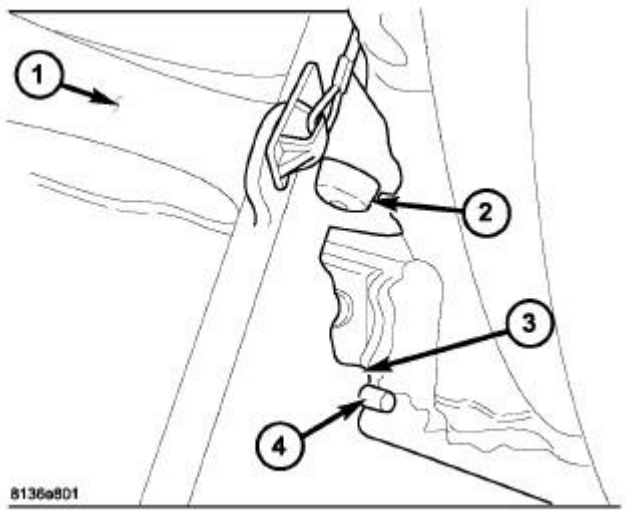

Fig. 97: Transmission Jack At Rear Axle
Courtesy of CHRYSLER LLC

NOTE: **Note: It is necessary to compress rear suspension to ride height before securing center bearing to body. Failure to compress suspension may result in objectionable noise and premature bearing wear.**

7. Compress rear suspension with suitable jack stands (2).

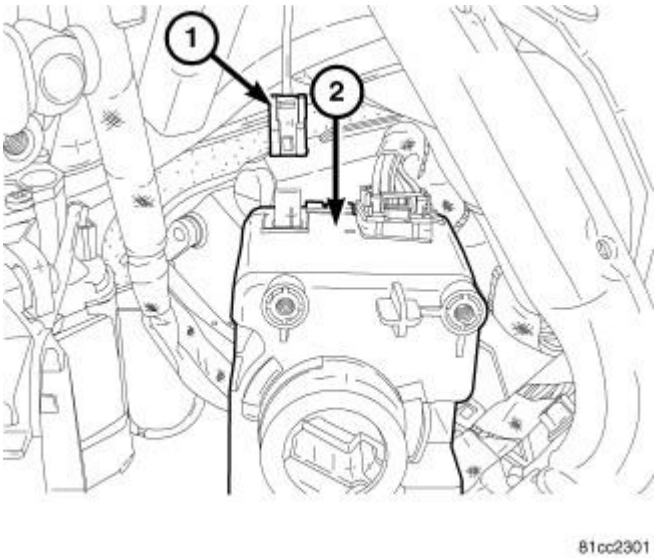

Fig. 98: Center Bearing To Body
Courtesy of CHRYSLER LLC

8. Torque center bearing-to-body bolts to 27 N.m (20 ft. lbs.).

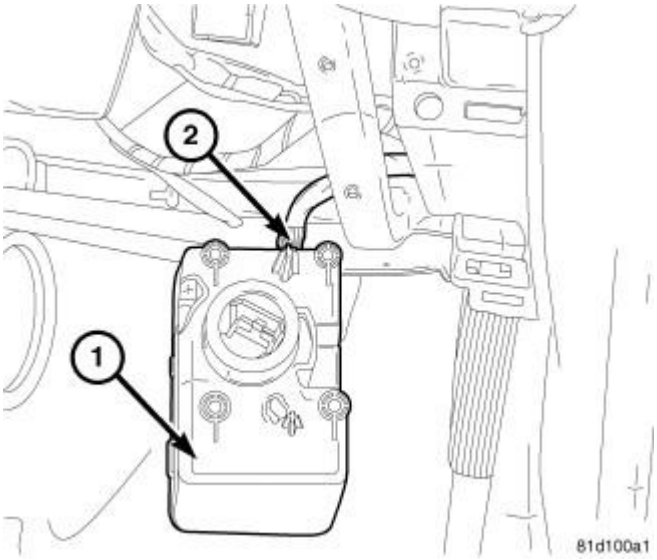

Fig. 99: Heat Shield
Courtesy of CHRYSLER LLC

9. Install heat shield (1).
10. Install rear exhaust system. Refer to **Exhaust System/MUFFLER, Exhaust - Installation**

SPECIFICATIONS

SPECIFICATIONS - TORQUE

TORQUE - NON-SRT AUTOMATIC TRANSMISSIONS

TORQUE - NON-SRT AUTOMATIC TRANSMISSIONS

DESCRIPTION	N.m	Ft. Lbs.	In. Lbs.
BOLT/NUT SHAFT COUPLER TO TRANSMISSION	68	50	-
BOLT/NUT SHAFT COUPLER TO REAR AXLE ASSEMBLY	68	50	-
BOLT/NUT COUPLER TO PROPELLER SHAFT (FRONT)	58	43	-
BOLT/NUT COUPLER TO PROPELLER SHAFT (REAR)	58	43	-
BOLT CENTER BEARING TO BODY	27	20	-

TORQUE - MANUAL TRANSMISSION

TORQUE - MANUAL TRANSMISSION

DESCRIPTION	N.m	Ft. Lbs.	In. Lbs.
BOLT/NUT SHAFT COUPLER TO TRANSMISSION	156	115	-
BOLT/NUT SHAFT COUPLER TO REAR AXLE ASSEMBLY	156	115	-
BOLT/NUT COUPLER TO PROPELLER SHAFT (FRONT)	91	67	-
BOLT/NUT COUPLER TO PROPELLER SHAFT (REAR)	91	67	-
BOLT CENTER BEARING TO BODY	27	20	-

TORQUE - SRT AUTOMATIC TRANSMISSION

TORQUE - SRT AUTOMATIC TRANSMISSION

DESCRIPTION	N.m	Ft. Lbs.	In. Lbs.
BOLT/NUT SHAFT COUPLER TO TRANSMISSION	68	50	-
BOLT/NUT SHAFT COUPLER TO REAR AXLE ASSEMBLY	156	115	-
BOLT/NUT COUPLER TO PROPELLER SHAFT (FRONT)	58	43	-
BOLT/NUT COUPLER TO PROPELLER SHAFT (REAR)	58	43	-
BOLT CENTER BEARING TO BODY	27	20	-

SPECIAL TOOLS

SPECIAL TOOLS

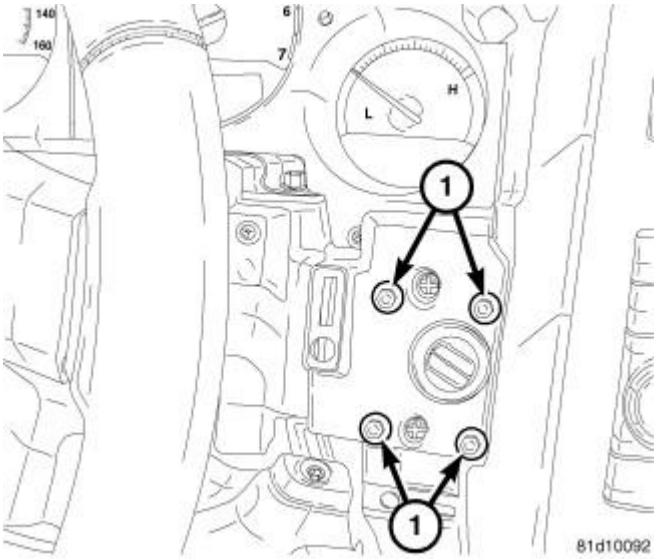

Fig. 100: Bearing Splitter, 1130
Courtesy of CHRYSLER LLC

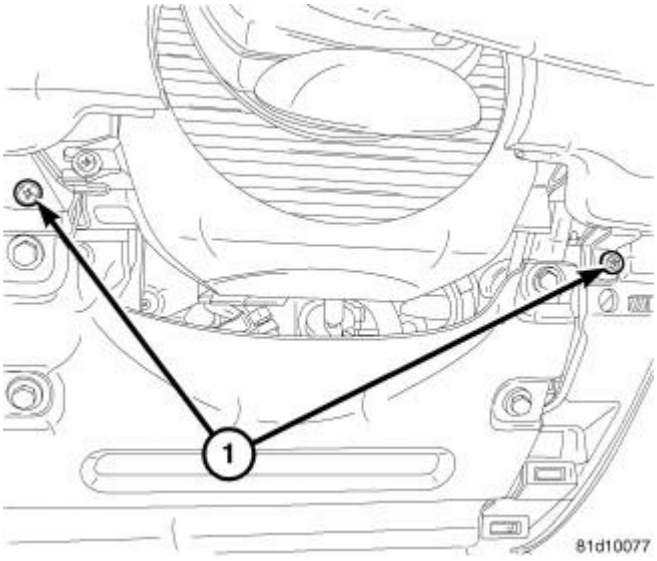

Fig. 101: Installer C-4735-1
Courtesy of CHRYSLER LLC

BEARING, DRIVE SHAFT CENTER

Removal

REMOVAL

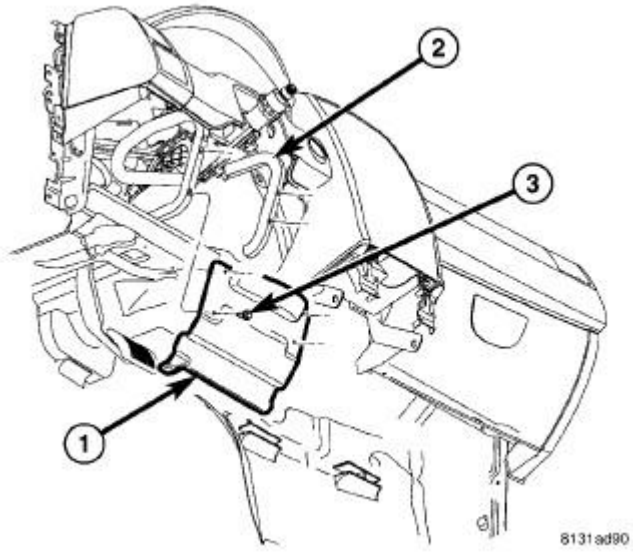

Fig. 102: Propeller Shaft Index Markings
Courtesy of CHRYSLER LLC

1. Remove propeller shaft from vehicle. See **Differential and Driveline/Propeller Shaft - Removal**

   NOTE: To address propeller shaft imbalance concerns, the propeller shaft spline interface has a "skip-tooth" design allowing only one possible assembly orientation. Install reference marks only to aid in assembly.

2. Mark segments (2,3) with installation reference marks (1).

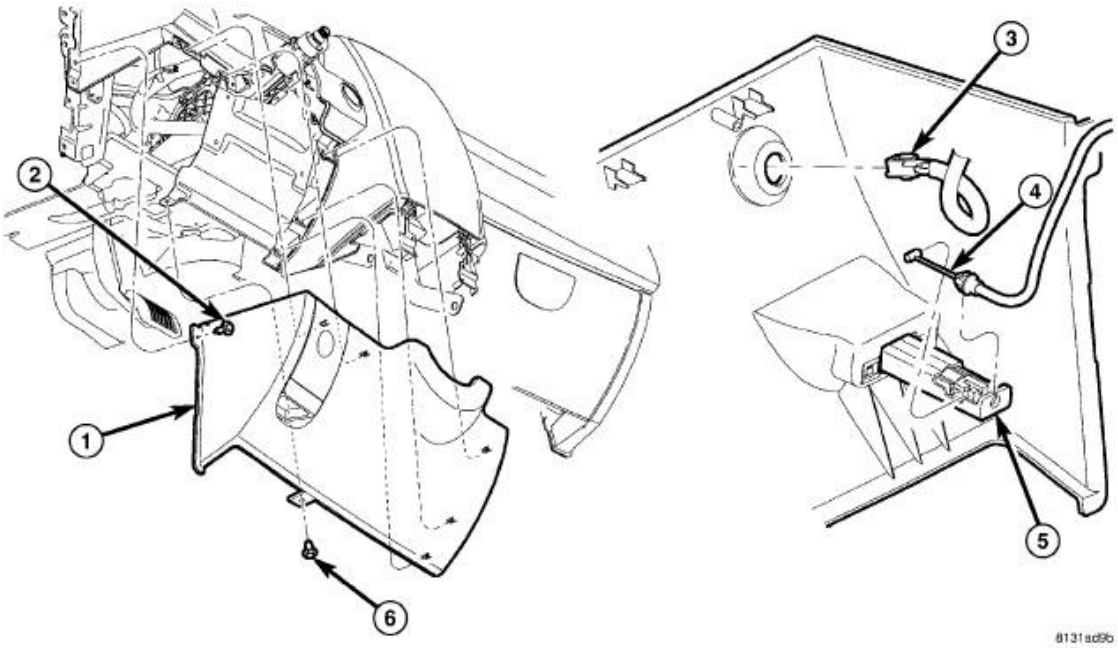

Fig. 103: Plunging Boot Removal
Courtesy of CHRYSLER LLC

3. Separate propeller shaft front and rear segments at bearing and remove boot (1).

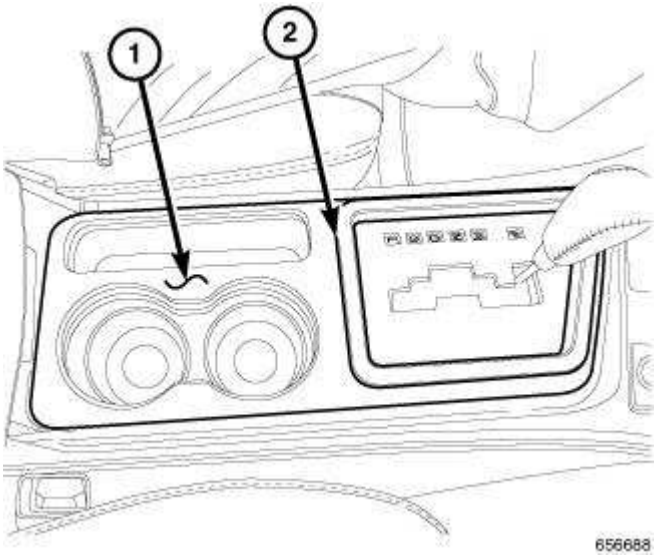

Fig. 104: Center Bearing Removal
Courtesy of CHRYSLER LLC

4. Press center bearing (1) off of rear shaft segment using arbor press and Bearing Splitter 1130 (2).

Installation

INSTALLATION

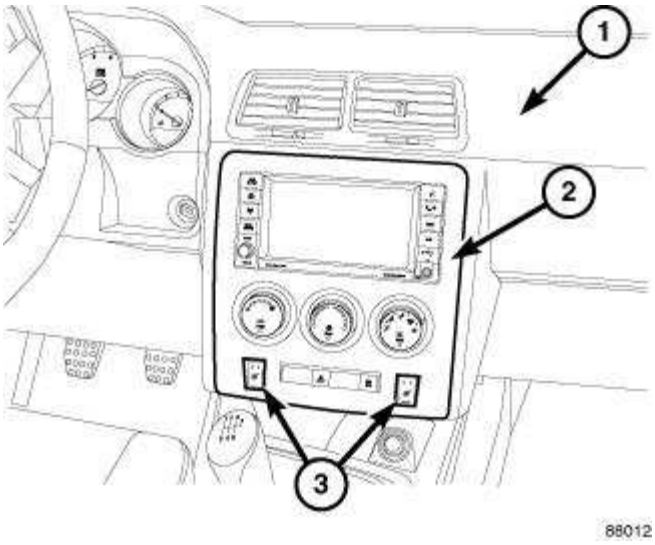

Fig. 105: Center Bearing Installation
Courtesy of CHRYSLER LLC

1. Install propeller shaft rear segment into press, supported on joint yoke (3).
2. Install bearing assembly as shown on illustration (2).
3. Using installer C-4735 (1), press bearing assembly (2) onto shaft.

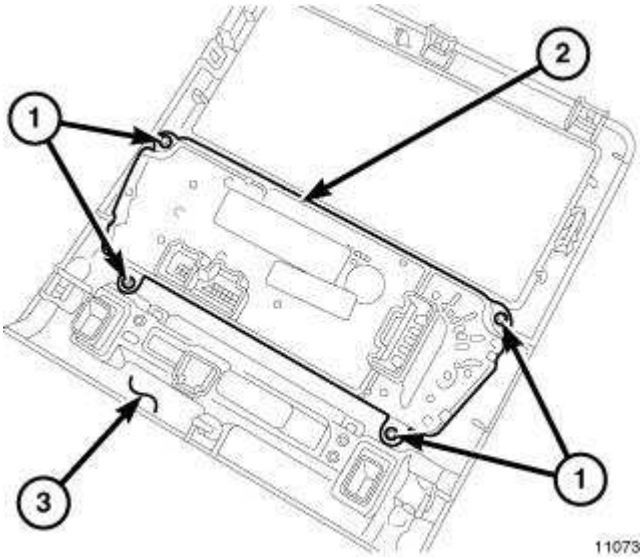

Fig. 106: Plunging Boot Installation
Courtesy of CHRYSLER LLC

4. Remove propeller shaft from press.
5. Install boot (1) to rear shaft segment.

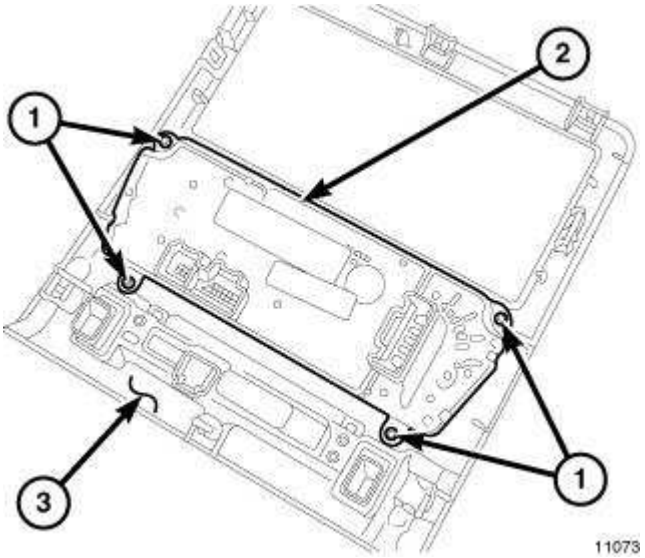

Fig. 107: Front Segment Installation
Courtesy of CHRYSLER LLC

NOTE: To address propeller shaft imbalance concerns, the propeller shaft spline interface has a "skip-tooth" design allowing only one possible assembly orientation.

6. Align index marks placed upon disassembly and install front segment (1) to rear segment.
7. Install boot (2) to front segment, seating boot into groove (3).
8. Install propeller shaft into vehicle. See **Differential and Driveline/Propeller Shaft - Installation**

REAR AXLE - 198MM

DESCRIPTION

DESCRIPTION

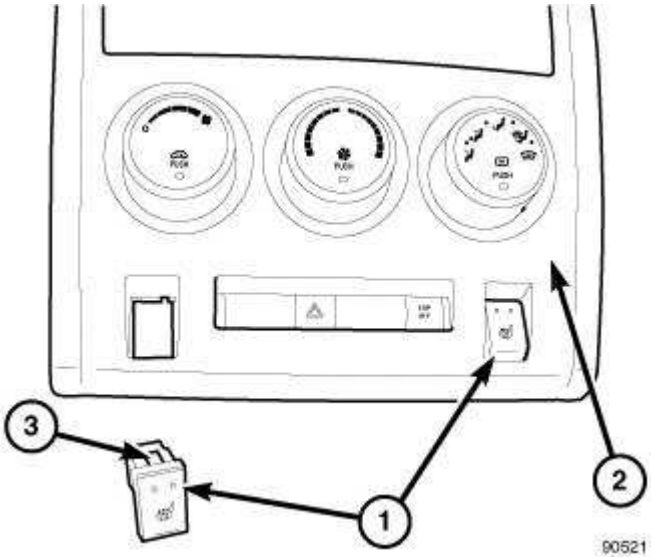

Fig. 108: Rear Axle Sectional View - 198/210 MM RII
Courtesy of CHRYSLER LLC

1 - BEARING, PINION TAIL	6 - DIFFERENTIAL
2 - SHIM, PINION DEPTH	7 - RING, SNAP
3 - BEARING, PINION HEAD	8 - COVER, AXLE
4 - GEAR/SHAFT, PINION	9 - GEAR, RING
5 - BEARING, DIFFERENTIAL SIDE	

The 198 MM RII (Rear-Independent-Iron) axle is an independent assembly with a cast iron housing and differential. The 198 MM RII uses an open differential which is supported by two tapered roller bearings located on either side of the case. Differential bearing preload and ring gear backlash are controlled with select snap-rings located on the outside of the differential bearing cups. Pinion height is set with a select shim located under the rear pinion bearing cup.

The 198 axle is available only in all-wheel-drive (AWD) models, and in V-6 engine-equipped rear-wheel-drive (RWD) models, and is available in three gear ratios: 3.07 3.64 AND 3.90:1.

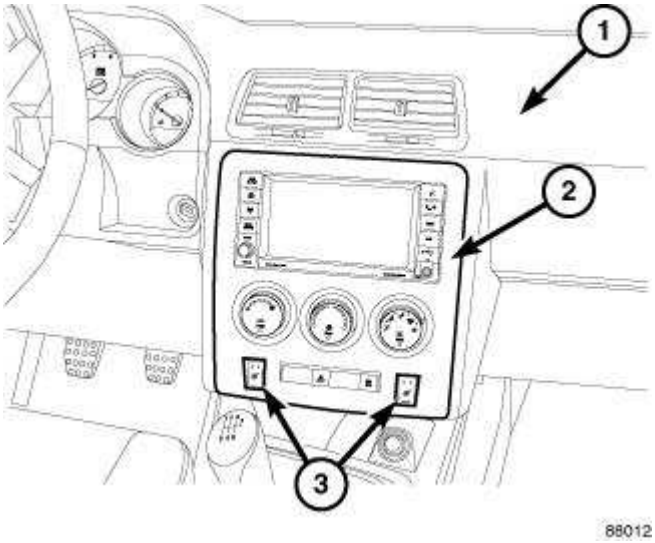

Fig. 109: 198/210 Axle Components
Courtesy of CHRYSLER LLC

1 - NUT, PINION FLANGE	11 - SHIM, PINION DEPTH
2 - FLANGE, PINION	12 - WASHER (2)
3 - SEAL, PINION	13 - SPACER, COLLAPSIBLE
4 - CONE, PINION TAIL BEARING	14 - GEAR, RING
5 - CUP, PINION TAIL BEARING	15 - CONE, DIFFERENTIAL SIDE BEARING
6 - CUP, DIFFERENTIAL SIDE BEARING	16 - DIFFERENTIAL
7 - HOUSING, AXLE	17 - SEAL, AXLE
8 - GEAR/SHAFT, PINION	18 - RING, SNAP
9 - CONE, PINION HEAD BEARING	19 - CUP, DIFFERENTIAL SIDE BEARING
10 - CUP, PINION HEAD BEARING	20 - COVER, AXLE HOUSING

AXLE IDENTIFICATION

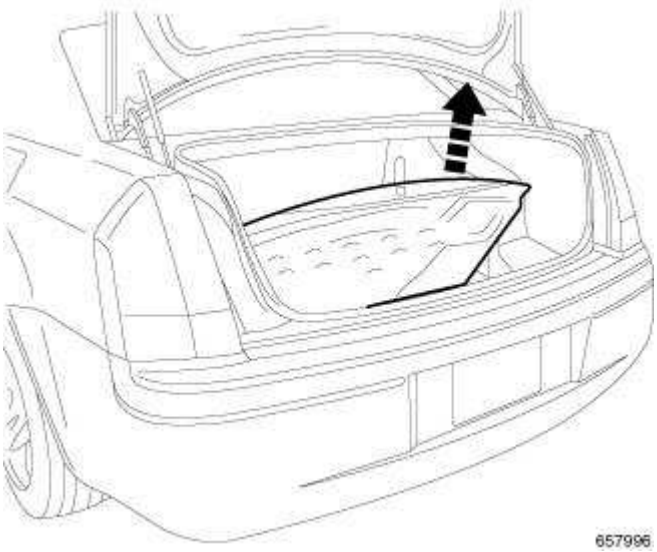

Fig. 110: 198 Axle Identification Label
Courtesy of CHRYSLER LLC

The 198 MM axle utilizes a barcoded label (1) which is adhered to the top of the axle housing as shown on illustration. The following information is found on the identification label:

- Traceability Code (Plant Use)
- Axle Part Number
- Axle Gear Ratio

DIAGNOSIS AND TESTING

AXLE

GEAR NOISE

Axle gear noise can be caused by insufficient lubricant, incorrect backlash, incorrect pinion depth, tooth contact, worn/damaged gears, or the carrier housing not having the proper offset and squareness.

Gear noise usually happens at a specific speed range. The noise can also occur during a specific type of driving condition. These conditions are acceleration, deceleration, coast, or constant load.

When road testing, first warm-up the axle fluid by driving the vehicle at least 5 miles and then accelerate the vehicle to the speed range where the noise is the greatest. Shift out-of-gear and coast through the peak-noise range. If the noise stops or changes greatly:

- Axle mounts damaged, worn, or bottoming out.
- Check for insufficient lubricant.
- Incorrect ring gear backlash.
- Gear damage.

Differential side gears and pinions can be checked by turning the vehicle. They usually do not cause noise during straight-ahead driving when the gears are unloaded. The side gears are loaded during vehicle turns. A worn pinion shaft can also cause a snapping or a knocking noise.

BEARING NOISE

The differential and pinion bearings can produce noise when worn or damaged. Bearing noise can be either a whining, or a growling sound.

Pinion bearings have a constant-pitch noise. This noise changes only with vehicle speed. Pinion bearing noise will be higher pitched because it rotates at a faster rate. Drive the vehicle and load the differential. If bearing noise occurs, the rear pinion bearing is the source of the noise. If the bearing noise is heard during a coast, the front pinion bearing is the source.

Worn or damaged differential bearings usually produce a low pitch noise. Differential bearing noise is similar to pinion bearing noise. The pitch of differential bearing noise is also constant and varies only with vehicle speed.

Wheel hub bearings produce noise and vibration when worn or damaged. The noise generally changes when the bearings are loaded. Road test the vehicle. Turn the vehicle sharply to the left and to the right. This will load the bearings and change the noise level. Where axle bearing damage is slight, the noise is usually not noticeable at speeds above 30 mph.

LOW SPEED KNOCK

Low speed knock is generally caused by a worn U-joint or by worn side-gear thrust washers. A worn pinion shaft bore will also cause low speed knock.

VIBRATION

Vibration at the rear of the vehicle is usually caused by a:

- Damaged propeller shaft.
- Missing propeller shaft balance weight(s).
- Worn or out-of-balance wheels.
- Loose wheel lug nuts.
- Worn U-joints or CV joints.
- Loose/broken springs.
- Damaged axle shaft bearing(s).
- Loose pinion gear nut.
- Excessive pinion yoke run out.
- Bent halfshaft(s).

Check for loose or damaged front-end components or engine/transmission mounts. These components can contribute to what appears to be a rearend vibration. Do not overlook engine accessories, brackets and drive belts.

All driveline components should be examined before starting any repair.

DRIVELINE SNAP

A snap or clunk noise when the vehicle is shifted into gear, can be caused by:

- Cradle-to-body isolator worn or damaged.
- Worn or damaged rubber washer between axle hub nut and axle hub.
- High engine idle speed.
- Transmission shift operation.
- Loose engine/transmission/transfer case mounts.

- Worn U-joints or CV joints.
- Worn or broken axle mount isolators.
- Loose pinion gear nut and yoke.
- Excessive ring gear backlash.
- Excessive side gear to case clearance.

The source of a snap or a clunk noise can be determined with the assistance of a helper. Raise the vehicle on a hoist with the wheels free to rotate. Instruct the helper to shift the transmission into gear. Listen for the noise, a mechanics stethoscope is helpful in isolating the source of a noise.

DIAGNOSTIC CHART

CONDITION	POSSIBLE CAUSE	CORRECTION
WHEEL NOISE	1. Wheel loose. 2. Faulty, brinelled wheel bearing.	1. Tighten loose nuts. 2. Replace bearing.
DIFFERENTIAL CRACKED	1. Improper differential side bearing preload. 2. Excessive ring gear backlash. 3. Vehicle overloaded.	1. Replace case and inspect gears and bearings for further damage. Set differential bearing preload properly. 2. Replace case and inspect gears and bearings for further damage. Set ring gear backlash properly. 3. Replace case and inspect gears and bearings for further damage. Avoid excessive vehicle weight.
DIFFERENTIAL GEARS SCORED	1. Insufficient lubrication. 2. Improper grade of lubricant. 3. Excessive spinning of one wheel/tire.	1. Replace scored gears. Fill differential with the correct fluid type and quantity. 2. Replace scored gears. Fill differential with the proper fluid type and quantity. 3. Replace scored gears. Inspect all gears, pinion bores, and shaft for damage. Service as necessary.
LOSS OF LUBRICANT	1. Lubricant level too high. 2. Worn axle shaft seals. 3. Cracked axle housing. 4. Worn pinion seal. 5. Worn/scored pinion flange journal.	1. Drain lubricant to the correct level. 2. Replace seals. 3. Repair as necessary. 4. Replace seal. 5. Replace pinion flange and seal.

	6. Axle cover not properly sealed.	6. Remove, clean, and re-seal cover.
AXLE OVERHEATING	1. Lubricant level low.	1. Fill differential to correct level.
	2. Improper grade of lubricant.	2. Fill differential with the correct fluid type and quantity.
	3. Bearing preload too high.	3. Readjust bearing pre-load.
	4. Insufficient ring gear backlash.	4. Re-adjust ring gear backlash.
GEAR TEETH BROKE	1. Overloading.	1. Replace gears. Examine other gears and bearings for possible damage.
	2. Ice-spotted pavement.	2. Replace gears and examine remaining parts for damage.
	3. Improper adjustments.	3. Replace gears and examine remaining parts for damage. Ensure ring gear backlash is correct.
AXLE NOISE	1. Insufficient lubricant.	1. Fill axle with the correct fluid type and quantity.
	2. Improper ring gear and pinion adjustment.	2. Check ring gear and pinion contact pattern. Adjust backlash or pinion depth.
	3. Unmatched ring gear and pinion.	3. Replace gears with a matched ring gear and pinion.
	4. Worn teeth on ring gear and/or pinion.	4. Replace ring gear and pinion.
	5. Loose pinion bearings.	5. Adjust pinion bearing pre-load.
	6. Loose differential bearings.	6. Adjust differential bearing preload.
	7. Misaligned or sprung ring gear.	7. Measure ring gear run-out. Replace components as necessary.
	8. Housing not machined properly.	8. Replace housing.

STANDARD PROCEDURE

FLUID DRAIN AND FILL

NOTE: **Note: The fluid required for use in this axle is Mopar® Synthetic Gear and Axle Lubricant 75W-140.**

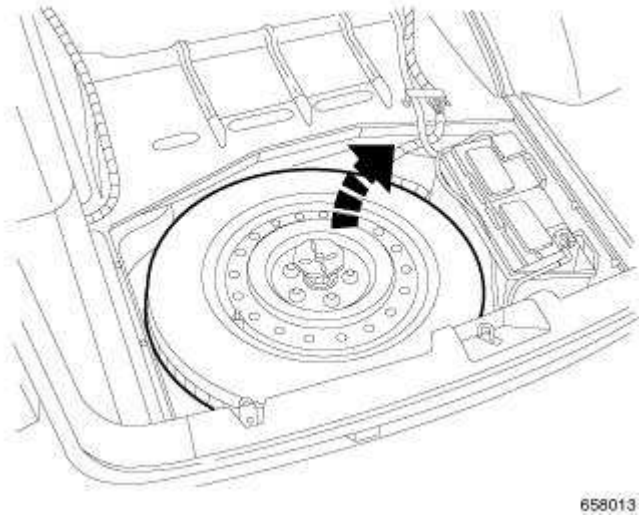

Fig. 111: Rear Axle Drain Plug
Courtesy of CHRYSLER LLC

1. Drive the vehicle until the differential lubricant is at the normal operating temperature.
2. With vehicle in neutral, position and raise vehicle on hoist.
3. Remove rear axle drain plug and drain lubricant completely from the axle.
4. Install drain plug and tighten to 60 N.m (44 ft lbs).

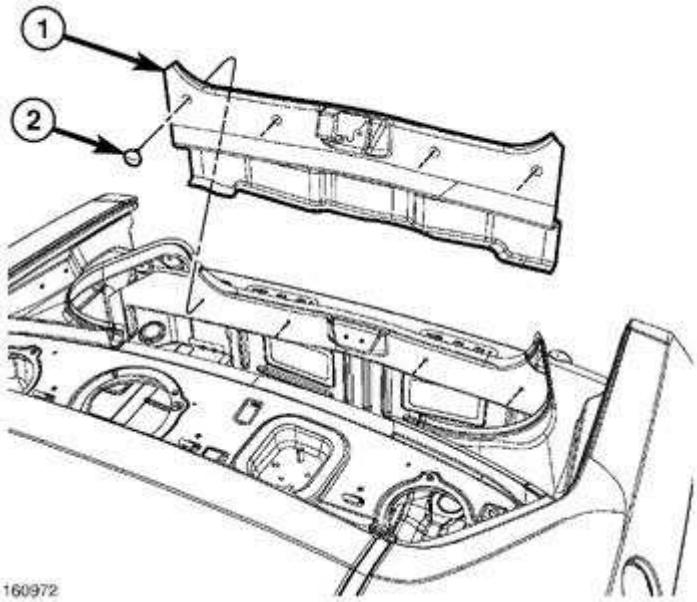

Fig. 112: Rear Axle Fill Plug
Courtesy of CHRYSLER LLC

5. Remove fill plug (1) and fill rear axle with 1.4 L (1.5 qts.) Mopar® Synthetic Gear AND Axle Lubricant 75W-140 and insure axle is filled to the bottom of the fill hole.
6. Install fill plug and tighten to 60 N.m (44 ft lbs).

REMOVAL

REMOVAL

NOTE: This procedure requires the compression of the rear suspension to ride height. A drive-on hoist should be used. If a drive-on hoist is not used, screw-style under-hoist jack stands are required to compress the rear suspension, facilitating rear halfshaft removal.

CAUTION: Never grasp halfshaft assembly by the inner or outer boots. Doing so may cause the boot to pucker or crease, reducing the service life of the boot and joint. Avoid over angulating or stroking the C/V joints when handling the halfshaft.

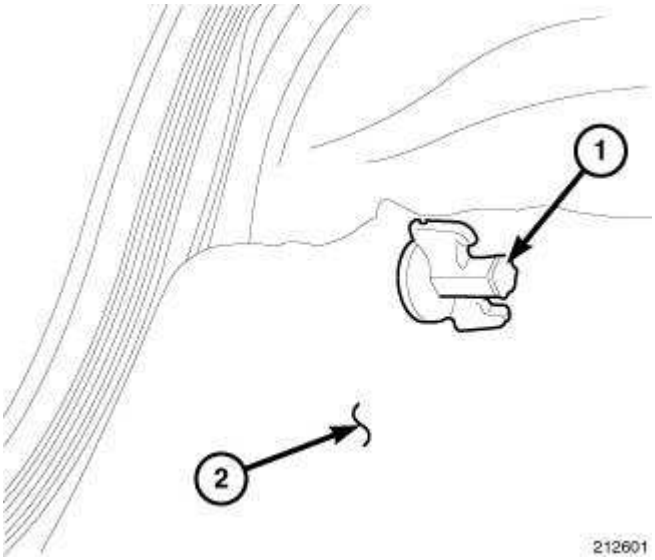

Fig. 113: Rear Axle Drain Plug
Courtesy of CHRYSLER LLC

1. With vehicle in neutral, position and raise vehicle on hoist.
2. Using 14mm hex, remove axle drain plug (1) and drain rear axle fluid into container suitable for fluid reuse.
3. Install drain plug (1) and torque to 60 N.m (44 ft. lbs.) torque.

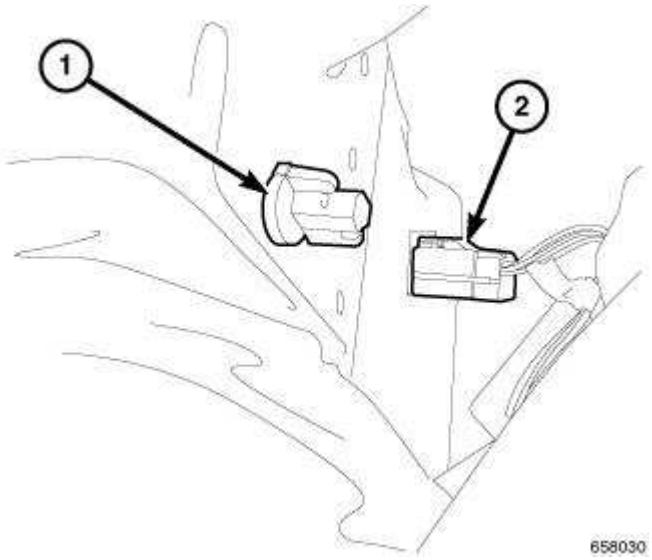

Fig. 114: Exhaust System
Courtesy of CHRYSLER LLC

4. Remove rear exhaust system (2) on dual-outlet exhaust models, otherwise, lower exhaust system at rear hanger(s) to provide adequate clearance.

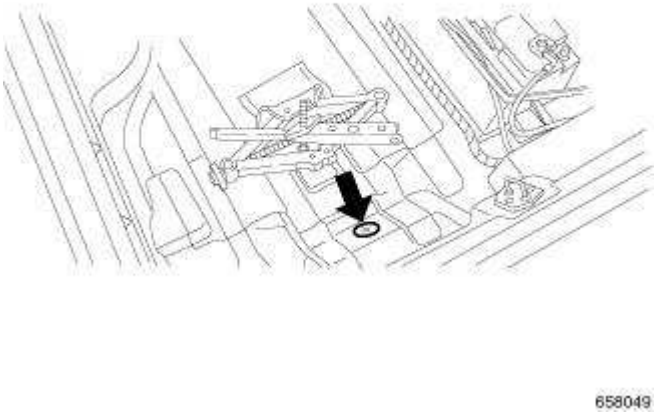

Fig. 115: Alignment Marks - Axle End Shown
Courtesy of CHRYSLER LLC

5. Apply alignment index marks (3) to the propeller shaft rubber coupler (1) and axle flange (2).

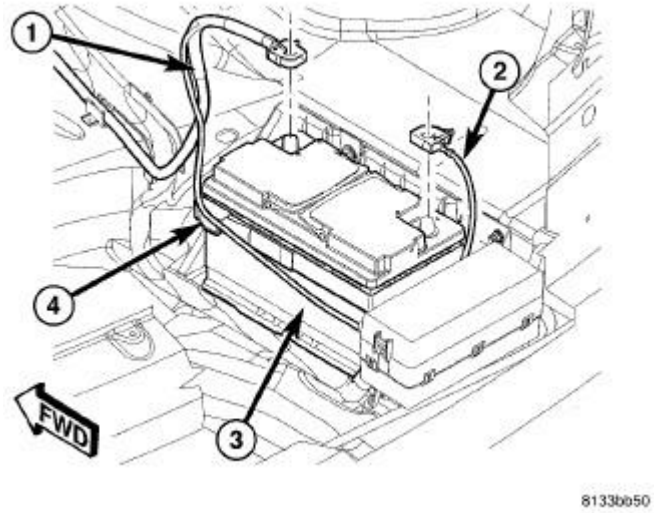

Fig. 116: Propeller Shaft At Rear Axle
Courtesy of CHRYSLER LLC

6. Remove three propeller shaft coupler-to-axle flange bolt/nuts.

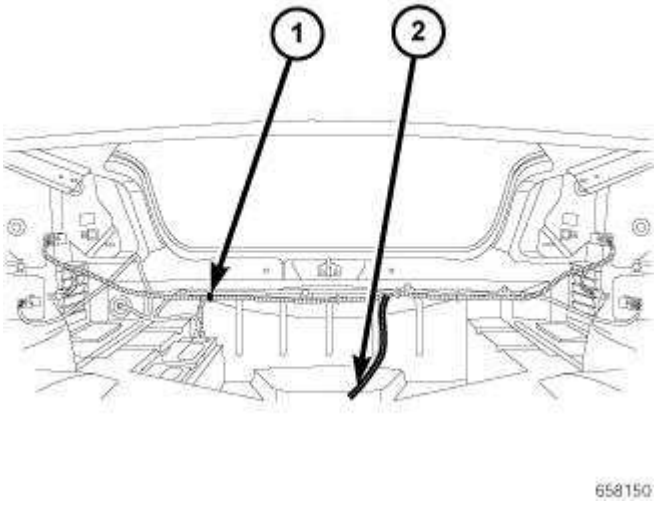

Fig. 117: Halfshaft Removal (V6 Models)
Courtesy of CHRYSLER LLC

7. Using suitable screwdriver (1), partially disengage halfshaft(s) (2) from axle assembly.

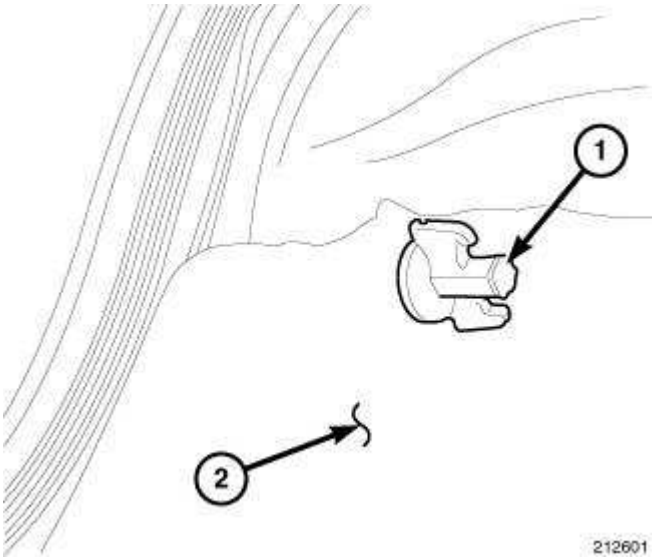

Fig. 118: Transmission Jack At Rear Axle
Courtesy of CHRYSLER LLC

8. If a drive-on hoist is used, position transmission jack (1) to rear axle assembly. If a drive-on hoist is not used, compress rear suspension using screw-style under-hoist jack stands (2), then position transmission jack to rear axle assembly.

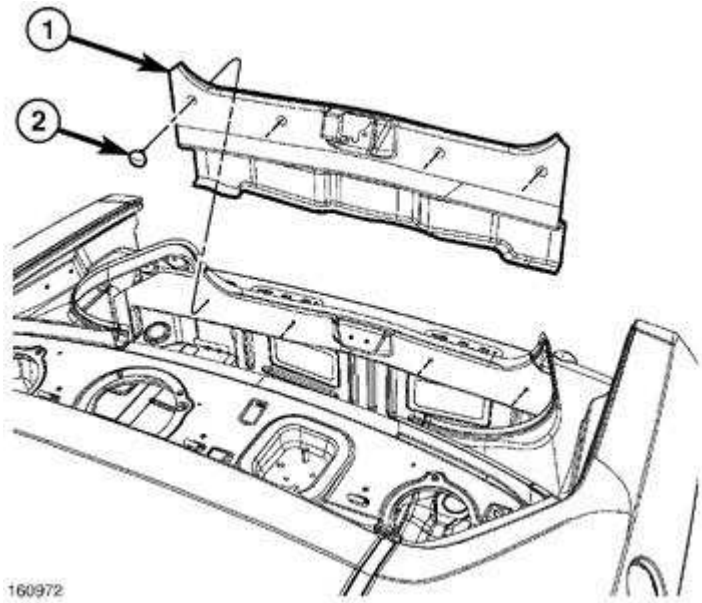

Fig. 119: Rear Axle Front Isolator
Courtesy of CHRYSLER LLC

9. Remove rear axle forward mount isolator (1) bolt/nut (2).

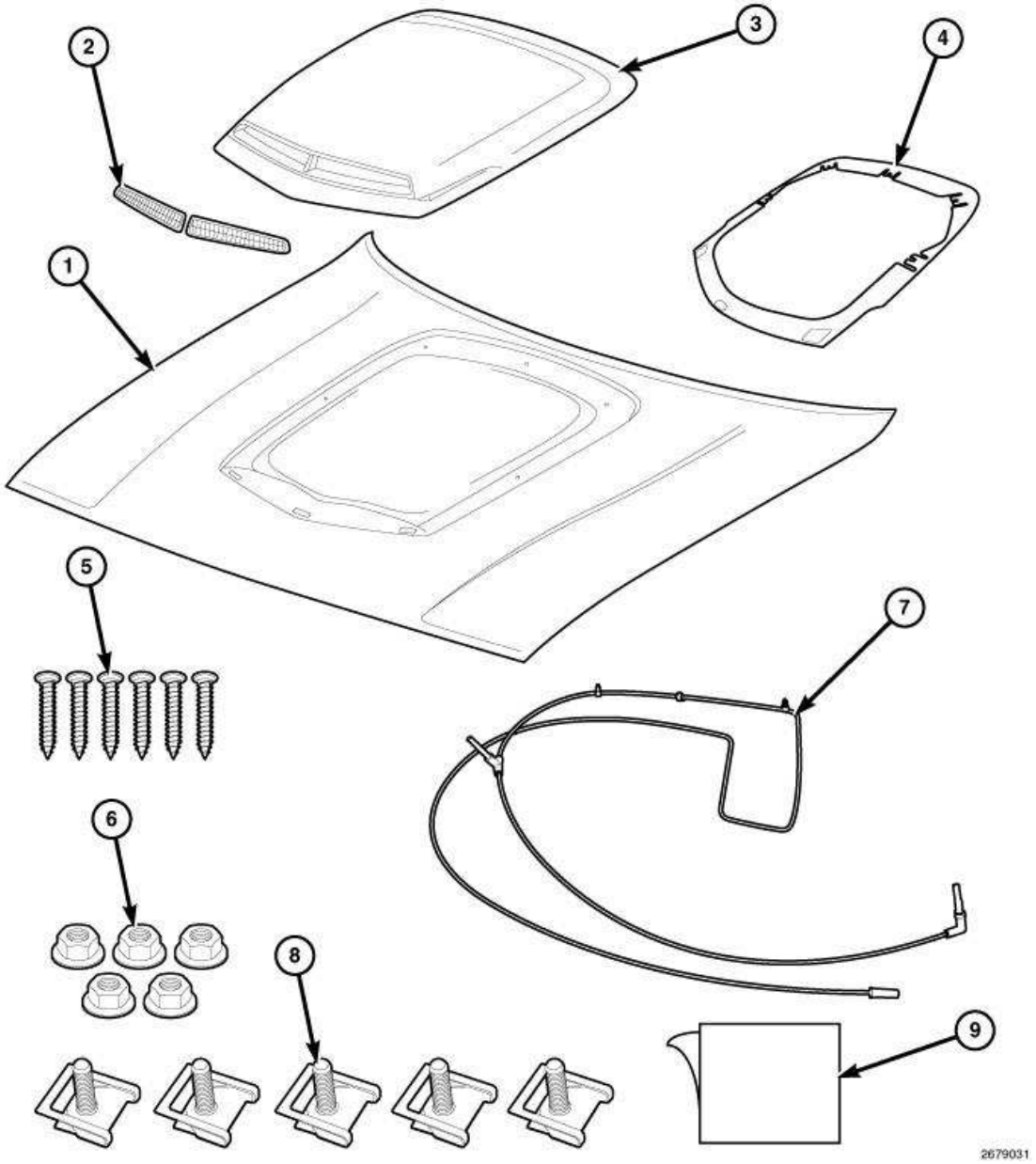

Fig. 120: Rear Axle To Crossmember Bolts
Courtesy of CHRYSLER LLC

10. Remove two rear axle-to-crossmember bolts (1).

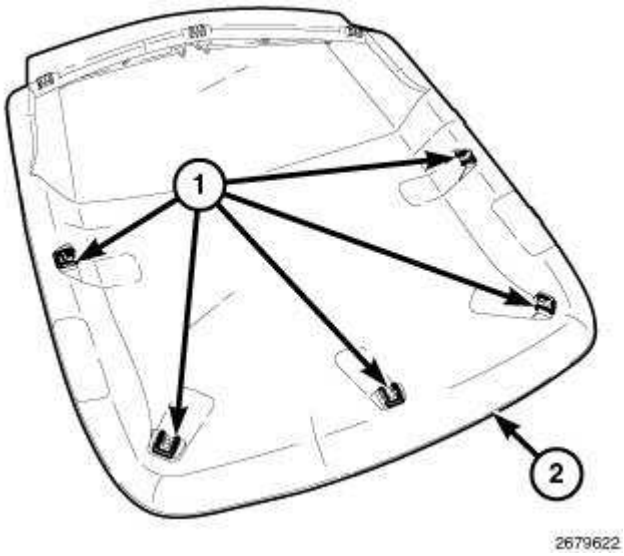

Fig. 121: Propeller Shaft Supported
Courtesy of CHRYSLER LLC

11. Carefully lower rear axle. While lowering axle, separate propeller shaft from axle and support with suitable rope or wire (1).

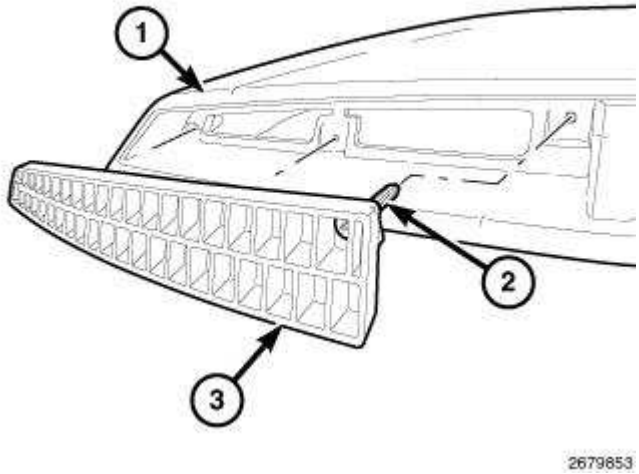

Fig. 122: Remove/Install Halfshaft
Courtesy of CHRYSLER LLC

12. Lower axle just enough to remove both halfshafts one at a time. Shift axle assembly in one direction, compressing one halfshaft while removing the other (1). Use caution to protect axle seal and journal.
13. Remove axle assembly from vehicle and transfer to bench.

INSTALLATION

INSTALLATION

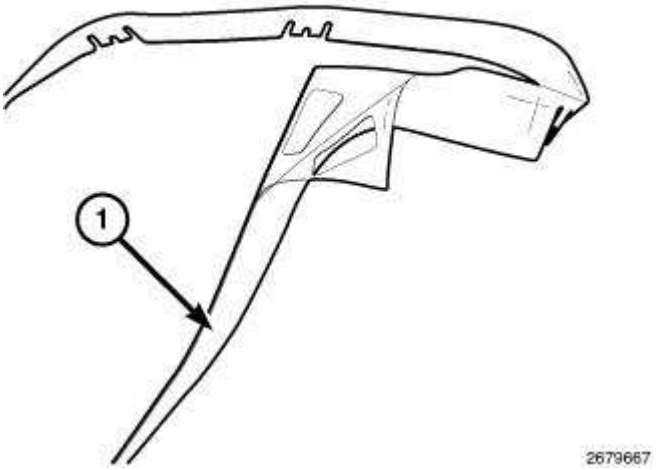

Fig. 123: Axle Seal Installation
Courtesy of CHRYSLER LLC

1. Install new axle seal(s) (1) using Installer 9223 (2) if a new seal is reqiuired.

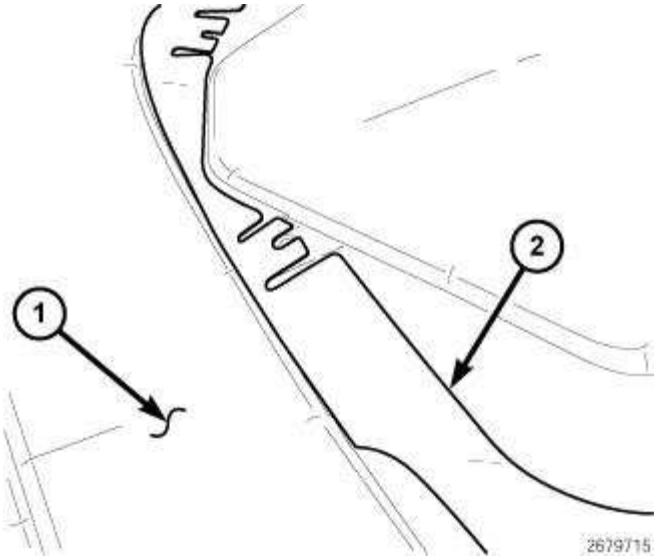

Fig. 124: Remove/Install Halfshaft
Courtesy of CHRYSLER LLC

NOTE: Use care when installing halfshaft to axle assembly. The halfshaft installation angle should be minimized to avoid damage to seal upon installation.

2. Using new circlip(s), install halfshaft (1) to rear axle assembly. Use care not to damage axle seals (2). Verify proper installation by pulling outward on joint by hand.

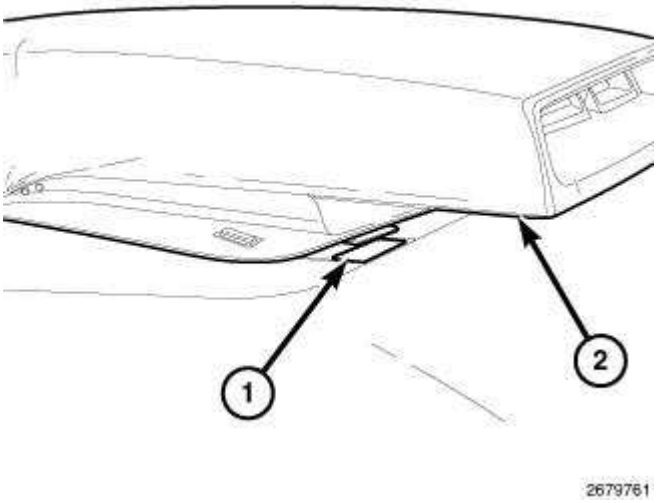

Fig. 125: Alignment Marks - Axle End Shown
Courtesy of CHRYSLER LLC

3. Raise rear axle assembly into position. Align propeller shaft index marks (3) and start propeller shaft coupler-to-axle bolt/nuts by hand.

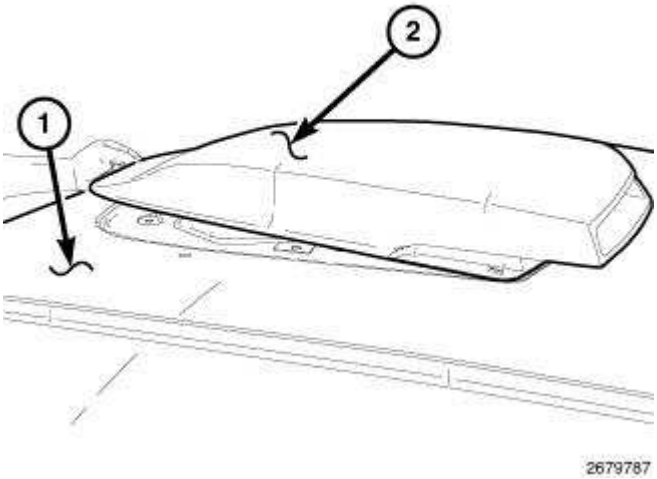

Fig. 126: Rear Axle To Crossmember Bolts
Courtesy of CHRYSLER LLC

4. Install two rear axle-to-crossmember bolts (1) and torque to 220 N.m (162 ft. lbs.).

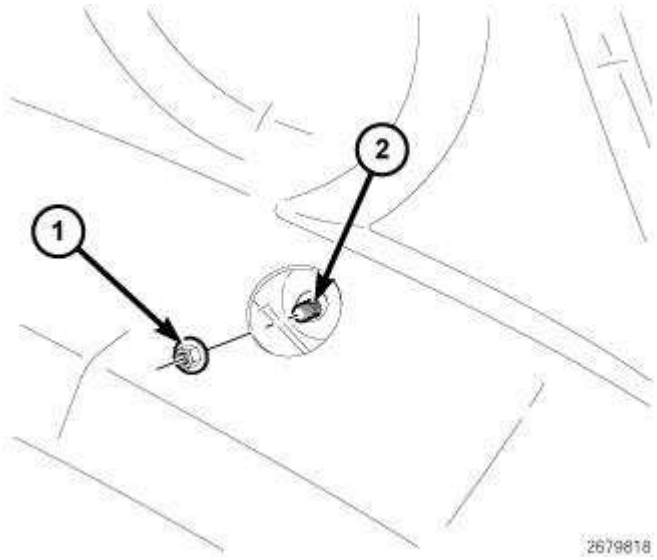

Fig. 127: Rear Axle Front Isolator
Courtesy of CHRYSLER LLC

5. Install rear axle front mount isolator (1) as shown on illustration and torque bolt/nut to 65 N.m (48 ft. lbs.).

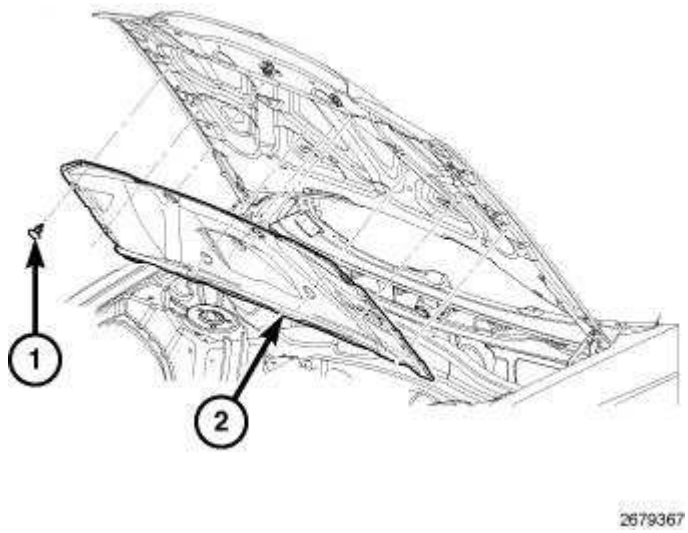

Fig. 128: Transmission Jack At Rear Axle
Courtesy of CHRYSLER LLC

6. Again verify halfshaft inner joints are fully engaged to axle assembly.
7. Remove transmission jack (1).
8. If used, remove screw-type under-hoist jack stands (2).

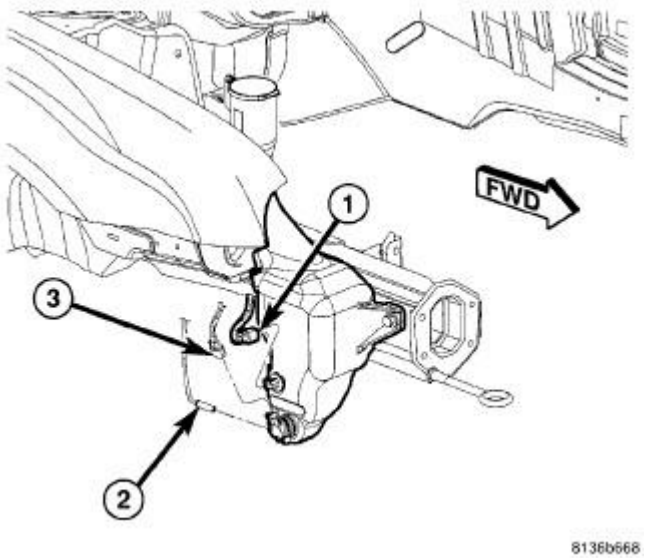

Fig. 129: Propeller Shaft At Rear Axle
Courtesy of CHRYSLER LLC

9. Torque propeller shaft coupler-to-axle flange bolt/nuts to 58 N.m (43 ft. lbs.).

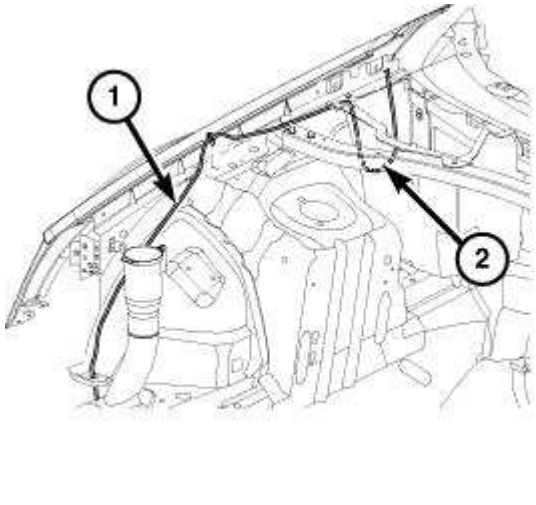

Fig. 130: Rear Axle Fill Plug
Courtesy of CHRYSLER LLC

10. Using a 14mm hex, remove rear axle fill plug (1). Fill axle with 1.4L (1.5 qts.) of Mopar® 75W-140 Synthetic Gear AND Axle Lubricant. Install fill plug and torque to 60 N.m (44 ft. lbs.).

ADJUSTMENTS

PINION DEPTH

PINION DEPTH VARIANCE

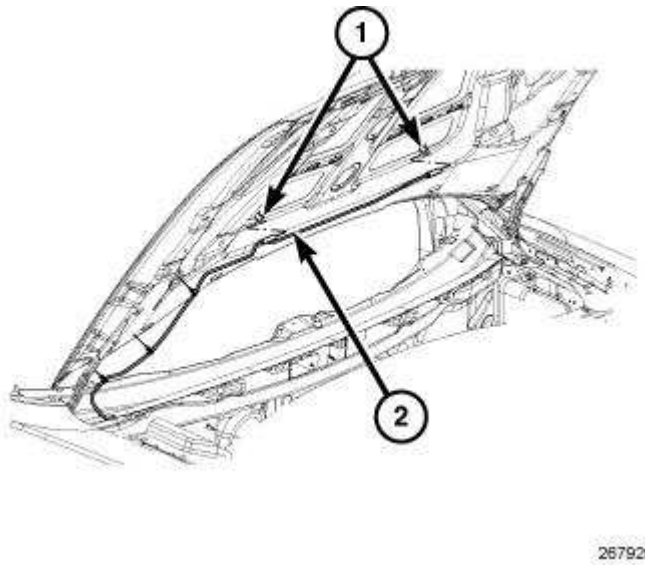

Fig. 131: Identifying Numbers On Pinion Gear
Courtesy of CHRYSLER LLC

Ring gear and pinion are supplied as matched sets. Identifying numbers for the ring gear and pinion are painted onto the pinion gear shaft and the side of the ring gear. A plus (+) number, minus (-) number or zero (0) along with the gear set sequence number (01 to 99) is on each gear. The pinion depth variance (1) is the amount the depth varies from the standard depth setting of a pinion marked with a (0). The remaining numbers (2) are the sequence number of the gear set. The standard depth provides the best gear tooth contact pattern.

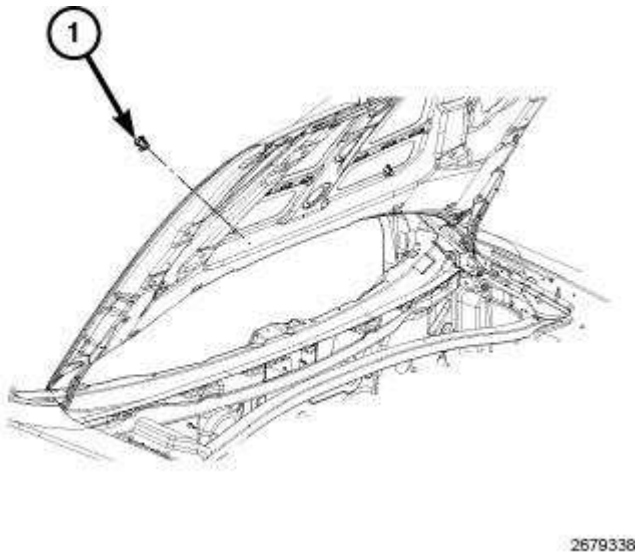

Fig. 132: Identifying Pinion Shaft, Bearings & Select Shims
Courtesy of CHRYSLER LLC

Compensation for pinion depth variance is achieved with select shims (3). The shims are sandwiched between the pinion head bearing cup (4) and axle housing.

If installing a new gear, note the depth variance number of the original and replacement pinion. Add or subtract this number from the original depth shim to compensate for the difference in the depth variances. The numbers represent deviation from the standard in thousandths of an inch. If the number is negative, add that value to the required thickness of the depth shims. If the number is positive, subtract that value from the thickness of the depth shim.

PINION GEAR DEPTH VARIANCE

Original Pinion Gear Depth Variance	Replacement Pinion Gear Depth Variance								
	-4	**-3**	**-2**	**-1**	**0**	**+1**	**+2**	**+3**	**+4**
+4	+0.008	+0.007	+0.006	+0.005	+0.004	+0.003	+0.002	+0.001	0
+3	+0.007	+0.006	+0.005	+0.004	+0.003	+0.002	+0.001	0	-0.001
+2	+0.006	+0.005	+0.004	+0.003	+0.002	+0.001	0	-0.001	-0.002
+1	+0.005	+0.004	+0.003	+0.002	+0.001	0	-0.001	-0.002	-0.003
0	+0.004	+0.003	+0.002	+0.001	0	-0.001	-0.002	-0.003	-0.004
-1	+0.003	+0.002	+0.001	0	-0.001	-0.002	-0.003	-0.004	-0.005
-2	+0.002	+0.001	0	-0.001	-0.002	-0.003	-0.004	-0.005	-0.006
-3	+0.001	0	-0.001	-0.002	-0.003	-0.004	-0.005	-0.006	-0.007
-4	0	-0.001	-0.002	-0.003	-0.004	-0.005	-0.006	-0.007	-0.008

PINION DEPTH MEASUREMENT

Pinion depth measurement is taken with the pinion head and tail bearing cups pressed into the axle housing without the shim.

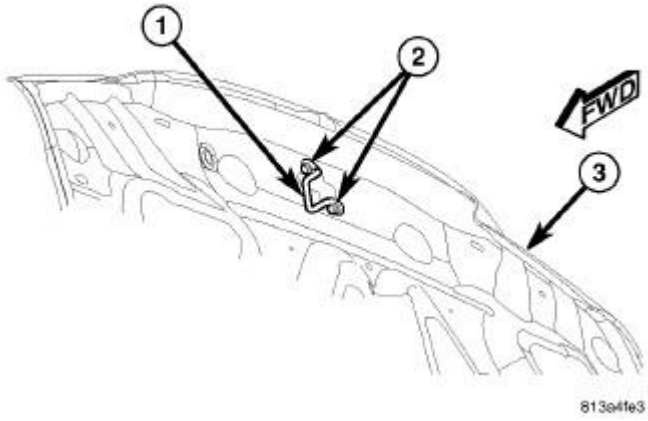

Fig. 133: Pinion Head Bearing Cup Installation
Courtesy of CHRYSLER LLC

1. Press pinion head bearing cup into housing using Handle C-4171 (1) and Installer C-4310 (2).

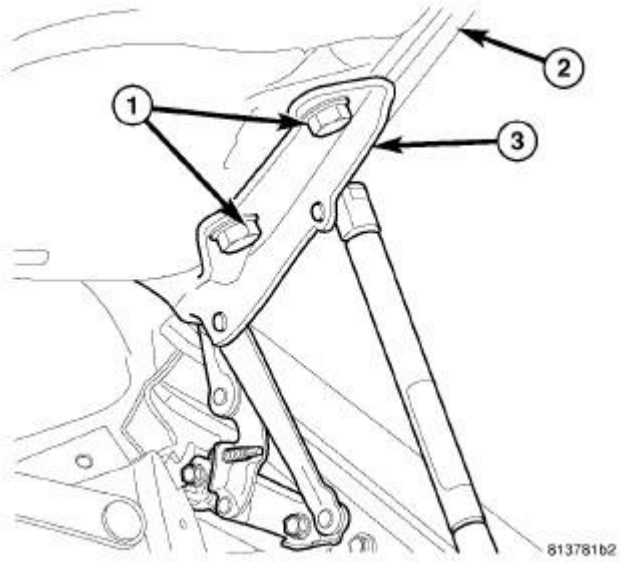

Fig. 134: Pinion Tail Bearing Cup Installation
Courtesy of CHRYSLER LLC

2. Press pinion tail bearing cup into housing using Handle C-4171 (1) and Installer D-146 (2).

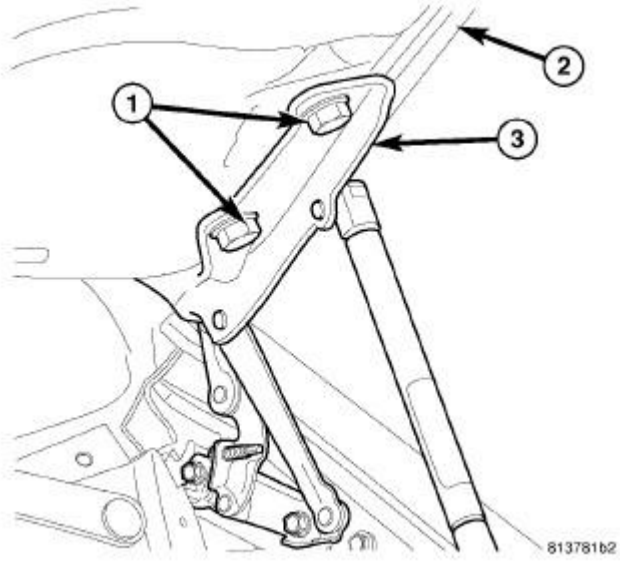

Fig. 135: L-Block, Gage Block And Bearing
Courtesy of CHRYSLER LLC

3. Assemble Pinion Height Block 6739 (3), Pinion Head Bearing Cone (1), Screw 6741 (all these can be found in a Pinion Gauge Set such as 6774), and Pinion Height Gage Block 9227 (2). Install assembly into axle housing and through bearing cups.

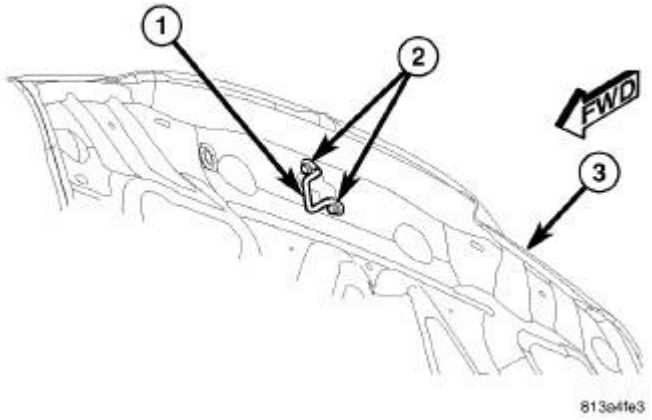

Fig. 136: Pinion Depth Gauge Tools - Typical
Courtesy of CHRYSLER LLC

4. Install pinion tail bearing and Cone 6740 (4). Tighten Cone 6740 by hand until 3.4 N.m (30 in. lbs.) of rotating torque is measured at Screw 6741 (5).

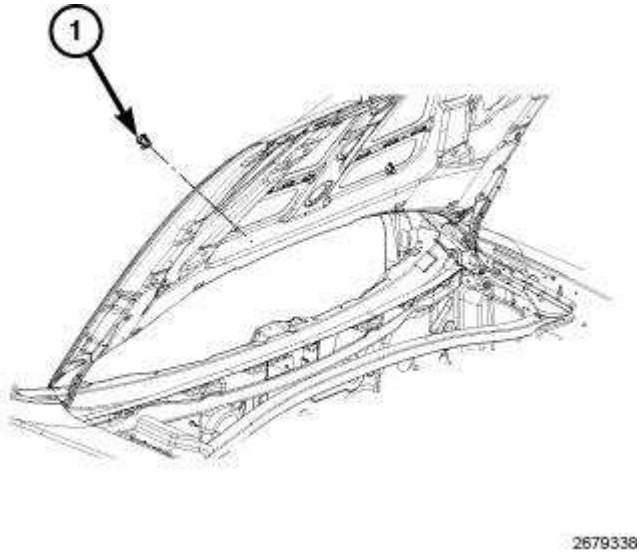

Fig. 137: Remove/Install Arbor Discs
Courtesy of CHRYSLER LLC

5. Install Arbor Discs 9228 (1).

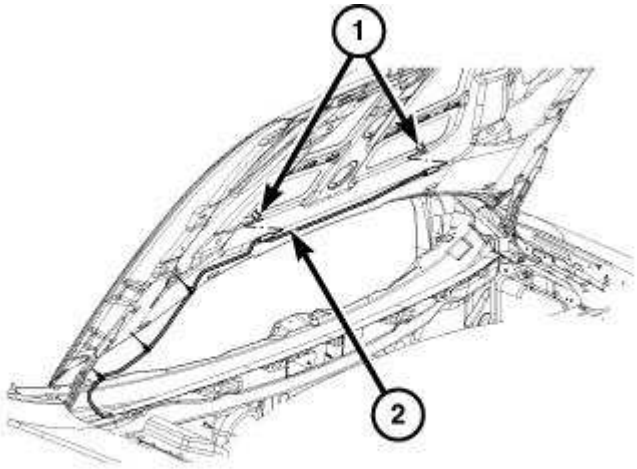

2679269

Fig. 138: Remove/Install Arbor Bar
Courtesy of CHRYSLER LLC

6. Install Arbor Bar D-115-3 (1) from a Pinion Gauge Set such as 6774.

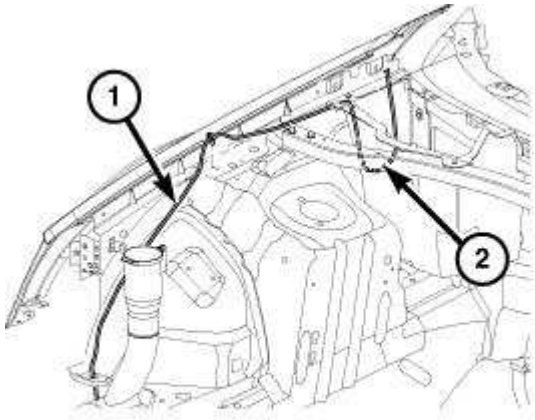

2679295

Fig. 139: Pinion Gage Setup
Courtesy of CHRYSLER LLC

7. Verify pinion depth setup is as shown on illustration.

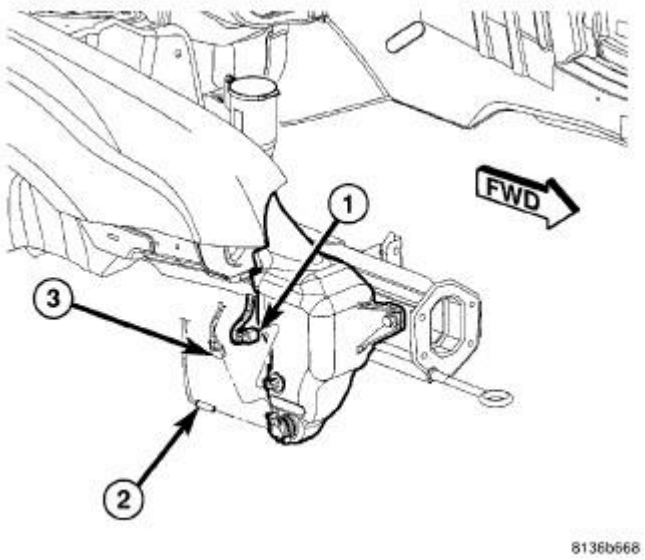

Fig. 140: Indicator/Scooter Block Setup
Courtesy of CHRYSLER LLC

8. Install Dial Indicator 9524 (1) to Scooter Block D-115-2A (2) (from a Pinion Gauge Set such as 6774). Secure with set-screw (3).

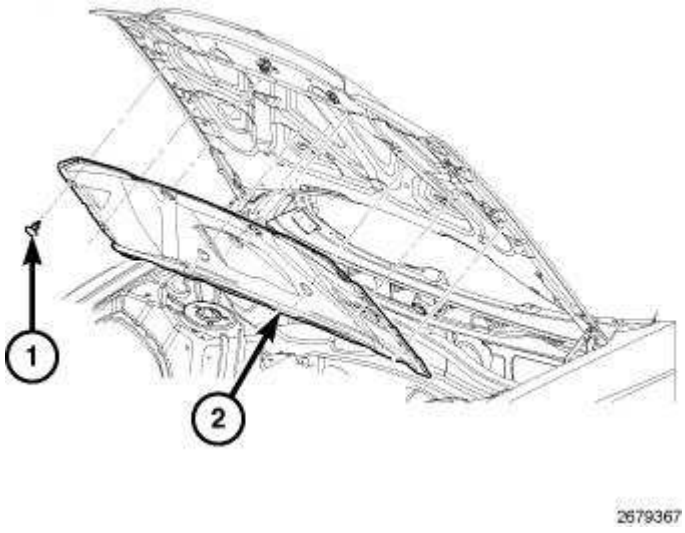

Fig. 141: Zero Dial Indicator On L-Block
Courtesy of CHRYSLER LLC

9. Install Indicator/Block assembly to top of Pinion Height Block 6739 (1). Zero indicator on top surface.

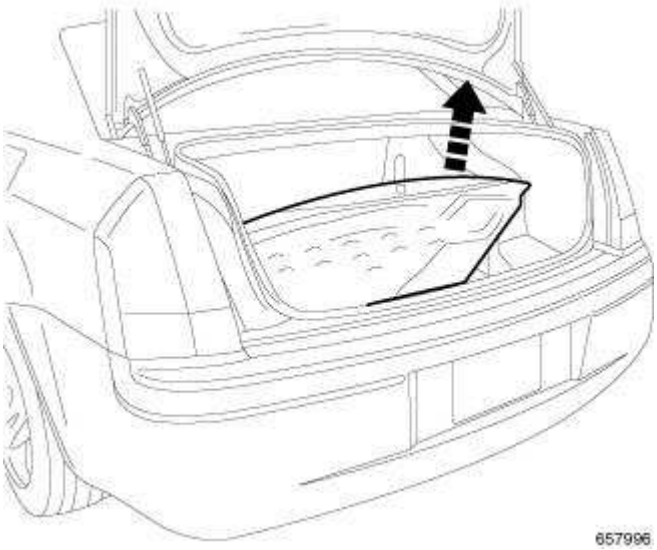

Fig. 142: Measure and Record Required Shim
Courtesy of CHRYSLER LLC

10. Slide indicator probe off of height block and onto Arbor Bar D-115-3 (2). As indicator contacts Arbor Bar (2), indicator needle will rotate clockwise. Continue moving indicator probe to the crest of the arbor bar and record the highest reading.

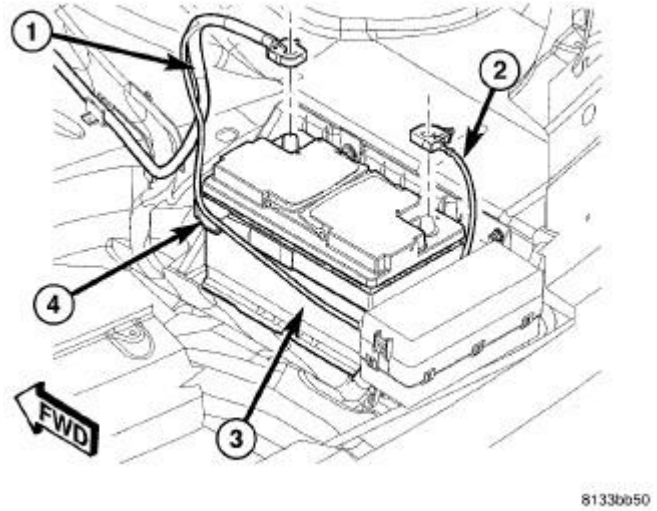

Fig. 143: Pinion Variance And Sequence Numbers
Courtesy of CHRYSLER LLC

11. Select a shim equal to the dial indicator reading plus the drive pinion gear depth variance number (1) written on the side of the pinion shaft. For example, if the depth variance is -1, add 0.025 mm (0.001 in.) to dial indicator reading.

SIDE BEARING PRELOAD AND RING GEAR BACKLASH

DIFFERENTIAL SIDE BEARING PRELOAD MEASUREMENT/CORRECTION

NOTE: Differential side bearing preload should be measured and adjusted after the following scenarios:

- **Differential case replacement**
- **Differential side bearing replacement**
- **Axle housing replacement**
- **Loss or replacement of side bearing snap rings**

If none of these situations apply, see Ring Gear Backlash Measurement/Correction.

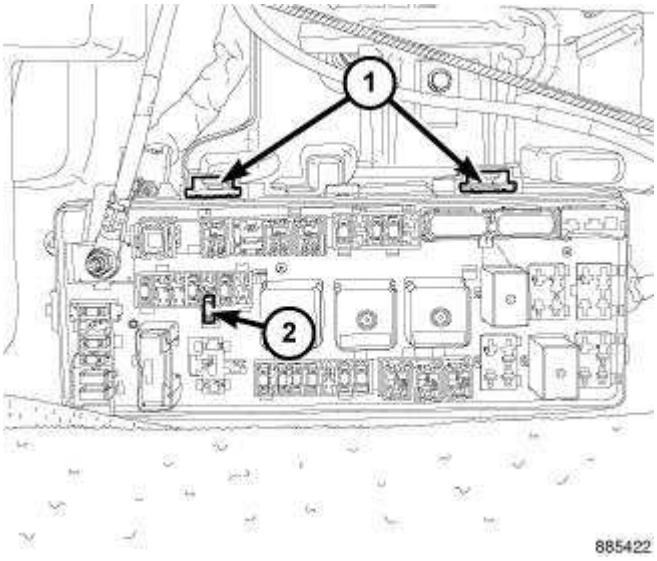

Fig. 144: Spreader Adapters 9226
Courtesy of CHRYSLER LLC

1. Install Spreader Adapter Plates 9226 (1) as shown on illustration

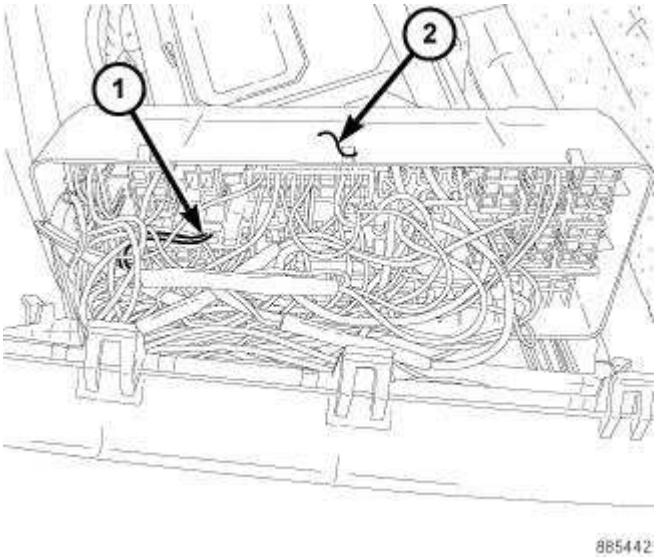

Fig. 145: Spreader W-129-B Installed
Courtesy of CHRYSLER LLC

2. Mount axle housing to Spreader W-129-B (1).

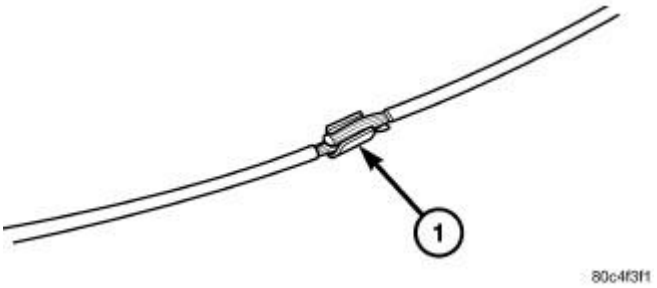

Fig. 146: Measuring Carrier Spread
Courtesy of CHRYSLER LLC

3. Set up Dial Indicator Set C-3339A as shown on illustration to measure axle housing spread:
   a. Clamp SP-5426 (1)
   b. Post SP-5425-B (2)
   c. Metric Dial Indicator 9524 (3)

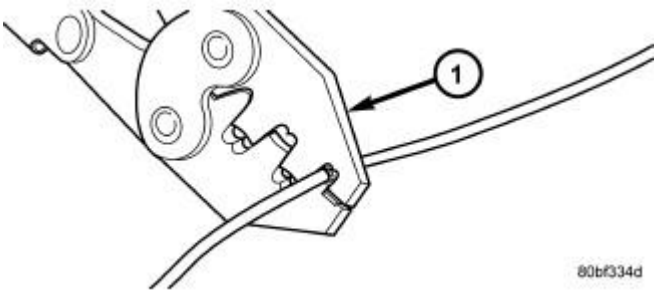

Fig. 147: Expanding/Contracting W-129-B Spreader

Courtesy of CHRYSLER LLC

4. If differential side bearing cups and snap rings are removed at this point, skip to Step 8. Otherwise, expand spreader to spread axle housing no more than 0.30 mm (0.012 in.).

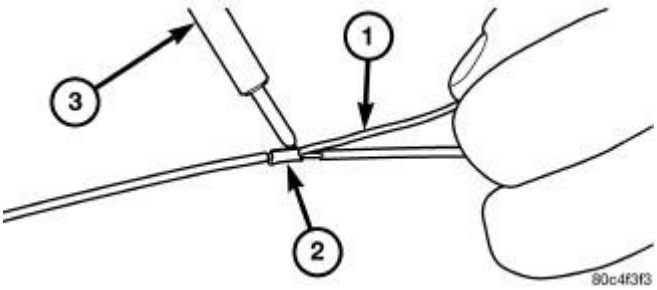

Fig. 148: Snap Ring Removal/Installation
Courtesy of CHRYSLER LLC

5. Remove both differential side bearing snap rings (1). Tag snap ring to ensure replacement to original position.

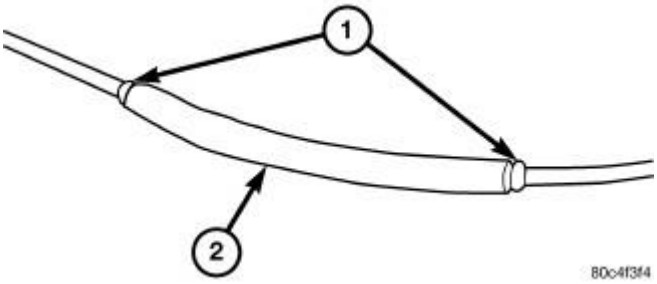

Fig. 149: Measuring Side Bearing Snap Ring
Courtesy of CHRYSLER LLC

6. Measure and record snap ring (2) thickness for later use.

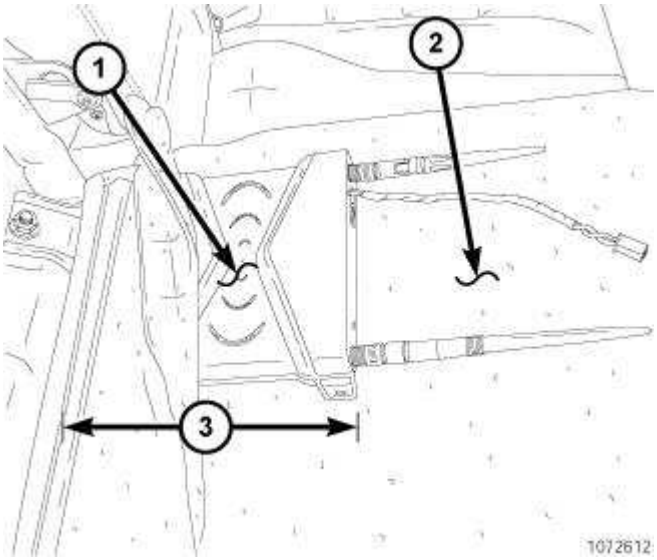

Fig. 150: Expanding/Contracting W-129-B Spreader
Courtesy of CHRYSLER LLC

7. Relax spreader (1) to relieve tension on axle housing.

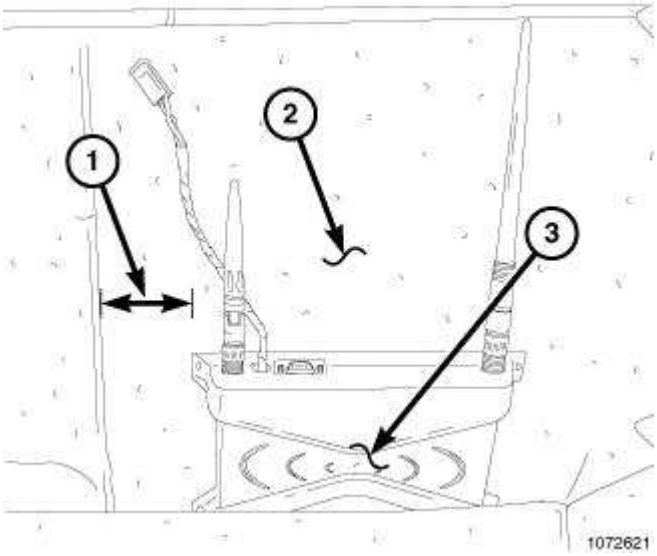

Fig. 151: Snap Ring Removal/Installation
Courtesy of CHRYSLER LLC

8. Install right (pinion) side bearing cup and snap ring (1).

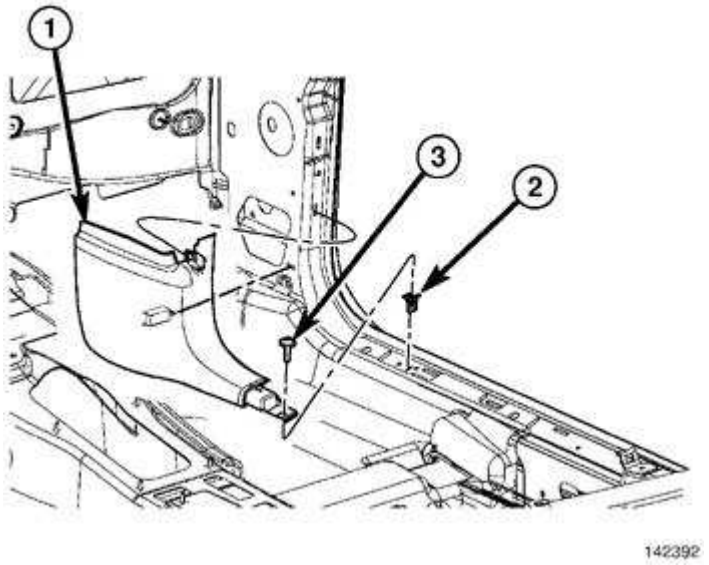

Fig. 152: Expanding/Contracting W-129-B Spreader
Courtesy of CHRYSLER LLC

9. Zero dial indicator.
10. Expand spreader (1) to spread axle housing no more than 0.30 mm (0.012 in.).

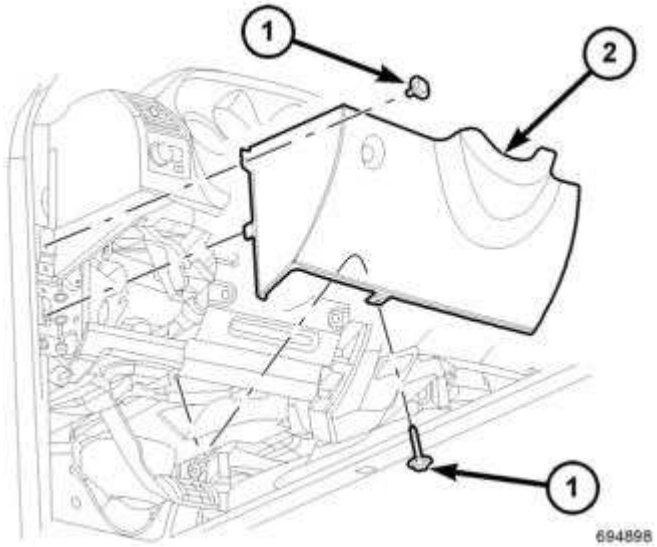

Fig. 153: Snap Ring Removal/Installation
Courtesy of CHRYSLER LLC

11. Install left (ring gear) side bearing cup and snap ring (1).

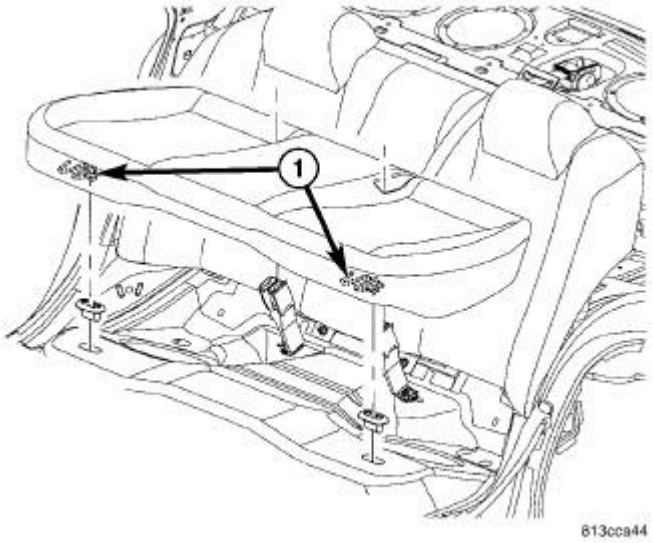

Fig. 154: Expanding/Contracting W-129-B Spreader
Courtesy of CHRYSLER LLC

12. Relax spreader (1) to relieve tension on axle housing.

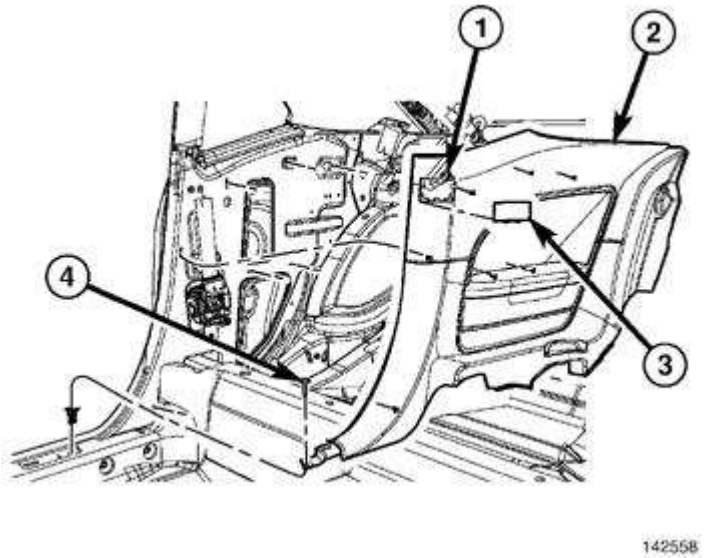

Fig. 155: Measuring Carrier Spread
Courtesy of CHRYSLER LLC

13. Measurement showing on indicator is the axle housing retained spread. Proper differential side bearing preload is achieved with an axle housing retained spread of 0.18-0.23 mm (0.007-0.009 in.).
14. If retained spread is less than 0.18 mm (0.007 in.), increase snap ring thickness at each side in equal increments.

15. If retained spread is greater than 0.23 mm (0.009 in.), decrease snap ring thickness at each side in equal increments.

RING GEAR BACKLASH MEASUREMENT/CORRECTION

NOTE: Differential Ring Gear Backlash should be measured and adjusted after the following scenarios:

- **Differential side bearing replacement**
- **Pinion head bearing replacement**
- **Pinion depth (shim) adjustment**
- **Differential case replacement**
- **Axle housing replacement**

NOTE: If Spreader W-129-B is installed, make sure tension on axle housing is relieved.

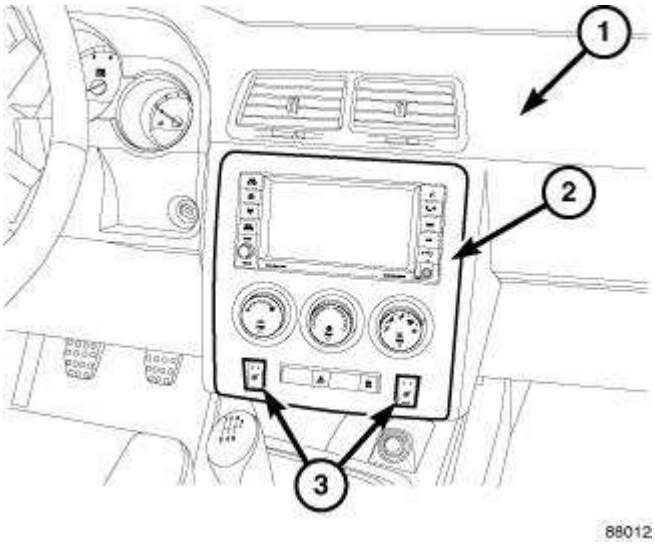

Fig. 156: Measuring Ring Gear Backlash
Courtesy of CHRYSLER LLC

1. Set up Dial Indicator Set C-3339A as shown on illustration to measure ring gear backlash:
   a. Clamp SP-5426 (1)
   b. Post SP-5425-B (2)
   c. Metric Dial Indicator 9524 (3)
2. Rotate ring gear one direction to take up clearance to pinion. Verify indicator tip is in contact with ring gear and zero indicator. Rotate ring gear back and forth and record measurement. Ring gear backlash should be 0.13-0.18 mm (0.005-0.007 in.). Verify back lash measurement in four positions.

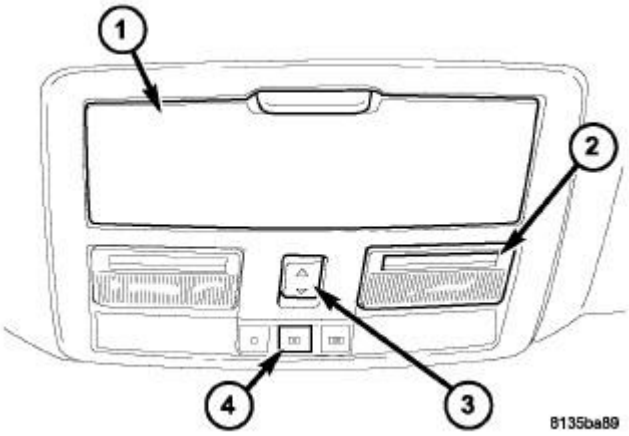

Fig. 157: Backlash Shim Correction
Courtesy of CHRYSLER LLC

3. If backlash measurement is less than 0.13 mm (0.005 in.), it is necessary to decrease the snap ring thickness on the ring gear (left) side, and increase the thickness on the pinion (right) side.
4. If backlash measurement is greater than 0.18 mm (0.007 in.), it is necessary to increase the snap ring thickness on the ring gear (right) side, and decrease the thickness on the pinion (left) side.

GEAR CONTACT PATTERN

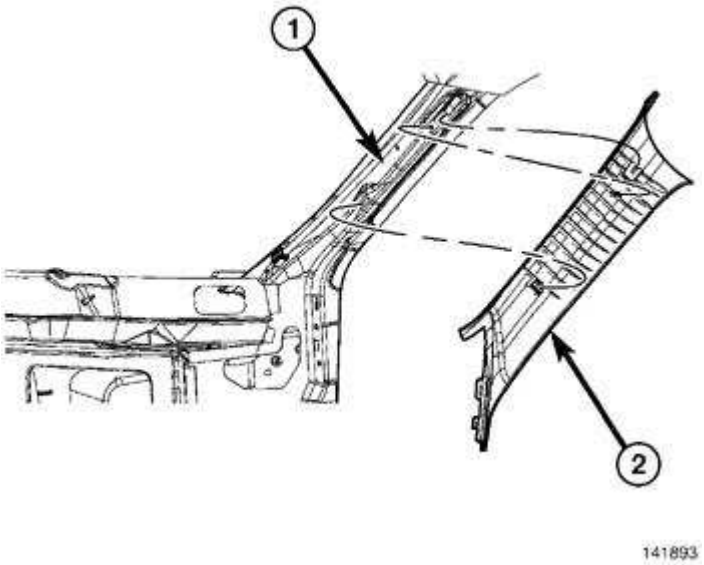

Fig. 158: Gear Tooth Contact Patterns
Courtesy of CHRYSLER LLC

The ring gear and pinion teeth contact patterns will show if the pinion depth is correct in the housing. It will also show if the ring gear backlash has been adjusted correctly. The backlash can be adjusted

within specifications to achieve desired tooth contact patterns.

1. Apply a thin coat of hydrated ferric oxide or equivalent to the drive and coast side of the ring gear teeth.
2. Wrap, twist, and hold a shop towel around the pinion yoke to increase the turning resistance of the pinion. This will provide a more distinct contact pattern.
3. With a boxed end wrench on a ring gear bolt, rotate the differential case one complete revolution in both directions while a load is being applied from shop towel.
4. Note and compare patterns on the ring gear teeth to Gear Tooth Contact Patterns chart and adjust pinion depth and gear backlash as necessary. The areas on the ring gear teeth with the greatest degree of contact against the pinion teeth will squeegee the compound to the areas with the least amount of contact.

SPECIFICATIONS

SPECIFICATIONS

SPECIFICATIONS

DESCRIPTION	SPECIFICATION
Axle Ratios	3.07, 3.64, 3.90
Ring Gear Diameter	198 mm (7.8 in.)
Ring Gear Backlash	0.13-0.18 mm (0.005-0.007 in.)
Side Bearing Preload	6000-8000 N
Axle Housing Retained Spread	0.18 mm to 0.23 mm (0.007 in. to 0.009 in.)
Select Snap Ring Size	3.60-4.68 mm (0.14-0.18 in.) In 0.02mm (0.0007 in.) increments
Select Pinion Shim Size	1.40-2.50mm (0.05-0.10 in.) In 0.01mm (0.0004 in.) increments
Pinion Torque To Rotate	2.25N.m (20 in. lbs.)
Total Torque To Rotate (Approx.)	3.38N.m (30 in. lbs.)

TORQUE SPECIFICATIONS

DESCRIPTION	N.m	Ft. Lbs.	In. Lbs.
Plug, Rear Axle Drain/Fill	60	44	-
Bolt, Differential Cover	30 +45°	22 + 45°	-
Bolt, Ring Gear-to-Differential Case	85	64	-
Bolt, Axle Housing-to-Crossmember	220	162	-
Bolt/Nut, Axle Front Mount Isolator	65	48	-
Bolt/Nut, Propeller Shaft Coupler-to-Axle	58	43	-

Flange			

SPECIAL TOOLS

SPECIAL TOOLS - 198 RII AXLE

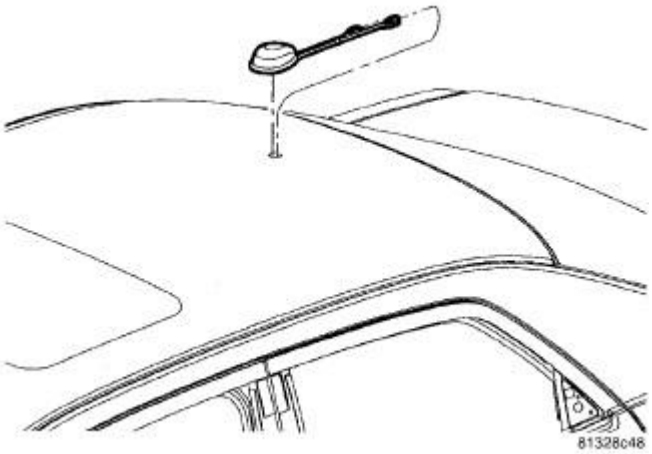

Fig. 159: Puller, 1026
Courtesy of CHRYSLER LLC

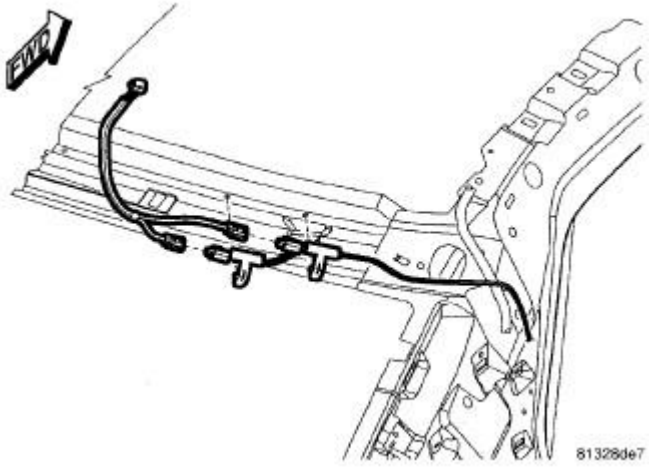

Fig. 160: Installer, 6448A
Courtesy of CHRYSLER LLC

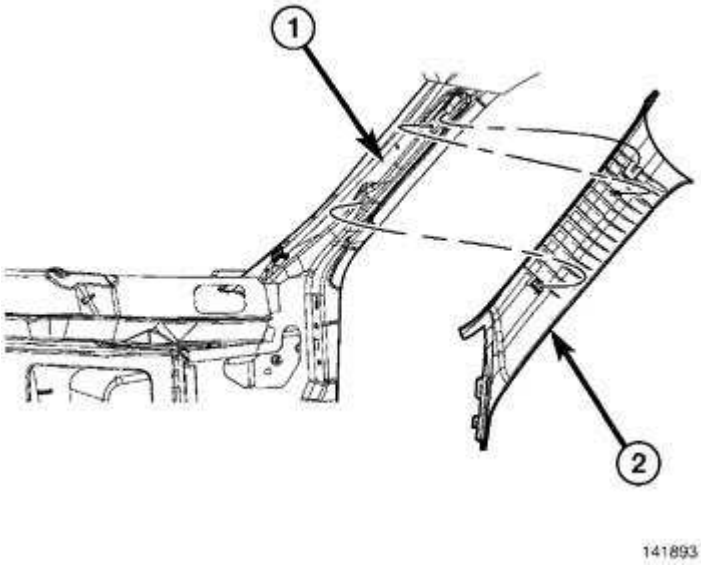

Fig. 161: Pinion Gauge Set 6774
Courtesy of CHRYSLER LLC

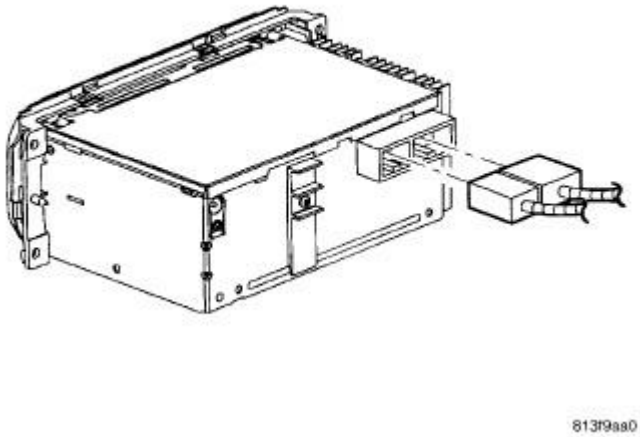

Fig. 162: Installer - 8255
Courtesy of CHRYSLER LLC

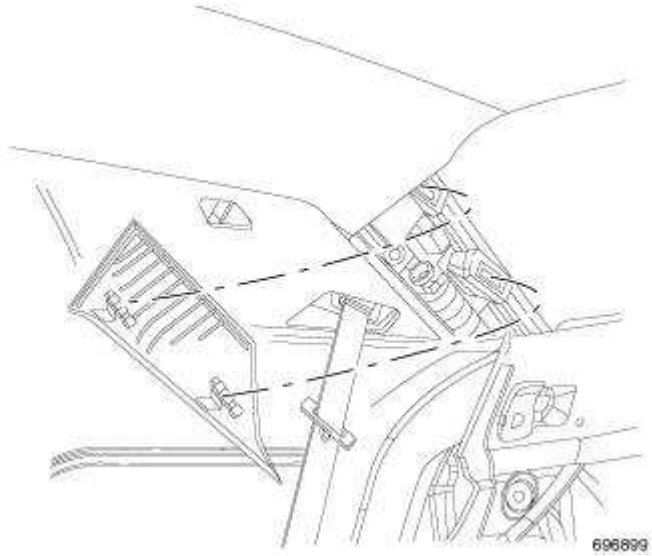

Fig. 163: Remover, 9084
Courtesy of CHRYSLER LLC

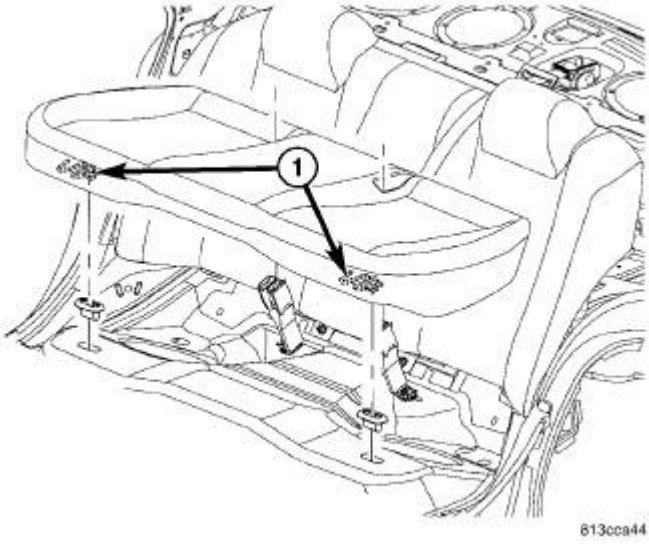

Fig. 164: Installer, 9223
Courtesy of CHRYSLER LLC

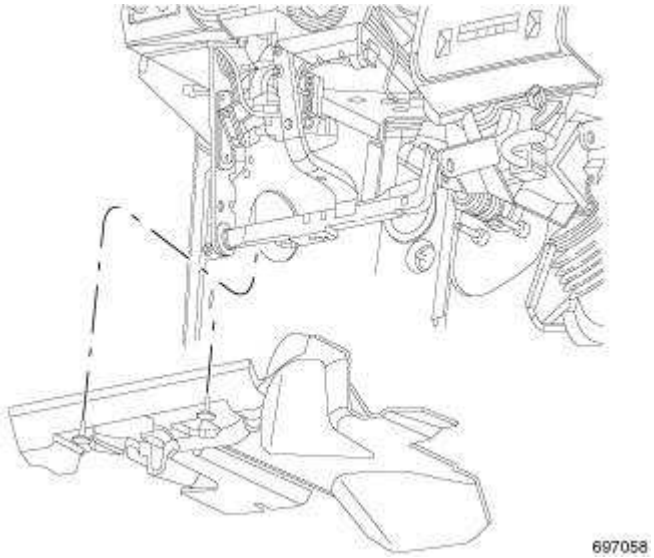

Fig. 165: Spreader Adapter Plates, 9226
Courtesy of CHRYSLER LLC

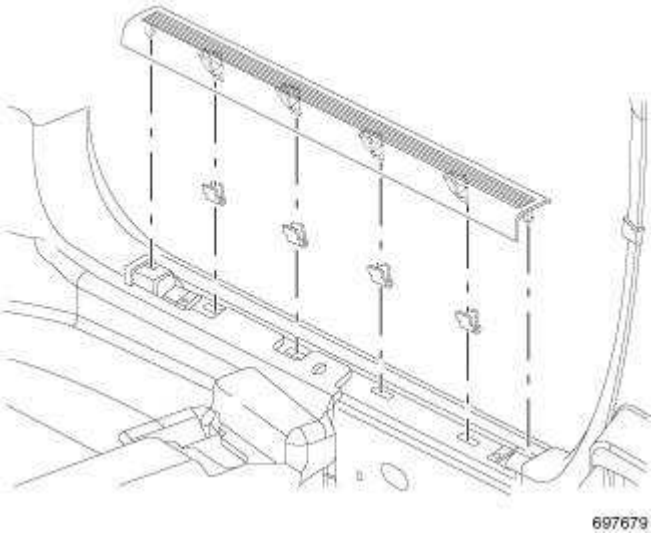

Fig. 166: Pinion Height Gage Block, 9227
Courtesy of CHRYSLER LLC

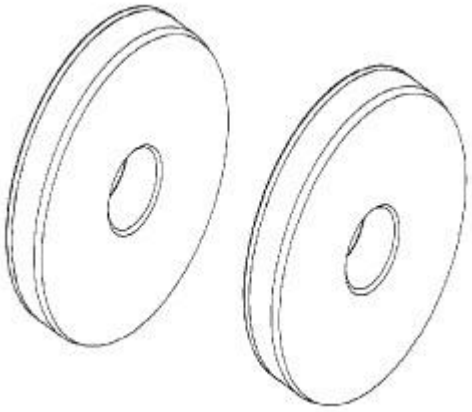

Fig. 167: Arbor Discs, 9228
Courtesy of CHRYSLER LLC

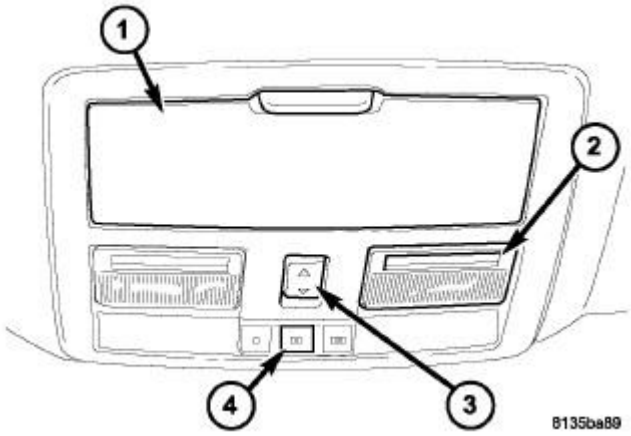

Fig. 168: Installer, 9231A
Courtesy of CHRYSLER LLC

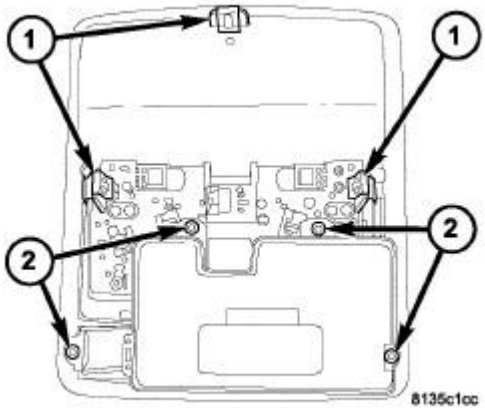

Fig. 169: Removal/Installation Arbor, 9522

Courtesy of CHRYSLER LLC

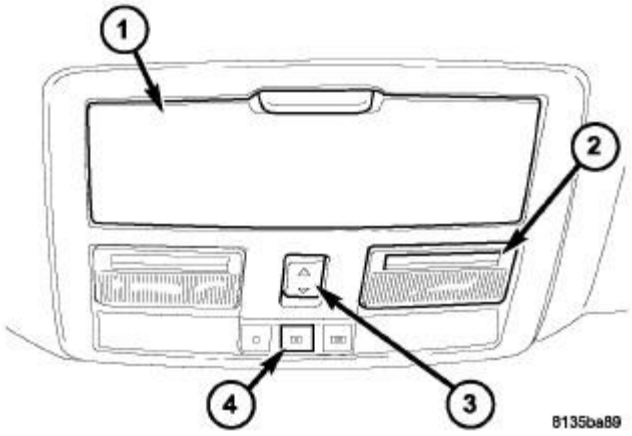

Fig. 170: Installer, 9523
Courtesy of CHRYSLER LLC

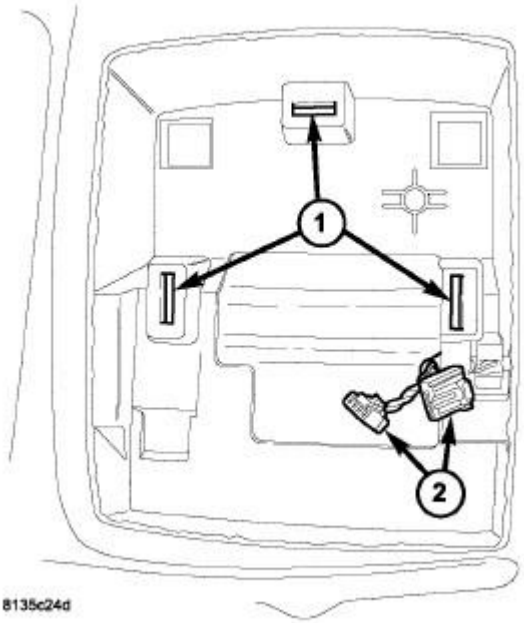

Fig. 171: Dial Indicator, 9524
Courtesy of CHRYSLER LLC

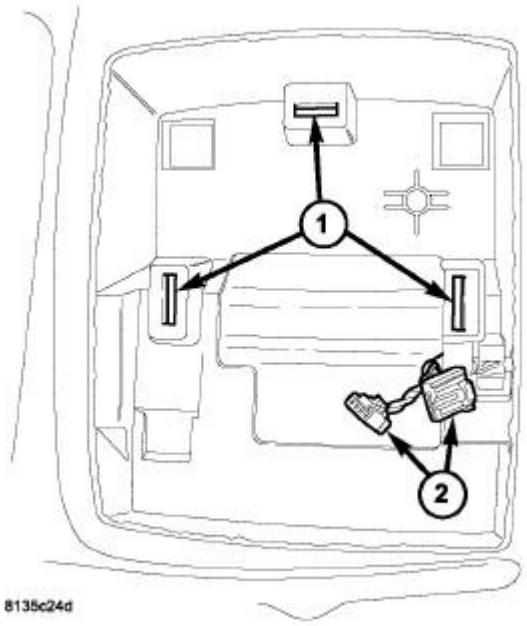

Fig. 172: Mounting Plate, 9630
Courtesy of CHRYSLER LLC

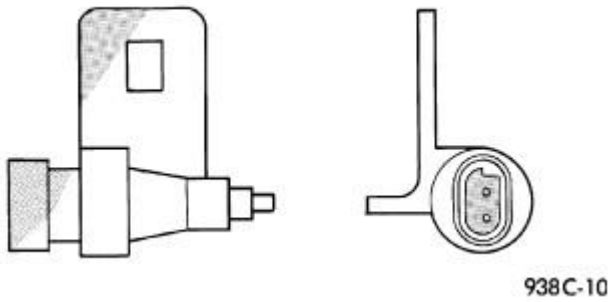

Fig. 173: Fixture, 9631
Courtesy of CHRYSLER LLC

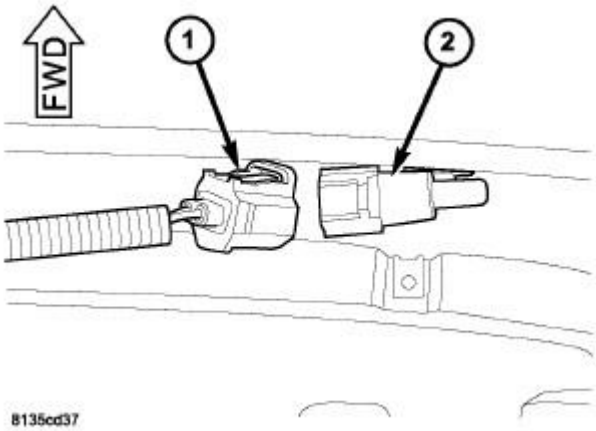

Fig. 174: Puller/Press, C-293-PA
Courtesy of CHRYSLER LLC

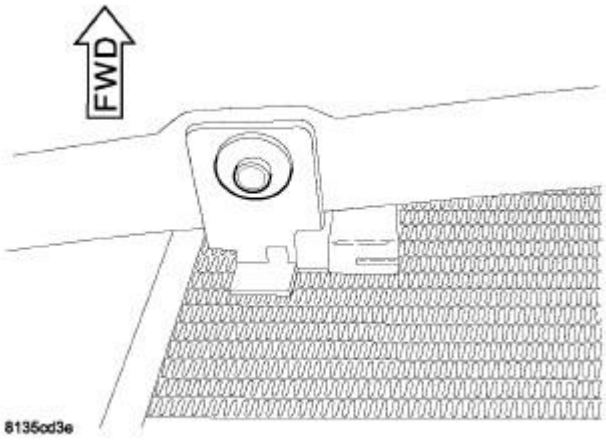

Fig. 175: Adapters, C-293-37
Courtesy of CHRYSLER LLC

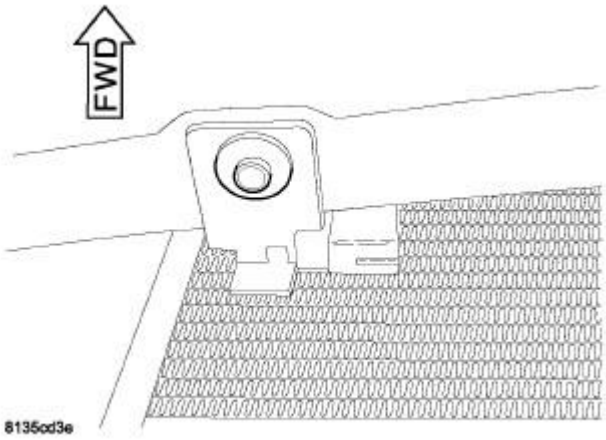

Fig. 176: Installer, C-3095-A
Courtesy of CHRYSLER LLC

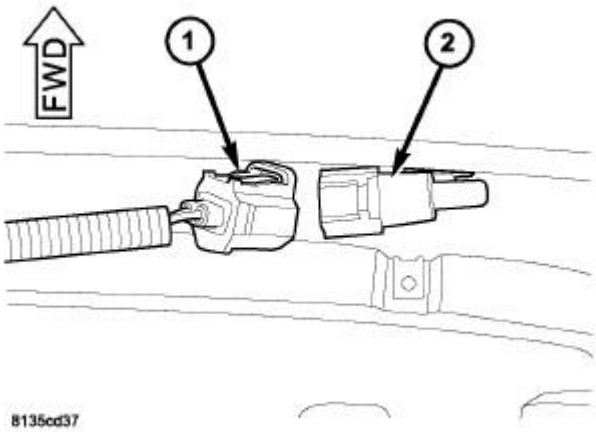

Fig. 177: Flange Wrench, C-3281
Courtesy of CHRYSLER LLC

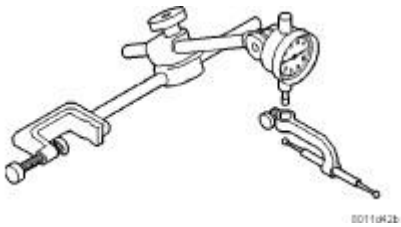

Fig. 178: Dial Indicator Set, C-3339-A
Courtesy of CHRYSLER LLC

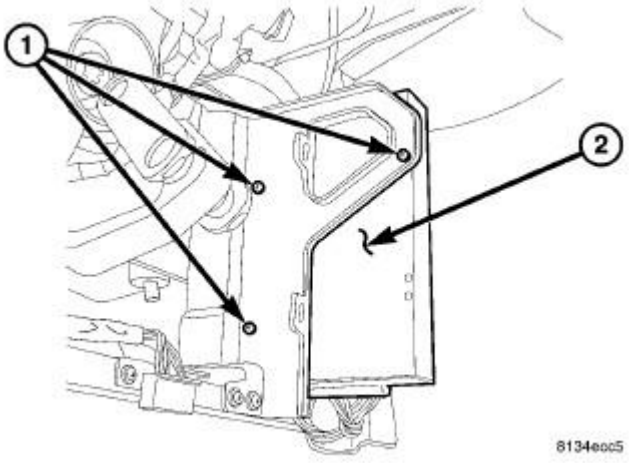

Fig. 179: Handle, C-4171
Courtesy of CHRYSLER LLC

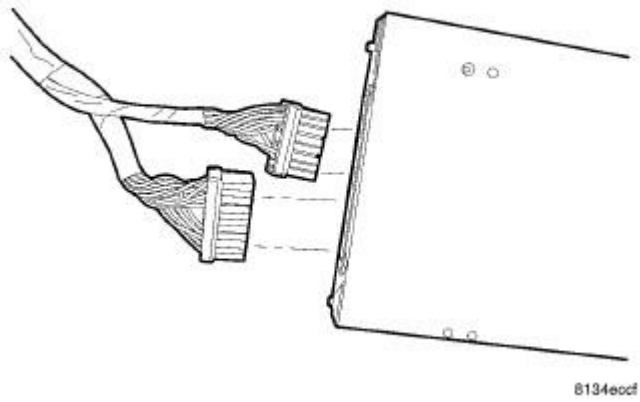

Fig. 180: Installer, C-4310
Courtesy of CHRYSLER LLC

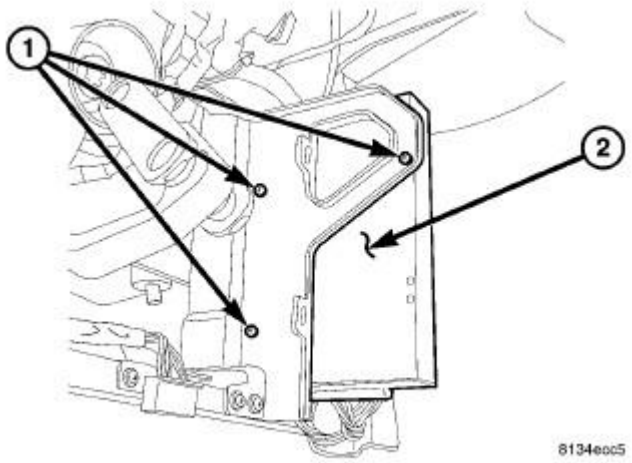

Fig. 181: Installer, D-146
Courtesy of CHRYSLER LLC

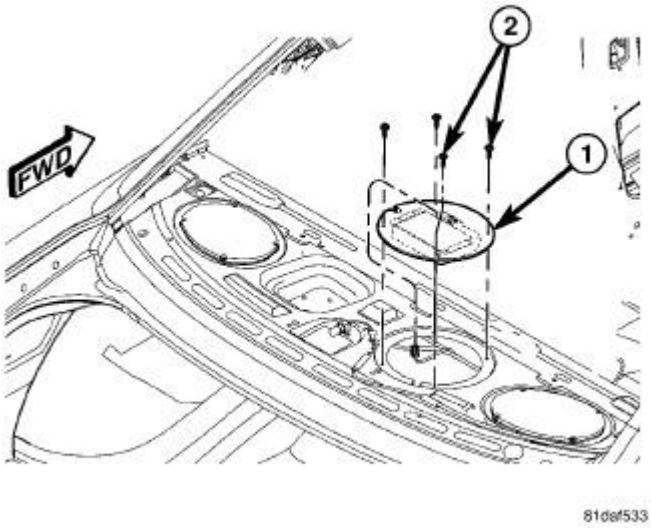

Fig. 182: Remover, D-149
Courtesy of CHRYSLER LLC

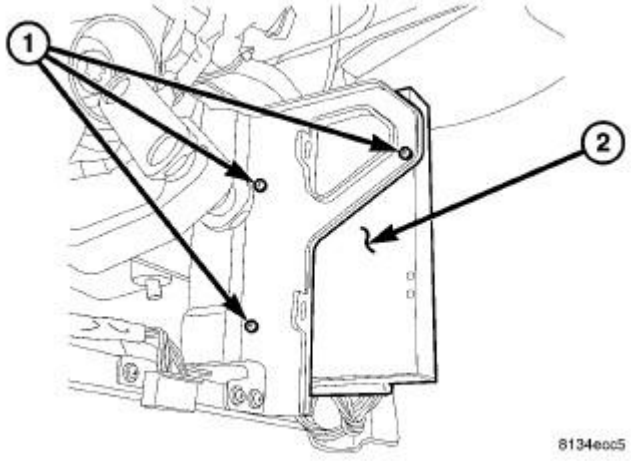

Fig. 183: Puller Extension, SP-3289
Courtesy of CHRYSLER LLC

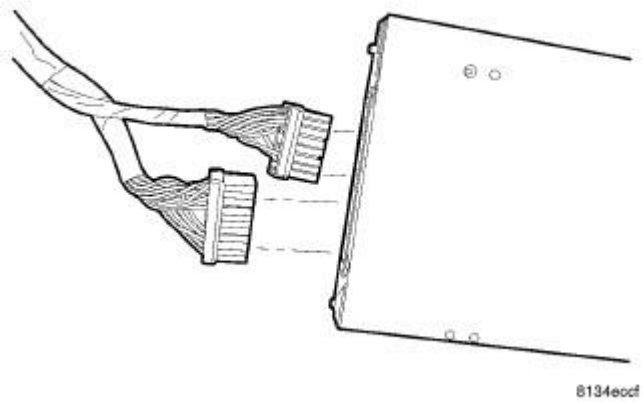

Fig. 184: Spreader, W-129-B
Courtesy of CHRYSLER LLC

BEARING, DIFFERENTIAL SIDE

Removal

REMOVAL

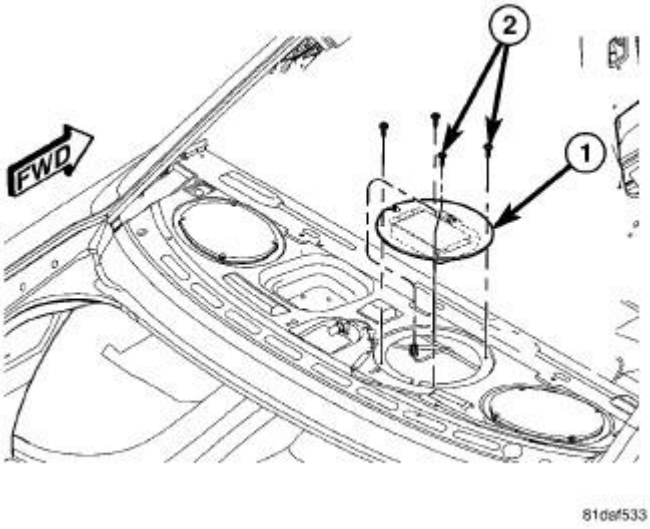

Fig. 185: Removing/Installing Differential
Courtesy of CHRYSLER LLC

1. Remove differential assembly from axle. See **Differential and Driveline/Rear Axle - 198MM - Removal**.

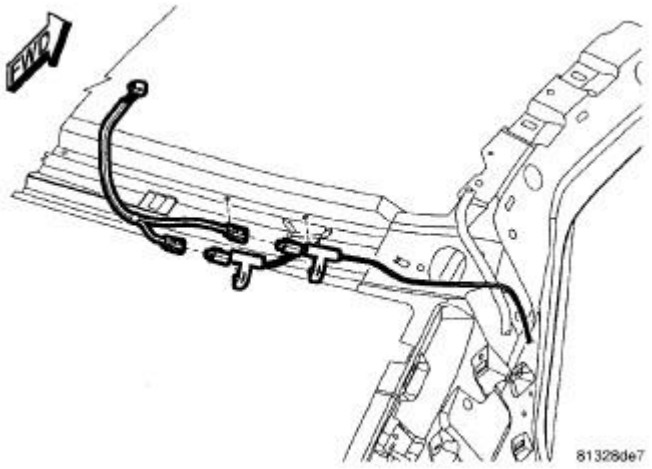

Fig. 186: Bearing Removal
Courtesy of CHRYSLER LLC

2. Remove bearings (2) from the differential case (3) with Puller/Press C-293-PA (5), Adapters C-293-37 (1) and Puller Extension SP-3289 (4).

Installation

INSTALLATION

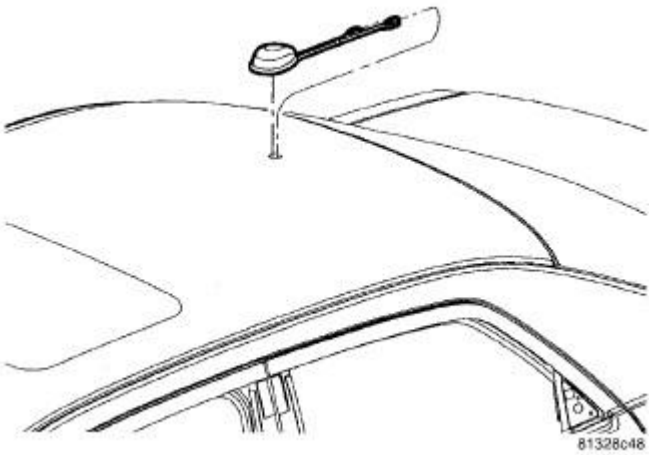

Fig. 187: Differential Side Bearing Installation
Courtesy of CHRYSLER LLC

1. Using Installer 9523 and Handle C-4171, press differential side bearings onto differential case.

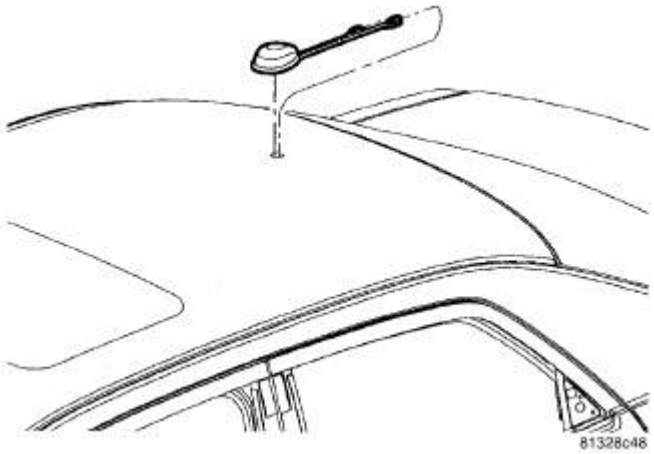

Fig. 188: Removing/Installing Differential
Courtesy of CHRYSLER LLC

2. Install differential and reassemble axle assembly.

CASE ASSEMBLY, DIFFERENTIAL

Removal

REMOVAL

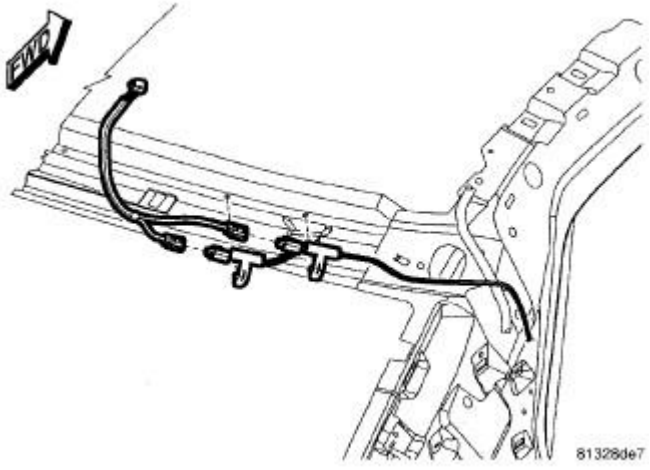

Fig. 189: 198 Axle Clamped In Vise
Courtesy of CHRYSLER LLC

1. Clamp rear axle assembly into bench vise (1).

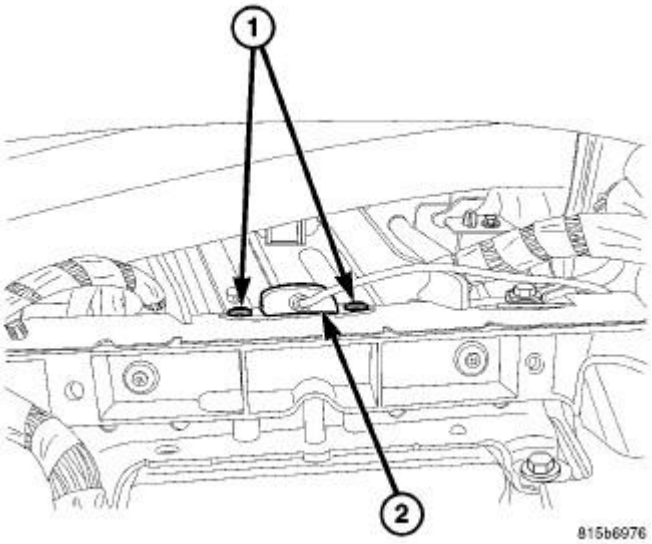

Fig. 190: Drain Plug Removal/Installation
Courtesy of CHRYSLER LLC

2. Remove drain plug (1) and drain fluid into container suitable for reuse.
3. Install drain plug and torque to 60 N.m (44 ft. lbs.).

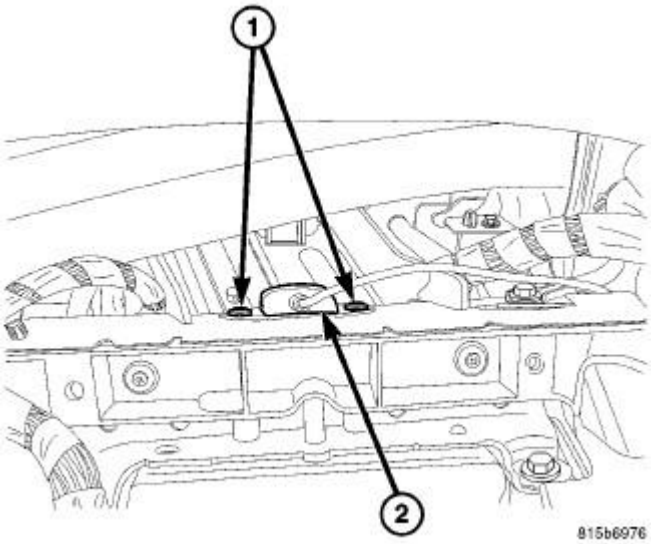

Fig. 191: Measuring Turning Torque
Courtesy of CHRYSLER LLC

4. Using suitable torque wrench (1), measure and record rear axle assembly total turning torque.

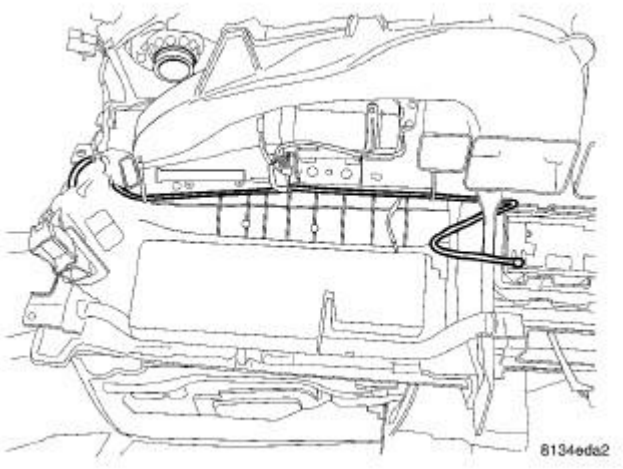

Fig. 192: Axle Seal Removal
Courtesy of CHRYSLER LLC

5. Using suitable screwdriver (1), remove both axle seals (2).

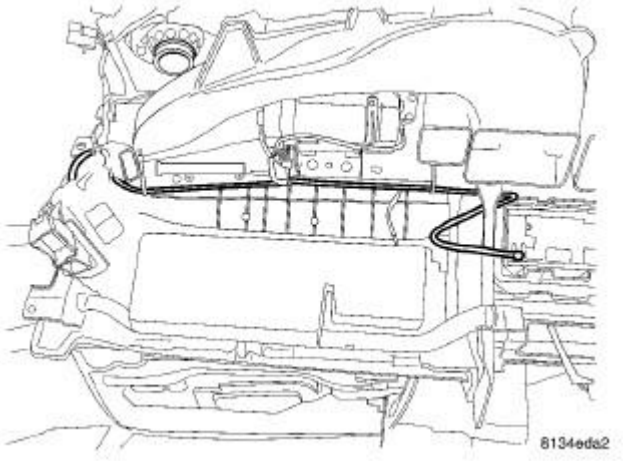

Fig. 193: Axle Housing Cover And Bolts
Courtesy of CHRYSLER LLC

6. Remove twelve axle cover-to-housing bolts (1) and remove cover (2).

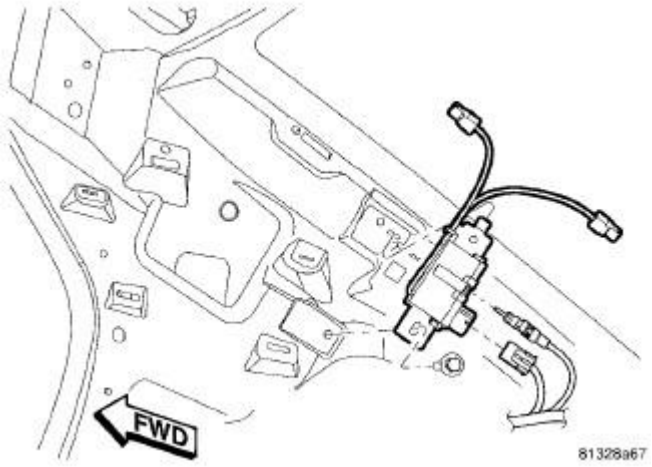

Fig. 194: Spreader Adapters 9226
Courtesy of CHRYSLER LLC

7. Install Spreader Adapter Plates (1), Tool 9226, as shown on illustration. Adapters contain two hole patterns and are labeled accordingly.

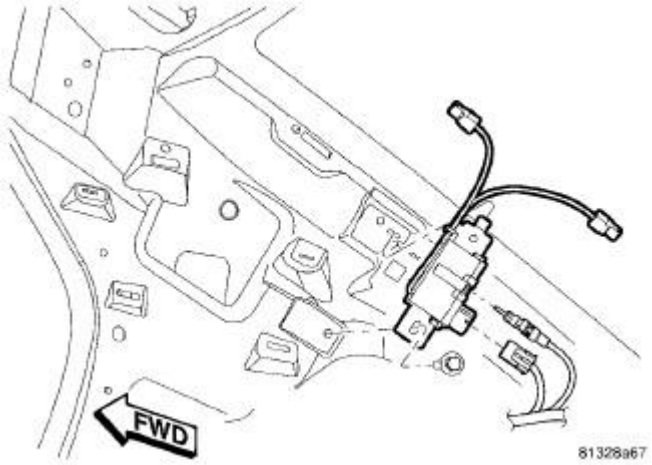

Fig. 195: Spreader W-129-B Installed
Courtesy of CHRYSLER LLC

8. Install Spreader W-129-B (1), as shown on illustration.

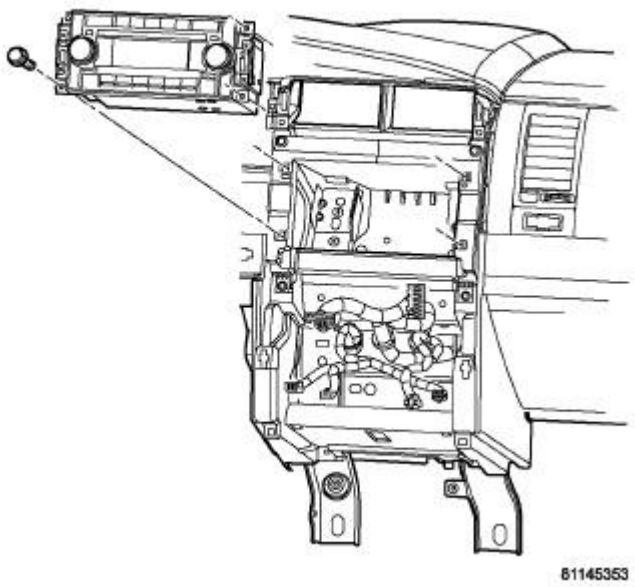

Fig. 196: Measuring Carrier Spread
Courtesy of CHRYSLER LLC

9. Set up Dial Indicator Set C-3339A to measure housing spread as shown on illustration.
   a. Clamp SP-5426 (1)
   b. Post SP-5425-B (2)
   c. Metric Dial Indicator 9524 (3)

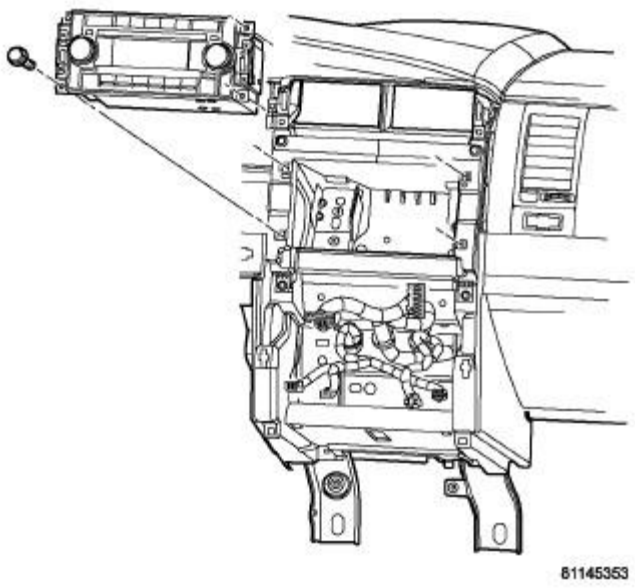

Fig. 197: Expanding/Contracting W-129-B Spreader
Courtesy of CHRYSLER LLC

10. Spread axle housing no more than 0.30 mm (0.012 in.).

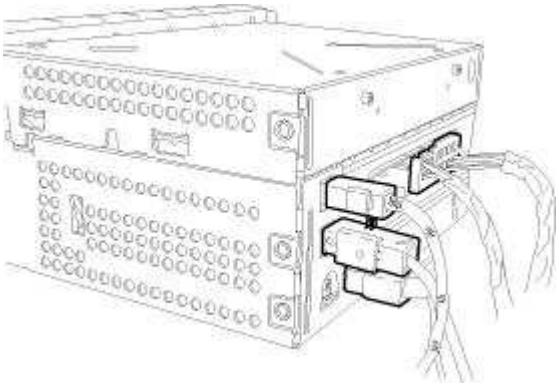

Fig. 198: Snap Ring Removal/Installation
Courtesy of CHRYSLER LLC

NOTE: The differential side bearing snap rings are select-fit, and control ring gear backlash and differential side bearing preload. It is important to return original snap rings to their original position.

11. Using suitable snap ring pliers (2), compress and remove differential side bearing snap rings (1). Identify and tag for proper reuse.

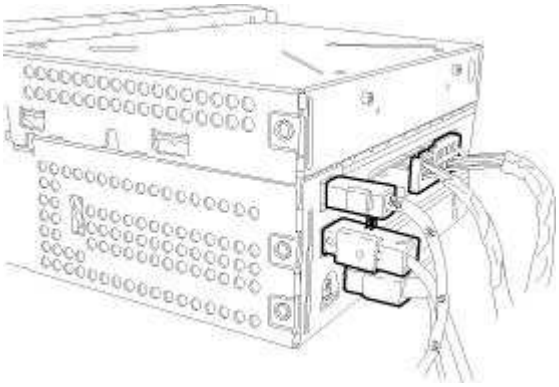

Fig. 199: Expanding/Contracting W-129-B Spreader
Courtesy of CHRYSLER LLC

12. Back off Spreader W-129-B (1) to relax tension on housing.

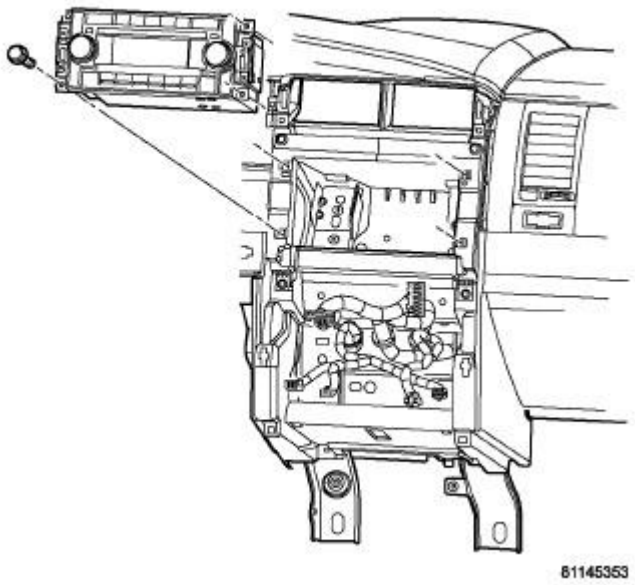

Fig. 200: Measuring Side Bearing Snap Ring
Courtesy of CHRYSLER LLC

13. Measure snap ring thickness and record for future use.

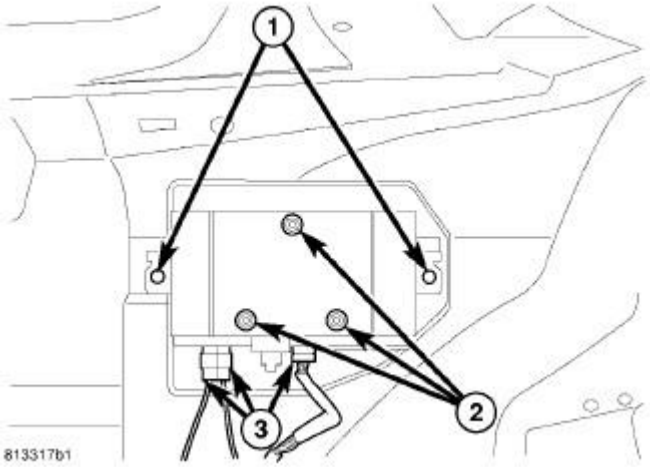

Fig. 201: Removing Side Bearing Cups
Courtesy of CHRYSLER LLC

14. Install Removal/Installation Arbor 9522 (1) into one side of housing and push inward to release differential side bearing cup (2) from opposite side. Repeat for other bearing.

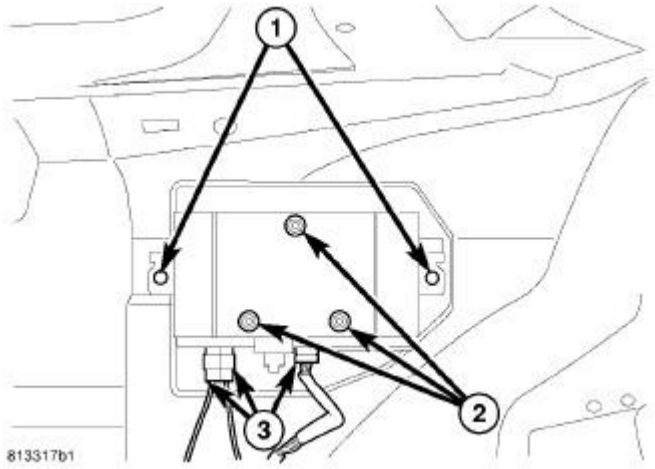

Fig. 202: Removing/Installing Differential
Courtesy of CHRYSLER LLC

NOTE: **Note: If difficulty removing differential is encountered due to interference with Spreader W-129-B and Spreader Adapter Plates 9226, remove spreader and adapter plates to facilitate removal.**

15. Remove differential assembly from axle housing.

Disassembly

DISASSEMBLY

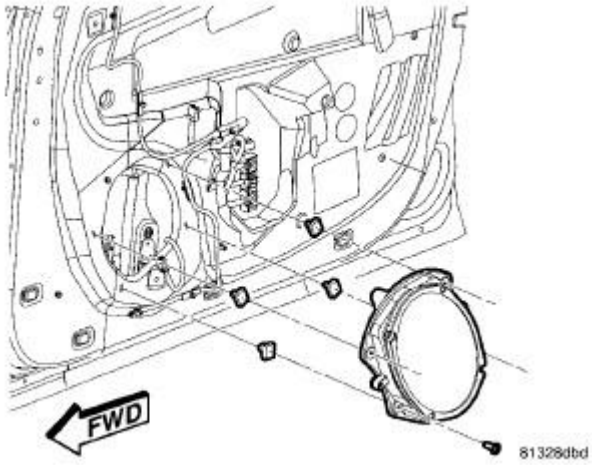

Fig. 203: Ring Gear Bolts (198)
Courtesy of CHRYSLER LLC

1. Remove differential ring gear-to-case bolts (1).

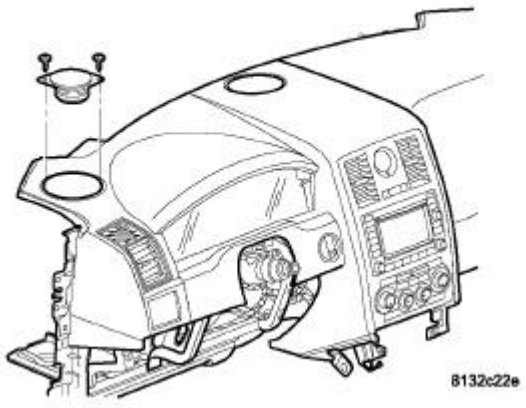

Fig. 204: Ring Gear Removal
Courtesy of CHRYSLER LLC

2. Using brass drift (1), remove ring gear (2).

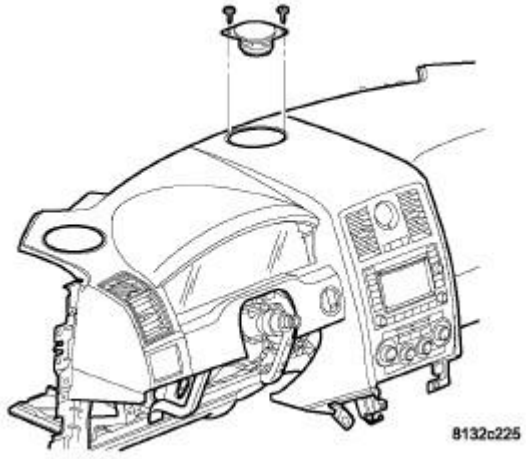

Fig. 205: Bearing Removal
Courtesy of CHRYSLER LLC

3. Remove bearings (2) from the differential case (3) with Puller/Press C-293-PA (5), Adapters C-293-37 (1) and Puller Extension SP-3289 (4).

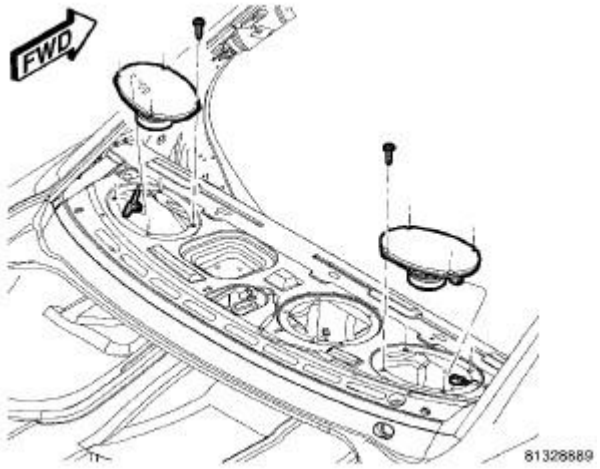

Fig. 206: Differential Mounted On Tool 9630
Courtesy of CHRYSLER LLC

4. Install the differential to Mounting Plate 9630 (2) to the differential (1) and then install the assembly into a bench vise.

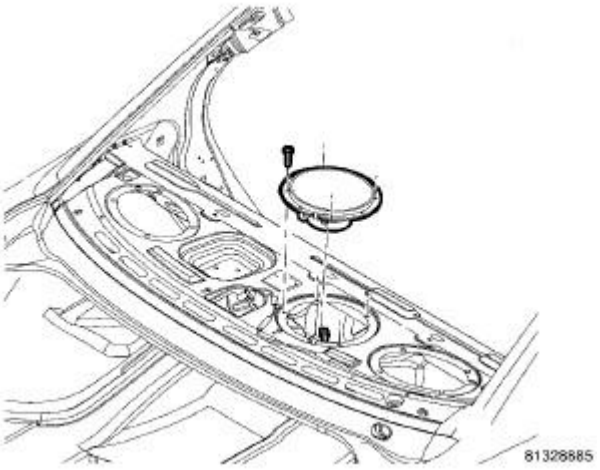

Fig. 207: Roll Pin Removal
Courtesy of CHRYSLER LLC

5. Drive out pinion shaft-to-case roll pin using hammer and suitable punch.

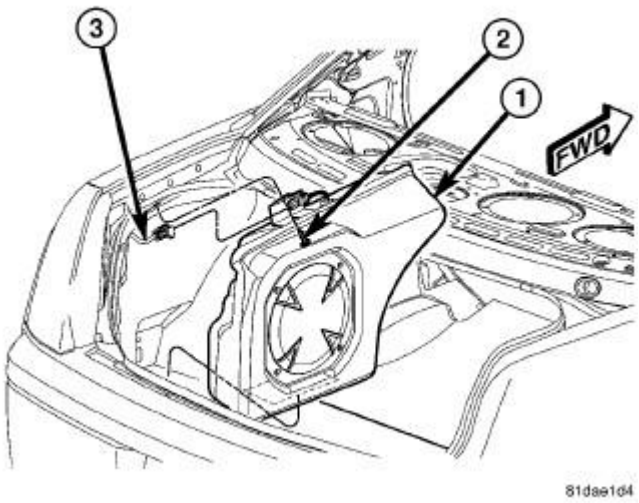

Fig. 208: Removing Pinion Shaft
Courtesy of CHRYSLER LLC

6. Using brass drift (2), drive out pinion shaft (1).

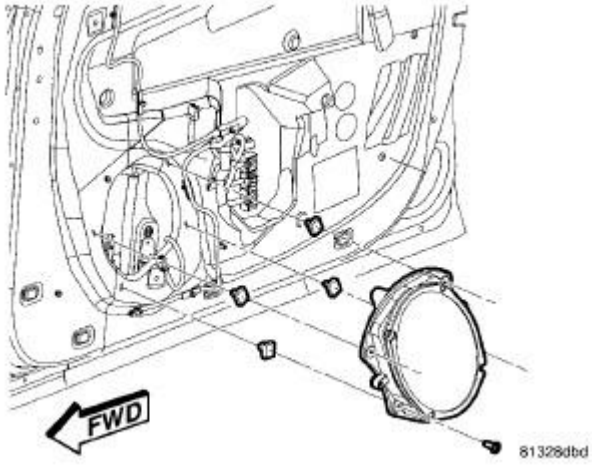

Fig. 209: Installing Fixture 9631 Into Differential Side Gear
Courtesy of CHRYSLER LLC

7. Install Fixture 9631 (1) into differential side gear.

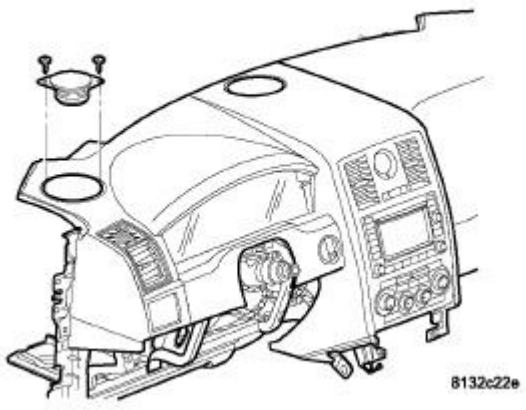

Fig. 210: Rotate Differential Gears With 9631
Courtesy of CHRYSLER LLC

8. Rotate Fixture 9631 (1) to gain access to and remove pinion gears and thrust washers.

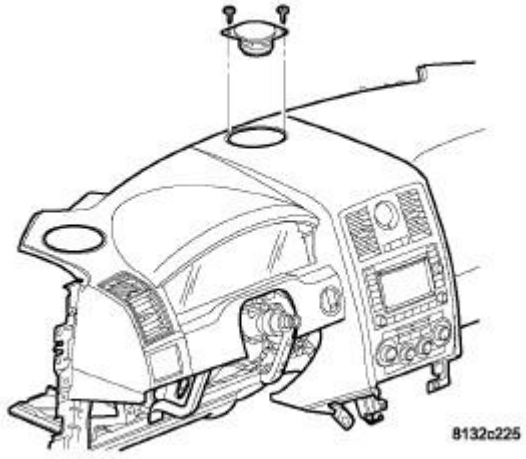

Fig. 211: Side Gears & Thrust Washers
Courtesy of CHRYSLER LLC

9. Remove differential side gears (4) and thrust washers (5).

Assembly

ASSEMBLY

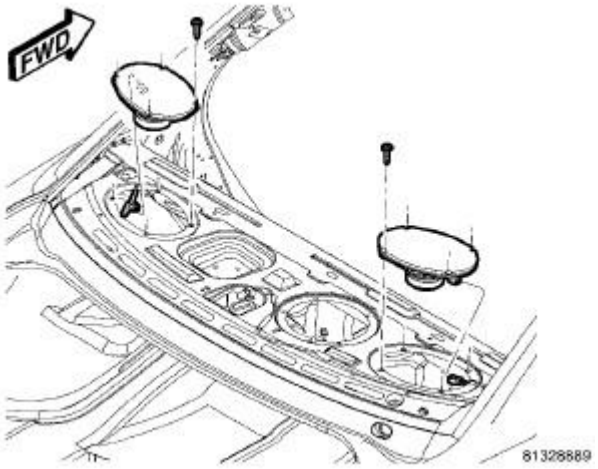

Fig. 212: Installing Side Gears With 9631
Courtesy of CHRYSLER LLC

1. Lubricate all differential components with hypoid gear lubricant.
2. Install differential side gears (2) and thrust washers to Fixtures 9631 (1) as shown in illustration.

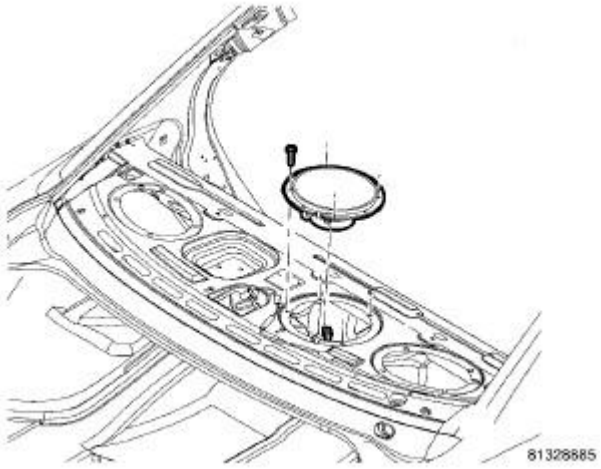

Fig. 213: Remove/Install Pinion Gear And Washer
Courtesy of CHRYSLER LLC

3. Install differential pinion gears (1) and thrust washers into position across from each other.

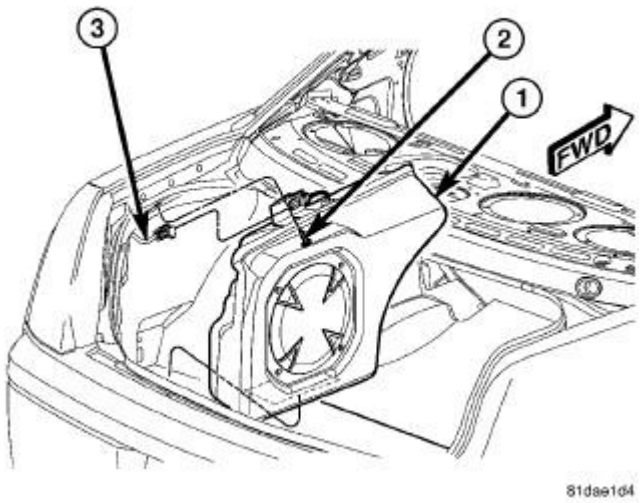

Fig. 214: Rotate Differential Gears With 9631
Courtesy of CHRYSLER LLC

4. Rotate pinion gears into place using Fixture 9631 and line up gear centers with pinion shaft bore.

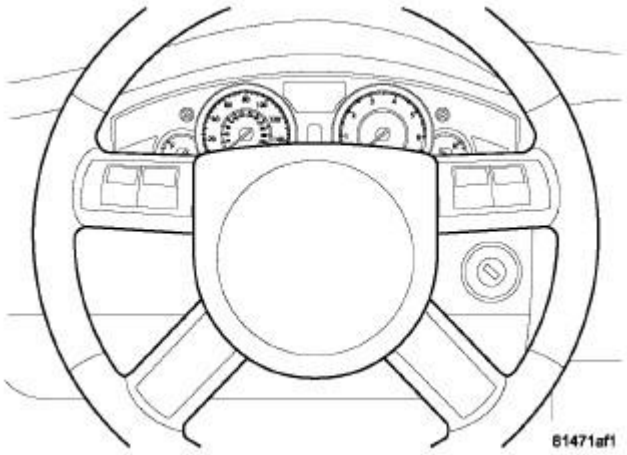

Fig. 215: Roll Pin Installation
Courtesy of CHRYSLER LLC

5. Using a brass hammer, drive pinion shaft (3) into differential case (1), making sure to line up roll pin bores.
6. Using suitable punch (2), drive new roll pin into position.

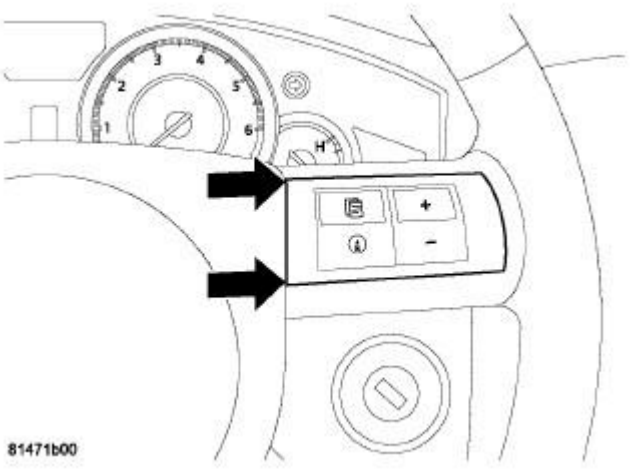

Fig. 216: Measure Rotating Torque
Courtesy of CHRYSLER LLC

7. Measure differential gear rotating torque as shown on illustration. Differential gear rotating torque should be 5-30 N.m (44-266 in. lbs.) Rotating torque is adjusted using select side gear thrust washers. Refer to the following chart.

Available Side Gear Thrust Washer Thicknesses
1.25 mm (0.049 in.)
1.30 mm (0.051 in.)
1.35 mm (0.053 in.)
1.40 mm (0.055 in.)
1.45 mm (0.057 in.)
1.50 mm (0.059 in.)
1.55 mm (0.061 in.)
1.60 mm (0.063 in.)
1.65 mm (0.065 in.)

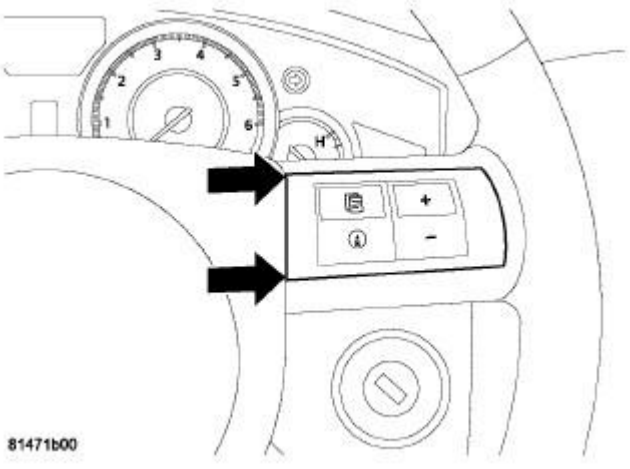

Fig. 217: Differential Mounted On Tool 9630
Courtesy of CHRYSLER LLC

8. Remove differential case from Mounting Plate 9630 (2).

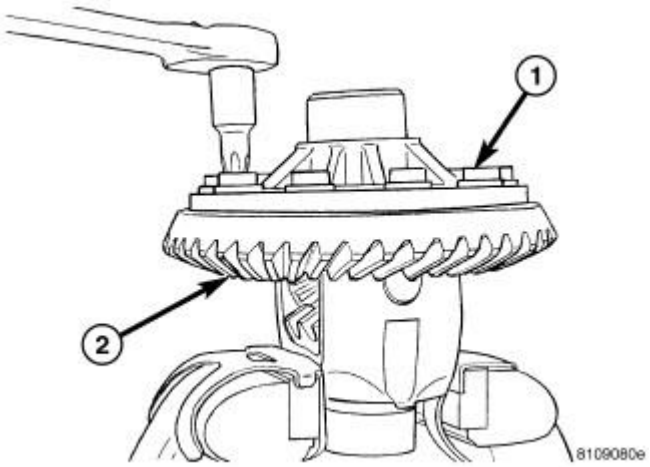

Fig. 218: Ring Gear Bolts
Courtesy of CHRYSLER LLC

9. Install ring gear to case. Lightly tap ring gear into position to facilitate starting of bolts.
10. Install **new** ring gear-to-case bolts and torque to 85 N.m (63 ft. lbs.).

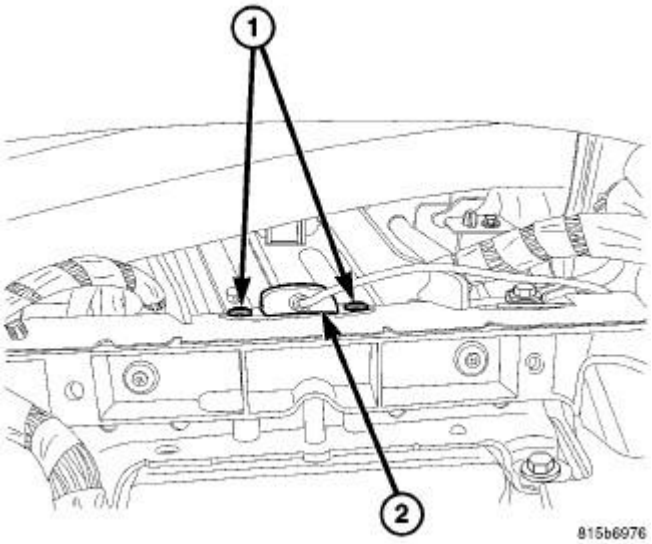

Fig. 219: Differential Side Bearing Installation
Courtesy of CHRYSLER LLC

11. Using Installer 9523 (2) and Handle C-4171 (1), press **new** differential side bearings (3) onto differential case.

Installation

INSTALLATION

NOTE: If replacement differential side bearings or differential case are being installed, it is necessary to measure and adjust Differential Side Bearing Preload and Gear Backlash. See Differential and Driveline/Rear Axle - 198MM - Adjustments to determine proper snap ring selection.

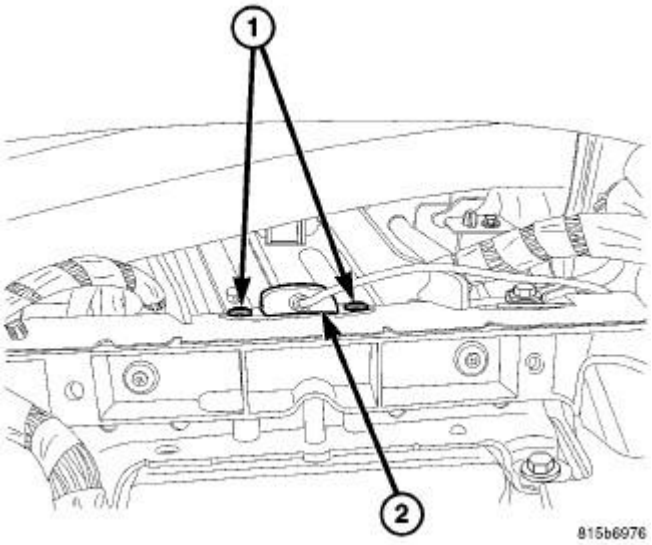

Fig. 220: Removing/Installing Differential
Courtesy of CHRYSLER LLC

1. Install differential assembly (1) into axle housing.

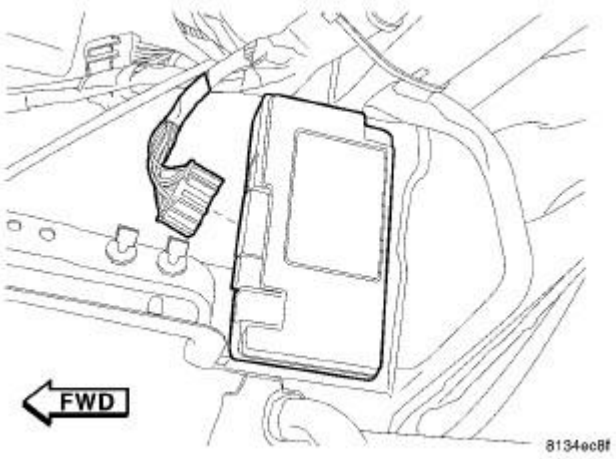

Fig. 221: Installing Side Bearing Cups
Courtesy of CHRYSLER LLC

2. Install differential side bearing cups (2).

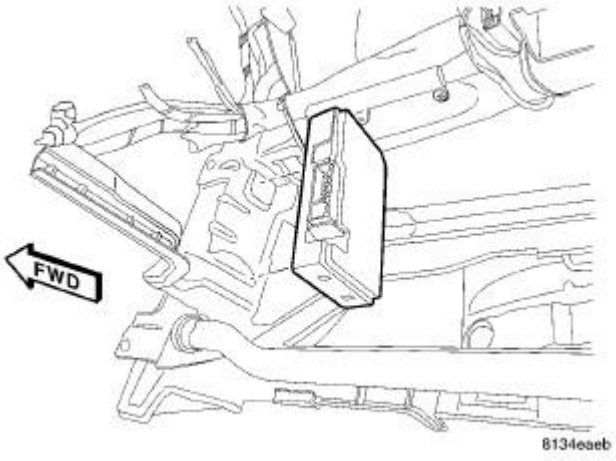

Fig. 222: Seating Side Bearing Cups Using Tool 9522
Courtesy of CHRYSLER LLC

3. Use Removal/Installation Arbor 9522 (1) to aid in seating side bearing cups (2).

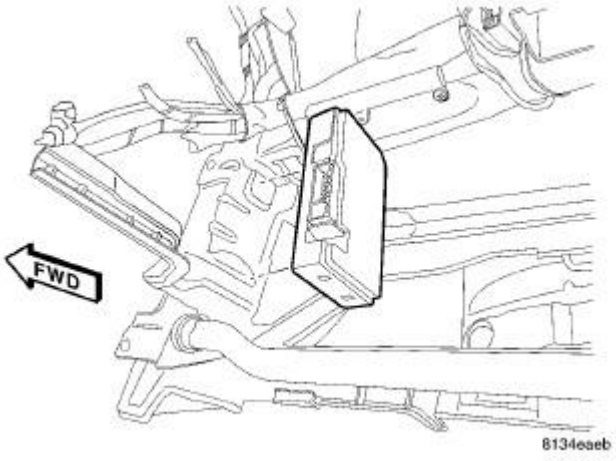

Fig. 223: Measuring Carrier Spread
Courtesy of CHRYSLER LLC

4. Set up Dial Indicator Set C-3339A to measure housing spread as shown on illustration:
   a. Clamp SP-5426 (1)
   b. Post SP-5425-B (2)
   c. Metric Dial Indicator 9524 (3)

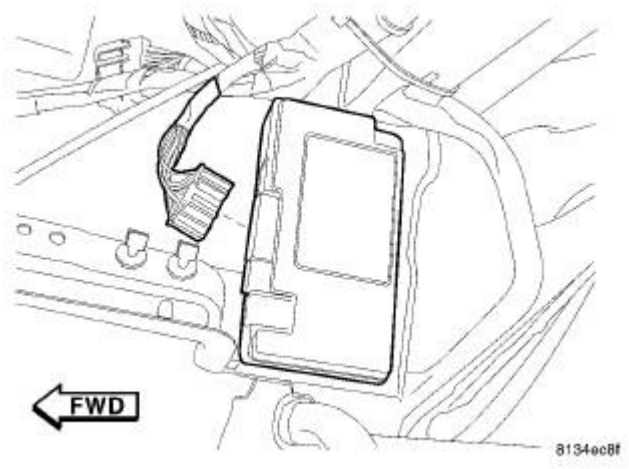

Fig. 224: Expanding/Contracting W-129-B Spreader
Courtesy of CHRYSLER LLC

5. Expand Spreader W-129-B (1) to spread axle housing no more than 0.30 mm (0.012 in.).

NOTE: **The differential side bearing snap rings are select-fit, and control ring gear backlash and differential side bearing preload. It is necessary to return snap rings to their original position. If replacement differential side bearings or differential case are being installed. See Differential and Driveline/Rear Axle - 198MM - Adjustments to determine proper snap ring selection.**

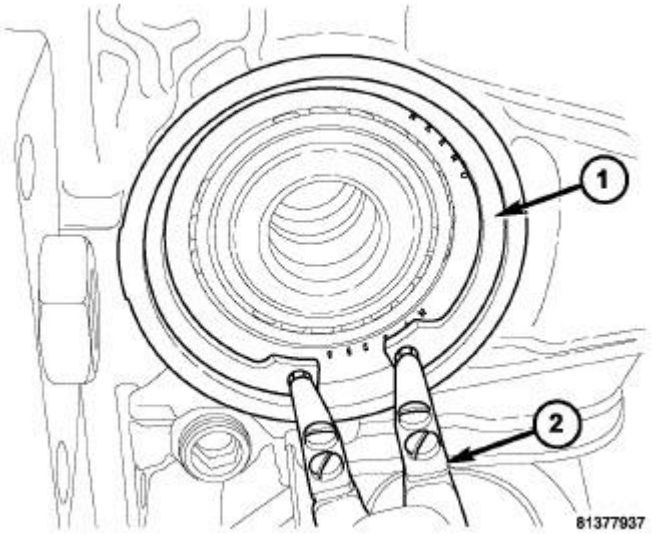

Fig. 225: Snap Ring Removal/Installation
Courtesy of CHRYSLER LLC

6. Using suitable snap ring pliers (2), install differential side bearing snap rings (1).



Fig. 226: Expanding/Contracting W-129-B Spreader
Courtesy of CHRYSLER LLC

7. Back off Spreader W-129-B (1) to relax tension on housing.

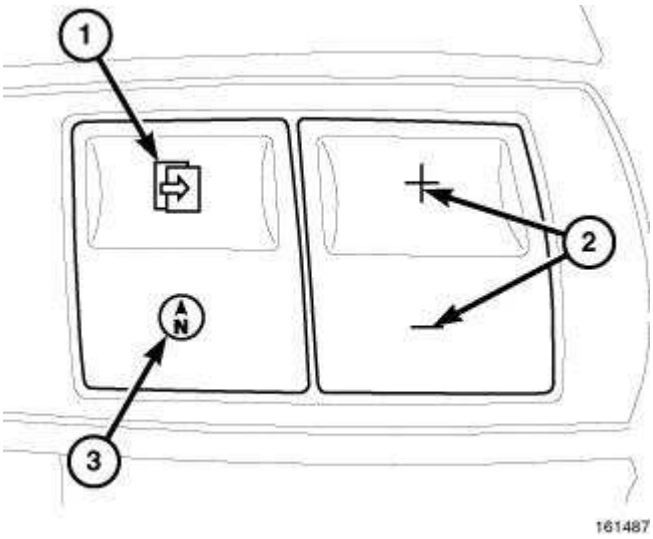

Fig. 227: Axle Seal Installation
Courtesy of CHRYSLER LLC

8. Install axle seals (1) using Installer 9223 (2).

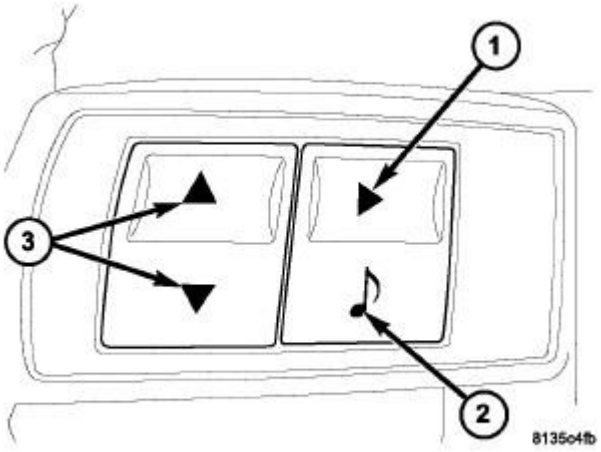

Fig. 228: Spreader Adapters 9226
Courtesy of CHRYSLER LLC

9. Remove Spreader W-129-B and Spreader Adapter Plates 9226 (1).

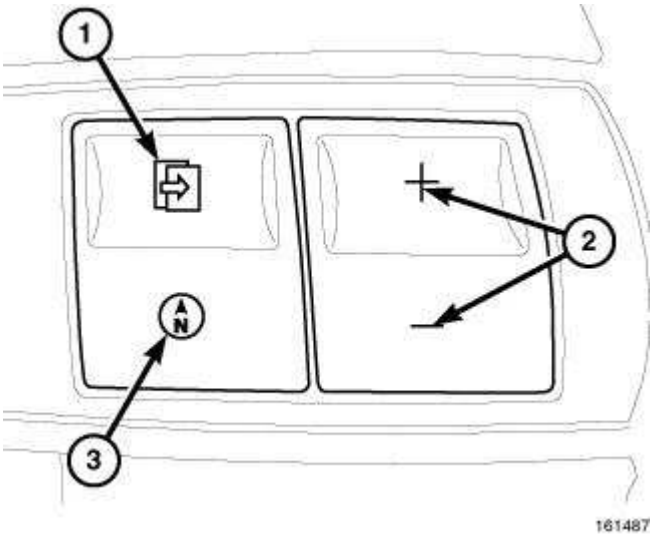

Fig. 229: Applying 198 Sealant To Axle Housing Cover
Courtesy of CHRYSLER LLC

10. Apply 4mm (0.157 in.) bead (2) of Mopar® Axle RTV to axle housing cover (1) as shown on illustration.

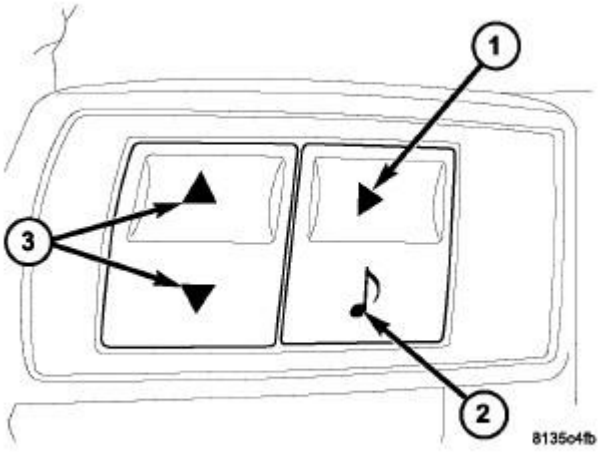

Fig. 230: Axle Housing Cover And Bolts
Courtesy of CHRYSLER LLC

11. Install cover to axle housing. Install and torque cover-to-housing bolts to 30 N.m (22 ft. lbs.) + 45°.

COVER, DIFFERENTIAL

Removal

REMOVAL

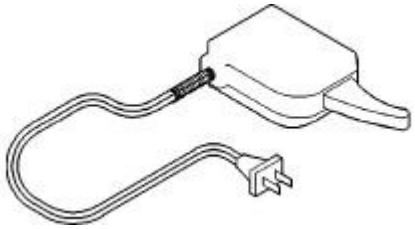

Fig. 231: Axle Housing Cover And Bolts
Courtesy of CHRYSLER LLC

1. Remove axle assembly from vehicle. See **Differential and Driveline/Rear Axle - 198MM - Removal**
2. Remove axle housing cover bolts (1).
3. Using suitable screwdriver, remove axle housing cover (2).

Installation

INSTALLATION

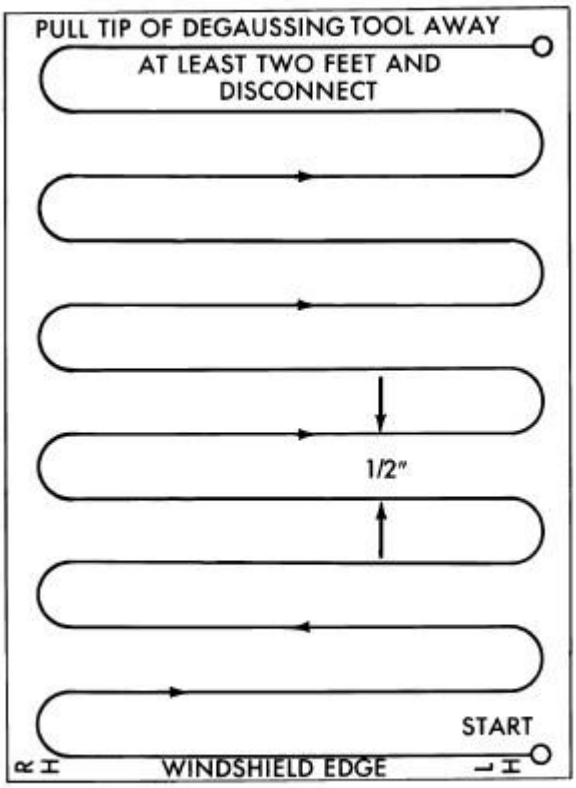

J908E-27

Fig. 232: Applying 198 Sealant To Axle Housing Cover
Courtesy of CHRYSLER LLC

1. After thoroughly cleaning axle housing cover (1), apply a 4 mm (0.157 in.) bead (2) of Mopar® Axle RTV as shown on illustration.

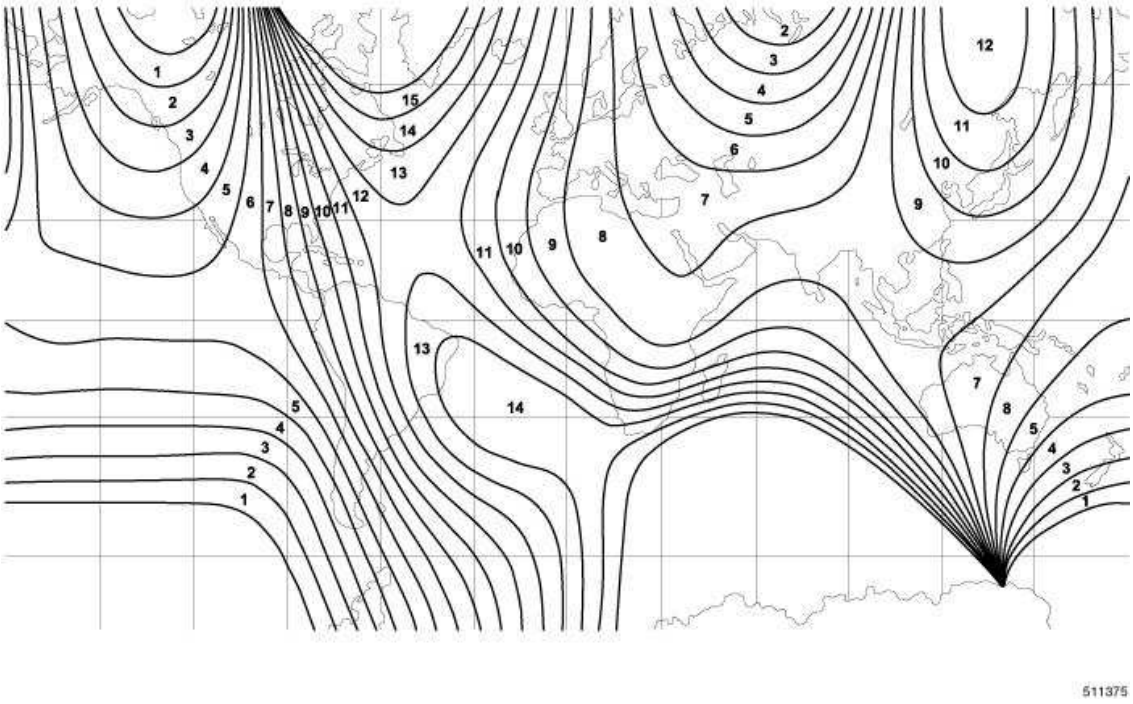

Fig. 233: Axle Housing Cover And Bolts
Courtesy of CHRYSLER LLC

2. Immediately install cover (2) to axle housing. Install and torque axle housing cover bolts (1) to 30 N.m (22 ft. lbs.) + 45°.
3. Install axle assembly to vehicle. See **Differential and Driveline/Rear Axle - 198MM - Installation**

GEAR, RING AND PINION

Removal

REMOVAL

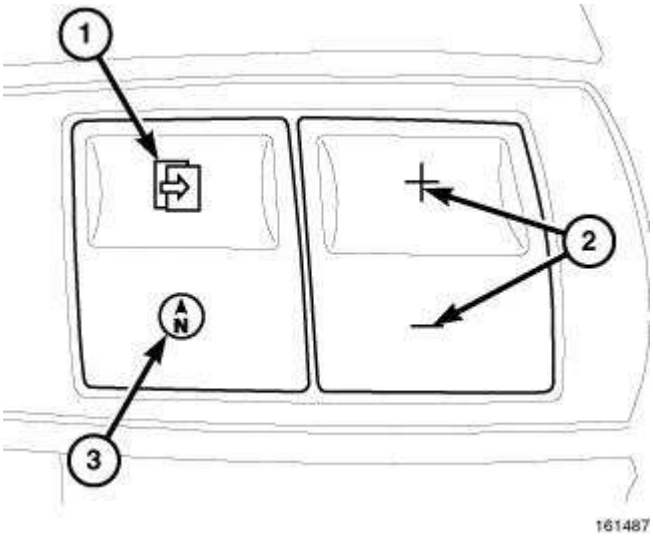

Fig. 234: Ring Gear Bolts
Courtesy of CHRYSLER LLC

1. Remove differential assembly. See **Differential and Driveline/Rear Axle - 198MM/CASE ASSEMBLY, Differential - Removal**
2. Place differential case in a soft-jawed vise and remove ring gear-to-case bolts.

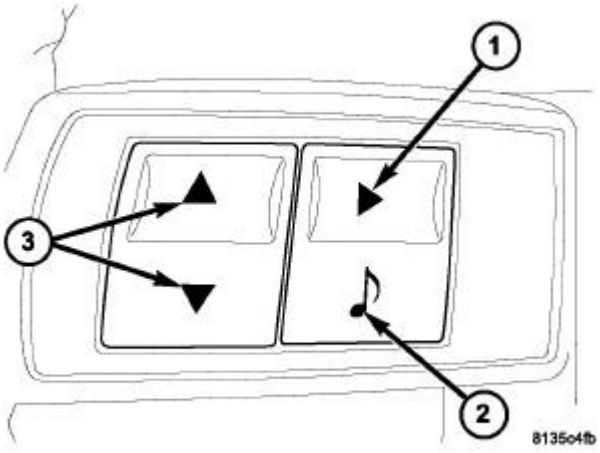

Fig. 235: Ring Gear Removal
Courtesy of CHRYSLER LLC

3. Remove ring gear from differential case with a brass drift and hammer.

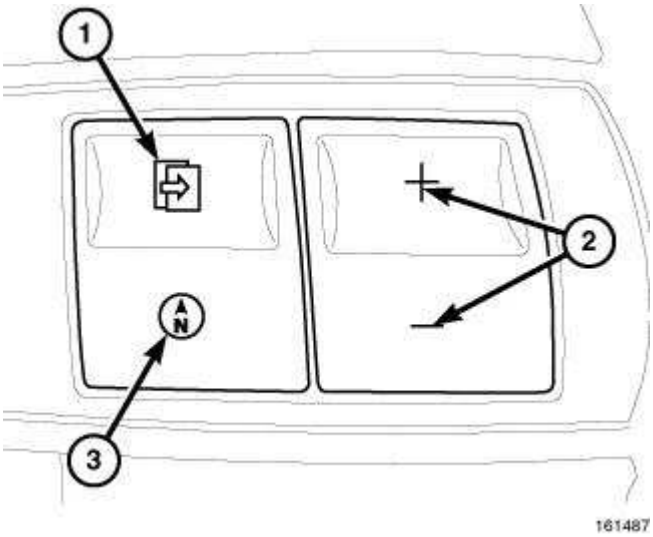

Fig. 236: Removing/Installing Pinion Flange Nut
Courtesy of CHRYSLER LLC

4. Using 41mm socket and Flange Wrench C-3281 (1), remove pinion nut and discard.

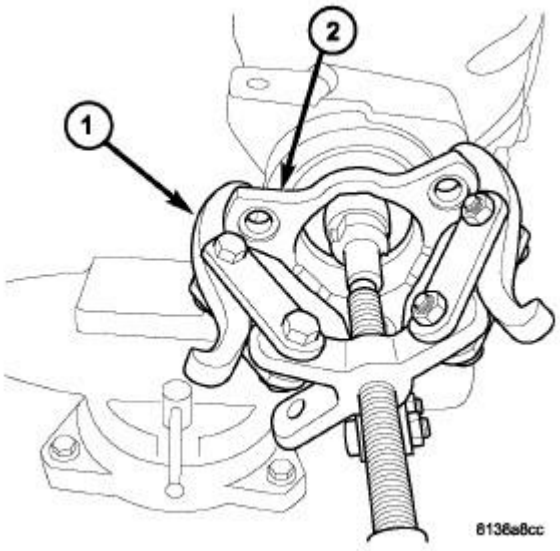

Fig. 237: Removing Pinion Flange With Puller 1026
Courtesy of CHRYSLER LLC

5. Using Puller 1026 (1), remove pinion flange (2).

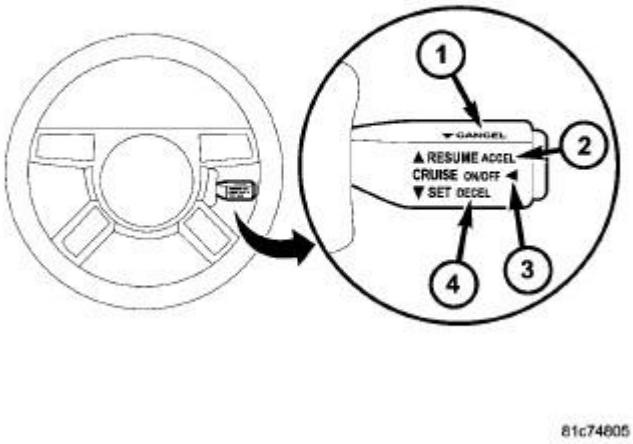

Fig. 238: Pinion Seal Removal
Courtesy of CHRYSLER LLC

6. Using a suitable screwdriver, remove and discard the pinion seal.
7. Remove pinion tail bearing cone.

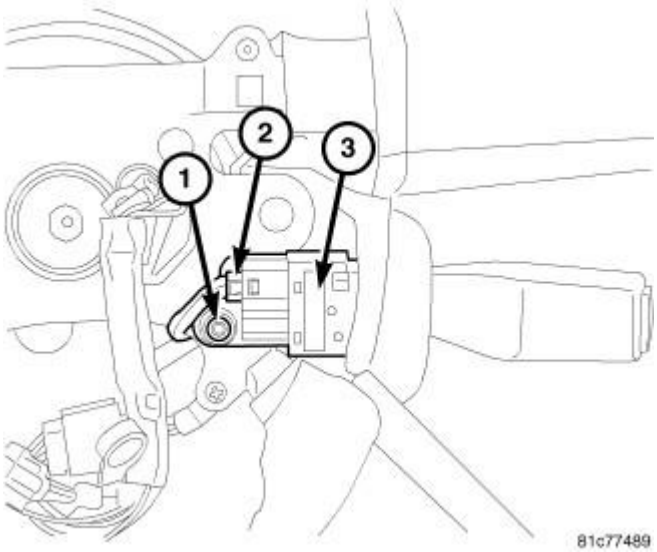

Fig. 239: Pressing Pinion Shaft Out Of Carrier
Courtesy of CHRYSLER LLC

8. Move axle housing to press and press out pinion shaft (1) as shown on illustration.

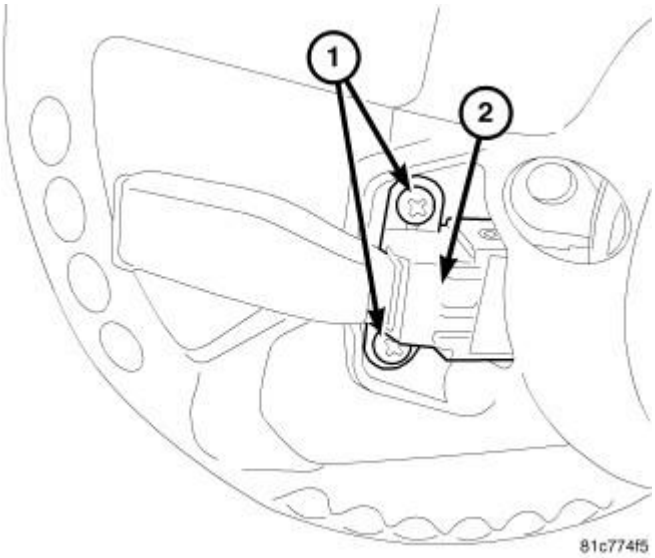

Fig. 240: Collapsible Spacer And Washers
Courtesy of CHRYSLER LLC

9. Remove collapsible spacer (1) and washers (2). Discard collapsible spacer.

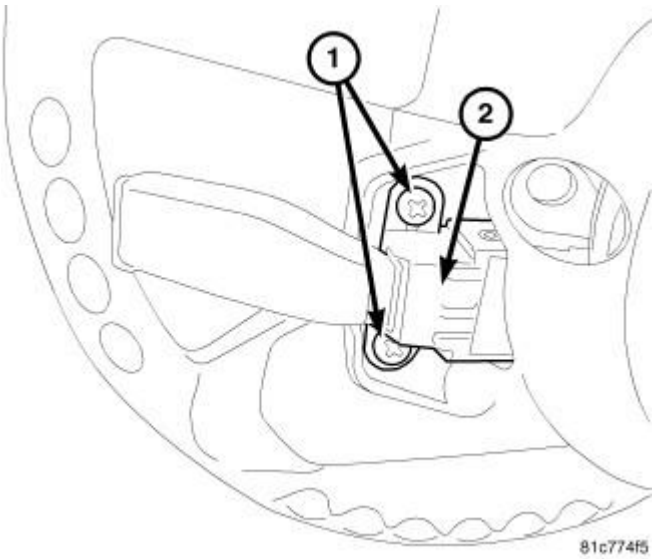

Fig. 241: Pinion Head Bearing Removal
Courtesy of CHRYSLER LLC

10. Remove pinion head bearing (2) with Puller/Press C-293-PA (1) and Adapters C-293-37 (3,4).

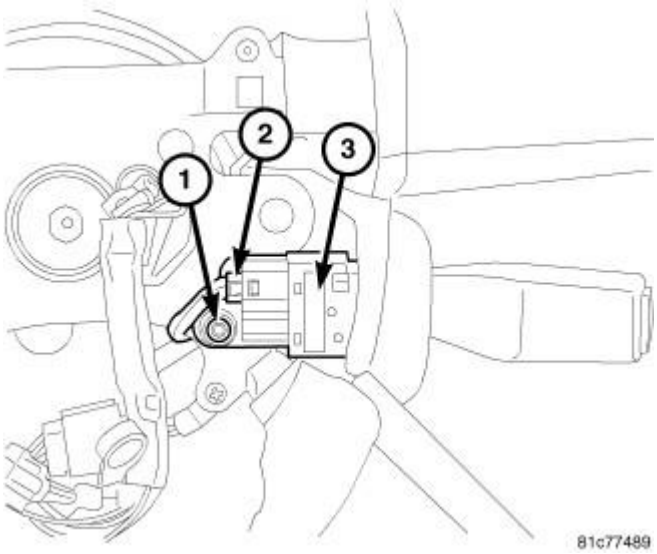

Fig. 242: Pinion Head Bearing Cup Removal
Courtesy of CHRYSLER LLC

11. Using Handle C-4171 (2) and Remover 9084 (1), drive out pinion head bearing cup.

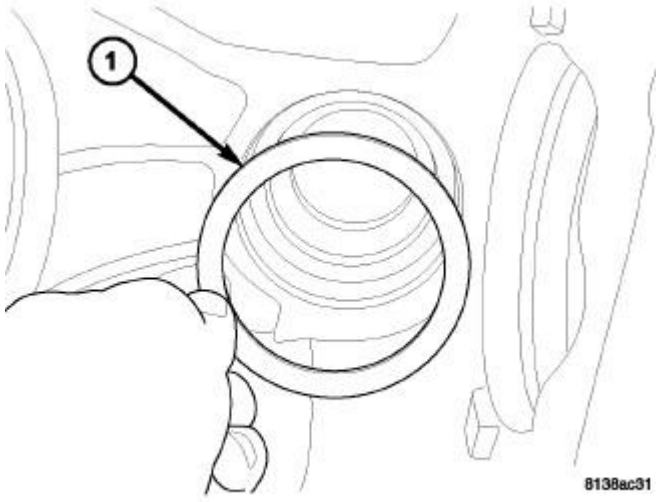

Fig. 243: Shim Removal/Installation
Courtesy of CHRYSLER LLC

12. Remove pinion head shim. Measure and record shim thickness.

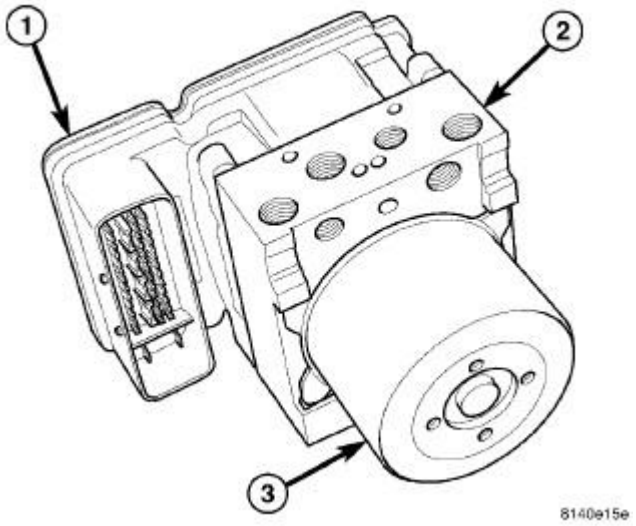

Fig. 244: Pinion Tail Bearing Cup Removal
Courtesy of CHRYSLER LLC

13. Using Handle C-4171 (2) and Remover D-149 (1), drive out pinion tail bearing cup.

Installation

INSTALLATION

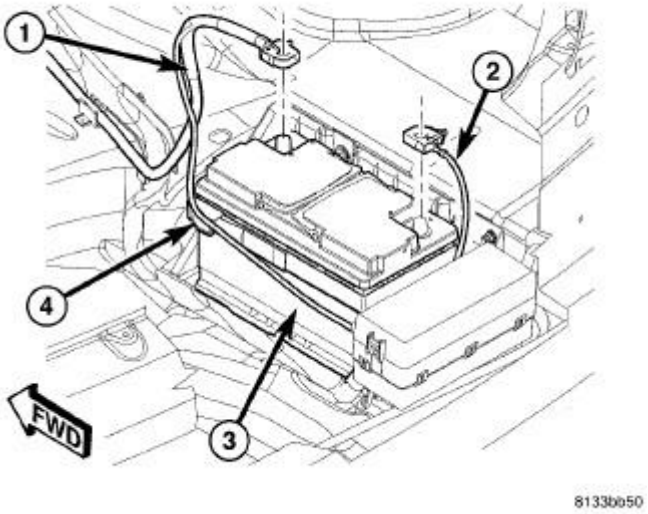

Fig. 245: Shim Removal/Installation
Courtesy of CHRYSLER LLC

1. Install selected pinion depth shim (1) into housing.

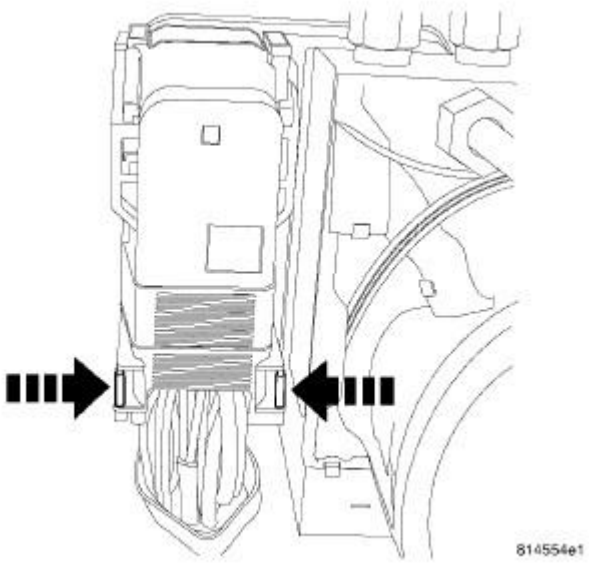

Fig. 246: Pinion Head Bearing Cup Installation
Courtesy of CHRYSLER LLC

2. Press pinion head bearing cup into housing using Handle C-4171 (1) and Installer C-4310 (2).

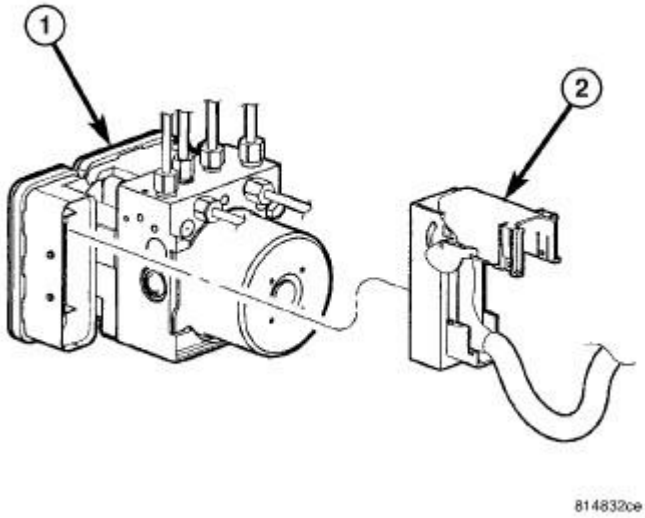

Fig. 247: Pinion Tail Bearing Cup Installation
Courtesy of CHRYSLER LLC

3. Press pinion tail bearing cup into housing using Handle C-4171 (1) and Installer D-146 (2).

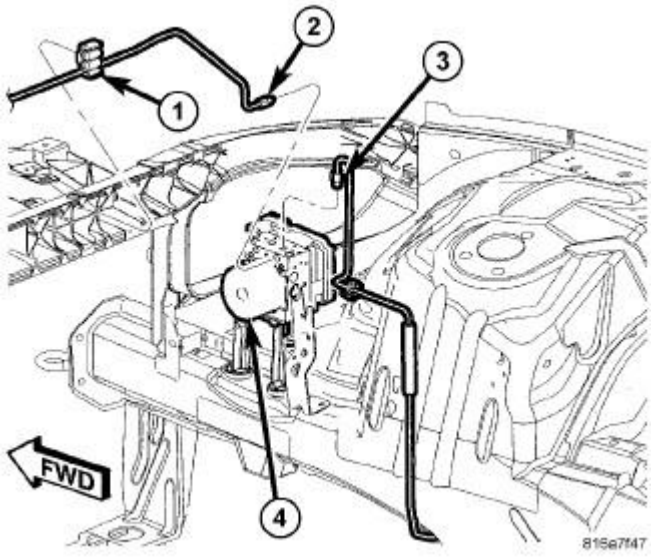

Fig. 248: Pinion Head Bearing Installation
Courtesy of CHRYSLER LLC

4. Press **new** pinion head bearing (2) onto pinion shaft using Installer C-3095-A (1).

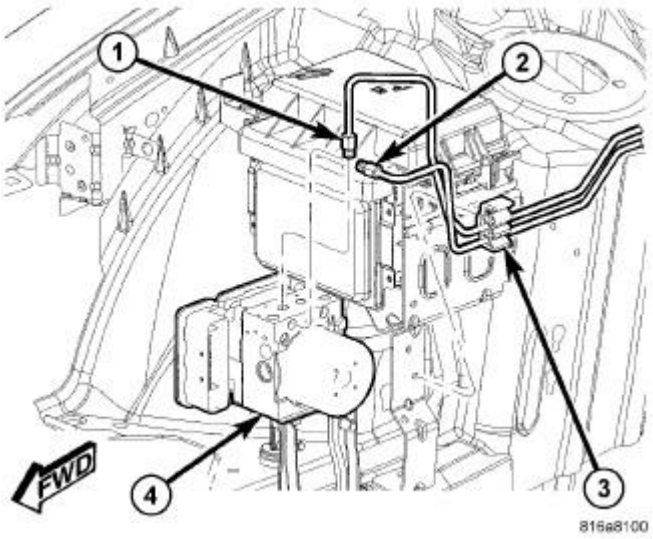

Fig. 249: Collapsible Spacer And Washers
Courtesy of CHRYSLER LLC

5. Install washers (2) and **new** collapsible spacer (1) to pinion shaft.

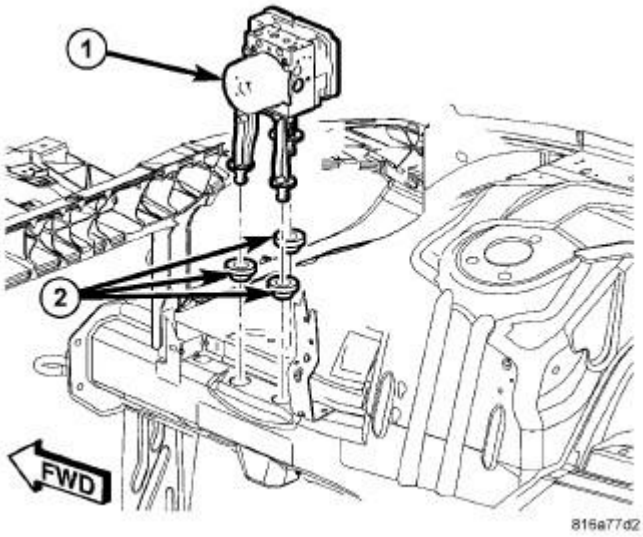

Fig. 250: Supporting Pinion Head And Carrier
Courtesy of CHRYSLER LLC

6. Install pinion shaft (1) into housing and support on press table atop Installer 8255 (2). **Ensure pinion gear face is centered atop Installer 8255.**

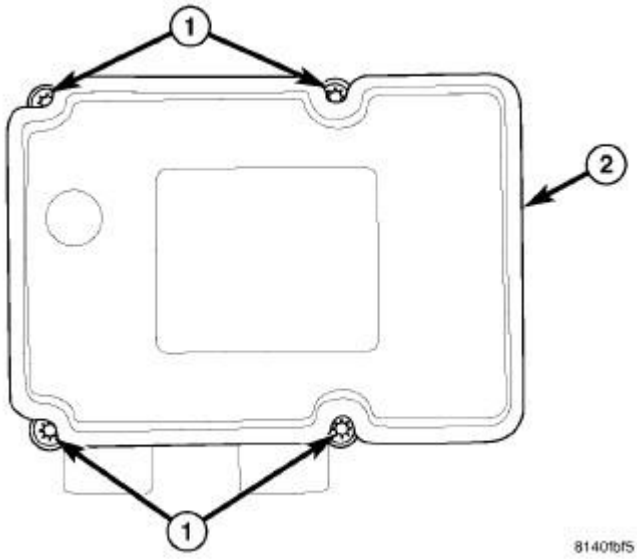

Fig. 251: Pinion Tail Bearing Installation
Courtesy of CHRYSLER LLC

7. Using Installer C-3095-A (1), press on **new** pinion tail bearing (2).

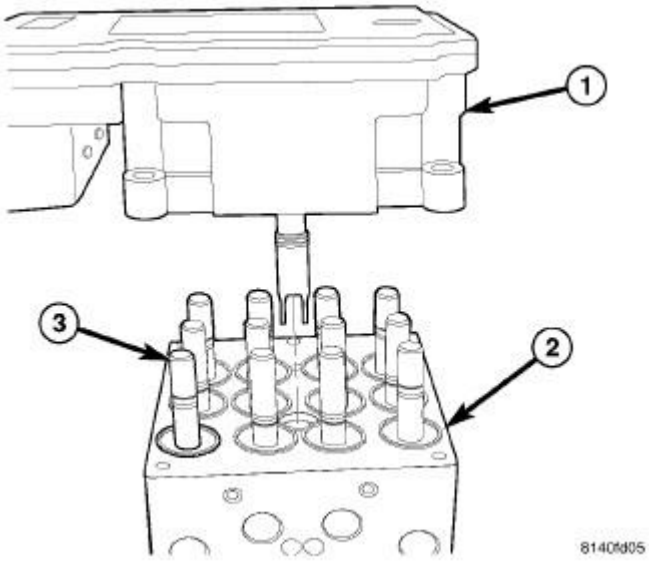

Fig. 252: Pinion Seal Installation
Courtesy of CHRYSLER LLC

8. Install new pinion seal into position.
9. Press pinion seal into housing using Installer 9231A (1).

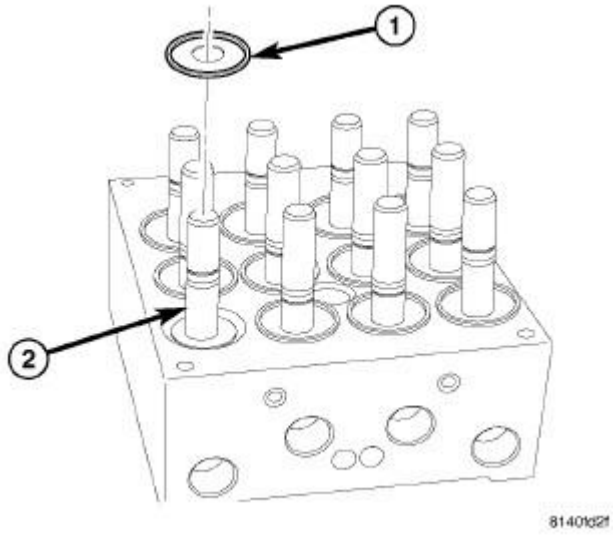

Fig. 253: Pinion Flange Installation
Courtesy of CHRYSLER LLC

10. Lightly lubricate pinion flange seal with axle lubricant for flange installation.
11. Align index marks and press pinion flange (2) on using Installer C-3095-A (1).

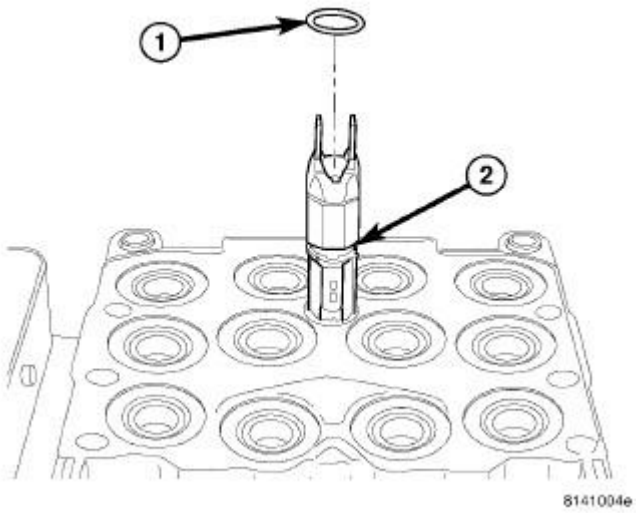

Fig. 254: Torquing Pinion Flange Nut
Courtesy of CHRYSLER LLC

12. Install new pinion flange nut by hand.
13. Hold pinion flange with Flange Wrench C-3281 (1). Using a deep 41 mm socket, tighten pinion flange nut to an initial torque of 203 N.m (150 ft. lbs.).

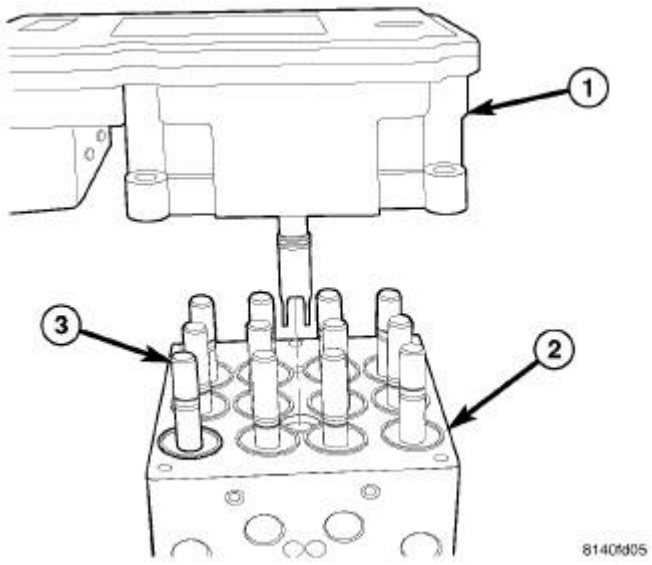

Fig. 255: Measuring Turning Torque
Courtesy of CHRYSLER LLC

14. Rotate pinion flange to ensure bearing is properly seated.
15. Measure pinion rotating torque using suitable torque wrench (1). **Pinion rotating torque should be 215-245 N. cm (19-22 in. lbs.).**

16. If pinion rotating torque exceeds the specified range, the pinion shaft must be removed and the crush sleeve replaced.

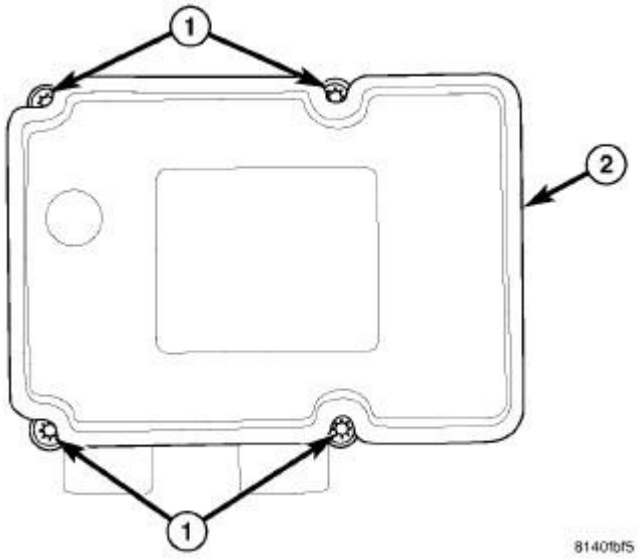

Fig. 256: Torquing Pinion Flange Nut
Courtesy of CHRYSLER LLC

17. If pinion rotating torque is below the specified range, increase nut torque by 7 N.m (5 ft. lbs.) increments and recheck turning torque until rotating torque is within range.

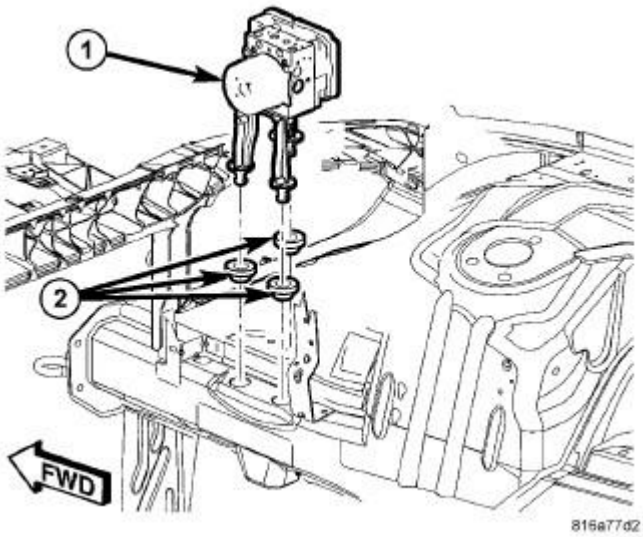

Fig. 257: Staking Pinion Flange Nut
Courtesy of CHRYSLER LLC

18. Stake pinion flange nut (1) using hammer and suitable punch.

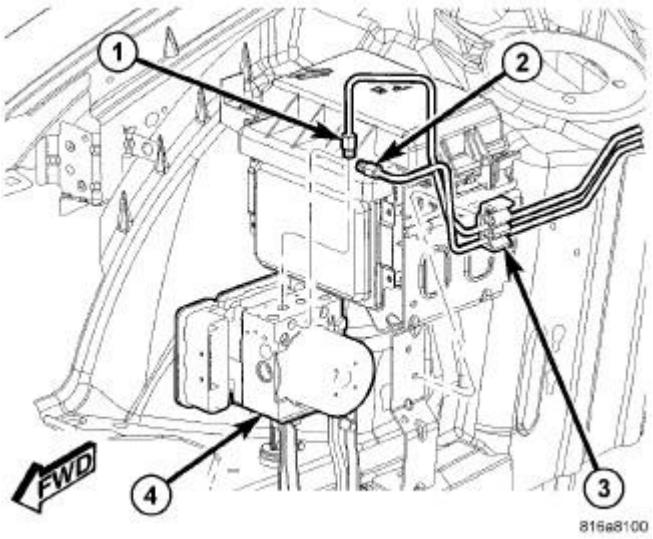

Fig. 258: Ring Gear Bolts
Courtesy of CHRYSLER LLC

19. Install ring gear to differential case. Loosely install **new** ring-gear-to-differential case bolts.
20. Torque all ring gear-to-case bolts to 85 N.m (64 ft. lbs.)

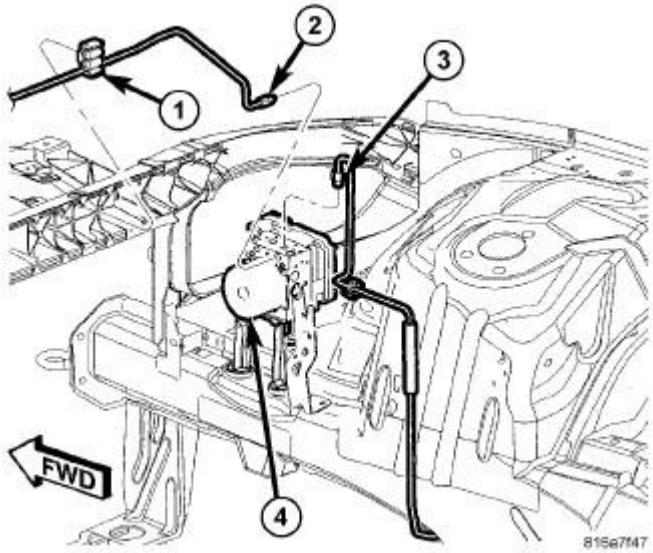

Fig. 259: Removing/Installing Differential
Courtesy of CHRYSLER LLC

21. Install differential and reassemble axle assembly. See **Differential and Driveline/Rear Axle - 198MM/CASE ASSEMBLY, Differential - Installation**

SEAL, AXLE DRIVE SHAFT

Removal

REMOVAL

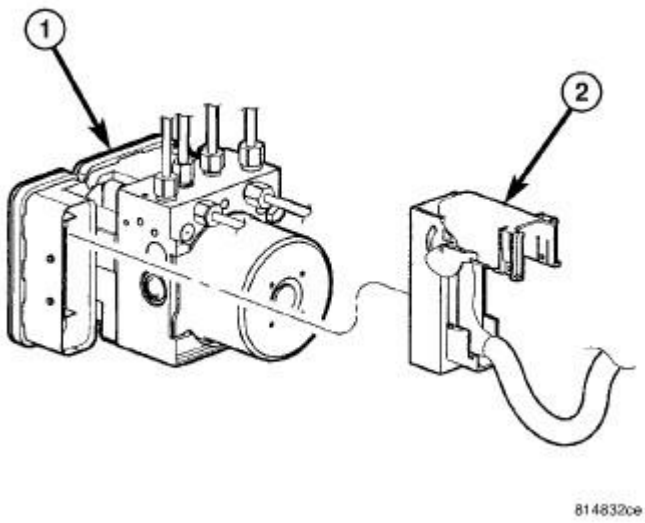

Fig. 260: Removing Left Side Seal
Courtesy of CHRYSLER LLC

1. Remove halfshaft(s). See **Differential and Driveline/Half Shaft - Removal**
2. Using suitable screwdriver (1), remove axle shaft seal (2).
3. Visually inspect halfshaft seal journal for damage (excessive seal groove, nicks, scratches, etc.). Replace halfshaft if necessary.

Installation

INSTALLATION

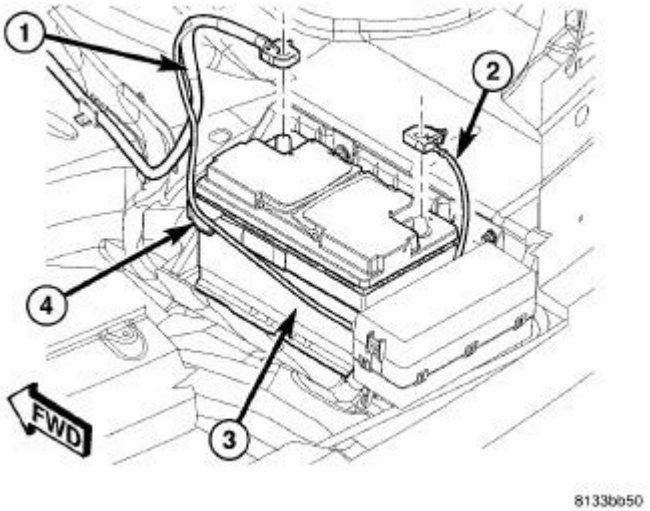

Fig. 261: Axle Seal Installation
Courtesy of CHRYSLER LLC

1. Using Installer 9223 (2), install **NEW** axle shaft seal (1). Lubricate the inside diameter with Mopar® Gear and Axle Lubricant 75W-140 to protect seal during halfshaft installation.
2. Install halfshaft(s). See **Differential and Driveline/Half Shaft - Installation**

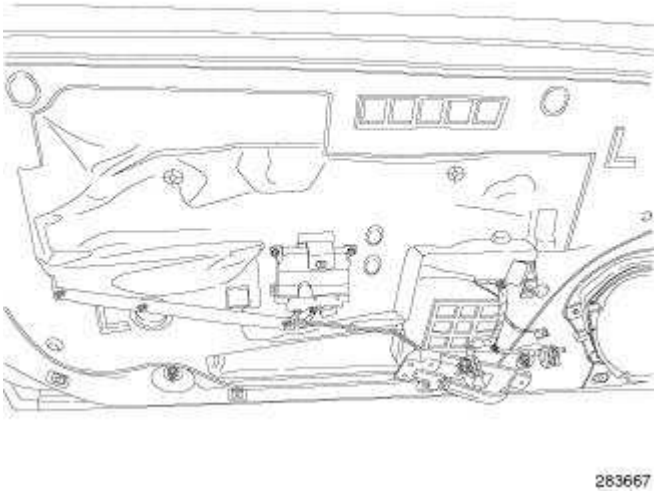

Fig. 262: Rear Axle Fill Plug
Courtesy of CHRYSLER LLC

3. Remove fill plug (1) to check and adjust rear axle fluid level. Top off axle with Mopar® Gear and Axle Lubricant 75W-140. Reinstall fill plug torque to 60 N.m (44 ft. lbs.) torque.

SEAL, DRIVE PINION

Removal

REMOVAL

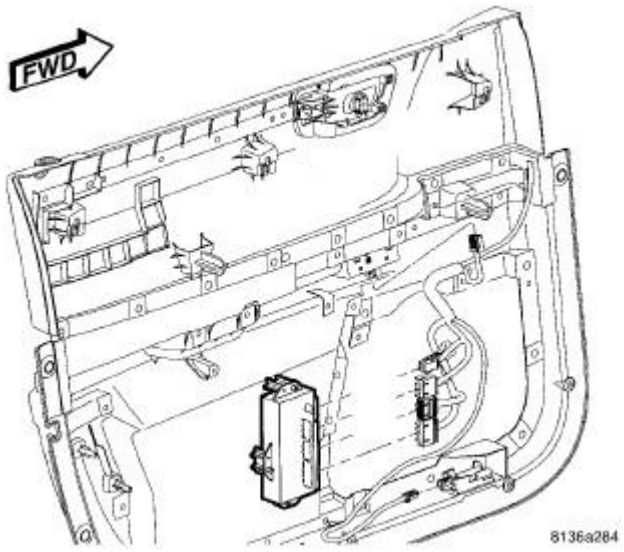

Fig. 263: Measuring Turning Torque
Courtesy of CHRYSLER LLC

1. Remove rear axle assembly from vehicle. See **Differential and Driveline/Rear Axle - 198MM - Removal**.
2. Measure axle assembly rotating torque and record measurement for reuse on assembly.

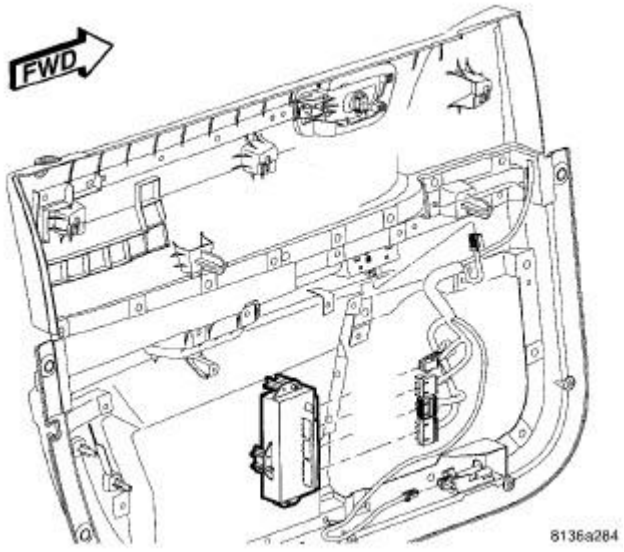

Fig. 264: Removing/Installing Pinion Flange Nut
Courtesy of CHRYSLER LLC

3. Using Flange Wrench C-3281(1) and 41mm socket, remove pinion flange nut and discard.

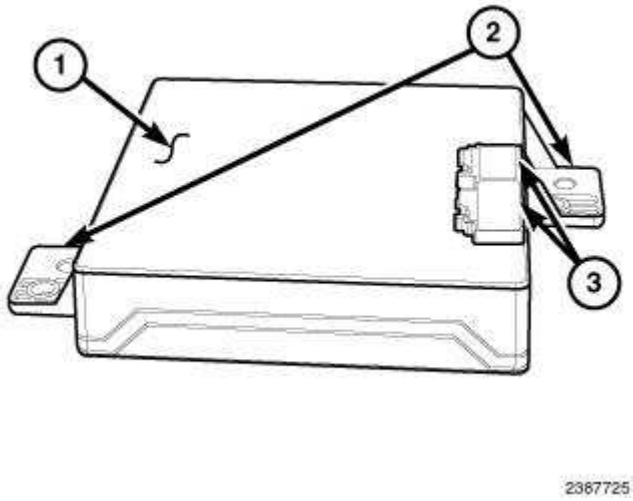

Fig. 265: Removing Pinion Flange With Puller 1026
Courtesy of CHRYSLER LLC

NOTE: Due to axle imbalance concerns, it is necessary to make sure pinion flange-to-shaft orientation is maintained. If alignment marks are not visible, apply appropriate marks before removing pinion flange.

4. Using Puller 1026 (1), remove pinion flange (2) from pinion shaft.

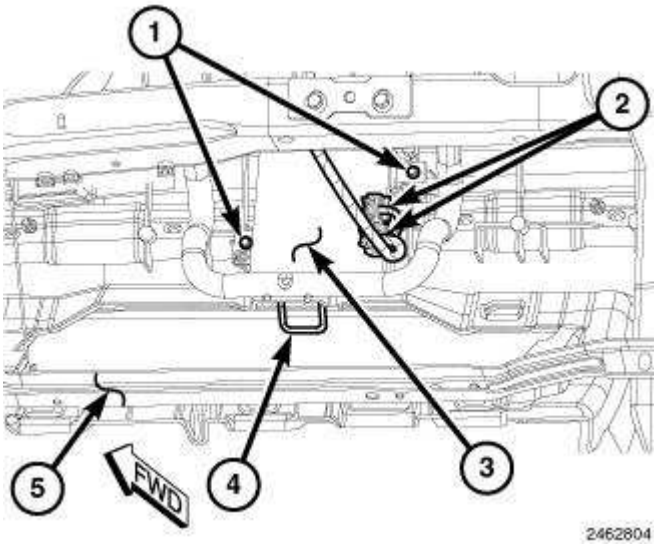

Fig. 266: Pinion Seal Removal
Courtesy of CHRYSLER LLC

5. Using suitable tool (1), remove pinion seal (2) and discard.

Installation

INSTALLATION

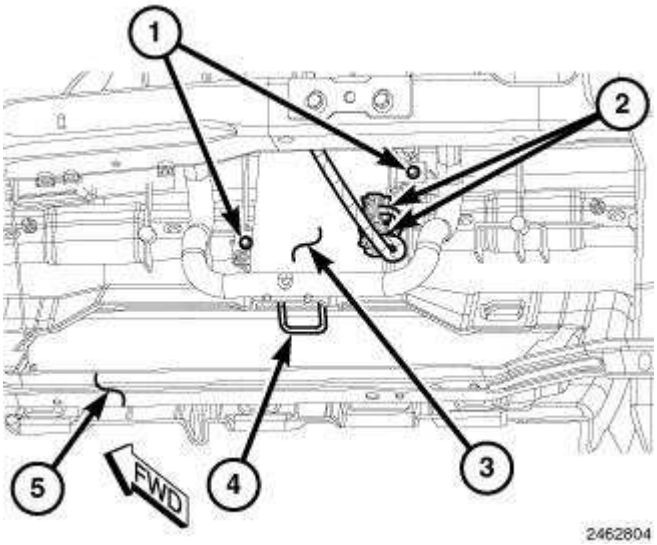

Fig. 267: Pinion Seal Installation
Courtesy of CHRYSLER LLC

1. Apply light coating of gear lubricant to the lip of the pinion seal.
2. Using Installer 9231A (1), install pinion seal until tool bottoms on carrier.

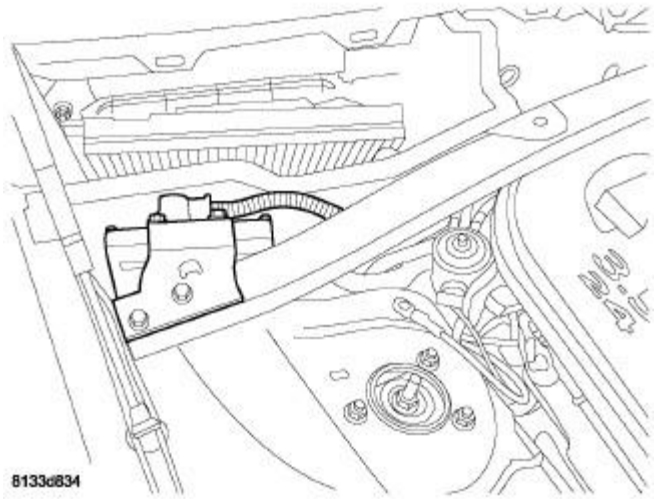

Fig. 268: Pinion Flange Installation
Courtesy of CHRYSLER LLC

3. Install pinion flange into position. Align index marks to maintain assembly balance.
4. Using Installer 6448A (1), lightly tap on pinion flange (2) until adequate pinion shaft threads are

exposed.

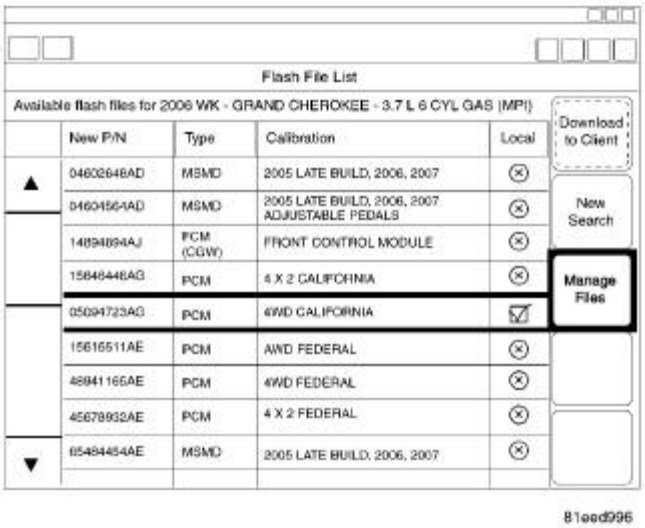

Fig. 269: Removing/Installing Pinion Flange Nut
Courtesy of CHRYSLER LLC

5. Install **new** pinion flange nut. Using Flange Wrench C-3281 (1) and 41mm socket, torque nut to 136 N.m (100 ft. lbs.).

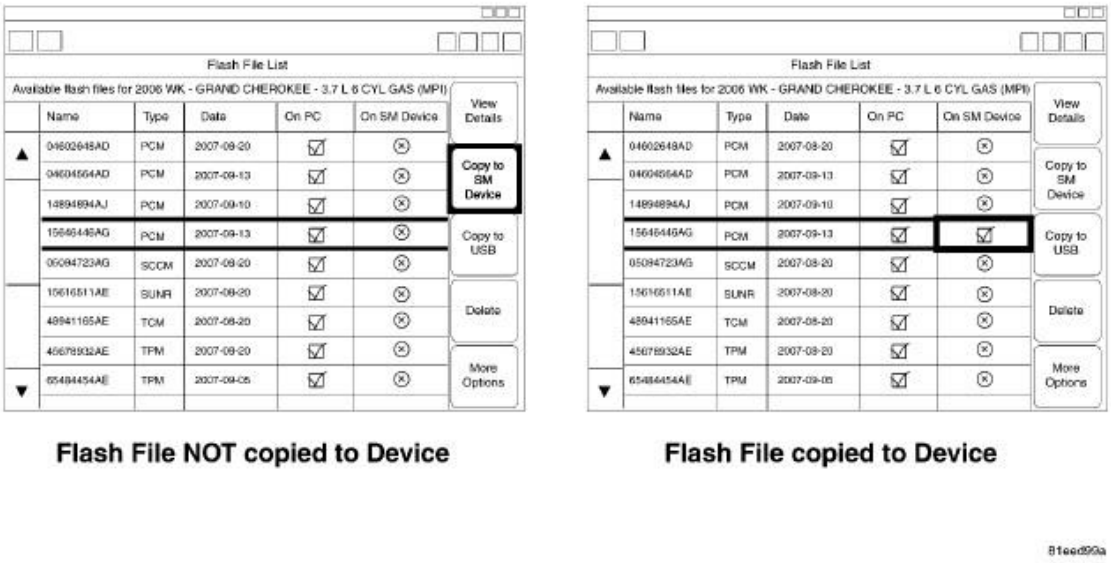

Fig. 270: Measuring Rotating Torque
Courtesy of CHRYSLER LLC

6. Measure assembly turning torque. Axle assembly rotating torque should be equal to the reading recorded upon seal/flange removal.

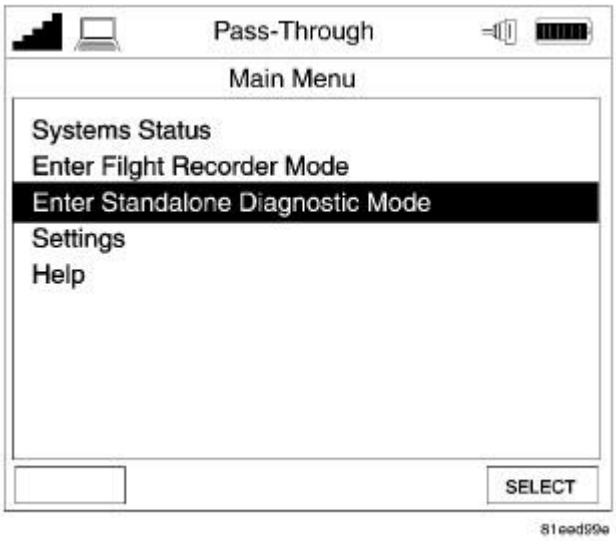

Fig. 271: Removing/Installing Pinion Flange Nut
Courtesy of CHRYSLER LLC

7. If rotating torque is low, increase pinion flange nut torque in 7 N.m (5 ft. lbs.) increments. Repeat until proper rotating torque is received.

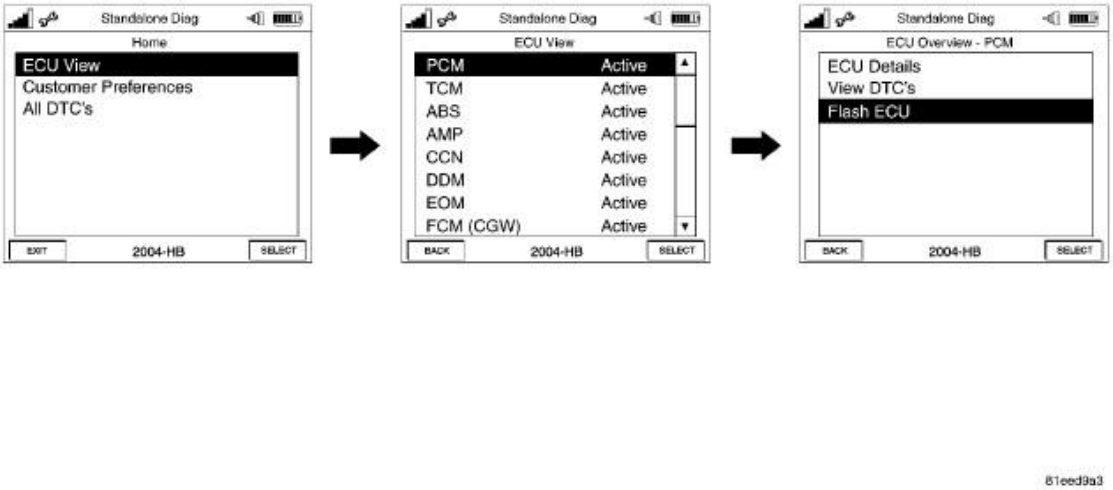

Fig. 272: Staking Pinion Flange Nut
Courtesy of CHRYSLER LLC

8. Stake pinion flange nut (1) as shown on illustration.
9. Install rear axle assembly. See **Differential and Driveline/Rear Axle - 198MM - Installation**.

REAR AXLE - 215RII

DESCRIPTION

DESCRIPTION

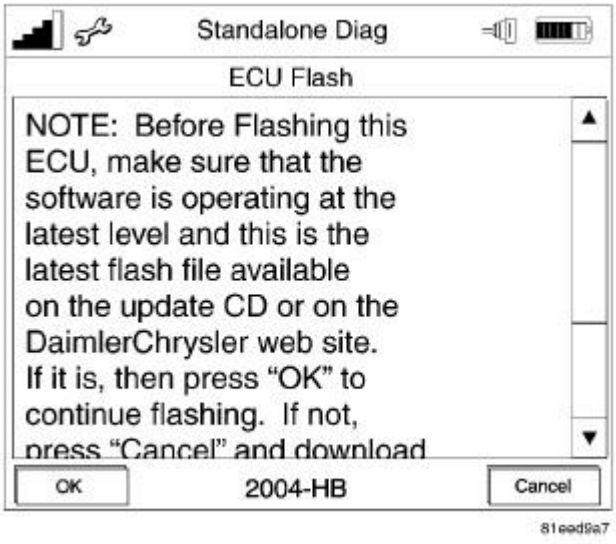

Fig. 273: Rear Axle Sectional View - 215 MM RII
Courtesy of CHRYSLER LLC

1 - BEARING, PINION TAIL	6 - DIFFERENTIAL
2 - SHIM, PINION DEPTH	7 - RING, SNAP
3 - BEARING, PINION HEAD	8 - COVER, AXLE
4 - GEAR/SHAFT, PINION	9 - GEAR, RING
5 - BEARING, DIFFERENTIAL SIDE	

The 215 MM RII (Rear-Independent-Iron) axle is an independent assembly with a cast iron housing and differential. The 215 MM RII uses an open differential which is supported by two tapered roller bearings located on either side of the case. Differential bearing preload and ring gear backlash are controlled with select snap-rings located on the outside of the differential bearing cups. Pinion height is set with a select shim located under the rear pinion bearing cup.

AXLE IDENTIFICATION

The 215 MM axle utilizes a barcoded label which is adhered to the top of the axle housing as shown on illustration. The following information is found on the identification label:

- Traceability Code (Plant Use)
- Axle Part Number
- Axle Gear Ratio

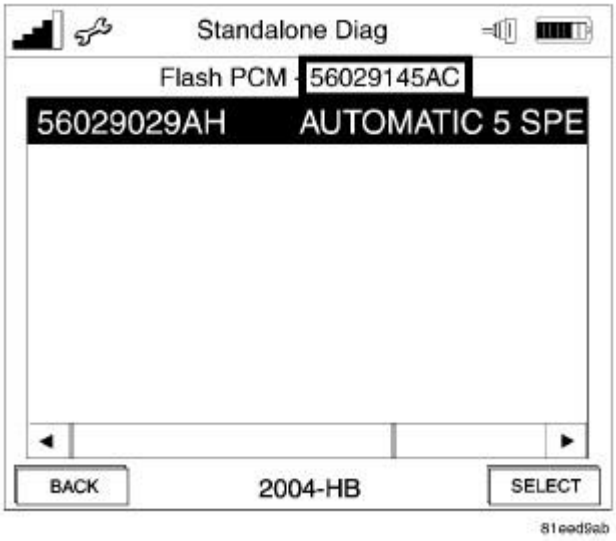

Fig. 274: Identification Tag - 215 MM Axle
Courtesy of CHRYSLER LLC

DIAGNOSIS AND TESTING

DIAGNOSIS AND TESTING

GEAR NOISE

Axle gear noise can be caused by insufficient lubricant, incorrect backlash, incorrect pinion depth, tooth contact, worn/damaged gears, or the carrier housing not having the proper offset and squareness.

Gear noise usually happens at a specific speed range. The noise can also occur during a specific type of driving condition. These conditions are acceleration, deceleration, coast, or constant load.

When road testing, first warm-up the axle fluid by driving the vehicle at least 5 miles and then accelerate the vehicle to the speed range where the noise is the greatest. Shift out-of-gear and coast through the peak-noise range. If the noise stops or changes greatly:

- Axle mounts damaged, worn, or bottoming out.
- Check for insufficient lubricant.
- Incorrect ring gear backlash.
- Gear damage.

Differential side gears and pinions can be checked by turning the vehicle. They usually do not cause noise during straight-ahead driving when the gears are unloaded. The side gears are loaded during vehicle turns. A worn pinion shaft can also cause a snapping or a knocking noise.

BEARING NOISE

The differential and pinion bearings can produce noise when worn or damaged. Bearing noise can be either a whining, or a growling sound.

Pinion bearings have a constant-pitch noise. This noise changes only with vehicle speed. Pinion bearing noise will be higher pitched because it rotates at a faster rate. Drive the vehicle and load the differential. If bearing noise occurs, the rear pinion bearing is the source of the noise. If the bearing noise is heard during a coast, the front pinion bearing is the source.

Worn or damaged differential bearings usually produce a low pitch noise. Differential bearing noise is similar to pinion bearing noise. The pitch of differential bearing noise is also constant and varies only with vehicle speed.

Wheel hub bearings produce noise and vibration when worn or damaged. The noise generally changes when the bearings are loaded. Road test the vehicle. Turn the vehicle sharply to the left and to the right. This will load the bearings and change the noise level. Where axle bearing damage is slight, the noise is usually not noticeable at speeds above 30 mph.

LOW SPEED KNOCK

Low speed knock is generally caused by a worn U-joint or by worn side-gear thrust washers. A worn pinion shaft bore will also cause low speed knock.

VIBRATION

Vibration at the rear of the vehicle is usually caused by a:

- Damaged propeller shaft.
- Missing propeller shaft balance weight(s).
- Worn or out-of-balance wheels.
- Loose wheel lug nuts.
- Worn U-joints or CV joints.
- Loose/broken springs.
- Damaged axle shaft bearing(s).
- Loose pinion gear nut.
- Excessive pinion yoke run out.
- Bent halfshaft(s).

Check for loose or damaged front-end components or engine/transmission mounts. These components can contribute to what appears to be a rearend vibration. Do not overlook engine

accessories, brackets and drive belts.

All driveline components should be examined before starting any repair.

DRIVELINE SNAP

A snap or clunk noise when the vehicle is shifted into gear, can be caused by:

- Cradle-to-body isolator worn or damaged.
- Worn or damaged rubber washer between axle hub nut and axle hub.
- High engine idle speed.
- Transmission shift operation.
- Loose engine/transmission/transfer case mounts.
- Worn U-joints or CV joints.
- Worn rubber coupler between the propeller shaft and the pinion yoke.
- Washers missing from the fasteners that attach the rubber coupler to the pinion yoke.
- Worn or broken axle mount isolators.
- Loose pinion gear nut and yoke.
- Excessive ring gear backlash.
- Excessive side gear to case clearance.

The source of a snap or a clunk noise can be determined with the assistance of a helper. Raise the vehicle on a hoist with the wheels free to rotate. Instruct the helper to shift the transmission into gear. Listen for the noise, a mechanics stethoscope is helpful in isolating the source of a noise.

DIAGNOSTIC CHART

CONDITION	POSSIBLE CAUSE	CORRECTION
WHEEL NOISE	1. Wheel loose. 2. Faulty, brinelled wheel bearing.	1. Tighten loose nuts. 2. Replace bearing.
DIFFERENTIAL CRACKED	1. Improper differential side bearing preload. 2. Excessive ring gear backlash. 3. Vehicle overloaded.	1. Replace case and inspect gears and bearings for further damage. Set differential bearing preload properly. 2. Replace case and inspect gears and bearings for further damage. Set ring gear backlash properly. 3. Replace case and inspect gears and bearings for further damage. Avoid excessive vehicle weight.
DIFFERENTIAL GEARS SCORED	1. Insufficient lubrication.	1. Replace scored gears. Fill differential with the correct fluid

		type and quantity.
	2. Improper grade of lubricant.	2. Replace scored gears. Fill differential with the proper fluid type and quantity.
	3. Excessive spinning of one wheel/tire.	3. Replace scored gears. Inspect all gears, pinion bores, and shaft for damage. Service as necessary.
LOSS OF LUBRICANT	1. Lubricant level too high.	1. Drain lubricant to the correct level.
	2. Worn axle shaft seals.	2. Replace seals.
	3. Cracked axle housing.	3. Repair as necessary.
	4. Worn pinion seal.	4. Replace seal.
	5. Worn/scored pinion flange journal.	5. Replace pinion flange and seal.
	6. Axle cover not properly sealed.	6. Remove, clean, and re-seal cover.
AXLE OVERHEATING	1. Lubricant level low.	1. Fill differential to correct level.
	2. Improper grade of lubricant.	2. Fill differential with the correct fluid type and quantity.
	3. Bearing preload too high.	3. Readjust bearing pre-load.
	4. Insufficient ring gear backlash.	4. Re-adjust ring gear backlash.
GEAR TEETH BROKE	1. Overloading.	1. Replace gears. Examine other gears and bearings for possible damage.
	2. Ice-spotted pavement.	2. Replace gears and examine remaining parts for damage.
	3. Improper adjustments.	3. Replace gears and examine remaining parts for damage. Ensure ring gear backlash is correct.
AXLE NOISE	1. Insufficient lubricant.	1. Fill axle with the correct fluid type and quantity.
	2. Improper ring gear and pinion adjustment.	2. Check ring gear and pinion contact pattern. Adjust backlash or pinion depth.
	3. Unmatched ring gear and pinion.	3. Replace gears with a matched ring gear and pinion.
	4. Worn teeth on ring gear and/or pinion.	4. Replace ring gear and pinion.
	5. Loose pinion bearings.	5. Adjust pinion bearing pre-load.
	6. Loose differential bearings.	6. Adjust differential bearing

		preload.
	7. Misaligned or sprung ring gear.	7. Measure ring gear run-out. Replace components as necessary.
	8. Housing not machined properly.	8. Replace housing.

STANDARD PROCEDURE

FLUID DRAIN AND FILL

NOTE: The fluid required for use in this axle is Mopar® Synthetic Gear and Axle Lubricant 75W-140.

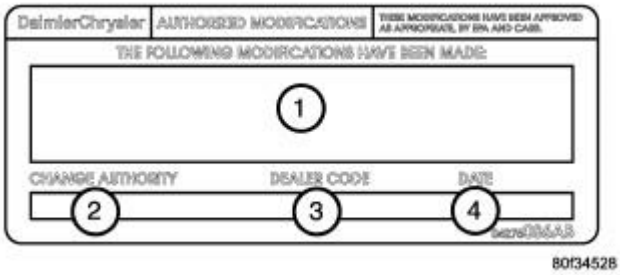

Fig. 275: Rear Axle Drain Plug
Courtesy of CHRYSLER LLC

1. Drive the vehicle until the differential lubricant is at the normal operating temperature.
2. With vehicle in neutral, position and raise vehicle on hoist.
3. Remove rear axle drain plug (1) and drain lubricant completely from the axle.
4. Install drain plug and tighten to 50 N.m (37 ft lbs).

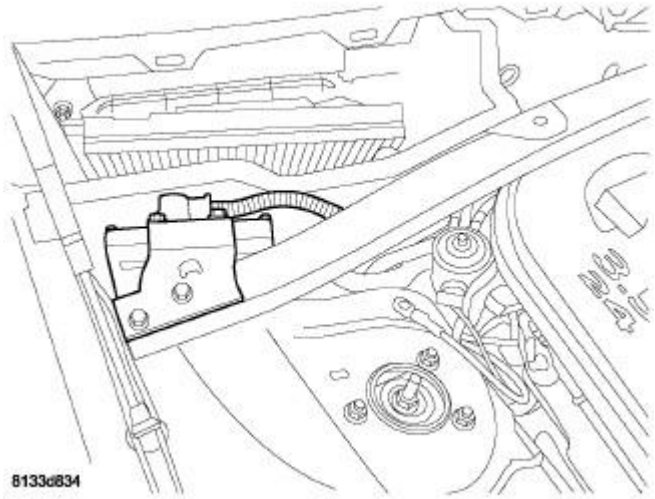

Fig. 276: Rear Axle Fill Plug
Courtesy of CHRYSLER LLC

5. Remove fill plug (1) and fill rear axle with 1.2 L (1.3 qts.) Mopar® Synthetic Gear AND Axle Lubricant 75W-140 and insure axle is filled to the bottom of the fill hole.
6. Install fill plug and tighten to 50 N.m (37 ft lbs).

REMOVAL

REMOVAL

NOTE: This procedure requires the compression of the rear suspension to ride height. A drive-on hoist should be used. If a drive-on hoist is not used, screw-style under-hoist jack stands are required to compress the rear suspension, facilitating rear halfshaft removal.

CAUTION: Never grasp halfshaft assembly by the inner or outer boots. Doing so may cause the boot to pucker or crease, reducing the service life of the boot and joint. Avoid over angulating or stroking the C/V joints when handling the halfshaft.

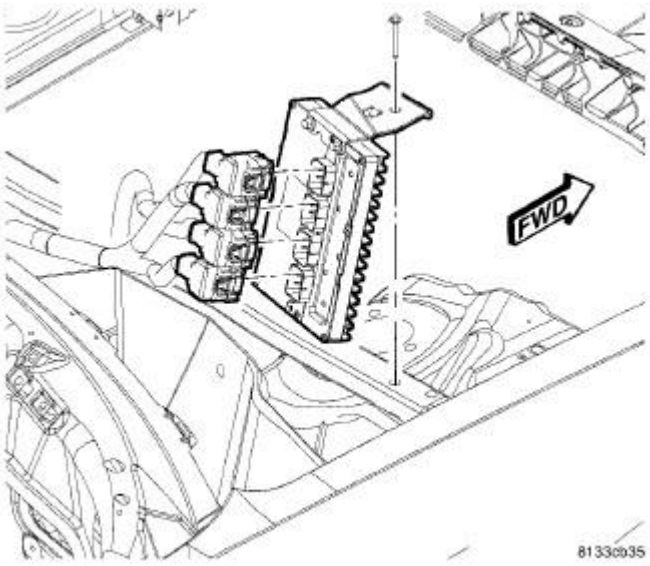

Fig. 277: Rear Axle Drain Plug
Courtesy of CHRYSLER LLC

1. With vehicle in neutral, position and raise vehicle on hoist.
2. Using 14mm hex, remove axle drain plug (1) and drain rear axle fluid into container suitable for fluid reuse.
3. Install drain plug (1) and torque to 50 N.m (37 ft. lbs.) torque.
4. Remove the exhaust system. Refer to **Exhaust System/MUFFLER, Exhaust - Removal** .

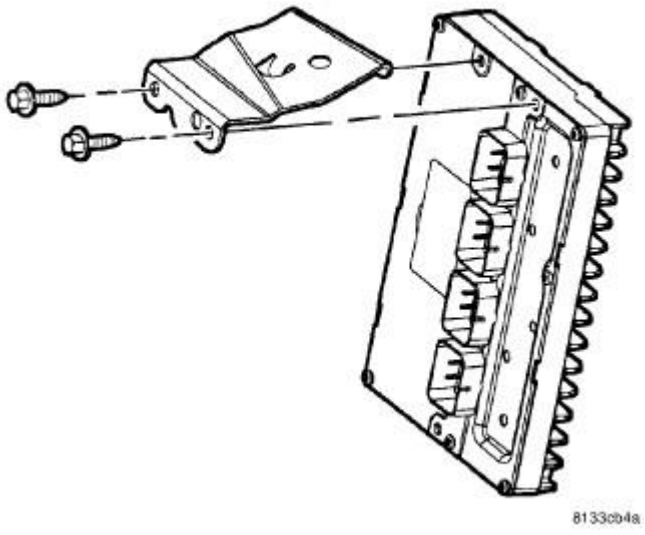

Fig. 278: Alignment Marks - Axle End Shown
Courtesy of CHRYSLER LLC

5. Apply alignment index marks (3) to the propeller shaft rubber coupler (1) and axle flange (2).

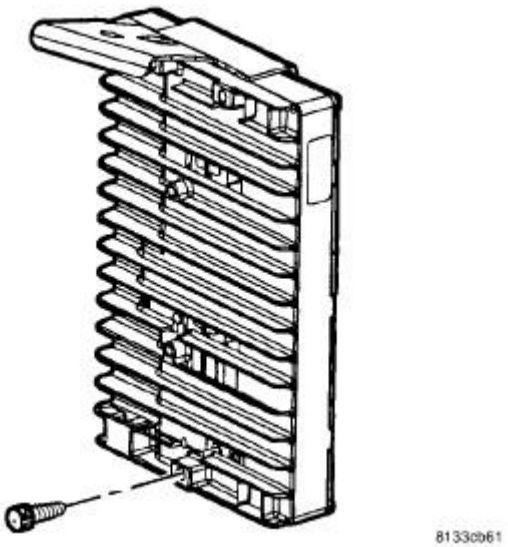

Fig. 279: Propeller Shaft At Rear Axle
Courtesy of CHRYSLER LLC

6. Remove three propeller shaft coupler(1)-to-axle flange (2) bolt/nuts.

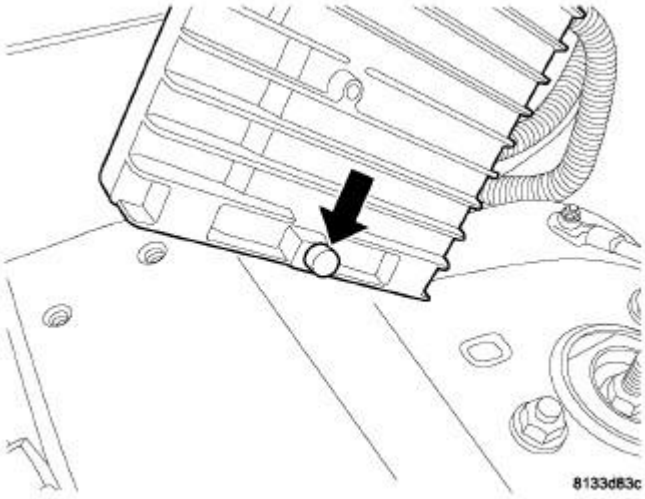

Fig. 280: Halfshaft Removal (V6 Models)
Courtesy of CHRYSLER LLC

NOTE: Do not damage the side seal, halfshaft slinger, and halfshaft boot.

7. Using suitable screwdriver (1), partially disengage halfshaft(s) (2) from axle assembly.

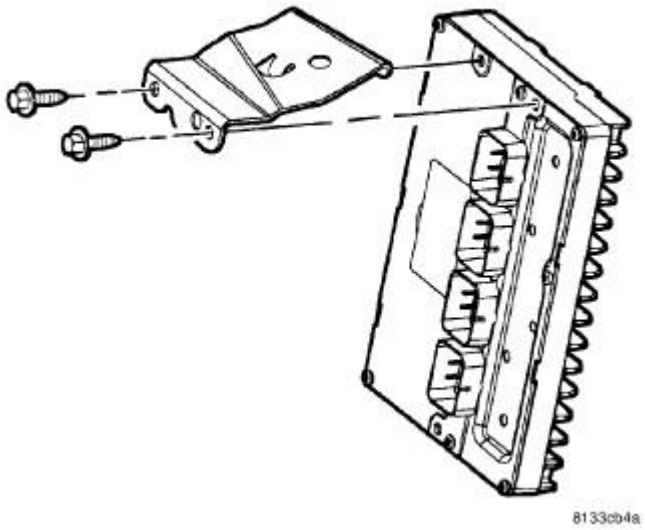

Fig. 281: Transmission Jack At Rear Axle
Courtesy of CHRYSLER LLC

8. If a drive-on hoist is used, position transmission jack (1) to rear axle assembly. If a drive-on hoist is not used, compress rear suspension using screw-style under-hoist jack stands (2), then position transmission jack to rear axle assembly.

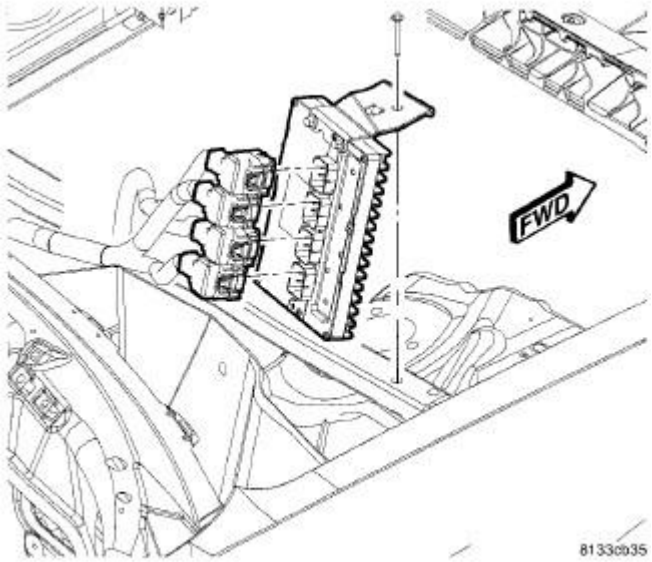

Fig. 282: Rear Axle Front Isolator
Courtesy of CHRYSLER LLC

9. Remove rear axle forward mount isolator (1) bolt/nut (2).

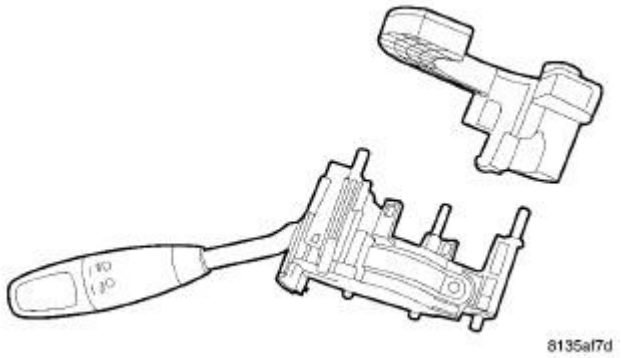

Fig. 283: Rear Axle To Crossmember Bolts
Courtesy of CHRYSLER LLC

10. Remove two rear axle-to-crossmember bolts (1).

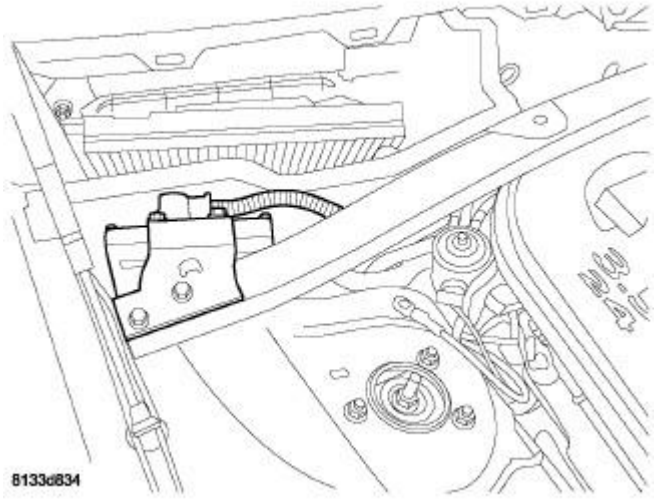

Fig. 284: Propeller Shaft Supported
Courtesy of CHRYSLER LLC

11. Carefully lower rear axle. While lowering axle, separate propeller shaft from axle and support with suitable rope or wire (1).

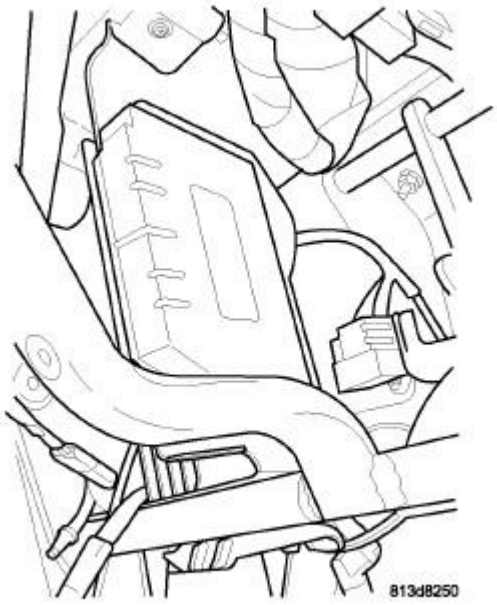

Fig. 285: Remove/Install Halfshaft
Courtesy of CHRYSLER LLC

12. Lower axle just enough to remove both halfshafts one at a time. Shift axle assembly in one direction, compressing one halfshaft while removing the other (1). Use caution to protect axle seal and journal.
13. Remove axle assembly from vehicle and transfer to bench.

INSTALLATION

INSTALLATION

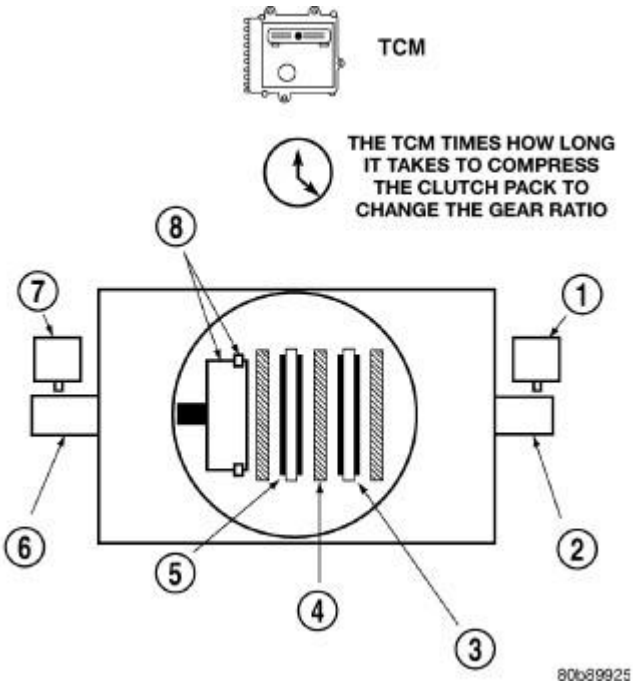

Fig. 286: Axle Seal Installation
Courtesy of CHRYSLER LLC

1. Install new axle seal(s) (1) using Installer 9755 (2).

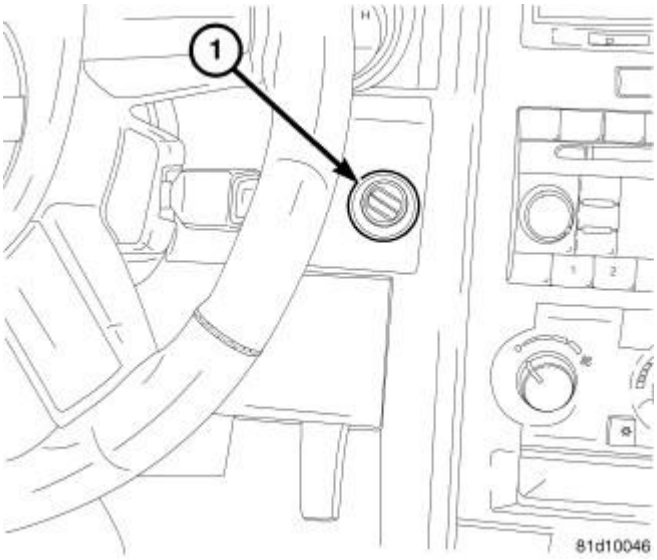

Fig. 287: Remove/Install Halfshaft
Courtesy of CHRYSLER LLC

NOTE: Use care when installing halfshaft to axle assembly. The halfshaft installation angle should be minimized to avoid damage to seal upon installation.

2. Using new circlip(s), install halfshaft (1) to rear axle assembly. Use care not to damage axle

seals (2). Verify proper installation by pulling outward on joint by hand.

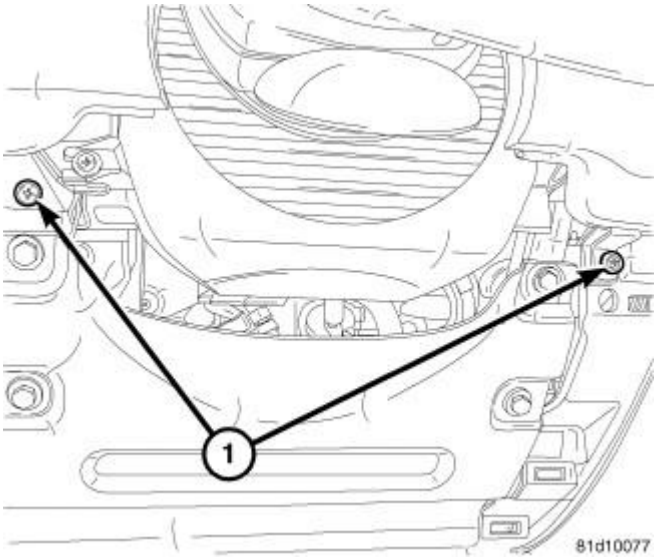

Fig. 288: Alignment Marks - Axle End Shown
Courtesy of CHRYSLER LLC

NOTE: Washers must be installed between the head of the propeller shaft coupler-to-axle bolt and the rubber coupler to prevent damage and imbalance.

3. Raise rear axle assembly into position. Align propeller shaft index marks (3) and start propeller shaft coupler-to-axle bolt/nuts by hand.

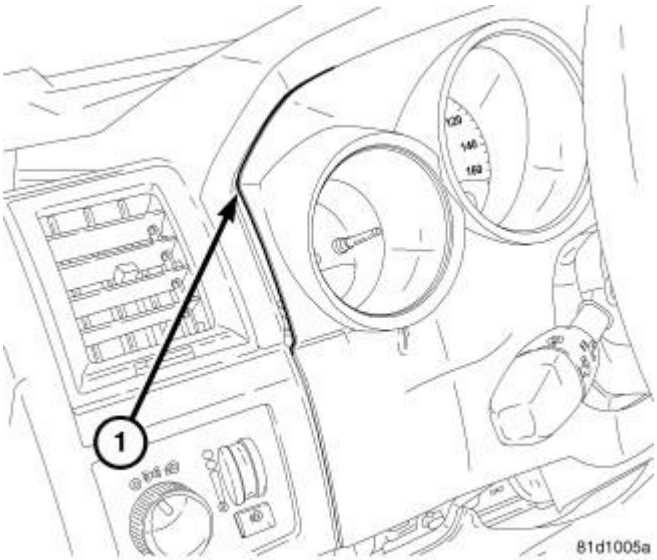

Fig. 289: Rear Axle To Crossmember Bolts
Courtesy of CHRYSLER LLC

4. Install two rear axle-to-crossmember bolts (1) and torque to 220 N.m (162 ft. lbs.).

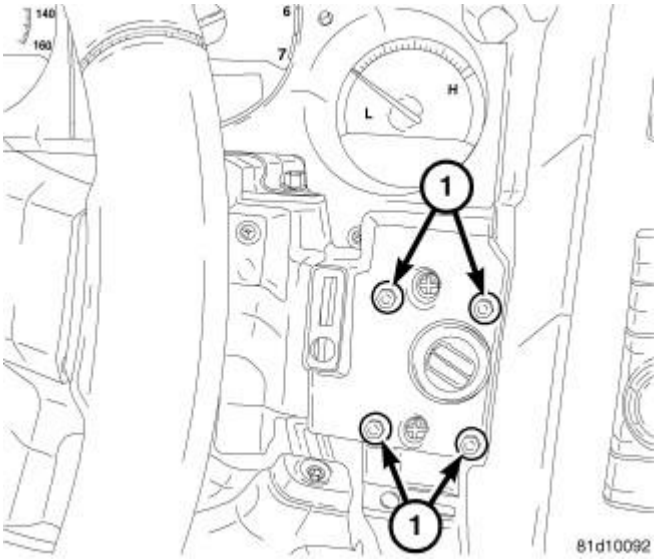

Fig. 290: Rear Axle Front Isolator
Courtesy of CHRYSLER LLC

5. Install rear axle front mount isolator (1) as shown on illustration and torque bolt/nut to 65 N.m (48 ft. lbs.).

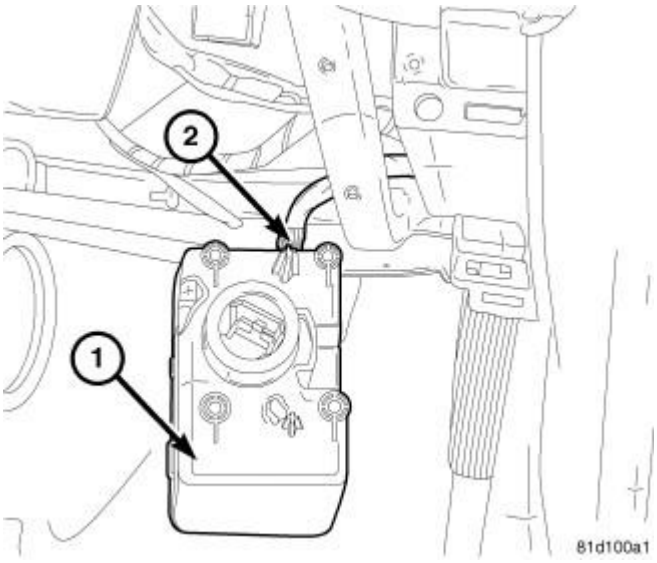

Fig. 291: Transmission Jack At Rear Axle
Courtesy of CHRYSLER LLC

6. Again verify halfshaft inner joints are fully engaged to axle assembly.
7. Remove transmission jack (1).
8. If used, remove screw-type under-hoist jack stands (2).

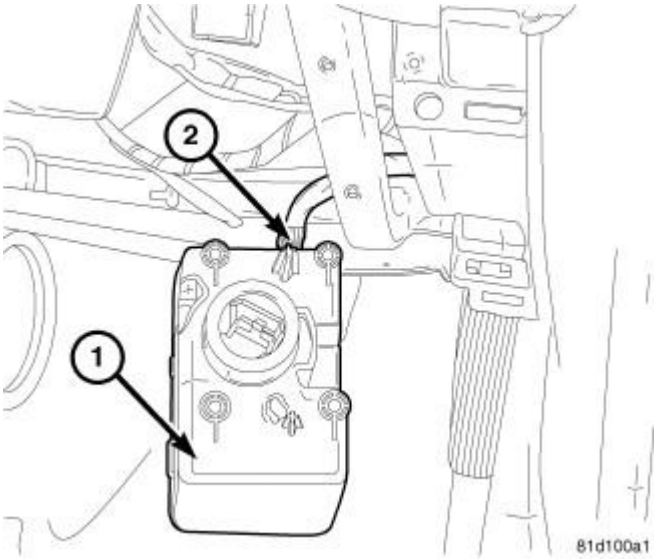

Fig. 292: Propeller Shaft At Rear Axle
Courtesy of CHRYSLER LLC

9. Torque propeller shaft coupler-to-axle flange bolt/nuts to 68 N.m (50 ft. lbs.).
10. Install the exhaust system. Refer to **Exhaust System/MUFFLER, Exhaust - Installation**

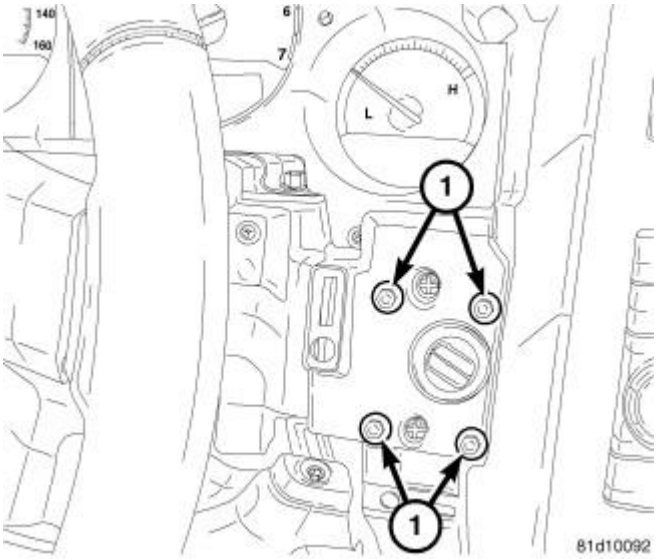

Fig. 293: Rear Axle Fill Plug
Courtesy of CHRYSLER LLC

11. Using a 14mm hex, remove rear axle fill plug (1). Fill axle with 1.2L (1.3 qts.) of Mopar® 75W-140 Synthetic Gear AND Axle Lubricant. Install fill plug and torque to 50 N.m (37 ft. lbs.).
12. Lower the vehicle.

SPECIAL TOOLS

SPECIAL TOOLS

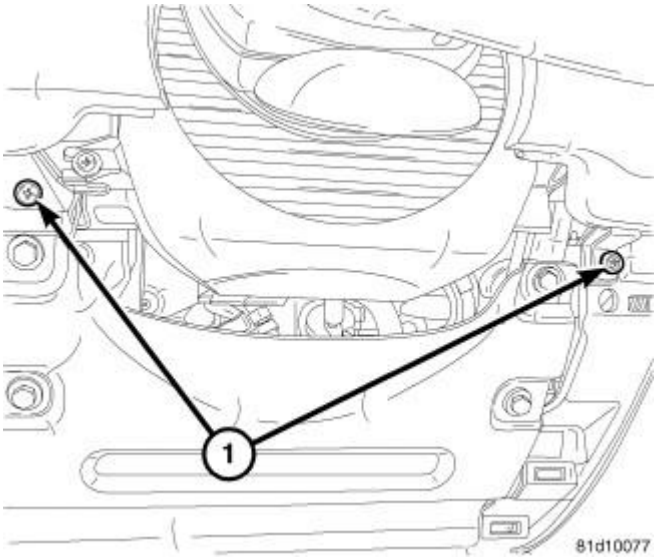

Fig. 294: Installer, 9754
Courtesy of CHRYSLER LLC

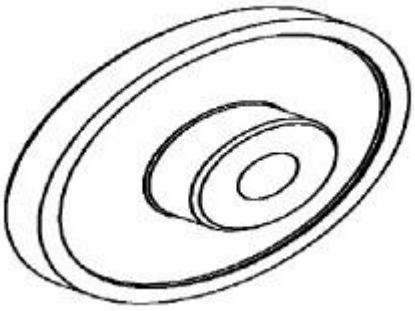

Fig. 295: Installer, 9755
Courtesy of CHRYSLER LLC

SEAL, AXLE DRIVE SHAFT

Removal

REMOVAL

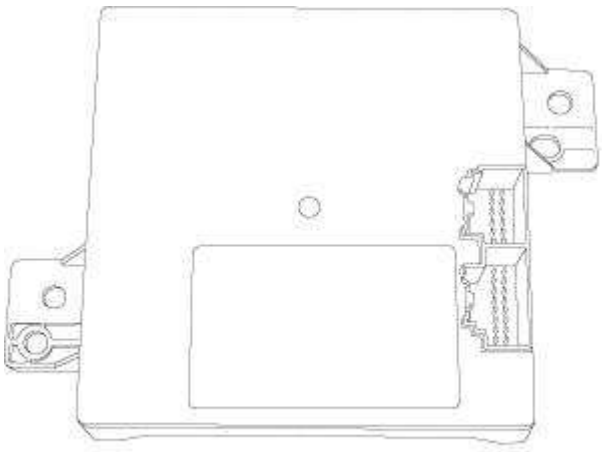

198683

Fig. 296: Axle Seal Removal
Courtesy of CHRYSLER LLC

1. Remove halfshaft(s). See **Differential and Driveline/Half Shaft - Removal**
2. Using suitable screwdriver (1), remove axle shaft seal (2).
3. Visually inspect halfshaft seal journal for damage (excessive seal groove, nicks, scratches, etc.). Replace halfshaft if necessary.

Installation

INSTALLATION

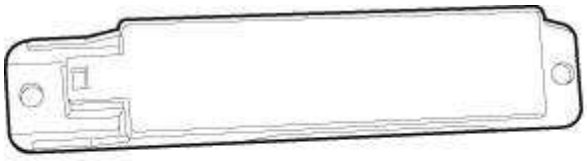

208479

Fig. 297: Axle Seal Installation
Courtesy of CHRYSLER LLC

1. Using Installer 9755 (2), install **NEW** axle shaft seal (1). Lubricate the inside diameter with Mopar® Gear and Axle Lubricant 75W-140 to protect seal during halfshaft installation.
2. Install halfshaft(s). See **Differential and Driveline/Half Shaft - Installation**



Fig. 298: Rear Axle Fill Plug
Courtesy of CHRYSLER LLC

3. Remove fill plug (1) to check and adjust rear axle fluid level. Top off axle with Mopar® Gear and Axle Lubricant 75W-140. Reinstall fill plug and torque to 50 N.m (37 ft. lbs.) torque.

SEAL, DRIVE PINION

Removal

REMOVAL

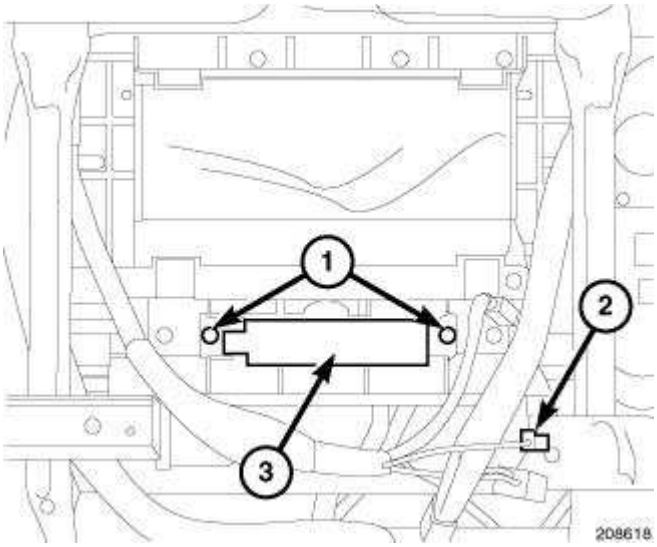

Fig. 299: Measuring Turning Torque
Courtesy of CHRYSLER LLC

1. Remove rear axle assembly from vehicle. Refer to Rear Axle Removal.
2. Measure axle assembly rotating torque and record measurement for reuse on assembly.

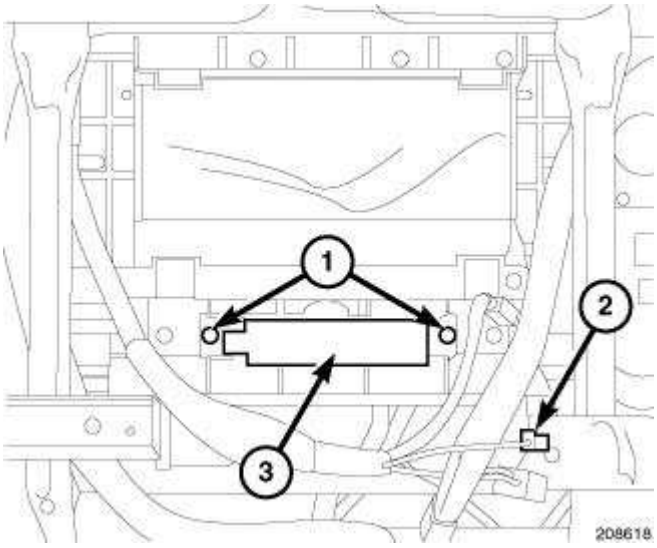

Fig. 300: Removing/Installing Pinion Flange Nut
Courtesy of CHRYSLER LLC

3. Using Flange Wrench C-3281(1) and 41mm socket, remove pinion flange nut and discard.



Fig. 301: Removing Pinion Flange With Puller 1026
Courtesy of CHRYSLER LLC

NOTE: Due to axle imbalance concerns, it is necessary to make sure pinion flange-to-shaft orientation is maintained. If alignment marks are not visible, apply appropriate marks before removing pinion flange.

4. Using Puller 1026 (1), remove pinion flange (2) from pinion shaft.

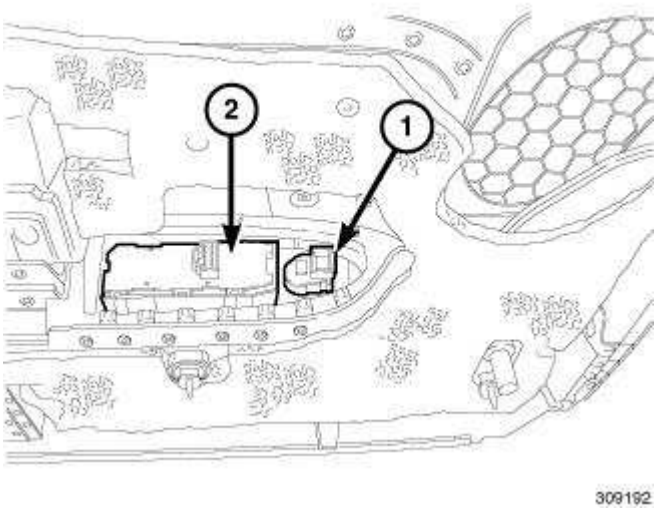

Fig. 302: Pinion Seal Removal
Courtesy of CHRYSLER LLC

5. Using suitable tool (1), remove pinion seal (2) and discard.

Installation

INSTALLATION

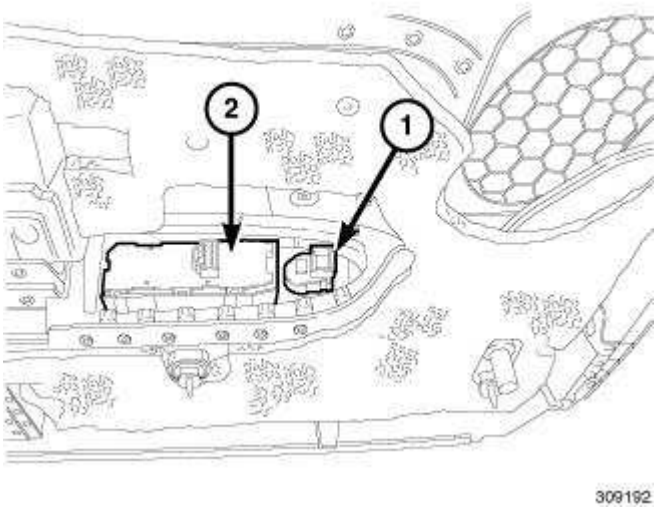

Fig. 303: Pinion Seal Installation
Courtesy of CHRYSLER LLC

1. Apply light coating of gear lubricant to the lip of the pinion seal.
2. Using Installer 9754 (1), install pinion seal until tool bottoms on carrier.

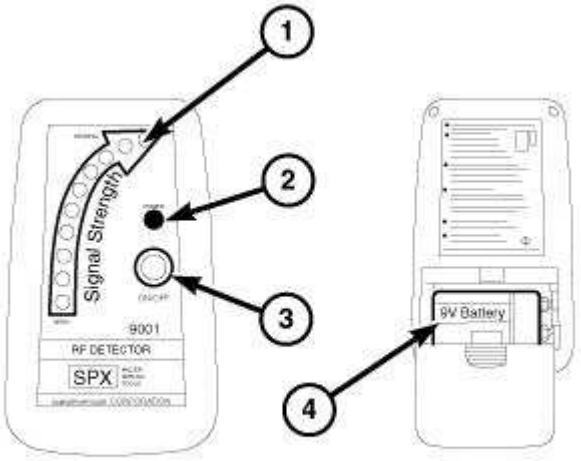

114508

Fig. 304: Installing Pinion Flange
Courtesy of CHRYSLER LLC

3. Install pinion flange into position. Align index marks to maintain assembly balance.
4. Using Installer 6448A (1), lightly tap on pinion flange (2) until adequate pinion shaft threads are exposed.

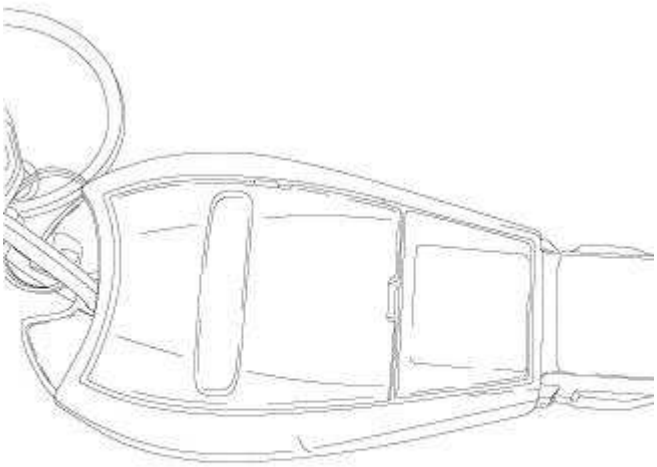

1953754

Fig. 305: Removing/Installing Pinion Flange Nut
Courtesy of CHRYSLER LLC

5. Install **new** pinion flange nut. Using Flange Wrench C-3281 (1) and 41mm socket, torque nut to

136 N.m (100 ft. lbs.).

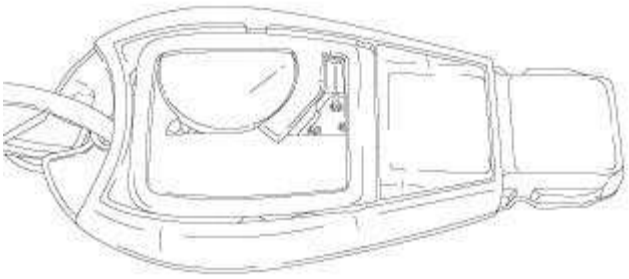

Fig. 306: Measuring Turning Torque
Courtesy of CHRYSLER LLC

6. Measure assembly turning torque. Axle assembly rotating torque must be should be equal to the reading recorded upon seal/flange removal.



Fig. 307: Removing/Installing Pinion Flange Nut
Courtesy of CHRYSLER LLC

7. If rotating torque is low, increase pinion flange nut torque in 7 N.m (5 ft. lbs.) increments. Repeat until proper rotating torque is received.

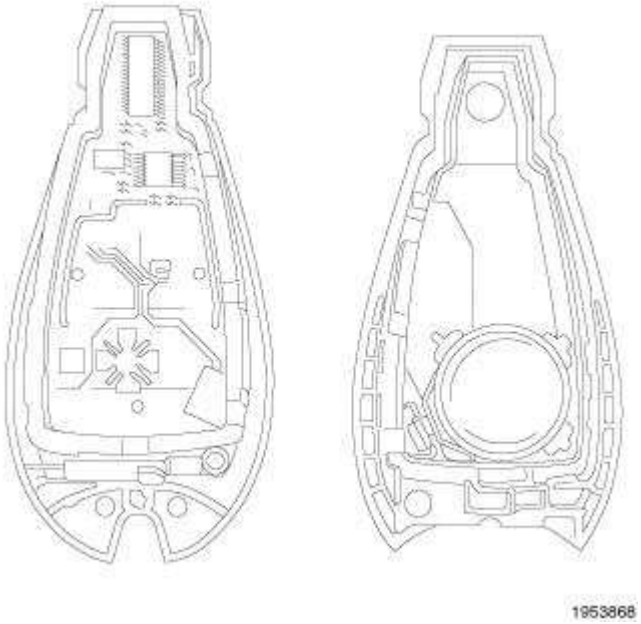

Fig. 308: Staking Pinion Flange Nut
Courtesy of CHRYSLER LLC

8. Stake pinion flange nut (1) as shown on illustration.
9. Install rear axle assembly. Refer to Rear Axle Installation.

REAR AXLE, G648

DIAGNOSIS AND TESTING

DIAGNOSIS AND TESTING

GEAR NOISE

Axle gear noise can be caused by insufficient lubricant, incorrect backlash, incorrect pinion depth, tooth contact, worn/damaged gears, or the carrier housing not having the proper offset and squareness.

Gear noise usually happens at a specific speed range. The noise can also occur during a specific type of driving condition. These conditions are acceleration, deceleration, coast, or constant load.

When road testing, first warm-up the axle fluid by driving the vehicle at least 5 miles and then accelerate the vehicle to the speed range where the noise is the greatest. Shift out-of-gear and coast through the peak-noise range. If the noise stops or changes greatly:

- Axle mounts damaged, worn, or bottoming out.
- Check for insufficient lubricant.
- Incorrect ring gear backlash.
- Gear damage.

Differential side gears and pinions can be checked by turning the vehicle. They usually do not cause noise during straight-ahead driving when the gears are unloaded. The side gears are loaded during vehicle turns. A worn pinion shaft can also cause a snapping or a knocking noise.

BEARING NOISE

The differential and pinion bearings can produce noise when worn or damaged. Bearing noise can be either a whining, or a growling sound.

Pinion bearings have a constant-pitch noise. This noise changes only with vehicle speed. Pinion bearing noise will be higher pitched because it rotates at a faster rate. Drive the vehicle and load the differential. If bearing noise occurs, the rear pinion bearing is the source of the noise. If the bearing noise is heard during a coast, the front pinion bearing is the source.

Worn or damaged differential bearings usually produce a low pitch noise. Differential bearing noise is similar to pinion bearing noise. The pitch of differential bearing noise is also constant and varies only with vehicle speed.

Wheel hub bearings produce noise and vibration when worn or damaged. The noise generally changes when the bearings are loaded. Road test the vehicle. Turn the vehicle sharply to the left and to the right. This will load the bearings and change the noise level. Where axle bearing damage is slight, the noise is usually not noticeable at speeds above 30 mph.

LOW SPEED KNOCK

Low speed knock is generally caused by a worn U-joint or by worn side-gear thrust washers. A worn pinion shaft bore will also cause low speed knock.

VIBRATION

Vibration at the rear of the vehicle is usually caused by a:

- Damaged propeller shaft.
- Missing propeller shaft balance weight(s).
- Worn or out-of-balance wheels.
- Loose wheel lug nuts.
- Worn U-joints, or CV joints.
- Worn rubber coupler between the propeller shaft and the pinion yoke.
- Washers missing from the fasteners that attach the rubber coupler to the pinion yoke.
- Loose/broken springs.

- Damaged axle shaft bearing(s).
- Loose pinion gear nut.
- Excessive pinion yoke run out.
- Bent halfshaft(s).

Check for loose or damaged front-end components or engine/transmission mounts. These components can contribute to what appears to be a rearend vibration. Do not overlook engine accessories, brackets and drive belts.

All driveline components should be examined before starting any repair.

DRIVELINE SNAP

A snap or clunk noise when the vehicle is shifted into gear, can be caused by:

- Cradle-to-body isolator worn or damaged.
- Worn or damaged rubber washer between axle hub nut and axle hub.
- High engine idle speed.
- Transmission shift operation.
- Loose engine/transmission/transfer case mounts.
- Worn U-joints, or CV joints.
- Worn rubber coupler between the propeller shaft and the pinion yoke.
- Worn or broken axle mount isolators.
- Loose pinion gear nut and yoke.
- Excessive ring gear backlash.
- Excessive side gear to case clearance.

The source of a snap or a clunk noise can be determined with the assistance of a helper. Raise the vehicle on a hoist with the wheels free to rotate. Instruct the helper to shift the transmission into gear. Listen for the noise, a mechanics stethoscope is helpful in isolating the source of a noise.

DIAGNOSTIC CHART

CONDITION	POSSIBLE CAUSE	CORRECTION
WHEEL NOISE	1. Wheel loose. 2. Faulty, brinelled wheel bearing.	1. Tighten loose nuts. 2. Replace bearing.
DIFFERENTIAL CRACKED	1. Improper differential side bearing preload. 2. Excessive ring gear backlash.	1. Replace case and inspect gears and bearings for further damage. Set differential bearing preload properly. 2. Replace case and inspect gears and bearings for further damage. Set ring gear

		backlash properly.
	3. Vehicle overloaded.	3. Replace case and inspect gears and bearings for further damage. Avoid excessive vehicle weight.
DIFFERENTIAL GEARS SCORED	1. Insufficient lubrication.	1. Replace scored gears. Fill differential with the correct fluid type and quantity.
	2. Improper grade of lubricant.	2. Replace scored gears. Fill differential with the proper fluid type and quantity.
	3. Excessive spinning of one wheel/tire.	3. Replace scored gears. Inspect all gears, pinion bores, and shaft for damage. Service as necessary.
LOSS OF LUBRICANT	1. Lubricant level too high.	1. Drain lubricant to the correct level.
	2. Worn axle shaft seals.	2. Replace seals.
	3. Cracked axle housing.	3. Repair as necessary.
	4. Worn pinion seal.	4. Replace seal.
	5. Worn/scored pinion flange journal.	5. Replace pinion flange and seal.
	6. Axle cover not properly sealed.	6. Remove, clean, and re-seal cover.
AXLE OVERHEATING	1. Lubricant level low.	1. Fill differential to correct level.
	2. Improper grade of lubricant.	2. Fill differential with the correct fluid type and quantity.
	3. Bearing preload too high.	3. Re-adjust bearing pre-load.
	4. Insufficient ring gear backlash.	4. Re-adjust ring gear backlash.
GEAR TEETH BROKE	1. Overloading.	1. Replace gears. Examine other gears and bearings for possible damage.
	2. Ice-spotted pavement.	2. Replace gears and examine remaining parts for damage.
	3. Improper adjustments.	3. Replace gears and examine remaining parts for damage. Ensure ring gear backlash is correct.
AXLE NOISE	1. Insufficient lubricant.	1. Fill axle with the correct fluid type and quantity.
	2. Improper ring gear and pinion adjustment.	2. Check ring gear and pinion contact pattern. Adjust backlash or pinion depth.

	3. Unmatched ring gear and pinion.	3. Replace gears with a matched ring gear and pinion.
	4. Worn teeth on ring gear and/or pinion.	4. Replace ring gear and pinion.
	5. Loose pinion bearings.	5. Adjust pinion bearing pre-load.
	6. Loose differential bearings.	6. Adjust differential bearing preload.
	7. Misaligned or sprung ring gear.	7. Measure ring gear run-out. Replace components as necessary.
	8. Housing not machined properly.	8. Replace housing.

STANDARD PROCEDURE

FLUID DRAIN AND FILL

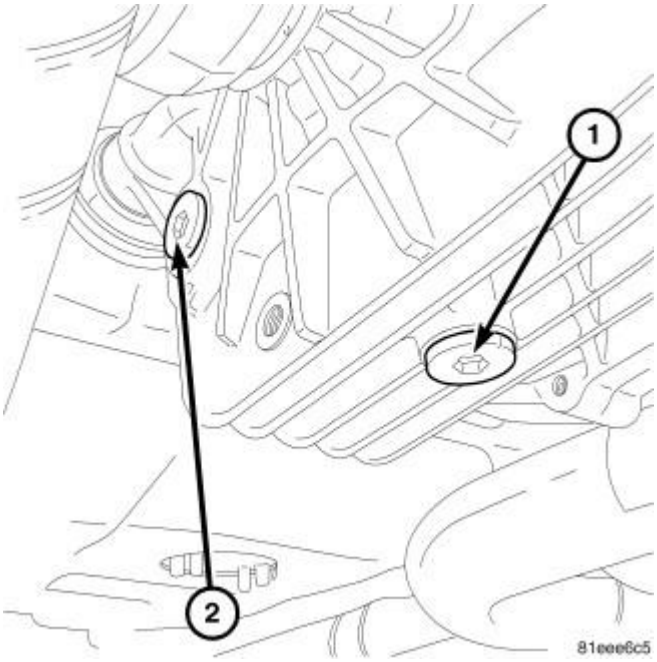

Fig. 309: Drain And Fill Plug
Courtesy of CHRYSLER LLC

1. With vehicle in neutral, position and raise vehicle on hoist.
2. Remove axle drain plug (1) and drain rear axle fluid into suitable container.
3. Install drain plug (1). Tighten to 35 Nm (25 ft. lbs.).

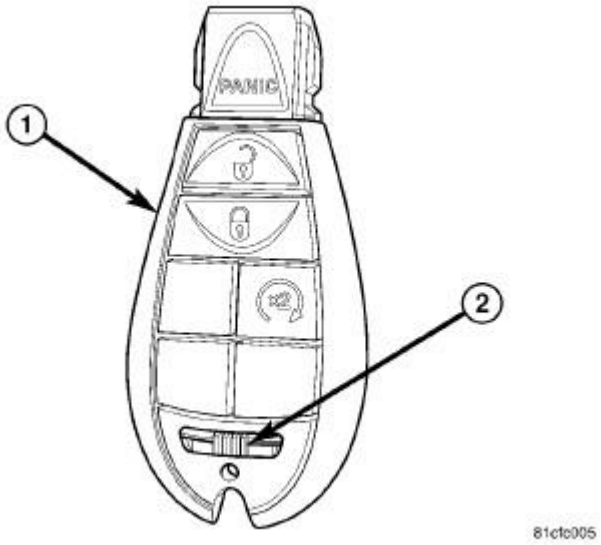

Fig. 310: Drain And Fill Plug
Courtesy of CHRYSLER LLC

4. Remove rear axle fill plug (2). Fill axle with 1.2L (1.2 qts.) of Mopar® 75W-90 Synthetic Gear AND Axle Lubricant and one 4 oz. bottle of MOPAR® Limited Slip Additive Friction Modifier. Install fill plug and torque to 35 N.m (25 ft. lbs.).

REMOVAL

REMOVAL

NOTE: This procedure requires the compression of the rear suspension to ride height. A drive-on hoist should be used. If a drive-on hoist is not used, screw-style under-hoist jack stands are required to compress the rear suspension, facilitating rear halfshaft removal.

CAUTION: Never grasp halfshaft assembly by the inner or outer boots. Doing so may cause the boot to pucker or crease, reducing the service life of the boot and joint. Avoid over angulating or stroking the C/V joints when handling the halfshaft.

1. With vehicle in neutral, position and raise vehicle on hoist.

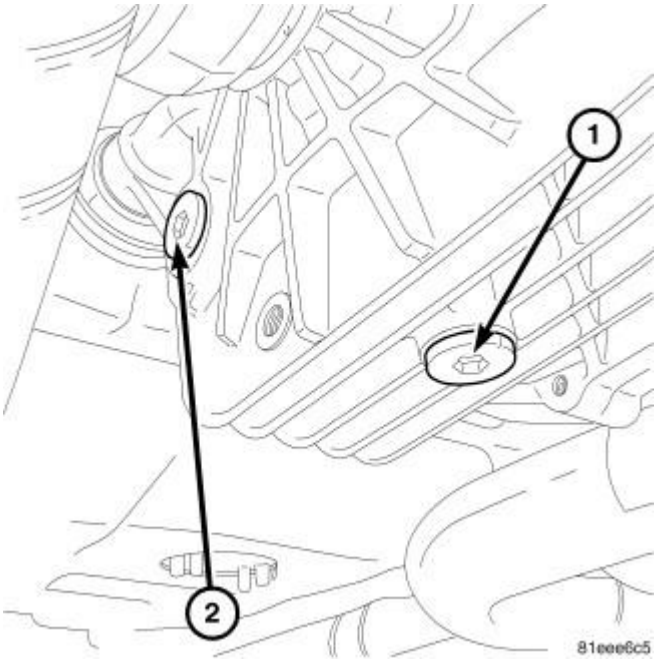

Fig. 311: Drain And Fill Plug
Courtesy of CHRYSLER LLC

2. Remove axle drain plug (1) and drain rear axle fluid into suitable container.
3. Install drain plug (1). Do not tighten at this time.
4. Remove the muffler. Refer to **Exhaust System/MUFFLER, Exhaust - Removal** .

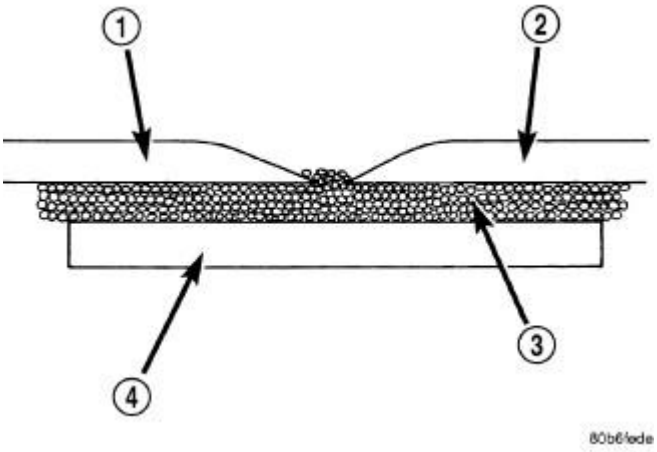

Fig. 312: Applying Alignment Index Marks To Rear Axle Flange
Courtesy of CHRYSLER LLC

5. Apply alignment index marks (3) to the propeller shaft rubber coupler (1) and axle flange (2).

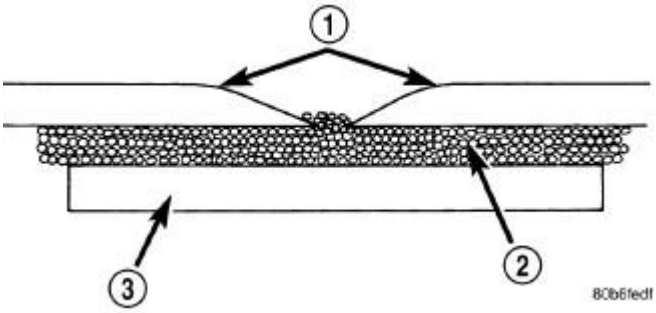

Fig. 313: Propeller Shaft Rear Coupler To Axle Flange
Courtesy of CHRYSLER LLC

NOTE: If re-using the propeller shaft coupler-to-axle flange fasteners, save the washers.

6. Remove three propeller shaft coupler (2) -to-axle flange (1) fasteners.

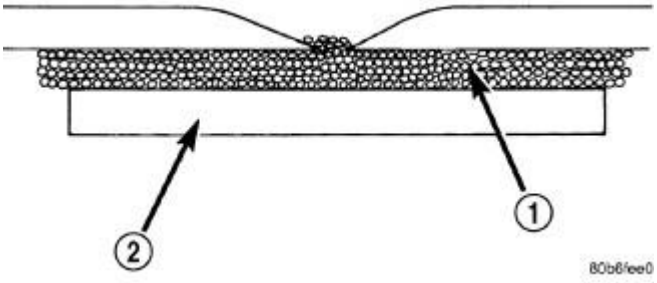

Fig. 314: Disengaging Halfshaft Using Suitable Pry Bar
Courtesy of CHRYSLER LLC

NOTE: Do not pry on the slinger (2).

7. Using suitable pry bar (1) in the location shown on illustration, partially disengage halfshaft(s) from axle assembly.

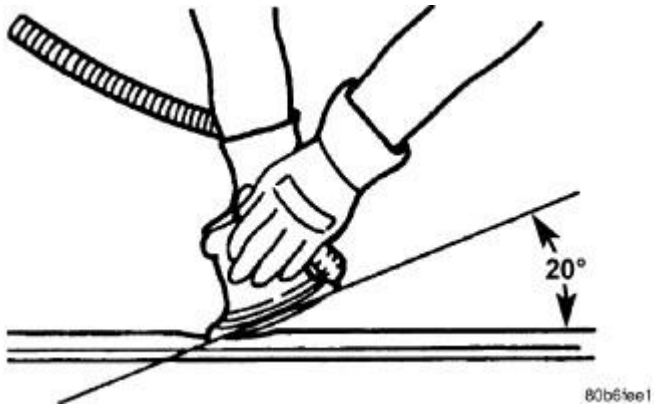

Fig. 315: Transmission Jack At Rear Axle
Courtesy of CHRYSLER LLC

8. If a drive-on hoist is used, position transmission jack (1) to rear axle assembly. If a drive-on hoist is not used, compress rear suspension using screw-style under-hoist jack stands (2), then position transmission jack to rear axle assembly.

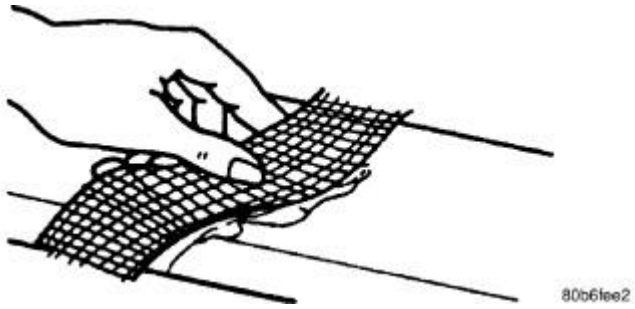

Fig. 316: Front Mount Bolt Cover
Courtesy of CHRYSLER LLC

9. Remove the front mount bolt cover (1) located at the top of the axle carrier (2).

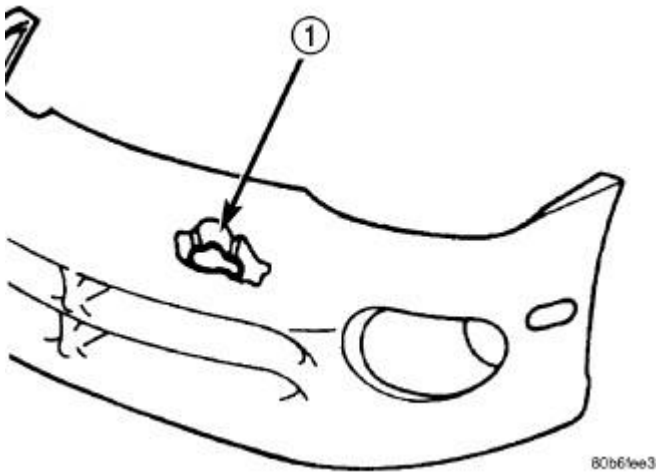

Fig. 317: Locating Rear Axle Front Mount Bolt
Courtesy of CHRYSLER LLC

NOTE: The nut will turn free at the at the top of the axle carrier, it will need to be held with a deep socket during removal.

10. Remove rear axle front mount bolt (1) and nut (3).

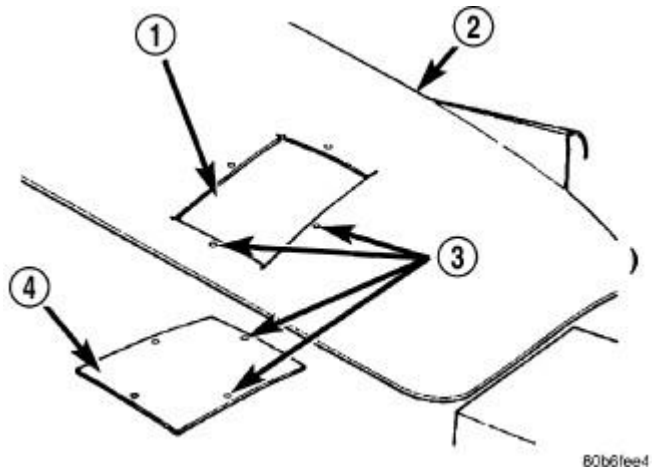

Fig. 318: Locating Right Rear Axle To Crossmember Bolts
Courtesy of CHRYSLER LLC

11. Remove right rear axle-to-crossmember bolts (1).

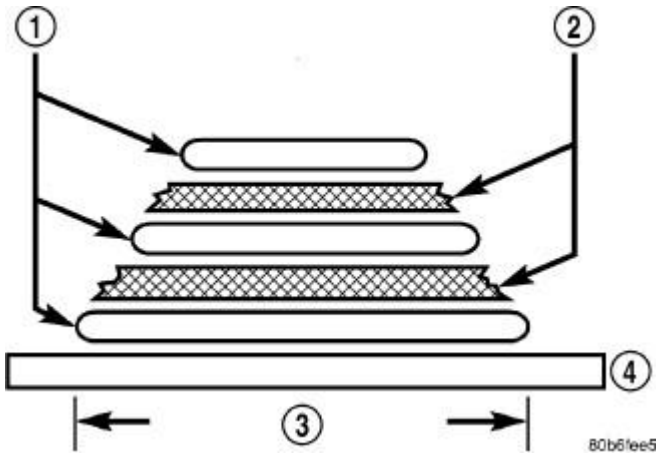

Fig. 319: Left Rear Bolt
Courtesy of CHRYSLER LLC

12. Remove the left rear bolt.

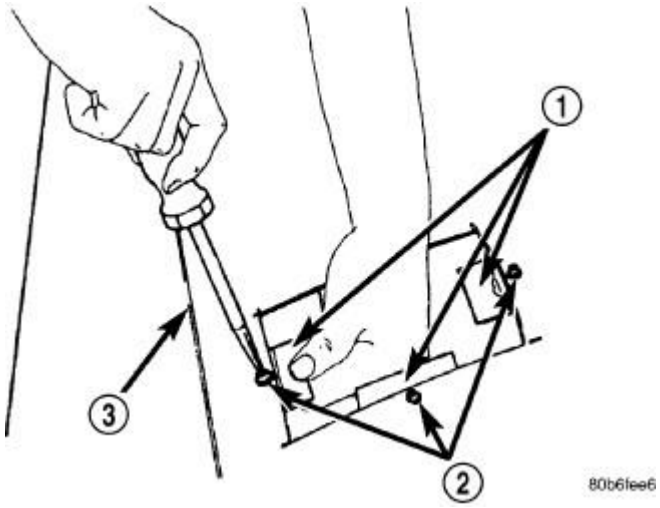

Fig. 320: Lowering Rear Axle Assembly
Courtesy of CHRYSLER LLC

NOTE: Do not pry on the axle halfshaft slinger.

13. Carefully lower rear axle. While lowering axle, separate right halfshaft (1) from axle and support with suitable rope or wire.

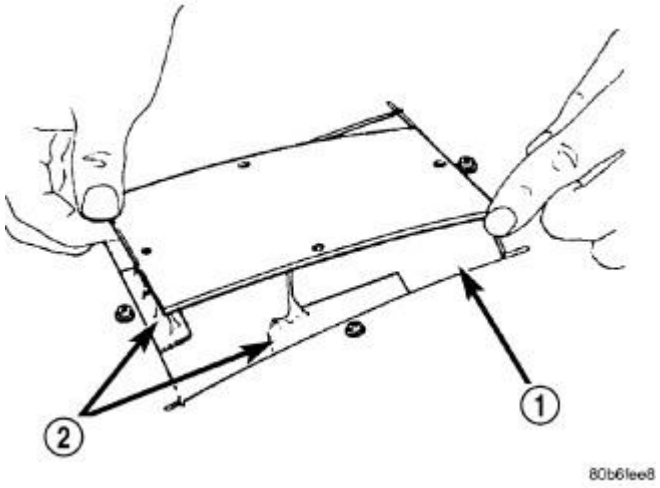

Fig. 321: Identifying Rear Axle Assembly, Lt. Side Halfshaft & Hydraulic Jack
Courtesy of CHRYSLER LLC

14. Remove left halfshaft (2).
15. Remove axle assembly from vehicle and transfer to bench.

INSTALLATION

INSTALLATION

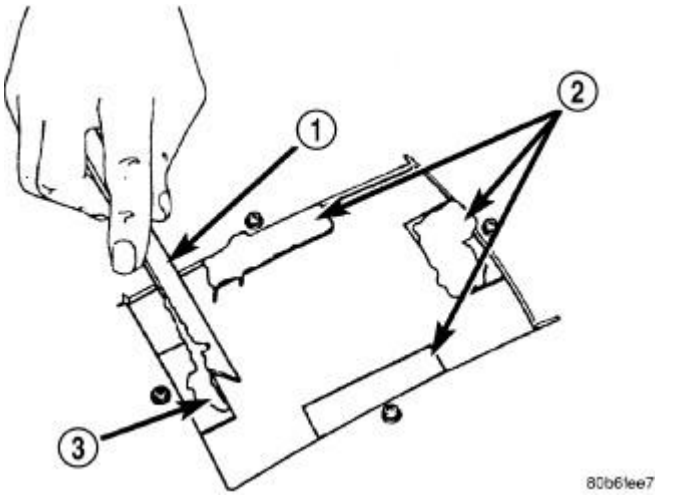

Fig. 322: Identifying Rear Axle Assembly, Lt. Side Halfshaft & Hydraulic Jack
Courtesy of CHRYSLER LLC

NOTE: Use care when installing halfshaft to axle assembly. The halfshaft installation angle should be minimized to avoid damage to seal upon installation.

1. Using new circlip(s), install left halfshaft (2) to rear axle assembly. Do not damage axle seals. Verify proper installation by pulling outward on joint by hand.

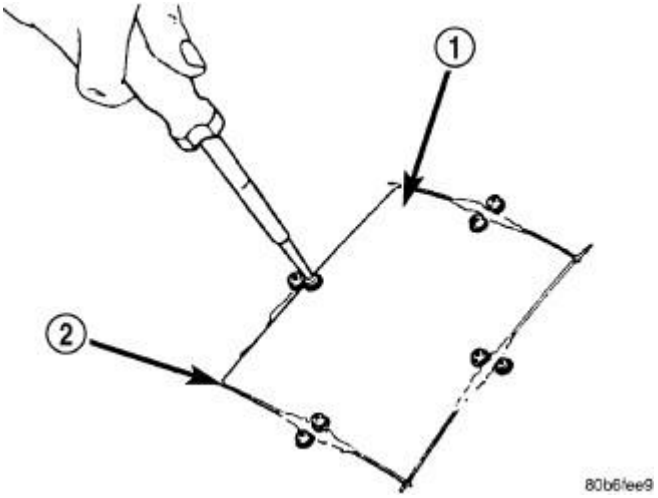

Fig. 323: Installing Right Halfshaft Into Axle Using Seal Protector
Courtesy of CHRYSLER LLC

2. Using Seal Protector 9099 (3) install the right halfshaft (1) into axle (2).

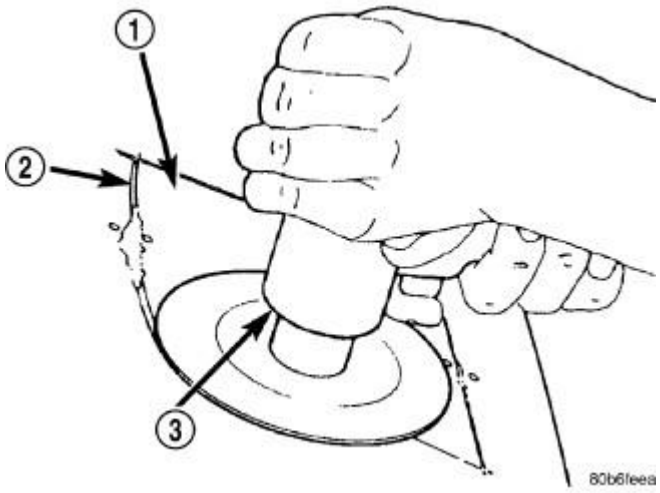

Fig. 324: Applying Alignment Index Marks To Rear Axle Flange
Courtesy of CHRYSLER LLC

NOTE: To prevent damage or imbalance, washers must be placed on fasteners that attach rubber coupler to the pinion yoke.

NOTE: To prevent damage or imbalance, washers must be installed between fastener heads and the rubber coupler.

3. Raise rear axle assembly into position. Align propeller shaft index marks (3) and start propeller shaft coupler-to-axle bolt/nuts by hand.

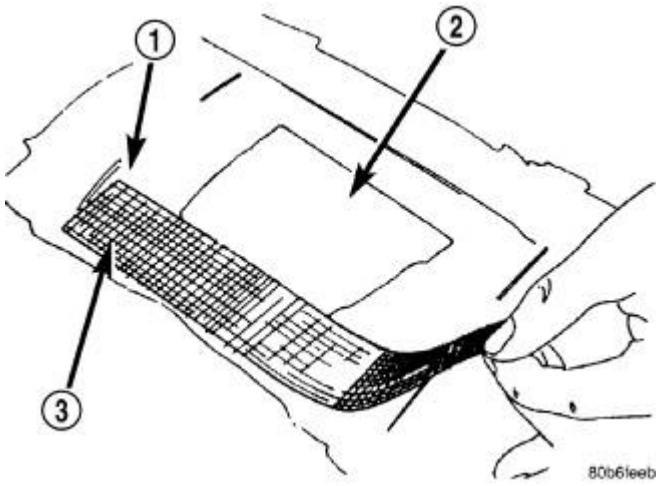

Fig. 325: Locating Right Rear Axle To Crossmember Bolts
Courtesy of CHRYSLER LLC

NOTE: Clean the rear axle-to-crossmember bolts and apply a patch of blue MOPAR® Lock & Seal medium strength thread locker to the rear axle-to-crossmember bolts.

4. Install right rear axle-to-crossmember bolt (1) and tighten to 220 N.m (162 ft. lbs.).

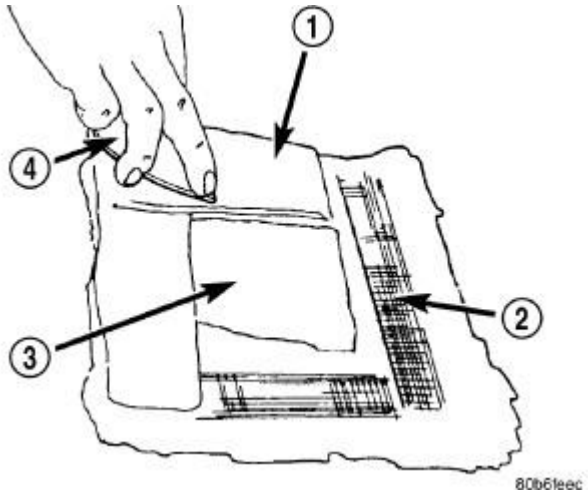

Fig. 326: Left Rear Bolt
Courtesy of CHRYSLER LLC

NOTE: Clean the rear axle-to-crossmember bolts and apply a patch of blue MOPAR® Lock & Seal medium strength thread locker to the rear axle-to-crossmember bolts.

5. Install left rear axle-to-crossmember bolt (1) and tighten to 220 N.m (162 ft. lbs.).

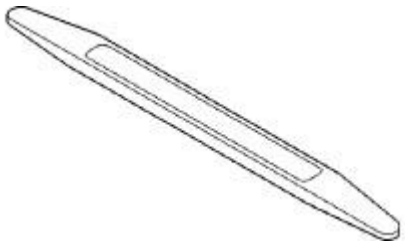

Fig. 327: Locating Rear Axle Front Mount Bolt
Courtesy of CHRYSLER LLC

NOTE: The rubber part of the axle isolator must face toward the cradle.

6. Install rear axle front mount isolator (3) as shown on illustration and torque fastener to 65 N.m (48 ft. lbs.).



Fig. 328: Front Mount Bolt Cover
Courtesy of CHRYSLER LLC

7. Install the front mount bolt cover (1).

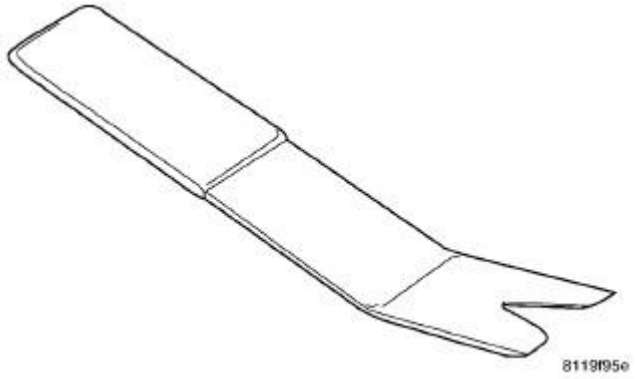

Fig. 329: Transmission Jack At Rear Axle
Courtesy of CHRYSLER LLC

8. Again verify halfshaft inner joints are fully engaged to axle assembly.
9. Remove transmission jack (1).
10. If used, remove screw-type under-hoist jack stands (2).

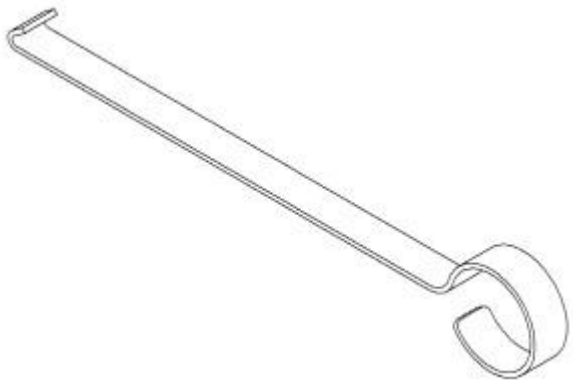

Fig. 330: Propeller Shaft Rear Coupler To Axle Flange
Courtesy of CHRYSLER LLC

NOTE: **If re-using original fasteners, apply a patch of blue MOPAR® Lock & Seal medium strength thread locker to the propeller shaft coupler-to-axle flange fasteners. New fasteners have a thread lock patch, and do not require application of blue MOPAR® Lock & Seal medium strength thread locker.**

11. Install the propeller shaft coupler-to-axle flange fasteners. Tighten the propeller shaft coupler-to-axle flange fasteners (2) to 122 N.m (89 ft. lbs.).

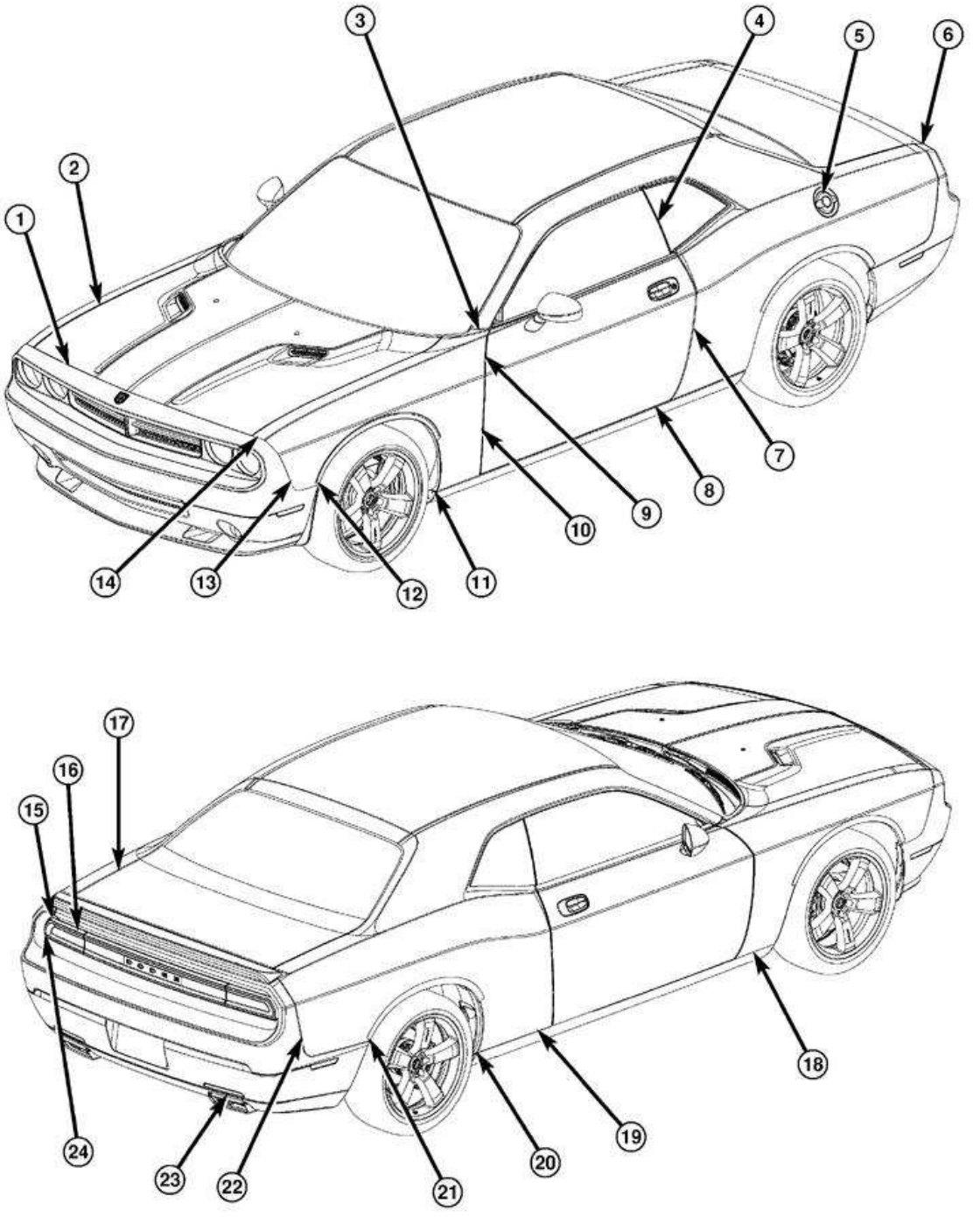

Fig. 331: Drain And Fill Plug
Courtesy of CHRYSLER LLC

12. Remove rear axle fill plug (2). Fill axle with 1.2L (1.2 qts.) of Mopar® 75W-90 Synthetic Gear and Axle Lubricant and add one 0.03 L (4 oz.) bottle of MOPAR® Limited Slip Additive Friction Modifier. Install fill plug and torque to 35 N.m (25 ft. lbs.).

ADJUSTMENTS

PINION DEPTH

NOTE: Pinion depth measurement is taken with the pinion head and tail bearing cups pressed into the axle housing without the shim.

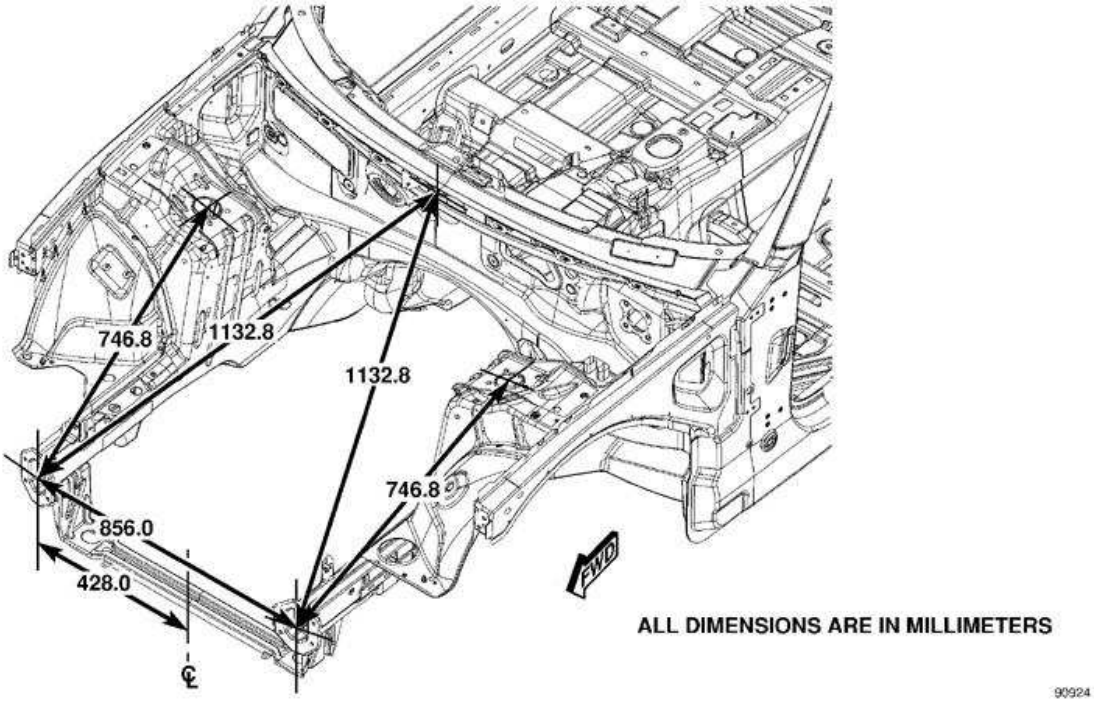

Fig. 332: Installing Pinion Bearing Cups With Pinion Bearing Cup Installer
Courtesy of CHRYSLER LLC

NOTE: Do not attempt to install the inner and outer pinion bearing cups at the same time.

1. If necessary, install the pinion head bearing cup into housing with Pinion Bearing Cup Installer 10148 (1).
2. If necessary, press pinion tail bearing cup into housing with Pinion Bearing Cup Installer 10148 (1).

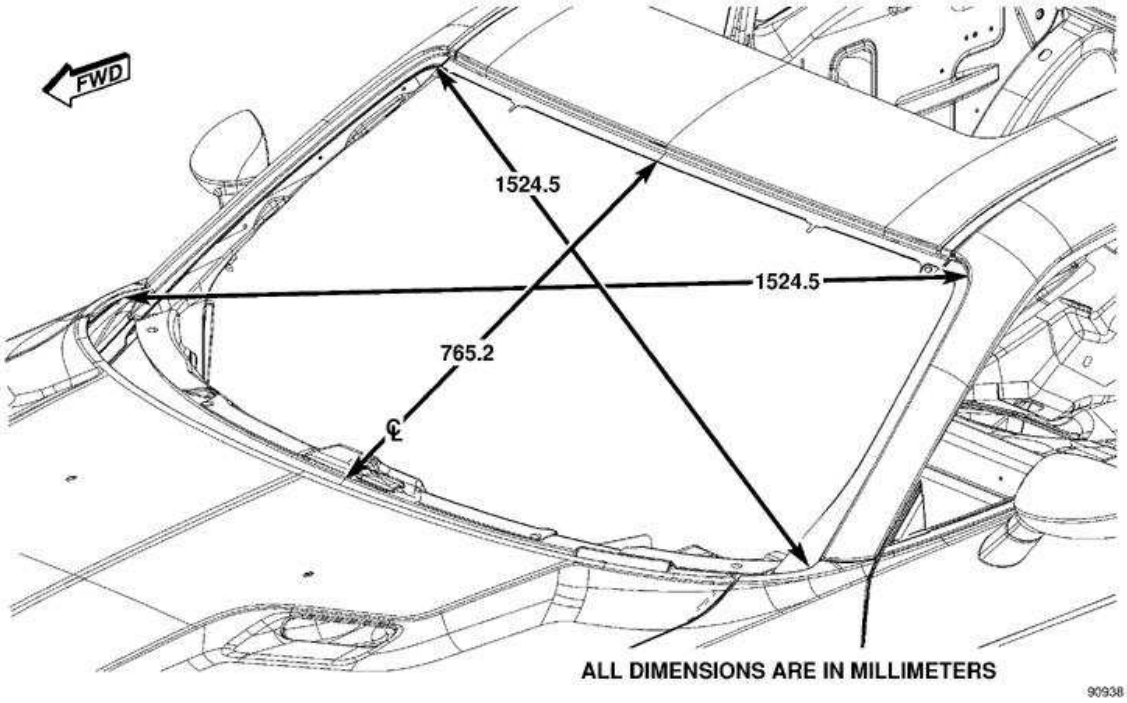

Fig. 333: Arbor Bar 10149-2
Courtesy of CHRYSLER LLC

3. Install Arbor Bar 10149-2 (1) into the case side bearing bore, then secure Arbor 10149-2 in place with Plate 10149-5 and fastener.

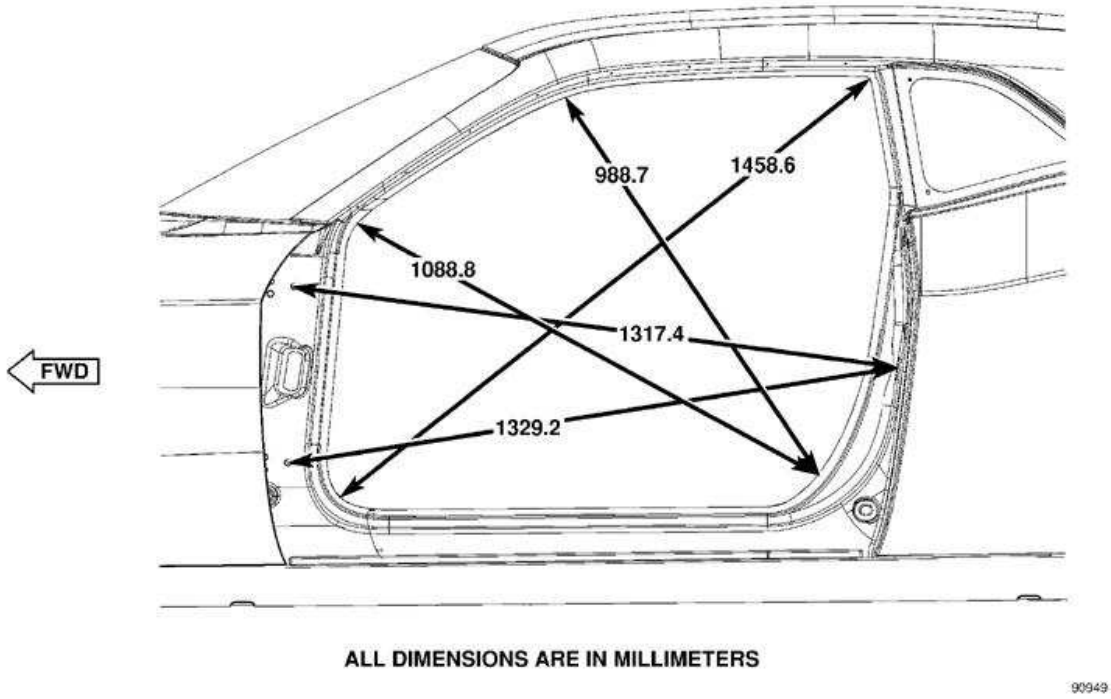

Fig. 334: Installing Pinion Head Bearing & Tail Bearing With Pinion Depth Measurement Tools

Courtesy of CHRYSLER LLC

4. Install the pinion head bearing, tail bearing (3), L-block 6739 (1), and the Pinion Height Block 10149-1 (2).
5. Verify pinion depth measurement tools are set up as shown on illustration.

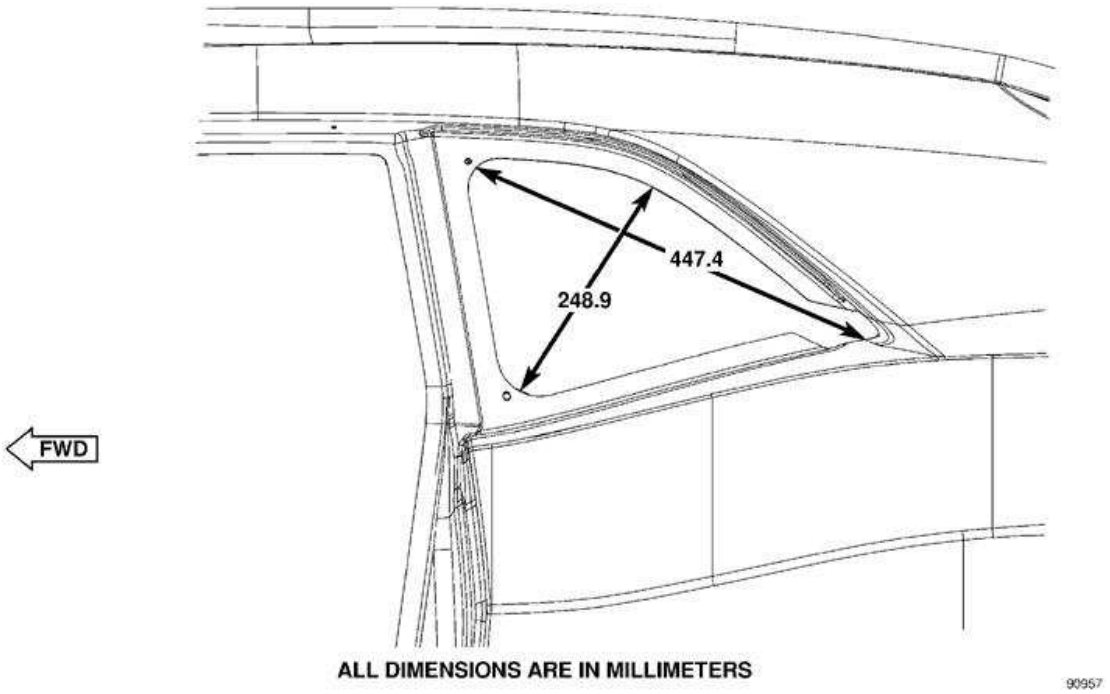

Fig. 335: Indicator/Scooter Block Setup
Courtesy of CHRYSLER LLC

6. Install Dial Indicator 9524 (1) to Scooter Block D-115-2A (2) (from Pinion Gage Set 6730). Secure with set-screw (3).

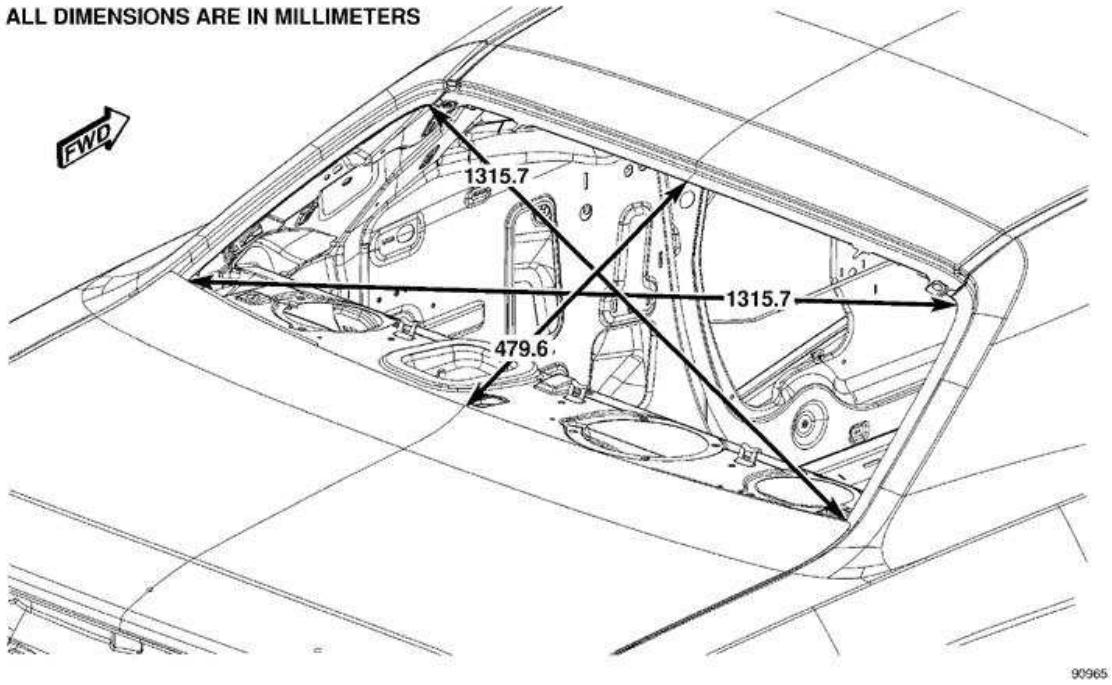

Fig. 336: Zeroing In Dial Indicator 9524 (1) On L-Block
Courtesy of CHRYSLER LLC

7. Zero Dial Indicator 9524 (1) on L-block 6739 (2).

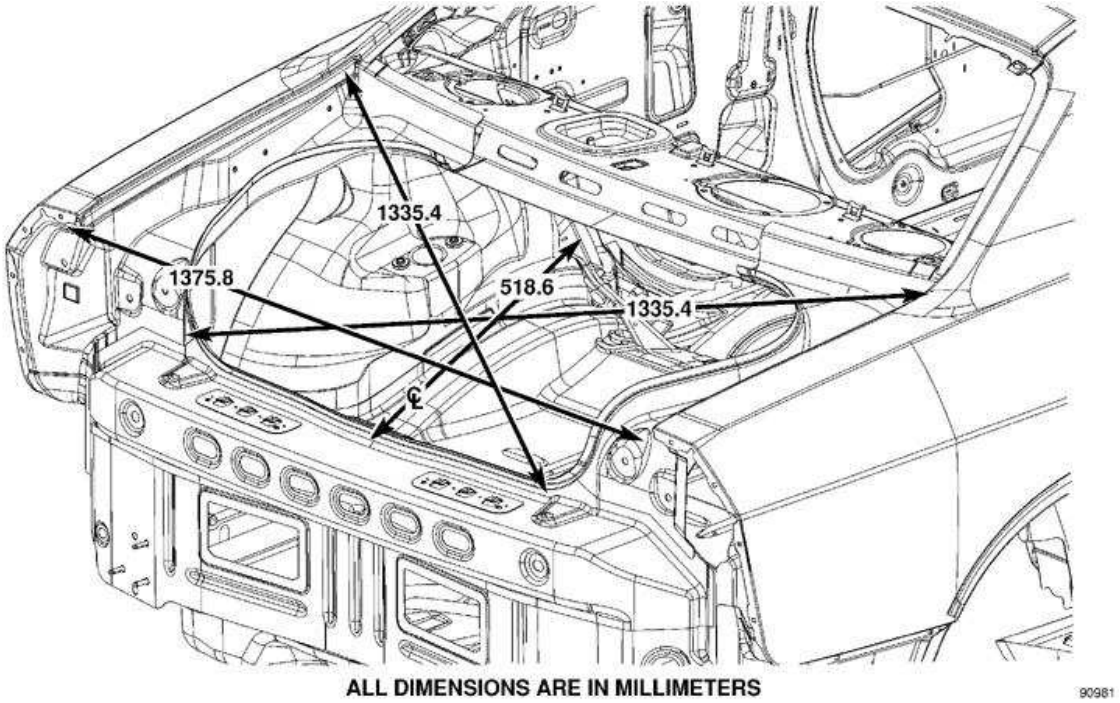

Fig. 337: Slide Indicator Probe Off Of Height Block And Onto Arbor Bar 10149-2
Courtesy of CHRYSLER LLC

8. Slide indicator probe (1) off of height block and onto Arbor Bar 10149-2 (2). As indicator contacts Arbor Bar 10149-2 (2), indicator needle will rotate clockwise. Continue moving indicator probe to the crest of Arbor Bar 10149-2 and record the highest reading.
9. Rotate Arbor Bar 10149-2 (2) 90°.
10. Repeat steps 7 through 9 and record each measurement until the Arbor Bar 10149-2 has been rotated back to the original location.
11. Average the four measurements taken in steps 7 through 10.
12. Select a shim equal to the average of the measurements, plus 1.5 mm (0.059 in.).

SIDE BEARING PRELOAD ADJUSTMENT

NOTE: Select the pinion shim before performing this procedure.

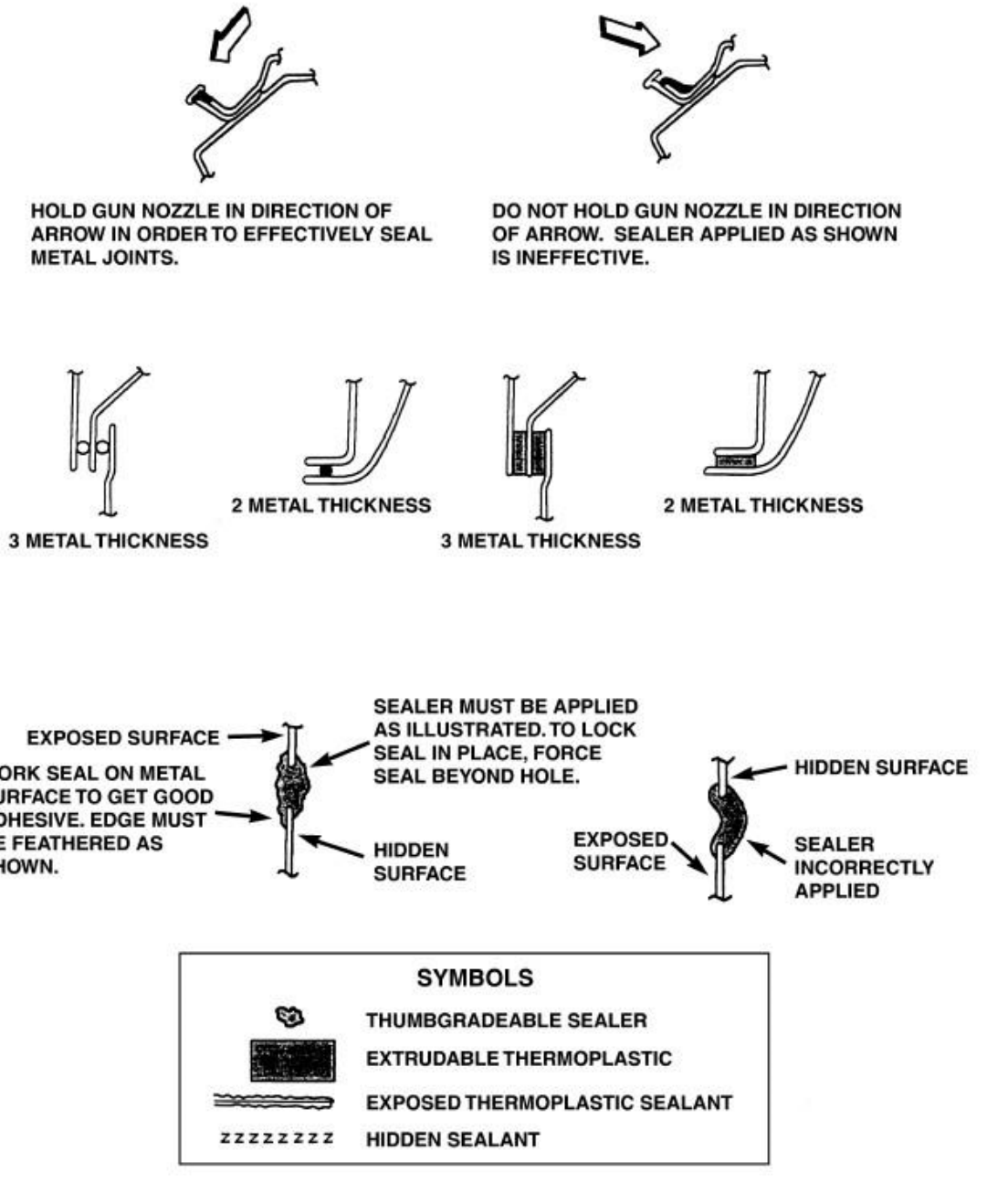

Fig. 338: Side Bearing Preload Adjustment
Courtesy of CHRYSLER LLC

1. Clean the differential bearing cup bore in the axle housing.
2. Install Dummy Bearing 10149-3 in the axle housing.
3. Clean the differential bearing cup bore in the axle housing cover.

4. Install Dummy Bearing 10149-4 in the axle housing cover.
5. Install the differential into the axle housing.
6. Install the axle housing cover and tighten the bolts to 10 Nm (7 ft. lbs.).
7. Set up the dial indicator (1) to measure endplay on the housing side of the differential (2).
8. From the housing side of the differential, press the differential toward the case cover, then zero the dial indicator (1).
9. From the case cover side, press the differential toward the housing side, and record the measurement.
10. Add 1.33 mm (0.052 in.) to the empty case measurement taken in the previous step and record the results. This is the total dimension of both differential shims when installed.
11. Remove the dial indicator.
12. Remove the axle housing cover.
13. Fully install the pinion.
14. Install the Dummy Bearing 10149-3 in the axle housing, then install the differential carrier into the axle housing.
15. Install Dummy Bearing 10149-4 in the axle housing cover, and install the axle housing cover. Tighten the bolts to 10 Nm (7 ft. lbs.).
16. Set up the dial indicator (1) as before.
17. From the housing side of the differential, press the differential toward the case cover, then zero the dial indicator (1).
18. From the case cover side, press the differential toward the housing side, and record the measurement.
19. Subtract 0.27 mm (0.01 in.) from the measurement found in the previous step. This is the size of the shim that should be installed in the housing cover.
20. Subtract the size of the selected housing cover shim from the measurement found in step 11. This is the size of the shim that should be installed in the housing.
21. Check ring gear backlash. Final ring gear backlash should be 0.21 mm +/- 0.13 mm (0.008 in. +/- 0.005 in.).

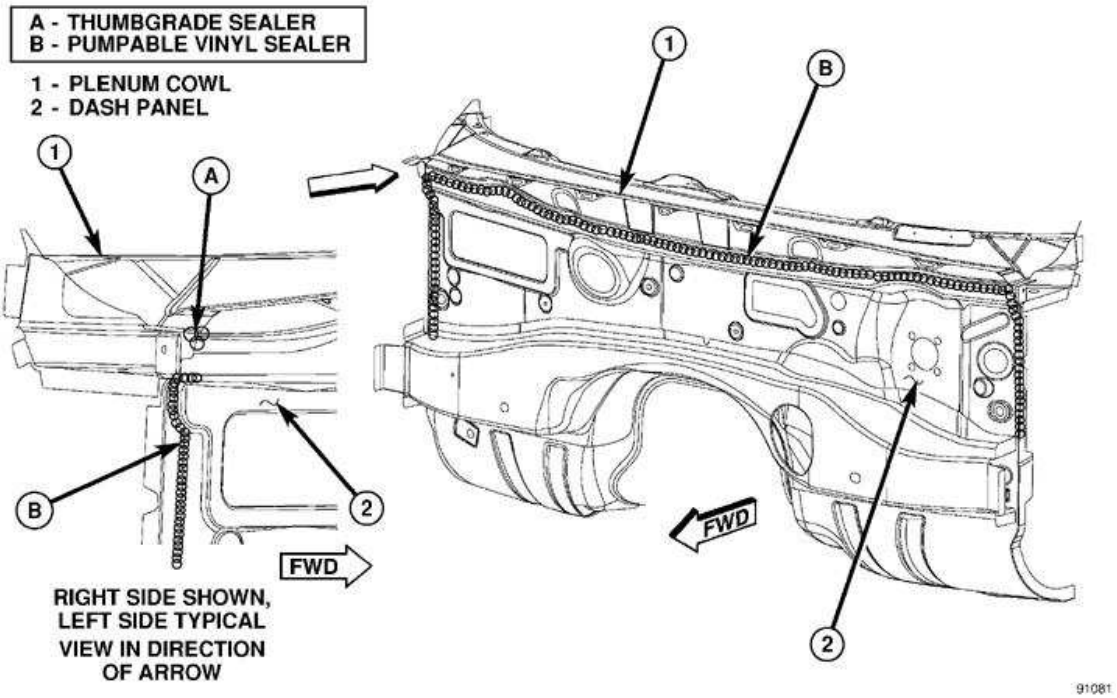

Fig. 339: Backlash Shim Correction
Courtesy of CHRYSLER LLC

22. If backlash measurement is less than 0.08 mm (0.003 in.), it is necessary to decrease the shim thickness on the ring gear (left) side, and increase the thickness on the pinion (right) side.
23. If backlash measurement is greater than 0.34 mm (0.013 in.), it is necessary to increase the shim thickness on the ring gear (right) side, and decrease the thickness on the pinion (left) side.
24. Check the gear contact pattern, and adjust as necessary. Refer to **GEAR CONTACT PATTERN**.

GEAR CONTACT PATTERN

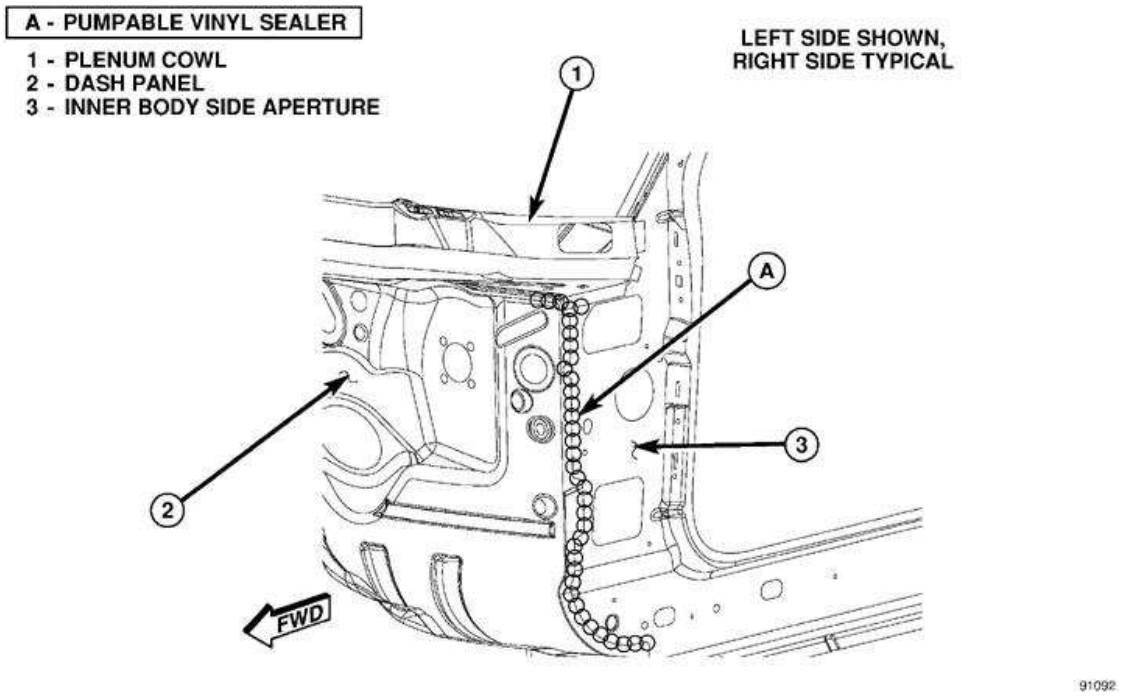

Fig. 340: Gear Tooth Contact Patterns
Courtesy of CHRYSLER LLC

NOTE: The ring gear and pinion teeth contact patterns will show if the pinion depth is correct in the housing. It will also show if the ring gear backlash has been adjusted correctly. The backlash can be adjusted within specifications to achieve desired tooth contact patterns.

1. Install the differential side bearings and pinion bearings.
2. Install the selected differential bearing and pinion shims in the differential housing and cover, and install the bearing cups.
3. Install the differential carrier and pinion in the differential housing.
4. Apply a thin coat of hydrated ferric oxide or equivalent to the drive and coast side of the ring gear teeth.
5. Install the differential housing cover. Tighten the bolts to 28 Nm (20 ft. lbs.).
6. Make a witness mark on the differential carrier.
7. Hold the differential case from freely rotating. This will provide a more distinct contact pattern.
8. Rotate the pinion until the witness mark on the differential case has made one complete revolution in both directions.
9. Note and compare patterns on the ring gear teeth to Gear Tooth Contact Patterns chart and adjust pinion depth and gear backlash as necessary. The areas on the ring gear teeth with the greatest degree of contact against the pinion teeth will push the compound to the areas with the least amount of contact.

SPECIFICATIONS

AXLE

ITEM	DESCRIPTION
Fluid	Mopar® Gear and Axle Lubricant 75W-90
Friction Modifier	MOPAR® Limited Slip Additive Friction Modifier

TORQUE

DESCRIPTION	N.m	Ft. Lbs.	In. Lbs.
Fill Hole Plug	35	25	-
Drain Hole Plug	35	25	-
Rear Axle Front Mount	65	48	-
Axle-to-Crossmember Bolts	220	162	-
Pinion Nut	245	180	-
Case Cover Bolts	28	20	-
Ring Gear Bolt Torques	185	136	-
Total Torque to Rotate (new bearings)	2.5 - 6.0	22 - 53	-

SPECIAL TOOLS

SPECIAL TOOLS

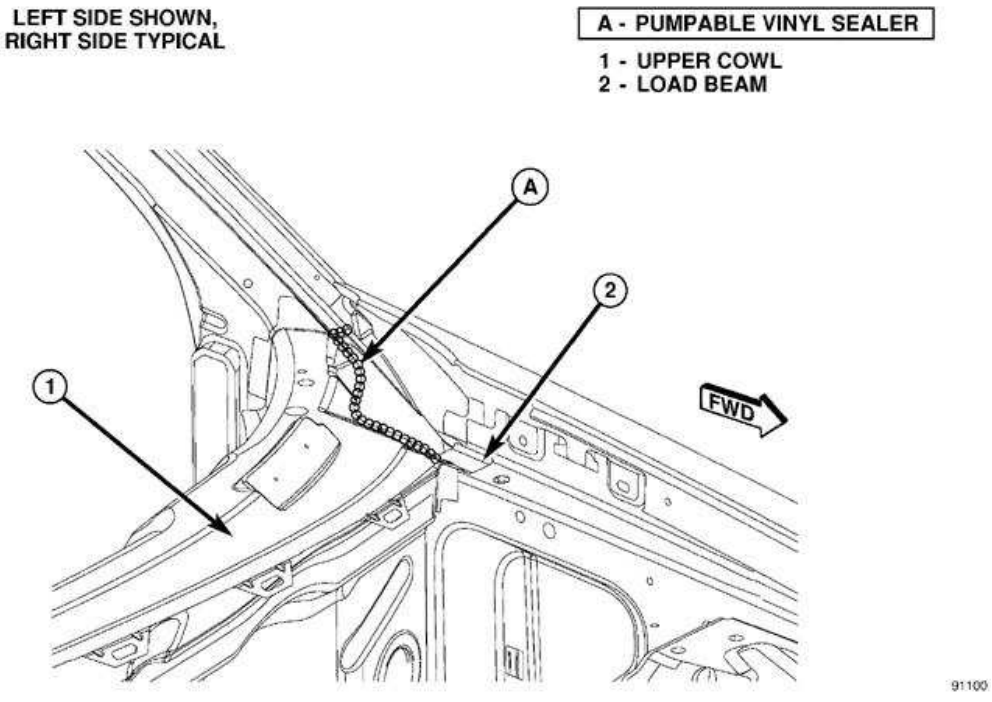

Fig. 341: BEARING INSTALLER 6446

Courtesy of CHRYSLER LLC

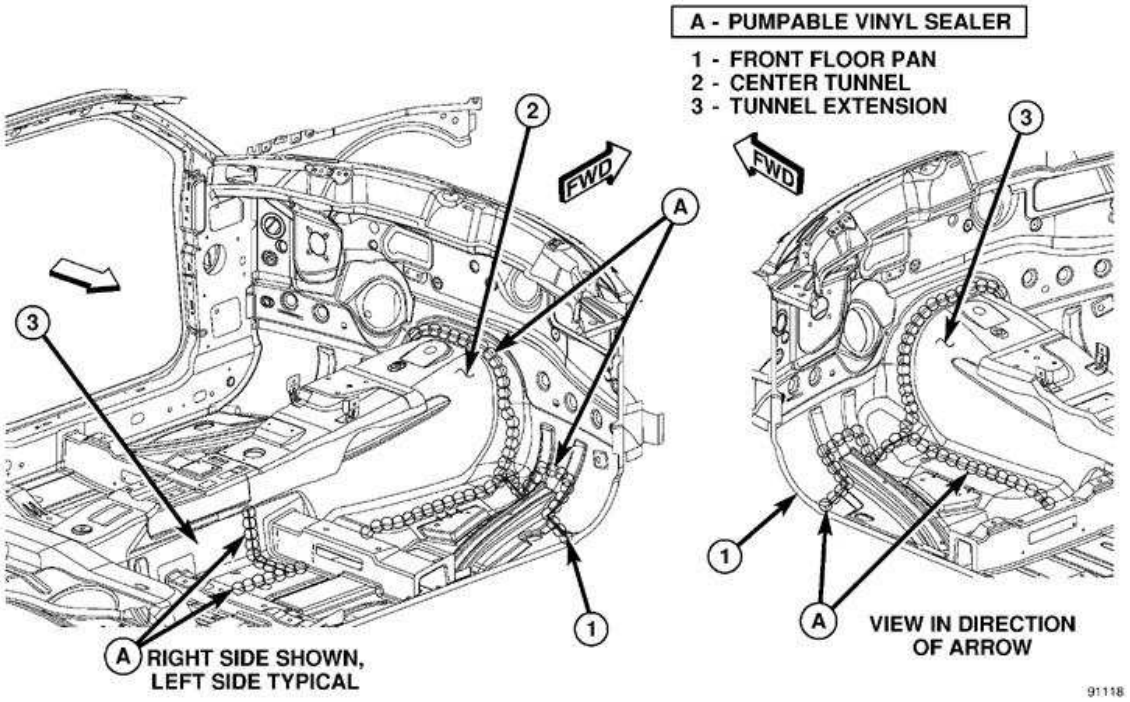

Fig. 342: DIFFERENTIAL BEARING CUP INSTALLER 10147
Courtesy of CHRYSLER LLC

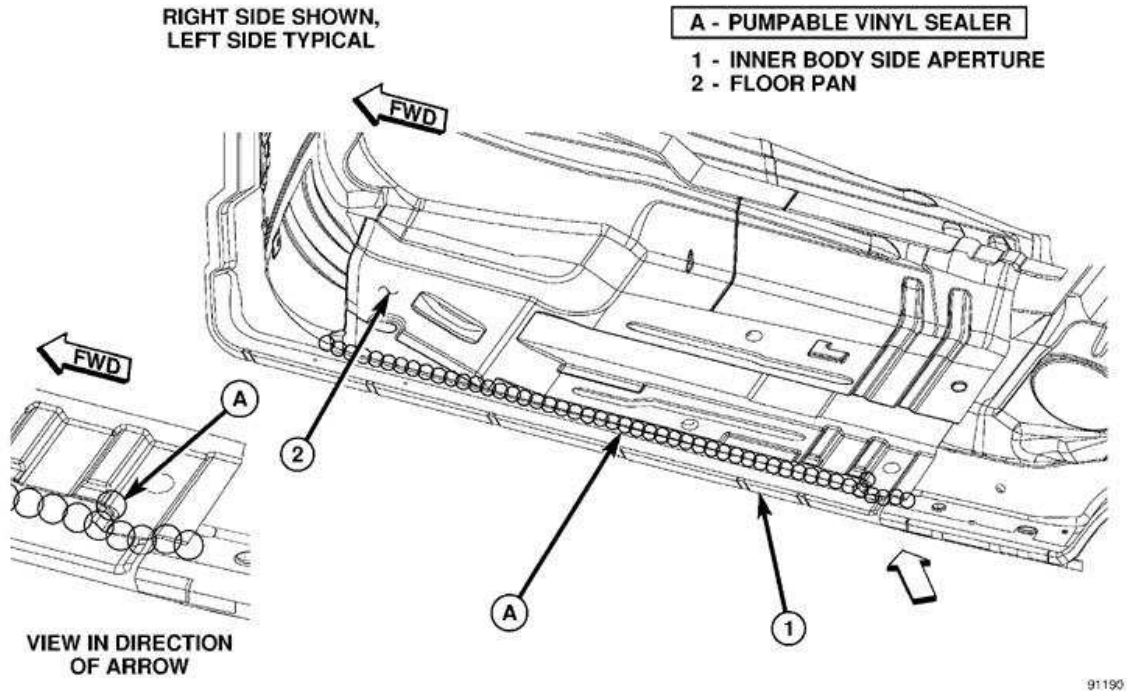

Fig. 343: PINION BEARING CUP INSTALLER 10148
Courtesy of CHRYSLER LLC

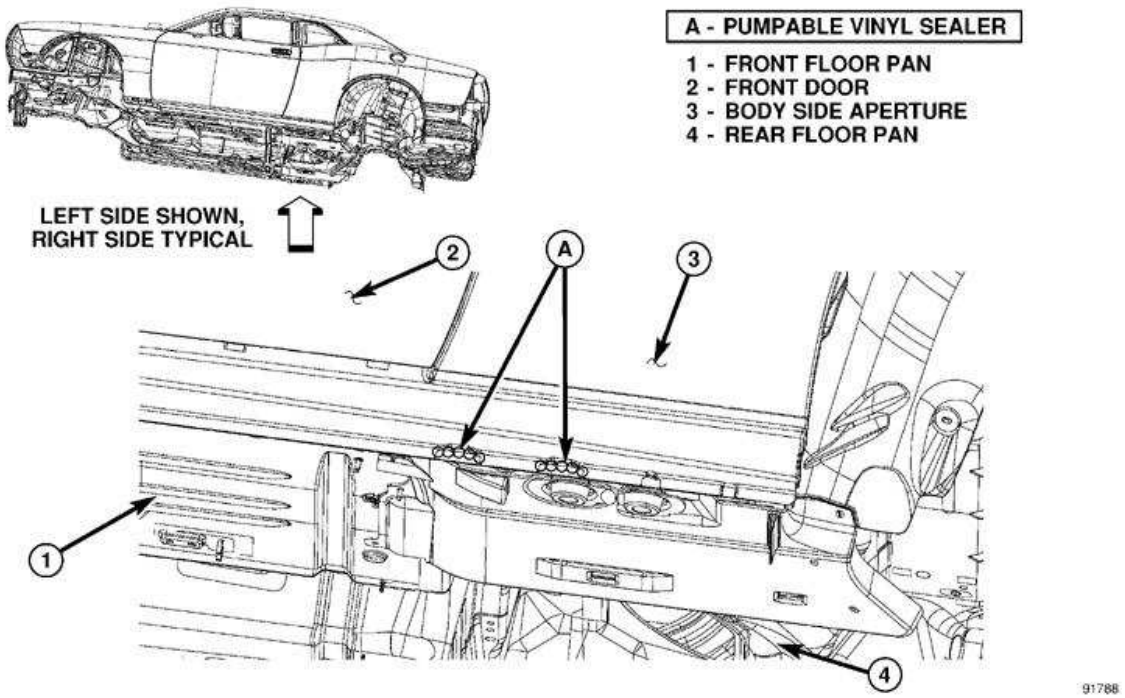

Fig. 344: ADAPTER BLOCKS C-293-37
Courtesy of CHRYSLER LLC

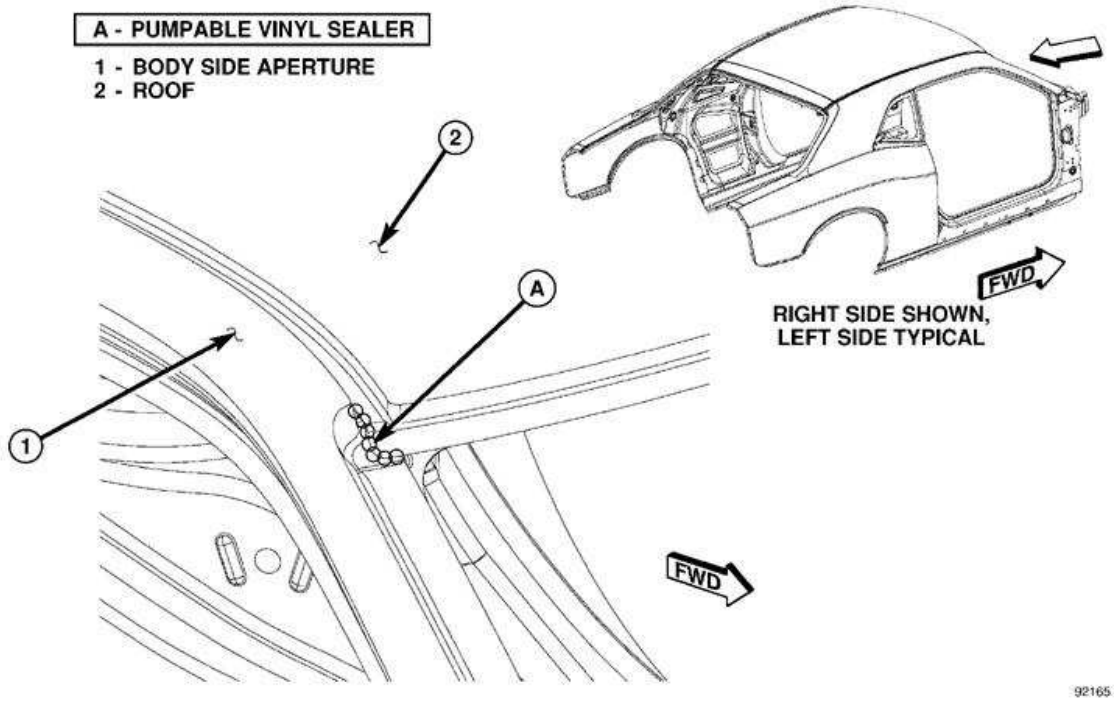

Fig. 345: PINION OIL SEAL INSTALLER 10146
Courtesy of CHRYSLER LLC

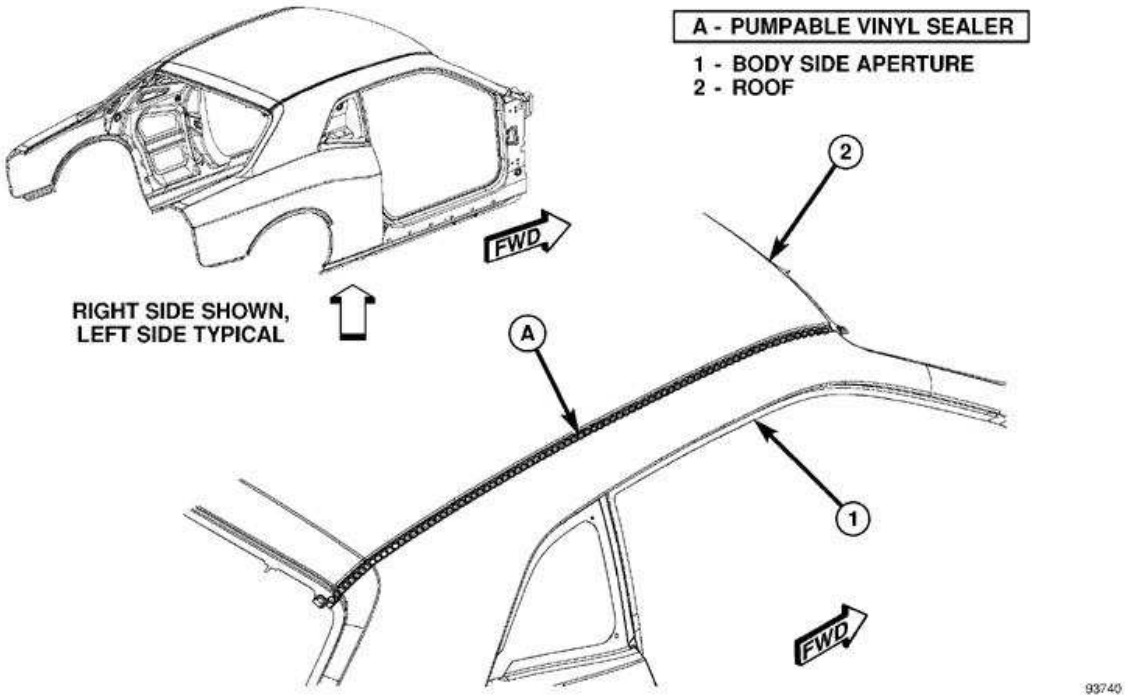

Fig. 346: PINION AND DIFFERENTIAL SHIM SELECTOR SET 10149
Courtesy of CHRYSLER LLC

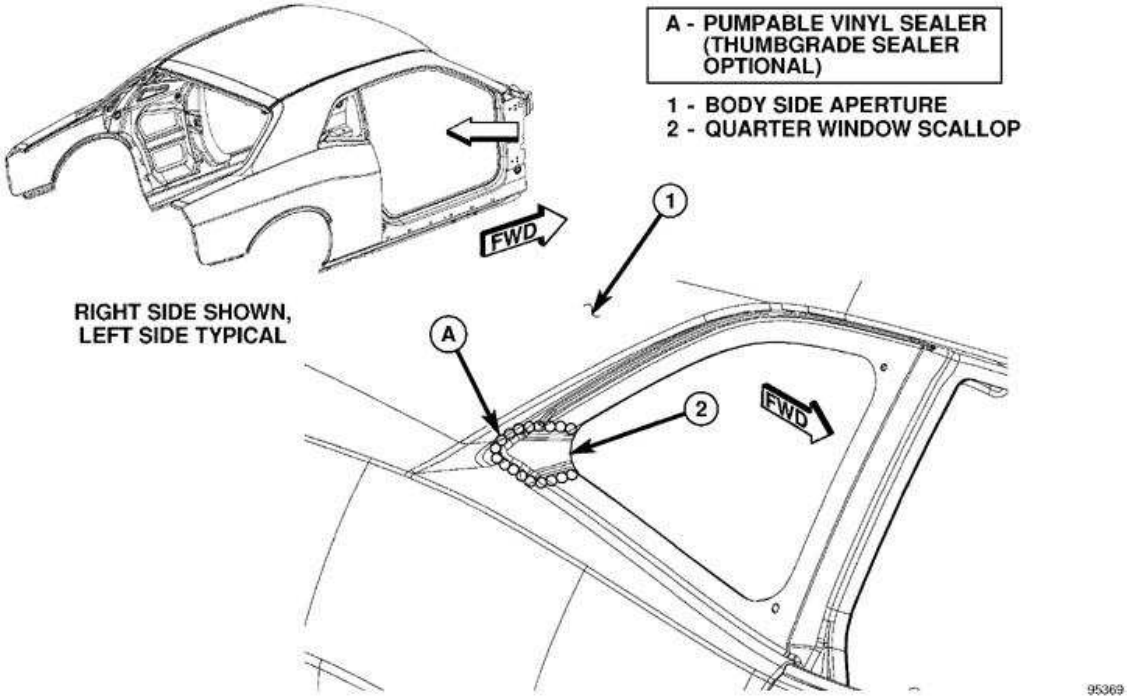

Fig. 347: PINION DEPTH SET 6730
Courtesy of CHRYSLER LLC

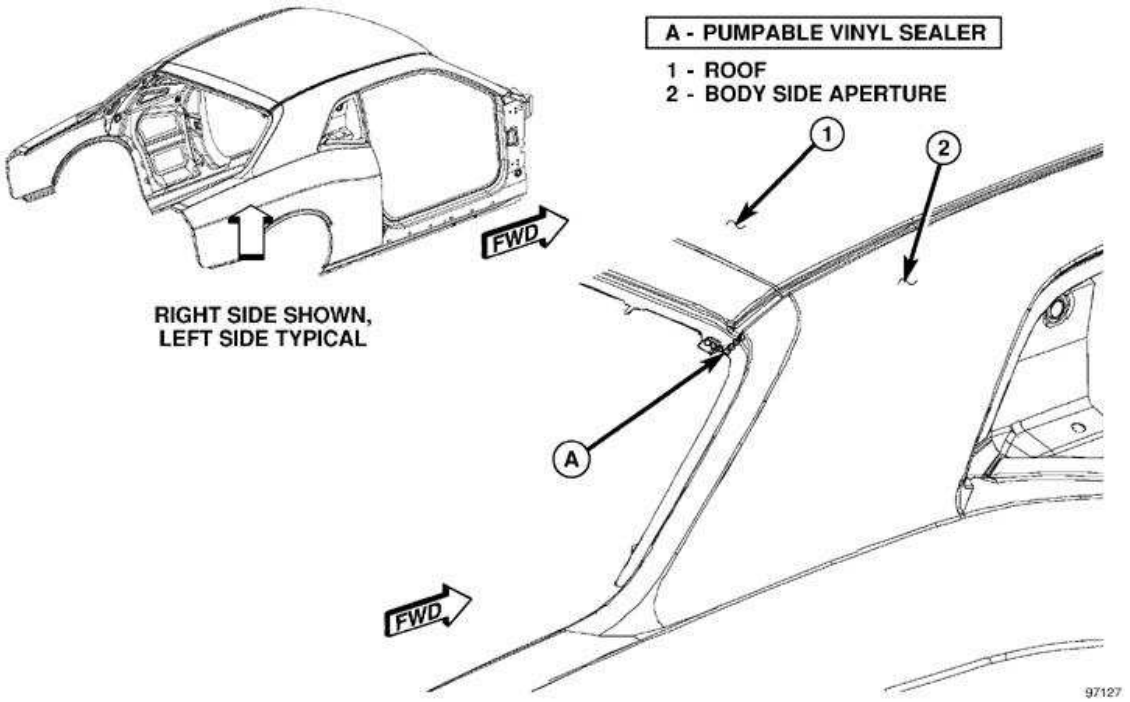

Fig. 348: BEARING SPLITER 1130
Courtesy of CHRYSLER LLC

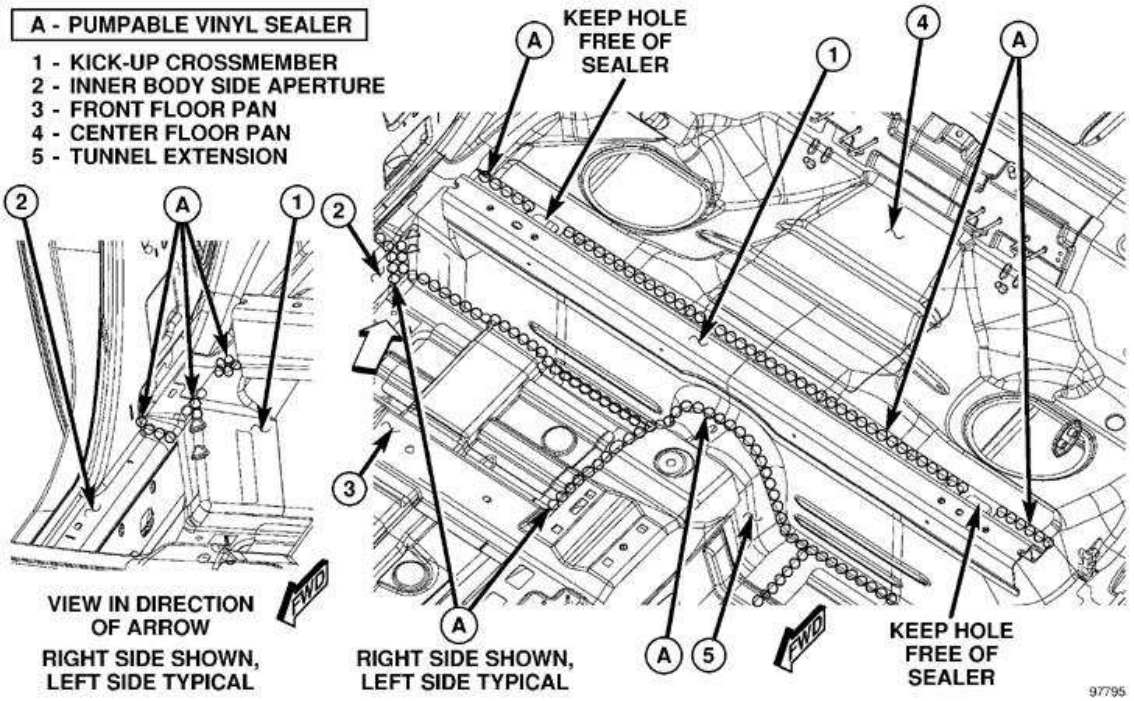

Fig. 349: SLIDE HAMMER C-637
Courtesy of CHRYSLER LLC

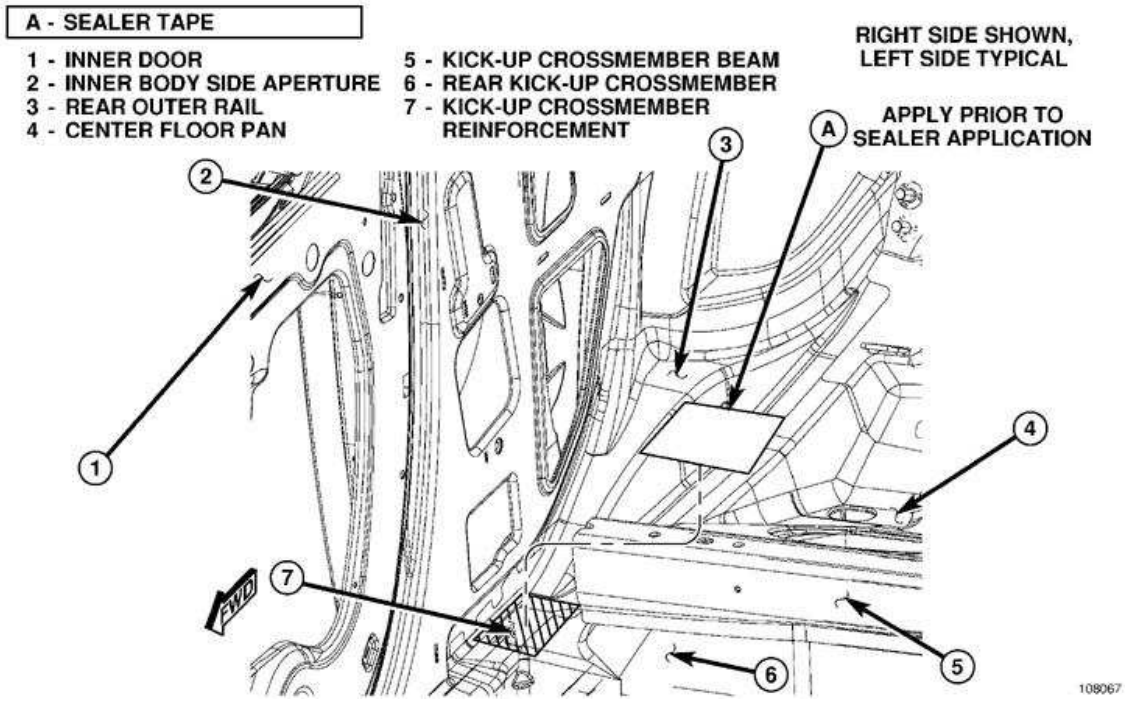

Fig. 350: Puller 7794-A
Courtesy of CHRYSLER LLC

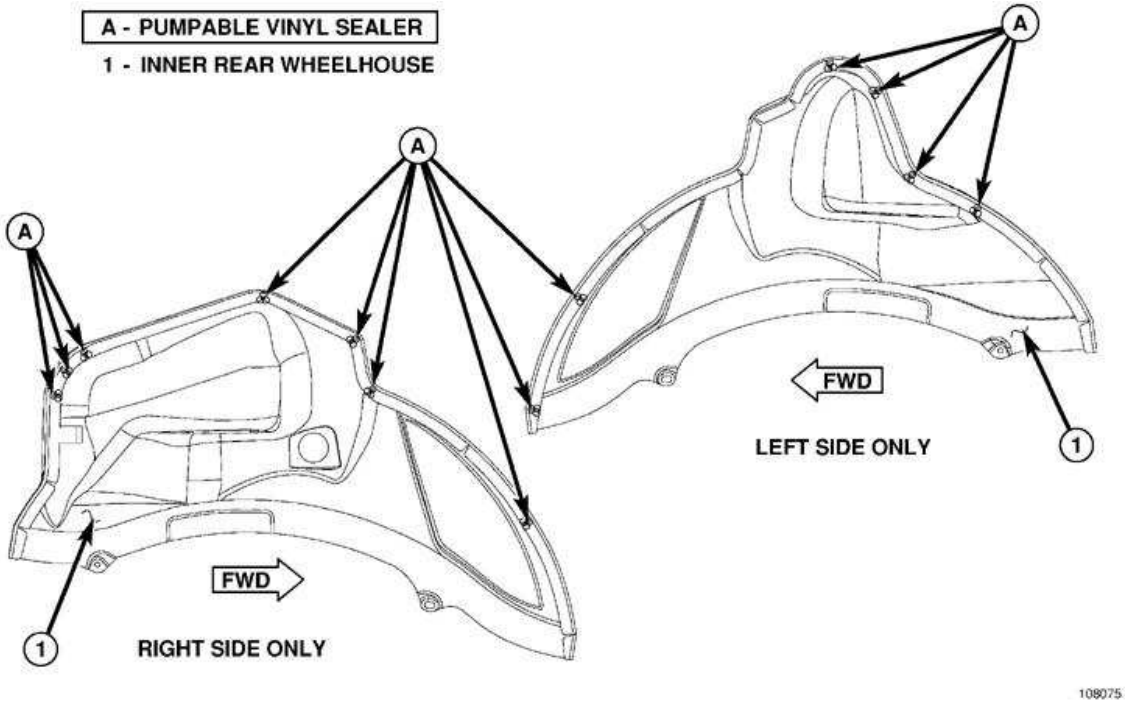

Fig. 351: Brace Tool, 8915
Courtesy of CHRYSLER LLC

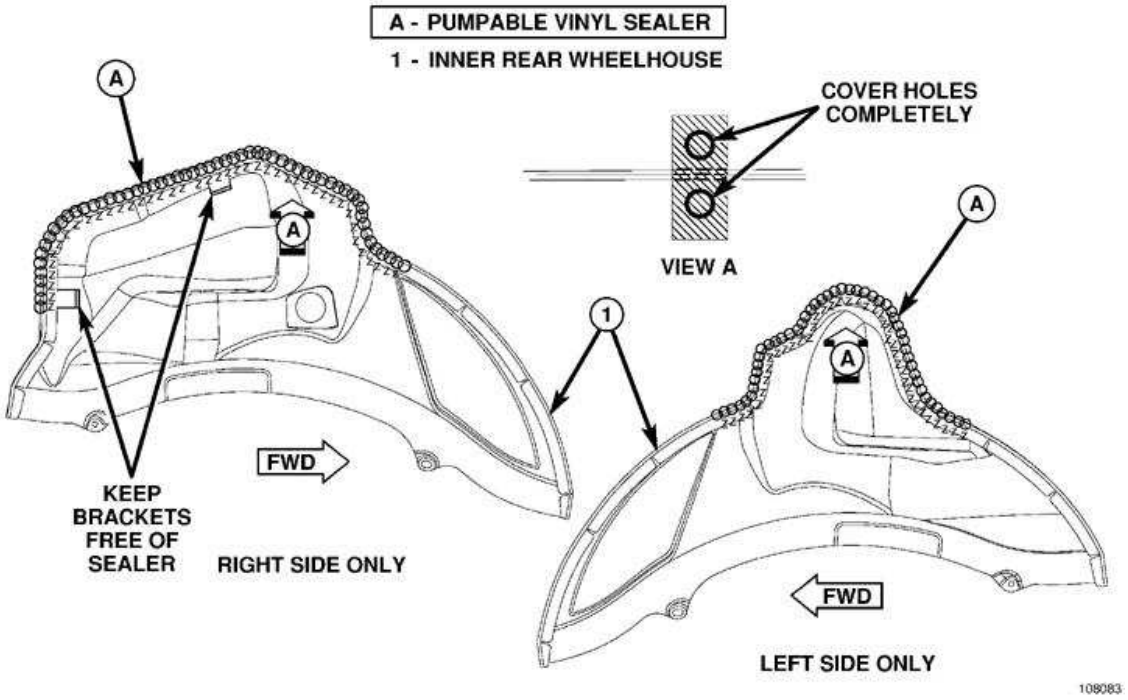

Fig. 352: Handle, C-4171
Courtesy of CHRYSLER LLC

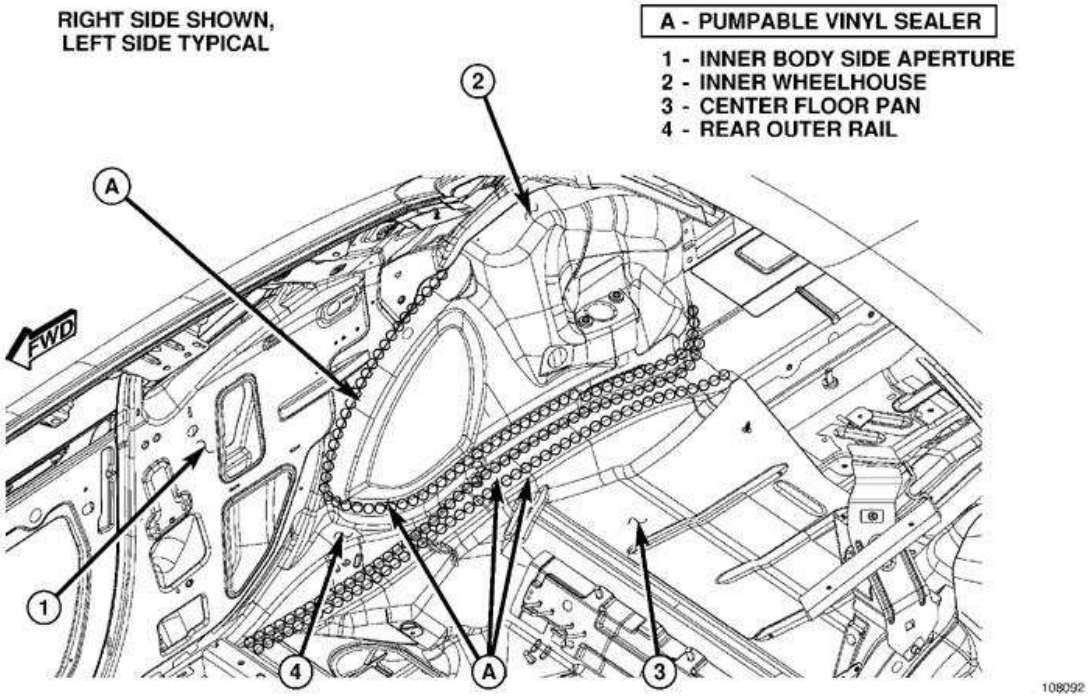

Fig. 353: PULLER 9593
Courtesy of CHRYSLER LLC

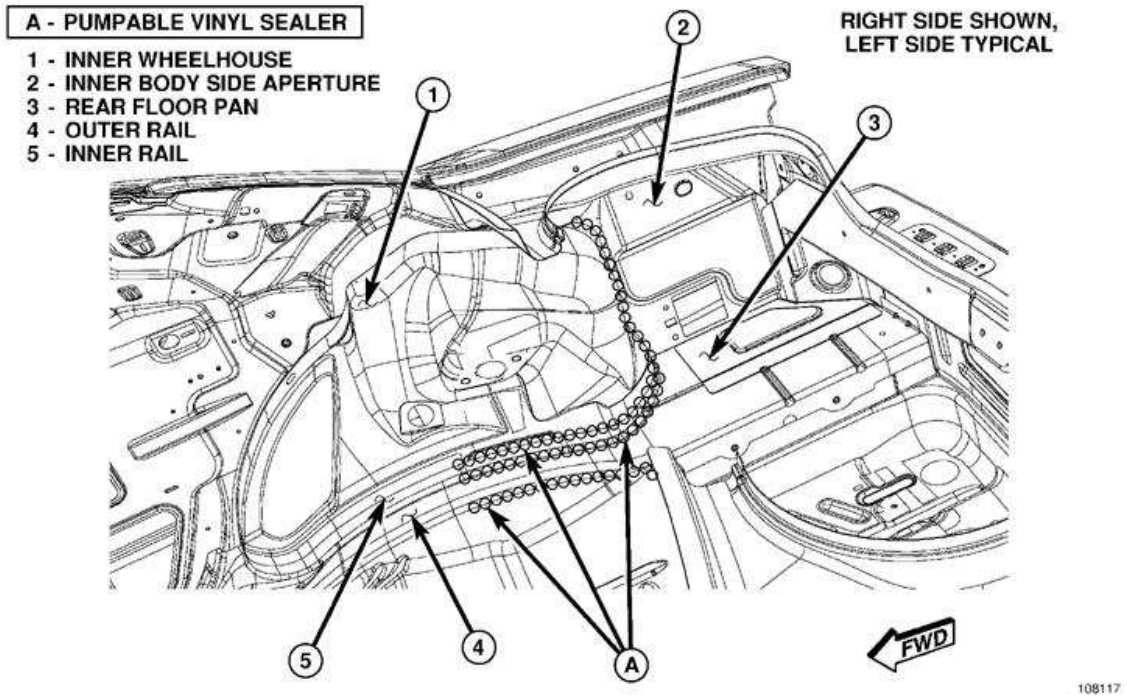

Fig. 354: INSTALLER C-4308
Courtesy of CHRYSLER LLC

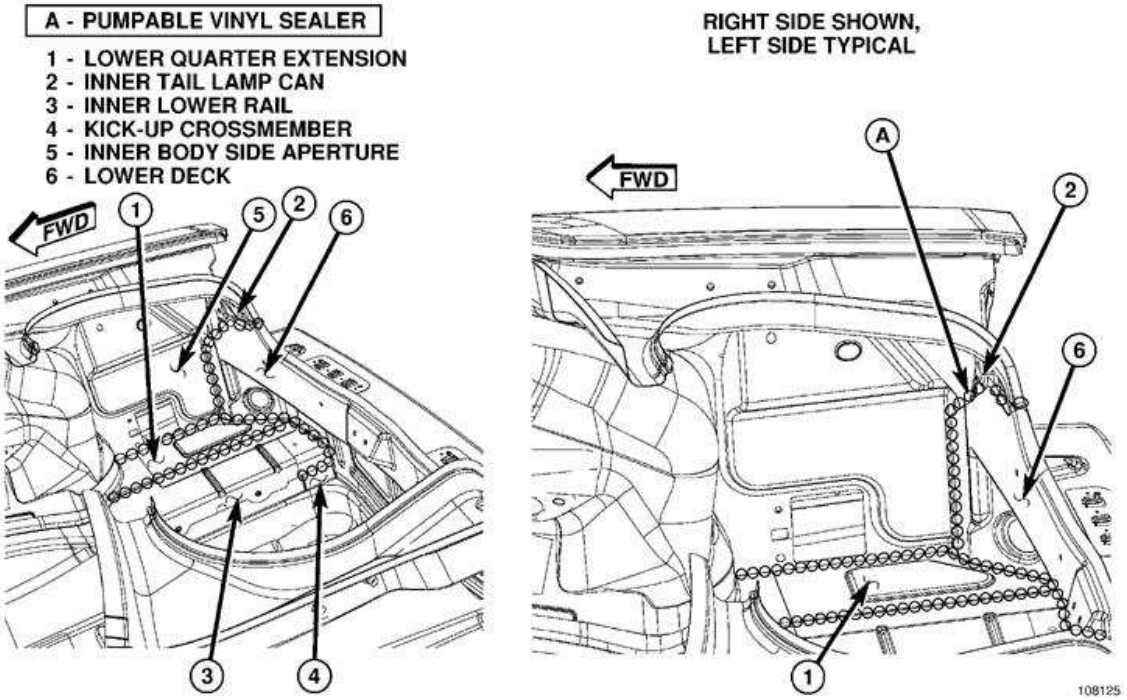

Fig. 355: FLANGE HOLDER C-3281
Courtesy of CHRYSLER LLC

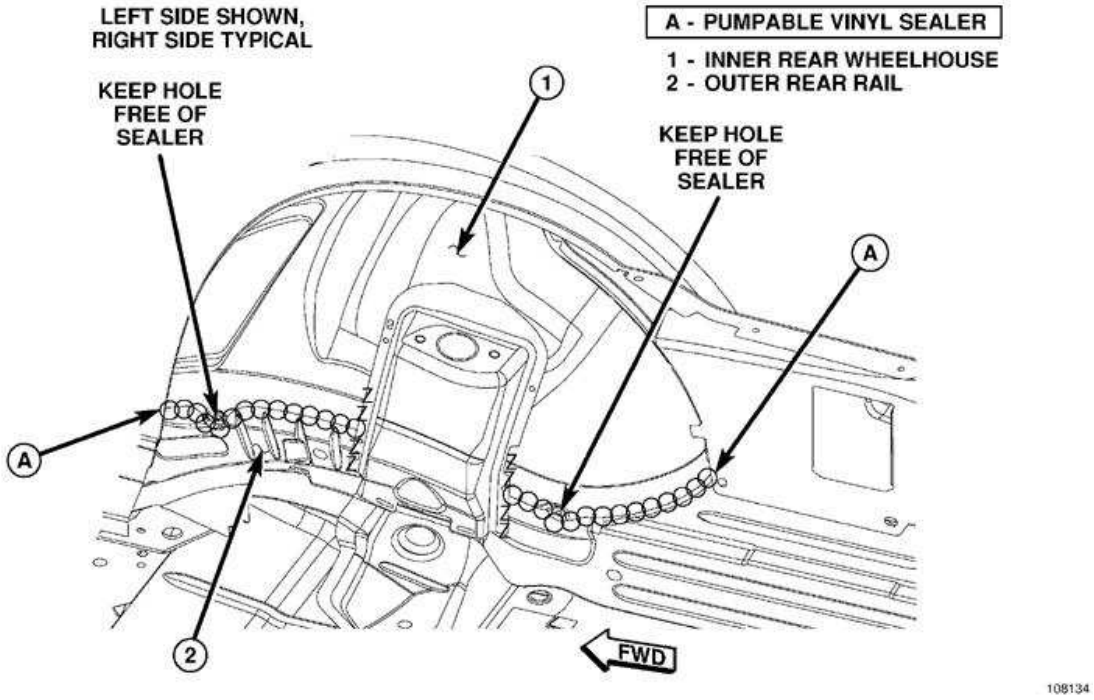

Fig. 356: PULLER 1026
Courtesy of CHRYSLER LLC

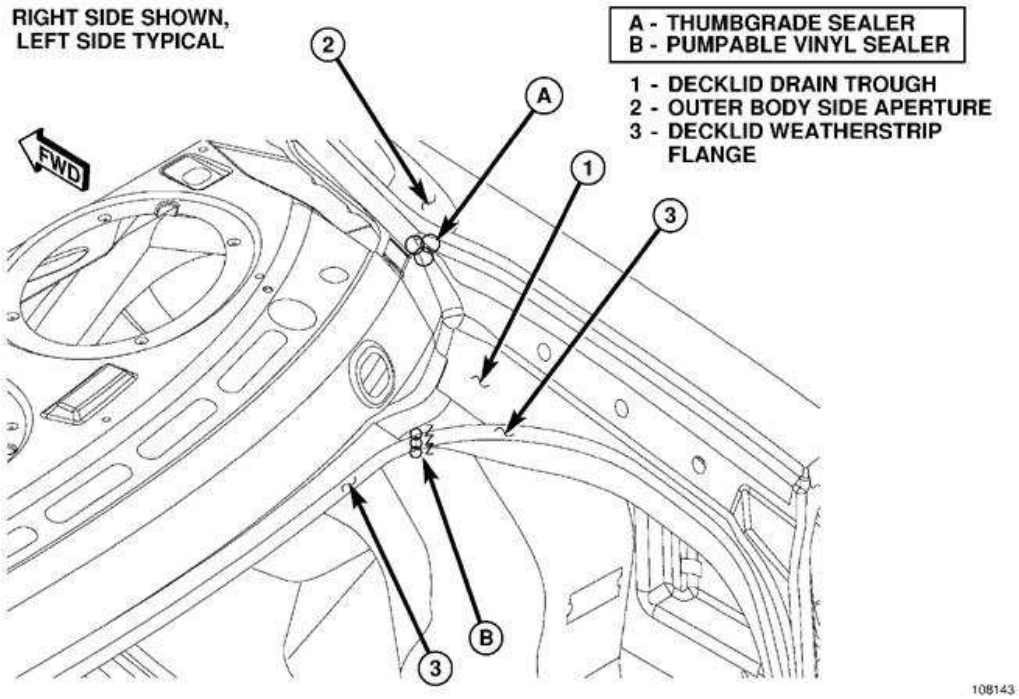

Fig. 357: BEARING INSTALLER 9919
Courtesy of CHRYSLER LLC

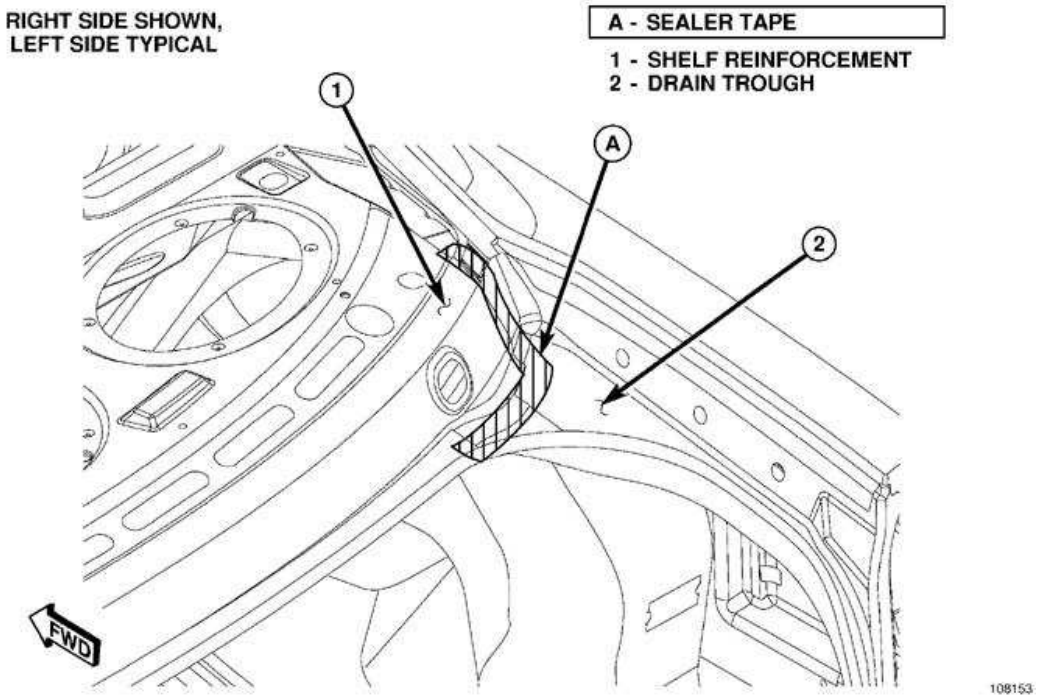

Fig. 358: PLUG C-293-3
Courtesy of CHRYSLER LLC

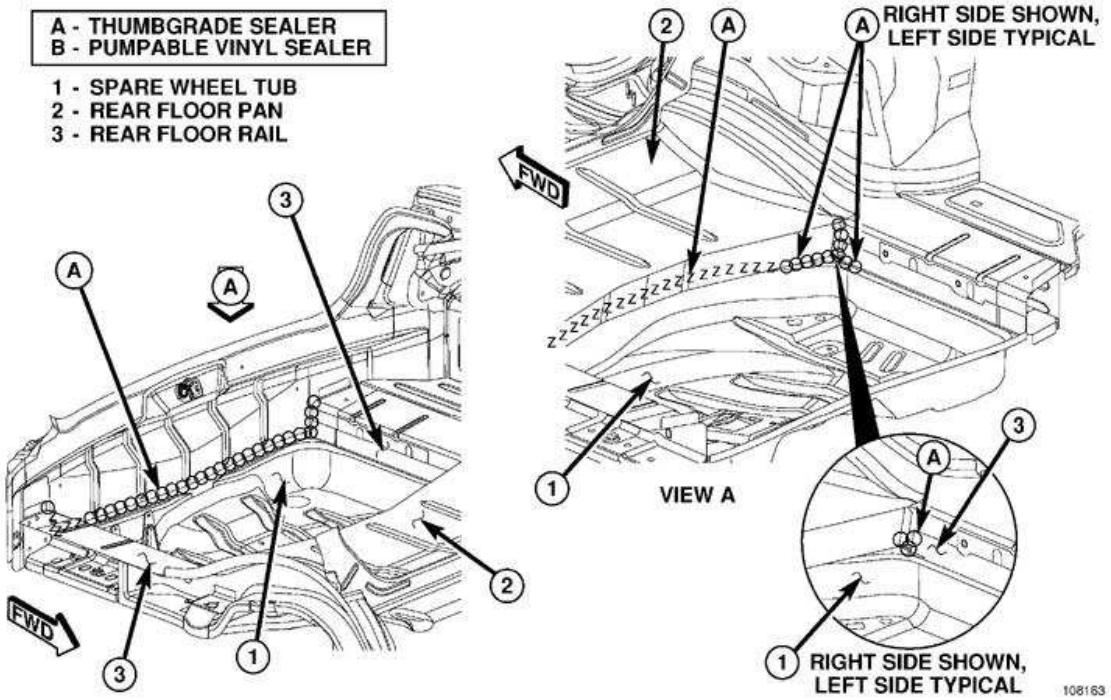

Fig. 359: PULLER C-293-PA
Courtesy of CHRYSLER LLC

BEARING, DIFFERENTIAL SIDE

Removal

REMOVAL

1. Remove the differential case assembly. See **Differential and Driveline/Rear Axle/CASE ASSEMBLY, Differential - Removal**.

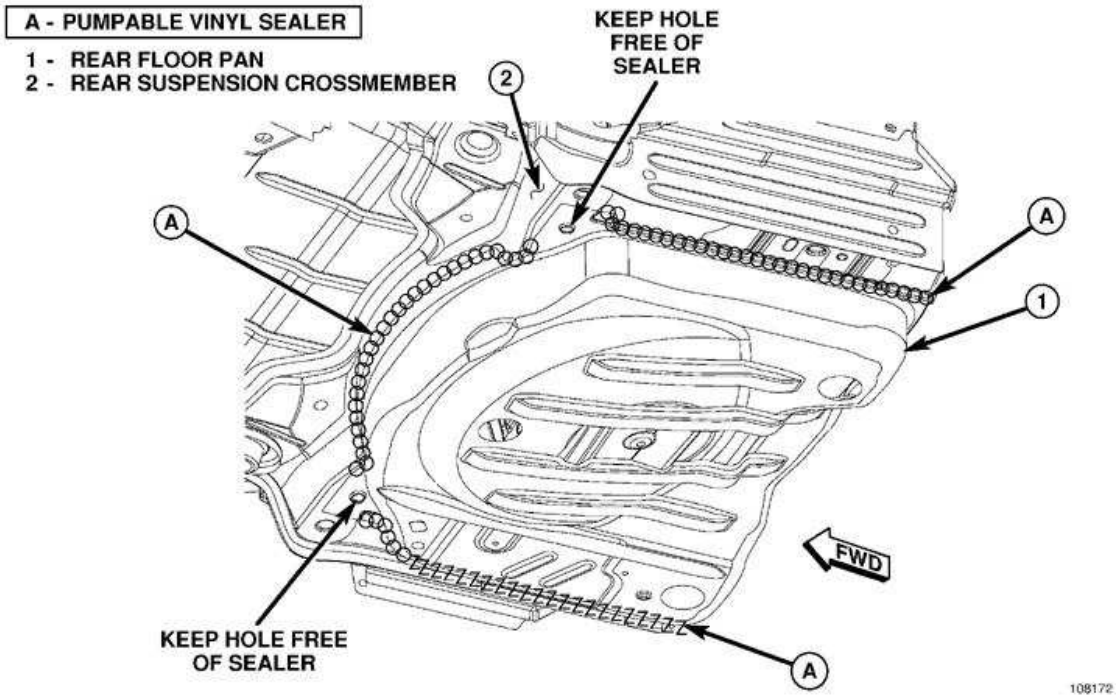

Fig. 360: Removing Differential Bearings From Case
Courtesy of CHRYSLER LLC

2. Remove the Differential Bearings from the case with Puller Press C-293-PA (1), Bearing/Gear Adapter C-293-3 (2) and Adapter Blocks C-293-37 (3).

Installation

INSTALLATION

WARNING: Use tongs or welding gloves when handling heated components. Failure to follow these instructions will result in personal injury.

CAUTION: Use only a bearing heater/hot plate and follow manufacturer's instructions. Heat components to 100 - 177 Celsius (212° Min. - 350° Max Fahrenheit). Never use an open flame to heat components. Never leave components on heater for an extended amount of time. If component is discolored after heating, the component has been overheated and must not be used. Failure to follow these instructions will result in component damage.

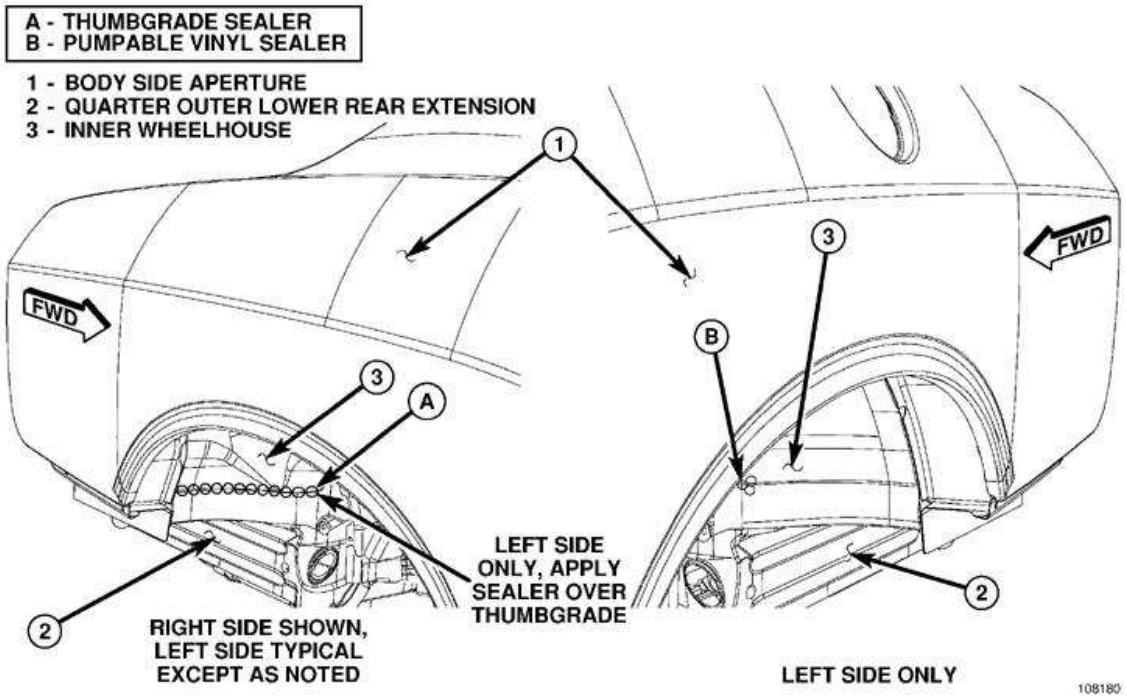

Fig. 361: Heating Differential Bearings With A Bearing Heater
Courtesy of CHRYSLER LLC

1. Heat the Differential Bearings with a bearing heater.
2. Immediately after heating, install the Differential Bearings.

CASE ASSEMBLY, DIFFERENTIAL

Removal

REMOVAL

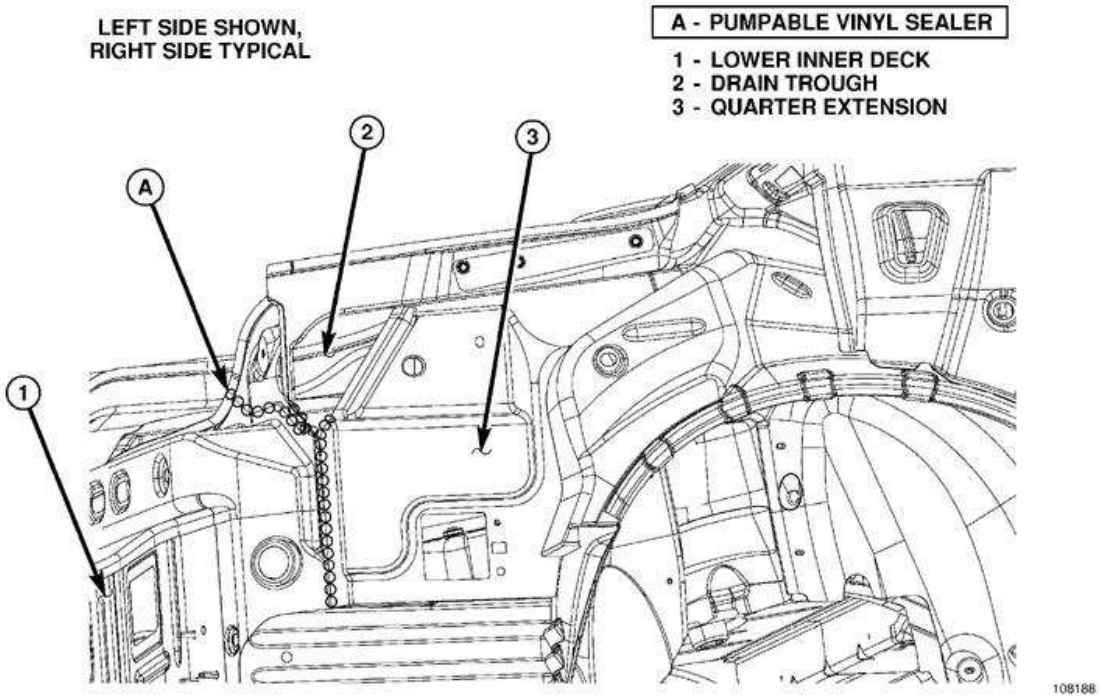

Fig. 362: Removing Case Half Bolts
Courtesy of CHRYSLER LLC

1. Remove the Rear Axle Assembly. See **Differential and Driveline/Rear Axle - Removal**
2. Remove the Case Half Bolts (1) and remove the Case Half (2).

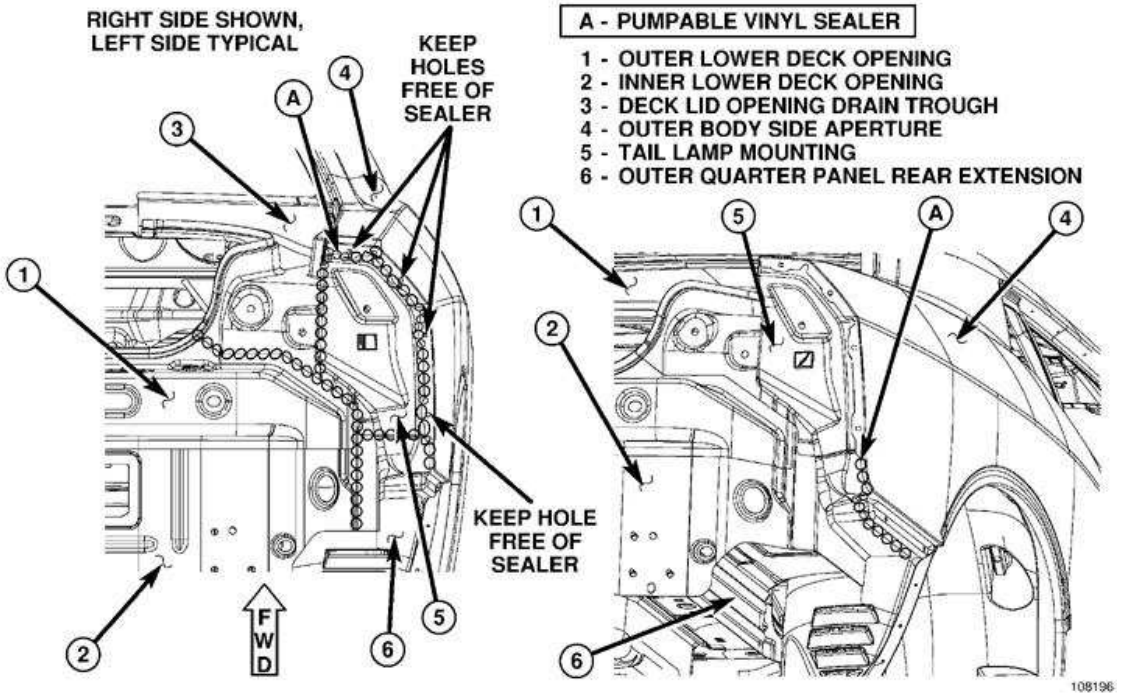

Fig. 363: Remove/Install Differential Case
Courtesy of CHRYSLER LLC

3. Remove the Differential Case (1).

Disassembly

DISASSEMBLY

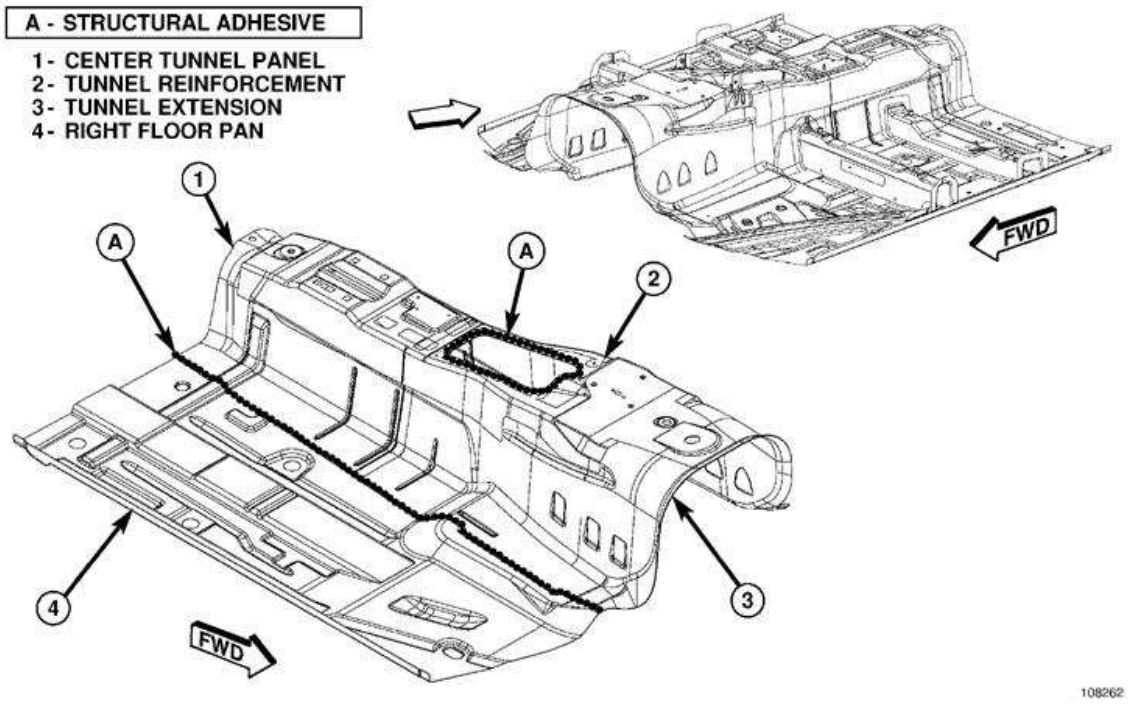

Fig. 364: Ring Gear Bolts
Courtesy of CHRYSLER LLC

1. Remove the ring gear bolts (1) and tap ring gear (2) off of the differential case with a soft faced hammer.
2. Remove the differential side bearings. See **Differential and Driveline/Rear Axle/BEARING, Differential Side - Removal**.

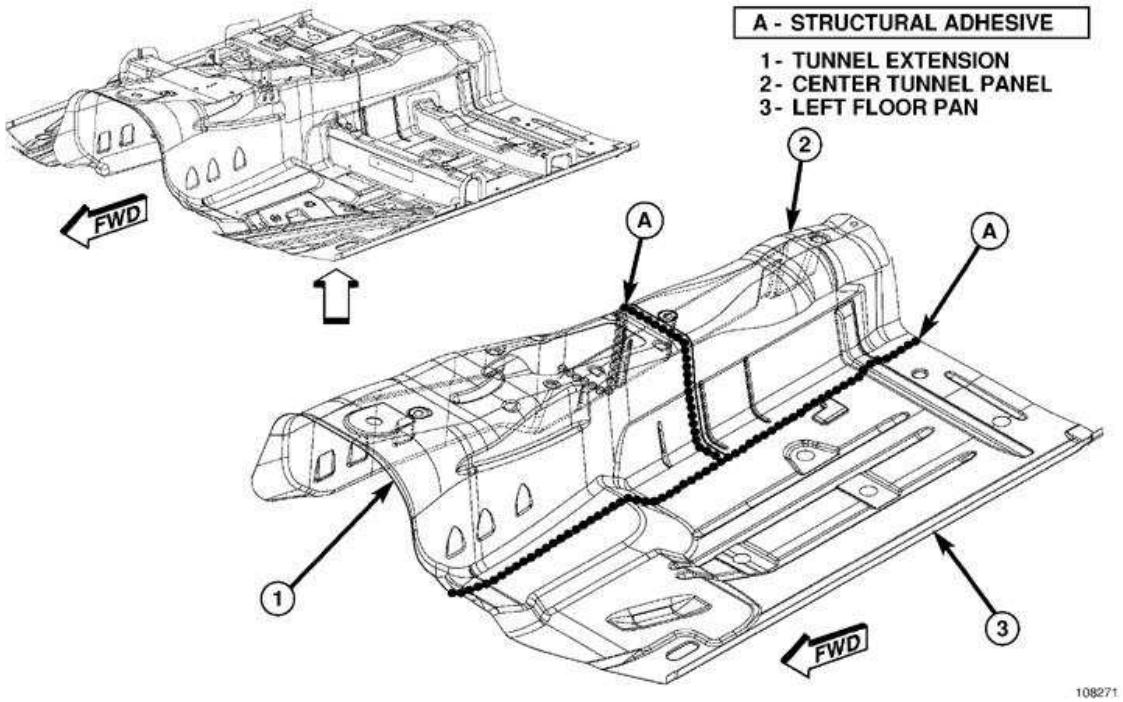

Fig. 365: Splitting Primary & Secondary Differential Case Halves
Courtesy of CHRYSLER LLC

3. Split the primary (1) and secondary (2) differential case halves.

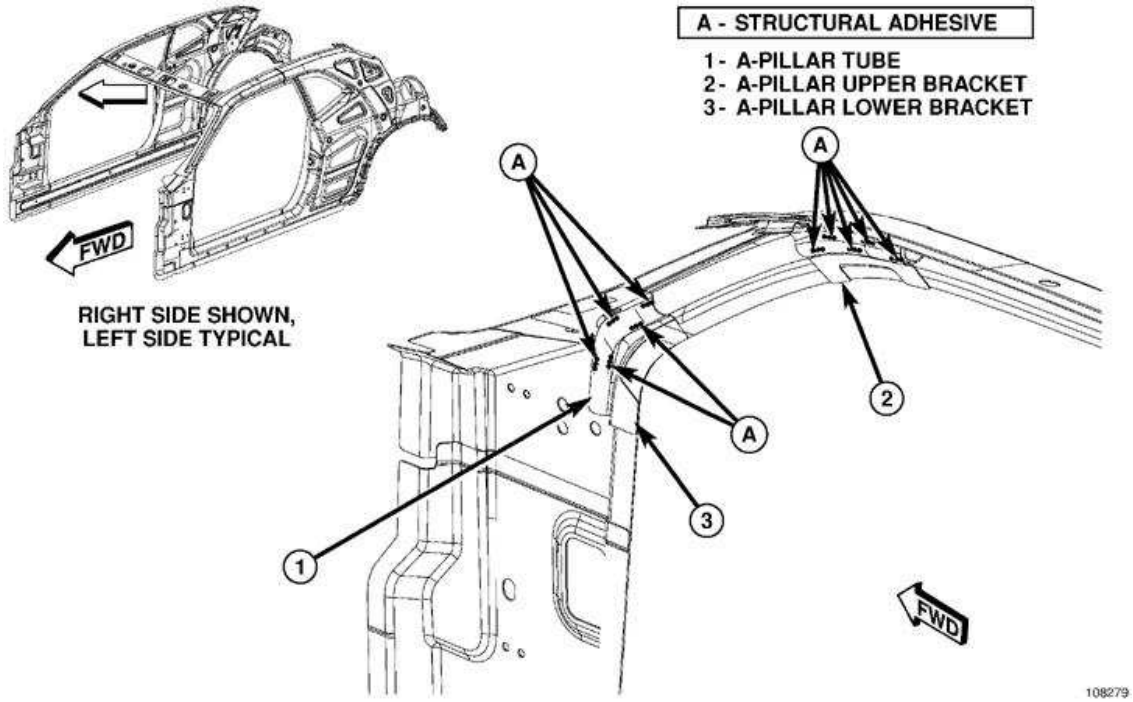

Fig. 366: Identifying Primary & Secondary Differential Case Halves
Courtesy of CHRYSLER LLC

4. Separate the primary (1) and secondary (2) differential case halves.

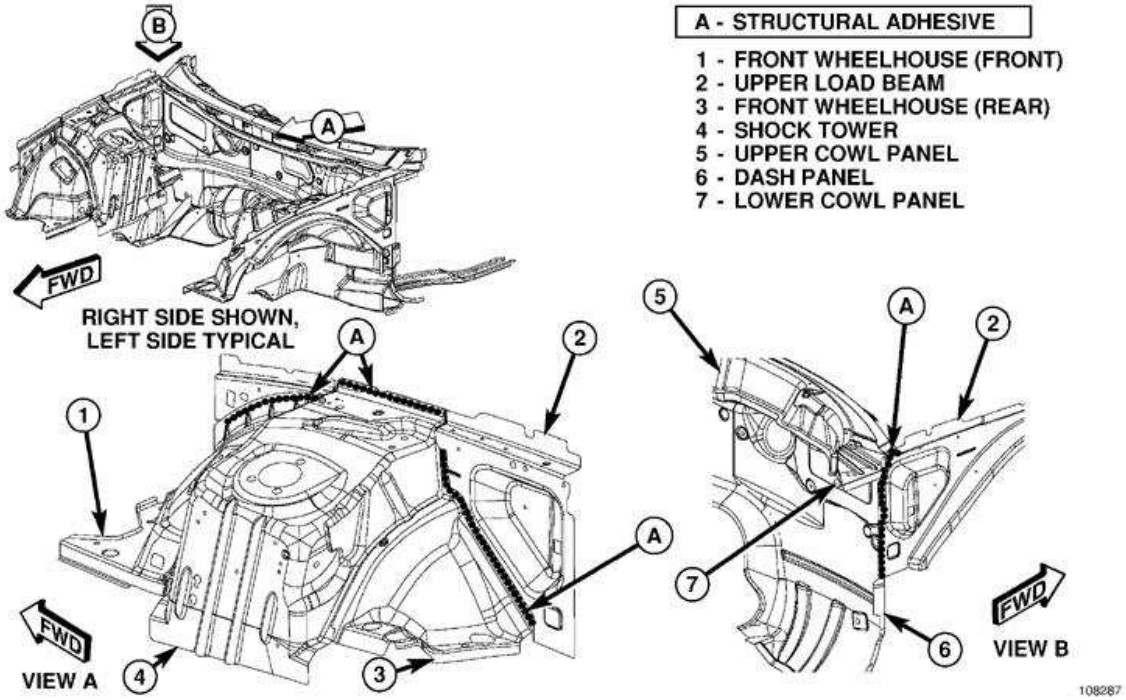

Fig. 367: Remove/Install Differential Side Gear
Courtesy of CHRYSLER LLC

5. Remove the differential side gear (1).

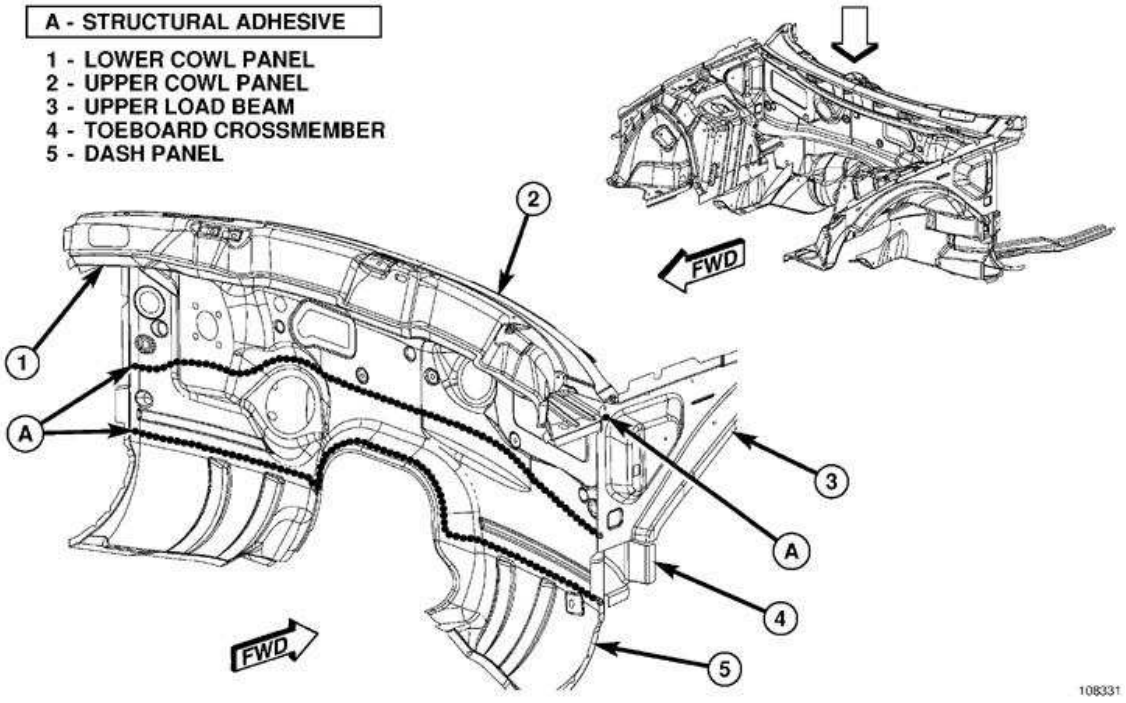

Fig. 368: Remove/Install Clutch Pack & Belleville Spring

Courtesy of CHRYSLER LLC

6. Remove the clutch pack (1) and the Belleville spring (2).

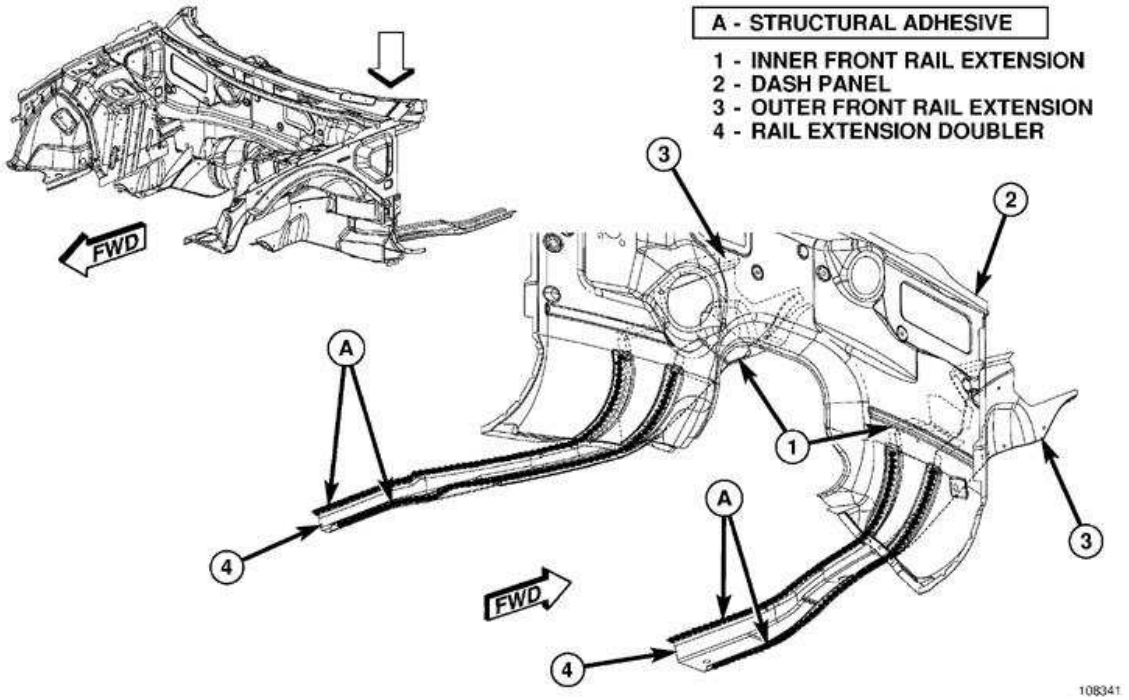

Fig. 369: Remove/Install Primary Differential Pinion Gear Shaft
Courtesy of CHRYSLER LLC

NOTE: It may be necessary use the differential side gear to press downward on the four pinions (2) for primary differential pinion gear shaft (1) removal.

7. Remove the primary differential pinion gear shaft (1).

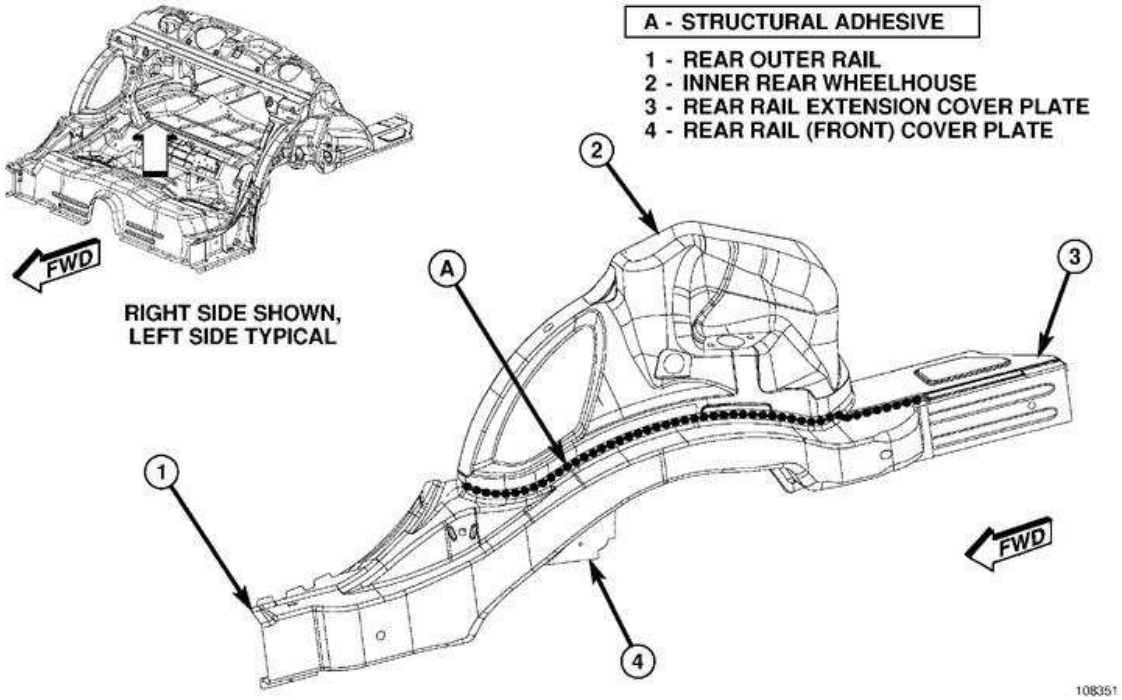

Fig. 370: Remove/Install Primary Differential Pinion Gears
Courtesy of CHRYSLER LLC

8. Remove the primary differential pinion gears (1).

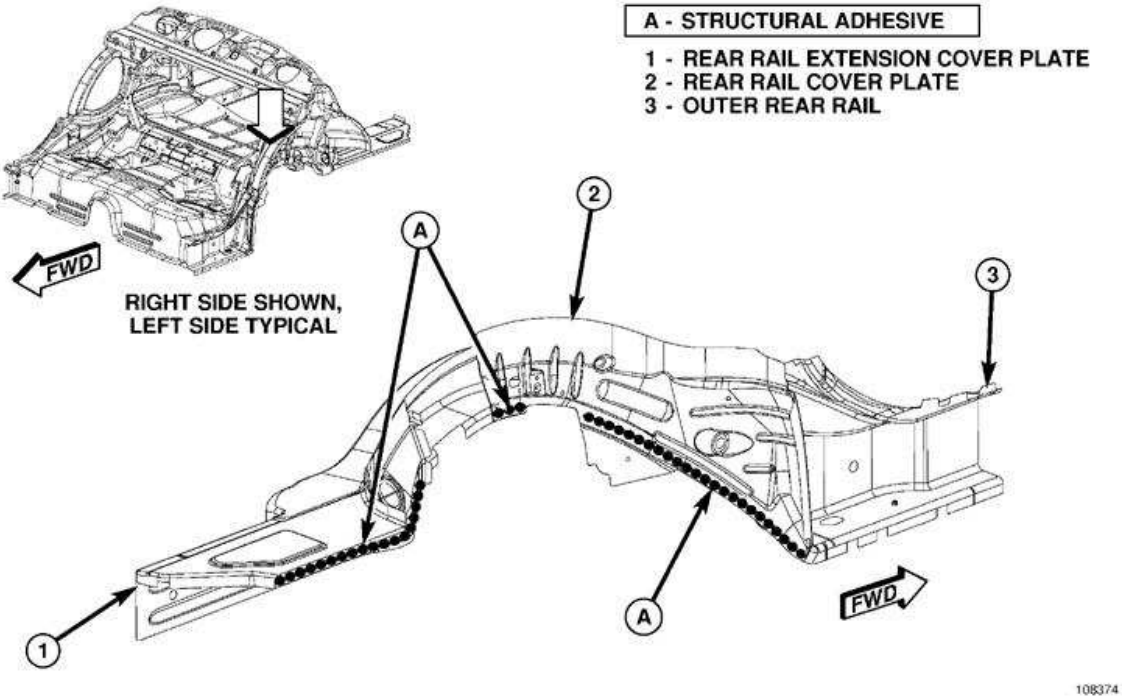

Fig. 371: Identifying Secondary Pinion Shafts & Secondary Differential Side Gears
Courtesy of CHRYSLER LLC

9. Use a brass drift to tap the secondary (split) pinion shafts (1) out of the differential case, then remove the secondary differential side gears (2).

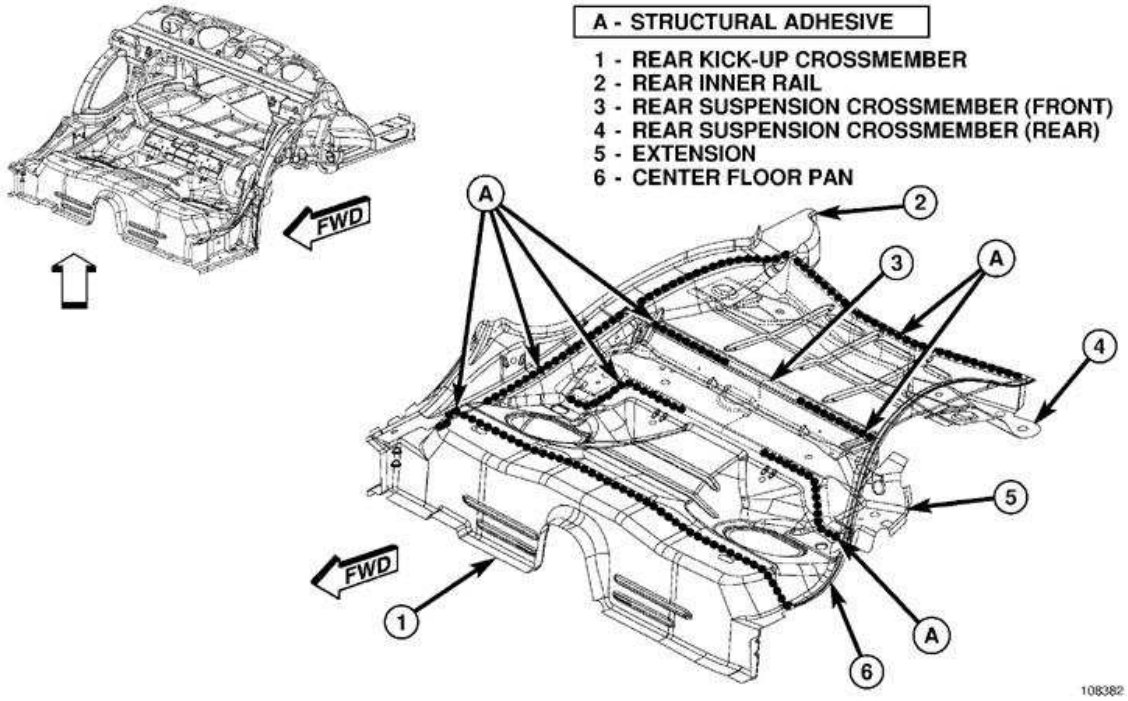

Fig. 372: Remove/Install Differential Side Gear
Courtesy of CHRYSLER LLC

10. Remove the differential side gear (1) from the primary differential case half (2).

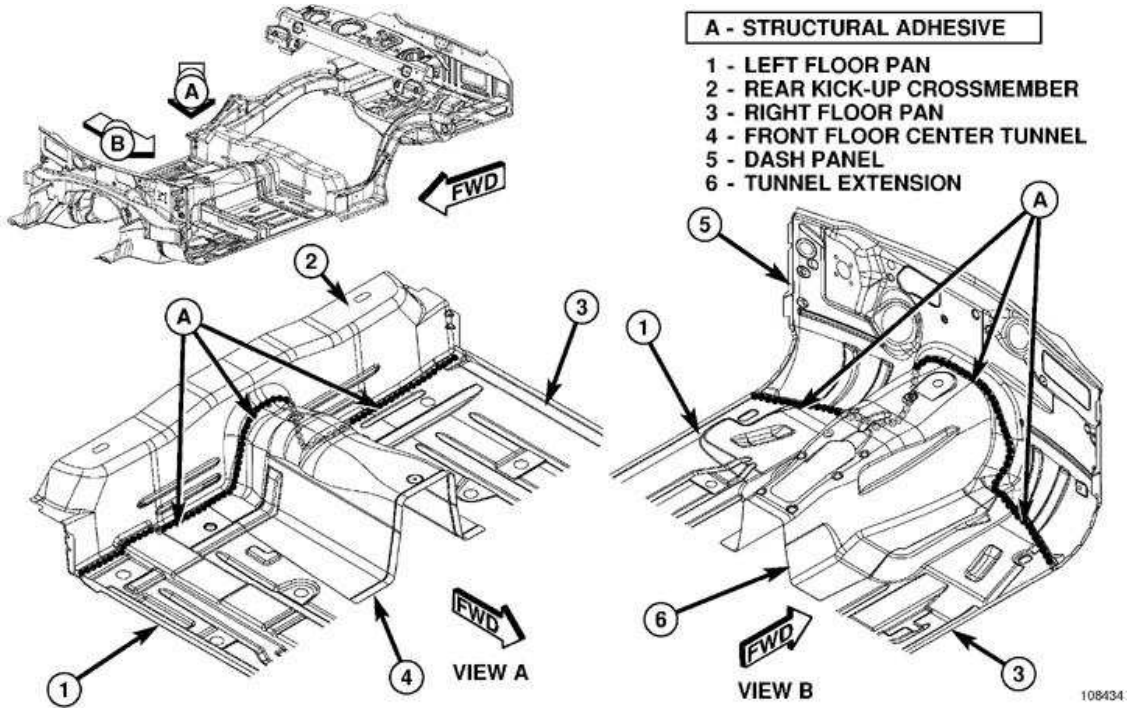

Fig. 373: Identifying Clutch Pack, Belleville Spring & Primary Differential Case Half
Courtesy of CHRYSLER LLC

11. Remove the clutch pack (1) and the Belleville spring (2) from the primary differential case half (3).

Assembly

ASSEMBLY

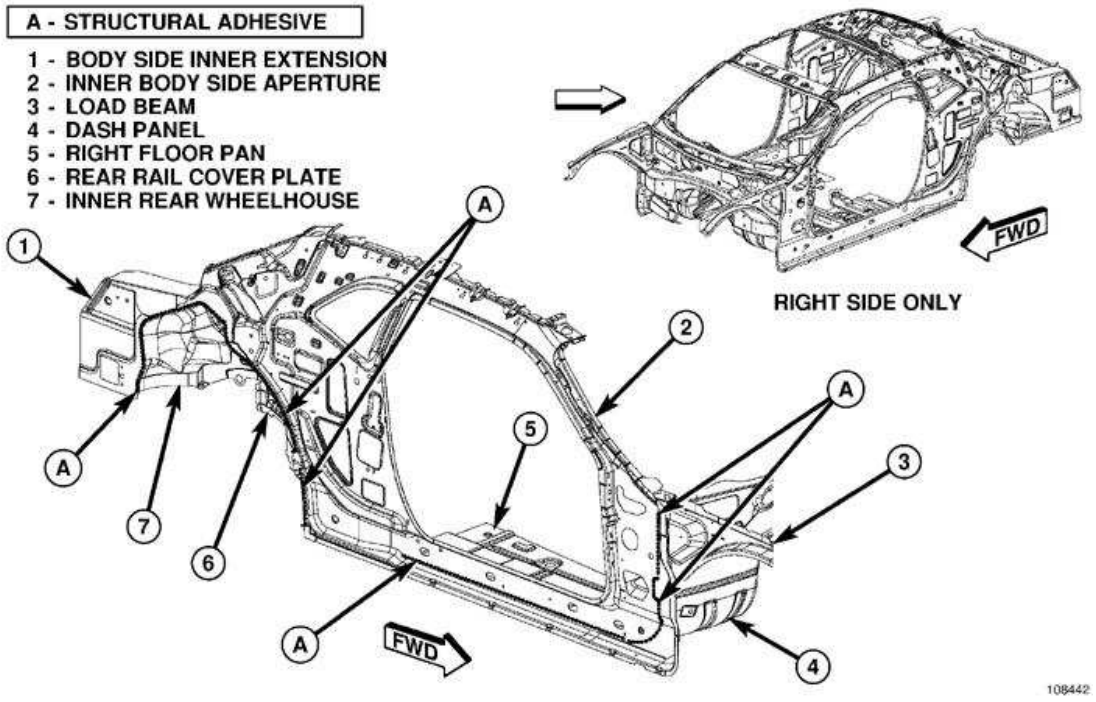

Fig. 374: Clutch Pack
Courtesy of CHRYSLER LLC

1. Assemble the clutch pack as follows: Friction disc (1), tabbed plate (2), friction disc (3), tabbed plate (4), large friction disc (5), and Belleville spring (6). Verify the friction surface on the large friction disc (5) is facing the tabbed plate (4).

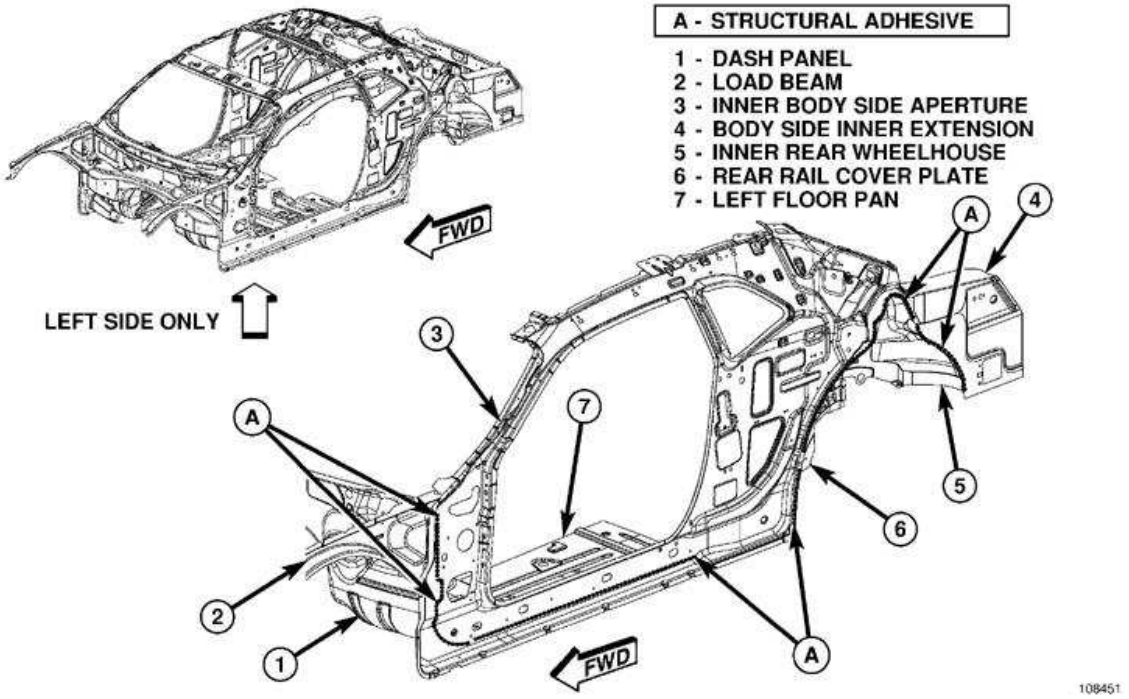

Fig. 375: Identifying Clutch Pack, Belleville Spring & Primary Differential Case Half
Courtesy of CHRYSLER LLC

NOTE: Verify the raised edge of the Belleville spring (2) is facing up, or away from the clutch pack (1).

2. Install the clutch pack (1) and the Belleville spring (2) into the primary differential case half (3).

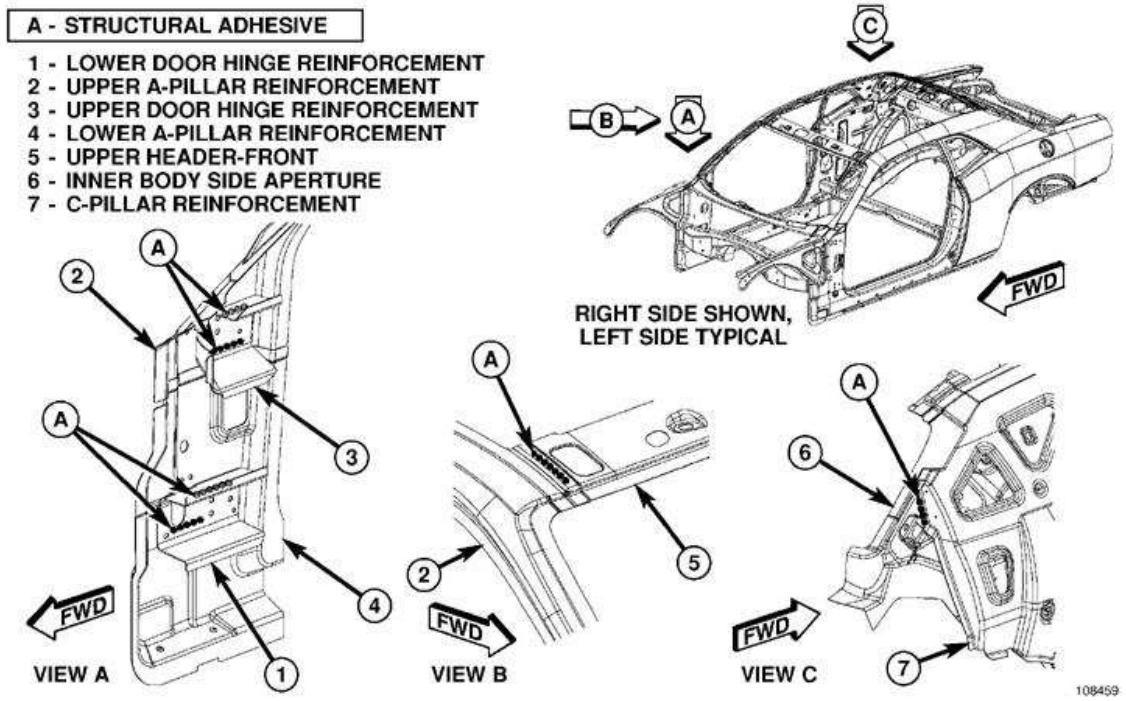

Fig. 376: Remove/Install Differential Side Gear
Courtesy of CHRYSLER LLC

3. Install the differential side gear (1) into the primary differential case half (2).

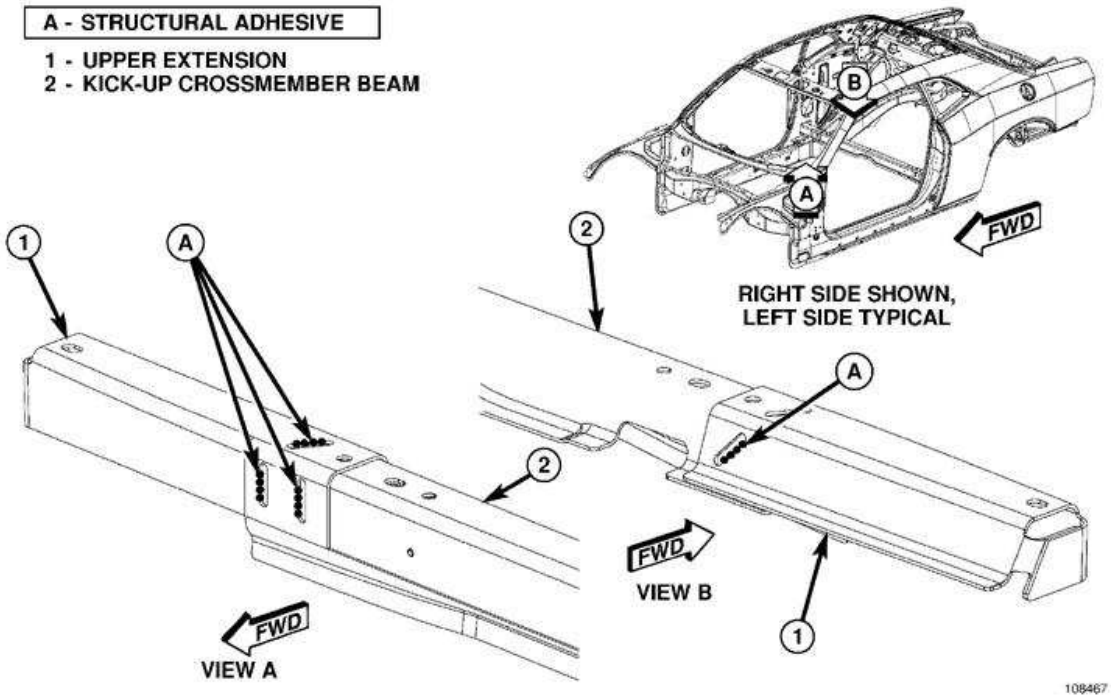

Fig. 377: Splines On Differential Side Gear
Courtesy of CHRYSLER LLC

4. Verify the differential side gear (1) is fully seated in the primary case half (2). Rotate the side gear as necessary to align the splines on all the friction plates with the splines on the differential side gear (1).

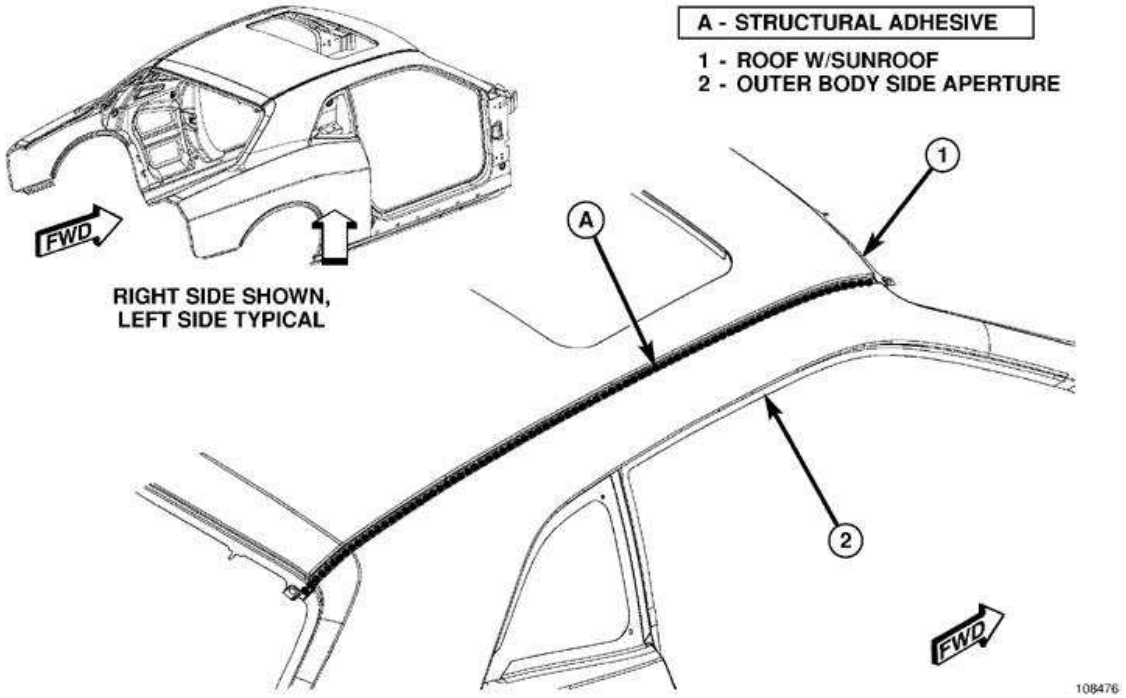

Fig. 378: Identifying Secondary Pinion Shafts & Secondary Differential Side Gears
Courtesy of CHRYSLER LLC

5. Install the secondary differential side gears (2), then slightly compress the Belleville spring by pressing down on the differential side gear, and install the secondary (split) pinion shafts (1).

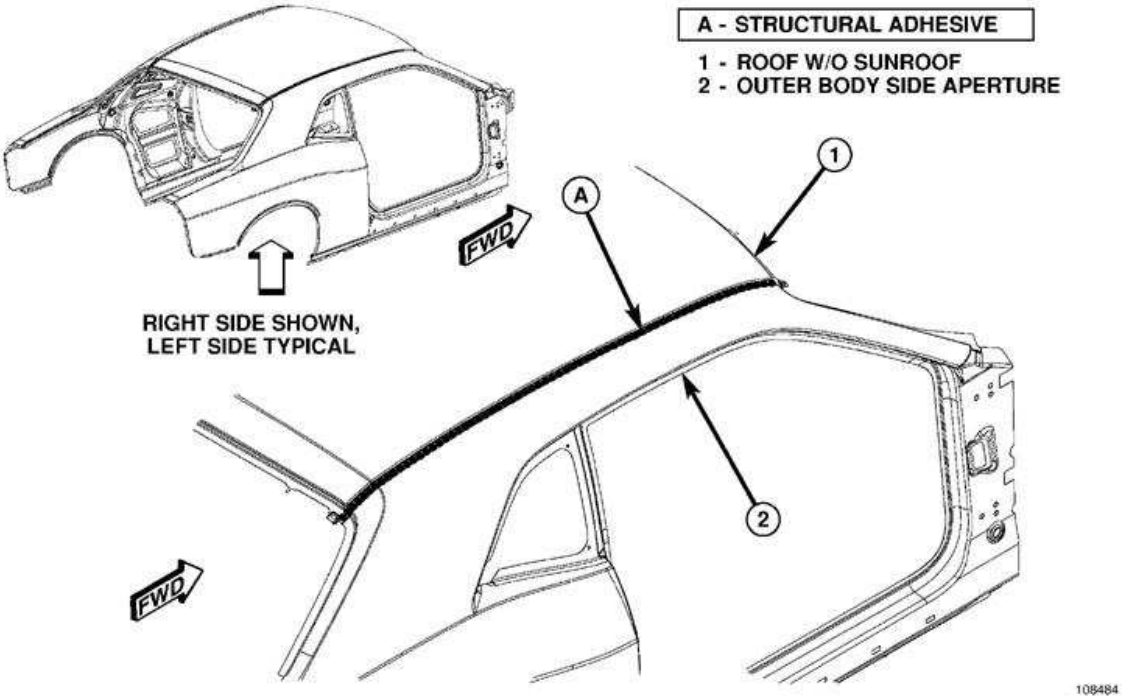

Fig. 379: Remove/Install Primary Differential Pinion Gears
Courtesy of CHRYSLER LLC

6. Install the primary differential pinion gears (1).

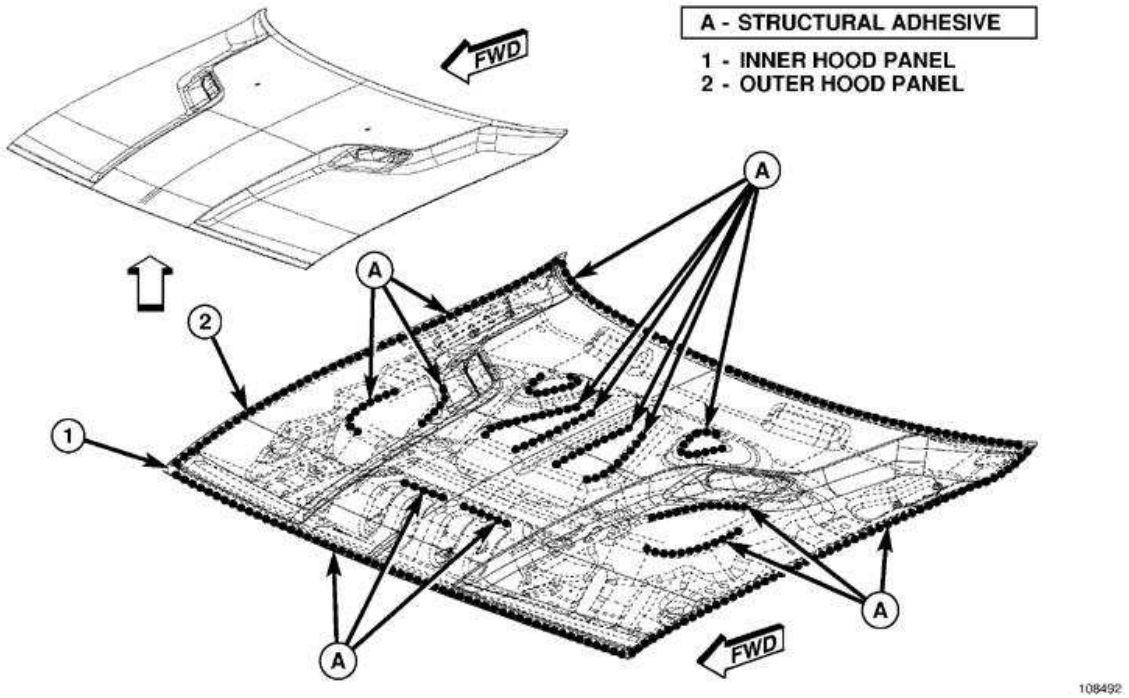

Fig. 380: Remove/Install Primary Differential Pinion Gear Shaft
Courtesy of CHRYSLER LLC

NOTE: It may be necessary use the differential side gear to press downward on the four pinions (2) for primary differential pinion gear shaft (1) removal.

7. Install the primary differential pinion gear shaft (1).

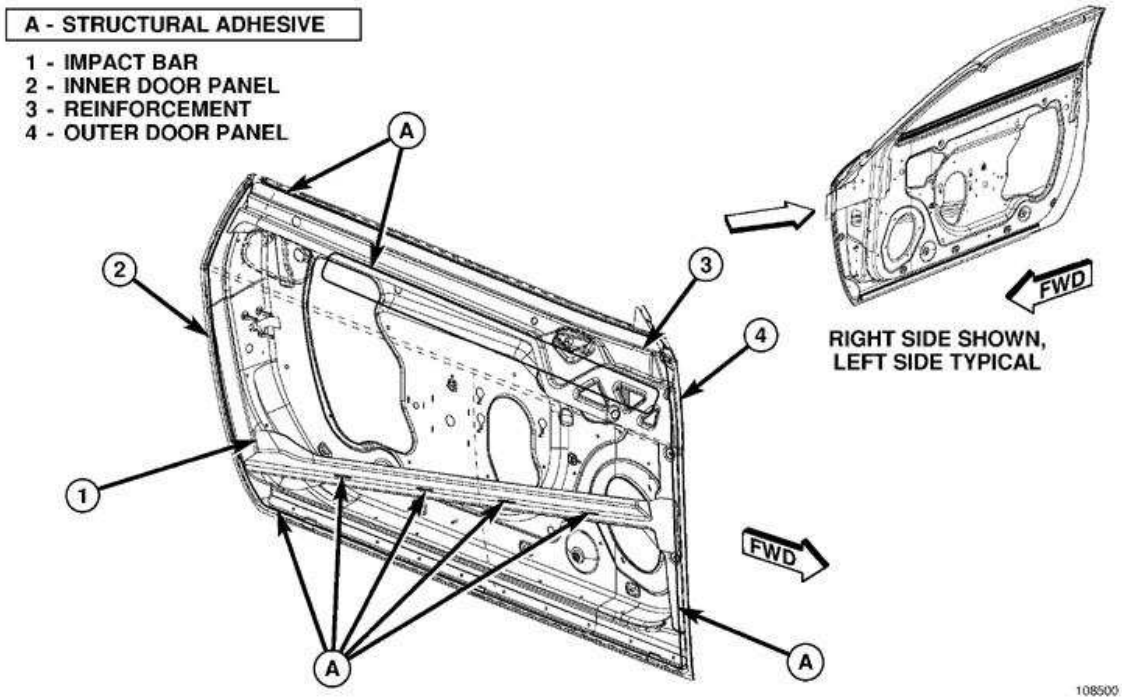

Fig. 381: Clutch Pack
Courtesy of CHRYSLER LLC

8. Assemble the clutch pack as follows: Friction disc (1), tabbed plate (2), friction disc (3), tabbed plate (4), large friction disc (5), and Belleville spring (6). Verify the friction surface on the large friction disc (5) is facing the tabbed plate (4).

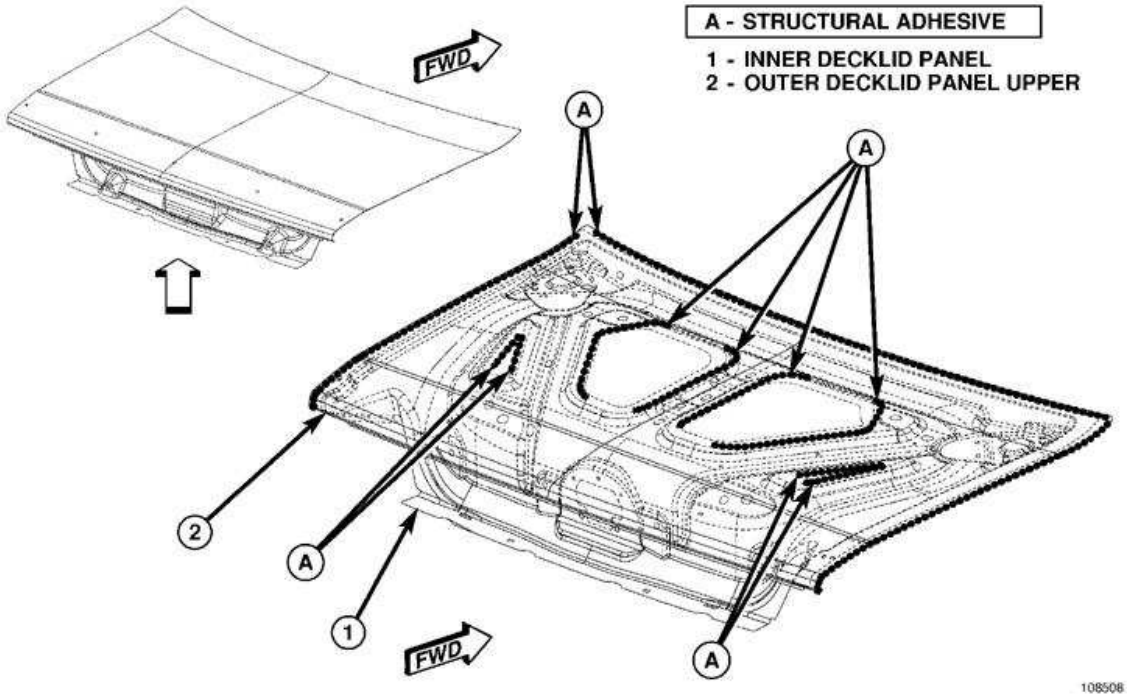

Fig. 382: Remove/Install Clutch Pack & Belleville Spring

Courtesy of CHRYSLER LLC

NOTE: Verify the raised edge of the Belleville spring (2) is facing up, or away from the clutch pack (1).

9. Install the clutch pack (1) and the Belleville spring (2).

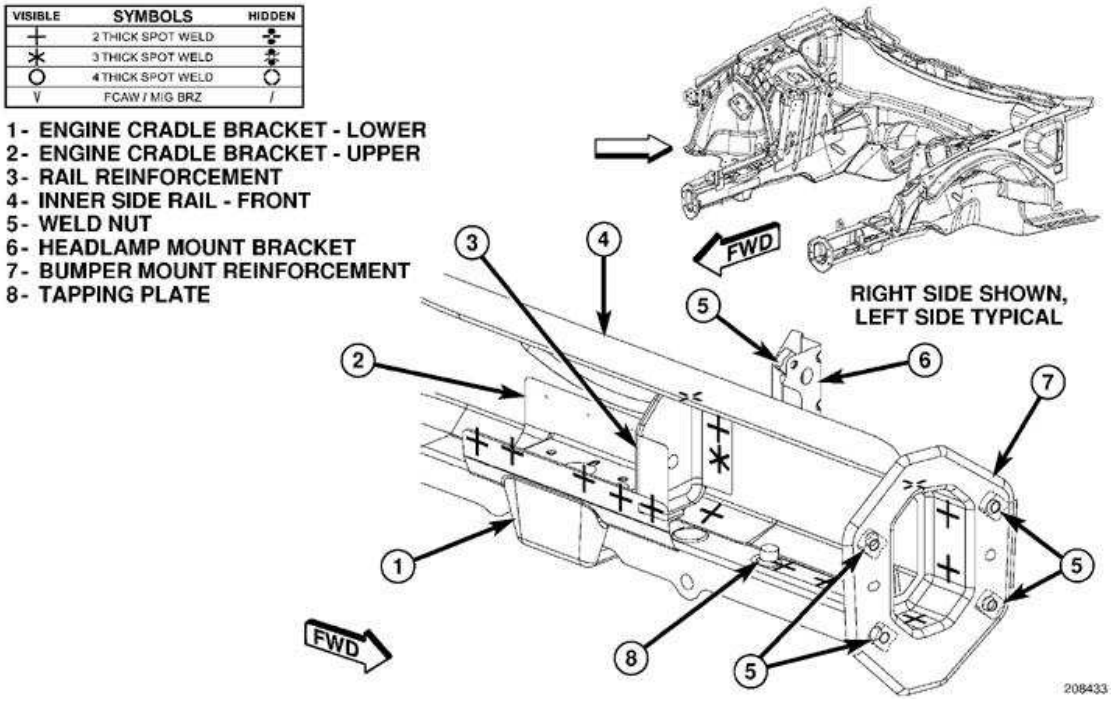

Fig. 383: Remove/Install Differential Side Gear
Courtesy of CHRYSLER LLC

10. Install the differential side gear (1).

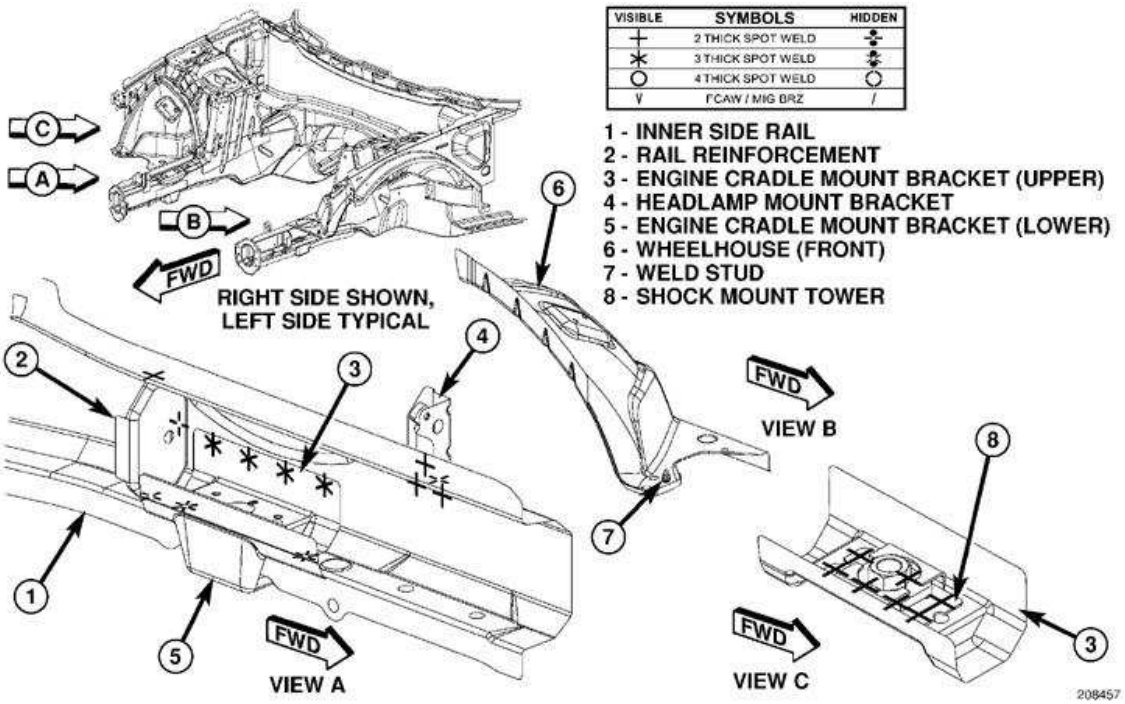

Fig. 384: Identifying Primary & Secondary Differential Case Halves
Courtesy of CHRYSLER LLC

11. Assemble the primary (1) and secondary (2) differential case halves.

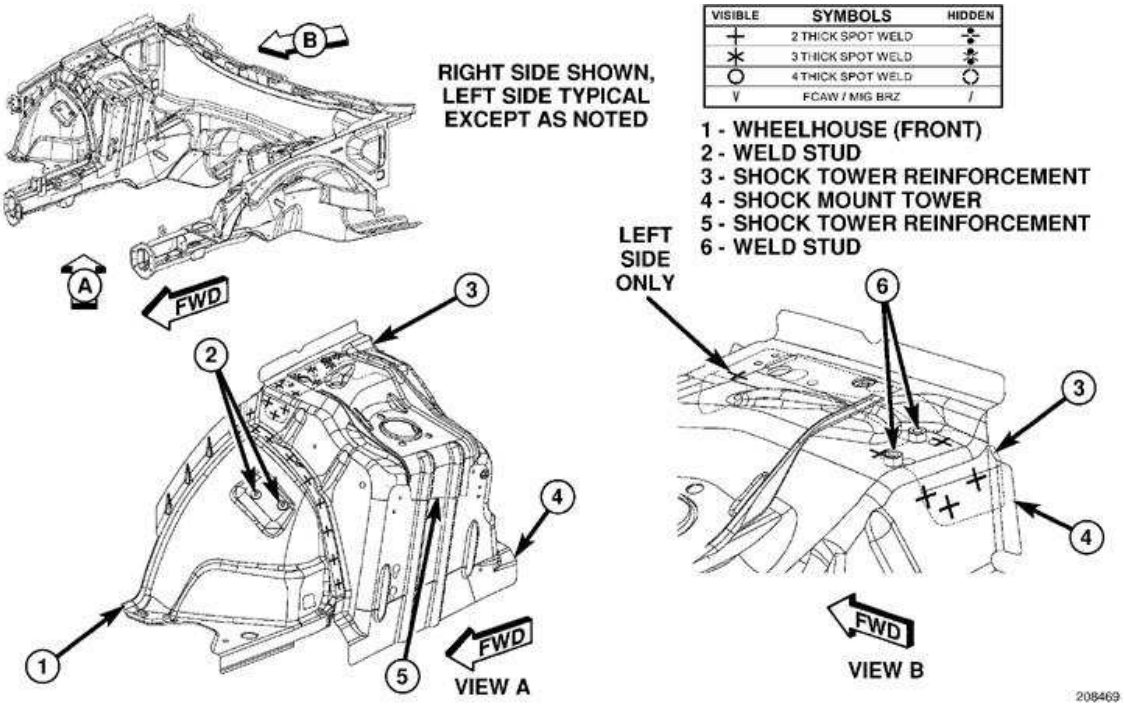

Fig. 385: Ring Gear Bolts
Courtesy of CHRYSLER LLC

12. Install the Ring Gear (2), and the Ring Gear Bolts (1). Tighten the ring gear bolts to 185 Nm (136 ft. lbs.).

Installation

INSTALLATION

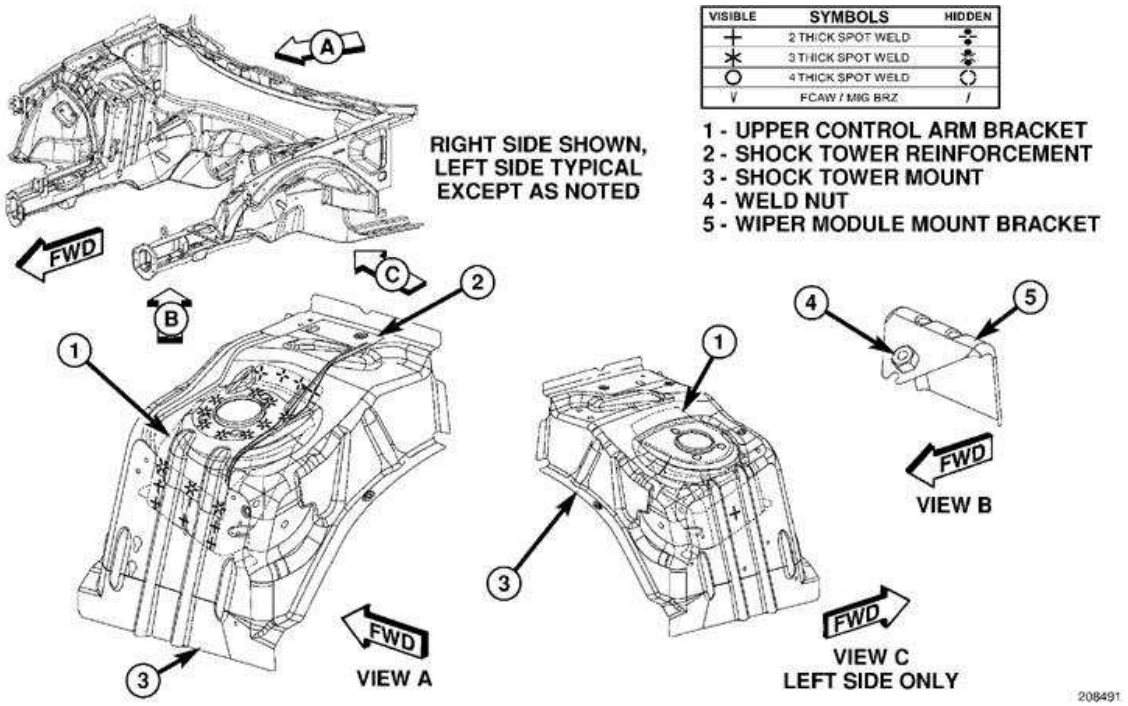

Fig. 386: Remove/Install Differential Case
Courtesy of CHRYSLER LLC

1. Apply a light coat of gear lubricant to differential bearings and bearing cups.
2. Install the Differential Case (1).

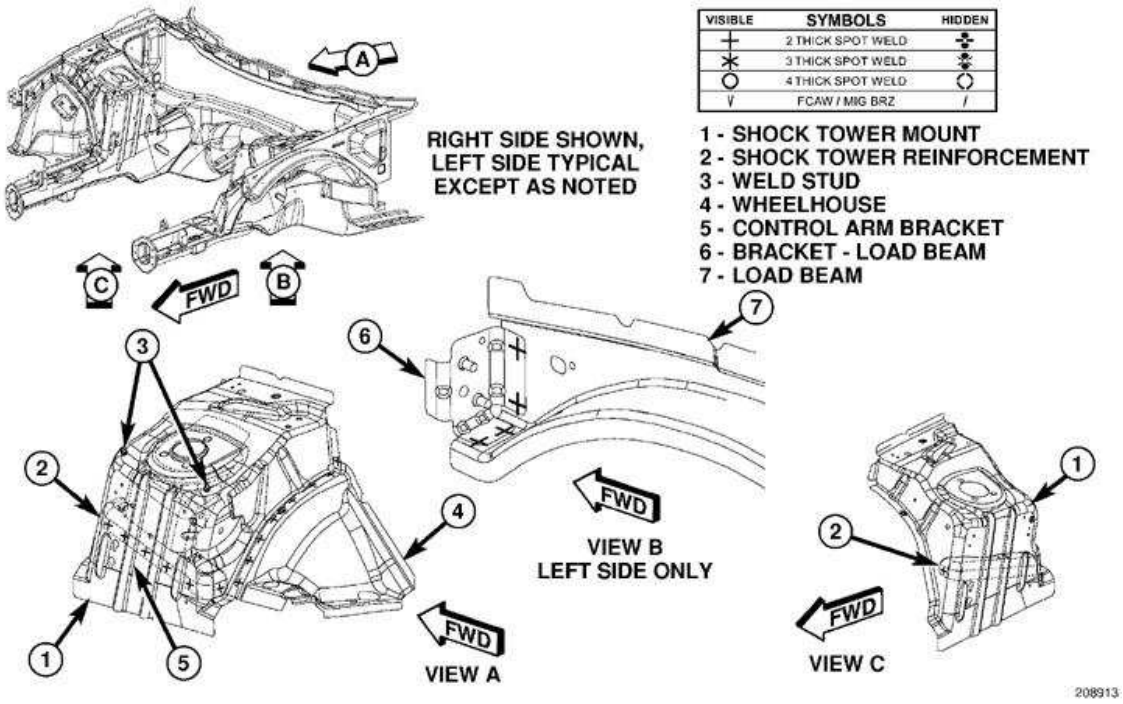

Fig. 387: Removing Case Half Bolts
Courtesy of CHRYSLER LLC

3. Install the Case Half (2) and the Case Half Bolts (1).
4. Verify the turning torque and differential bearing preload are within acceptable limits. If the turning torque and differential bearing preload measurements are not within specifications, or if a new ring and pinion gear have been installed, perform the pinion depth adjustment and differential side bearing preload and backlash adjustment procedures. See **Differential and Driveline/Rear Axle - Adjustments**.
5. Install the Rear Axle Assembly. See **Differential and Driveline/Rear Axle - Installation**

GEAR, RING AND PINION

Removal

GEAR-PINION/RING

1. Remove the Rear Axle Assembly. See **Differential and Driveline/Rear Axle - Removal**.

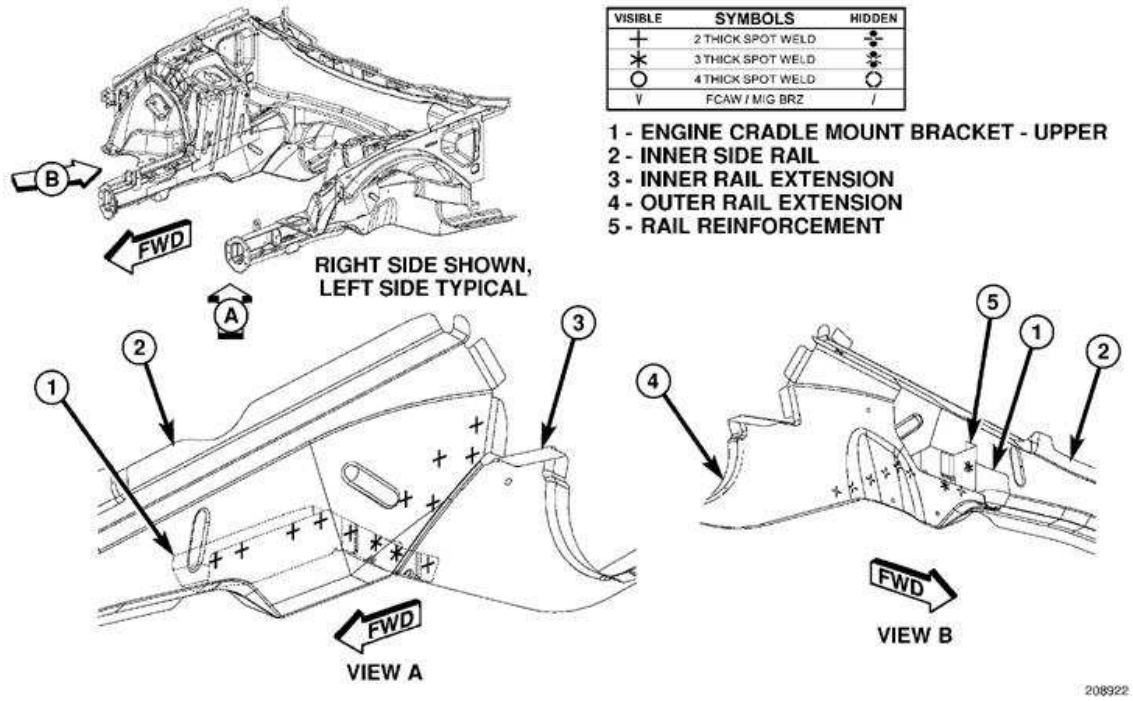

Fig. 388: Removing Case Half Bolts
Courtesy of CHRYSLER LLC

2. Remove the Case Half Bolts (1) and remove the Case Half (2).

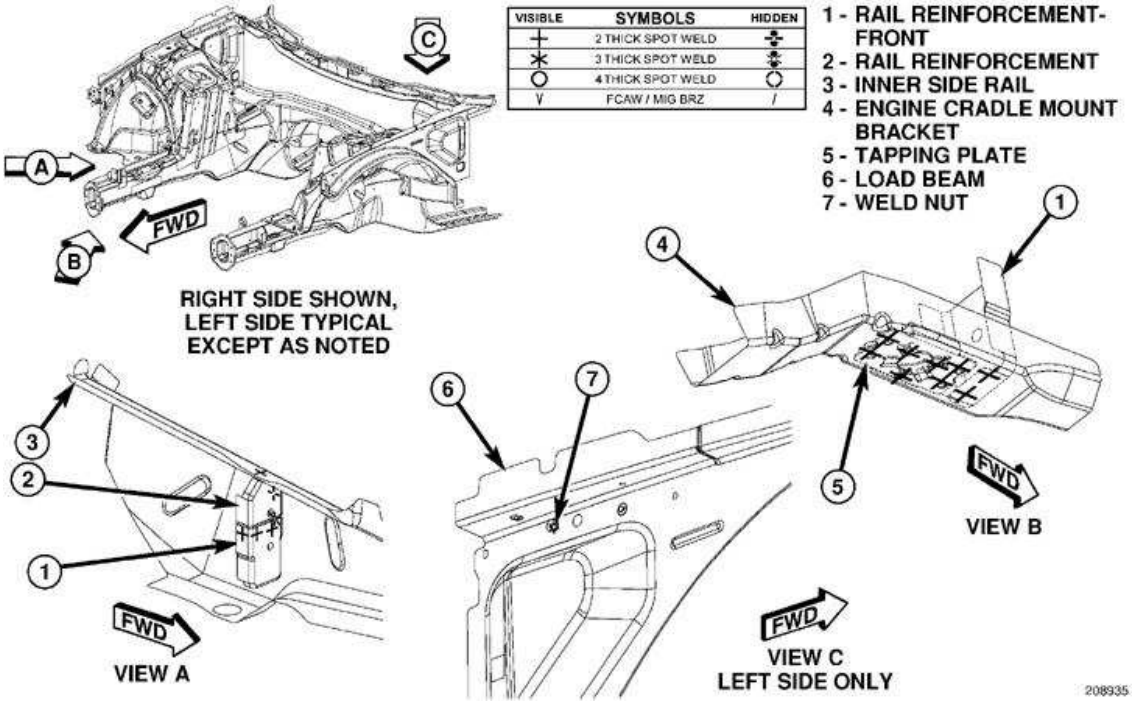

Fig. 389: Remove/Install Differential Case
Courtesy of CHRYSLER LLC

3. Remove the Differential Case (1).

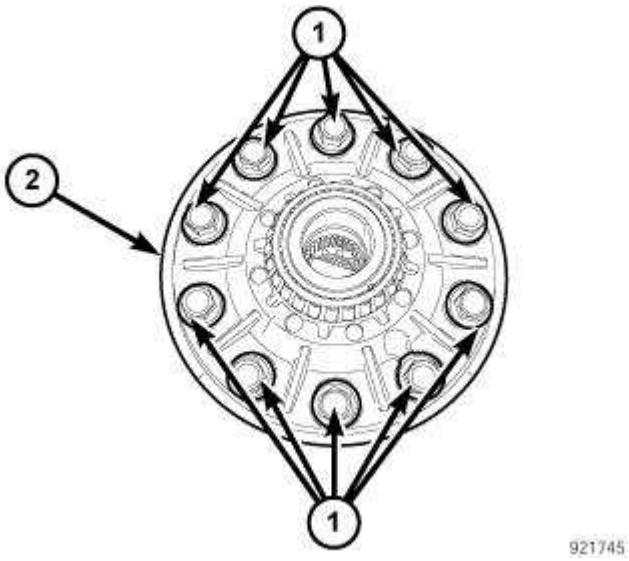

Fig. 390: Ring Gear Bolts
Courtesy of CHRYSLER LLC

4. Remove the Ring Gear Bolts (1) and tap Ring Gear (2) off of the Differential Case with a dead-blow hammer.

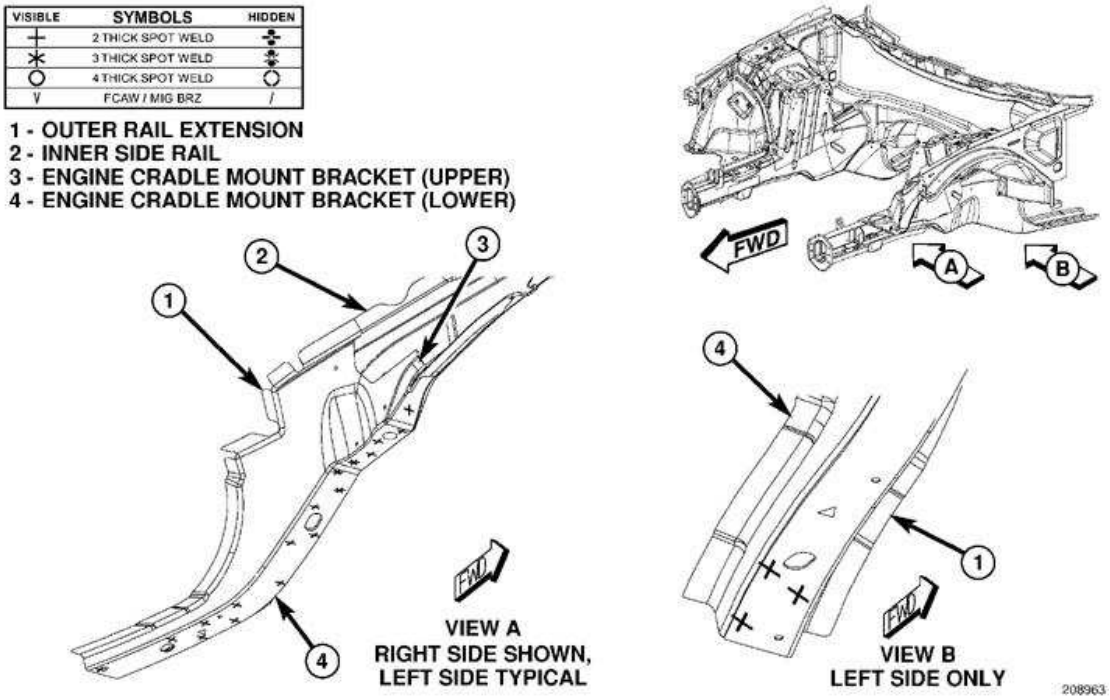

Fig. 391: Remove/Install Pinion Flange
Courtesy of CHRYSLER LLC

5. Hold Pinion Flange (2) with Flange Holder C-3281 (1) and remove the Pinion Nut.

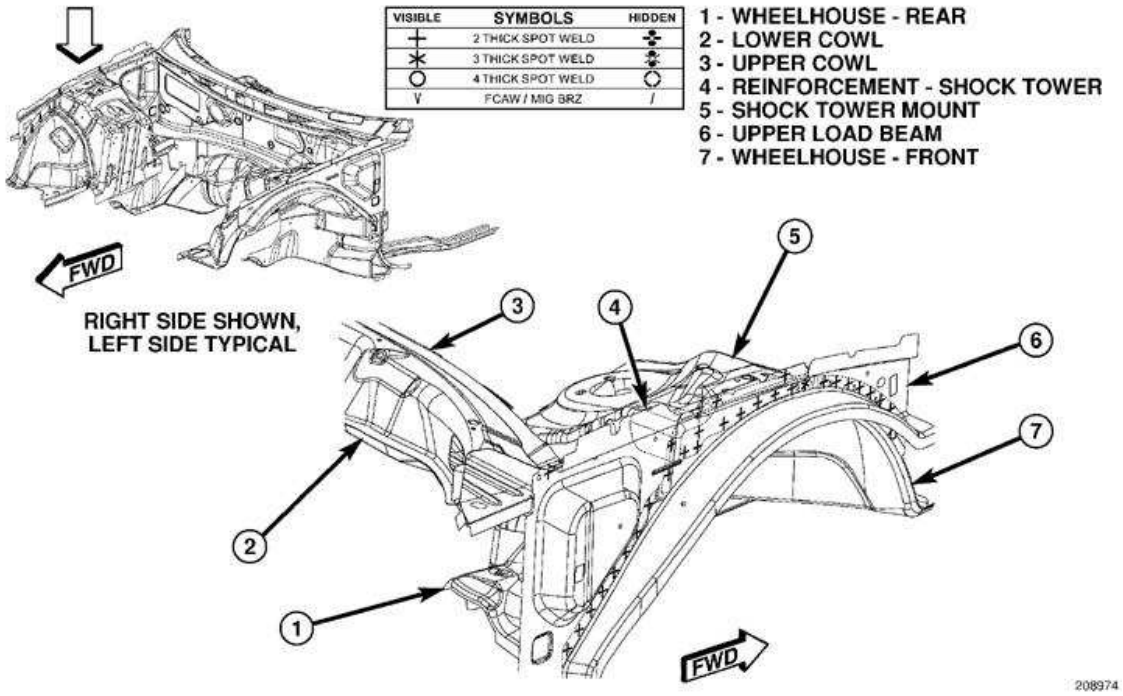

Fig. 392: Removing Pinion Flange From Pinion Shaft
Courtesy of CHRYSLER LLC

6. Use Puller 1026 (1) to remove the Pinion Flange (2) from the Pinion Shaft.

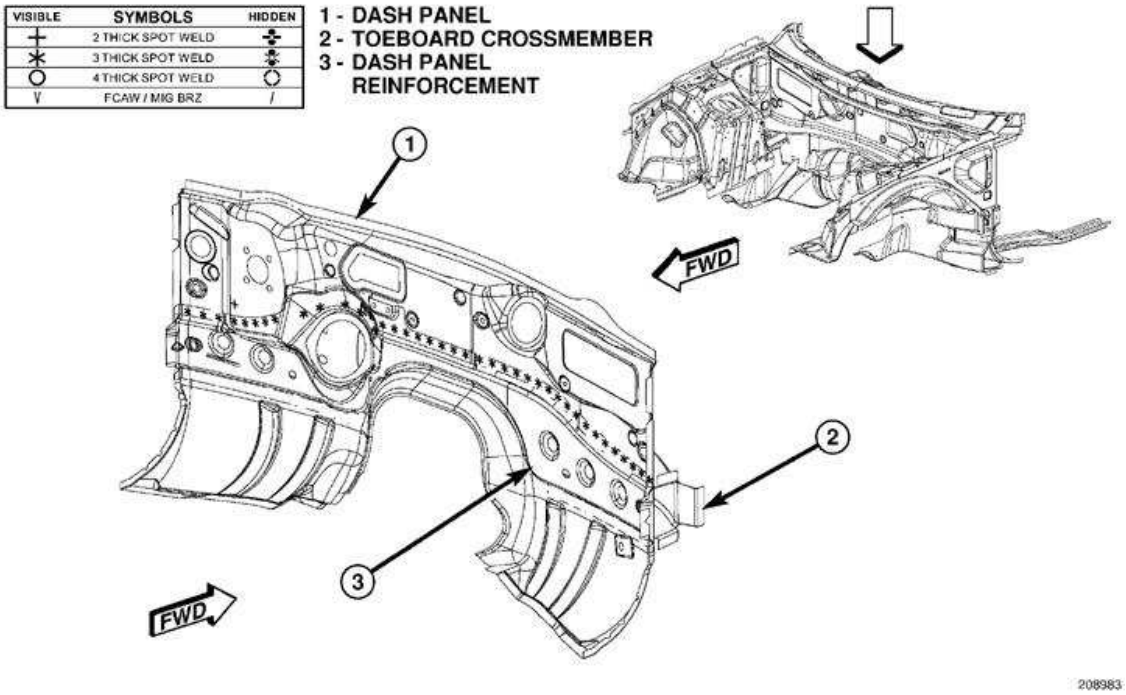

Fig. 393: Pressing Pinion Out Of Case With Arbor Press
Courtesy of CHRYSLER LLC

7. Press the Pinion (1) out of the Case (2) with an arbor press.

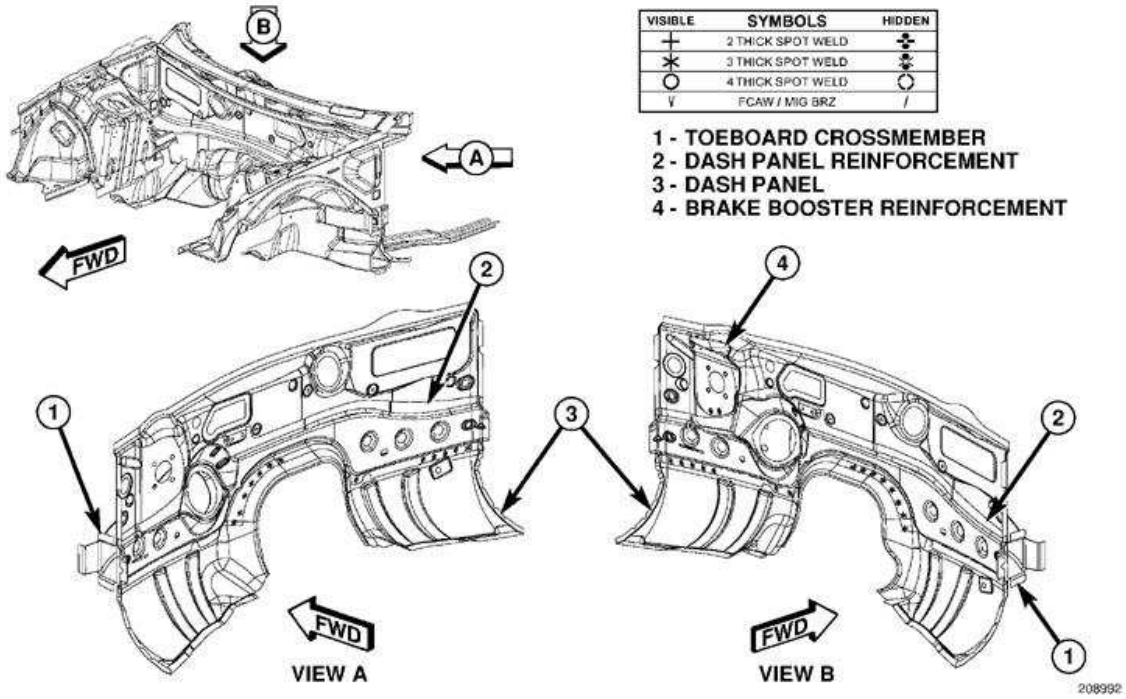

Fig. 394: Pressing Bearing Off Of Pinion
Courtesy of CHRYSLER LLC

NOTE: Tighten Bearing Splitter 1130 enough so that it does not slip off the bearing during removal

8. Use an arbor press and Bearing Splitter 1130 (2) to press the Bearing (1) off of the Pinion (3).

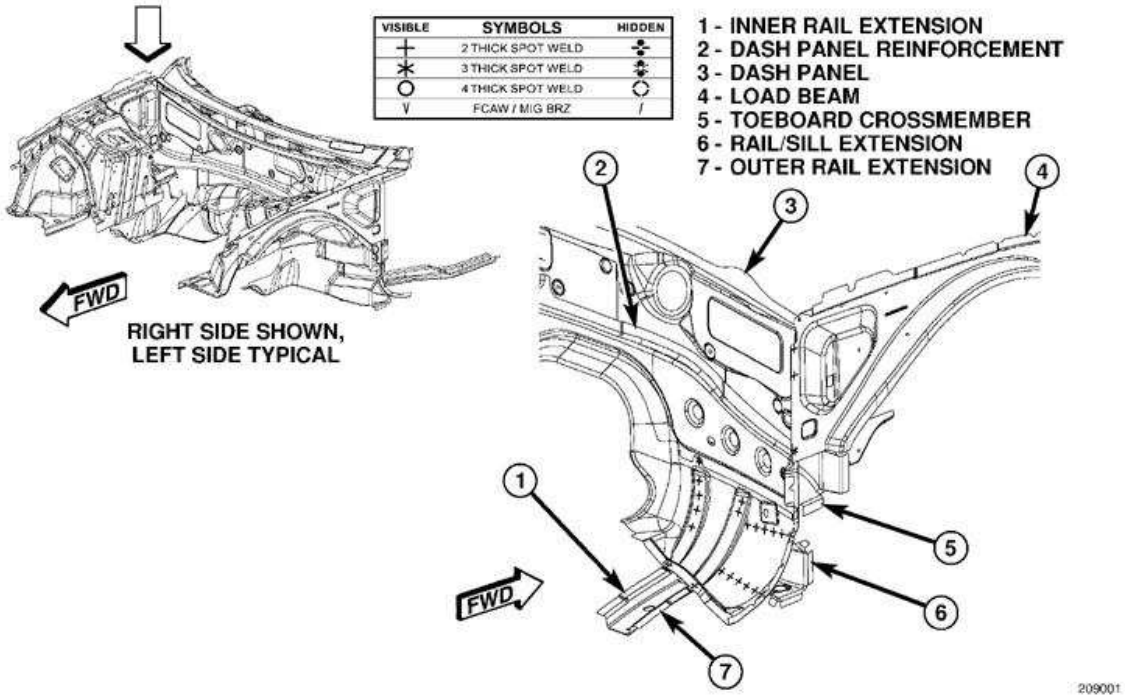

Fig. 395: Removing Pinion Bearing Cup
Courtesy of CHRYSLER LLC

NOTE: Use a brass drift only. Otherwise, damage can occur.

9. Remove the Pinion Bearing Cup by tapping it out through the Pinion Shaft Bore (1).

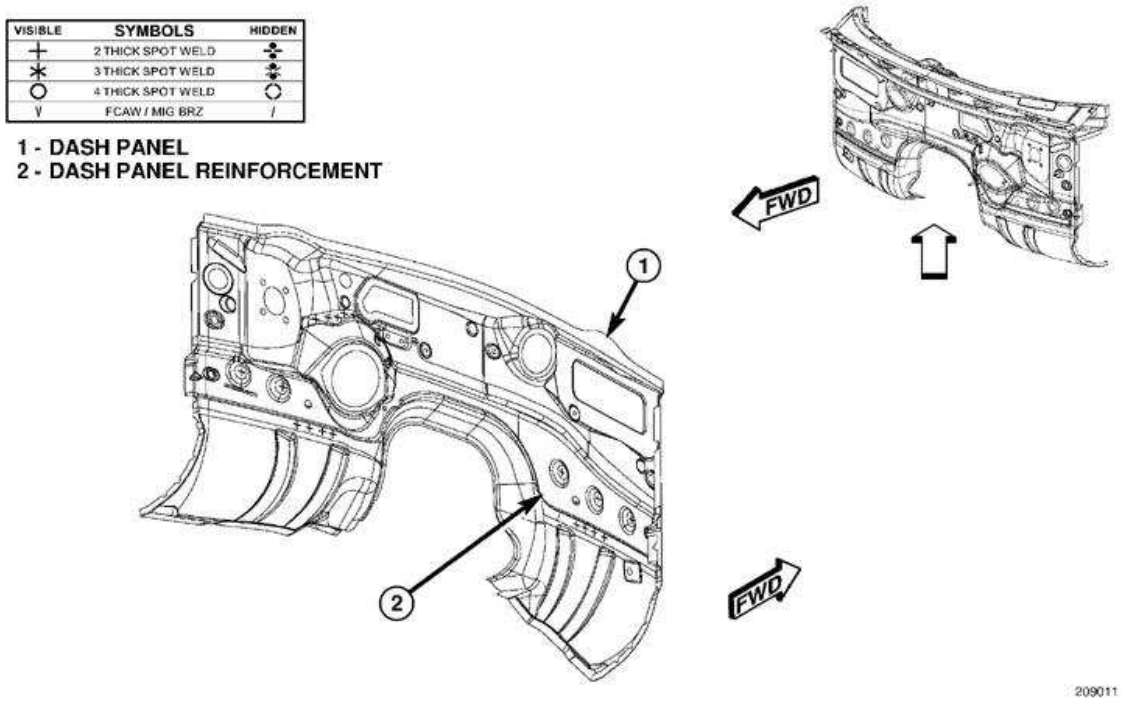

Fig. 396: Removing Pinion Bearing Seal

Courtesy of CHRYSLER LLC

10. Remove the Pinion Bearing Seal with Slide Hammer C-637 and Collet 7794-A.
11. Remove the Outer Pinion Bearing.

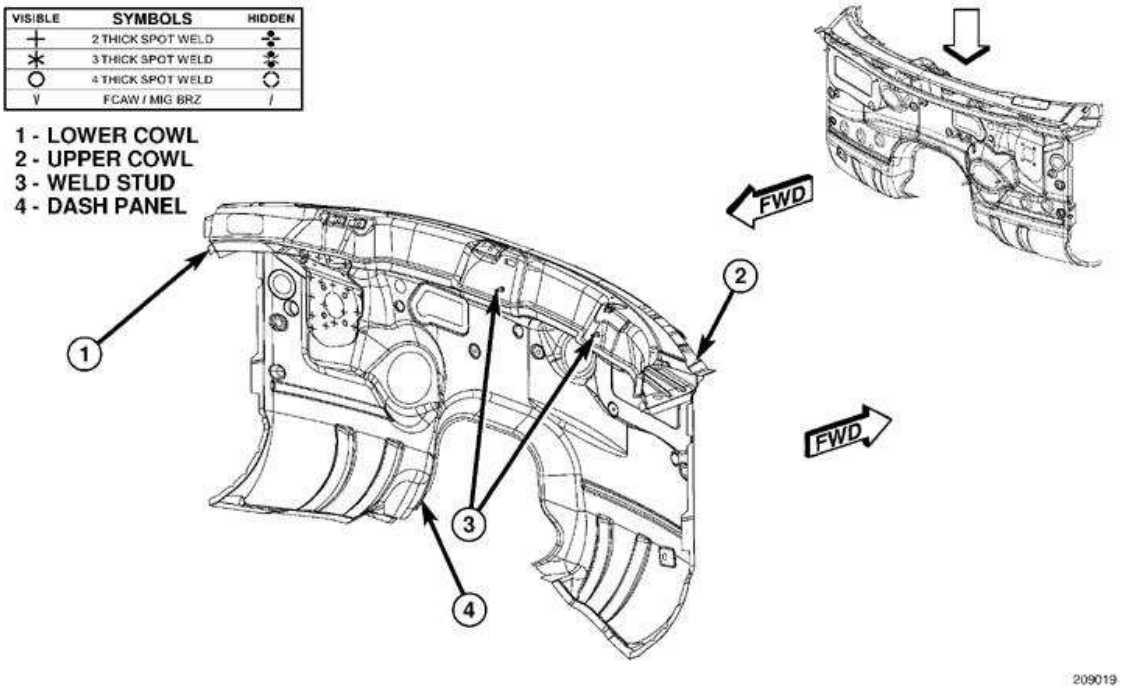

Fig. 397: Removing Outer Pinion Cup
Courtesy of CHRYSLER LLC

12. Use Brace 8915 and Bearing Remover 9593 to remove the Outer Pinion Cup.

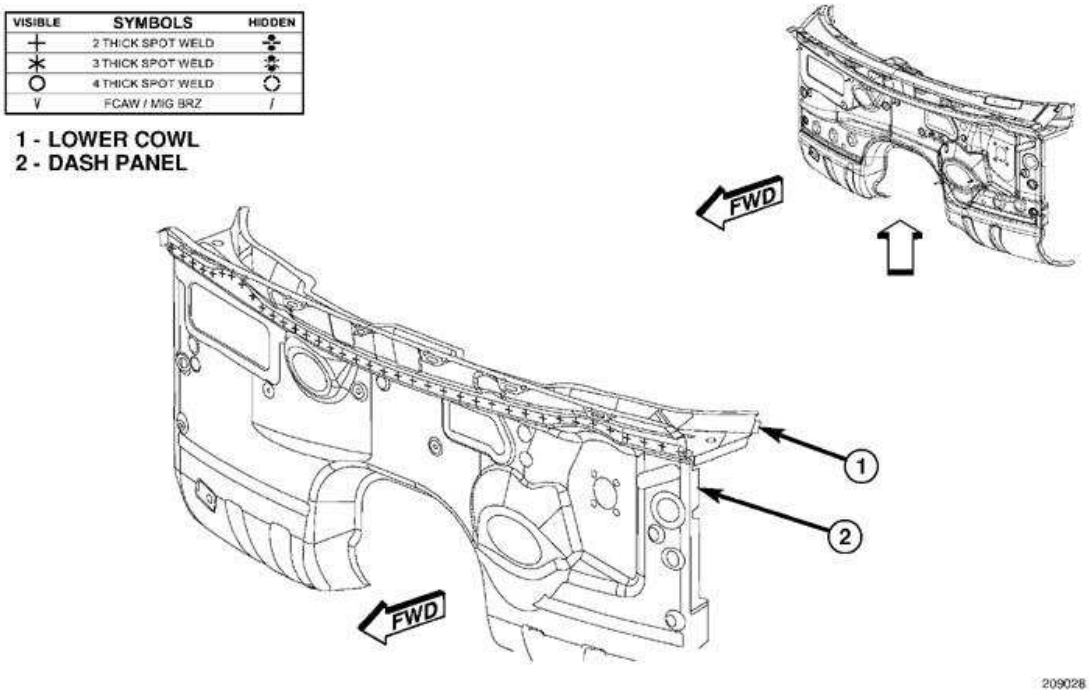

Fig. 398: Removing Differential Bearing Cone From Case
Courtesy of CHRYSLER LLC

13. Use Bearing Cup Remover 9593 (1) and Brace 8915 (2) to remove the Differential Bearing Cone (3) from the Case.

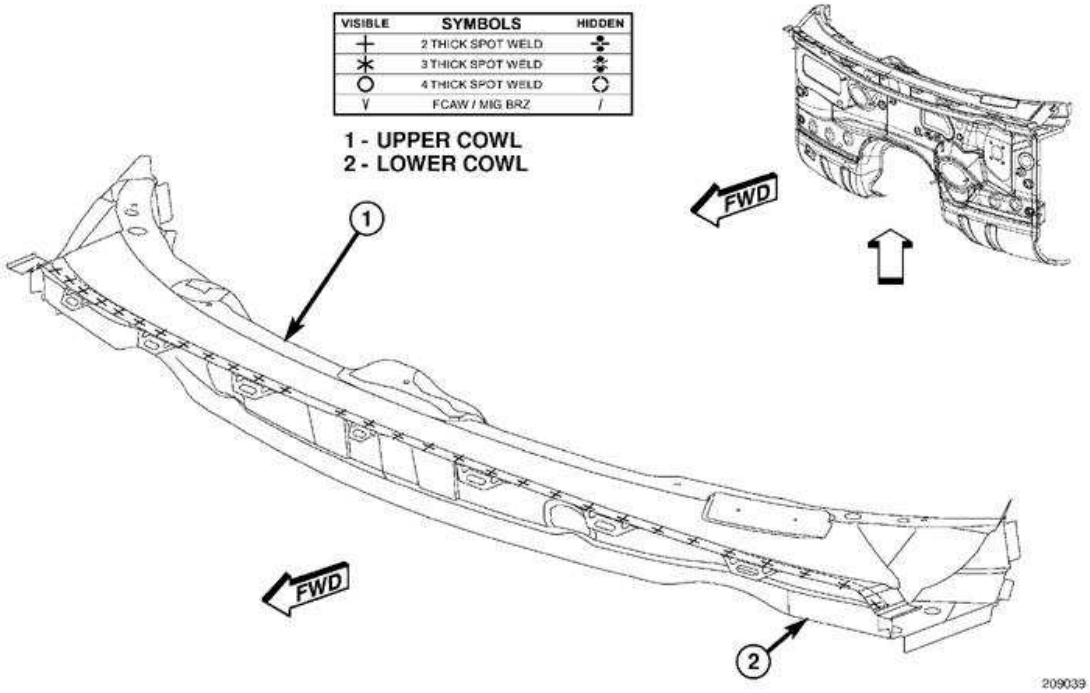

Fig. 399: Removing Differential Bearing Cone From Cover
Courtesy of CHRYSLER LLC

14. Use Bearing Cup Remover 9593 (1) and Brace 8915 (2) to remove the Differential Bearing Cone (3) from the Cover.

Installation

INSTALLATION

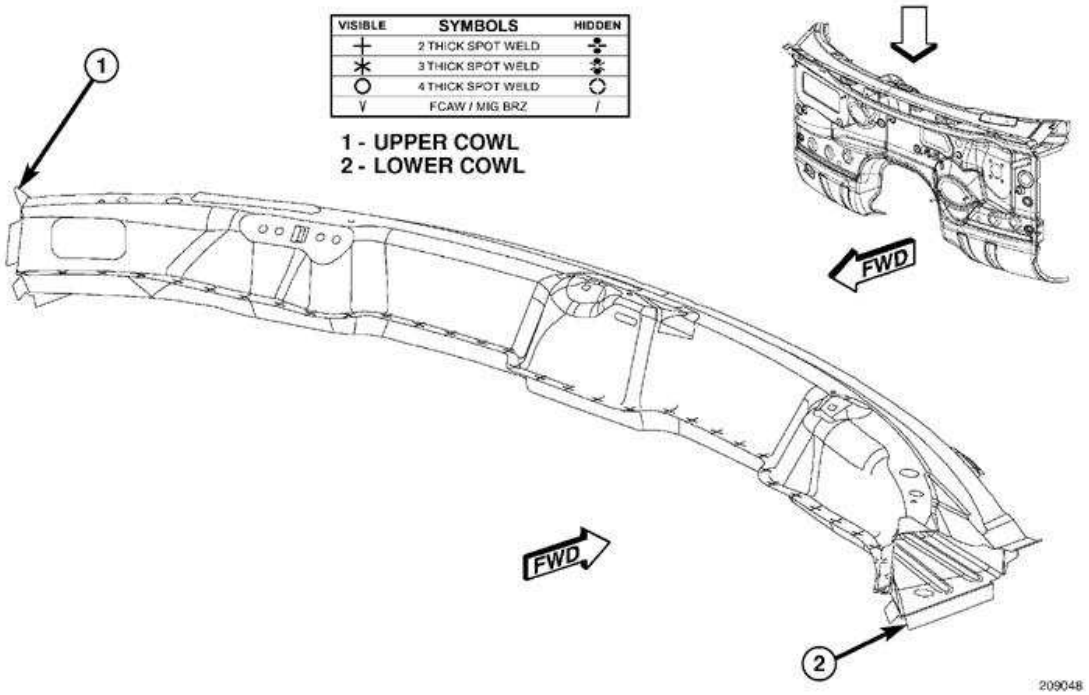

Fig. 400: Installing Pinion Bearing Cups With Pinion Bearing Cup Installer
Courtesy of CHRYSLER LLC

NOTE: Do not attempt to install the inner and outer pinion bearing cups at the same time.

1. Use Pinion Bearing Cup Installer 10148 (1) to install the pinion head bearing cup (2).
2. Install the pinion tail bearing cup with pinion bearing cup Installer 10148 (1).

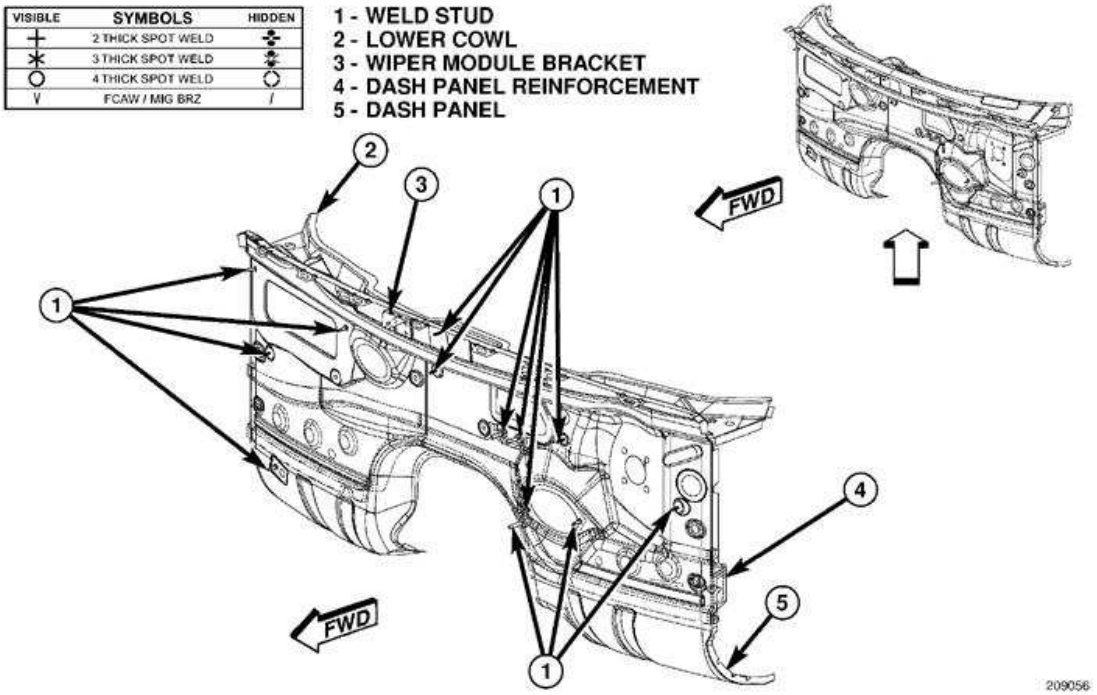

Fig. 401: Identifying Pinion Shaft, Pinion Head Bearing, Depth Shim & Spacer
Courtesy of CHRYSLER LLC

3. Determine the correct pinion depth and differential bearing preload. See **Differential and Driveline/Rear Axle - Adjustments**.
4. Install the pinion depth shim (1) onto the pinion shaft (2).

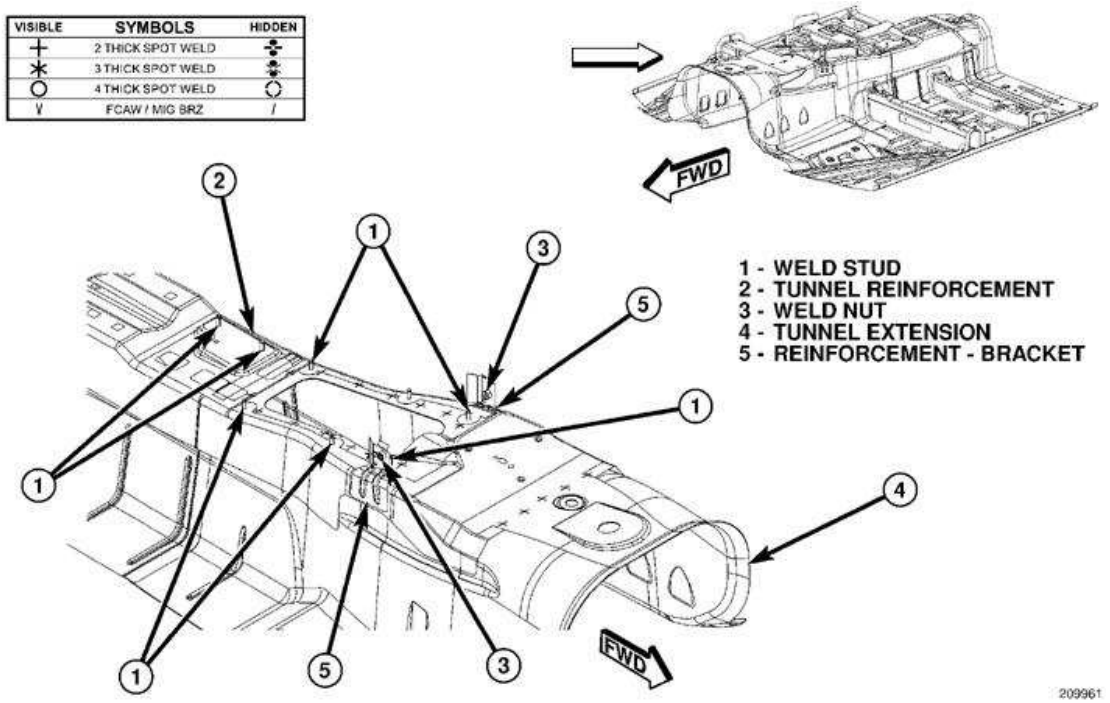

Fig. 402: Installing Pinion Head Bearing Using Arbor Press & Installer 6446

Courtesy of CHRYSLER LLC

5. Use an arbor press and Installer 6446 (1) to install the pinion head bearing (2).

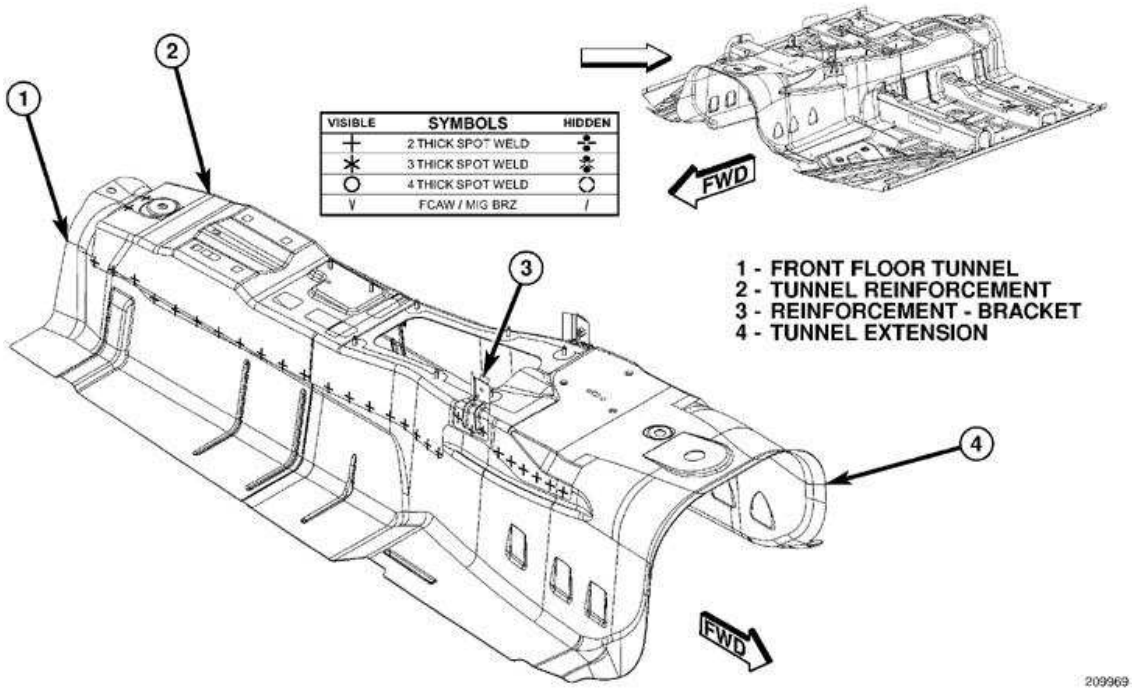

Fig. 403: Installing Spacer Onto Pinion Shaft
Courtesy of CHRYSLER LLC

6. Install the spacer (1) onto the pinion shaft.
7. Install the pinion into the case.

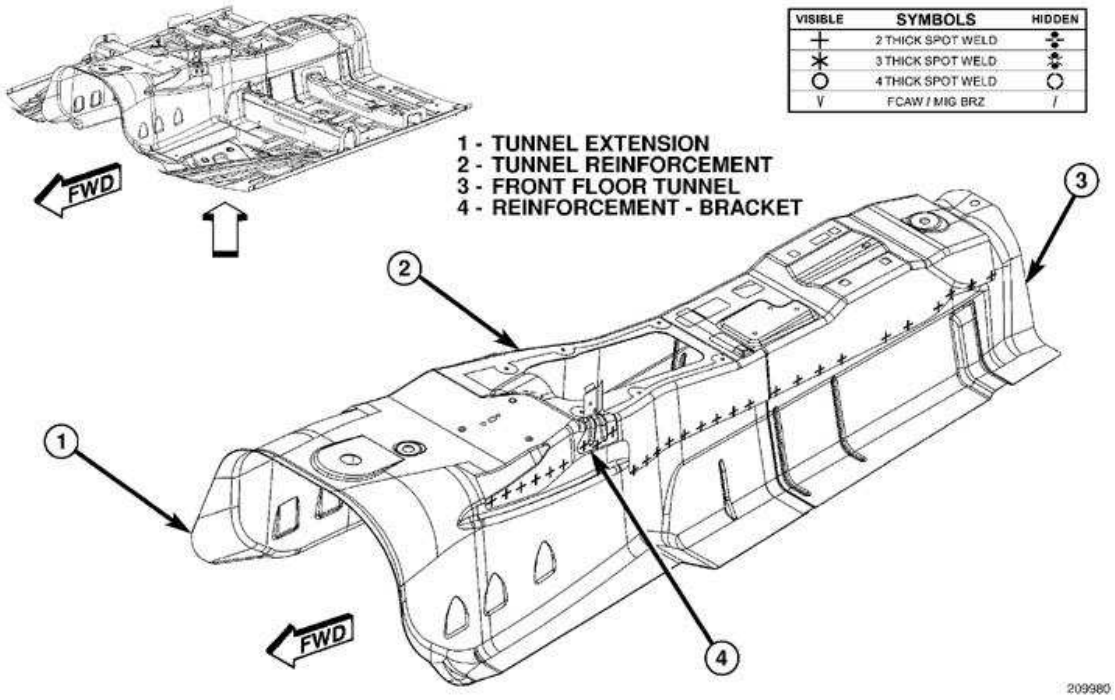

Fig. 404: Bearing Heater
Courtesy of CHRYSLER LLC

WARNING: Use tongs or welding gloves when handling heated components. Failure to follow these instructions will result in personal injury.

CAUTION: Bearings (1) are installed using a Bearing Heater (2). Use only a bearing heater/hot plate and follow manufacturer's instructions. Heat components to 100 - 149 Celsius (212° Min. - 300° Max Fahrenheit). Never use an open flame to heat components. Never leave components on heater for an extended amount of time. If component is discolored after heating, the component has been overheated and must not be used. Failure to follow these instructions will result in component damage.

8. Heat pinion tail bearing (1) to 100 - 149 Celsius (212° Min. - 300° Max Fahrenheit) and install on pinion with tongs or welding gloves.

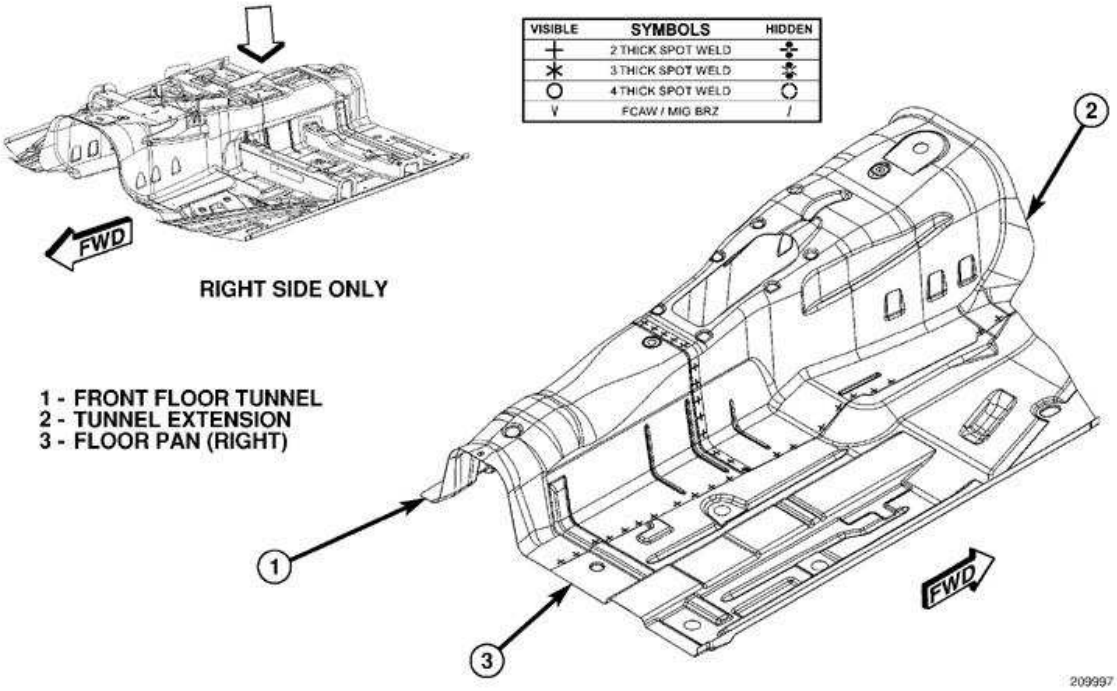

Fig. 405: Installing Pinion Seal
Courtesy of CHRYSLER LLC

NOTE: Apply a light coating of gear lube to pinion seal.

NOTE: Allow the pinion tail bearing to cool off to room temperature before installing the pinion seal.

9. Use pinion oil seal installer 10146 (1) to install the pinion seal (2).

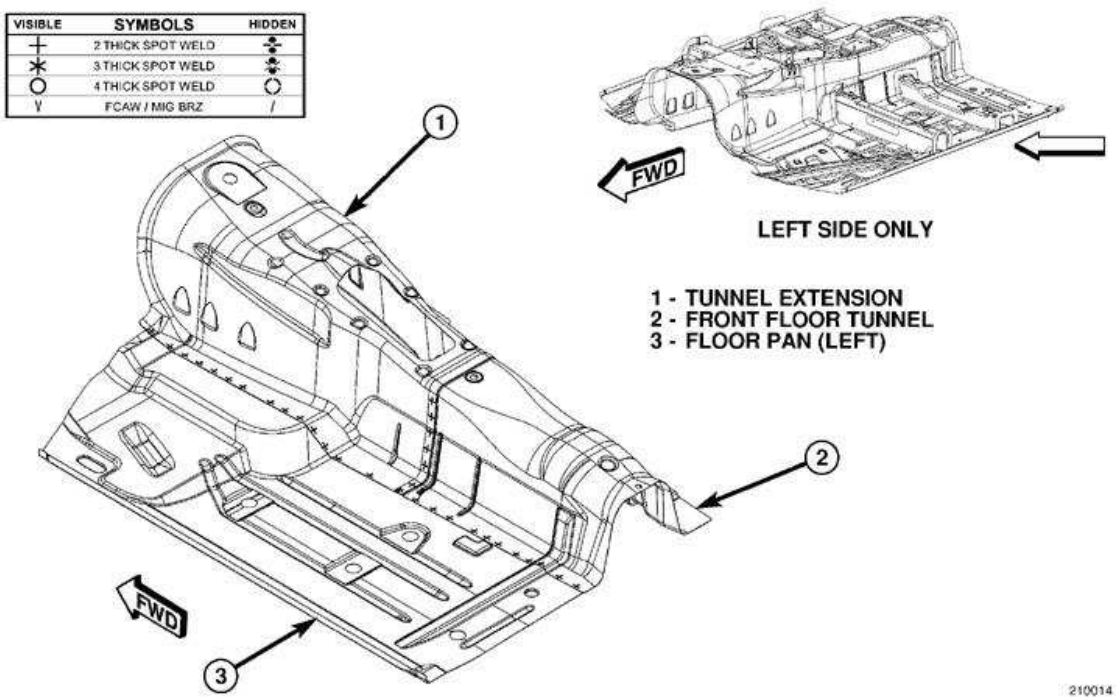

Fig. 406: Remove/Install Pinion Flange
Courtesy of CHRYSLER LLC

10. Install the pinion flange (2).
11. Install the original pinion nut. Hold the pinion flange with flange holder C-3281 (1) and tighten the pinion nut.
12. Remove and discard the original Pinion Nut.
13. Remove the Pinion Flange.
14. Install the pinion flange (2) and a new pinion flange nut. Tighten the pinion flange nut to 245 Nm (180 ft. lbs.).
15. Use an inch pound torque wrench to measure the turning torque of the pinion.
16. If the turning torque is too high, remove the selected shim, and install a larger shim on the pinion shaft, then verify the turning torque is correct. If the turning torque is too low, remove the selected shim, and install a smaller shim on the pinion, then verify the turning torque is correct.

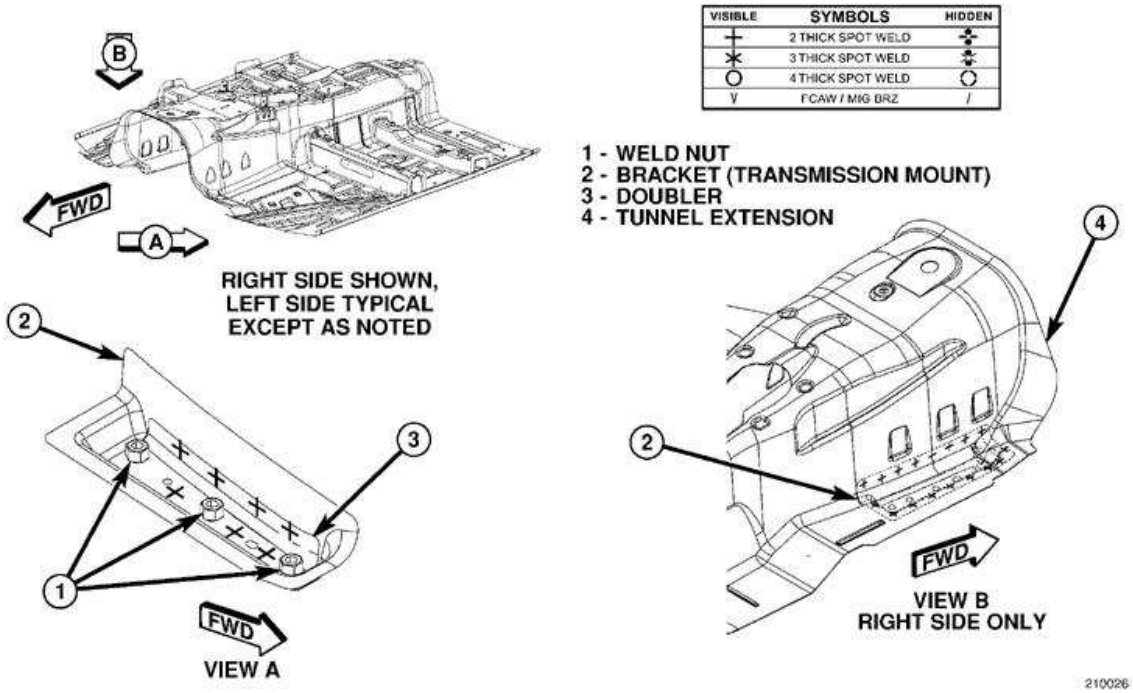

Fig. 407: Ring Gear Bolts
Courtesy of CHRYSLER LLC

17. Install the Ring Gear (2), and new Ring Gear Bolts (1). Tighten the bolts to 185 Nm (136 ft. lb.).

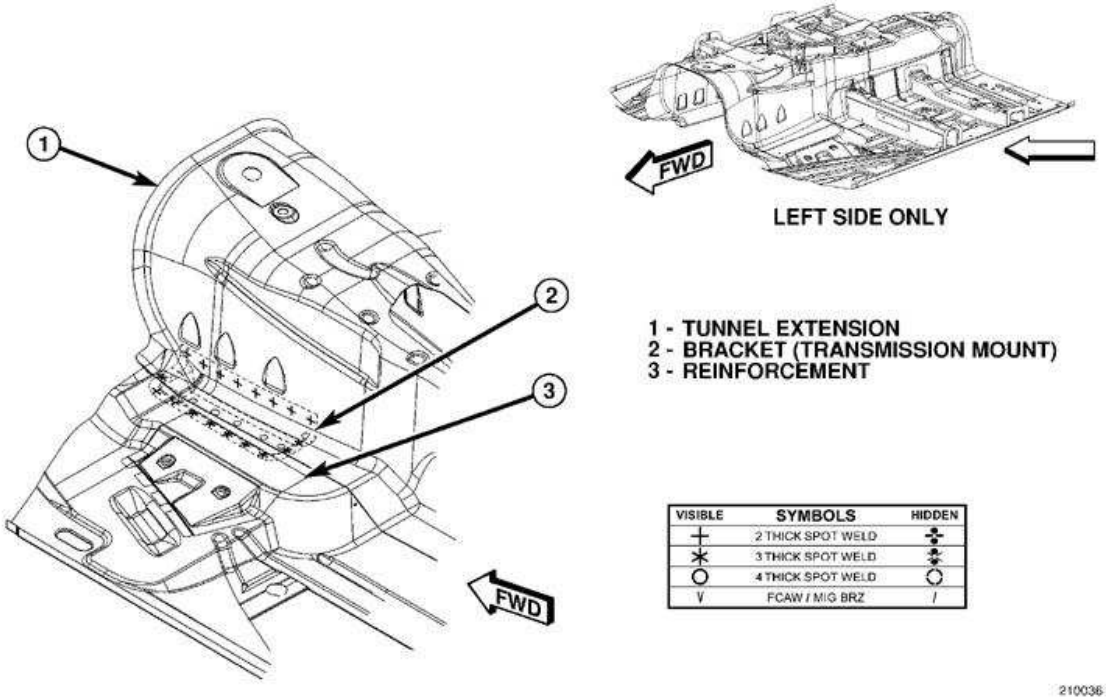

Fig. 408: Differential Side Bearing Shim
Courtesy of CHRYSLER LLC

18. Measure end play of the differential, and determine the size of the required differential shims to get the correct differential side bearing preload and ring gear backlash. See **Differential and Driveline/Rear Axle - Adjustments**.
19. Install shim (1) in the cover.

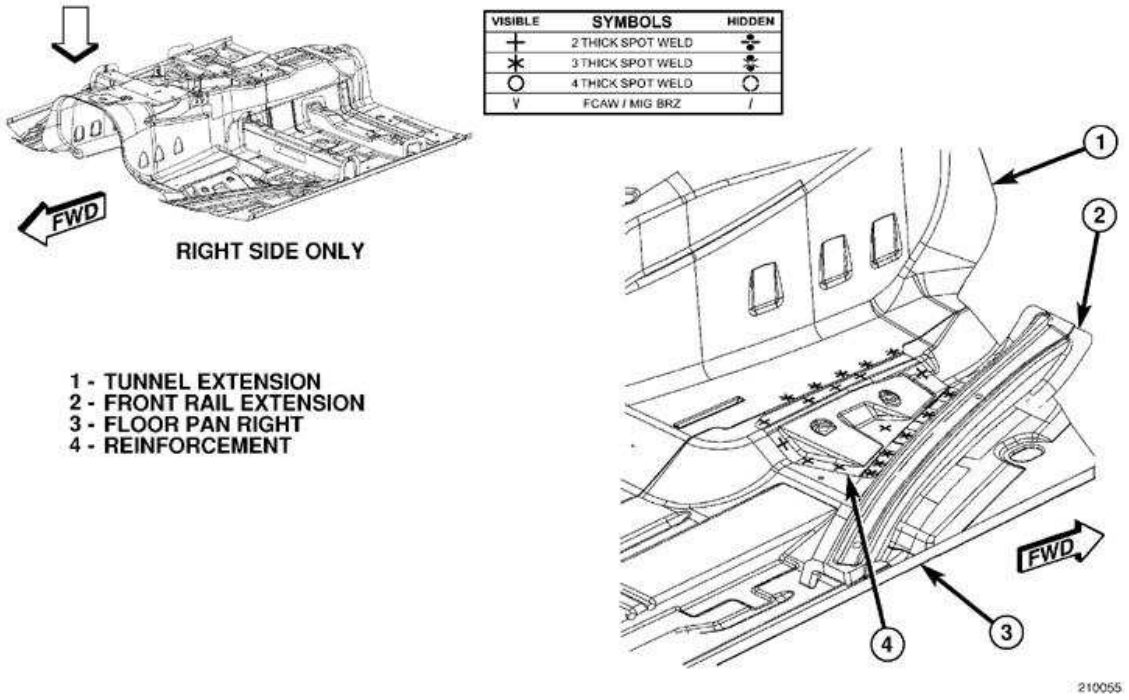

Fig. 409: Installing Differential Side Bearing Cup
Courtesy of CHRYSLER LLC

20. Use Differential Bearing Cup Installer 10147 (2) and Universal Installer Handle C-4171 (1) to install the differential side bearing cup (3) into the cover (3).

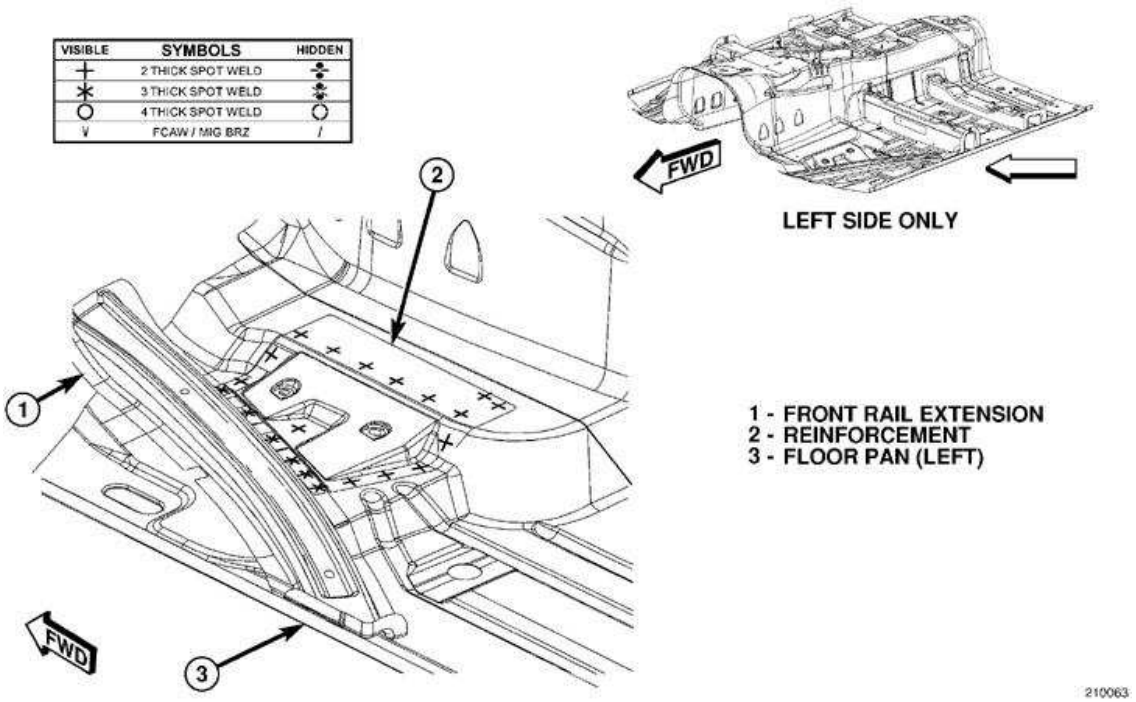

Fig. 410: Installing Shim Into Case
Courtesy of CHRYSLER LLC

21. Install shim (1) in the case.

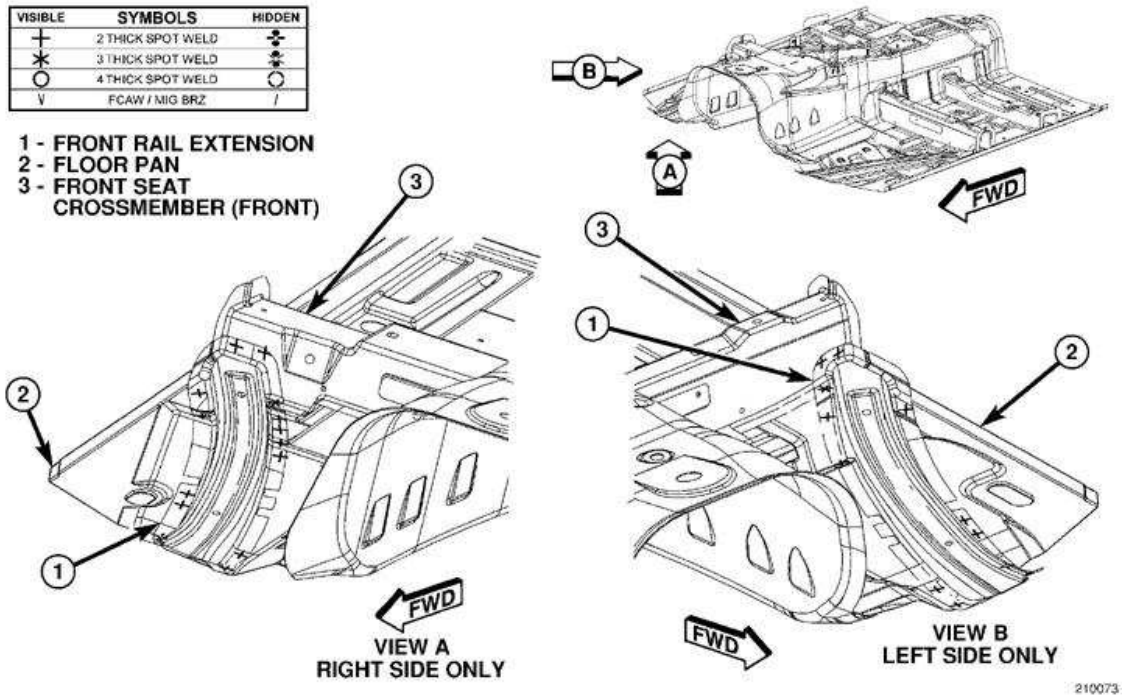

Fig. 411: Installing Differential Side Bearing Cup In Case
Courtesy of CHRYSLER LLC

22. Use Differential Bearing Cup Installer 10147 and Universal Installer Handle C-4171 to install the Differential Side Bearing Cup into the Case.
23. Install the Differential in the housing.

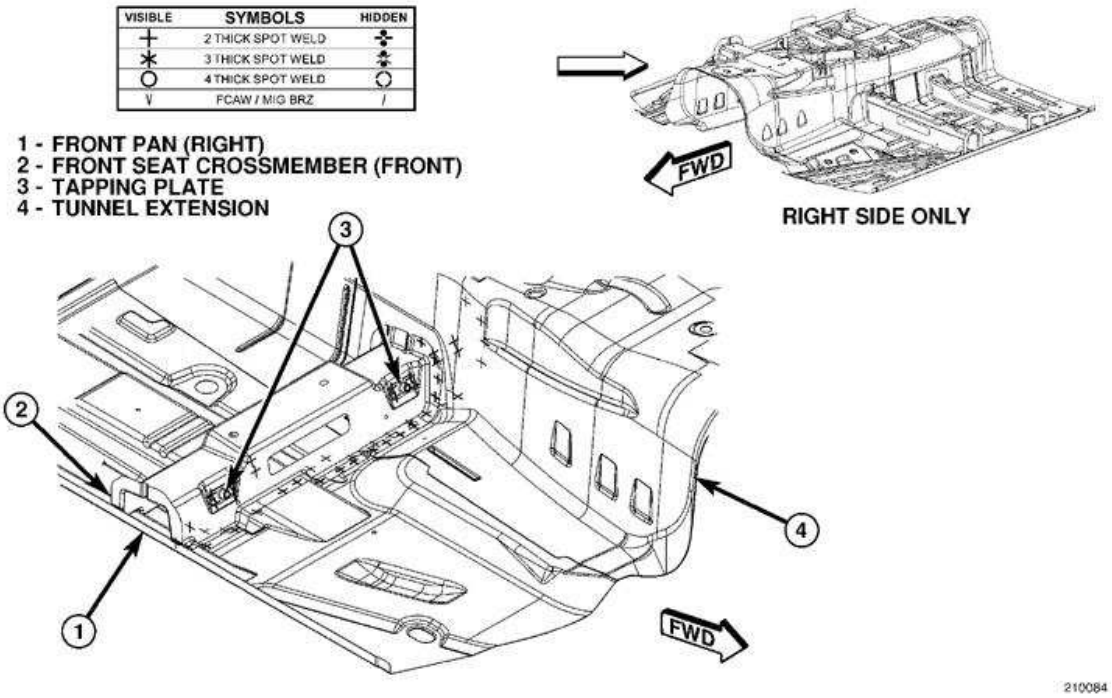

Fig. 412: Removing Case Half Bolts
Courtesy of CHRYSLER LLC

24. Temporarily install the cover (2), and the cover bolts (1).
25. Verify the ring and pinion gear contact pattern is within acceptable limits.
26. Tighten the cover bolts to 28 Nm (20 ft. lbs.).
27. Verify the total turning torque of the differential is within 2.5 to 6.0 Nm (22 - 53 in. lbs.). If necessary, adjust the size of the differential shims to bring the turning torque within specifications.
28. Install the rear axle assembly. See **Differential and Driveline/Rear Axle - Installation**.

SEAL, AXLE DRIVE SHAFT

Removal

REMOVAL

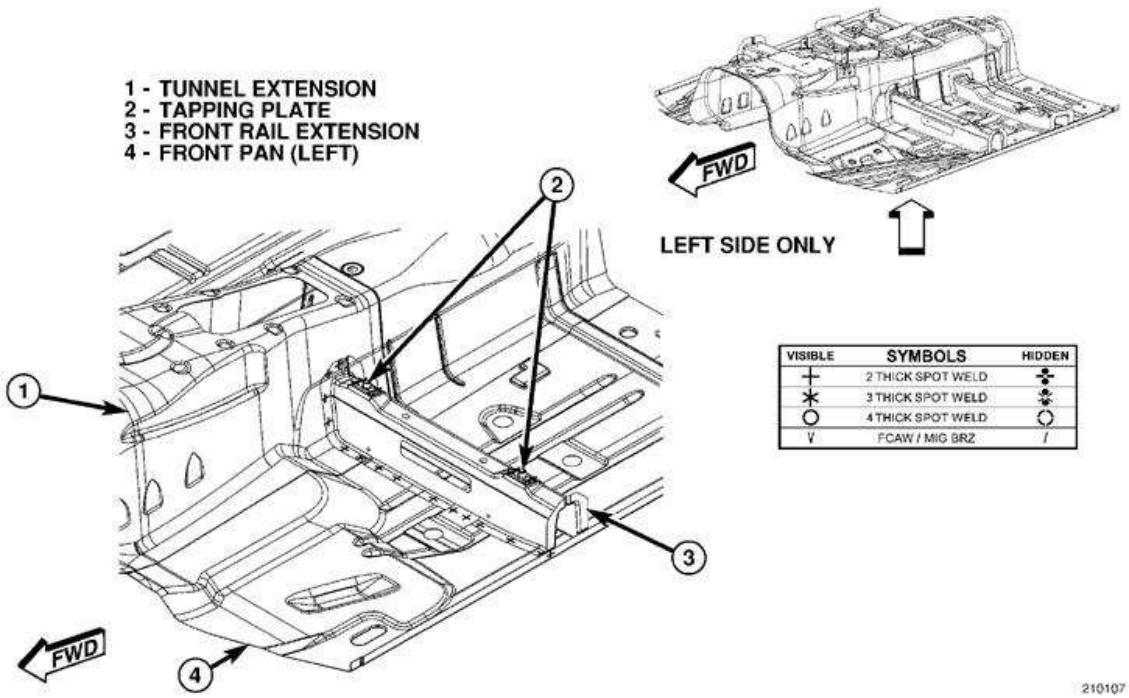

Fig. 413: Removing Left Side Seal
Courtesy of CHRYSLER LLC

1. Remove halfshaft(s). See **Differential and Driveline/Half Shaft - Removal**
2. Using suitable screwdriver (1), remove axle shaft seal (2).
3. Visually inspect halfshaft seal journal for damage (excessive seal groove, nicks, scratches, etc.). Replace halfshaft if necessary.

Installation

INSTALLATION

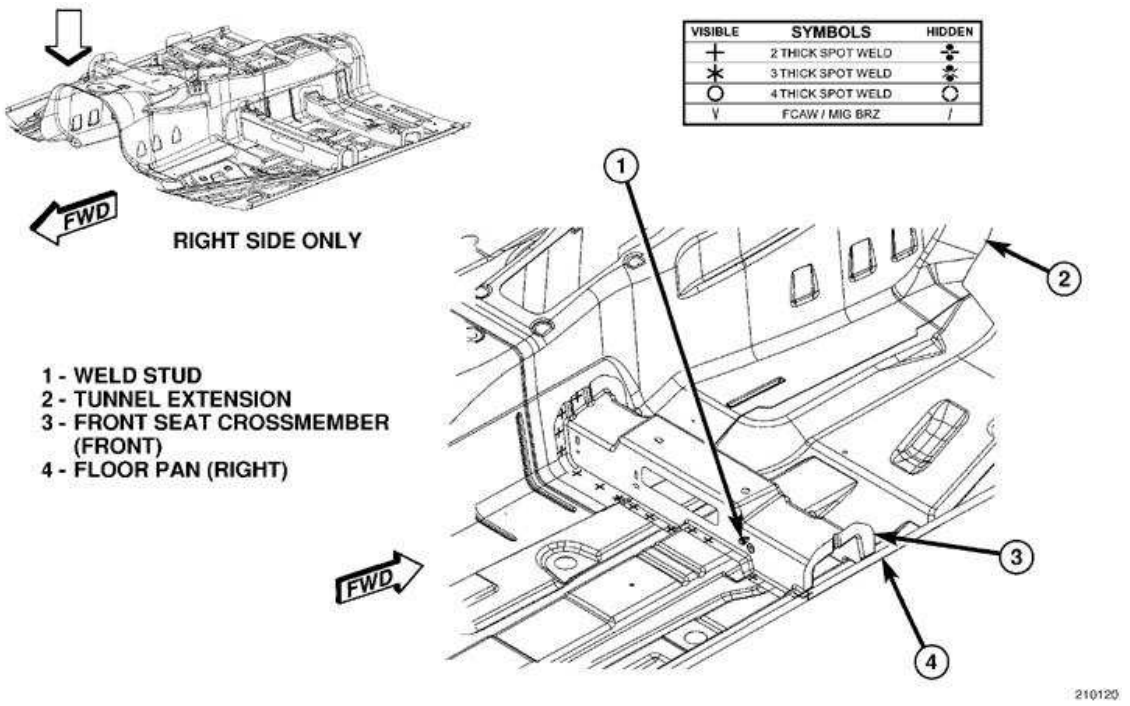

Fig. 414: Installing Right Side Seal
Courtesy of CHRYSLER LLC

1. Using Installer 9919 (2) and Handle C-4171 (3), install **NEW** axle shaft seal (1). Lubricate the inside diameter with Mopar® Gear and Axle Lubricant 75W-90 to protect seal during halfshaft installation.
2. Install halfshaft(s). See **Differential and Driveline/Half Shaft - Installation**

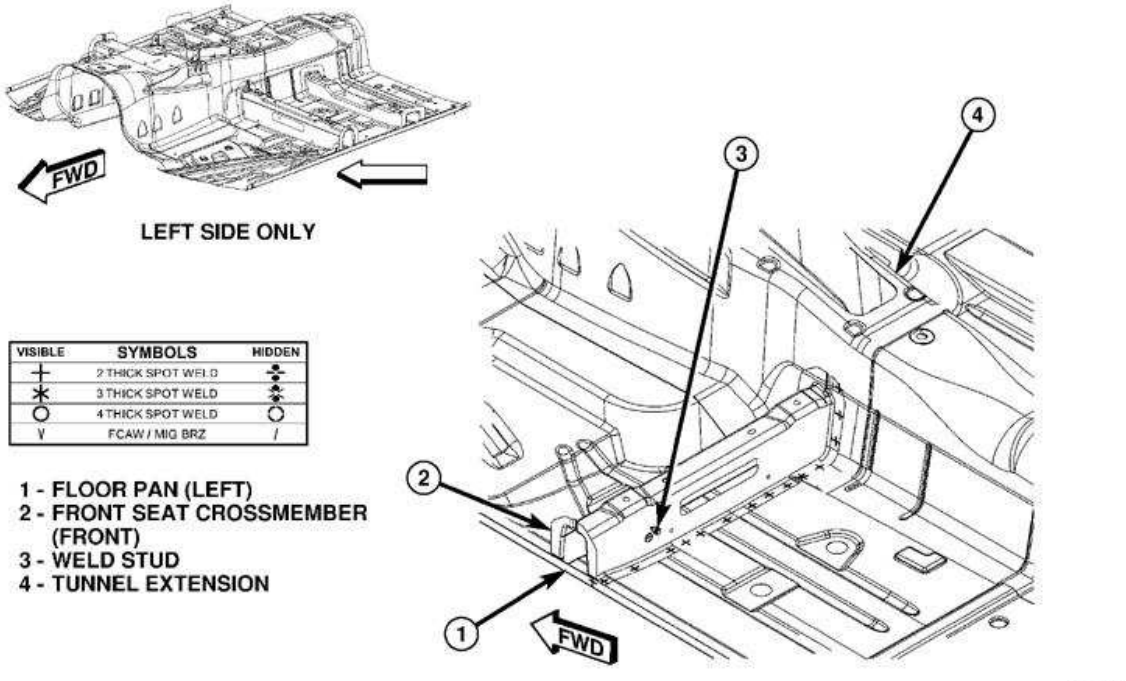

Fig. 415: Drain And Fill Plug
Courtesy of CHRYSLER LLC

3. Remove fill plug (2) to check and adjust rear axle fluid level. Top off axle with Mopar® Gear and Axle Lubricant 75W-90. Reinstall fill plug and torque to 35 N.m (25 ft. lbs.) torque.

SEAL, DRIVE PINION

Removal

REMOVAL

1. Remove rear axle assembly from vehicle. Refer to Rear Axle Removal.

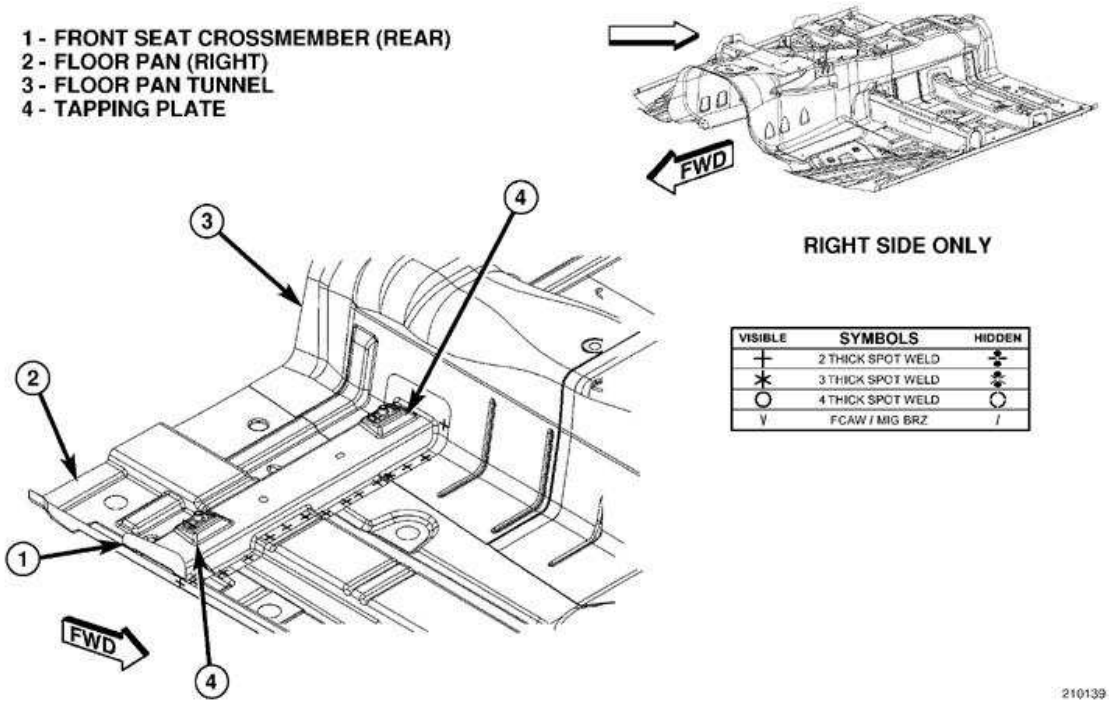

Fig. 416: Measuring Rotating Torque At Pinion Flange
Courtesy of CHRYSLER LLC

2. Use a torque wrench calibrated to measure low torque values (1) to measure rotating torque at the pinion flange (2). Record measurement for reuse on assembly.

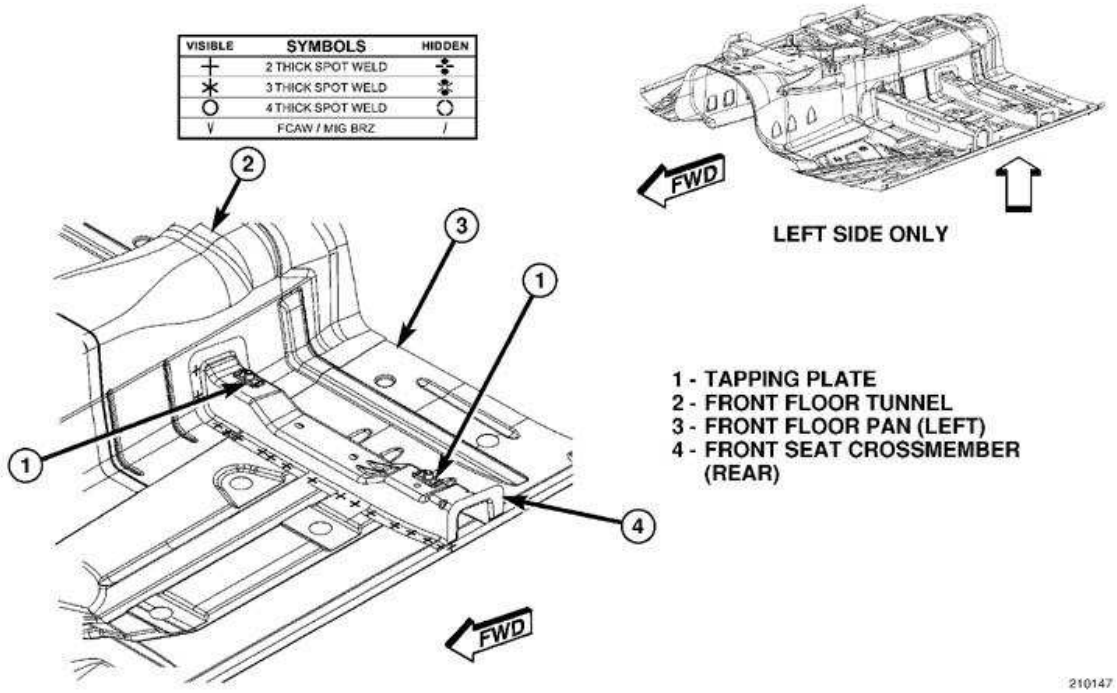

Fig. 417: Removing/Installing Pinion Flange Nut
Courtesy of CHRYSLER LLC

3. Using Flange Wrench C-3281(1) and 41mm socket, remove pinion flange nut and discard.

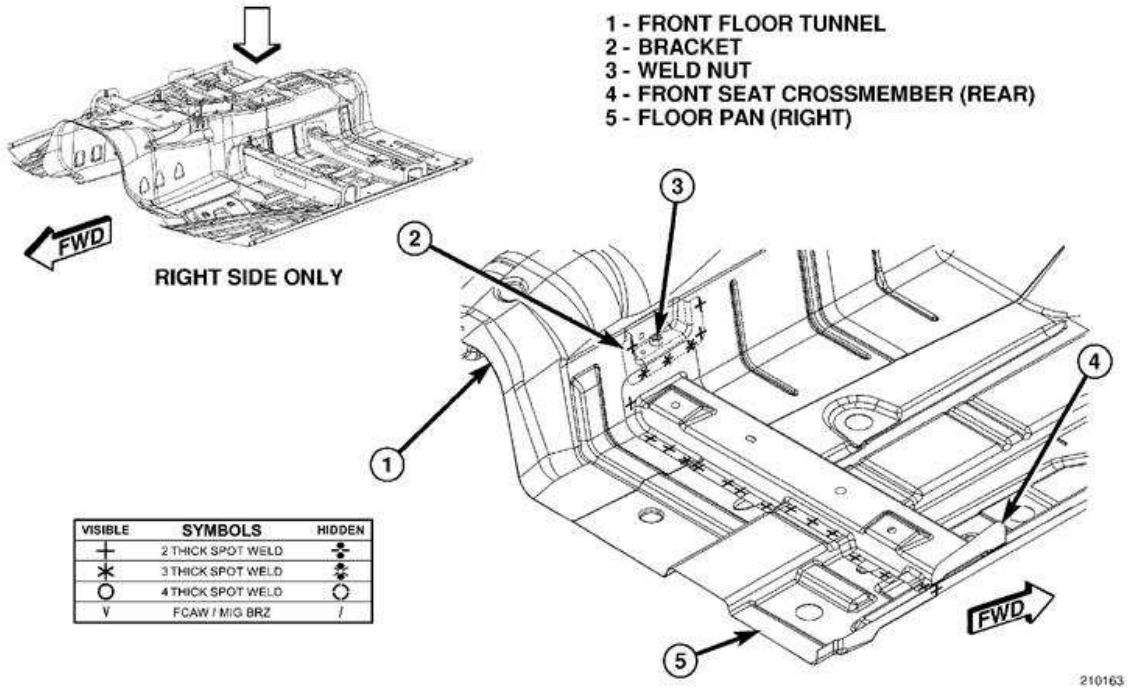

Fig. 418: Removing Pinion Flange With Puller 1026
Courtesy of CHRYSLER LLC

NOTE: **Due to axle imbalance concerns, it is necessary to make sure pinion flange-to-shaft orientation is maintained. If alignment marks are not visible, apply appropriate marks before removing pinion flange.**

4. Using Puller 1026 (1), remove pinion flange (2) from pinion shaft.

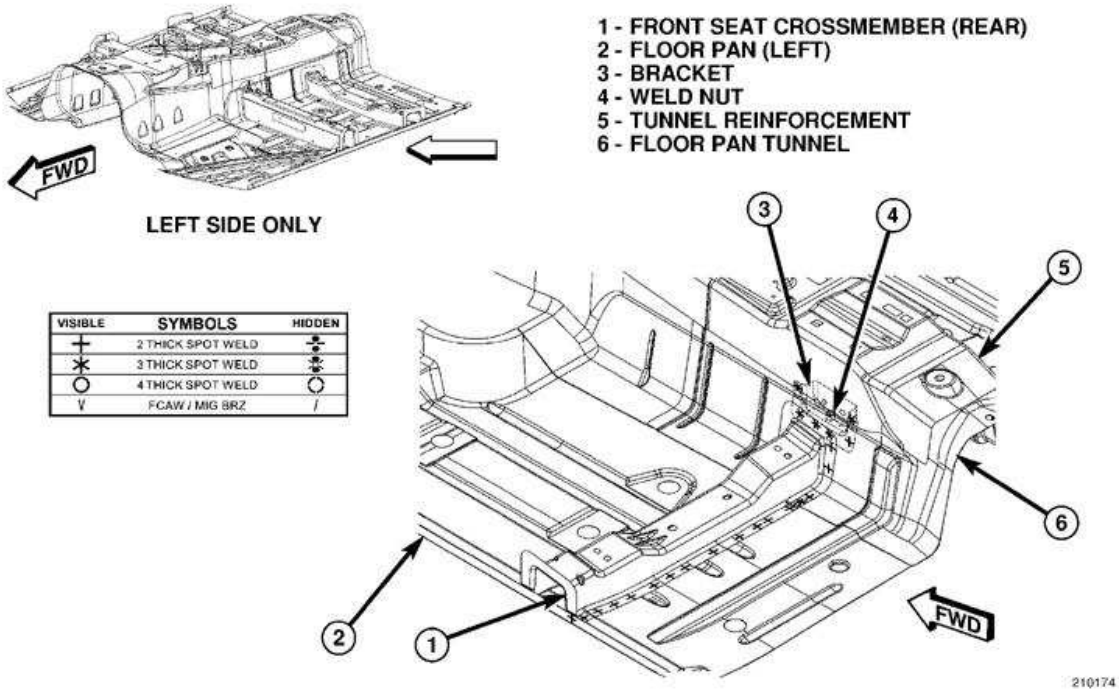

Fig. 419: Removing Pinion Seal Using A Suitable Seal Removal Tool
Courtesy of CHRYSLER LLC

5. Using a suitable seal removal tool (1), remove pinion seal (2) and discard.

Installation

INSTALLATION

1. Apply light coating of gear lubricant to the lip of the pinion seal.

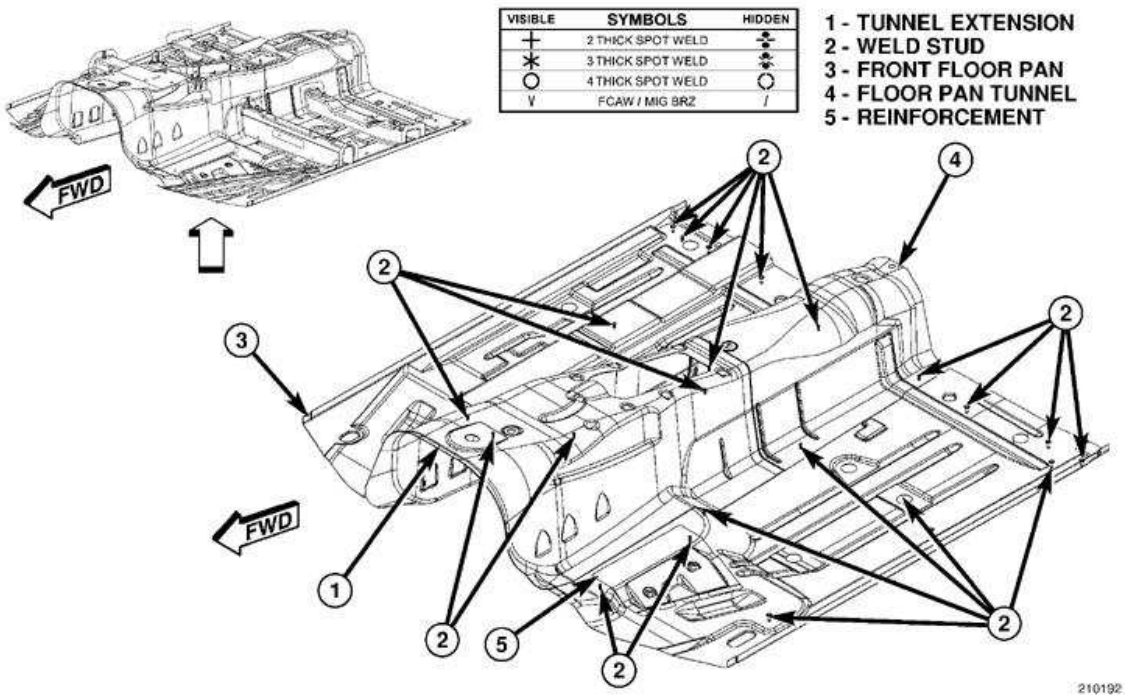

Fig. 420: Installing Pinion Seal
Courtesy of CHRYSLER LLC

2. Using Installer 10146 (1), install pinion seal until tool bottoms on carrier.

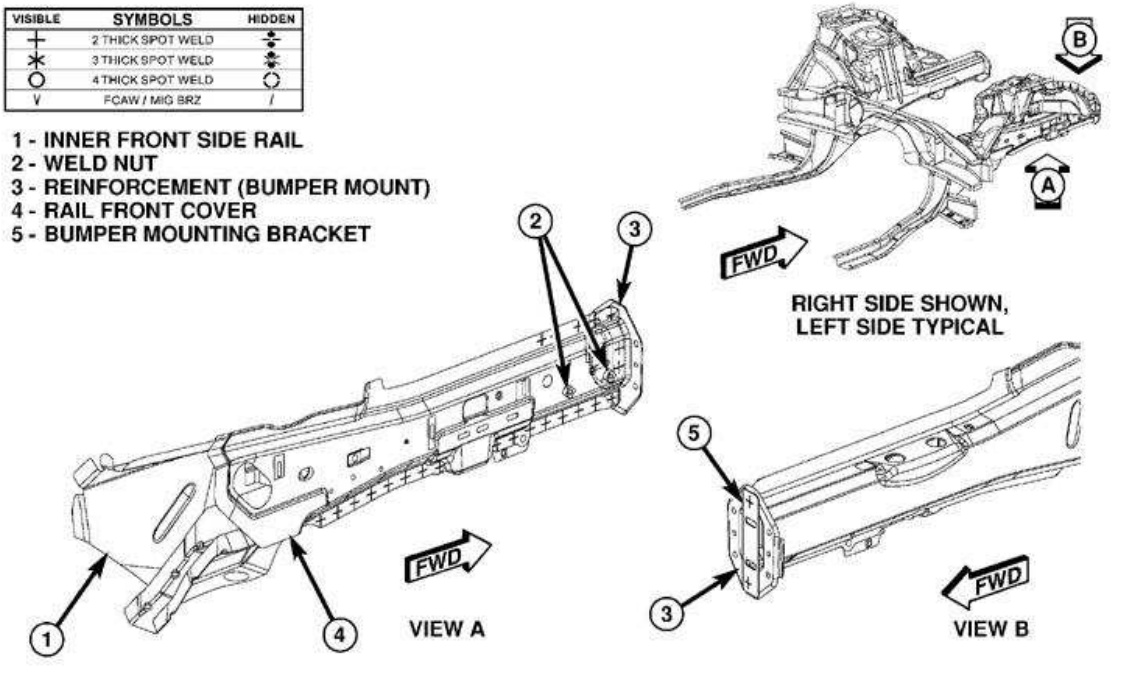

Fig. 421: Installing Pinion Flange
Courtesy of CHRYSLER LLC

3. Install pinion flange into position. Align index marks made during disassembly to maintain assembly balance.
4. Using Installer 6448A (1), lightly tap on pinion flange (2) until enough pinion shaft threads are exposed to install the pinion flange, and start the pinion nut.

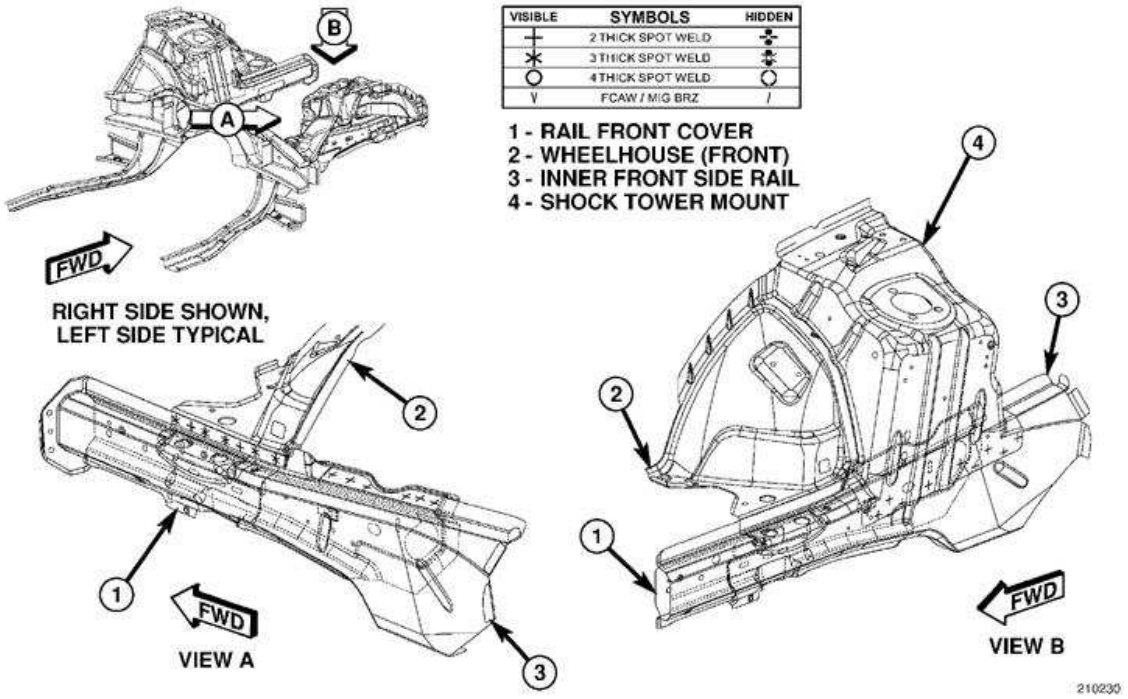

Fig. 422: Removing/Installing Pinion Flange Nut
Courtesy of CHRYSLER LLC

5. Install a **new** pinion flange nut. Using Flange Wrench C-3281 (1) and 41mm socket, torque nut to 245 N.m (181 ft. lbs.).

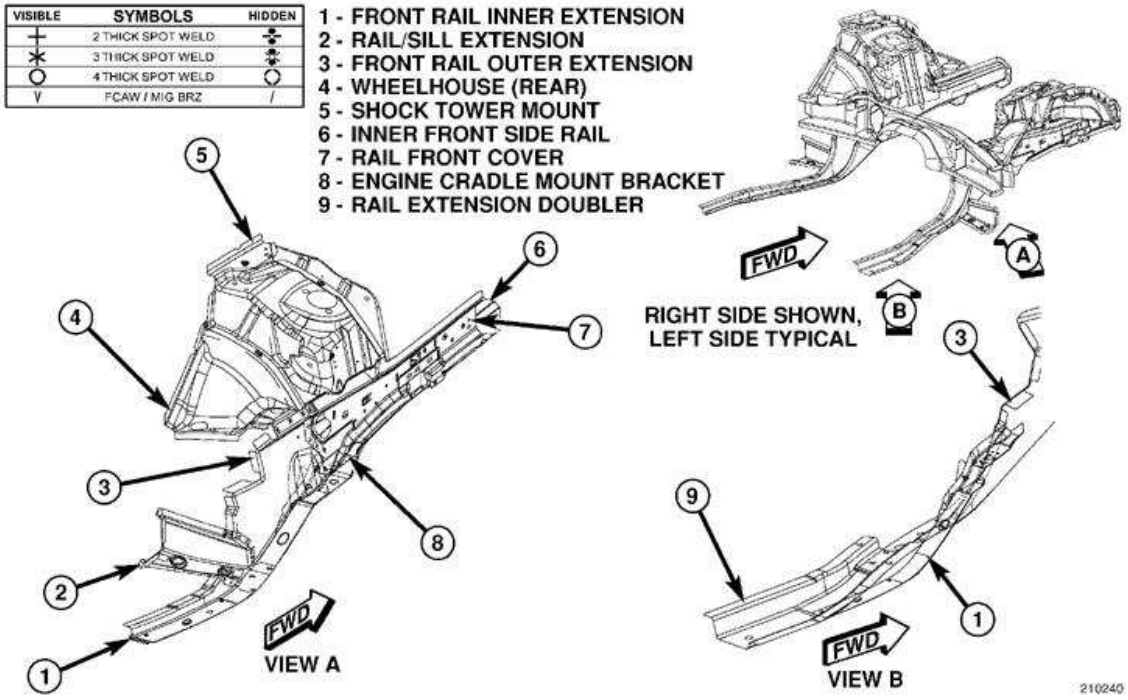

Fig. 423: Measuring Rotating Torque At Pinion Flange
Courtesy of CHRYSLER LLC

6. Use a torque wrench calibrated to measure low torque values (1) to measure rotating torque at the pinion flange (2). Verify the turning torque matches the rotating torque as measured before removal of the original seal.

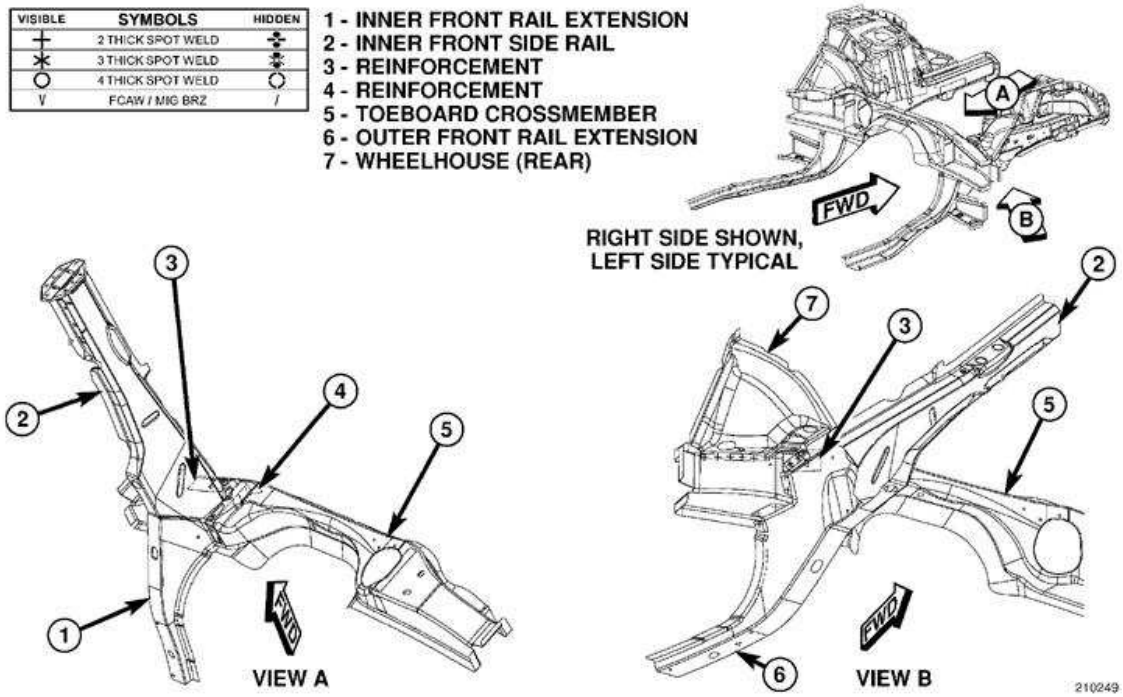

Fig. 424: Removing/Installing Pinion Flange Nut

Courtesy of CHRYSLER LLC

7. Install rear axle assembly. Refer to Rear Axle Installation.

ENGINE PERFORMANCE

Powertrain Control Module (PCM) - Electrical Diagnostics - NGC - Challenger

DIAGNOSTIC CODE INDEX

POWERTRAIN CONTROL MODULE (PCM) - DIAGNOSTIC CODE INDEX

DTC	Description
P000B	BANK 1 CAMSHAFT 2 POSITION SLOW RESPONSE
P0013	BANK 1 CAMSHAFT 2 POSITION ACTUATOR CIRCUIT OPEN
P0016	CRANKSHAFT/CAMSHAFT TIMING MISALIGNMENT - BANK 1 SENSOR 1 - 3.5L
P0016	CRANKSHAFT/CAMSHAFT TIMING MISALIGNMENT - BANK 1 SENSOR 1 - 5.7L/SRT8
P0031	O2 SENSOR 1/1 HEATER CIRCUIT LOW
P0032	O2 SENSOR 1/1 HEATER CIRCUIT HIGH
P0037	O2 SENSOR 1/2 HEATER CIRCUIT LOW
P0038	O2 SENSOR 1/2 HEATER CIRCUIT HIGH
P0051	O2 SENSOR 2/1 HEATER CIRCUIT LOW
P0052	O2 SENSOR 2/1 HEATER CIRCUIT HIGH
P0057	O2 SENSOR 2/2 HEATER CIRCUIT LOW
P0058	O2 SENSOR 2/2 HEATER CIRCUIT HIGH
P0071	AMBIENT AIR TEMPERATURE SENSOR PERFORMANCE
P0072	AMBIENT AIR TEMPERATURE SENSOR CIRCUIT LOW
P0073	AMBIENT AIR TEMPERATURE SENSOR CIRCUIT HIGH
P0107	MANIFOLD ABSOLUTE PRESSURE SENSOR CIRCUIT LOW
P0108	MANIFOLD ABSOLUTE PRESSURE SENSOR CIRCUIT HIGH
P0111	INTAKE AIR TEMPERATURE SENSOR 1 PERFORMANCE - 3.5L/SRT8
P0111	INTAKE AIR TEMPERATURE SENSOR 1 PERFORMANCE - 5.7L
P0112	INTAKE AIR TEMPERATURE SENSOR 1 CIRCUIT LOW - 3.5L/SRT8
P0112	INTAKE AIR TEMPERATURE SENSOR 1 CIRCUIT LOW - 5.7L
P0113	INTAKE AIR TEMPERATURE SENSOR 1 CIRCUIT HIGH - 3.5L/SRT8
P0113	INTAKE AIR TEMPERATURE SENSOR 1 CIRCUIT HIGH - 5.7L
P0116	ENGINE COOLANT TEMPERATURE SENSOR PERFORMANCE
P0117	ENGINE COOLANT TEMPERATURE SENSOR CIRCUIT LOW
P0118	ENGINE COOLANT TEMPERATURE SENSOR CIRCUIT HIGH
P0121	THROTTLE POSITION SENSOR 1 PERFORMANCE
P0122	THROTTLE POSITION SENSOR 1 CIRCUIT LOW
P0123	THROTTLE POSITION SENSOR 1 CIRCUIT HIGH
P0125	INSUFFICIENT COOLANT TEMP FOR CLOSED-LOOP FUEL CONTROL
P0128	THERMOSTAT RATIONALITY
P0129	BAROMETRIC PRESSURE OUT-OF-RANGE / LOW

P0131	O2 SENSOR 1/1 CIRCUIT LOW
P0132	O2 SENSOR 1/1 CIRCUIT HIGH
P0133	O2 SENSOR 1/1 SLOW RESPONSE
P0135	O2 SENSOR 1/1 HEATER PERFORMANCE
P0137	O2 SENSOR 1/2 CIRCUIT LOW
P0138	O2 SENSOR 1/2 CIRCUIT HIGH
P0139	O2 SENSOR 1/2 SLOW RESPONSE
P013A	O2 SENSOR 1/2 SLOW RESPONSE - RICH TO LEAN
P013C	O2 SENSOR 2/2 SLOW RESPONSE - RICH TO LEAN
P0141	O2 SENSOR 1/2 HEATER PERFORMANCE
P0151	O2 SENSOR 2/1 CIRCUIT LOW
P0152	O2 SENSOR 2/1 CIRCUIT HIGH
P0153	O2 SENSOR 2/1 SLOW RESPONSE
P0155	O2 SENSOR 2/1 HEATER PERFORMANCE
P0157	O2 SENSOR 2/2 CIRCUIT LOW
P0158	O2 SENSOR 2/2 CIRCUIT HIGH
P0159	O2 SENSOR 2/2 SLOW RESPONSE
P0161	O2 SENSOR 2/2 HEATER PERFORMANCE
P0171	FUEL SYSTEM 1/1 LEAN
P0172	FUEL SYSTEM 1/1 RICH
P0174	FUEL SYSTEM 2/1 LEAN
P0175	FUEL SYSTEM 2/1 RICH
P0196	ENGINE OIL TEMPERATURE SENSOR PERFORMANCE
P0197	ENGINE OIL TEMPERATURE SENSOR CIRCUIT LOW
P0198	ENGINE OIL TEMPERATURE SENSOR CIRCUIT HIGH
P0201	FUEL INJECTOR 1 CIRCUIT/OPEN
P0202	FUEL INJECTOR 2 CIRCUIT/OPEN
P0203	FUEL INJECTOR 3 CIRCUIT/OPEN
P0204	FUEL INJECTOR 4 CIRCUIT/OPEN
P0205	FUEL INJECTOR 5 CIRCUIT/OPEN
P0206	FUEL INJECTOR 6 CIRCUIT/OPEN
P0207	FUEL INJECTOR 7 CIRCUIT/OPEN
P0208	FUEL INJECTOR 8 CIRCUIT/OPEN
P0221	THROTTLE POSITION SENSOR 2 CIRCUIT PERFORMANCE
P0222	THROTTLE POSITION SENSOR 2 CIRCUIT LOW
P0223	THROTTLE POSITION SENSOR 2 CIRCUIT HIGH
P0298	ENGINE OIL TEMPERATURE TOO HIGH
P0300	MULTIPLE CYLINDER MISFIRE
P0301	CYLINDER 1 MISFIRE
P0302	CYLINDER 2 MISFIRE
P0303	CYLINDER 3 MISFIRE

	CYLINDER 4 MISFIRE
P0305	CYLINDER 5 MISFIRE
P0306	CYLINDER 6 MISFIRE
P0307	CYLINDER 7 MISFIRE
P0308	CYLINDER 8 MISFIRE
P0315	NO CRANK SENSOR LEARNED
P0325	KNOCK SENSOR 1 CIRCUIT
P0330	KNOCK SENSOR 2 CIRCUIT
P0335	CRANKSHAFT POSITION SENSOR CIRCUIT
P0339	CRANKSHAFT POSITION SENSOR INTERMITTENT
P0340	CAMSHAFT POSITION SENSOR CIRCUIT - BANK 1 SENSOR 1 - 3.5L
P0340	CAMSHAFT POSITION SENSOR CIRCUIT - BANK 1 SENSOR 1 - 5.7L/SRT8
P0344	CAMSHAFT POSITION SENSOR INTERMITTENT - 3.5L
P0344	CAMSHAFT POSITION SENSOR INTERMITTENT - 5.7L/SRT8
P0401	EGR SYSTEM PERFORMANCE
P0403	EGR CONTROL CIRCUIT/OPEN
P0404	EGR POSITION SENSOR PERFORMANCE
P0405	EGR POSITION SENSOR CIRCUIT LOW
P0406	EGR POSITION SENSOR CIRCUIT HIGH
P0420	CATALYST EFFICIENCY (BANK 1)
P0430	CATALYST EFFICIENCY (BANK 2)
P0440	GENERAL EVAP SYSTEM FAILURE
P0441	EVAP PURGE SYSTEM PERFORMANCE
P0443	EVAP PURGE CONTROL CIRCUIT
P0452	EVAP PRESSURE SWITCH STUCK CLOSED
P0455	EVAP SYSTEM LARGE LEAK
P0456	EVAP SYSTEM SMALL LEAK
P0457	LOOSE FUEL CAP
P0461	FUEL LEVEL SENSOR 1 PERFORMANCE
P0462	FUEL LEVEL SENSOR 1 CIRCUIT LOW
P0463	FUEL LEVEL SENSOR 1 CIRCUIT HIGH
P0480	COOLING FAN 1 CONTROL CIRCUIT
P0481	COOLING FAN 2 CONTROL CIRCUIT
P0501	VEHICLE SPEED SENSOR 1 PERFORMANCE (Equipped with ABS)
P0501	VEHICLE SPEED SENSOR 1 PERFORMANCE (Not Equipped with ABS)
P0503	VEHICLE SPEED SENSOR 1 ERRATIC (Equipped with ABS)
P0503	VEHICLE SPEED SENSOR 1 ERRATIC (Not Equipped with ABS)
P0506	IDLE SPEED PERFORMANCE LOWER THAN EXPECTED
P0507	IDLE SPEED PERFORMANCE HIGHER THAN EXPECTED
P050B	COLD START IGNITION TIMING PERFORMANCE

P0513	INVALID SKIM KEY
P0520	ENGINE OIL PRESSURE SENSOR CIRCUIT
P0521	ENGINE OIL PRESSURE SENSOR PERFORMANCE
P0522	OIL PRESSURE TOO LOW - 3.5L
P0522	ENGINE OIL PRESSURE SENSOR CIRCUIT LOW - 5.7L/SRT8
P0523	ENGINE OIL PRESSURE SENSOR CIRCUIT HIGH
P0524	ENGINE OIL PRESSURE TOO LOW
P0532	A/C PRESSURE SENSOR CIRCUIT LOW
P0533	A/C PRESSURE SENSOR CIRCUIT HIGH
P0562	BATTERY VOLTAGE LOW
P0563	BATTERY VOLTAGE HIGH
P0571	BRAKE SWITCH 1 PERFORMANCE
P0572	BRAKE SWITCH 1 STUCK ON
P0573	BRAKE SWITCH 1 STUCK OFF
P0579	SPEED CONTROL SWITCH 1 PERFORMANCE
P0580	SPEED CONTROL SWITCH 1 CIRCUIT LOW
P0585	SPEED CONTROL SWITCH 1/2 CORRELATION
P0591	SPEED CONTROL SWITCH 2 PERFORMANCE
P0592	SPEED CONTROL SWITCH 2 CIRCUIT LOW
P0600	SERIAL COMMUNICATION LINK
P0601	INTERNAL MEMORY CHECKSUM INVALID
P0606	INTERNAL CONTROL PROCESSOR
P060B	ETC A/D GROUND PERFORMANCE
P060D	ETC LEVEL 2 APP PERFORMANCE
P060E	ETC LEVEL 2 TPS PERFORMANCE
P060F	ETC LEVEL 2 ECT PERFORMANCE
P061A	ETC LEVEL 2 TORQUE PERFORMANCE
P061C	ETC LEVEL 2 RPM PERFORMANCE
P0622	GENERATOR FIELD CONTROL CIRCUIT/OPEN
P0627	FUEL PUMP CONTROL CIRCUIT/OPEN
P062C	ETC LEVEL 2 MPH PERFORMANCE
P0630	VIN NOT PROGRAMMED IN PCM
P0632	ODOMETER NOT PROGRAMMED IN PCM
P0633	SKIM SECRET KEY NOT STORED IN PCM
P0642	SENSOR REFERENCE VOLTAGE 1 CIRCUIT LOW
P0643	SENSOR REFERENCE VOLTAGE 1 CIRCUIT HIGH
P0645	A/C CONTROL CIRCUIT/OPEN
P0646	A/C CLUTCH CONTROL CIRCUIT 2 LOW
P0647	A/C CLUTCH CONTROL CIRCUIT 2 HIGH
P0652	SENSOR REFERENCE VOLTAGE 2 CIRCUIT LOW
P0653	SENSOR REFERENCE VOLTAGE 2 CIRCUIT HIGH

	AUTO SHUTDOWN CONTROL CIRCUIT
P0688	ASD/MAIN SENSE CIRCUIT
P0700	TRANSMISSION CONTROL SYSTEM (MIL REQUEST)
P0703	BRAKE SWITCH 2 PERFORMANCE
P0801	REVERSE GEAR LOCKOUT CIRCUIT OPEN OR SHORTED
P0803	SKIP SHIFT CONTROL SOLENOID CIRCUIT
P080B	SKIP SHIFT RATIONALITY
P0830	CLUTCH UPSTOP SWITCH STUCK ON
P0835	CLUTCH UPSTOP SWITCH STUCK OFF
P0850	PARK/NEUTRAL SWITCH PERFORMANCE
P1004	SHORT RUNNER VALVE CONTROL PERFORMANCE
P1115	GENERAL TEMPERATURE RATIONALITY
P1128	CLOSED LOOP FUELING NOT ACHIEVED - BANK 1
P1129	CLOSED LOOP FUELING NOT ACHIEVED - BANK 2
P1239	ENGINE OIL TEMPERATURE TOO LOW
P1404	EGR CLOSE POSITION PERFORMANCE
P1411	CYLINDER 1 REACTIVATION CONTROL PERFORMANCE
P1414	CYLINDER 4 REACTIVATION CONTROL PERFORMANCE
P1416	CYLINDER 6 REACTIVATION CONTROL PERFORMANCE
P1417	CYLINDER 7 REACTIVATION CONTROL PERFORMANCE
P1501	VEHICLE SPEED SENSOR 1/2 CORRELATION - DRIVE WHEELS (Equipped with ABS)
P1502	VEHICLE SPEED SENSOR 1/2 CORRELATION - NON DRIVE WHEELS (Equipped with ABS)
P150D	COLD START ROUGH IDLE - OPEN THROTTLE START
P1521	INCORRECT ENGINE OIL TYPE
P1524	OIL PRESSURE OUT OF RANGE - CAMSHAFT ADVANCE/RETARD DISABLED
P1572	BRAKE PEDAL STUCK ON
P1573	BRAKE PEDAL STUCK OFF
P1593	SPEED CONTROL SWITCH 1/2 STUCK
P1607	PCM INTERNAL SHUTDOWN TIMER RATIONALITY
P1618	SENSOR REFERENCE VOLTAGE 1 ERRATIC
P1628	SENSOR REFERENCE VOLTAGE 2 ERRATIC
P1696	EEPROM MEMORY WRITE DENIED/INVALID
P1697	EMR (SRI) MILEAGE NOT STORED
P2008	SHORT RUNNER VALVE (SRV) CONTROL CIRCUIT
P2016	SHORT RUNNER VALVE (SRV) POSITION SENSOR CIRCUIT LOW
P2017	SHORT RUNNER VALVE (SRV) POSITION SENSOR CIRCUIT HIGH
P2066	FUEL LEVEL SENSOR 2 PERFORMANCE
P2067	FUEL LEVEL SENSOR 2 CIRCUIT LOW

P2068	FUEL LEVEL SENSOR 2 CIRCUIT HIGH
P2072	ELECTRONIC THROTTLE CONTROL SYSTEM - ICE BLOCKAGE
P2096	DOWNSTREAM FUEL TRIM SYSTEM 1 LEAN
P2097	DOWNSTREAM FUEL TRIM SYSTEM 1 RICH
P2098	DOWNSTREAM FUEL TRIM SYSTEM 2 LEAN
P2099	DOWNSTREAM FUEL TRIM SYSTEM 2 RICH
P2100	ELECTRONIC THROTTLE CONTROL MOTOR CIRCUIT/OPEN - BANK 1
P2101	ELECTRONIC THROTTLE CONTROL MOTOR PERFORMANCE - BANK 1
P2107	ELECTRONIC THROTTLE CONTROL MODULE PROCESSOR
P2110	ELECTRONIC THROTTLE CONTROL SYSTEM - FORCED LIMITED RPM
P2111	ELECTRONIC THROTTLE CONTROL SYSTEM - UNABLE TO CLOSE
P2112	ELECTRONIC THROTTLE CONTROL SYSTEM - UNABLE TO OPEN
P2115	ACCELERATOR PEDAL POSITION SENSOR 1 MINIMUM STOP PERFORMANCE
P2116	ACCELERATOR PEDAL POSITION SENSOR 2 MINIMUM STOP PERFORMANCE
P2118	ELECTRONIC THROTTLE CONTROL MOTOR CURRENT PERFORMANCE
P2122	ACCELERATOR PEDAL POSITION SENSOR 1 CIRCUIT LOW
P2123	ACCELERATOR PEDAL POSITION SENSOR 1 CIRCUIT HIGH
P2127	ACCELERATOR PEDAL POSITION SENSOR 2 CIRCUIT LOW
P2128	ACCELERATOR PEDAL POSITION SENSOR 2 CIRCUIT HIGH
P2135	THROTTLE POSITION SENSOR 1/2 CORRELATION
P2138	ACCELERATOR PEDAL POSITION SENSOR 1/2 CORRELATION
P2161	VEHICLE SPEED SENSOR 2 ERRATIC (with ABS)
P2166	ACCELERATOR PEDAL POSITION SENSOR 1 MAXIMUM STOP PERFORMANCE
P2167	ACCELERATOR PEDAL POSITION SENSOR 2 MAXIMUM STOP PERFORMANCE
P2172	HIGH AIRFLOW/VACUUM LEAK DETECTED (INSTANTANEOUS ACCUMULATION)
P2173	HIGH AIRFLOW/VACUUM LEAK DETECTED (SLOW ACCUMULATION)
P2174	LOW AIRFLOW/RESTRICTION DETECTED (INSTANTANEOUS ACCUMULATION)
P2175	LOW AIRFLOW/RESTRICTION DETECTED (SLOW ACCUMULATION)
P2181	COOLING SYSTEM PERFORMANCE
P2271	O2 SENSOR 1/2 SIGNAL BIASED RICH
P2273	O2 SENSOR 2/2 SIGNAL BIASED RICH
P2299	BRAKE PEDAL POSITION/ACCELERATOR PEDAL POSITION INCOMPATIBLE
P2302	IGNITION COIL 1 SECONDARY CIRCUIT - INSUFFICIENT IONIZATION - 3.5L

P2302	IGNITION COIL 1 SECONDARY CIRCUIT - INSUFFICIENT IONIZATION - 5.7L/SRT8
P2305	IGNITION COIL 2 SECONDARY CIRCUIT - INSUFFICIENT IONIZATION - 3.5L
P2305	IGNITION COIL 2 SECONDARY CIRCUIT - INSUFFICIENT IONIZATION - 5.7L/SRT8
P2308	IGNITION COIL 3 SECONDARY CIRCUIT - INSUFFICIENT IONIZATION - 3.5L
P2308	IGNITION COIL 3 SECONDARY CIRCUIT - INSUFFICIENT IONIZATION - 5.7L/SRT8
P2311	IGNITION COIL 4 SECONDARY CIRCUIT - INSUFFICIENT IONIZATION - 3.5L
P2311	IGNITION COIL 4 SECONDARY CIRCUIT - INSUFFICIENT IONIZATION - 5.7L/SRT8
P2314	IGNITION COIL 5 SECONDARY CIRCUIT - INSUFFICIENT IONIZATION - 3.5L
P2314	IGNITION COIL 5 SECONDARY CIRCUIT - INSUFFICIENT IONIZATION - 5.7L/SRT8
P2317	IGNITION COIL 6 SECONDARY CIRCUIT - INSUFFICIENT IONIZATION - 3.5L
P2317	IGNITION COIL 6 SECONDARY CIRCUIT - INSUFFICIENT IONIZATION - 5.7L/SRT8
P2320	IGNITION COIL 7 SECONDARY CIRCUIT - INSUFFICIENT IONIZATION - 5.7L/SRT8
P2323	IGNITION COIL 8 SECONDARY CIRCUIT - INSUFFICIENT IONIZATION - 5.7L/SRT8
P2503	CHARGING SYSTEM OUTPUT LOW
P2504	CHARGING SYSTEM OUTPUT HIGH
P2533	IGNITION SWITCH RUN/START POSITION CIRCUIT
P2610	PCM INTERNAL ENGINE OFF TIMER PERFORMANCE
P3400	MDS RATIONALITY BANK 1
P3401	MDS SOLENOID 1 CIRCUIT
P3402	CYLINDER 1 DEACTIVATION CONTROL PERFORMANCE
P3425	MDS SOLENOID 4 CIRCUIT
P3426	CYLINDER 4 DEACTIVATION CONTROL PERFORMANCE
P3441	MDS SOLENOID 6 CIRCUIT
P3442	CYLINDER 6 DEACTIVATION CONTROL PERFORMANCE
P3449	MDS SOLENOID 7 CIRCUIT
P3450	CYLINDER 7 DEACTIVATION CONTROL PERFORMANCE
P3497	MDS RATIONALITY BANK 2
U0001	CAN C BUS
U0101	LOST COMMUNICATION WITH TCM
U0103	LOST COMMUNICATION WITH ELECTRIC GEAR SHIFT MODULE

U0121	LOST COMMUNICATION WITH ANTI-LOCK BRAKE MODULE
U0141	LOST COMMUNICATION WITH IPM (FCM/TIPM)
U0168	LOST COMMUNICATION WITH VEHICLE SECURITY CONTROL MODULE (WIN)
U110A	LOST COMMUNICATION WITH SCM - CAN-C
U110C	LOST FUEL LEVEL MESSAGE
U110E	LOST AMBIENT TEMPERATURE MESSAGE
U110F	LOST FUEL VOLUME MESSAGE
U1110	LOST VEHICLE SPEED MESSAGE
U1113	LOST A/C PRESSURE MESSAGE
U1120	LOST WHEEL DISTANCE MESSAGE
U1403	IMPLAUSIBLE FUEL LEVEL SIGNAL RECEIVED
U1411	IMPLAUSIBLE FUEL VOLUME SIGNAL RECEIVED
U1412	IMPLAUSIBLE VEHICLE SPEED SIGNAL RECEIVED
U1417	IMPLAUSIBLE LEFT WHEEL DISTANCE SIGNAL RECEIVED
U1418	IMPLAUSIBLE RIGHT WHEEL DISTANCE SIGNAL RECEIVED

DTC INDEX

Challenger

ABS - ELECTRICAL DIAGNOSTICS

DTC	Description
C100A	LEFT FRONT WHEEL SPEED SENSOR CIRCUIT
C1011	LEFT FRONT WHEEL SPEED SENSOR SIGNAL ERRATIC PERFORMANCE
C1014	LEFT FRONT WHEEL SPEED COMPARATIVE PERFORMANCE
C1015	RIGHT FRONT WHEEL SPEED SENSOR CIRCUIT
C101C	RIGHT FRONT WHEEL SPEED SENSOR SIGNAL ERRATIC PERFORMANCE
C101F	RIGHT FRONT WHEEL SPEED COMPARATIVE PERFORMANCE
C1020	LEFT REAR WHEEL SPEED SENSOR CIRCUIT
C1027	LEFT REAR WHEEL SPEED SENSOR SIGNAL ERRATIC PERFORMANCE
C102A	LEFT REAR WHEEL SPEED COMPARATIVE PERFORMANCE
C102B	RIGHT REAR WHEEL SPEED SENSOR CIRCUIT
C1032	RIGHT REAR WHEEL SPEED SENSOR SIGNAL ERRATIC PERFORMANCE
C1035	RIGHT REAR WHEEL SPEED COMPARATIVE PERFORMANCE
C1041	LEFT FRONT TONE WHEEL PERFORMANCE
C1042	RIGHT FRONT TONE WHEEL PERFORMANCE
C1043	LEFT REAR TONE WHEEL PERFORMANCE
C1044	RIGHT REAR TONE WHEEL PERFORMANCE
C1046	LEFT FRONT WHEEL PRESSURE PHASE MONITORING
C1047	RIGHT FRONT WHEEL PRESSURE PHASE MONITORING
C1048	LEFT REAR WHEEL PRESSURE PHASE MONITORING
C1049	RIGHT REAR WHEEL PRESSURE PHASE MONITORING
C1073	ABS PUMP MOTOR CONTROL CIRCUIT
C1078	TIRE REVOLUTIONS RANGE PERFORMANCE
C107C	BRAKE PEDAL SWITCH 1/2 STUCK
C107D	BRAKE PEDAL SWITCH 1/2 CORRELATION
C1090	ABS BRAKE LAMP CONTROL CIRCUIT LOW
C1091	ABS BRAKE LAMP CONTROL CIRCUIT HIGH
C1210	G SENSOR INPUT CIRCUIT PERFORMANCE
C1219	STEERING ANGLE SENSOR ERRATIC PERFORMANCE
C121A	STEERING ANGLE SENSOR NOT INITIALIZED
C121C	TORQUE REQUEST SIGNAL DENIED
C121D	BRAKE PRESSURE SENSOR CIRCUIT

C121E	BRAKE PRESSURE SENSOR COMPARATIVE PERFORMANCE
C1231	DRIVE TEST: STEERING ANGLE SENSOR
C1232	DRIVE TEST: PRESSURE SENSOR
C1234	DRIVE TEST: SENSOR CLUSTER INSTALLATION
C1238	DRIVE TEST: UNSUCCESSFUL
C1239	EMISSIONS ROLLS TEST ACTIVE
C123A	ESP SYSTEM SENSORS CALIBRATION
C123B	ESP SYSTEM CONTROL TOO LONG
C123C	DYNAMICS SENSOR MOUNTING/INSTALLATION PERFORMANCE
C123F	STEERING ANGLE SENSOR COMPARATIVE PERFORMANCE
C1240	STEERING ANGLE SENSOR OVERTRAVEL PERFORMANCE
C1242	G SENSOR INPUT SIGNAL PERFORMANCE
C1243	G SENSOR NOT INITIALIZED
C2100	BATTERY VOLTAGE LOW
C2101	BATTERY VOLTAGE HIGH
C2114	DYNAMICS SENSOR SUPPLY VOLTAGE LOW
C2115	DYNAMICS SENSOR SUPPLY VOLTAGE HIGH
C2116	ABS PUMP MOTOR SUPPLY LOW VOLTAGE
C2200	ANTI-LOCK BRAKE MODULE INTERNAL
C2202	ORIGINAL VIN MISMATCH/MISSING
C2204	DYNAMICS SENSOR INTERNAL
C2205	STEERING ANGLE SENSOR INTERNAL
C2206	VEHICLE CONFIGURATION MISMATCH
U0002	CAN C BUS OFF PERFORMANCE
U0100	LOST COMMUNICATION WITH ECM/PCM
U0101	LOST COMMUNICATION WITH TCM
U0125	LOST COMMUNICATION WITH DYNAMICS SENSOR
U0126	LOST COMMUNICATION WITH STEERING ANGLE SENSOR
U0141	LOST COMMUNICATION WITH TOTALLY INTEGRATED POWER MODULE
U0146	LOST COMMUNICATION WITH CENTRAL GATEWAY
U0401	IMPLAUSIBLE DATA RECEIVED FROM ECM/PCM
U0429	IMPLAUSIBLE DATA RECEIVED FROM SCM
U1003	ESP CAN C BUS PERFORMANCE
U1104	CAN C BUS CRC PERFORMANCE
U140E	IMPLAUSIBLE VEHICLE CONFIGURATION DATA RECEIVED
U1501	IMPLAUSIBLE MESSAGE DATA LENGTH RECEIVED FROM ECM/PCM
U1502	IMPLAUSIBLE MESSAGE DATA LENGTH RECEIVED FROM TCM
U1503	IMPLAUSIBLE MESSAGE DATA LENGTH RECEIVED FROM TIPM

AUDIO (AMPLIFIER) - ELECTRICAL DIAGNOSTICS

DTC	Description
B1460	CHANNEL 1 AUDIO SPEAKER OUTPUT CIRCUIT PERFORMANCE
B1461	CHANNEL 1 AUDIO SPEAKER OUTPUT CIRCUIT LOW
B1462	CHANNEL 1 AUDIO SPEAKER OUTPUT CIRCUIT HIGH
B1463	CHANNEL 1 AUDIO SPEAKER OUTPUT CIRCUIT OPEN
B1464	CHANNEL 1 AUDIO SPEAKER OUTPUT CIRCUIT SHORTED TOGETHER
B1465	CHANNEL 2 AUDIO SPEAKER OUTPUT CIRCUIT PERFORMANCE
B1466	CHANNEL 2 AUDIO SPEAKER OUTPUT CIRCUIT LOW
B1467	CHANNEL 2 AUDIO SPEAKER OUTPUT CIRCUIT HIGH
B1468	CHANNEL 2 AUDIO SPEAKER OUTPUT CIRCUIT OPEN
B1469	CHANNEL 2 AUDIO SPEAKER OUTPUT CIRCUIT SHORTED TOGETHER
B146A	CHANNEL 3 AUDIO SPEAKER OUTPUT CIRCUIT PERFORMANCE
B146B	CHANNEL 3 AUDIO SPEAKER OUTPUT CIRCUIT LOW
B146C	CHANNEL 3 AUDIO SPEAKER OUTPUT CIRCUIT HIGH
B146D	CHANNEL 3 AUDIO SPEAKER OUTPUT CIRCUIT OPEN
B146E	CHANNEL 3 AUDIO SPEAKER OUTPUT CIRCUIT SHORTED TOGETHER
B146F	CHANNEL 4 AUDIO SPEAKER OUTPUT CIRCUIT PERFORMANCE
B1470	CHANNEL 4 AUDIO SPEAKER OUTPUT CIRCUIT LOW
B1471	CHANNEL 4 AUDIO SPEAKER OUTPUT CIRCUIT HIGH
B1472	CHANNEL 4 AUDIO SPEAKER OUTPUT CIRCUIT OPEN
B1473	CHANNEL 4 AUDIO SPEAKER OUTPUT CIRCUIT SHORTED TOGETHER
B1474	CHANNEL 5 AUDIO SPEAKER OUTPUT CIRCUIT PERFORMANCE
B1475	CHANNEL 5 AUDIO SPEAKER OUTPUT CIRCUIT LOW
B1476	CHANNEL 5 AUDIO SPEAKER OUTPUT CIRCUIT HIGH
B1477	CHANNEL 5 AUDIO SPEAKER OUTPUT CIRCUIT OPEN
B1478	CHANNEL 5 AUDIO SPEAKER OUTPUT CIRCUIT SHORTED TOGETHER
B1479	CHANNEL 6 AUDIO SPEAKER OUTPUT CIRCUIT PERFORMANCE
B147A	CHANNEL 6 AUDIO SPEAKER OUTPUT CIRCUIT LOW
B147B	CHANNEL 6 AUDIO SPEAKER OUTPUT CIRCUIT HIGH
B147C	CHANNEL 6 AUDIO SPEAKER OUTPUT CIRCUIT OPEN
B147D	CHANNEL 6 AUDIO SPEAKER OUTPUT CIRCUIT SHORTED TOGETHER
B147E	CHANNEL 7 AUDIO SPEAKER OUTPUT CIRCUIT PERFORMANCE
B147F	CHANNEL 7 AUDIO SPEAKER OUTPUT CIRCUIT LOW
B1480	CHANNEL 7 AUDIO SPEAKER OUTPUT CIRCUIT HIGH
B1481	CHANNEL 7 AUDIO SPEAKER OUTPUT CIRCUIT OPEN
B1482	CHANNEL 7 AUDIO SPEAKER OUTPUT CIRCUIT SHORTED TOGETHER
B1483	CHANNEL 8 AUDIO SPEAKER OUTPUT CIRCUIT PERFORMANCE
B1484	CHANNEL 8 AUDIO SPEAKER OUTPUT CIRCUIT LOW
B1485	CHANNEL 8 AUDIO SPEAKER OUTPUT CIRCUIT HIGH
B1486	CHANNEL 8 AUDIO SPEAKER OUTPUT CIRCUIT OPEN
B1487	CHANNEL 8 AUDIO SPEAKER OUTPUT CIRCUIT SHORTED TOGETHER

	CABIN EQ MISMATCH PERFORMANCE
B210D	BATTERY VOLTAGE LOW
B210E	BATTERY VOLTAGE HIGH
B221F	AMPLIFIER INTERNAL
U0019	CAN B BUS
U0141	LOST COMMUNICATION WITH IPM (FCM/TIPM)
U0184	LOST COMMUNICATION WITH RADIO

AUDIO (RADIO) - ELECTRICAL DIAGNOSTICS

DTC	Description
B1401	FRONT LEFT AUDIO SPEAKER OUTPUT CIRCUIT LOW
B1402	FRONT LEFT AUDIO SPEAKER OUTPUT CIRCUIT HIGH
B1403	FRONT LEFT AUDIO SPEAKER OUTPUT CIRCUIT OPEN
B1405	FRONT RIGHT AUDIO SPEAKER OUTPUT CIRCUIT LOW
B1406	FRONT RIGHT AUDIO SPEAKER OUTPUT CIRCUIT HIGH
B1407	FRONT RIGHT AUDIO SPEAKER OUTPUT CIRCUIT OPEN
B1409	REAR LEFT AUDIO SPEAKER OUTPUT CIRCUIT LOW
B140A	REAR LEFT AUDIO SPEAKER OUTPUT CIRCUIT HIGH
B140B	REAR LEFT AUDIO SPEAKER OUTPUT CIRCUIT OPEN
B140D	REAR RIGHT AUDIO SPEAKER OUTPUT CIRCUIT LOW
B140E	REAR RIGHT AUDIO SPEAKER OUTPUT CIRCUIT HIGH
B140F	REAR RIGHT AUDIO SPEAKER OUTPUT CIRCUIT OPEN
B1421	AUDIO CD READ ERROR/INOPERABLE DISC
B1422	AUDIO DVD READ ERROR/INOPERABLE DISC
B1429	RADIO DISPLAY HIGH TEMPERATURE
B142A	RADIO UNIT HIGH TEMPERATURE
B142D	AUDIO ANTENNA NOT CONNECTED
B142E	GPS ANTENNA NOT CONNECTED
B142F	SATELLITE RADIO ANTENNA NOT CONNECTED
B1430 (2.5)	SATELLITE RADIO ANTENNA INTERNAL PERFORMANCE
B1430 (4.0)	SATELLITE RADIO ANTENNA INTERNAL PERFORMANCE
B143B	MICROPHONE 1 CIRCUIT LOW
B143C	MICROPHONE 1 CIRCUIT HIGH
B143E	MICROPHONE 2 CIRCUIT LOW
B143F	MICROPHONE 2 CIRCUIT HIGH
B1492	GENERAL MICROPHONE PERFORMANCE
B14B7	MICROPHONE 1 CIRCUIT OPEN
B14B8	MICROPHONE 2 CIRCUIT OPEN
B156B	SATELLITE RADIO ANTENNA CIRCUIT
B221E	RADIO INTERNAL

U0019	CAN B BUS
U0141	LOST COMMUNICATION WITH TOTALLY INTEGRATED POWER MODULE (TIPM)
U0155	LOST COMMUNICATION WITH CLUSTER/CCN
U0168	LOST COMMUNICATION WITH VEHICLE SECURITY CONTROL MODULE (WIN)
U0186	LOST COMMUNICATION WITH AUDIO AMPLIFIER
U0197	LOST COMMUNICATION WITH HANDS FREE PHONE MODULE (HFM)
U0199	LOST COMMUNICATION WITH DRIVER DOOR MODULE (DDM)
U0200	LOST COMMUNICATION WITH PASSENGER DOOR MODULE (PDM)

CABIN COMPARTMENT NODE (CCN) - ELECTRICAL DIAGNOSTICS

DTC	Description
B1084	LEFT HEATED SEAT SWITCH INPUT CIRCUIT/PERFORMANCE
B1087	RIGHT HEATED SEAT SWITCH INPUT CIRCUIT/PERFORMANCE
B1A20	PRE-ARM TIMEOUT
B1200	AIRBAG WARNING INDICATOR CIRCUIT LOW
B1202	AIRBAG WARNING INDICATOR CIRCUIT OPEN
B120E	LEFT HEATED SEAT HI INDICATOR CONTROL CIRCUIT HIGH
B120F	LEFT HEATED SEAT HI INDICATOR CONTROL CIRCUIT OPEN
B1216	LEFT HEATED SEAT LO INDICATOR CONTROL CIRCUIT HIGH
B1217	LEFT HEATED SEAT LO INDICATOR CONTROL CIRCUIT OPEN
B121A	RIGHT HEATED SEAT HI INDICATOR CONTROL CIRCUIT HIGH
B121B	RIGHT HEATED SEAT HI INDICATOR CONTROL CIRCUIT OPEN
B1222	RIGHT HEATED SEAT LO INDICATOR CONTROL CIRCUIT HIGH
B1223	RIGHT HEATED SEAT LO INDICATOR CONTROL CIRCUIT OPEN
B1607	HEADLAMP SWITCH INPUT CIRCUIT LOW
B1608	HEADLAMP SWITCH INPUT CIRCUIT HIGH
B160A	PANEL DIMMER INPUT CIRCUIT LOW
B160B	PANEL DIMMER INPUT CIRCUIT HIGH
B1613	PANEL ILLUMINATION CONTROL CIRCUIT LOW
B1614	PANEL ILLUMINATION CONTROL CIRCUIT HIGH
B161B	COURTESY/DOME LAMP CONTROL CIRCUIT LOW
B161F	READING LAMP CONTROL CIRCUIT LOW
B168F	FRONT FOG LAMP SWITCH STUCK
B1801	DRIVER DOOR LOCK/UNLOCK SWITCH CIRCUIT LOW
B1803	DRIVER DOOR LOCK/UNLOCK SWITCH CIRCUIT STUCK LOCK
B1804	DRIVER DOOR LOCK/UNLOCK SWITCH CIRCUIT STUCK UNLOCK
B1806	PASSENGER DOOR LOCK/UNLOCK SWITCH CIRCUIT LOW
B1808	PASSENGER DOOR LOCK/UNLOCK SWITCH CIRCUIT STUCK LOCK

B1809	PASSENGER DOOR LOCK/UNLOCK SWITCH CIRCUIT STUCK UNLOCK
B1826	TRUNK RELEASE SWITCH INPUT CIRCUIT LOW
B2213	CCN INTERNAL
C230D	TRAC/ESP OFF SWITCH INPUT CIRCUIT LOW
P0462	FUEL LEVEL SENSOR 1 CIRCUIT LOW
P0463	FUEL LEVEL SENSOR 1 CIRCUIT HIGH
P2067	FUEL LEVEL SENSOR 2 CIRCUIT LOW
P2068	FUEL LEVEL SENSOR 2 CIRCUIT HIGH
U0019	CAN B BUS
U0141	LOST COMMUNICATION WITH FCM (TIPM)
U0151	LOST COMMUNICATION WITH OCCUPANT RESTRAINT CONTROLLER
U0164	LOST COMMUNICATION WITH HVAC CONTROL MODULE
U0168	LOST COMMUNICATION WITH VEHICLE SECURITY CONTROL MODULE (WIN)
U0184	LOST COMMUNICATION WITH RADIO
U0195	LOST COMMUNICATION WITH SDARS
U0197	LOST COMMUNICATION WITH HANDS FREE PHONE MODULE
U0208	LOST COMMUNICATION WITH HEATED SEAT CONTROL MODULE
U0212	LOST COMMUNICATION WITH SCCM-CAN-B

DRIVER DOOR MODULE (DDM) - ELECTRICAL DIAGNOSTICS

DTC	Description
B1852	DRIVER WINDOW SWITCH STUCK
B1854	DRIVER WINDOW CONTROL CIRCUIT LOW
B1858	DRIVER WINDOW POSITION SENSOR POWER SUPPLY LOW
B185A	DRIVER WINDOW POSITION SENSOR CIRCUIT PERFORMANCE
B1868	DRIVER PASSENGER WINDOW SWITCH CIRCUIT STUCK
B18D5	DRIVER DOOR PAWL SWITCH STUCK
B190E	DRIVER WINDOW SWITCH CIRCUIT LOW
B190F	DRIVER WINDOW SWITCH CIRCUIT HIGH
B1914	DRIVER WINDOW CONTROL 2 CIRCUIT LOW
B1DA7	SWITCH POWER SUPPLY CIRCUIT LOW
B210D	BATTERY VOLTAGE LOW
B210E	BATTERY VOLTAGE HIGH
B2218	DOOR MODULE INTERNAL
U0141	LOST COMMUNICATION WITH FRONT CONTROL MODULE (TIPM)
U0151	LOST COMMUNICATION WITH OCCUPANT RESTRAINT CONTROLLER (ORC)
U0155	LOST COMMUNICATION WITH CLUSTER/CCN
U0156	LOST COMMUNICATION WITH EOM

U0159	LOST COMMUNICATION WITH PARKING ASSIST CONTROL MODULE
U0164	LOST COMMUNICATION WITH HVAC CONTROL MODULE
U0168	LOST COMMUNICATION WITH VEHICLE SECURITY CONTROL MODULE (WIN)
U0169	LOST COMMUNICATION WITH SUNROOF CONTROL MODULE
U0184	LOST COMMUNICATION WITH RADIO
U0186	LOST COMMUNICATION WITH AUDIO AMPLIFIER
U0195	LOST COMMUNICATION WITH SDARS
U0197	LOST COMMUNICATION WITH HANDS FREE PHONE MODULE
U0200	LOST COMMUNICATION WITH PASSENGER DOOR MODULE
U0208	LOST COMMUNICATION WITH HEATED SEAT CONTROL MODULE
U0212	LOST COMMUNICATION WITH SCCM - CAN-B
U1000	CAN B BUS (+) CIRCUIT
U1001	CAN B BUS (-) CIRCUIT

ELECTRONIC OVERHEAD MODULE (EOM) - ELECTRICAL DIAGNOSTICS

DTC	Description
B1A32	UNIVERSAL GARAGE DOOR SWITCH 1 STUCK
B1A33	UNIVERSAL GARAGE DOOR SWITCH 2 STUCK
B1A34	UNIVERSAL GARAGE DOOR SWITCH 3 STUCK
B2217	EVIC/EOM/CMTC INTERNAL
B222D	ECU UNABLE TO CONFIGURE/CONFIGURATION NOT LEARNED
B2331	VEHICLE NEEDS DEGAUSSED
U0019	CAN B BUS
U0141	LOST COMMUNICATION WITH FRONT CONTROL MODULE (TIPM)
U0151	LOST COMMUNICATION WITH OCCUPANT RESTRAINT CONTROLLER
U0155	LOST COMMUNICATION WITH CLUSTER/CCN
U0164	LOST COMMUNICATION WITH HVAC CONTROL MODULE
U0169	LOST COMMUNICATION WITH SUNROOF CONTROL MODULE
U0184	LOST COMMUNICATION WITH RADIO
U0186	LOST COMMUNICATION WITH AUDIO AMPLIFIER
U0197	LOST COMMUNICATION WITH HANDS FREE PHONE MODULE
U0199	LOST COMMUNICATION WITH DRIVER DOOR MODULE
U0200	LOST COMMUNICATION WITH PASSENGER DOOR MODULE
U0208	LOST COMMUNICATION WITH HEATED SEAT CONTROL MODULE

ELECTRONIC SHIFT MODULE (ESM) - ELECTRICAL DIAGNOSTICS

DTC	Description
P0562	BATTERY VOLTAGE LOW

P0563	BATTERY VOLTAGE HIGH
P0607	ECU INTERNAL PERFORMANCE
P0930	BTSI CONTROL CIRCUIT LOW
P0931	BTSI CONTROL CIRCUIT HIGH
P2775	AUTOSTICK UPSHIFT SWITCH CIRCUIT PERFORMANCE
P2779	AUTOSTICK DOWNSHIFT SWITCH CIRCUIT PERFORMANCE
U0002	CAN C BUS OFF PERFORMANCE
U0100	LOST COMMUNICATION WITH ECM/PCM
U0121	LOST COMMUNICATION WITH ANTI-LOCK BRAKE MODULE
U0141	LOST COMMUNICATION WITH FRONT CONTROL MODULE

HANDS FREE MODULE (HFM) - ELECTRICAL DIAGNOSTICS

DTC	Description
B1438	VOICE RECOGNITION SWITCH STUCK
B1439	PHONE SWITCH STUCK
B143B	MICROPHONE 1 CIRCUIT LOW
B143C	MICROPHONE 1 CIRCUIT HIGH
B143E	MICROPHONE 2 CIRCUIT LOW
B143F	MICROPHONE 2 CIRCUIT HIGH
B1459	TELEMATICS MIRROR CONTROL CIRCUIT LOW
U0019	CAN B BUS
U0141	LOST COMMUNICATION WITH IPM (FCM/TIPM)
U0151	LOST COMMUNICATION WITH OCCUPANT RESTRAINT CONTROLLER
U0155	LOST COMMUNICATION WITH CLUSTER/CCN
U0156	LOST COMMUNICATION WITH EOM
U0164	LOST COMMUNICATION WITH HVAC CONTROL MODULE
U0168	LOST COMMUNICATION WITH VEHICLE SECURITY CONTROL MODULE (WIN)
U0169	LOST COMMUNICATION WITH SUNROOF CONTROL MODULE
U0184	LOST COMMUNICATION WITH RADIO
U0186	LOST COMMUNICATION WITH AUDIO AMPLIFIER
U0195	LOST COMMUNICATION WITH SDARS
U0199	LOST COMMUNICATION WITH DRIVER DOOR MODULE
U0200	LOST COMMUNICATION WITH PASSENGER DOOR MODULE
U0208	LOST COMMUNICATION WITH HEATED SEAT CONTROL MODULE
U0212	LOST COMMUNICATION WITH SCCM - CAN B

HEATED SEAT MODULE (HSM) - ELECTRICAL DIAGNOSTICS

DTC	Description

B1092	FRONT LEFT SEAT HEATER CONTROL CIRCUIT LOW
B1094	FRONT LEFT SEAT HEATER CONTROL CIRCUIT OPEN
B1096	FRONT RIGHT SEAT HEATER CONTROL CIRCUIT LOW
B1098	FRONT RIGHT SEAT HEATER CONTROL CIRCUIT OPEN
B210D	BATTERY VOLTAGE LOW
B210E	BATTERY VOLTAGE HIGH
B221A	HEATED SEAT MODULE INTERNAL
U0019	CAN B BUS
U0141	LOST COMMUNICATION WITH FRONT CONTROL MODULE (TIPM)
U0151	LOST COMMUNICATION WITH OCCUPANT RESTRAINT CONTROLLER (ORC)
U0155	LOST COMMUNICATION WITH CLUSTER/CCN
U0156	LOST COMMUNICATION WITH EOM
U0164	LOST COMMUNICATION WITH HVAC CONTROL MODULE
U0168	LOST COMMUNICATION WITH VEHICLE SECURITY CONTROL MODULE (WIN)
U0169	LOST COMMUNICATION WITH SUNROOF CONTROL MODULE (RCM)
U0184	LOST COMMUNICATION WITH RADIO
U0186	LOST COMMUNICATION WITH AUDIO AMPLIFIER
U0197	LOST COMMUNICATION WITH HANDS FREE PHONE MODULE (HFM)
U0199	LOST COMMUNICATION WITH DRIVER DOOR MODULE
U0200	LOST COMMUNICATION WITH PASSENGER DOOR MODULE
U0212	LOST COMMUNICATION WITH SCM - CAN B
U1107	ECU IN SINGLE WIRE MODE

HEATING & AIR CONDITIONING - ELECTRICAL DIAGNOSTICS

DTC	Description
B1000	A/C SWITCH REQUEST INPUT CIRCUIT/PERFORMANCE
B1009	RECIRCULATION SWITCH REQUEST INPUT CIRCUIT/PERFORMANCE
B1015	REAR DEFROST SWITCH REQUEST INPUT CIRCUIT/PERFORMANCE
B1031	EVAPORATOR FIN TEMPERATURE SENSOR CIRCUIT LOW
B1032	EVAPORATOR FIN TEMPERATURE SENSOR CIRCUIT HIGH
B1040	PANEL MODE DOOR 1 CONTROL CIRCUIT/PERFORMANCE
B1043	PANEL MODE DOOR 1 CONTROL CIRCUIT OPEN
B1044	PANEL MODE DOOR 1 TRAVEL RANGE TOO SMALL
B1045	PANEL MODE DOOR TRAVEL RANGE TOO LARGE
B1058	RECIRCULATION DOOR CONTROL CIRCUIT/PERFORMANCE
B105B	RECIRCULATION DOOR CONTROL CIRCUIT OPEN
B105C	RECIRCULATION DOOR TRAVEL RANGE TOO SMALL
B105D	RECIRCULATION DOOR TRAVEL RANGE TOO LARGE

B10A2	LEFT BLEND DOOR CONTROL CIRCUIT/PERFORMANCE
B10A5	LEFT BLEND DOOR CONTROL CIRCUIT OPEN
B10A6	LEFT BLEND DOOR TRAVEL TOO SMALL
B10A7	LEFT BLEND DOOR TRAVEL TOO LARGE
B10B2	A/C COOL DOWN TEST PERFORMANCE
B210A	SYSTEM VOLTAGE LOW
B210D	SYSTEM VOLTAGE HIGH
U0010	CAN INTERIOR BUS
U0141	LOST COMMUNICATION WITH IPM (FCM/TIPM)
U0151	LOST COMMUNICATION WITH OCCUPANT RESTRAINT CONTROLLER (ORC)
U0155	LOST COMMUNICATION WITH CLUSTER/CCN
U0156	LOST COMMUNICATION WITH EOM
U0169	LOST COMMUNICATION WITH SUNROOF CONTROL MODULE
U0184	LOST COMMUNICATION WITH RADIO
U0186	LOST COMMUNICATION WITH AUDIO AMPLIFIER
U0197	LOST COMMUNICATION WITH HANDS FREE PHONE MODULE (MTC)
U0199	LOST COMMUNICATION WITH DRIVER DOOR MODULE
U0200	LOST COMMUNICATION WITH PASSENGER DOOR MODULE
U0208	LOST COMMUNICATION WITH HEATED SEAT CONTROL MODULE
B1000-92	A/C SWITCH REQUEST INPUT - PERFORMANCE OR INCORRECT OPERATION
B1009-92	RECIRCULATION SWITCH REQUEST INPUT - PERFORMANCE OR INCORRECT OPERATION
B1015-92	EBL/REAR DEFROST SWITCH REQUEST INPUT - PERFORMANCE OR INCORRECT OPERATION
B1030-11	EVAPORATOR TEMPERATURE SENSOR - CIRCUIT SHORT TO GROUND
B1030-12	EVAPORATOR TEMPERATURE SENSOR - CIRCUIT SHORT TO BATTERY
B1058-11	RECIRCULATION DOOR CONTROL - CIRCUIT SHORT TO GROUND
B1058-12	RECIRCULATION DOOR CONTROL - CIRCUIT SHORT TO BATTERY
B1058-13	RECIRCULATION DOOR CONTROL - CIRCUIT OPEN
B1058-92	RECIRCULATION DOOR CONTROL - PERFORMANCE OR INCORRECT OPERATION
B105C-00	RECIRCULATION DOOR TRAVEL RANGE TOO SMALL
B105D-00	RECIRCULATION DOOR TRAVEL RANGE TOO LARGE
B10B2-00	A/C COOL DOWN TEST PERFORMANCE
B11C2-11	FRONT MODE DOOR 1 CONTROL - CIRCUIT SHORT TO GROUND
B11C2-12	FRONT MODE DOOR 1 CONTROL - CIRCUIT SHORT TO BATTERY
B11C2-13	FRONT MODE DOOR 1 CONTROL - CIRCUIT OPEN
B11C2-92	FRONT MODE DOOR 1 CONTROL - PERFORMANCE OR INCORRECT

	OPERATION
B11C3-00	FRONT MODE DOOR 1 TRAVEL RANGE TOO SMALL
B11C4-00	FRONT MODE DOOR 1 TRAVEL RANGE TOO LARGE
B11CB-11	MAIN/LEFT TEMPERATURE DOOR CONTROL - CIRCUIT SHORT TO GROUND
B11CB-12	MAIN/LEFT TEMPERATURE DOOR CONTROL - CIRCUIT SHORT TO BATTERY
B11CB-13	MAIN/LEFT TEMPERATURE DOOR CONTROL - CIRCUIT OPEN
B11CB-92	MAIN/LEFT TEMPERATURE DOOR CONTROL - PERFORMANCE OR INCORRECT OPERATION
B11CC-00	MAIN/LEFT TEMPERATURE DOOR TRAVEL TOO SMALL
B11CD-00	MAIN/LEFT TEMPERATURE DOOR TRAVEL TOO LARGE
B11D9-92	BLOWER SPEED KNOB REQUEST INPUT - PERFORMANCE OR INCORRECT OPERATION
B160F-11	TWILIGHT/AMBIENT LIGHT SENSOR INPUT - CIRCUIT SHORT TO GROUND
B160F-12	TWILIGHT/AMBIENT LIGHT SENSOR INPUT - CIRCUIT SHORT TO BATTERY
B160F-92	TWILIGHT/AMBIENT LIGHT SENSOR INPUT - PERFORMANCE OR INCORRECT OPERATION
B210A-84	SYSTEM VOLTAGE LOW - SIGNAL BELOW ALLOWABLE RANGE
B210B-85	SYSTEM VOLTAGE HIGH - SIGNAL ABOVE ALLOWABLE RANGE
B210D-84	BATTERY VOLTAGE LOW - SIGNAL BELOW ALLOWABLE RANGE
B210E-85	BATTERY VOLTAGE HIGH - SIGNAL ABOVE ALLOWABLE RANGE
B2214-00	(HVAC) CLIMATE CONTROL INTERNAL
B222A-00	VEHICLE LINE MISMATCH
U0010-00	CAN INTERIOR BUS
U0141-00	LOST COMMUNICATION WITH IPM (FCM/TIPM)
U0155-00	LOST COMMUNICATION WITH CLUSTER/CCN

PASSENGER DOOR MODULE (PDM) - ELECTRICAL DIAGNOSTICS

DTC	Description
B185D	PASSENGER WINDOW SWITCH CIRCUIT STUCK
B185F	PASSENGER WINDOW CONTROL CIRCUIT LOW
B1863	PASSENGER WINDOW POSITION SENSOR POWER SUPPLY LOW
B1865	PASSENGER WINDOW POSITION SENSOR CIRCUIT PERFORMANCE - PDM
B18DB	PASSENGER DOOR PAWL SWITCH STUCK
B1911	PASSENGER WINDOW SWITCH CIRCUIT LOW
B1912	PASSENGER WINDOW SWITCH CIRCUIT HIGH
B1918	PASSENGER WINDOW CONTROL 2 CIRCUIT LOW

B1DA7	SWITCH POWER SUPPLY CIRCUIT LOW
B210D	BATTERY VOLTAGE LOW
B210E	BATTERY VOLTAGE HIGH
B2219	DOOR MODULE INTERNAL
U0141	LOST COMMUNICATION WITH FRONT CONTROL MODULE (TIPM)
U0151	LOST COMMUNICATION WITH OCCUPANT RESTRAINT CONTROLLER (ORC)
U0155	LOST COMMUNICATION WITH CLUSTER/CCN
U0156	LOST COMMUNICATION WITH EOM
U0159	LOST COMMUNICATION WITH PARKING ASSIST CONTROL MODULE
U0164	LOST COMMUNICATION WITH HVAC CONTROL MODULE
U0168	LOST COMMUNICATION WITH VEHICLE SECURITY CONTROL MODULE (SKREEM/WCM)
U0169	LOST COMMUNICATION WITH SUNROOF CONTROL MODULE
U0184	LOST COMMUNICATION WITH RADIO
U0186	LOST COMMUNICATION WITH AUDIO AMPLIFIER
U0195	LOST COMMUNICATION WITH SDARS
U0197	LOST COMMUNICATION WITH HANDS FREE PHONE MODULE
U0199	LOST COMMUNICATION WITH DRIVER DOOR MODULE
U0208	LOST COMMUNICATION WITH HEATED SEAT CONTROL MODULE
U0212	LOST COMMUNICATION WITH SCCM - CAN-B
U1000	CAN B BUS (+) CIRCUIT
U1001	CAN B BUS (-) CIRCUIT

PASSIVE ENTRY MODULE (PEM) - ELECTRICAL DIAGNOSTICS

DTC	Description
B1A72-01	PASSIVE ENTRY ANTENNA 2 - GENERAL ELECTRICAL FAILURE
B1A73-01	PASSIVE ENTRY ANTENNA 3 - GENERAL ELECTRICAL FAILURE
B2199-16	BATTERY VOLTAGE - CIRCUIT VOLTAGE BELOW THRESHOLD
B2199-17	BATTERY VOLTAGE - CIRCUIT VOLTAGE ABOVE THRESHOLD
B2205-00	ORIGINAL VIN MISSING/MISMATCH
B223B-00	VEHICLE CONFIGURATION MISMATCH
B229B-00	PASSIVE ENTRY MODULE (PEM) INTERNAL
U0019-00	CAN B BUS
U0020-00	CAN B BUS OFF PERFORMANCE
U0021-00	CAN B BUS (+) CIRCUIT OPEN
U0022-00	CAN B BUS (+) CIRCUIT LOW
U0023-00	CAN B BUS (+) CIRCUIT HIGH
U0024-00	CAN B BUS (-) CIRCUIT OPEN
U0025-00	CAN B BUS (-) CIRCUIT LOW

U0026-00	CAN B BUS (-) CIRCUIT HIGH
U0141-00	LOST COMMUNICATION WITH FRONT CONTROL MODULE (TIPM)
U0155-00	LOST COMMUNICATION WITH CLUSTER/CCN

POWERTRAIN CONTROL MODULE (PCM) - ELECTRICAL DIAGNOSTICS - NGC

DTC	Description
P000B	BANK 1 CAMSHAFT 2 POSITION SLOW RESPONSE
P0013	BANK 1 CAMSHAFT 2 POSITION ACTUATOR CIRCUIT OPEN
P0016	CRANKSHAFT/CAMSHAFT TIMING MISALIGNMENT - BANK 1 SENSOR 1 - 3.5L
P0016	CRANKSHAFT/CAMSHAFT TIMING MISALIGNMENT - BANK 1 SENSOR 1 - 5.7L/SRT8
P0031	O2 SENSOR 1/1 HEATER CIRCUIT LOW
P0032	O2 SENSOR 1/1 HEATER CIRCUIT HIGH
P0037	O2 SENSOR 1/2 HEATER CIRCUIT LOW
P0038	O2 SENSOR 1/2 HEATER CIRCUIT HIGH
P0051	O2 SENSOR 2/1 HEATER CIRCUIT LOW
P0052	O2 SENSOR 2/1 HEATER CIRCUIT HIGH
P0057	O2 SENSOR 2/2 HEATER CIRCUIT LOW
P0058	O2 SENSOR 2/2 HEATER CIRCUIT HIGH
P0071	AMBIENT AIR TEMPERATURE SENSOR PERFORMANCE
P0072	AMBIENT AIR TEMPERATURE SENSOR CIRCUIT LOW
P0073	AMBIENT AIR TEMPERATURE SENSOR CIRCUIT HIGH
P0107	MANIFOLD ABSOLUTE PRESSURE SENSOR CIRCUIT LOW
P0108	MANIFOLD ABSOLUTE PRESSURE SENSOR CIRCUIT HIGH
P0111	INTAKE AIR TEMPERATURE SENSOR 1 PERFORMANCE - 3.5L/SRT8
P0111	INTAKE AIR TEMPERATURE SENSOR 1 PERFORMANCE - 5.7L
P0112	INTAKE AIR TEMPERATURE SENSOR 1 CIRCUIT LOW - 3.5L/SRT8
P0112	INTAKE AIR TEMPERATURE SENSOR 1 CIRCUIT LOW - 5.7L
P0113	INTAKE AIR TEMPERATURE SENSOR 1 CIRCUIT HIGH - 3.5L/SRT8
P0113	INTAKE AIR TEMPERATURE SENSOR 1 CIRCUIT HIGH - 5.7L
P0116	ENGINE COOLANT TEMPERATURE SENSOR PERFORMANCE
P0117	ENGINE COOLANT TEMPERATURE SENSOR CIRCUIT LOW
P0118	ENGINE COOLANT TEMPERATURE SENSOR CIRCUIT HIGH
P0121	THROTTLE POSITION SENSOR 1 PERFORMANCE
P0122	THROTTLE POSITION SENSOR 1 CIRCUIT LOW
P0123	THROTTLE POSITION SENSOR 1 CIRCUIT HIGH
P0125	INSUFFICIENT COOLANT TEMP FOR CLOSED-LOOP FUEL CONTROL
P0128	THERMOSTAT RATIONALITY

P0129	BAROMETRIC PRESSURE OUT-OF-RANGE LOW
P0131	O2 SENSOR 1/1 CIRCUIT LOW
P0132	O2 SENSOR 1/1 CIRCUIT HIGH
P0133	O2 SENSOR 1/1 SLOW RESPONSE
P0135	O2 SENSOR 1/1 HEATER PERFORMANCE
P0137	O2 SENSOR 1/2 CIRCUIT LOW
P0138	O2 SENSOR 1/2 CIRCUIT HIGH
P0139	O2 SENSOR 1/2 SLOW RESPONSE
P013A	O2 SENSOR 1/2 SLOW RESPONSE - RICH TO LEAN
P013C	O2 SENSOR 2/2 SLOW RESPONSE - RICH TO LEAN
P0141	O2 SENSOR 1/2 HEATER PERFORMANCE
P0151	O2 SENSOR 2/1 CIRCUIT LOW
P0152	O2 SENSOR 2/1 CIRCUIT HIGH
P0153	O2 SENSOR 2/1 SLOW RESPONSE
P0155	O2 SENSOR 2/1 HEATER PERFORMANCE
P0157	O2 SENSOR 2/2 CIRCUIT LOW
P0158	O2 SENSOR 2/2 CIRCUIT HIGH
P0159	O2 SENSOR 2/2 SLOW RESPONSE
P0161	O2 SENSOR 2/2 HEATER PERFORMANCE
P0171	FUEL SYSTEM 1/1 LEAN
P0172	FUEL SYSTEM 1/1 RICH
P0174	FUEL SYSTEM 2/1 LEAN
P0175	FUEL SYSTEM 2/1 RICH
P0196	ENGINE OIL TEMPERATURE SENSOR PERFORMANCE
P0197	ENGINE OIL TEMPERATURE SENSOR CIRCUIT LOW
P0198	ENGINE OIL TEMPERATURE SENSOR CIRCUIT HIGH
P0201	FUEL INJECTOR 1 CIRCUIT/OPEN
P0202	FUEL INJECTOR 2 CIRCUIT/OPEN
P0203	FUEL INJECTOR 3 CIRCUIT/OPEN
P0204	FUEL INJECTOR 4 CIRCUIT/OPEN
P0205	FUEL INJECTOR 5 CIRCUIT/OPEN
P0206	FUEL INJECTOR 6 CIRCUIT/OPEN
P0207	FUEL INJECTOR 7 CIRCUIT/OPEN
P0208	FUEL INJECTOR 8 CIRCUIT/OPEN
P0221	THROTTLE POSITION SENSOR 2 CIRCUIT PERFORMANCE
P0222	THROTTLE POSITION SENSOR 2 CIRCUIT LOW
P0223	THROTTLE POSITION SENSOR 2 CIRCUIT HIGH
P0298	ENGINE OIL TEMPERATURE TOO HIGH
P0300	MULTIPLE CYLINDER MISFIRE
P0301	CYLINDER 1 MISFIRE
P0302	CYLINDER 2 MISFIRE

	CYLINDER 3 MISFIRE
P0304	CYLINDER 4 MISFIRE
P0305	CYLINDER 5 MISFIRE
P0306	CYLINDER 6 MISFIRE
P0307	CYLINDER 7 MISFIRE
P0308	CYLINDER 8 MISFIRE
P0315	NO CRANK SENSOR LEARNED
P0325	KNOCK SENSOR 1 CIRCUIT
P0330	KNOCK SENSOR 2 CIRCUIT
P0335	CRANKSHAFT POSITION SENSOR CIRCUIT
P0339	CRANKSHAFT POSITION SENSOR INTERMITTENT
P0340	CAMSHAFT POSITION SENSOR CIRCUIT - BANK 1 SENSOR 1 - 3.5L
P0340	CAMSHAFT POSITION SENSOR CIRCUIT - BANK 1 SENSOR 1 - 5.7L/SRT8
P0344	CAMSHAFT POSITION SENSOR INTERMITTENT - 3.5L
P0344	CAMSHAFT POSITION SENSOR INTERMITTENT - 5.7L/SRT8
P0401	EGR SYSTEM PERFORMANCE
P0403	EGR CONTROL CIRCUIT/OPEN
P0404	EGR POSITION SENSOR PERFORMANCE
P0405	EGR POSITION SENSOR CIRCUIT LOW
P0406	EGR POSITION SENSOR CIRCUIT HIGH
P0420	CATALYST EFFICIENCY (BANK 1)
P0430	CATALYST EFFICIENCY (BANK 2)
P0440	GENERAL EVAP SYSTEM FAILURE
P0441	EVAP PURGE SYSTEM PERFORMANCE
P0443	EVAP PURGE CONTROL CIRCUIT
P0452	EVAP PRESSURE SWITCH STUCK CLOSED
P0455	EVAP SYSTEM LARGE LEAK
P0456	EVAP SYSTEM SMALL LEAK
P0457	LOOSE FUEL CAP
P0461	FUEL LEVEL SENSOR 1 PERFORMANCE
P0462	FUEL LEVEL SENSOR 1 CIRCUIT LOW
P0463	FUEL LEVEL SENSOR 1 CIRCUIT HIGH
P0480	COOLING FAN 1 CONTROL CIRCUIT
P0481	COOLING FAN 2 CONTROL CIRCUIT
P0501	VEHICLE SPEED SENSOR 1 PERFORMANCE (Equipped with ABS)
P0501	VEHICLE SPEED SENSOR 1 PERFORMANCE (Not Equipped with ABS)
P0503	VEHICLE SPEED SENSOR 1 ERRATIC (Equipped with ABS)
P0503	VEHICLE SPEED SENSOR 1 ERRATIC (Not Equipped with ABS)
P0506	IDLE SPEED PERFORMANCE LOWER THAN EXPECTED
P0507	IDLE SPEED PERFORMANCE HIGHER THAN EXPECTED

P050B	COLD START IGNITION TIMING PERFORMANCE
P0513	INVALID SKIM KEY
P0520	ENGINE OIL PRESSURE SENSOR CIRCUIT
P0521	ENGINE OIL PRESSURE SENSOR PERFORMANCE
P0522	OIL PRESSURE TOO LOW - 3.5L
P0522	ENGINE OIL PRESSURE SENSOR CIRCUIT LOW - 5.7L/SRT8
P0523	ENGINE OIL PRESSURE SENSOR CIRCUIT HIGH
P0524	ENGINE OIL PRESSURE TOO LOW
P0532	A/C PRESSURE SENSOR CIRCUIT LOW
P0533	A/C PRESSURE SENSOR CIRCUIT HIGH
P0562	BATTERY VOLTAGE LOW
P0563	BATTERY VOLTAGE HIGH
P0571	BRAKE SWITCH 1 PERFORMANCE
P0572	BRAKE SWITCH 1 STUCK ON
P0573	BRAKE SWITCH 1 STUCK OFF
P0579	SPEED CONTROL SWITCH 1 PERFORMANCE
P0580	SPEED CONTROL SWITCH 1 CIRCUIT LOW
P0585	SPEED CONTROL SWITCH 1/2 CORRELATION
P0591	SPEED CONTROL SWITCH 2 PERFORMANCE
P0592	SPEED CONTROL SWITCH 2 CIRCUIT LOW
P0600	SERIAL COMMUNICATION LINK
P0601	INTERNAL MEMORY CHECKSUM INVALID
P0606	INTERNAL CONTROL PROCESSOR
P060B	ETC A/D GROUND PERFORMANCE
P060D	ETC LEVEL 2 APP PERFORMANCE
P060E	ETC LEVEL 2 TPS PERFORMANCE
P060F	ETC LEVEL 2 ECT PERFORMANCE
P061A	ETC LEVEL 2 TORQUE PERFORMANCE
P061C	ETC LEVEL 2 RPM PERFORMANCE
P0622	GENERATOR FIELD CONTROL CIRCUIT/OPEN
P0627	FUEL PUMP CONTROL CIRCUIT/OPEN
P062C	ETC LEVEL 2 MPH PERFORMANCE
P0630	VIN NOT PROGRAMMED IN PCM
P0632	ODOMETER NOT PROGRAMMED IN PCM
P0633	SKIM SECRET KEY NOT STORED IN PCM
P0642	SENSOR REFERENCE VOLTAGE 1 CIRCUIT LOW
P0643	SENSOR REFERENCE VOLTAGE 1 CIRCUIT HIGH
P0645	A/C CONTROL CIRCUIT/OPEN
P0646	A/C CLUTCH CONTROL CIRCUIT 2 LOW
P0647	A/C CLUTCH CONTROL CIRCUIT 2 HIGH
P0652	SENSOR REFERENCE VOLTAGE 2 CIRCUIT LOW

	SENSOR REFERENCE VOLTAGE 2 CIRCUIT HIGH
P0685	AUTO SHUTDOWN CONTROL CIRCUIT
P0688	ASD/MAIN SENSE CIRCUIT
P0700	TRANSMISSION CONTROL SYSTEM (MIL REQUEST)
P0703	BRAKE SWITCH 2 PERFORMANCE
P0801	REVERSE GEAR LOCKOUT CIRCUIT OPEN OR SHORTED
P0803	SKIP SHIFT CONTROL SOLENOID CIRCUIT
P080B	SKIP SHIFT RATIONALITY
P0830	CLUTCH UPSTOP SWITCH STUCK ON
P0835	CLUTCH UPSTOP SWITCH STUCK OFF
P0850	PARK/NEUTRAL SWITCH PERFORMANCE
P1004	SHORT RUNNER VALVE CONTROL PERFORMANCE
P1115	GENERAL TEMPERATURE RATIONALITY
P1128	CLOSED LOOP FUELING NOT ACHIEVED - BANK 1
P1129	CLOSED LOOP FUELING NOT ACHIEVED - BANK 2
P1239	ENGINE OIL TEMPERATURE TOO LOW
P1404	EGR CLOSE POSITION PERFORMANCE
P1411	CYLINDER 1 REACTIVATION CONTROL PERFORMANCE
P1414	CYLINDER 4 REACTIVATION CONTROL PERFORMANCE
P1416	CYLINDER 6 REACTIVATION CONTROL PERFORMANCE
P1417	CYLINDER 7 REACTIVATION CONTROL PERFORMANCE
P1501	VEHICLE SPEED SENSOR 1/2 CORRELATION - DRIVE WHEELS (Equipped with ABS)
P1502	VEHICLE SPEED SENSOR 1/2 CORRELATION - NON DRIVE WHEELS (Equipped with ABS)
P150D	COLD START ROUGH IDLE - OPEN THROTTLE START
P1521	INCORRECT ENGINE OIL TYPE
P1524	OIL PRESSURE OUT OF RANGE - CAMSHAFT ADVANCE/RETARD DISABLED
P1572	BRAKE PEDAL STUCK ON
P1573	BRAKE PEDAL STUCK OFF
P1593	SPEED CONTROL SWITCH 1/2 STUCK
P1607	PCM INTERNAL SHUTDOWN TIMER RATIONALITY
P1618	SENSOR REFERENCE VOLTAGE 1 ERRATIC
P1628	SENSOR REFERENCE VOLTAGE 2 ERRATIC
P1696	EEPROM MEMORY WRITE DENIED/INVALID
P1697	EMR (SRI) MILEAGE NOT STORED
P2008	SHORT RUNNER VALVE (SRV) CONTROL CIRCUIT
P2016	SHORT RUNNER VALVE (SRV) POSITION SENSOR CIRCUIT LOW
P2017	SHORT RUNNER VALVE (SRV) POSITION SENSOR CIRCUIT HIGH
P2066	FUEL LEVEL SENSOR 2 PERFORMANCE

P2067	FUEL LEVEL SENSOR 2 CIRCUIT LOW
P2068	FUEL LEVEL SENSOR 2 CIRCUIT HIGH
P2072	ELECTRONIC THROTTLE CONTROL SYSTEM - ICE BLOCKAGE
P2096	DOWNSTREAM FUEL TRIM SYSTEM 1 LEAN
P2097	DOWNSTREAM FUEL TRIM SYSTEM 1 RICH
P2098	DOWNSTREAM FUEL TRIM SYSTEM 2 LEAN
P2099	DOWNSTREAM FUEL TRIM SYSTEM 2 RICH
P2100	ELECTRONIC THROTTLE CONTROL MOTOR CIRCUIT/OPEN - BANK 1
P2101	ELECTRONIC THROTTLE CONTROL MOTOR PERFORMANCE - BANK 1
P2107	ELECTRONIC THROTTLE CONTROL MODULE PROCESSOR
P2110	ELECTRONIC THROTTLE CONTROL SYSTEM - FORCED LIMITED RPM
P2111	ELECTRONIC THROTTLE CONTROL SYSTEM - UNABLE TO CLOSE
P2112	ELECTRONIC THROTTLE CONTROL SYSTEM - UNABLE TO OPEN
P2115	ACCELERATOR PEDAL POSITION SENSOR 1 MINIMUM STOP PERFORMANCE
P2116	ACCELERATOR PEDAL POSITION SENSOR 2 MINIMUM STOP PERFORMANCE
P2118	ELECTRONIC THROTTLE CONTROL MOTOR CURRENT PERFORMANCE
P2122	ACCELERATOR PEDAL POSITION SENSOR 1 CIRCUIT LOW
P2123	ACCELERATOR PEDAL POSITION SENSOR 1 CIRCUIT HIGH
P2127	ACCELERATOR PEDAL POSITION SENSOR 2 CIRCUIT LOW
P2128	ACCELERATOR PEDAL POSITION SENSOR 2 CIRCUIT HIGH
P2135	THROTTLE POSITION SENSOR 1/2 CORRELATION
P2138	ACCELERATOR PEDAL POSITION SENSOR 1/2 CORRELATION
P2161	VEHICLE SPEED SENSOR 2 ERRATIC (with ABS)
P2166	ACCELERATOR PEDAL POSITION SENSOR 1 MAXIMUM STOP PERFORMANCE
P2167	ACCELERATOR PEDAL POSITION SENSOR 2 MAXIMUM STOP PERFORMANCE
P2172	HIGH AIRFLOW/VACUUM LEAK DETECTED (INSTANTANEOUS ACCUMULATION)
P2173	HIGH AIRFLOW/VACUUM LEAK DETECTED (SLOW ACCUMULATION)
P2174	LOW AIRFLOW/RESTRICTION DETECTED (INSTANTANEOUS ACCUMULATION)
P2175	LOW AIRFLOW/RESTRICTION DETECTED (SLOW ACCUMULATION)
P2181	COOLING SYSTEM PERFORMANCE
P2271	O2 SENSOR 1/2 SIGNAL BIASED RICH
P2273	O2 SENSOR 2/2 SIGNAL BIASED RICH
P2299	BRAKE PEDAL POSITION/ACCELERATOR PEDAL POSITION INCOMPATIBLE
P2302	IGNITION COIL 1 SECONDARY CIRCUIT - INSUFFICIENT IONIZATION -

	3.5L
P2302	IGNITION COIL 1 SECONDARY CIRCUIT - INSUFFICIENT IONIZATION - 5.7L/SRT8
P2305	IGNITION COIL 2 SECONDARY CIRCUIT - INSUFFICIENT IONIZATION - 3.5L
P2305	IGNITION COIL 2 SECONDARY CIRCUIT - INSUFFICIENT IONIZATION - 5.7L/SRT8
P2308	IGNITION COIL 3 SECONDARY CIRCUIT - INSUFFICIENT IONIZATION - 3.5L
P2308	IGNITION COIL 3 SECONDARY CIRCUIT - INSUFFICIENT IONIZATION - 5.7L/SRT8
P2311	IGNITION COIL 4 SECONDARY CIRCUIT - INSUFFICIENT IONIZATION - 3.5L
P2311	IGNITION COIL 4 SECONDARY CIRCUIT - INSUFFICIENT IONIZATION - 5.7L/SRT8
P2314	IGNITION COIL 5 SECONDARY CIRCUIT - INSUFFICIENT IONIZATION - 3.5L
P2314	IGNITION COIL 5 SECONDARY CIRCUIT - INSUFFICIENT IONIZATION - 5.7L/SRT8
P2317	IGNITION COIL 6 SECONDARY CIRCUIT - INSUFFICIENT IONIZATION - 3.5L
P2317	IGNITION COIL 6 SECONDARY CIRCUIT - INSUFFICIENT IONIZATION - 5.7L/SRT8
P2320	IGNITION COIL 7 SECONDARY CIRCUIT - INSUFFICIENT IONIZATION - 5.7L/SRT8
P2323	IGNITION COIL 8 SECONDARY CIRCUIT - INSUFFICIENT IONIZATION - 5.7L/SRT8
P2503	CHARGING SYSTEM OUTPUT LOW
P2504	CHARGING SYSTEM OUTPUT HIGH
P2533	IGNITION SWITCH RUN/START POSITION CIRCUIT
P2610	PCM INTERNAL ENGINE OFF TIMER PERFORMANCE
P3400	MDS RATIONALITY BANK 1
P3401	MDS SOLENOID 1 CIRCUIT
P3402	CYLINDER 1 DEACTIVATION CONTROL PERFORMANCE
P3425	MDS SOLENOID 4 CIRCUIT
P3426	CYLINDER 4 DEACTIVATION CONTROL PERFORMANCE
P3441	MDS SOLENOID 6 CIRCUIT
P3442	CYLINDER 6 DEACTIVATION CONTROL PERFORMANCE
P3449	MDS SOLENOID 7 CIRCUIT
P3450	CYLINDER 7 DEACTIVATION CONTROL PERFORMANCE
P3497	MDS RATIONALITY BANK 2
U0001	CAN C BUS
U0101	LOST COMMUNICATION WITH TCM

U0103	LOST COMMUNICATION WITH ELECTRIC GEAR SHIFT MODULE
U0121	LOST COMMUNICATION WITH ANTI-LOCK BRAKE MODULE
U0141	LOST COMMUNICATION WITH IPM (FCM/TIPM)
U0168	LOST COMMUNICATION WITH VEHICLE SECURITY CONTROL MODULE (WIN)
U110A	LOST COMMUNICATION WITH SCM - CAN-C
U110C	LOST FUEL LEVEL MESSAGE
U110E	LOST AMBIENT TEMPERATURE MESSAGE
U110F	LOST FUEL VOLUME MESSAGE
U1110	LOST VEHICLE SPEED MESSAGE
U1113	LOST A/C PRESSURE MESSAGE
U1120	LOST WHEEL DISTANCE MESSAGE
U1403	IMPLAUSIBLE FUEL LEVEL SIGNAL RECEIVED
U1411	IMPLAUSIBLE FUEL VOLUME SIGNAL RECEIVED
U1412	IMPLAUSIBLE VEHICLE SPEED SIGNAL RECEIVED
U1417	IMPLAUSIBLE LEFT WHEEL DISTANCE SIGNAL RECEIVED
U1418	IMPLAUSIBLE RIGHT WHEEL DISTANCE SIGNAL RECEIVED

POWERTRAIN CONTROL MODULE (PCM) - ELECTRICAL DIAGNOSTICS - 42RLE

DTC	Description
P0122	TPS/APP CIRCUIT LOW
P0123	TPS/APP CIRCUIT HIGH
P0124	TPS/APP INTERMITTENT
P0218	HIGH TEMPERATURE OPERATION ACTIVATED
P0562	BATTERY VOLTAGE LOW
P0602	CONTROL MODULE PROGRAMMING ERROR/NOT PROGRAMMED
P0604	INTERNAL CONTROL MODULE RAM
P0605	INTERNAL CONTROL MODULE ROM
P0613	INTERNAL TRANSMISSION PROCESSOR
P0706	TRANSMISSION RANGE SENSOR RATIONALITY
P0711	TRANSMISSION TEMPERATURE SENSOR PERFORMANCE
P0712	TRANSMISSION TEMPERATURE SENSOR LOW
P0713	TRANSMISSION TEMPERATURE SENSOR HIGH
P0714	TRANSMISSION TEMPERATURE SENSOR INTERMITTENT
P0716	INPUT SPEED SENSOR 1 CIRCUIT PERFORMANCE
P0721	OUTPUT SPEED SENSOR CIRCUIT PERFORMANCE
P0726	ENGINE SPEED INPUT CIRCUIT RANGE/PERFORMANCE
P0731	GEAR RATIO ERROR IN 1ST
P0732	GEAR RATIO ERROR IN 2ND

P0733	GEAR RATIO ERROR IN 3RD
P0734	GEAR RATIO ERROR IN 4TH
P0736	GEAR RATIO ERROR IN REVERSE
P0740	TCC OUT OF RANGE
P0750	LR SOLENOID CIRCUIT
P0755	2/4 SOLENOID CIRCUIT
P0760	OD SOLENOID CIRCUIT
P0765	UD SOLENOID CIRCUIT
P0841	LR PRESSURE SWITCH RATIONALITY
P0845	2/4 HYDRAULIC PRESSURE TEST
P0846	2/4 PRESSURE SWITCH RATIONALITY
P0868	LINE PRESSURE LOW
P0869	LINE PRESSURE HIGH
P0870	OD HYDRAULIC PRESSURE TEST
P0871	OD PRESSURE SWITCH RATIONALITY
P0882	TCM POWER INPUT LOW
P0883	TCM POWER INPUT HIGH
P0884	POWER UP AT SPEED
P0890	SWITCHED BATTERY
P0897	TRANSMISSION FLUID DETERIORATED
P0933	HYDRAULIC PRESSURE SENSOR RANGE/PERFORMANCE
P0934	LINE PRESSURE SENSOR CIRCUIT LOW
P0935	LINE PRESSURE SENSOR CIRCUIT HIGH
P0944	LOSS OF HYDRAULIC PUMP PRIME
P0992	2/4/OD HYDRAULIC PRESSURE TEST
P1684	BATTERY WAS DISCONNECTED
P1713	RESTRICTED MANUAL VALVE IN T2 RANGE
P1745	TRANSMISSION LINE PRESSURE TOO HIGH FOR TOO LONG
P1775	SOLENOID SWITCH VALVE LATCHED IN TCC POSITION
P1776	SOLENOID SWITCH VALVE LATCHED IN LR POSITION
P1790	FAULT IMMEDIATELY AFTER SHIFT
P1794	SPEED SENSOR GROUND ERROR
P1797	MANUAL SHIFT OVERHEAT
U0141	LOST COMMUNICATION WITH IPM (FCM/TIPM)

RESTRAINTS - ELECTRICAL DIAGNOSTICS

DTC	Description
B1B00	DRIVER AIRBAG SQUIB 1 CIRCUIT LOW
B1B01	DRIVER AIRBAG SQUIB 1 CIRCUIT HIGH
B1B02	DRIVER AIRBAG SQUIB 1 CIRCUIT OPEN

B1B03	DRIVER AIRBAG SQUIB 1 CIRCUIT SHORTED TOGETHER
B1B04	DRIVER AIRBAG SQUIB 2 CIRCUIT LOW
B1B05	DRIVER AIRBAG SQUIB 2 CIRCUIT HIGH
B1B06	DRIVER AIRBAG SQUIB 2 CIRCUIT OPEN
B1B07	DRIVER AIRBAG SQUIB 2 CIRCUIT SHORTED TOGETHER
B1B08	PASSENGER AIRBAG SQUIB 1 CIRCUIT LOW
B1B09	PASSENGER AIRBAG SQUIB 1 CIRCUIT HIGH
B1B0A	PASSENGER AIRBAG SQUIB 1 CIRCUIT OPEN
B1B0B	PASSENGER AIRBAG SQUIB 1 CIRCUIT SHORTED TOGETHER
B1B0C	PASSENGER AIRBAG SQUIB 2 CIRCUIT LOW
B1B0D	PASSENGER AIRBAG SQUIB 2 CIRCUIT HIGH
B1B0E	PASSENGER AIRBAG SQUIB 2 CIRCUIT OPEN
B1B0F	PASSENGER AIRBAG SQUIB 2 CIRCUIT SHORTED TOGETHER
B1B18	LEFT SIDE CURTAIN SQUIB 1 CIRCUIT LOW
B1B19	LEFT SIDE CURTAIN SQUIB 1 CIRCUIT HIGH
B1B1A	LEFT SIDE CURTAIN SQUIB 1 CIRCUIT OPEN
B1B1B	LEFT SIDE CURTAIN SQUIB 1 CIRCUIT SHORTED TOGETHER
B1B20	RIGHT SIDE CURTAIN SQUIB 1 CIRCUIT LOW
B1B21	RIGHT SIDE CURTAIN SQUIB 1 CIRCUIT HIGH
B1B22	RIGHT SIDE CURTAIN SQUIB 1 CIRCUIT OPEN
B1B23	RIGHT SIDE CURTAIN SQUIB 1 CIRCUIT SHORTED TOGETHER
B1B70	UP FRONT LEFT SATELLITE ACCELERATION SENSOR INTERNAL
B1B71	UP FRONT RIGHT SATELLITE ACCELERATION SENSOR INTERNAL
B1B72	LEFT SIDE SATELLITE ACCELERATION SENSOR 1 INTERNAL
B1B73	LEFT SIDE SATELLITE ACCELERATION SENSOR 2 INTERNAL
B1B74	LEFT SIDE SATELLITE ACCELERATION SENSOR 3 INTERNAL
B1B75	RIGHT SIDE SATELLITE ACCELERATION SENSOR 1 INTERNAL
B1B76	RIGHT SIDE SATELLITE ACCELERATION SENSOR 2 INTERNAL
B1B77	RIGHT SIDE SATELLITE ACCELERATION SENSOR 3 INTERNAL
B1B8D	DRIVER SEAT TRACK POSITION SENSOR CIRCUIT LOW
B1B8E	DRIVER SEAT TRACK POSITION SENSOR CIRCUIT HIGH
B1B8F	DRIVER SEAT TRACK POSITION SENSOR CIRCUIT OPEN
B1B90	DRIVER SEAT TRACK POSITION SENSOR CIRCUIT SHORTED TOGETHER
B1B91	DRIVER SEAT TRACK POSITION SENSOR CONFIGURATION MISMATCH
B1B94	PASSENGER SEAT TRACK POSITION SENSOR CIRCUIT HIGH
B1B95	PASSENGER SEAT TRACK POSITION SENSOR CIRCUIT OPEN
B1BA5	AIRBAG SQUIB CONFIGURATION MISMATCH
B1BC7	DEPLOYMENT DATA RECORD FULL
B1C38	1st ROW DRIVER RETRACTOR TENSIONER CIRCUIT LOW

B1C39	1ST ROW DRIVER RETRACTOR TENSIONER CIRCUIT HIGH
B1C3A	1st ROW DRIVER RETRACTOR TENSIONER CIRCUIT OPEN
B1C3B	1st ROW DRIVER RETRACTOR TENSIONER CIRCUIT SHORTED TOGETHER
B1C3D	1st ROW DRIVER SEAT BELT BUCKLE TENSIONER CIRCUIT LOW
B1C3E	1st ROW DRIVER SEAT BELT BUCKLE TENSIONER CIRCUIT HIGH
B1C3F	1st ROW DRIVER SEAT BELT BUCKLE TENSIONER CIRCUIT OPEN
B1C40	1st ROW DRIVER SEAT BELT BUCKLE TENSIONER CIRCUIT SHORTED TOGETHER
B1C47	1st ROW PASSENGER RETRACTOR TENSIONER CIRCUIT LOW
B1C48	1ST ROW PASSENGER RETRACTOR TENSIONER CIRCUIT HIGH
B1C49	1st ROW PASSENGER RETRACTOR TENSIONER CIRCUIT OPEN
B1C4A	1st ROW PASSENGER RETRACTOR TENSIONER CIRCUIT SHORTED TOGETHER
B1C4C	1st ROW PASSENGER SEAT BELT BUCKLE TENSIONER CIRCUIT LOW
B1C4D	1st ROW PASSENGER SEAT BELT BUCKLE TENSIONER CIRCUIT HIGH
B1C4E	1st ROW PASSENGER SEAT BELT BUCKLE TENSIONER CIRCUIT OPEN
B1C4F	1st ROW PASSENGER SEAT BELT BUCKLE TENSIONER CIRCUIT SHORTED TOGETHER
B210D	BATTERY VOLTAGE LOW
B210E	BATTERY VOLTAGE HIGH
B212C	IGNITION RUN/START INPUT CIRCUIT OPEN
B212D	IGNITION RUN ONLY INPUT CIRCUIT OPEN
B2207	OCCUPANT RESTRAINT CONTROLLER INTERNAL 1
B2208	OCCUPANT RESTRAINT CONTROLLER INTERNAL 2
B220B	OCCUPANT RESTRAINT CONTROLLER FIRING STORED ENERGY
B223B	VEHICLE CONFIGURATION MISMATCH
B2255	OCCUPANT RESTRAINT CONTROLLER ROLL OVER FEATURE DISABLE
B222A	VEHICLE LINE MISMATCH
U0002	CAN C BUS OFF PERFORMANCE
U0141	LOST COMMUNICATION WITH FRONT CONTROL MODULE (TIPM)
U0170	LOST COMMUNICATION W/UP-FRONT LEFT SATELLITE ACCELERATION SENSOR
U0171	LOST COMMUNICATION W/UP-FRONT RIGHT SATELLITE ACCELERATION SENSOR
U0172	LOST COMMUNICATION W/LEFT SIDE SATELLITE ACCELERATION SENSOR 1
U0173	LOST COMMUNICATION W/LEFT SIDE SATELLITE ACCELERATION SENSOR 2
U0175	LOST COMMUNICATION W/RIGHT SIDE SATELLITE ACCELERATION

	SENSOR 1
U0176	LOST COMMUNICATION W/RIGHT SIDE SATELLITE ACCELERATION SENSOR 2
U1414	IMPLAUSIBLE/MISSING ECU CONFIGURATION DATA
U1415	IMPLAUSIBLE/MISSING VEHICLE CONFIGURATION DATA

STEERING CONTROL MODULE (SCM) - ELECTRICAL DIAGNOSTICS

DTC	Description
B1489	STEERING WHEEL CONTROL AUDIO SWITCH CIRCUIT
B148A	STEERING WHEEL CONTROL MENU SWITCH CIRCUIT
B148B	STEERING WHEEL CONTROL UP SWITCH CIRCUIT
B148C	STEERING WHEEL CONTROL DOWN SWITCH CIRCUIT
B148D	STEERING WHEEL CONTROL SIDE SWITCH CIRCUIT
B148E	STEERING WHEEL CONTROL [+] SWITCH CIRCUIT
B148F	STEERING WHEEL CONTROL [-] SWITCH CIRCUIT
B1490	STEERING WHEEL CONTROL C/T SWITCH CIRCUIT
B2225	STEERING CONTROL MODULE INTERNAL
B2332	HORN SWITCH INPUT CIRCUIT/PERFORMANCE
C1219	STEERING ANGLE SENSOR ERRATIC PERFORMANCE
P0562	BATTERY VOLTAGE LOW
P0563	BATTERY VOLTAGE HIGH
P0585	SPEED CONTROL MULTIPLEXED SWITCH 1/2 CORRELATION
P1593	SPEED CONTROL SWITCH 1/2 STUCK
U0002	CAN C BUS OFF PERFORMANCE
U0019	CAN B BUS CIRCUIT
U0121	LOST COMMUNICATION WITH ANTI-LOCK BRAKE SYSTEM (ABS) CONTROL MODULE
U0141	LOST COMMUNICATION WITH FRONT CONTROL MODULE (TIPM)
U0155	LOST COMMUNICATION WITH CLUSTER/CCN
U0212	LOST COMMUNICATION WITH STEERING COLUMN CONTROL MODULE
U1109	LOST COMMUNICATION WITH LIN STEERING WHEEL CONTROLS

SUNROOF MODULE (SUNR) - ELECTRICAL DIAGNOSTICS

DTC	Description
B1841	SUNROOF OPEN SWITCH INPUT CIRCUIT HIGH
B1844	SUNROOF CLOSE SWITCH INPUT CIRCUIT HIGH
B1847	SUNROOF VENT SWITCH INPUT CIRCUIT HIGH
B1849	SUNROOF MOTOR CONTROL CIRCUIT/PERFORMANCE (STALLED)

B210A	SYSTEM VOLTAGE LOW
B210B	SYSTEM VOLTAGE HIGH
B210D	BATTERY VOLTAGE LOW
B210E	BATTERY VOLTAGE HIGH
B2227	SUNROOF ECU INTERNAL
U0019	CAN B BUS
U0141	LOST COMMUNICATION WITH FRONT CONTROL MODULE (TIPM)
U0155	LOST COMMUNICATION WITH CLUSTER/CCN

TIRE PRESSURE MODULE (TPM) - ELECTRICAL DIAGNOSTICS

DTC	Description
B2199-16	BATTERY VOLTAGE - CIRCUIT VOLTAGE BELOW THRESHOLD
B2199-17	BATTERY VOLTAGE - CIRCUIT VOLTAGE ABOVE THRESHOLD
B21DD-84	SYSTEM VOLTAGE - SIGNAL VOLTAGE BELOW ALLOWABLE RANGE
B21DD-85	SYSTEM VOLTAGE - SIGNAL ABOVE ALLOWABLE RANGE
C0077-00	LOW TIRE PRESSURE
C1501-96	TIRE PRESSURE SENSOR 1 - INTERNAL COMPONENT FAILURE
C1502-96	TIRE PRESSURE SENSOR 2 - INTERNAL COMPONENT FAILURE
C1503-96	TIRE PRESSURE SENSOR 3 - INTERNAL COMPONENT FAILURE
C1504-96	TIRE PRESSURE SENSOR 4 - INTERNAL COMPONENT FAILURE
C151C-00	TIRE PRESSURE SENSORS MISSING
C151D-00	TIRE PRESSURE SENSOR LOCATION UNDETERMINED
C1580-00	LEFT/RIGHT SIDE TIRE PRESSURE SENSOR LOCATION UNDETERMINED
C1581-00	FRONT/REAR TIRE PRESSURE SENSOR LOCATION UNDETERMINED
C2209-00	TIRE PRESSURE MONITOR INTERNAL
U0001-00	CAN C BUS
U0002-00	CAN C BUS OFF PERFORMANCE
U0100-00	LOST COMMUNICATION WITH ECM/PCM
U0121-00	LOST COMMUNICATION WITH ANTI-LOCK BRAKE MODULE
U0141-00	LOST COMMUNICATION WITH IPM (FCM/TIPM)
U0168-00	LOST COMMUNICATION WITH VEHICLE SECURITY CONTROL MODULE (WIN/WCM)

TOTALLY INTEGRATED POWER MODULE (TIPM) - ELECTRICAL DIAGNOSTICS

DTC	Description
B162B	LEFT LOW BEAM DRIVER CIRCUIT LOW
B162C	LEFT LOW BEAM CONTROL CIRCUIT HIGH

B162F	RIGHT LOW BEAM CONTROL CIRCUIT LOW
B1630	RIGHT LOW BEAM CONTROL CIRCUIT HIGH
B1633	LEFT HI BEAM CONTROL CIRCUIT LOW
B1634	LEFT HI BEAM CONTROL CIRCUIT HIGH
B1637	RIGHT HI BEAM CONTROL CIRCUIT LOW
B1638	RIGHT HI BEAM CONTROL CIRCUIT HIGH
B163B	FRONT LEFT TURN CONTROL CIRCUIT LOW
B163C	FRONT LEFT TURN CONTROL CIRCUIT HIGH
B163F	FRONT RIGHT TURN CONTROL CIRCUIT LOW
B1640	FRONT RIGHT TURN CONTROL CIRCUIT HIGH
B1643	REAR LEFT TURN CONTROL CIRCUIT LOW
B1644	REAR LEFT TURN CONTROL CIRCUIT HIGH
B1647	REAR RIGHT TURN CONTROL CIRCUIT LOW
B1648	REAR RIGHT TURN CONTROL CIRCUIT HIGH
B1659	FRONT FOG LAMP CONTROL CIRCUIT LOW
B165C	PARK LAMP CONTROL CIRCUIT LOW
B165D	PARK LAMP CONTROL CIRCUIT HIGH
B1660	FRONT FOG LAMP CONTROL CIRCUIT HIGH
B1667	REVERSE LAMP CONTROL CIRCUIT LOW
B1668	REVERSE LAMP CONTROL CIRCUIT HIGH
B167A	LEFT FRONT HEADLAMP LIGHT SOURCE CIRCUIT
B167B	RIGHT FRONT HEADLAMP LIGHT SOURCE CIRCUIT
B1820	HOOD AJAR INPUT CIRCUIT HIGH
B2104	IGNITION RUN/START 1 CONTROL CIRCUIT LOW
B2105	IGNITION RUN/START 1 CONTROL CIRCUIT HIGH
B210D	BATTERY VOLTAGE LOW
B210E	BATTERY VOLTAGE HIGH
B211E	IGNITION RUN/ACC/PAD CONTROL CIRCUIT LOW
B211F	IGNITION RUN/ACC/PAD CONTROL CIRCUIT HIGH
B2112	5 VOLT SUPPLY CIRCUIT LOW
B2122	IGNITION RUN CONTROL CIRCUIT LOW
B2123	IGNITION RUN CONTROL CIRCUIT HIGH
B2184	IGNITION UNLOCK RUN/START CONTROL CIRCUIT LOW
B2206	CURRENT VIN MISSING/MISMATCH
B2215	FRONT CONTROL MODULE INTERNAL (TIPM)
B222C	VEHICLE CONFIGURATION NOT PROGRAMMED
B2304	WIPER PARK SWITCH INPUT CIRCUIT LOW
B2305	WIPER PARK SWITCH INPUT CIRCUIT HIGH
B2313	WIPER ON/OFF CONTROL CIRCUIT LOW
B2314	WIPER ON/OFF CONTROL CIRCUIT HIGH
B2315	WIPER ON/OFF CONTROL CIRCUIT OPEN

	WIPER HI/LOW CONTROL CIRCUIT LOW
B2318	WIPER HI/LOW CONTROL CIRCUIT HIGH
B2319	WIPER HI/LOW CONTROL CIRCUIT OPEN
B2328	WASHER FLUID LEVEL SENSOR INPUT CIRCUIT HIGH
B2336	HORN CONTROL CIRCUIT LOW
B2337	HORN CONTROL CIRCUIT HIGH
B2346	WIPER MOTOR LOW SPEED CONTROL CIRCUIT LOW
B2347	WIPER MOTOR LOW SPEED CONTROL CIRCUIT HIGH
B234A	WIPER MOTOR HIGH SPEED CONTROL CIRCUIT LOW
B234B	WIPER MOTOR HIGH SPEED CONTROL CIRCUIT HIGH
C1007	BRAKE FLUID LEVEL CIRCUIT LOW
C1008	BRAKE FLUID LEVEL CIRCUIT HIGH
C1017	RIGHT FRONT WHEEL SPEED SENSOR CIRCUIT LOW
C1018	RIGHT FRONT WHEEL SPEED SENSOR CIRCUIT HIGH
P0072	AMBIENT AIR TEMPERATURE SENSOR CIRCUIT LOW
P0073	AMBIENT AIR TEMPERATURE SENSOR CIRCUIT HIGH
P0480	COOLING FAN 1 CONTROL CIRCUIT
P0481	COOLING FAN 2 CONTROL CIRCUIT
P0532	A/C PRESSURE SENSOR CIRCUIT LOW
P0533	A/C PRESSURE SENSOR CIRCUIT HIGH
P0616	STARTER CONTROL CIRCUIT LOW
P0646	A/C CLUTCH CONTROL CIRCUIT 2 LOW
P0647	A/C CLUTCH CONTROL CIRCUIT 2 HIGH
P0688	ASD/MAIN SENSE CIRCUIT
P0691	COOLING FAN 1 CONTROL CIRCUIT LOW
P0692	COOLING FAN 1 CONTROL CIRCUIT HIGH
P0693	COOLING FAN 2 CONTROL CIRCUIT LOW
P0694	COOLING FAN 2 CONTROL CIRCUIT HIGH
P0886	TCM POWER CONTROL CIRCUIT LOW
P0887	TCM POWER CONTROL CIRCUIT HIGH
U0001	CAN C BUS
U0002	CAN C BUS OFF PERFORMANCE
U0019	CAN B BUS
U0021	CAN B BUS (+) CIRCUIT OPEN
U0022	CAN B BUS (+) CIRCUIT LOW
U0023	CAN B BUS (+) CIRCUIT HIGH
U0024	CAN B BUS (-) CIRCUIT OPEN
U0025	CAN B BUS (-) CIRCUIT LOW
U0026	CAN B BUS (-) CIRCUIT HIGH
U0100	LOST COMMUNICATION WITH ECM/PCM
U0101	LOST COMMUNICATION WITH TCM

	LOST COMMUNICATION WITH ELECTRIC GEAR SHIFT MODULE
U0121	LOST COMMUNICATION WITH ANTI-LOCK BRAKE MODULE
U0127	LOST COMMUNICATION WITH TIRE PRESSURE MONITOR MODULE
U0141	LOST COMMUNICATION WITH TOTALLY INTEGRATED POWER MODULE (TIPM)
U0151	LOST COMMUNICATION WITH OCCUPANT RESTRAINT CONTROLLER (ORC)
U0155	LOST COMMUNICATION WITH CLUSTER/CCN
U11A2	LOST COMMUNICATION WITH PASSIVE ENTRY MODULE
U0156	LOST COMMUNICATION WITH EOM (ELECTRONIC OVERHEAD MODULE)
U0164	LOST COMMUNICATION WITH HVAC CONTROL MODULE
U0168	LOST COMMUNICATION WITH VEHICLE SECURITY CONTROL MODULE (WIN)
U0169	LOST COMMUNICATION WITH SUNROOF CONTROL MODULE (SUNR)
U0184	LOST COMMUNICATION WITH RADIO
U0186	LOST COMMUNICATION WITH AUDIO AMPLIFIER
U0197	LOST COMMUNICATION WITH HANDS FREE PHONE MODULE (HFM)
U0203	LOST COMMUNICATION WITH DOOR MODULE FRONT LEFT
U0204	LOST COMMUNICATION WITH DOOR MODULE FRONT RIGHT
U0208	LOST COMMUNICATION WITH HEATED SEAT CONTROL MODULE (HSM)
U0212	LOST COMMUNICATION WITH SCCM - CAN B
U1105	CAN B SIGNAL MISSING
U1106	CAN C SIGNAL MISSING
U1107	ECU IN SINGLE-WIRE MODE
U1108	ADDITIONAL CAN B ECU DETECTED
U110A	LOST COMMUNICATION WITH SCCM - CAN C
U1145	LOST COMMUNICATION WITH KEYLESS GO SECURITY MODULE
U1148	ADDITIONAL CAN C BUS ECU DETECTED

TRANSMISSION CONTROL MODULE (TCM) - ELECTRICAL DIAGNOSTICS

DTC	**Description**
P0219	ENGINE OVERSPEED
P0501	VEHICLE SPEED SENSOR 1 PERFORMANCE
P0562	BATTERY VOLTAGE LOW
P0563	BATTERY VOLTAGE HIGH
P0601	INTERNAL MEMORY CHECKSUM INVALID
P0602	CONTROL MODULE PROGRAMMING ERROR/NOT PROGRAMMED
P0604	INTERNAL CONTROL MODULE RAM

P0605	INTERNAL CONTROL MODULE ROM
P0613	INTERNAL TRANSMISSION PROCESSOR
P0614	ECM/TCM INCOMPATIBLE
P0642	SENSOR REFERENCE VOLTAGE 1 CIRCUIT LOW
P0643	SENSOR REFERENCE VOLTAGE 1 CIRCUIT HIGH
P0657	SOLENOID SUPPLY VOLTAGE CIRCUIT
P0710	TRANSMISSION TEMPERATURE SENSOR CIRCUIT
P0712	TRANSMISSION TEMPERATURE SENSOR LOW
P0714	TRANSMISSION TEMPERATURE SENSOR INTERMITTENT
P0717	INPUT SPEED SENSOR 1 CIRCUIT NO SIGNAL
P0730	INCORRECT GEAR RATIO
P0731	GEAR RATIO ERROR IN 1ST
P0732	GEAR RATIO ERROR IN 2ND
P0733	GEAR RATIO ERROR IN 3RD
P0734	GEAR RATIO ERROR IN 4TH
P0735	GEAR RATIO ERROR IN 5TH
P0741	TORQUE CONVERTER CLUTCH CIRCUIT PERFORMANCE
P0742	TORQUE CONVERTER CLUTCH STUCK ON
P0743	TCC SOLENOID CIRCUIT
P0748	MODULATOR PRESSURE SOLENOID CIRCUIT
P0752	1-2/4-5 SOLENOID
P0753	1-2/4-5 SOLENOID CIRCUIT
P0757	2-3 SOLENOID
P0758	2-3 SOLENOID CIRCUIT
P0762	3-4 SOLENOID
P0763	3-4 SOLENOID CIRCUIT
P0778	SHIFT PRESSURE SOLENOID CIRCUIT
P0817	STARTER DISABLE (P/N) CIRCUIT/OPEN
P1629	TCM INTERNAL - SOLENOID SUPPLY/WATCHDOG
P1631	TCM INTERNAL- PROCESSOR CLOCK PERFORMANCE
P1632	TCM INTERNAL - TEST INTERNAL WATCHDOG PERFORMANCE
P1633	TCM INTERNAL - TEST EXTERNAL WATCHDOG PERFORMANCE
P1634	TCM INTERNAL- INTERNAL WATCHDOG PERFORMANCE
P1636	TCM INTERNAL- EXTERNAL WATCHDOG PERFORMANCE
P1637	TCM INTERNAL-EEPROM PERFORMANCE
P1638	TCM INTERNAL-CAN 1 RAM PERFORMANCE
P1639	TCM INTERNAL-CAN 2 RAM PERFORMANCE
P1644	INCORRECT VARIANT/CONFIGURATION
P1704	INPUT SPEED SENSOR 1 OVERSPEED
P1705	INPUT SPEED SENSOR 2 OVERSPEED
P1731	INCORRECT GEAR ENGAGED

	TORQUE MANAGEMENT FEEDBACK SIGNAL PERFORMANCE
P2767	INPUT SPEED SENSOR 2 CIRCUIT NO SIGNAL
P2783	TORQUE CONVERTER TEMPERATURE TOO HIGH
P2784	INPUT SPEED SENSOR 1/2 CORRELATION
U0002	CAN C BUS OFF PERFORMANCE
U0100	LOST COMMUNICATION WITH ECM/PCM
U0103	LOST COMMUNICATION WITH ELECTRIC GEAR SHIFT MODULE
U0121	LOST COMMUNICATION WITH ANTI-LOCK BRAKE MODULE
U0141	LOST COMMUNICATION WITH FRONT CONTROL MODULE
U0155	LOST COMMUNICATION WITH CLUSTER/CCN
U0164	LOST COMMUNICATION WITH HVAC CONTROL MODULE
U0401	IMPLAUSIBLE DATA RECEIVED FROM ECM/PCM
U0404	IMPLAUSIBLE DATA RECEIVED FROM ESM
U0414	IMPLAUSIBLE DATA RECEIVED FROM FDCM
U0415	IMPLAUSIBLE DATA RECEIVED FROM ABS
U0423	IMPLAUSIBLE DATA RECEIVED FROM CLUSTER/CCN
U0424	IMPLAUSIBLE DATA RECEIVED FROM HVAC CONTROL MODULE
U0431	IMPLAUSIBLE DATA FROM TIPM
U110B	LOST ENGINE COOLANT MESSAGE
U1118	LOST ENGINE MESSAGE
U1119	LOST TIPM MESSAGE
U1400	IMPLAUSIBLE TPS SIGNAL RECEIVED
U1401	IMPLAUSIBLE ENGINE SPEED SIGNAL RECEIVED
U1402	IMPLAUSIBLE ENGINE TEMPERATURE SIGNAL RECEIVED
U1404	IMPLAUSIBLE STATIC ENGINE TORQUE SIGNAL RECEIVED
U1405	IMPLAUSIBLE MINIMUM ENGINE TORQUE SIGNAL RECEIVED
U1406	IMPLAUSIBLE MAXIMUM ENGINE TORQUE SIGNAL RECEIVED
U1407	IMPLAUSIBLE ENGINE TORQUE REQUEST SIGNAL RECEIVED
U1408	IMPLAUSIBLE BRAKE SIGNAL RECEIVED
U1409	IMPLAUSIBLE LEFT FRONT WHEEL SPEED SIGNAL RECEIVED
U140A	IMPLAUSIBLE RIGHT FRONT WHEEL SPEED SIGNAL RECEIVED
U140B	IMPLAUSIBLE LEFT REAR WHEEL SPEED SIGNAL RECEIVED
U140C	IMPLAUSIBLE RIGHT REAR WHEEL SPEED SIGNAL RECEIVED
U140D	IMPLAUSIBLE WHEEL SPEED SIGNALS RECEIVED
U140F	IMPLAUSIBLE ENGINE VARIANT DATA
U1410	IMPLAUSIBLE/MISSING FCM VARIANT DATA
U1505	IMPLAUSIBLE MESSAGE DATA LENGTH RECEIVED FROM FDCM
U1507	IMPLAUSIBLE ENGINE TEMPERATURE MESSAGE DATA LENGTH RECEIVED
U1508	IMPLAUSIBLE MESSAGE DATA LENGTH RECEIVED FROM ESM
U1509	IMPLAUSIBLE ENGINE VARIANT MESSAGE DATA LENGTH RECEIVED

U150A	IMPLAUSIBLE TIPM VARIANT MESSAGE DATA LENGTH RECEIVED

WIRELESS IGNITION MODULE (WIN) - ELECTRICAL DIAGNOSTICS

DTC	Description
B1A08	RKE FOB 1 PERFORMANCE
B1A09	RKE FOB 2 PERFORMANCE
B1A0A	RKE FOB 3 PERFORMANCE
B1A0B	RKE FOB 4 PERFORMANCE
B1A0C	RKE FOB 5 PERFORMANCE
B1A0D	RKE FOB 6 PERFORMANCE
B1A0E	RKE FOB 7 PERFORMANCE
B1A0F	RKE FOB 8 PERFORMANCE
B1A10	RKE FOB 1 BATTERY LOW
B1A11	RKE FOB 2 BATTERY LOW
B1A12	RKE FOB 3 BATTERY LOW
B1A13	RKE FOB 4 BATTERY LOW
B1A14	RKE FOB 5 BATTERY LOW
B1A15	RKE FOB 6 BATTERY LOW
B1A16	RKE FOB 7 BATTERY LOW
B1A17	RKE FOB 8 BATTERY LOW
B1A24	KEY NOT PROGRAMMED
B1A25	INVALID KEY
B1A26	MAXIMUM NUMBER OF KEYS PROGRAMMED
B1A27	WIN PROGRAMMING PERFORMANCE
B1A28	ECM MISMATCH WITH SKIM
B1A29	SKIM BASESTATION MISMATCH
B1A2A	KEY 1 COMMUNICATION ERROR
B1A2B	KEY 2 COMMUNICATION ERROR
B1A2C	KEY 3 COMMUNICATION ERROR
B1A2D	KEY 4 COMMUNICATION ERROR
B1A2E	KEY 5 COMMUNICATION ERROR
B1A2F	KEY 6 COMMUNICATION ERROR
B1A30	KEY 7 COMMUNICATION ERROR
B1A31	KEY 8 COMMUNICATION ERROR
B1A35	UNIDENTIFIED KEY COMMUNICATION ERROR
B2101	IGNITION RUN/START INPUT LOW
B2102	IGNITION RUN/START INPUT HIGH
B210D	BATTERY VOLTAGE LOW
B210E	BATTERY VOLTAGE HIGH
B2204	ECU CONFIGURATION MISMATCH

B2205	ORIGINAL VIN MISSING/MISMATCH
B2224	SKREEM INTERNAL
B2228	WIN INTERNAL - RKE RECEIVER
B2229	SKREEM INTERNAL - SKIM IMMOBILIZER
C0077-00	LOW TIRE PRESSURE
C1501-96	TIRE PRESSURE MONITORING (TPM) SENSOR 1 INTERNAL
C1502-96	TIRE PRESSURE SENSOR 2 INTERNAL
C1503-96	TIRE PRESSURE SENSOR 3 INTERNAL
C1504-96	TIRE PRESSURE SENSOR 4 INTERNAL
P0928	BTSI CONTROL CIRCUIT
U1197	SECURITY SEED RESPONSE NOT RECEIVED FROM ECM/PCM

CHRYSLER

Challenger, Charger & 300

BUZZERS, RELAYS & TIMERS

BUZZERS, RELAYS & TIMERS LOCATION

Component	Location
ACCESSORY DELAY Relay	Power distribution center. See **Fig. 75**.
AUTO SHUT DOWN Relay	Totally integrated power module. See **Fig. 74**.
BRAKE LAMP Relay	Power distribution center. See **Fig. 75**.
DRIVE TRAIN CONTROL Relay	Power distribution center. See **Fig. 75**.
FUEL PUMP Relay	Power distribution center. See **Fig. 75**.
Headlamp Washer Relay (HID Lamps)	Below right front light housing. See **Fig. 47**.
POLICE No. 1 Relay	Fuse/relay block. See **Fig. 42**.
POLICE No. 2 Relay	Fuse/relay block. See **Fig. 42**.
POLICE No. 3 Relay	Fuse/relay block. See **Fig. 42**.
RADIATOR FAN CONTROL Relay	Totally integrated power module. See **Fig. 74**.
RADIATOR FAN HIGH/LOW CONTROL Relay	Totally integrated power module. See **Fig. 74**.
RADIATOR FAN HIGH Relay	Totally integrated power module. See **Fig. 74**.
REAR HEATED SEATS Relay	Power distribution center. See **Fig. 75**.
REAR WINDOW DEFOGGER Relay	Power distribution center. See **Fig. 75**.
REAR WIPER Relay	Integrated power module. See **Fig. 75**.
RUN Relay	Power distribution center. See **Fig. 75**.
RUN/START Relay	Totally integrated power module. See **Fig. 74**.
STARTER Relay	Totally integrated power module. See **Fig. 74**.
TRANSMISSION Relay (NAG1)	Power distribution center. See **Fig. 75**.
WIPER HIGH/LOW Relay	Totally integrated power module. See **Fig. 74**.
WIPER ON/OFF Relay	Totally integrated power module. See **Fig. 74**.

CIRCUIT PROTECTION DEVICES

CIRCUIT PROTECTION DEVICES LOCATION

Component	Location
Circuit Breaker No. 1	Power distribution center. See **Fig. 75**.
Circuit Breaker No. 2	Power distribution center. See **Fig. 75**.
Circuit Breaker No. 3	Power distribution center. See **Fig. 75**.
Fuse Relay Block-Police	Right kick panel. See **Fig. 56**.
Integrated Power Module	Right side of engine compartment. See **Fig. 3**.
Power Distribution Center (Except Magnum)	Right rear of trunk. See **Fig. 34**.
Power Distribution Center (Magnum)	Right rear of trunk. See **Fig. 63**.

CONTROL UNITS

CONTROL UNITS LOCATION

Component	Location
Adaptive Cruise Control Module	Left grille. See **Fig. 44**.
Analog Clock Module	Top center of dash. See **Fig. 20**.
Antilock Brakes Module	Right front of engine compartment. See **Fig. 49**.
Brake Module (Trailer Tow)	Left kick panel. See **Fig. 55**.
Driver Door Module	Middle of driver door. See **Fig. 26**.
Electrohydraulic Control Unit Assembly (NAG1)	Right side of transmission. See **Fig. 50**.
Electronic Overhead Module	Overhead console. See **Fig. 30**.
Electronic Shift Module	Bottom of steering column. See **Fig. 18**.
Front Blower Power Module (ATC)	Center of HVAC unit. See **Fig. 38**.
Hands Free Module	Right side of dash. See **Fig. 53**.
Heated Seats Module	Below passenger seat. See **Fig. 56**.
Interface-Police/Taxi Module	In mini-console. See **Fig. 54**.
Memory Seat Module	Below driver seat. See **Fig. 55**.
Occupant Restraint Controller Module	In center console. See **Fig. 53**.
Park Assist Module	Right rear seat. See **Fig. 34**.
Passenger Door Module	Middle of passenger door.
Powertrain Control Module	Right rear of engine compartment. See **Fig. 50**.
Satellite Video Module	Audio-video jumper.
Steering Control Module	Steering column. See **Fig. 53**.
Tire Pressure Monitoring Module	Behind right rear wheelhouse splash shield. See **Fig. 60**.
Totally Integrated Power Module	Right side of engine compartment.
Transmission Control Module (NAG1)	Below steering column. See **Fig. 55**.
Video Screen Module	In console.
Wireless Control Module	Steering column.

MOTORS

MOTORS LOCATION

Component	Location
Adjustable Pedals Motor	Adjustable pedals assembly. See **Fig. 56**.
Blend Door Actuator-Left	Left side of HVAC unit. See **Fig. 15**.
Blend Door Actuator-Right (ATC)	Center of HVAC unit. See **Fig. 38**.
Blower Motor	Right side of HVAC unit. See **Fig. 14**.
Door Latch-Decklid (LX48)	Deck lid latch. See **Fig. 64**.
Door Latch-Left Rear	Rear of left rear door.

Door Latch-Liftgate (LX49)	Liftgate latch.
Door Latch-Right Rear	Rear of right rear door. See **Fig. 27**.
Driver Horizontal Seat Adjuster Motor	Below driver seat. See **Fig. 24**.
Driver Recliner Seat Adjuster Motor (Except Memory)	Driver seat back.
Driver Recliner Seat Adjuster Motor (Memory)	Below driver seat.
Front Driver Vertical Seat Adjuster Motor	Below driver seat. See **Fig. 24**.
Front Passenger Vertical Seat Adjuster Motor	Front passenger seat. See **Fig. 57**.
Fuel Pump Module	Top of fuel tank. See **Fig. 25**.
Headlamp Washer Motor (HID Lamps)	Right front bumper. See **Fig. 47**.
Left Front Express Window Motor (Except Base)	In middle of driver door. See **Fig. 26**.
Left Front Window Motor (Base)	In middle of driver door. See **Fig. 26**.
Left Rear Window Motor	In middle of left rear door.
Mode Door Actuator	Left side of HVAC unit. See **Fig. 15**.
Passenger Seat Horizontal Adjuster Motor	Below passenger seat. See **Fig. 57**.
Rear Driver Vertical Seat Adjuster Motor	Rear of driver seat.
Rear Passenger Vertical Seat Adjuster Motor	Below passenger seat. See **Fig. 57**.
Recirculation Door Actuator	Right side of HVAC unit. See **Fig. 14**.
Right Front Express Window Motor (Except Base)	In middle of passenger door.
Right Front Window Motor (Base)	In middle of passenger door.
Right Rear Window Motor	Middle of right rear door. See **Fig. 27**.
Starter AWD (5.7L)	Left rear of engine. See **Fig. 12**.
Starter RWD (5.7L)	Right rear of engine. See **Fig. 12**.
Starter (2.7L)	Left rear side of engine. See **Fig. 6**.
Starter (3.5L)	Left rear side of engine. See **Fig. 9**.
Starter (6.1L)	Right rear of engine. See **Fig. 40**.
Steering Telescope Motor	Steering column. See **Fig. 53**.
Steering Tilt Motor	Steering column. See **Fig. 53**.
Sunroof Motor/Module	Rear center of headliner. See **Fig. 31**.
Windshield Washer Pump	Right front of engine compartment. See **Fig. 47**.
Wiper Motor-Front	Left rear of engine compartment. See **Fig. 51**.
Wiper Motor-Rear (LX49)	Rear deck lid. See **Fig. 65**.

SENDING UNITS & SENSORS

SENDING UNITS & SENSORS LOCATION

Component	Location
ABS Wheel Speed Sensor-Left Front	Left front wheel well. See **Fig. 2**.

ABS Wheel Speed Sensor-Right Front	Right front wheel well. See **Fig. 49**.
Accelerator Pedal Position Sensor	Adjustable pedal assembly. See **Fig. 56**.
A/C Pressure Transducer	Left rear of engine compartment. See **Fig. 51**.
Adjustable Pedals Sensor	Adjustable pedal assembly. See **Fig. 55**.
Ambient Air Temperature Sensor	Right front of engine compartment. See **Fig. 1**.
Brake Fluid Level Sensor	Left rear of engine compartment. See **Fig. 51**.
Camshaft Position Sensor (2.7L & 3.5L)	Top front of engine. See **Fig. 7**.
Camshaft Position Sensor (5.7L)	Top right front of engine. See **Fig. 72**.
Camshaft Position Sensor (6.1L)	Top right front of engine.
Crankshaft Position Sensor (2.7L)	Right rear of engine. See **Fig. 5**.
Crankshaft Position Sensor (3.5L)	Right rear of engine. See **Fig. 8**.
Crankshaft Position Sensor (5.7L)	Right rear of engine. See **Fig. 12**.
Crankshaft Position Sensor (6.1L)	Right rear of engine.
Driver Seat Track Position Sensor	Below driver seat. See **Fig. 55**.
Dynamics Sensor (ESP)	Center console. See **Fig. 56**.
Engine Coolant Temperature Sensor (2.7L & 3.5L)	Front of engine. See **Fig. 7**.
Engine Coolant Temperature Sensor (6.1L)	Left front of engine.
Evaporator Temperature Sensor	Center of HVAC unit. See **Fig. 38**.
Exhaust Gas Recirculation Valve Assembly (2.7L)	Rear of engine. See **Fig. 5**.
Exhaust Gas Recirculation Valve Assembly (3.5L)	Rear of engine. See **Fig. 8**.
Exhaust Gas Recirculation Valve Assembly (5.7L)	Right front of engine. See **Fig. 11**.
Front Washer Fluid Level Sensor	Right front of engine compartment. See **Fig. 47**.
Fuel Pump Module	Top of fuel tank. See **Fig. 25**.
Inlet Air Temperature Sensor (2.7L)	Top of engine. See **Fig. 6**.
Inlet Air Temperature Sensor (3.5L)	Top of engine. See **Fig. 9**.
Inlet Air Temperature Sensor (5.7L)	Top front of engine. See **Fig. 72**.
Inlet Air Temperature Sensor (6.1L)	Top front of engine. See **Fig. 70**.
Input Speed Sensor (2.7L)	Right side of transmission. See **Fig. 5**.
Input Speed Sensor (3.5L)	Right side of transmission. See **Fig. 8**.
Knock Sensor No. 1 (2.7L)	Rear of engine. See **Fig. 6**.
Knock Sensor No. 1 (3.5L)	Left rear of engine. See **Fig. 73**.
Knock Sensor No. 1 (5.7L)	Rear of engine. See **Fig. 13**.
Knock Sensor No. 1 (6.1L SRT8)	Lower left rear of engine. See **Fig. 41**.
Knock Sensor No. 2 (5.7L)	Right rear of engine. See **Fig. 12**.
Knock Sensor No. 2 (6.1L)	Lower right rear of engine. See **Fig. 40**.
Left Front Impact Sensor	Left front of engine compartment. See **Fig. 2**.

Left Side Impact Sensor 1	Left "B" pillar. See **Fig. 25**.
Left Side Impact Sensor 2	Rear of left rear door. See **Fig. 28**.
Manifold Absolute Pressure Sensor (2.7L)	Top of engine. See **Fig. 6**.
Manifold Absolute Pressure Sensor (3.5L)	Top of engine. See **Fig. 9**.
Manifold Absolute Pressure Sensor (5.7L)	Top of engine. See **Fig. 13**.
Manifold Absolute Pressure Sensor (6.1L)	Top rear of intake manifold. See **Fig. 40**.
Oil Pressure Sensor (5.7L)	Right front of engine. See **Fig. 72**.
Oil Pressure Sensor (6.1L)	Lower right front of engine. See **Fig. 40**.
Oil Temperature Sensor (5.7L)	Right front of engine. See **Fig. 72**.
Oil Temperature Sensor (6.1L)	Right rear of engine. See **Fig. 40**.
Output Speed Sensor (2.7L)	Right side of transmission. See **Fig. 5**.
Output Speed Sensor (3.5L)	Right side of transmission. See **Fig. 8**.
Oxygen Sensor 1/1 (2.7L)	Right rear of engine. See **Fig. 71**.
Oxygen Sensor 1/1 (3.5L)	Right rear of engine. See **Fig. 46**.
Oxygen Sensor 1/1 (5.7L)	Left rear of engine. See **Fig. 12**.
Oxygen Sensor 1/1 (6.1L)	Left rear of engine. See **Fig. 70**.
Oxygen Sensor 1/2	Left rear of engine. See **Fig. 52**.
Oxygen Sensor 2/1 (2.7L)	Left side of engine. See **Fig. 5**.
Oxygen Sensor 2/1 (3.5L)	Left side of engine. See **Fig. 9**.
Oxygen Sensor 2/1 (5.7L)	Right side of engine. See **Fig. 12**.
Oxygen Sensor 2/1 (6.1L)	Left rear of engine. See **Fig. 71**.
Oxygen Sensor 2/2	Lower rear of engine. See **Fig. 52**.
Park Assist Sensor No. 7	Right rear fascia. See **Fig. 37**.
Park Assist Sensor No. 8	Right rear fascia. See **Fig. 37**.
Park Assist Sensor No. 9	Left rear fascia. See **Fig. 37**.
Park Assist Sensor No. 10	Left rear fascia. See **Fig. 37**.
Passenger Seat Track Position Sensor	Right side of passenger seat. See **Fig. 56**.
Rain Sensor (Auto Wipers)	Inside rearview mirror. See **Fig. 22**.
Rear ABS Wheel Speed Sensor (Magnum)	Right front of cargo pan. See **Fig. 29**.
Right Front Impact Sensor	Right front of engine compartment. See **Fig. 48**.
Right Front Wheel Speed Sensor (Except ABS)	Right front wheel well. See **Fig. 49**.
Right Side Impact Sensor 1	Right "B" pillar. See **Fig. 59**.
Right Side Impact Sensor 2	Rear of right rear door. See **Fig. 62**.
Shift Lever Position Sensor (Column NAG1)	Steering column.
Sun Sensor	Top center of dash. See **Fig. 53**.
Transmission Range Sensor RLE (2.7L)	Right side of transmission. See **Fig. 5**.
Transmission Range Sensor RLE (3.5L)	Right side of transmission. See **Fig. 8**.

SOLENOIDS & SOLENOID VALVES

SOLENOIDS & SOLENOID VALVES LOCATION

Component	Location
Assembly-Line Pressure Sensor/Variable Force Solenoid	Rear of engine compartment. See **Fig. 73**.
Evaporator Purge Solenoid	Right of engine compartment. See **Fig. 50**.
Exhaust Gas Recirculation Valve Assembly (2.7L)	Rear of engine. See **Fig. 5**.
Exhaust Gas Recirculation Valve Assembly (3.5L)	Rear of engine. See **Fig. 8**.
Exhaust Gas Recirculation Valve Assembly (5.7L)	Right front of engine. See **Fig. 11**.
Fuel Injector No. 1 (2.7L)	Top right front of engine. See **Fig. 69**.
Fuel Injector No. 1 (3.5L)	Top right front of engine.
Fuel Injector No. 1 (5.7L)	Top left front of engine. See **Fig. 13**.
Fuel Injector No. 1 (6.1L)	Left side of intake manifold. See **Fig. 41**.
Fuel Injector No. 2 (2.7L & 3.5L)	Top left front of engine. See **Fig. 6**.
Fuel Injector No. 2 (5.7L)	Top right front of engine. See **Fig. 12**.
Fuel Injector No. 2 (6.1L)	Top right front of engine. See **Fig. 70**.
Fuel Injector No. 3 (2.7L)	Top right of engine. See **Fig. 69**.
Fuel Injector No. 3 (3.5L)	Top right of engine.
Fuel Injector No. 3 (5.7L)	Top left of engine. See **Fig. 13**.
Fuel Injector No. 3 (6.1L)	Left side of intake manifold. See **Fig. 41**.
Fuel Injector No. 4 (2.7L)	Top left of engine. See **Fig. 6**.
Fuel Injector No. 4 (3.5L)	Top left of engine.
Fuel Injector No. 4 (5.7L)	Top right of engine. See **Fig. 12**.
Fuel Injector No. 4 (6.1L)	Top right front of engine. See **Fig. 70**.
Fuel Injector No. 5 (2.7L)	Top right rear of engine. See **Fig. 69**.
Fuel Injector No. 5 (3.5L)	Top right rear of engine.
Fuel Injector No. 5 (5.7L)	Top left rear of engine. See **Fig. 13**.
Fuel Injector No. 5 (6.1L)	Left side of intake manifold. See **Fig. 41**.
Fuel Injector No. 6 (2.7L)	Top left rear of engine. See **Fig. 6**.
Fuel Injector No. 6 (3.5L)	Top left rear of engine.
Fuel Injector No. 6 (5.7L)	Top right rear of engine. See **Fig. 12**.
Fuel Injector No. 6 (6.1L)	Top right rear of engine. See **Fig. 70**.
Fuel Injector No. 7 (5.7L)	Top left rear of engine. See **Fig. 13**.
Fuel Injector No. 7 (6.1L)	Left side of intake manifold. See **Fig. 41**.
Fuel Injector No. 8 (5.7L)	Top right rear of engine. See **Fig. 12**.
Fuel Injector No. 8 (6.1L)	Top right rear of engine. See **Fig. 70**.
Line Pressure Sensor/Variable Force Solenoid (RLE)	Transmission.
Multi Displacement System Solenoid (Cyl 1) (5.7L MDS)	Top center of engine. See **Fig. 66**.

Multi Displacement System Solenoid (Cyl 4) (5.7L MDS)	Top center of engine. See **Fig. 66**.
Multi Displacement System Solenoid (Cyl 6) (5.7L MDS)	Top center of engine. See **Fig. 66**.
Multi Displacement System Solenoid (Cyl 7) (5.7L MDS)	Top center of engine. See **Fig. 66**.
Short Runner Valve Solenoid (3.5L)	Top of engine. See **Fig. 7**.
Variable Cam Timing Solenoid	Top center of engine. See **Fig. 66**.

SWITCHES

SWITCHES LOCATION

Component	Location
Door Latch-Decklid (LX48)	Deck lid latch. See **Fig. 64**.
Door Latch-Left Front	Driver door. See **Fig. 26**.
Door Latch-Left Rear	Rear of left rear door.
Door Latch-Liftgate	Liftgate latch.
Door Latch-Right Front	Right front door.
Door Latch-Right Rear	Rear of right rear door. See **Fig. 27**.
EVAP System Monitor Switch	Right rear of wheel well. See **Fig. 62**.
Hood Ajar-Switch	Right side of engine compartment. See **Fig. 4**.
Liftgate Release Switch (Magnum)	Left rear liftgate. See **Fig. 65**.
Oil Pressure Switch (2.7L)	Rear of engine. See **Fig. 71**.
Oil Pressure Switch (3.5L)	Lower left front of engine. See **Fig. 73**.
Parking Brake Switch	Base of parking brake. See **Fig. 55**.
Stop Lamp Switch	Base of brake pedal. See **Fig. 55**.
Transmission Solenoid/Pressure Switch Assembly (2.7L) (RLE)	Top of transmission.
Transmission Solenoid/Pressure Switch Assembly (3.5L) (RLE)	Top of transmission.

MISCELLANEOUS

MISCELLANEOUS LOCATION

Component	Location
A/C Compressor Clutch (2.7L)	Front of engine. See **Fig. 6**.
A/C Compressor Clutch (3.5L)	Front of engine.
A/C Compressor Clutch (5.7L)	Front of engine.
A/C Compressor Clutch (6.1L)	Front of engine. See **Fig. 41**.
Data Link Connector	Left side of dash, above pedals. See **Fig. 53**.
Diode No. 1 (NAG1)	Power distribution center. See **Fig. 75**.
Diode No. 2	Power distribution center. See **Fig. 75**.

Driver Airbag Squib 1	Steering wheel. See **Fig. 17**.
Driver Airbag Squib 2	Steering wheel. See **Fig. 17**.
Driver Seat Belt Pretensioner	Left "B" pillar. See **Fig. 25**.
Front Blower Motor Resistor Block (MTC)	Center HVAC unit.
Generator (2.7L)	Right front of engine. See **Fig. 5**.
Generator (3.5L)	Right front of engine. See **Fig. 8**.
Generator (5.7L)	Right front of engine. See **Fig. 72**.
Generator (6.1L)	Right front of engine. See **Fig. 40**.
Global Positioning System Antenna (Navigation)	Behind instrument cluster.
Horn No. 1	Right front of engine compartment. See **Fig. 48**.
Horn No. 2	Right front of engine compartment. See **Fig. 48**.
Ignition Capacitor No. 1 (2.7L)	Near breakout for ignition coil no. 5. See **Fig. 69**.
Ignition Capacitor No. 1 (6.1L)	Rear of left engine head. See **Fig. 70**.
Ignition Capacitor No. 2 (2.7L & 5.7L)	Top left of engine. See **Fig. 6**.
Ignition Coil No. 1 (2.7L)	Top right front of engine. See **Fig. 69**.
Ignition Coil No. 1 (3.5L)	Top right front of engine.
Ignition Coil No. 1 (5.7L)	Top left rear of engine. See **Fig. 13**.
Ignition Coil No. 1 (6.1L)	Top right rear of engine. See **Fig. 40**.
Ignition Coil No. 2 (2.7L)	Top left rear of engine. See **Fig. 6**.
Ignition Coil No. 2 (3.5L)	Top left side of engine. See **Fig. 10**.
Ignition Coil No. 2 (5.7L)	Top right rear of engine. See **Fig. 12**.
Ignition Coil No. 2 (6.1L)	Top right front of engine. See **Fig. 70**.
Ignition Coil No. 3 (2.7L)	Top right of engine. See **Fig. 69**.
Ignition Coil No. 3 (3.5L)	Top right of engine.
Ignition Coil No. 3 (5.7L)	Top left rear of engine. See **Fig. 13**.
Ignition Coil No. 3 (6.1L)	Right rear of engine. See **Fig. 40**.
Ignition Coil No. 4 (2.7L)	Top left rear of engine. See **Fig. 6**.
Ignition Coil No. 4 (3.5L)	Top left of engine. See **Fig. 10**.
Ignition Coil No. 4 (5.7L)	Top right of engine. See **Fig. 12**.
Ignition Coil No. 4 (6.1L)	Top right front of engine. See **Fig. 70**.
Ignition Coil No. 5 (2.7L)	Top right rear of engine. See **Fig. 69**.
Ignition Coil No. 5 (3.5L)	Top right rear of engine.
Ignition Coil No. 5 (5.7L)	Top left rear of engine. See **Fig. 13**.
Ignition Coil No. 5 (6.1L)	Right rear of engine. See **Fig. 40**.
Ignition Coil No. 6 (2.7L)	Top left rear of engine. See **Fig. 6**.
Ignition Coil No. 6 (3.5L)	Top left side of engine. See **Fig. 10**.
Ignition Coil No. 6 (5.7L)	Top right rear of engine. See **Fig. 12**.

Ignition Coil No. 6 (6.1L)	Top right rear of engine. See **Fig. 70**.
Ignition Coil No. 7 (5.7L)	Top left rear of engine. See **Fig. 13**.
Ignition Coil No. 7 (6.1L)	Top right rear of engine. See **Fig. 40**.
Ignition Coil No. 8 (5.7L)	Top right rear of engine. See **Fig. 12**.
Ignition Coil No. 8 (6.1L)	Top right rear of engine. See **Fig. 70**.
Left Side Curtain Airbag	Body, behind left rear seat. See **Fig. 28**.
Left Side Thorax Airbag	Driver seat.
Park Assist Display (Parktronics)	Rear center of headliner, above backlite. See **Fig. 30**.
Passenger Airbag Squib	Right side of dash. See **Fig. 53**.
Passenger Seat Belt Pretensioner	Right "B" pillar. See **Fig. 59**.
Radio Amplifier	Left of dash. See **Fig. 16**.
Radio Antenna (Except Magnum)	Upper right backlight. See **Fig. 62**.
Right Side Curtain Airbag	Body, behind right rear seat. See **Fig. 62**.
Right Side Thorax Airbag	Driver seat.
Satellite Antenna No. 1	Left rear of cargo area. See **Fig. 33**.
Satellite Antenna No. 2	Left rear of cargo area. See **Fig. 33**.
Satellite Radio Antenna Cable No. 1	Rear center of headliner. See **Fig. 32**.
Satellite Radio Antenna Cable No. 2	Rear center of headliner. See **Fig. 32**.
Satellite Video Antenna 1	Interior mirror jumper.
Seat Back Heater-Left	Near driver seat back pivot.
Seat Back Heater-Left Rear	Rear seat near left belt. See **Fig. 58**.
Seat Back Heater-Right	Near passenger seat back pivot. See **Fig. 57**.
Seat Back Heater-Right Rear	Rear seat near right belt. See **Fig. 58**.
Seat Cushion Heater-Left	Under driver seat.
Seat Cushion Heater-Right	Under passenger seat. See **Fig. 57**.
Siren	Left front wheel well. See **Fig. 39**.
Subwoofer Amplifier (SRT8)	Center rear shelf. See **Fig. 62**.
Throttle Body (2.7L)	Top of intake manifold. See **Fig. 6**.
Throttle Body (3.5L)	Top of intake manifold. See **Fig. 9**.
Throttle Body (5.7L)	Top of intake manifold. See **Fig. 13**.
Throttle Body (6.1L)	Top of intake manifold. See **Fig. 40**.
Tire Pressure Transponder-Left Front	Left front side of engine compartment. See **Fig. 48**.
Tire Pressure Transponder-Right Front	Right front of engine compartment. See **Fig. 47**.
Tire Pressure Transponder-Right Rear	Right rear wheel well. See **Fig. 62**.
Zener Diode	Power distribution center. See **Fig. 75**.

CONNECTORS

CONNECTORS LOCATION

Component	Location
C100 (2.7L & 3.5L) (Black, 14 Pin)	Right side of engine compartment. See **Fig. 4**.
C100 (6.1L) (Black, 16 Pin)	Right side of engine compartment. See **Fig. 40**.
C101 (5.7L MDS) (Dark Gray, 6 Pin)	Left rear of engine. See **Fig. 13**.
C102 (Light Gray/Black, 43 Pin)	Right side of dash. See **Fig. 53**.
C103 (LX48) (Dark Gray, 6 Pin)	Right front of engine compartment. See **Fig. 47**.
C104 (Black, 43 Pin)	Right side of dash. See **Fig. 56**.
C105 (Brown, 43 Pin)	Right side of dash. See **Fig. 56**.
C107 (6.1L) (Black, 2 Pin)	Top front of engine. See **Fig. 40**.
C200 (Natural/Black, 43 Pin)	Right side of dash. See **Fig. 53**.
C202 (Natural, 16 Pin)	Right side of HVAC unit. See **Fig. 53**.
C203 (Black, 43 Pin)	Left kick panel. See **Fig. 53**.
C204 (Natural, 18 Pin)	Right side of dash. See **Fig. 53**.
C205 (Except Base) (Natural, 18 Pin)	Left side of dash. See **Fig. 53**.
C207 (Black, 2 Pin)	Right side of dash. See **Fig. 53**.
C209 (Yellow, 2 Pin)	Instrument panel to audio/video jumper.
C210 (Satellite Video) (Yellow, 2 Pin)	Audio/video jumper to interior mirror jumper.
C300 (Natural, 24 Pin)	Driver door. See **Fig. 55**.
C301 (Natural, 24 Pin)	Passenger door. See **Fig. 56**.
C302 (Natural, 10 Pin)	Left rear door. See **Fig. 27**.
C303 (Natural, 10 Pin)	Right rear door. See **Fig. 59**.
C304 (LX49) (Light Gray, 6 Pin)	Top front of liftgate. See **Fig. 65**.
C305 (LX49) Light Gray, 6 Pin	Top front of liftgate. See **Fig. 65**.
C306 (Black, 10 Pin)	Right rear body. See **Fig. 63**.
C307 (LX48) (Black, 6 Pin)	Left taillight assembly. See **Fig. 36**.
C308 (LX48) (Black, 6 Pin)	Right taillight assembly. See **Fig. 36**.
C309 (LX49) (Dark Gray, 6 Pin)	Left rear fascia. See **Fig. 43**.
C310 (LX49) (Dark Gray, 6 Pin)	Right rear fascia. See **Fig. 43**.
C311 (Natural, 10 Pin)	Rear of sunroof. See **Fig. 31**.
C313 (Light Gray, 14 Pin)	Below driver seat. See **Fig. 67**.
C314 (Light Gray, 14 Pin)	Below passenger seat. See **Fig. 56**.
C315 (White, 4 Pin)	Left rear of driver's seat. See **Fig. 67**.
C316 (Light Gray, 2 Pin)	Passenger seat. See **Fig. 57**.
C317 (Natural, 26 Pin)	Left kick panel. See **Fig. 61**.
C319 (Rear Heated Seats) (Light Gray, 12 Pin)	Rear of center console. See **Fig. 56**.
C320 (Rear Heated Seats) (Light Gray, 6 Pin)	Under right rear seat. See **Fig. 58**.
C321 (Rear Heated Seats) (Green, 2 Pin)	Under center of rear seat. See **Fig. 58**.
C322 (Yellow, 4 Pin)	Front seat to seat airbag jumper. See **Fig. 55**.
C323 (Yellow, 4 Pin)	Floor, below center console. See **Fig. 56**.

C326 (DVD) (White, 24 Pin)	Left rear body. See **Fig. 61**.

GROUNDS

GROUNDS LOCATION

Component	Location
G100	Left front of engine compartment. See **Fig. 2**.
G101	Right front of engine compartment. See **Fig. 49**.
G102	Right of engine compartment. See **Fig. 49**.
G104 (2.7L)	Right side of engine. See **Fig. 5**.
G104 (3.5L)	Right side of engine. See **Fig. 8**.
G104 (5.7L)	Right side of engine. See **Fig. 12**.
G104 (6.1L)	Top of right cylinder head cover. See **Fig. 40**.
G105 (2.7L & 3.5L)	Engine, near breakout for ignition coil #5.
G105 (5.7L)	Rear of engine. See **Fig. 12**.
G105 (6.1L)	Rear of engine. See **Fig. 40**.
G106 (2.7L)	Left side of engine. See **Fig. 6**.
G106 (3.5L)	Left side of engine. See **Fig. 9**.
G106 (5.7L)	Rear of engine. See **Fig. 12**.
G106 (6.1L)	Left rear of cylinder head. See **Fig. 40**.
G109 (Except 6.1L)	Right shock tower, near purge solenoid. See **Fig. 49**.
G109 (6.1L)	Top of right cylinder head cover. See **Fig. 40**.
G200	Left side of dash, near breakout for ignition switch. See **Fig. 53**.
G201	Right side of dash. See **Fig. 53**.
G202	Left of dash, near breakout for cluster C3. See **Fig. 53**.
G300	Left "B" pillar. See **Fig. 55**.
G301	Right "B" pillar. See **Fig. 56**.
G302	Right front of cargo pan. See **Fig. 29**.
G303	Right rear cargo pan. See **Fig. 35**.
G304	Next to deck lid latch. (LX48). See **Fig. 64**.

SPLICES

SPLICES LOCATION

Component	Location
S100 (2.7L)	Left rear of engine. See **Fig. 6**.
S100 (3.5L)	Left rear of engine. See **Fig. 9**.
S100 (5.7L)	Right rear of engine. See **Fig. 12**.

S100 (6.1L)	Rear of engine. See **Fig. 40**.
S101	Front fascia harness.
S102	Front fascia harness.
S103	Front fascia harness.
S104	Front fascia harness.
S105 (2.7L)	Right rear of engine compartment. See **Fig. 5**.
S105 (3.5L)	Right rear of engine compartment. See **Fig. 8**.
S105 (5.7L)	Right rear of engine compartment.
S105 (6.1L)	Right rear of engine compartment. See **Fig. 40**.
S106 (2.7L)	Right rear of engine compartment. See **Fig. 5**.
S106 (3.5L)	Right rear of engine compartment. See **Fig. 8**.
S106 (5.7L)	Right rear of engine. See **Fig. 12**.
S106 (6.1L)	Right rear of engine compartment. See **Fig. 40**.
S107 (2.7L)	Top of engine. See **Fig. 6**.
S107 (5.7L)	Top of engine. See **Fig. 12**.
S107 (6.1L)	Rear of engine. See **Fig. 40**.
S108 (6.1L)	Right rear top of engine, next to ignition coil #8. See **Fig. 40**.
S108 (2.7L)	Rear of engine. See **Fig. 6**.
S108 (3.5L)	Between breakout for fuel injectors 4 & 6. See **Fig. 10**.
S108 (5.7L)	Top of engine between fuel injectors 5 & 7.
S109 (3.5L)	Right rear of engine. See **Fig. 46**.
S109 (6.1L)	Right rear of engine. See **Fig. 40**.
S110 (2.7L)	Right rear of engine compartment. See **Fig. 5**.
S110 (3.5L)	Right rear of engine compartment. See **Fig. 9**.
S110 (5.7L)	Right rear of engine compartment. See **Fig. 12**.
S110 (6.1L)	Right rear of engine compartment. See **Fig. 40**.
S111 (2.7L)	Left side of engine. See **Fig. 6**.
S111 (5.7L)	Right rear side of engine. See **Fig. 12**.
S111 (6.1L)	Right rear side of engine. See **Fig. 40**.
S112 (2.7L)	Right rear of engine compartment. See **Fig. 5**.
S112 (3.5L)	Right rear of engine compartment. See **Fig. 8**.
S112 (5.7L)	Right rear of engine. See **Fig. 12**.
S112 (6.1L)	Right rear of engine compartment. See **Fig. 40**.
S113	Engine harness. See **Fig. 8**.
S114 (2.7L)	Right rear of engine compartment. See **Fig. 5**.
S114 (3.5L)	Right rear of engine compartment. See **Fig. 8**.
S115 (5.7L)	Right side of engine. See **Fig. 12**.
S115 (6.1L)	Right side of engine. See **Fig. 40**.
S120	Right front of engine compartment. See **Fig.**

	47.
S122	Right side of engine compartment. See **Fig. 49**.
S123	Right front of engine compartment. See **Fig. 49**.
S124	Right side of engine compartment. See **Fig. 49**.
S125	Left rear of engine compartment. See **Fig. 50**.
S126	Right rear of engine compartment. See **Fig. 50**.
S127	Right side of engine compartment. See **Fig. 49**.
S128	Front of engine compartment. See **Fig. 48**.
S130	Right front of engine compartment. See **Fig. 48**.
S131	Front of engine compartment. See **Fig. 49**.
S135	Front of engine compartment. See **Fig. 47**.
S136	Engine harness, at top rear of engine. See **Fig. 66**.
S141 (SRT8)	Right side of dash. See **Fig. 56**.
S142 (6.1L)	Right rear of engine, on fusible link eyelet breakout. See **Fig. 40**.
S143	Right front inner fender well, in breakout to C100. See **Fig. 50**.
S143 (SRT8)	Right front inner fender well. See **Fig. 50**.
S150	Right rear of engine compartment. See **Fig. 4**.
S156	Rear of engine compartment. See **Fig. 50**.
S159	Lower right front of engine compartment. See **Fig. 48**.
S160	Lower right front of engine compartment. See **Fig. 48**.
S161	Lower right front of engine compartment. See **Fig. 48**.
S162	Lower right front of engine compartment. See **Fig. 48**.
S163	Lower right front of engine compartment. See **Fig. 48**.
S164	Lower right front of engine compartment. See **Fig. 48**.
S166	Breakout for TIPM C6. See **Fig. 49**.
S167	Right rear of engine compartment, near grommet to dash. See **Fig. 50**.
S168	Top right of radiator yoke. See **Fig. 48**.
S169	Left rear engine compartment, near grommet to dash. See **Fig. 51**.
S170	Top right of radiator yoke. See **Fig. 48**.
	Left rear of engine compartment, near grommet

S171	to dash. See **Fig. 51**.
S200	Right side of dash. See **Fig. 21**.
S201	Left side of dash. See **Fig. 16**.
S202	Right side of dash. See **Fig. 21**.
S203	Right side of dash. See **Fig. 21**.
S204	Above steering column. See **Fig. 19**.
S205	Above steering column. See **Fig. 19**.
S206	Left side of dash. See **Fig. 19**.
S207	Left side of dash. See **Fig. 19**.
S208	Left side of dash. See **Fig. 16**.
S209	Left side of dash. See **Fig. 16**.
S210	Left side of dash. See **Fig. 19**.
S212	Left side of dash. See **Fig. 19**.
S213	Right side of dash. See **Fig. 21**.
S215	Right side of dash. See **Fig. 21**.
S217	Right side of dash. See **Fig. 21**.
S218	Right side of dash. See **Fig. 21**.
S219	Right side of dash. See **Fig. 21**.
S220	Right side of dash. See **Fig. 21**.
S221	Breakout for left dash panel speaker. See **Fig. 16**.
S222	Breakout for right dash panel speaker. See **Fig. 21**.
S223	Breakout for left dash panel speaker. See **Fig. 16**.
S224	Breakout for right dash speaker. See **Fig. 21**.
S225	Left side of dash. See **Fig. 16**.
S226	Left side of dash. See **Fig. 16**.
S227	Left side of dash. See **Fig. 19**.
S228	Left side of dash. See **Fig. 45**.
S235	Center of dash. See **Fig. 68**.
S236	Left side of dash. See **Fig. 68**.
S237	Center of dash. See **Fig. 68**.
S300 (Except SRT8)	Below right front door. See **Fig. 23**.
S300 (SRT8)	Near breakout for right taillight. See **Fig. 56**.
S302	Body floor, near passenger door. See **Fig. 56**.
S306	Right kick panel. See **Fig. 56**.
S308	Left kick panel. See **Fig. 55**.
S309	Left front body. See **Fig. 55**.
S311	Right kick panel. See **Fig. 56**.
S315	Power distribution center. See **Fig. 63**.

S317	Right kick panel. See **Fig. 56**.
S318	Below right "B" pillar. See **Fig. 56**.
S319	Below right "B" pillar. See **Fig. 59**.
S321	Power distribution center. See **Fig. 63**.
S322	Power distribution center. See **Fig. 63**.
S323	Power distribution center. See **Fig. 63**.
S326	Body harness, below right rear door. See **Fig. 59**.
S328	Below right front door. See **Fig. 56**.
S329	Power distribution center. See **Fig. 63**.
S332	Below driver seat. See **Fig. 24**.
S333	Below driver seat. See **Fig. 24**.
S334	Below passenger seat. See **Fig. 57**.
S335	Below passenger seat. See **Fig. 57**.
S338	Front of headliner. See **Fig. 30**.
S339	Front of headliner. See **Fig. 30**.
S340	Front of headliner. See **Fig. 30**.
S341	Front of headliner. See **Fig. 30**.
S342	Front of headliner. See **Fig. 30**.
S343	Near breakout for inside rearview mirror. See **Fig. 22**.
S344	Right side of rear fascia. See **Fig. 37**.
S345	Right side of rear fascia. See **Fig. 37**.
S346 (Parktronics)	Middle of rear fascia. See **Fig. 37**.
S347 (Parktronics)	Middle of rear fascia. See **Fig. 37**.
S349 (LX49)	Near left side of rear fascia. See **Fig. 37**.
S350	Right taillight assembly. See **Fig. 36**.
S351	Right taillight assembly. See **Fig. 36**.
S352	Left taillight assembly. See **Fig. 36**.
S353	Left taillight assembly. See **Fig. 36**.
S355	Bottom of driver door. See **Fig. 26**.
S356	Bottom of driver door. See **Fig. 26**.
S357	Bottom of driver door. See **Fig. 26**.
S359	Bottom of driver door. See **Fig. 26**.
S360	Bottom of right front door. See **Fig. 26**.
S361	Right side of rear fascia. See **Fig. 37**.
S365	In console harness.
S366	In console harness.
S367	In console harness.
S368	Power distribution center. See **Fig. 63**.
S370	Right rear door.

S371	Left taillight.
S372	Right taillight.
S384	Rear lighting harness.
S386	Left front body. See **Fig. 55**.
S387	Below glove box. See **Fig. 56**.
S388	Power distribution center. See **Fig. 63**.
S389	Power distribution center. See **Fig. 63**.
S390	Center console. See **Fig. 56**.
S391	Center console. See **Fig. 56**.
S392	Audio harness.
S393	Audio harness.
S395	Interior mirror jumper harness.
S396	Interior mirror jumper harness.
S399	Body floor at right front door. See **Fig. 56**.

COMPONENT LOCATION GRAPHICS

NOTE: Figures may show multiple component locations. Refer to appropriate table for proper figure references.

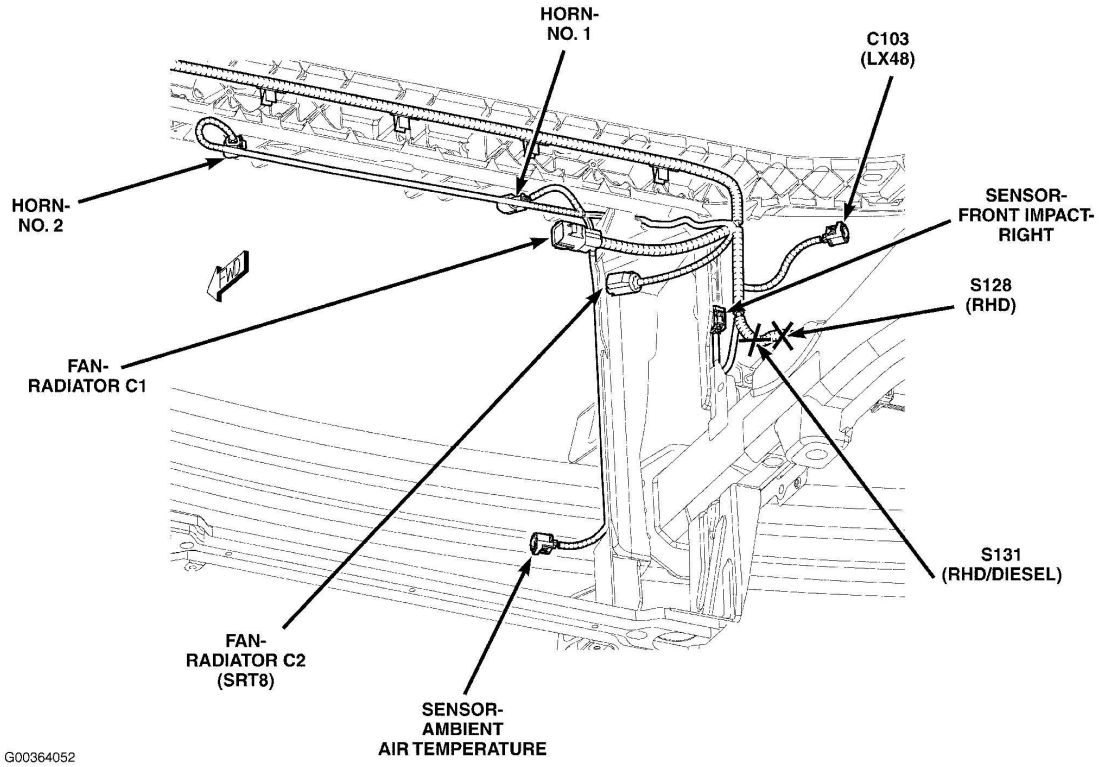

Fig. 1: Right Front Of Engine Compartment

Courtesy of CHRYSLER LLC

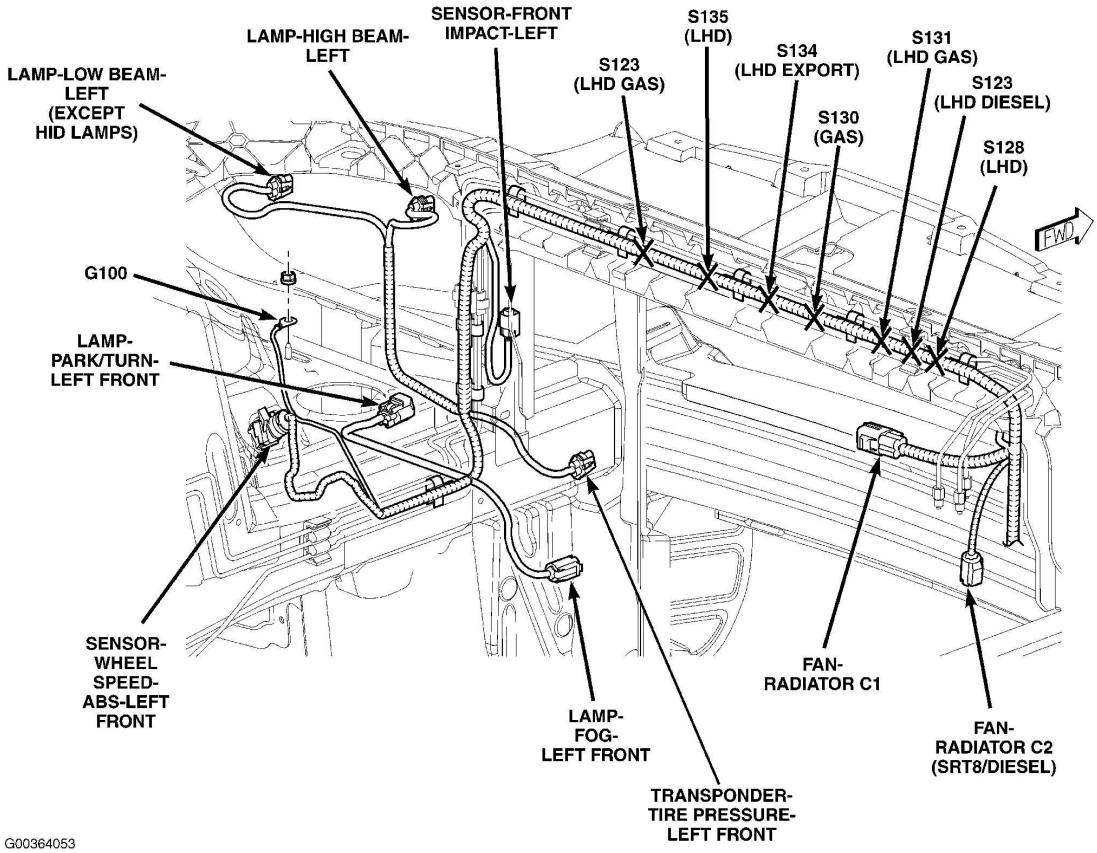

Fig. 2: Front Of Engine Compartment
Courtesy of CHRYSLER LLC

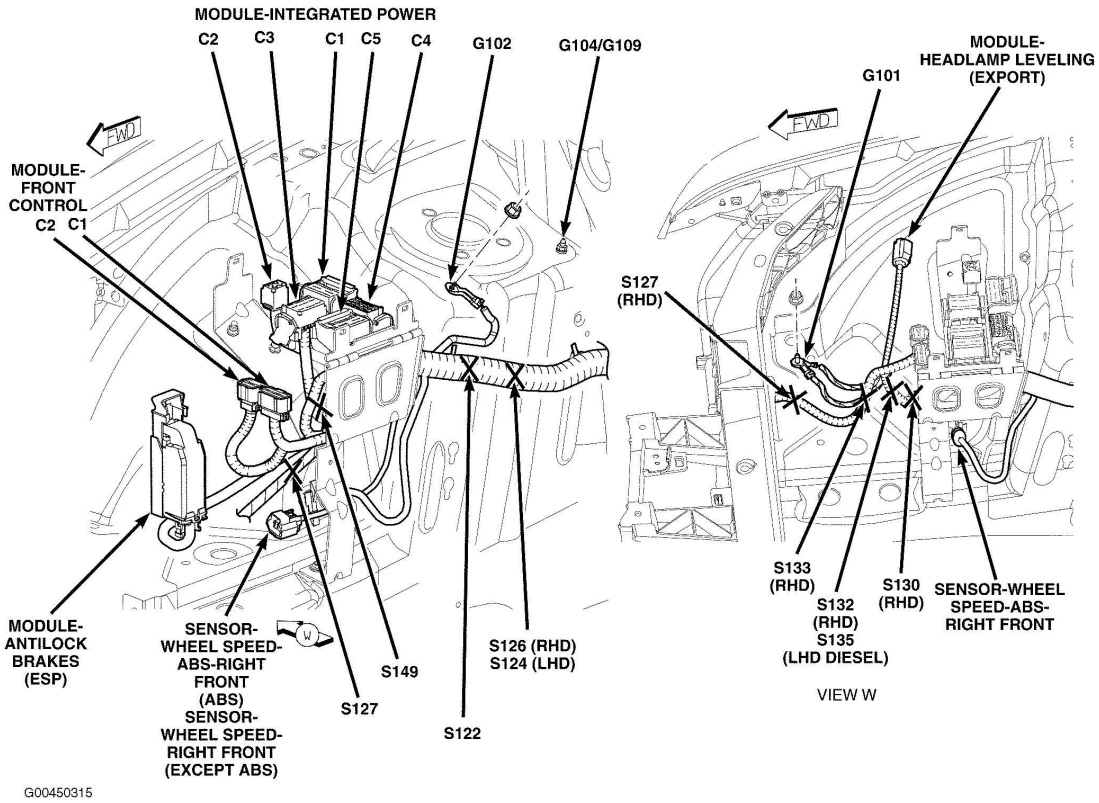

Fig. 3: Right Side Of Engine Compartment
Courtesy of CHRYSLER LLC

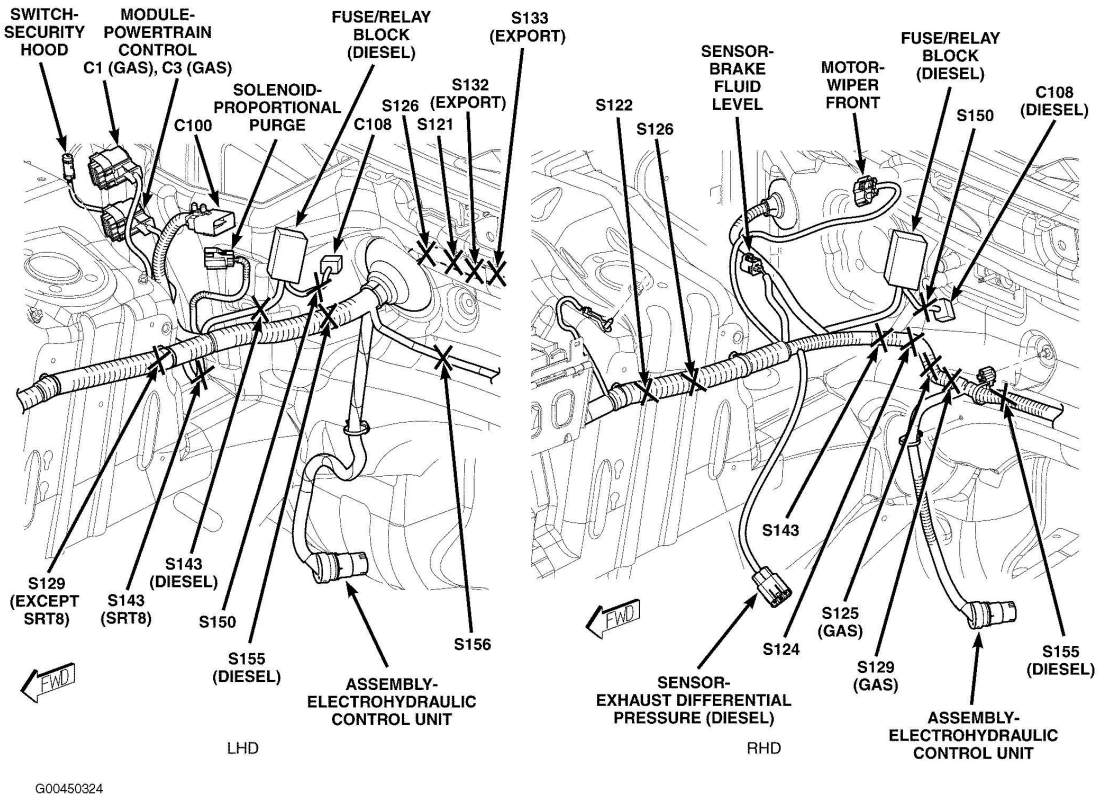

Fig. 4: Right Inner Fender Shield
Courtesy of CHRYSLER LLC

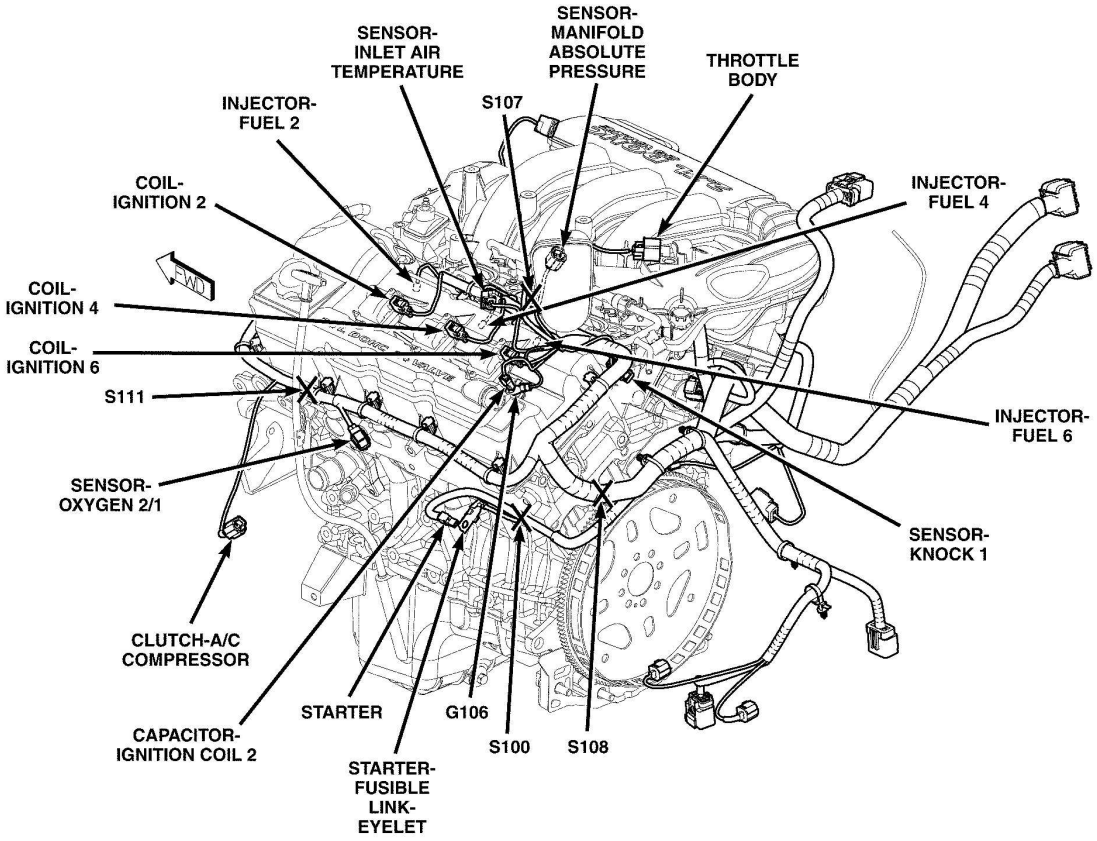

Fig. 5: Right Rear Of Engine (2.7L)
Courtesy of CHRYSLER LLC

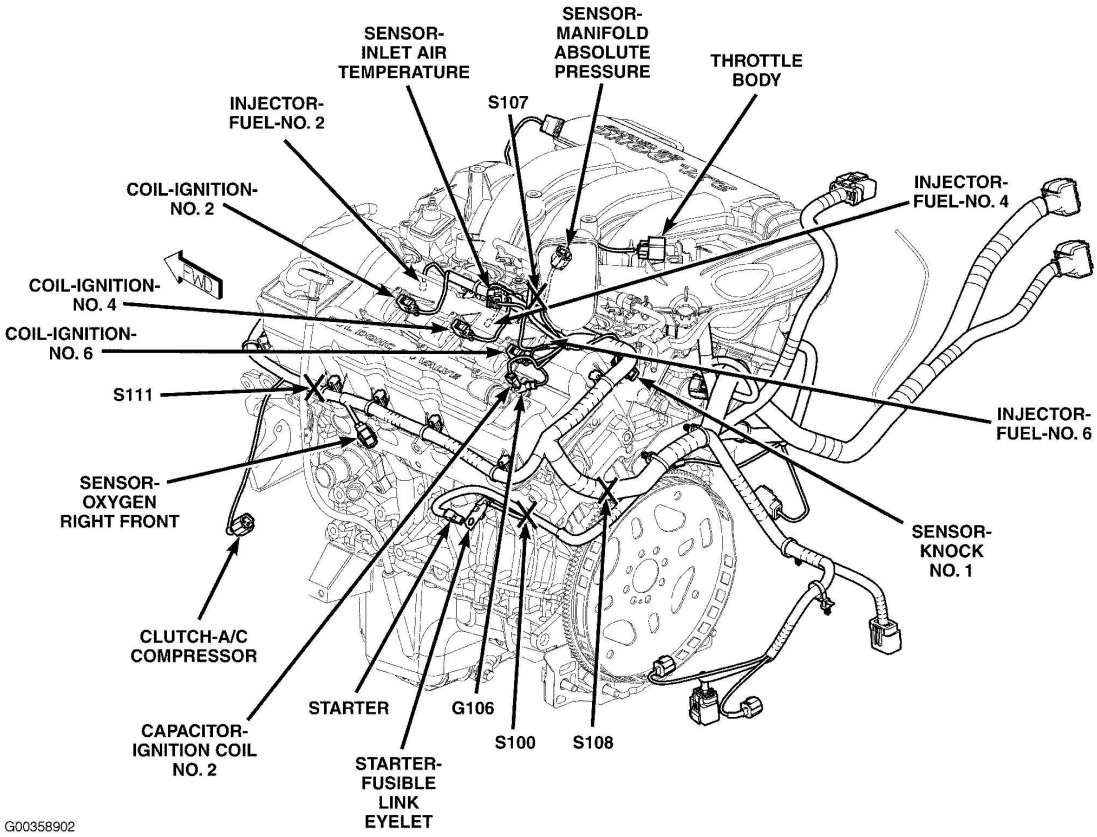

Fig. 6: Left Rear Of Engine (2.7L)
Courtesy of CHRYSLER LLC

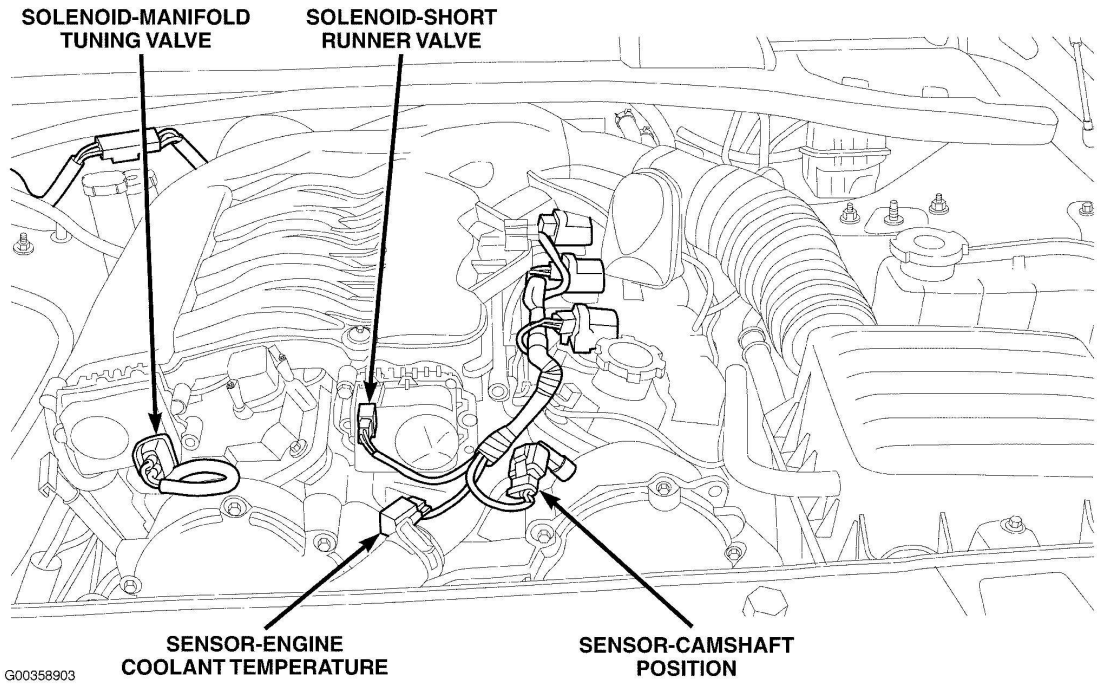

Fig. 7: Front Of Engine (3.5L)
Courtesy of CHRYSLER LLC

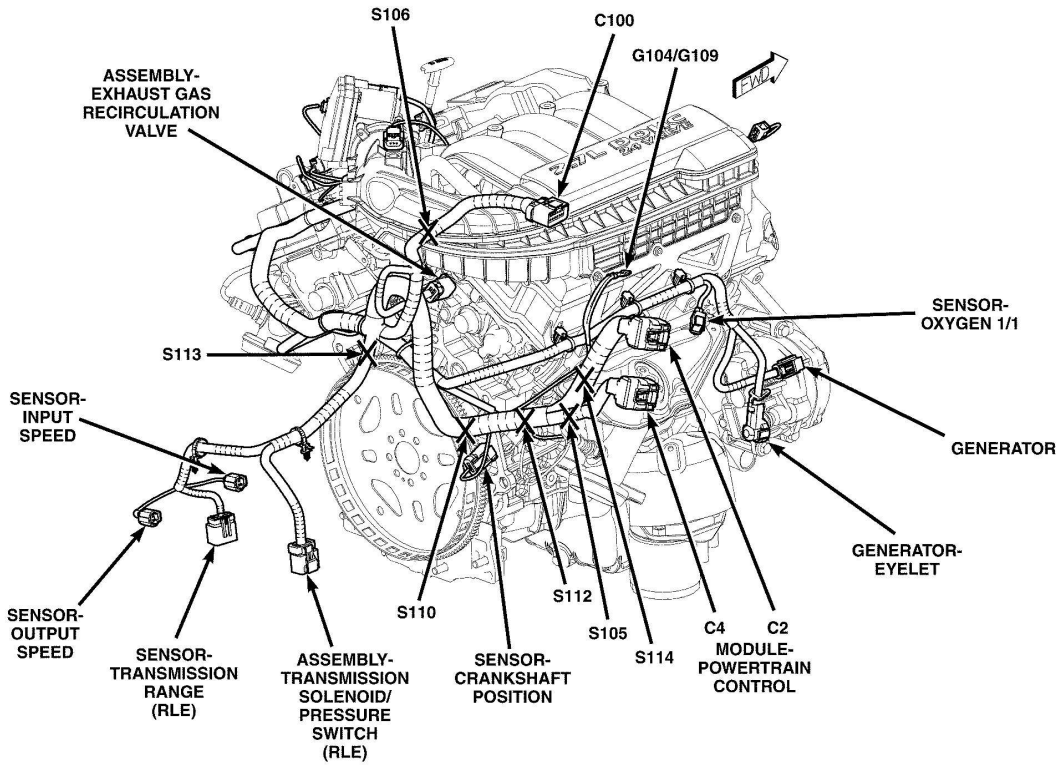

Fig. 8: Right Rear Of Engine (3.5L)
Courtesy of CHRYSLER LLC

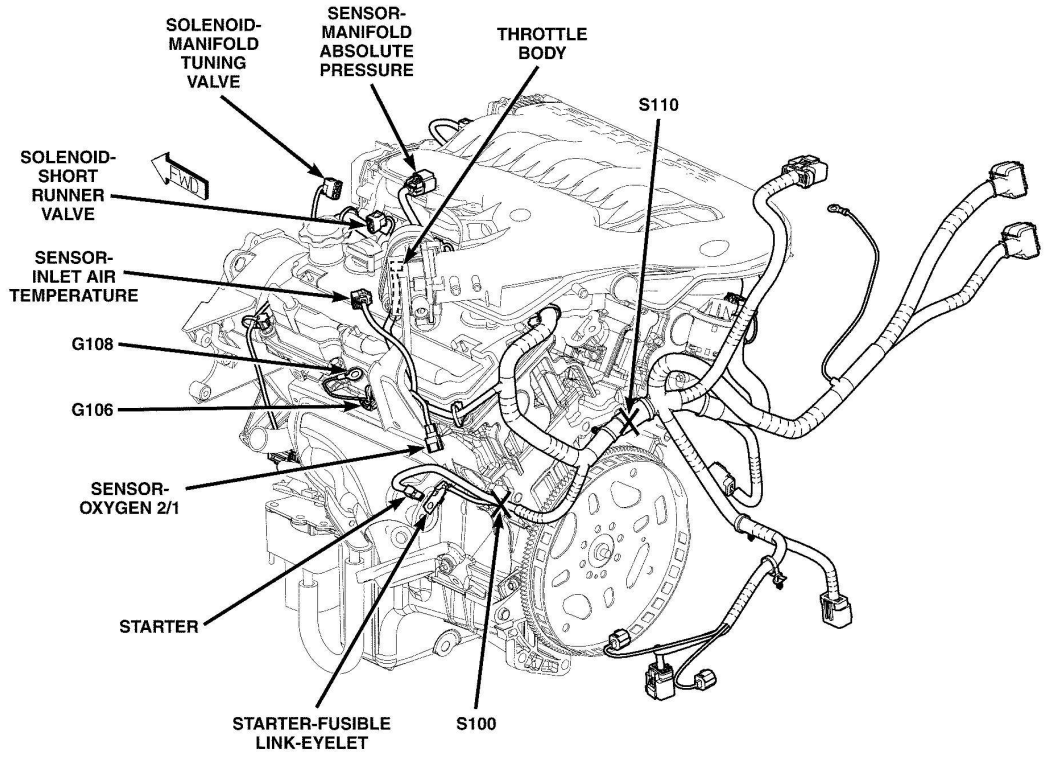

Fig. 9: Left Rear Of Engine (3.5L)
Courtesy of CHRYSLER LLC

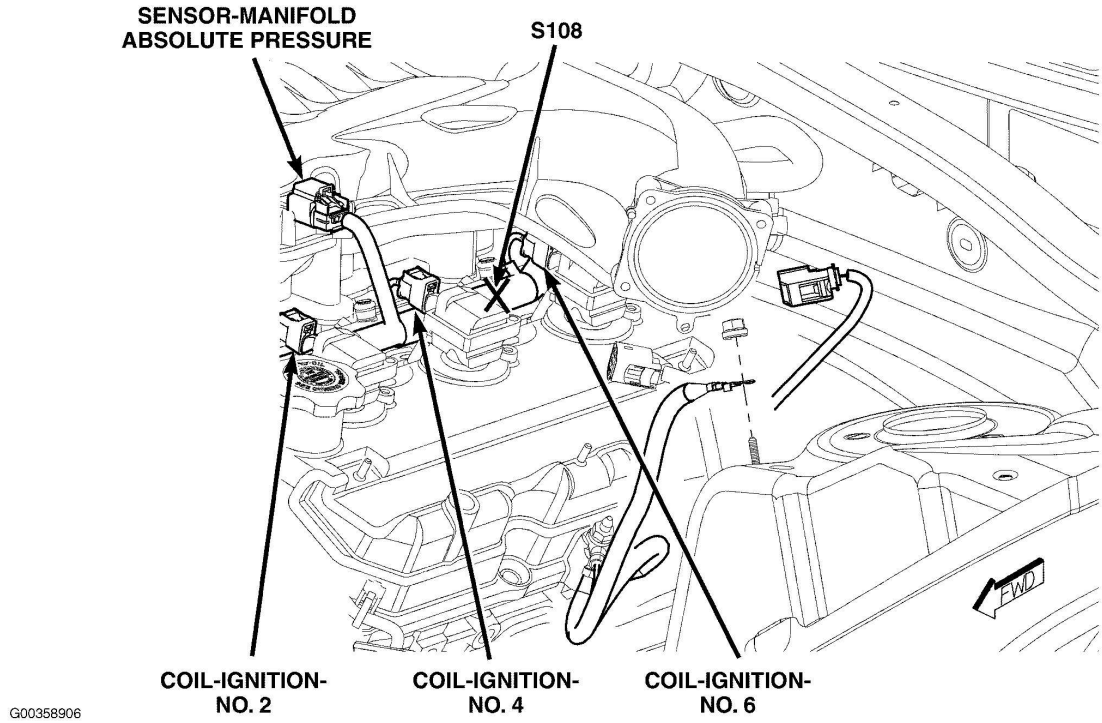

Fig. 10: Left Side Of Engine (3.5L)
Courtesy of CHRYSLER LLC

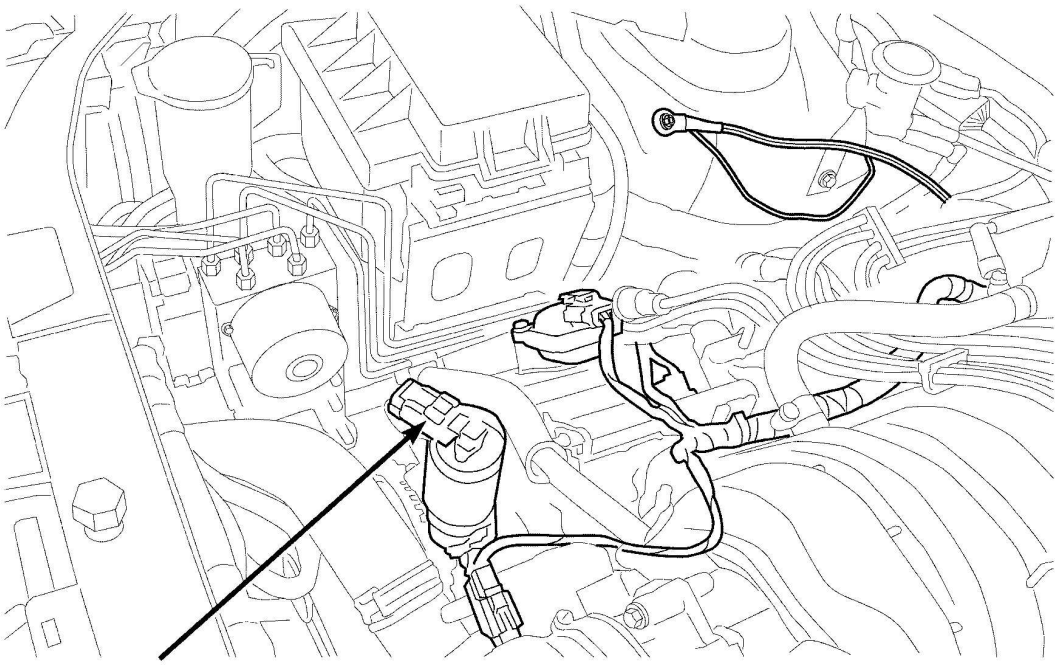

Fig. 11: Right Front Of Engine (5.7L)
Courtesy of CHRYSLER LLC

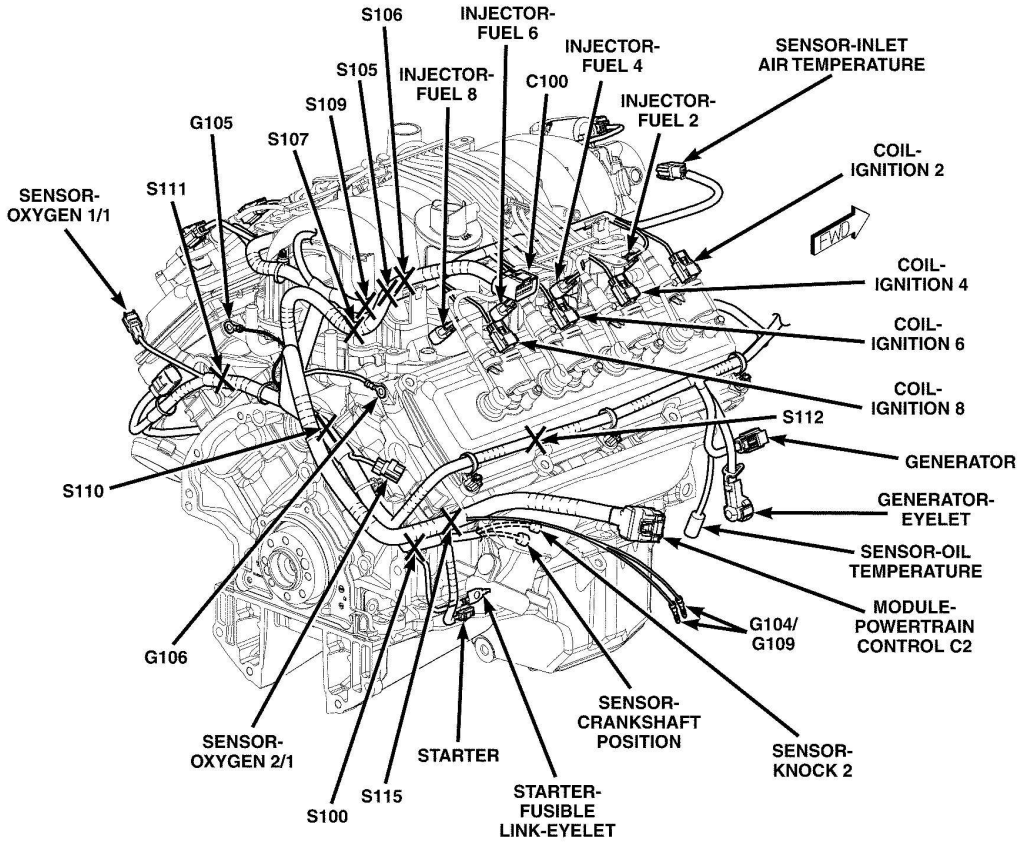

Fig. 12: Right Rear Of Engine (5.7L)
Courtesy of CHRYSLER LLC

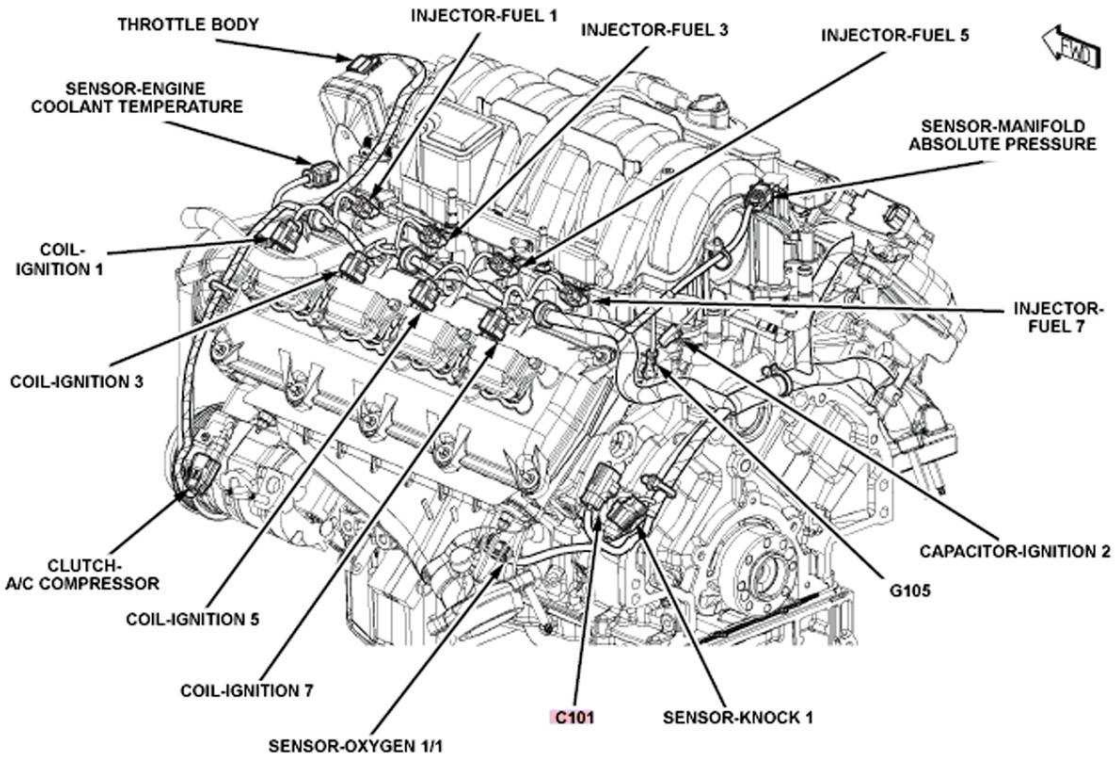

Fig. 13: Left Rear Of Engine (5.7L)
Courtesy of CHRYSLER LLC

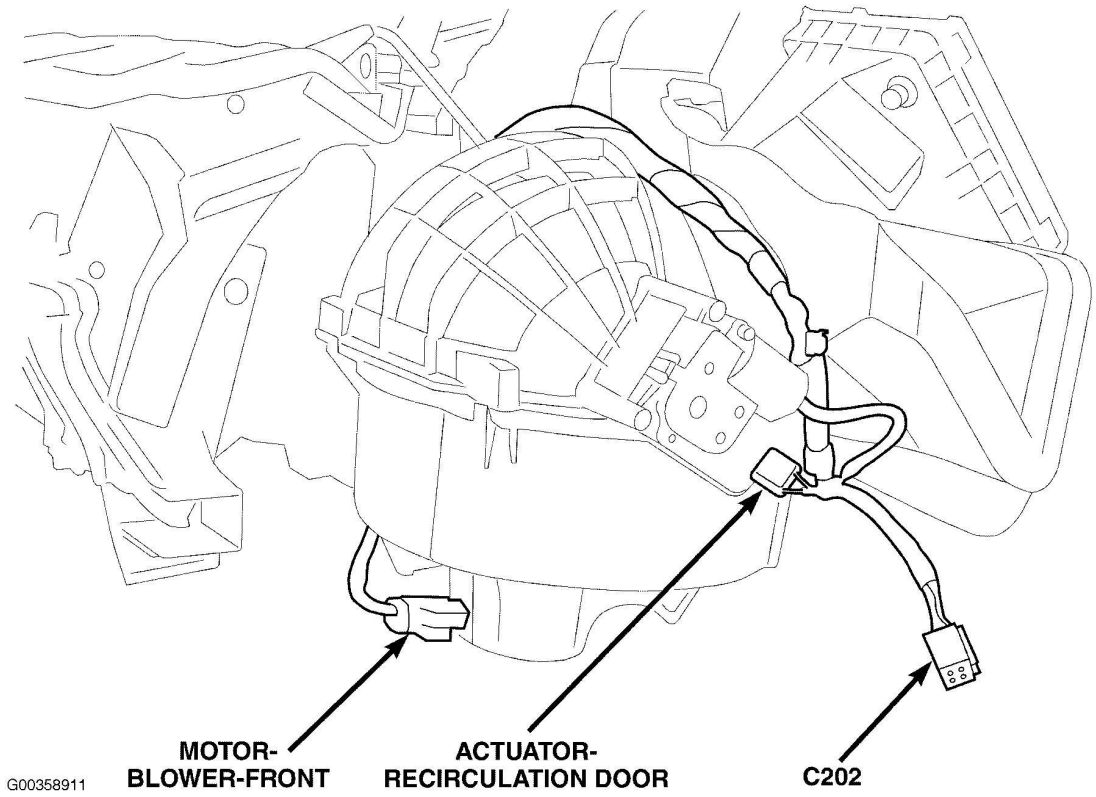

Fig. 14: HVAC Unit
Courtesy of CHRYSLER LLC

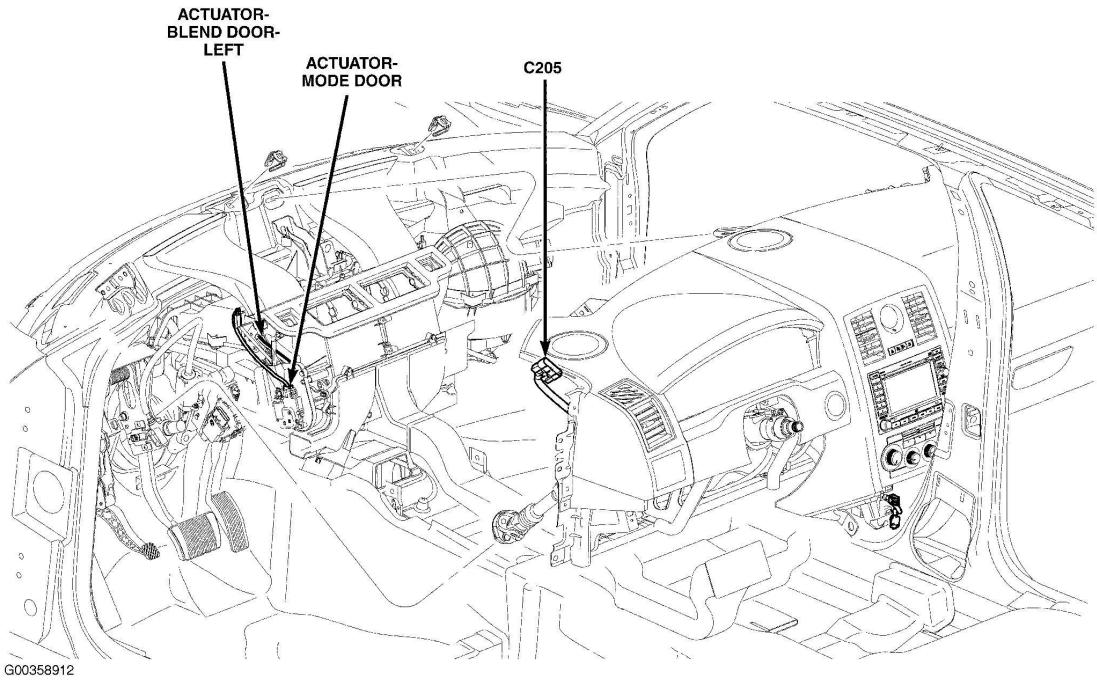

Fig. 15: Instrument Panel
Courtesy of CHRYSLER LLC

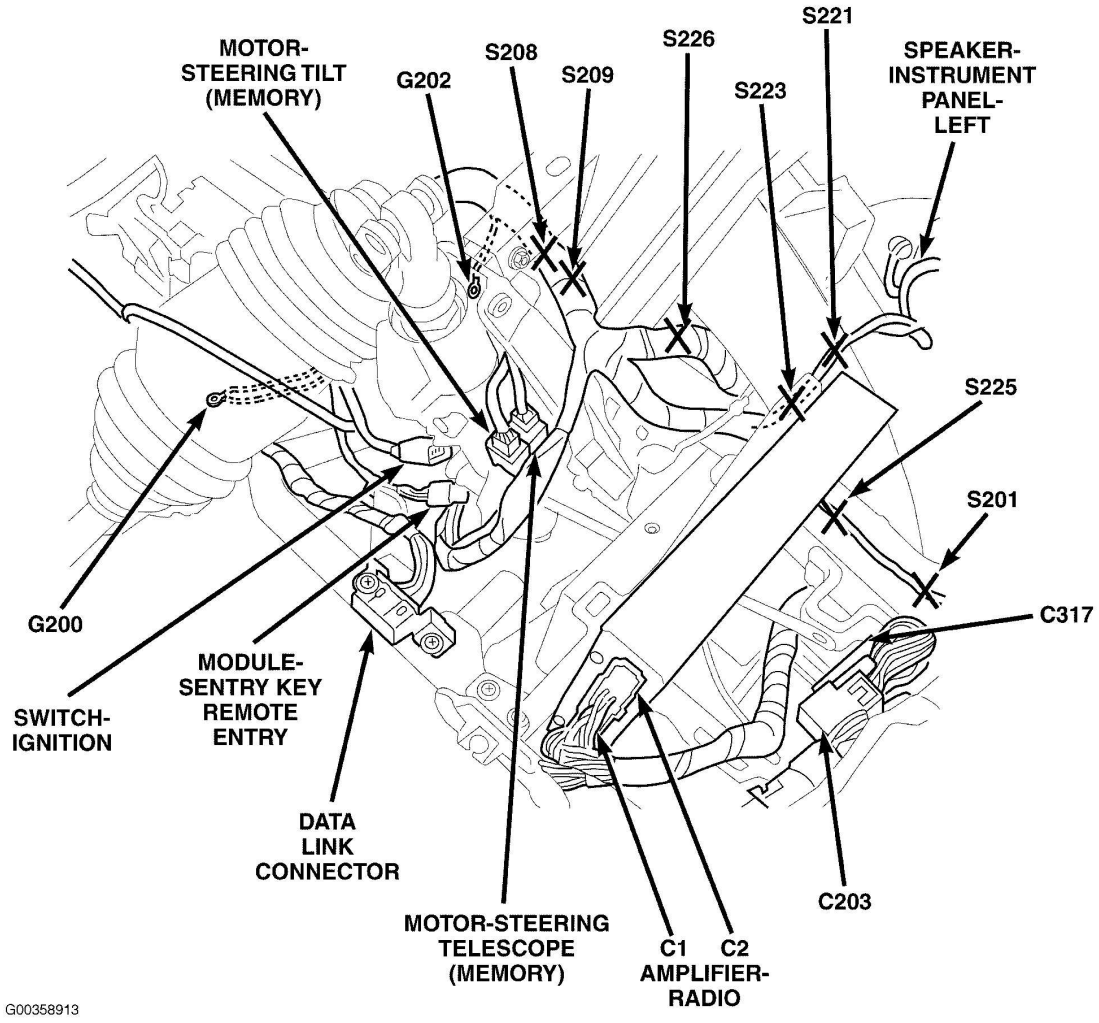

Fig. 16: Left Side Of Dash
Courtesy of CHRYSLER LLC

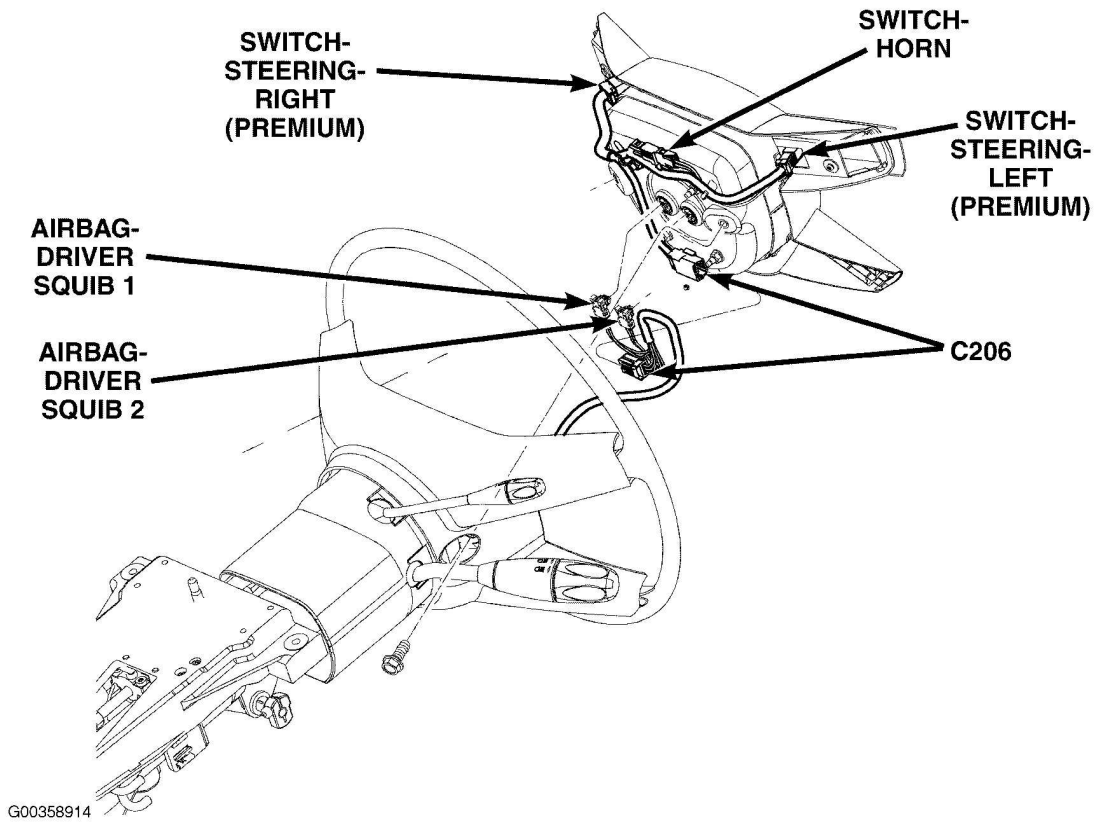

Fig. 17: Steering Column
Courtesy of CHRYSLER LLC

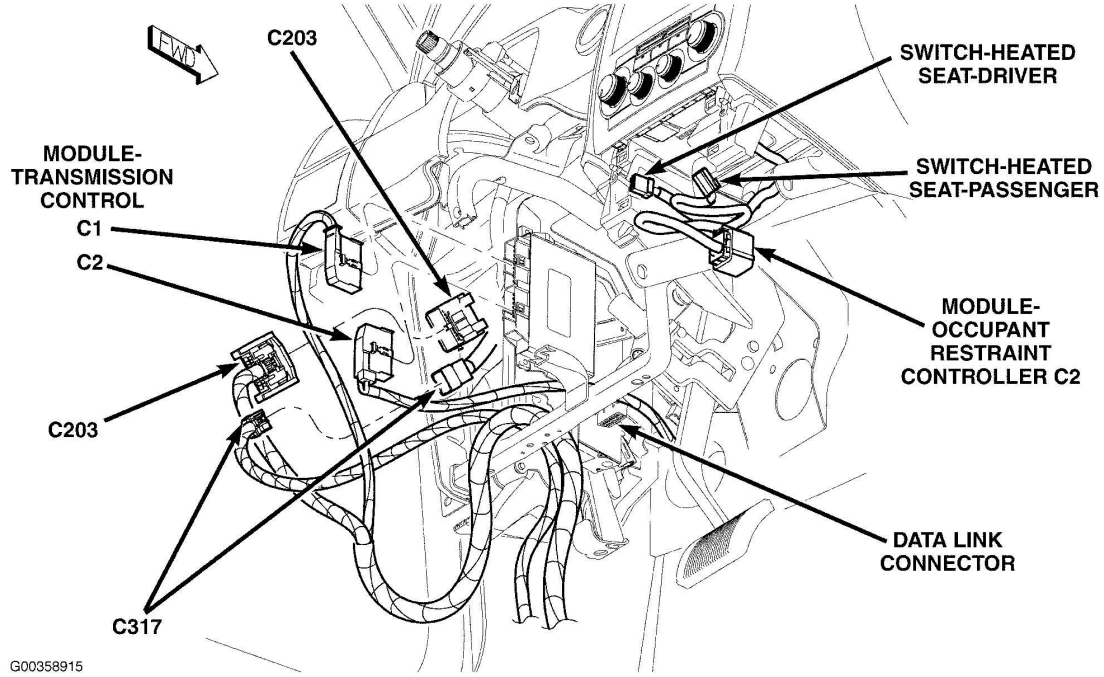

Fig. 18: Left Side Of Dash
Courtesy of CHRYSLER LLC

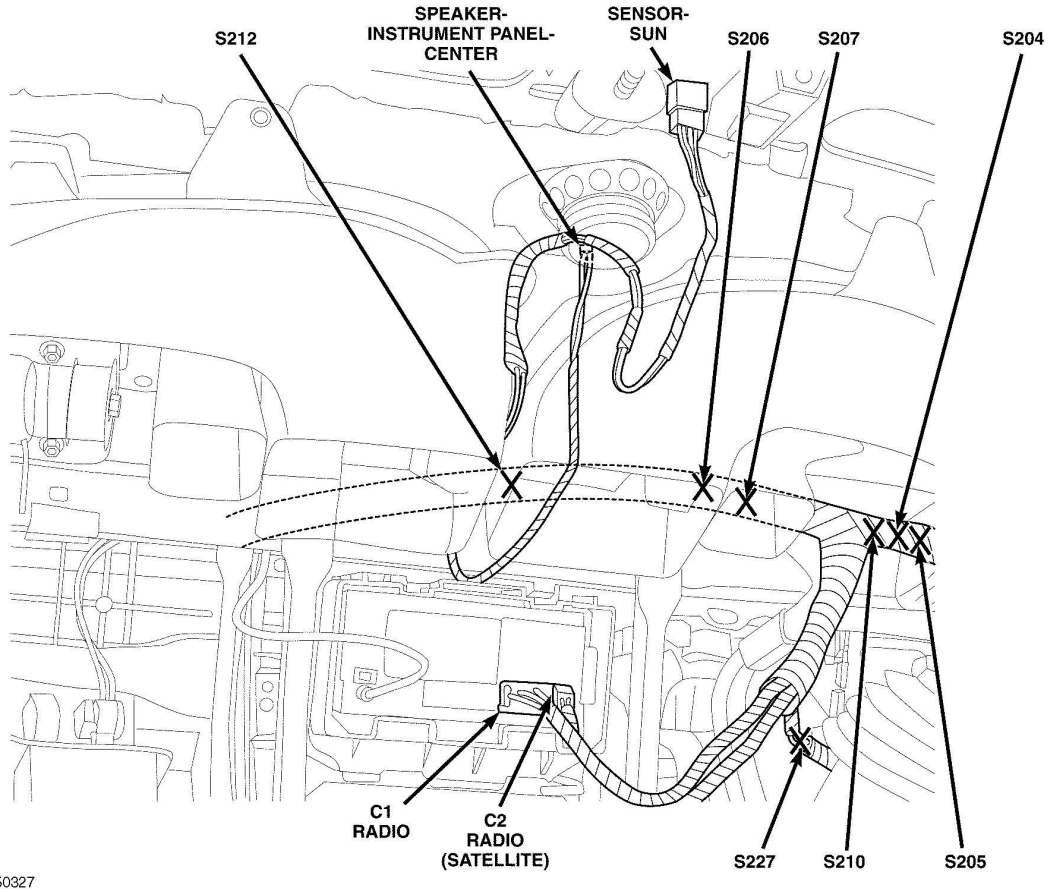

Fig. 19: Center/Left Side Of Dash
Courtesy of CHRYSLER LLC

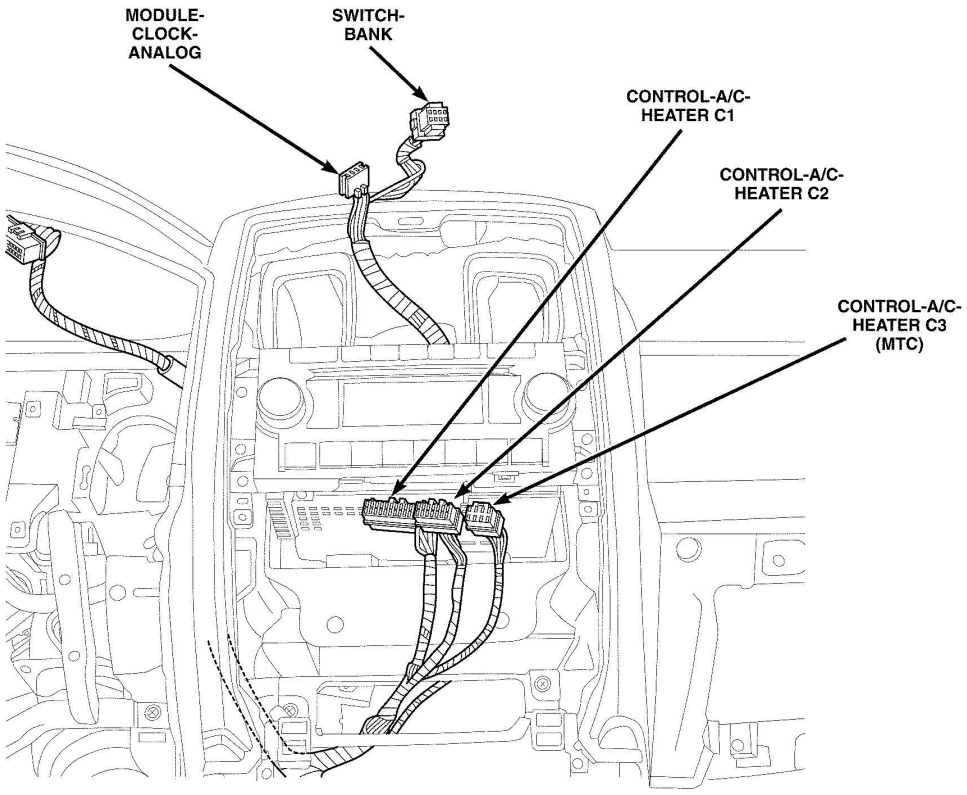

G00450328

Fig. 20: Center Of Dash
Courtesy of CHRYSLER LLC

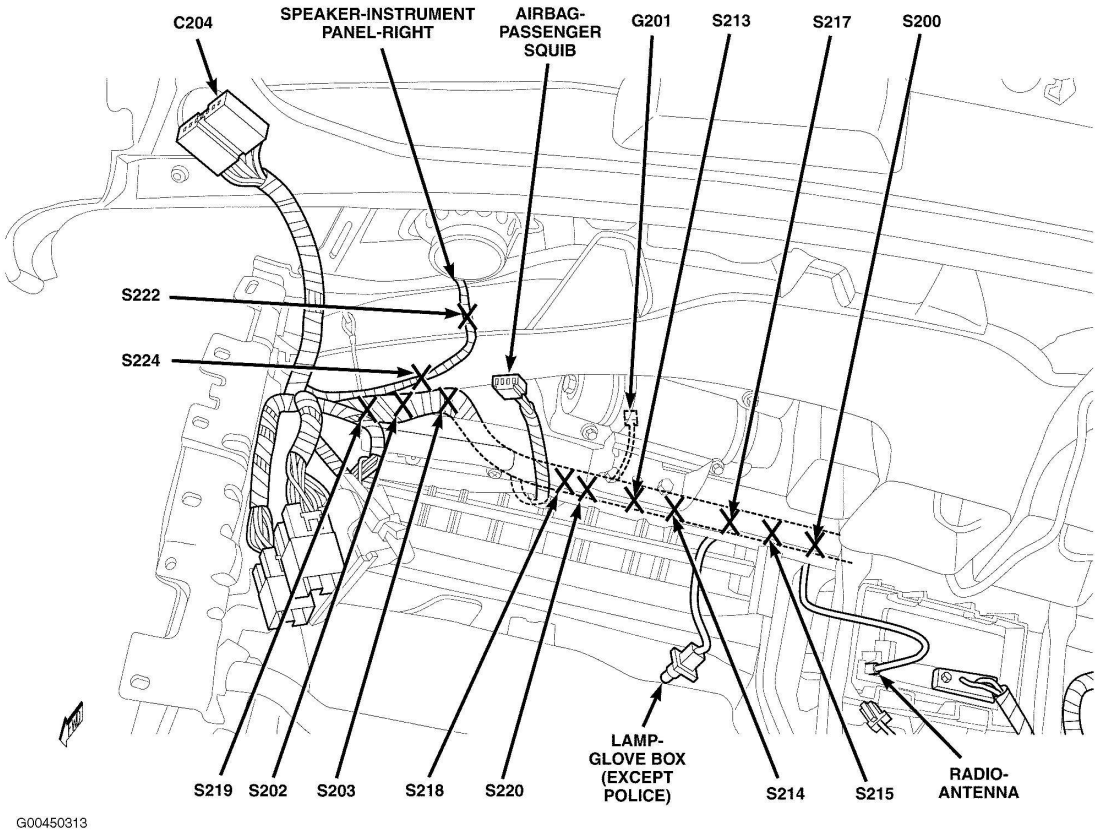

Fig. 21: Right Side Of Dash
Courtesy of CHRYSLER LLC

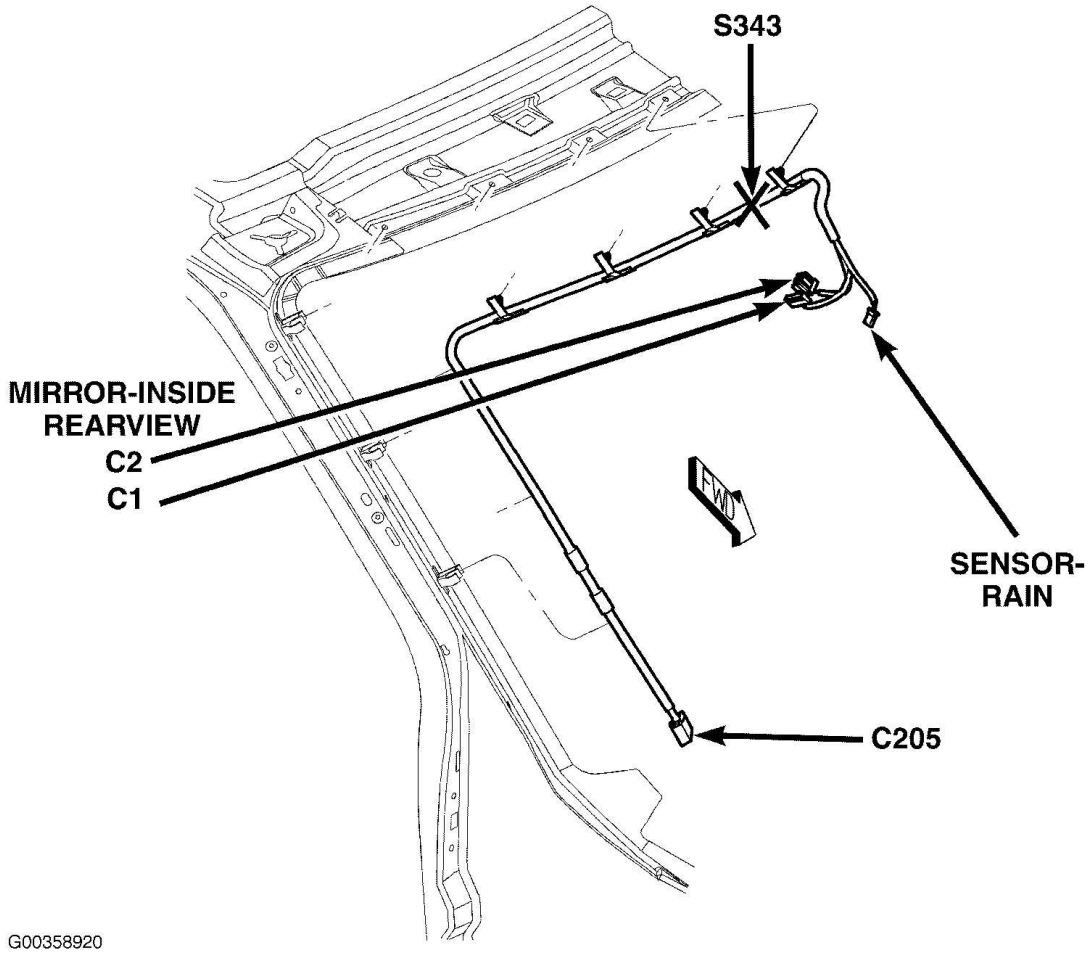

Fig. 22: Left "A" Pillar
Courtesy of CHRYSLER LLC

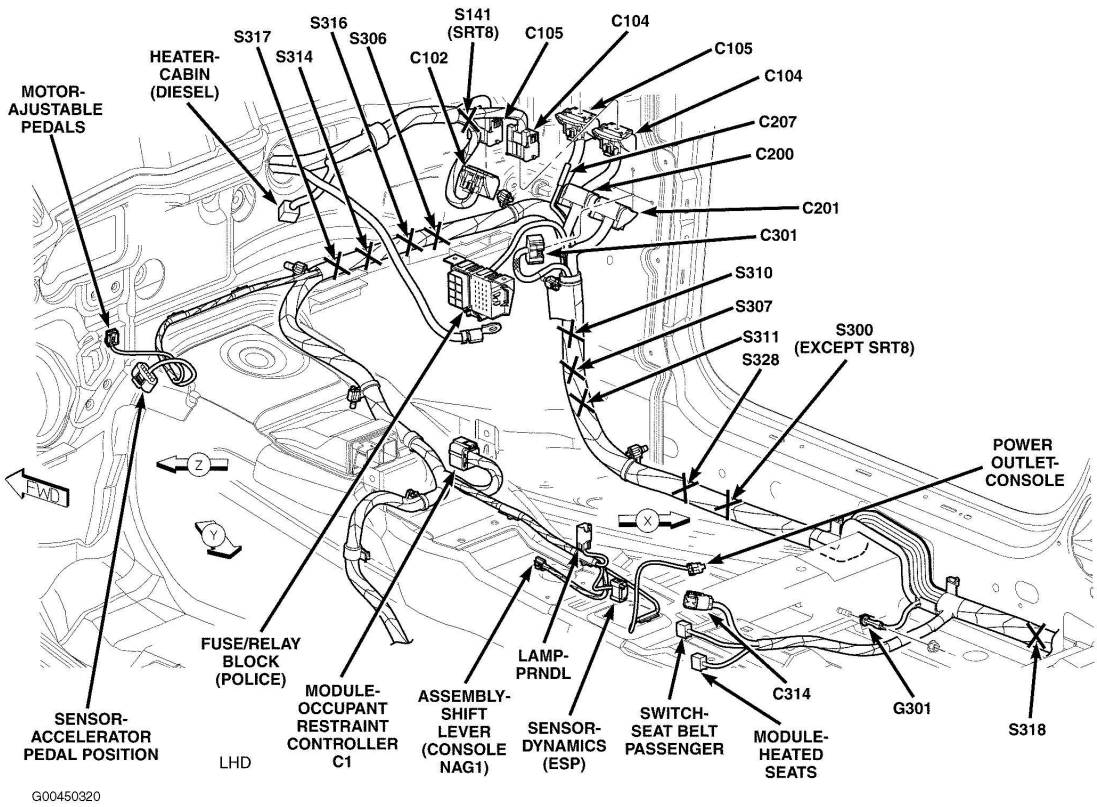

Fig. 23: Right Front Of Passenger Compartment
Courtesy of CHRYSLER LLC

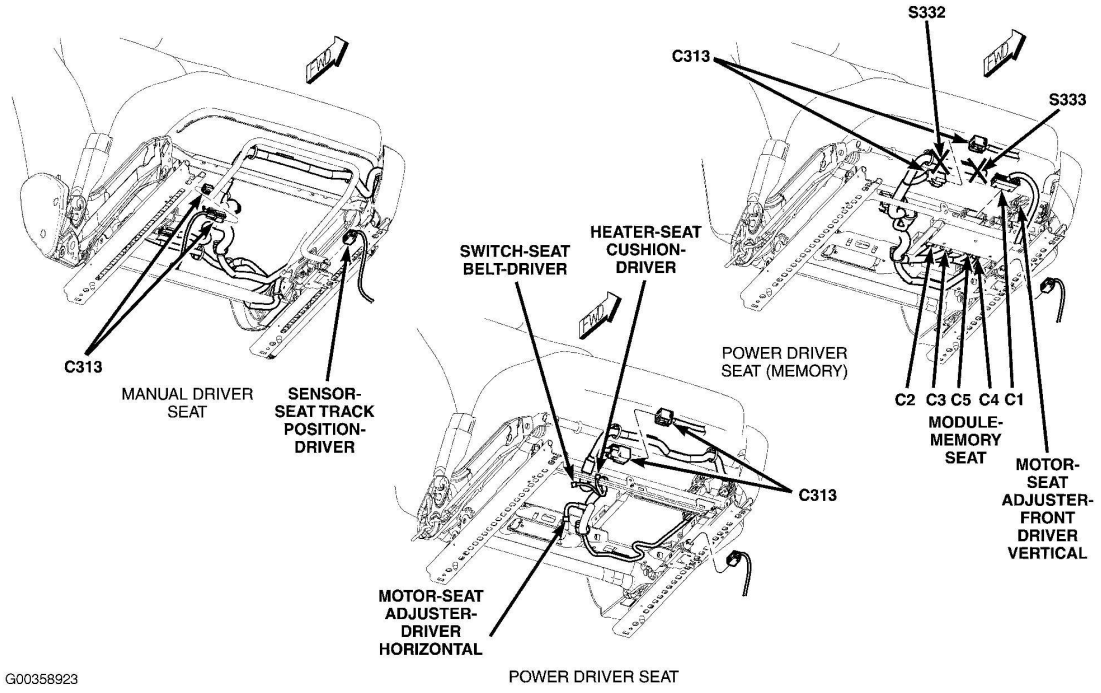

Fig. 24: Driver Seat
Courtesy of CHRYSLER LLC

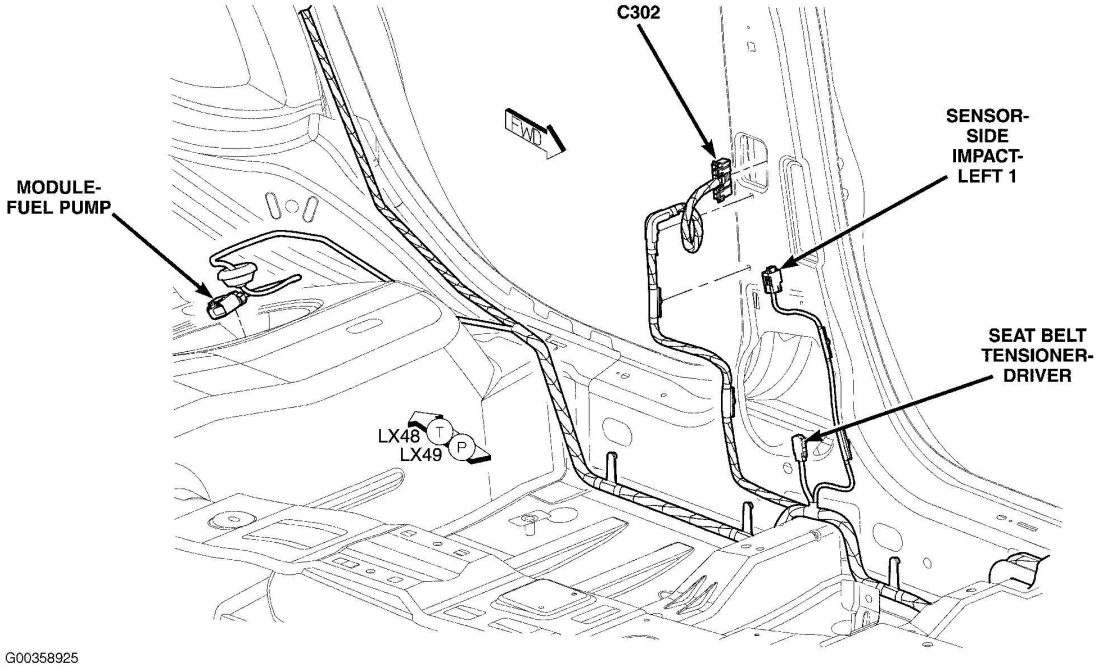

Fig. 25: Left Side Of Passenger Compartment
Courtesy of CHRYSLER LLC

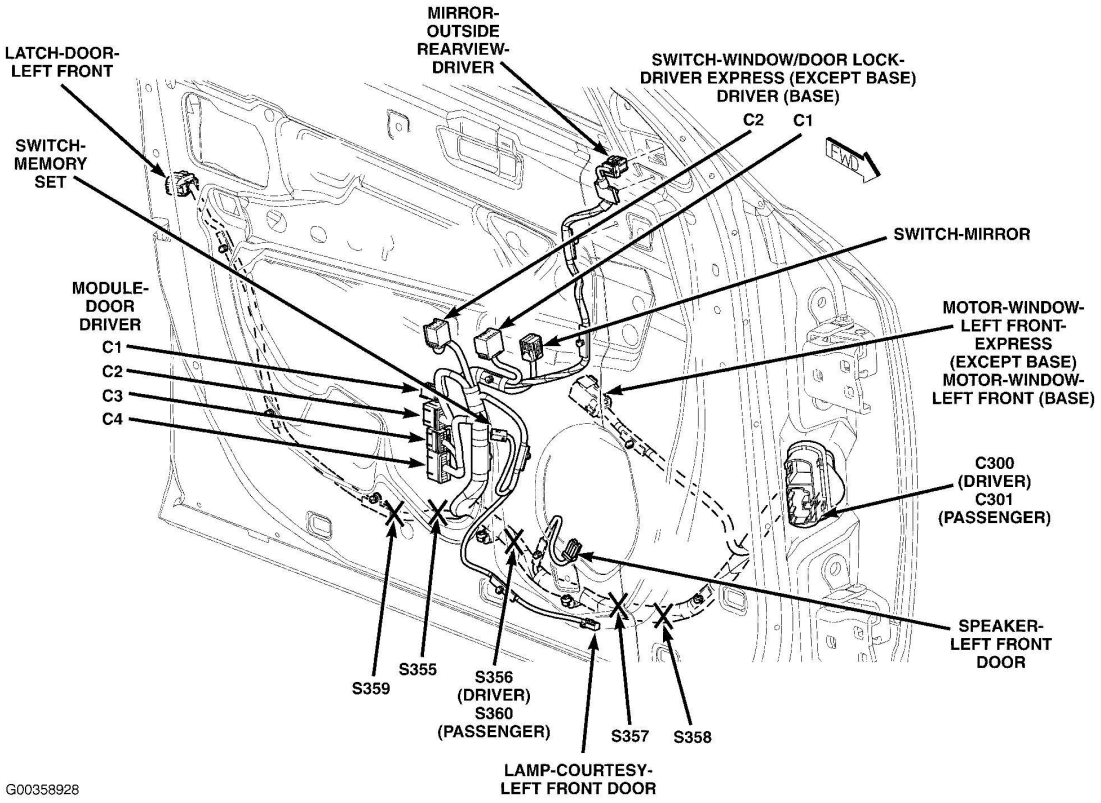

Fig. 26: Driver Door (Right Front Door Similar)
Courtesy of CHRYSLER LLC

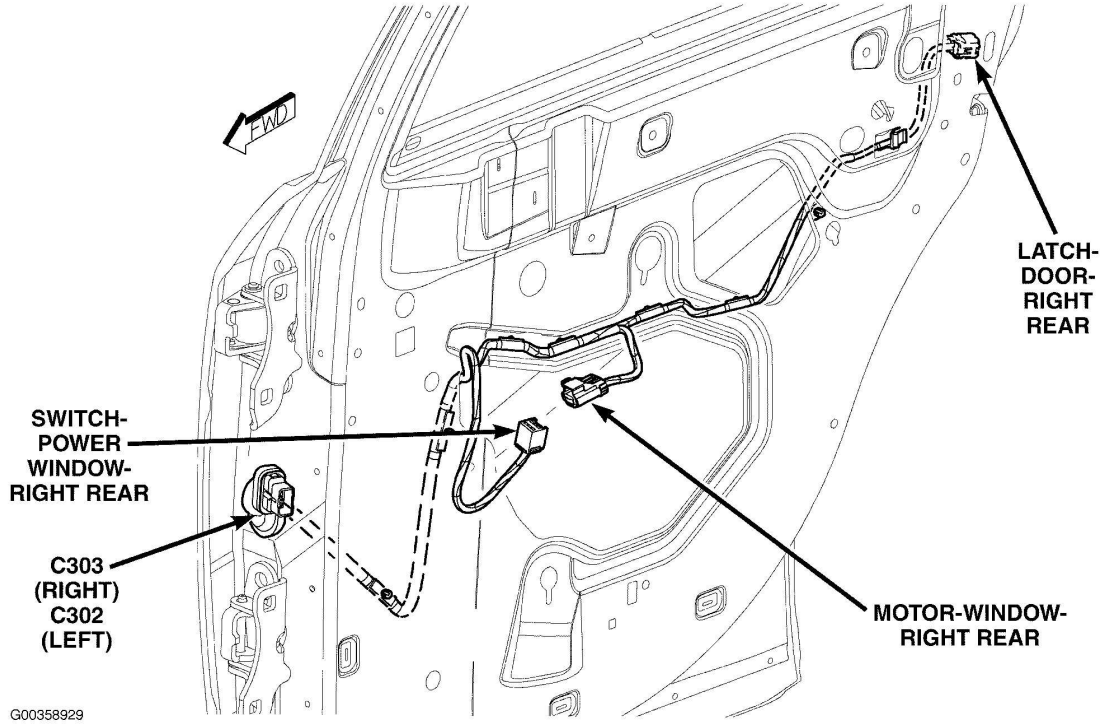

Fig. 27: Left/Right Rear Door
Courtesy of CHRYSLER LLC

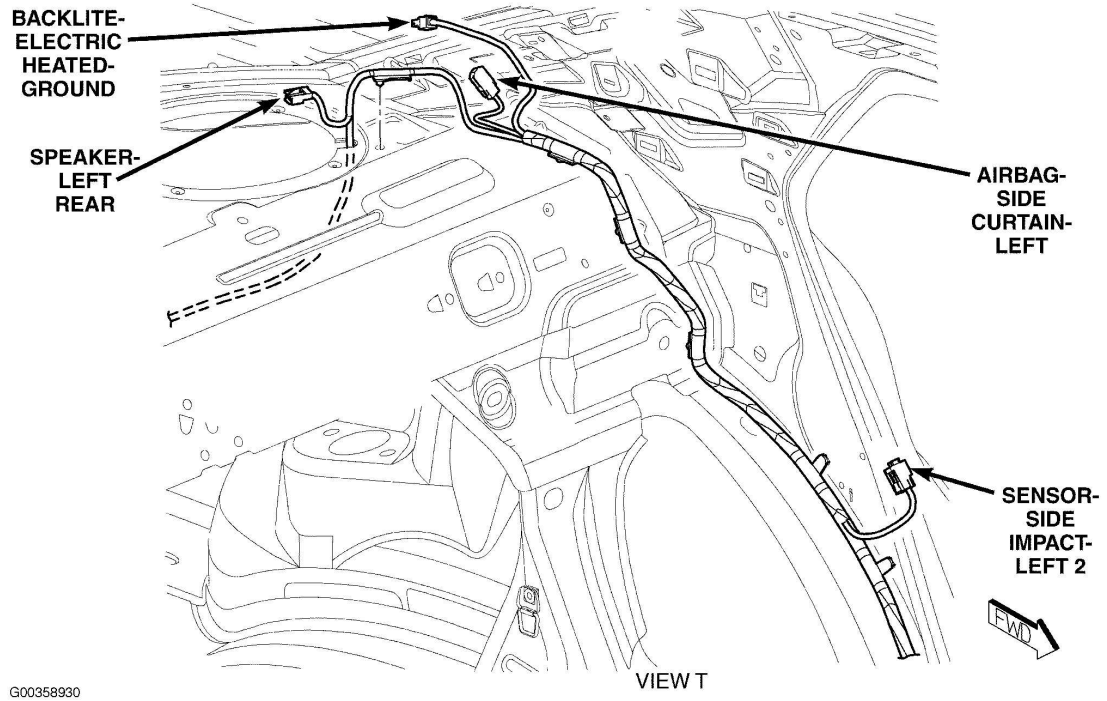

Fig. 28: Left Rear Quarterpanel (Except Magnum)
Courtesy of CHRYSLER LLC

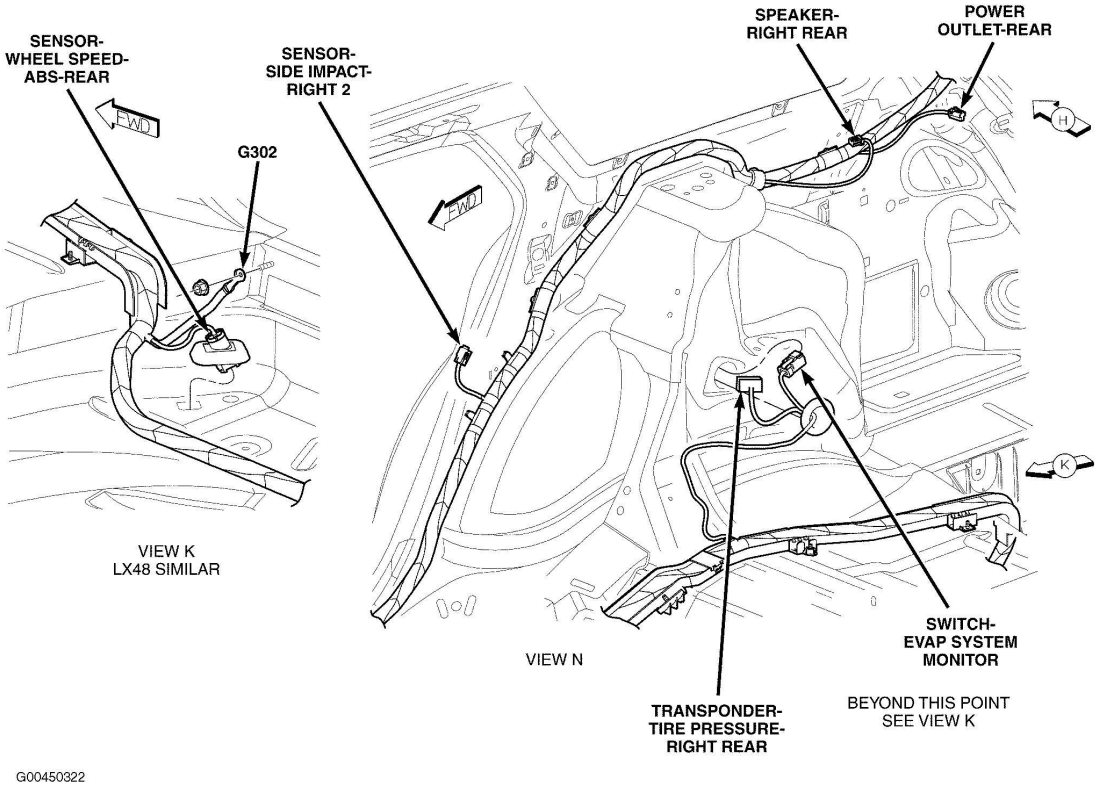

Fig. 29: Right Rear Quarterpanel (Magnum)
Courtesy of CHRYSLER LLC

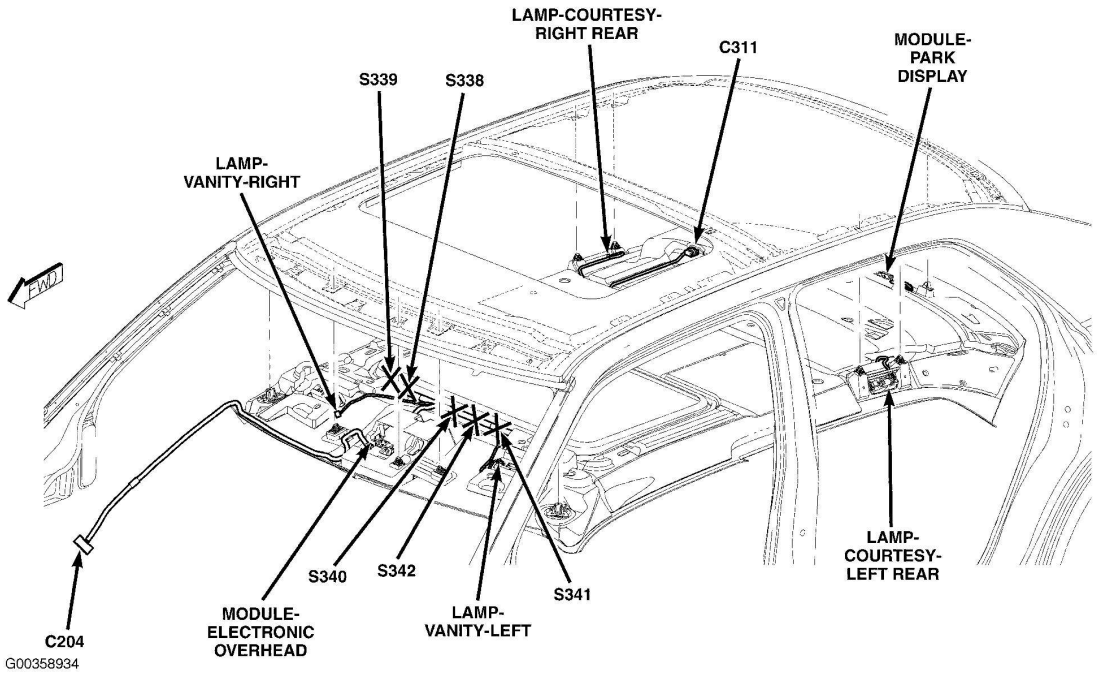

Fig. 30: Headliner
Courtesy of CHRYSLER LLC

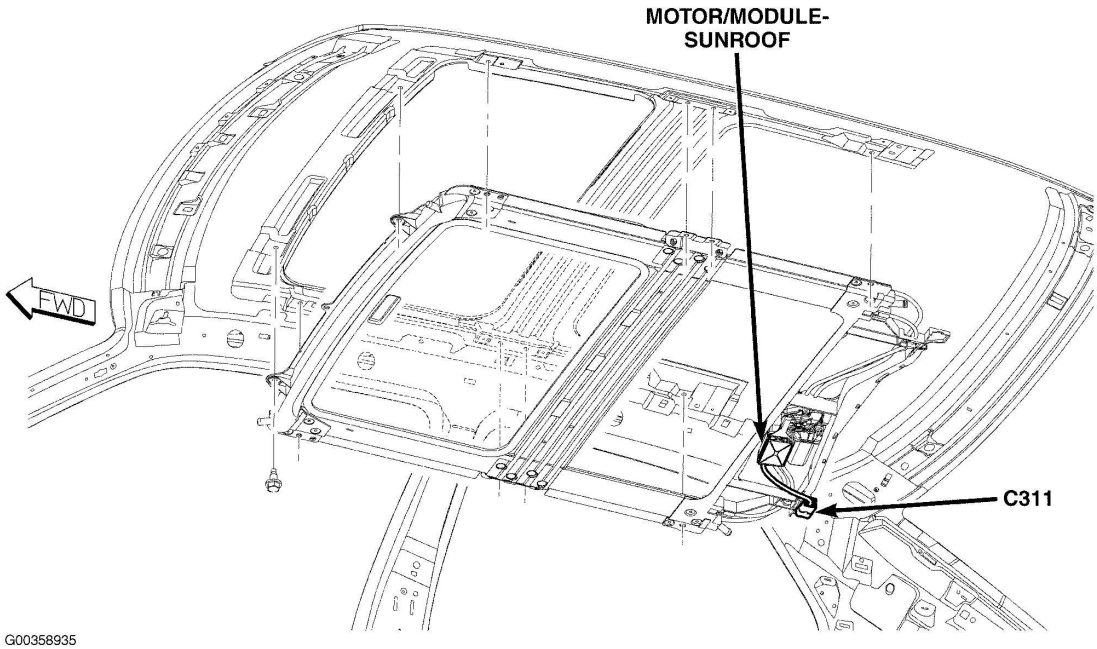

Fig. 31: Headliner
Courtesy of CHRYSLER LLC

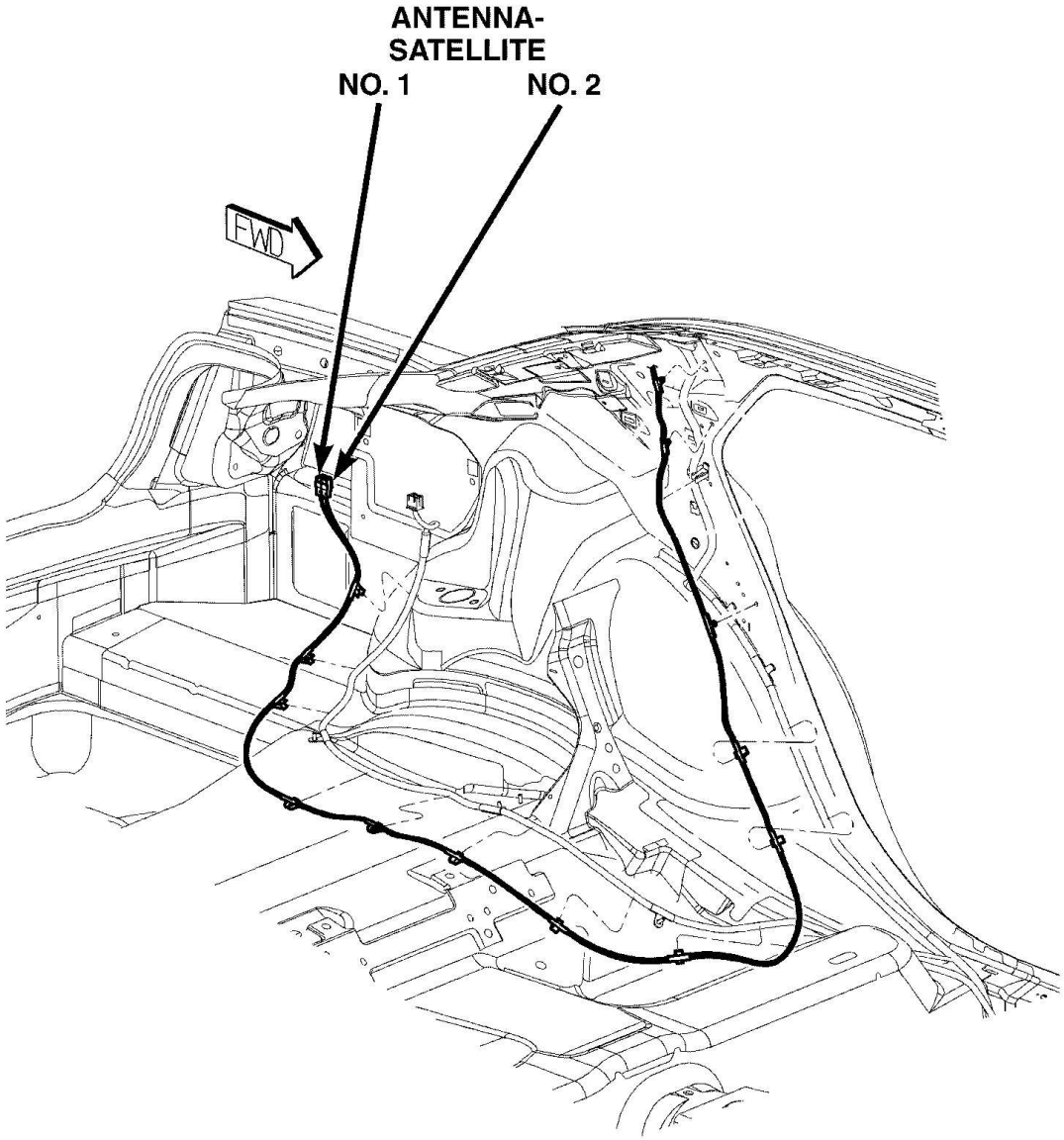

Fig. 32: Left Rear Of Trunk (Except Magnum)
Courtesy of CHRYSLER LLC

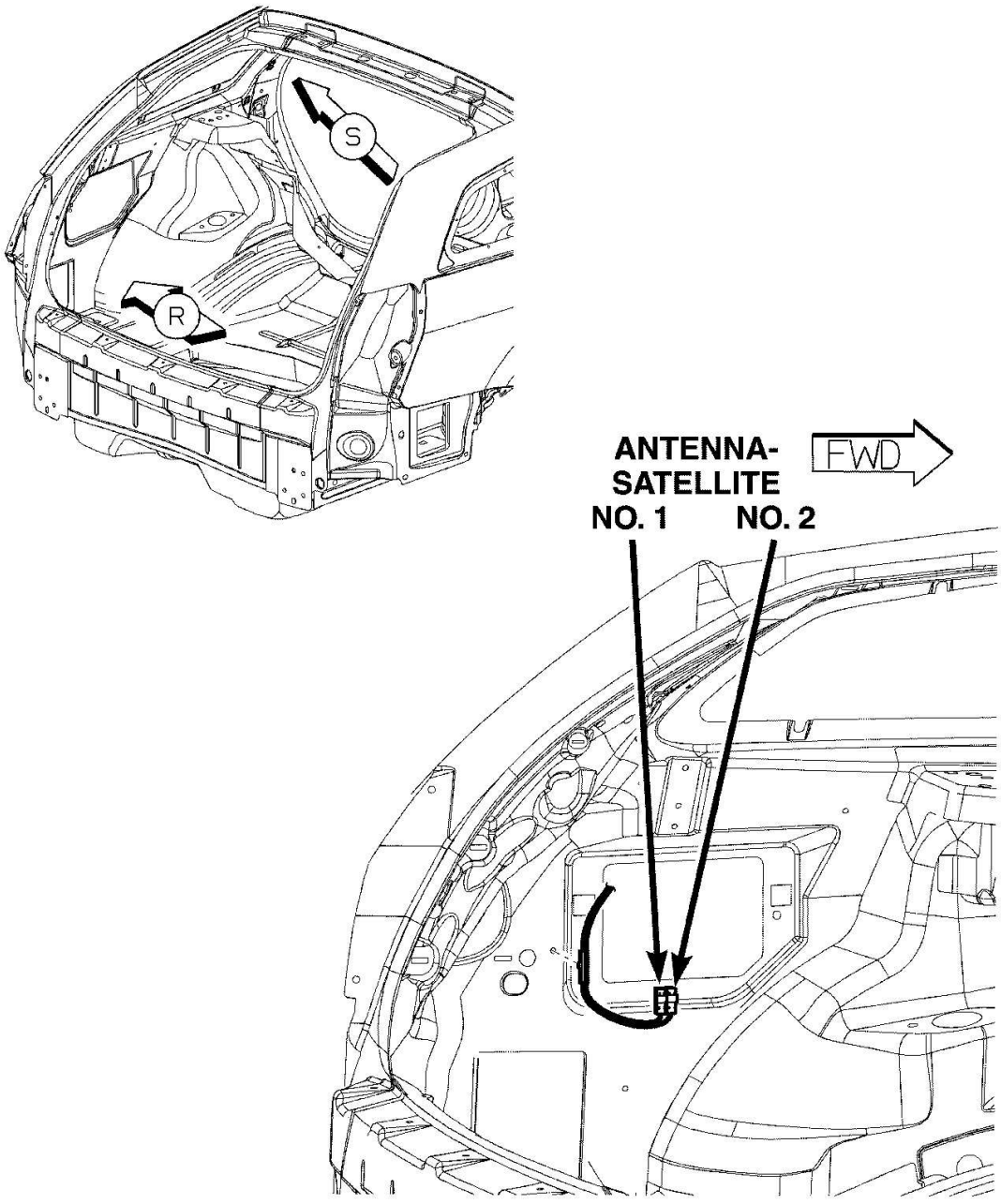

Fig. 33: Left Rear Of Cargo Area (Magnum)
Courtesy of CHRYSLER LLC

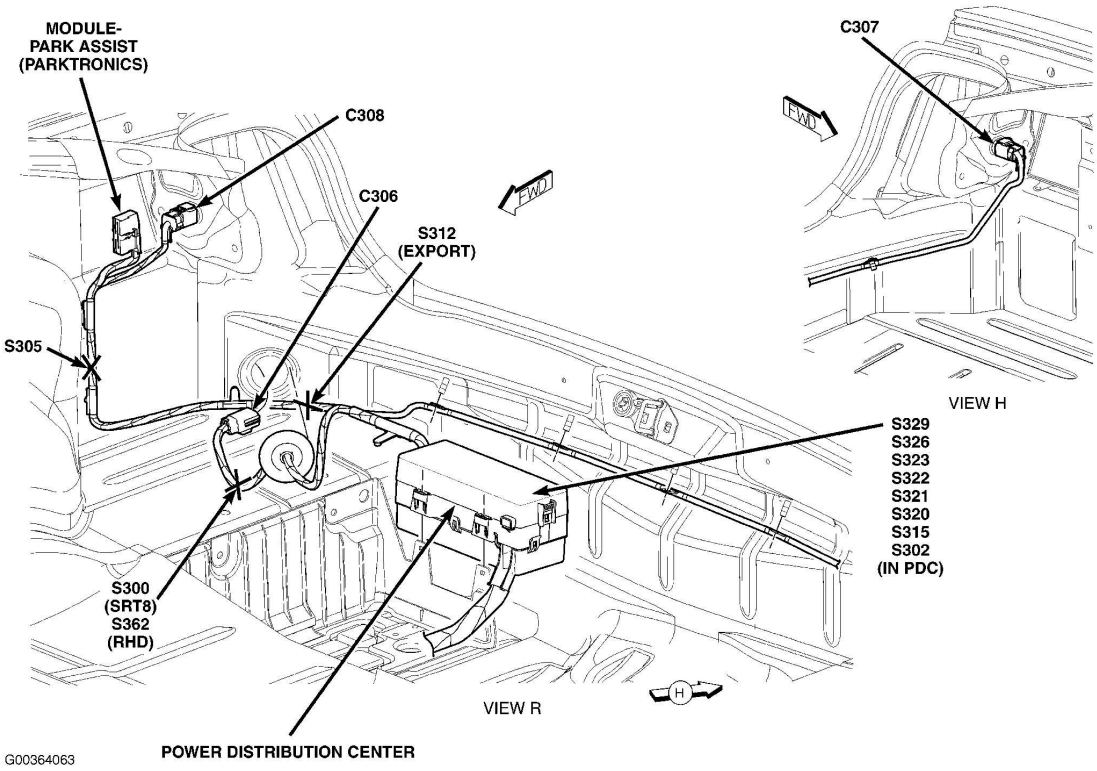

Fig. 34: Trunk (Except Magnum)
Courtesy of CHRYSLER LLC

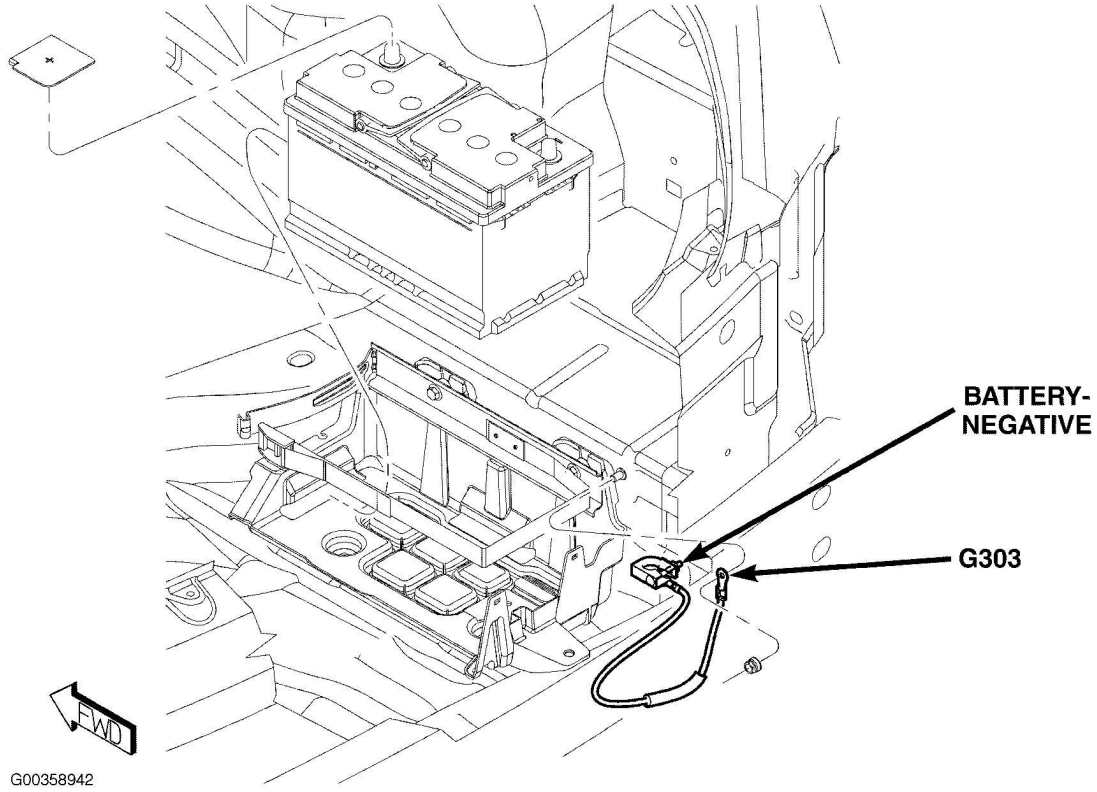

Fig. 35: Trunk Battery
Courtesy of CHRYSLER LLC

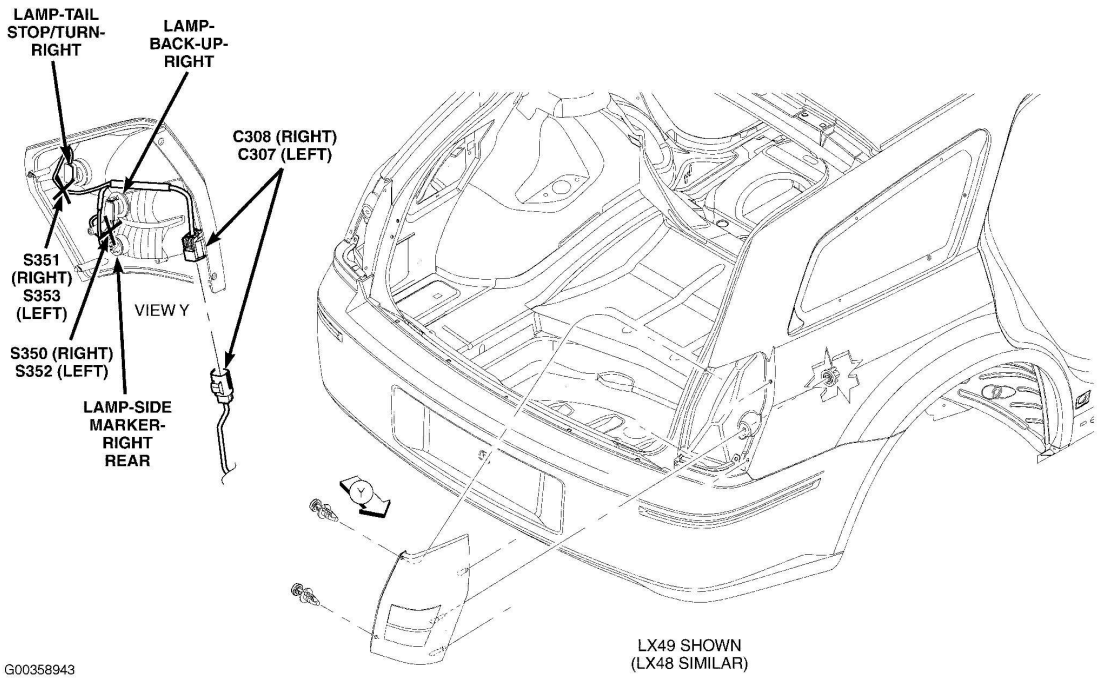

Fig. 36: Rear Of Vehicle
Courtesy of CHRYSLER LLC

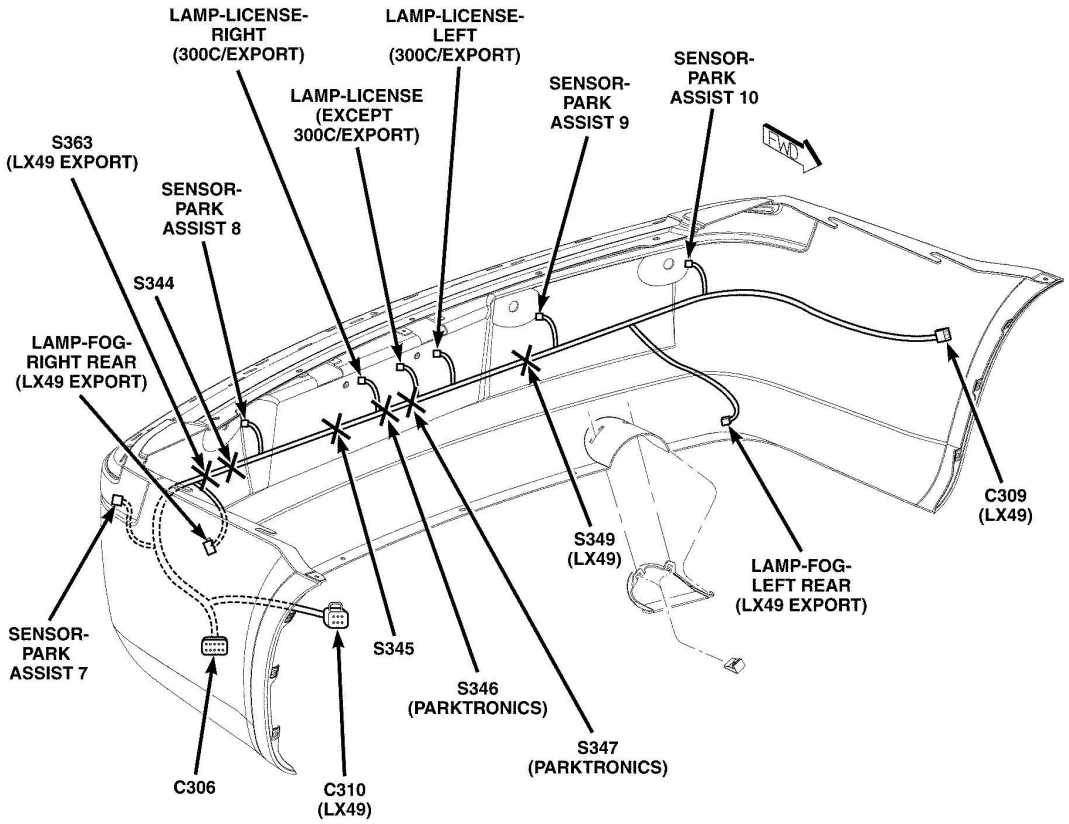

Fig. 37: Rear Fascia
Courtesy of CHRYSLER LLC

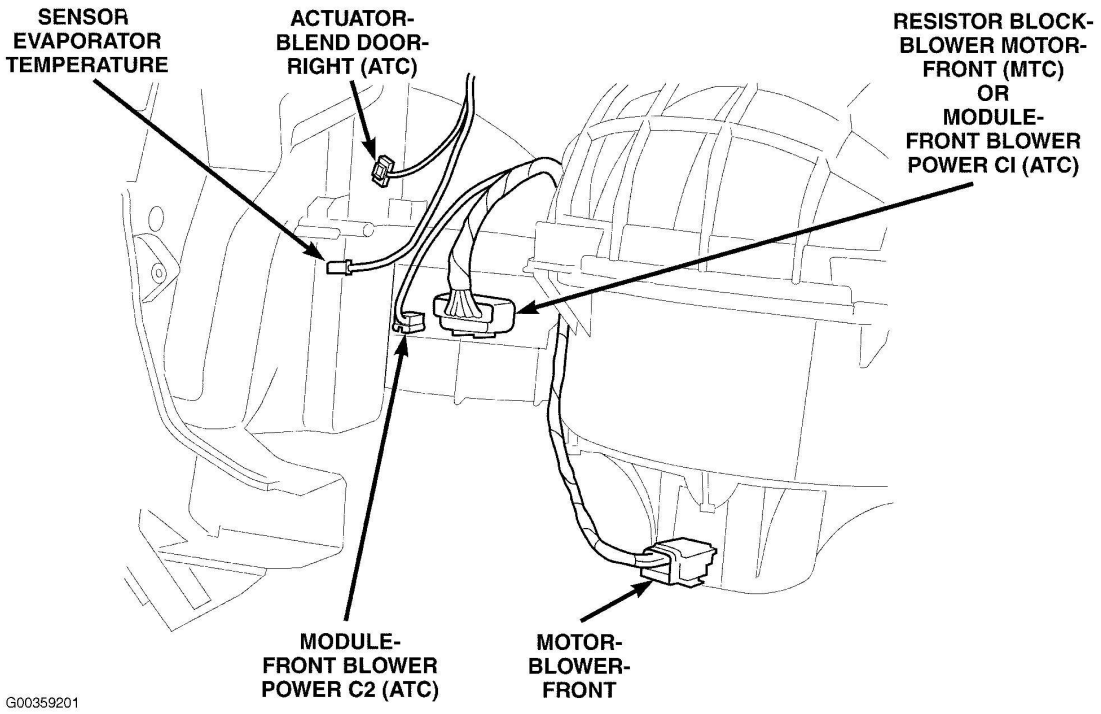

Fig. 38: HVAC Unit
Courtesy of CHRYSLER LLC

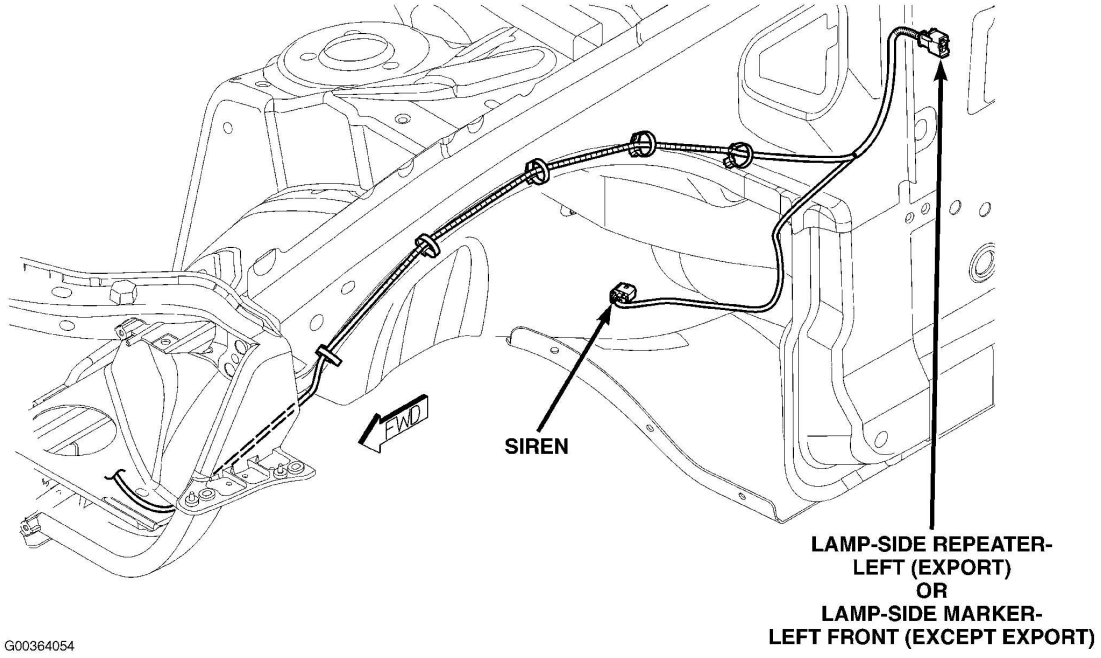

Fig. 39: Right Side Of Engine Compartment
Courtesy of CHRYSLER LLC

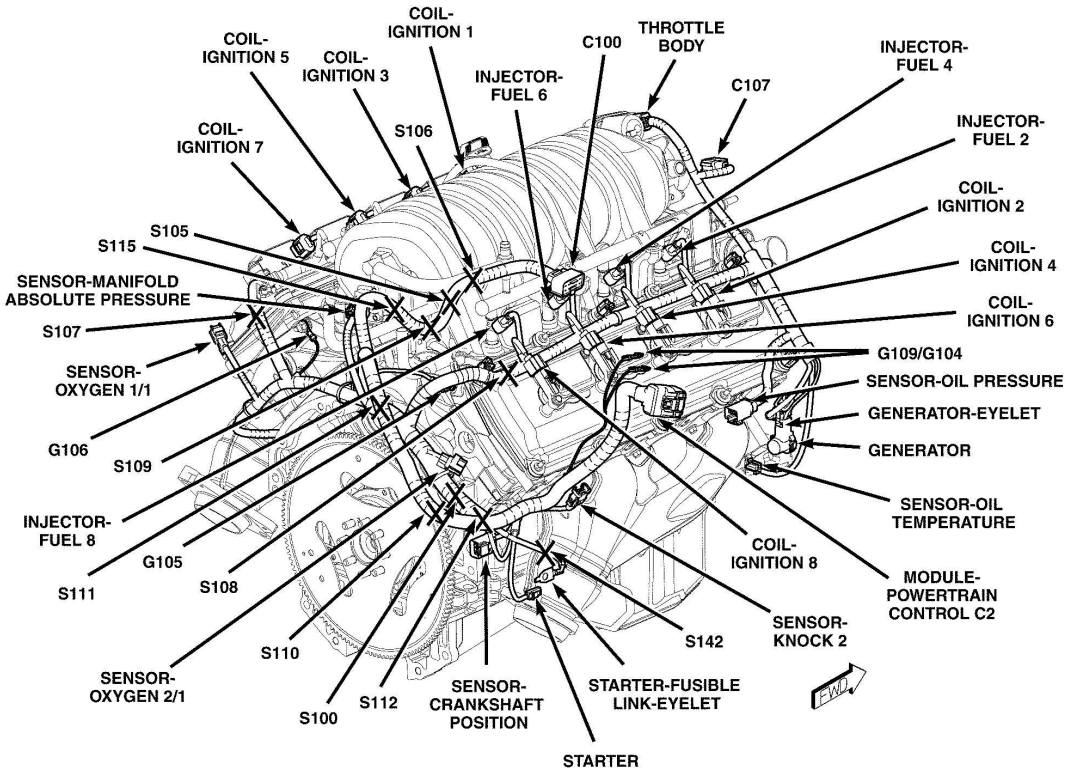

G00450318

Fig. 40: Right Rear Of Engine (6.1L)
Courtesy of CHRYSLER LLC

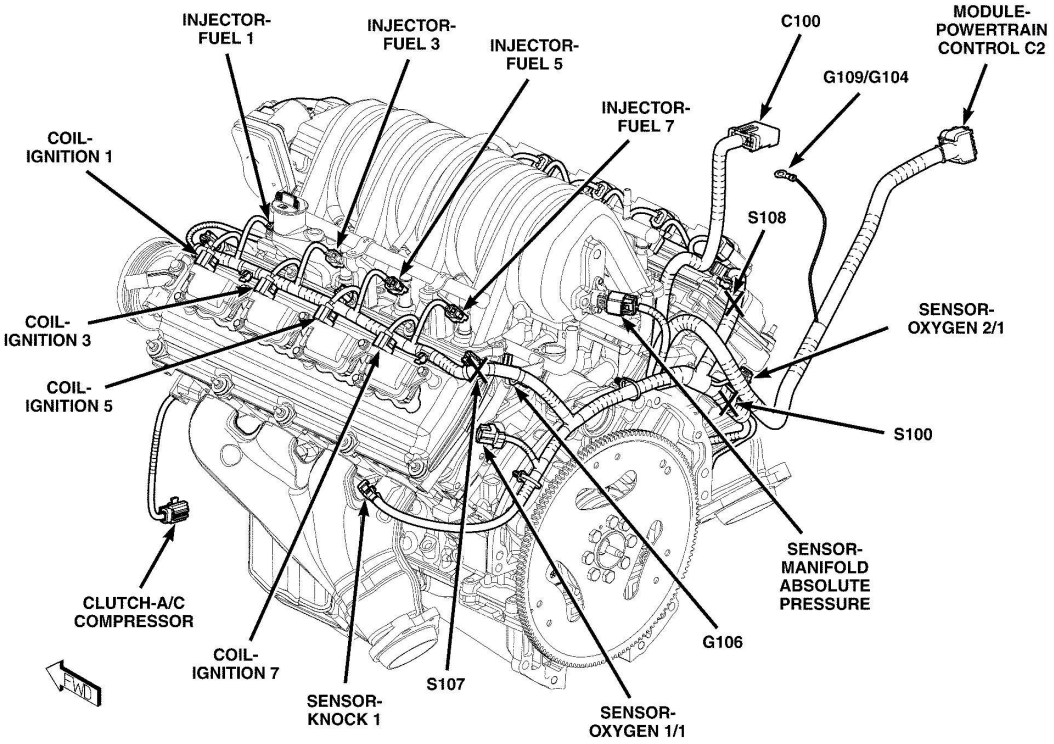

Fig. 41: Left Rear Of Engine (6.1L)
Courtesy of CHRYSLER LLC

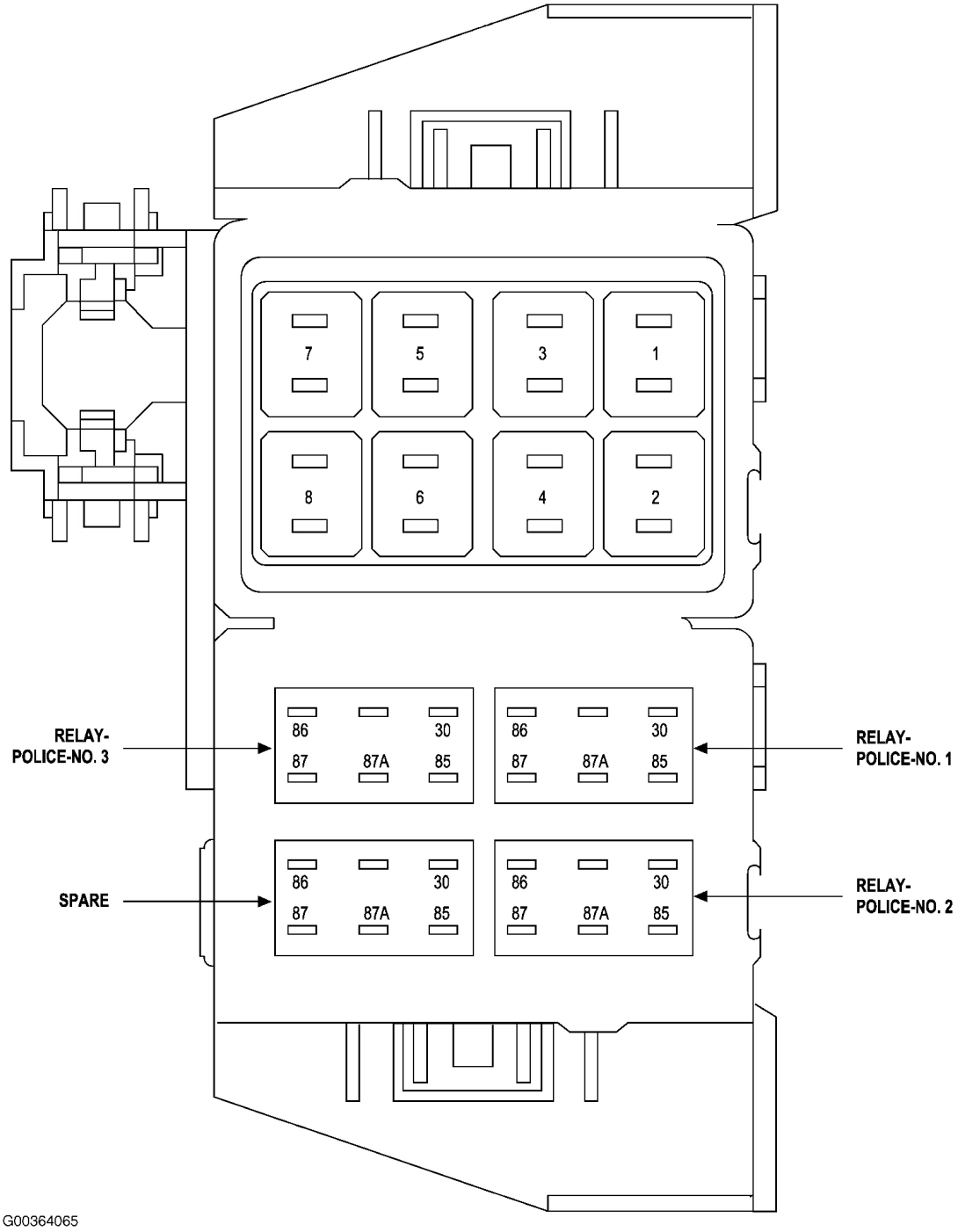

Fig. 42: Police Fuse/Relay Block
Courtesy of CHRYSLER LLC

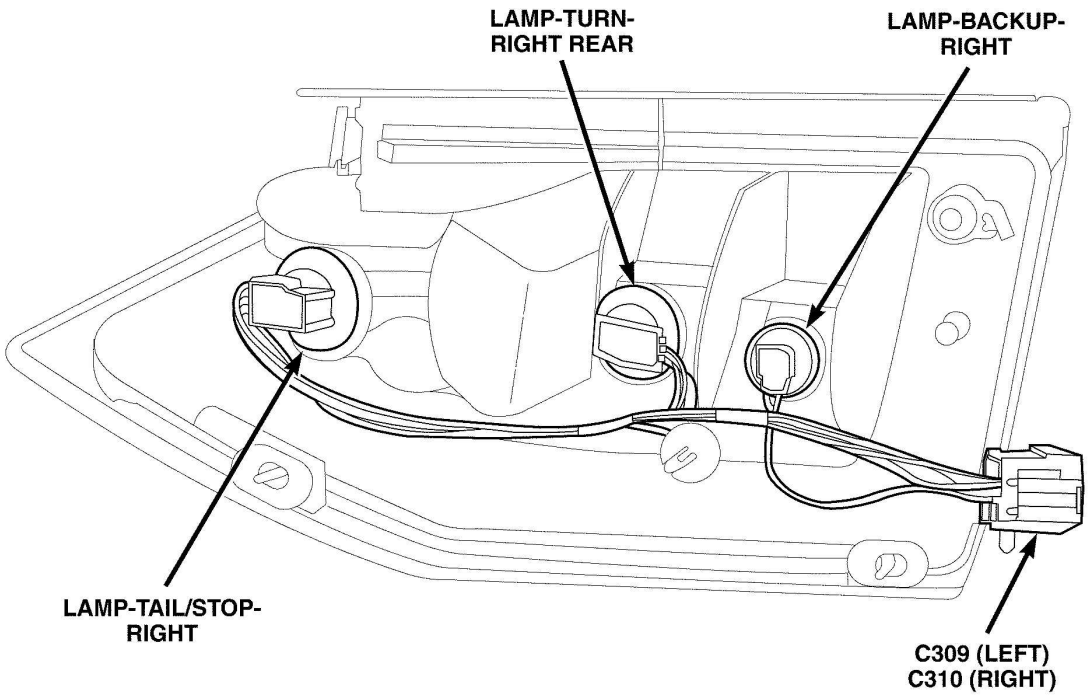

G00450329

Fig. 43: Right Taillight Assembly (Left Similar)
Courtesy of CHRYSLER LLC

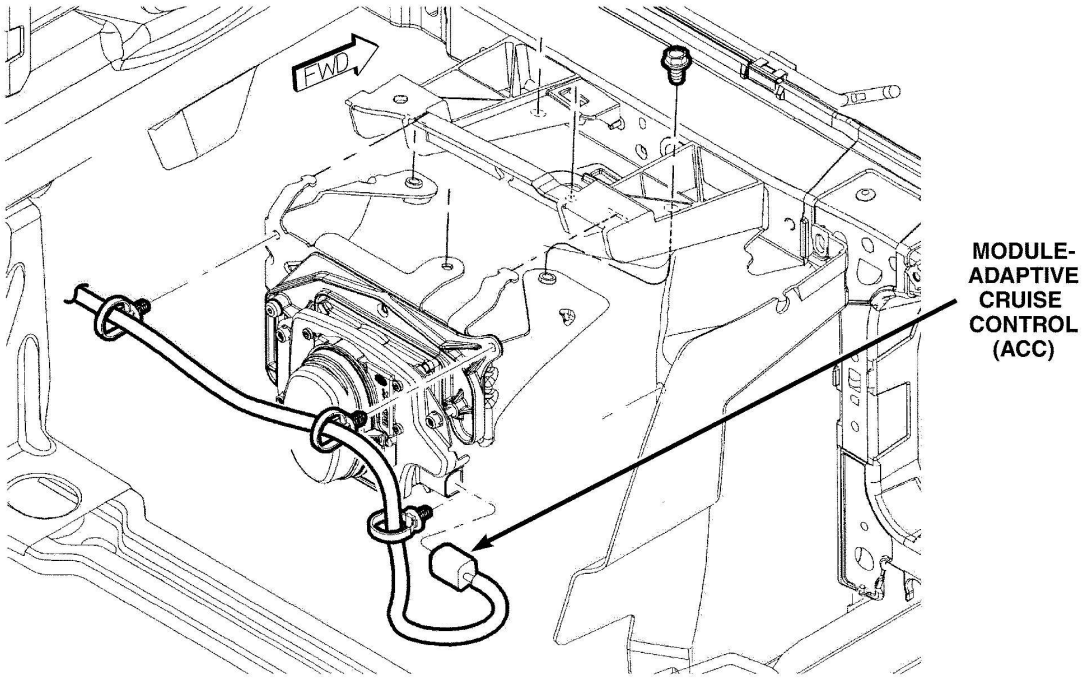

G00450332

Fig. 44: Front Of Vehicle
Courtesy of CHRYSLER LLC

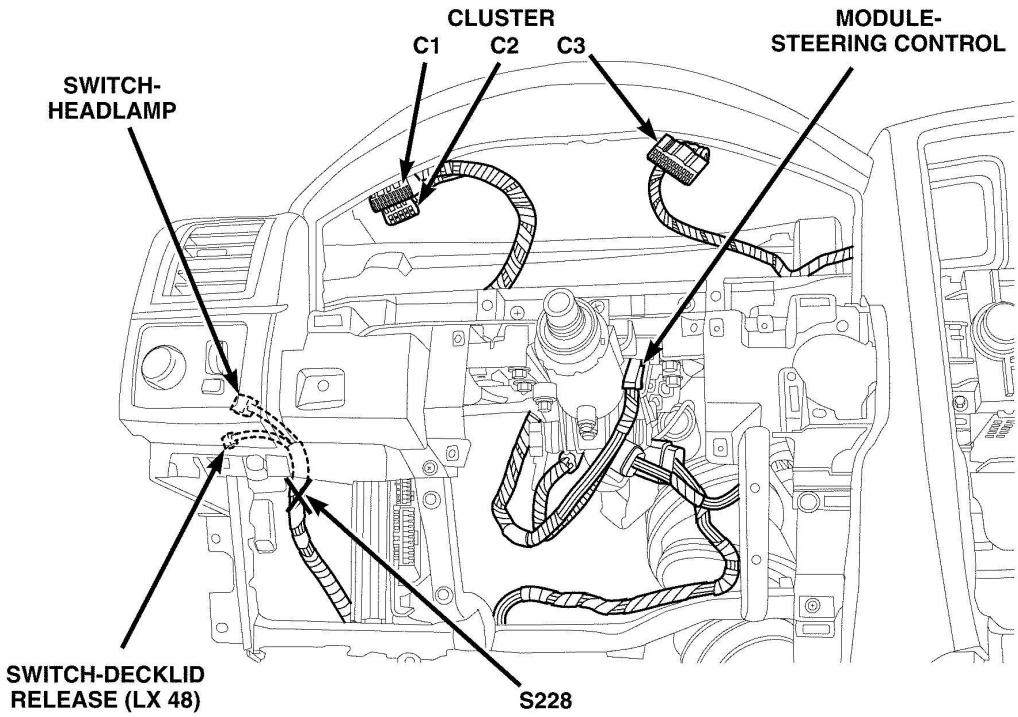

G00450333

Fig. 45: Dash
Courtesy of CHRYSLER LLC

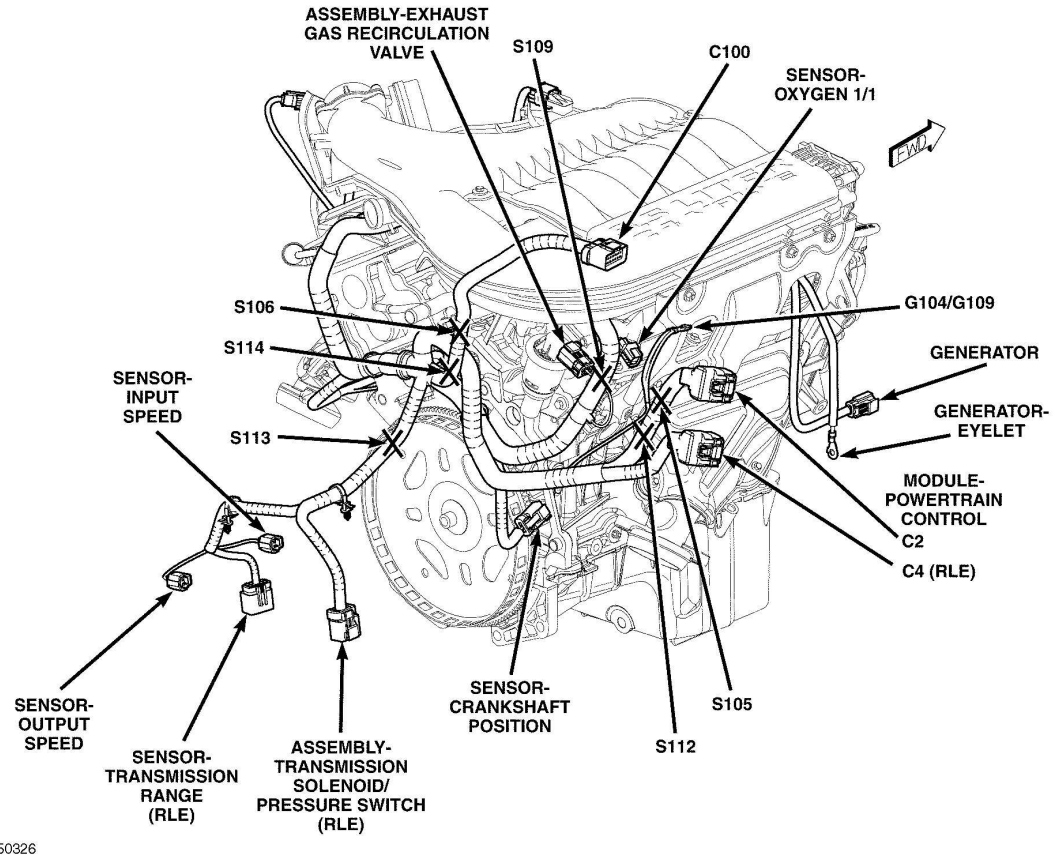

Fig. 46: Engine Assembly (3.5L)
Courtesy of CHRYSLER LLC

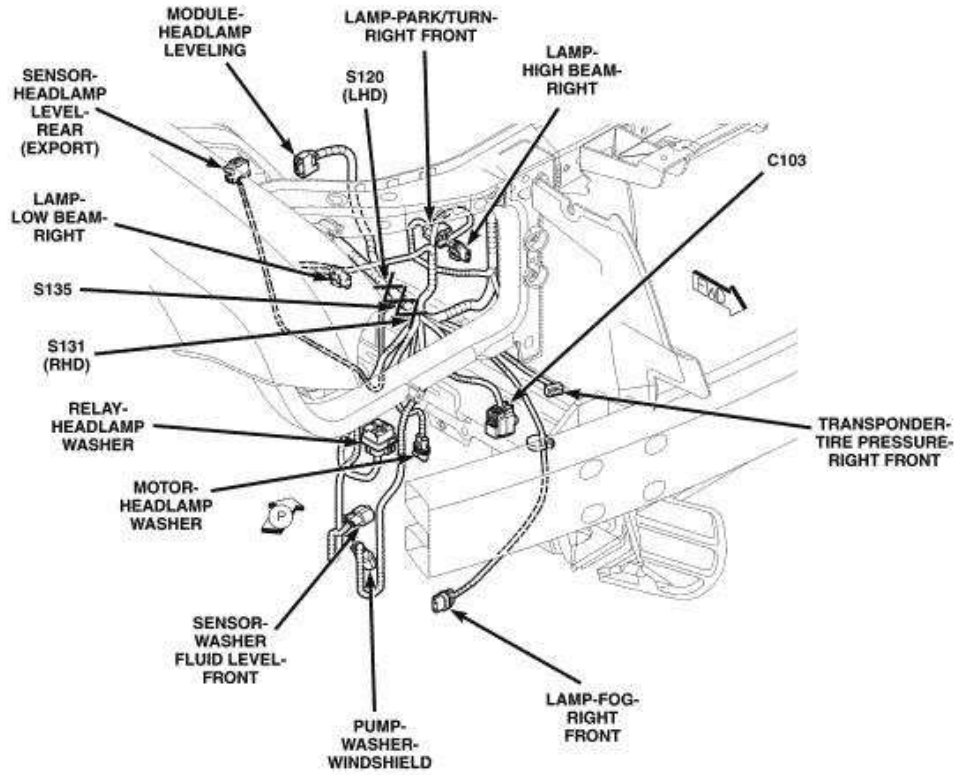

Fig. 47: Right Front Of Engine Compartment
Courtesy of CHRYSLER LLC

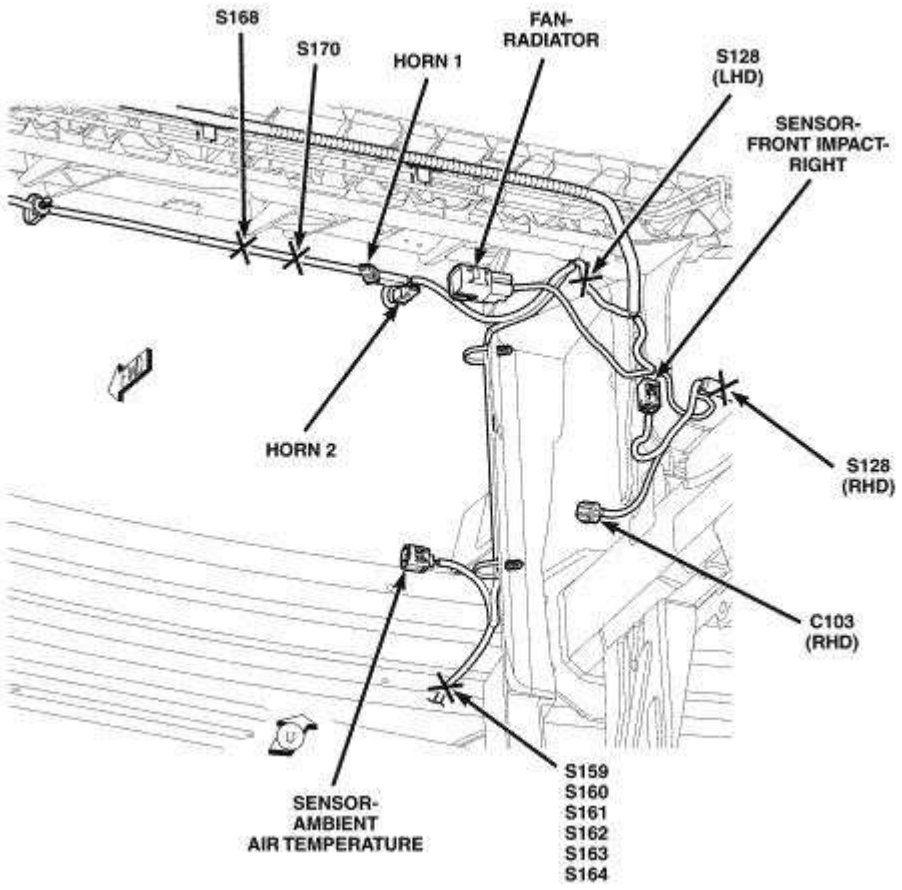

Fig. 48: Right Front Of Engine Compartment
Courtesy of CHRYSLER LLC

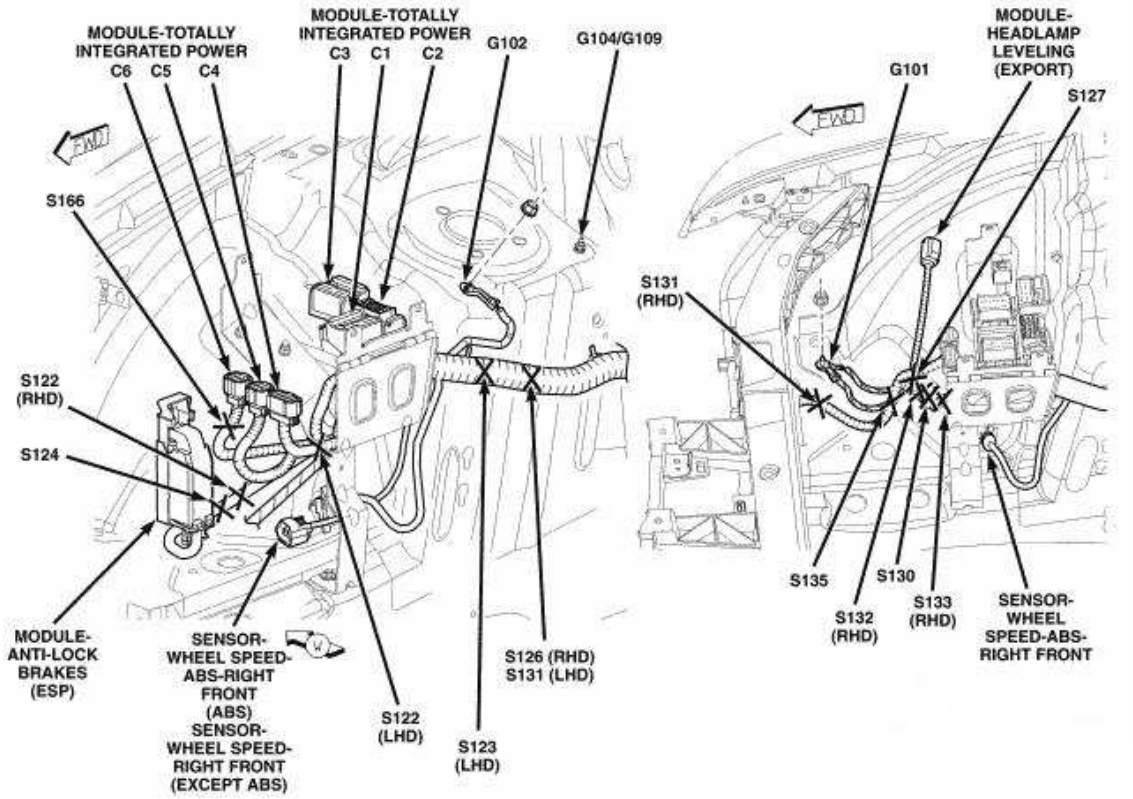

Fig. 49: Right Side Of Engine Compartment
Courtesy of CHRYSLER LLC

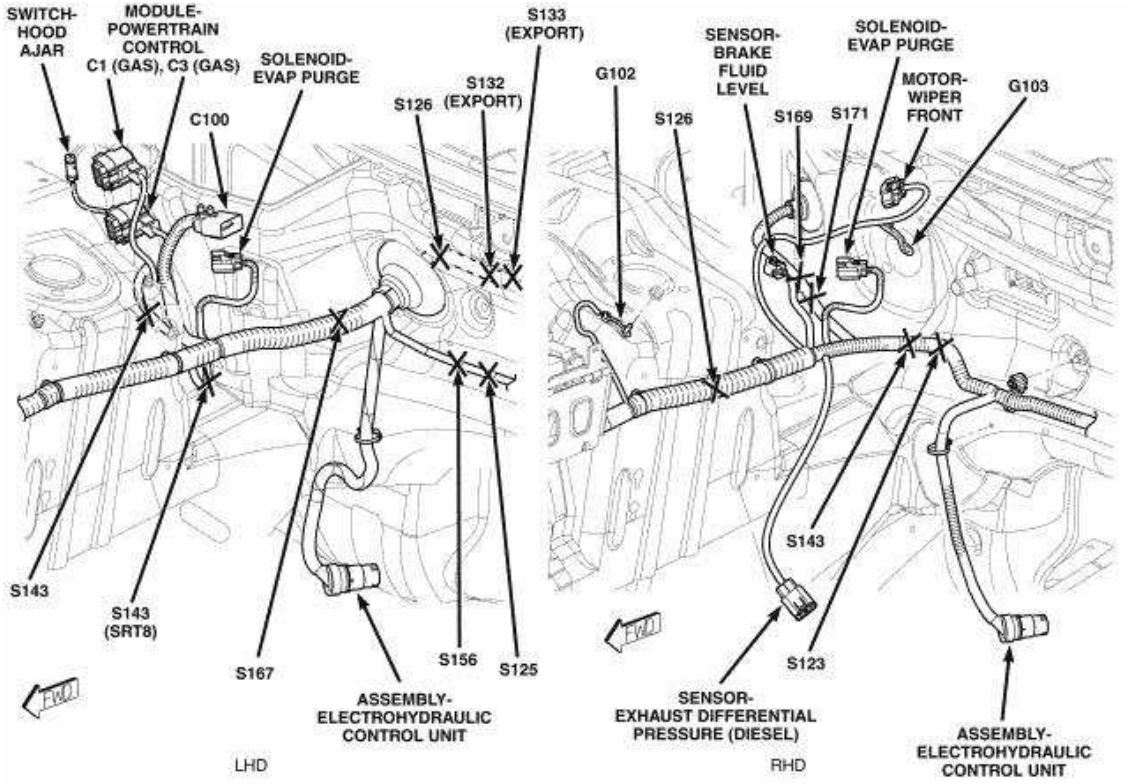

Fig. 50: Right Inner Fender Shield
Courtesy of CHRYSLER LLC

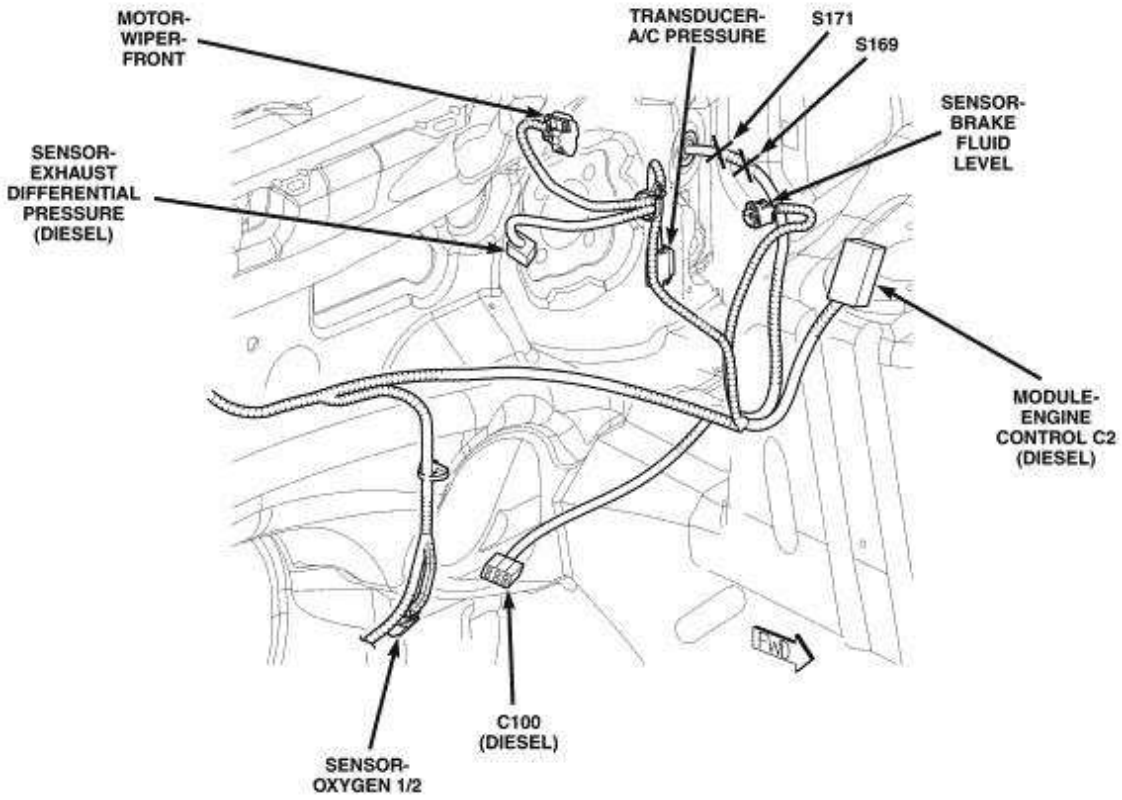

Fig. 51: Left Rear Of Engine Compartment
Courtesy of CHRYSLER LLC

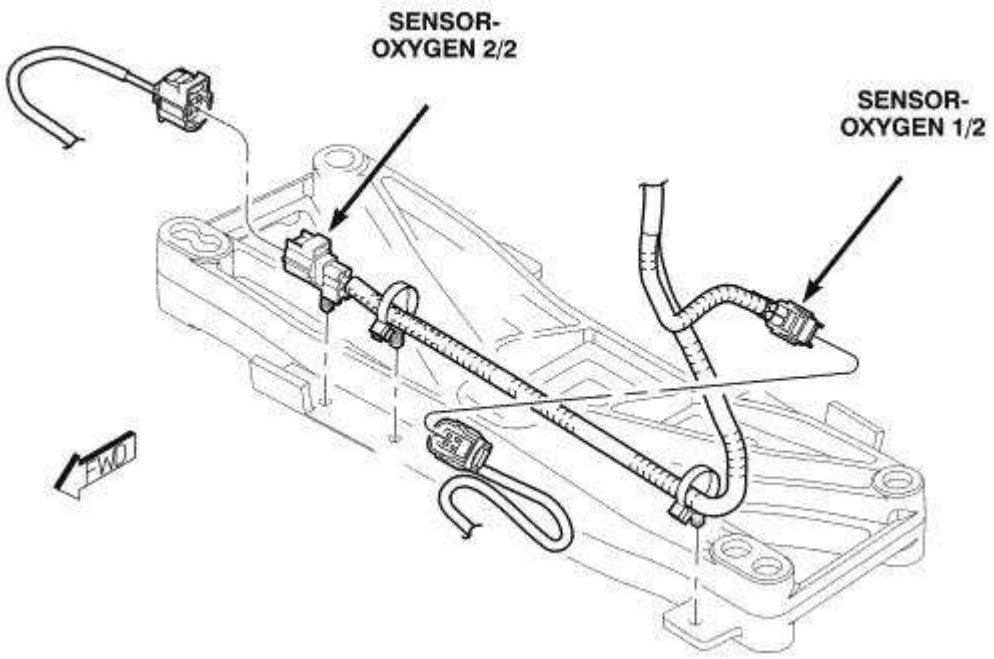

Fig. 52: Rear Of Engine Compartment (V6)
Courtesy of CHRYSLER LLC

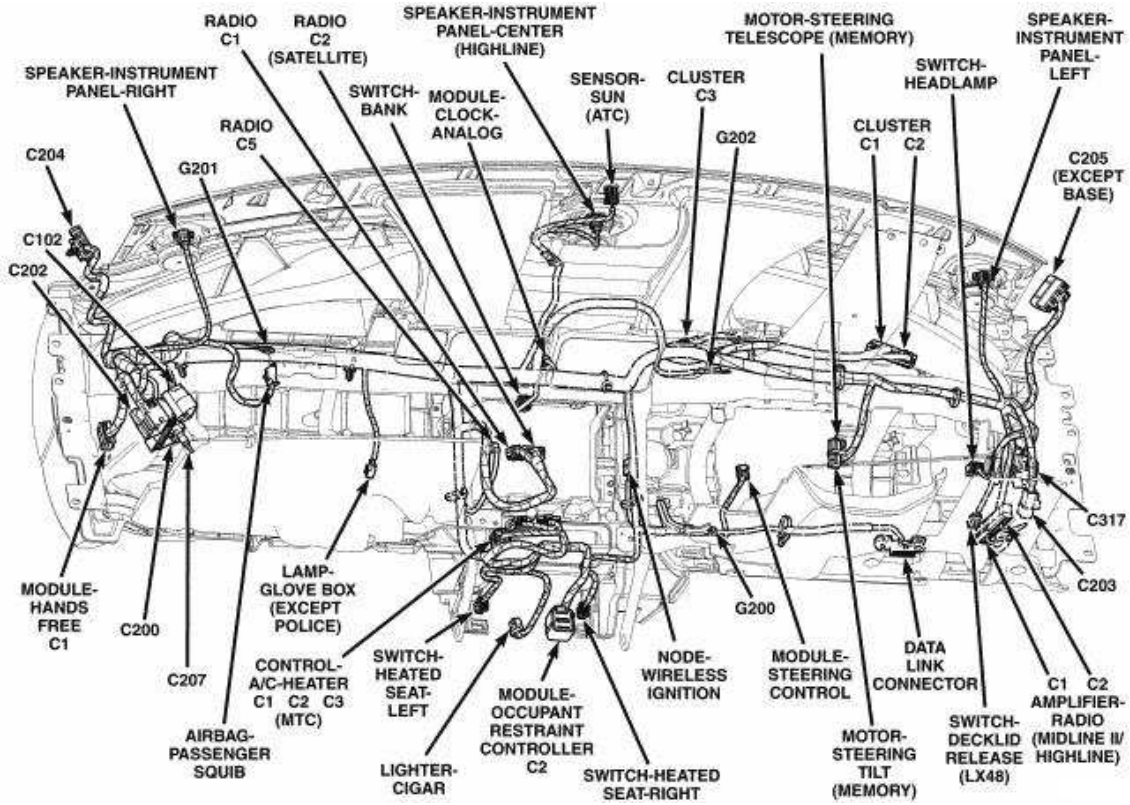

Fig. 53: Instrument Panel
Courtesy of CHRYSLER LLC

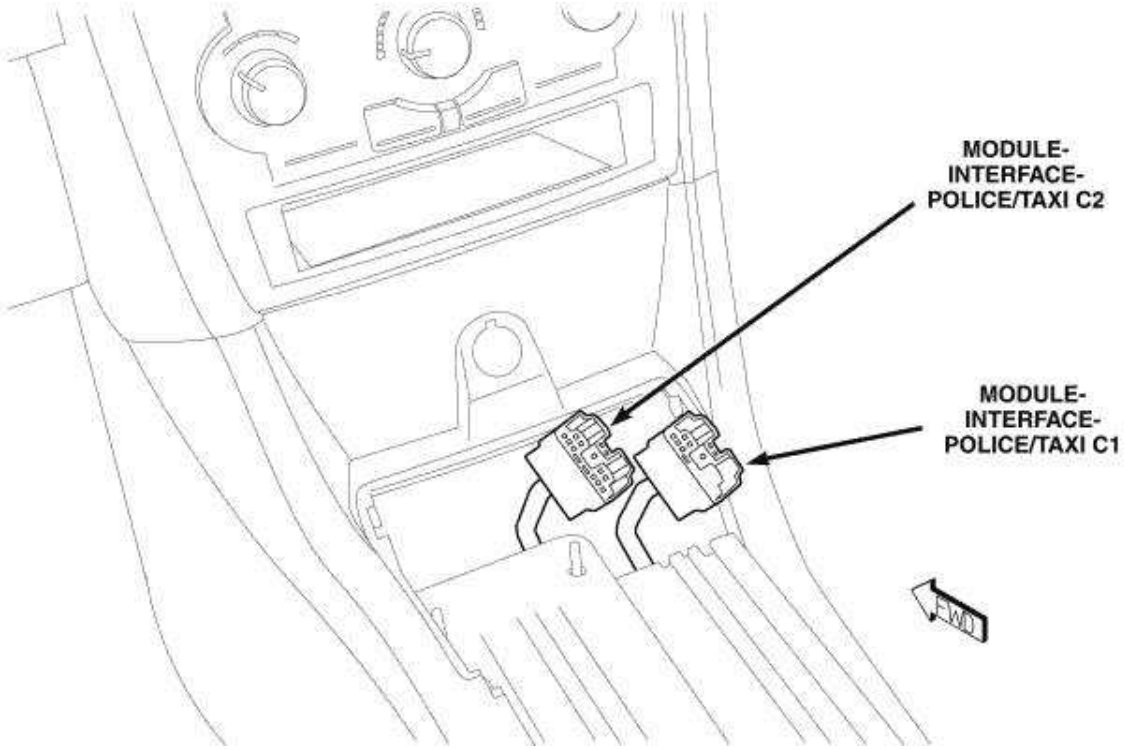

Fig. 54: Police/Taxi Interface Module
Courtesy of CHRYSLER LLC

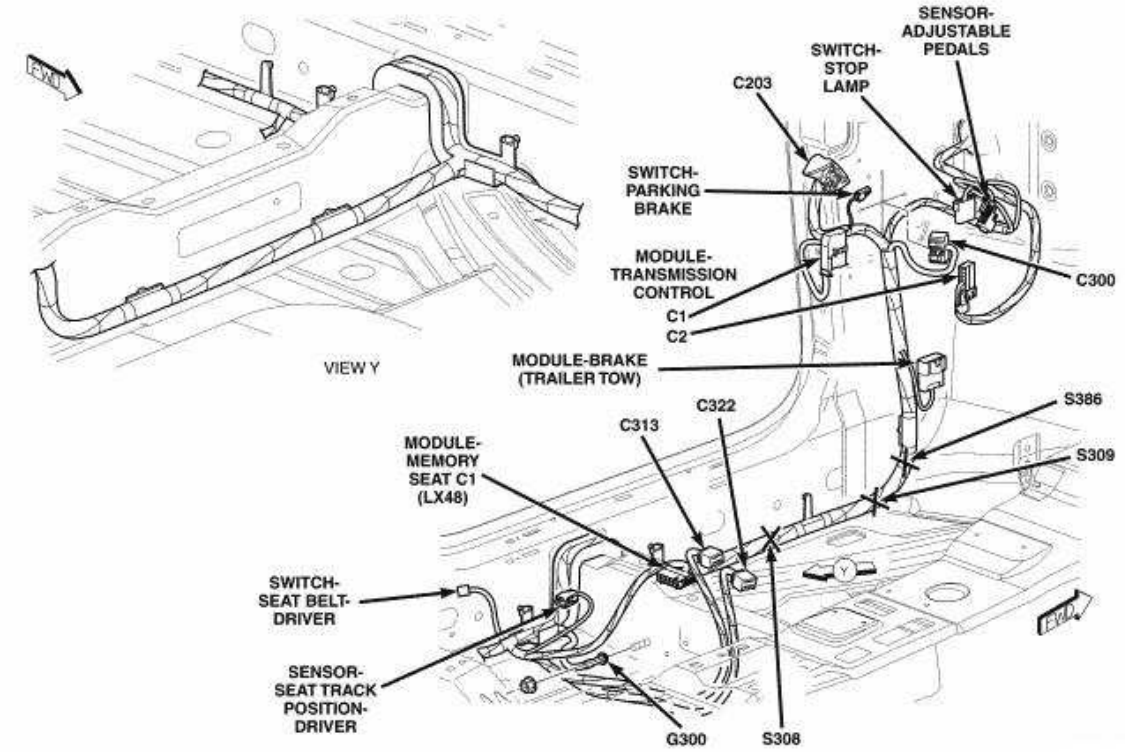

Fig. 55: Body, Left Front

Courtesy of CHRYSLER LLC

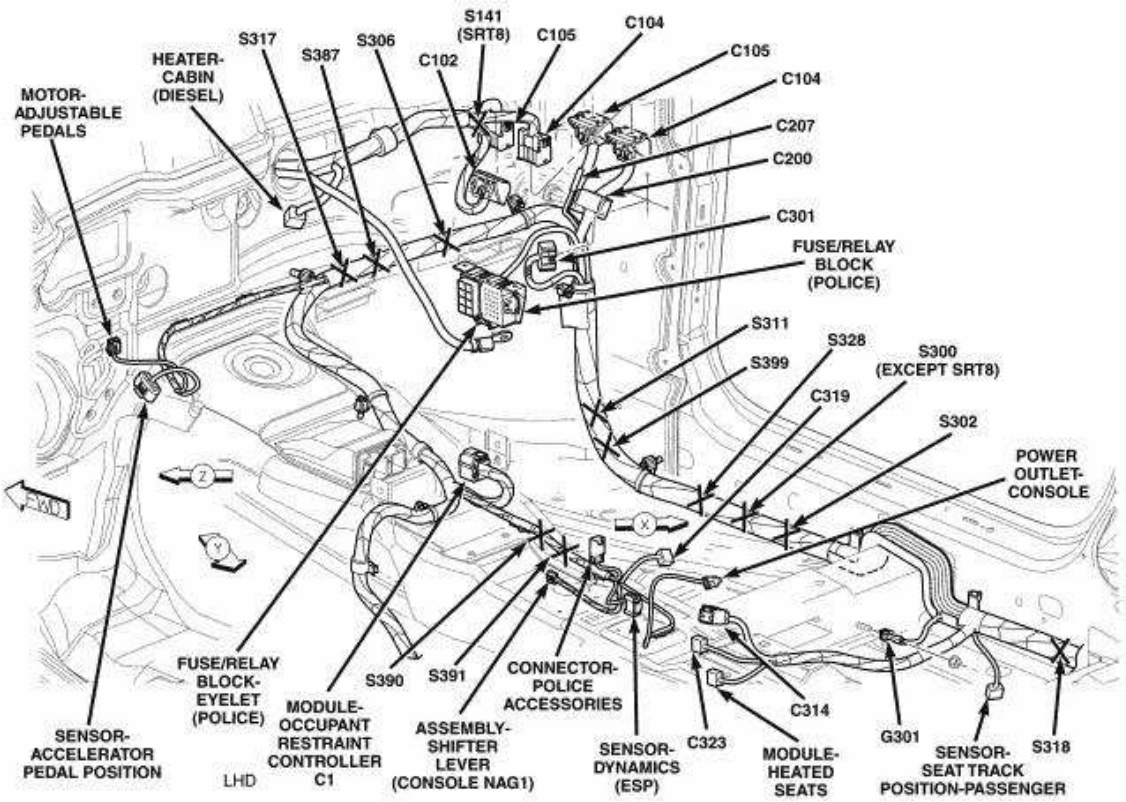

Fig. 56: Body, Right Front
Courtesy of CHRYSLER LLC

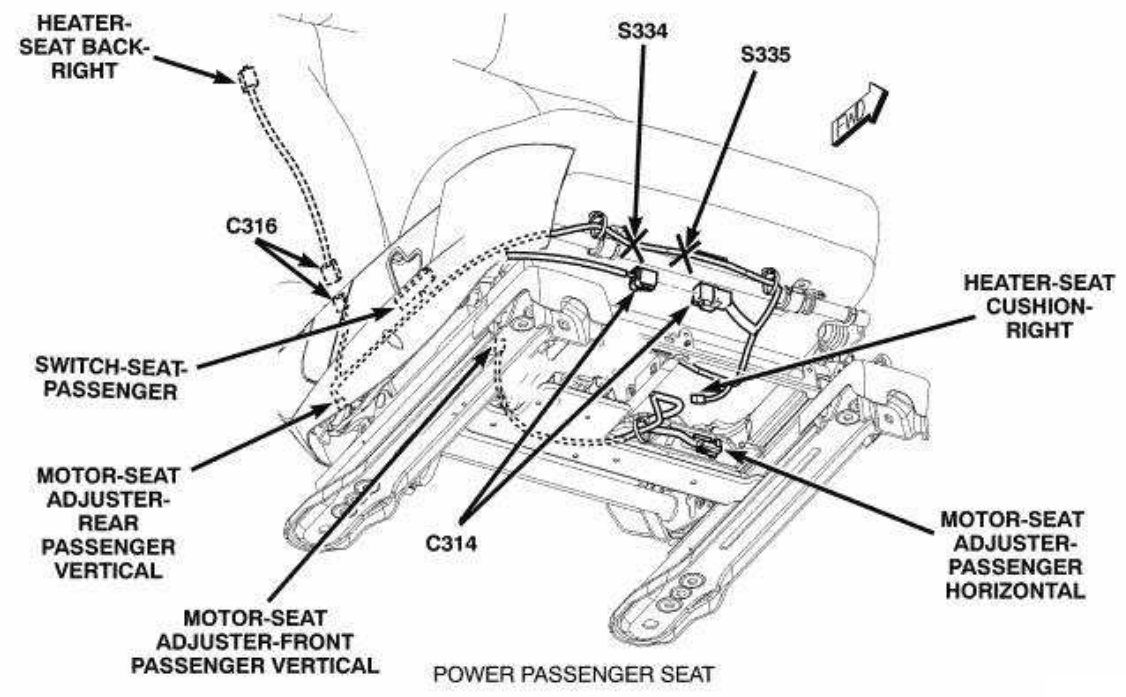

Fig. 57: Passenger Seat
Courtesy of CHRYSLER LLC

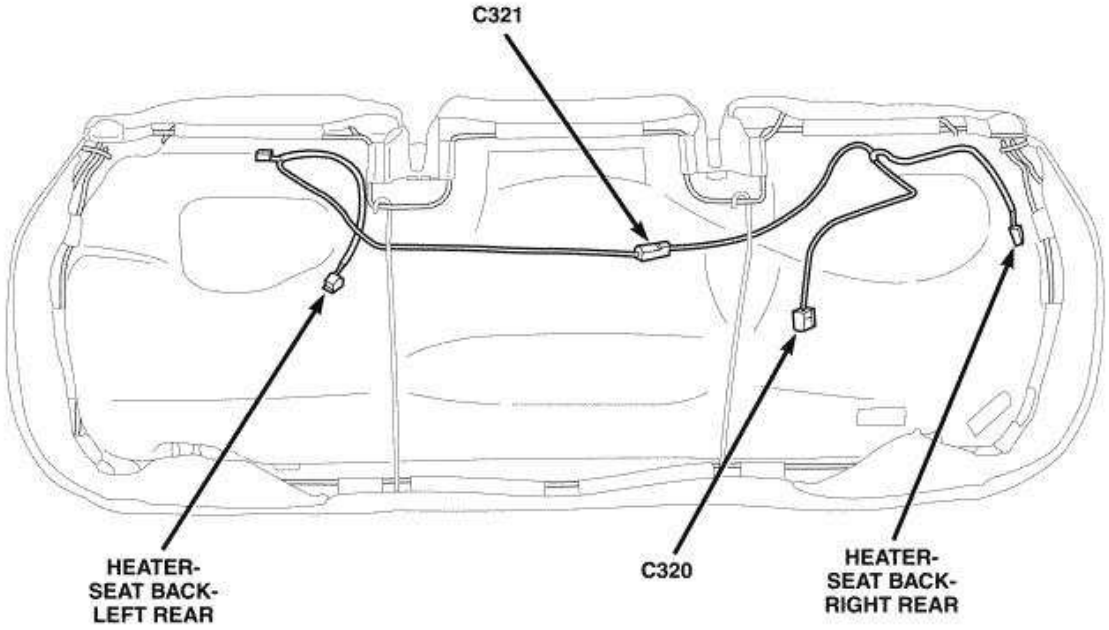

Fig. 58: Rear Heated Seat Harness
Courtesy of CHRYSLER LLC

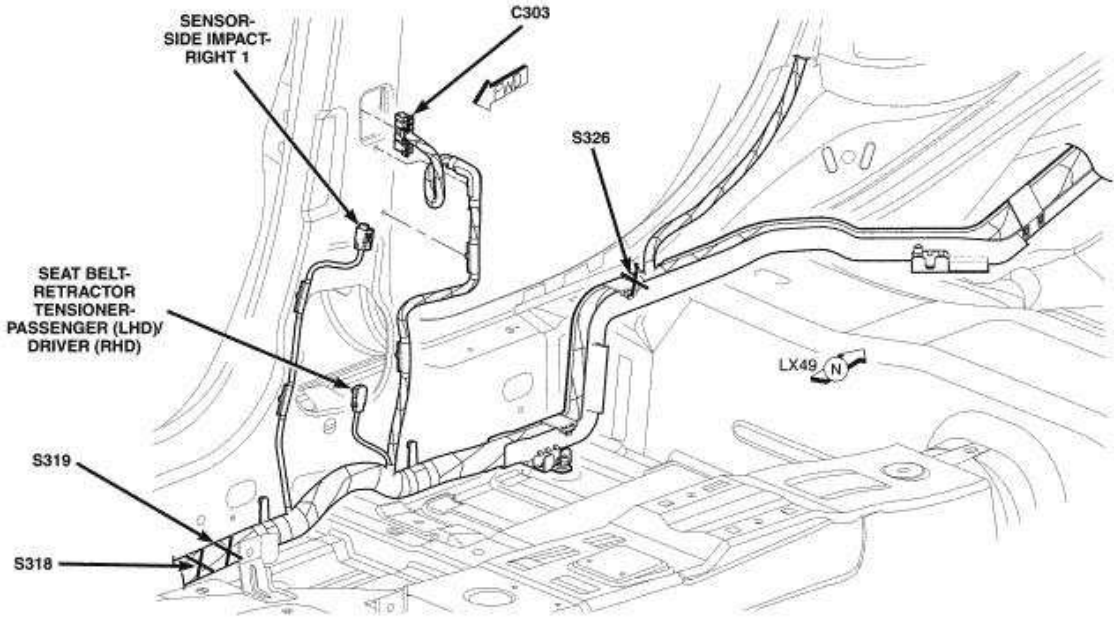

Fig. 59: Body, Right Side
Courtesy of CHRYSLER LLC

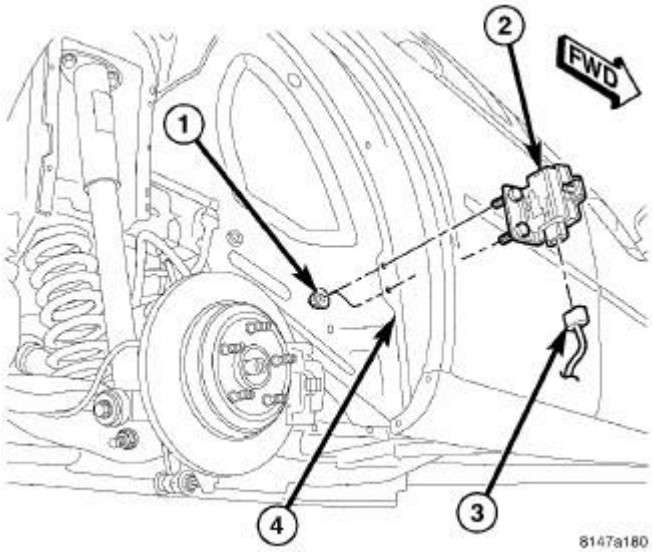

Fig. 60: Rear Transponder Mounting
Courtesy of CHRYSLER LLC

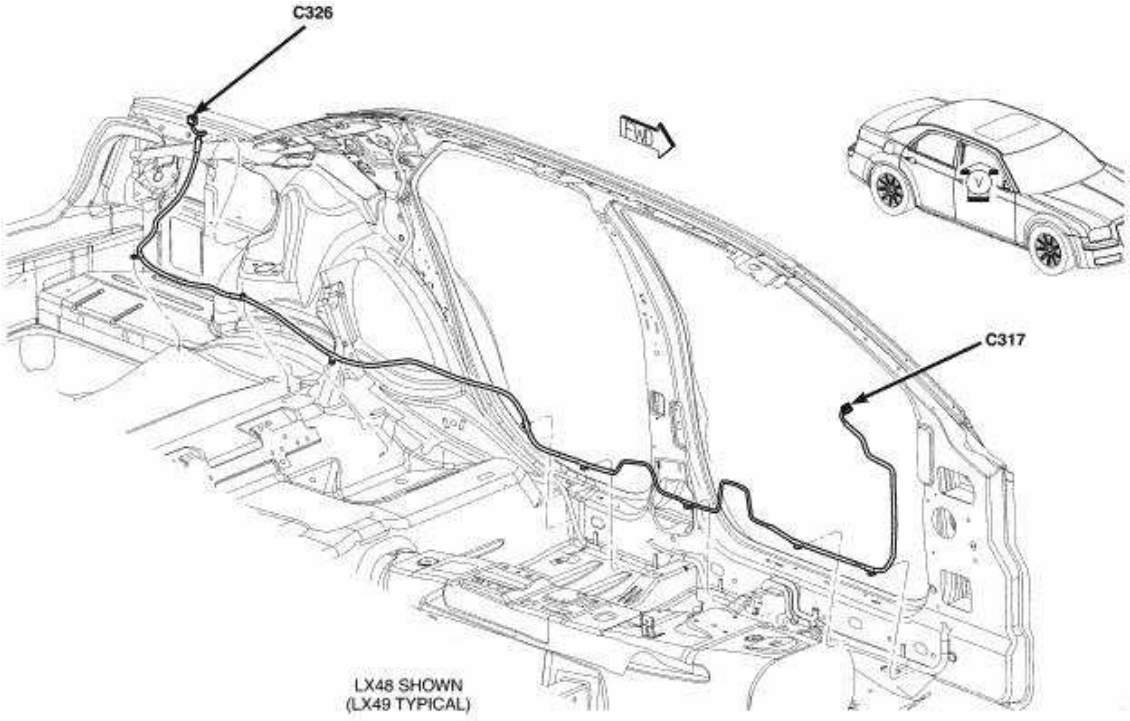

Fig. 61: Left Side Of Vehicle
Courtesy of CHRYSLER LLC

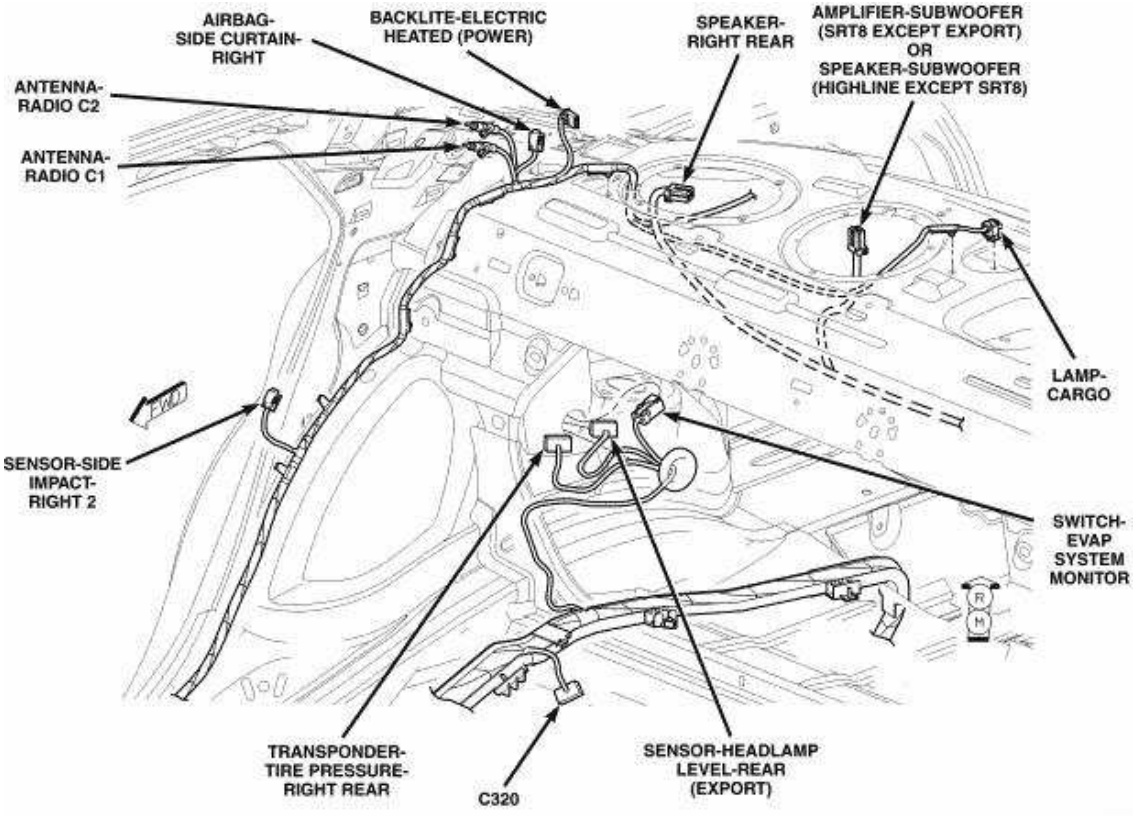

Fig. 62: Body, Right Rear Quarter
Courtesy of CHRYSLER LLC

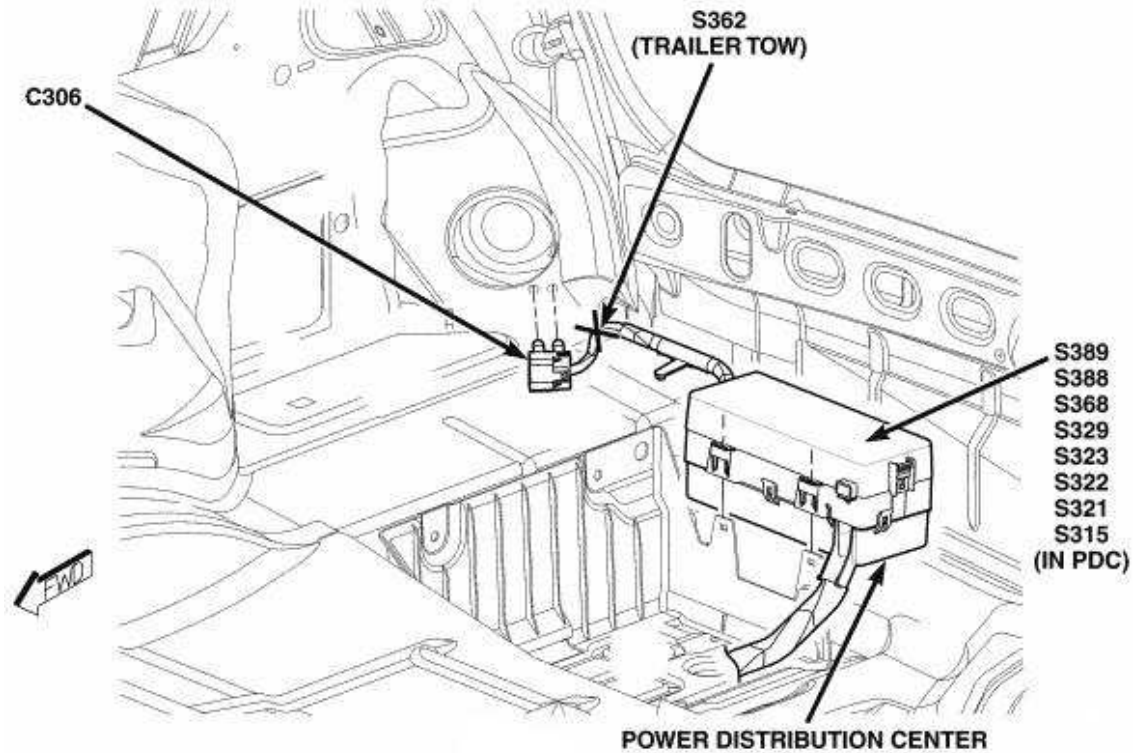

Fig. 63: Body, Right Rear & PDC
Courtesy of CHRYSLER LLC

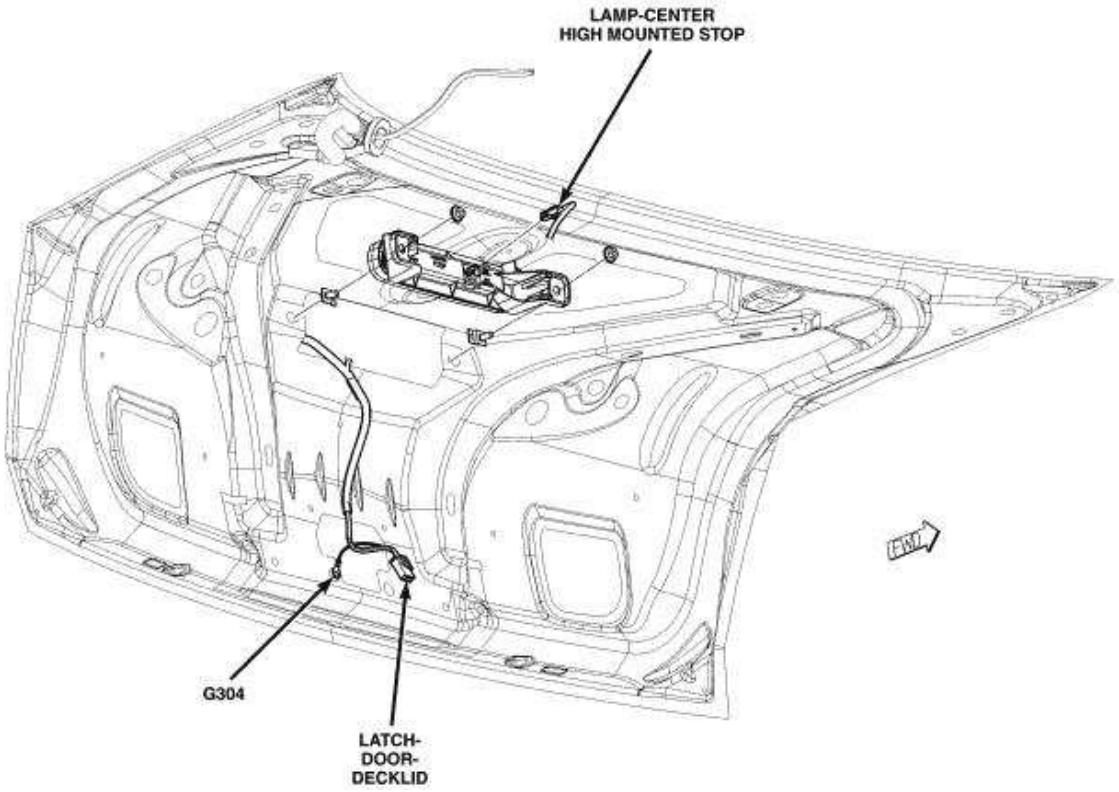

Fig. 64: Deck Lid
Courtesy of CHRYSLER LLC

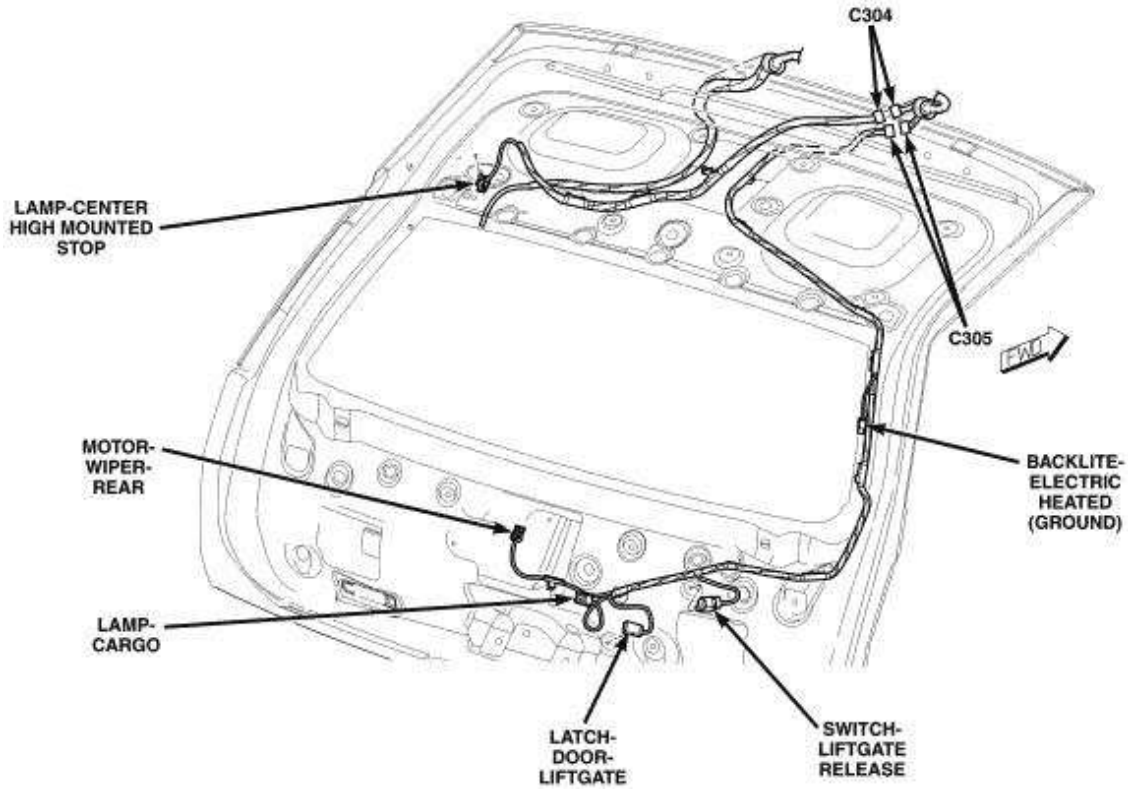

Fig. 65: Liftgate
Courtesy of CHRYSLER LLC

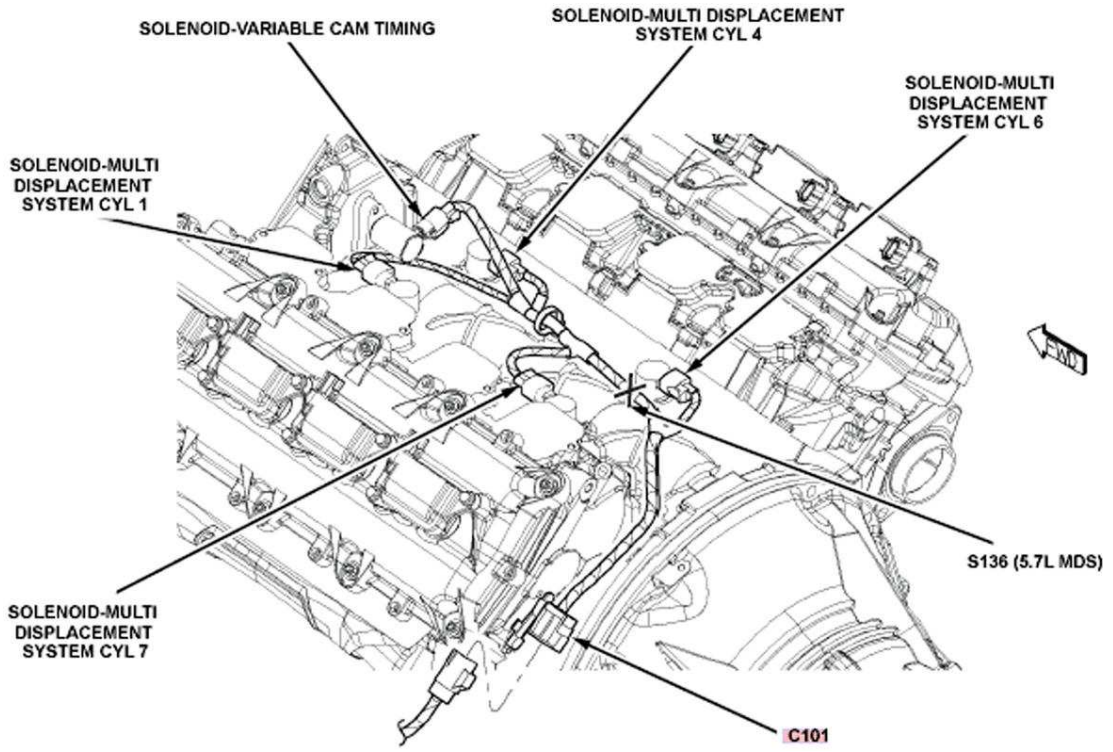

Fig. 66: Top Of Engine (5.7L)

Courtesy of CHRYSLER LLC

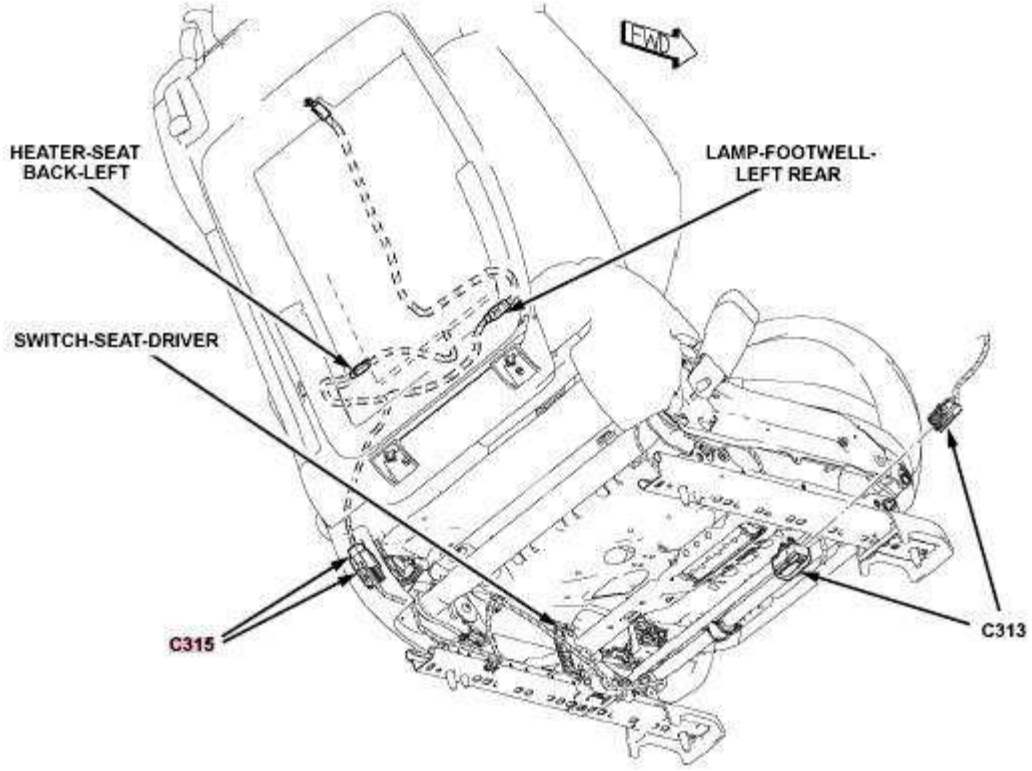

Fig. 67: Driver's Seat
Courtesy of CHRYSLER LLC

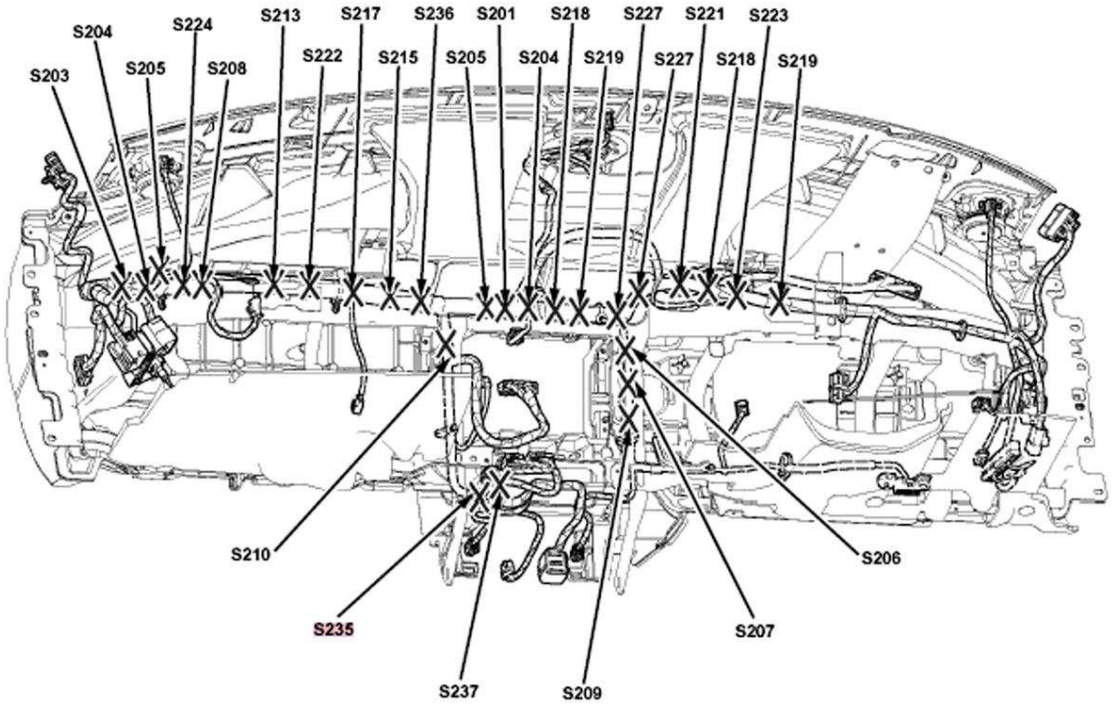

Fig. 68: Dash
Courtesy of CHRYSLER LLC

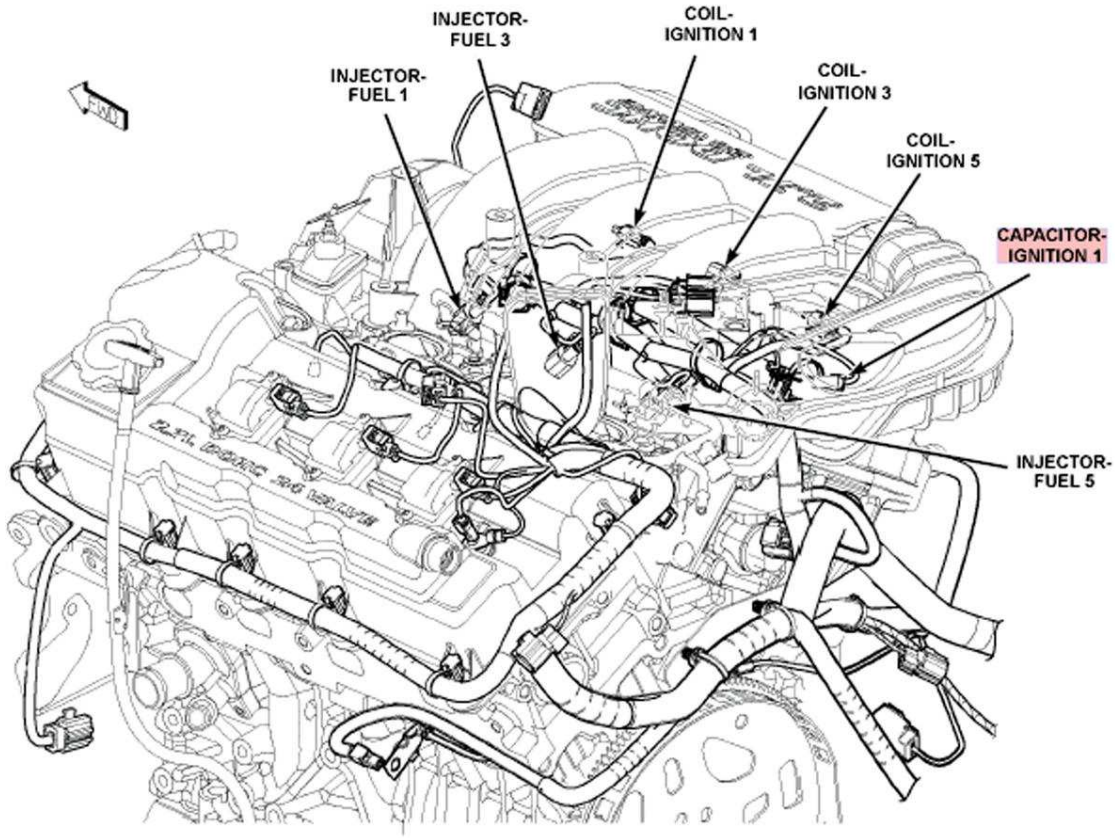

Fig. 69: Top Of Engine (2.7L)
Courtesy of CHRYSLER LLC

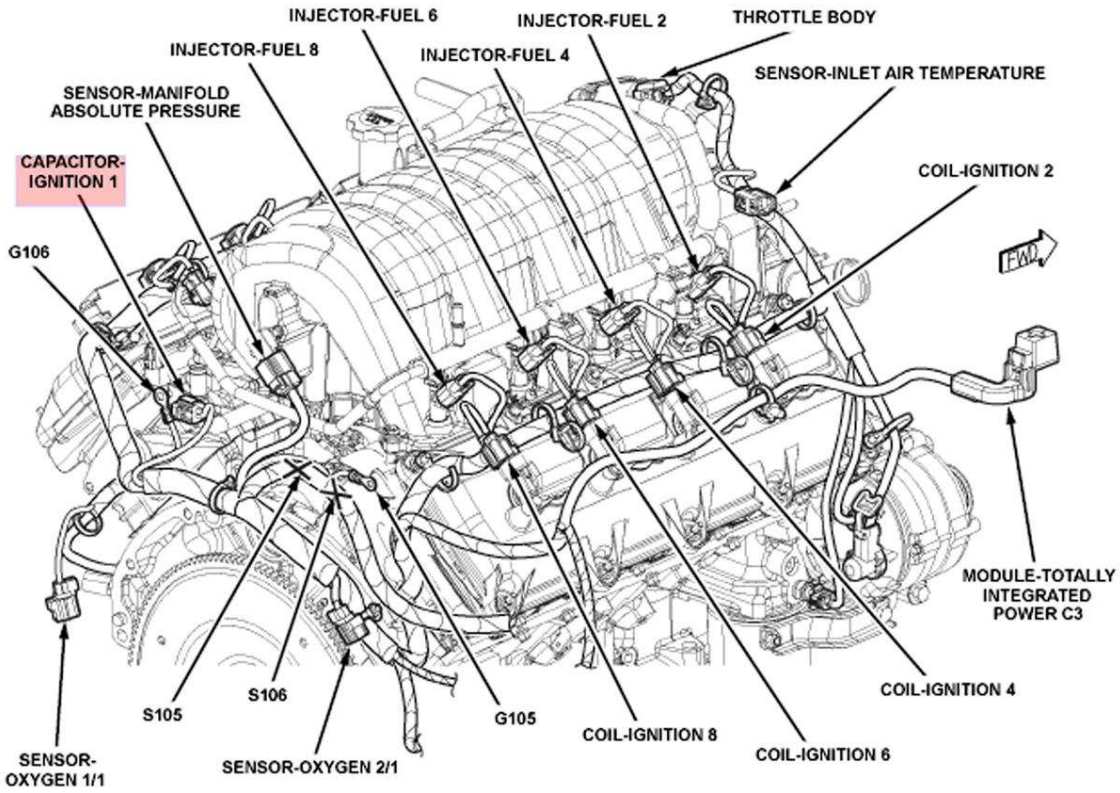

Fig. 70: Top Of Engine (6.1L)
Courtesy of CHRYSLER LLC

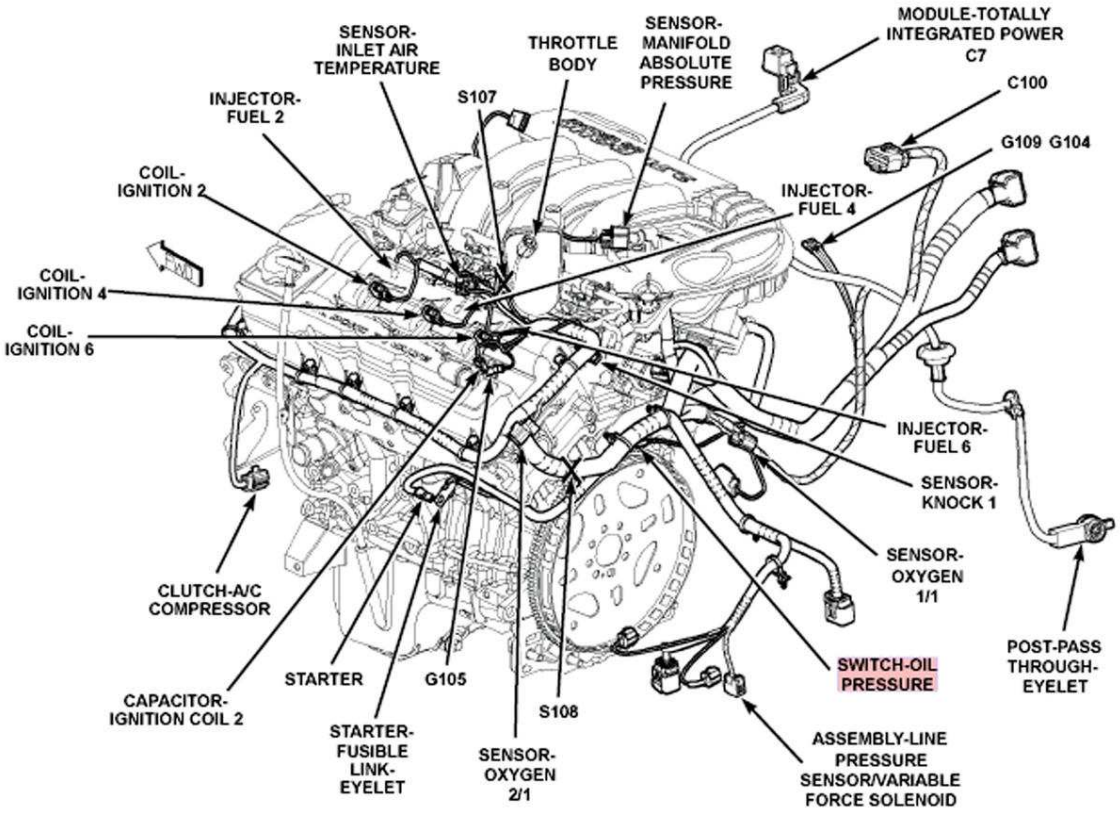

Fig. 71: Top Of Engine (2.7L)
Courtesy of CHRYSLER LLC

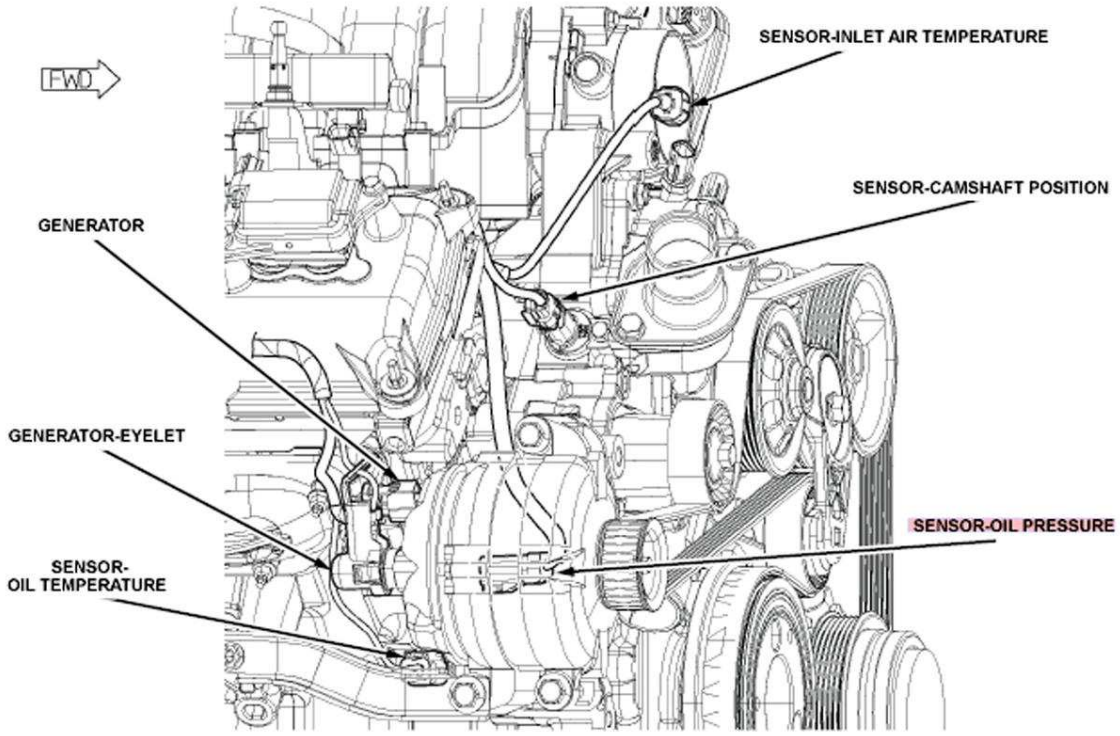

Fig. 72: Right Front Of Engine (5.7L)
Courtesy of CHRYSLER LLC

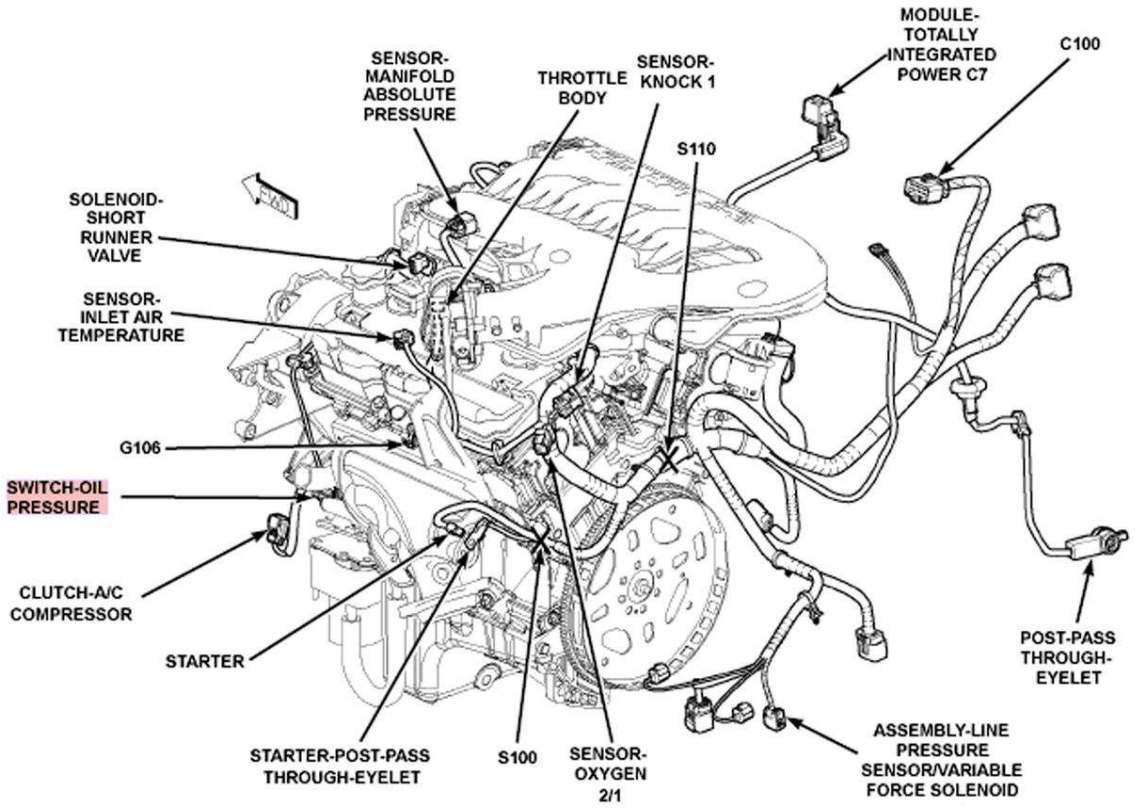

Fig. 73: Left Side Of Engine (3.5L)
Courtesy of CHRYSLER LLC

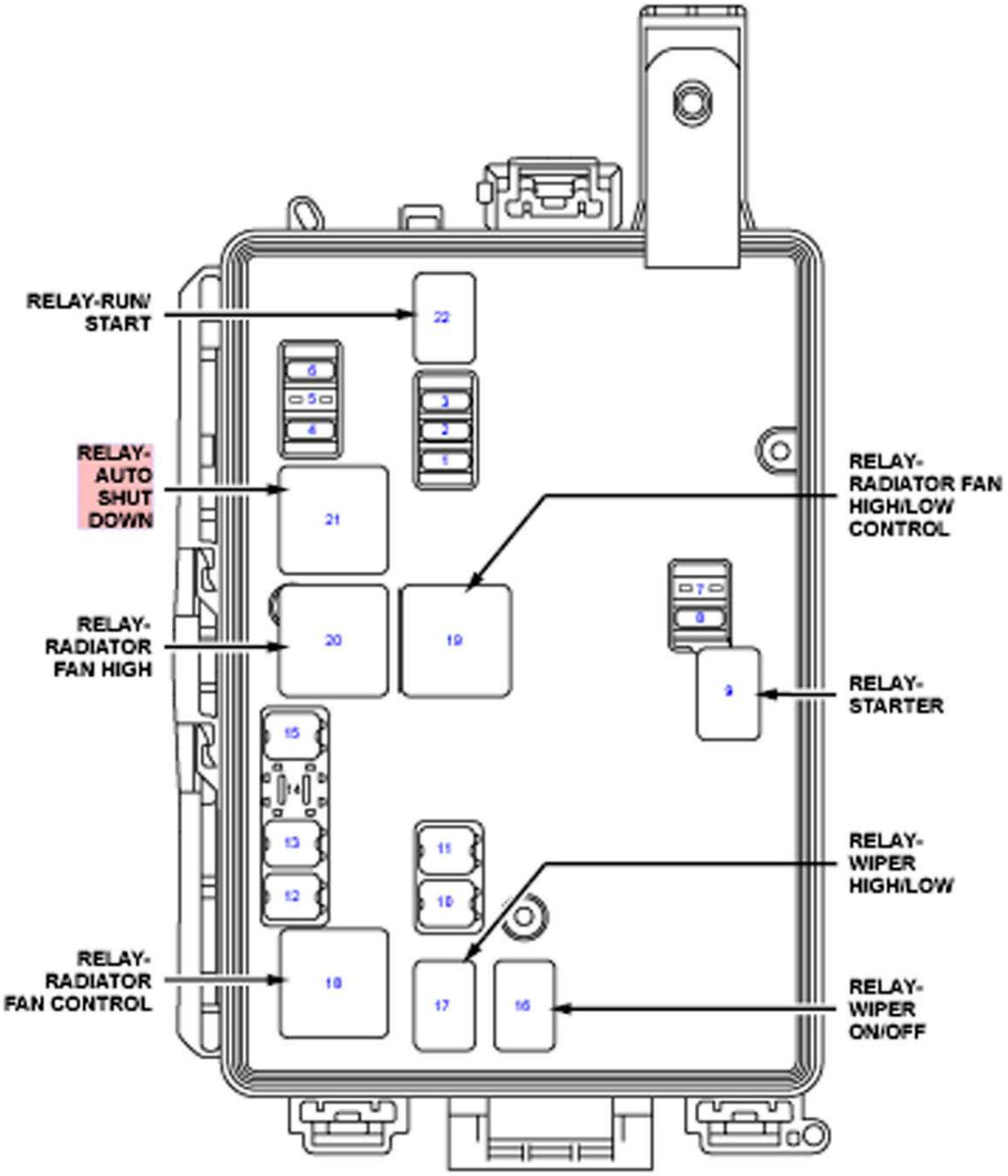

Fig. 74: Totally Integrated Power Module
Courtesy of CHRYSLER LLC

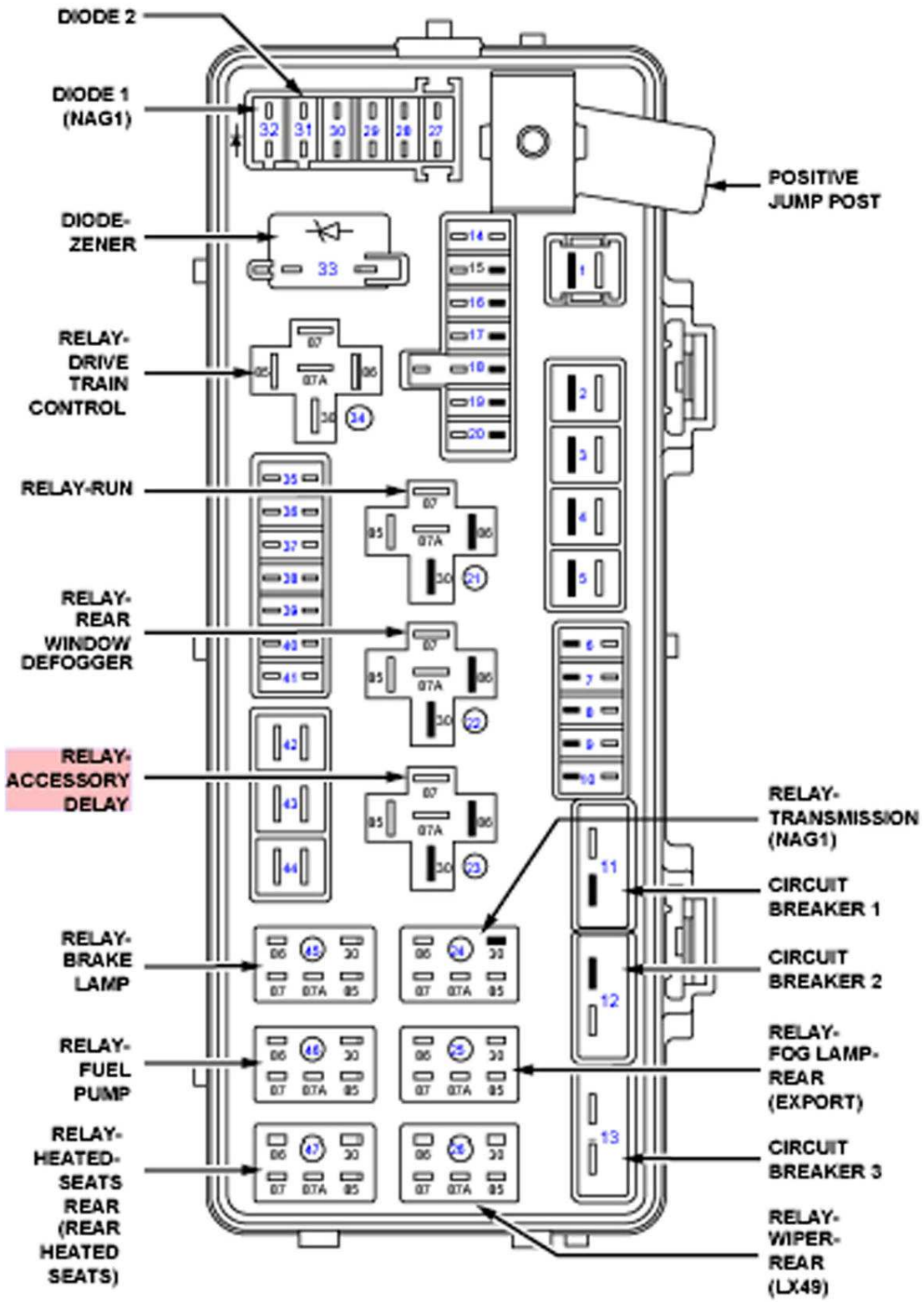

Fig. 75: Power Distribution Center
Courtesy of CHRYSLER LLC

ACCESSORIES AND EQUIPMENT

Electronic Control Modules - Service Information - Challenger

STANDARD PROCEDURE

MODULE/PROGRAMMING ORDER REPLACEMENT GUIDE

Match the module row with the condition that applies, after module replacement follow the chart down and program the modules in the chart order.

WIN WITHOUT PEM MODULE

MODULE	MODULE REPLACEMENT GUIDE						
	Condition 1	**Condition 2**	**Condition 3**	**Condition 4**	**Condition 5**	**Condition 6**	**Condition 7**
PCM	Existing Part	Existing Part	New Part	Existing Part	New Part	New Part	New Part
WCM/WIN	Existing Part	New Part	New Part	New Part	Existing Part	Existing Part	New Part
"Ignition Keys / FOBIKS"	New Part	New Part	New Part	Existing Part	Existing Part	New Part	Existing Part
PROGRAMMING ORDER	ASSOCIATED MODULE MISC. FUNCTION						
1	Program Ignition Keys or Key FOBs	WIN Replaced	Check PCM VIN	WIN Replaced	PCM Replaced	PCM Replaced	Attempt to avoid this situation. If possible, try to execute condition 4 or 5 Otherwise, keys must be replaced also (condition 3)
2	----	Program Ignition Keys or Key FOBs	WIN Replaced	Program Ignition Keys or Key FOBs	----	Program Ignition Keys or Key FOBs	
3	----	----	Program Ignition Keys or Key FOBs	----	----	----	

WIN WITH PEM MODULE, CONDITION 1 - 9

MODULE	MODULE REPLACEMENT GUIDE						
	Condition 1	**Condition 2**	**Condition 3**	**Condition 4**	**Condition 5**	**Condition 6**	**Condition 7**
PCM	Existing Part	Existing Part	Existing Part	Existing Part	New Part	New Part	Existing Part

WCM/WIN	Existing Part	Existing Part	New Part	New Part	New Part	New Part	New Part
Ignition Keys / FOBIKS	New Part	New Part	New Part	New Part	New Part	New Part	Existing Part
PEM	Existing Part	New Part	Existing Part	New Part	Existing Part	New Part	Existing Part
PROGRAMMING ORDER	ASSOCIATED MODULE MISC. FUNCTION						
1	Program Ignition Keys or Key FOBs	Program Ignition Keys or Key FOBs	WIN Replaced	WIN Replaced	Check PCM VIN	Check PCM VIN	WIN Replaced
2	PEM Replaced	PEM Replaced	Program Ignition Keys or Key FOBs	Program Ignition Keys or Key FOBs	WIN Replaced	WIN Replaced	Program Ignition Keys or Key FOBs
3	----	----	PEM Replaced	PEM Replaced	Program Ignition Keys or Key FOBs	Program Ignition Keys or Key FOBs	PEM Replaced
4	----	----	----	----	PEM Replaced	PEM Replaced	----

WIN WITH PEM MODULE, CONTINUED CONDITION 8 - 14

MODULE	MODULE REPLACEMENT GUIDE						
	Condition 8	**Condition 9**	**Condition 10**	**Condition 11**	**Condition 12**	**Condition 13**	**Condition 14**
PCM	Existing Part	New Part	New Part	New Part	New Part	New Part	New Part
WCM/WIN	New Part	New Part	New Part	Existing Part	Existing Part	Existing Part	Existing Part
Ignition Keys / FOBIKS	Existing Part	Existing Part	Existing Part	Existing Part	Existing Part	New Part	New Part
PEM	New Part	Existing Part	New Part	Existing Part	New Part	New Part	Existing Part
PROGRAMMING ORDER	ASSOCIATED MODULE MISC. FUNCTION						
1	WIN Replaced	Attempt to avoid this situation.	Attempt to avoid this situation.	PCM Replaced	PCM Replaced	PCM Replaced	PCM Replaced
2	Program Ignition Keys or	If possible, try to execute condition 11 then 7.	If possible, try to execute condition 11 then 8.	----	PEM Replaced	Program Ignition Keys or	Program Ignition Keys or

	Key FOBs	Otherwise, keys must be replaced also (condition 5)	Otherwise, keys must be replaced also (condition 6)			Key FOBs	Key FOBs
3	PEM Replaced			----	----	PEM Replaced	PEM Replaced
4	----			----	----	----	----

MODULE PROGRAMMING

The Wireless Ignition Node (WIN) controls the Vehicle Theft Security System (VTSS), Remote Keyless Entry (RKE). When a Powertrain Control Module (PCM) is in need of replacement, perform the following steps in order:

NOTE: The PCM and the WIN should never be replaced at the same time. They should be replaced independently of each other.

1. If applicable, first replace the PCM with the original WIN still connected to the vehicle.
2. Using a scan tool program the new PCM. (This will ensure the transfer of the Secret Key data from the original WIN into the new PCM).
3. Replace the WIN, using the scan tool program the new WIN module. This will transfer the Secret Key data from the PCM into the new WIN.
4. With the scan tool reprogram the key FOBIK to the new WIN.
5. Ensure all the customer's keys have been programmed to the new module.

NOTE: If the original keys do not successfully program to the new WIN after the proper procedures are followed correctly, programming new keys will be necessary.

NOTE: Programming the PCM or WIN is done using a diagnostic scan tool and a PIN to enter secure access mode. If three attempts are made to enter secure access mode using an incorrect PIN, secure access mode will be locked out for one hour. To exit this lockout mode, turn the ignition to the RUN position for one hour and then enter the correct PIN. Be certain that all accessories are turned OFF. Also, monitor the battery state and connect a battery charger if necessary.

CAUTION: Read all notes and cautions for programming procedures.

NOTE: Have a unique vehicle PIN readily available before running the routine

CAUTION: If the PCM and WIN are replaced at the same time, the PCM MUST be programmed before the WIN.

NOTE: **If the PCM and the WIN are replaced at the same time, all vehicle keys will need to be replaced and programmed to the new WIN.**

CAUTION: Read all notes and cautions for programming procedures.

NOTE: **If the original keys do not successfully program to the new WIN after the proper procedures are followed correctly, programming new keys will be necessary.**

NOTE: **A maximum of eight keys can be learned by the WIN. Once a key is learned by a WIN, that key has acquired the Secret Key for that WIN and cannot be transferred to any other WIN or vehicle.**

CAUTION: Read all notes and cautions for programming procedures.

CAUTION: If the PCM and WIN are replaced at the same time, the PCM MUST be programmed before the WIN.

PROGRAMMING THE SECRET KEY TO THE WIN

The secret key is an ID code that is unique to each WIN. This code is programmed and stored in the WIN, the PCM, and each ignition key transponder chip. When the PCM or WIN is replaced, it is necessary to program the Secret Key Code into the new module using a diagnostic scan tool. Follow the programming steps outlined in the diagnostic scan tool for **PCM REPLACED** , **WIN REPLACED** , or **TIPM REPLACED** under **MISCELLANEOUS FUNCTIONS** for the **WIRELESS CONTROL MODULE** menu item as appropriate.

NOTE: **Programming the PCM or WIN is done using a diagnostic scan tool and a PIN to enter secure access mode. If three attempts are made to enter secure access mode using an incorrect PIN, secure access mode will be locked out for one hour. To exit this lockout mode, turn the ignition to the RUN position for one hour and then enter the correct PIN. Be certain that all accessories are turned OFF. Also, monitor the battery state and connect a battery charger if necessary.**

PCM/WIN PROGRAMMING

When an PCM and the WIN are replaced at the same time, perform the following steps in order:

1. Program the new WIN.
2. Replace all ignition keys and program them to the new WIN.

PROGRAMMING THE WIN

CAUTION: Read all notes and cautions for programming procedures.

1. Connect a battery charger to the vehicle.
2. Connect the scan tool.

NOTE: Have a unique vehicle PIN readily available before running the routine

CAUTION: If the PCM and WIN are replaced at the same time, the PCM MUST be programmed before the WIN.

3. Select "ECU View."
4. Select "WIN".
5. Select "Miscellaneous Functions."
6. Select "WIN Replaced".
7. Enter the PIN when prompted.
8. Cycle ignition key after the successful routine completion.

NOTE: If the PCM and the WIN are replaced at the same time, all vehicle keys will need to be replaced and programmed to the new WIN.

PROGRAMMING IGNITION KEYS TO THE WIN

Each FOBIK has a unique ID code that is assigned at the time the key is manufactured. When a key is programmed into the WIN, the module learns the transponder ID code and the transponder acquires the unique Secret Key ID code from the WIN.

CAUTION: Read all notes and cautions for programming procedures.

1. Connect a battery charger to the vehicle.
2. Connect the scan tool.
3. Have a unique vehicle PIN readily available before running the routine.
4. Ignition key should be in RUN position.
5. Select "ECU View".
6. Select "WIN Wireless Control".
7. Select "Miscellaneous Functions."
8. Select "Program Ignition Keys or Key FOBs", Start
9. Enter the PIN when prompted.

10. Verify the correct information.
11. Cycle ignition key after the successful routine completion.

NOTE: If the original keys do not successfully program to the new WIN after the proper procedures are followed correctly, programming new keys will be necessary.

NOTE: A maximum of eight keys can be learned by the WIN. Once a key is learned by a WIN, that key has acquired the Secret Key for that WIN and cannot be transferred to any other WIN or vehicle.

PROGRAMMING THE PCM

CAUTION: Read all notes and cautions for programming procedures.

1. Connect a battery charger to the vehicle.
2. Connect the scan tool.
3. Have a unique vehicle PIN readily available before running the routine.
4. Ignition key should be in RUN position.

CAUTION: If the PCM and WIN are replaced at the same time, the PCM MUST be programmed before the WIN.

5. Select "ECU View".
6. Select "WIN Wireless Control".
7. Select "Miscellaneous Functions."
8. Select "PCM Replaced".
9. Enter the PIN when prompted.
10. Verify the correct information.
11. Cycle ignition key after the successful routine completion.

COMMUNICATION

DESCRIPTION

DESCRIPTION

The primary on-board communication network between the microprocessor-based Electronic Control Modules (ECMs) in this vehicle is the Controller Area Network (CAN) data bus system. A data bus network minimizes redundant wiring connections; and at the same time, reduces wire harness complexity, sensor current loads and controller hardware by allowing each sensing device to be

connected to only one module, (also referred to as a node). Each node reads, then broadcasts its sensor data over the bus for use by all other nodes requiring that data. Each node ignores the messages on the bus that it cannot use.

The CAN bus is a two-wire multiplex system. Multiplexing is any system that enables the transmission of multiple messages over a single channel or circuit. The CAN bus is used for communication between most vehicle nodes. However, in addition to the CAN bus network, certain nodes may also be equipped with a Local Interface Network (LIN) data bus. The LIN data bus is a single wire low-speed (9.6 Kbps) serial link bus used to provide direct communication between a LIN master module and certain switch or sensor inputs.

There are actually three separate CAN bus systems used in the vehicle. They are designated: the CAN-B, the CAN-C and the Diagnostic CAN-C. The CAN-B and CAN-C systems provide on-board communication between all of the nodes that are connected to them. The CAN-C is the faster of the two systems providing near real-time communication (500 Kbps), but is less fault tolerant than the CAN-B system. The CAN-C is used typically for communications between more critical nodes, while the slower (83.3 Kbps), but more fault tolerant CAN-B system is used for communications between less critical nodes. The CAN-B fault tolerance comes from its ability to revert to a single wire communication mode if there is a fault in the bus wiring.

The added speed of the CAN data bus is many times faster than previous data bus systems. This added speed facilitates the addition of more Electronic Control Modules (ECMs) or nodes and the incorporation of many new electrical and electronic features in the vehicle.

The Diagnostic CAN-C bus is also capable of 500 Kbps communication and is sometimes informally referred to as the CAN-D system to differentiate it from the other high speed CAN-C bus. The Diagnostic CAN-C is used exclusively for the transmission of diagnostic information between the Totally Integrated Power Module (TIPM) and a diagnostic scan tool connected to the industry-standard 16-way Data Link Connector (DLC) located beneath the instrument panel on the driver side of the vehicle.

The TIPM is located in the engine compartment near the battery. The central CAN gateway or hub module integral to the TIPM, connects to all three CAN buses. This gateway physically and electrically isolates the CAN buses from each other and coordinates the bi-directional transfer of messages between them.

OPERATION

OPERATION

The Controller Area Network (CAN) data bus allows all electronic modules or nodes connected to the bus to share information with each other. Regardless of whether a message originates from a module on the lower speed CAN-B bus or on the higher speed CAN-C or CAN-D bus, the message structure and layout is similar, which allows the Totally Integrated Power Module (TIPM) to process and transfer messages between the CAN buses. The TIPM also stores a Diagnostic Trouble Code (DTC) for certain bus network faults.

All modules (also referred to as nodes) transmit and receive messages over one of these buses. Data

exchange between nodes is achieved by serial transmission of encoded data messages. Each node can both send and receive serial data simultaneously. Each digital bit of a CAN bus messages carries over the bus as a voltage differential between the two bus circuits which, when strung together, form a message. Each node uses arbitration to sort the message priority if two competing messages are attempting to be broadcast at the same time.

The instrument cluster (also known as the Cab Compartment Node/CCN) is the Local Interface Network (LIN) master module in this vehicle and it gathers information from the compass module, the instrument panel switch bank, the Steering Control Module (SCM) and the Heated Seat Module (HSM) through the LIN data bus. There is also LIN bus communication between the individual Tire Pressure Monitor (TPM) transponders and the Wireless Ignition Node (WIN). Both the CCN and the WIN either act directly upon the information received through the LIN data bus, relay the information to other nodes in the vehicle using electronic messages placed on the CAN bus or both.

The voltage network used to transmit messages requires biasing and termination. Each module on the CAN bus network provides its own biasing and termination. There are two types of nodes used in the CAN bus network. On the CAN-C bus, a dominant node has a 120 Ohm termination resistance while a non-dominant (or recessive) node has about a 2500 to 3000 Ohm (2.5 to 3.0 kilohm) termination resistance. The dominant nodes on the CAN-C bus are the WIN and the Powertrain Control Module (PCM).

The termination resistance of the two dominant nodes are combined in parallel to provide a total of about 60 Ohms. This resistance value may vary somewhat by application, depending upon the number of non-dominant nodes on the CAN-C bus. On the CAN-D bus (or Diagnostic CAN-C) all of the 60 Ohm termination resistance is present in the TIPM.

NOTE: **All measurement of termination resistance is done with the vehicle battery disconnected.**

NOTE: **Termination resistance of a CAN-B node cannot be verified with a Digital Multi-Meter (DMM) or Digital Volt-Ohm Meter (DVOM). The transceiver of each CAN-B node connects to termination resistors internally. When the vehicle battery is disconnected, the internal connections of all CAN-B node transceivers are switched open, disconnecting the termination resistors. Therefore, the total bus resistance measured under these conditions will be extremely high or infinite, which does not accurately reflect the actual termination resistance of the CAN-B bus.**

The communication protocol being used for the CAN data bus is a non-proprietary, open standard adopted from the Bosch CAN Specification 2.0b. The CAN-C is the faster of the two primary buses in the CAN bus system, providing near real-time communication (500 Kbps).

The CAN bus nodes are connected in parallel to the two-wire bus using a twisted pair, where the wires are wrapped around each other to provide shielding from unwanted electromagnetic induction, thus preventing interference with the relatively low voltage signals being carried through them. The twisted pairs have between 33 and 50 twists per meter (yard). While the CAN bus is operating (active), one of the bus wires will carry a higher voltage and is referred to as the CAN High or CAN

bus (+) wire, while the other bus wire will carry a lower voltage and is referred to as the CAN Low or CAN bus (-) wire. Refer to the CAN Bus Voltages table.

CAN Bus Voltages (Normal Operation)								
CAN-C Bus Circuits	**Sleep**	**Recessive (Bus Idle)**	**Dominant (Bus Active)**	**CAN-L Short to Ground**	**CAN-H Short to Ground**	**CAN-L Short to Battery**	**CAN-H Short to Battery**	**CAN-H Short to CAN-L**
CAN-L (-)	0 V	2.4 - 2.5 V	1.3 - 2.3 V	0 V	0.3 - 0.5V	Battery Voltage	Battery Voltage Less 0.75 V	2.45 V
CAN-H (+)	0 V	2.4 - 2.5 V	2.6 - 3.5 V	0.02 V	0 V	Battery Voltage Less 0.75 V	Battery Voltage	2.45 V
CAN-B Bus Circuits	**Key-Off (Bus Asleep)**		**Key-On (Bus Active)**	**CAN-L Short to Ground**	**CAN-H Short to Ground**	**CAN-L Short to Battery**	**CAN-H Short to Battery**	**CAN-H Short to CAN-L**
CAN-L (-)	10.99 V		4.65 - 4.98 V	0 V	4.5 - 4.7 V	Battery Voltage	4.5 - 4.7 V	0.3 - 0.7 V
CAN-H (+)	0.0 V		0.39 - 0.46 V	0.3 - 0.7 V	0 V	0.3 - 0.7 V	Battery Voltage	0.3 - 0.7 V
Notes								
All measurements taken between node ground and CAN terminal with a standard DVOM. DVOM displays average network voltage. Total resistance of the CAN-C network can also be measured (60 Ohms). Cannot measure total resistance of CAN-B network.								

In order to minimize the potential effects of the Ignition-OFF Draw (IOD), the CAN-B network employs a sleep strategy. However, a network sleep strategy should not be confused with the sleep strategy of the individual nodes on that network, as they may differ. For example: The CAN-C bus network awakes only when the ignition switch is in the ON or START positions; however, the TIPM, which is on the CAN-C bus, may still be awake with the ignition switch in the ACCESSORY or UNLOCK positions. The integrated circuitry of an individual node may be capable of processing certain sensor inputs and outputs without the need to utilize network resources.

The CAN-B bus network remains active until all nodes on that network are ready for sleep. This is determined by the network using tokens in a manner similar to polling. When the last node that is active on the network is ready for sleep and it has already received a token indicating that all other nodes on the bus are ready for sleep, it broadcasts a **bus sleep acknowledgment** message that causes the network to sleep. Once the CAN-B bus network is asleep, any node on the bus can awaken it by transmitting a message on the network. The TIPM keeps either the CAN-B or the CAN-C bus awake for a timed interval after it receives a diagnostic message for that bus over the Diagnostic CAN-C bus.

In the CAN system, available options are configured into the TIPM at the assembly plant, but

additional options can be added in the field using the diagnostic scan tool. The configuration settings are stored in non-volatile memory. The TIPM also has two 64-bit registers, which track each of the **as-built** and **currently responding** nodes on the CAN-B and CAN-C buses. The TIPM stores a Diagnostic Trouble Code (DTC) in one of two caches for any detected active or stored faults in the order in which they occur. One cache stores powertrain (P-Code), chassis (C-Code) and body (B-Code) DTCs, while the second cache is dedicated to storing network (U-Code) DTCs.

If there are intermittent or active faults in the CAN network, a diagnostic scan tool connected to the Diagnostic CAN-C bus through the 16-way Data Link Connector (DLC) may only be able to communicate with the TIPM. To aid in CAN network diagnosis, the TIPM provides CAN-B and CAN-C network status information to the scan tool using certain diagnostic signals. In addition, the transceiver in each node on the CAN-C bus will identify a **bus off hardware failure** , while the transceiver in each node on the CAN-B bus will identify a **general bus hardware failure** . The transceivers for some CAN-B nodes also identifies certain failures for both CAN-B bus signal wires.

MODULE, ANTI-LOCK BRAKE SYSTEM

DESCRIPTION

DESCRIPTION

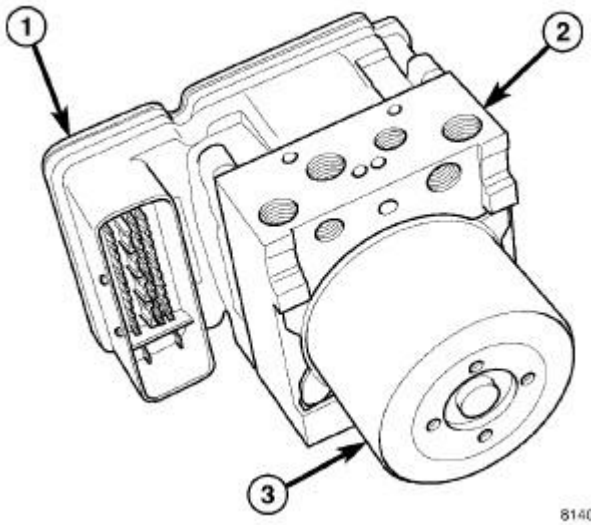

Fig. 1: Antilock Brake Module (ABM) Integrated Control Unit
Courtesy of CHRYSLER LLC

The Antilock Brake Module (ABM) is a microprocessor-based device which monitors the Antilock Brake System (ABS) during normal braking and controls it when the vehicle is in an ABS stop. The ABM also monitors the Electronic Stability Program (ESP).

The ABM (1) is mounted to the HCU (2) as part of the Integrated Control Unit (ICU). The ABM uses a 47-Way connector on the vehicle wiring harness. The power source for the ABM is through the

ignition switch in the RUN or ON position. The ABM is on the CAN-C bus.

CAUTION: For Adaptive Cruise Control (ACC) equipped vehicles, the ABM and HCU are not separately serviceable. They must be replaced as an assembly.

OPERATION

OPERATION

The primary functions of the Antilock Brake Module (ABM) are to:

- Monitor the Antilock Brake System (ABS) and Electronic Stability Program (ESP) for proper operation.
- Detect wheel locking or wheel slipping tendencies by monitoring the speed of all four wheels of the vehicle.
- Control fluid modulation to the wheel brakes while the system is in ABS or traction control mode.
- Modulates fluid pressure to the wheel brakes to control vehicle yaw rate in ESP mode.
- Store diagnostic information.
- Provide communication to the scan tool while in diagnostic mode.
- Illuminate the amber TCS/ESP indicator in the instrument cluster.

The ABM constantly monitors the ABS and ESP (if equipped) for proper operation. If the ABM detects a fault, it will turn on the amber TCS/ESP indicator and disable the ABS or ESP if so equipped. The normal base braking system will remain operational at that time.

The ABM continuously monitors the speed of each wheel through the signals generated by the wheel speed sensors to determine if any wheel is beginning to lock. When a wheel locking tendency is detected, the ABM commands the ABM solenoid coils to actuate. The coils then open and close the valves in the HCU that modulate brake fluid pressure in some or all of the hydraulic circuits. The ABM continues to control pressure in individual hydraulic circuits until a locking tendency is no longer present.

REMOVAL

REMOVAL

CAUTION: For Adaptive Cruise Control (ACC) equipped vehicles, the ABM and HCU are not separately serviceable. They must be replaced as an assembly.

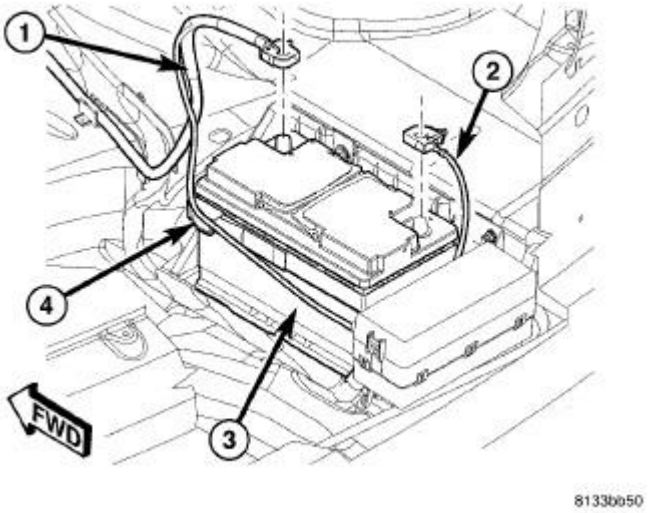

Fig. 2: Battery & Cables
Courtesy of CHRYSLER LLC

1. Disconnect negative (-) battery cable (2) from battery post and isolate.

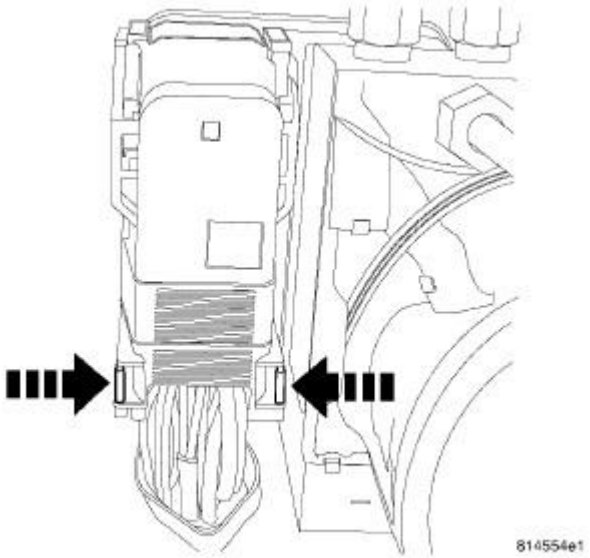

Fig. 3: ABM Connector Release Tabs
Courtesy of CHRYSLER LLC

NOTE: Use this figure in the following step to release the ABM harness connector cover. It shows the location of the release tabs.

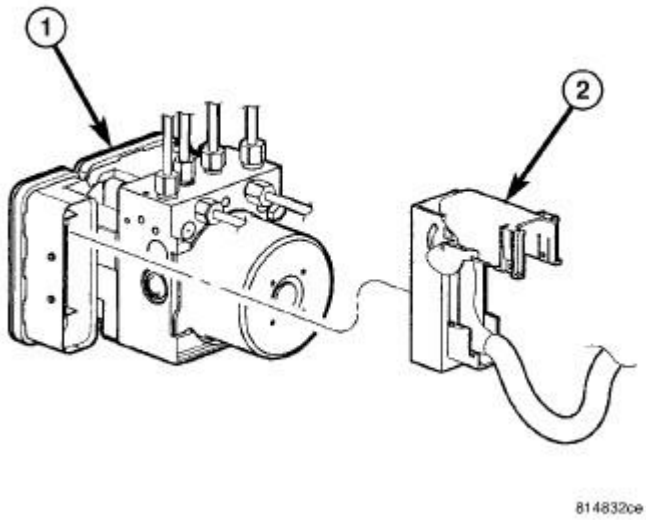

Fig. 4: Wiring Harness Connector At ABM
Courtesy of CHRYSLER LLC

2. Disconnect ABM harness connector from antilock brake module (ABM). To do so:
   a. Depress tabs on each side of connector cover, then
   b. Pull outward and upward on lower half of cover until it locks into position pointing straight outward (2). Connector can then be pulled straight outward off ABM (1).

NOTE: DO NOT remove any brake lines from the ICU fluid ports while performing the following steps. The ABM can be removed and installed without doing so.

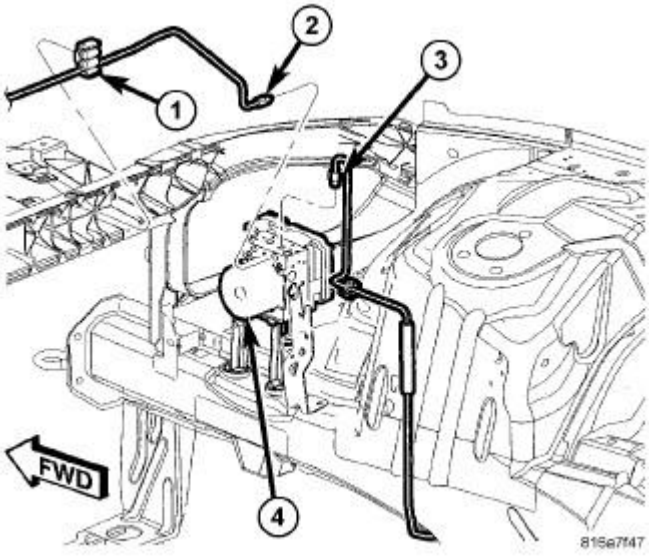

Fig. 5: Left Front And Right Front Brake Tubes At ICU

Courtesy of CHRYSLER LLC

3. Unclip all brake tubes from two routing clips (1) along upper radiator support.
4. Unclip right front brake tube (3) from routing clip on bracket below Fuse And Relay Center.

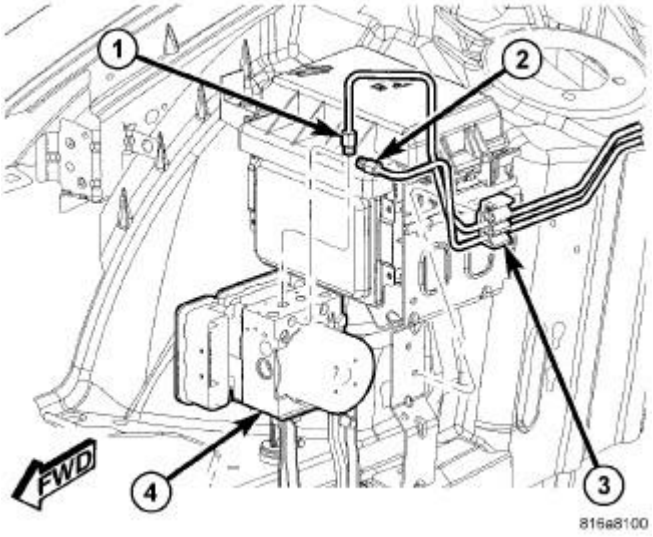

Fig. 6: Left Rear And Right Rear Brake Tubes At ICU
Courtesy of CHRYSLER LLC

5. Unclip rear brake tubes (1, 2) from routing clip (3) on bracket below Fuse And Relay Center.

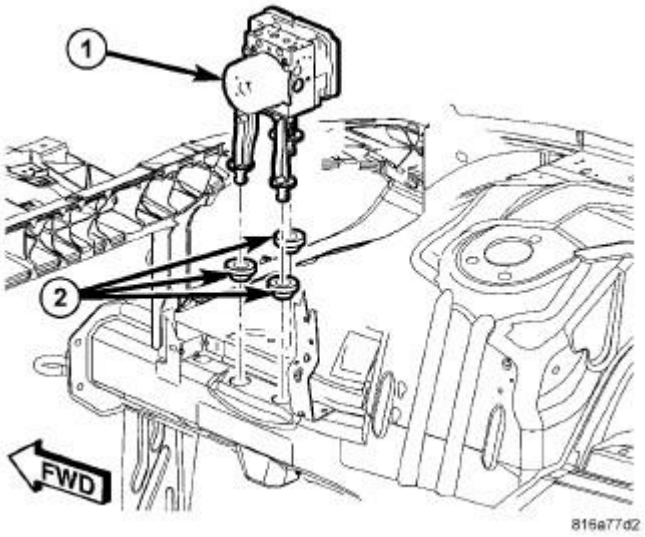

Fig. 7: ICU Mounting
Courtesy of CHRYSLER LLC

6. Lift ICU (1) from mounting grommets (2) and move inboard allowing access to ABM attaching screws. **Do not force brake tubes. Move assembly just enough to access mounting screws.**

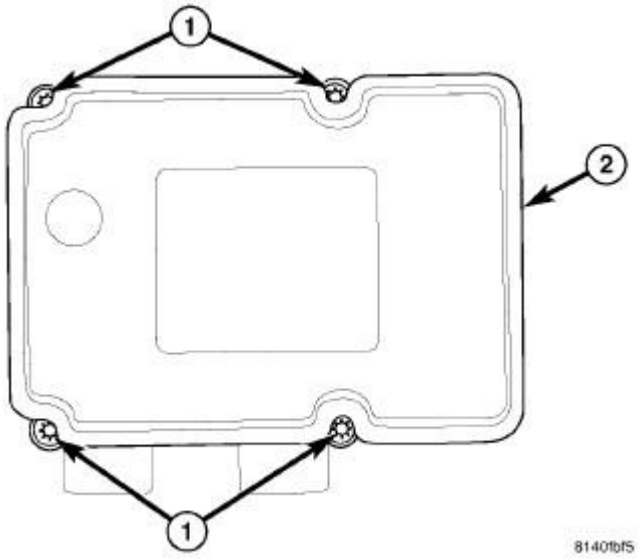

Fig. 8: ABM Mounting Screws - With Traction Control
Courtesy of CHRYSLER LLC

7. Remove four screws (1) attaching ABM (2) to HCU.

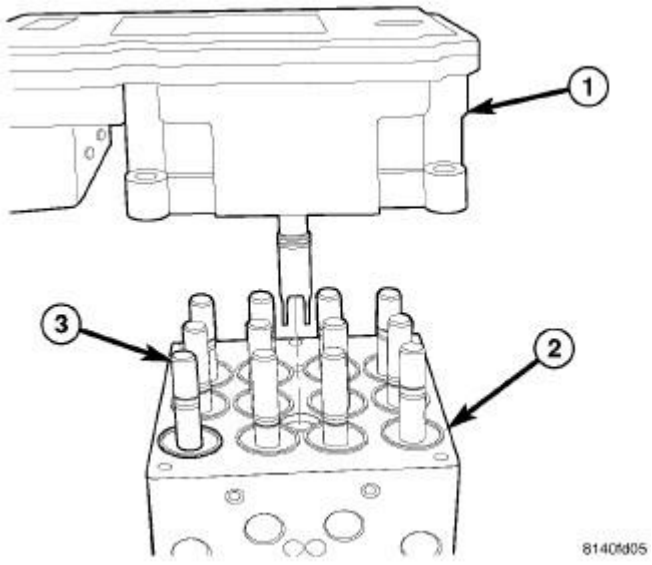

Fig. 9: ABM Assembly To HCU
Courtesy of CHRYSLER LLC

8. Slide ABM (1) off HCU (2).

INSTALLATION

INSTALLATION

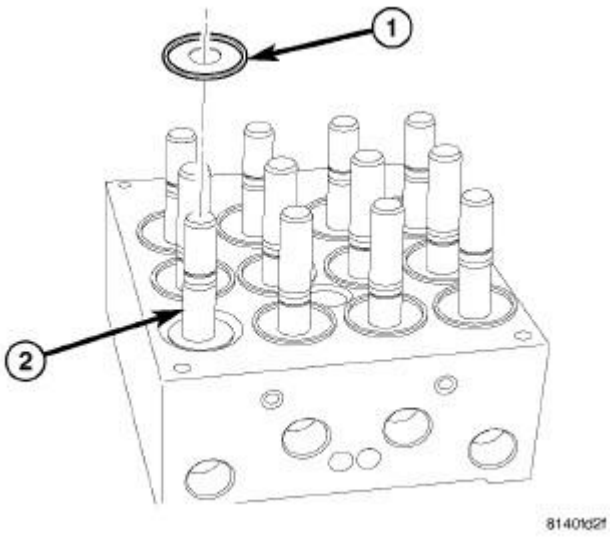

Fig. 10: Solenoid Valve Seal
Courtesy of CHRYSLER LLC

CAUTION: When installing new O-rings or solenoid valve stem seals, do not use any type of lubricant.

1. Clean any debris off the mating surfaces of the HCU and ABM.
2. If the seals (1) on the solenoid valve stems (2) are not new, replace them all. Each of the solenoid valve stem seals must be new to keep out moisture and debris; **do not reuse solenoid valve stem seals** .

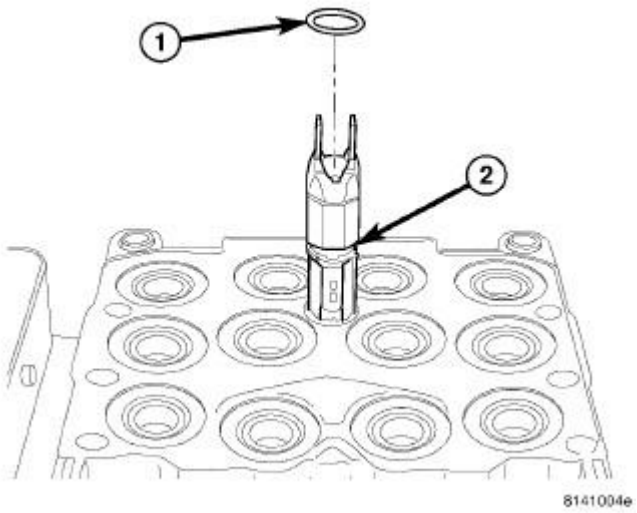

Fig. 11: Internal Pump Connector O-Ring
Courtesy of CHRYSLER LLC

3. Replace the pump/motor connector O-ring (1) if it is not new. Be sure the O-ring is properly seated in the mounting groove (2).

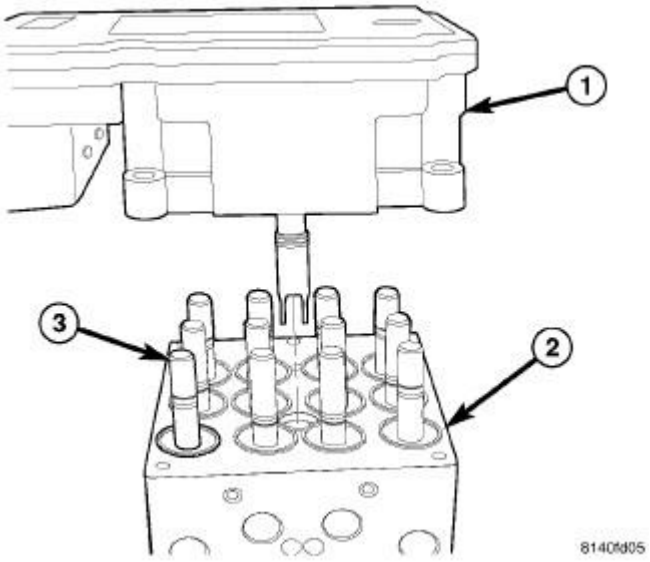

Fig. 12: ABM Assembly To HCU
Courtesy of CHRYSLER LLC

4. Align components and install the ABM (1) on the HCU (2).

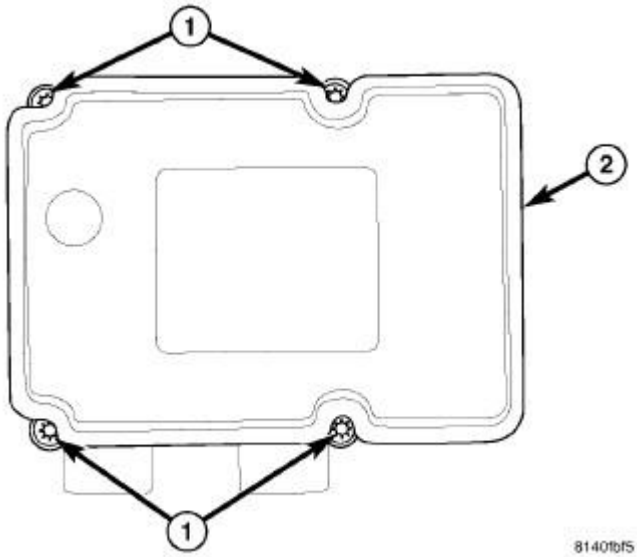

Fig. 13: ABM Mounting Screws - With Traction Control
Courtesy of CHRYSLER LLC

5. Install the four screws (1) attaching the ABM (2) to the HCU. Tighten the mounting screws to 2 N.m (17 in. lbs.).

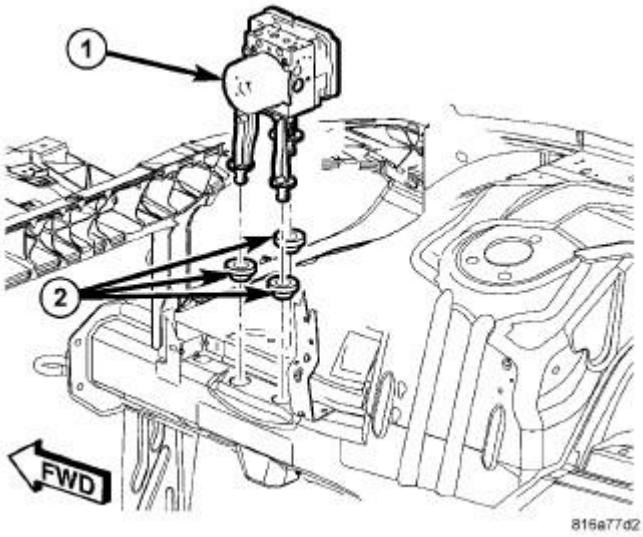

Fig. 14: ICU Mounting
Courtesy of CHRYSLER LLC

6. Position ICU (1) above mounting grommets (2) located in body side rail and press mounting bracket into place.

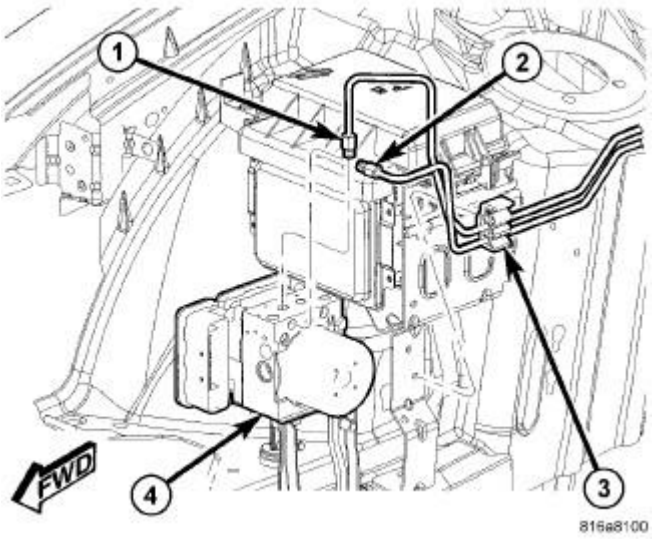

Fig. 15: Left Rear And Right Rear Brake Tubes At ICU
Courtesy of CHRYSLER LLC

7. Clip rear brake tubes (1, 2) to routing clip (3) on bracket below Fuse And Relay Center.

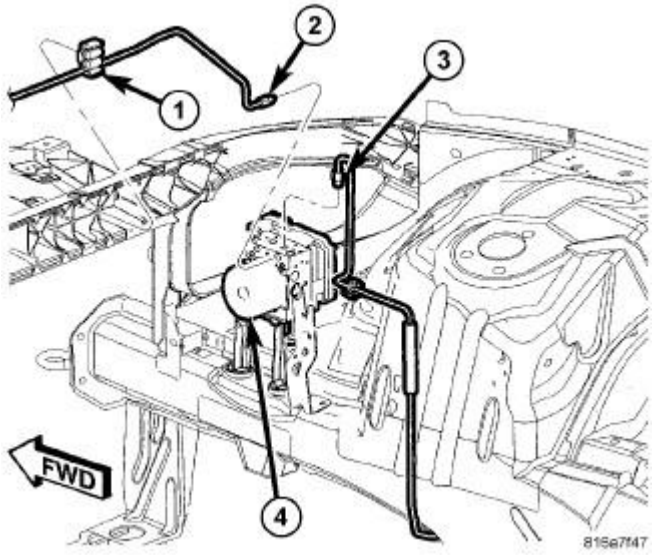

Fig. 16: Left Front And Right Front Brake Tubes At ICU
Courtesy of CHRYSLER LLC

8. Clip right front brake tube (3) to routing clip on bracket below Fuse And Relay Center.
9. Clip brake tubes to two routing clips (1) along upper radiator support.

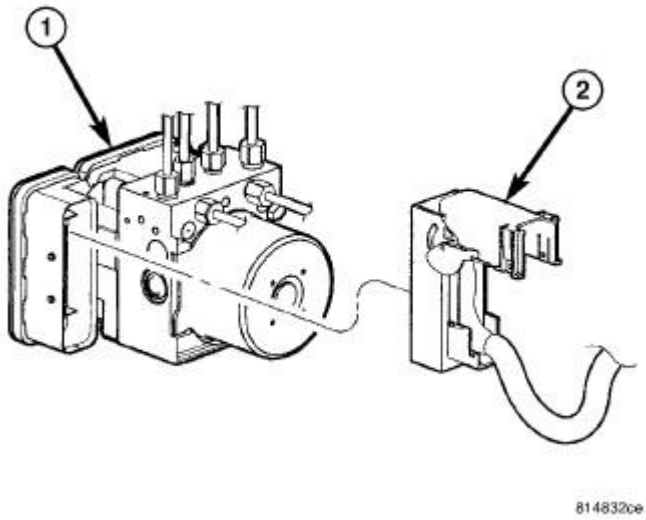

Fig. 17: Wiring Harness Connector At ABM
Courtesy of CHRYSLER LLC

CAUTION: Before installing the ABM harness connector (2) on the ABM (1), be sure the seal is properly installed in the connector.

10. Insert ABM harness connector (2) into socket of ABM (1) and close cover, locking connector in place.

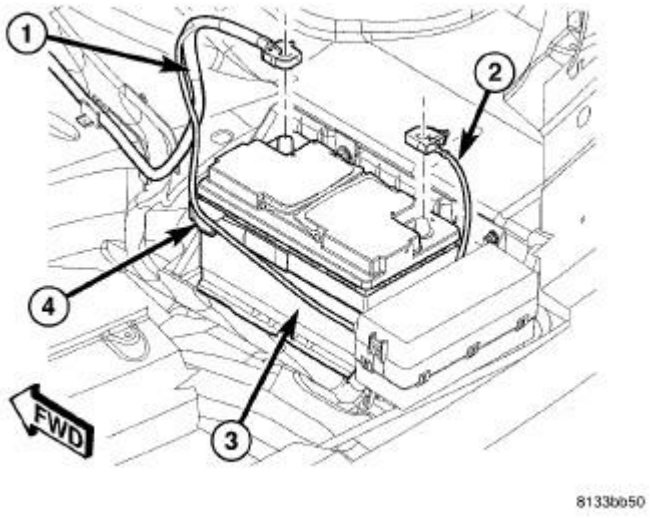

Fig. 18: Battery & Cables
Courtesy of CHRYSLER LLC

11. Connect battery negative cable (2) to battery post. It is important that this is performed properly.

Refer to **Electrical - Engine Systems/Battery System - Standard Procedure** .

12. Perform ABS Verification Test and clear any faults. Refer to **DTC-Based Diagnostics/MODULE, Antilock Brake (ABS) - Standard Procedure** .

MODULE, DOOR

DESCRIPTION

DESCRIPTION

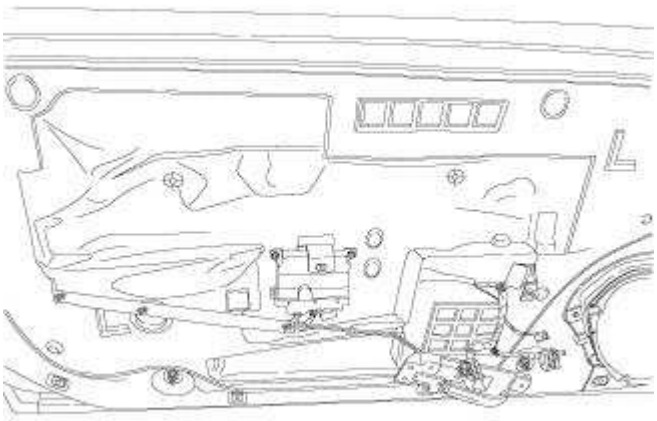

Fig. 19: Identifying Backside Of Front Door Trim Panel With Door Module (Lt/Rt Similar)
Courtesy of CHRYSLER LLC

The door modules control the express up and down feature as well as normal window functions. It is used only on vehicles equipped with the express up feature. If equipped with memory system, the door module controls the memory mirror. The modules are attached to each front door trim panel.

OPERATION

OPERATION

If the vehicle is equipped with the Express Up power window feature there will be a door module on each front door trim panel. The power window switches and motors are directly wired to the modules. If the vehicle is equipped with the Memory System, the exterior power mirrors and switches are also directly wired to the modules along with the rear door window switches. The modules are wired to the accessory delay relay which allows the operation of the windows and mirrors for a given period of time after the ignition is turned off and providing the doors are not opened. The modules communicate with each other and other modules on the vehicle via the CAN-B bus circuit. There are several Diagnostic Trouble Codes (DTC's) the modules will store if there are problems with the power window system or the memory power mirror system.

ANTI-PINCH

The "Anti-Pinch" function is a safety feature that senses obstacles at the top of the glass and anywhere on the seal where it meets the glass to close during the window closing operation. When a front window switch is pressed to the "Auto-Up" position and the closing window traps an object and the sense current passes its limit, the module will stop the motor and drive the window down approximately 200 millimeters. The pinch force is speed dependent which means that if the vehicle is going over 2km per hour the pinch force will be higher than if the vehicle is stopped.

PANIC MODE

If the window switch is held in the "Auto-Up" position and the closing window traps an object, the module will stop the motor and when the switch is released will drive the window in the opposite direction approximately 10 millimeters. If within 8 seconds after the switch was released to the neutral position, the switch is held again to the "Auto-Up" position, the module will enter the second panic mode. During the second panic mode, the module will drive the motor with full (stall) force and stop. If within 8 seconds after the switch is released again to the neutral position, the switch is held again to the "Auto-Up" position, the module will drive the motor again with full (stall) force and stop.

REMOVAL

REMOVAL

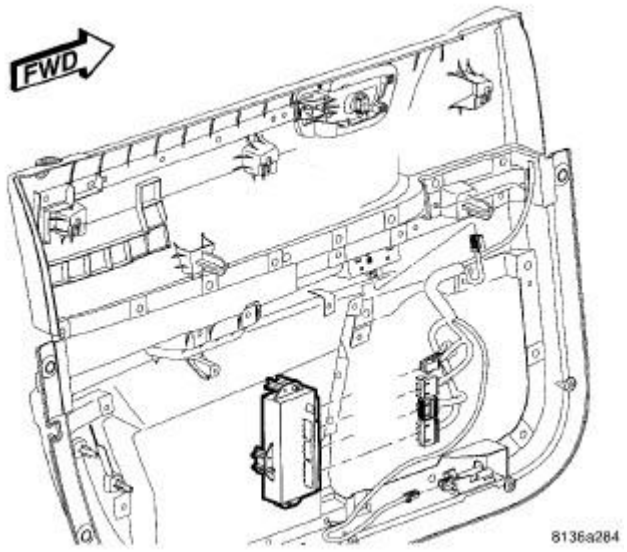

Fig. 20: Door Module Location
Courtesy of CHRYSLER LLC

NOTE: A battery reconnect procedure must be performed anytime the battery has been disconnected. Refer to Electrical - Engine Systems/Battery System - Standard Procedure .

1. Disconnect and isolate the battery negative cable.
2. Remove front door trim panel. Refer to **Body/Door - Front/PANEL, Door Trim - Removal** .

3. Disconnect electrical harness connectors.
4. Remove mounting fasteners and module.

INSTALLATION

INSTALLATION

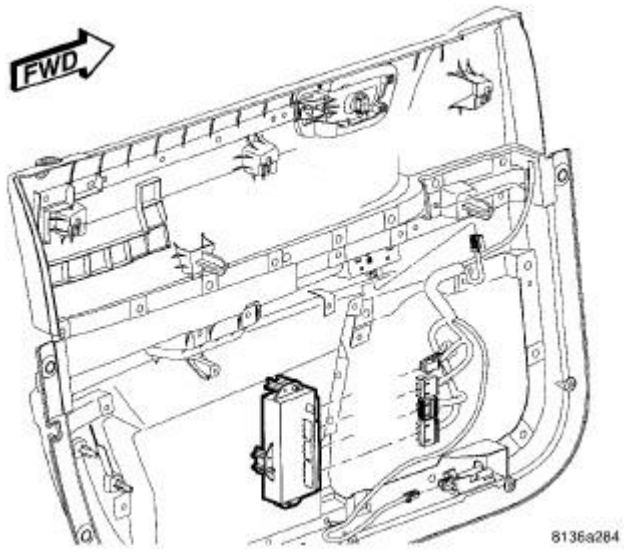

Fig. 21: Door Module Location
Courtesy of CHRYSLER LLC

NOTE: A battery reconnect procedure must be performed anytime the battery has been disconnected. Refer to Electrical - Engine Systems/Battery System - Standard Procedure .

1. Position module.
2. Install and tighten mounting fasteners.
3. Connect electrical harness connectors.
4. Install door trim panel. Refer to **Body/Door - Front/PANEL, Door Trim - Installation** .
5. Connect battery negative cable.

MODULE, PASSIVE ENTRY

DESCRIPTION

DESCRIPTION

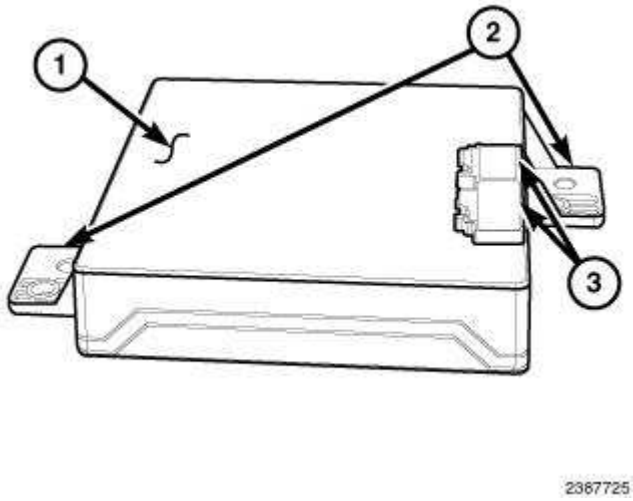

Fig. 22: Passive Entry Module (PEM)
Courtesy of CHRYSLER LLC

The Passive Entry Module (PEM) (1) is the primary component of the Passive Entry (PE) and Keyless Go (KG) systems. Vehicles not equipped with PE or KG do not have a PEM installed. The PEM contains both the Central Processor Unit (CPU) and transceiver of the PE and KG systems, and is sometimes alternately referred to as the PEKG module or receiver. Concealed within the molded black plastic PEM housing is the printed circuit board and the other electronic circuitry of the module.

The PEM is secured with two screws to the substrate on the back of the instrument panel base trim, above the upper glove box opening near the passenger airbag retainer or chute. Two mounting tabs (2) at opposing corners and two connector receptacles (3) are integral to the PEM housing. The connector receptacles contain all of the terminal pins that connect the PEM to the vehicle electrical system through two dedicated take outs and connectors of the instrument panel wire harness.

There are at least two unique hardware versions of the PEM. These versions are required in order to accommodate the two Controller Area Network (CAN) data bus systems possibly found in Chrysler vehicles, CAN-B or CAN-Interior High Speed (IHS). The PEM used for this platform must be able to communicate with other electronic modules in the vehicle using the CAN-B data bus network.

The PEM cannot be adjusted or repaired and, if damaged or ineffective, it must be replaced. The PEM software is flash programmable.

OPERATION

OPERATION

The microprocessor in the Passive Entry Module (PEM) contains the logic circuits and controls all of the features of the Passive Entry (PE) and Keyless Go (KG) systems. The PEM receives battery voltage on a fused B(+) circuit and is grounded at all times through a hard wired remote ground point. These connections allow the PEM to operate regardless of the ignition switch position and with the IOD fuse removed.

The PEM has sufficient driver outputs to power a number of Low Frequency (LF) Radio Frequency (RF) antennas located within the vehicle, which it uses to communicate with up to eight different FOB with Integrated Key (FOBIK) units that have been programmed to the vehicle. The FOBIK units communicate with the PEM using Very High Frequency (VHF) RF communication on a frequency of 434 MegaHertz (MHz) using digital Frequency-Shift Keying (FSK) modulation, and uses faster data rates for the PE functionality only.

The number of antennas and the specific antenna locations are designed to ensure complete vehicle interior coverage. The LF antennas are each numbered and connected to the PEM on dedicated and sequentially numbered circuits. This arrangement allows the PEM to localize the positions of transmitting FOBIK units using a triangulation strategy. See the LC Low Frequency Antenna And Circuit Numbering table.

LC LOW FREQUENCY ANTENNA AND CIRCUIT NUMBERING	
Location	**Antenna And Circuit Number**
Instrument Panel	3
Rear Seat	2

The location of a valid FOBIK is critical to the PE and KG features that the PEM will allow. The PEM has the ability to distinguish that a FOBIK is inside, outside or within the trunk of the vehicle. Inside of the vehicle is defined as anywhere within the passenger compartment and up to 10 centimeters (4 inches) from the exterior surfaces of the vehicle. Trunk is defined as anywhere within the trunk compartment of the vehicle.

Outside of the vehicle is defined as anywhere within about 10 centimeters (4 inches) and up to about 2 meters (6.5 feet) from the exterior surfaces of the vehicle, but is further differentiated by zones. The PEM identifies the zone in which the valid FOBIK is located as the active zone, which determines which vehicle aperture becomes accessible. The PEM will not respond to an input from a zone that is not active.

When the PEM microprocessor detects a PE input or KG request, the system program logic challenges the FOBIK to identify whether it is a valid key. If a valid key is detected through the response from the FOBIK, then necessary electronic message commands to other electronic modules in the vehicle will be sent by the PEM to enable or disable the vehicle starting system.

The PEM uses On-Board Diagnostics (OBD) and communicates with other modules in the vehicle as well as with a diagnostic scan tool using the Controller Area Network (CAN) data bus. This method of communication is used by the PEM to acquire vehicle configuration data, including customer programmable features. The PEM communicates with the Wireless Ignition Node (WIN) (also known as the Wireless Control Module/WCM or Sentry Key REmote Entry Module/SKREEM), the ElectroMechanical Instrument Cluster (EMIC) (also known as the Cab Compartment Node/CCN), the Powertrain Control Module (PCM) and the Totally Integrated Power Module (TIPM) (also known as the Forward Control Module/FCM) using the CAN data bus.

The PEM microprocessor monitors all of the PE and KG system circuits, then sets active and stored Diagnostic Trouble Codes (DTC) for any monitored system faults it detects. The PEM will also send electronic message requests to the EMIC for the display of certain textual warning messages related

to PE and KG system operation in the Electronic Vehicle Information Center (EVIC).

The hard wired inputs and outputs of the PEM may be diagnosed using conventional diagnostic tools and procedures. Refer to the appropriate wiring information. However, conventional diagnostic methods will not prove conclusive in the diagnosis of the PEM electronic controls or the communication between modules and other devices that provide some features of the PE and KG systems. The most reliable, efficient and accurate means to diagnose the PEM or the electronic controls and communication related to PE or KG system operation requires the use of a diagnostic scan tool. Refer to the appropriate diagnostic information.

REMOVAL

REMOVAL

WARNING: To avoid serious or fatal injury on vehicles equipped with airbags, disable the Supplemental Restraint System (SRS) before attempting any steering wheel, steering column, airbag, seat belt tensioner, impact sensor, or instrument panel component diagnosis or service. Disconnect and isolate the battery negative (ground) cable, then wait two minutes for the system capacitor to discharge before performing further diagnosis or service. This is the only sure way to disable the SRS. Failure to take the proper precautions could result in accidental airbag deployment.

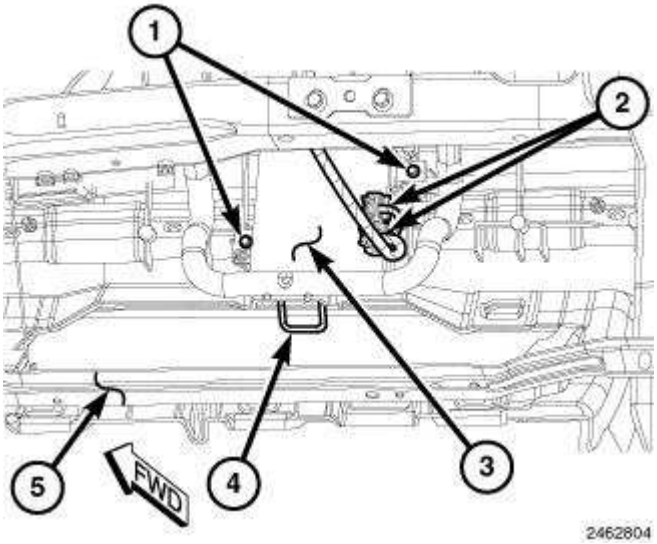

Fig. 23: Removal/Install Passive Entry Module (PEM)
Courtesy of CHRYSLER LLC

1. Disconnect and isolate the battery negative cable.
2. Remove the glove box from the instrument panel. Refer to **Body/Instrument Panel/GLOVE BOX, Instrument Panel - Removal** .
3. Reach through the glove box opening (5) and above the glove box latch striker (4) to access and disconnect the two instrument panel wire harness connectors (2) from the Passive Entry

Module (PEM) (3) connector receptacles.

4. Remove the two screws (1) that secure the PEM to the instrument panel base trim substrate.
5. Remove the PEM through the glove box opening.

INSTALLATION

INSTALLATION

WARNING: To avoid serious or fatal injury on vehicles equipped with airbags, disable the Supplemental Restraint System (SRS) before attempting any steering wheel, steering column, airbag, seat belt tensioner, impact sensor, or instrument panel component diagnosis or service. Disconnect and isolate the battery negative (ground) cable, then wait two minutes for the system capacitor to discharge before performing further diagnosis or service. This is the only sure way to disable the SRS. Failure to take the proper precautions could result in accidental airbag deployment.

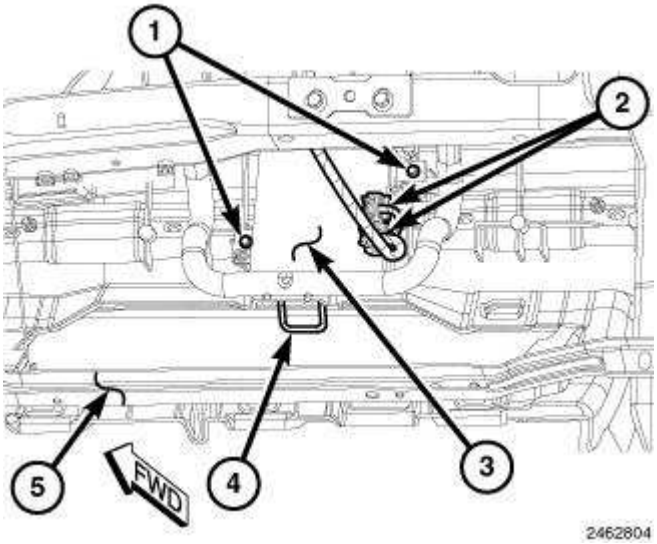

Fig. 24: Removal/Install Passive Entry Module (PEM)
Courtesy of CHRYSLER LLC

1. Reach through the instrument panel glove box opening (5) and above the glove box latch striker (4) to position the Passive Entry Module (PEM) (3) locating holes onto the two locating pins on the instrument panel base trim substrate.
2. Install and tighten the two screws (1) that secure the PEM to the instrument panel base trim substrate. Tighten the screws securely.
3. Reconnect the two instrument panel wire harness connectors (2) to the PEM connector receptacles.
4. Reinstall the glove box into the instrument panel.
5. Reconnect the battery negative cable.

NOTE: **If the PEM is being replaced with a new unit, a diagnostic scan tool MUST be used to initialize and configure the new PEM. Follow the programming steps outlined in the diagnostic scan tool for Initialize found under Miscellaneous Functions for the PEM/Passive Entry Module menu item.**

MODULE, POWERTRAIN CONTROL

DESCRIPTION

DESCRIPTION - PCM

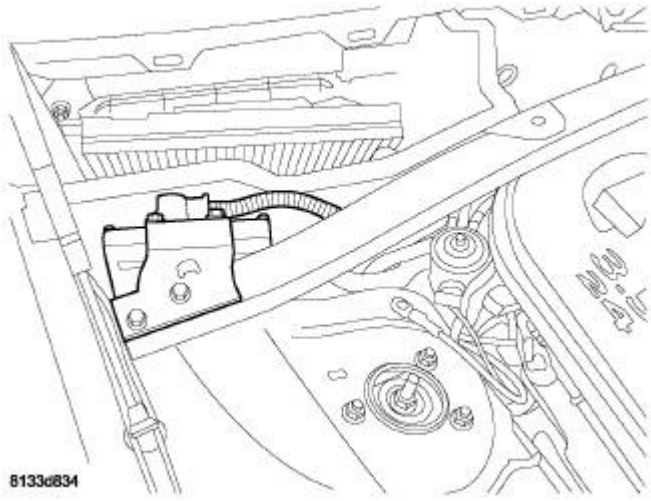

Fig. 25: PCM Location In Vehicle
Courtesy of CHRYSLER LLC

The Powertrain Control Module (PCM) is located in the engine compartment. The PCM is referred to as NGC.

MODES OF OPERATION

As input signals to the Powertrain Control Module (PCM) change, the PCM adjusts its response to the output devices. For example, the PCM must calculate different injector pulse width and ignition timing for idle than it does for wide open throttle (WOT).

The PCM will operate in two different modes: **Open Loop and Closed Loop** .

During Open Loop modes, the PCM receives input signals and responds only according to preset PCM programming. Input from the oxygen (O2S) sensors is not monitored during Open Loop modes.

During Closed Loop modes, the PCM will monitor the oxygen (O2S) sensors input. This input indicates to the PCM whether or not the calculated injector pulse width results in the ideal air-fuel

ratio. This ratio is 14.7 parts air-to-1 part fuel. By monitoring the exhaust oxygen content through the O2S sensor, the PCM can fine tune the injector pulse width. This is done to achieve optimum fuel economy combined with low emission engine performance.

The fuel injection system has the following modes of operation:

- Ignition switch ON
- Engine start-up (crank)
- Engine warm-up
- Idle
- Cruise
- Acceleration
- Deceleration
- Wide open throttle (WOT)
- Ignition switch OFF

The ignition switch On, engine start-up (crank), engine warm-up, acceleration, deceleration and wide open throttle modes are Open Loop modes. The idle and cruise modes, (with the engine at operating temperature) are Closed Loop modes.

IGNITION SWITCH (KEY-ON) MODE

This is an Open Loop mode. When the fuel system is activated by the ignition switch, the following actions occur:

- The PCM determines atmospheric air pressure from the MAP sensor input to determine basic fuel strategy.
- The PCM monitors the engine coolant temperature sensor input. The PCM modifies fuel strategy based on this input.
- Intake manifold air temperature sensor input is monitored.
- Throttle position sensors (TPS) and pedal value sensors are monitored.
- The auto shutdown (ASD) relay is energized by the PCM for approximately three seconds.
- The fuel pump is energized through the fuel pump relay by the PCM. The fuel pump will operate for approximately three seconds unless the engine is operating or the starter motor is engaged.
- The O2S sensor heater element is energized via the O2S heater drivers (solid state devices) internal to the PCM. These drivers provide a PWM 0-12V signal to heat the O2S heater elements to optimize the O2S sensor signal output. The O2S sensor input is not used by the PCM to calibrate air-fuel ratio during this mode of operation.

ENGINE START-UP MODE

This is an Open Loop mode. The following actions occur when the starter motor is engaged.

The PCM receives inputs from:

- Direct Battery voltage
- Pedal Value Sensors (PVS)
- Engine coolant temperature sensor
- Crankshaft position sensor
- Intake manifold air temperature sensor
- Manifold absolute pressure (MAP) sensor
- Throttle position sensors (TPS)
- Camshaft position sensor signal

The PCM monitors the crankshaft position sensor. If the PCM does not receive a crankshaft position sensor signal within approximately 3 seconds of cranking the engine, it will shut down the fuel injection system.

The fuel pump is activated by the PCM through the fuel pump relay located in the IPM.

Voltage is applied to the fuel injectors with the ASD relay via the PCM. The PCM will then control the injection sequence and injector pulse width by actuating ground circuit to each individual injector on and off.

The PCM determines the proper ignition timing according to input received from the crankshaft position sensor.

ENGINE WARM-UP MODE

This is an Open Loop mode. During engine warm-up, the PCM receives inputs from:

- Direct Battery voltage
- Crankshaft position sensor
- Engine coolant temperature sensor
- Intake manifold air temperature sensor
- Manifold absolute pressure (MAP) sensor
- Throttle position sensors (TPS)
- Camshaft position sensor signal
- Park/neutral switch (gear indicator signal)
- Pedal Value Sensors (PVS)
- Air conditioning select signal (if equipped)
- Air conditioning request signal (if equipped)

Based on these inputs the following occurs:

- Voltage is applied to the fuel injectors with the ASD relay via the PCM. The PCM will then control the injection sequence and injector pulse width by turning the ground circuit to each individual injector on and off.

- The PCM adjusts engine idle speed through the electronic throttle control (ETC) motor and adjusts ignition timing accordingly.
- The PCM operates the A/C compressor clutch through the clutch relay. This is done if A/C has been selected by the vehicle operator and requested by the A/C thermostat.
- When engine has reached operating temperature, the PCM will begin monitoring O2S sensor to control the air/fuel ratio. The system will then leave the warm-up mode and go into closed loop operation.

IDLE MODE

When the engine is at operating temperature, this is a Closed Loop mode. At idle speed, the PCM receives inputs from:

- Air conditioning select signal (if equipped)
- Air conditioning request signal (if equipped)
- Battery voltage
- Crankshaft position sensor
- Engine coolant temperature sensor
- Intake manifold air temperature sensor
- Manifold absolute pressure (MAP) sensor
- Pedal Value Sensors (PVS)
- Throttle position sensors (TPS)
- Camshaft position sensor signal
- Battery voltage
- Park/neutral switch (gear indicator signal)
- Oxygen sensors

Based on these inputs, the following occurs:

- Voltage is applied to the fuel injectors with the ASD relay via the PCM. The PCM will then control injection sequence and injector pulse width by turning the ground circuit to each individual injector on and off.
- The PCM monitors the O2S sensor input and adjusts air-fuel ratio by varying injector pulse width. It also adjusts engine idle speed through the electronic throttle control (ETC) motor.
- The PCM adjusts ignition timing by increasing and decreasing spark advance.
- The PCM operates the A/C compressor clutch through the A/C clutch relay. This happens if A/C has been selected by the vehicle operator and requested by the A/C thermostat.

CRUISE MODE

When the engine is at operating temperature, this is a Closed Loop mode. At cruising speed, the PCM receives inputs from:

- Air conditioning select signal (if equipped)
- Air conditioning request signal (if equipped)
- Battery voltage
- Engine coolant temperature sensor
- Crankshaft position sensor
- Intake manifold air temperature sensor
- Manifold absolute pressure (MAP) sensor
- Pedal Value Sensors (PVS)
- Throttle position sensors (TPS)
- Camshaft position sensor signal
- Park/neutral switch (gear indicator signal)
- Oxygen (O2S) sensors

Based on these inputs, the following occurs:

- Voltage is applied to the fuel injectors with the ASD relay via the PCM. The PCM will then adjust the injector pulse width by turning the ground circuit to each individual injector on and off.
- The PCM monitors the O2S sensor input and adjusts air-fuel ratio.
- The PCM adjusts ignition timing by turning the ground path to the coils on and off.
- The PCM operates the A/C compressor clutch through the clutch relay. This happens if A/C has been selected by the vehicle operator and requested by the A/C thermostat.

ACCELERATION MODE

This is an Open Loop mode. The PCM recognizes an abrupt increase in throttle position or MAP pressure as a demand for increased engine output and vehicle acceleration. The PCM increases injector pulse width in response to increased throttle opening.

DECELERATION MODE

When the engine is at operating temperature, this is an Open Loop mode. During hard deceleration, the PCM receives the following inputs.

- Air conditioning select signal (if equipped)
- Air conditioning request signal (if equipped)
- Battery voltage
- Engine coolant temperature sensor
- Crankshaft position sensor
- Intake manifold air temperature sensor
- Manifold absolute pressure (MAP) sensor
- Pedal Value Sensors (PVS)

- Throttle position sensors (TPS)
- Camshaft position sensor signal
- Park/neutral switch (gear indicator signal)
- Vehicle speed

If the vehicle is under hard deceleration with the proper RPM and closed throttle conditions, the PCM will ignore the oxygen sensor input signal. The PCM will enter a fuel cut-off strategy in which it will not supply a ground to the injectors. If a hard deceleration does not exist, the PCM will determine the proper injector pulse width and continue injection.

The PCM adjusts ignition timing by turning the ground path to the coils on and off.

WIDE OPEN THROTTLE MODE

This is an Open Loop mode. During wide open throttle operation, the PCM receives the following inputs.

- Battery voltage
- Crankshaft position sensor
- Engine coolant temperature sensor
- Intake manifold air temperature sensor
- Manifold absolute pressure (MAP) sensor
- Pedal Value Sensors (PVS)
- Throttle position sensors (TPS)
- Camshaft position sensor signal

During wide open throttle conditions, the following occurs:

- Voltage is applied to the fuel injectors with the ASD relay via the PCM. The PCM will then control the injection sequence and injector pulse width by turning the ground circuit to each individual injector on and off. The PCM ignores the oxygen sensor input signal and provides a predetermined amount of additional fuel. This is done by adjusting injector pulse width.
- The PCM adjusts ignition timing by turning the ground path to the coil on and off.

IGNITION SWITCH OFF MODE

When ignition switch is turned to OFF position, the PCM stops operating the injectors, ignition coil, ASD relay and fuel pump relay.

5V POWER SUPPLIES

The Powertrain Control Module (PCM) supplies two independent regulated 5V power supply circuits; primary and secondary.

IGNITION CIRCUIT SENSE

The ignition switch power feeds to the PCM originate from the Integrated Power Module (IPM) after it determines what position the ignition key is in. The ACC and Run/Start feeds are hard wired from the IPM to the PCM. There is no hard wire Start feed to the PCM, because the IPM indicates via a CAN bus message to the PCM when the key is in the START (Crank) position.

POWER GROUNDS

The Powertrain Control Module (PCM) has 2 main grounds - power grounds for engine functions and power grounds for transmission functions (if equipped with 42RLE). Both of these grounds are referred to as power grounds. All of the high current electrically noisy devices are connected to these grounds. The sensor return comes into the sensor return circuit internal to the module, passes through noise suppression, and is then connected to the power ground internal to the module so as to minimize the effects of the high current and electrically noisy devices on various sensor signals.

The power ground is used to control ground circuits for the following PCM loads:

- Fuel injectors
- Ignition coil(s)
- Certain relays/solenoids
- Certain sensors

SENSOR RETURN

The Sensor Return circuits are internal to the Powertrain Control Module (PCM).

Sensor Return provides a low noise ground reference for all engine control system sensors. Refer to Power Grounds for more information on engine AND transmission PCM power grounds.

OPERATION

OPERATION - PCM

1. Also refer to Modes of Operation.

The PCM operates the fuel system. The PCM is a pre-programmed, dual microprocessor digital computer. It regulates ignition timing, air-fuel ratio, emission control devices, charging system, certain transmission features, speed control, air conditioning compressor clutch engagement and idle speed. The PCM can adapt its programming to meet changing operating conditions.

The PCM receives input signals from various switches and sensors. Based on these inputs, the PCM regulates various engine and vehicle operations through different system components. These components are referred to as Powertrain Control Module (PCM) Outputs. The sensors and switches that provide inputs to the PCM are considered Powertrain Control Module (PCM) Inputs.

The PCM adjusts ignition timing based upon inputs it receives from sensors that react to: engine RPM, manifold absolute pressure, engine coolant temperature, throttle position, pedal value, transmission gear selection (automatic transmission), vehicle speed and the brake switch.

The PCM adjusts idle speed based on inputs it receives from sensors that react to: throttle position, vehicle speed, transmission gear selection, engine coolant temperature and from inputs it receives from the air conditioning clutch switch and brake switch.

Based on inputs that it receives, the PCM adjusts ignition coil dwell. The PCM also adjusts the generator charge rate through control of the generator field and provides speed control operation.

- A/C select AND request via CAN communication bus
- Auto shutdown (ASD) sense
- Brake switches 1 AND 2
- Direct Battery voltage
- EGR Position sensor
- EVAP purge solenoid current sense
- Camshaft position sensor signal
- Crankshaft position sensor
- CAN C bus communication for internal module communication and data link connection for scan tools
- Engine coolant temperature sensor
- 5 volts (primary)
- 5 volts (secondary)
- Fuel level via CAN communication bus from IPM
- Generator (battery voltage sense) output
- Ignition circuit sense (ACC AND Run/Start via hardwire from Integrated Power Module (IPM) while the Crank indication is via CAN communication bus)
- Intake manifold air temperature sensor
- Evaporative system ESIM vacuum switch (if equipped)
- Manifold absolute pressure (MAP) sensor
- Oil pressure
- Oxygen sensors signals
- Park/neutral switch
- Power ground
- Sensor return
- Signal ground
- Speed control switch states are determined by SCM and transmitted over the bus via CAN bus
- SRV position sensor signal
- Throttle position sensors and Pedal value sensors
- Transmission pressure switch inputs (42RLE)
- Transmission variable line pressure sensor (42RLE)
- Transmission temperature sensor (42RLE)

- Vehicle speed (ABS equipped) via CAN C bus from ABS module
- Vehicle Speed (Non-ABS) from IPM via CAN C and Trans Turbine sensors (with pinion factor)
- A/C clutch relay
- Auto shutdown (ASD) relay coil
- CAN C bus messages for speedometer (non-ABS packages), voltmeter or generator lamp (if equipped), fuel gauge, oil pressure gauge/lamp, engine coolant temperature gauge and speed control indication warning lamp
- CAN bus communication for inter module communication and data link connection for scan tools
- EGR valve control solenoid (if equipped)
- Electronic Throttle Control (ETC) motor
- EVAP Purge solenoid
- Fuel injectors
- Fuel pump relay
- Generator field driver
- Ignition coils
- Malfunction indicator lamp (also known as MIL). Driven through Bus Messages.
- Oxygen sensor heater elements
- Radiator cooling fan relay via CAN bus message to IPM
- Short Runner Valve (SRV) actuator (if equipped)
- Tachometer (if equipped). Driven through Bus Messages.
- Transmission solenoids (42RLE only)
- Transmission power relay

5 VOLT SUPPLIES

Primary 5-volt supply:

- supplies the required 5 volt power source to the Crankshaft Position (CKP) sensor.
- supplies the required 5 volt power source to the oil pressure sensor (if equipped).
- supplies the required 5 volt power source to the Pedal Value Sensor #1.
- supplies a reference voltage for the Throttle Position Sensor (TPS) sensors 1 AND 2.

Secondary 5-volt supply:

- supplies the required 5 volt power source for the Camshaft Position Sensor.
- supplies the 5 volt power source to the EGR position sensor (if equipped).
- supplies a reference voltage for the Manifold Absolute Pressure (MAP) sensor.
- supplies the 5 volt power source to the Pedal Value Sensor #2, SRV Position Feedback sensor (if equipped).

- supplies the 5 volt power source to the transmission variable line pressure sensor (if equipped with 42RLE transmission).

OPERATION - IGNITION CIRCUIT SENSE

When the ignition key is inserted, the position of the key is transmitted via the CAN bus to Integrated Power Module (IPM). When the key position is rotated to the ACC position or Run/Start position, the IPM energizes the Ignition ACC and/or Run/Start feed which will wake up the Powertrain Control Module (PCM) accordingly. These feeds are essentially fused switched battery voltage feeds fabricated by the IPM with relays or solid state devices. There is not Ignition Start feed to the PCM - this is handled by a CAN bus message from IPM to PCM. NOTE: Only on those applications with the 42RLE does the PCM receive an Ignition ACC feed.

STANDARD PROCEDURE

TCM QUICK LEARN - 42RLE Only (Non ABS)

The quick learn procedure requires the use of the appropriate scan tool.

This program allows the electronic transmission system to recalibrate itself. This will provide the proper transmission operation. The quick learn procedure should be performed if any of the following procedures are performed:

- Transmission Assembly Replacement
- Transmission Control Module Replacement
- Solenoid Pack Replacement
- Clutch Plate and/or Seal Replacement
- Valve Body Replacement or Recondition

To perform the Quick Learn Procedure, the following conditions must be met:

- The brakes must be applied
- The engine speed must be above 500 RPM
- The throttle angle (TPS) must be less than 3 degrees
- The shift lever position must stay in PARK until prompted to shift to overdrive
- The shift lever position must stay in overdrive after the Shift to Overdrive prompt until the scan tool indicates the procedure is complete.
- The calculated oil temperature must be above 60° and below 200°

TCM ADAPTATION - NAG1 Only

The adaptation procedure requires the use of the appropriate scan tool. This program allows the electronic transmission system to re-calibrate itself. This will provide the proper baseline transmission operation. The adaptation procedure should be performed if any of the following procedures are performed:

- Transmission Assembly Replacement
- Transmission Control Module Replacement
- Clutch Plate and/or Seal Replacement
- Electrohydraulic Unit Replacement or Recondition

1. With the scan tool, reset the Transmission adaptives. Resetting the adaptives will set the adaptives to factory settings.

   NOTE: Perform the Coast Down Adaptations first. The Transmission Temperature must be greater than 60°C (140°F) and less than 70°C (158°F). Failure to stay within these temperature ranges will void the procedure.

2. Drive the vehicle until the transmission temperature is in the specified range.
3. Perform 4 to 5 coast downs from 5th to 4th gear and then 4th to 3rd gear.

   NOTE: For Upshift adaptation, the Transmission temperature must be greater than 60°C (140°F) and less than 100°C (212°F). Failure to stay within these temperature ranges will void this procedure.

4. From a stop, moderately accelerate the vehicle and obtain all forward gear ranges while keeping the Engine RPM below 1800 RPM. Repeat this procedure 4 to 5 times.
5. Obtaining 5th gear may be difficult at 1800 RPM. Allow the transmission to shift into 5th gear at a higher RPM then lower the RPM to 1800 and perform manual shifts between 4th and 5th gears using the shift lever.
6. The TCM will store the adaptives every 10 minutes. After completion of the adaptation procedure make sure the vehicle stays running for at least 10 minutes.
7. It is possible to manually store the adaptives under the 10 minute time frame using the scan tool Store Adaptives procedure.

PCM/ECM REPROGRAMMING - GAS

PCM / TCM FLASH REPROGRAMMING

This procedure will need to be done when one or more of the following situations are true:

1. A vehicle's Powertrain control module (PCM) has been replaced.
2. A diagnostic trouble code (DTC) is set "P1602 - PCM Not Programmed."
3. An updated calibration or software release is available for either the PCM or TCM ECUs.

This procedure assumes that the StarSCAN® and StarMOBILE® devices are configured to your dealership's network with either a wired or wireless connection. The StarSCAN® and StarMOBILE® must also be running at the latest operating system and software release level. For more help on how to network your StarSCAN® or StarMOBILE® reference the StarSCAN® / StarMOBILE® Quick Start Networking Guide available on 'DealerCONNECT > Service > StarSCAN® and StarMOBILE® Tools

> Online Documentation' or at www.dcctools.com, under the Download Center.

Table Of Contents

1. **SECTION 1 - PCM / TCM FLASH PROCEDURE**
2. **REQUIRED TOOLS/EQUIPMENT**
3. **TECH TIPS and INFORMATION**
4. **PARTS REQUIRED**

SECTION 1 - PCM / TCM FLASH PROCEDURE

If using StarSCAN® or StarMOBILE® Desktop Client. Go to **REPAIR PROCEDURE - Using StarSCAN® or StarMOBILE® Desktop Client**.

If using StarMOBILE® Standalone Diagnostic Mode. Go To **REPAIR PROCEDURE - Using StarMOBILE® Standalone Diagnostic Mode**.

REPAIR PROCEDURE - Using StarSCAN® or StarMOBILE® Desktop Client

NOTE: If this flash process is interrupted or aborted, the flash should be restarted.

1. Open the hood of the vehicle and install a battery charger. Verify that the charging rate provides a continuous charge of 13.2 - 13.5 volts.
2. Connect the StarSCAN® or StarMOBILE® to the vehicle data link connector located under the steering column and turn the ignition key to the "RUN" position.
3. Power on the StarSCAN® or StarMOBILE®. If the StarMOBILE® is being used, launch the StarMOBILE® Desktop Client and connect to the appropriate StarMOBILE® device.
4. Retrieve the old ECU part number. From the tool's Home screen,
    a. Select "ECU View"
    b. Select "PCM"
    c. Select "More Options"
    d. Select "ECU Flash"
    e. Record the part number at the top of the Flash PCM screen for later reference.
5. Program the ECU as follows:
    a. Using the StarSCAN® / StarMOBILE® at the Home screen, select "ECU View"
    b. Select "PCM"
    c. Select "More Options"
    d. Select "ECU Flash"
    e. Select "Browse for New File" and follow the on screen instructions.
    f. Highlight the appropriate calibration based on the part number recorded in Step 4e, or by using Year/Model/Engine and appropriate emissions selection for the vehicle being worked on.

g. Select "Download to Scantool"
h. Once the download is complete, select "Close" and then "Back"
i. Highlight the listed calibration, select "Update Controller" and follow the on screen instructions.
j. When the PCM update is complete, select "OK"
k. Verify that the part number at the top of the Flash PCM screen has updated to the new part number.

NOTE: If this flash process is interrupted or aborted, the flash should be restarted.

6. Continue to **SECTION 2 - ADDITIONAL PCM / TCM REPLACEMENT PROCEDURES** to complete the process if the ECU has been replaced.
7. Type the necessary information on the "Authorized Modification Label" (p/n 04275086AB) and attach near the VECI label (See **SECTION 3 - AUTHORIZED MODIFICATION LABEL** for details).

REPAIR PROCEDURE - Using StarMOBILE® Standalone Diagnostic Mode

NOTE: StarMOBILE® Standalone Mode is an efficient way to flash ECUs without having direct access to a network connection. It involves first copying the flash file to the StarMOBILE® device which DOES require a network connection. Once the file has been copied to the StarMOBILE® device, it can be used in a Standalone mode to flash the ECU WITHOUT a network connection.

NOTE: StarMOBILE® does not need to be connected to a vehicle when retrieving a flash file for Standalone Mode.

1. Power on the StarMOBILE®. Launch the StarMOBILE® Desktop Client and connect to the tool.
2. At the Home screen, select "ECU View"
   a. Select "PCM"
   b. Select "More Options"
   c. Select "ECU Flash"
   d. Select "Browse for New File" and follow the on screen instructions.
   e. Highlight the appropriate calibration based on the current ECU part number, or by using Year/Model/Engine and appropriate emissions selection for the vehicle being worked on.

NOTE: If you are not connected to the vehicle, you may also search for flash files by selecting the "Flash Download" button from the Home screen.

3. From the Flash File List, select the appropriate calibration for the PCM and select "Download to Client"
4. Once the download is complete, hit "OK" and then "Manage Files"

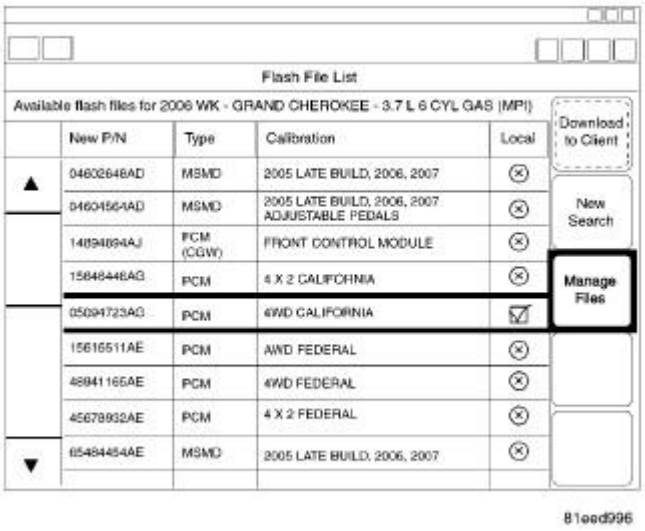

Fig. 26: Flash File List - Manage Files
Courtesy of CHRYSLER LLC

5. In the Manage Files screen, highlight the downloaded flash file and select "Copy to SM Device". A green check mark should now appear in the On SM Device column.

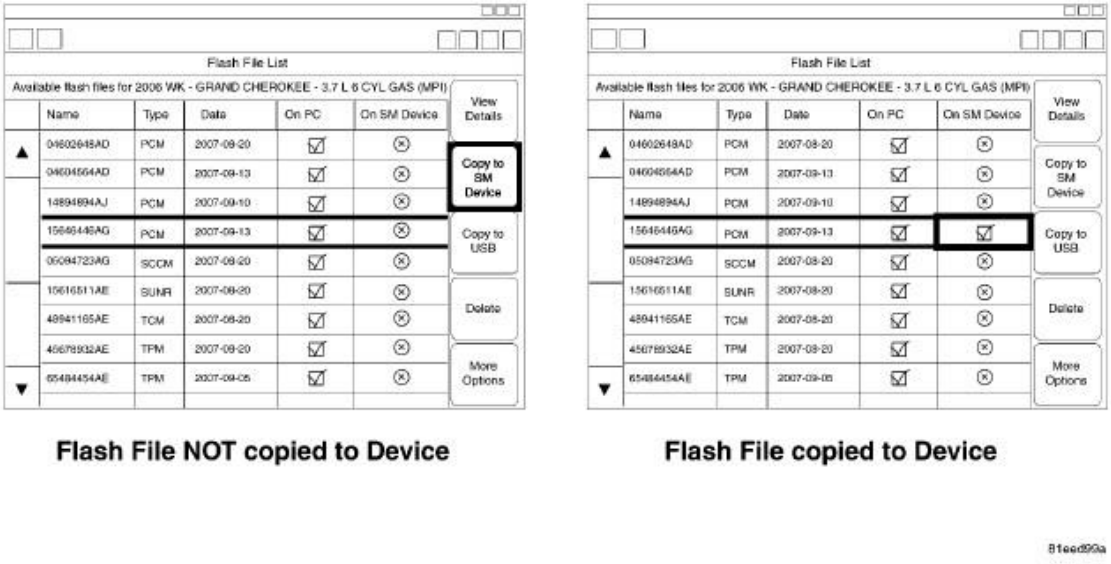

Fig. 27: Flash File List - Copy to SM Device
Courtesy of CHRYSLER LLC

6. Exit the StarMOBILE® Desktop Client application.
7. Open the hood of the vehicle and install a battery charger. Verify that the charging rate provides

a continuous charge of 13.2 - 13.5 volts.

8. Connect the StarMOBILE® to the vehicle data link connector located under the steering column and turn the ignition key to the "RUN" position.
9. On the StarMOBILE® device, select "Enter Standalone Diagnostic Mode" (use the right function key).

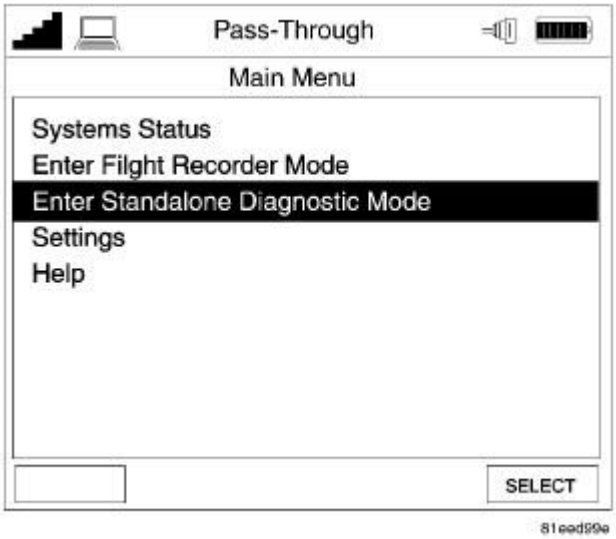

Fig. 28: Pass-Through - Main Menu - Enter Standalone Diagnostic Mode
Courtesy of CHRYSLER LLC

NOTE: If a StarMOBILE® Desktop Client is still associated with the device, you will receive the following error: "Your StarMOBILE® device is currently locked by a PC named 'xxxxxxxx' on your network. To remove the lock, close its Desktop Client or reboot this device".

10. Program the ECU as follows:
    a. Select "ECU View"
    b. Select "PCM"
    c. Select "Flash ECU"

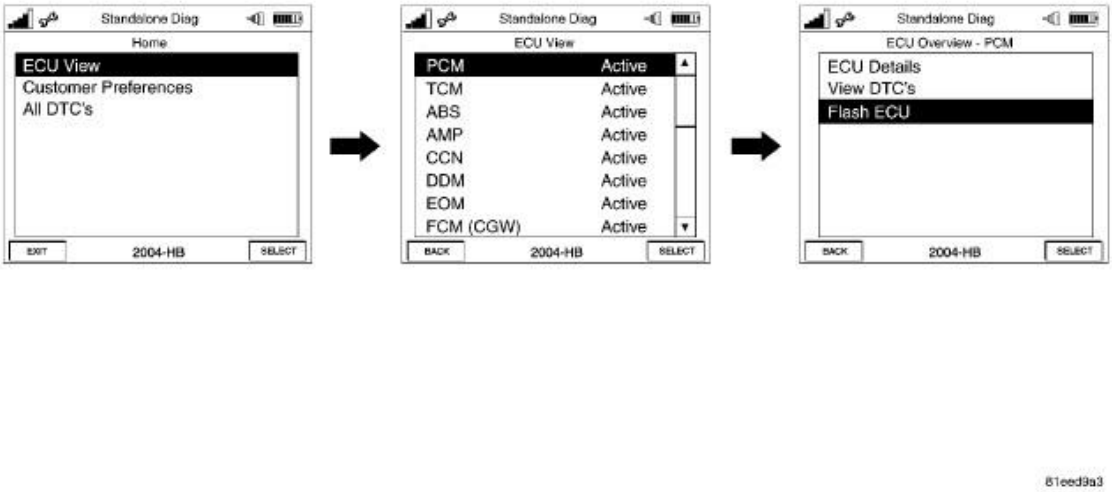

Fig. 29: Standalone Diag - Flash ECU
Courtesy of CHRYSLER LLC

d. Record the ECU part number at the very top of the screen for later reference.

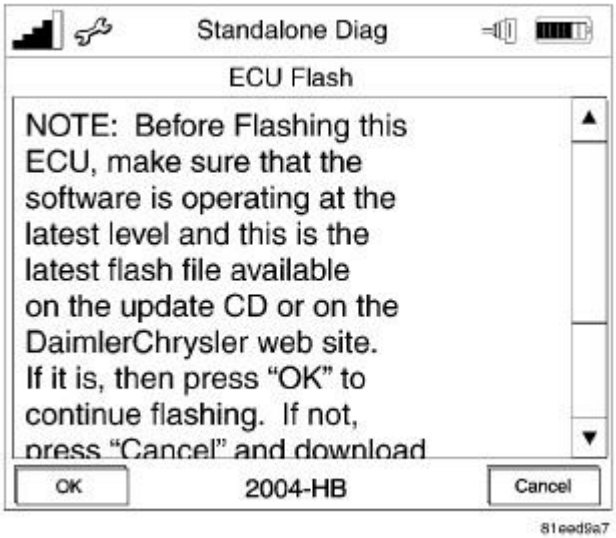

Fig. 30: Standalone Diag - ECU Part Number Note
Courtesy of CHRYSLER LLC

e. Highlight the flash file that you want to use. Hit "SELECT" and then "OK". Follow the on screen instructions.

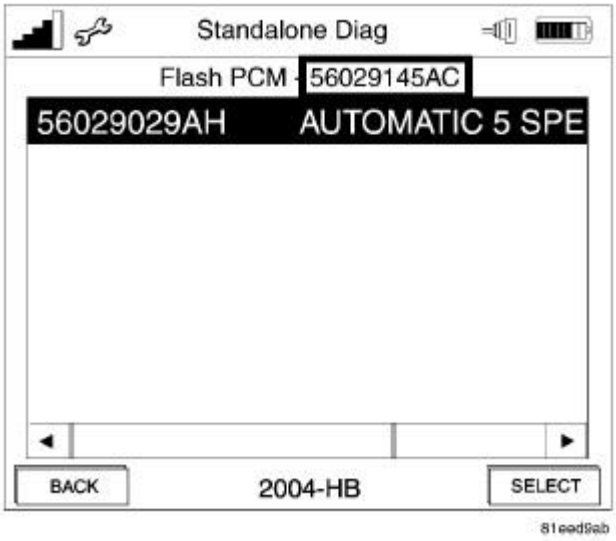

Fig. 31: Standalone Diag - Highlighting Flash File
Courtesy of CHRYSLER LLC

f. Once the flash is complete, verify that the part number at the top of the Flash PCM screen has updated to the new part number.

NOTE: If this flash process is interrupted or aborted, the flash should be restarted.

11. Continue to **SECTION 2 - ADDITIONAL PCM / TCM REPLACEMENT PROCEDURES** to complete the process if the ECU has been replaced.
12. Type the necessary information on the "Authorized Modification Label" (p/n 04275086AB) and attach near the VECI label (See **SECTION 3 - AUTHORIZED MODIFICATION LABEL** for details).

SECTION 2 - ADDITIONAL PCM / TCM REPLACEMENT PROCEDURES

Find the PCM/TCM Type for the vehicle, read and write down the steps, and then go to the step by step instructions for additional information on how to perform these procedures. STEP-BY-STEP INSTRUCTIONS .

If a NGC3 or NGC4 PCM was replaced, perform the following additional steps and/or routines:

1. PCM Replaced - if WCM equipped
2. Learn ETC - if ETC equipped
3. Check PCM Odometer
4. Check PCM VIN - if NOT WCM equipped
5. Quicklearn - if EATX equipped

If a GPEC PCM was replaced, perform the following additional steps and/or routines:

1. If the vehicle is equipped with a CVT, ensure that the TCM has the latest software calibration available (if the vehicle is not equipped with a CVT, skip to Step 3).
2. PCM Replaced - if WCM equipped
3. Learn ETC
4. Check PCM Odometer
5. Check PCM VIN - if NOT WCM equipped
6. TCM Quicklearn - if EATX equipped

If a CVT TCM was replaced, perform the following additional steps and/or routines:

1. Initialize CVT

If an EGS TCM was replaced, perform the following additional steps and/or routines:

1. Initialize EGS

STEP-BY-STEP INSTRUCTIONS

Check PCM Odometer

From the "Home" screen, select "ECU View".

- Select "PCM"
- Select "Misc. Functions"
- Select "Check PCM Odometer" and follow the on screen instructions.
- When complete, select "Finish".

Check PCM VIN

From the "Home" screen, select "ECU View"

- Select "PCM"
- Select "Misc. Functions"
- Select "Check PCM VIN" and follow the on screen instructions.
- When complete, select "Finish"

Initialize CVT

From the "Home" screen, select "ECU View"

- Select "TCM"
- Select "Misc. Functions"

- Select "Initialize CVT" and follow the on screen instructions.
- When complete, select "Finish"

Initialize EGS

From the "Home" screen, select "ECU View"

- Select "TCM"
- Select "Misc. Functions"
- Select "Initialize EGS" and follow the on screen instructions.
- When complete, select "Finish"

Learn ETC

From the "Home" screen, select "ECU View"

- Select "PCM"
- Select "Misc. Functions"
- Select "Learn ETC" and follow the on screen instructions.
- When complete, select "Finish"

PCM Replaced

The vehicle pin (Personal Identification Number) will be required to complete the routine. This information may be obtained in three ways:

1. The original selling invoice
2. DealerCONNECT > Parts > Key Codes
3. Contacting the District Manager.

From the "Home" screen, select "ECU View"

- Select "WCM"
- Select "Misc. Functions"
- Select "PCM Replaced" and follow the on screen instructions.
- When complete, select "Finish"

Quicklearn

From the "Home" screen, select "ECU View"

- Select "PCM"
- Select "Misc. Functions"

- Select "Quicklearn" and follow the on screen instructions.
- When complete, select "Finish"

Update CVT TCM

From the "Home" screen:

- Select "ECU View"
- Select "TCM"
- Select "More Options"
- Select "ECU Flash"
- Select "Browse for New File" and follow the on screen instructions.
- Highlight the appropriate calibration.
- Select "Download to Scantool"
- Once the download is complete, select "Close" and then "Back"
- Highlight the listed calibration, select "Update Controller" and follow the on screen instructions.
- When the TCM update is complete, select "OK"
- Verify that the part number at the top of the "Flash TCM" screen has updated to the latest level.

SECTION 3 - AUTHORIZED MODIFICATION LABEL

NOTE: The following step is required by law when reprogramming a PCM and/or TCM.

Type the necessary information on the "Authorized Modification Label" and attach near the VECI label.

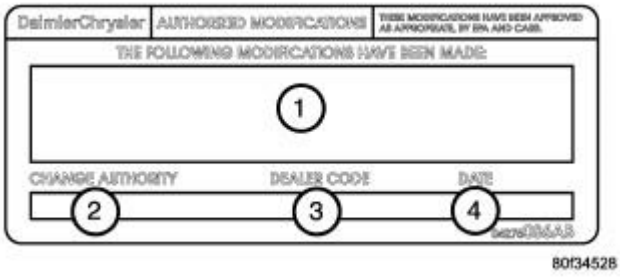

Fig. 32: Authorized Modification Label
Courtesy of CHRYSLER LLC

1. Powertrain Control / Transmission Control Module Part Numbers (Insert P/Ns) Used
2. Change Authority: TSB XX--XX
3. Dealer Code: XXXXX
4. Date: XX-XX-XX

REQUIRED TOOLS/EQUIPMENT:

REQUIRED TOOLS/EQUIPMENT:

PART NUMBER	StarSCAN®	PART NUMBER	StarMOBILE®
NPN	Battery Charger	NPN	Battery Charger
CH9401	StarSCAN® Tool Kit	CH9801	StarMOBILE® Tool Kit
CH9404	StarSCAN® Vehicle Cable	CH9804	StarMOBILE® Vehicle Cable
-	-	-	TechCONNECT PC or equivalent

TECH TIPS and INFORMATION:

1. StarMOBILE® Standalone Diagnostic Mode is an efficient way to flash ECUs without having direct access to a network connection. It involves first copying the flash file to the StarMOBILE® device which DOES require a network connection. Once the file has been copied to the StarMOBILE® device, it can be used in a Standalone mode to flash the ECU WITHOUT a network connection.
2. To use the StarMOBILE® in Pass-Through Mode requires that your StarMOBILE® is connected to the dealerships network via a wired or wireless connection. For more information on how to use the StarMOBILE in Pass-Through Mode see the StarMOBILE® training tutorials available on 'DealerCONNECT > Service > StarSCAN® and StarMOBILE® Tools > Training Aids' link or at www.dcctools.com, under the 'Training Aids' link.
3. StarMOBILE® does not need to be connected to a vehicle when retrieving a flash file for Standalone Mode.
4. Extreme care must be taken when programming a calibration into a generic PCM. Do not randomly select a calibration. Once a calibration is selected and programmed, the controller cannot be reprogrammed to a different calibration. The ECU can only be reprogrammed to a more recent version of that calibration.
5. If the flash process is interrupted or aborted, the flash should be restarted.
6. Due to the PCM / TCM programming procedure, a DTC may be set in other ECUs within the vehicle. Some DTCs may cause the MIL to illuminate. From the "Home" screen select "System View". Then select "All DTCs". Press "Clear All Stored DTCs" if there are any DTCs shown on the list.
7. When replacing a GPEC PCM for a vehicle that is equipped with a CVT, it is extremely important that the PCM and TCM both have the latest software calibrations.
8. Do not allow the battery charger to time out or the charging rate to climb above 13.5 volts during the flash process.
9. The StarSCAN® and StarMOBILE® diagnostic tools fully support Internet connectivity and must be configured for your dealership's network. For help on setting up your StarSCAN® / StarMOBILE® for the dealership's network, refer to the StarSCAN® / StarMOBILE® Quick Start Networking Guide available on 'DealerCONNECT > Service > StarSCAN® and StarMOBILE® Tools > Online Documentation' or at www.dcctools.com, under the download center.
10. The operating software in the StarSCAN® and StarMOBILE® must be programmed with the latest software release level. The software level is visible in the blue header at the top of the StarSCAN® and StarMOBILE® Desktop Client screens. For instructions on how to update your

scan tool, refer to the StarSCAN® / StarMOBILE® Software Update guide available on 'DealerCONNECT > Service > StarSCAN® and StarMOBILE® Tools > Online Documentation' or at www.dcctools.com, under the download center.

PARTS REQUIRED

PARTS REQUIRED

Qty	Part Number	DESCRIPTION
1	04275086AB	Label, Authorized Modification

REMOVAL

REMOVAL

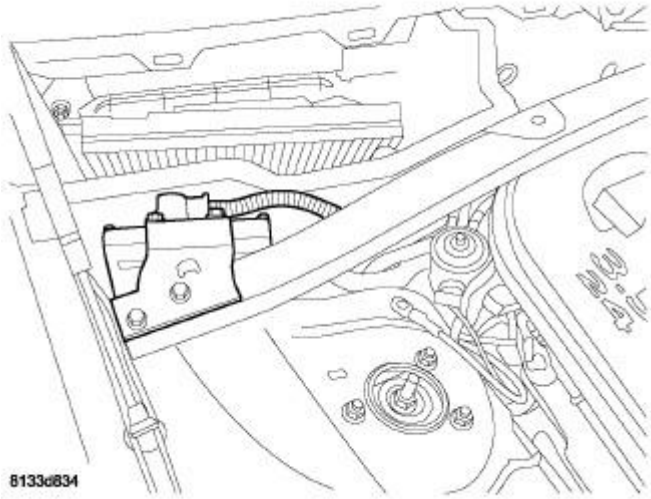

Fig. 33: PCM Location In Vehicle
Courtesy of CHRYSLER LLC

NOTE: USE THE SCAN TOOL TO REPROGRAM THE NEW POWERTRAIN CONTROL MODULE (PCM) WITH THE VEHICLES ORIGINAL IDENTIFICATION NUMBER (VIN) AND THE VEHICLES ORIGINAL MILEAGE. IF THIS STEP IS NOT DONE, A DIAGNOSTIC TROUBLE CODE (DTC) MAY BE SET.

To avoid possible voltage spike damage to PCM, ignition key must be off, and negative battery cable must be disconnected before unplugging PCM connectors.

1. Disconnect and isolate negative battery cable.

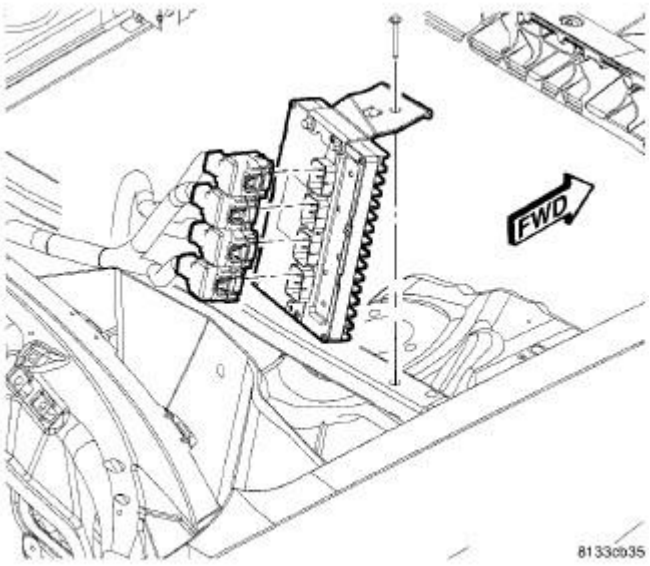

Fig. 34: PCM Location
Courtesy of CHRYSLER LLC

2. Remove PCM bracket-to-body mounting bolt.
3. Remove assembly from vehicle.
4. Disconnect electrical connectors from PCM.

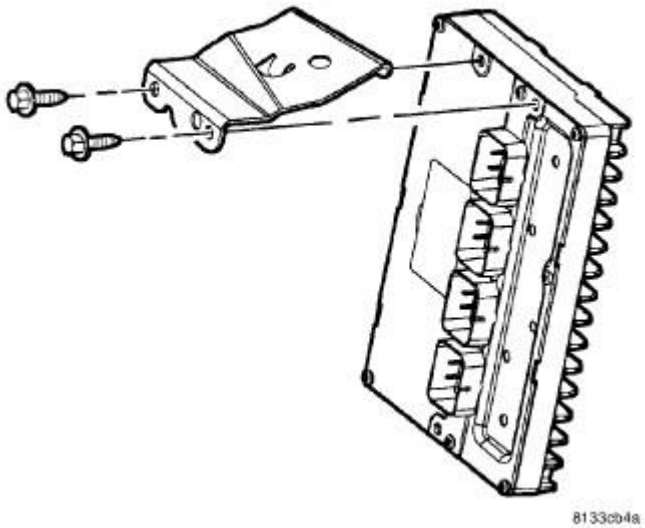

Fig. 35: PCM Bracket
Courtesy of CHRYSLER LLC

5. Remove bracket from PCM.

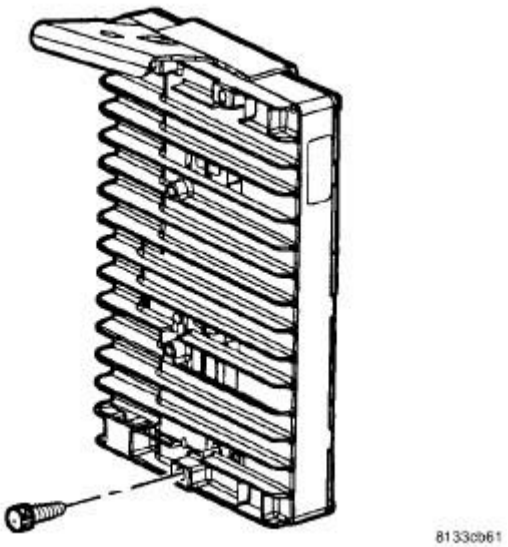

Fig. 36: Rubber Bumper
Courtesy of CHRYSLER LLC

6. Remove rubber bumper from PCM.

INSTALLATION

INSTALLATION

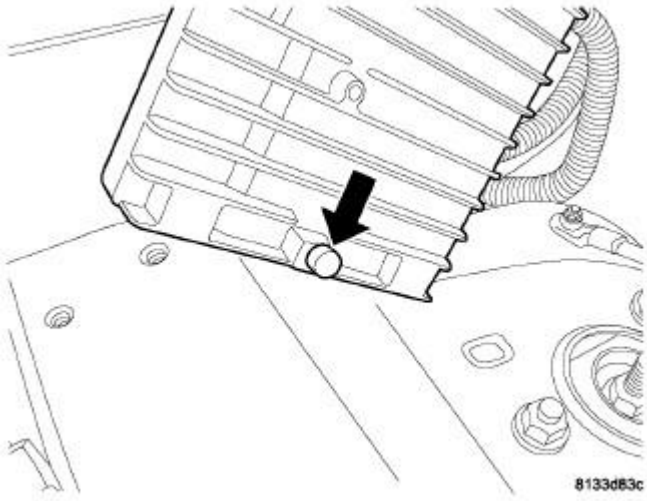

Fig. 37: Rubber Bumper Installed
Courtesy of CHRYSLER LLC

NOTE: USE THE SCAN TOOL TO REPROGRAM THE NEW POWERTRAIN CONTROL MODULE (PCM) WITH THE VEHICLES ORIGINAL IDENTIFICATION NUMBER (VIN) AND THE VEHICLES ORIGINAL MILEAGE. IF THIS STEP IS NOT DONE, A

DIAGNOSTIC TROUBLE CODE (DTC) MAY BE SET.

1. Install rubber bumper to PCM.
2. Check pins in electrical connectors for damage. Repair as necessary.
3. Install electrical connectors to PCM.

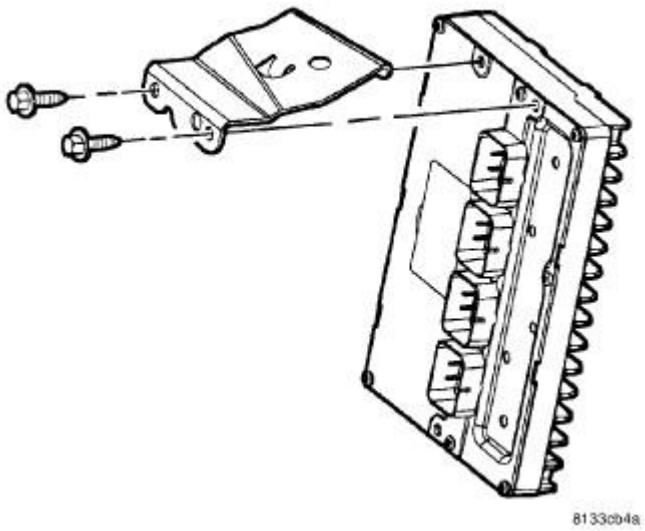

Fig. 38: PCM Bracket
Courtesy of CHRYSLER LLC

4. Install mounting bracket to PCM.

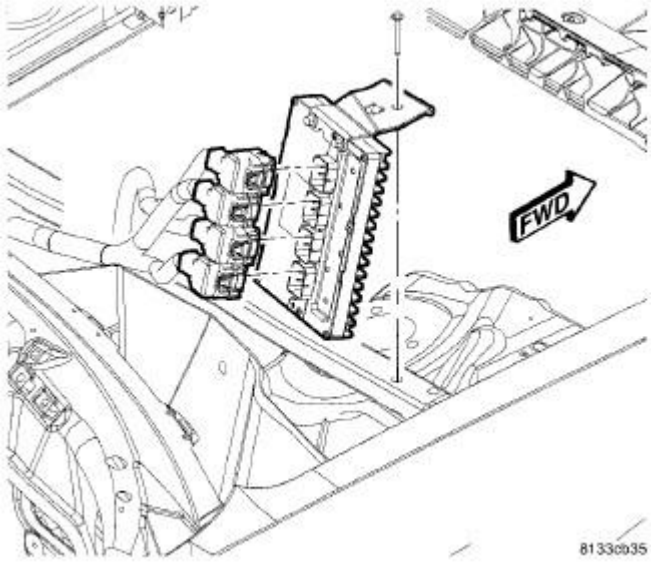

Fig. 39: PCM Location
Courtesy of CHRYSLER LLC

5. Install assembly to body. Install bolt and tighten 9 N.m (80 in. lbs.) torque.
6. Connect negative cable to battery.
7. Use the scan tool to reprogram new PCM with vehicles original Identification Number (VIN) and original vehicle mileage.

MODULE, STEERING COLUMN

DESCRIPTION

DESCRIPTION

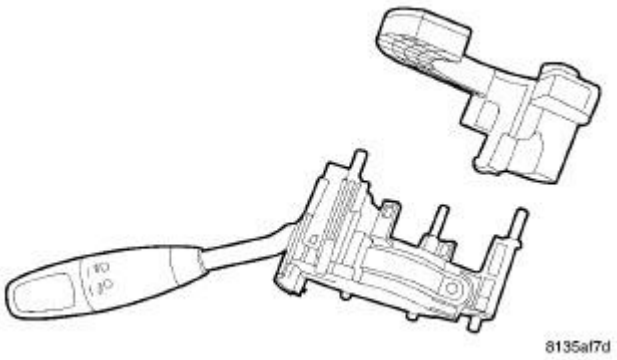

Fig. 40: Multi-Function Switch & Circuit Board
Courtesy of CHRYSLER LLC

> **WARNING: To service any component of the SCCM, the entire assembly must be removed from the column. This must be done due to the clockspring passing through the assembly and into the self docking connector. Failure to remove the assembly could damage the pins of the clockspring and prevent the airbag system from operating properly.**

The Steering Control Module (SCM) is the module located in the bottom of the Steering Column Control Module (SCCM), retained by three screws, and is the mating point for all the switches (steering angle sensor, tilt/telescopic switch, multi-function switch, clockspring) located in the SCCM. The steering wheel switches, horn, speed control switches, attach to the steering wheel and interface to the SCM through the SCCM. The SCM is screwed directly to the bottom of the multi-function switch. All the other switches are mounted on top of the multi-function switch.

OPERATION

OPERATION

> **WARNING: To service any component of the SCCM, the entire assembly must be removed from the column. This must be done due to the clockspring passing through the assembly and into the self docking connector. Failure to remove the assembly could damage the pins of the clockspring**

and prevent the airbag system from operating properly. Failure to follow these instructions may result in serious or fatal injury.

The Steering Control Module (SCM) communicates via the Local Interconnect Network (LIN) serial data bus to the steering wheel switches and the horn switch. The SCM communicates across the CAN C and CAN B. This is an ultra-low voltage serial data bus that allows the following components to communicate with the Controller Area Network (CAN) B and C data buses.

FUNCTION	INPUT	OUTPUT
Steering Wheel Switch	Direct to SCM on LIN Bus	SCM output to CAN B BUS
Horn Switch	Direct to SCM on LIN Bus	SCM output to CAN B BUS
Multi Function Switch	Direct input to the SCM.	SCM output to CAN B BUS
Tilt / Telescopic Switch	Direct input to the SCM	SCM output to CAN B BUS
Steering angle sensor	Direct input to the SCM	SCM output to CAN C BUS
Speed Control Switch (steering wheel mounted)	Direct input to the SCM	SCM output to CAN C BUS
Speed Control Switch (Police Package Le / L2)	Direct input to the SCM	SCCM output to CAN C BUS

The SCM changes the LIN communication to CAN communication and also stores Diagnostic Trouble Codes (DTC's) for the switches within the SCCM and on the steering wheel.

For removal and installation, disassembly and assembly of the SCCM:

- Refer to **Steering/Column/MODULE, Steering Column Control - Removal** .
- Refer to **Steering/Column/MODULE, Steering Column Control - Disassembly** .
- Refer to **Steering/Column/MODULE, Steering Column Control - Assembly** .
- Refer to **Steering/Column/MODULE, Steering Column Control - Installation** .

The SCM is not serviceable and if found faulty, it must be replaced as a unit.

MODULE, TRANSMISSION CONTROL

DESCRIPTION

TRANSMISSION CONTROL MODULE - 42RLE

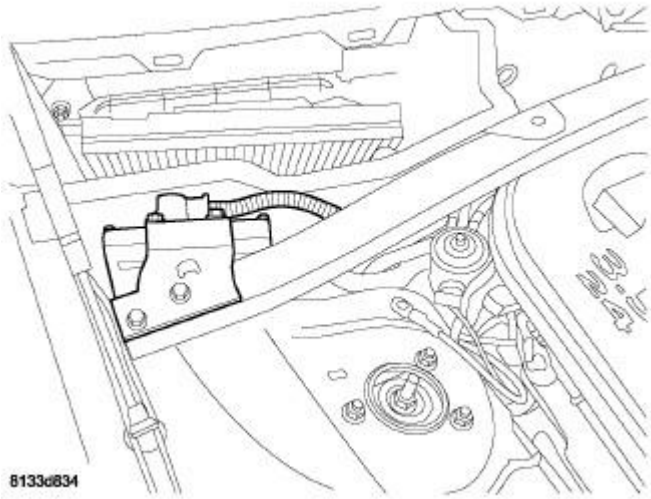

Fig. 41: PCM Location In Vehicle
Courtesy of CHRYSLER LLC

The Transmission Control Module (TCM) is a sub-module within the Powertrain Control Module (PCM). The Powertrain Control Module (PCM) is located in the right rear of the engine compartment, just in front of the windshield.

TRANSMISSION CONTROL MODULE - NAG1

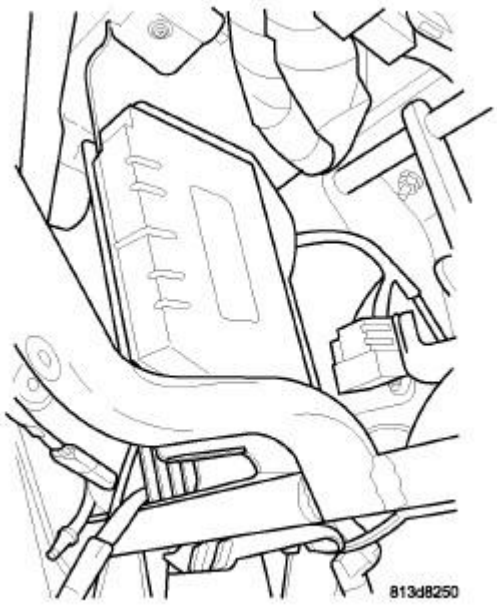

Fig. 42: TCM Location
Courtesy of CHRYSLER LLC

The TCM is located under the left side of the instrument panel for left hand drive vehicles. For right hand drive vehicles, the TCM is located in the mirrored location under the right side of the instrument panel.

The electronic control system consists of various components providing inputs to the transmission control module (TCM). The TCM monitors transmission sensors, shift lever position, and bus messages to determine transmission shift strategy. After shift strategies are determined, the TCM controls the actuation of transmission solenoids, which controls the routing of hydraulic fluid within the transmission, by moving a sequence of four valves to make a shift occur.

The NAG1 electronic transmission has a fully adaptive control system. The system performs its functions based on continuous real-time sensor feedback information. In addition the TCM receives information from the PCM (engine management) and ABS (chassis systems) controllers over the CAN bus. The CAN bus is a high-speed communication bus that allows real time control capability between various controllers. Most messages are sent every 20 milliseconds. This means critical information can be shared between the transmission, engine, and ABS controllers. The CAN bus is a two wire bus with a CAN Bus (+) circuit and a CAN Bus (-) circuit. These circuits are twisted pairs in the harness to reduce the potential of radio and noise interference.

The transmission control system automatically adapts to changes in engine performance, vehicle speed, and transmission temperature variations to provide consistent shift quality. The control system ensures that clutch operation during up-shifting and downshifting is more responsive without increased harshness. The TCM activates the solenoid valves and moves valves in the valve body to achieve the necessary gear changes. The required pressure level is calculated from the load condition, engine speed. Vehicle speed (from ABS module) and transmission oil temperature, matched to the torque to be transmitted. The TCM is located under the left side of the instrument panel for left hand drive vehicles. For right hand drive vehicles, the TCM is located in the mirrored location under the right side of the instrument panel.

OPERATION

TRANSMISSION CONTROL MODULE (TCM)- 42RLE

The TCM controls all electronic operations of the transmission. The TCM receives information regarding vehicle operation from both direct and indirect inputs, and selects the operational mode of the transmission. Direct inputs are hardwired to, and used specifically by the TCM. Indirect inputs are shared with the TCM via the vehicle communication bus.

Some examples of **direct inputs** to the TCM are:

- Battery (B+) voltage
- Ignition "ON" voltage
- Transmission Control Relay (Switched B+)
- Throttle Position Sensor
- Crankshaft Position Sensor
- Transmission Range Sensor

- Pressure Switches
- Transmission Temperature Sensor
- Input Shaft Speed Sensor
- Output Shaft Speed Sensor
- Line Pressure Sensor

Some examples of **indirect inputs** to the TCM are:

- Engine/Body Identification
- Manifold Pressure
- Target Idle
- Torque Reduction Confirmation
- Engine Coolant Temperature
- Ambient/Battery Temperature
- Scan Tool Communication

Based on the information received from these various inputs, the TCM determines the appropriate shift schedule and shift points, depending on the present operating conditions and driver demand. This is possible through the control of various direct and indirect outputs.

Some examples of TCM **direct outputs** are:

- Transmission Control Relay
- Solenoids
- Torque Reduction Request

Some examples of TCM **indirect outputs** are:

- Transmission Temperature (to PCM)
- PRNDL Position (to cluster/CCN)

In addition to monitoring inputs and controlling outputs, the TCM has other important responsibilities and functions:

- Storing and maintaining Clutch Volume Indexes (CVI)
- Storing and selecting appropriate Shift Schedules
- System self-diagnostics
- Diagnostic capabilities (with scan tool)

NOTE: **If the TCM has been replaced, the "Quick Learn Procedure" must be performed. See Electrical - Electronic Control Modules/Electronic Control Modules/MODULE, Transmission Control - Standard Procedure.**

BATTERY FEED

A fused, direct battery feed to the TCM is used for continuous power. This battery voltage is necessary to retain memory in the TCM. When the battery (B+) is disconnected, this memory is lost. When the battery (B+) is restored, this memory loss is detected by the TCM and a Diagnostic Trouble Code (DTC) is set.

CLUTCH VOLUME INDEXES (CVI)

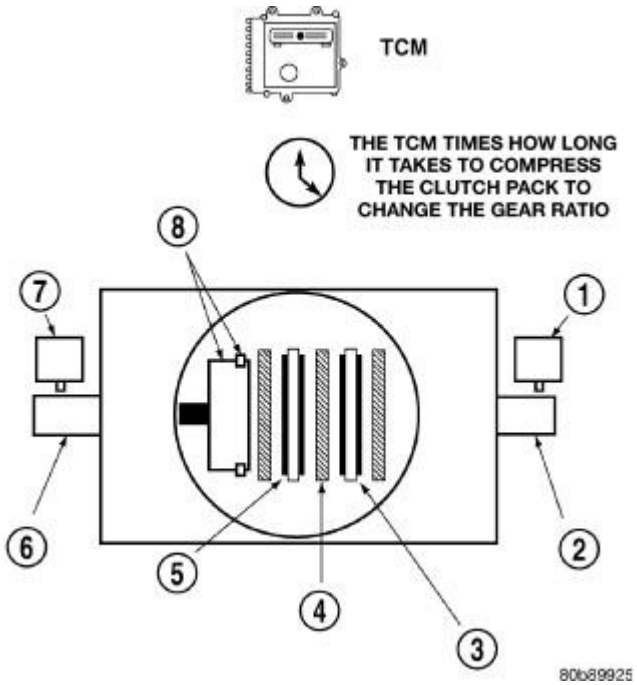

Fig. 43: Example Of CVI Calculation
Courtesy of CHRYSLER LLC

1 - OUTPUT SPEED SENSOR
2 - OUTPUT SHAFT
3 - CLUTCH PACK
4 - SEPARATOR PLATE
5 - FRICTION DISCS
6 - INPUT SHAFT
7 - INPUT SPEED SENSOR
8 - PISTON AND SEAL

An important function of the TCM is to monitor Clutch Volume Indexes (CVI). CVIs represent the volume of fluid needed to compress a clutch pack.

The TCM monitors gear ratio changes by monitoring the Input and Output Speed Sensors. The Input, or Turbine Speed Sensor sends an electrical signal to the TCM that represents input shaft RPM. The Output Speed Sensor provides the TCM with output shaft speed information.

By comparing the two inputs, the TCM can determine transmission gear position. This is important to the CVI calculation because the TCM determines CVIs by monitoring how long it takes for a gear change to occur .

Gear ratios can be determined by using the Scan Tool and reading the Input/Output Speed Sensor values in the "Monitors" display. Gear ratio can be obtained by dividing the Input Speed Sensor value by the Output Speed Sensor value.

For example, if the input shaft is rotating at 1000 RPM and the output shaft is rotating at 500 RPM, then the TCM can determine that the gear ratio is 2:1. In direct drive (3rd gear), the gear ratio changes to 1:1. The gear ratio changes as clutches are applied and released. By monitoring the length of time it takes for the gear ratio to change following a shift request, the TCM can determine the volume of fluid used to apply or release a friction element.

The volume of transmission fluid needed to apply the friction elements are continuously updated for adaptive controls. As friction material wears, the volume of fluid need to apply the element increases.

Certain mechanical problems within the input clutch assembly can cause inadequate or out-of-range element volumes. Also, defective Input/Output Speed Sensors and wiring can cause these conditions. The following chart identifies the appropriate clutch volumes and when they are monitored/updated:

CLUTCH VOLUMES		
Clutch	**When Updated**	**Proper Clutch Volume**
L/R	2-1 or 3-1 downshift	45 to 134
2C	3-2 kickdown shift	25 to 85
OD	2-3 upshift	30 to 100
4C	3-4 upshift	30 to 85
UD	4-3 kickdown shift	30 to 100

SHIFT SCHEDULES

As mentioned earlier, the TCM has programming that allows it to select a variety of shift schedules. Shift schedule selection is dependent on the following:

- Shift lever position
- Throttle position
- Engine load
- Fluid temperature
- Software level

As driving conditions change, the TCM appropriately adjusts the shift schedule. Use the following chart to determine the appropriate operation expected, depending on driving conditions.

Schedule	Condition	Expected Operation
Extreme Cold	Oil temperature below -16° F	- Park, Reverse, Neutral and

		1st and 3rd gear only in D position, 2nd gear only in Manual 2 or L - No EMCC
Super Cold	Oil temperature between -12° F and 10° F	- Delayed 2-3 upshift - Delayed 3-4 upshift - Early 4-3 coastdown shift - High speed 4-2, 3-2, 2-1 kickdown shifts are prevented - Shifts at high throttle openings will be early. - No EMCC
Cold	Oil temperature between 10° F and 36° F	- Shift schedule is the same as Super Cold except that the 2-3 upshifts are not delayed.
Warm	Oil temperature between 40° F and 80° F	- Normal operation (upshift, kickdowns, and coastdowns) - No EMCC
Hot	Oil temperature between 80° F and 240° F	- Normal operation (upshift, kickdowns, and coastdowns) - Normal EMCC operation
Overheat	Oil temperature above 240° F or engine coolant temperature above 244° F	- Delayed 2-3 upshift - Delayed 3-4 upshift - 3rd gear FEMCC from 30-48 mph - 3rd gear PEMCC above 35 mph - Above 25 mph the torque converter will not unlock unless the throttle is closed or if a wide open throttle 2nd PEMCC to 1 kickdown is made

TRANSMISSION CONTROL MODULE - NAG1

The transmission control module (TCM) determines the current operating conditions of the vehicle and controls the shifting process for shift comfort and driving situations. It receives this operating data from sensors and broadcast messages from other modules.

The TCM uses inputs from several sensors that are directly hardwired to the controller and it uses several indirect inputs that are used to control shifts. This information is used to actuate the proper solenoids in the valve body to achieve the desired gear.

The shift lever assembly (SLA) has sensors that are monitored by the TCM to calculate shift lever position. The reverse light switch, an integral part of the SLA, controls the reverse light relay control

circuit. The Brake/Transmission Shift Interlock (BTSI) solenoid and the park lockout solenoid (also part of the SLA) are controlled by the TCM.

The PCM and ABS broadcast messages over the controller area network (CAN) bus for use by the TCM. The TCM uses this information, with other inputs, to determine the transmission operating conditions.

The TCM:

- determines the momentary operating conditions of the vehicle.
- controls all shift processes.
- considers shift comfort and the driving situation.

The TCM controls the solenoid valves for modulating shift pressures and gear changes. Relative to the torque being transmitted, the required pressures are calculated from load conditions, engine RPM, vehicle speed, and ATF temperature.

The following functions are contained in the TCM:

- Shift Program
- Downshift Safety
- Torque Converter Lock-Up Clutch.
- Adaptation.

The TCM continuously checks for electrical problems, mechanical problems, and some hydraulic problems. When a problem is sensed, the TCM stores a diagnostic trouble code (DTC). Some of these codes cause the transmission to go into "Limp-In" or "default" mode. Some DTCs cause permanent Limp-In and others cause temporary Limp-In. The NAG1 defaults in the current gear position if a DTC is detected, then after a key cycle the transmission will go into Limp-in, which is mechanical 2nd gear. Some DTCs may allow the transmission to resume normal operation (recover) if the detected problem goes away. A permanent Limp-In DTC will recover when the key is cycled, but if the same DTC is detected for three key cycles the system will not recover and the DTC must be cleared from the TCM with the appropriate scan tool.

NOTE: **If the TCM has been replaced, the "TCM Adaptation Procedure" must be performed. See Electrical - Electronic Control Modules/Electronic Control Modules/MODULE, Transmission Control - Standard Procedure**

TCM SIGNALS

The TCM registers one part of the input signals by direct inputs, the other part by CAN bus. In addition to the direct control of the actuators, the TCM sends various output signals by CAN bus to other control modules.

Selector Lever Position

A series of sensors in the SLA inform the TCM of the position of the selector lever.

The TCM monitors the SLA for all shift lever positions through five position circuits. The SLA provides a low-current 12-volt signal to the TCM. The TCM compares the on/off signals to programmed combinations to determine the exact position of the shift lever.

ATF Temperature Sensor

The ATF temperature sensor is a positive temperature co-efficient (PTC) thermistor. It measures the temperature of the transmission fluid and is a direct input signal for the TCM. The temperature of the ATF has an influence on the shifttime and resulting shift quality. As the temperature rises, resistance rises, and therefore, the probing voltage is decreasing. Because of its registration, the shifting process can be optimized in all temperature ranges.

The ATF temperature sensor is wired in series with the park/neutral contact. The temperature signal is transmitted to the TCM only when the reed contact of the park/neutral contact is closed because the TCM only reads ATF temperature while in any forward gear, or REVERSE. When the transmission is in PARK or NEUTRAL, the TCM will substitute the engine temperature for the ATF temperature.

Starter Interlock

The TCM monitors a contact switch wired in series with the transmission temperature sensor to determine PARK and NEUTRAL positions. The contact switch is open in PARK and NEUTRAL. The TCM senses transmission temperature as high (switch supply voltage), confirming switch status as open. The TCM then broadcasts a message over CAN bus to confirm switch status. The PCM receives this information and allows operation of the starter circuit.

N2 and N3 Speed Sensors

The N2 and N3 Input Speed Sensors are two Hall-effect speed sensors that are mounted internally in the transmission and are used by the TCM to calculate the transmission's input speed. Since the input speed cannot be measured directly, two of the drive elements are measured. Two input speed sensors were required because both drive elements are not active in all gears.

CAN Bus Indirect Input Signals

A 2.5-volt bias (operating voltage) is present on the CAN bus any time the ignition switch is in the RUN position. Both the TCM and the ABS apply this bias. On this vehicle, the CAN bus is used for module data exchange only. The indirect inputs used on the NAG1 electronic control system are:

- Wheel Speed Sensors.
- Transfer Case Switch Status.
- Brake Switch.
- Engine RPM.
- Engine Temperature.
- Cruise Control Status.

- Gear Limit Request.
- Throttle Position - 0% at idle, 100% at WOT. If open, TCM assumes idle (0% throttle opening).
- Odometer Mileage
- Maximum Effective Torque.
- Engine in Limp-In Mode/Mileage Where DTC Was Set.

BRAKE TRANSMISSION SHIFT INTERLOCK (BTSI)

The BTSI solenoid prevents shifting out of the PARK position until the ignition key is in the RUN position and the brake pedal is pressed. The TCM controls the ground while the ignition switch supplies power to the BTSI solenoid. The PCM monitors the brake switch and broadcasts brake switch status messages over the CAN C bus. If the park brake is depressed and there is power (Run/Start) to SLA, the BTSI solenoid deactivates. The TCM monitors this for the SLA because the SLA does not communicate on the CAN bus.

SHIFT SCHEDULES

The basic shift schedule includes up and downshifts for all five gears. The TCM adapts the shift program according to driving style, accelerator pedal position and deviation of vehicle speed. Influencing factors are:

- Road Conditions.
- Incline, Decline and Altitude.
- Trailer Operation, Loading.
- Engine Coolant Temperature.
- Cruise Control Operation.
- Sporty Driving Style.
- Low and High ATF Temperature.

Upshift To:	1-2	2-3	3-4	4-5
Activated By Solenoid:	1-2/4-5	2-3	3-4	1-2/4-5
Shift Point (at 35.2% of throttle)	29 km/h (18 mph)	48 km/h (30 mph)	68 km/h (42 mph)	85 km/h (53 mph)

Downshift From:	5-4	4-3	3-2	2-1
Activated By Solenoid:	1-2/4-5	3-4	2-3	1-2/4-5
Shift Point	55.7 km/h (34.61 mph)	40.5 km/h (25.17 mph)	24.4 km/h (15.16 mph)	15.1 km/h (9.38 mph)

DOWNSHIFT SAFETY

Selector lever downshifts are not performed if inadmissible high engine RPM is sensed.

ADAPTATION

To equalize tolerances and wear, an automatic adaptation takes place for:

- Shift Time.
- Clutch Filling Time.
- Clutch Filling Pressure.
- Torque Converter Lock-Up Control.

Adaptation data may be stored permanently and to some extent, can be diagnosed.

Driving Style Adaptation

The shift point is modified in steps based on the information from the inputs. The control module looks at inputs such as:

- vehicle acceleration and deceleration (calculated by the TCM).
- rate of change as well as the position of the throttle pedal (fuel injection information from the PCM).
- lateral acceleration (calculated by the TCM).
- gear change frequency (how often the shift occurs).

Based on how aggressive the driver is, the TCM moves up the shift so that the present gear is held a little longer before the next upshift. If the driving style is still aggressive, the shift point is modified up to ten steps. If the driving returns to normal, then the shift point modification also returns to the base position.

This adaptation has no memory. The adaptation to driving style is nothing more than a shift point modification meant to assist an aggressive driver. The shift points are adjusted for the moment and return to base position as soon as the inputs are controlled in a more normal manner.

CONTROLLER MODES OF OPERATION

Permanent Limp-In Mode

When the TCM determines there is a non-recoverable condition present that does not allow proper transmission operation, it places the transmission in permanent Limp-In Mode. When the condition occurs the TCM turns off all solenoids as well as the solenoid supply output circuit. If this occurs while the vehicle is moving, the transmission remains in the current gear position until the ignition is turned off or the shifter is placed in the "P" position. When the shifter has been placed in "P," the transmission only allows 2nd gear operation. If this occurs while the vehicle is not moving, the transmission only allows operation in 2nd gear.

Temporary Limp-In Mode

This mode is the same as the permanent Limp-In Mode except if the condition is no longer present, the system resumes normal operation.

Under Voltage Limp-In Mode

When the TCM detects that system voltage has dropped below 8.5 volts, it disables voltage-dependant diagnostics and places the transmission in the temporary Limp-In Mode. When the TCM senses that the voltage has risen above 9.0 volts, normal transmission operation is resumed.

Hardware Error Mode

When the TCM detects a major internal error, the transmission is placed in the permanent Limp-In Mode and ceases all communication over the CAN bus. When the TCM has entered this mode normal transmission operation does not resume until all DTCs are cleared from the TCM.

Loss of Drive

If the TCM detects a situation that has resulted or may result in a catastrophic engine or transmission problem, the transmission is placed in the neutral position. Improper Ratio, Input Sensor Overspeed or Engine Overspeed DTCs cause the loss of drive.

Controlled Limp-in Mode

When a failure does not require the TCM to shut down the solenoid supply, but the failure is severe enough that the TCM places the transmission into a predefined gear, there are several shift performance concerns. For instance, if the transmission is slipping, the controller tries to place the transmission into 3rd gear and maintain 3rd gear for all forward drive conditions.

STANDARD PROCEDURE

TCM ADAPTATION - NAG1 Only

The adaptation procedure requires the use of the appropriate scan tool. This program allows the electronic transmission system to re-calibrate itself. This will provide the proper baseline transmission operation. The adaptation procedure should be performed if any of the following procedures are performed:

- Transmission Assembly Replacement
- Transmission Control Module Replacement
- Clutch Plate and/or Seal Replacement
- Electrohydraulic Unit Replacement or Recondition

1. With the scan tool, reset the Transmission adaptives. Resetting the adaptives will set the adaptives to factory settings.

   NOTE: Perform the Coast Down Adaptations first. The Transmission Temperature must be greater than 60°C (140°F) and less than 70°C (158°F). Failure to stay within these temperature ranges will void the procedure.

2. Drive the vehicle until the transmission temperature is in the specified range.

3. Perform 4 to 5 coast downs from 5th to 4th gear and then 4th to 3rd gear.

NOTE: For Upshift adaptation, the Transmission temperature must be greater than 60°C (140°F) and less than 100°C (212°F). Failure to stay within these temperature ranges will void this procedure.

4. From a stop, moderately accelerate the vehicle and obtain all forward gear ranges while keeping the Engine RPM below 1800 RPM. Repeat this procedure 4 to 5 times.
5. Obtaining 5th gear may be difficult at 1800 RPM. Allow the transmission to shift into 5th gear at a higher RPM then lower the RPM to 1800 and perform manual shifts between 4th and 5th gears using the shift lever.
6. The TCM will store the adaptives every 10 minutes. After completion of the adaptation procedure make sure the vehicle stays running for at least 10 minutes.
7. It is possible to manually store the adaptives under the 10 minute time frame using the scan tool Store Adaptives procedure.

RECEIVER, WIRELESS IGNITION NODE

DESCRIPTION

DESCRIPTION

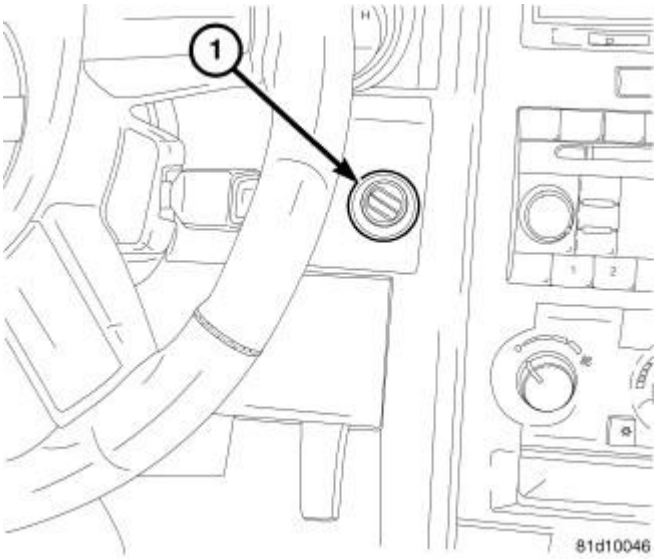

Fig. 44: Node - Wireless Ignition
Courtesy of CHRYSLER LLC

The Wireless Ignition Node (WIN) (1) located behind the instrument panel trim to the right of the steering column and controls/contains the following functions:

- Ignition Switch, can only be replace as the WIN module. See **Electrical - Electronic Control Modules/Electronic Control Modules/RECEIVER, Wireless Ignition Node - Operation**.

- Remote Keyless Entry (RKE). Refer to **Electrical - Power Systems/Power Locks - Description** .
- Tire Pressure Monitoring (TPM). Refer to **Tires and Wheels/Tire Pressure Monitoring - Description** .
- Brake Transmission Shifter Interlock (BTSI). Refer to **Transmission and Transfer Case/Automatic - NAG1/MECHANISM, Brake Transmission Shift Interlock - Description** .
- Remote Start. Refer to **Electrical - Engine Systems/Starting - Operation** .

OPERATION

OPERATION

Following are brief descriptions of the systems that the WIN controls.

IGNITION SWITCH

The Wireless Ignition Node (WIN) incorporates an integral ignition switch that consists of four rotary positions with three detent positions and one spring-loaded position. The one extreme clockwise position shall be spring-loaded momentary contact **"START"** position. When released from the **"START"** position, the switch shall automatically return to the detent **"ON"** position. The other position include a detent **"ACCESSORY"** position and a detent**"LOCK"** position.

The WIN reads the position of the ignition switch and transmits via vehicle bus. These positions include **"LOCK"** with ignition key-out, **"LOCK"** with ignition key-in, **"ACCESSORY"** , **"RUN"** and **"START"** .

SENTRY KEY IMMOBILIZER SYSTEM (SKIS)

Upon failure of proper Sentry Key Immobilizer (SKIS) communication to the Powertrain Control Module, (PCM), the PCM will shut off fuel after two seconds of run time. The engine will not re-crank on the key cycle during which the failure occurred. A full key down sequence must be performed for the engine to crank again. Refer to **Electrical - Vehicle Theft Security/Vehicle Theft Security - Operation** .

REMOTE KEYLESS ENTRY (RKE)

The Remote Keyless Entry (RKE), transmitter uses radio frequency signals to communicate with the WIN across can bus. Refer to **Electrical - Power Systems/Power Locks - Operation** .

TIRE PRESSURE MONITORING (TPM)

The Tire Pressure Monitoring (TPM) system uses radio and sensor technology to monitor tire air pressure levels. Refer to **Tires and Wheels/Tire Pressure Monitoring - Operation** .

REMOTE START WITH/EXTENDED RANGE ANTENNA

Further information concerning the Remote Start System can be located in, Starting System. Refer to

Electrical - Engine Systems/Starting - Operation .

BRAKE TRANSMISSION SHIFTER INTERLOCK (BTSI)

The Brake Transmission Shifter/Ignition Interlock (BTSI) is controlled by the WIN and prevents the transmission gear shifter from being moved out of PARK without a driver in place. Refer to **Transmission and Transfer Case/Automatic - NAG1/MECHANISM, Brake Transmission Shift Interlock - Operation** .

FOBIK REMOVAL INHIBIT

The key removal inhibit solenoid internal to the WIN prevents the FOB with Integrated Key (FOBIK) from being rotated in the ignition switch to the LOCK position for all vehicles with an automatic transmission unless the transmission shift lever is in the PARK position. The WIN module monitors a hard wired input from a switch integral to the automatic transmission shifter module to control this feature. The key removal inhibit solenoid is electronically disabled internally by the WIN on vehicles with a manual transmission.

KEYLESS GO

The WIN transmits and receives a signal to and from the FOBIK over the Control Area Network (CAN) Data Bus through the Passive Entry Module (PEM) validation in order change ignition states. Refer to **Electrical - Engine Systems/Starting/KEYLESS GO - Operation** .

DIAGNOSIS AND TESTING

FOBIK TRAPPED IN WIN

For more information. Refer to **Electrical/Power Locks/TRANSMITTER, Integrated Key FOB - Diagnosis and Testing** .

REMOVAL

REMOVAL

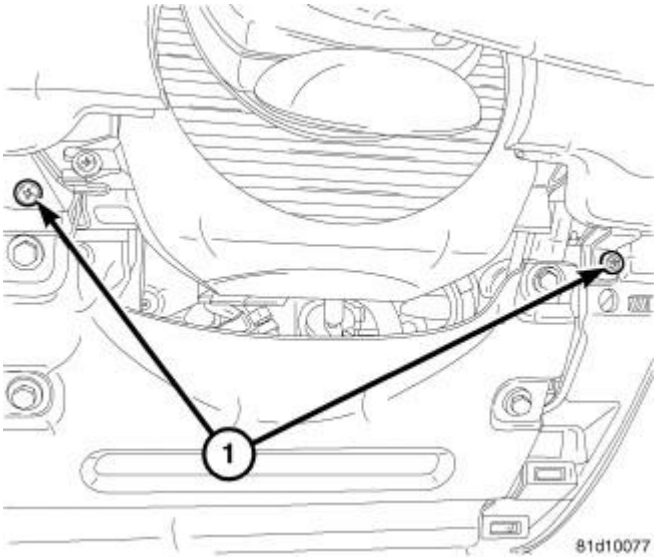

Fig. 45: Lower Instrument Cluster Trim Screws
Courtesy of CHRYSLER LLC

1. Disconnect the battery negative cable.
2. Remove the lower steering column trim cover and steering column cover reinforcement. Refer to **Body/Instrument Panel/COVER, Steering Column Opening - Removal** .
3. Remove the two screws (1) from the lower instrument cluster trim.

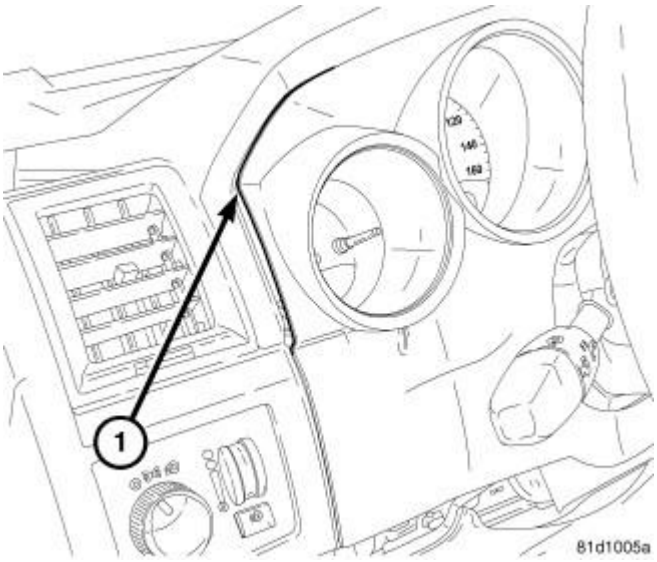

Fig. 46: Edge Of Instrument Cluster Trim
Courtesy of CHRYSLER LLC

4. Using a trim stick or equivalent, gently pry (1) along the edge of the trim to remove the instrument cluster trim.

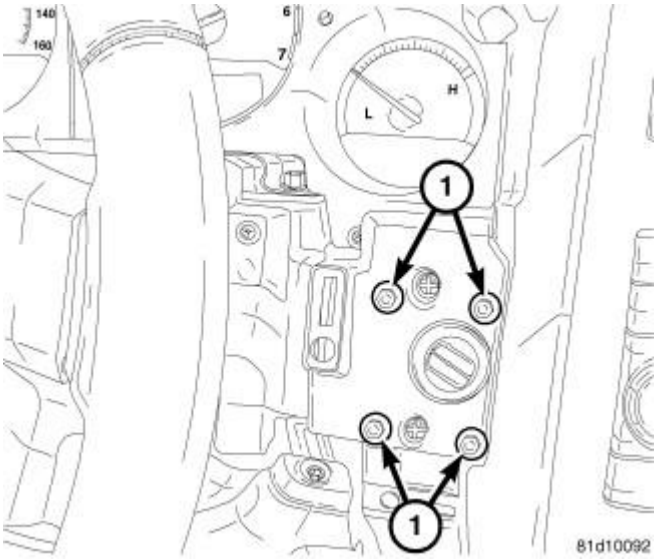

Fig. 47: Wireless Ignition Node Screws
Courtesy of CHRYSLER LLC

5. Remove the 4 screws from the WIN (1).

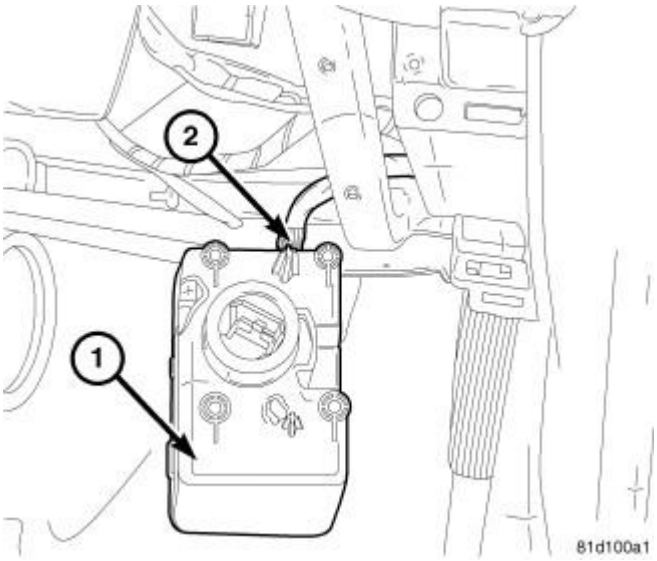

Fig. 48: Wireless Ignition Node
Courtesy of CHRYSLER LLC

6. Remove the WIN (1) from the rear if the instrument panel bringing it through the opening below the steering column and disconnect the electrical connector (2) from the WIN.

INSTALLATION

INSTALLATION

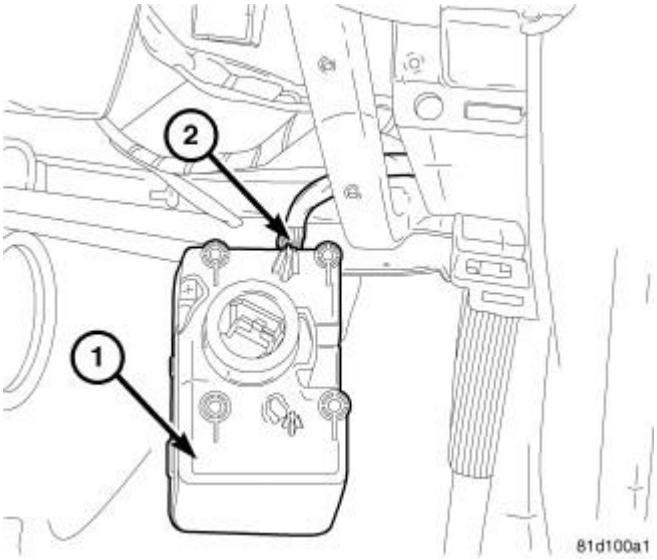

Fig. 49: Node - Wireless Ignition
Courtesy of CHRYSLER LLC

1. Reconnect the electrical connector (1) to the Wireless Ignition Node (WIN) and position the WIN back into the instrument panel.

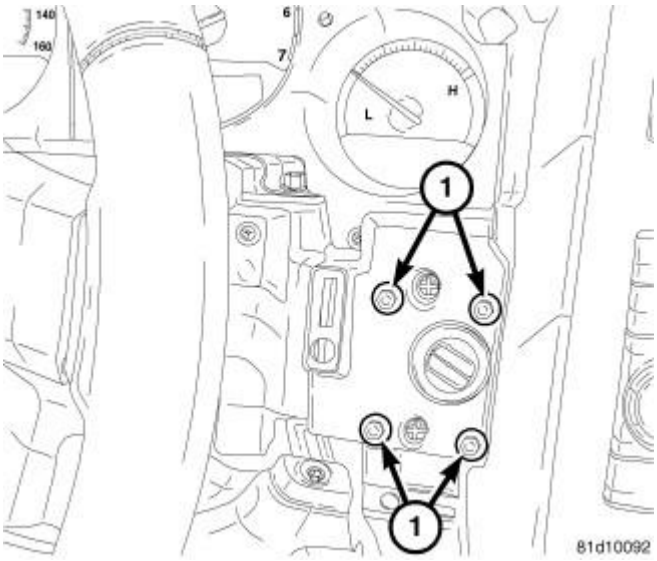

Fig. 50: Node - Wireless Ignition
Courtesy of CHRYSLER LLC

2. Install the four screws (1) through the instrument panel into the WIN.
3. Install the instrument panel trim cover. Ensuring that the cover snaps into the securing clips.

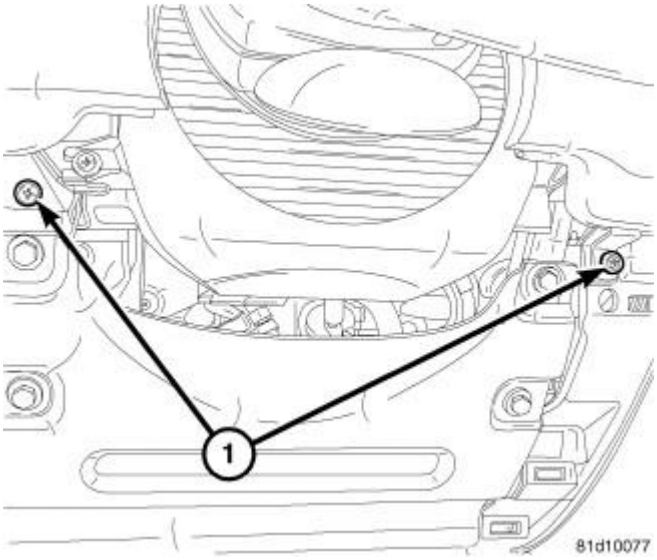

Fig. 51: Instrument Panel Lower Screws
Courtesy of CHRYSLER LLC

4. Install the two lower instrument panel screws (1).
5. Install the lower steering column cover reinforcement and the steering column trim cover. Refer to **Body/Instrument Panel/COVER, Steering Column Opening - Installation** .
6. Connect the battery negative cable.
7. Program the WIN following the Module/Programming Order Replacement Guide and Module Programming procedures. See **Electrical - Electronic Control Modules/Electronic Control Modules - Standard Procedure**.

ENGINE

Cooling - Challenger

DESCRIPTION

GASOLINE ENGINE

The cooling system consists of :

- Radiator
- Electric Cooling fan
- Fan shroud
- Radiator pressure cap
- Thermostat
- Coolant recovery container
- Transmission oil cooler (if equipped with an automatic transmission)
- Coolant
- Water pump
- Hoses and hose clamps

OPERATION

GASOLINE ENGINES

The cooling system regulates engine operating temperature. It allows the engine to reach normal operating temperature as quickly as possible. It also maintains normal operating temperature and prevents overheating.

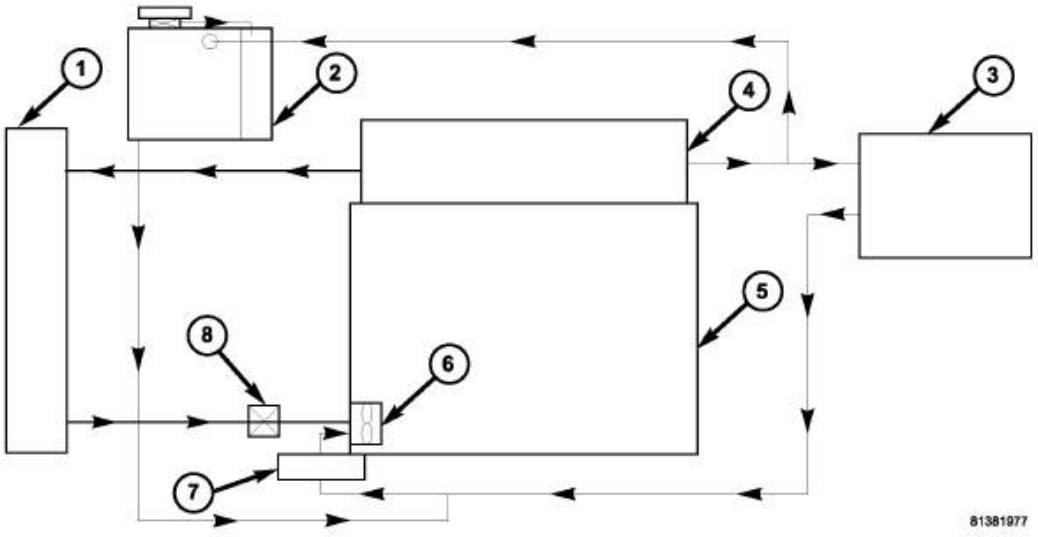

Fig. 1: Cooling Flow Diagram With Engine Oil Cooler - 3.5L
Courtesy of CHRYSLER LLC

1 - RADIATOR
2 - HOT BOTTLE/COOLANT RECOVERY BOTTLE
3 - HEATER CORE
4 - CYLINDER HEAD
5 - CYLINDER BLOCK
6 - WATER PUMP
7 - ENGINE OIL COOLER
8 - THERMOSTAT

The cooling system also provides a means of heating the passenger compartment and cooling the automatic transmission fluid (if equipped).

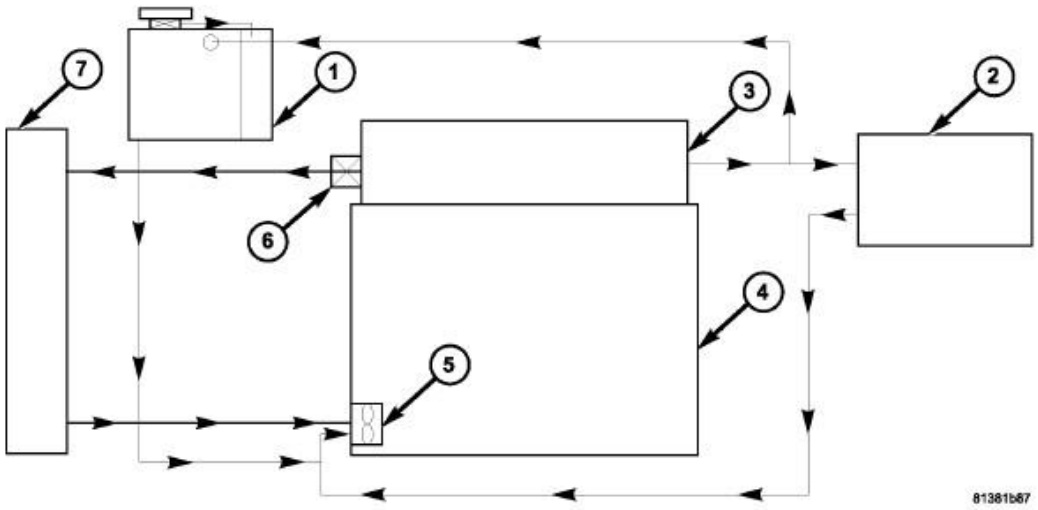

Fig. 2: Cooling Flow Diagram - 5.7L/6.1L
Courtesy of CHRYSLER LLC

1 - HOT BOTTLE/COOLANT RECOVERY BOTTLE
CHARGE AIR COOLER - DIESEL ENGINE
2 - HEATER CORE
3 - CYLINDER HEAD
4 - CYLINDER BLOCK
5 - WATER PUMP
6 - THERMOSTAT
7 - RADIATOR

The cooling system is pressurized and uses a centrifugal water pump to circulate coolant throughout the system.

DIAGNOSIS AND TESTING

LEAKS

WARNING: Do not remove radiator cap with system hot and under pressure. Serious burns from coolant can occur.

WARNING: Do not remove cylinder block drain plugs or loosen radiator draincock with system hot and under pressure. Serious burns from coolant can occur.

ULTRAVIOLET LIGHT METHOD

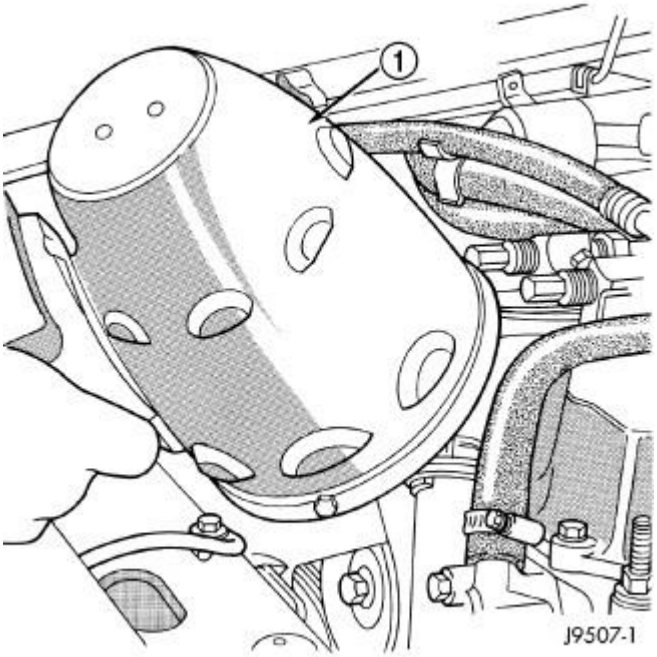

Fig. 3: Using Black Light To Check For Leaks
Courtesy of CHRYSLER LLC

A leak detection additive is available through the parts department that can be added to cooling system. The additive is highly visible under ultraviolet light (black light) (1). Pour one ounce of additive into cooling system. Place heater control unit in HEAT position. Start and operate engine until the radiator upper hose is warm to touch. Aim the commercially available black light tool at components to be checked. If leaks are present, black light will cause the additive to glow a bright green color.

The black light can be used in conjunction with a pressure tester to determine if any external leaks exist.

PRESSURE TESTER METHOD

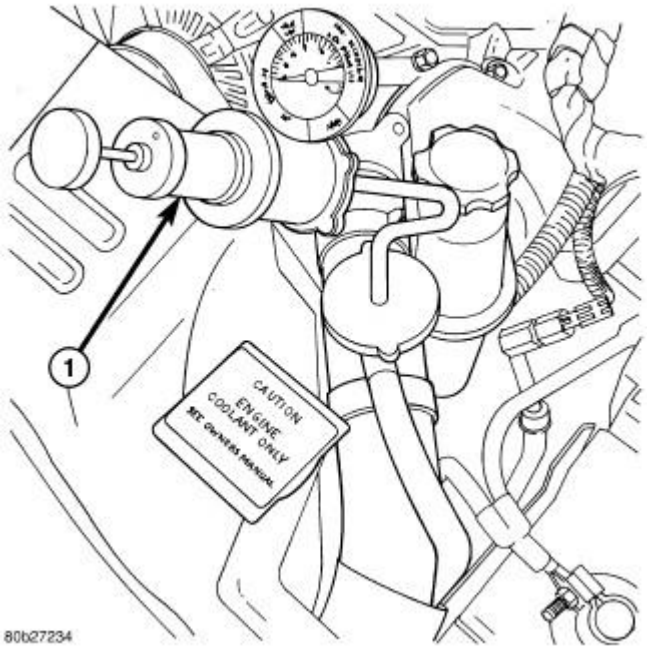

Fig. 4: Identifying Pressure Tester Method
Courtesy of CHRYSLER LLC

The engine should be at normal operating temperature. Recheck the system cold if the cause of coolant loss is not located during the warm engine examination.

WARNING: Hot, pressurized coolant can cause injury by scalding.

Carefully remove the radiator pressure cap from the filler neck and check coolant level. Push down on cap to disengage it from the stop tabs. Wipe the inside of filler neck and examine the lower inside sealing seat for nicks, cracks, paint, dirt and solder residue. Inspect the radiator-to- reserve/overflow tank hose for internal obstructions. Insert a wire through the hose to be sure it is not obstructed.

Inspect cams on the outside of filler neck. If the cams are damaged, seating of the pressure cap valve and tester seal will be affected.

Attach pressure tester (7700 or an equivalent) (1) to radiator filler neck.

Operate tester pump to apply 124.1 kPa (18 psi) pressure to system. If hoses enlarge excessively or bulge while testing, replace as necessary. Observe the gauge pointer and determine the condition of the cooling system according to the following criteria:

Holds Steady: If the pointer remains steady for two minutes, serious coolant leaks are not present in system. However, there could be an internal leak that does not appear with normal system test pressure. If it is certain that coolant is being lost and leaks cannot be detected, inspect for interior leakage or perform Internal Leakage Test. Refer to **INTERNAL LEAKAGE INSPECTION**.

Drops Slowly: Indicates a small leak or seepage is occurring. Examine all connections for seepage or slight leakage with a flashlight. Inspect radiator, hoses, gasket edges and heater. Seal small leak holes with a Sealer Lubricant (or equivalent). Repair leak holes and inspect system again with pressure applied.

Drops Quickly: Indicates that serious leakage is occurring. Examine system for external leakage. If leaks are not visible, inspect for internal leakage. Large radiator leak holes should be repaired by a reputable radiator repair shop.

INTERNAL LEAKAGE INSPECTION

Remove engine oil pan drain plug and drain a small amount of engine oil. If coolant is present in the pan, it will drain first because it is heavier than oil. An alternative method is to operate engine for a short period to churn the oil. After this is done, remove engine dipstick and inspect for water globules. Also inspect the transmission dipstick for water globules and the transmission fluid cooler for leakage.

> **WARNING: With radiator pressure tester tool installed on radiator, do not allow pressure to exceed 145 kPa (21 psi). Pressure will build up quickly if a combustion leak is present. To release pressure, rock tester from side to side. When removing tester, do not turn tester more than 1/2 turn if system is under pressure.**

Operate the engine without the pressure cap on the radiator until the thermostat opens. Attach a Pressure Tester to filler neck. If pressure builds up quickly it indicates a combustion leak exists. This is usually the result of a cylinder head gasket leak or crack in engine. Repair as necessary.

If there is not an immediate pressure increase, pump the Pressure Tester. Do this until indicated pressure is within system range of 124.1 kPa (18 psi). Fluctuation of gauge pointer indicates compression or combustion leakage into cooling system.

Because the vehicle is equipped with a catalytic converter, **do not** remove spark plug cables or short out cylinders to isolate compression leak.

If the needle on the dial of pressure tester does not fluctuate, race engine a few times to check for an abnormal amount of coolant or steam. This would be emitting from exhaust pipe. Coolant or steam from exhaust pipe may indicate a faulty cylinder head gasket, cracked engine cylinder block or cylinder head.

A convenient check for exhaust gas leakage into cooling system is provided by a commercially available Block Leak Check tool. Follow manufacturers instructions when using this product.

COMBUSTION LEAKAGE TEST - WITHOUT PRESSURE TESTER

DO NOT WASTE reusable coolant. If the solution is clean, drain the coolant into a clean container for reuse.

> **WARNING: Do not remove cylinder block drain plugs or loosen radiator draincock**

with system hot and under pressure. Serious burns from coolant can occur.

Drain sufficient coolant to allow thermostat removal. See **Cooling/Engine/THERMOSTAT - Removal** for 3.5L engine, also see **Cooling/Engine/THERMOSTAT - Removal** for 5.7L engine. Remove accessory drive belt. See **Cooling/Accessory Drive/BELT, Serpentine - Removal**.

Add coolant to radiator to bring level to within 6.3 mm (1/4 in) of the top of the thermostat housing.

CAUTION: Avoid overheating. Do not operate engine for an excessive period of time. Open draincock immediately after test to eliminate boil over.

Start engine and accelerate rapidly three times, to approximately 3000 RPM while observing coolant. If internal engine combustion gases are leaking into cooling system, bubbles will appear in coolant. If bubbles do not appear, internal combustion gas leakage is not present.

PRELIMINARY CHECKS

ENGINE COOLING SYSTEM OVERHEATING

Establish what driving conditions caused the complaint. Abnormal loads on the cooling system such as the following may be the cause:

- Prolonged idle
- Very high ambient temperature
- Slight tail wind at idle
- Slow traffic
- Traffic jams
- High speed or steep grades

TRAILER TOWING:

Consult Trailer Towing section of owners manual. Do not exceed limits.

RECENT SERVICE OR ACCIDENT REPAIR:

Determine if any recent service has been performed on vehicle that may effect cooling system. This may be:

- Engine adjustments (incorrect timing)
- Slipping engine accessory drive belt(s)
- Brakes (possibly dragging)
- Changed parts. Incorrect water pump or pump rotating in wrong direction due to belt not correctly routed

- Reconditioned radiator or cooling system refilling (possibly under filled or air trapped in system).

NOTE: **If investigation reveals none of the previous items as a cause for an engine overheating complaint, refer to COOLING SYSTEM DIAGNOSIS CHART BELOW.**

These charts are to be used as a quick-reference only. Refer to **COOLING SYSTEM DIAGNOSIS CHART**.

COOLING SYSTEM DIAGNOSIS CHART

CONDITION	POSSIBLE CAUSES	CORRECTION
TEMPERATURE GAUGE READS LOW	1. Has a Diagnostic Trouble Code (DTC) been set indicating a stuck open thermostat?	1. Refer to **Emissions Control - Description** . Replace thermostat if necessary.
-	2. Is the temperature sending unit connected?	2. Check the temperature sensor connector. Repair connector if necessary.
-	3. Is the temperature gauge operating OK?	3. Check gauge operation. Refer to **Electrical/Instrument Cluster - Diagnosis and Testing** . Repair as necessary.
-	4. Coolant level low in cold ambient temperatures accompanied with poor heater performance.	4. Check coolant level in the coolant reserve/overflow tank or degas bottle and the radiator. Inspect system for leaks. Repair leaks as necessary. Refer to the Coolant service information for WARNINGS and CAUTIONS associated with removing the radiator cap. See WARNINGS and CAUTIONS under **Diagnosis and Testing**.
-	5. Improper operation of internal heater doors or heater controls.	5. Inspect heater and repair as necessary. Refer to **Heating and Air Conditioning - Diagnosis and Testing** .
TEMPERATURE GAUGE READS HIGH OR THE COOLANT WARNING LAMP ILLUMINATES. COOLANT MAY OR MAY NOT BE LOST OR LEAKING FROM THE COOLING SYSTEM	1. Trailer is being towed, a steep hill is being climbed, vehicle is operated in slow moving traffic, or engine is being idled with very high ambient (outside) temperatures and the air conditioning is on. Higher altitudes could	1. This may be a temporary condition and repair is not necessary. Turn off the air conditioning and attempt to drive the vehicle without any of the previous conditions. Observe the temperature gauge. The gauge should return to the normal range. If the gauge does not return to the normal range, determine the cause for overheating and repair. Refer to Possible Causes (2-18).

	aggravate these conditions.	
-	2. Is the temperature gauge reading correctly?	2. Check gauge. Refer to **Electrical/Instrument Cluster - Diagnosis and Testing** . Repair as necessary.
-	3. Is the temperature warning illuminating unnecessarily?	3. Refer to **Electrical/Instrument Cluster - Diagnosis and Testing** .
-	4. Coolant low in coolant reserve/overflow tank and radiator?	4. Check for coolant leaks and repair as necessary. See **Cooling - Diagnosis and Testing**.
-	5. Pressure cap not installed tightly. If cap is loose, boiling point of coolant will be lowered. Also refer to the following Step 6.	5. Tighten cap
-	6. Poor seals at the radiator cap.	6. (a) Check condition of cap and cap seals. Refer to Radiator Cap. Replace cap if necessary.
-	-	(b) Check condition of radiator filler neck or degas bottle. If neck is bent or damaged, replace radiator or degas bottle.
-	7. Coolant level low in radiator but not in coolant reserve/overflow tank. This means the radiator is not drawing coolant from the coolant reserve/overflow tank as the engine cools.	7. (a) Check condition of radiator cap and cap seals. Replace cap if necessary. See **CAP, Radiator**.
-	-	(b) Check condition of radiator filler neck. If neck is bent or damaged, replace radiator.
-	-	(c) Check condition of the hose from the radiator to the coolant tank. It should fit tight at both ends without any kinks or tears. Replace hose if necessary.
-	-	(d) Check coolant reserve/overflow tank and tanks hoses for blockage. Repair as necessary.

-	8. Incorrect coolant concentration	8. Check coolant. Refer to **Vehicle Quick Reference/Capacities and Recommended Fluids - Description**
-	9. Coolant not flowing through system	9. Check for coolant flow at radiator filler neck with some coolant removed, engine warm and thermostat open. Coolant should be observed flowing through radiator. If flow is not observed, determine area of obstruction and repair as necessary.
-	10. Radiator or A/C condenser fins are dirty or clogged.	10. Remove insects and debris. See **Cooling - Standard Procedure**.
-	11. Radiator core is corroded or plugged.	11. Have radiator re-cored or replaced.
-	12. Dragging brakes	12. Check and correct as necessary refer to brake service information.
-	13. Fuel or Ignition system problems.	13. Refer to appropriate Electrical & Diagnosis for testing procedures.
-	14. Bug screen or cardboard is being used, reducing airflow.	14. Remove bug screen or cardboard.
-	15. Thermostat partially or completely shut.	15. Check thermostat operation and replace as necessary. See **Cooling/Engine/THERMOSTAT - Removal**.
-	16. Cooling fan(s) not operating properly.	16. Check cooling fan drive operation. Refer to appropriate Diagnostic Information.
-	17. Cylinder head gasket leaking.	17. Check for cylinder head gasket leaks. See **Cooling - Diagnosis and Testing**.
-	18. Heater core leaking.	18. Check heater core for leaks. Refer to **Heating and Air Conditioning - Diagnosis and Testing** . Repair as necessary.
TEMPERATURE GAUGE READING IS INCONSISTENT (FLUCTUATES, CYCLES, OR IS ERRATIC	1. During cold weather operation, with the heater in the high position, the gauge reading may drop slightly.	1. During cold weather operation, with the heater in the high position, the gauge reading may drop slightly.
-	2. Temperature gauge or engine mounted gauge sensor defective or shorted.	2. Check operation of gauge and repair if necessary. Refer to **Electrical/Instrument Cluster - Diagnosis and Testing** .

	Also, corroded or loose wiring in this circuit.	
-	3. Gauge reading rises when vehicle is brought to a stop after heavy use (engine still running)	3. A normal condition. No correction is necessary. Gauge should return to normal range after vehicle is driven.
-	4. Gauge reading high after restarting a warmed up (hot) engine.	4. A normal condition. No correction is necessary. The gauge should return to normal range after a few minutes of engine operation.
-	5. Coolant level low in radiator (air will build up in the cooling system causing the thermostat to open late).	5. Check and correct coolant leaks. See **Cooling - Diagnosis and Testing**.
-	6. Cylinder head gasket leaking allowing exhaust gas to enter cooling system causing a thermostat to open late.	6. (a) Check for cylinder head gasket leaks. See **Cooling - Diagnosis and Testing**. (b) Check for coolant in the engine oil. Inspect for white steam emitting from the exhaust system. Repair as necessary.
-	7. Water pump impeller loose on shaft.	7. Check water pump and replace as necessary. See **Cooling/Engine/PUMP, Water - Removal**.
-	8. Loose accessory drive belt. (water pump slipping)	8. Check and correct as necessary. See **Cooling/Accessory Drive/BELT, Serpentine - Diagnosis and Testing**
-	9. Air leak on the suction side of the water pump allows air to build up in cooling system causing thermostat to open late.	9. Locate leak and repair as necessary.
PRESSURE CAP IS BLOWING OFF STEAM AND/OR COOLANT TO COOLANT TANK. TEMPERATURE GAUGE READING MAY BE ABOVE NORMAL BUT NOT HIGH. COOLANT LEVEL MAY BE HIGH IN COOLANT RESERVE/OVERFLOW	1. Pressure relief valve in radiator cap is defective.	1. Check condition of radiator cap and cap seals. See **Cooling/Engine/CAP, Radiator - Diagnosis and Testing**. Replace cap as necessary.

TANK		
COOLANT LOSS TO THE GROUND WITHOUT PRESSURE CAP BLOWOFF. GAUGE READING HIGH OR HOT	1. Coolant leaks in radiator, cooling system hoses, water pump or engine.	1. Pressure test and repair as necessary. See **Cooling - Diagnosis and Testing**.
DETONATION OR PRE-IGNITION (NOT CAUSED BY IGNITION SYSTEM). GAUGE MAY OR MAY NOT BE READING HIGH	1. Engine overheating. 2. Freeze point of coolant not correct. Mixture is too rich or too lean.	1. Check reason for overheating and repair as necessary. 2. Check coolant concentration. Refer to **Vehicle Quick Reference/Capacities and Recommended Fluids - Description** .
HOSE OR HOSES COLLAPSE WHILE ENGINE IS RUNNING	1. Vacuum created in cooling system on engine cool-down is not being relieved through coolant reserve/overflow system. - - -	1. (a) Radiator cap relief valve stuck. See **Cooling/Engine/CAP, Radiator - Diagnosis and Testing**. Replace if necessary (b) Hose between coolant reserve/overflow tank and radiator is kinked. Repair as necessary. (c) Vent at coolant reserve/overflow tank is plugged. Clean vent and repair as necessary. (d) Reserve/overflow tank is internally blocked or plugged. Check for blockage and repair as necessary.
NOISY COOLING FAN	1. Fan blades loose. 2. Fan blades striking a surrounding object. 3. Air obstructions at radiator or air conditioning condenser.	1. Replace fan blade assembly. See **Cooling/Engine/FAN, Cooling - Removal**. 2. Locate point of fan blade contact and repair as necessary. 3. Remove obstructions and/or clean debris or insects from radiator or A/C condenser.
INADEQUATE HEATER PERFORMANCE. THERMOSTAT FAILED IN OPEN POSITION	1. Has a Diagnostic trouble Code (DTC) been set? 2. Coolant level low 3. Obstructions in heater hose/fittings 4. Heater hose kinked	1. Refer to **Emissions Control - Description** for correct procedures and replace thermostat if necessary 2. See **Cooling - Standard Procedure**. 3. Remove heater hoses at both ends and check for obstructions 4. Locate kinked area and repair as necessary

-	5. Water pump is not pumping water to/through the heater core. When the engine is fully warmed up, both heater hoses should be hot to the touch. If only one of the hoses is hot, the water pump may not be operating correctly or the heater core may be plugged. Accessory drive belt may be slipping causing poor water pump operation.	5. See **Cooling/Engine/PUMP, Water - Removal** for 2.7L engine. See **Cooling/Engine/PUMP, Water - Removal** for 3.5L engine. See **Cooling/Engine/PUMP, Water - Removal** for 5.7L/6.1L engine. If a slipping belt is detected. See **Cooling/Accessory Drive/BELT, Serpentine - Diagnosis and Testing**. If heater core obstruction is detected. Refer to **Heating and Air Conditioning/Plumbing/CORE, Heater - Removal** .
STEAM IS COMING FROM THE FRONT OF VEHICLE NEAR THE GRILL AREA WHEN WEATHER IS WET, ENGINE IS WARMED UP AND RUNNING, AND VEHICLE IS STATIONARY. TEMPERATURE GAUGE IS IN NORMAL RANGE	1. During wet weather, moisture (snow, ice or rain condensation) on the radiator will evaporate when the thermostat opens. This opening allows heated water into the radiator. When the moisture contacts the hot radiator, steam may be emitted. This usually occurs in cold weather with no fan or airflow to blow it away.	1. Occasional steam emitting from this area is normal. No repair is necessary.
COOLANT COLOR	1. Coolant color is not necessarily an indication of adequate corrosion or temperature protection. Do not rely on coolant color for determining condition of coolant.	1. Refer to **Vehicle Quick Reference/Capacities and Recommended Fluids - Description** Adjust coolant mixture as necessary.
COOLANT LEVEL CHANGES IN COOLANT RESERVE/OVERFLOW TANK. TEMPERATURE GAUGE IS IN NORMAL RANGE	1. Level changes are to be expected as coolant volume fluctuates with engine temperature. If the level in the tank was between the MIN. and	1. A normal condition. No repair is necessary.

	MAX. marks at normal operating temperature, the level should return to within that range after operation at elevated temperatures.	

STANDARD PROCEDURE

DRAINING

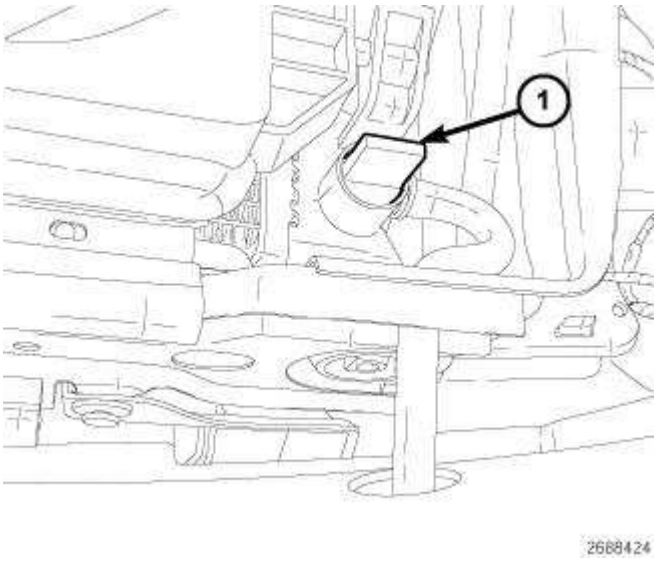

Fig. 5: Radiator Petcock
Courtesy of CHRYSLER LLC

WARNING: Do not remove cylinder block drain plugs or loosen radiator draincock with system hot and under pressure. Serious burns from coolant can occur.

NOTE: Typical drain plug shown in illustration.

DO NOT WASTE reusable coolant. If solution is clean, drain coolant into a clean container for reuse.

1. Remove radiator pressure cap.
2. Raise and secure vehicle.
3. If equipped, remove the underbody splash shield.
4. Loosen radiator petcock.
5. Drain coolant into a clean container.

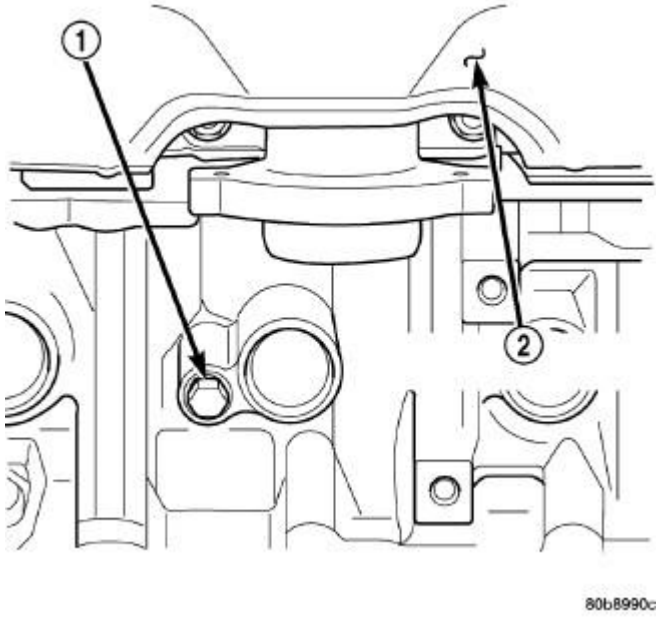

Fig. 6: Identifying Cylinder Block Drain Plugs
Courtesy of CHRYSLER LLC

6. If necessary, to perform a complete coolant drain of the engine, remove the drain plug (1) from the engine block.

FILLING - GAS ENGINE

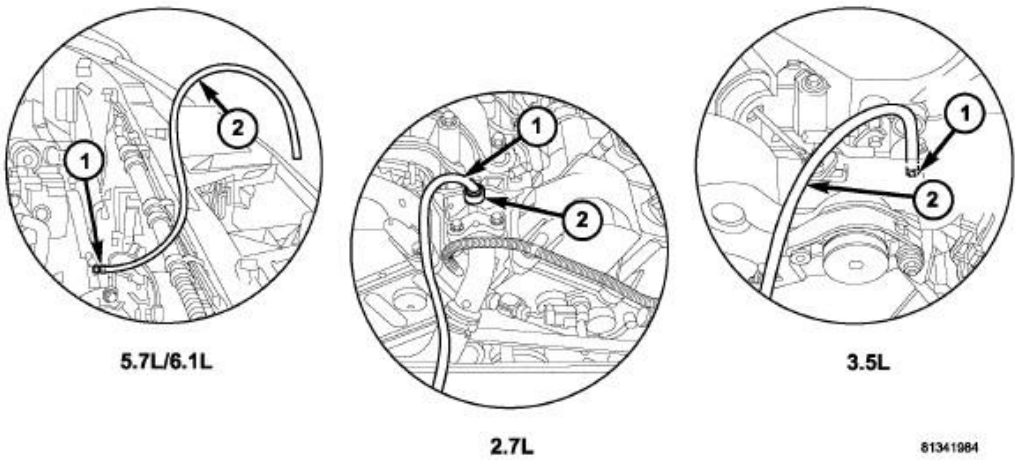

Fig. 7: Cooling System Bleeding
Courtesy of CHRYSLER LLC

1 - BLEED VALVE 2 - HOSE

The use of aluminum cylinder blocks, cylinder heads and water pumps requires special corrosion protection. In order to maintain the required protection for these components and cooling system performance, only use the appropriate fluid. Refer to **Vehicle Quick Reference/Capacities and Recommended Fluids - Description** when servicing the vehicle. This coolant offers the best engine cooling without corrosion when mixed with 50% distilled water to obtain a freeze point of -37° C (-35° F). If it loses color or becomes contaminated, drain, flush, and replace with fresh properly mixed coolant solution.

WARNING: Make sure engine cooling system is cool before removing pressure cap or any hose. severe personal injury may result from escaping hot coolant. The cooling system is pressurized when hot.

NOTE: Cooling system fill procedure is critical to overall cooling system performance.

1. Close radiator draincock. **Hand tighten only.**
2. Install engine block drain plugs, if removed. Coat the threads with Mopar® Thread Sealant with Teflon.

WARNING: When installing drain hose to air bleed valve, route hose away from accessory drive belts, accessory drive pulleys, and electric cooling fan motors.

NOTE: It may be necessary to install a bleed fitting on the 5.7L engine.

3. Attach a 1.5 - 2 m (4 - 6 ft.) long 6.35 mm (1/4 inch.) ID clear hose to bleeder fitting
   - **Bleed Valve Location (2.7L):** Located on the water outlet connector at the front of engine.
   - **Bleed Valve Location (3.5L):** Located on the lower intake manifold, left of center and below the upper intake plenum.
   - **Plug Location (5.7L/6.1L):** Located on the front of the water outlet housing at the front of engine.
4. Route hose (2) away from the accessory drive belt, drive pulleys and electric cooling fan. Place the other end of hose (2) into a clean container. The hose will prevent coolant from contacting the accessory drive belt when bleeding the system during the refilling operation.

NOTE: It is imperative that the cooling system air bleed valve be opened before any coolant is added to the cooling system. Failure to open the bleed valve first will result in an incomplete fill of the system.

5. 5.7L/6.1L ENGINE - Install a threaded and barbed fitting (1/4 - 18 npt) into water pump housing.
6. Attach Tool 8195, Filling Aid Funnel to pressure bottle filler neck.
7. Using hose pinch-off pliers, pinch overflow hose (3) that connects between the two chambers of the coolant bottle (2).
8. Open bleed fitting.

CAUTION: Do not mix coolants. If coolant is used other than specified, a reduction in corrosion protection will occur.

9. Pour the antifreeze mixture. Refer to **Vehicle Quick Reference/Capacities and Recommended Fluids - Description** into the larger section of Filling Aid Funnel (the smaller section of funnel is to allow air to escape). For system capacity. See **Cooling - Specifications**.
10. Slowly fill the cooling system until a steady stream of coolant flows from the hose attached to the bleed valve.
11. Close the bleed valve and continue filling system to the top of the Tool 8195, Filling Aid Funnel.
12. Remove pinch-off pliers from overflow hose.
13. Allow the coolant in Filling Funnel to drain into overflow chamber of the pressure bottle.
14. Remove Tool 8195, Filling Aid Funnel. Install cap on coolant pressure bottle.
15. Remove hose from bleed valve.
16. 5.7L/6.1L ENGINE - Install fitting into thermostat housing. Coat the threads with Mopar® Thread Sealant with Teflon.
17. Start engine and run at 1500 - 2000 RPM for 30 minutes.

NOTE: The engine cooling system will push any remaining air into the coolant bottle within about an hour of normal driving. As a result, a drop in coolant level in the pressure bottle may occur.
If the engine cooling system overheats and pushes coolant into the overflow side of the coolant bottle, this coolant will be sucked back into the cooling system ONLY IF THE PRESSURE CAP IS LEFT ON THE BOTTLE. Removing the pressure cap breaks the vacuum path between the two bottle sections and the coolant will not return to cooling system.

18. Shut off engine allow it to cool down for 30 minutes. This permits coolant to be drawn into the pressure chamber.
19. With engine COLD, observe coolant level in pressure chamber. Coolant level should be within MIN and MAX marks. Adjust coolant level as necessary.

NOTE: The coolant bottle has two chambers. Coolant will normally only be in the inboard of the two. The outboard chamber is only to recover coolant in the event of an overheat or after a recent service fill.

ADDING ADDITIONAL COOLANT

The use of aluminum cylinder blocks, cylinder heads and water pumps requires special corrosion protection. Only Mopar® Antifreeze/Coolant, 5 Year/100,000 Mile Formula (glycol base coolant with corrosion inhibitors called HOAT, for Hybrid Organic Additive Technology) is recommended. This coolant offers the best engine cooling without corrosion when mixed with 50% distilled water to obtain to obtain a freeze point of -37°C (-35°F). If it loses color or becomes contaminated, drain, flush, and replace with fresh properly mixed coolant solution.

CAUTION: Do not use coolant additives that are claimed to improve engine cooling.

COOLANT LEVEL CHECK

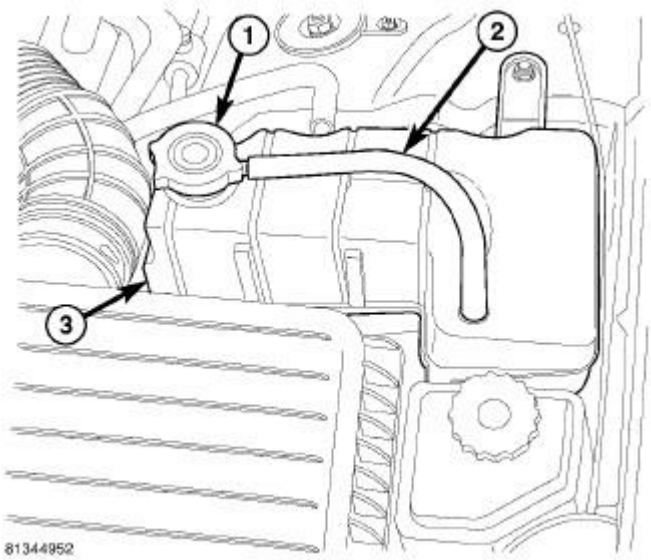

Fig. 8: Coolant Recovery Container
Courtesy of CHRYSLER LLC

1 - COOLANT RECOVER CONTAINER PRESSURE CAP
2 - COOLANT RECOVERY CONTAINER
3 - ADD/FULL MARKS

NOTE: Do not remove radiator cap for routine coolant level inspections. The coolant level can be checked at coolant recovery bottle (2).

The coolant reserve/overflow system provides a quick method for determining coolant level. With engine not running, the coolant level should be between MIN and MAX marks (3). If the coolant level is at or below the MIN mark, fill the recovery bottle with a 50/50 mixture of antifreeze and water ONE QUART AT A TIME. Repeat this procedure until the coolant level is at the FULL mark.

DRAINING

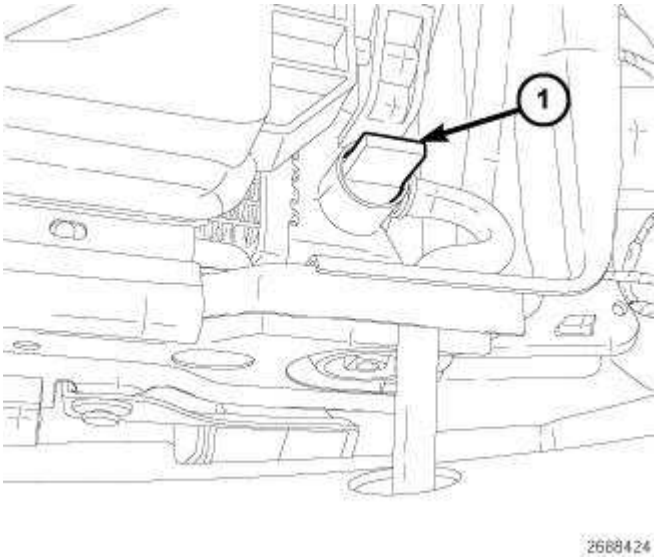

Fig. 9: Radiator Petcock
Courtesy of CHRYSLER LLC

WARNING: Do not remove cylinder block drain plugs or loosen radiator draincock with system hot and under pressure. Serious burns from coolant can occur.

NOTE: Typical drain plug shown in illustration.

DO NOT WASTE reusable coolant. If solution is clean, drain coolant into a clean container for reuse.

1. Remove radiator pressure cap.
2. Raise and secure vehicle.
3. If equipped, remove the underbody splash shield.
4. Loosen radiator petcock.
5. Drain coolant into a clean container.

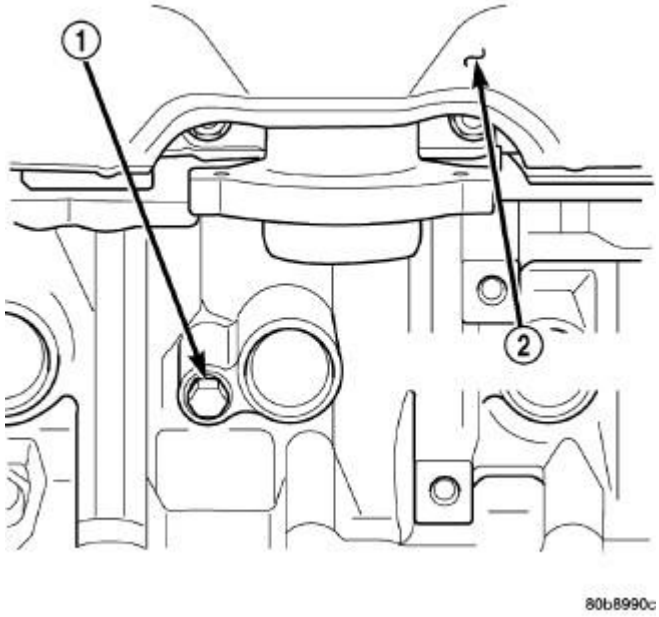

Fig. 10: Identifying Cylinder Block Drain Plugs
Courtesy of CHRYSLER LLC

6. If necessary, to perform a complete coolant drain of the engine, remove the drain plug (1) from the engine block.

CLEANING/REVERSE FLUSHING

CLEANING

Drain cooling system and refill with water. Run engine with radiator cap installed until upper radiator hose is hot. Stop engine and drain water from system. If water is dirty, fill system with water, run engine and drain system. Repeat until water drains clean.

REVERSE FLUSHING

Reverse flushing of cooling system is the forcing of water through the cooling system. This is done using air pressure in the opposite direction of normal coolant flow. It is usually only necessary with very dirty systems with evidence of partial plugging.

REVERSE FLUSHING RADIATOR

Disconnect radiator hoses from radiator inlet and outlet. Attach a section of radiator hose to radiator bottom outlet fitting and insert flushing gun. Connect a water supply hose and air supply hose to flushing gun.

CAUTION: Internal radiator pressure must not exceed 138 kPa (20 psi) as damage to radiator may result.

Allow radiator to fill with water. When radiator is filled, apply air in short blasts. Allow radiator to refill between blasts. Continue this reverse flushing until clean water flows out through rear of radiator cooling tube passages. Have radiator cleaned more extensively by a radiator repair shop.

REVERSE FLUSHING ENGINE

Drain cooling system. Remove thermostat housing and thermostat. Install thermostat housing. Disconnect radiator upper hose from radiator and attach flushing gun to hose. Disconnect radiator lower hose from water pump and attach a lead-away hose to water pump inlet fitting.

CAUTION: On vehicles equipped with a heater water control valve, be sure heater control valve is closed (heat off). This will prevent coolant flow with scale and other deposits from entering heater core.

Connect water supply hose and air supply hose to flushing gun. Allow engine to fill with water. When engine is filled, apply air in short blasts, allowing system to fill between air blasts. Continue until clean water flows through the lead away hose.

Remove lead away hose, flushing gun, water supply hose and air supply hose. Remove thermostat housing and install thermostat. Install thermostat housing with a replacement gasket. Refer to Thermostat Replacement. Connect radiator hoses. Refill cooling system with correct antifreeze/water mixture. Refer to Refilling the Cooling System.

CHEMICAL CLEANING

In some instances, use a radiator cleaner (Mopar Radiator Kleen or equivalent) before flushing. This will soften scale and other deposits and aid flushing operation.

CAUTION: Follow manufacturers instructions when using these products.

SPECIFICATIONS

SPECIFICATIONS

SPECIFICATIONS

DESCRIPTION	SPECIFICATION	
-	Metric	Standard
3.5 L	10.8 Liters	11.4 Quarts
5.7 L	13.9 Liters	14.7 Quarts
6.1 L	14.4 Liters	15.2 Quarts

TORQUE

TORQUE

DESCRIPTION	N.m	Ft. Lbs.	In. Lbs.
Automatic Belt Tensioner to Block - Bolts	54	40	-
3.0L Diesel	-	-	-
Block Heater - Bolt	2	-	17
Generator/Compressor Mounting Bracket - Bolts -	-	-	-
No. 1 and No. 2	54	40	-
No. 3	40	30	-
Fan Shroud Mounting - Bolts	6	-	50
Fan Blade to Fan Motor - Bolts	23	17	-
Idler Pulley - Bolt - 5.7L/6.1L	54	40	-
Idler Pulley - Bolt - 2.7L/3.5L	28	-	250
Radiator to Support Bracket - Bolts	12	-	106
Thermostat Housing - Bolts - 2.7L/3.5L	12	-	105
Housing - Coolant Outlet - 2.7L	12	-	105
Housing - Coolant - 3.0L Diesel	12	-	105
Heater Supply Tube	3.4	-	30
Thermostat Housing - Bolts - 5.7L/6.1L	13	-	112
Upper Radiator Closure Panel - Bolts	10	-	90
Water Pump - Bolts - 2.7L/3.5L	12	-	105
Water Pump - Bolts - 5.7L/6.1L	28	20	-
Transmission Cooler Lines at Transmission	20	18	-
Transmission Cooler lines at thermal bypass valve	20	28	-

SPECIAL TOOLS

SPECIAL TOOLS

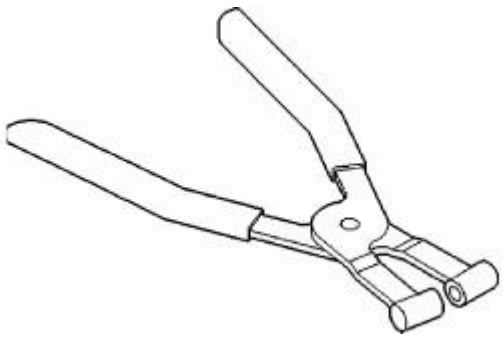

Fig. 11: PLIERS 6094
Courtesy of CHRYSLER LLC

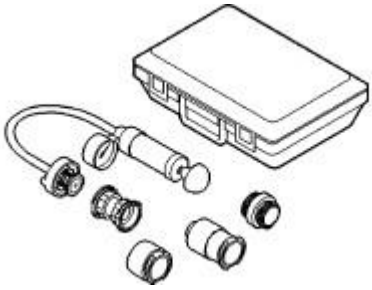

Fig. 12: PRESSURE TESTER 7700
Courtesy of CHRYSLER LLC

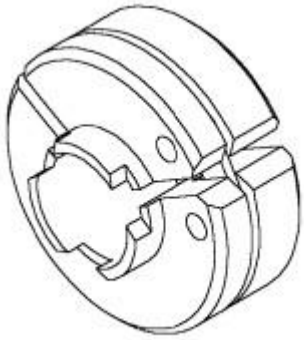

Fig. 13: RELEASE TOOL 8875A
Courtesy of CHRYSLER LLC



Fig. 14: FILLING AID FUNNEL 8195
Courtesy of CHRYSLER LLC

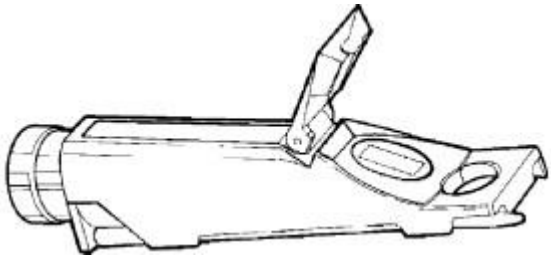

Fig. 15: COOLANT REFRACTOMETER 8286
Courtesy of CHRYSLER LLC

ACCESSORY DRIVE

BELT, SERPENTINE

Description

DESCRIPTION

The accessory drive belt is a serpentine type belt. Satisfactory performance of these belts depends on belt condition and proper belt tension.

Diagnosis and Testing

ACCESSORY DRIVE BELT

VISUAL DIAGNOSIS

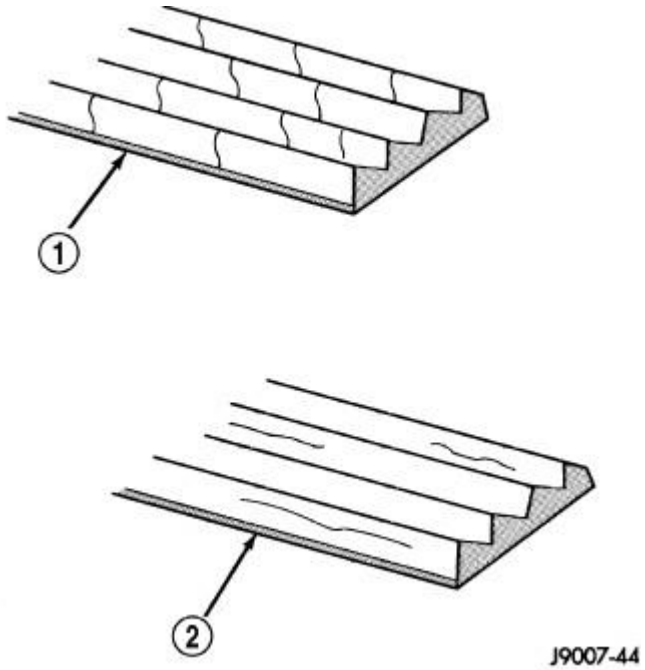

Fig. 16: Belt Wear Patterns
Courtesy of CHRYSLER LLC

1 - NORMAL CRACKS BELT OK 2 - NOT NORMAL CRACKS REPLACE BELT

When diagnosing serpentine accessory drive belts, small cracks (1) that run across the ribbed surface of the belt from rib to rib , are considered normal. These are not a reason to replace the belt. However, cracks (2) running along a rib (not across) are **not** normal. Any belt with cracks running along a rib must be replaced. Also replace the belt if it has excessive wear, frayed cords, severe glazing or chunking.

Any belt with bumps, surface coming apart, or any other uneven indications along the flat surface of the belt must be remove and inspected and replaced if necessary.

Refer to **ACCESSORY DRIVE BELT DIAGNOSIS CHART** for further belt diagnosis.

NOISE DIAGNOSIS

Noises generated by the accessory drive belt are most noticeable at idle. Before replacing a belt to resolve a noise condition, inspect all of the accessory drive pulleys for alignment, glazing, or excessive end play.

ACCESSORY DRIVE BELT DIAGNOSIS CHART

CONDITION	POSSIBLE CAUSES	CORRECTION
RIB CHUNKING (One or more ribs has separated from belt body)	1. Foreign objects imbedded in pulley grooves. 2. Installation damage	1. Remove foreign objects from pulley grooves. Replace belt. 2. Replace belt
RIB OR BELT WEAR	1. Pulley misaligned 2. Abrasive environment 3. Rusted pulley(s) 4. Sharp or jagged pulley groove tips 5. Belt rubber deteriorated	1. Align pulley(s) 2. Clean pulley(s). Replace belt if necessary 3. Clean rust from pulley(s) 4. Replace pulley. Inspect belt. 5. Replace belt
BELT SLIPS	1. Belt slipping because of insufficient tension 2. Belt or pulley exposed to substance that has reduced friction (belt dressing, oil, ethylene glycol) 3. Driven component bearing failure (seizure) 4. Belt glazed or hardened from heat and excessive slippage	1. Inspect/Replace tensioner if necessary 2. Replace belt and clean pulleys 3. Replace faulty component or bearing 4. Replace belt.
LONGITUDINAL BELT CRACKING	1. Belt has mis-tracked from pulley groove 2. Pulley groove tip has worn away rubber to tensile member	1. Replace belt 2. Replace belt
"GROOVE JUMPING" (Belt does not maintain correct position on pulley)	1. Incorrect belt tension 2. Pulley(s) not within design tolerance 3. Foreign object(s) in grooves 4. Pulley misalignment 5. Belt cord line is broken	1. Inspect/Replace tensioner if necessary 2. Replace pulley(s) 3. Remove foreign objects from grooves 4. Align component 5. Replace belt
BELT BROKEN (Note: Identify and correct problem before new belt is	1. Incorrect belt tension 2. Tensile member damaged	1. Replace Inspect/Replace tensioner if necessary 2. Replace belt

installed)	during belt installation 3. Severe misalignment 4. Bracket, pulley, or bearing failure	 3. Align pulley(s) 4. Replace defective component and belt
NOISE (Objectionable squeal, squeak, or rumble is heard or felt while drive belt is in operation)	1. Incorrect belt tension 2. Bearing noise 3. Belt misalignment 4. Belt to pulley mismatch 5. Driven component induced vibration 6. Belt flat surface coming apart	1. Inspect/Replace tensioner if necessary 2. Locate and repair 3. Align belt/pulley(s) 4. Install correct belt 5. Locate defective driven component and repair 6. Replace belt
TENSION SHEETING FABRIC FAILURE (Woven fabric on outside, circumference of belt has cracked or separated from body of belt)	1. Tension sheeting contacting stationary object 2. Excessive heat causing woven fabric to age 3. Tension sheeting splice has fractured	1. Correct rubbing condition 2. Replace belt 3. Replace belt
CORD EDGE FAILURE (Tensile member exposed at edges of belt or separated from belt body)	1. Incorrect belt tension 2. Belt contacting stationary object 3. Pulley(s) out of tolerance 4. Insufficient adhesion between tensile member and rubber matrix	1. Inspect/Replace tensioner if necessary 2. Replace belt 3. Replace pulley 4. Replace belt

Removal

3.5L

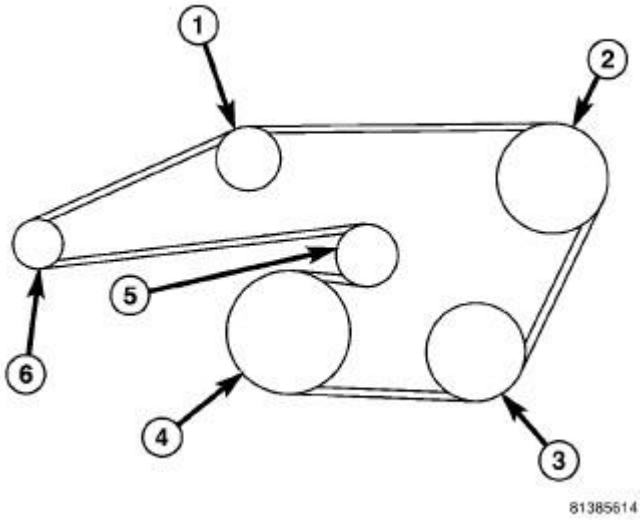

Fig. 17: Identifying Accessory Drive Belt Routing - 3.5L
Courtesy of CHRYSLER LLC

1 - IDLER PULLEY
2 - P/S PUMP
3 - A/C COMPRESSOR
4 - CRANKSHAFT
5 - TENSIONER
6 - GENERATOR

CAUTION: Do not let tensioner arm snap back to the freearm position, sever damage may occur to the tensioner.

1. Rotate belt tensioner (5) counterclockwise until it contacts it's stop. Remove belt, then slowly rotate the tensioner into the freearm position.

5.7L

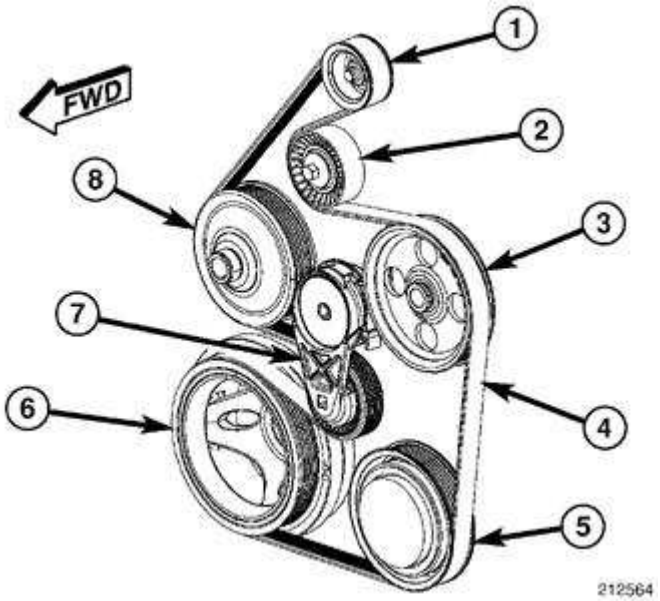

Fig. 18: Identifying Accessory Drive Belt Routing - 5.7L
Courtesy of CHRYSLER LLC

1. Remove the air intake tube between the intake manifold and the air filter assembly.
2. Insert a suitable square drive ratchet into the square hole on the belt tensioner arm (7).
3. Release the belt tension by rotating the tensioner (7)**clockwise** . Rotate the belt tensioner until the accessory drive belt (4) can be removed from the pulleys.
4. Remove the accessory drive belt (4).
5. Gently release the tensioner (7).

6.1L

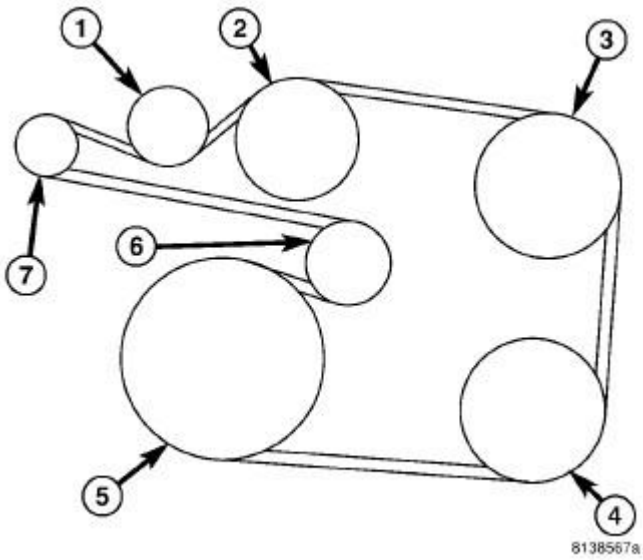

Fig. 19: Identifying Accessory Drive Belt Routing - 6.1L

Courtesy of CHRYSLER LLC

1 - IDLER PULLEY 2 - WATER PUMP 3 - P/S PUMP 4 - A/C COMPRESSOR 5 - CRANKSHAFT 6 - TENSIONER 7 - GENERATOR

CAUTION: Do not let the tensioner arm snap back to the freearm position, sever damage may occur to the tensioner.

1. Disconnect negative battery cable from battery.
2. Rotate accessory drive belt tensioner (6) counterclockwise until it contacts it's stop. Remove accessory drive belt, then slowly rotate the tensioner into the freearm position.

Cleaning

CLEANING

Clean all foreign debris from belt pulley grooves. The belt pulleys must be free of oil, grease, and coolants before installing the drive belt.

Installation

3.5L

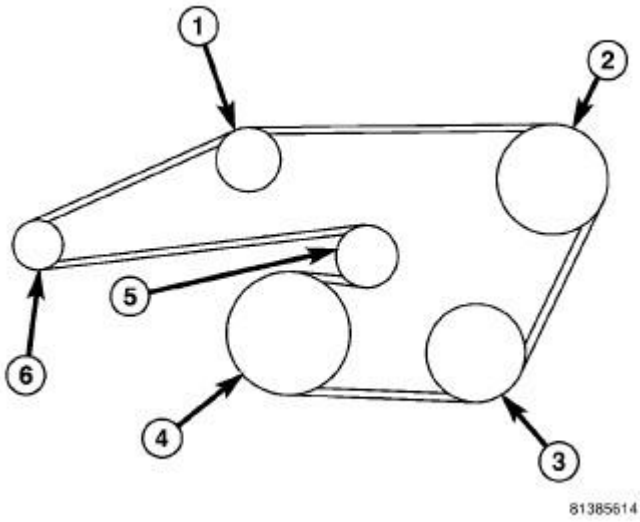

Fig. 20: Identifying Accessory Drive Belt Routing - 3.5L

Courtesy of CHRYSLER LLC

1 - IDLER PULLEY
2 - P/S PUMP
3 - A/C COMPRESSOR
4 - CRANKSHAFT
5 - TENSIONER
6 - GENERATOR

1. Check condition of all pulleys.

CAUTION: When installing the serpentine accessory drive belt, the belt MUST be routed correctly. If not, the engine may overheat due to the water pump rotating in the wrong direction.

2. Position accessory drive belt around all pulleys except the idler pulley (1). Rotate the tensioner arm (5) until it contacts it's stop position. Route the accessory drive belt around the idler (1) and slowly let the tensioner rotate into the belt. Make sure the belt is seated onto all pulleys.

NOTE: NOTE: ON all engines, the tensioner (5) is equipped with an indexing tang on back of tensioner and an indexing stop on tensioner housing. If a new belt is being installed, tang must be within approximately 6 - 8mm (0.24 - 0.32 in.) of indexing stop (i.e. tang is approximately between the two indexing stops). Belt is considered new if it has been used 15 minutes or less.

3. With the drive belt installed, inspect the belt wear indicator.

5.7L

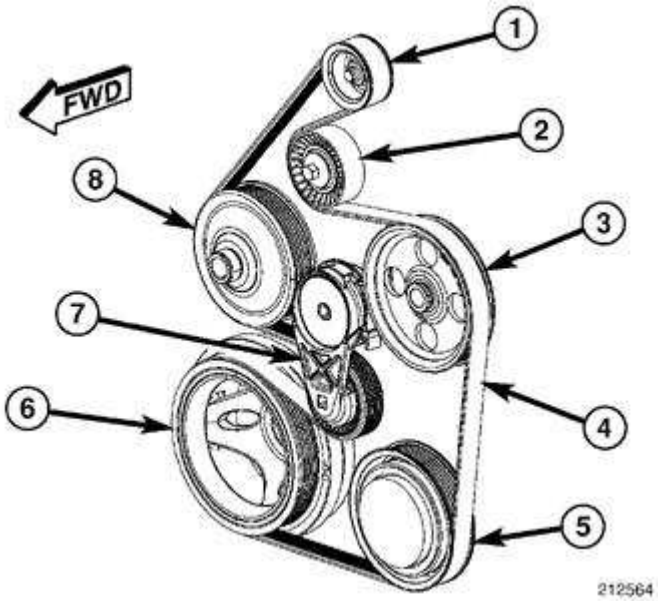

Fig. 21: Identifying Accessory Drive Belt Routing - 5.7L
Courtesy of CHRYSLER LLC

1. Position the accessory drive belt (4) over all pulleys except for the water pump pulley (8).
2. Rotate the tensioner (7) **clockwise** and slip the accessory drive belt over the water pump pulley (8).
3. Gently release the tensioner (7).
4. Install the air intake tube between the intake manifold and air filter assembly.

6.1L

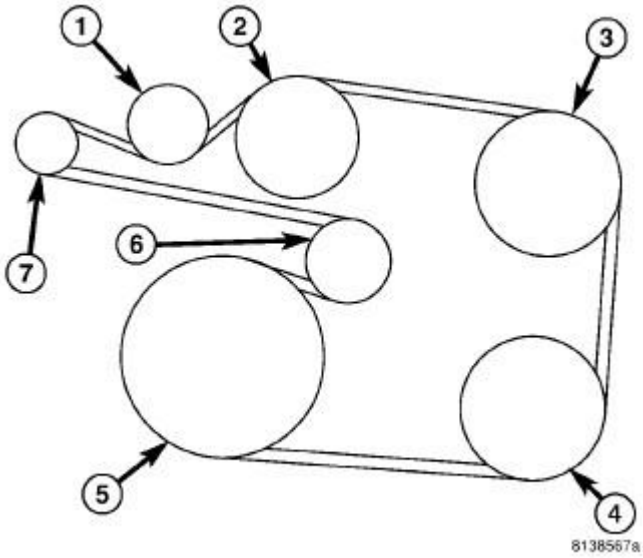

Fig. 22: Identifying Accessory Drive Belt Routing - 6.1L
Courtesy of CHRYSLER LLC

1 - IDLER PULLEY
2 - WATER PUMP
3 - P/S PUMP
4 - A/C COMPRESSOR
5 - CRANKSHAFT
6 - TENSIONER
7 - GENERATOR

1. Check condition of all pulleys.

   CAUTION: When installing the serpentine accessory drive belt, the belt MUST be routed correctly. If not, the engine may overheat due to the water pump rotating in the wrong direction.

2. Position accessory drive belt around all pulleys except the idler pulley. Rotate the tensioner arm until it contacts it's stop position. Route the accessory drive belt around the idler and slowly let the tensioner rotate into the belt. Make sure the belt is seated onto all pulleys.

   ON all engines, the tensioner (6) is equipped with an indexing tang on back of tensioner and an indexing stop on tensioner housing. If a new belt is being installed, tang must be within approximately 6 - 8mm (0.24 - 0.32 in.) of indexing stop (i.e. tang is approximately between the two indexing stops). Belt is considered new if it has been used 15 minutes or less.

3. With the accessory drive belt installed, inspect the belt wear indicator.

PULLEY, IDLER

Removal

3.5L

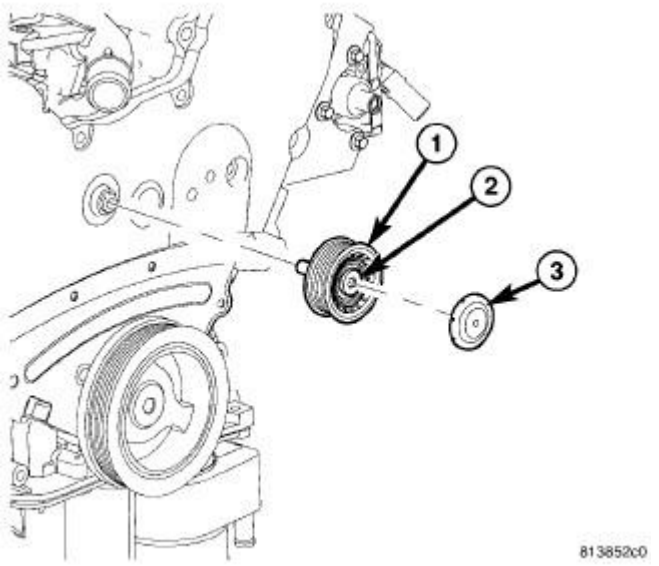

Fig. 23: Idler Pulley - 3.5L
Courtesy of CHRYSLER LLC

1 - IDLER PULLEY 2 - BOLT (part of pulley) 3 - COVER

1. Remove accessory drive belt. See **Cooling/Accessory Drive/BELT, Serpentine - Removal**.
2. Remove cover (3).
3. Remove bolt (2) and idler pulley (1).

5.7L/6.1L

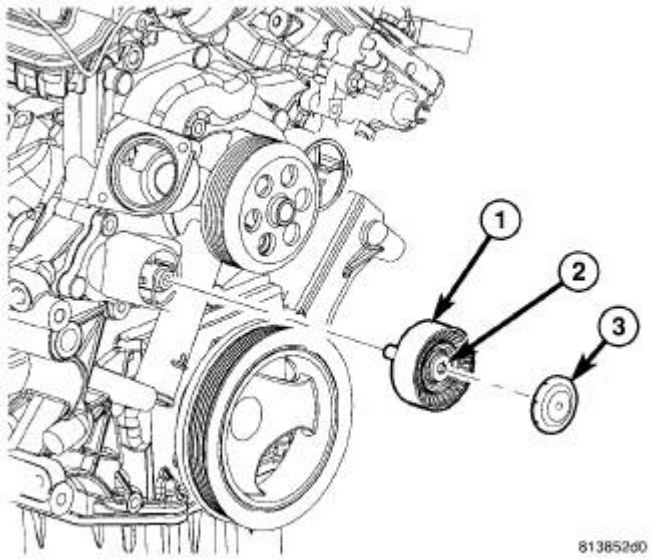

Fig. 24: Idler Pulley - 5.7L/6.1L
Courtesy of CHRYSLER LLC

1 - IDLER PULLEY 2 - BOLT (part of pulley) 3 - COVER

1. Remove accessory drive belt. See **Cooling/Accessory Drive/TENSIONER, Belt - Removal**.
2. Remove cover (3).
3. Remove bolt (2) and idler pulley (1).

Installation

3.5L

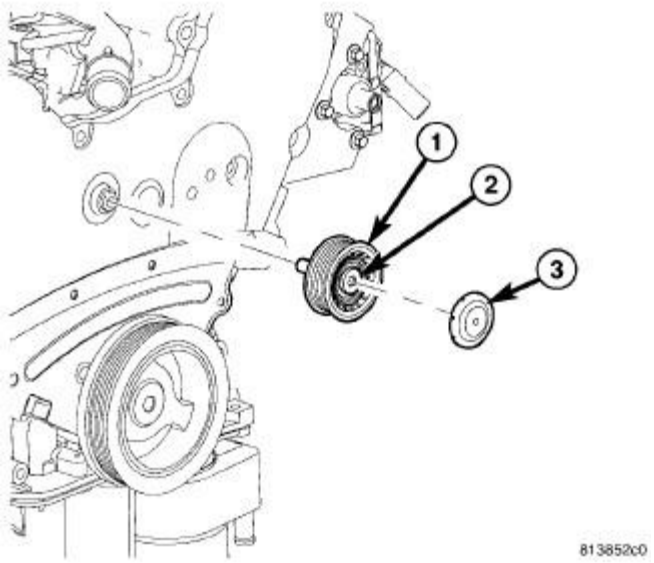

Fig. 25: Idler Pulley - 3.5L
Courtesy of CHRYSLER LLC

1 - IDLER PULLEY 2 - BOLT (part of pulley) 3 - COVER

1. Position idler pulley (1).
2. Tighten bolt to (2) 28 N.m (250 in. lbs.).
3. Install cover (3).
4. Install accessory drive belt. See **Cooling/Accessory Drive/BELT, Serpentine - Installation**.

5.7L/6.1L

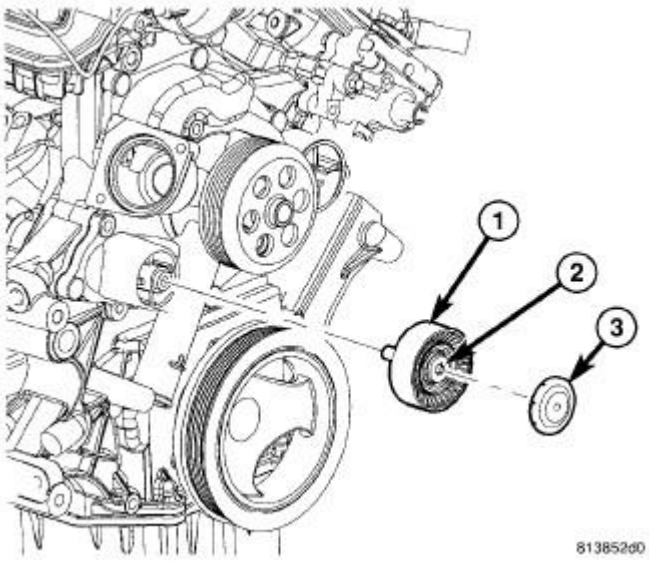

Fig. 26: Idler Pulley - 5.7L/6.1L
Courtesy of CHRYSLER LLC

1 - IDLER PULLEY 2 - BOLT (part of pulley) 3 - COVER

1. Position idler pulley (1).
2. Tighten bolt (2) to 54 N.m (40 ft. lbs.).
3. Install cover (3).
4. Install accessory drive belt. See **Cooling/Accessory Drive/BELT, Serpentine - Installation**.

TENSIONER, BELT

Description

DESCRIPTION

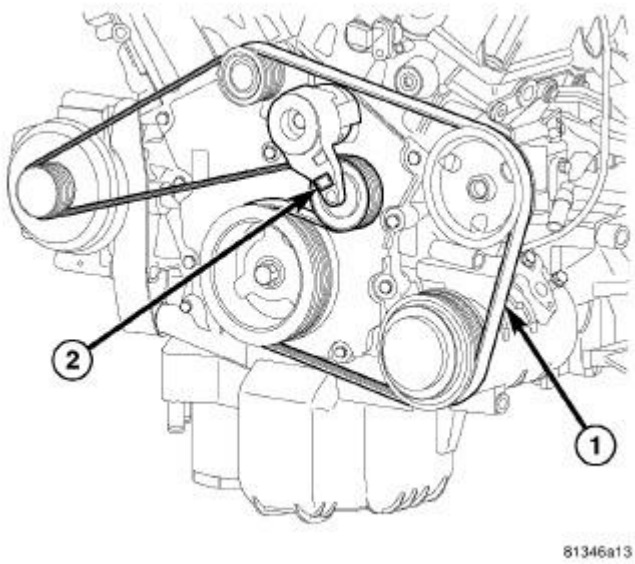

Fig. 27: Automatic Belt Tensioner
Courtesy of CHRYSLER LLC

Correct drive belt tension is required to ensure optimum performance of the belt (1) driven engine accessories. If specified tension is not maintained, belt slippage may cause; engine overheating, lack of power steering assist, loss of air conditioning capacity, reduced generator output rate, and greatly reduced belt life.

Operation

OPERATION

The automatic belt tensioner maintains belt tension by using internal spring pressure, a pivoting arm and pulley to apply force against the drive belt.

Removal

3.5L

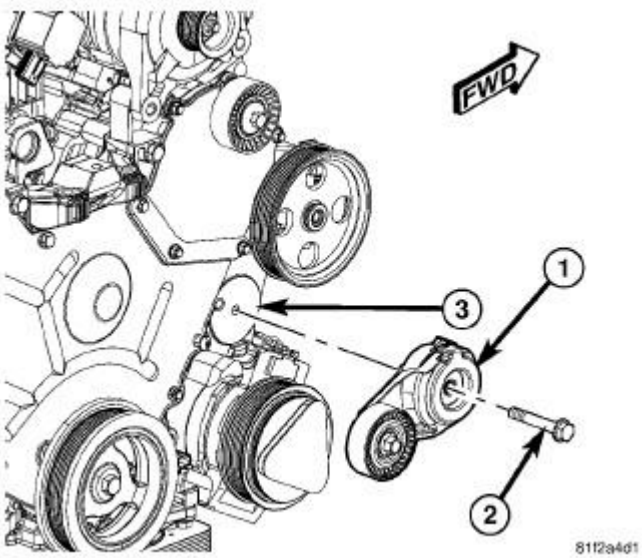

Fig. 28: Accessory Drive Belt Tensioner - 3.5L
Courtesy of CHRYSLER LLC

1 - ACCESSORY DRIVE BELT TENSIONER 2 - BOLT
3 - FRONT ENGINE COVER

WARNING: Because of high spring pressure, do not attempt to disassemble automatic tensioner. Unit is serviced as an assembly.

1. Remove accessory drive belt. See **Cooling/Accessory Drive/BELT, Serpentine - Removal**.
2. Remove tensioner assembly bolt (2).
3. Remove accessory drive belt tensioner (1) from front engine cover (3).

5.7L

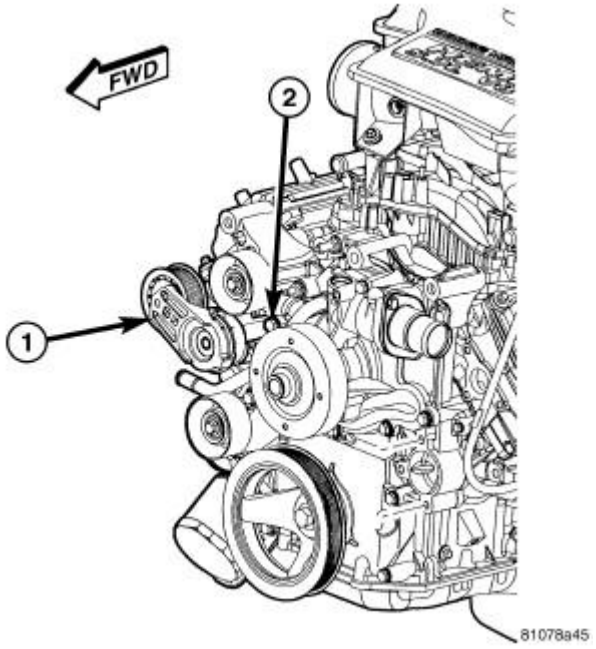

Fig. 29: Automatic Belt Tensioner - 5.7L
Courtesy of CHRYSLER LLC

1 - TENSIONER 2 - BOLT

1. Remove the accessory drive belt. See **Cooling/Accessory Drive/BELT, Serpentine - Removal**.
2. Remove the tensioner and the mounting bracket.
3. Remove the tensioner assembly from the mounting bracket.

6.1L

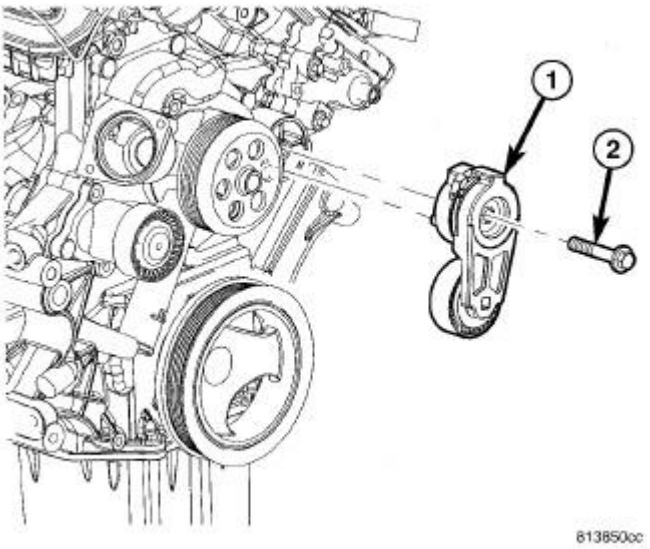

Fig. 30: Tensioner - 5.7L/6.1L
Courtesy of CHRYSLER LLC

1 - TENSIONER 2 - BOLT

1. Remove accessory drive belt. See **Cooling/Accessory Drive/BELT, Serpentine - Removal**.

WARNING: Because of high spring pressure, do not attempt to disassemble automatic tensioner. Unit is serviced as an assembly.

2. Remove tensioner assembly bolt (2).
3. Remove tensioner assembly (1) from mounting bracket.

Installation

3.5L

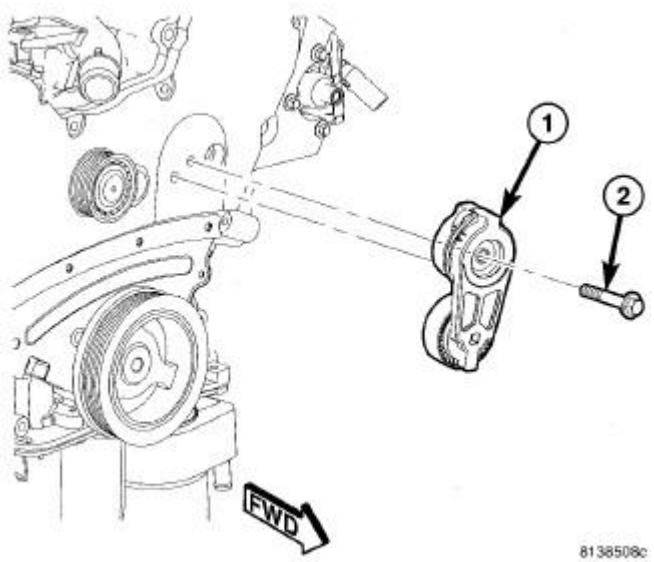

Fig. 31: Tensioner - 3.5L
Courtesy of CHRYSLER LLC

1 - TENSIONER 2 - BOLT

1. Install tensioner bolt (2) to tensioner (1). Tighten bolt to 34 N.m (40 ft. lbs.).
2. Install accessory drive belt. See **Cooling/Accessory Drive/BELT, Serpentine - Installation**.
3. Check belt indexing marks.

5.7L

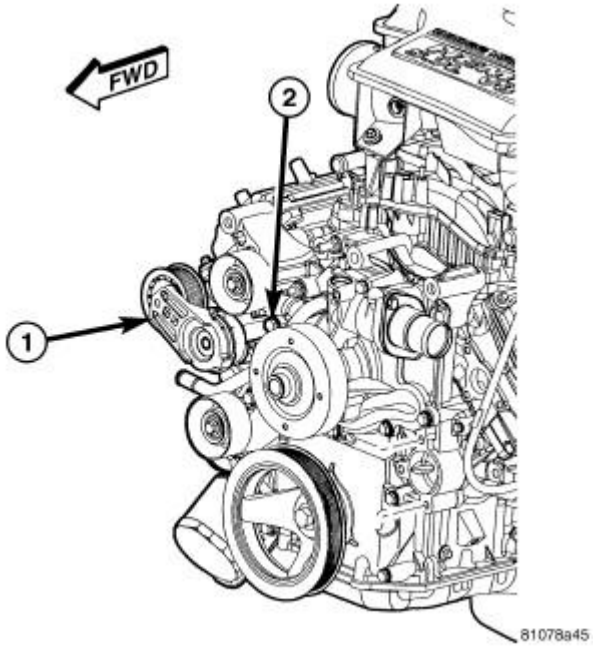

Fig. 32: Automatic Belt Tensioner - 5.7L
Courtesy of CHRYSLER LLC

1 - TENSIONER 2 - BOLT

1. Install the accessory drive belt tensioner on to the mounting bracket. Tighten the bolt to 41 N.m (30 ft. lbs.).
2. Install accessory drive belt tensioner and bracket assembly
3. Install the accessory drive belt. See **Cooling/Accessory Drive/BELT, Serpentine - Installation**.

6.1L

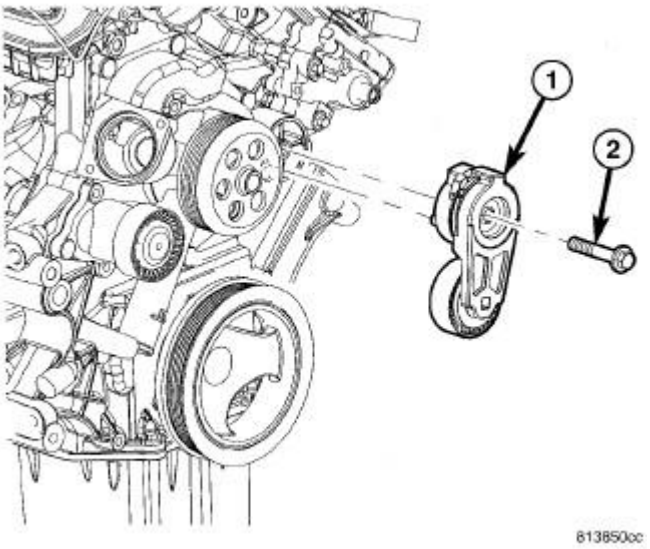

Fig. 33: Tensioner - 6.1L
Courtesy of CHRYSLER LLC

1 - TENSIONER 2 - BOLT

1. Install tensioner bolt (2) to tensioner (1). Tighten bolt to 34 N.m (40 ft. lbs.).
2. Install accessory drive belt. See **Cooling/Accessory Drive/BELT, Serpentine - Installation**.
3. Check belt indexing marks.

ENGINE

BOTTLE, COOLANT RECOVERY

Removal

REMOVAL

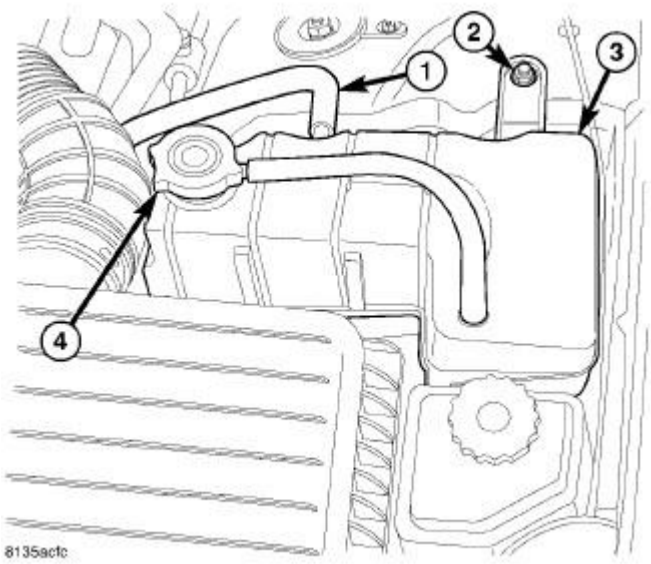

Fig. 34: Coolant Recovery Container
Courtesy of CHRYSLER LLC

1 - COOLANT RECOVER TUBE
2 - NUT
3 - COOLANT RECOVERY CONTAINER
4 - COOLANT RECOVERY PRESSURE CAP

1. Partially drain cooling system using the draincock only. See **Cooling - Standard Procedure**. Drain system below level of the coolant recovery pressure container.
2. Remove coolant recovery container pressure cap (4).
3. Remove and plug coolant recovery tube (1).
4. Remove mounting nuts (2).
5. Remove coolant recovery container (3) from vehicle.

Installation

INSTALLATION

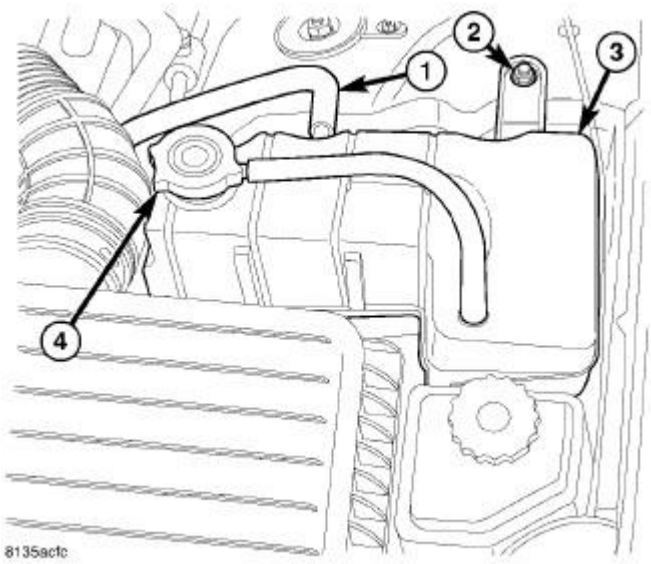

Fig. 35: Coolant Recovery Container
Courtesy of CHRYSLER LLC

1 - COOLANT RECOVER TUBE
2 - NUT
3 - COOLANT RECOVERY CONTAINER
3 - COOLANT RECOVERY PRESSURE CAP

1. Position coolant recovery container (3).
2. Install mounting nuts (2). Tighten to 10 N.m (89 in. lbs.).
3. Install coolant recovery tube (1).
4. Fill cooling system. See **Cooling - Standard Procedure**.
5. Install coolant recovery container pressure cap (4).

CAP, RADIATOR

Description

DESCRIPTION

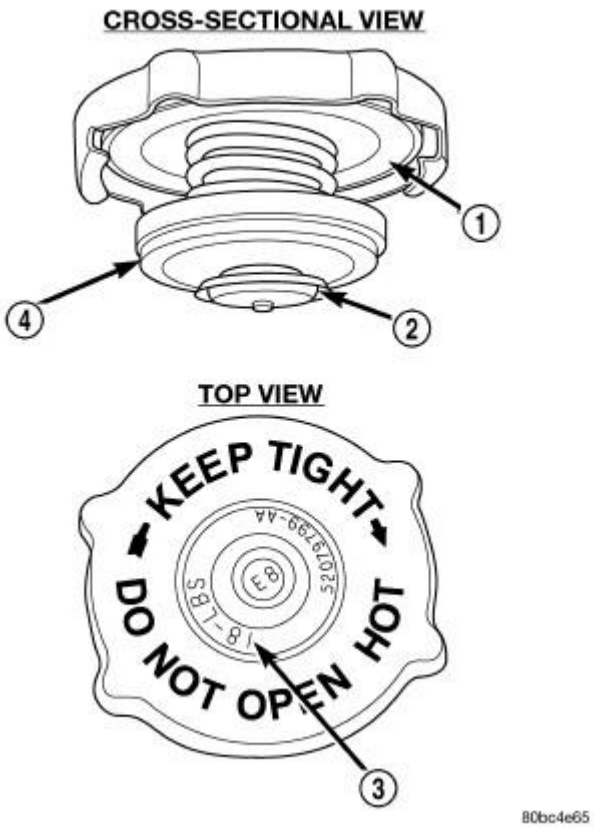

Fig. 36: Radiator Pressure Cap - Typical
Courtesy of CHRYSLER LLC

All cooling systems are equipped with a pressure cap on the radiator. This cap releases pressure at some point within a range of 110-138 kPa (16-20 psi). The pressure relief point (in pounds) is engraved on top of the cap (3).

The cooling system will operate at pressures slightly above atmospheric pressure. This results in a higher coolant boiling point allowing increased radiator cooling capacity. The cap contains a spring-loaded pressure relief valve (4). This valve opens when system pressure reaches the release range of 110-138 kPa (16-20 psi).

A rubber gasket (2) seals the radiator filler neck. This is done to maintain vacuum during coolant cool-down and to prevent leakage when system is under pressure.

Operation

OPERATION

A vent valve in the center of the cap will remain shut as long as the cooling system is pressurized. As the coolant cools, it contracts and creates a vacuum in cooling system. This causes the vacuum valve to open and coolant in reserve/overflow tank to be drawn through connecting hose into radiator. If the vacuum valve is stuck shut, or overflow hose is kinked, radiator hoses will collapse on cool-down.

Diagnosis and Testing

RADIATOR CAP-TO-FILLER NECK SEAL

The pressure cap upper gasket (seal) pressure relief can be tested by removing overflow hose from radiator filler neck nipple. Attach hose of pressure tester tool 7700 (or equivalent) to nipple. It will be necessary to disconnect hose from its adapter for filler neck. Pump air into radiator. The pressure cap upper gasket should relieve at 124 kPa (18 psi) and hold pressure at a minimum of 110 kPa (186psi).

WARNING: The warning words "DO NOT OPEN HOT" on radiator pressure cap, are a safety precaution. When hot, pressure builds up in cooling system. To prevent scalding or injury, radiator cap should not be removed while system is hot and/or under pressure.

Do not remove radiator cap at any time **except** for the following purposes:

1. Check and adjust antifreeze freeze point.
2. Refill system with new antifreeze.
3. Conducting service procedures.
4. Checking for vacuum leaks.

WARNING: If vehicle has been run recently, wait at least 15 minutes before removing radiator cap. With a rag, squeeze radiator upper hose to check if system is under pressure. Place a rag over cap and without pushing cap down, rotate it counter-clockwise to first stop. Allow fluid to escape through the coolant reserve/overflow hose into reserve/overflow tank. Squeeze radiator upper hose to determine when pressure has been released. When coolant and steam stop being pushed into tank and system pressure drops, remove radiator cap completely.

RADIATOR PRESSURE CAP

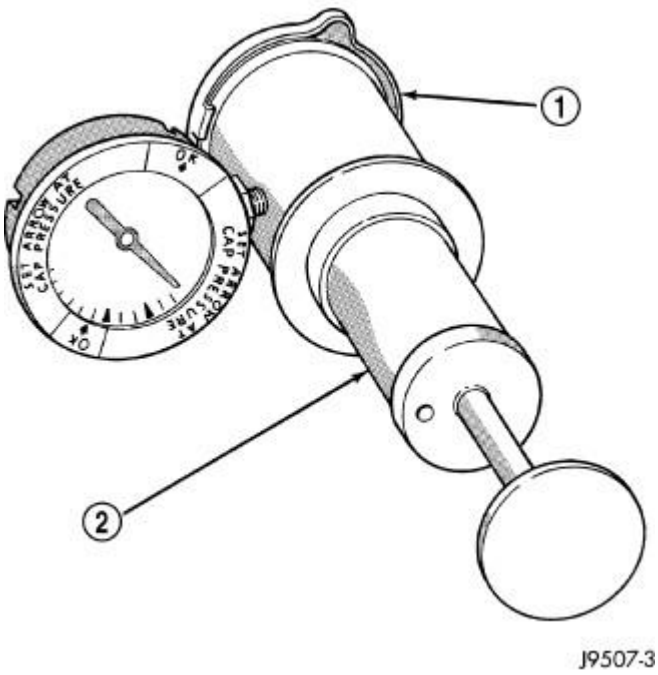

Fig. 37: Pressure Testing Radiator Pressure Cap-Typical
Courtesy of CHRYSLER LLC

Remove cap (1) from radiator. Be sure that sealing surfaces are clean. Moisten rubber gasket with water and install cap (1) on pressure tester 7700 (2) or an equivalent.

Operate tester pump to bring pressure to 124 kPa (18 psi) on gauge. If pressure cap (1) fails to hold pressure of at least 110 kPa (16 psi) replace cap. Refer to the following **CAUTION** .

The pressure cap may test properly while positioned on tool 7700 (or equivalent). It may not hold pressure or vacuum when installed on radiator. If so, inspect radiator filler neck and cap's top gasket for damage. Also inspect for dirt or distortion that may prevent cap from sealing properly.

CAUTION: Radiator pressure testing tools are very sensitive to small air leaks, which will not cause cooling system problems. A pressure cap that does not have a history of coolant loss should not be replaced just because it leaks slowly when tested with this tool. Add water to tool. Turn tool upside down and recheck pressure cap to confirm that cap needs replacement.

Cleaning

CLEANING

Use only a mild soap and water to clean the radiator cap. Using any type solvent may cause damage to the seal in the radiator cap.

Inspection

INSPECTION

Hold cap at eye level, right side up. The vent valve at bottom of cap should open. If rubber gasket has swollen and prevents vent valve from opening, replace cap.

Hold cap at eye level, upside down. If any light can be seen between vent valve and rubber gasket, replace cap. **Do not use a replacement cap that has a spring to hold vent shut.** A replacement cap must be the type designed for a coolant reserve/overflow system with a completely sealed diaphragm spring and a rubber gasket. This gasket is used to seal to radiator filler neck top surface. Use of proper cap will allow coolant return to radiator.

COOLANT

Description

DESCRIPTION

GAS ENGINES

WARNING: Antifreeze is an ethylene glycol based coolant and is harmful if swallowed or inhaled. If swallowed, drink two glasses of water and induce vomiting. If inhaled, move to fresh air area. Seek medical attention immediately. Do not store in open or unmarked containers. Wash skin and clothing thoroughly after coming in contact with ethylene glycol. Keep out of reach of children. Dispose of glycol based coolant properly, contact your government agency for location of collection center in your area. Do not open a cooling system when the engine is at operating temperature or hot under pressure, personal injury can result. Avoid radiator cooling fan when engine compartment related service is performed, personal injury can result.

CAUTION: Use of Propylene Glycol based coolants is not recommended, as they provide less freeze protection and less boiling protection.

The cooling system is designed around the coolant. The coolant must accept heat from engine metal, in the cylinder head area near the exhaust valves and engine block. Then coolant carries the heat to the radiator where the tube/fin radiator can transfer the heat to the air.

The use of aluminum cylinder blocks, cylinder heads, and water pumps requires special corrosion protection. Mopar® Antifreeze/Coolant, 5 Year/100,000 Mile Formula (MS-9769), or the equivalent ethylene glycol based coolant with hybrid organic corrosion inhibitors (called HOAT, for Hybrid Organic Additive Technology) is recommended. This coolant offers the best engine cooling without corrosion when mixed with 50% Ethylene Glycol and 50% distilled water to obtain a freeze point of -37°C (-35°F). If it loses color or becomes contaminated, drain, flush, and replace with fresh properly mixed coolant solution.

The green coolant **MUST NOT BE MIXED** with the orange or magenta coolants. When replacing

coolant the complete system flush must be performed before using the replacement coolant.

CAUTION: Mopar® Antifreeze/Coolant, 5 Year/100,000 Mile Formula (MS-9769) may not be mixed with any other type of antifreeze. Doing so will reduce the corrosion protection and may result in premature water pump seal failure. If non-HOAT coolant is introduced into the cooling system in an emergency, it should be replaced with the specified coolant as soon as possible.

DIESEL ENGINE

CAUTION: Use of Propylene Glycol based coolants is not recommended, as they provide less freeze protection and less boiling protection.

The cooling system is designed around the coolant. The coolant must accept heat from engine metal, in the cylinder head area near the exhaust valves and engine block. Then coolant carries the heat to the radiator where the tube/fin radiator can transfer the heat to the air.

The use of aluminum cylinder blocks, cylinder heads, and water pumps requires special corrosion protection. Glysantin G 30-91 Antifreeze/Coolant, 5 Year/150,000 Mile Formula (ASTM D3306), or the equivalent ethylene glycol based coolant. This coolant offers the best engine cooling without corrosion when mixed with 50% coolant and 50% distilled water to obtain a freeze point of -36°C (-34° F). It is dyed purple to distinguish it's unique chemistry from traditional green and yellow silicate coolants. If it loses color or becomes contaminated, drain, flush, and replace with fresh properly mixed coolant solution.

The purple coolant **MUST NOT BE MIXED** with the orange, green or magenta coolants. When replacing coolant the complete system flush must be performed before using the replacement coolant.

CAUTION: Glysantin G 30-91 Antifreeze/Coolant, 5 Year/100,00 Mile Formula (ASTM D3306) may not be mixed with any other type of antifreeze. Doing so will reduce the corrosion protection and may result in premature water pump seal failure.

Operation

OPERATION

Coolant flows through the engine block absorbing the heat from the engine, then flows to the radiator where the cooling fins in the radiator transfers the heat from the coolant to the atmosphere. During cold weather the ethylene-glycol or propylene-glycol coolant prevents water present in the cooling system from freezing within temperatures indicated by mixture ratio of coolant to water.

Diagnosis and Testing

COOLANT CONCENTRATION TESTING

Coolant concentration should be checked when any additional coolant was added to system or after a coolant drain, flush and refill. The coolant mixture offers optimum engine cooling and protection against corrosion when mixed to a freeze point of -37°C (-34°F) to -46°C (-50°F). The use of a hydrometer or a refractometer can be used to test coolant concentration.

A hydrometer will test the amount of glycol in a mixture by measuring the specific gravity of the mixture. The higher the concentration of ethylene glycol, the larger the number of balls that will float, and higher the freeze protection (up to a maximum of 60% by volume glycol).

A refractometer Tool 8286. See **Cooling - Special Tools** will test the amount of glycol in a coolant mixture by measuring the amount a beam of light bends as it passes through the fluid.

Some coolant manufactures use other types of glycols into their coolant formulations. Propylene glycol is the most common new coolant. However, propylene glycol based coolants do not provide the same freezing protection and corrosion protection and is not recommended.

CAUTION: Do not mix types of coolant - corrosion protection will be severely reduced.

FAN, COOLING

Removal

REMOVAL

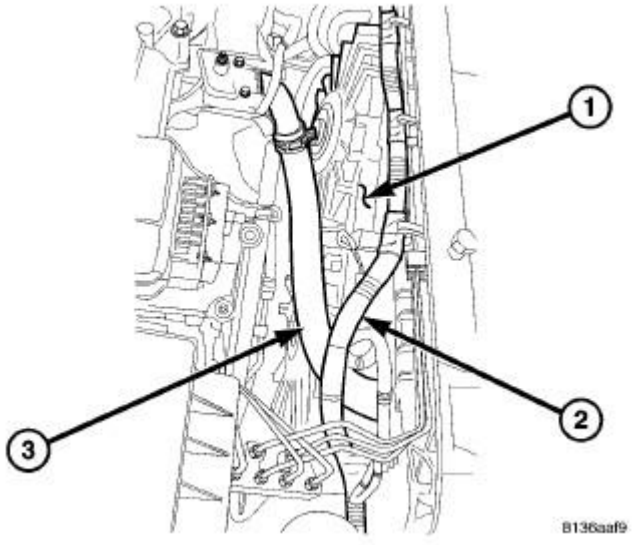

Fig. 38: Radiator Fan Assembly
Courtesy of CHRYSLER LLC

1 - RADIATOR FAN ASSEMBLY
2 - ELECTRICAL CONNECTOR

3 - UPPER RADIATOR HOSE

1. Disconnect negative battery cable.
2. Partially drain cooling system. See **Cooling - Standard Procedure**.
3. Remove the air filter housing assembly. Refer to **Engine/Air Intake System/BODY, Air Cleaner - Removal** .
4. Remove the upper radiator hose (3).
5. Disconnect the cooling fan electrical connector (2).
6. Remove the cooling fan mounting bolts.
7. Remove the radiator cooling fan assembly (1) from vehicle.
8. Remove the fan blade from the fan motor.
9. Remove the fan motor from cooling fan shroud.

Installation

INSTALLATION

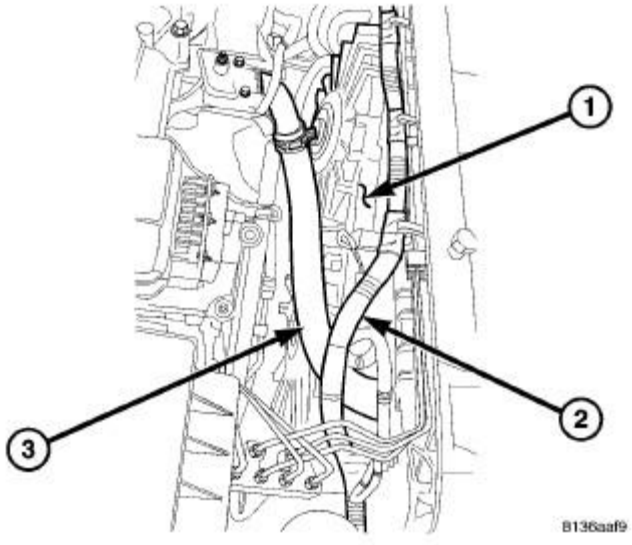

Fig. 39: Radiator Fan Assembly
Courtesy of CHRYSLER LLC

1 - RADIATOR FAN ASSEMBLY 2 - ELECTRICAL CONNECTOR 3 - UPPER RADIATOR HOSE

1. Position fan motor on radiator fan shroud.
2. Install mounting bolts. Tighten to 10 N.m (89 in. lbs.).
3. Position fan blade on motor and install retaining nut. Tighten nut to 25 N.m (221 in. lbs.).

4. Position radiator cooling fan assembly (1) in vehicle.
5. Install cooling fan mounting bolts. Tighten to 6 N.m (50 in. lbs.)
6. Connect cooling fan electrical connector (2).
7. Install upper radiator hose (3).
8. Install the air filter housing. Refer to **Engine/Air Intake System/BODY, Air Cleaner - Installation** .
9. Fill the cooling system. See **Cooling - Standard Procedure**.
10. Operate engine until it reaches normal operating temperature. Check cooling system and automatic transmission for correct fluid levels.

HEATER, ENGINE BLOCK

Description

ENGINE BLOCK HEATER

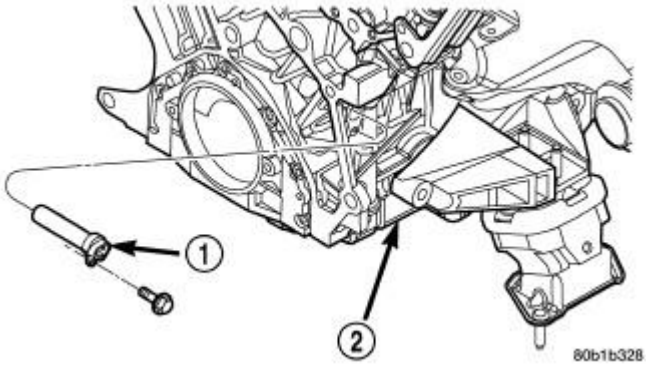

Fig. 40: Engine Block Heater 2.7L/3.5L
Courtesy of CHRYSLER LLC

The 3.5L engine block heater (1) is mounted in the cylinder block (2), near the right rear corner. The engine block heater (1) is a dry cylinder type design and is powered by 110 volt AC.

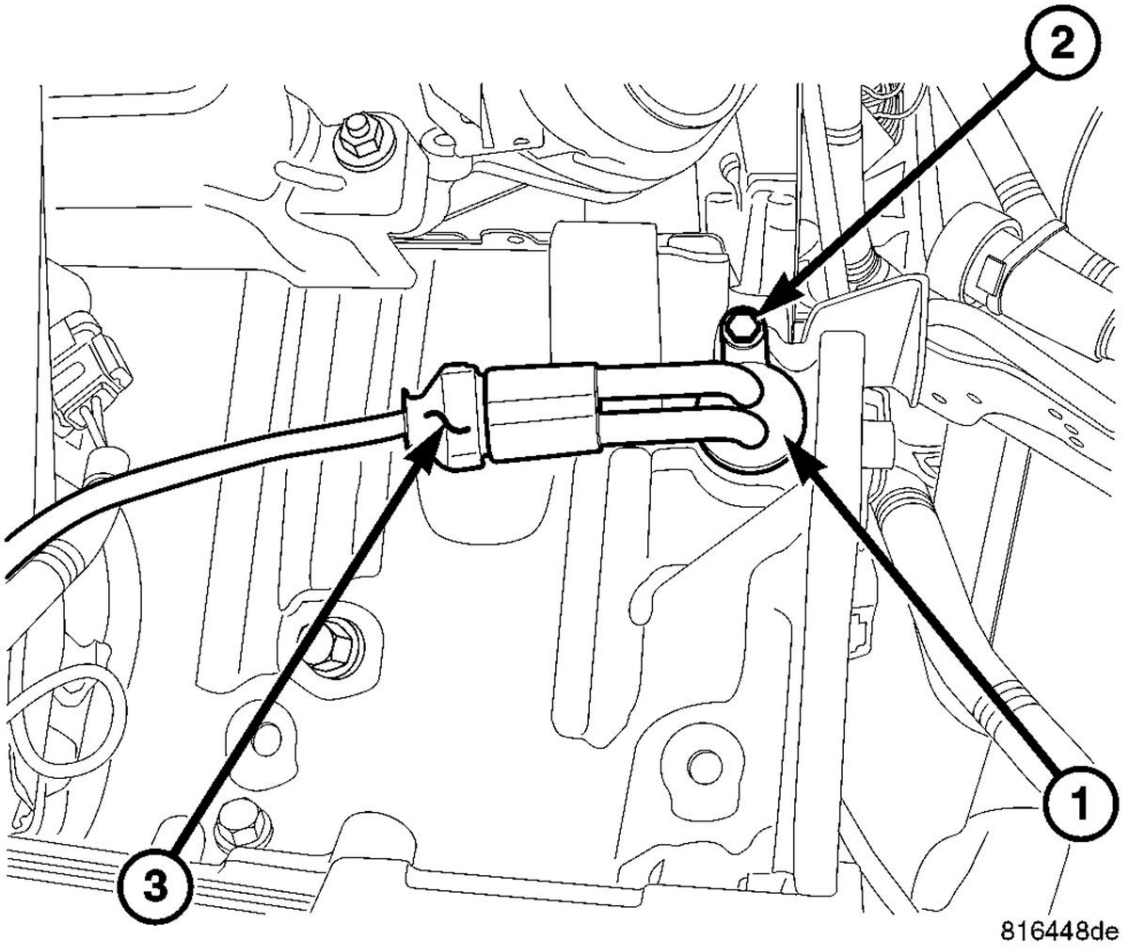

Fig. 41: Engine Block Heater 5.7L/6.1L
Courtesy of CHRYSLER LLC

1 - BLOCK HEATER

The 5.7L and 6.1L engine block heater (1) is mounted in the cylinder block, near the left rear corner. The engine block heater (1) is a dry cylinder type design and is powered by 110 volt AC.

Operation

OPERATION

When power is applied (110 volt AC) to the block heater, the heating element transfers heat through the aluminum engine block and into the coolant without directly penetrating the cooling system.

Diagnosis and Testing

ENGINE BLOCK HEATER

If unit does not operate, trouble can be in either the power cord or the heater element. Test power cord for continuity with a 110-volt voltmeter or 110-volt test light; test heater element continuity with

an ohmmeter or 12-volt test light.

Removal

3.5L

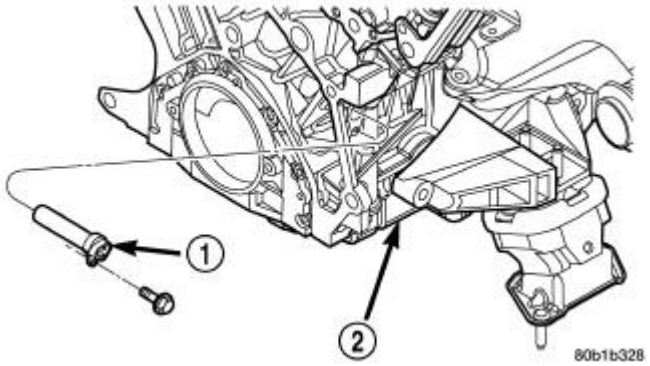

Fig. 42: Engine Block Heater - 2.7L/3.5L
Courtesy of CHRYSLER LLC

1 - BLOCK HEATER
2 - ENGINE - RIGHT SIDE

1. Raise vehicle on hoist.
2. Detach power cord plug from block heater (1).
3. Remove block heater attaching screw located below heater terminals.
4. Remove block heater from cylinder block (2).

5.7L

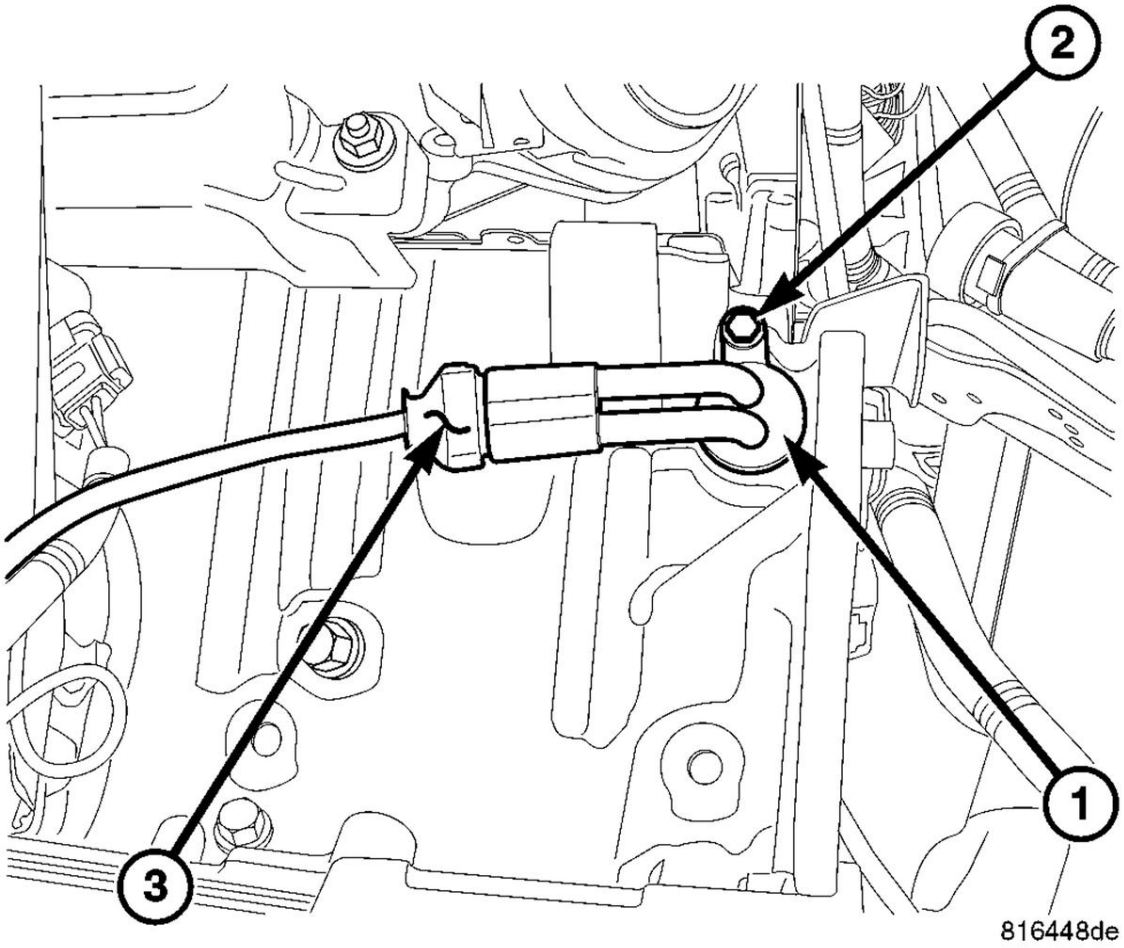

Fig. 43: Engine Block Heater 5.7L/6.1L
Courtesy of CHRYSLER LLC

1 - BLOCK HEATER

1. Raise and support the vehicle.
2. Remove the power cord from the block heater (1).
3. Remove the bolt (2) on the block heater (1). Remove the block heater assembly (1).

6.1L

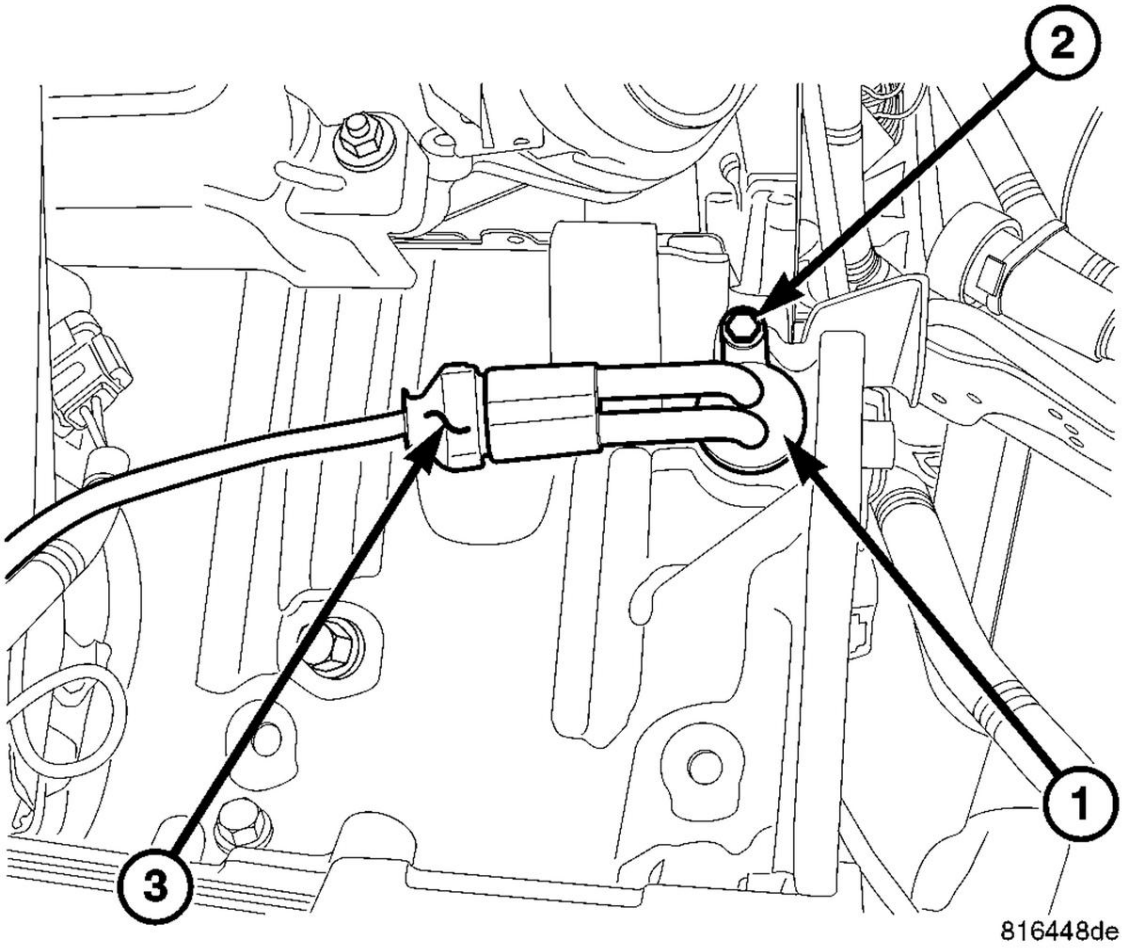

Fig. 44: Engine Block Heater 5.7L/6.1L
Courtesy of CHRYSLER LLC

1 - BLOCK HEATER

1. Raise vehicle.
2. Remove power cord from block heater.
3. Remove bolt on block heater. Remove heater assembly.

Installation

3.5L

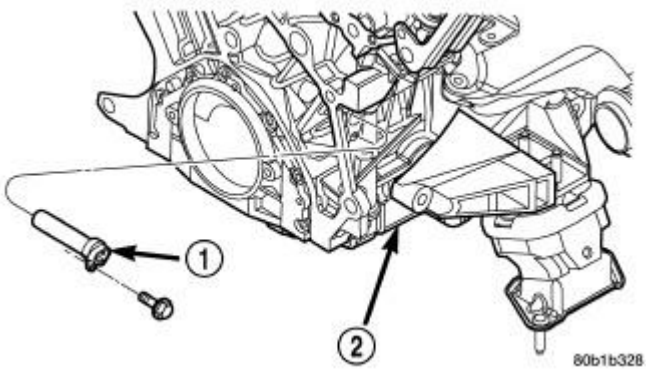

Fig. 45: Engine Block Heater - 2.7L/3.5L
Courtesy of CHRYSLER LLC

1 - BLOCK HEATER
2 - ENGINE - RIGHT SIDE

1. Thoroughly clean cylinder block heater cavity.
2. Insert heater assembly (1) into block (2) with mounting hole is located below heater terminals.
3. Install mounting screw and tighten to 12 N.m (105 in. lbs.).
4. Attach power cord to heater.

CAUTION: To prevent damage, the power cord must be secured in its retainer clips, and not positioned so it could contact linkages or exhaust manifolds.

5. Lower vehicle.

5.7L

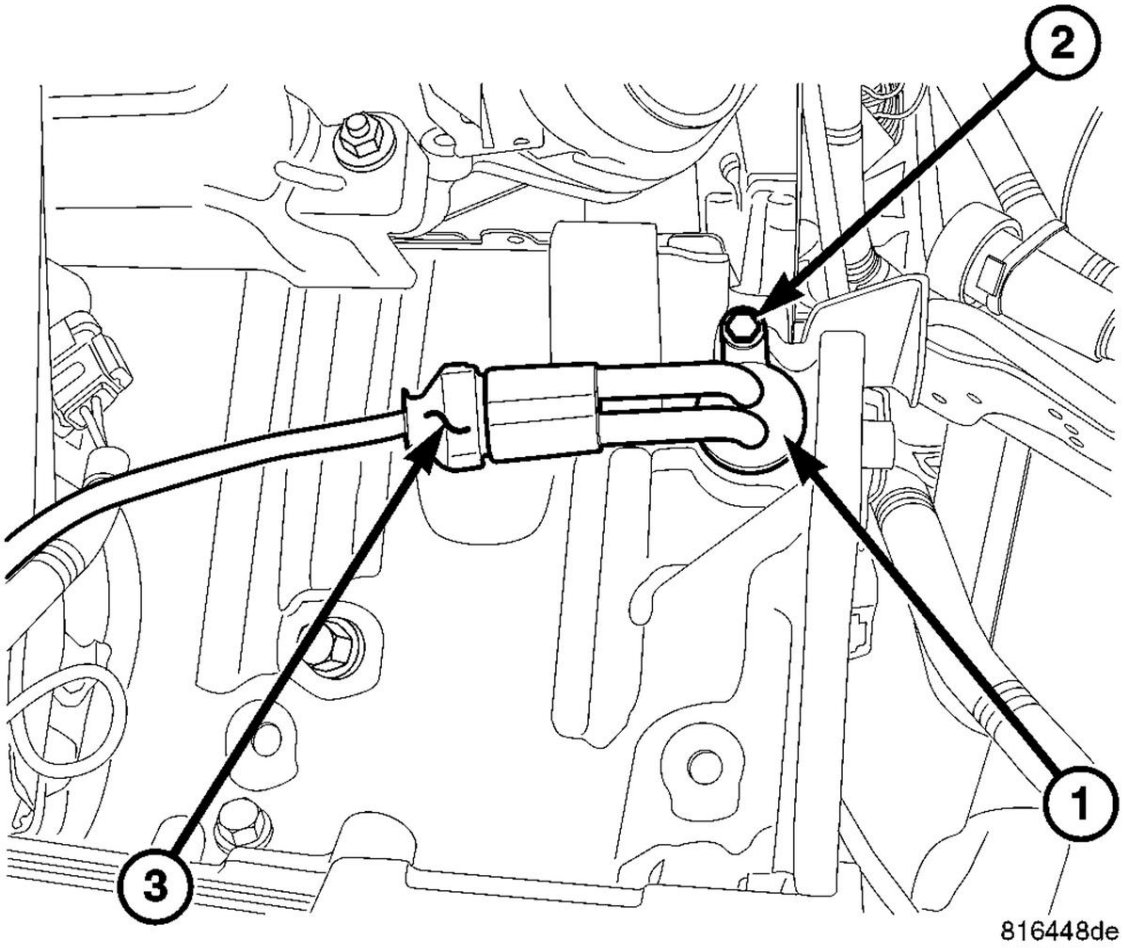

Fig. 46: Engine Block Heater 5.7L/6.1L
Courtesy of CHRYSLER LLC

1 - BLOCK HEATER

1. Thoroughly clean the cylinder block core hole and the block heater seat.
2. Insert the block heater assembly (1) into the block.
3. With the block heater fully seated, tighten bolt (1) to 2 N.m (17 in. lbs.).

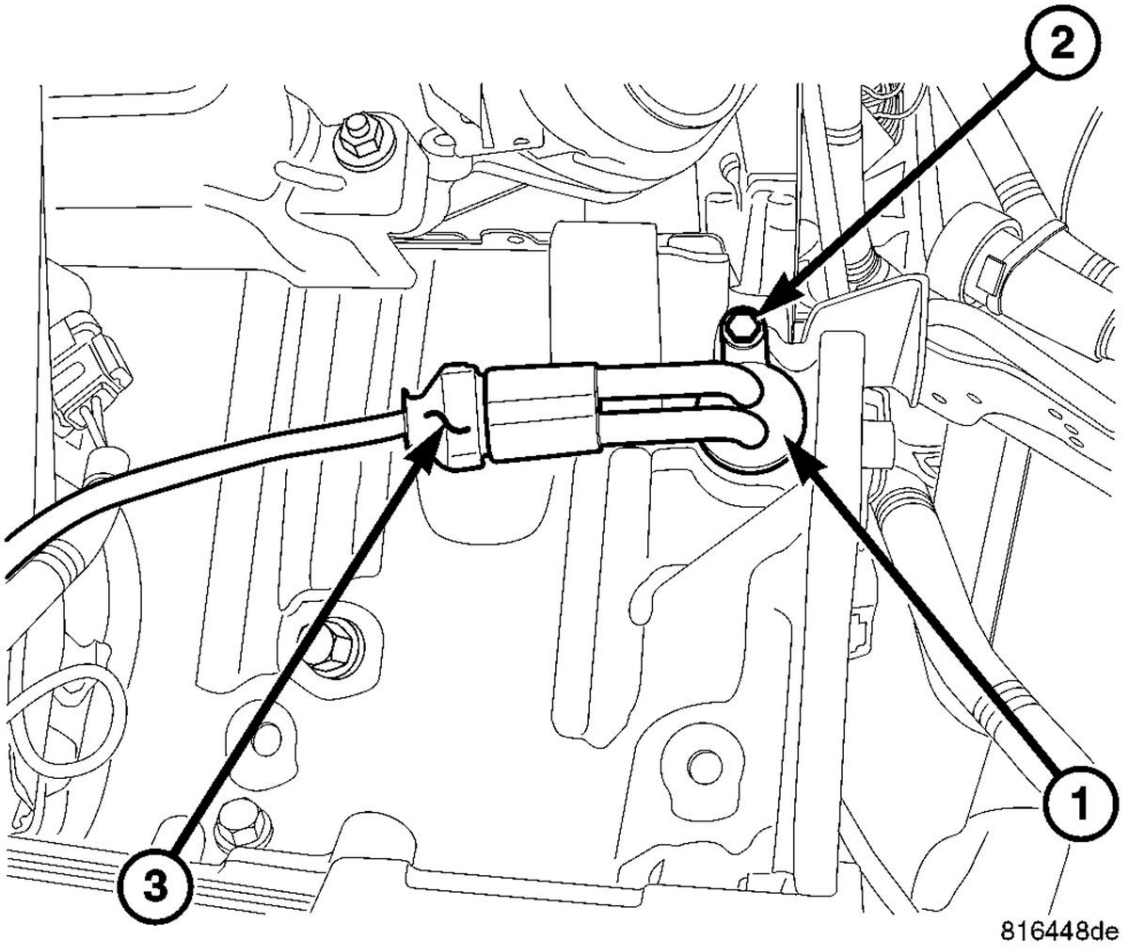

Fig. 47: Engine Block Heater 5.7L/6.1L
Courtesy of CHRYSLER LLC

1 - BLOCK HEATER

1. Thoroughly clean cylinder block core hole and block heater seat.
2. Insert block heater assembly (1) into the block.
3. With block heater (1) fully seated, tighten bolt (2) to 2 N.m (17 in. lbs.) torque.
4. Connect power cord (3) to block heater assembly (1).

PUMP, WATER

Description

DESCRIPTION

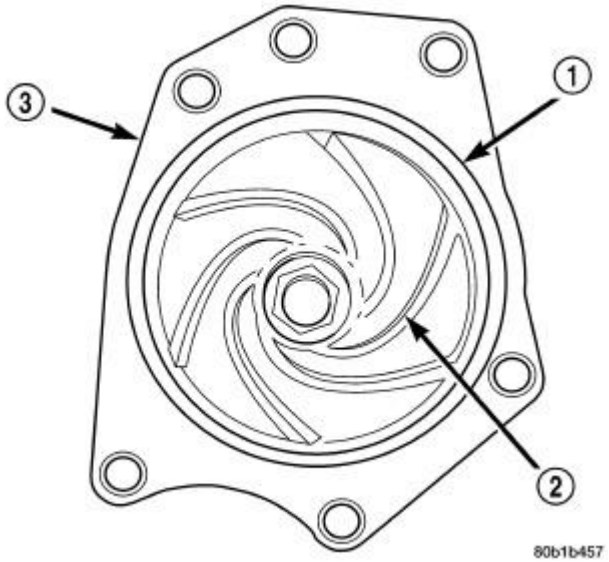

Fig. 48: Water Pump - 3.5L Engine
Courtesy of CHRYSLER LLC

The 3.5L water pump has a die cast aluminum housing (3) and a plastic swept vane impeller (2) and bolts directly to the rear timing belt cover using a press-in-place gasket (1) for sealing. The water pump is driven by the engine timing belt.

Standard Procedure

COOLANT AIR EVACUATION

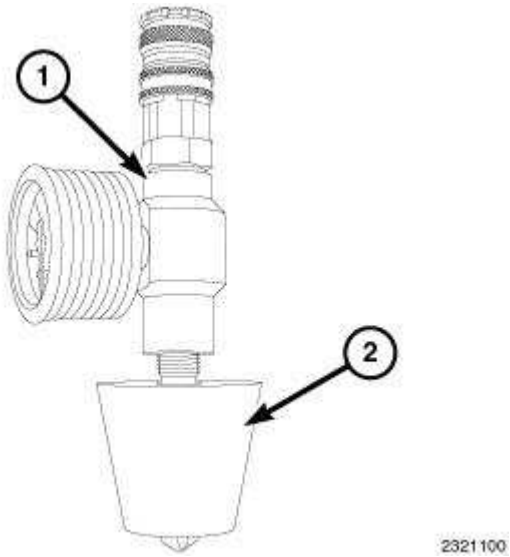

Fig. 49: Pressurized Air Operated Vacuum Generator
Courtesy of CHRYSLER LLC

Evacuating or purging air from the cooling system involves the use of a pressurized air operated

vacuum generator. The vacuum created allows for a quick and complete coolant refilling while removing any airlocks present in the system components.

NOTE: **To avoid damage to the cooling system, ensure that no component would be susceptible to damage when a vacuum is drawn on the system.**

WARNING: **ANTIFREEZE IS AN ETHYLENE GLYCOL BASE COOLANT AND IS HARMFUL IF SWALLOWED OR INHALED. IF SWALLOWED, DRINK TWO GLASSES OF WATER AND INDUCE VOMITING. IF INHALED, MOVE TO FRESH AIR AREA. SEEK MEDICAL ATTENTION IMMEDIATELY. DO NOT STORE IN OPEN OR UNMARKED CONTAINERS. WASH SKIN AND CLOTHING THOROUGHLY AFTER COMING IN CONTACT WITH ETHYLENE GLYCOL. KEEP OUT OF REACH OF CHILDREN. DISPOSE OF GLYCOL BASED COOLANT PROPERLY. CONTACT YOUR DEALER OR GOVERNMENT AGENCY FOR LOCATION OF COLLECTION CENTER IN YOUR AREA. DO NOT OPEN A COOLING SYSTEM WHEN THE ENGINE IS AT OPERATING TEMPERATURE OR HOT UNDER PRESSURE; PERSONAL INJURY CAN RESULT. AVOID RADIATOR COOLING FAN WHEN ENGINE COMPARTMENT RELATED SERVICE IS PERFORMED; PERSONAL INJURY CAN RESULT.**

WARNING: **WEAR APPROPRIATE EYE AND HAND PROTECTION WHEN PERFORMING THIS PROCEDURE.**

NOTE: **The service area where this procedure is performed should have a minimum shop air requirement of 80 PSI (5.5 bar) and should be equipped with an air dryer system.**

NOTE: **For best results, the radiator should be empty. The vehicle's heater control should be set to the heat position (ignition may need to be turned to the on position but do not start the motor).**

1. Refer to the Chrysler Pentastar Service Equipment (Chrysler PSE) Coolant Refiller #85-15-0650 or equivalent tool's operating manual for specific assembly steps.
2. Choose an appropriate adapter cone that will fit the vehicle's radiator filler neck or reservoir tank.
3. Attach the adapter cone (2) to the vacuum gauge (1).

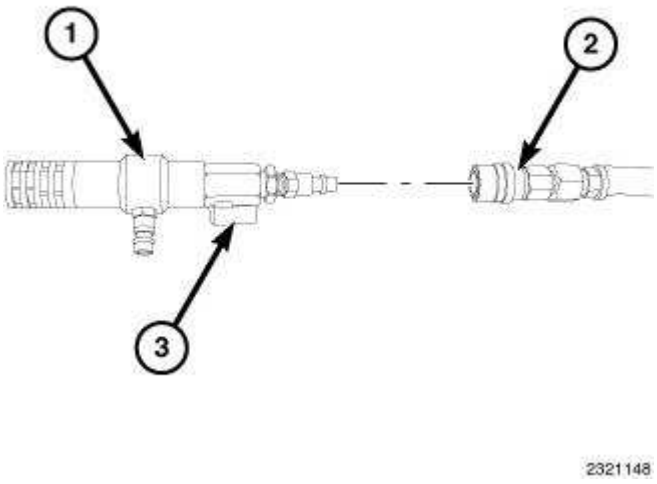

Fig. 50: Vacuum Generator/Venturi Ball Valve
Courtesy of CHRYSLER LLC

4. Make sure the vacuum generator/venturi ball valve (3) is closed and attach an airline hose (2) (minimum shop air requirement of 80 PSI/5.5 bar) to the vacuum generator/venturi (1).
5. Position the adaptor cone/vacuum gauge assembly into the radiator filler neck or reservoir tank. Ensure that the adapter cone is sealed properly.

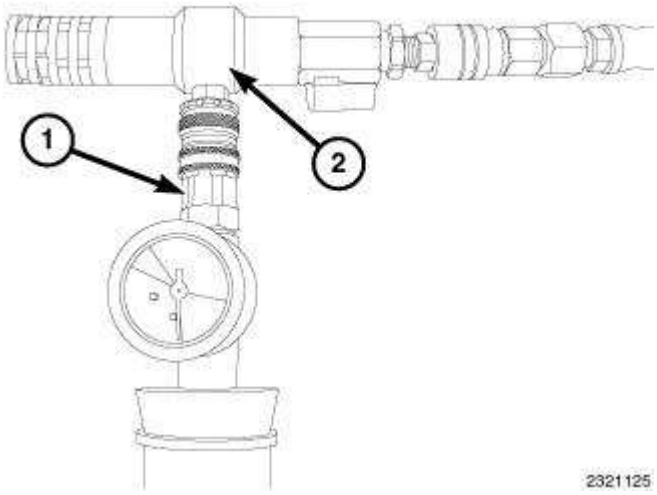

Fig. 51: Vacuum Generator/Venturi
Courtesy of CHRYSLER LLC

6. Connect the vacuum generator/venturi (2) to the positioned adaptor cone/vacuum gauge assembly (1).
7. Open the vacuum generator/venturi ball valve.

NOTE: **Do not bump or move the assembly as it may result in loss of vacuum. Some radiator overflow hoses may need to be clamped off to obtain vacuum.**

8. Let the system run until the vacuum gauge shows a good vacuum through the cooling system. Refer to the tool's operating manual for appropriate pressure readings.

NOTE: **If a strong vacuum is being created in the system, it is normal to see the radiator hoses have collapsed.**

9. Close the vacuum generator/venturi ball valve.

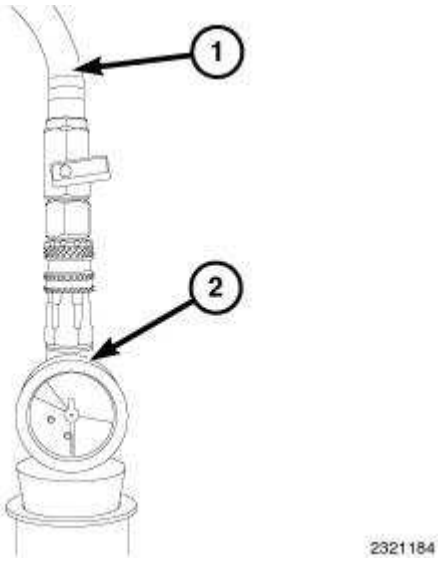

Fig. 52: Vacuum Generator/Venturi And Air Line
Courtesy of CHRYSLER LLC

10. Disconnect the vacuum generator/venturi and airline from the adaptor cone/vacuum gauge assembly.
11. Wait approximately 20 seconds, if the pressure readings do not move, the system has no leaks. If the pressure readings move, a leak could be present in the system and the cooling system should be checked for leaks and the procedure should be repeated.
12. Place the tool's suction hose into the coolant's container.

NOTE: **Ensure there is a sufficient amount of coolant, mixed to the required strength/protection level available for use. For best results and to assist the refilling procedure, place the coolant container at the same height as the radiator filler neck. Always draw more coolant than required. If the coolant level is too low, it will pull air into the cooling system which could result in airlocks in the system.**

13. Connect the tool's suction hose (1) to the adaptor cone/vacuum gauge assembly (2).

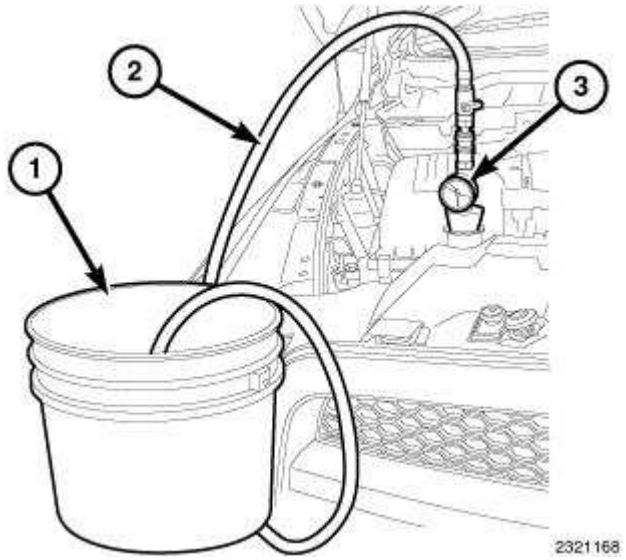

Fig. 53: Suction Hose Ball Valve
Courtesy of CHRYSLER LLC

14. Open the suction hose's ball valve to begin refilling the cooling system.
15. When the vacuum gauge reads zero, the system is filled.

NOTE: On some remote pressurized tanks, it is recommended to stop filling when the proper level is reached.

16. Close the suction hose's ball valve and remove the suction hose from the adaptor cone/vacuum gauge assembly.
17. Remove the adaptor cone/vacuum gauge assembly from the radiator filler neck or reservoir tank.
18. With heater control unit in the HEAT position, operate engine with container cap in place.
19. After engine has reached normal operating temperature, shut engine off and allow it to cool. When engine is cooling down, coolant will be drawn into the radiator from the pressure container.
20. Add coolant to the recovery bottle/container as necessary. **Only add coolant to the container when the engine is cold. Coolant level in a warm engine will be higher due to thermal expansion.** Add necessary coolant to raise container level to the COLD MINIMUM mark after each cool down period.
21. Once the appropriate coolant level is achieved, attach the radiator cap or reservoir tank cap.

Removal

3.5L ENGINE

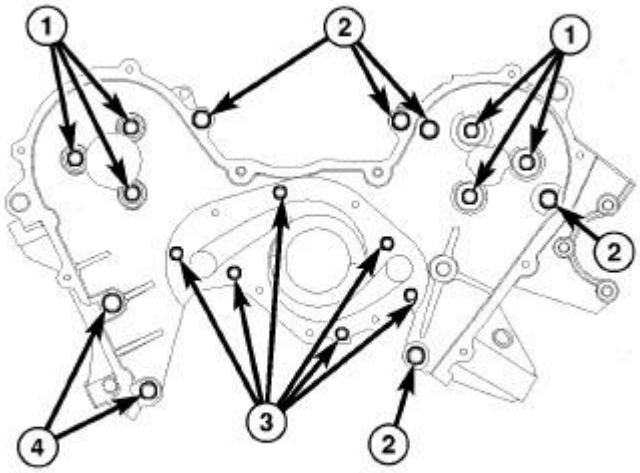

Fig. 54: Timing Belt Rear Cover
Courtesy of CHRYSLER LLC

1 - M8 FASTENERS (APPLY THREAD SEALANT)
2 - M10 FASTENERS
3 - M6 FASTENERS
4 - M10 FASTENERS (STUD/NUT)

The water pump on all models can be replaced without discharging the air conditioning system.

1. Drain cooling system. See **Cooling - Standard Procedure**.
2. Remove accessory drive belts. See **Cooling/Accessory Drive/BELT, Serpentine - Removal**.
3. Remove engine timing belt. Refer to **Engine/Valve Timing/BELT and SPROCKETS, Timing - Removal** .
4. Remove water pump mounting bolts (3). Note position of longer bolts for proper reinstallation.
5. Remove water pump body from engine.

5.7L ENGINE

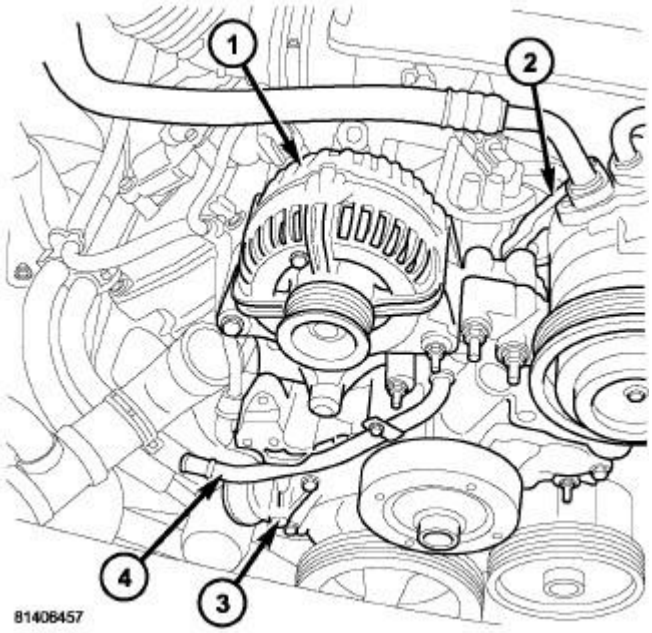

Fig. 55: Generator, A/C Compressor & Water Pump - 5.7L
Courtesy of CHRYSLER LLC

1 - GENERATOR
2 - A/C COMPRESSOR
3 - WATER PUMP
4 - HEATER BYPASS TUBE

1. Disconnect the negative battery cable.
2. Drain the cooling system. See **Cooling - Standard Procedure**.
3. Remove the fan/viscous fan drive assembly from the water pump. See **Cooling/Engine/FAN, Cooling - Removal**. Do not attempt to remove the fan/viscous fan drive assembly from vehicle at this time.
4. If the water pump is being replaced, do not unbolt the fan blade assembly from the thermal viscous fan drive.
5. Remove the two fan shroud-to-radiator screws. Disconnect the coolant overflow hose, windshield washer fluid hose and washer pump electrical connector.
6. Remove the fan shroud and the fan blade/viscous fan drive assembly from the vehicle.
7. Remove A/C compressor and generator brace.
8. Remove idler pulleys. See **Cooling/Accessory Drive/PULLEY, Idler - Removal**.
9. Remove the belt tensioner assembly. See **Cooling/Accessory Drive/TENSIONER, Belt - Removal**.
10. Remove the upper and lower radiator hoses.
11. Remove the heater hoses.

12. Remove the water pump mounting bolts and remove the pump.

6.1L ENGINE

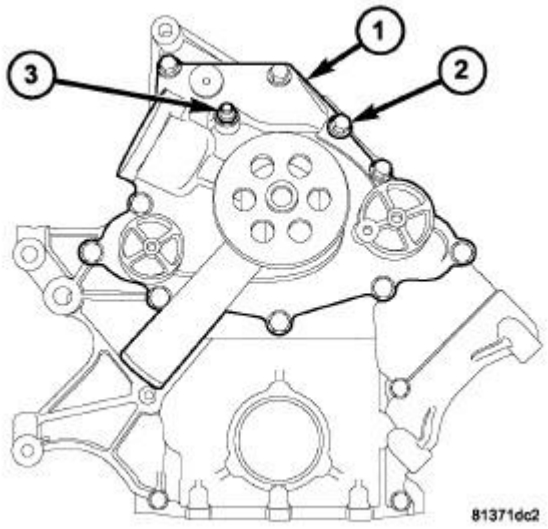

Fig. 56: Water Pump - 5.7L/6.1L
Courtesy of CHRYSLER LLC

1 - WATER PUMP ASSEMBLY 2 - BOLT 3 - DOUBLE ENDED BOLT

1. Disconnect negative battery cable.
2. Drain cooling system. See **Cooling - Standard Procedure**.
3. Remove radiator fan assembly. See **Cooling/Engine/FAN, Cooling - Removal**.
4. Remove accessory drive belt. See **Cooling/Accessory Drive/BELT, Serpentine - Removal**.
5. Remove thermostat. See **Cooling/Engine/THERMOSTAT - Removal**.

NOTE: The water pump mounting bolts (2) are different lengths. Note the location of the water pump mounting bolts (2).

6. Remove water pump mounting bolts (2) and remove water pump (1).

Inspection

WATER PUMP

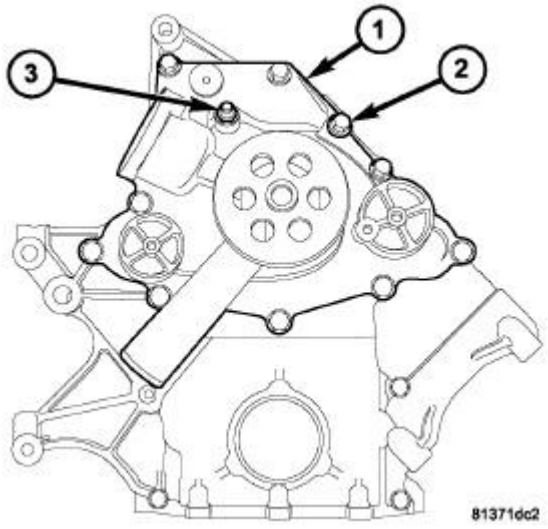

Fig. 57: Water Pump - 5.7L/6.1L
Courtesy of CHRYSLER LLC

1 - WATER PUMP ASSEMBLY 2 - BOLT 3 - DOUBLE ENDED BOLT

Inspect and replace the water pump if it has any of the following defects:

1. Damage or cracks on the pump body.

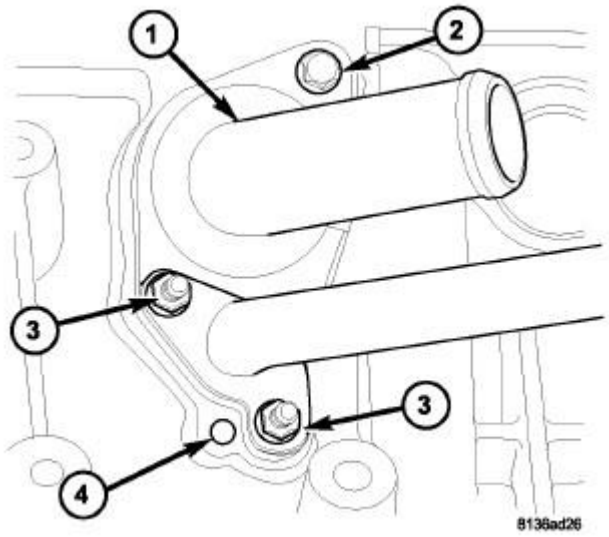

Fig. 58: Thermostat Housing/Coolant Inlet, Fasteners & Weep Hole
Courtesy of CHRYSLER LLC

1 - THERMOSTAT HOUSING/COOLANT INLET 2 - BOLT 3 - NUT 4 - WEEP HOLE

2. Coolant leaks: If the shaft seal is leaking, this will be evident by traces of thick deposits of dried glycol running down from the pump primary weep passage. A thin black stain below the pump primary weep hole/passage is considered normal operation.

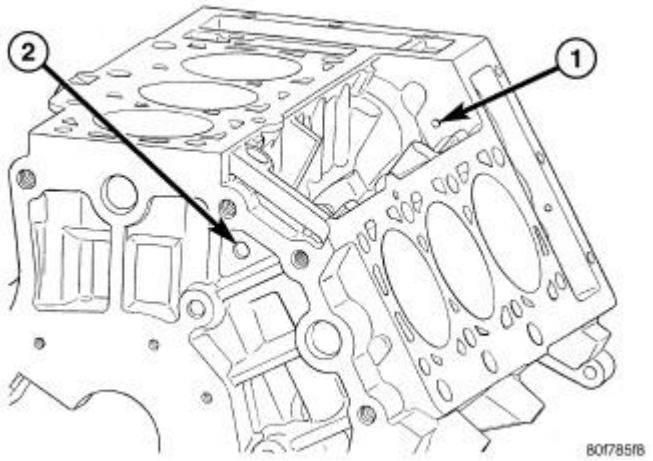

Fig. 59: Weep Passage To Valley Of Block & Drain Hole In Rear Of Block
Courtesy of CHRYSLER LLC

1 - WEEP PASSAGE TO VALLEY OF BLOCK 2 - HOLE IN REAR OF BLOCK

3. Coolant leaks: If the pump primary weep passage is plugged, coolant may come from the secondary weep passage and collect in the valley of the engine. The coolant will eventually run out the back side of the engine. Leakage from the secondary weep passage may give false indications that core plug(s) may be leaking on the back side of the engine block. If this condition is found, clean the primary weep passage of debris.

NOTE: **It is normal for the water pump to weep a small amount of coolant from the primary weep hole (black stain at weep passage). Do not replace the water pump if this condition exists. Replace the water pump if a heavy deposit or a steady flow of engine coolant is evident from the primary weep passage. This indicates a shaft seal failure and pump must be replaced. Coolant may leak from the secondary weep passage and fill the valley of the engine. If this condition is found, clean the primary weep passage of debris. Be sure to perform a thorough analysis before replacing water pump.**

4. Impeller rubs inside of cylinder block.

5. Excessively loose or rough turning bearing.

Installation

3.5L ENGINE

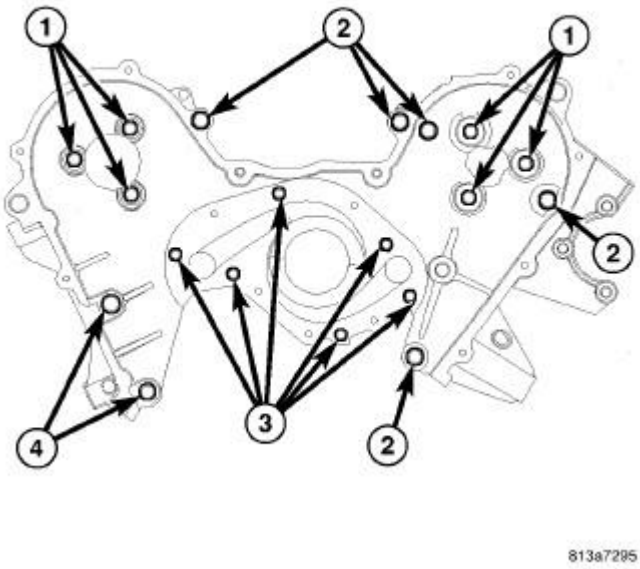

Fig. 60: Timing Belt Rear Cover
Courtesy of CHRYSLER LLC

1 - M8 FASTENERS (APPLY THREAD SEALANT)
2 - M10 FASTENERS
3 - M6 FASTENERS
4 - M10 FASTENERS (STUD/NUT)

1. Clean all O-ring surfaces on front cover.
2. Position water pump and O-ring to engine.
3. Install mounting bolts (3). Tighten to 12 N.m (105 in. lbs.).
4. Install timing belt. Refer to **Engine/Valve Timing/BELT and SPROCKETS, Timing - Installation** .
5. Install accessory drive belts. See **Cooling/Accessory Drive/BELT, Serpentine - Installation**.
6. Evacuate air and refill cooling system. See **Cooling/Engine/PUMP, Water - Standard Procedure**.
7. Check cooling system for leaks. See **Cooling - Diagnosis and Testing**.

5.7L

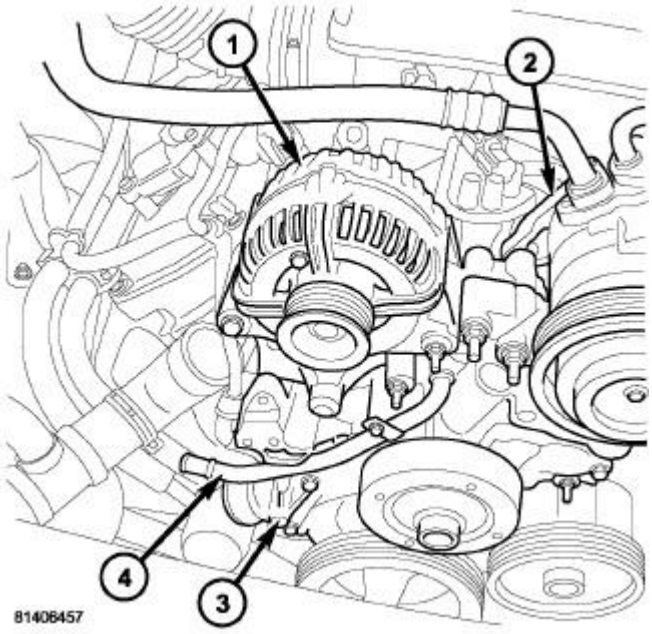

Fig. 61: Generator, A/C Compressor & Water Pump - 5.7L
Courtesy of CHRYSLER LLC

1 - GENERATOR 2 - A/C COMPRESSOR 3 - WATER PUMP 4 - HEATER BYPASS TUBE

1. Install the water pump and the mounting bolts. Tighten mounting bolts to 24 N.m (18 ft. lbs.).
2. Install the heater hoses.
3. Install the upper and lower radiator hoses.
4. Install the accessory drive belt tensioner assembly. See **Cooling/Accessory Drive/TENSIONER, Belt - Installation**.
5. Install the idler pulleys and mounting bolts. Tighten the bolts to 54 N.m (40 ft. lbs.).
6. Install the A/C compressor and the alternator brace. Tighten bolt and nuts to 28 N.m (21 ft. lbs.).
7. Install the fan shroud assembly and two fan shroud mounting screws.
8. Install the fan/viscous drive assembly. See **Cooling/Engine/FAN, Cooling - Installation**.
9. Make sure there is at least 25 mm (1.0 inches) between the tips of the fan blades and the fan shroud.
10. Install the accessory drive belt. See **Cooling/Accessory Drive/BELT, Serpentine - Installation**.
11. Connect the negative battery cable.
12. Evacuate air and refill cooling system. See **Cooling/Engine/PUMP, Water - Standard Procedure**.

13. Check cooling system for leaks. See **Cooling - Diagnosis and Testing**.

6.1L

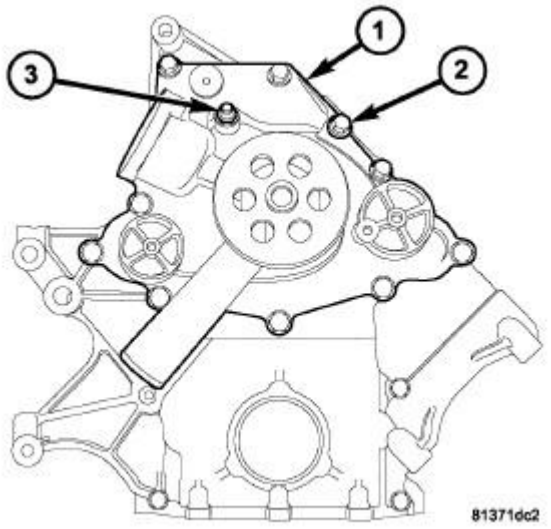

Fig. 62: Water Pump - 5.7L/6.1L
Courtesy of CHRYSLER LLC

1 - WATER PUMP ASSEMBLY 2 - BOLT 3 - DOUBLE ENDED BOLT

1. Install water pump and mounting bolts (2). Tighten mounting bolts to 28 N.m (20 ft. lbs.).
2. Make sure double ended bolt (3) is in the proper location. Tighten double ended bolt to 28 N.m (20 ft. lbs.).
3. Install thermostat. See **Cooling/Engine/THERMOSTAT - Installation**.
4. Install accessory drive belt. See **Cooling/Accessory Drive/BELT, Serpentine - Installation**.
5. Install the radiator fan assembly. See **Cooling/Engine/FAN, Cooling - Installation**.
6. Connect negative battery cable.
7. Evacuate air and refill cooling system. See **Cooling/Engine/PUMP, Water - Standard Procedure**
8. Check cooling system for leaks. See **Cooling - Diagnosis and Testing**

RADIATOR, ENGINE COOLING

Removal

REMOVAL

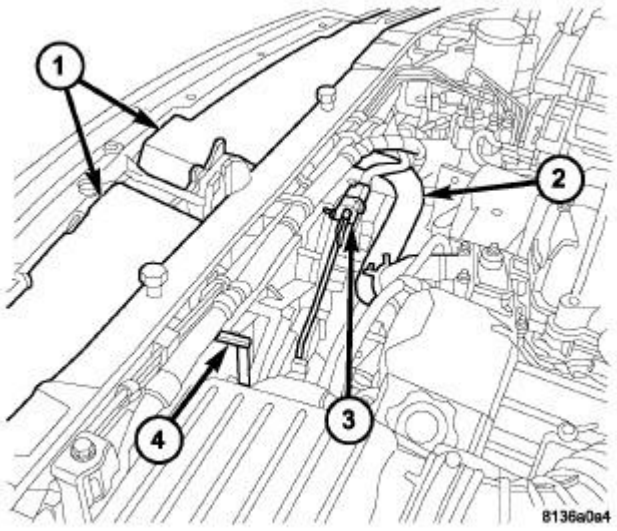

Fig. 63: Radiator Fan Assembly
Courtesy of CHRYSLER LLC

1 - UPPER RADIATOR CLOSURE PANELS
2 - UPPER RADIATOR HOSE
3 - RADIATOR FAN ELECTRICAL CONNECTOR
4 - RADIATOR FAN ASSEMBLY

1. Disconnect negative battery cable.
2. Drain cooling system. See **Cooling - Standard Procedure**.
3. Remove upper radiator hose (2).
4. Remove upper radiator closure panels (1).
5. Remove radiator fan assembly (4). See **Cooling/Engine/FAN, Cooling - Removal**.

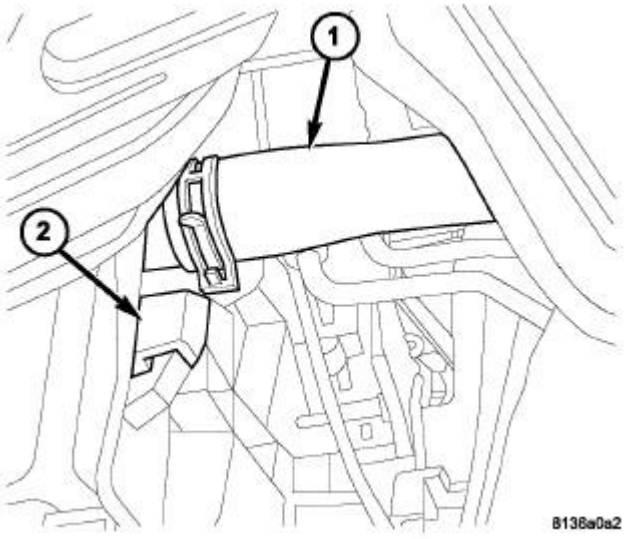

Fig. 64: Lower Radiator Hose
Courtesy of CHRYSLER LLC

1 - LOWER RADIATOR HOSE 2 - RADIATOR FAN ASSEMBLY

6. Raise vehicle.
7. Remove lower splash shield.
8. Remove lower radiator hose (1).
9. Remove lower condenser mount bolts.

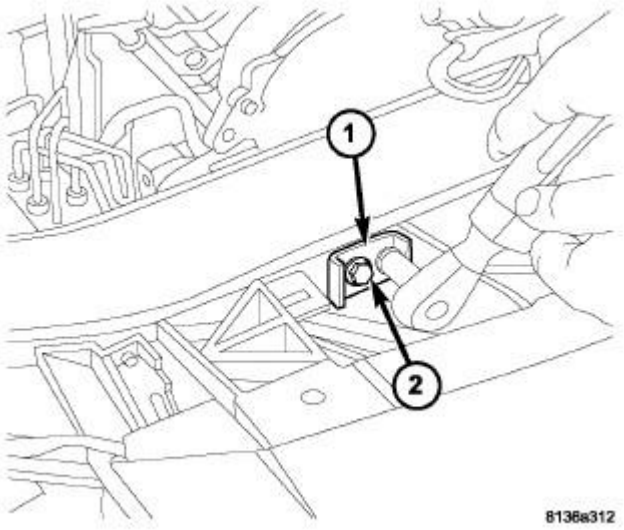

Fig. 65: Radiator Mounting Bracket
Courtesy of CHRYSLER LLC

10. Lower vehicle.
11. Remove upper radiator hose.

CAUTION: Bolts are installed with threadlocker. Use hand tools to remove the upper radiator mounting bolts.

12. Remove upper radiator mounting brackets (1) and bolts (2).
13. Remove upper condenser mounting bolts.
14. Separate condenser assembly from radiator.
15. Tilt radiator toward engine and remove radiator from vehicle.

Cleaning

CLEANING

Clean radiator fins are necessary for good heat transfer. The radiator and air conditioning fins should be cleaned when an accumulation of debris has occurred. With the engine cold, apply cold water and compressed air to the back (engine side) of the radiator to flush the radiator and/or A/C condenser of debris.

Inspection

INSPECTION

Inspect the radiator tanks for cracks, broken or missing fittings also inspect the joint where the tanks seam up to the radiator core for signs of leakage and/or deteriorating seals.

Inspect radiator core for corroded, bent or missing cooling fins. Inspect the core for bent or damaged cooling tubes.

Installation

INSTALLATION

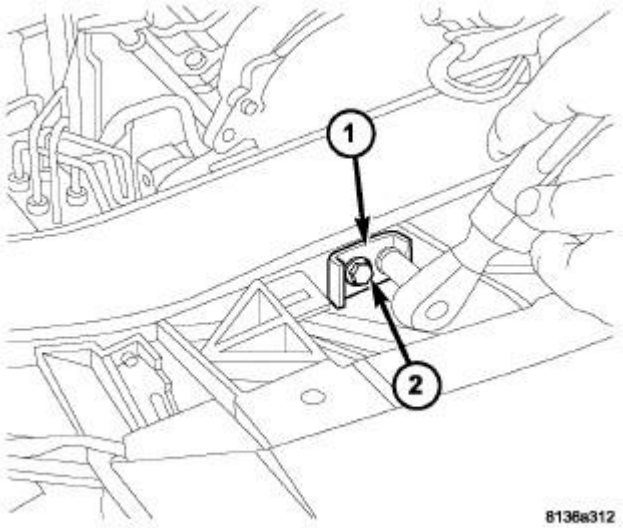

Fig. 66: Radiator Mounting Bracket
Courtesy of CHRYSLER LLC

1. Position the radiator into engine compartment. Seat the radiator assembly lower rubber isolators into the mounting holes in radiator lower support.
2. Install the radiator mounting bracket (1) and bolts (2). Tighten to 12 N.m (106 in. lbs.).
3. Position the condenser on radiator and install upper mounting bolts. Tighten bolts to 6 N.m (50 in. lbs.).
4. Raise the vehicle.

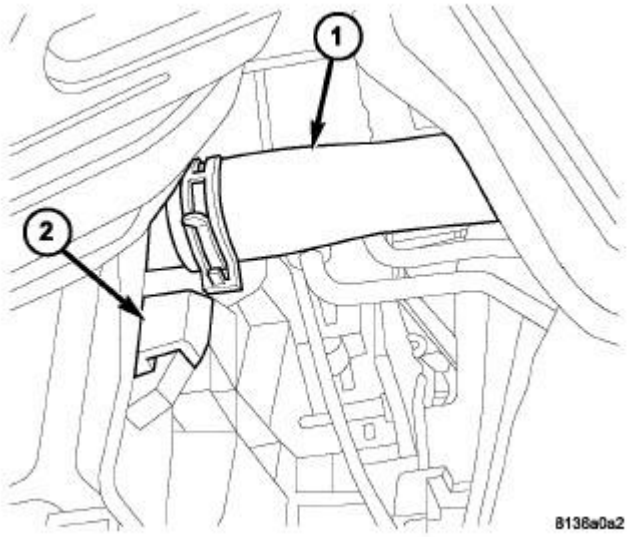

Fig. 67: Lower Radiator Hose
Courtesy of CHRYSLER LLC

1 - LOWER RADIATOR HOSE 2 - RADIATOR FAN ASSEMBLY

5. Install the lower condenser mounting bolts. Tighten bolts to 10 N.m (88 in. lbs.)
6. Install the lower radiator hose (1) and clamp.
7. Lower the vehicle.

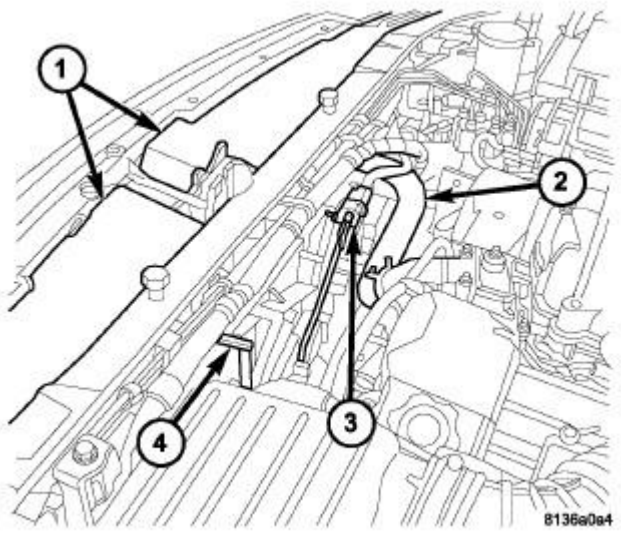

Fig. 68: Radiator Fan Assembly
Courtesy of CHRYSLER LLC

1 - UPPER RADIATOR CLOSURE PANELS 2 - UPPER RADIATOR HOSE 3 - RADIATOR FAN ELECTRICAL CONNECTOR 4 - RADIATOR FAN ASSEMBLY

8. Install the radiator fan. See **Cooling/Engine/FAN, Cooling - Installation**.
9. Install the upper radiator upper hose. Align hose so it does not interfere with the accessory drive belt or engine. Position hose clamp so it will not interfere with the hood.
10. Install the upper radiator closure panels.
11. Connect the negative cable.
12. Fill the cooling system with coolant. See **Cooling - Standard Procedure**.
13. Operate the engine until it reaches normal operating temperature. Check the cooling system and automatic transmission for the correct fluid levels.

SENSOR, COOLANT TEMPERATURE

Removal

3.5L

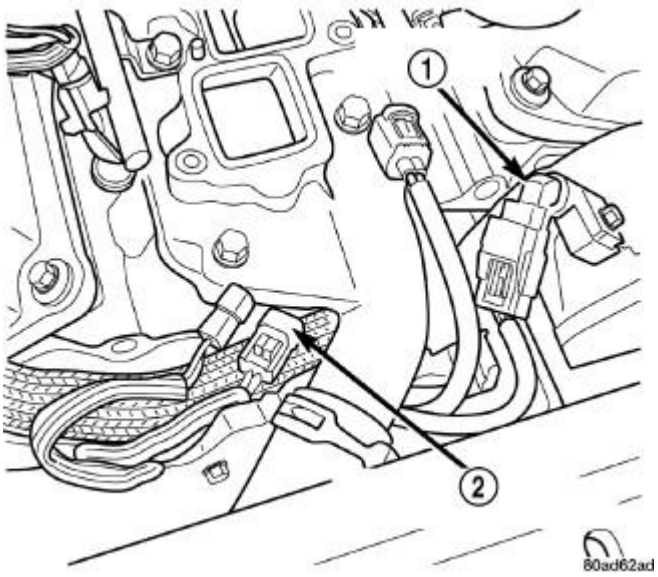

Fig. 69: Engine Coolant Temperature Sensor - 3.5L
Courtesy of CHRYSLER LLC

1 - CAMSHAFT POSITION SENSOR 2 - ENGINE COOLANT TEMPERATURE SENSOR

1. Disconnect negative battery cable.
2. Partially drain cooling system. See **Cooling - Standard Procedure**.
3. With the engine cold, disconnect coolant sensor electrical connector.
4. Remove sensor (2).

5.7L

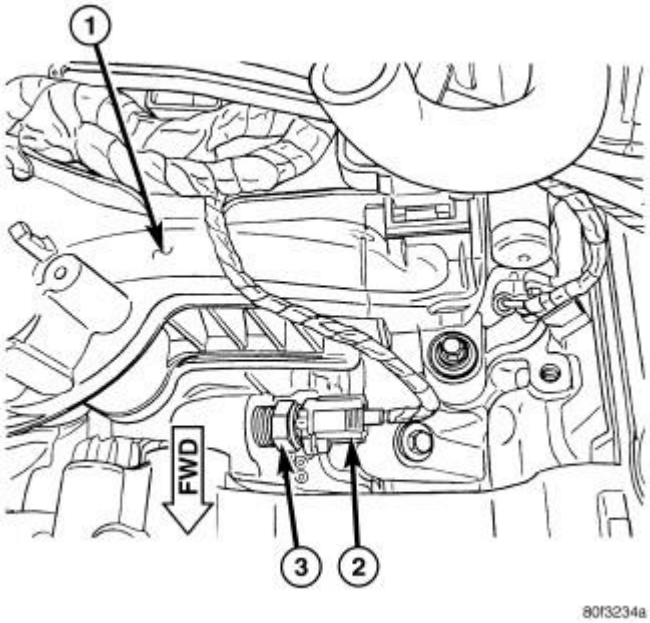

Fig. 70: Removing/Installing ECT
Courtesy of CHRYSLER LLC

1. Partially drain the cooling system. See **Cooling - Standard Procedure**.
2. Remove the accessory drive belt. See **Cooling/Accessory Drive/BELT, Serpentine - Removal**.
3. Carefully unbolt the air conditioning compressor from the front of engine. Do not disconnect any A/C hoses from the compressor. Temporarily support the compressor to gain access to the ECT sensor (3).
4. Disconnect the electrical connector (2) from the sensor (3).
5. Remove the sensor (3) from cylinder block cylinder block.

6.1L

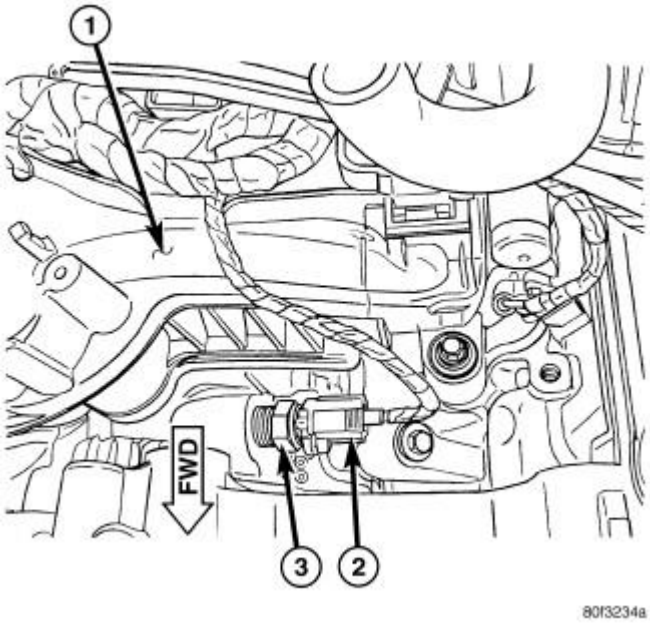

Fig. 71: Removing/Installing ECT Sensor - 5.7L/6.1L
Courtesy of CHRYSLER LLC

1. Partially drain the cooling system. See **Cooling - Standard Procedure**.
2. Remove accessory drive belt. See **Cooling/Accessory Drive/BELT, Serpentine - Removal**.
3. Carefully unbolt air conditioning compressor from front of engine. Do not disconnect any A/C hoses from compressor. Temporarily support compressor to gain access to ECT sensor (3).
4. Disconnect electrical connector (2) from sensor (3).
5. Remove sensor (3) from cylinder block.

Installation

3.5L

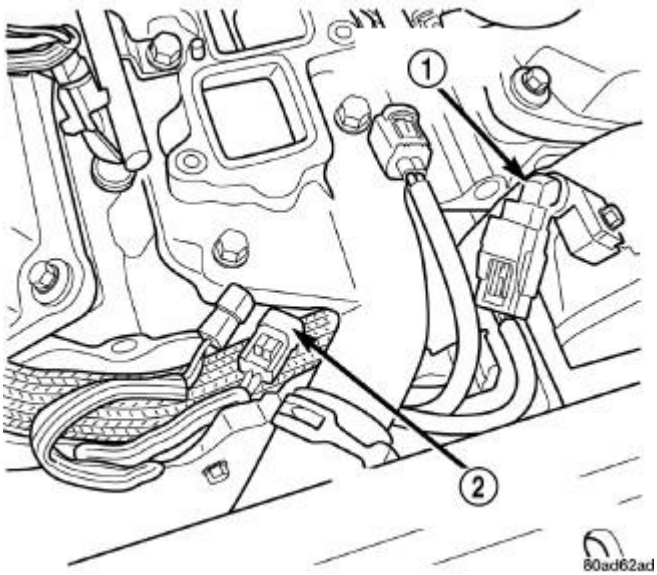

Fig. 72: Engine Coolant Temperature Sensor - 3.5L
Courtesy of CHRYSLER LLC

1 - CAMSHAFT POSITION SENSOR 2 - ENGINE COOLANT TEMPERATURE SENSOR

1. Install engine coolant temperature sensor (2). Tighten sensor to 28 N.m (20 ft. lbs.).
2. Attach electrical connector to sensor.
3. Connect negative battery cable.

5.7L

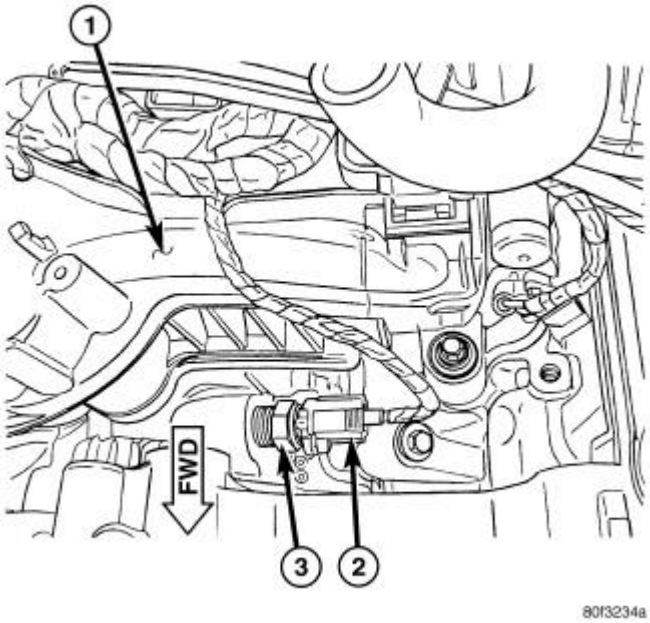

Fig. 73: Removing/Installing ECT - 5.7L
Courtesy of CHRYSLER LLC

1. Apply thread sealant to ECT sensor threads.
2. Install the ECT sensor (3) to the engine.
3. Tighten the ECT sensor to 11 N.m (97.3 in. lbs.).
4. Connect the electrical connector (2).
5. Fill the cooling system. See **Cooling - Standard Procedure**.

6.1L

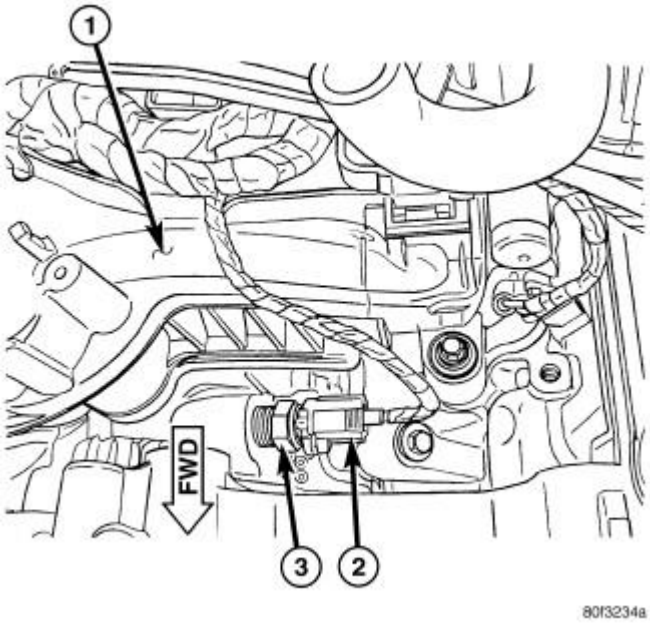

Fig. 74: Removing/Installing ECT - 5.7L/6.1L
Courtesy of CHRYSLER LLC

1. Apply thread sealant to sensor threads.
2. Install ECT sensor (3) to engine.
3. Tighten sensor to 11 N.m (98 in. lbs.).
4. Connect electrical connector (2) to ECT sensor (3).
5. Fill the cooling system. See **Cooling - Standard Procedure**.

THERMOSTAT

Description

DESCRIPTION

The engine cooling thermostats are a wax pellet driven, reverse poppet choke type. The thermostats have an air bleed located in the thermostat flange. The air bleed allows internal trapped air during cooling system filling to be released. The thermostat on the 2.7L and 3.5L engines are located on the lower left side of engine, near the front. The thermostat on both engines are on the inlet side of the water pump.

The thermostat on the 5.7L/6.1L engine is located beneath the thermostat housing (1) at the front of the intake manifold.

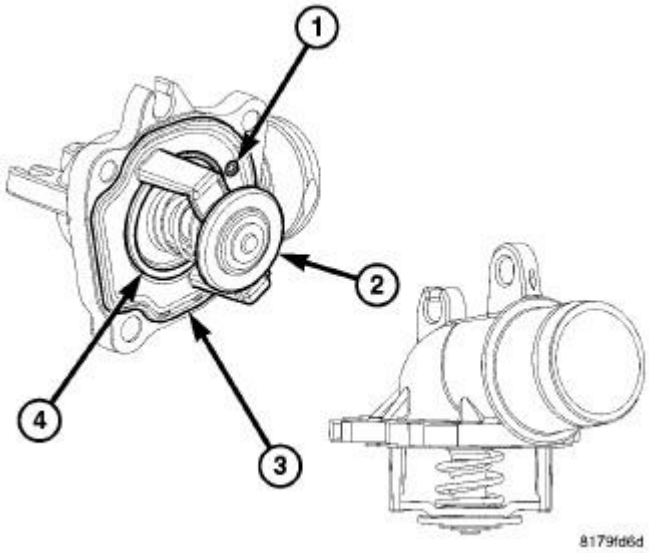

Fig. 75: Thermostat - Typical
Courtesy of CHRYSLER LLC

1 - VENT VALVE 2 - BYPASS VALVE
3 - THERMOSTAT HOUSING SEAL
4 - MAIN VALVE

The thermostat on the 3.0L Diesel engine is integrated into the thermostat housing located at the front of the right intake manifold and is serviced as an assembly. A rubber seal is used to seal the thermostat housing to the intake manifold. The thermostat contains the following components:

- Main Valve (4) - Controls coolant flow through the radiator
- Bypass Valve (2) - Controls coolant flow through the bypass passage to the inlet side of the water pump
- Vent Valve (1) - Vents the cooling system via a ball valve when it is filled and when the engine is running
- Thermostat Housing Seal (3)

Operation

OPERATION

WARM-UP PHASE

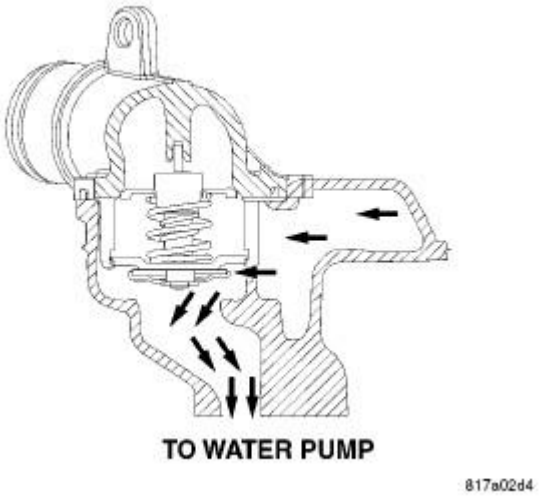

Fig. 76: Warm-Up Phase
Courtesy of CHRYSLER LLC

Up to a coolant temperature of approximately 87° C (189° F), the main valve is closed and the bypass valve fully open. The flow through the radiator is interrupted and coolant flows through the bypass passage directly to the inlet side of the water pump.

PARTIAL-LOAD PHASE

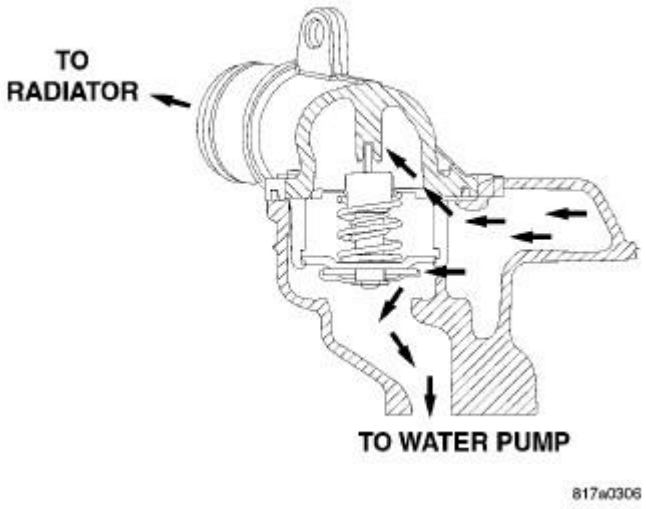

Fig. 77: Partial-Load Phase
Courtesy of CHRYSLER LLC

The main valve begins to open at a coolant temperature of 86° C (189° F), and a small amount of coolant flows through the radiator. As the engine temperature increases, the main valve opens further

and the bypass valve gradually closes. More coolant flows through the radiator and less coolant flows through the bypass passage.

FULL-LOAD PHASE

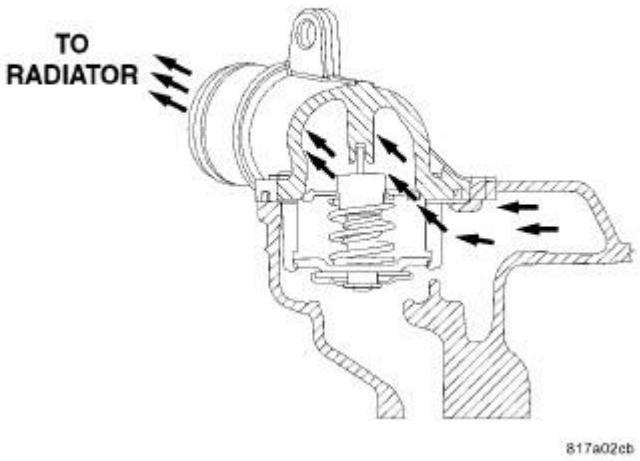

Fig. 78: Full-Load Phase
Courtesy of CHRYSLER LLC

The main valve is fully open at a coolant temperature above 102° C (216° F). The bypass plate seals off the bypass passage. The entire quantity of coolant flows through the radiator.

Diagnosis and Testing

ENGINE COOLANT THERMOSTAT

The thermostat is operated by a wax filled chamber (pellet) which is sealed. When heated coolant reaches a predetermined temperature the wax pellet expands enough to overcome the closing spring and water pump pressure, which forces the valve to open. Coolant leakage into the pellet will cause a thermostat to fail open. Do not attempt to free up a thermostat with a screwdriver.

Thermostat diagnostics is included in powertrain control module's (PCM) programing for on-board diagnosis. The malfunction indicator light (MIL) will illuminate and a diagnostic trouble code (DTC) will be set when an "open too soon" condition occurs. Do not change a thermostat for lack of heater performance or temperature gauge position, unless a DTC is present. For other probable causes. See **Cooling - Diagnosis and Testing**. Thermostat failing shut is the normal long term mode of failure, and normally, only on high mileage vehicles. The temperature gauge will indicate this. See **Cooling - Diagnosis and Testing**.

Removal

3.5L ENGINE

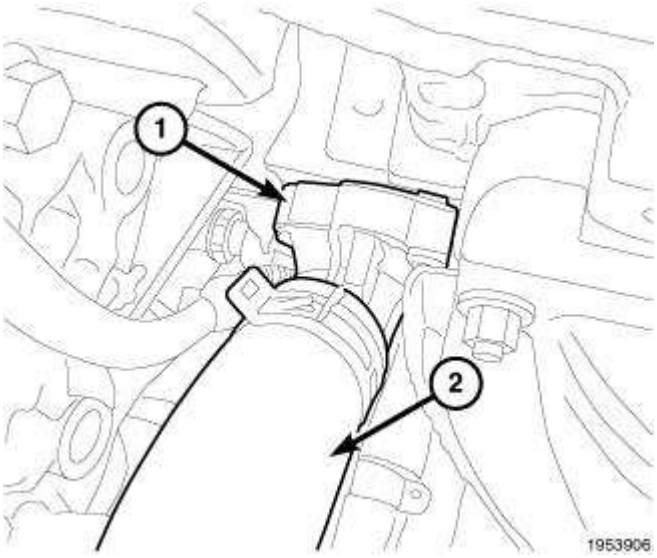

Fig. 79: Lower Radiator Hose And Thermostat Housing
Courtesy of CHRYSLER LLC

- 1 - THERMOSTAT 2 - RADIATOR HOSE

1. Disconnect negative battery cable.
2. Raise vehicle on hoist.
3. Remove belly pan. Refer to **Body/Exterior/BELLY PAN - Removal** .
4. Drain cooling system. See **Cooling - Standard Procedure**.
5. Lower vehicle on hoist.
6. Remove air box assembly. Refer to **Engine/Air Intake System/BODY, Air Cleaner - Removal** .
7. Disconnect lower radiator hose (2) from thermostat housing (1).
8. Remove thermostat housing bolts.
9. Remove thermostat housing (1), thermostat, and gasket.

NOTE: The OEM thermostat is staked in place at the factory. To ensure proper seating of replacement thermostat, carefully remove the bulged metal from the thermostat housing using a suitable hand held grinder. It is not necessary to restake the replacement thermostat into the thermostat housing.

10. Clean gasket surfaces.

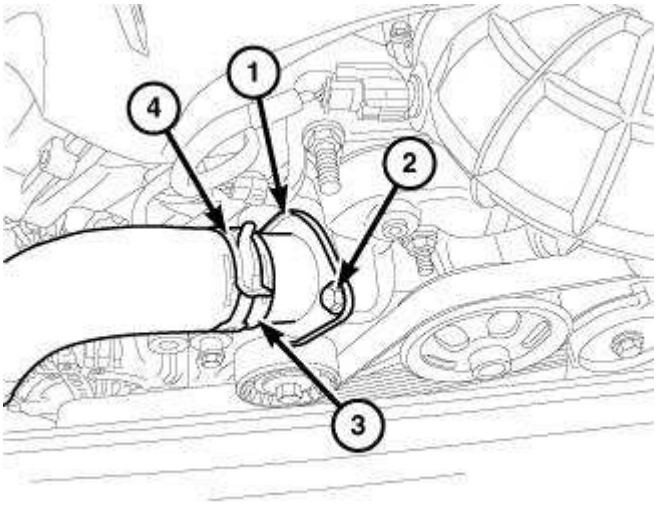

Fig. 80: Thermostat Housing, Radiator Hose & Mounting Bolts
Courtesy of CHRYSLER LLC

1. Disconnect the negative battery cable.
2. Drain the cooling system until the coolant level is below the thermostat. See **Cooling - Standard Procedure**.
3. Remove the radiator hose (3) from the thermostat housing (1).
4. Remove the thermostat housing mounting bolts (2), thermostat housing (1), and thermostat.

6.1L

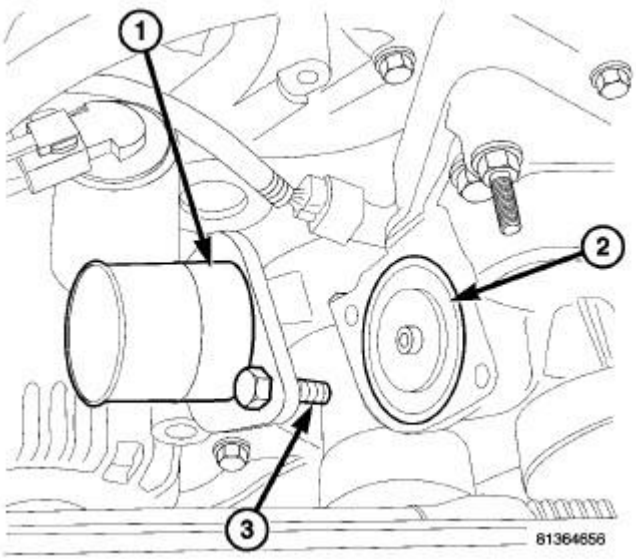

Fig. 81: Thermostat - 5.7L/6.1L
Courtesy of CHRYSLER LLC

1 - THERMOSTAT HOUSING
2 - THERMOSTAT
3 - BOLT

1. Disconnect negative battery cable at battery.
2. Drain cooling system. See **Cooling - Standard Procedure**.
3. Remove radiator hose at thermostat housing (1).

NOTE: Thermostat o-ring is part of thermostat (2) and is not serviced separately.

4. Remove thermostat housing mounting bolts (3), thermostat housing (1) and thermostat (2).

Installation

3.5L ENGINE

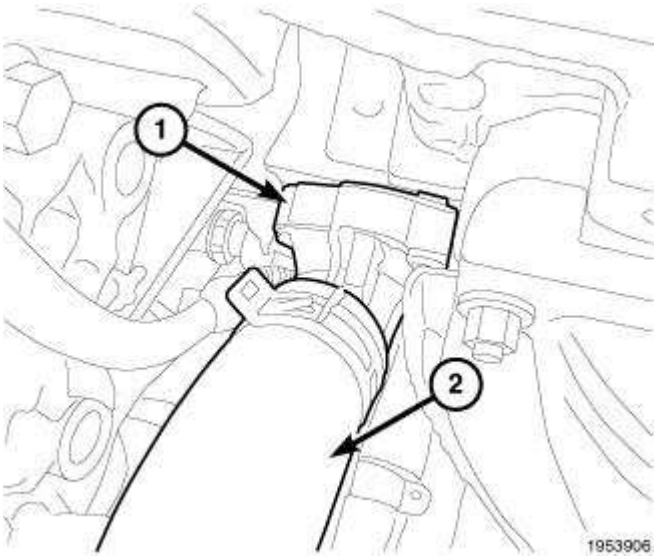

Fig. 82: Lower Radiator Hose And Thermostat Housing
Courtesy of CHRYSLER LLC

-
1 - THERMOSTAT
2 - RADIATOR HOSE

1. Position gasket on thermostat and housing (1).
2. Install thermostat housing (1), gasket and mounting bolts onto block. Tighten attaching bolts to 12 N.m (105 in. lbs.).
3. Install radiator hose (2).
4. Install air box assembly. Refer to **Engine/Air Intake System/BODY, Air Cleaner - Installation**
5. Fill cooling system. See **Cooling - Standard Procedure**.

6. Raise vehicle on hoist.
7. Install belly pan. Refer to **Body/Exterior/BELLY PAN - Installation**
8. Connect negative battery cable.

5.7L

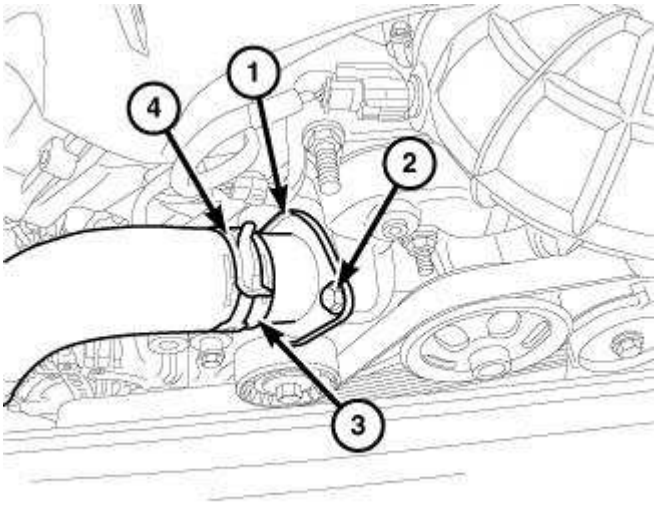

261774

Fig. 83: Thermostat Housing, Radiator Hose & Mounting Bolts
Courtesy of CHRYSLER LLC

1. Clean the mating areas of the intake manifold and thermostat housing (1).
2. Install the thermostat into the recessed machined groove on the front cover.
3. Install the housing-to-front cover bolts. Tighten the bolts to 23 N.m (200 in. lbs.).
4. Install the radiator upper hose (3) to the thermostat housing (1).
5. Fill the cooling system. See **Cooling - Standard Procedure**.
6. Connect the negative battery cable.
7. Start and warm the engine. Check for leaks.

6.1L

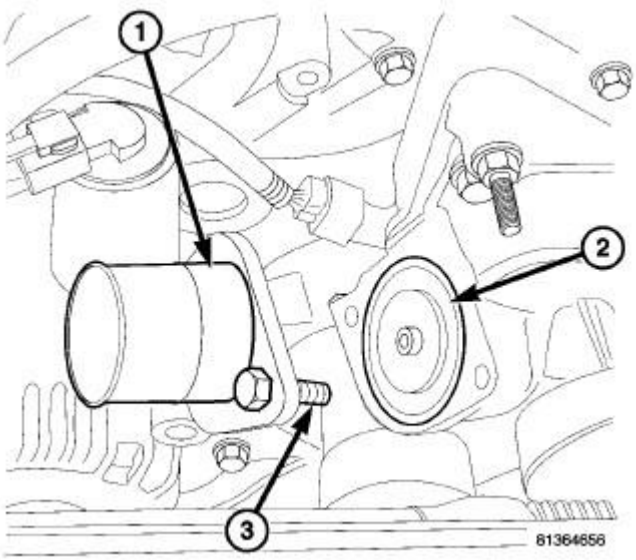

Fig. 84: Thermostat - 5.7L/6.1L
Courtesy of CHRYSLER LLC

1 - THERMOSTAT HOUSING 2 - THERMOSTAT 3 - BOLT

1. Clean mating areas of timing chain cover and thermostat housing (1).

NOTE: Install thermostat with the bleed valve located at the 12 o'clock position.

2. Install thermostat (2) (spring side down) into recessed machined groove on timing chain cover with bleed valve located at the 12 o'clock position.
3. Position thermostat housing (1) on timing chain cover.

CAUTION: Thermostat housing must be tightened evenly and thermostat (2) must be centered into recessed groove in timing chain cover. If not, it may result in a cracked thermostat housing (1), damaged timing chain cover threads or coolant leaks.

4. Install two housing-to-timing chain cover bolts (3). Tighten bolts to 13 N.m (112 in. lbs.) torque.
5. Install lower radiator hose on thermostat housing.
6. Lower vehicle.
7. Fill cooling system. See **Cooling - Standard Procedure**.
8. Connect negative battery cable to battery.
9. Start and warm the engine. Check for leaks.

TUBE, HEATER HOSE, SUPPLY

Removal

3.5L

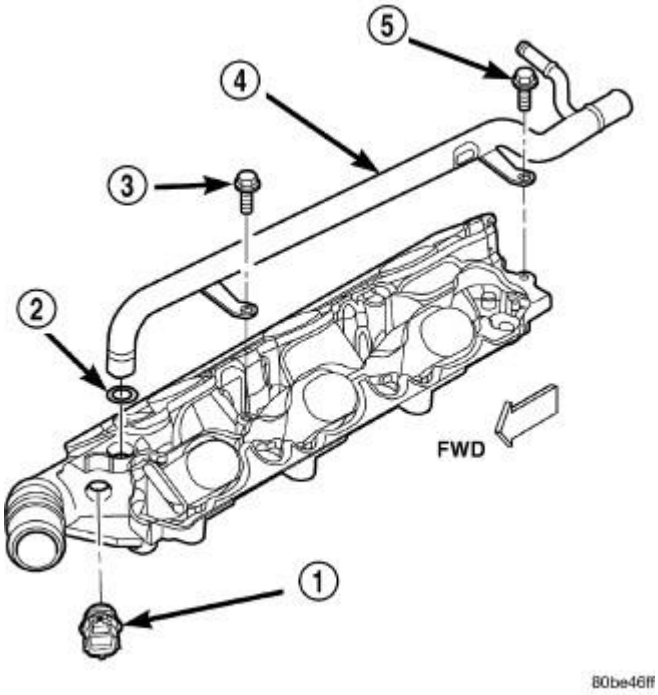

Fig. 85: Heater Supply Tube - 3.5L
Courtesy of CHRYSLER LLC

1 - COOLANT TEMPERATURE SENSOR
2 - O-RING
3 - BOLT
4 - HEATER SUPPLY TUBE
5 - BOLT

1. Drain cooling system. See **Cooling - Standard Procedure**.
2. Remove upper and lower intake manifold. Refer to **Engine/Manifolds/MANIFOLD, Intake - Removal** , and refer to **Engine/Manifolds/MANIFOLD, Intake - Removal** .
3. Position lower intake manifold upside down on bench and remove the tube retaining bolt (5).
4. Remove heater supply tube (4) from manifold and discard O-ring (2).

5.7L

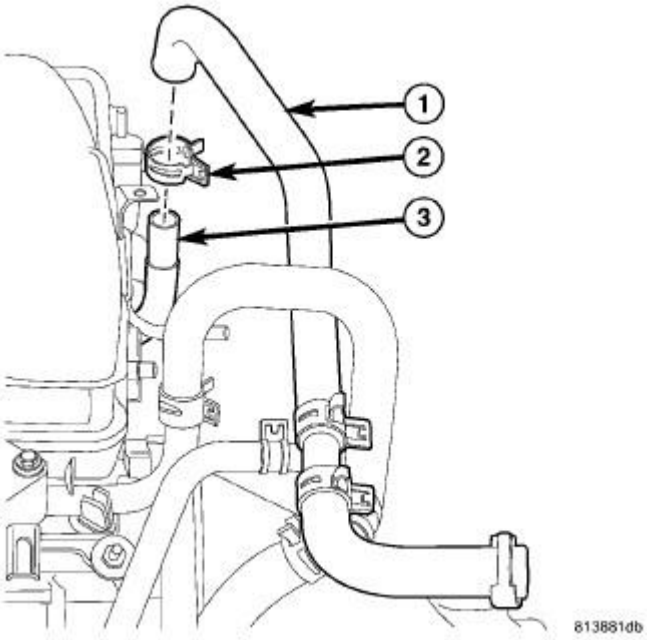

Fig. 86: Heater Hose - 5.7L/6.1L
Courtesy of CHRYSLER LLC

1 - Heater Hose 2 - Clamp 3 - Tube

1. Disconnect negative battery cable.
2. Drain cooling system. See **Cooling - Standard Procedure**.
3. Remove intake manifold. Refer to **Engine/Manifolds/MANIFOLD, Intake - Removal** .
4. Remove heater hoses from heater tubes.
5. Remove heater tube mounting bolts.
6. Remove heater tubes from water pump housing and remove from vehicle.

6.1L

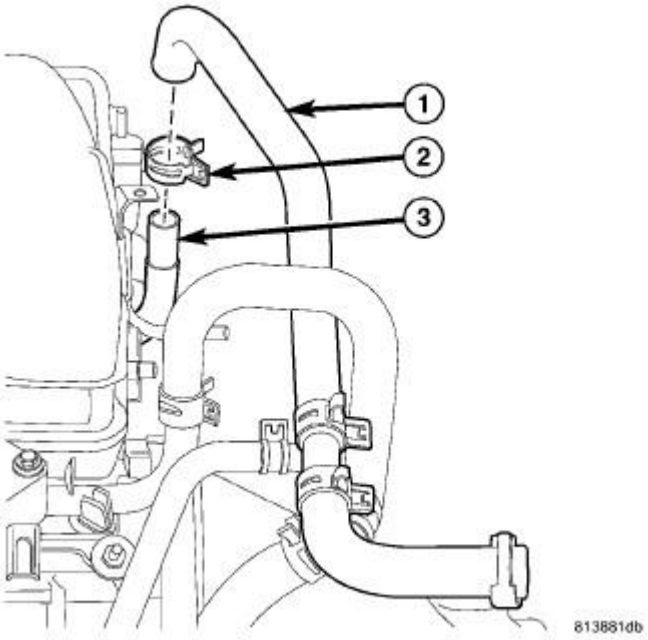

Fig. 87: Heater Hose - 5.7L/6.1L
Courtesy of CHRYSLER LLC

1 - Heater Hose 2 - Clamp 3 - Tube

1. Disconnect negative battery cable.
2. Drain cooling system. See **Cooling - Standard Procedure**.
3. Remove intake manifold. Refer to **Engine/Manifolds/MANIFOLD, Intake - Removal** .
4. Remove heater hoses from heater tubes.
5. Remove heater tube mounting bolts.
6. Remove heater tubes from water pump housing and remove from vehicle.

Installation

3.5L

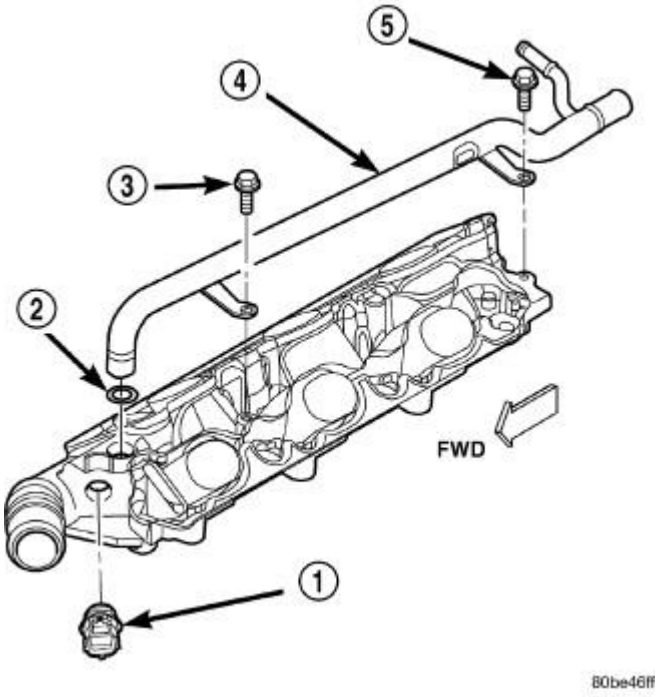

Fig. 88: Heater Supply Tube - 3.5L
Courtesy of CHRYSLER LLC

1 - COOLANT TEMPERATURE SENSOR
2 - O-RING
3 - BOLT
4 - HEATER SUPPLY TUBE
5 - BOLT

1. Clean heater tube sealing surfaces.
2. Inspect heater tube O-ring (2). Replace as necessary.
3. Lubricate O-ring (2) with a silicone type grease such as Mopar® Dielectric Grease.
4. Install O-ring (2) on heater supply tube (4).
5. Install heater tube (4) on manifold.
6. Install retaining bolts. Tighten bolts to 12 N.m (105 in. lbs.).
7. Install lower and upper intake manifolds. Refer to **Engine/Manifolds/MANIFOLD, Intake - Installation** , and refer to **Engine/Manifolds/MANIFOLD, Intake - Installation** .
8. Refill cooling system. See **Cooling - Standard Procedure**.
9. Operate engine until it reaches normal operating temperature. Check cooling system for correct fluid levels.

5.7L

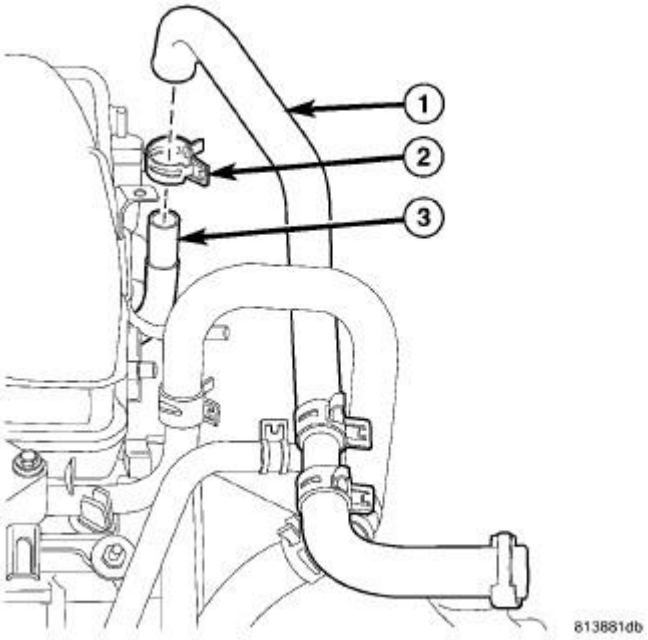

Fig. 89: Heater Hose - 5.7L/6.1L
Courtesy of CHRYSLER LLC

1 - Heater Hose 2 - Clamp 3 - Tube

1. Position heater tubes into water pump housing.
2. Install mounting bolts. Tighten bolts to 10 N.m (88 in. lbs.).
3. Install heater hose onto heater tubes.
4. Install intake manifold. Refer to **Engine/Manifolds/MANIFOLD, Intake - Installation** .
5. Connect negative battery cable.
6. Fill cooling system. See **Cooling - Standard Procedure**.
7. Start vehicle and check for cooling system leaks.

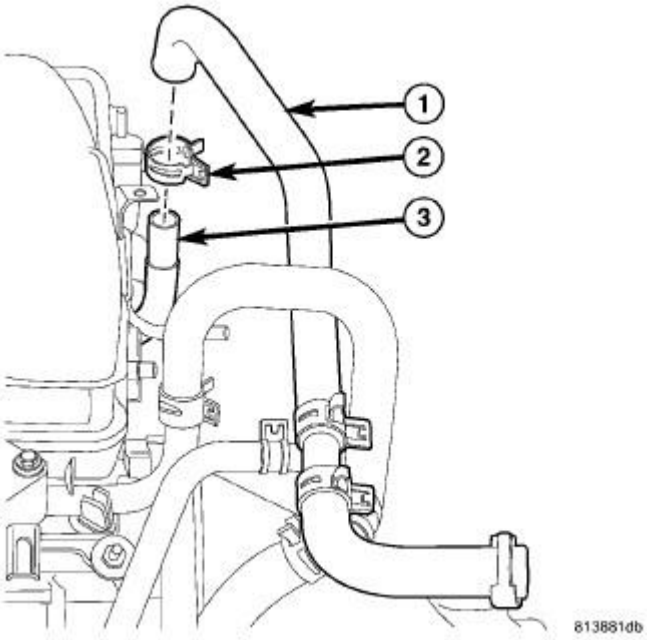

Fig. 90: Heater Hose - 5.7L/6.1L
Courtesy of CHRYSLER LLC

1 - Heater Hose 2 - Clamp 3 - Tube

1. Position heater tubes into water pump housing.
2. Install mounting bolts. Tighten bolts to 10 N.m (88 in. lbs.).
3. Install heater hose onto heater tubes.
4. Install intake manifold. Refer to **Engine/Manifolds/MANIFOLD, Intake - Installation** .
5. Connect negative battery cable.
6. Fill cooling system. See **Cooling - Standard Procedure**.
7. Start vehicle and check for cooling system leaks.

TRANSMISSION

STANDARD PROCEDURE

TRANSMISSION COOLER LINE QUICK CONNECT FITTING DISASSEMBLY/ASSEMBLY

DISCONNECT

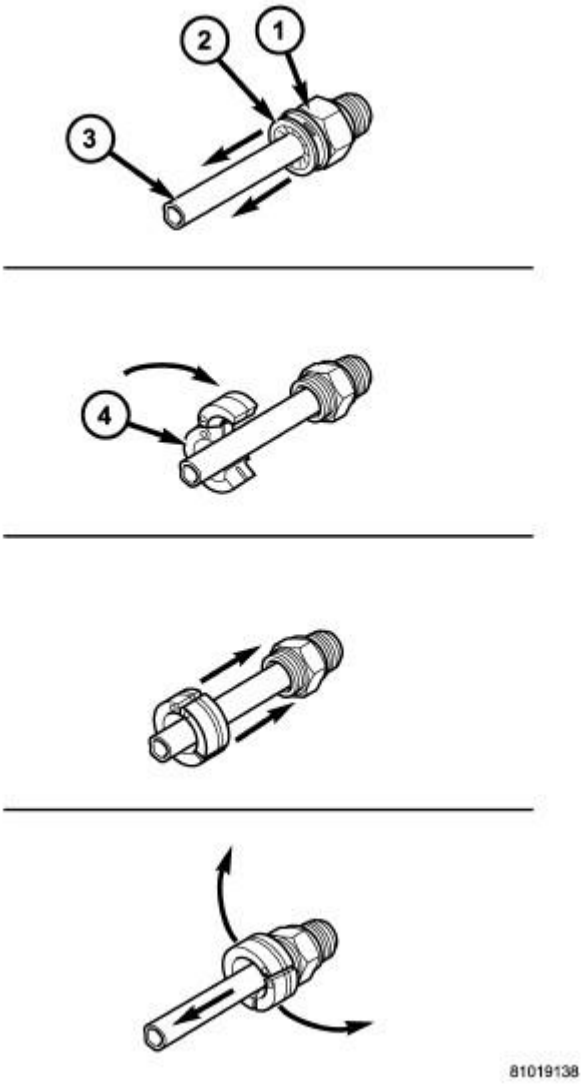

Fig. 91: Oil Cooler Line Quick Connect Fitting - Disassembly
Courtesy of CHRYSLER LLC

1 - QUICK CONNECT FITTING
2 - DUST CAP
3 - OIL COOLER LINE
4 - SPECIAL TOOL 8875A

1. Remove dust cap by pulling it straight back off of quick connect fitting.
2. Place disconnect tool 8875A onto transmission cooler line with the fingers of the tool facing the quick connect fitting.
3. Slide disconnect tool down the transmission line and engage the fingers of the tool into the retaining clip. When properly engaged in the clip, the tool will fit flush against the quick connect

fitting.

4. Rotate the disconnect tool 60° to expand the retaining clip.
5. While holding the disconnect tool against the quick connect fitting, pull back on the transmission cooler line to remove.

CONNECT

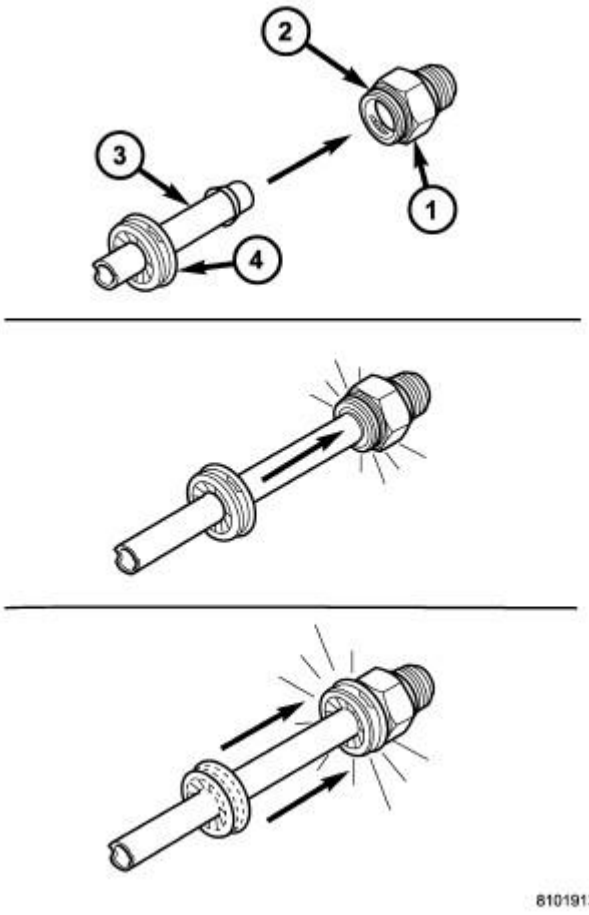

Fig. 92: Oil Cooler Line Quick Connect Fitting - Assembly
Courtesy of CHRYSLER LLC

1 - QUICK CONNECT FITTING
2 - CLIP
3 - OIL COOLER LINE
4 - DUST CAP

1. Align transmission cooler line with quick connect fitting while pushing straight into the fitting.
2. Push in on transmission cooler line until a "click" is heard or felt.
3. Slide dust cap down the transmission cooler line and snap it over the quick connect fitting until it

is fully seated and rotates freely. Dust cap will only snap over quick connect fitting when the transmission cooler line is properly installed.

NOTE: If dust cap will not snap into place, repeat assembly step #2.

TRANSMISSION OIL COOLER REVERSE FLUSHING/CLEANING

TRANSMISSION OIL COOLER REVERSE FLUSHING DESCRIPTION

Reverse flushing of the transmission oil cooling system is the forcing of fluid (ATF+4) in the opposite direction of normal fluid flow through the cooling system. It is necessary to perform this procedure anytime the transmission is serviced to avoid possible contamination of the cooling system.**DO NOT PERFORM THIS PROCEDURE ON ANY VEHICLE THAT DOES NOT USE MOPAR® ATF+4 TRANSMISSION FLUID.**

REVERSE FLUSHING TRANSMISSION OIL COOLER

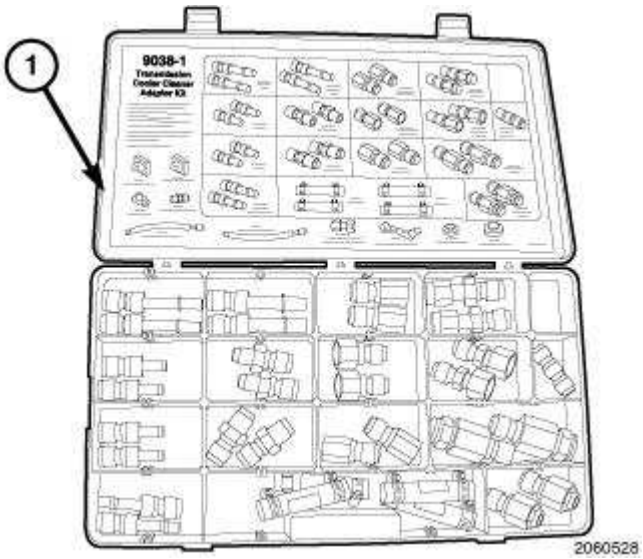

Fig. 93: Trans Cooler Cleaner Adapter Kit - 9038-1
Courtesy of CHRYSLER LLC

WARNING: WEAR PROTECTIVE EYEWEAR AND APPROPRIATE HEAT RESISTANT GLOVES WHEN PERFORMING THIS PROCEDURE.

NOTE: Refer to the Transmission Cooler Cleaner's operating instructions before starting this procedure.

1. Remove the transmission from the vehicle. Refer to the specific vehicle's transmission removal procedure.
2. Using tool 9038-1, trans cooler cleaner adapter kit (TCCAK) (1), select the proper adapter/fitting for the vehicle you are performing the procedure on.

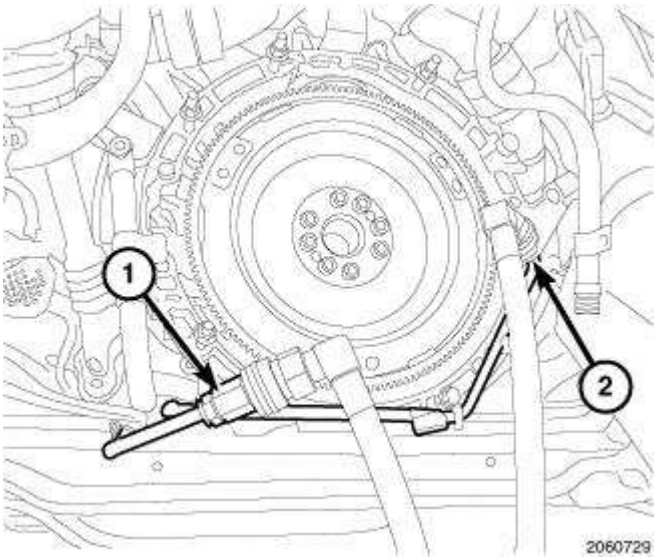

Fig. 94: Installing Trans Cooler Cleaner To Transmission Oil Cooler
Courtesy of CHRYSLER LLC

3. Install the selected adapter/fitting to the transmission oil cooler inlet (2) and outlet (1) lines.
4. Connect the red hose (outlet) of the 9038 trans cooler cleaner (TCC) to the transmission oil cooler outlet line (1).
5. Connect the blue hose (inlet) of the 9038 trans cooler cleaner (TCC) to the transmission oil cooler inlet line (2).

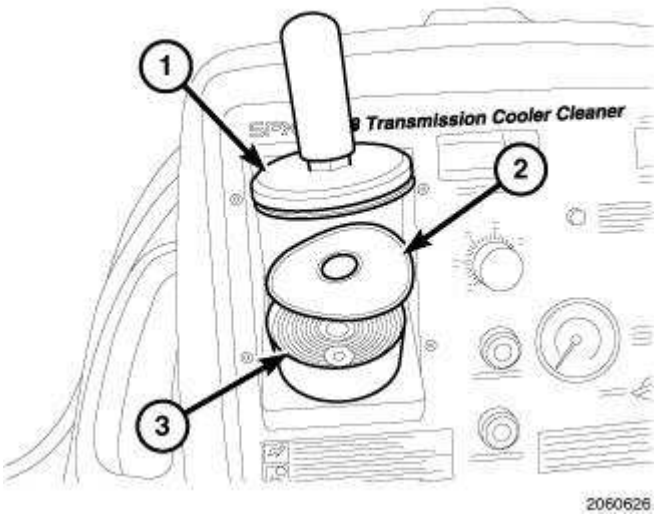

Fig. 95: Identifying Trans Cooler Cleaner Filter Screen
Courtesy of CHRYSLER LLC

6. Before starting the 9038 trans cooler cleaner (TCC), check the filter screen (2) for any debris. If debris is present, clean the filter screen in a parts washer and dry completely.

CAUTION: FILTER SCREEN (2) MUST BE COMPLETELY CLEAN AND DRY BEFORE PROCEEDING. FAILURE TO COMPLY COULD RESULT IN POSSIBLE CONTAMINATION AND DAMAGE TO THE COOLING SYSTEM.

7. Connect a compressed air line (90 to 120 psi recommended) to the air inlet fitting located on the rear of the 9038 trans cooler cleaner (TCC).
8. Power up and pre-heat the 9038 trans cooler cleaner (TCC) machine to 190°F (will take approximately 45 minutes with a full tank of fluid).
9. Refer to the 9038 transmission cooler cleaner's (TCC) owners manual and quick reference card for detailed operating instructions.

NOTE: It is recommended to flush/clean the system in 30 minute intervals.

TRANSMISSION OIL COOLER CLEANING

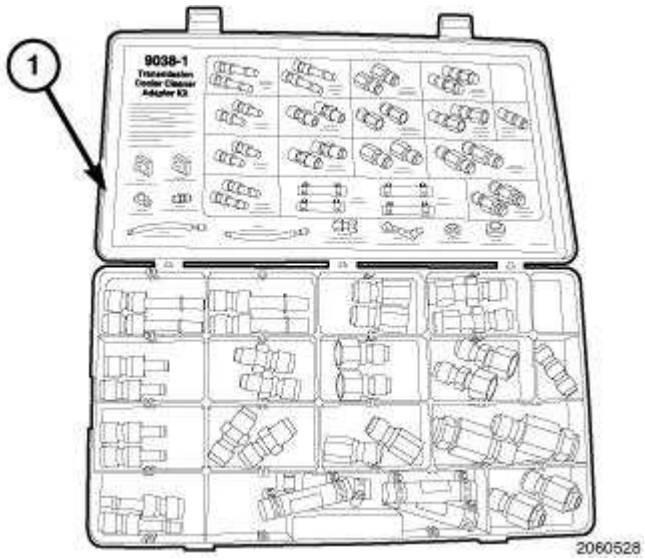

Fig. 96: Trans Cooler Cleaner Adapter Kit - 9038-1
Courtesy of CHRYSLER LLC

NOTE: Always start the cleaning procedure by reverse flushing the system first.

WARNING: WEAR PROTECTIVE EYEWEAR AND APPROPRIATE HEAT RESISTANT GLOVES WHEN PERFORMING THIS PROCEDURE.

NOTE: Refer to the Transmission Cooler Cleaner's operating instructions before starting this procedure.

1. With the transmission removed from the vehicle. Use tool 9038-1, trans cooler cleaner adapter kit (TCCAK) (1), to select the proper adapter/fitting for the vehicle you are performing the

procedure on.

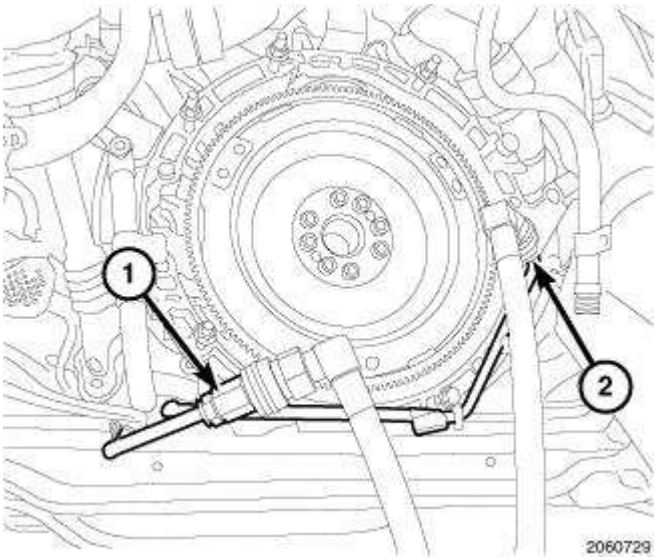

Fig. 97: Installing Trans Cooler Cleaner To Transmission Oil Cooler
Courtesy of CHRYSLER LLC

2. Install the selected adapter/fitting to the transmission oil cooler inlet (2) and outlet (1) lines.
3. Connect the blue hose (inlet) of the 9038 trans cooler cleaner (TCC) to the transmission oil cooler outlet line (1).
4. Connect the red hose (outlet) of the 9038 trans cooler cleaner (TCC) to the transmission oil cooler inlet line (2).

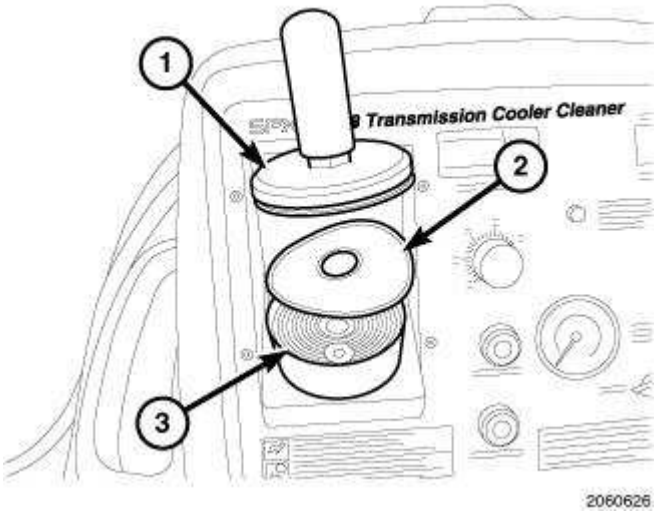

Fig. 98: Identifying Trans Cooler Cleaner Filter Screen
Courtesy of CHRYSLER LLC

5. Before starting the 9038 trans cooler cleaner (TCC), check the filter screen (2) for any debris. If debris is present, clean the filter screen in a parts washer and dry completely.

CAUTION: FILTER SCREEN (2) MUST BE COMPLETELY CLEAN AND DRY BEFORE PROCEEDING. FAILURE TO COMPLY COULD RESULT IN POSSIBLE CONTAMINATION AND DAMAGE TO THE COOLING SYSTEM.

6. Refer to the 9038 transmission cooler cleaner's (TCC) owners manual and quick reference card for detailed operating instructions.

NOTE: It is recommended to flush/clean the system in 30 minute intervals.

7. Check the filter screen (2) for any debris. If debris is present after the cleaning procedure is complete, clean the filter screen in a parts washer, dry completely, repeat the reverse flush procedure and repeat the cleaning procedure.
8. Install the transmission to the vehicle. Refer to the specific vehicle's transmission installation procedure.

COOLER, TRANSMISSION OIL

Description

DESCRIPTION

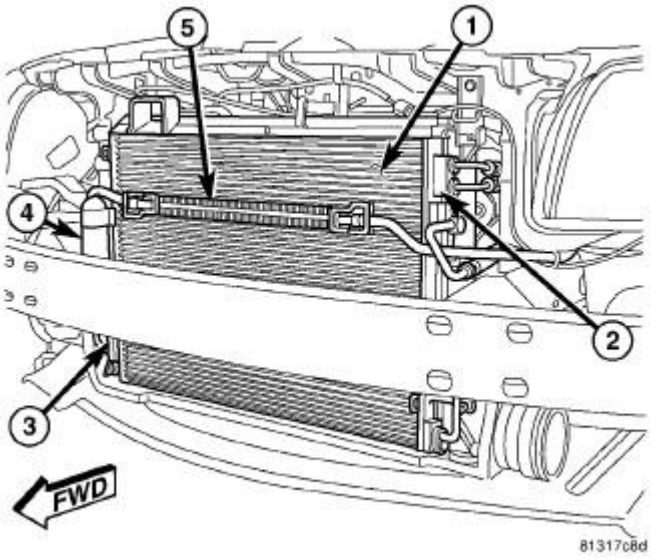

Fig. 99: Identifying A/C Condenser & Power Steering Cooler
Courtesy of CHRYSLER LLC

The automatic transmission cooler (2) is located in the front of the radiator and behind the front fascia and is combined with the A/C condenser. The transmission cooler is a heat exchanger that allows heat in the transmission fluid to be transferred to the air passing over the cooler fins.

The Transmission oil cooler/A/C condenser assembly is equipped with quick connect fitting for the

transmission oil cooler lines, a tapping block (3) for the receiver/drier (4) and mounting provisions for the power steering cooler (5).

The transmission oil cooler/AC condenser is service as an assembly. For removal. Refer to **Heating and Air Conditioning/Plumbing/CONDENSER, A/C - Removal** and installation. Refer to **Heating and Air Conditioning/Plumbing/CONDENSER, A/C - Installation** .

TUBES AND HOSES, TRANSMISSION OIL COOLER

Removal

REMOVAL

1. Remove upper radiator closure panels
2. Using Release Tool 8875A, remove transmission cooler lines from transmission cooler. See **Cooling - Standard Procedure**.
3. Raise vehicle on hoist.
4. Remove front transmission cooler lines from the thermal bypass valve block.
5. Remove rear transmission cooler lines from the thermal bypass valve block
6. Remove the transmission cooler lines from the transmission.

Installation

INSTALLATION

1. Install rear transmission cooler lines at transmission. Tighten fittings to 20 N.m (18 ft. lbs.).
2. Install rear transmission cooler lines to thermal bypass valve. Tighten fittings to 20 N.m (18 ft. lbs.).
3. Install front transmission cooler lines to thermal bypass valve. Tighten fittings to 20 N.m (18 ft. lbs.).
4. Install front transmission cooler lines into transmission cooler. See **Cooling - Standard Procedure**.
5. Lower vehicle.
6. Check transmission fluid level. Refer to **Transmission and Transfer Case/Automatic - 42RLE/FLUID and FILTER - Standard Procedure** , or refer to **Transmission and Transfer Case/Automatic - NAG1/FLUID and FILTER - Standard Procedure** .

VALVE, THERMO BYPASS

Description

DESCRIPTION

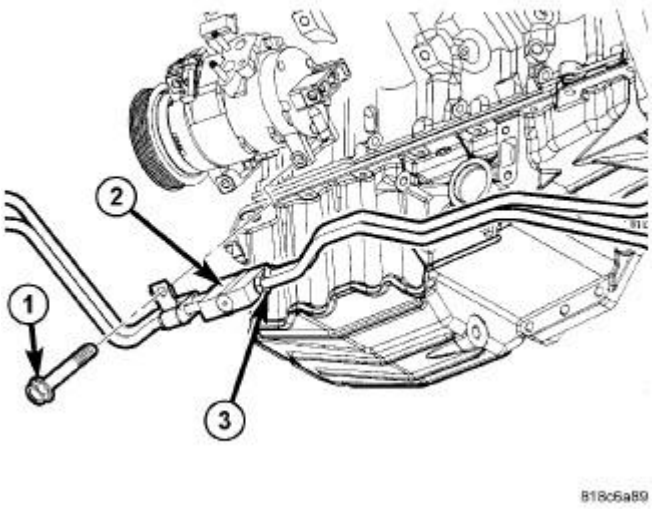

Fig. 100: Thermal Bypass Valve
Courtesy of CHRYSLER LLC

The transmission thermal bypass valve is mounted on LH side of the engine at the A/C compressor.

Operation

OPERATION

The air-to-oil transmission cooler system has a thermal bypass valve assembly that controls fluid flow through the cooler. When the transmission fluid is cold (less then operating temperature), the fluid is routed through the cooler bypass valve without flowing through the transmission cooler. When the transmission fluid reaches operating temperatures 71°C (160°F) and above, the thermostat closes off the bypass and allowing fluid to flow through the transmission cooler. The thermal bypass valve is serviced as an assembly.

Removal

REMOVAL

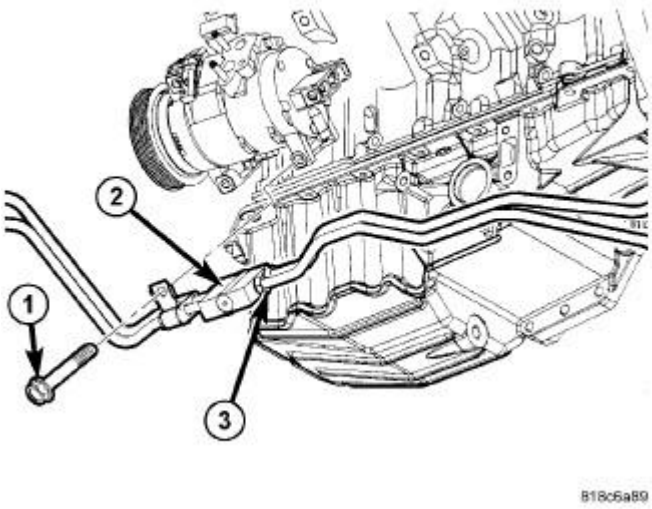

Fig. 101: Thermal Bypass Valve
Courtesy of CHRYSLER LLC

1 - MOUNTING BOLT 2 - THERMAL BYPASS VALVE BLOCK
3 - COOLER LINE FITTING

1. Raise and support vehicle.
2. Remove front transmission cooler lines from the thermal bypass valve block (2).
3. Remove rear transmission cooler lines from the thermal bypass valve block (2).
4. Remove thermal bypass valve block (2).

Installation

INSTALLATION

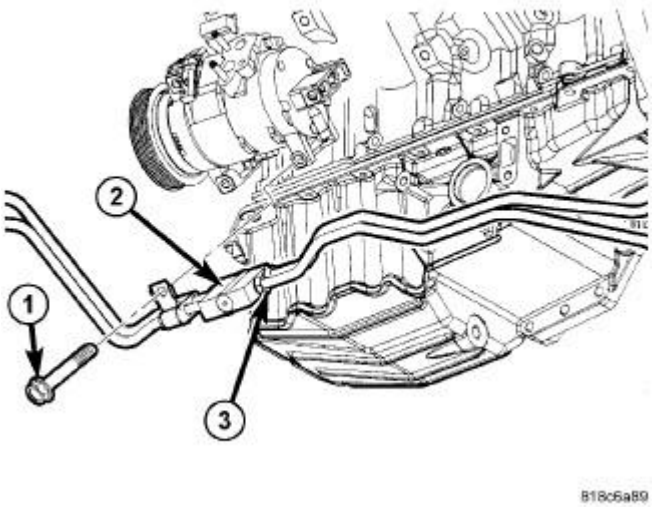

Fig. 102: Thermal Bypass Valve
Courtesy of CHRYSLER LLC

1 - MOUNTING BOLT 2 - THERMAL BYPASS VALVE BLOCK
3 - COOLER LINE FITTING

1. Position thermal bypass valve. Install mounting bolt. Tighten mounting bolt to: 3.5L engine to 26 N.m (19 ft.lbs.) and 5.7L/6.1L engine to 50 N.m (37 ft. lbs.).
2. Install rear transmission cooler lines to thermal bypass valve. Tighten fittings to 20 N.m (18 ft. lbs.).
3. Install front transmission cooler lines to thermal bypass valve. Tighten fittings to 20 N.m (18 ft. lbs.).

GENERAL INFORMATION

Engine Overhaul Procedures

* PLEASE READ THIS FIRST *

NOTE: **Examples used in this article are general in nature and do not necessarily relate to a specific engine or system. Illustrations and procedures have been chosen to guide mechanic through engine overhaul process. Descriptions of processes of cleaning, inspection, assembly and machine shop practice are included.**

Always refer to appropriate engine overhaul article, if available, in the ENGINES section for complete overhaul procedures and specifications for the vehicle being repaired.

DESCRIPTION

Examples used in this article are general in nature and do not necessarily relate to a specific engine or system. Illustrations and procedures have been chosen to guide mechanic through engine overhaul process. Descriptions of cleaning, inspection, and assembly processes are included.

ENGINE IDENTIFICATION

Engine may be identified from Vehicle Identification Number (VIN) stamped on a metal tab. Metal tab may be located in different locations depending on manufacturer. Engine identification number or serial number is located on cylinder block. Location varies with each manufacturer.

INSPECTION PROCEDURES

* PLEASE READ THIS FIRST *

NOTE: **Examples used in this article are general in nature and do not necessarily relate to a specific engine or system. Illustrations and procedures have been chosen to guide mechanic through engine overhaul process. Descriptions of processes of cleaning, inspection, assembly and machine shop practice are included.**

Always refer to appropriate engine overhaul article, if available, in the ENGINES section for complete overhaul procedures and specifications for the vehicle being repaired.

GENERAL

NOTE: **Examples used in this article are general in nature and do not necessarily relate to a specific engine or system. Illustrations and procedures have been chosen to guide mechanic through engine overhaul process. Descriptions of processes**

of cleaning, inspection, assembly and machine shop practice are included.

Always refer to appropriate engine overhaul article, if available, in the ENGINES section for complete overhaul procedures and specifications for the vehicle being repaired.

Engine components must be inspected to meet manufacturer's specifications and tolerances during overhaul. Proper dimensions and tolerances must be met to obtain proper performance and maximum engine life.

Micrometers, depth gauges and dial indicator are used for checking tolerances during engine overhaul. Magnaflux, Magnaglo, dye-check, ultrasonic and x-ray inspection procedures are used for parts inspection.

MAGNETIC PARTICLE INSPECTION

NOTE: **Examples used in this article are general in nature and do not necessarily relate to a specific engine or system. Illustrations and procedures have been chosen to guide mechanic through engine overhaul process. Descriptions of processes of cleaning, inspection, assembly and machine shop practice are included.**

Always refer to appropriate engine overhaul article, if available, in the ENGINES section for complete overhaul procedures and specifications for the vehicle being repaired.

Magnaflux & Magnaglo

Magnaflux is an inspection technique used to locate material flaws and stress cracks. Component is subjected to a strong magnetic field. Entire component or a localized area can be magnetized. Component is coated with either a wet or dry material that contains fine magnetic particles.

Cracks which are outlined by the particles cause an interruption of magnetic field. Dry powder method of Magnaflux can be used in normal lighting and crack appears as a bright line.

Fluorescent liquid is used along with a Black light in the Magnaglo Magnaflux system. Darkened room is required for this procedure. The crack will appear as a glowing line. Complete demagnetizing of component upon completion is required on both procedures. Magnetic particle inspection applies to ferrous materials only.

PENETRANT INSPECTION

NOTE: **Examples used in this article are general in nature and do not necessarily relate to a specific engine or system. Illustrations and procedures have been chosen to guide mechanic through engine overhaul process. Descriptions of processes of cleaning, inspection, assembly and machine shop practice are included.**

Always refer to appropriate engine overhaul article, if available, in the ENGINES section for complete overhaul procedures and specifications for the vehicle being repaired.

Zyglo

The Zyglo process coats material with a fluorescent dye penetrant. Component is often warmed to expand cracks that will be penetrated by the dye. Using darkened room and Black light, component is inspected for cracks. Crack will glow brightly.

Developing solution is often used to enhance results. Parts made of any material, such as aluminum cylinder heads or plastics, may be tested using this process.

Dye Check

Penetrating dye is sprayed on the previously cleaned component. Dye is left on component for 5-45 minutes, depending upon material density. Component is then wiped clean and sprayed with a developing solution. Surface cracks will show up as a bright line.

ULTRASONIC INSPECTION

NOTE: **Examples used in this article are general in nature and do not necessarily relate to a specific engine or system. Illustrations and procedures have been chosen to guide mechanic through engine overhaul process. Descriptions of processes of cleaning, inspection, assembly and machine shop practice are included.**

Always refer to appropriate engine overhaul article, if available, in the ENGINES section for complete overhaul procedures and specifications for the vehicle being repaired.

If an expensive part is suspected of internal cracking, ultrasonic testing is used. Sound waves are used for component inspection.

X-RAY INSPECTION

NOTE: **Examples used in this article are general in nature and do not necessarily relate to a specific engine or system. Illustrations and procedures have been chosen to guide mechanic through engine overhaul process. Descriptions of processes of cleaning, inspection, assembly and machine shop practice are included.**

Always refer to appropriate engine overhaul article, if available, in the ENGINES section for complete overhaul procedures and specifications for the vehicle being repaired.

This form of inspection is used on highly stressed components. X-ray inspection may be used to detect internal and external flaws in any material.

PRESSURE TESTING

NOTE: **Examples used in this article are general in nature and do not necessarily relate to a specific engine or system. Illustrations and procedures have been chosen to guide mechanic through engine overhaul process. Descriptions of processes of cleaning, inspection, assembly and machine shop practice are included.**

Always refer to appropriate engine overhaul article, if available, in the ENGINES section for complete overhaul procedures and specifications for the vehicle being repaired.

Cylinder heads can be tested for cracks using a pressure tester. Pressure testing is performed by plugging all but one of the holes of cylinder head and injecting air or water into the open passage.

Leaks are indicated by the appearance of wet or damp areas when using water. When air is used, it is necessary to spray the head surface with a soap solution. Bubbles will indicate a leak. Cylinder head may also be submerged in water heated to specified temperature to check for cracks created during heat expansion.

CLEANING PROCEDURES

* PLEASE READ THIS FIRST *

NOTE: **Examples used in this article are general in nature and do not necessarily relate to a specific engine or system. Illustrations and procedures have been chosen to guide mechanic through engine overhaul process. Descriptions of processes of cleaning, inspection, assembly and machine shop practice are included.**

Always refer to appropriate engine overhaul article, if available, in the ENGINES section for complete overhaul procedures and specifications for the vehicle being repaired.

GENERAL

NOTE: **Examples used in this article are general in nature and do not necessarily relate to a specific engine or system. Illustrations and procedures have been chosen to guide mechanic through engine overhaul process. Descriptions of processes of cleaning, inspection, assembly and machine shop practice are included.**

Always refer to appropriate engine overhaul article, if available, in the ENGINES section for complete overhaul procedures and specifications for the vehicle being repaired.

All components of an engine do not have the same cleaning requirements. Physical methods include bead blasting and manual removal. Chemical methods include solvent blast, solvent tank, hot tank, cold tank and steam cleaning of components.

BEAD BLASTING

NOTE: **Examples used in this article are general in nature and do not necessarily relate to a specific engine or system. Illustrations and procedures have been chosen to guide mechanic through engine overhaul process. Descriptions of processes of cleaning, inspection, assembly and machine shop practice are included.**

Always refer to appropriate engine overhaul article, if available, in the ENGINES section for complete overhaul procedures and specifications for the vehicle being repaired.

Manual removal of deposits may be required prior to bead blasting, followed by some other cleaning method. Carbon, paint and rust may be removed using bead blasting method. Components must be free of oil and grease prior to bead blasting. Beads will stick to grease or oil soaked areas causing area not to be cleaned.

Use air pressure to remove all trapped residual beads from component after cleaning. After cleaning internal engine parts made of aluminum, wash thoroughly with hot soapy water. Component must be thoroughly cleaned as glass beads will enter engine oil resulting in bearing damage.

CHEMICAL CLEANING

NOTE: **Examples used in this article are general in nature and do not necessarily relate to a specific engine or system. Illustrations and procedures have been chosen to guide mechanic through engine overhaul process. Descriptions of processes of cleaning, inspection, assembly and machine shop practice are included.**

Always refer to appropriate engine overhaul article, if available, in the ENGINES section for complete overhaul procedures and specifications for the vehicle being repaired.

Solvent tank is used for cleaning oily residue from components. Solvent blasting sprays solvent through a siphon gun using compressed air.

The hot tank, using heated caustic solvents, is used for cleaning ferrous materials only. DO NOT clean aluminum parts such as cylinder heads, bearings or other soft metals using the hot tank. After cleaning, flush parts with hot water.

A non-ferrous part will be ruined and caustic solution will be diluted if placed in the hot tank. Always use eye protection and gloves when using the hot tank.

Use of a cold tank is for cleaning aluminum cylinder heads, carburetors and other soft metals. A less caustic and unheated solution is used. Parts may be left in the tank for several hours without damage. After cleaning, flush parts with hot water.

Steam cleaning, with boiling hot water sprayed at high pressure, is recommended as the final cleaning process when using either hot or cold tank cleaning.

COMPONENT CLEANING

*** PLEASE READ THIS FIRST ***

NOTE: **Examples used in this article are general in nature and do not necessarily relate to a specific engine or system. Illustrations and procedures have been chosen to guide mechanic through engine overhaul process. Descriptions of processes of cleaning, inspection, assembly and machine shop practice are included.**

Always refer to appropriate engine overhaul article, if available, in the ENGINES section for complete overhaul procedures and specifications for the vehicle being repaired.

SHEET METAL PARTS

NOTE: **Examples used in this article are general in nature and do not necessarily relate to a specific engine or system. Illustrations and procedures have been chosen to guide mechanic through engine overhaul process. Descriptions of processes of cleaning, inspection, assembly and machine shop practice are included.**

Always refer to appropriate engine overhaul article, if available, in the ENGINES section for complete overhaul procedures and specifications for the vehicle being repaired.

Examples of sheet metal parts are rocker covers, front and side covers, oil pan and bellhousing dust cover. Glass bead blasting or hot tank may be used for cleaning.

Ensure all mating surfaces are flat. Deformed surfaces should be straightened. Check all sheet metal parts for cracks and dents.

INTAKE & EXHAUST MANIFOLDS

NOTE: **Examples used in this article are general in nature and do not necessarily relate to a specific engine or system. Illustrations and procedures have been chosen to guide mechanic through engine overhaul process. Descriptions of processes of cleaning, inspection, assembly and machine shop practice are included.**

Always refer to appropriate engine overhaul article, if available, in the ENGINES section for complete overhaul procedures and specifications for the vehicle being repaired.

Using solvent cleaning or bead blasting, clean manifolds for inspection. If intake manifold has an exhaust crossover, all carbon deposits must be removed. Inspect manifolds for cracks, burned or eroded areas, corrosion and damage to fasteners.

Exhaust heat and products of combustion cause threads of fasteners to corrode. Replace studs and

bolts as necessary. On "V" type intake manifolds, sheet metal oil shield must be removed for proper cleaning and inspection. Ensure all manifold parting surfaces are flat and free of burrs.

CYLINDER HEAD REPLACEMENT

*** PLEASE READ THIS FIRST ***

NOTE: Examples used in this article are general in nature and do not necessarily relate to a specific engine or system. Illustrations and procedures have been chosen to guide mechanic through engine overhaul process. Descriptions of processes of cleaning, inspection, assembly and machine shop practice are included.

Always refer to appropriate engine overhaul article, if available, in the ENGINES section for complete overhaul procedures and specifications for the vehicle being repaired.

REMOVAL

NOTE: Examples used in this article are general in nature and do not necessarily relate to a specific engine or system. Illustrations and procedures have been chosen to guide mechanic through engine overhaul process. Descriptions of processes of cleaning, inspection, assembly and machine shop practice are included.

Always refer to appropriate engine overhaul article, if available, in the ENGINES section for complete overhaul procedures and specifications for the vehicle being repaired.

Remove intake and exhaust manifolds and valve cover. Cylinder head and camshaft carrier bolts (if equipped) should be removed only when engine is cold. On many aluminum cylinder heads, removal while hot will cause cylinder head warpage. Mark rocker arm or overhead cam components for location.

Remove rocker arm components or overhead cam components. Components must be installed in original location. Individual design rocker arms may utilize shafts, ball-type pedestal mounts or no rocker arms. For all design types, wire components together and identify according to corresponding valve. Remove cylinder head bolts. Note length and location. Some applications require cylinder head bolts be removed in proper sequence to prevent cylinder head damage. See **Fig. 1**. Remove cylinder head.

INSTALLATION

NOTE: Examples used in this article are general in nature and do not necessarily relate to a specific engine or system. Illustrations and procedures have been chosen to guide mechanic through engine overhaul process. Descriptions of processes of cleaning, inspection, assembly and machine shop practice are included.

Always refer to appropriate engine overhaul article, if available, in the ENGINES section for complete overhaul procedures and specifications for the vehicle being repaired.

Ensure all surfaces and head bolts are clean. Check that head bolt holes of cylinder block are clean and dry to prevent block damage when bolts are tightened. Clean threads with tap to ensure accurate bolt torque.

Install head gasket on cylinder block. Some manufacturers may recommend sealant be applied to head gasket prior to installation. Note that all holes are aligned. Some gasket applications may be marked so that certain area faces upward. Install cylinder head using care not to damage head gasket. Ensure cylinder head is fully seated on cylinder block.

Some applications require head bolts be coated with sealant prior to installation. This is done if head bolts are exposed to coolant passages. Some applications require head bolts be coated with light coat of engine oil.

Install head bolts. Head bolts should be tightened in proper steps and sequence to specification. See **Fig. 1**. Install remaining components. Tighten all bolts to specification. Adjust valves if required. See VALVE ADJUSTMENT.

NOTE: Some manufacturers require that head bolts be retightened after specified amount of operation. This must be done to prevent head gasket failure.

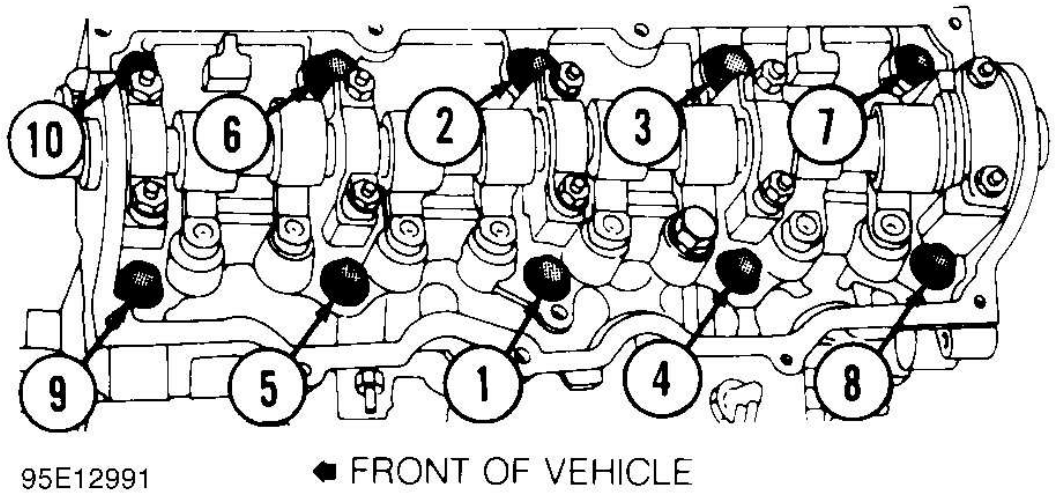

Fig. 1: Typical Cylinder Head Tightening or Loosening Sequence

VALVE ADJUSTMENT

NOTE: **Examples used in this article are general in nature and do not necessarily relate to a specific engine or system. Illustrations and procedures have been chosen to guide mechanic through engine overhaul process. Descriptions of processes of cleaning, inspection, assembly and machine shop practice are included.**

Always refer to appropriate engine overhaul article, if available, in the ENGINES section for complete overhaul procedures and specifications for the vehicle being repaired.

Engine specifications will indicate valve train clearance and temperature at which adjustment is to be made on most models. In most cases, adjustment will be made with a cold engine. In some cases, both a cold and a hot clearance will be given for maintenance convenience.

On some models, adjustment is not required. Rocker arms are tightened to specification and valve lash is automatically set. On some models with push rod actuated valve train, adjustment is made at push rod end of rocker arm while other models do not require adjustment.

Clearance will be checked between tip of rocker arm and tip of valve stem in proper sequence using a feeler gauge. Adjustment is made by rotating adjusting screw until proper clearance is obtained. Lock nut is then tightened. Engine will be rotated to obtain all valve adjustments to manufacturer's specifications.

Some models require hydraulic lifter to be bled down and clearance measured. Push rods of different length can be used to obtain proper clearance. Clearance will be checked between tip of rocker arm and tip of valve stem in proper sequence using a feeler gauge.

Overhead cam engines designed without rocker arms actuate valves directly on a cam follower. A hardened, removable disc is installed between the cam lobe and lifter. Clearance will be checked between cam heel and adjusting disc in proper sequence using a feeler gauge. Engine will be rotated to obtain all valve adjustments.

On overhead cam engines designed with rocker arms, adjustment is made at valve end of rocker arm. Ensure valve to be adjusted is riding on heel of cam on all engines. Clearance will be checked between tip of rocker arm and tip of valve stem in proper sequence using a feeler gauge. Adjustment is made by rotating adjusting screw until proper clearance is obtained. Lock nut is then tightened. Engine will be rotated to obtain all valve adjustments to manufacturer's specifications.

CYLINDER HEAD OVERHAUL

*** PLEASE READ THIS FIRST ***

NOTE: **Examples used in this article are general in nature and do not necessarily relate to a specific engine or system. Illustrations and procedures have been chosen to guide mechanic through engine overhaul process. Descriptions of processes of cleaning, inspection, assembly and machine shop practice are included.**

Always refer to appropriate engine overhaul article, if available, in the ENGINES section for complete overhaul procedures and specifications for the vehicle being repaired.

CYLINDER HEAD DISASSEMBLY

NOTE: **Examples used in this article are general in nature and do not necessarily relate to a specific engine or system. Illustrations and procedures have been chosen to guide mechanic through engine overhaul process. Descriptions of processes of cleaning, inspection, assembly and machine shop practice are included.**

Always refer to appropriate engine overhaul article, if available, in the ENGINES section for complete overhaul procedures and specifications for the vehicle being repaired.

Mark valves for location. Using valve spring compressor, compress valve springs. Remove valve locks. Carefully release spring compressor. Remove retainer or rotator, valve spring, spring seat and valve. See **Fig. 2**.

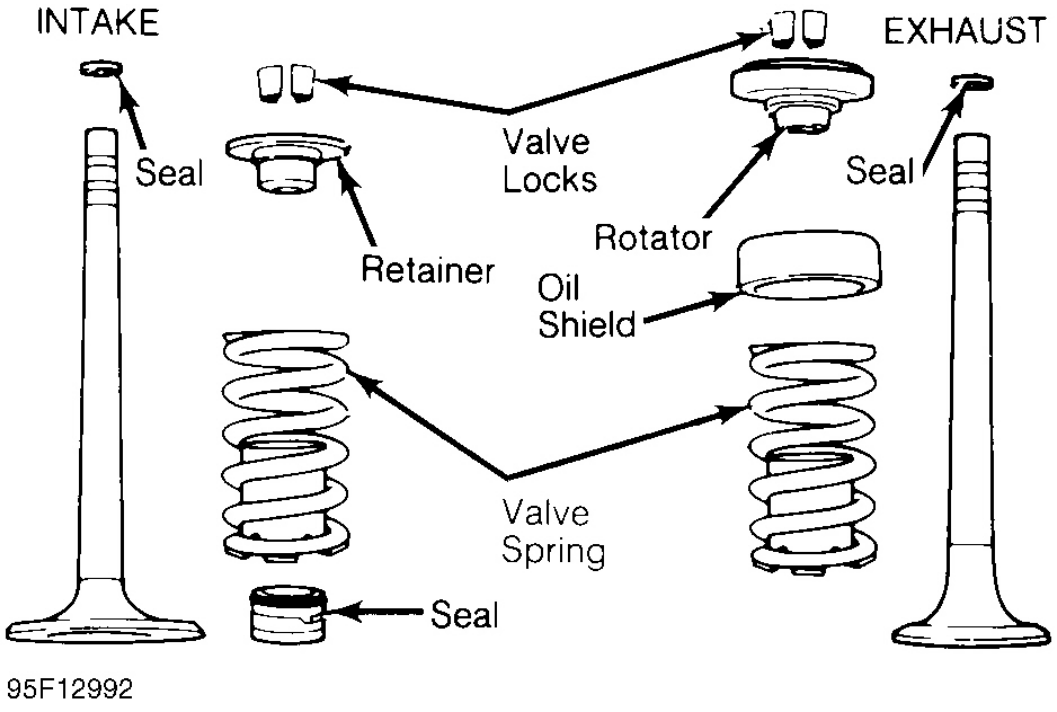

Fig. 2: Exploded View of Valve Assemblies

CYLINDER HEAD CLEANING & INSPECTION

NOTE: **Examples used in this article are general in nature and do not necessarily relate to a specific engine or system. Illustrations and procedures have been chosen to guide mechanic through engine overhaul process. Descriptions of processes of cleaning, inspection, assembly and machine shop practice are included.**

Always refer to appropriate engine overhaul article, if available, in the ENGINES section for complete overhaul procedures and specifications for the vehicle being repaired.

Clean cylinder head and valve components using approved cleaning methods. Inspect cylinder head for cracks, damage or warped gasket surface. Place straightedge across gasket surface. Determine clearance at center of straightedge. Measure across both diagonals, longitudinal center line and across cylinder head at several points. See **Fig. 3**.

On cast iron cylinder heads, if warpage exceeds .003" (.08 mm) in a 6" span, or .006" (.15 mm) over total length, cylinder head must be resurfaced. On most aluminum cylinder heads, if warpage exceeds .002" (.05 mm) in any area, cylinder head must be resurfaced. Warpage specification may vary by manufacturer. If warpage exceeds specification on some cylinder heads, cylinder head must be replaced.

Cylinder head thickness should be measured to determine amount of material which can be removed before replacement is required. Cylinder head thickness must not be less than the manufacturer's specification.

If cylinder head required resurfacing, it may not align properly with intake manifold. On "V" type engines, misalignment is corrected by machining intake manifold surface that contacts cylinder head. Cylinder head may be machined on surface that contacts intake manifold. Using oil stone, remove burrs or scratches from all sealing surfaces.

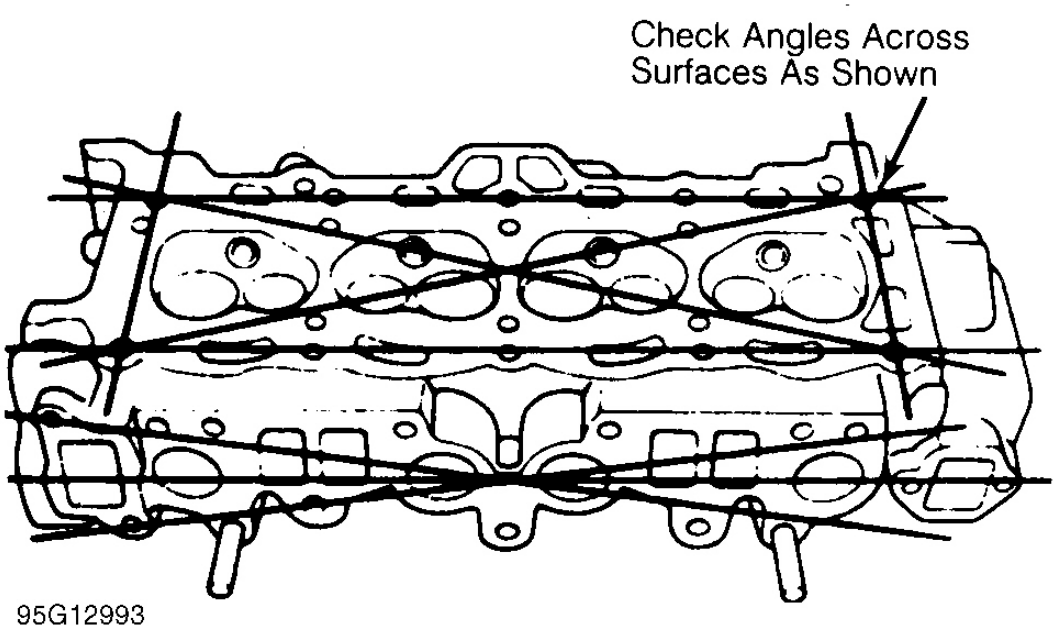

Fig. 3: Checking Cylinder Head for Warpage

VALVE SPRINGS

NOTE: **Examples used in this article are general in nature and do not necessarily relate to a specific engine or system. Illustrations and procedures have been chosen to guide mechanic through engine overhaul process. Descriptions of processes of cleaning, inspection, assembly and machine shop practice are included.**

Always refer to appropriate engine overhaul article, if available, in the ENGINES section for complete overhaul procedures and specifications for the vehicle being repaired.

Inspect valve springs for corroded or pitted valve spring surfaces which may lead to breakage. Polished spring ends caused by a rotating spring indicate that spring surge has occurred. Replace springs showing evidence of these conditions.

Inspect valve springs for squareness using a 90-degree straightedge. See **Fig. 4**. Replace valve spring if out-of-square exceeds manufacturer's specification.

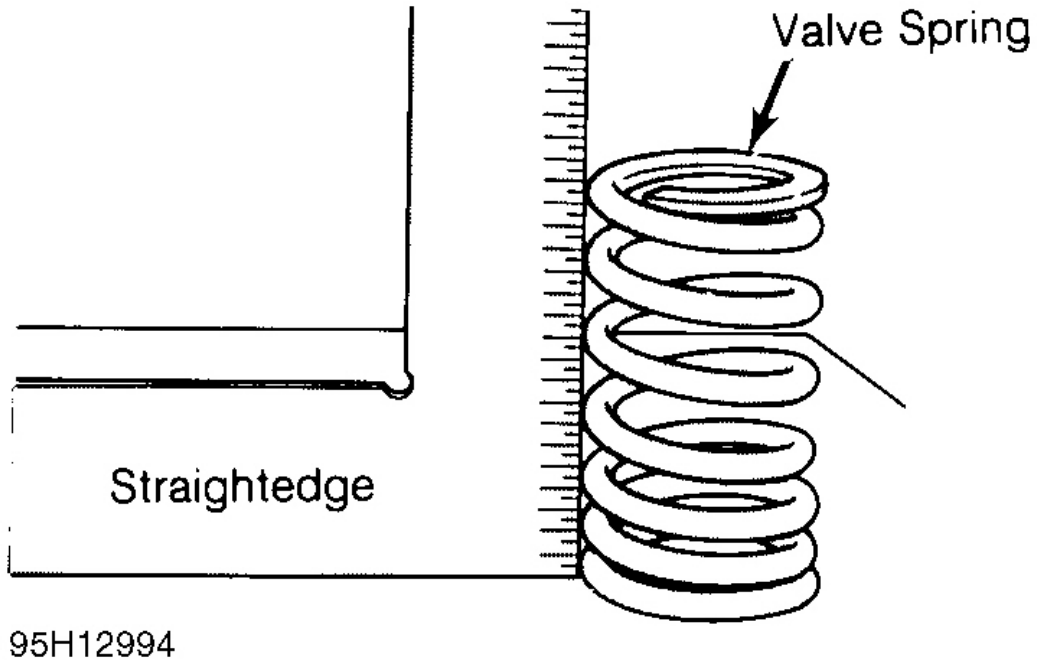

Fig. 4: Checking Valve Spring Squareness

Using vernier caliper, measure free length of all valve springs. Replace springs if not within specification. Using valve spring tester, test valve spring pressure at installed and compressed heights. See **Fig. 5**.

Usually compressed height is installed height minus valve lift. Replace valve spring if not within specification. It is recommended to replace all valve springs when overhauling cylinder head. Valve springs may need to be installed with color coded end or small coils at specified area according to manufacturer.

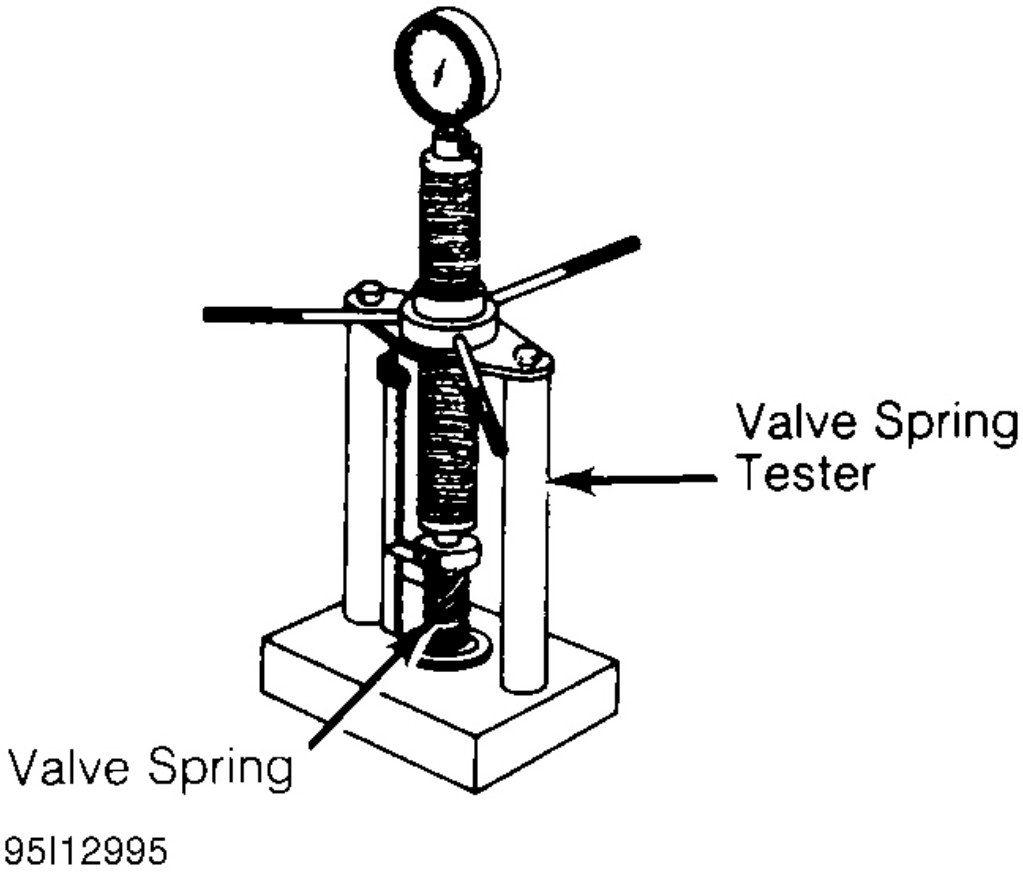

Fig. 5: Checking Valve Spring Pressure

VALVE GUIDE

NOTE: **Examples used in this article are general in nature and do not necessarily relate to a specific engine or system. Illustrations and procedures have been chosen to guide mechanic through engine overhaul process. Descriptions of processes of cleaning, inspection, assembly and machine shop practice are included.**

Always refer to appropriate engine overhaul article, if available, in the ENGINES section for complete overhaul procedures and specifications for the vehicle being repaired.

Measuring Valve Guide Clearance

Check valve stem-to-guide clearance. Ensure valve stem diameter is within specification. Install valve in valve guide. Install dial indicator assembly on cylinder head with tip resting against valve stem just

above valve guide. See **Fig. 6**.

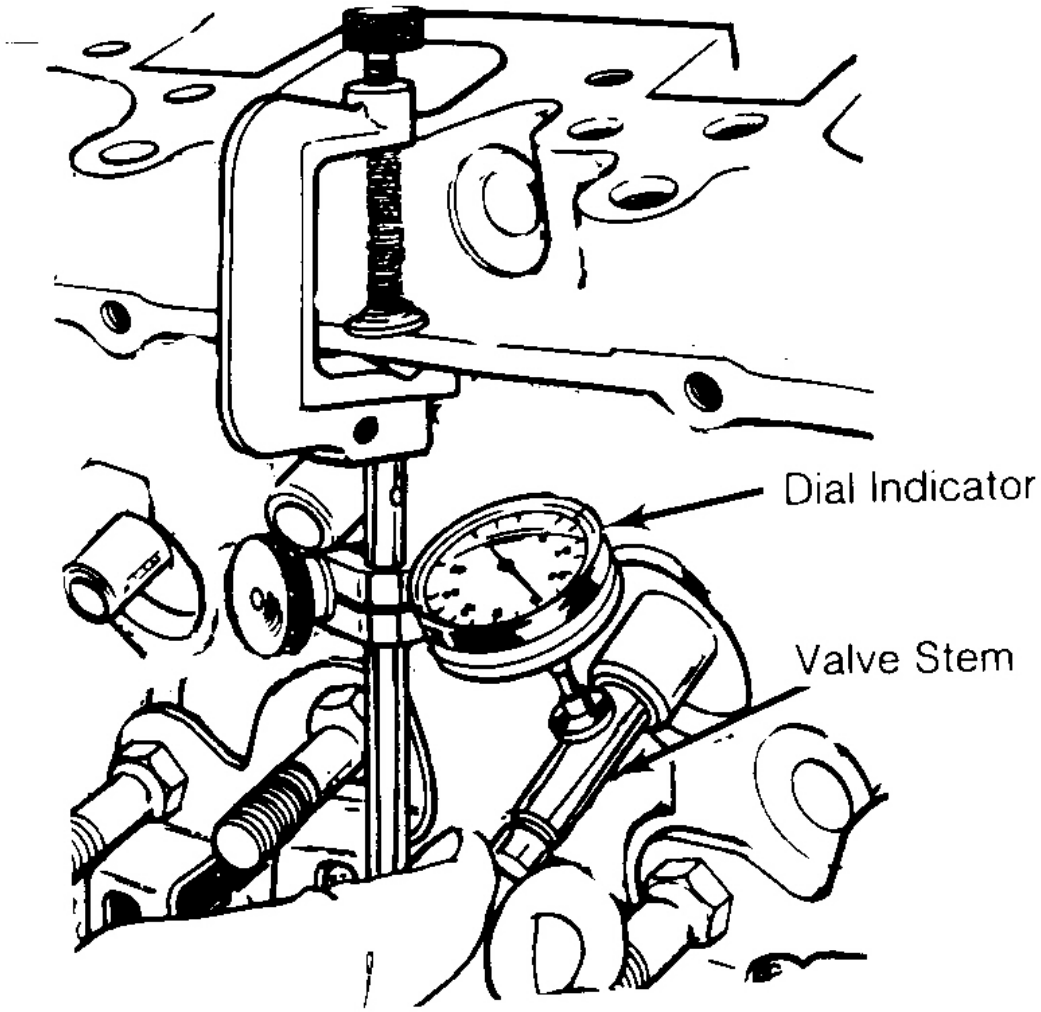

Fig. 6: Measuring Valve Stem-to-Guide Clearance

Lower valve approximately 1/16" below valve seat. Push valve stem against valve guide as far as possible. Adjust dial indicator to zero. Push valve stem in opposite direction and note reading. Clearance must be within specification.

If valve guide clearance exceeds specification, valves with oversize stems may be used and valve guides are reamed to larger size or valve guide must be replaced. On some applications, a false guide is installed, then reamed to proper specification. Valve guide reamer set is used to ream valve guide to obtain proper clearance for new valve.

Reaming Valve Guide

Select proper reamer for size of valve stem. Reamer must be of proper length to provide clean cut through entire length of valve guide. Install reamer in valve guide and rotate to cut valve guide. See **Fig. 7**.

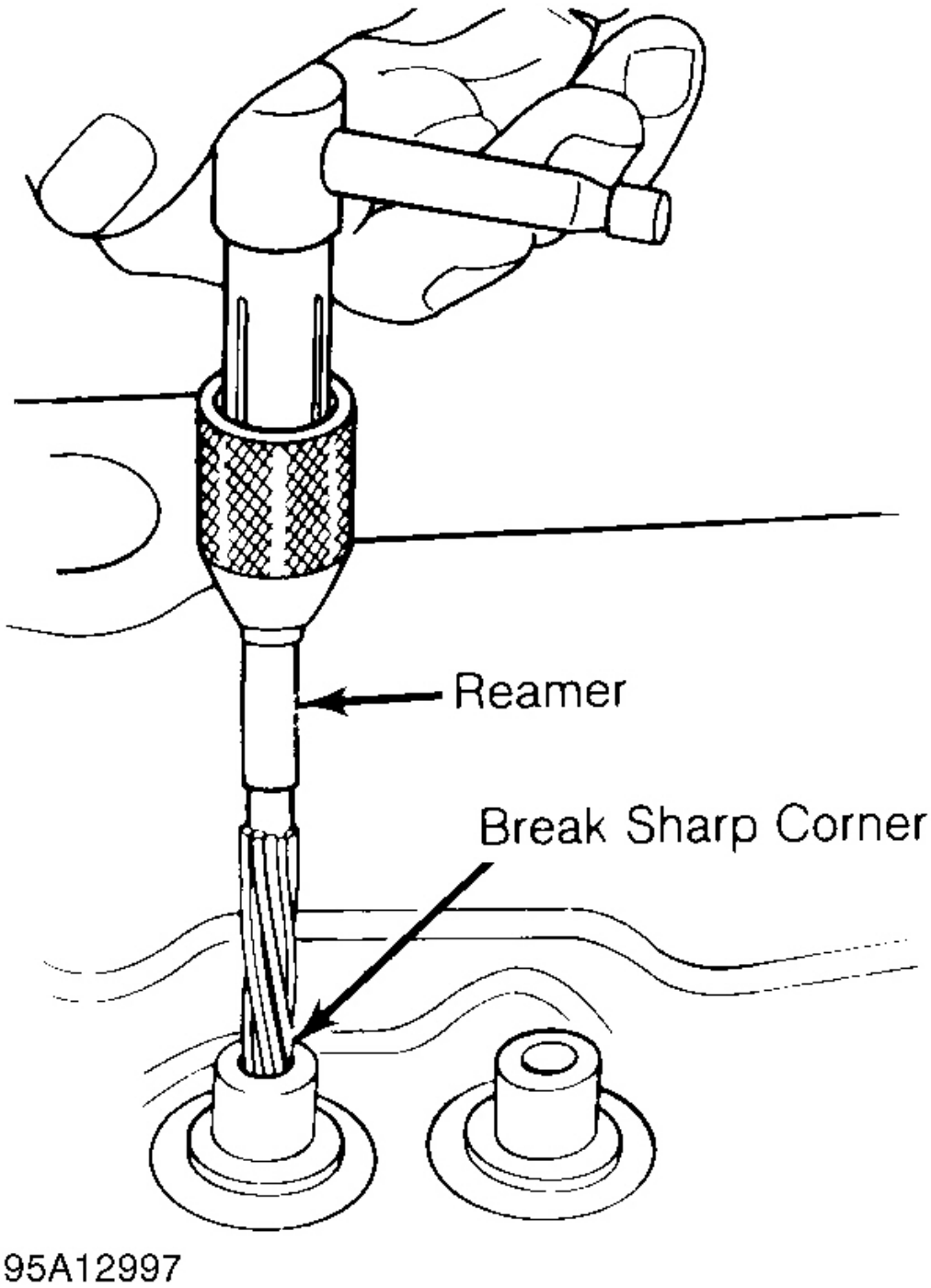

Fig. 7: Reaming Valve Guides

Replacing Valve Guide

Replace valve guide if clearance exceeds specification. Valve guides are either pressed, hammered or shrunk in place, depending upon cylinder head design and type of metal used.

Remove valve guide from cylinder head by pressing or tapping on a stepped drift. See **Fig. 8**. Once valve guide is installed, distance from cylinder head to top of valve guide must be checked. This distance must be within specification.

Aluminum heads are often heated before installing valve guide. Valve guide is sometimes cooled in dry ice prior to installation. Combination of a heated cylinder head and cooled valve guide ensures a tight guide fit upon assembly. The new guide must be reamed to specification.

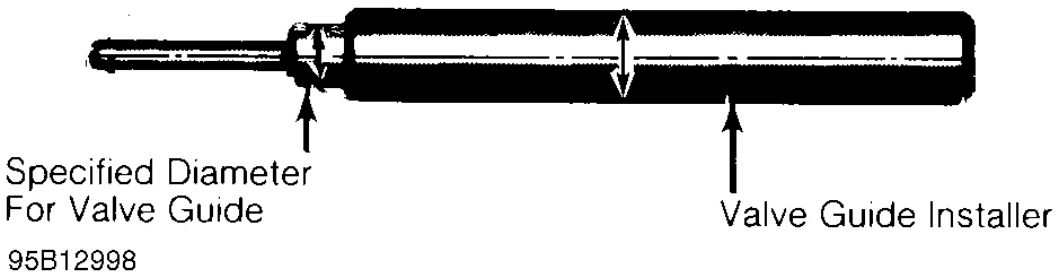

Fig. 8: Typical Valve Guide Remover & Installer

VALVES & VALVE SEATS

NOTE: **Examples used in this article are general in nature and do not necessarily relate to a specific engine or system. Illustrations and procedures have been chosen to guide mechanic through engine overhaul process. Descriptions of processes of cleaning, inspection, assembly and machine shop practice are included.**

Always refer to appropriate engine overhaul article, if available, in the ENGINES section for complete overhaul procedures and specifications for the vehicle being repaired.

Valve Grinding

Valve stem O.D. should be measured in several areas to indicate amount of wear. Replace valve if not within specification. Valve margin area should be measured to ensure that valve can be ground. See **Fig. 9**.

If valve margin is less than specification, the valves will be burned. Valve must be replaced. Due to minimum margin dimensions during manufacture, some new type valves cannot be reground. Some manufacturers use stellite coated valves that must NOT be machined. Valves can only be lapped into

valve seat.

CAUTION: Some valves are sodium filled. Extreme care must be used when disposing of damaged or worn sodium-filled valves.

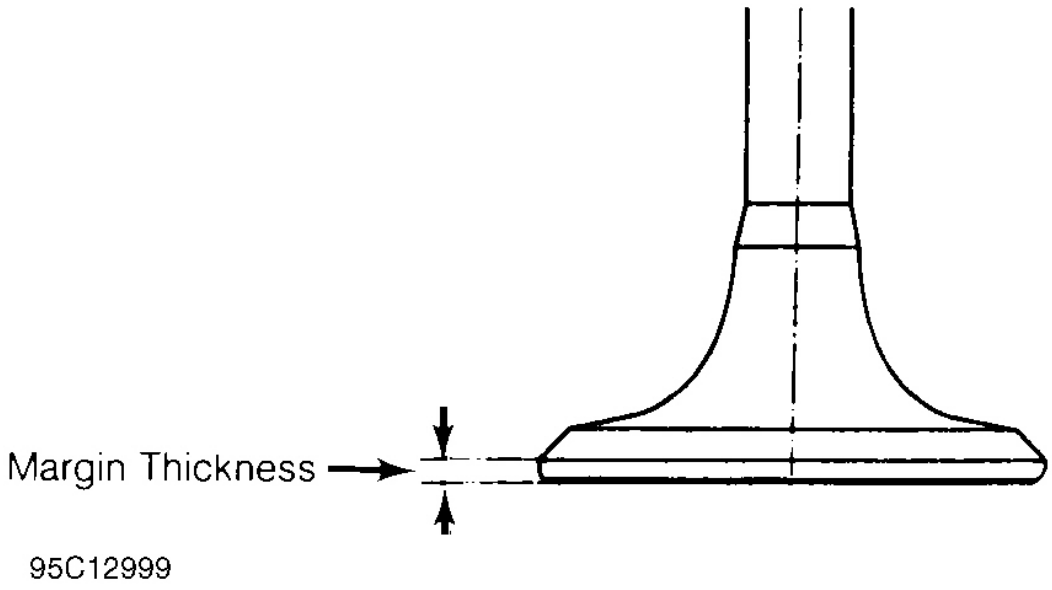

Fig. 9: Measuring Valve Head Margin

Resurface valve to proper angle specification using valve grinding machine. Follow manufacturer's instructions for valve grinding machine. Specifications may indicate a different valve face angle than seat angle. Measure valve margin after grinding. Replace valve if not within specification. Valve stem tip can be refinished using valve grinding machine.

Valve Lapping

During valve lapping of recently designed valves, be sure to follow manufacturer's recommendations. Surface hardening and materials used with some valves do not permit lapping. Lapping process will remove excessive amounts of the hardened surface.

Valve lapping is done to ensure adequate sealing between valve face and seat. Use either a hand drill or lapping stick with suction cup attached.

Moisten and attach suction cup to valve. Lubricate valve stem and guide. Apply a thin coat of fine valve grinding compound between valve and seat. Rotate lapping tool between the palms or with hand drill.

Lift valve upward off the seat and change position often. This is done to prevent grooving of valve

seat. Lap valve until a smooth polished seat is obtained. Thoroughly clean grinding compound from components. Valve-to-valve seat concentricity should be checked. See **VALVE SEAT CONCENTRICITY**.

CAUTION: Valve guides must be in good condition and free of carbon deposits prior to valve seat grinding. Some engines contain an induction hardened valve seat. Excessive material removal will damage valve seats.

Valve Seat Grinding

Select coarse stone of correct size and angle for seat to be ground. Ensure stone is true and has a smooth surface. Select correct size pilot for valve guide dimension. Install pilot in valve guide. Lightly lubricate pilot shaft. Install stone on pilot. Move stone off and on the seat approximately 2 times per second during grinding operation.

Select a fine stone to finish grinding operation. Various angle grinding stones are used to center and narrow the valve seat as required. See **Fig. 10**.

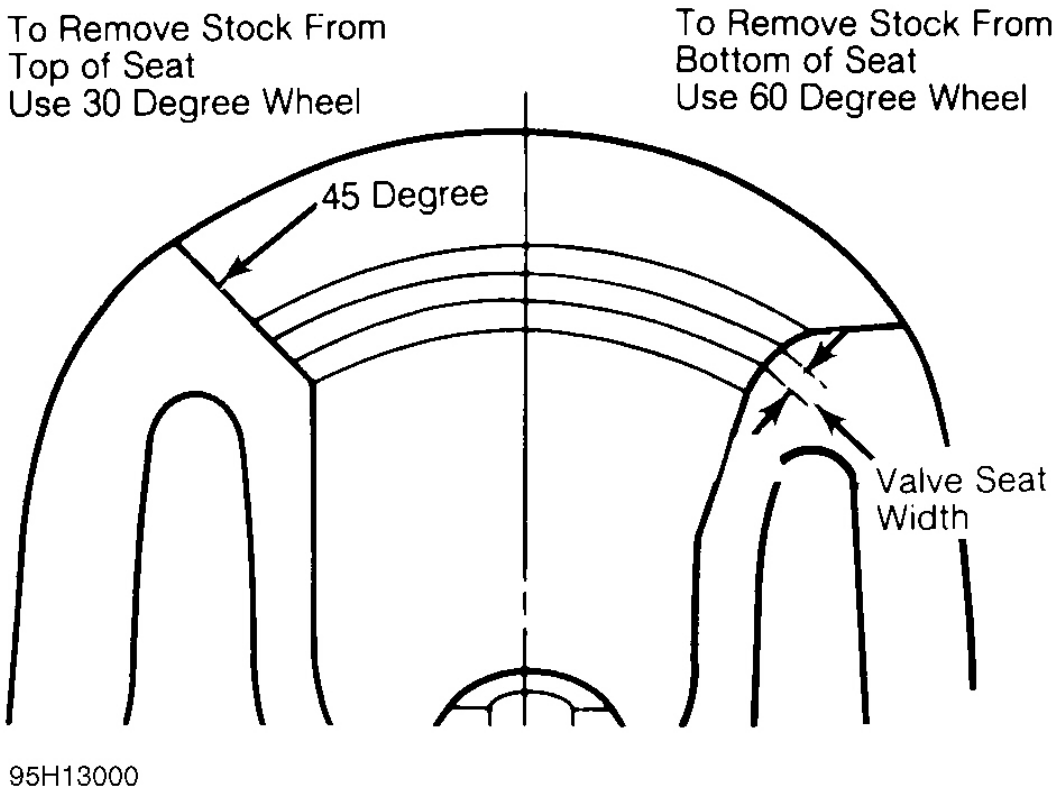

Fig. 10: Adjusting Valve Seat Width

Valve Seat Replacement

Replacement of valve seat inserts is done by cutting out the old insert and machining an oversize insert bore. Replacement oversize insert is usually cooled and the cylinder head is sometimes warmed. Valve seat is pressed into the head. This operation requires specialized machine shop equipment.

Valve Seat Concentricity

Using dial gauge, install gauge pilot in valve guide. Position gauge arm on the valve seat. Adjust dial indicator to zero. Rotate arm 360 degrees and note reading. Runout should not exceed specification.

To check valve-to-valve seat concentricity, coat valve face lightly with Prussian Blue dye. Install valve and rotate it on valve seat. If pattern is even and entire seat is coated at valve contact point, valve is concentric with the valve seat.

CYLINDER HEAD REASSEMBLY

NOTE: Examples used in this article are general in nature and do not necessarily relate to a specific engine or system. Illustrations and procedures have been chosen to guide mechanic through engine overhaul process. Descriptions of processes of cleaning, inspection, assembly and machine shop practice are included.

Always refer to appropriate engine overhaul article, if available, in the ENGINES section for complete overhaul procedures and specifications for the vehicle being repaired.

Valve Stem Installed Height

Valve stem installed height must be checked when new valves are installed or when valves or valve seats have been ground. Install valve in valve guide. Measure distance from tip of valve stem to spring seat. See **Fig. 11**. Distance must be within specification to allow sufficient clearance for valve operation.

Remove valve and grind valve stem tip if height exceeds specification. Valve tips are surface hardened. DO NOT remove more than .010" (.25 mm) from tip. Chamfer sharp edge of reground valve tip. Recheck valve stem installed height.

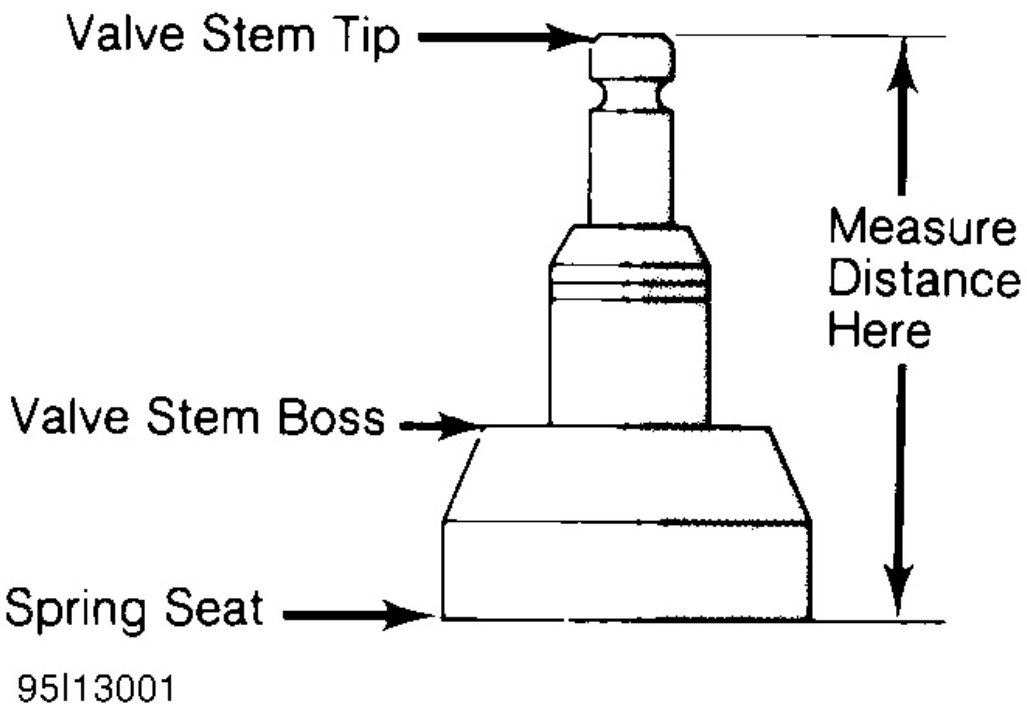

Fig. 11: Measuring Valve Stem Installed Height

VALVE STEM OIL SEALS

NOTE: **Examples used in this article are general in nature and do not necessarily relate to a specific engine or system. Illustrations and procedures have been chosen to guide mechanic through engine overhaul process. Descriptions of processes of cleaning, inspection, assembly and machine shop practice are included.**

Always refer to appropriate engine overhaul article, if available, in the ENGINES section for complete overhaul procedures and specifications for the vehicle being repaired.

Valve stem oil seals must be installed on valve stem. See **Fig. 2**. Seals are needed due to pressure differential at the ends of valve guides. Atmospheric pressure above intake guide, combined with manifold vacuum below guide, causes oil to be drawn into the cylinder.

Exhaust guides also have pressure differential created by exhaust gas flowing past the guide, creating a low pressure area. This low pressure area draws oil into the exhaust system.

Some manufacturers require that special color code or specified height valve stem oil seal be

installed in designated area.

Replacement (On-Vehicle)

Mark rocker arm or overhead cam components for location. Remove rocker arm components or overhead cam components. Components must be installed in original location. Remove spark plugs. Valve stem oil seals may be replaced by holding valves against seats using air pressure.

Air pressure must be installed in cylinder using an adapter for spark plug hole. An adapter can be constructed by welding air hose connection to spark plug body with porcelain removed.

Rotate engine until piston is at top of stroke. Install adapter in spark plug hole. Apply a minimum of 140 psi (9.8 kg/cm^2) line pressure to adapter. Air pressure should hold valve closed. If air pressure does not hold valve closed, check for damaged or bent valve. Cylinder head must be removed for service.

Using valve spring compressor, compress valve springs. Remove valve locks. Carefully release spring compressor. Remove retainer or rotator and valve spring. Remove valve stem oil seal.

If oversize valves have been installed, oversize oil seals must be used. Coat valve stem with engine oil. Install protective sleeve over end of valve stem. Install new oil seal over valve stem and seat on valve guide. Remove protective sleeve. Install spring seat, valve spring and retainer or rotator. Compress spring and install valve locks. Remove spring compressor. Ensure valve locks are fully seated.

Install rocker arms or overhead cam components. Tighten all bolts to specification. Adjust valves if required. Remove adapter. Install spark plugs, valve cover and gasket.

VALVE SPRING INSTALLED HEIGHT

NOTE: Examples used in this article are general in nature and do not necessarily relate to a specific engine or system. Illustrations and procedures have been chosen to guide mechanic through engine overhaul process. Descriptions of processes of cleaning, inspection, assembly and machine shop practice are included.

Always refer to appropriate engine overhaul article, if available, in the ENGINES section for complete overhaul procedures and specifications for the vehicle being repaired.

Valve spring installed height should be checked during reassembly. Measure height from lower edge of valve spring to the upper edge. DO NOT include valve spring seat or retainer. Distance must be within specification. If valves and/or seats have been ground, a valve spring shim may be required to correct spring height. See **Fig. 12**.

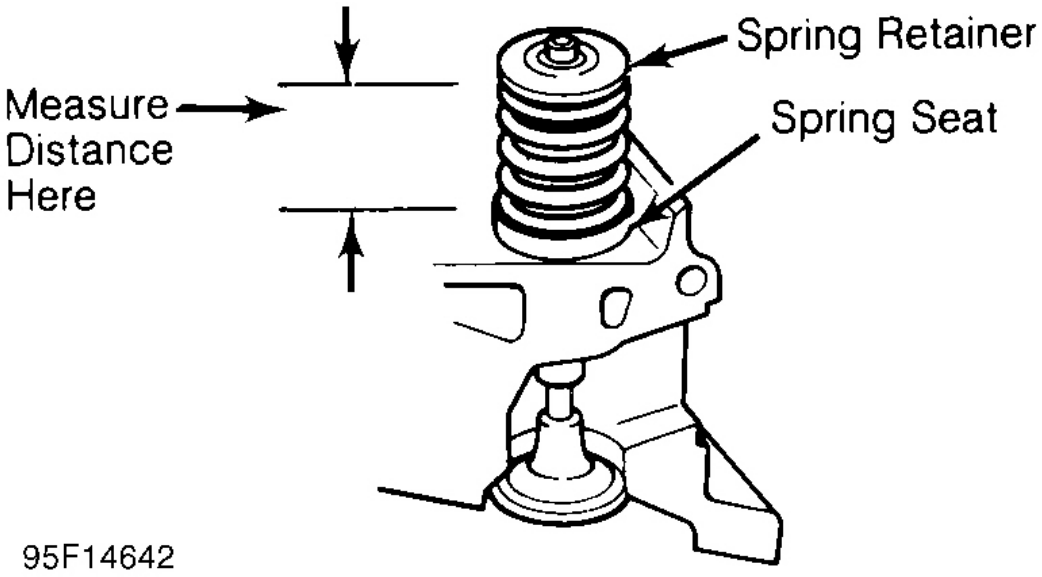

Fig. 12: Measuring Valve Spring Installed Height

ROCKER ARMS & ASSEMBLIES

NOTE: Examples used in this article are general in nature and do not necessarily relate to a specific engine or system. Illustrations and procedures have been chosen to guide mechanic through engine overhaul process. Descriptions of processes of cleaning, inspection, assembly and machine shop practice are included.

Always refer to appropriate engine overhaul article, if available, in the ENGINES section for complete overhaul procedures and specifications for the vehicle being repaired.

Rocker Studs

Rocker studs are either threaded or pressed in place. Threaded studs are removed by locking 2 nuts on the stud. Unscrew the stud by turning the jam nut. Coat new stud threads with Loctite and install. Tighten to specification.

Pressed-in stud can be removed using a stud puller. Ream stud bore to proper specification and press in a new oversize stud. Pressed-in studs are often replaced by cutting threads in the stud bore to accept a threaded stud.

Rocker Arms & Shafts

Mark rocker arms for location. Remove rocker arm retaining bolts. Remove rocker arms. Inspect

rocker arms, shafts, bushings and pivot balls (if equipped) for excessive wear. Inspect rocker arms for wear in valve stem contact area. Measure rocker arm bushing I.D. Replace bushings if excessively worn.

The rocker arm valve stem contact point may be reground, using special fixture for valve grinding machine. Remove minimum amount of material as possible. Ensure all oil passages are clear. Install rocker arm components in original location. Ensure rocker arm is properly seated in push rod. Tighten bolts to specification. Adjust valves if required. See **VALVE ADJUSTMENT**.

PUSH RODS

NOTE: **Examples used in this article are general in nature and do not necessarily relate to a specific engine or system. Illustrations and procedures have been chosen to guide mechanic through engine overhaul process. Descriptions of processes of cleaning, inspection, assembly and machine shop practice are included.**

Always refer to appropriate engine overhaul article, if available, in the ENGINES section for complete overhaul procedures and specifications for the vehicle being repaired.

Remove rocker arms. Mark push rods for location. Remove push rods. Push rods can be steel or aluminum, solid or hollow. Hollow push rods must be internally cleaned to ensure oil passage to rocker arms is cleaned. Check push rods for damage, such as loose ends on steel tipped aluminum types.

Check push rod for straightness. Roll push rod on a flat surface. Using feeler gauge, check clearance at center. Replace push rod if bent. The push rod can also be supported at each end and rotated. A dial indicator is used to detect a bent area in the push rod.

Lubricate ends of push rod and install push rod in original location. Ensure push rod is properly seated in lifter. Install rocker arm. Tighten bolts to specification. Adjust valves if required. See **VALVE ADJUSTMENT**.

LIFTERS

NOTE: **Examples used in this article are general in nature and do not necessarily relate to a specific engine or system. Illustrations and procedures have been chosen to guide mechanic through engine overhaul process. Descriptions of processes of cleaning, inspection, assembly and machine shop practice are included.**

Always refer to appropriate engine overhaul article, if available, in the ENGINES section for complete overhaul procedures and specifications for the vehicle being repaired.

Hydraulic Lifters

Before replacing a hydraulic lifter for noisy operation, ensure noise is not caused by worn rocker arms

or valve tips. Also ensure sufficient oil pressure exists. Hydraulic lifters must be installed in original location. Remove rocker arm assembly and push rod. Mark components for location. Some applications require intake manifold, cylinder head or lifter cover removal. Remove lifter retainer plate (if used). To remove lifters, use a hydraulic lifter remover or magnet. Different type lifters are used. See **Fig. 13**.

On sticking lifters, disassemble and clean lifter. DO NOT mix lifter components or positions. Parts are select-fitted and are not interchangeable. Inspect all components for wear. Note amount of wear in lifter body-to-camshaft contact area. Surface must have smooth and convex contact face. If wear is apparent, carefully inspect cam lobe.

Inspect push rod contact area and lifter body for scoring or signs of wear. If body is scored, inspect lifter bore for damage and lack of lubrication. On roller type lifters, inspect roller for flaking, pitting, loss of needle bearings and roughness during rotation.

Measure lifter body O.D. in several areas. Measure lifter bore I.D. Ensure components or oil clearance is within specification. Some models offer oversize lifters. Replace lifter if damaged.

If lifter check valve is not operating, obstructions may be preventing it from closing or valve spring may be broken. Clean or replace components as necessary.

Check plunger operation. Plunger should drop to bottom of the body by its own weight when assembled dry. If plunger is not free, soak lifter in solvent to dissolve deposits.

Lifter leak-down test can be performed on lifter. Lifter must be filled with special test oil. New lifters contain special test oil. Using lifter leak-down tester, perform leak-down test following manufacturer's instructions. If leak-down time is not within specifications, replace lifter assembly.

Lifters should be soaked in clean engine oil several hours prior to installation. Coat lifter base, roller (if equipped) and lifter body with ample amount of Molykote or camshaft lubricant. See **Fig. 13**. Install lifter in original location. Install remaining components. Valve lash adjustment is not required on most hydraulic lifters. Preload of hydraulic lifter is automatic. Some models may require adjustment.

NOTE: Some manufacturers require that a crankcase conditioner be added to engine oil and engine operated for specified amount of time to aid in lifter break-in procedure if new lifters or camshaft are installed.

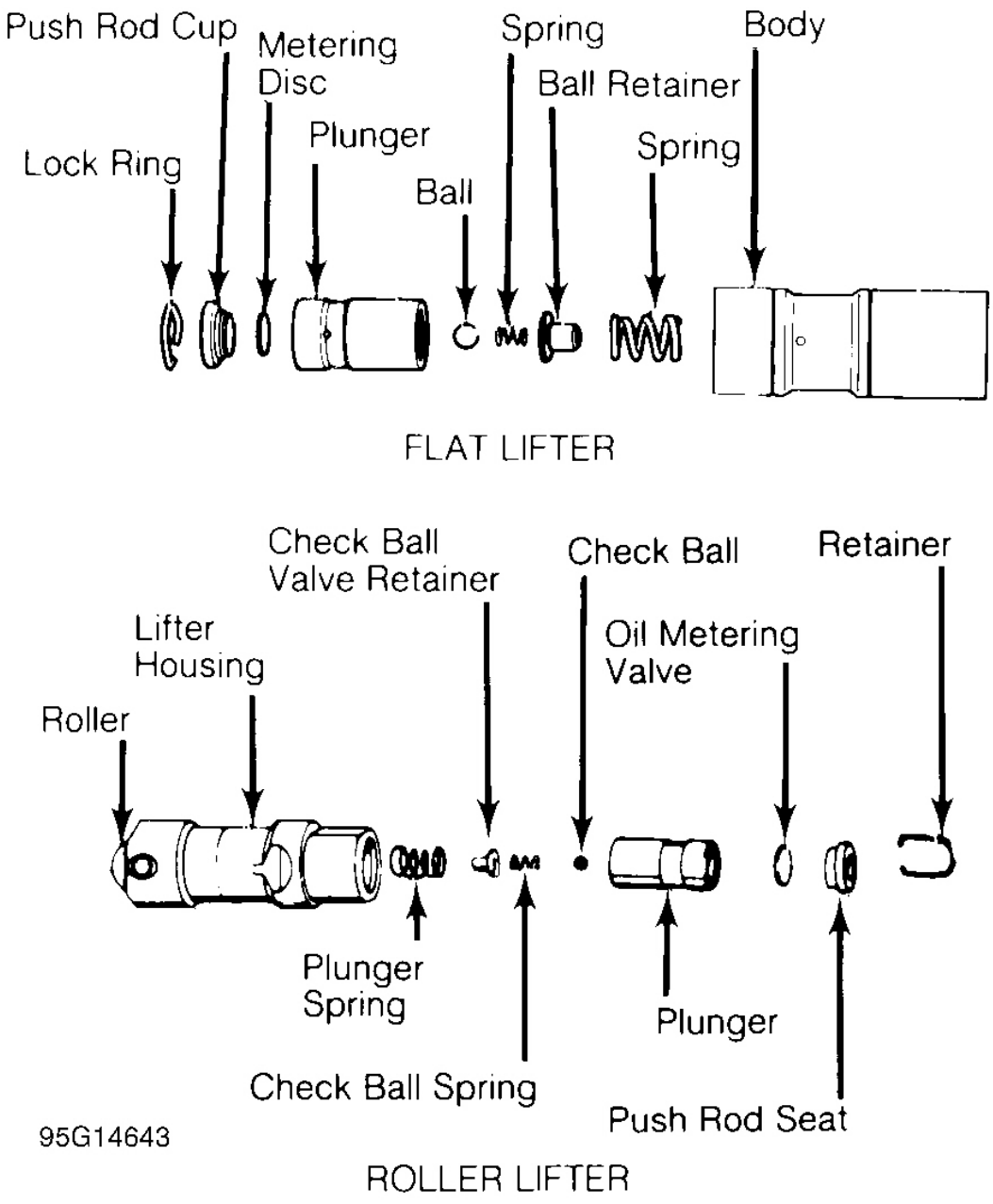

Fig. 13: Typical Hydraulic Valve Lifter Assemblies

Mechanical Lifters

Lifter assemblies must be installed in original locations. Remove rocker arm assembly and push rod. Mark components for location. Some applications require intake manifold or lifter cover removal. Remove lifter retainer plate (if used). To remove lifters, use lifter remover or magnet.

Inspect push rod contact area and lifter body for scoring or signs of wear. If body is scored, inspect lifter bore for damage and lack of lubrication. Note amount of wear in lifter body-to-camshaft contact area. Surface must have smooth and convex contact face. If wear is apparent, carefully inspect cam lobe.

Coat lifter base, roller (if equipped) and lifter body with ample amount of Molykote or camshaft lubricant. Install lifter in original location. Install remaining components. Tighten bolts to specification. Adjust valves. See **VALVE ADJUSTMENT**.

PISTONS, CONNECTING RODS & BEARINGS

* PLEASE READ THIS FIRST *

NOTE: **Examples used in this article are general in nature and do not necessarily relate to a specific engine or system. Illustrations and procedures have been chosen to guide mechanic through engine overhaul process. Descriptions of processes of cleaning, inspection, assembly and machine shop practice are included.**

Always refer to appropriate engine overhaul article, if available, in the ENGINES section for complete overhaul procedures and specifications for the vehicle being repaired.

RIDGE REMOVAL

NOTE: **Examples used in this article are general in nature and do not necessarily relate to a specific engine or system. Illustrations and procedures have been chosen to guide mechanic through engine overhaul process. Descriptions of processes of cleaning, inspection, assembly and machine shop practice are included.**

Always refer to appropriate engine overhaul article, if available, in the ENGINES section for complete overhaul procedures and specifications for the vehicle being repaired.

Ridge in cylinder wall must be removed prior to piston removal. Failure to remove ridge prior to removing pistons will cause piston damage in piston ring lands or grooves.

With piston at bottom dead center, place rag in bore to trap metal chips. Install ridge reamer in cylinder bore. Adjust ridge reamer using manufacturer's instructions. Remove ridge using ridge reamer. DO NOT remove an excessive amount of material. Ensure ridge is completely removed.

PISTON & CONNECTING ROD REMOVAL

NOTE: **Examples used in this article are general in nature and do not necessarily relate to a specific engine or system. Illustrations and procedures have been chosen to guide mechanic through engine overhaul process. Descriptions of processes of cleaning, inspection, assembly and machine shop practice are included.**

Always refer to appropriate engine overhaul article, if available, in the ENGINES section for complete overhaul procedures and specifications for the vehicle being repaired.

Note top of piston. Some pistons may contain a notch, arrow or be marked FRONT. Piston must be installed in proper direction to prevent damage with valve operation.

Check that connecting rod and cap are numbered for cylinder location and which side of cylinder block the number faces. Proper cap and connecting rod must be installed together. Connecting rod cap must be installed on connecting rod in proper direction to ensure bearing lock procedure. Mark connecting rod and cap if necessary. Pistons must be installed in original location.

Remove cap retaining nuts or bolts. Remove bearing cap. Install tubing protectors on connecting rod bolts. This protects cylinder walls from scoring during removal. Ensure proper removal of ridge. Push piston and connecting rod from cylinder. Connecting rod boss can be tapped with a wooden dowel or hammer handle to aid in removal.

PISTON & CONNECTING ROD

NOTE: **Examples used in this article are general in nature and do not necessarily relate to a specific engine or system. Illustrations and procedures have been chosen to guide mechanic through engine overhaul process. Descriptions of processes of cleaning, inspection, assembly and machine shop practice are included.**

Always refer to appropriate engine overhaul article, if available, in the ENGINES section for complete overhaul procedures and specifications for the vehicle being repaired.

Disassembly

Using ring expander, remove piston rings. Remove piston pin retaining rings (if equipped). Note direction of piston installation on connecting rod. On pressed type piston pins, special fixtures and procedures according to manufacturer must be used to remove piston pins. Follow manufacturer's recommendations to avoid piston distortion or breakage.

Cleaning

Remove all carbon and varnish from piston. Pistons and connecting rods may be cleaned in cold type chemical tank. Using ring groove cleaner, clean all deposits from ring grooves. Ensure all deposits are cleaned from ring grooves to prevent ring breakage or sticking. DO NOT attempt to clean pistons with wire brush.

Inspection

Inspect pistons for nicks, scoring, cracks or damage in ring areas. Connecting rod should be checked for cracks using Magnaflux procedure. Piston diameter must be measured in manufacturer's specified area.

Using telescopic gauge and micrometer, measure piston pin bore of piston in 2 areas, 90 degrees apart. This is done to check diameter and out-of-round.

Install proper bearing cap on connecting rod. Ensure bearing cap is installed in proper location. Tighten bolts or nuts to specification. Using inside micrometer, measure inside diameter in 2 areas, 90 degrees apart.

Connecting rod I.D. and out-of-round must be within specification. Measure piston pin bore I.D. and piston pin O.D. All components must be within specification. Subtract piston pin diameter from piston pin bore in piston and connecting rod to determine proper fit.

Connecting rod length must be measured from center of crankshaft journal inside diameter to center of piston pin bushing using proper caliper. Connecting rods must be the same length. Connecting rods should be checked on an alignment fixture for bent or twisted condition. Replace all components which are damaged or not within specification.

PISTON & CYLINDER BORE FIT

NOTE: **Examples used in this article are general in nature and do not necessarily relate to a specific engine or system. Illustrations and procedures have been chosen to guide mechanic through engine overhaul process. Descriptions of processes of cleaning, inspection, assembly and machine shop practice are included.**

Always refer to appropriate engine overhaul article, if available, in the ENGINES section for complete overhaul procedures and specifications for the vehicle being repaired.

Ensure cylinder is checked for taper, out-of-round and properly honed prior to checking piston and cylinder bore fit. See **CYLINDER BLOCK**. Using dial bore gauge, measure cylinder bore.

Measure piston skirt diameter at 90 degree angle to piston pin at specified area by manufacturer. Subtract piston diameter from cylinder bore diameter to determine piston-to-cylinder clearance. Clearance must be within specification. Mark piston for proper cylinder location.

ASSEMBLING PISTON & CONNECTING ROD

NOTE: **Examples used in this article are general in nature and do not necessarily relate to a specific engine or system. Illustrations and procedures have been chosen to guide mechanic through engine overhaul process. Descriptions of processes of cleaning, inspection, assembly and machine shop practice are included.**

Always refer to appropriate engine overhaul article, if available, in the ENGINES section for complete overhaul procedures and specifications for the vehicle being repaired.

Install piston on connecting rod for corresponding cylinder. Ensure reference marking on top of piston corresponds with connecting rod and cap number. See **Fig. 14**.

Lubricate piston pin and install in connecting rod. Ensure piston pin retainers are fully seated (if equipped). On pressed type piston pins, follow manufacturer's recommended procedure to avoid distortion or breakage.

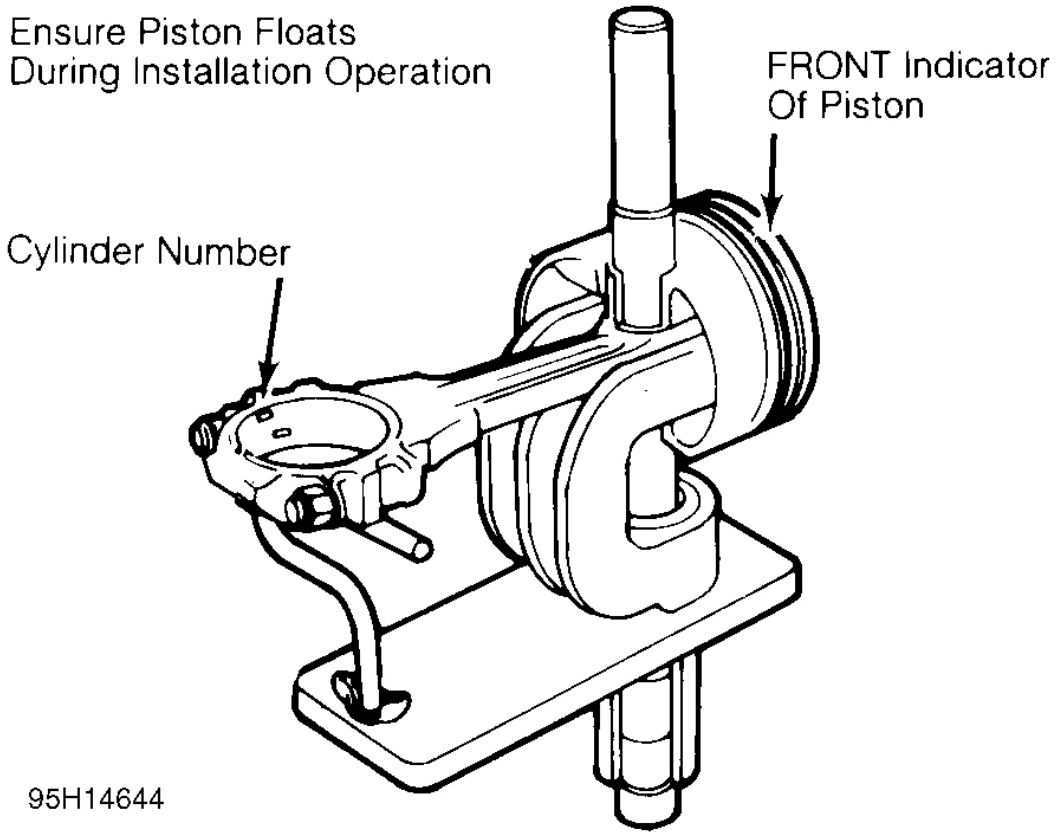

Fig. 14: Installing Typical Piston Pin

CHECKING PISTON RING CLEARANCES

NOTE: **Examples used in this article are general in nature and do not necessarily relate to a specific engine or system. Illustrations and procedures have been chosen to guide mechanic through engine overhaul process. Descriptions of processes of cleaning, inspection, assembly and machine shop practice are included.**

Always refer to appropriate engine overhaul article, if available, in the ENGINES section for complete overhaul procedures and specifications for the vehicle being repaired.

Piston rings must be checked for side clearance and end gap. To check end gap, install piston ring in cylinder in which it is to be installed. Using an inverted piston, push ring to bottom of cylinder in

smallest cylinder diameter.

Using feeler gauge, check ring end gap. See **Fig. 15**. Piston ring end gap must be within specification. Ring breakage will occur if insufficient ring end gap exists.

Some manufacturers permit correcting insufficient ring end gap by using a fine file while other manufacturers recommend using another ring set. Mark rings for proper cylinder installation after checking end gap.

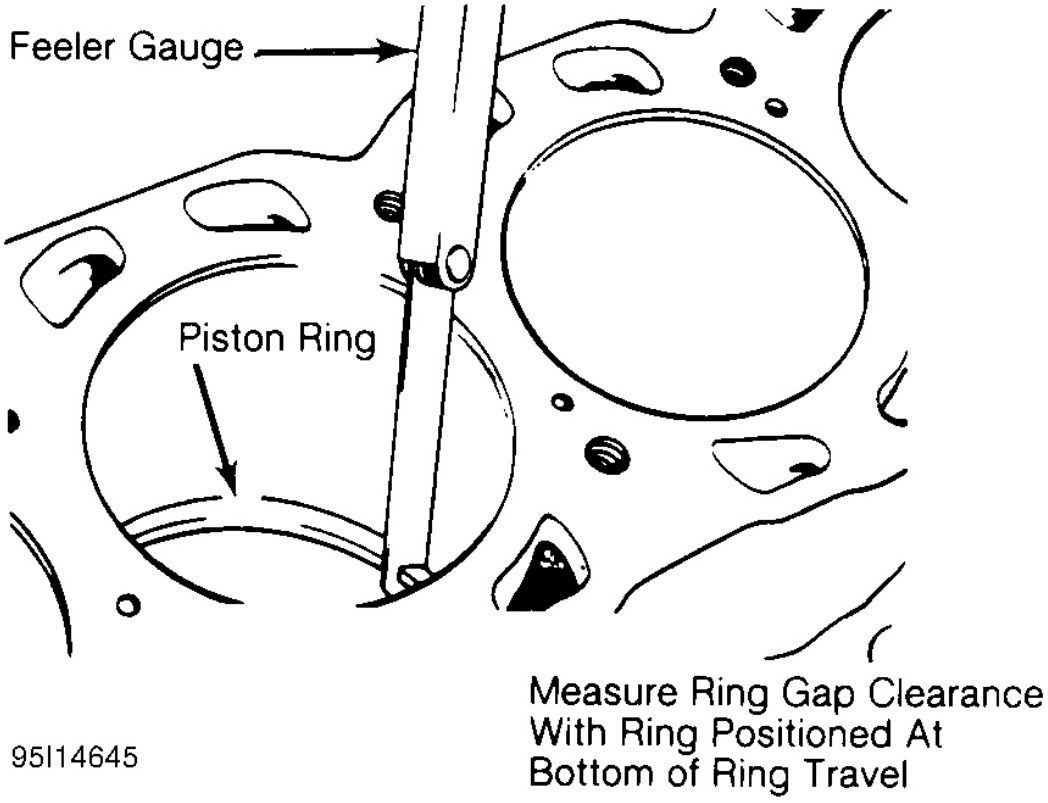

Fig. 15: Checking Piston Ring End Gap

For checking side clearance, install rings on piston. Using feeler gauge, measure clearance between piston ring and piston ring land. Check side clearance in several areas around piston. Side clearance must be within specification.

If side clearance is excessive, piston ring grooves can be machined to accept oversize piston rings (if available). Normal practice is to replace piston.

PISTON & CONNECTING ROD INSTALLATION

NOTE: **Examples used in this article are general in nature and do not necessarily relate to a specific engine or system. Illustrations and procedures have been chosen to guide mechanic through engine overhaul process. Descriptions of processes of cleaning, inspection, assembly and machine shop practice are included.**

Always refer to appropriate engine overhaul article, if available, in the ENGINES section for complete overhaul procedures and specifications for the vehicle being repaired.

Cylinders must be honed prior to piston installation. See **CYLINDER HONING** under CYLINDER BLOCK.

Install upper connecting rod bearings. Lubricate upper bearings with engine oil. Install lower bearings in rod caps. Ensure bearing tabs are properly seated. Position piston ring gaps according to manufacturer's recommendations. See **Fig. 16**. Lubricate pistons, rings and cylinder walls.

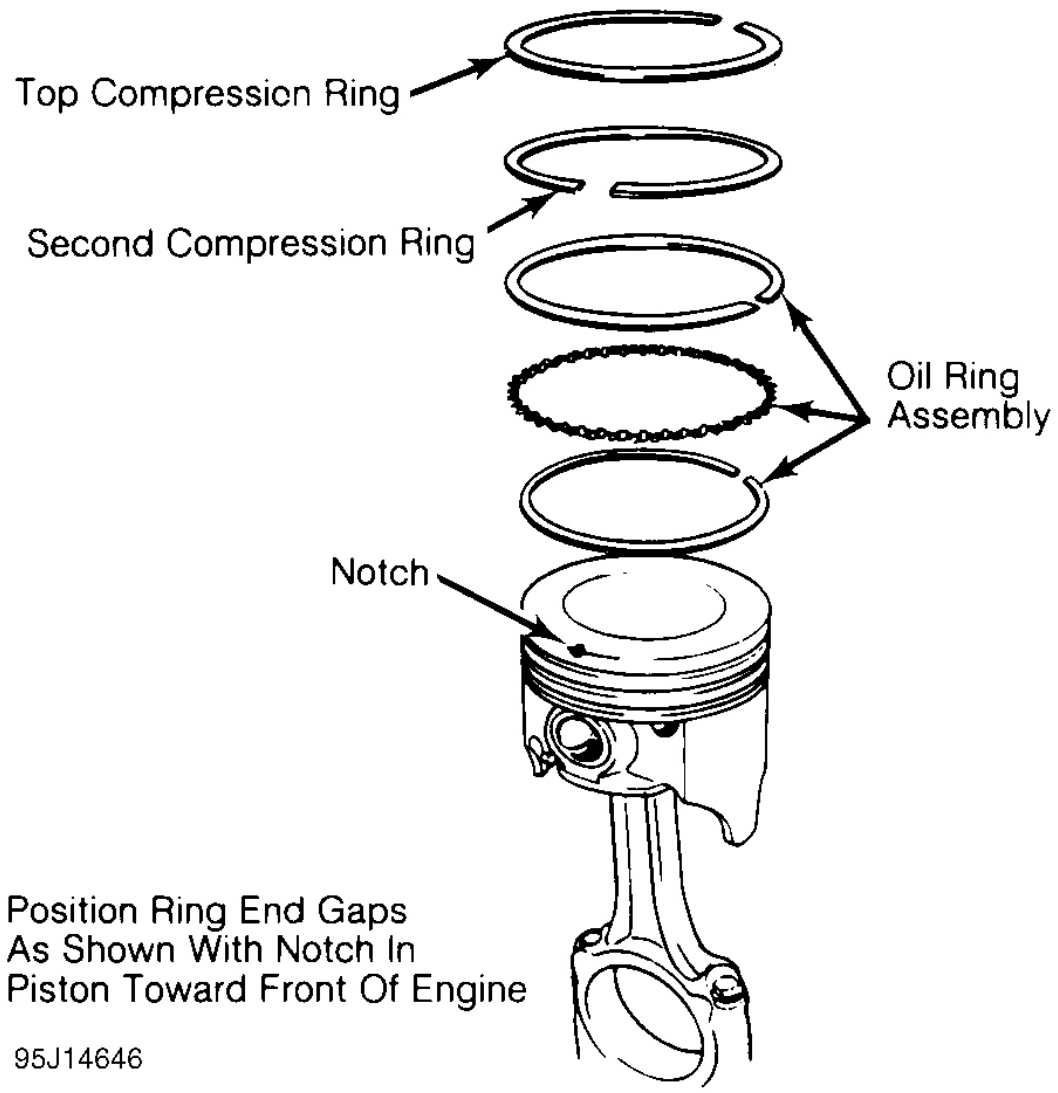

Fig. 16: Positioning Typical Piston Ring End Gap

Install ring compressor. Use care not to rotate piston rings. Compress rings with ring compressor. Install plastic tubing protectors over connecting rod bolts. Install piston and connecting rod assembly. Ensure piston notch, arrow or FRONT mark is toward front of engine. See **Fig. 17**.

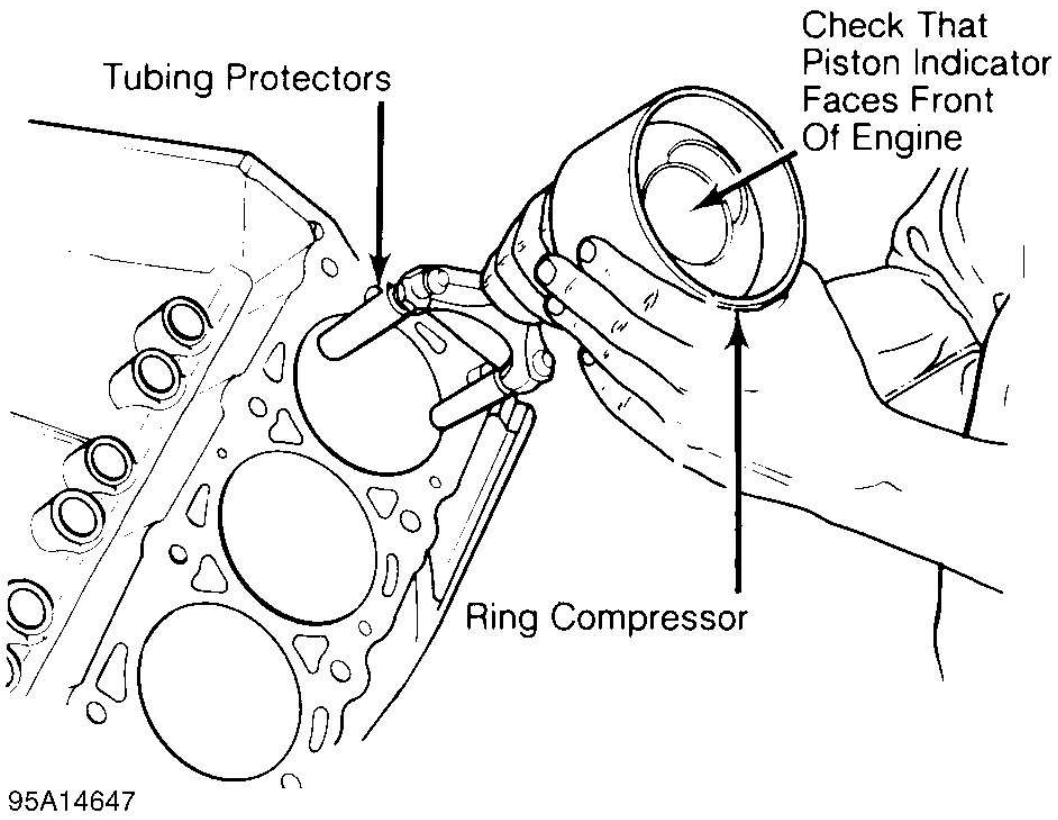

Fig. 17: Installing Piston & Connecting Rod Assembly

Carefully tap piston into cylinder until rod bearing is seated on crankshaft journal. Remove protectors. Install rod cap and bearing. Lightly tighten connecting rod bolts. Repeat procedure for remaining cylinders. Check bearing clearance. See **MAIN & CONNECTING ROD BEARING CLEARANCE**.

Once clearance is checked, lubricate journals and bearings. Install bearing caps. Ensure marks are aligned on connecting rod and cap. Tighten rod nuts or bolts to specification. Ensure rod moves freely on crankshaft. Check connecting rod side clearance. See **CONNECTING ROD SIDE CLEARANCE**.

CONNECTING ROD SIDE CLEARANCE

NOTE: **Examples used in this article are general in nature and do not necessarily relate to a specific engine or system. Illustrations and procedures have been chosen to guide mechanic through engine overhaul process. Descriptions of processes of cleaning, inspection, assembly and machine shop practice are included.**

Always refer to appropriate engine overhaul article, if available, in the ENGINES section for complete overhaul procedures and specifications for the vehicle being repaired.

Position connecting rod toward one side of crankshaft as far as possible. Using feeler gauge, measure clearance between side of connecting rod and crankshaft. See **Fig. 18**. Clearance must be within specification.

Check for improper bearing installation, wrong bearing cap or insufficient bearing clearance if side clearance is insufficient. Connecting rod may require machining to obtain proper clearance. Excessive clearance usually indicates excessive wear at crankshaft. Crankshaft must be repaired or replaced.

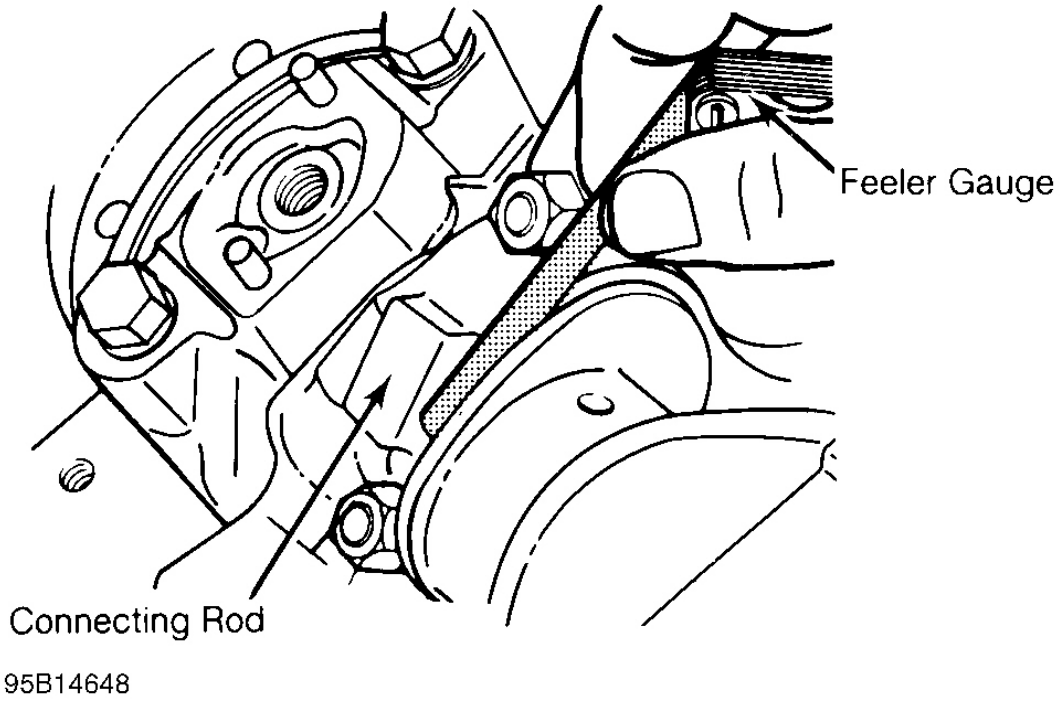

Fig. 18: Measuring Connecting Rod Side Clearance

MAIN & CONNECTING ROD BEARING CLEARANCE

NOTE: **Examples used in this article are general in nature and do not necessarily relate to a specific engine or system. Illustrations and procedures have been chosen to guide mechanic through engine overhaul process. Descriptions of processes of cleaning, inspection, assembly and machine shop practice are included.**

Always refer to appropriate engine overhaul article, if available, in the ENGINES section for complete overhaul procedures and specifications for the vehicle being repaired.

Plastigage Method

Plastigage method may be used to determine bearing clearance. Plastigage can be used with an engine in service or during reassembly. Plastigage material is oil soluble.

Ensure journals and bearings are free of oil or solvent. Oil or solvent will dissolve material and false reading will be obtained. Install small piece of Plastigage along full length of bearing journal. Install bearing cap in original location. Tighten bolts to specification.

CAUTION: DO NOT rotate crankshaft while Plastigage is installed. Bearing clearance will not be obtained if crankshaft is rotated.

Remove bearing cap. Compare Plastigage width with scale on Plastigage container to determine bearing clearance. See **Fig. 19**. Rotate crankshaft 90 degrees. Repeat procedure. This is done to check journal eccentricity. This procedure can be used to check oil clearance on both connecting rod and main bearings.

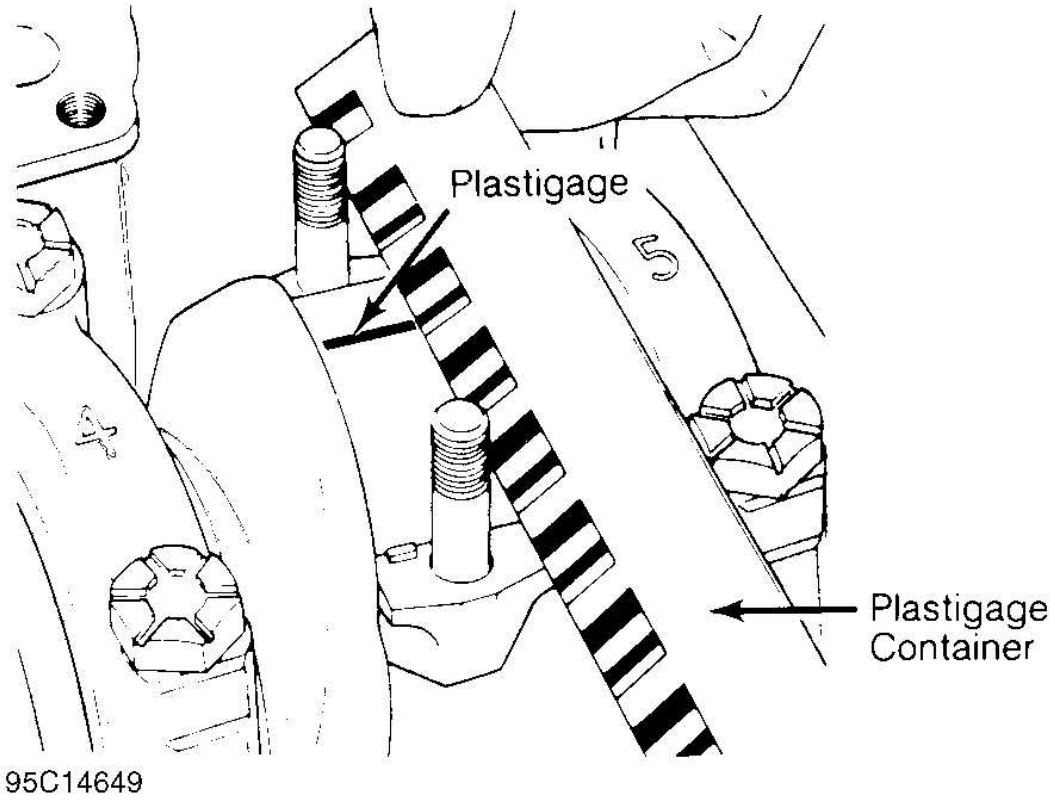

Fig. 19: Measuring Bearing Clearance

Micrometer & Telescopic Gauge Method

A micrometer is used to determine journal diameter, taper and out-of-round dimensions of the

crankshaft. See **CLEANING & INSPECTION** under CRANKSHAFT & MAIN BEARINGS in this article.

With crankshaft removed, install bearings and caps in original location on cylinder block. Tighten bolts to specification. On connecting rods, install bearings and caps on connecting rods. Install proper connecting rod cap on corresponding rod. Ensure bearing cap is installed in original location. Tighten bolts to specification.

Using a telescopic gauge and micrometer or inside micrometer, measure inside diameter of connecting rod and main bearings bores. Subtract each crankshaft journal diameter from the corresponding inside bearing bore diameter. This is the bearing clearance.

CRANKSHAFT & MAIN BEARINGS

*** PLEASE READ THIS FIRST ***

NOTE: **Examples used in this article are general in nature and do not necessarily relate to a specific engine or system. Illustrations and procedures have been chosen to guide mechanic through engine overhaul process. Descriptions of processes of cleaning, inspection, assembly and machine shop practice are included.**

Always refer to appropriate engine overhaul article, if available, in the ENGINES section for complete overhaul procedures and specifications for the vehicle being repaired.

REMOVAL

NOTE: **Examples used in this article are general in nature and do not necessarily relate to a specific engine or system. Illustrations and procedures have been chosen to guide mechanic through engine overhaul process. Descriptions of processes of cleaning, inspection, assembly and machine shop practice are included.**

Always refer to appropriate engine overhaul article, if available, in the ENGINES section for complete overhaul procedures and specifications for the vehicle being repaired.

Ensure all main bearing caps are marked for location on cylinder block. Some main bearing caps have an arrow stamped on them. The arrow must face timing belt or timing chain end of engine. Remove main bearing cap bolts. Remove main bearing caps. Carefully remove crankshaft. Use care not to bind crankshaft in cylinder block during removal.

CLEANING & INSPECTION

NOTE: **Examples used in this article are general in nature and do not necessarily relate to a specific engine or system. Illustrations and procedures have been chosen to guide mechanic through engine overhaul process. Descriptions of processes of cleaning, inspection, assembly and machine shop practice are included.**

Always refer to appropriate engine overhaul article, if available, in the ENGINES section for complete overhaul procedures and specifications for the vehicle being repaired.

Thoroughly clean crankshaft using solvent. Dry with compressed air. Ensure all oil passages are clear and free of sludge, rust, dirt and metal chips.

Inspect crankshaft for scoring and nicks. Inspect crankshaft for cracks using Magnaflux procedure. Inspect rear seal area for grooving or damage. Inspect bolt hole threads for damage. If pilot bearing or bushing is used, check pilot bearing or bushing fit in crankshaft. Inspect crankshaft gear for damaged or cracked teeth. Replace gear if damaged. Ensure oil passage plugs are tight (if equipped).

Using micrometer, measure all journals in 4 areas to determine journal taper, out-of-round and undersize. See **Fig. 20**. Some crankshafts can be reground to the next largest undersize, depending on the amount of wear or damage. Crankshafts with rolled fillet cannot be reground and must be replaced.

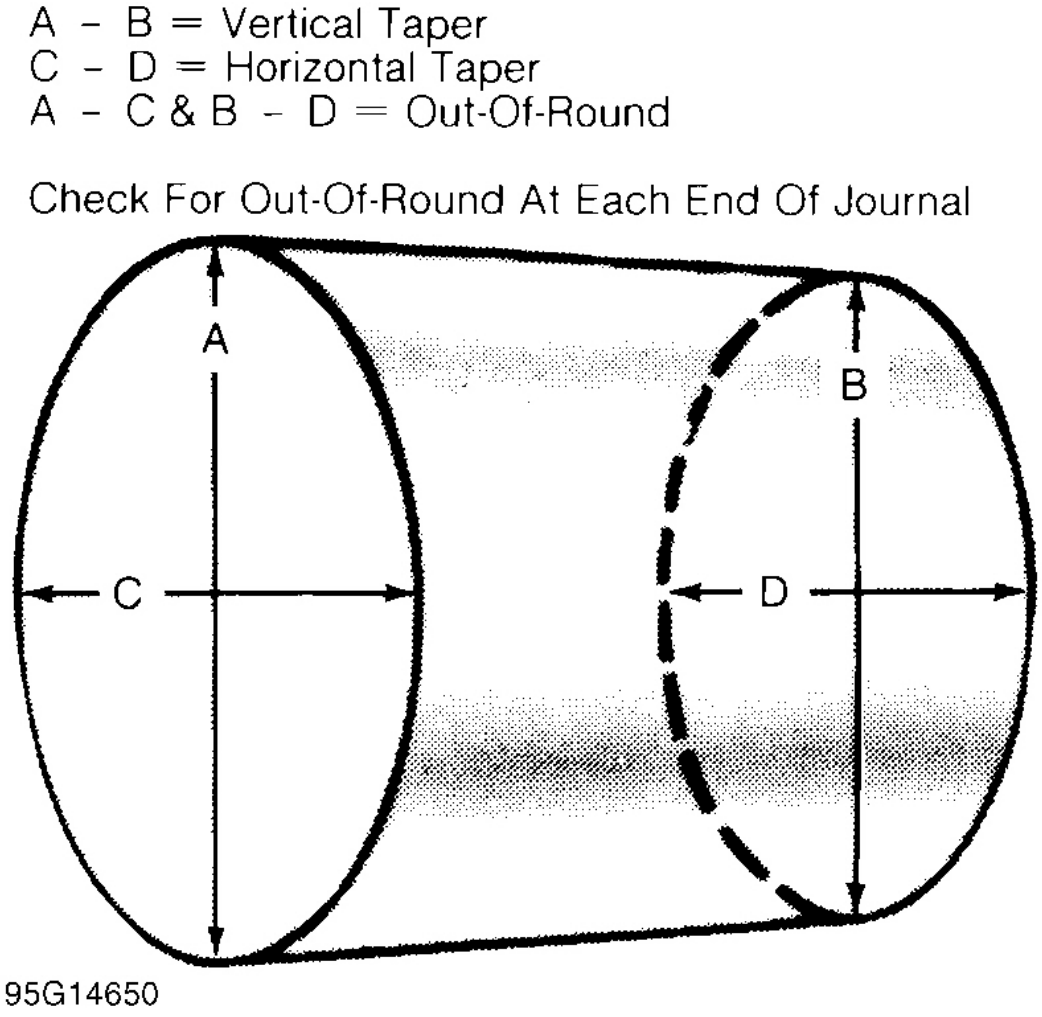

Fig. 20: Measuring Crankshaft Journals

Crankshaft journal runout should be checked. Install crankshaft in "V" blocks or bench center. Position dial indicator with tip resting on the main bearing journal area. See **Fig. 21**. Rotate crankshaft and note reading. Journal runout must not exceed specification. Repeat procedure on all main bearing journals. Crankshaft must be replaced if runout exceeds specification.

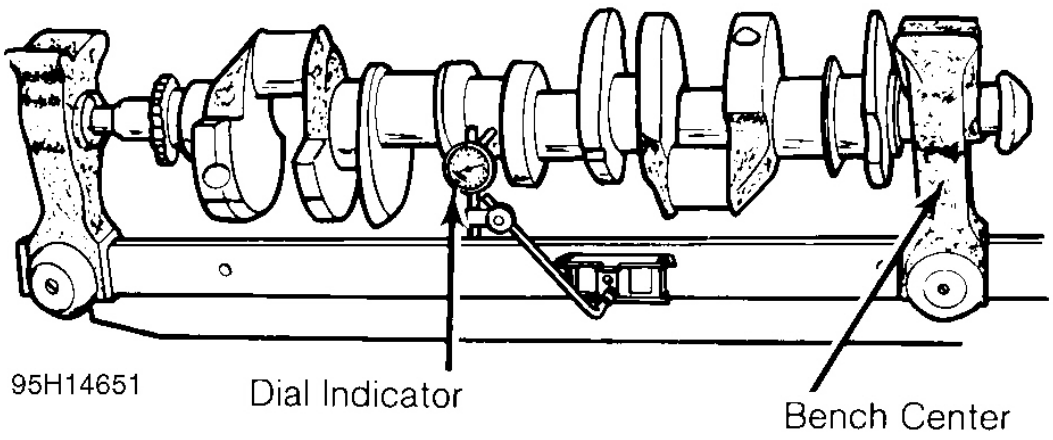

Fig. 21: Measuring Crankshaft Main Bearing Journal Runout

INSTALLATION

NOTE: **Examples used in this article are general in nature and do not necessarily relate to a specific engine or system. Illustrations and procedures have been chosen to guide mechanic through engine overhaul process. Descriptions of processes of cleaning, inspection, assembly and machine shop practice are included.**

Always refer to appropriate engine overhaul article, if available, in the ENGINES section for complete overhaul procedures and specifications for the vehicle being repaired.

Install upper main bearing in cylinder block. Ensure lock tab is properly located in cylinder block. Install bearings in main bearing caps. Ensure all oil passages are aligned. Install rear seal (if removed).

Ensure crankshaft journals are clean. Lubricate upper main bearings with clean engine oil. Carefully install crankshaft. Check each main bearing clearance using Plastigage method. See **MAIN & CONNECTING ROD BEARING CLEARANCE**.

Once clearance is checked, lubricate lower main bearing and journals. Install main bearing caps in original location. Install rear seal in rear main bearing cap (if removed). Some rear main bearing caps require sealant to be applied in corners to prevent oil leakage.

Install and tighten all bolts except thrust bearing cap to specification. Tighten thrust bearing cap bolts finger tight only. Some models require that thrust bearing be aligned. On most applications, crankshaft must be moved rearward then forward. Procedure may vary with manufacturer. Thrust bearing cap is then tightened to specification. Ensure crankshaft rotates freely. Crankshaft end play should be checked. See **CRANKSHAFT END PLAY**.

CRANKSHAFT END PLAY

NOTE: **Examples used in this article are general in nature and do not necessarily relate to a specific engine or system. Illustrations and procedures have been chosen to guide mechanic through engine overhaul process. Descriptions of processes of cleaning, inspection, assembly and machine shop practice are included.**

Always refer to appropriate engine overhaul article, if available, in the ENGINES section for complete overhaul procedures and specifications for the vehicle being repaired.

Dial Indicator Method

Crankshaft end play can be checked using dial indicator. Mount dial indicator on rear of cylinder block. Position dial indicator tip against rear of crankshaft. Ensure tip is resting against flat surface.

Pry crankshaft rearward. Adjust dial indicator to zero. Pry crankshaft forward and note reading. Crankshaft end play must be within specification. If end play is not within specification, check for faulty thrust bearing installation or worn crankshaft. Some applications offer oversize thrust bearings.

Feeler Gauge Method

Crankshaft end play can be checked using feeler gauge. Pry crankshaft rearward. Pry crankshaft forward. Using feeler gauge, measure clearance between crankshaft and thrust bearing surface. See **Fig. 22**.

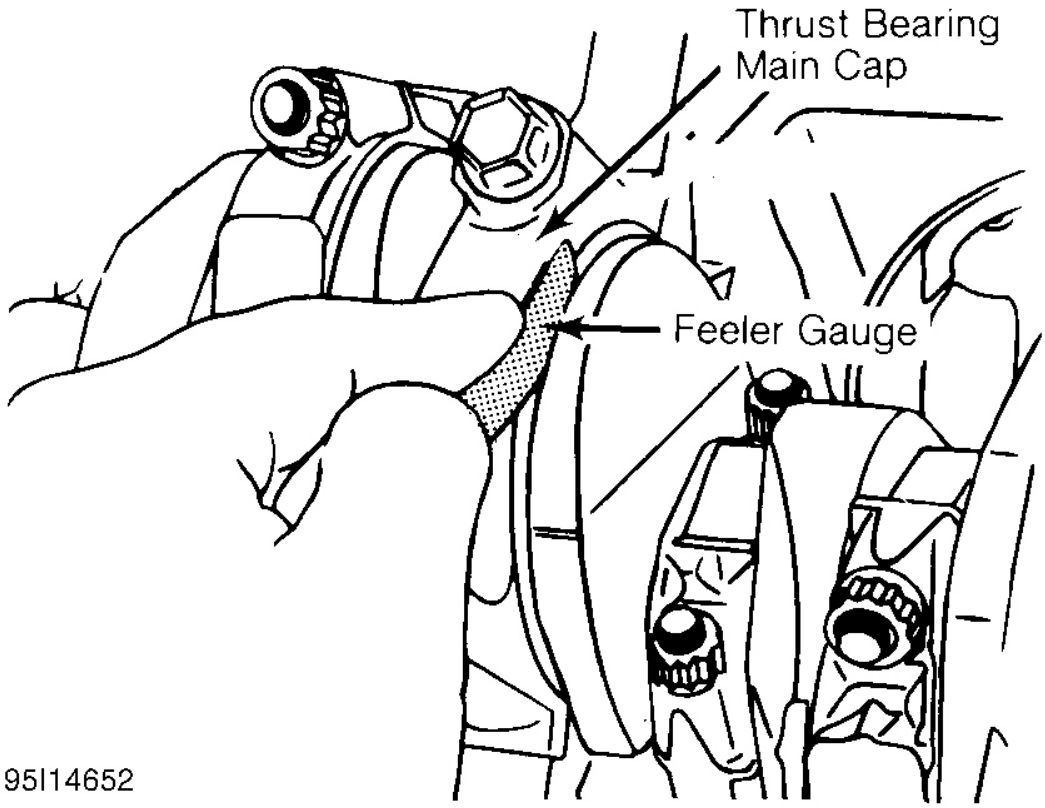

Fig. 22: Checking Crankshaft End Play

Crankshaft end play must be within specification. If end play is not within specification, check for faulty thrust bearing installation or worn crankshaft. Some applications offer oversize thrust bearings.

CYLINDER BLOCK

NOTE: Examples used in this article are general in nature and do not necessarily relate to a specific engine or system. Illustrations and procedures have been chosen to guide mechanic through engine overhaul process. Descriptions of processes of cleaning, inspection, assembly and machine shop practice are included.

Always refer to appropriate engine overhaul article, if available, in the ENGINES section for complete overhaul procedures and specifications for the vehicle being repaired.

Block Cleaning

Only cast cylinder blocks should be hot tank cleaned. Aluminum cylinder blocks should be cleaned using cold tank method. Cylinder block is cleaned in order to remove carbon deposits, gasket residue

and water jacket scale. Remove oil gallery plugs, freeze plugs and cam bearings before cleaning block.

Block Inspection

Visually inspect the block. Check suspected areas for cracks using the Dye Penetrant inspection method. Block may be checked for cracks using the Magnaflux method.

Cracks are most commonly found at the bottom of cylinders, main bearing saddles, near expansion plugs and between cylinders and water jackets. Inspect lifter bores for damage. Inspect all head bolt holes for damaged threads. Threads should be cleaned using tap to ensure proper head bolt torque. Consult machine shop concerning possible welding and machining (if required).

Cylinder Bore Inspection

Inspect bore for scoring or roughness. Cylinder bore is dimensionally checked for out-of-round and taper using dial bore gauge. For determining out-of-round, measure cylinder parallel and perpendicular to the block center line. Difference in the 2 readings is the bore out-of-round. Cylinder bore must be checked at top, middle and bottom of piston travel area.

Bore taper is obtained by measuring bore at the top and bottom. If wear has exceeded allowable limits, block must be honed or bored to next available oversize piston dimension.

Cylinder Honing

Cylinder must be properly honed to allow new piston rings to properly seat. Cross-hatching at correct angle and depth is critical to lubrication of cylinder walls and pistons.

A flexible drive hone and power drill are commonly used. Drive hone must be lubricated during operation. Mix equal parts of kerosene and SAE 20W engine oil for lubrication.

Apply lubrication to cylinder wall. Operate cylinder hone from top to bottom of cylinder using even strokes to produce 45 degree cross-hatch pattern on the cylinder wall. DO NOT allow cylinder hone to extend below cylinder during operation.

Recheck bore dimension after final honing. Wash cylinder wall with hot soapy water to remove abrasive particles. Blow dry with compressed air. Coat cleaned cylinder walls with lubricating oil.

Deck Warpage

Check deck for damage or warped gasket surface. Place a straightedge across gasket surface of the deck. Using feeler gauge, measure clearance at center of straightedge. Measure across width and length of cylinder block at several points.

If warpage exceeds specifications, deck must be resurfaced. If warpage exceeds manufacturer's maximum tolerance for material removal, replace block.

NOTE: **Some manufacturers recommend that a total amount of material (cylinder head and cylinder block) can only be removed before components must be replaced.**

Deck Height

Distance from crankshaft center line to block deck is called the deck height. Measure and record front and rear main journals of crankshaft. To compute this distance, install crankshaft and retain with center main bearing and cap only. Measure distance from crankshaft journal to block deck, parallel to cylinder center line.

Add one half of main bearing journal diameter to distance from crankshaft journal to block deck. This dimension should be checked at front and rear of cylinder block. Both readings should be the same.

If difference exceeds specification, cylinder block must be repaired or replaced. Deck height and warpage should be corrected at the same time.

Main Bearing Bore & Alignment

For checking main bearing bore, remove all bearings from cylinder block and main bearing caps. Install main bearing caps in original location. Tighten bolts to specification. Using inside micrometer, measure main bearing bore in 2 areas 90 degrees apart. Determine bore size and out-of-round. If diameter is not within specification, block must be align-bored.

For checking alignment, place a straightedge along center line of main bearing saddles. Check for clearance between straightedge and main bearing saddles. Block must be align-bored if clearance exists.

Expansion Plug Removal

Drill hole in center of expansion plug. Remove with screwdriver or punch. Use care not to damage sealing surface.

Expansion Plug Installation

Ensure sealing surface is free of burrs. Coat expansion plug with sealer. Using wooden dowel or pipe of slightly smaller diameter, install expansion plug. Ensure expansion plug is evenly located.

Oil Gallery Plug Removal

Remove threaded oil gallery plugs using appropriate wrench. Soft press-in plugs are removed by drilling into plug and installing a sheet metal screw. Remove plug with slide hammer or pliers.

Oil Gallery Plug Installation

Ensure threads or sealing surface is clean. Coat threaded oil gallery plugs with sealer and install. Replacement soft press-in plugs are installed with a hammer and drift.

CAMSHAFT

*** PLEASE READ THIS FIRST ***

NOTE: **Examples used in this article are general in nature and do not necessarily relate to a specific engine or system. Illustrations and procedures have been chosen to guide mechanic through engine overhaul process. Descriptions of processes of cleaning, inspection, assembly and machine shop practice are included.**

Always refer to appropriate engine overhaul article, if available, in the ENGINES section for complete overhaul procedures and specifications for the vehicle being repaired.

CLEANING & INSPECTION

NOTE: **Examples used in this article are general in nature and do not necessarily relate to a specific engine or system. Illustrations and procedures have been chosen to guide mechanic through engine overhaul process. Descriptions of processes of cleaning, inspection, assembly and machine shop practice are included.**

Always refer to appropriate engine overhaul article, if available, in the ENGINES section for complete overhaul procedures and specifications for the vehicle being repaired.

Clean camshaft with solvent. Ensure all oil passages are clear. Inspect cam lobes and bearing journals for pitting, flaking or scoring. Using micrometer, measure bearing journal O.D.

Support camshaft at each end with "V" blocks. Position dial indicator with tip resting on center bearing journal. Rotate camshaft and note camshaft runout reading. If reading exceeds specification, replace camshaft.

Check cam lobe lift by measuring base circle of camshaft using micrometer. Measure again at 90-degree angle to tip of cam lobe. Cam lift can be determined by subtracting base circle diameter from tip of cam lobe measurement.

Different lift dimensions are given for intake and exhaust cam lobes. Reading must be within specification. Replace camshaft if cam lobes or bearing journals are not within specification.

Inspect camshaft gear for chipped, eroded or damaged teeth. Replace gear if damaged. On camshafts using thrust plate, measure distance between thrust plate and camshaft shoulder. Replace thrust plate if not within specification.

CAMSHAFT BEARINGS

NOTE: **Examples used in this article are general in nature and do not necessarily relate to a specific engine or system. Illustrations and procedures have been chosen**

to guide mechanic through engine overhaul process. Descriptions of processes of cleaning, inspection, assembly and machine shop practice are included.

Always refer to appropriate engine overhaul article, if available, in the ENGINES section for complete overhaul procedures and specifications for the vehicle being repaired.

Removal & Installation

Remove camshaft rear plug. Camshaft bearing remover is assembled with shoulder resting against bearing to be removed according to manufacturer's instructions. Tighten puller nut until bearing is removed. Remove remaining bearings, leaving front and rear bearings until last. These bearings act as a guide for camshaft bearing remover.

To install new bearings, puller is rearranged to pull bearings toward the center of block. Ensure all lubrication passages of bearing are aligned with cylinder block. Coat new camshaft rear plug with sealant. Install camshaft rear plug. Ensure plug is even in cylinder block.

CAMSHAFT INSTALLATION

NOTE: **Examples used in this article are general in nature and do not necessarily relate to a specific engine or system. Illustrations and procedures have been chosen to guide mechanic through engine overhaul process. Descriptions of processes of cleaning, inspection, assembly and machine shop practice are included.**

Always refer to appropriate engine overhaul article, if available, in the ENGINES section for complete overhaul procedures and specifications for the vehicle being repaired.

Lubricate bearing surfaces and cam lobes with ample amount of Molykote or camshaft lubricant. Carefully install camshaft. Use care not to damage bearing journals during installation. Install thrust plate retaining bolts (if equipped). Tighten bolts to specification. On overhead camshafts, install bearing caps in original location. Tighten bolts to specification. On all applications, check camshaft end play.

CAMSHAFT END PLAY

NOTE: **Examples used in this article are general in nature and do not necessarily relate to a specific engine or system. Illustrations and procedures have been chosen to guide mechanic through engine overhaul process. Descriptions of processes of cleaning, inspection, assembly and machine shop practice are included.**

Always refer to appropriate engine overhaul article, if available, in the ENGINES section for complete overhaul procedures and specifications for the vehicle being repaired.

Using dial indicator, check camshaft end play. Position dial indicator on front of engine block or cylinder head. Position indicator tip against camshaft. Push camshaft toward rear of cylinder head or engine and adjust indicator to zero.

Move camshaft forward and note reading. Camshaft end play must be within specification. End play may be adjusted by relocating gear, shimming thrust plate or replacing thrust plate depending on each manufacturer.

TIMING CHAINS & BELTS

*** PLEASE READ THIS FIRST ***

NOTE: **Examples used in this article are general in nature and do not necessarily relate to a specific engine or system. Illustrations and procedures have been chosen to guide mechanic through engine overhaul process. Descriptions of processes of cleaning, inspection, assembly and machine shop practice are included.**

Always refer to appropriate engine overhaul article, if available, in the ENGINES section for complete overhaul procedures and specifications for the vehicle being repaired.

TIMING CHAINS

NOTE: **Examples used in this article are general in nature and do not necessarily relate to a specific engine or system. Illustrations and procedures have been chosen to guide mechanic through engine overhaul process. Descriptions of processes of cleaning, inspection, assembly and machine shop practice are included.**

Always refer to appropriate engine overhaul article, if available, in the ENGINES section for complete overhaul procedures and specifications for the vehicle being repaired.

Timing chains will stretch during operation. Limits are placed upon amount of stretch before replacement is required. Timing chain stretch will alter ignition timing and valve timing.

To check timing chain stretch, rotate crankshaft to eliminate slack from one side of timing chain. Mark reference point on cylinder block. Rotate crankshaft in opposite direction to eliminate slack from remaining side of timing chain. Force other side of chain outward and measure distance between reference point and timing chain. See **Fig. 23**. Replace timing chain and gears if not within specification.

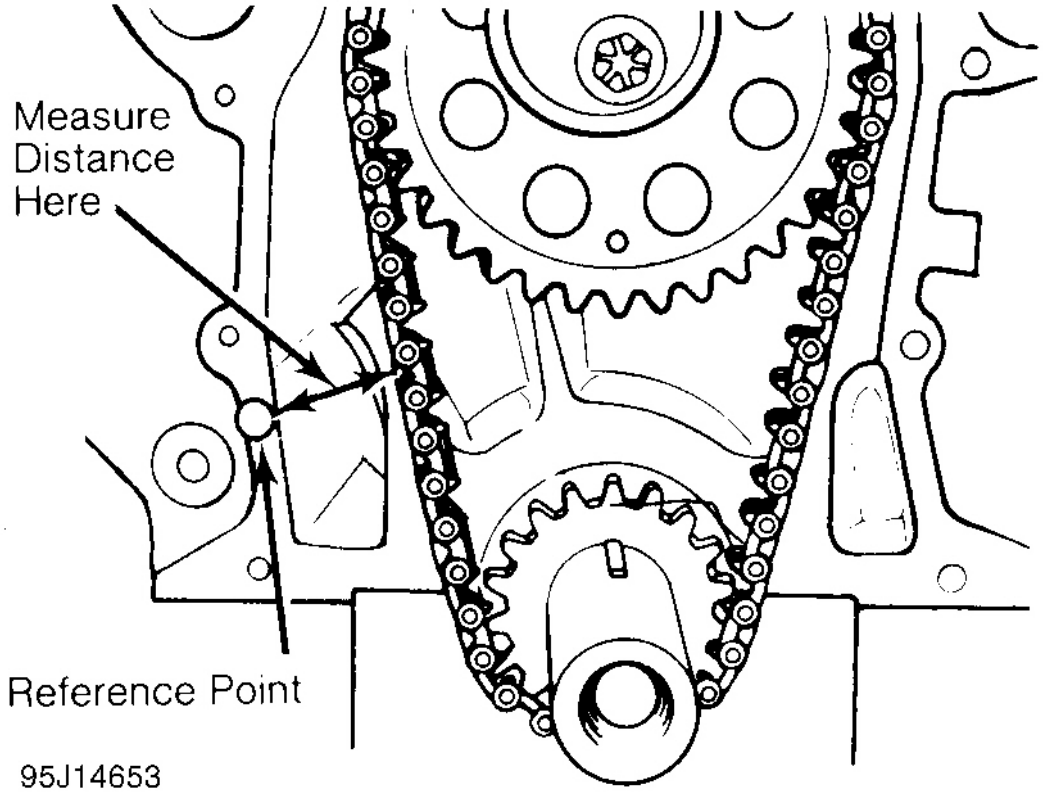

Fig. 23: Measuring Timing Chain Stretch

Timing chains must be installed so timing marks on camshaft gear and crankshaft gear are aligned according to manufacturer. See **Fig. 24**.

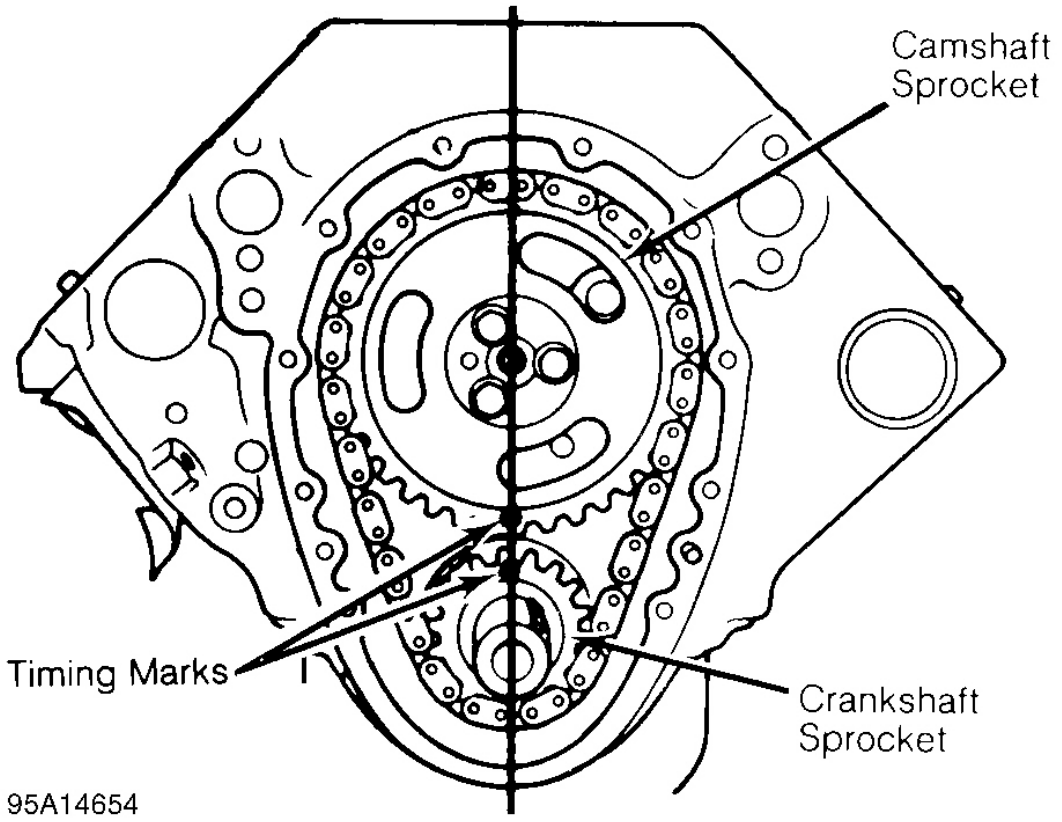

Fig. 24: Typical Gear Timing Mark Alignment

TIMING BELTS

NOTE: **Examples used in this article are general in nature and do not necessarily relate to a specific engine or system. Illustrations and procedures have been chosen to guide mechanic through engine overhaul process. Descriptions of processes of cleaning, inspection, assembly and machine shop practice are included.**

Always refer to appropriate engine overhaul article, if available, in the ENGINES section for complete overhaul procedures and specifications for the vehicle being repaired.

Cogged tooth belts are commonly used on overhead cam engines. Inspect belt teeth for rounded corners or cracking. Replace belt if it is cracked, damaged, missing teeth or oil soaked.

Used timing belt must be installed in original direction of rotation. Inspect all sprocket teeth for wear. Replace all worn sprockets. Sprockets are marked for timing purposes. Engine is positioned so that crankshaft sprocket mark will be upward. Camshaft sprocket is aligned with reference mark on cylinder head or timing belt cover and then timing belt can be installed. See **Fig. 25**.

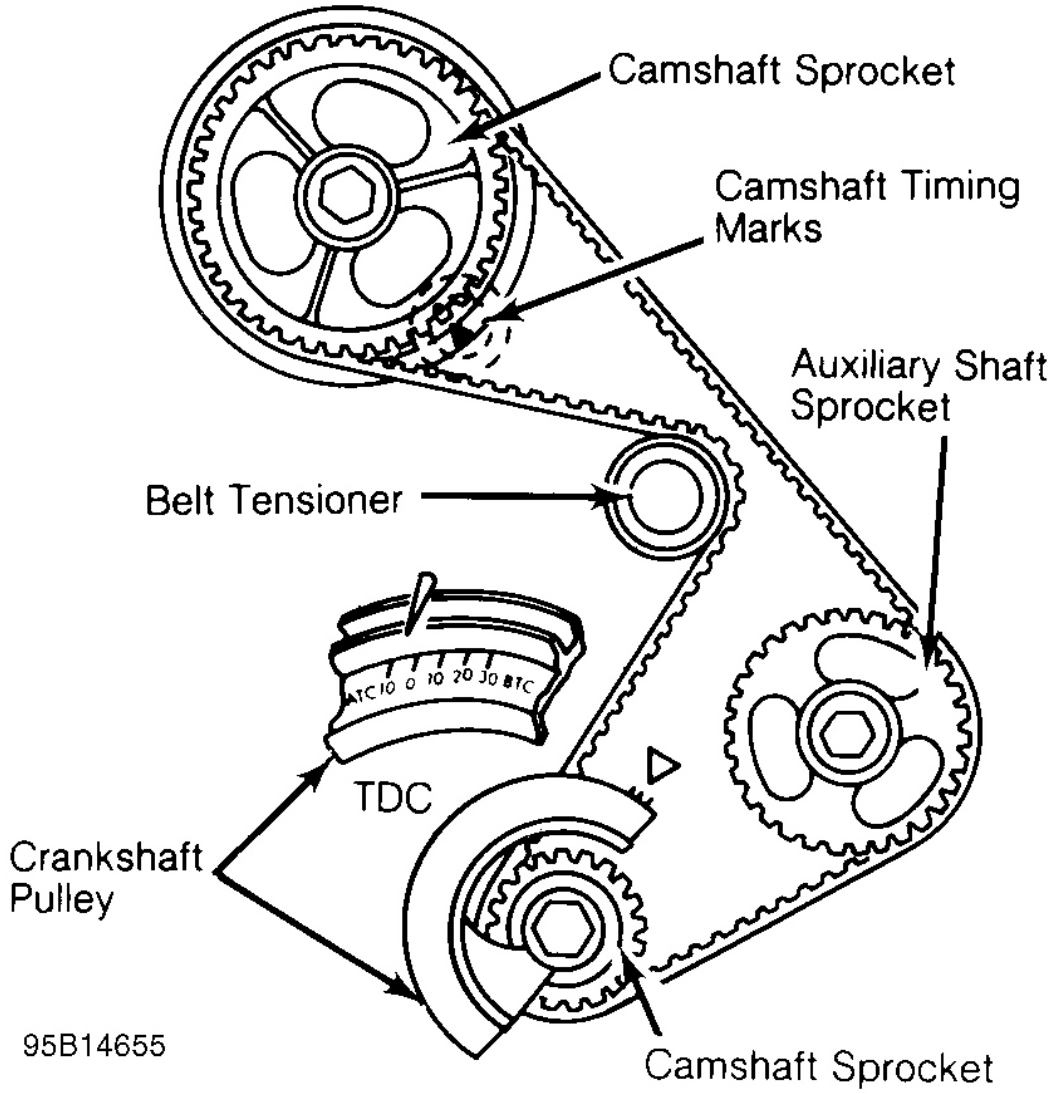

Fig. 25: Typical Camshaft Belt Sprocket Alignment

TENSION ADJUSTMENT

NOTE: **Examples used in this article are general in nature and do not necessarily relate to a specific engine or system. Illustrations and procedures have been chosen to guide mechanic through engine overhaul process. Descriptions of processes of cleaning, inspection, assembly and machine shop practice are included.**

Always refer to appropriate engine overhaul article, if available, in the ENGINES section for complete overhaul procedures and specifications for the vehicle being repaired.

If guide rails are used with spring loaded tensioners, ensure at least half of original rail thickness remains. Spring loaded tensioner should be inspected for damage.

Ensure all timing marks are aligned. Adjust belt tension using manufacturer's recommendations. Belt tension may require checking using tension gauge. See **Fig. 26**.

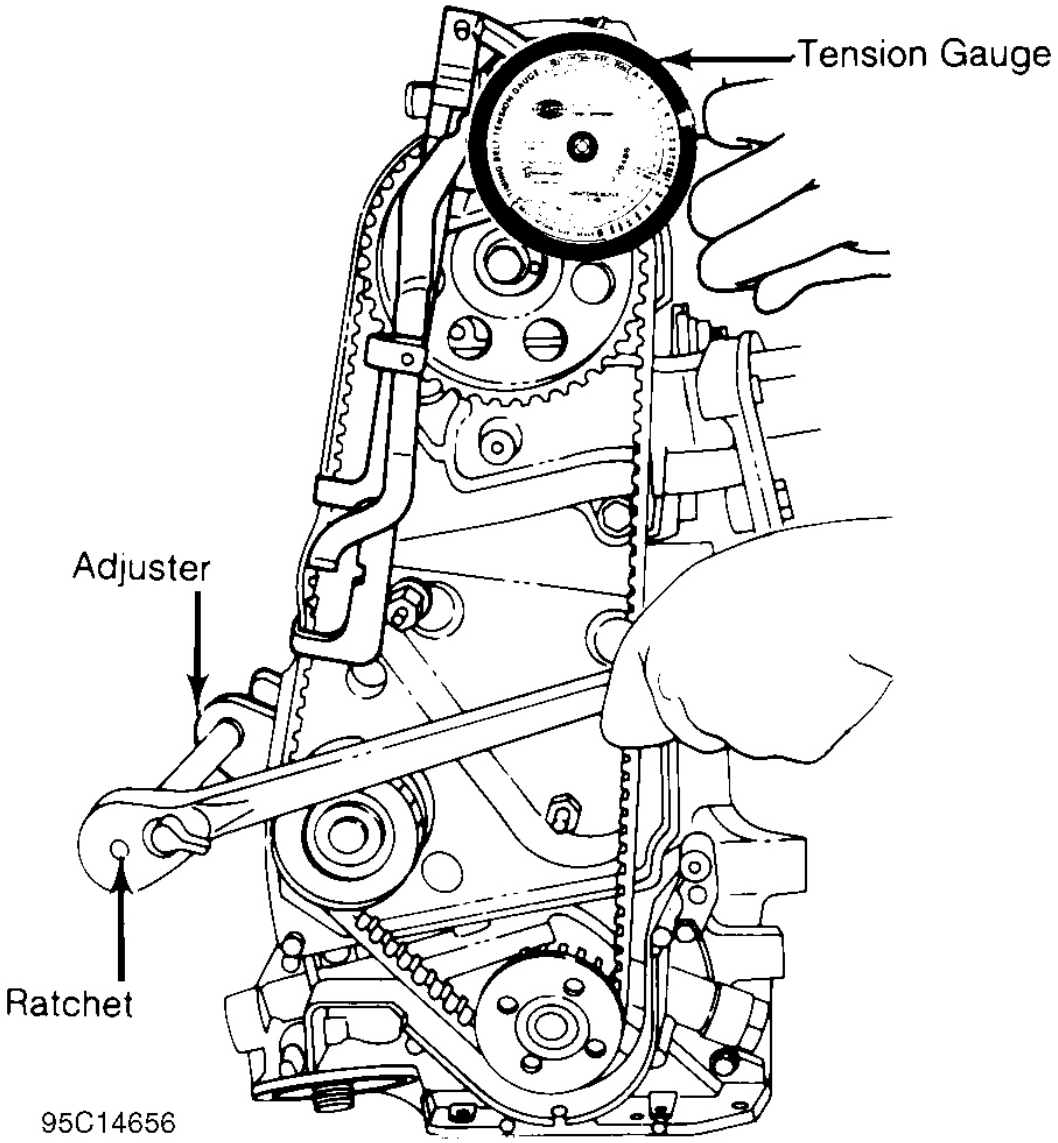

Fig. 26: Adjusting Typical Timing Belt Tension

TIMING GEARS

*** PLEASE READ THIS FIRST ***

NOTE: **Examples used in this article are general in nature and do not necessarily relate to a specific engine or system. Illustrations and procedures have been chosen to guide mechanic through engine overhaul process. Descriptions of processes of cleaning, inspection, assembly and machine shop practice are included.**

Always refer to appropriate engine overhaul article, if available, in the ENGINES section for complete overhaul procedures and specifications for the vehicle being repaired.

TIMING GEAR BACKLASH & RUNOUT

NOTE: **Examples used in this article are general in nature and do not necessarily relate to a specific engine or system. Illustrations and procedures have been chosen to guide mechanic through engine overhaul process. Descriptions of processes of cleaning, inspection, assembly and machine shop practice are included.**

Always refer to appropriate engine overhaul article, if available, in the ENGINES section for complete overhaul procedures and specifications for the vehicle being repaired.

On engines where camshaft gear operates directly on crankshaft gear, gear backlash and runout must be checked. To check backlash, install dial indicator with tip resting on tooth of camshaft gear. Rotate camshaft gear as far as possible. Adjust indicator to zero. Rotate camshaft gear in opposite direction as far as possible and note reading.

To determine timing gear runout, mount dial indicator with tip resting on face edge of camshaft gear. Adjust indicator to zero. Rotate camshaft gear 360 degrees and note reading. If backlash or runout exceeds specification, replace camshaft and/or crankshaft gear.

REAR MAIN OIL SEAL INSTALLATION

NOTE: **Examples used in this article are general in nature and do not necessarily relate to a specific engine or system. Illustrations and procedures have been chosen to guide mechanic through engine overhaul process. Descriptions of processes of cleaning, inspection, assembly and machine shop practice are included.**

Always refer to appropriate engine overhaul article, if available, in the ENGINES section for complete overhaul procedures and specifications for the vehicle being repaired.

One-Piece Type Seal

For one-piece type oil seal installation, coat block contact surface of seal with sealer if seal is not factory coated. Ensure seal surface is free of burrs. Lubricate seal lip with engine oil and press seal into place using proper oil seal installer. See **Fig. 27**.

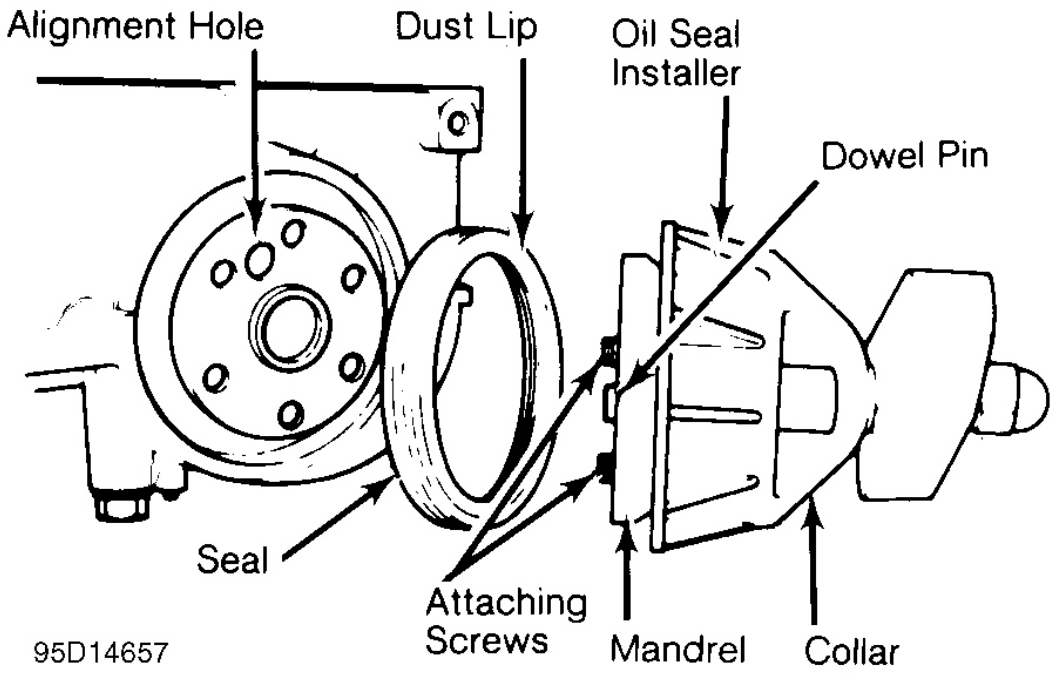

Fig. 27: Installing Typical One-Piece Oil Seal

Rope Type Seal

For rope type rear main oil seal installation, press seal lightly into seat area. Using seal installer, fully seat seal in bearing cap or cylinder block.

Trim seal ends even with cylinder block parting surface. Some applications require sealer to be applied on main bearing cap before installing. See **Fig. 28**.

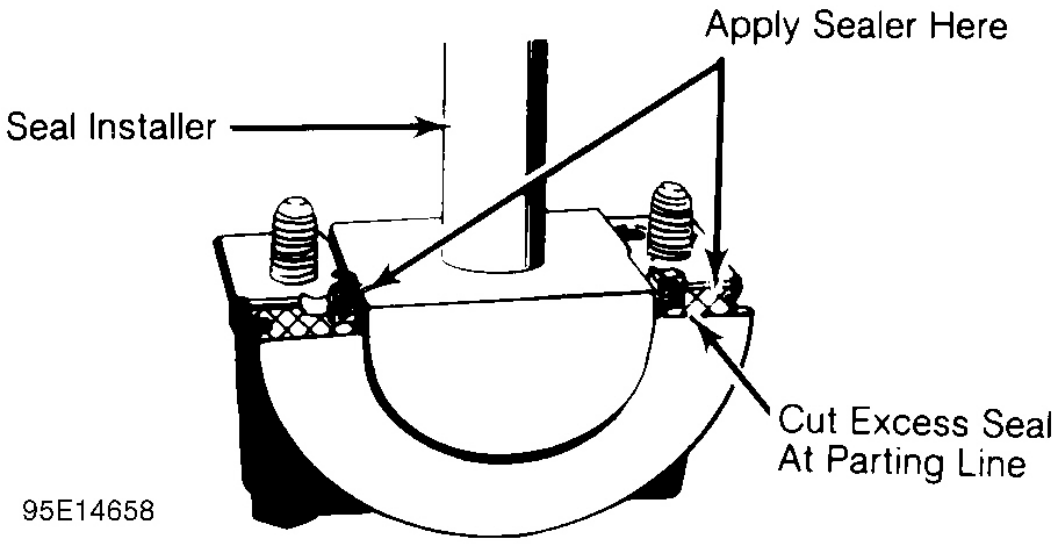

Fig. 28: Installing Typical Rope Seal

Split-Rubber Type Seal

Follow manufacturer's procedures when installing split-rubber type rear main oil seals. Installation procedures vary with manufacturer and engine type. See **Fig. 29**.

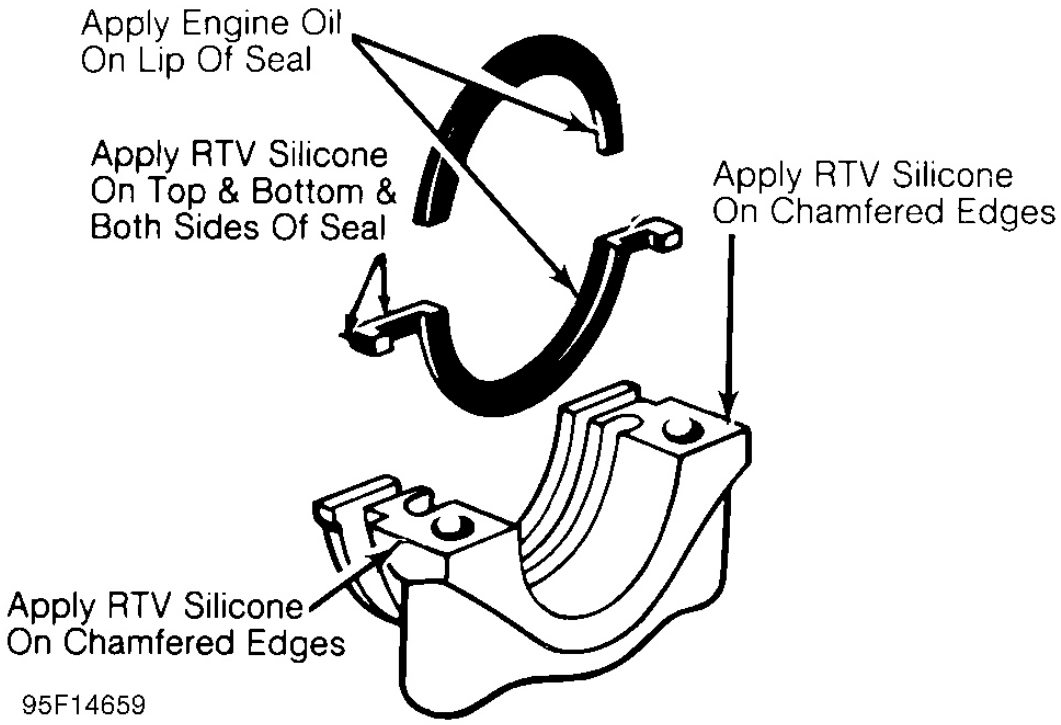

Fig. 29: Installing Typical Split-Rubber Seal

OIL PUMP

*** PLEASE READ THIS FIRST ***

NOTE: **Examples used in this article are general in nature and do not necessarily relate to a specific engine or system. Illustrations and procedures have been chosen to guide mechanic through engine overhaul process. Descriptions of processes of cleaning, inspection, assembly and machine shop practice are included.**

Always refer to appropriate engine overhaul article, if available, in the ENGINES section for complete overhaul procedures and specifications for the vehicle being repaired.

ROTOR TYPE

NOTE: **Examples used in this article are general in nature and do not necessarily relate to a specific engine or system. Illustrations and procedures have been chosen to guide mechanic through engine overhaul process. Descriptions of processes of cleaning, inspection, assembly and machine shop practice are included.**

Always refer to appropriate engine overhaul article, if available, in the ENGINES section for complete overhaul procedures and specifications for the vehicle being repaired.

Mark oil pump rotor locations before removing. See **Fig. 30**. Remove outer rotor and measure thickness and diameter. Measure inner rotor thickness. Inspect shaft for scoring or wear. Inspect rotors for pitting or damage. Inspect cover for grooving or wear. Replace worn or damaged components.

Measure outer rotor-to-body clearance. Replace pump assembly if clearance exceeds specification. Measure clearance between rotors. See **Fig. 31**. Replace shaft and both rotors if clearance exceeds specification.

Install rotors in pump body. Position straightedge across pump body. Using feeler gauge, measure clearance between rotors and straightedge. Pump cover wear is measured using a straightedge and feeler gauge. Replace pump if clearance exceeds specification.

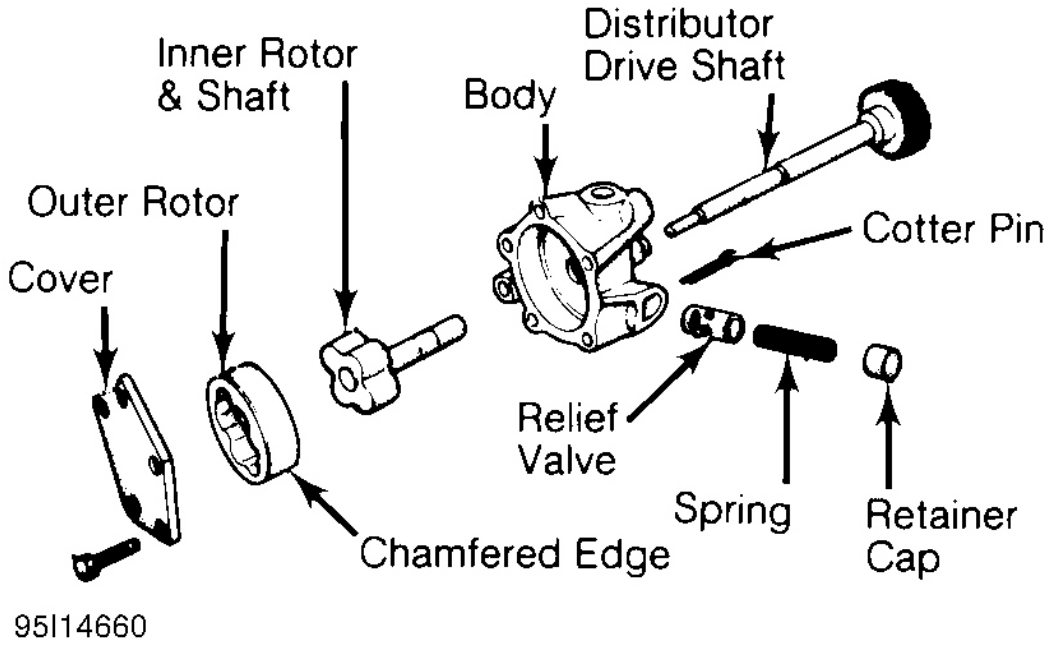

Fig. 30: Typical Rotor Type Oil Pump

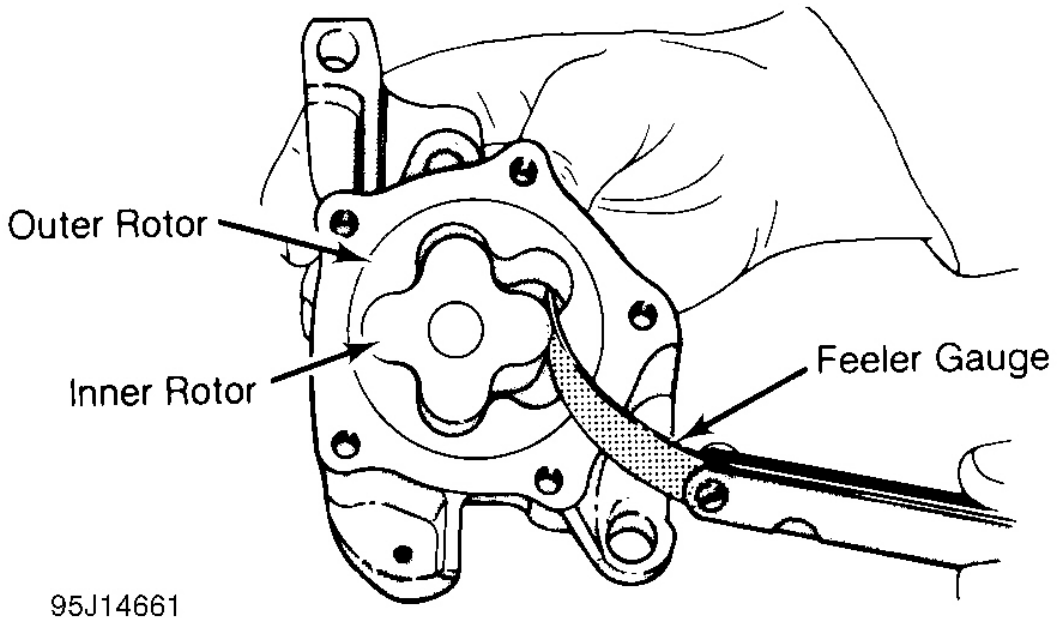

Fig. 31: Measuring Rotor Clearance

GEAR TYPE

NOTE: Examples used in this article are general in nature and do not necessarily relate to a specific engine or system. Illustrations and procedures have been chosen to guide mechanic through engine overhaul process. Descriptions of processes of cleaning, inspection, assembly and machine shop practice are included.

Always refer to appropriate engine overhaul article, if available, in the ENGINES section for complete overhaul procedures and specifications for the vehicle being repaired.

Mark oil pump gear location before removing. See **Fig. 32**. Remove gears from pump body. Inspect gears for pitting or damage. Inspect cover for grooving or wear. Measure gear diameter and length. Measure gear housing cavity depth and diameter. See **Fig. 33**. Replace worn or damaged components.

Pump cover wear is measured using a straightedge and feeler gauge. Replace pump or components if warpage or wear exceeds specification, or mating surface of pump cover is scratched or grooved.

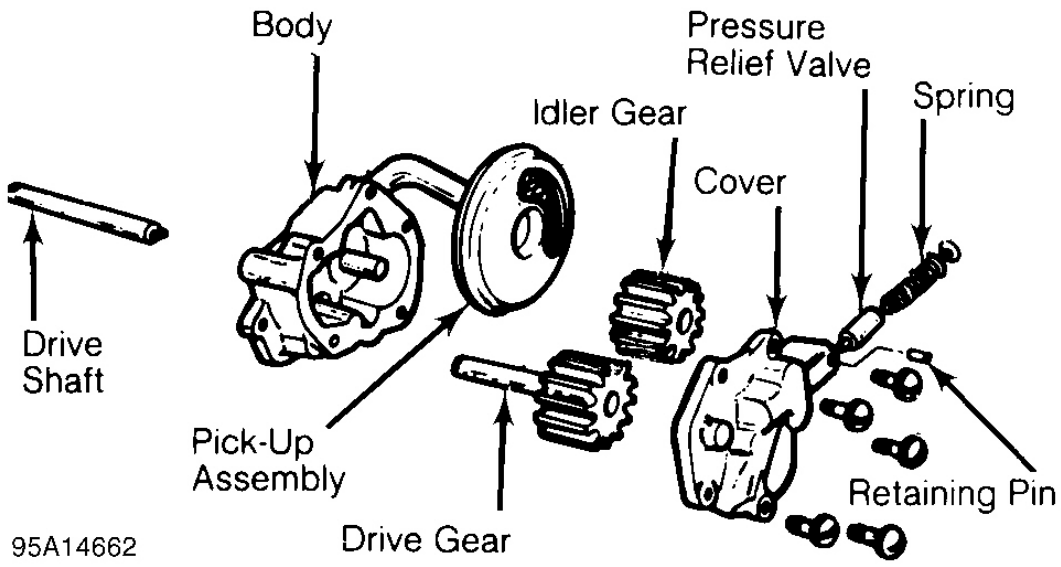

Fig. 32: Typical Gear Type Oil Pump

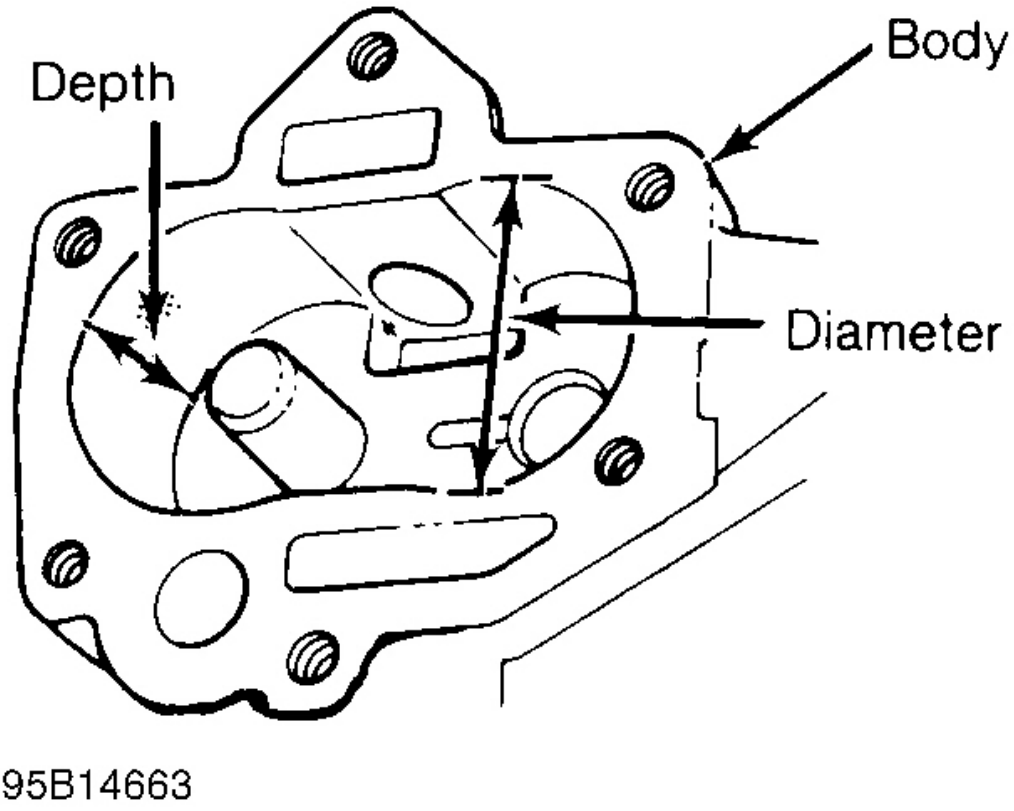

Fig. 33: Measuring Oil Pump Gear Cavity

BREAK-IN PROCEDURE

*** PLEASE READ THIS FIRST ***

NOTE: **Examples used in this article are general in nature and do not necessarily relate to a specific engine or system. Illustrations and procedures have been chosen to guide mechanic through engine overhaul process. Descriptions of processes of cleaning, inspection, assembly and machine shop practice are included.**

Always refer to appropriate engine overhaul article, if available, in the ENGINES section for complete overhaul procedures and specifications for the vehicle being repaired.

ENGINE PRE-OILING

NOTE: **Examples used in this article are general in nature and do not necessarily relate to a specific engine or system. Illustrations and procedures have been chosen to guide mechanic through engine overhaul process. Descriptions of processes of cleaning, inspection, assembly and machine shop practice are included.**

Always refer to appropriate engine overhaul article, if available, in the ENGINES section for complete overhaul procedures and specifications for the vehicle being repaired.

Pre-oil engine prior to operation to prevent engine damage. Lightly oiled oil pump will cavitate unless oil pump cavities are filled with engine oil or petroleum jelly.

Engine pre-oiling can be done using pressure oiler (if available). Connect pressure oiler to cylinder block oil passage such as oil pressure sending unit. Operate pressure oiler long enough to ensure correct amount of oil has filled crankcase. Check oil level while pre-oiling.

If pressure oiler is not available, disconnect ignition system. Remove oil pressure sending unit and replace with oil pressure test gauge. Using starter motor, rotate engine starter until gauge shows normal oil pressure for several seconds. DO NOT crank engine for more than 30 seconds to avoid starter motor damage. Ensure oil pressure has reached the most distant point from the oil pump.

NOTE: **If new lifters or camshaft are installed, some manufacturers require that a crankcase conditioner be added to engine oil. The engine should be operated for specified amount of time to aid in lifter break-in procedure.**

INITIAL START-UP

NOTE: **Examples used in this article are general in nature and do not necessarily relate to a specific engine or system. Illustrations and procedures have been chosen to guide mechanic through engine overhaul process. Descriptions of processes of cleaning, inspection, assembly and machine shop practice are included.**

Always refer to appropriate engine overhaul article, if available, in the ENGINES section for complete overhaul procedures and specifications for the vehicle being repaired.

Start engine and operate engine at low speed while checking for coolant, fuel and oil leaks. Stop engine. Recheck coolant and oil level. Adjust if necessary.

CAMSHAFT

NOTE: **Examples used in this article are general in nature and do not necessarily relate to a specific engine or system. Illustrations and procedures have been chosen to guide mechanic through engine overhaul process. Descriptions of processes of cleaning, inspection, assembly and machine shop practice are included.**

Always refer to appropriate engine overhaul article, if available, in the ENGINES section for complete overhaul procedures and specifications for the vehicle being repaired.

Break-in procedure is required when new or reground camshaft has been installed. Operate and maintain engine speed between 1500-2500 RPM for approximately 30 minutes. Procedure may vary due to manufacturer's recommendations.

PISTON RINGS

NOTE: **Examples used in this article are general in nature and do not necessarily relate to a specific engine or system. Illustrations and procedures have been chosen to guide mechanic through engine overhaul process. Descriptions of processes of cleaning, inspection, assembly and machine shop practice are included.**

Always refer to appropriate engine overhaul article, if available, in the ENGINES section for complete overhaul procedures and specifications for the vehicle being repaired.

Piston rings require a break-in procedure to ensure seating of rings to cylinder walls. Serious damage may occur to rings if correct procedures are not followed.

Extremely high piston ring temperatures are obtained during break-in process. If rings are exposed to excessively high RPM or high cylinder pressures, ring damage can occur. Follow piston ring manufacturer's recommended break-in procedure.

FINAL ADJUSTMENTS

NOTE: **Examples used in this article are general in nature and do not necessarily relate to a specific engine or system. Illustrations and procedures have been chosen to guide mechanic through engine overhaul process. Descriptions of processes of cleaning, inspection, assembly and machine shop practice are included.**

Always refer to appropriate engine overhaul article, if available, in the ENGINES section for complete overhaul procedures and specifications for the vehicle being repaired.

Check or adjust ignition timing and dwell (if applicable). Adjust valves (if necessary). Adjust idle speed and mixture. Retighten cylinder heads (if required). If cylinder head or block is aluminum, retighten bolts when engine is cold. Follow the engine manufacturer's recommended break-in procedure and maintenance schedule for new engines.

NOTE: **Some manufacturers require that head bolts be retightened after specified amount of operation. This must be done to prevent head gasket failure.**

ENGINE

Exhaust System - Challenger

DESCRIPTION

DESCRIPTION

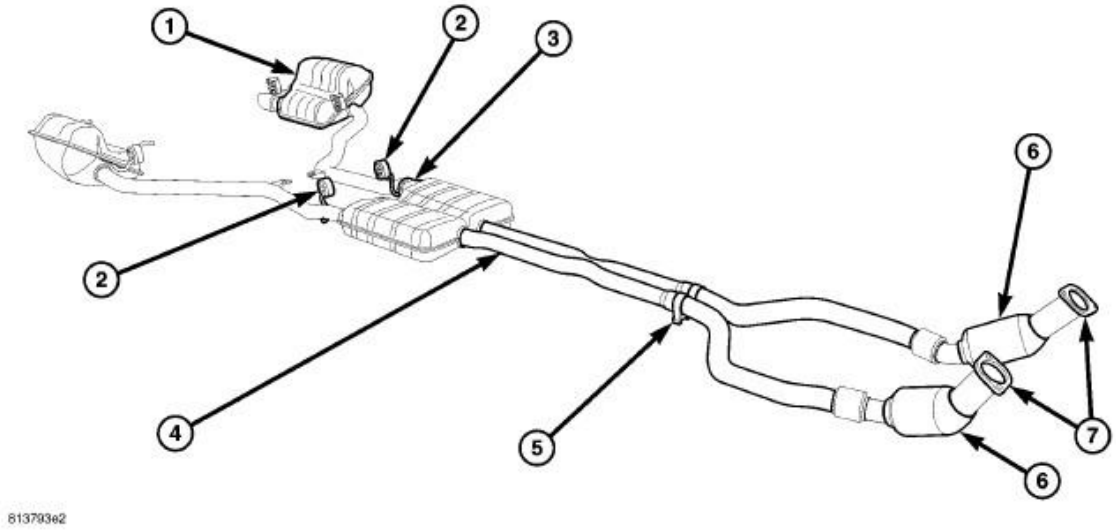

Fig. 1: Exhaust System - V8 Dual System
Courtesy of CHRYSLER LLC

The exhaust system consists of:

- Front exhaust pipes (4)
- Resonators (1)
- RH muffler and resonator assembly (4)
- Band clamp (5)
- Isolators (2)
- Ball flange (3)

The LH resonator (1) is serviced as an assembly.

DIAGNOSIS AND TESTING

EXHAUST SYSTEM

CONDITION	POSSIBLE CAUSES	CORRECTION
EXCESSIVE EXHAUST NOISE (UNDER HOOD)	1. Exhaust manifold cracked or broken.	1. Replace manifold.

	2. Manifold to cylinder head leak.	2. Tighten manifold and/or replace gasket.
	3. EGR tube to manifold gasket leakage.	3. Tighten fasteners or replace gasket.
	4. EGR Valve to EGR tube gasket leakage.	4. Tighten fasteners or replace gasket.
	5. Exhaust to manifold leak.	5. Tighten or replace nuts
	6. Pipe and shell noise from front exhaust pipe.	6. Characteristic of single wall pipe.
EXCESSIVE EXHAUST NOISE	1. Leak at exhaust pipe joints.	1. Tighten clamps at leaking joints.
	2. Burned or rusted out muffler assembly or exhaust pipe.	2. Replace muffler and resonator assembly and/or LH rear resonator and tailpipe assembly as necessary.
	3. Burned or rusted out resonator(s).	3. Replace RH muffler and resonator assembly and/or RH resonator and tailpipe as necessary.
	4. Restriction in exhaust system.	4. Remove restriction if possible, or replace components as necessary.
	5. Converter material in muffler or resonators.	5. Replace RH muffler and resonator assembly and/or RH resonator and tailpipe as necessary. Check fuel injection and ignition systems for proper operation.

INSPECTION

INSPECTION

Inspect the exhaust pipes, catalytic converters, muffler, and resonators for cracked joints, broken welds and corrosion damage that would result in a leaking exhaust system. Inspect the clamps, support brackets, and insulators for cracks and corrosion damage.

NOTE: Slip joint band clamps are spot/tack welded to exhaust system. If a band clamp must be replaced, the spot/tack weld must be ground off.

ADJUSTMENTS

ADJUSTMENTS

A misaligned exhaust system is usually indicated by a vibration, rattling noise, or binding of exhaust

system components. These noises are sometimes hard to distinguish from other chassis noises. Inspect exhaust system for broken or loose clamps, heat shields, isolators, and brackets. Replace or tighten as necessary. It is important that exhaust system clearances and alignment be maintained.

Perform the following procedures to align the exhaust system:

1. Loosen clamps and support brackets.
2. Align the exhaust system starting at the front, working rearward.
3. Tighten all clamps and brackets once alignment and clearances are achieved.

SPECIFICATIONS

TORQUE

TORQUE SPECIFICATIONS

DESCRIPTION	N.m	Ft. Lbs.	In. Lbs.
Nut - Catalytic Converter to Ball Flange Snug fit	12	-	106
Nut - Catalytic Converter to Ball Flange	34	25	-
Band Clamp	50	36	-
Nut - Catalytic Converter to Support Bracket	55	40	-
Fasteners - Exhaust Support Bracket	25	-	215
Retainers - Heat Shield	10	-	98
Nuts - Tunnel Reinforcement	25	-	215
Fastener - Exhaust tips	30	22	-

SPECIAL TOOLS

SPECIAL TOOLS

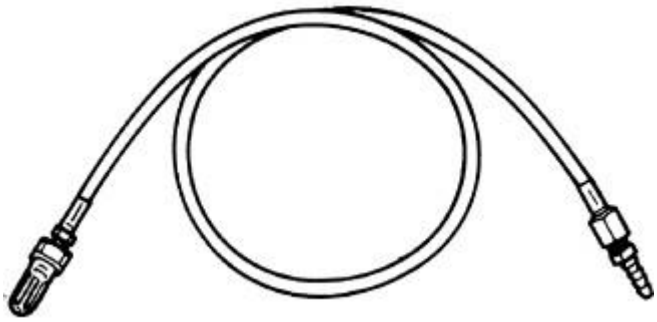

Fig. 2: HOSE, EXHAUST BACK PRESSURE - CH8519
Courtesy of CHRYSLER LLC



Fig. 3: DRB III ESSENTIALKIT - CH6010A
Courtesy of CHRYSLER LLC

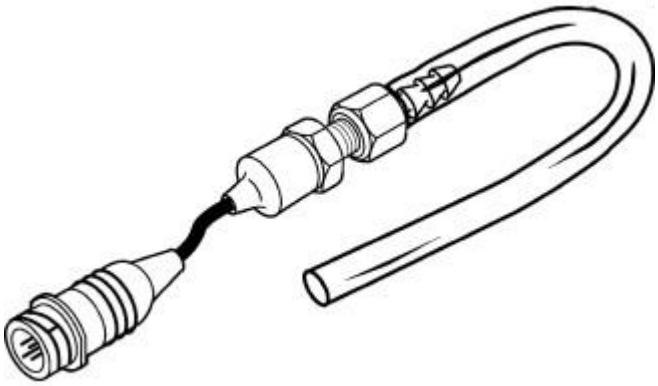

Fig. 4: CABLE, TRANSDUCER, 15 PSI - CH7063
Courtesy of CHRYSLER LLC

CONVERTER, CATALYTIC

DESCRIPTION

DESCRIPTION

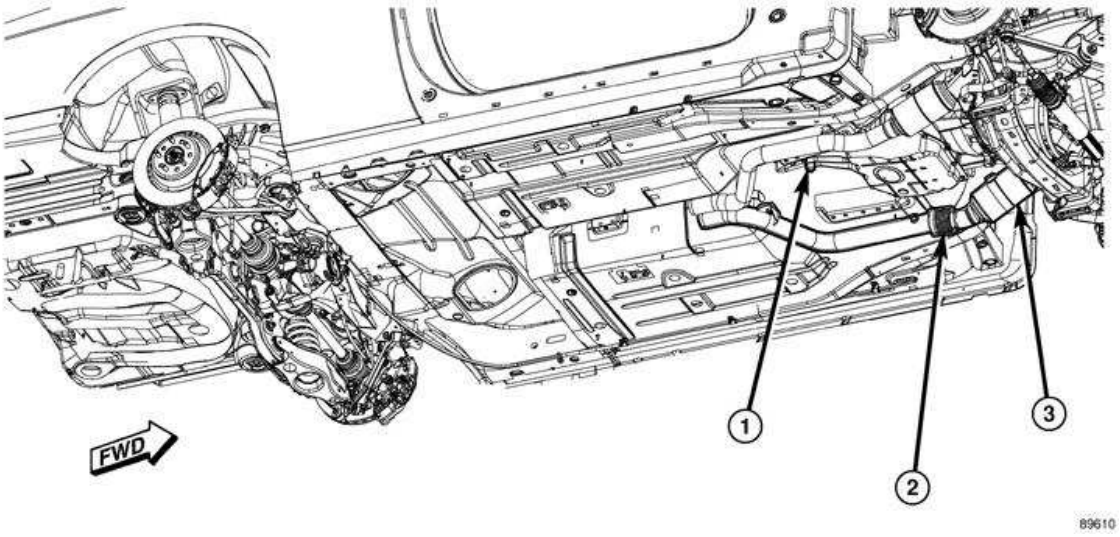

Fig. 5: Catalytic Converters
Courtesy of CHRYSLER LLC

1 - RH CATALYTIC CONVERTER 2 - FLEX JOINT 3 - LH CATALYTIC CONVERTER

The close coupled, three-way catalytic converter inlets are connected to the exhaust manifolds by the use of a ball flange. RWD vehicles use a flex joint downstream of the LH and RH catalytic converters. The left (3) and right (1) side converter outlet pipe connects to the exhaust system.

REMOVAL

RIGHT HAND CATALYTIC CONVERTER

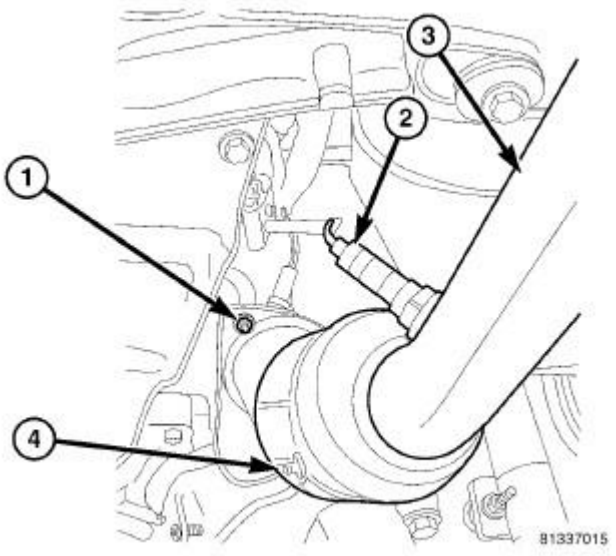

Fig. 6: RIGHT HAND CATALYTIC CONVERTER
Courtesy of CHRYSLER LLC

1 - FLANGE NUTS
2 - DOWNSTREAM OXYGEN SENSOR
3 - FRONT EXHAUST PIPE W/CATALYTIC CONVERTER
4 - CATALYTIC CONVERTER

1. Disconnect the negative battery cable.
2. Raise and support the vehicle.
3. Disconnect the downstream oxygen sensor electrical connectors.
4. Remove the muffler and resonator. See **Exhaust System/MUFFLER, Exhaust - Removal**.

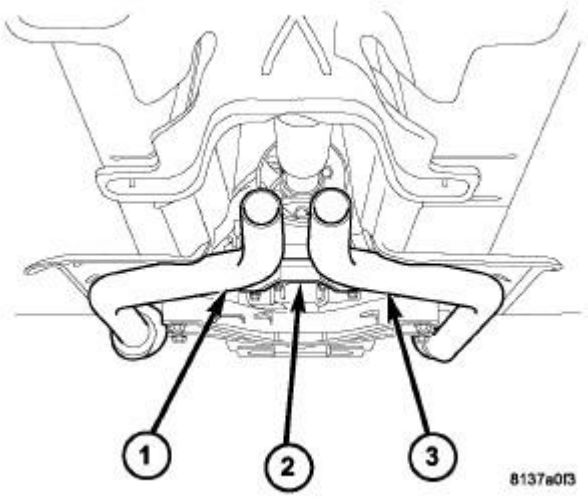

Fig. 7: CATALYTIC CONVERTER BRACE
Courtesy of CHRYSLER LLC

1 - LH CATALYTIC CONVERTER
2 - BRACE
3 - RH CATALYTIC CONVERTER

5. Remove the catalytic converter-to-ball flange nuts (1).
6. Remove the RH catalytic converter (3).

LEFT HAND CATALYTIC CONVERTER

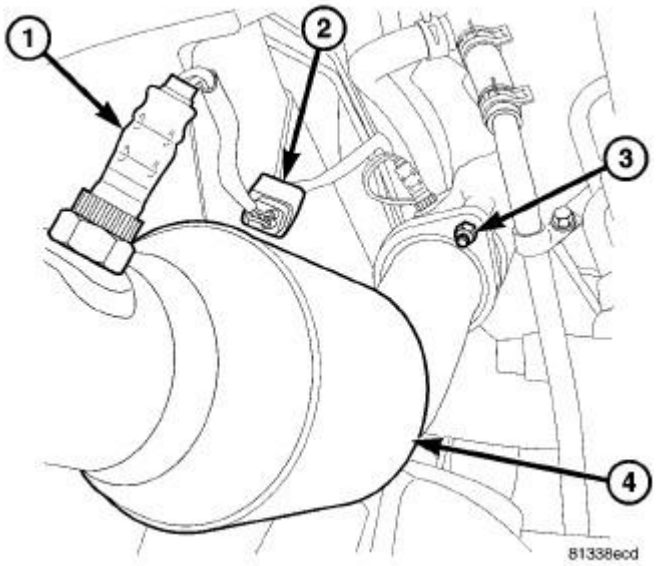

Fig. 8: LEFT HAND CATALYTIC CONVERTER
Courtesy of CHRYSLER LLC

1 - OXYGEN SENSOR
2 - OXYGEN SENSOR CONNECTOR
3 - BALL FLANGE NUT
4 - LH CATALYTIC CONVERTER

1. Raise and support the vehicle.
2. Disconnect the downstream oxygen sensor electrical connectors.
3. Remove the muffler and resonator assembly. See **Exhaust System/MUFFLER, Exhaust - Removal**.
4. Remove the ball flange nuts.
5. Remove the catalytic converter ball flange nuts.
6. Remove the catalytic converter.

INSPECTION

INSPECTION

WARNING: The normal operating temperature of the exhaust system is very high. Therefore, never attempt to service any part of the exhaust system until it is cooled. Special care should be taken when working near the catalytic converter. The temperature of the converter rises to a high level after a short period of engine operation time.

Check the catalytic converter for a flow restriction. See **Exhaust System - Diagnosis and Testing** for Exhaust System Restriction Check for procedure.

Visually inspect the catalytic converter element by using a borescope or equivalent. Remove oxygen sensor(s) and insert borescope. If borescope is not available, remove converter and inspect element using a flashlight. Inspect element for cracked or melted substrate.

NOTE: Before replacing a catalytic converter, determine the root cause of failure. Most catalytic converter failures are caused by air, fuel or ignition problems. Refer to the appropriate diagnostic service information for test procedures.

INSTALLATION

RIGHT HAND CATALYTIC CONVERTER

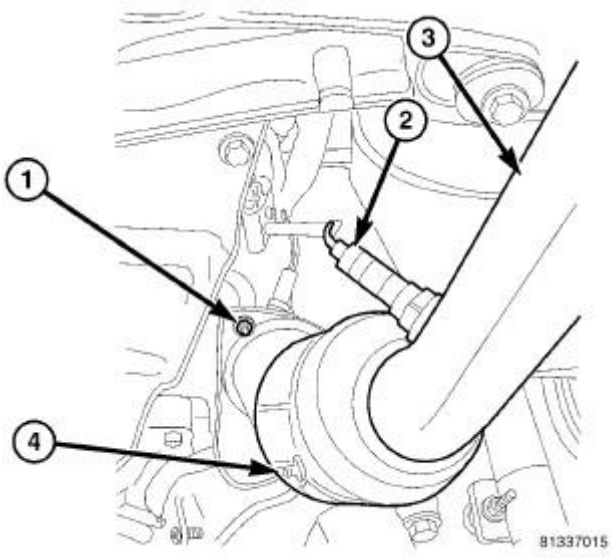

Fig. 9: RIGHT HAND CATALYTIC CONVERTER
Courtesy of CHRYSLER LLC

1 - FLANGE NUTS
2 - DOWNSTREAM OXYGEN SENSOR
3 - FRONT EXHAUST PIPE W/CATALYTIC CONVERTER
4 - CATALYTIC CONVERTER

1. Install the catalytic converter (3) onto the exhaust manifold ball flange. Finger tighten the nuts at this time.
2. Install the muffler and resonator assembly. See **Exhaust System/MUFFLER, Exhaust - Installation**

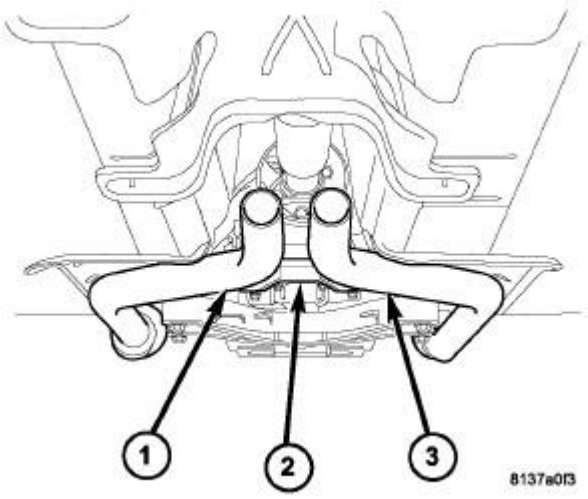

Fig. 10: CATALYTIC CONVERTER BRACE
Courtesy of CHRYSLER LLC

1 - LH CATALYTIC CONVERTER
2 - BRACE
3 - RH CATALYTIC CONVERTER

3. Install the bolts and cross brace (3). Tighten the bolts to 55 N.m (40 ft. lbs.).
4. TIghten the manifold ball flange nut to 12 N.m (106 in. lbs.).
5. Check the clearance between the exhaust module and the fuel tank. Clearance is 14mm (.55 in.).
6. Check the clearance at the rear tunnel reinforcement. Clearance is 15 - 20mm (.59 -.78 in.).
7. Adjust clearance as necessary.
8. Tighten the ball flange nuts to 34 N.m (25 ft. lbs.).
9. Connect the oxygen sensor (2) connectors.
10. Lower the vehicle.
11. Connect the negative battery cable.
12. Start the engine and inspect for exhaust leaks. Repair exhaust leaks as necessary.

LEFT HAND CATALYTIC CONVERTER

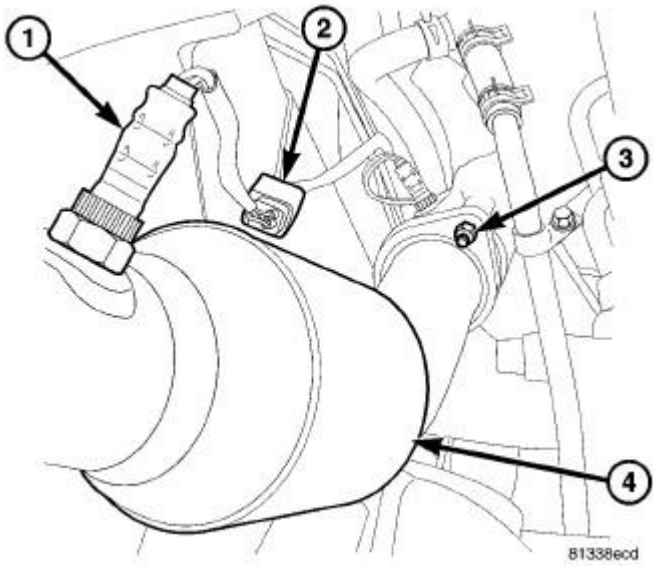

Fig. 11: LEFT HAND CATALYTIC CONVERTER
Courtesy of CHRYSLER LLC

1 - OXYGEN SENSOR
2 - OXYGEN SENSOR CONNECTOR
3 - BALL FLANGE NUT
4 - LH CATALYTIC CONVERTER

1. Install the catalytic converter (3) onto the exhaust manifold ball flange. Finger tighten the nuts.
2. Install the muffler and resonator assembly. See **Exhaust System/MUFFLER, Exhaust - Installation**.
3. Install the bolts and the cross brace. Tighten the bolts to 55 N.m (40 ft. lbs.).
4. Tighten the manifold ball flange nut to 12 N.m (106 in. lbs.).
5. Check the clearance between exhaust module and fuel tank. Clearance is 14mm (.55 in.).
6. Check the clearance at the rear tunnel reinforcement. Clearance is 15 - 20mm (.59 -.78 in.).
7. Adjust the clearance as necessary.
8. Tighten the ball flange nuts to 34 N.m (25 ft. lbs.).
9. Lower the vehicle.
10. Connect the negative battery cable.
11. Start the engine and inspect for exhaust leaks. Repair exhaust leaks as necessary.

MUFFLER, EXHAUST

DESCRIPTION

DESCRIPTION

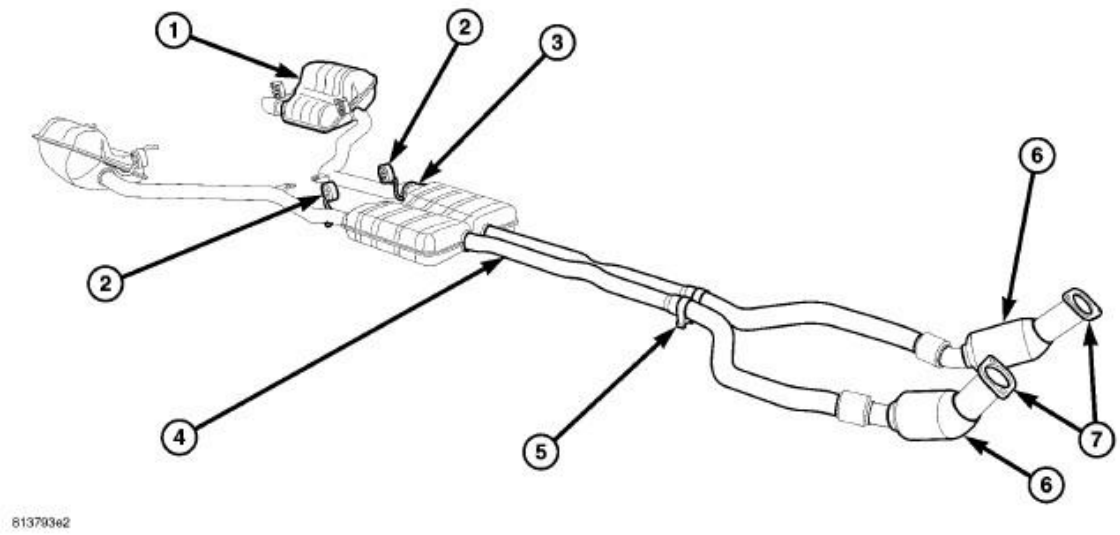

Fig. 12: Exhaust System - V8 Dual System
Courtesy of CHRYSLER LLC

The exhaust system consists of:

- Front exhaust pipes (4)
- LH Resonator (1)
- Muffler and RH Resonator assembly (4)
- Band clamps (5)
- Isolators (2)
- Ball flange (3)

The LH Resonator (1) is serviced as an assembly.

REMOVAL

REMOVAL

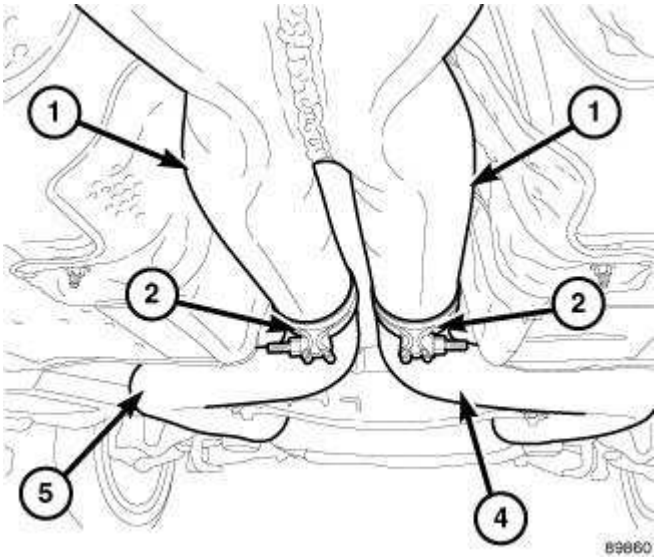

Fig. 13: FRONT EXHAUST CLAMPS
Courtesy of CHRYSLER LLC

1 - MUFFLER AND RESONATOR ASSEMBLY
2 - CLAMPS
3 - RH CATALYTIC CONVERTER
4 - LH CATALYTIC CONVERTER

1. Raise and support the vehicle.
2. Remove the LH resonator. See **Exhaust System/RESONATOR, Exhaust - Removal**.
3. Remove the catalytic converter-to-exhaust clamps (3).

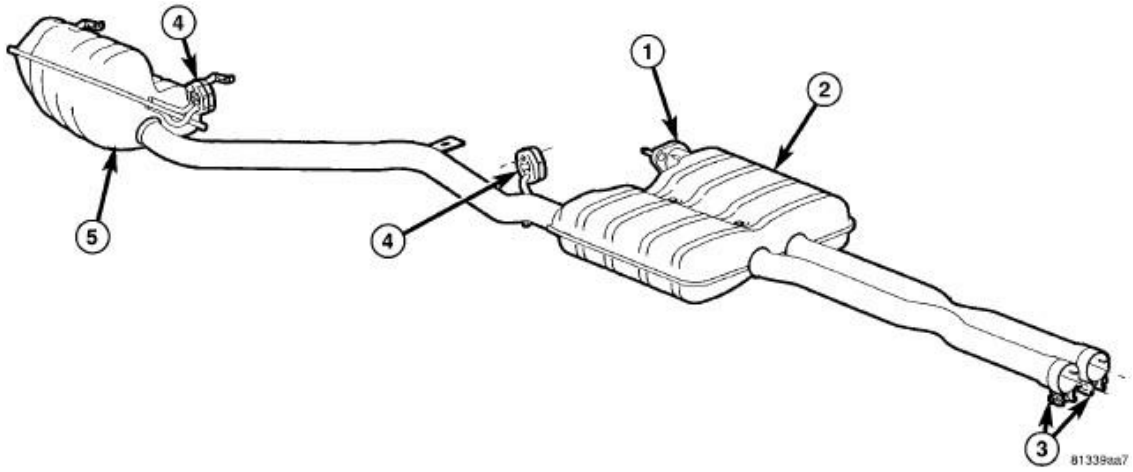

Fig. 14: EXHAUST PIPE ASSEMBLY
Courtesy of CHRYSLER LLC

4. Remove the isolators (4).
5. Remove the RH muffler and resonator assembly (2) by twisting/turning while pulling the

assembly out of catalytic converters.

INSTALLATION

INSTALLATION

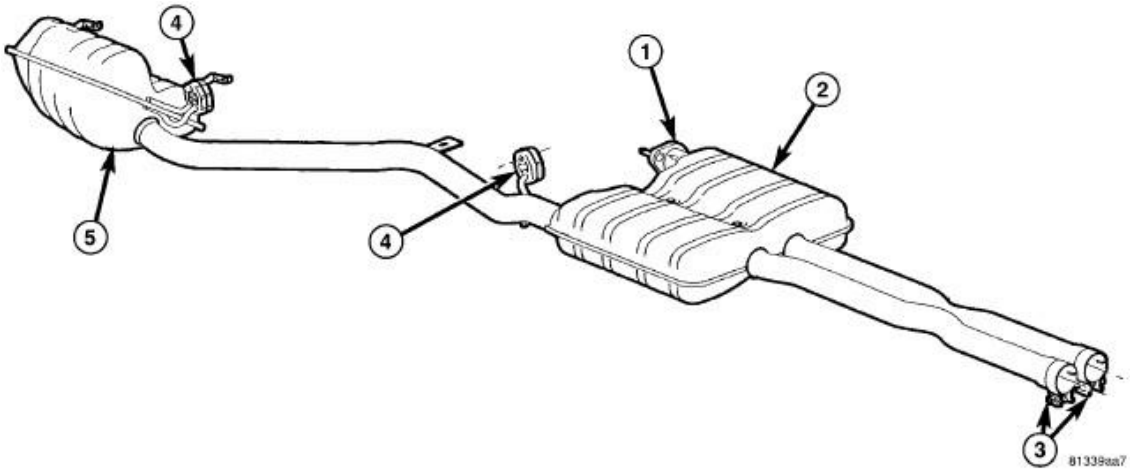

Fig. 15: EXHAUST PIPE ASSEMBLY
Courtesy of CHRYSLER LLC

1. Position the front exhaust pipe clamps (3) on the RH muffler and resonator assembly (5).
2. Install the RH muffer and resonator assembly (5) onto the catalytic converters.

NOTE: Isolators have an approximately 10° forward angle when installed.

3. Install isolators (4).

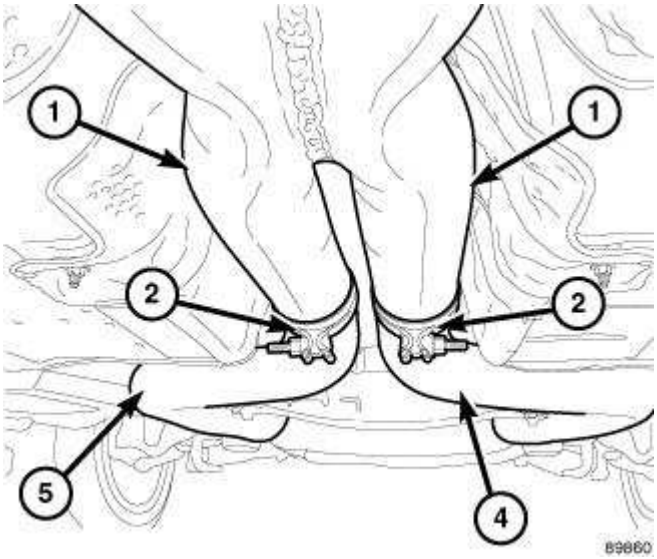

Fig. 16: FRONT EXHAUST CLAMPS
Courtesy of CHRYSLER LLC

4. Install the LH resonator. See **Exhaust System/RESONATOR, Exhaust - Installation**.

NOTE: Check for proper alignment and clearance to underbody and engine compartment components before tightening clamps.

5. Tighten the band clamps (2) to 61 N.m (45 ft. lbs.).
6. Install tunnel reinforcement (2) and nuts (1). Tighten nuts to 25 N.m (215 in. lbs.).
7. Check the clearance between the muffler and resonator assembly and the fuel tank. Clearance is 14mm (0.55 in.).
8. Check the clearance at the rear tunnel reinforcement. Clearance is 15 - 20 mm (.59 -.78 in.).
9. The tailpipe should be centered in the the rear fascia opening.
10. Adjust clearance as necessary.
11. Lower the vehicle.
12. Start the engine and inspect for exhaust leaks. Repair exhaust leaks as necessary.

RESONATOR, EXHAUST

REMOVAL

5.7L

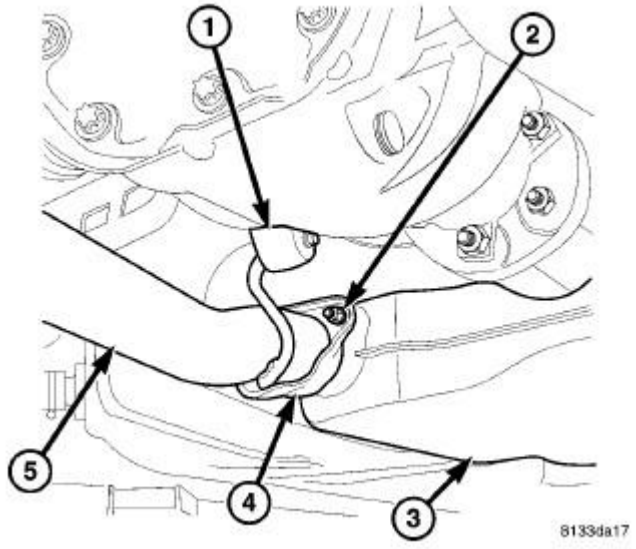

Fig. 17: Left Hand Rear Resonator Assembly
Courtesy of CHRYSLER LLC

1 - ISOLATOR 2 - NUT 3 - MUFFLER AND TAILPIPE ASSEMBLY

4 - BALL FLANGE
5 - LH RESONATOR AND TAILPIPE ASSEMBLY

1. Raise vehicle.
2. Remove two nuts (2).
3. Remove isolators (1).
4. Remove LH resonator and tailpipe assembly (5).

6.1L

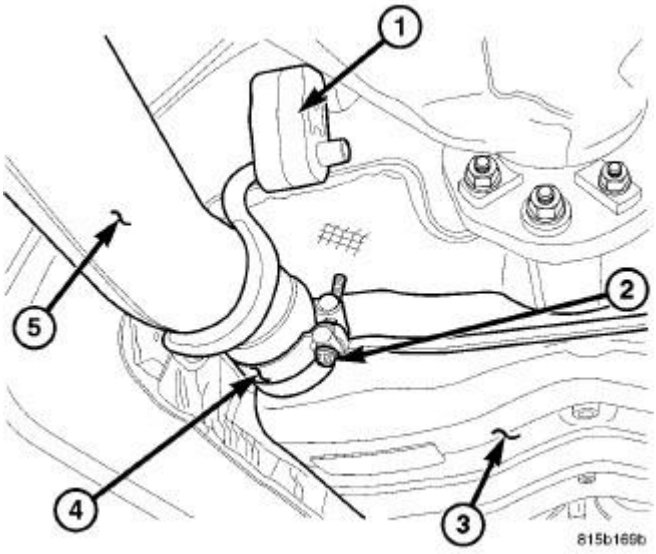

Fig. 18: LEFT HAND RESONATOR AND TAILPIPE ASSEMBLY
Courtesy of CHRYSLER LLC

1. Raise vehicle.
2. Remove the bolt (2).
3. Remove isolators (1).
4. Remove LH resonator and tailpipe assembly (5).

RH RESONATOR

The RH resonator is serviced with the muffler and RH resonator assembly. See **Exhaust System/MUFFLER, Exhaust - Removal**.

LH RESONATOR

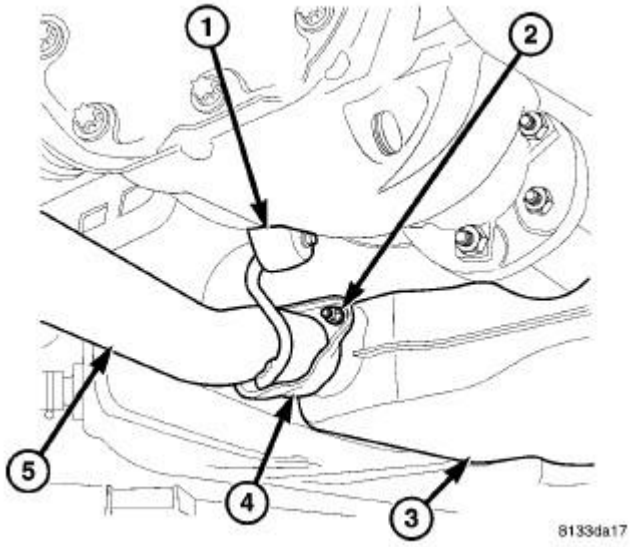

Fig. 19: Left Hand Rear Resonator Assembly
Courtesy of CHRYSLER LLC

1. Raise and support the vehicle.
2. Remove the two nuts (2).
3. Removeisolators(1).
4. Remove the LH resonator (5) from the vehicle.

INSTALLATION

5.7L

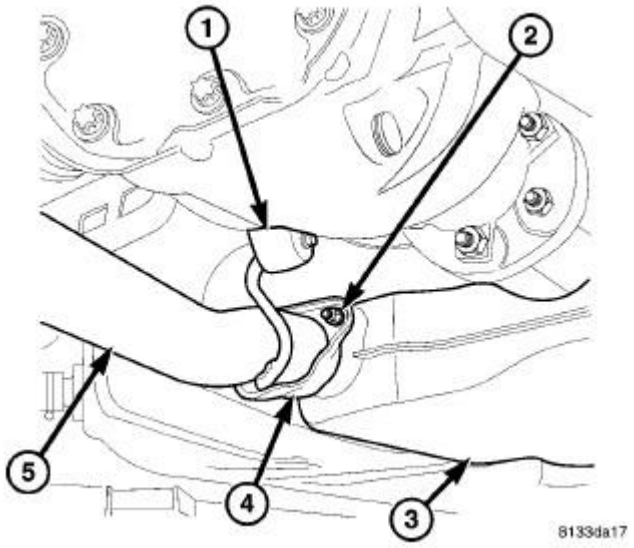

Fig. 20: LEFT HAND RESONATOR AND TAILPIPE ASSEMBLY

Courtesy of CHRYSLER LLC

1 - ISOLATOR 2 - NUT 3 - MUFFLER AND TAILPIPE ASSEMBLY 4 - BALL FLANGE 5 - LH RESONATOR AND TAILPIPE ASSEMBLY

1. Position LH resonator and tailpipe assembly (5) in vehicle.
2. Install isolators (1).
3. install ball flange nuts (2). Tighten nuts finger tight.
4. Check clearance between muffler and tailpipe assembly and fuel tank. Clearance is 14mm (.55 in.) for V8 engine and 16mm (.62 in.) for V6 engine.
5. Check clearance at rear tunnel reinforcement. Clearance is 15 - 20mm (.59 -.78 in.).
6. The tailpipe should be centered in the rear fascia opening.
7. Tighten ball flange nuts (2) to 47 N.m (35 ft. lbs.).
8. Lower vehicle.
9. Start the engine and inspect for exhaust leaks. Repair exhaust leaks as necessary.

6.1L

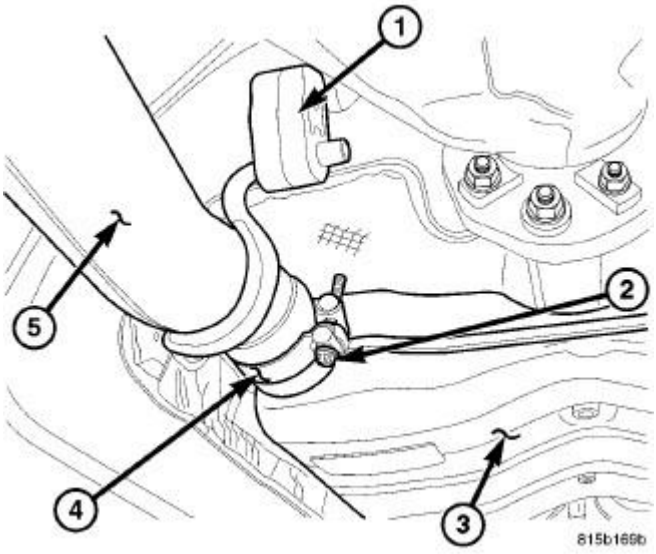

Fig. 21: LEFT HAND RESONATOR AND TAILPIPE ASSEMBLY
Courtesy of CHRYSLER LLC

1. Position LH resonator and tailpipe assembly (5) in vehicle.
2. Install isolators (1).
3. install ball clamp bolt (2). Tighten bolt finger tight.

4. Check clearance between muffler and tailpipe assembly and fuel tank. Clearance is 14mm (.55 in.) for V8 engine.
5. Check clearance at rear tunnel reinforcement. Clearance is 15 - 20mm (.59 -.78 in.).
6. The tailpipe should be centered in the rear fascia opening.
7. Tighten ball clamp bolt (2) to 47 N.m (35 ft. lbs.).
8. Lower vehicle.
9. Start the engine and inspect for exhaust leaks. Repair exhaust leaks as necessary.

RH RESONATOR

The RH resonator serviced with the muffler and resonator assembly. See **Exhaust System/MUFFLER, Exhaust - Installation**

LH RESONATOR

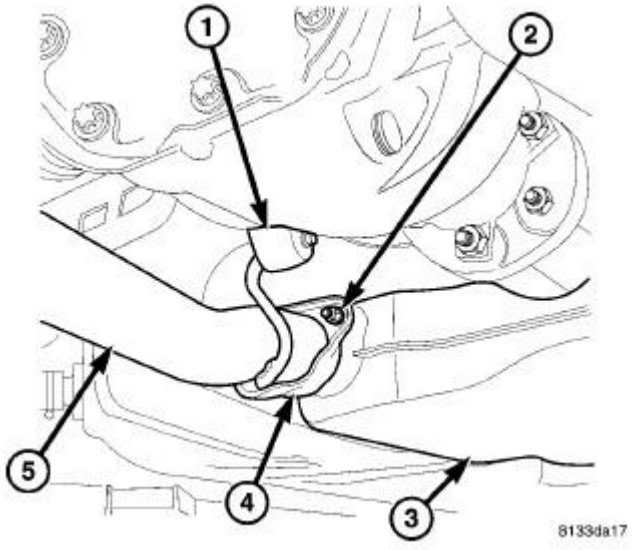

Fig. 22: Left Hand Rear Resonator Assembly
Courtesy of CHRYSLER LLC

1. Position the LH resonator assembly (5) into the vehicle.
2. Install the isolators (1).
3. Install the ball flange nuts (2). Tighten the nuts finger tight.
4. Check clearance between the LH resonator assembly and the fuel tank. Clearance is 14mm (.55 in.).
5. The tailpipe should be centered in the rear fascia opening.
6. Tighten ball flange nuts (2) to 47 N.m (35 ft. lbs.).
7. Lower the vehicle.
8. Start the engine and inspect for exhaust leaks. Repair exhaust leaks as necessary.

SHIELD, HEAT

REMOVAL

REMOVAL

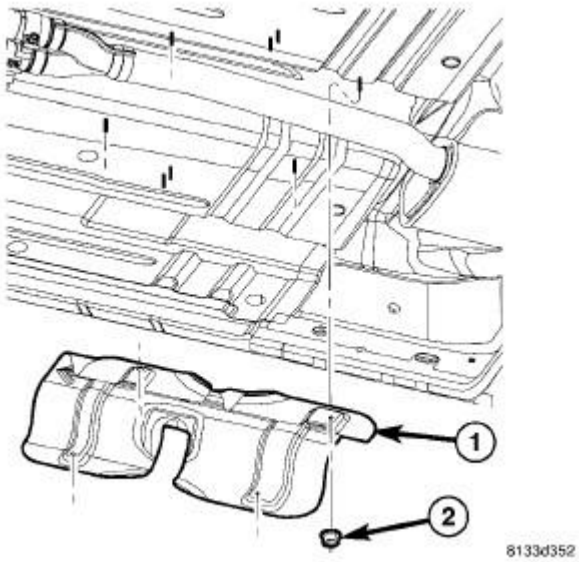

Fig. 23: HEAT SHIELDS
Courtesy of CHRYSLER LLC

1 - HEAT SHIELD 2 - NUT

1. Raise and support the vehicle.
2. Remove the nuts (2).
3. Remove the heat shields (1).

INSTALLATION

INSTALLATION

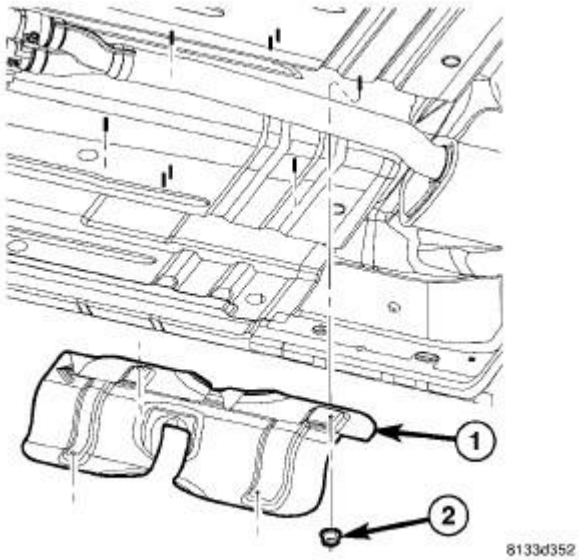

Fig. 24: HEAT SHIELDS
Courtesy of CHRYSLER LLC

1 - HEAT SHIELD 2 - NUT

1. Position the heat shields (1).
2. Install the nuts (2). Tighten the nuts to 10 N.m (98 in. lbs.).

BUMPERS

SPECIFICATIONS

SPECIFICATIONS - TIGHTENING

SPECIFICATIONS - TIGHTENING

DESCRIPTION	N.m	Ft. Lbs.	In. Lbs.
Front bumper bolts	28	21	-
Rear bumper bolts	28	21	-

AIR DAM, FRONT

Removal

REMOVAL

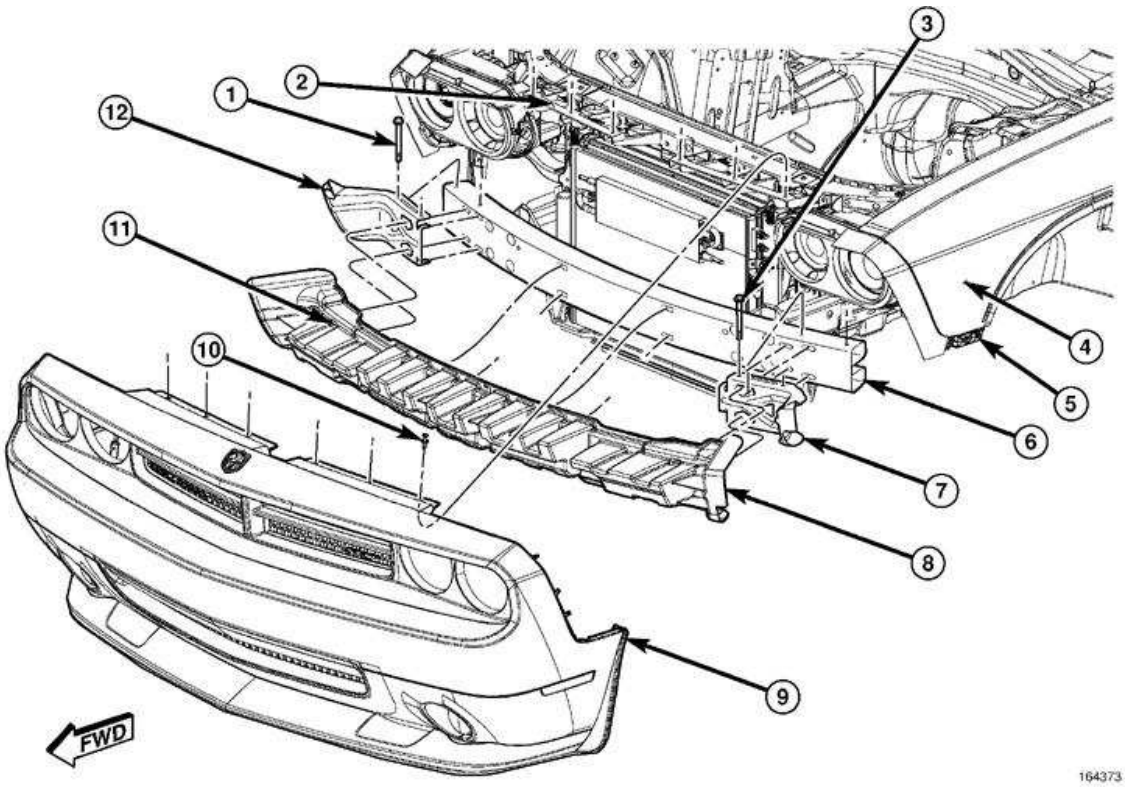

Fig. 1: Identifying Front Fascia Components
Courtesy of CHRYSLER LLC

1. BOLT, RIGHT FRONT BUMPER EXTENSION	7. EXTENSION, LEFT BUMPER

2. HARNESS, WIRING	8. ENERGY ABSORBER, FRONT BUMPER
3. BOLT, LEFT FRONT BUMPER EXTENSION	9. FASCIA, FRONT
4. FENDER	10. FASTNER, PUSH PIN
5. BRACKET, FASCIA SUPPORT	11. CLIP, ENERGY ABSORBER
6. BEAM ASSEMBLY, FRONT BUMPER	12. EXTENSION, RIGHT BUMPER

1. Remove the front fascia from the vehicle. See **Frame and Bumpers/Bumpers/FASCIA, Front - Removal**.
2. With the front fascia on a bench, remove the front air dam retainers.
3. Remove the front air dam from the fascia.

Installation

INSTALLATION

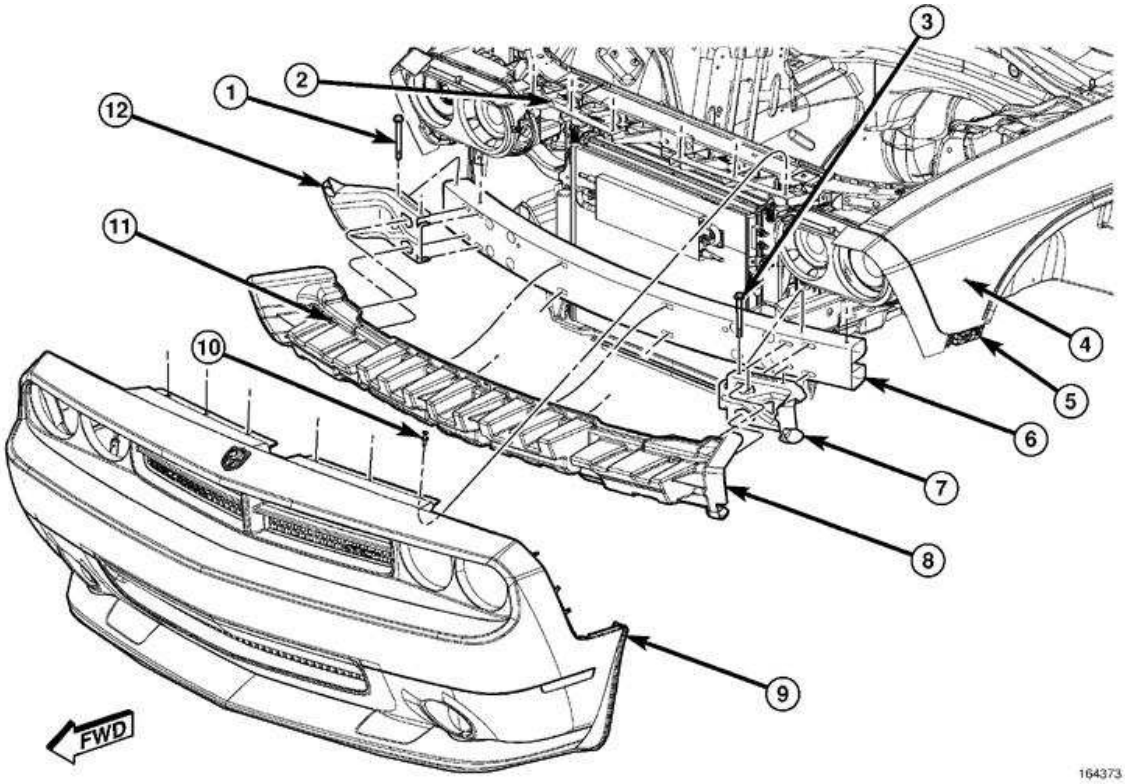

Fig. 2: Identifying Front Fascia Components
Courtesy of CHRYSLER LLC

1. BOLT, RIGHT FRONT BUMPER EXTENSION	7. EXTENSION, LEFT BUMPER
2. HARNESS, WIRING	8. ENERGY ABSORBER, FRONT BUMPER
3. BOLT, LEFT FRONT BUMPER EXTENSION	9. FASCIA, FRONT
4. FENDER	10. FASTNER, PUSH PIN
5. BRACKET, FASCIA SUPPORT	11. CLIP, ENERGY ABSORBER

6. BEAM ASSEMBLY, FRONT BUMPER	12. EXTENSION, RIGHT BUMPER

1. Place the front air dam into position.
2. Install the air dam mounting fasteners that secure the air dam to the fascia.
3. Install the front fascia. See **Frame and Bumpers/Bumpers/FASCIA, Front - Installation**.

BUMPER, FRONT

Removal

REMOVAL

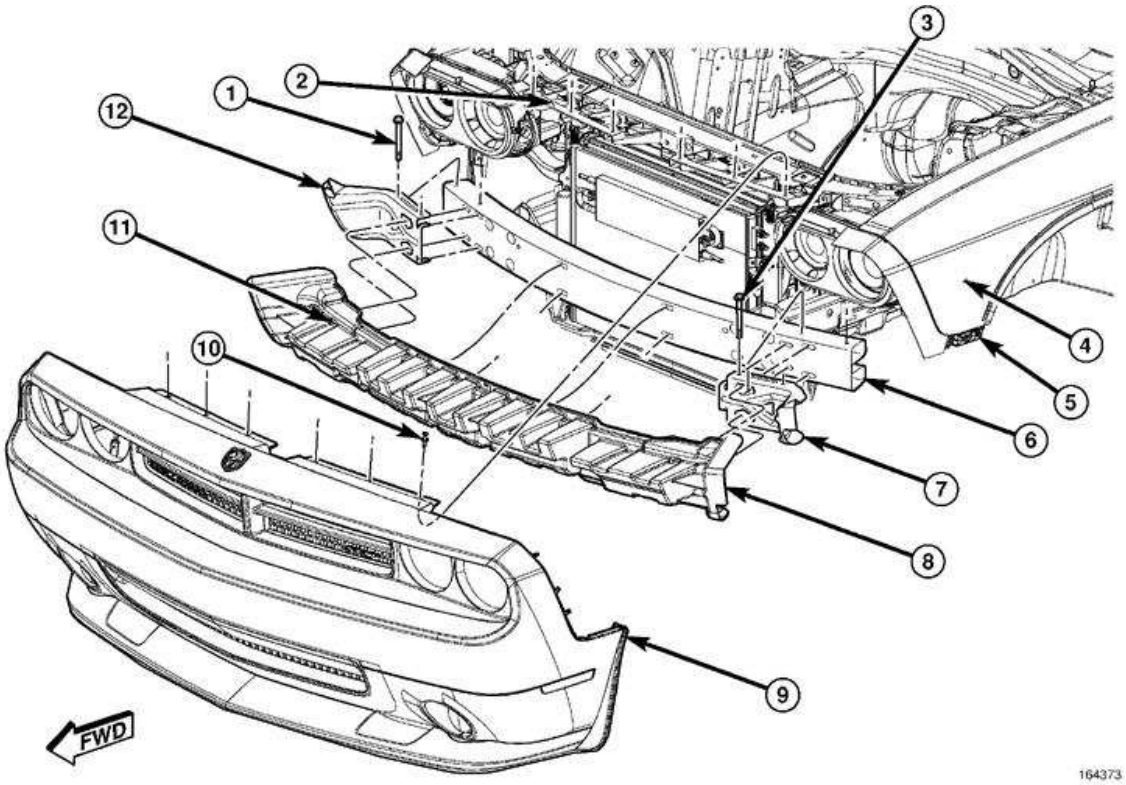

Fig. 3: Identifying Front Fascia Components
Courtesy of CHRYSLER LLC

1. BOLT, RIGHT FRONT BUMPER EXTENSION	7. EXTENSION, LEFT BUMPER
2. HARNESS, WIRING	8. ENERGY ABSORBER, FRONT BUMPER
3. BOLT, LEFT FRONT BUMPER EXTENSION	9. FASCIA, FRONT
4. FENDER	10. FASTNER, PUSH PIN
5. BRACKET, FASCIA SUPPORT	11. CLIP, ENERGY ABSORBER
6. BEAM ASSEMBLY, FRONT BUMPER	12. EXTENSION, RIGHT BUMPER

1. Remove fascia assembly (9). See **Frame and Bumpers/Bumpers/FASCIA, Front - Removal**

2. Remove the energy absorber (8) by disengaging the clips (11).
3. Remove the left bumper extension bolt (3) and left bumper extension (7).
4. Remove the right bumper extension bolt (1) and right bumper extension (12).
5. Remove the eight mounting fasteners (4 per side) and remove the bumper (6).

Installation

INSTALLATION

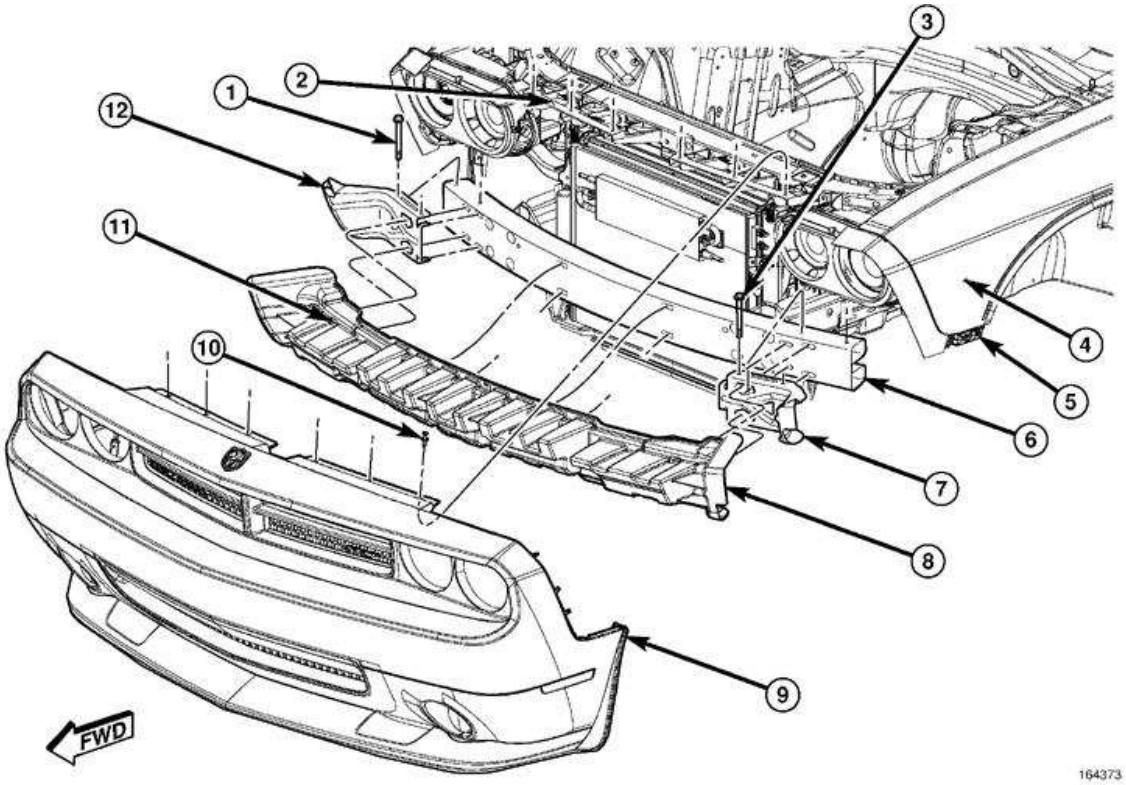

Fig. 4: Identifying Front Fascia Components
Courtesy of CHRYSLER LLC

1. BOLT, RIGHT FRONT BUMPER EXTENSION	7. EXTENSION, LEFT BUMPER
2. HARNESS, WIRING	8. ENERGY ABSORBER, FRONT BUMPER
3. BOLT, LEFT FRONT BUMPER EXTENSION	9. FASCIA, FRONT
4. FENDER	10. FASTNER, PUSH PIN
5. BRACKET, FASCIA SUPPORT	11. CLIP, ENERGY ABSORBER
6. BEAM ASSEMBLY, FRONT BUMPER	12. EXTENSION, RIGHT BUMPER

1. Position the bumper (6) and install the eight mounting fasteners (4 per side). Tighten to 28 N.m (21 ft. lbs.).
2. Install the right bumper extension (12) and right bumper extension bolt(1).
3. Install the left bumper extension (7) and left bumper extension bolt (3). Tighten to 28 N.m (21 ft.

lbs.).

4. Install the energy absorber (8) by engaging the clips (11).
5. Install the fascia assembly (9). See **Frame and Bumpers/Bumpers/FASCIA, Front - Installation**.

BUMPER, REAR

Removal

REMOVAL

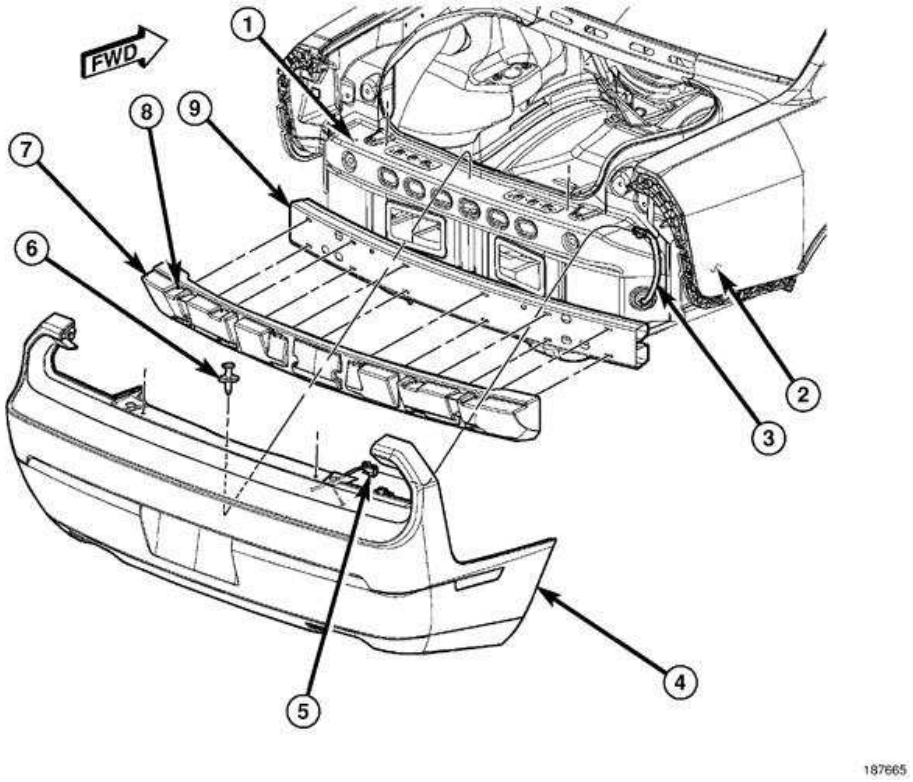

Fig. 5: Identifying Rear Fascia & Bumper Components
Courtesy of CHRYSLER LLC

1. CLOSER, REAR REINFORCEMENT	6. FASTENER, PUSH PIN
2. PANEL, BODY SIDE	7. ENERGY ABSORBER, REAR BUMPER
3. CONNECTOR, WIRING HARNESS	8. CLIP, ENERGY ABSORBER
4. FASCIA, REAR	9. BUMPER, REAR
5. CONNECTOR, WIRING HARNESS	-

1. Remove the rear fascia assembly (4). See **Frame and Bumpers/Bumpers/FASCIA, Rear - Removal**
2. Remove the rear energy absorber (7) by disengaging the clips (8).
3. Remove the rear bumper mounting fasteners and remove the bumper (9).

Installation

INSTALLATION

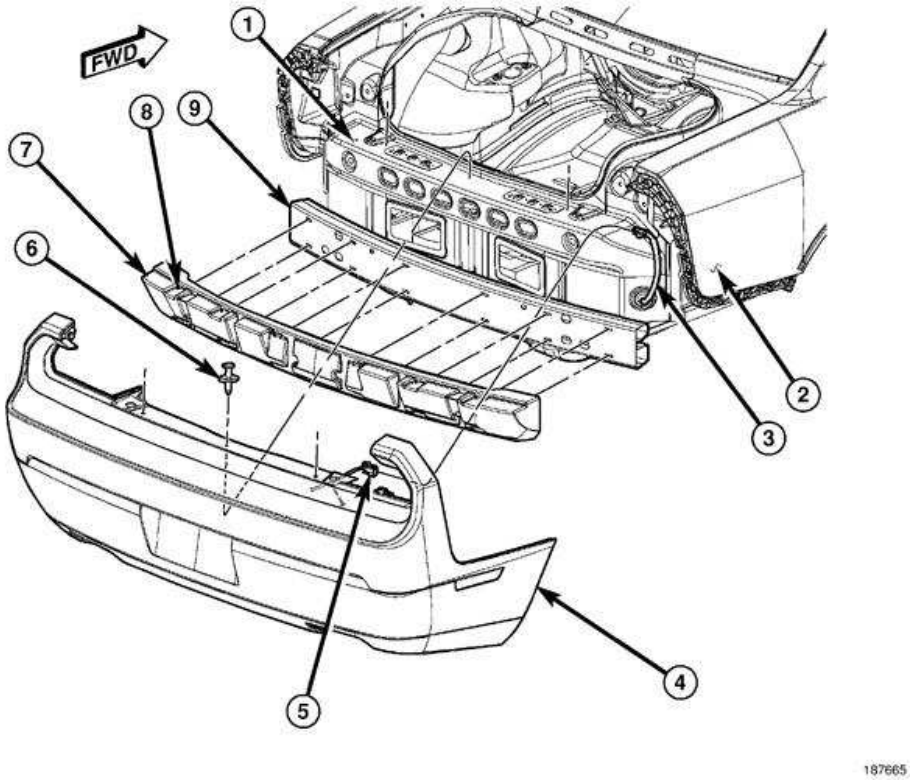

Fig. 6: Identifying Rear Fascia & Bumper Components
Courtesy of CHRYSLER LLC

1. CLOSER, REAR REINFORCEMENT	6. FASTENER, PUSH PIN
2. PANEL, BODY SIDE	7. ENERGY ABSORBER, REAR BUMPER
3. CONNECTOR, WIRING HARNESS	8. CLIP, ENERGY ABSORBER
4. FASCIA, REAR	9. BUMPER, REAR
5. CONNECTOR, WIRING HARNESS	-

1. Place the bumper into position.
2. Install the mounting fasteners. Tighten to 28 N.m (21 ft. lbs.).
3. Install the rear energy absorber (7) by engaging the clips (8).
4. Install the rear fascia assembly. See **Frame and Bumpers/Bumpers/FASCIA, Rear - Installation**.

FASCIA, FRONT

Removal

REMOVAL

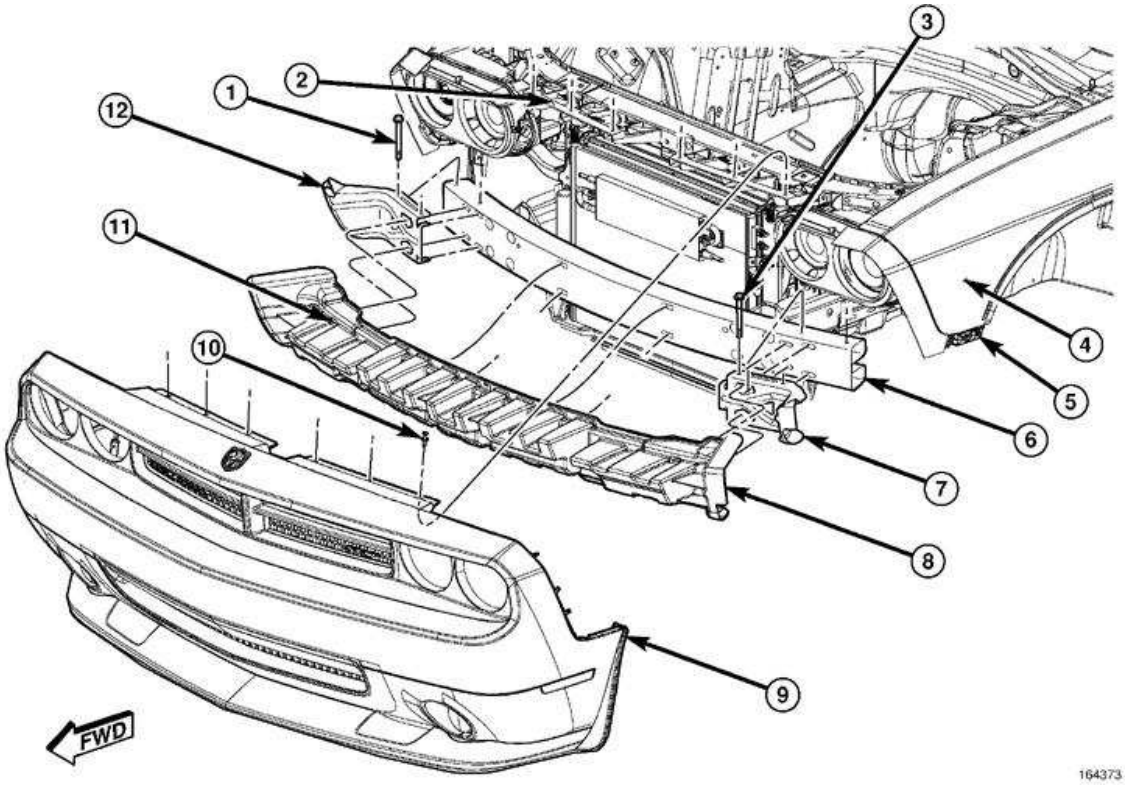

Fig. 7: Identifying Front Fascia Components
Courtesy of CHRYSLER LLC

1. BOLT, RIGHT FRONT BUMPER EXTENSION	7. EXTENSION, LEFT BUMPER
2. HARNESS, WIRING	8. ENERGY ABSORBER, FRONT BUMPER
3. BOLT, LEFT FRONT BUMPER EXTENSION	9. FASCIA, FRONT
4. FENDER	10. FASTNER, PUSH PIN
5. BRACKET, FASCIA SUPPORT	11. CLIP, ENERGY ABSORBER
6. BEAM ASSEMBLY, FRONT BUMPER	12. EXTENSION, RIGHT BUMPER

1. Raise and support the vehicle.
2. Remove the left and right front splash shields as necessary. Refer to **Body/Exterior/SHIELD, Splash - Removal** .
3. Remove the belly pan.
4. Remove the mounting fasteners that secures the front fascia assembly (9) to the inside of the front fender.
5. Partially lower the vehicle and remove the push-pin retainers (10) that secure the front fascia assembly to the upper radiator support.
6. Disconnect the Tire Pressure Monitoring (TPM) connector. Refer to **Tires and Wheels/Tire Pressure Monitoring/MODULE, Tire Pressure Monitoring (TPM) - Removal** .
7. Carefully pull the left and front side of the fascia out of the fender mounted fascia mounting brackets.
8. Carefully pull the front fascia assembly forward to disengage the push-pin retainer from the slot

in each side of the fascia and disconnect the fog lamp wire harness connectors, if equipped.

Installation

INSTALLATION

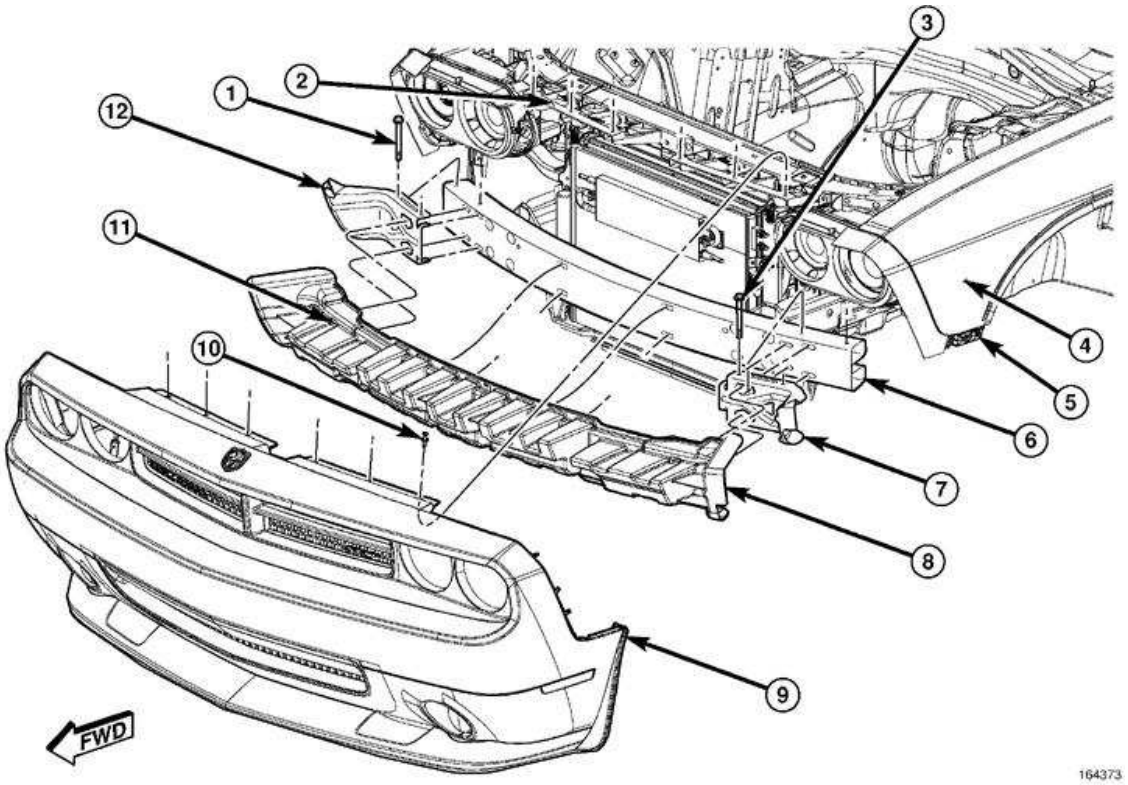

Fig. 8: Identifying Front Fascia Components
Courtesy of CHRYSLER LLC

1. BOLT, RIGHT FRONT BUMPER EXTENSION	7. EXTENSION, LEFT BUMPER
2. HARNESS, WIRING	8. ENERGY ABSORBER, FRONT BUMPER
3. BOLT, LEFT FRONT BUMPER EXTENSION	9. FASCIA, FRONT
4. FENDER	10. FASTNER, PUSH PIN
5. BRACKET, FASCIA SUPPORT	11. CLIP, ENERGY ABSORBER
6. BEAM ASSEMBLY, FRONT BUMPER	12. EXTENSION, RIGHT BUMPER

1. Place the front fascia assembly in position and connect the fog lamp wire harness connectors, if equipped.
2. Push the left and front side of the fascia in to the fender mounted fascia mounting brackets.
3. Connect the Tire Pressure Monitoring (TPM) connector.
4. If equipped, connect the headlamp washer system hose from washer reservoir.
5. Raise the vehicle.
6. Install the mounting fasteners that secures the front fascia assembly (9) to the inside of the front fender.

7. Install the belly pan.
8. Install the left and right front splash shields as necessary. Refer to **Body/Exterior/SHIELD, Splash - Installation** .
9. Lower the vehicle.

FASCIA, REAR

Removal

REMOVAL

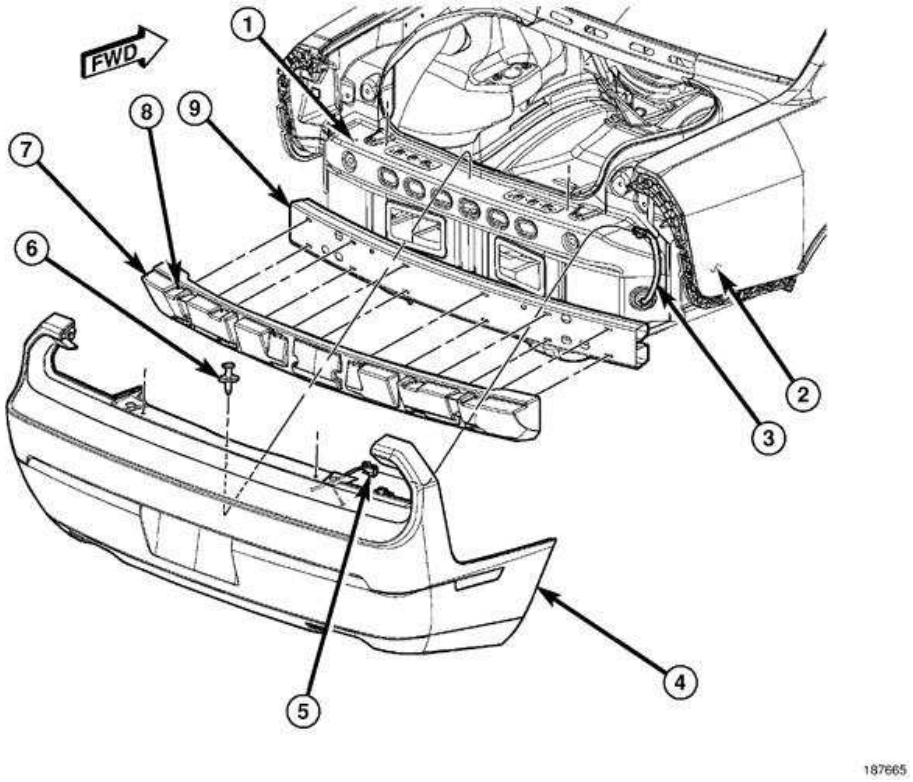

Fig. 9: Identifying Rear Fascia & Bumper Components
Courtesy of CHRYSLER LLC

1. CLOSER, REAR REINFORCEMENT	6. FASTENER, PUSH PIN
2. PANEL, BODY SIDE	7. ENERGY ABSORBER, REAR BUMPER
3. CONNECTOR, WIRING HARNESS	8. CLIP, ENERGY ABSORBER
4. FASCIA, REAR	9. BUMPER, REAR
5. CONNECTOR, WIRING HARNESS	-

1. Raise and support the vehicle.
2. Remove the rear splash shields, as necessary. Refer to **Body/Exterior/SHIELD, Splash - Removal** .

3. Remove the left and right rear tail lamps. Refer to **Electrical - Lamps and Lighting/Lamps/Lighting - Exterior/LAMP, Tail - Removal** .
4. Remove the left and right upper fasteners.
5. Remove the lower rear fascia (4) mounting fasteners located under the vehicle.
6. Remove the mounting fasteners in the wheel wells.
7. Remove the upper fascia push pin retainers (6).
8. Carefully pull the left and right side of the rear fascia outward, disengaging the fascia from the fender (2) mounted mounting brackets.
9. Carefully remove the rear fascia from the vehicle and disconnect the electrical connectors.

Installation

INSTALLATION

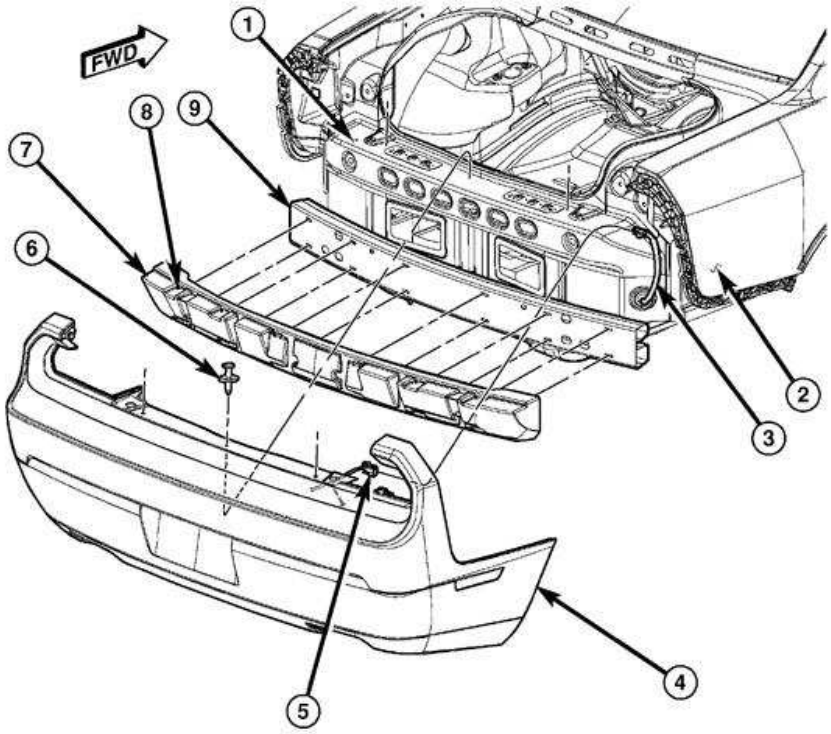

Fig. 10: Identifying Rear Fascia & Bumper Components
Courtesy of CHRYSLER LLC

1. CLOSER, REAR REINFORCEMENT	6. FASTENER, PUSH PIN
2. PANEL, BODY SIDE	7. ENERGY ABSORBER, REAR BUMPER
3. CONNECTOR, WIRING HARNESS	8. CLIP, ENERGY ABSORBER
4. FASCIA, REAR	9. BUMPER, REAR
5. CONNECTOR, WIRING HARNESS	-

1. Carefully remove the rear fascia from the vehicle and disconnect the electrical connectors.
2. Carefully pull the left and right side of the rear fascia outward, disengaging the fascia from the fender (2) mounted mounting brackets.
3. Remove the upper fascia push pin retainers (6).
4. Install the mounting fasteners in the wheel wells.
5. Install the lower rear fascia (4) mounting fasteners located under the vehicle.
6. Install the left and right upper fasteners.
7. Install the left and right rear tail lamps. Refer to **Electrical - Lamps and Lighting/Lamps/Lighting - Exterior/LAMP, Tail - Installation** .
8. Install the rear splash shields, as necessary. Refer to **Body/Exterior/SHIELD, Splash - Installation** .
9. Lower the vehicle.

FRAME

WARNING

USE OF HEAT DURING REPAIR

WARNING: Chrysler LLC engineering's position on the use of heat during collision repair is as follows:

- **Any body panel or frame component damaged which is to be repaired and reused, must be repaired using the "cold straightening" method. No heat may be used during the straightening process.**
- **During rough straightening prior to panel replacement, damaged panels or frame components may be heated to assist in body/frame realignment. The application of heat must be constrained to the parts which will be replaced and not allowed to affect any other components.**

This "no heat" recommendation is due to the extensive use of high strength and advanced high strength steels in Chrysler LLC products. High-strength materials can be substantially and negatively affected from heat input which will not be obviously known to the repairer or consumer.

Ignoring these recommendations may lead to serious compromises in the ability to protect occupants in a future collision event, reduce the engineered qualities and attributes, or decrease the durability and reliability of the vehicle.

This statement supersedes any previously released information by the Chrysler LLC.

Failure to follow these instructions may result in serious or fatal injury.

WARNINGS

WARNING: Before performing any welding operations disconnect and isolate the negative battery (ground) cable. Disconnect all wire harness connectors from the Occupant Restraint Controller (ORC). Failure to take the proper precautions could result in accidental airbag deployment and other possible damage to the supplemental restraint system circuits and components. Failure to follow these instructions may result in possible serious or fatal injury.

- **use eye protection when grinding or welding metal, serious eye injury can result.**
- **before proceeding with frame repair involving grinding or welding, verify that vehicle fuel system is not leaking or in contact with repair area. Personal injury can result.**
- **do not allow open flame or heat and metal spatter from arc welding to contact plastic body panels. Fire or explosion can result.**
- **when welded frame components are replaced, make sure complete penetration weld is achieved during installation. If not, dangerous operating conditions can result.**
- **stand clear of cables or chains on pulling equipment during frame straightening operations. Personal injury can result.**
- **do not venture under a hoisted vehicle that is not supported on safety stands. Personal injury can result.**
- **do not use heat, if frame straightening is required.**

Failure to follow these instructions may result in possible serious or fatal injury.

CAUTION: Do not reuse damaged fasteners, quality of repair would be suspect. Failure to use only production fasteners or fasteners of equivalent hardness can result in loosening or failure. Do not drill any holes in the frame that are not specifically outlined in this or other Chrysler procedures as frame rail failure can result.

STANDARD PROCEDURE

STANDARD PROCEDURE - REAR FRAME RAIL REPLACEMENT

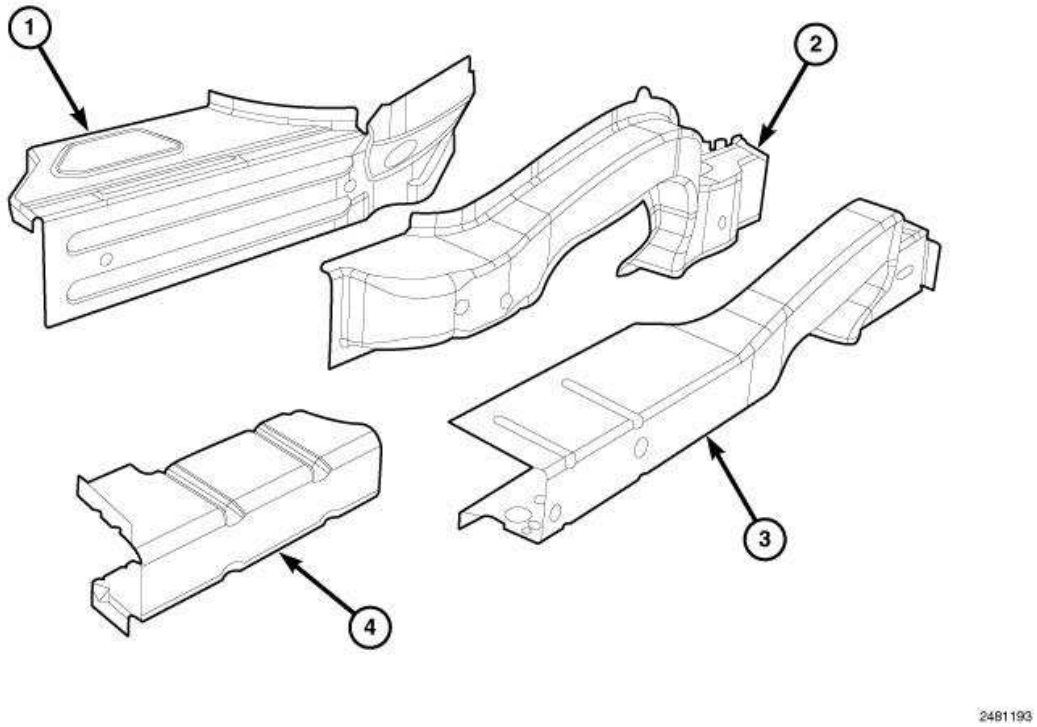

Fig. 11: Rail Terminology
Courtesy of CHRYSLER LLC

1 - COVER PLATE
2 - RAIL, REAR, OUTER
3 - RAIL, REAR, INNER
4 - REINFORCEMENT, REAR RAIL INNER, REAR

"Rail, rear, outer" (2) - this portion of the rear rail assembly is not visible as it is gloved inside the "rail, rear, inner" (3) and the "cover plate, rear rail extension" (1). **This rail may not be sectioned!**

"Reinforcement, rear rail inner rear" (4) - welded inside of the "rail, rear, inner" (3) and extends from the end of that rail to the "panel, deck opening lower".

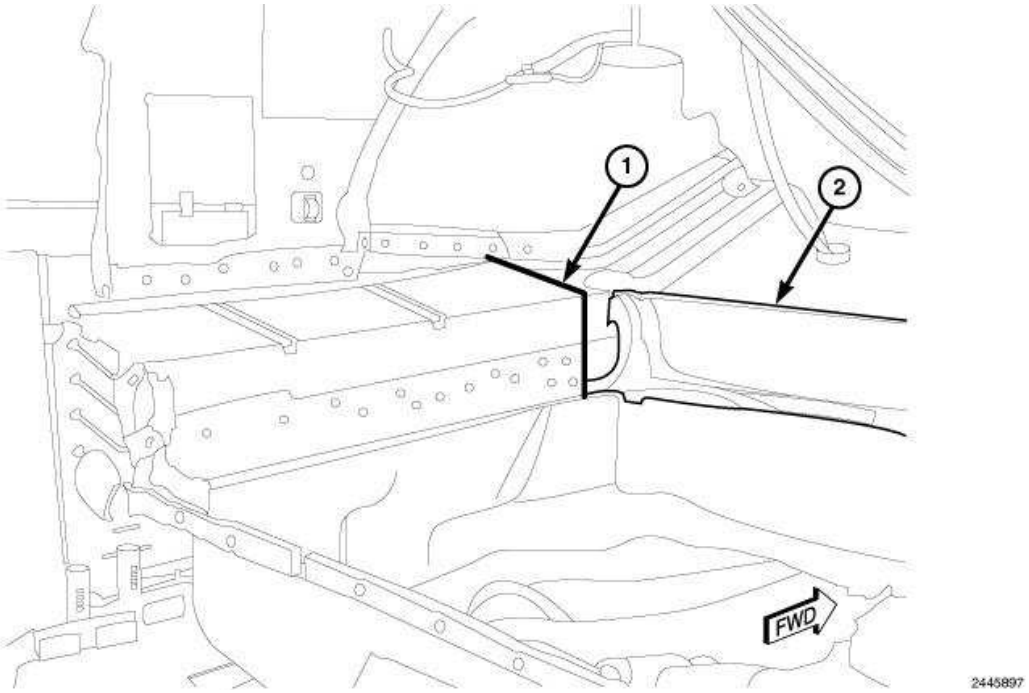

Fig. 12: Rear Inner Rail
Courtesy of CHRYSLER LLC

"Rail, rear inner" may be sectioned at this location (1), greatly reducing vehicle disruption and repair costs.

This partial replacement procedure presumes that all damage to the "rail, rear inner" is aft of the crossmember (2).

Left side

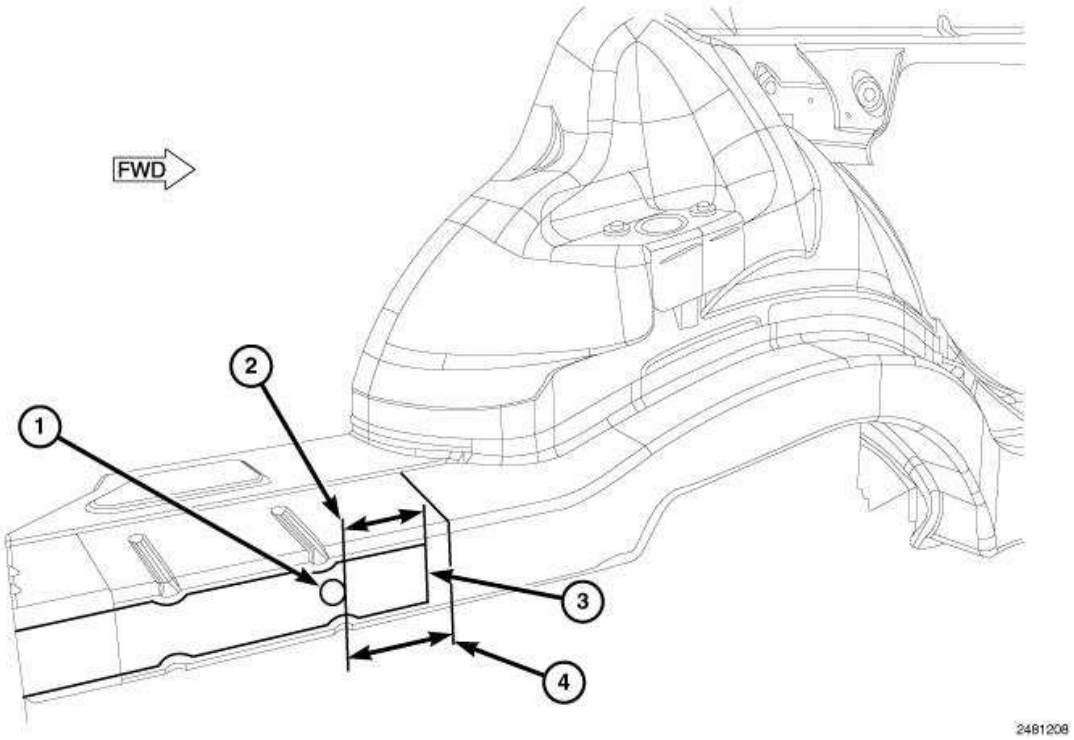

Fig. 13: LX/LC Left Rear Rail Cut Locations
Courtesy of CHRYSLER LLC

1 - HOLE
2 - 100 mm (4 in.)
3 - REINFORCEMENT, REAR RAIL INNER, REAR
4 - CUT LOCATION 125 mm (5 in.)

The "Reinforcement, Rear Rail Inner, Rear" (3) ends 100 mm (4 in.) (2) forward of round hole (1) on inner face of "Rail, Rear Inner" - recommended cut location is 125 mm (5 in.) (4) from forward edge of the hole (1).

Right Side

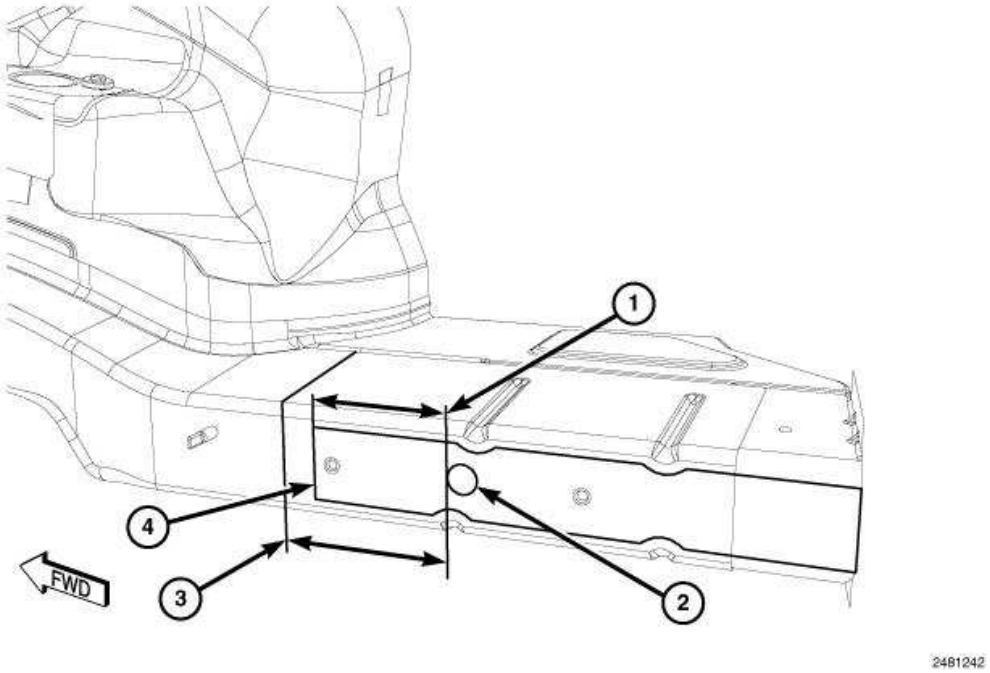

Fig. 14: LX/LC Right Rear Rail Cut Locations
Courtesy of CHRYSLER LLC

1 - 125 mm (5 in.)
2 - HOLE
3 - CUT LOCATION 150 mm (6 in.)
4 - REINFORCEMENT, REAR RAIL INNER, REAR

The "Reinforcement, Rear Rail Inner Rear" (4) ends 125 mm (5 in.) (1) forward of round hole (2) on inner face of "rail, rear inner" - recommended cut location (3) is 150 mm (6 in.) from forward edge of hole (2).

The following procedure details key points of the repair. I-CAR training is presumed, and should be followed for best-practice repair procedures.

1. Mount the damaged vehicle onto a structural straightening bench and check/correct any body misalignment utilizing three dimensional measuring equipment.
2. Remove all components in area of repair allowing unimpeded access for cutting and welding operations.
3. Trunk floor should be removed if being replaced, or the necessary welds released and the weld flange bent inboard to provide access to the rail for the butt-joint.
4. Using the round hole in the "Rail, Rear, Inner" as a point of reference, measure 125 mm (5 in.) forward for the left rail, or 150 mm (6 in.) forward for the right rail, and scribe a vertical line on the rail.

5. With the vertical line just made as reference, cut off the damaged "Rail, Rear, Inner" taking care not to damage the "Rail, Rear, Outer", using a reciprocating saw or cut-off wheel, and remove the damaged portion.
6. Utilize the same measuring and cutting process above to remove the replacement portion from the service part.
7. Using a surface conditioning disk, remove all e-coat within 25 mm (1 in.) of the cut location and de-bur the cut edge.
8. If the "Rail, Rear, Outer" was damaged during the cutting operation, MIG-weld the damage and dress the weld.
9. Fabricate 19 mm (0.75 in.) weld backers from the damaged component, or the remains of the service part, and tack in place on the replacement rail section at the butt-joint location.
10. Position and clamp the replacement rail and confirm proper position with measuring equipment.
11. Weld the service part in position using a skip-stitch process.
12. Complete remaining repairs in the damaged area.
13. Clean and dress all welded areas.
14. Apply epoxy primer to the exterior of the rail at the repair location.
15. Apply quality body sealer to all areas previously sealed to duplicate the original appearance. Note that additional sealer may be applied to better protect the exterior exposed seams from road spray.
16. Refinish all exposed surfaces in trunk and on underbody using quality refinish materials.
17. Apply inner panel rust proofing, such as Mopar # 05093981AA, or equivalent, to the rail inner cavity areas in two applications with a 30-minute flash period between the applications. Pay particular attention to areas which have been welded.
18. Reassemble vehicle and complete repairs.

Additional Information

Observe all cautions and warnings per the Chrysler service information. See **Frame and Bumpers/Frame - Warning**.

Reference the Chrysler weld process chart. See **Frame and Bumpers/Frame - Specifications**.

Butt joint should be metal finished without thinning the base rail material or weldment. This is a cosmetic finishing process to disguise the repair and should have the surface coating (paint) duplicated as well.

Restore corrosion protection when complete with all welding operations.

SPECIFICATIONS

WELD PROCESS

CAUTION: All welds should conform to the Chrysler LLC vehicle engineering process standard PS 9472.

COMPONENT PARTS	TRUCK FRAME		BODYSHELL EXTERIOR & UNDERBODY PANELS			
-	Chrysler MS 6000 (Zinc and Zinc Iron Alloy coated sheet steels)					
WELDING PROCESS	GAS METAL ARC (Note: 1)	FLUX CORED ARC	GAS METAL ARC (Note: 1)	MIG BRAZE (Note: 2)	GAS METAL ARC (Note: 1)	FLUX CORED ARC
Material Type	Chrysler MS 264 (High Strength and Structural Quality Steels which includes HSLA, Martensitic, and Dual Phase materials)					
Material Thickness Range	2 mm - 4 mm		0.6 mm - 1.02 mm		>1.02 mm - 3.0 mm	
ELECTRODE TYPE (AWS SPEC. A5.18)	AWS CLASS. ER70S-6	AWS CLASS. E71T-11 (Note 3)	AWS CLASS. ER70S-6	AWS CLASS. ERCuSi - A Silicon Bronze	AWS CLASS. ER70S-6	AWS CLASS. E71T-11 (Note 3)
ELECTRODE SIZE	0.035	0.045	0.023 - 0.025	0.035	0.035	0.045
ELECTRODE MAKER	Lincoln®	Lincoln® NR-211-MP	Lincoln®	-	Lincoln®	Lincoln® NR-211-MP
WIRE FEED SPEED (in/min) -	245-250 Vertical Down 70-90 Flat & Horizontal	110 Vertical Down 70-90 Flat & Horizontal	95-115 All Welds -	150-155 Flat & Horizontal -	245-250 Vertical Down 70-90 Flat & Horizontal	110 Vertical Down 70-90 Flat & Horizontal
TRAVEL SPEED (in/min)	-	-	10	-	-	-
VOLTAGE	19-20	15-18	16-19	18-19	19-20	15-18
POLARITY	DCEP	DCEN	DCEP	DCEP	DCEP	DCEN
GAS FLOW (cfh)	25-35	N/A	25-35	25-35	25-35	N/A
ELECTRICAL STICKOUT (in)	1/2 - 5/8	3/8 - 1/2	1/2 - 5/8	5/8 - 3/4	1/2- 5/8	3/8 - 1/2
GAS TYPE -	75% Ar 25% CO2	N/A -	75% Ar 25% CO2	100% Ar -	75% Ar 25% CO2	N/A -
TYPE OF ARC TRANSFER	Short Circuit	-	Short Circuit	Spray	Short Circuit	-

These Procedure Specifications are appropriate as of this publication date 8/1/2007. Procedures may be superseded with new specs at a later date.

Always process to the thinner material thickness (TMT)

All persons performing welding must be qualified to weld in all positions.

NOTE:

1. **Must remove Zinc Coating on both sides of metal at the weld zone.**
2. **MIG Braze welding process requires use of Pulse Arc® or STT® welding machine.**
3. **Must use Lincoln® product since E 71T-11 product differs from other suppliers.**

FRAME DIMENSIONS

Frame dimensions are listed in metric scale then converted to inch scale listed in parenthesis. All dimensions are from center to center of Principal Locating Point (PLP), or from center to center of PLP and fastener location. Vertical dimensions can be taken from the work surface to the locations indicated.

INDEX

DESCRIPTION	FIGURE
FRAME DIMENSIONS - BOTTOM VIEW	See **Fig. 15**.
FRAME DIMENSIONS - SIDE VIEW	See **Fig. 16**.

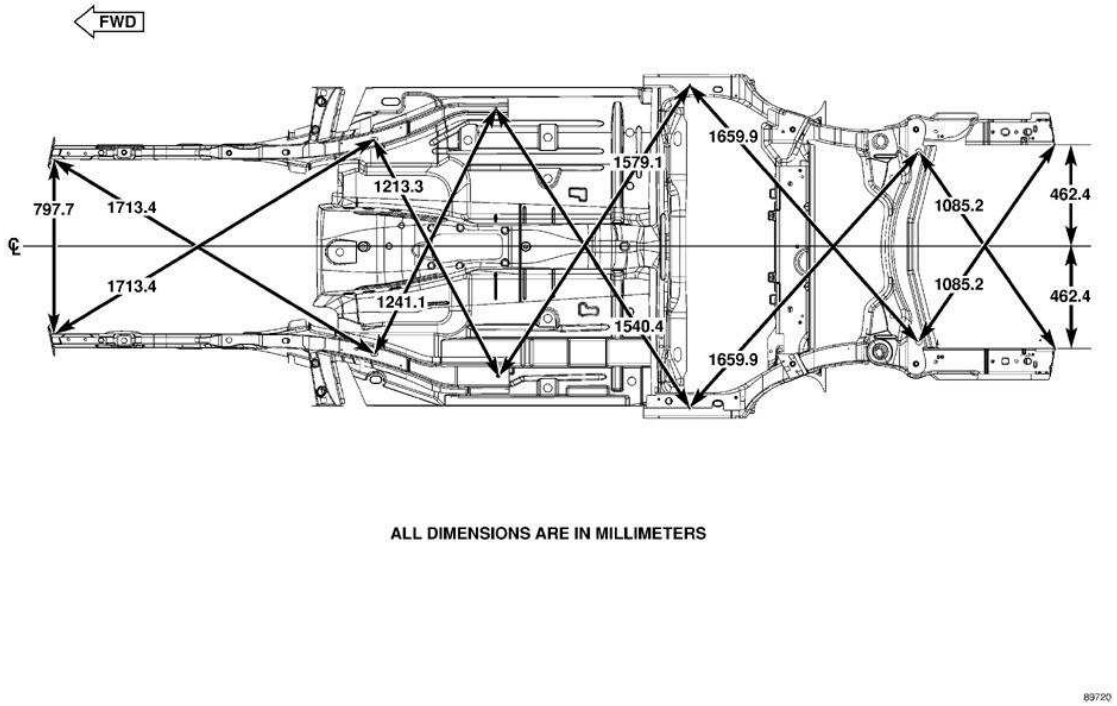

Fig. 15: FRAME DIMENSIONS - BOTTOM VIEW
Courtesy of CHRYSLER LLC

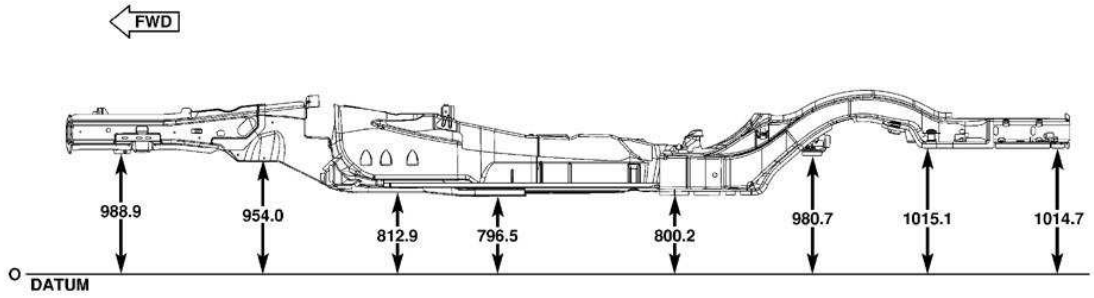

Fig. 16: FRAME DIMENSIONS - SIDE VIEW
Courtesy of CHRYSLER LLC

FASTENER TORQUE

FASTENER TORQUE

DESCRIPTION	N.m	Ft. Lbs.	In. Lbs.
Axle Flange Bolts	81	60	-
Ball Joint Nut	122	90	-
Caliper Guide Pins	31	23	-
Camber Link Bolt	85	63	-
Compression Link Bolt	85	63	-
Cushion Retainer Mounting Bolts	60	44	-
Engine Cradle bolts	185	136	-
Engine Mount Nuts	60	44	-
Front Suspension Crossmember Front Attaching Bolts	109	80	-
Front Suspension Crossmember Rear Attaching Bolts	102	75	-
Hub Nut	213	157	-
Outer Tie Rod End Nut	86	63	-
Radiator Support Crossmember Attaching Bolts	61	45	-
Rear Bumper Reinforcement Attaching Nuts	28	21	-
Rear Crossmember Mounting Bolts	180	133	-

Shock Absorber Lower Mounting Bolt	72	53	-
Shock Clevis Bracket to Lower Control Arm	174	128	-
Spring Link Bolt	108	80	-
SRT Rear Disc Brake Caliper Mounting Bolt	130	96	-
Stabilizer Link Ball Joint	81	60	-
Stabilizer Link Bolt	61	45	-
Standard Disc Brakes Guide Pins	31	23	-
Steering Gear Lower Mounting Bolt	142	105	-
Tension Link Bolt	85	63	-
Toe Link Cam Bolt Nut	108	80	-
Wheel Mounting Nuts	150	110	-

SPECIAL TOOLS

SPECIAL TOOLS

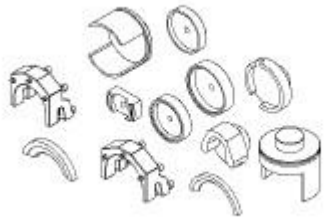

Fig. 17: Remover/Installer, Bushing 9031A
Courtesy of CHRYSLER LLC

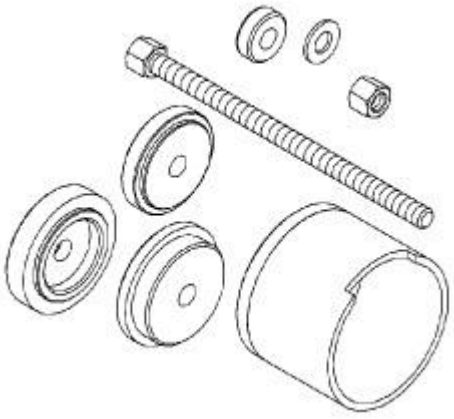

Fig. 18: Remover/Installer, Bushing 9520
Courtesy of CHRYSLER LLC



Fig. 19: Press, Ball Joint C-4212F
Courtesy of CHRYSLER LLC

CROSSMEMBER, CRADLE, ENGINE

Removal

REMOVAL

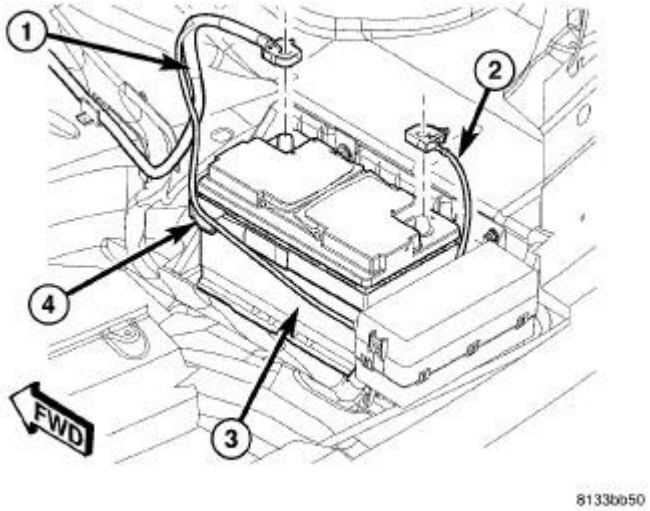

Fig. 20: BATTERY AND CABLES
Courtesy of CHRYSLER LLC

1. Disconnect and isolate negative battery cable (2).
2. Siphon power steering fluid from pump reservoir.
3. Raise and support the vehicle

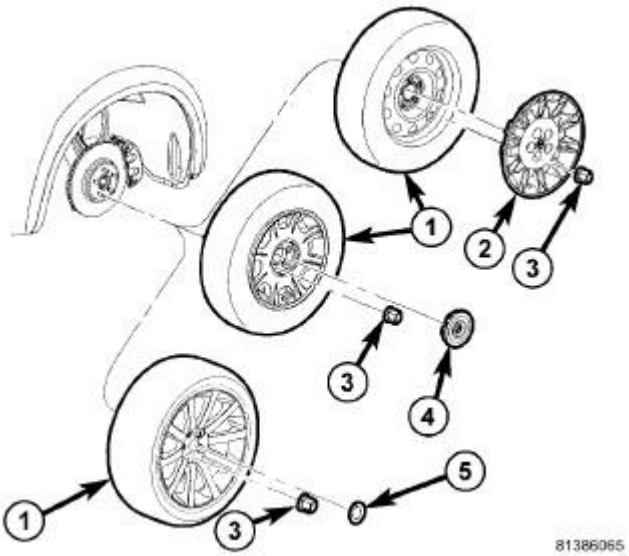

Fig. 21: TIRE AND WHEEL MOUNTING
Courtesy of CHRYSLER LLC

4. Remove the left and right front wheels (1). Refer to **Tires and Wheels - Removal** .

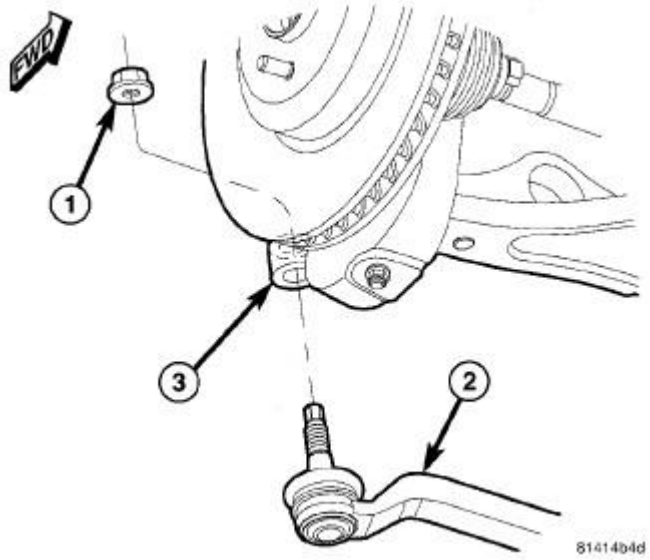

Fig. 22: TIE ROD ATTACHMENT AT KNUCKLE
Courtesy of CHRYSLER LLC

5. Remove outer tie rod (2) end nut (1) at each knuckle (3).

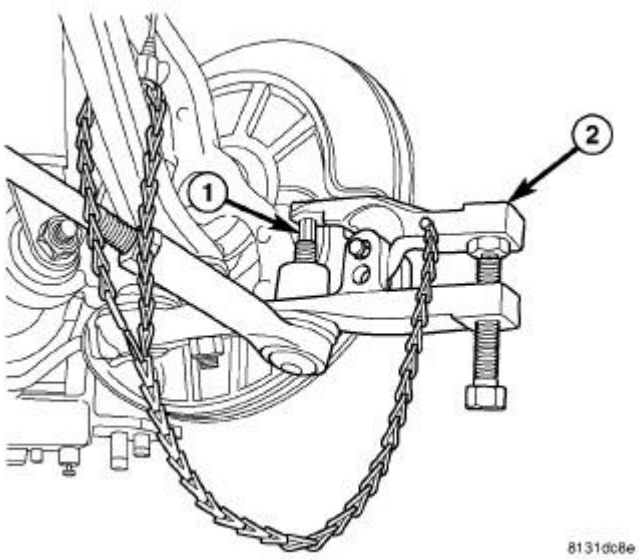

Fig. 23: USING PULLER ON OUTER TIE ROD
Courtesy of CHRYSLER LLC

6. Using Ball Joint Remover 9360 (2), separate outer tie rod (1) from each knuckle.

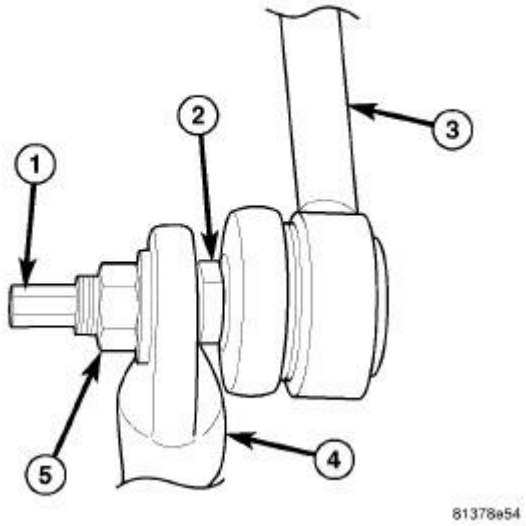

Fig. 24: LINK BALL JOINT AT STABILIZER BAR
Courtesy of CHRYSLER LLC

7. On each side of vehicle, remove nut (5) fastening stabilizer link (3) to stabilizer bar (4). Slide link ball joint stem (1) from bar.

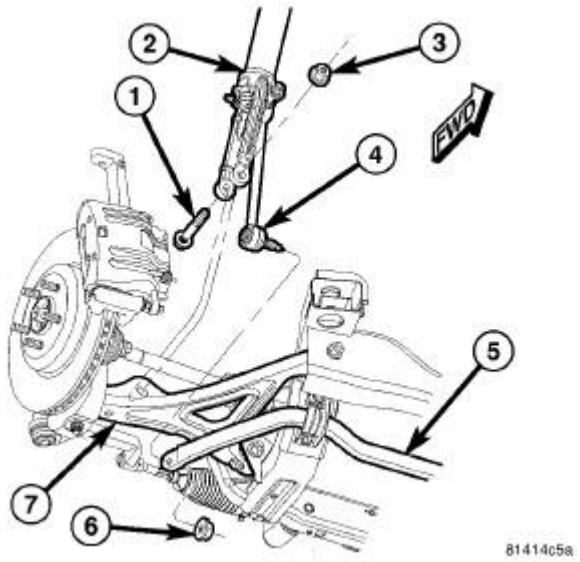

Fig. 25: SHOCK ATTACHMENT AT LOWER CONTROL ARM
Courtesy of CHRYSLER LLC

8. Back off nut (3) from bolt (1) attaching shock clevis bracket (2) to lower control arm (7) until it is flush with end of bolt.
9. Using a brass drift punch, tap the bolt out of the clevis bracket until bolt serrations clear bracket.
10. Remove nut (3) and bolt (1) for clevis bracket and control arm.
11. Install engine support tool 8534B.
12. Remove upper airbox inlet tube.
13. Install left and right engine lift bracket to cylinder head.

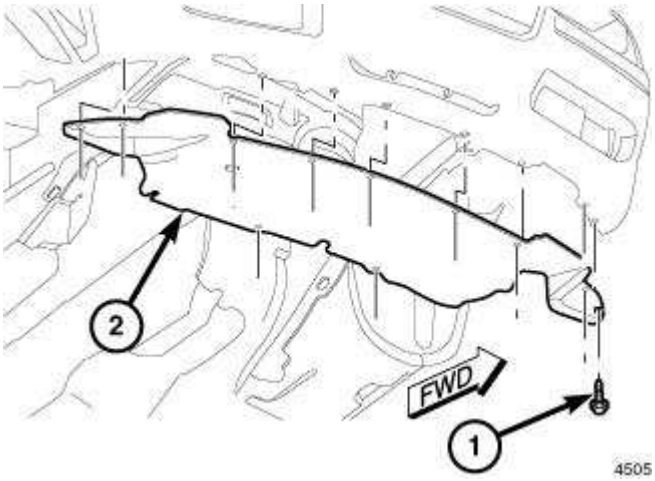

Fig. 26: FRONT BELLY PAN
Courtesy of CHRYSLER LLC

14. Remove the front belly pan.

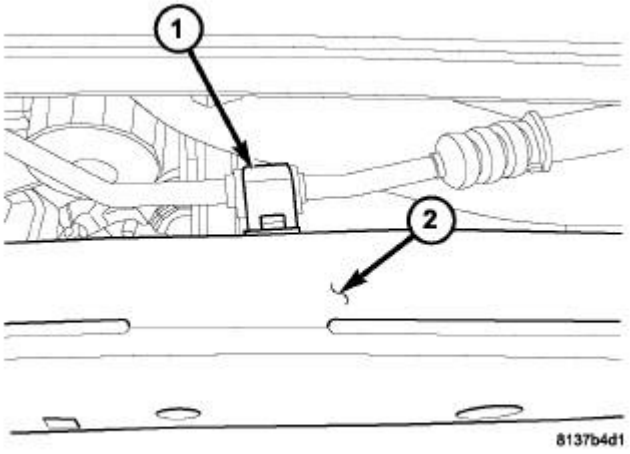

Fig. 27: HOSE MOUNTING BRACKET TO CRADLE
Courtesy of CHRYSLER LLC

15. Remove two pressure line retainer bolts (1) from cradle (2).

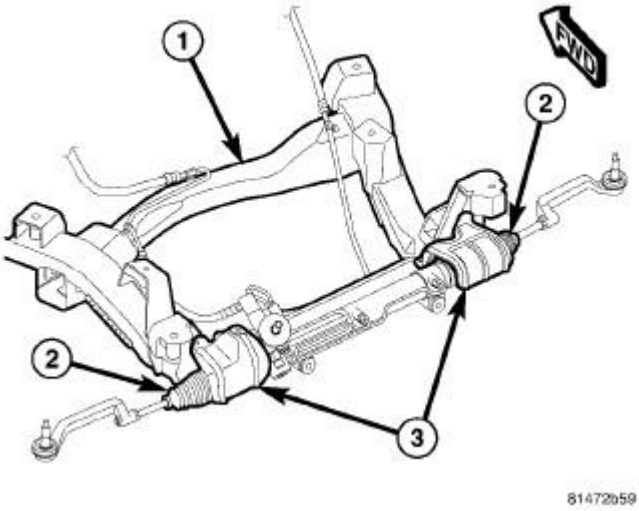

Fig. 28: INNER TIE ROD BELLOWS HEAT SHIELD
Courtesy of CHRYSLER LLC

16. Remove mounting screws, then heat shield (3) above each inner tie rod bellows (2).

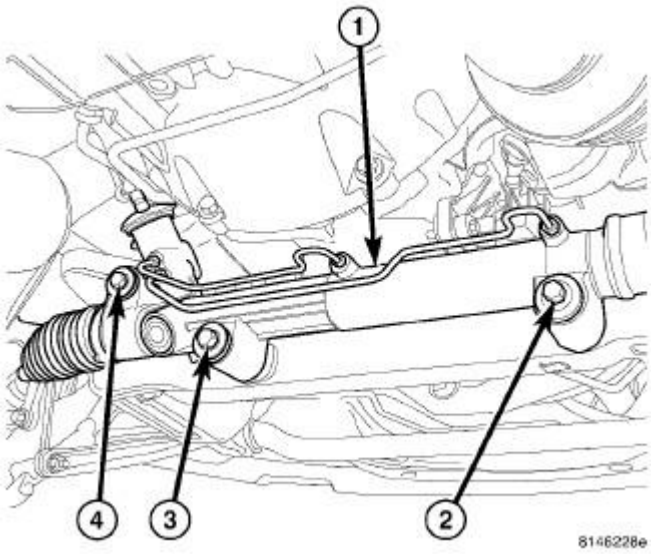

Fig. 29: AWD GEAR MOUNTING BOLTS
Courtesy of CHRYSLER LLC

17. Remove steering gear upper mounting bolt (4) and nut.
18. Remove steering gear lower mounting bolts (2 and 3).
19. Remove steering gear (1) and support from the exhaust system.

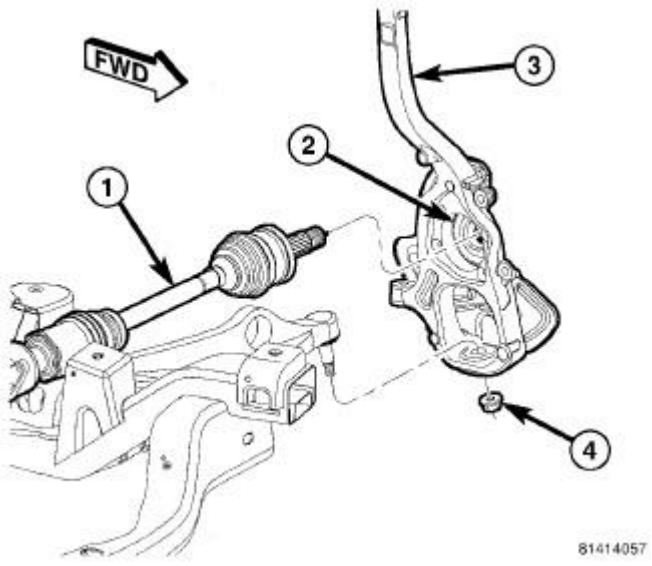

Fig. 30: BALL JOINT ATTACHMENT
Courtesy of CHRYSLER LLC

20. Loosen nut (4) attaching lower control arm ball joint stud to knuckle (3). Back nut off until nut is even with end of stud. **Keeping nut on at this location will help keep end of stud from distorting while using Puller in next step.**

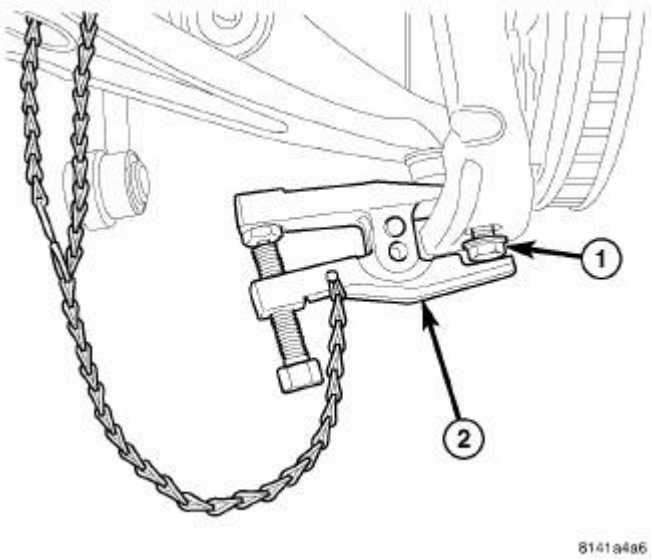

Fig. 31: USING PULLER ON LOWER BALL JOINT - AWD
Courtesy of CHRYSLER LLC

CAUTION: In following step, use care not to damage ball joint seal boot while sliding Ball Joint Remover 9360, into place past seal boot.

21. Using Ball Joint Remover 9360 (2), separate ball joint stud from knuckle.
22. Remove tool.
23. Remove left and right engine mount nut.
24. Remove nut (1) from end of ball joint stud.

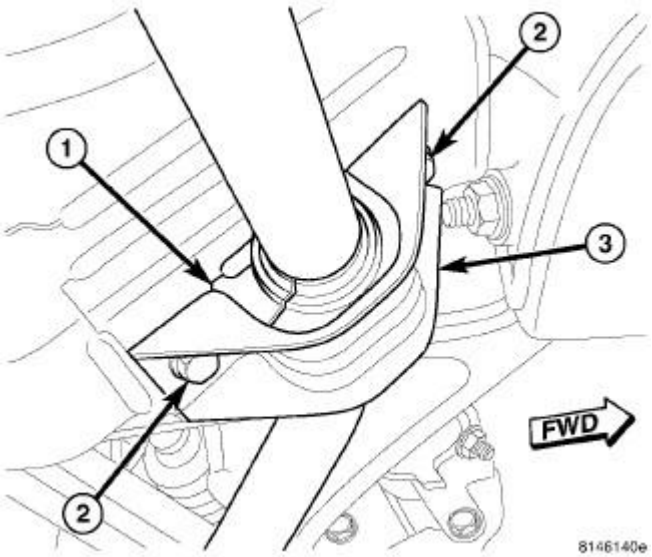

Fig. 32: STABILIZER BAR BUSHING AND RETAINER

Courtesy of CHRYSLER LLC

25. On each side of vehicle, remove bolts (2) fastening stabilizer bar isolator retainer (3) in place.
26. Remove stabilizer bar with isolators and retainers from vehicle.
27. Support the engine cradle (special tool 8534B Engine Support Fixture) with a suitable lifting device.
28. Using a grease pencil or equivalent, mark the position of the engine cradle to aid installation.
29. Remove the four engine cradle bolts and lower the cradle.
30. Remove the control arms, if required.

Installation

INSTALLATION

NOTE: Although AWD and RWD upper control arms are similar in appearance, they are not interchangeable.

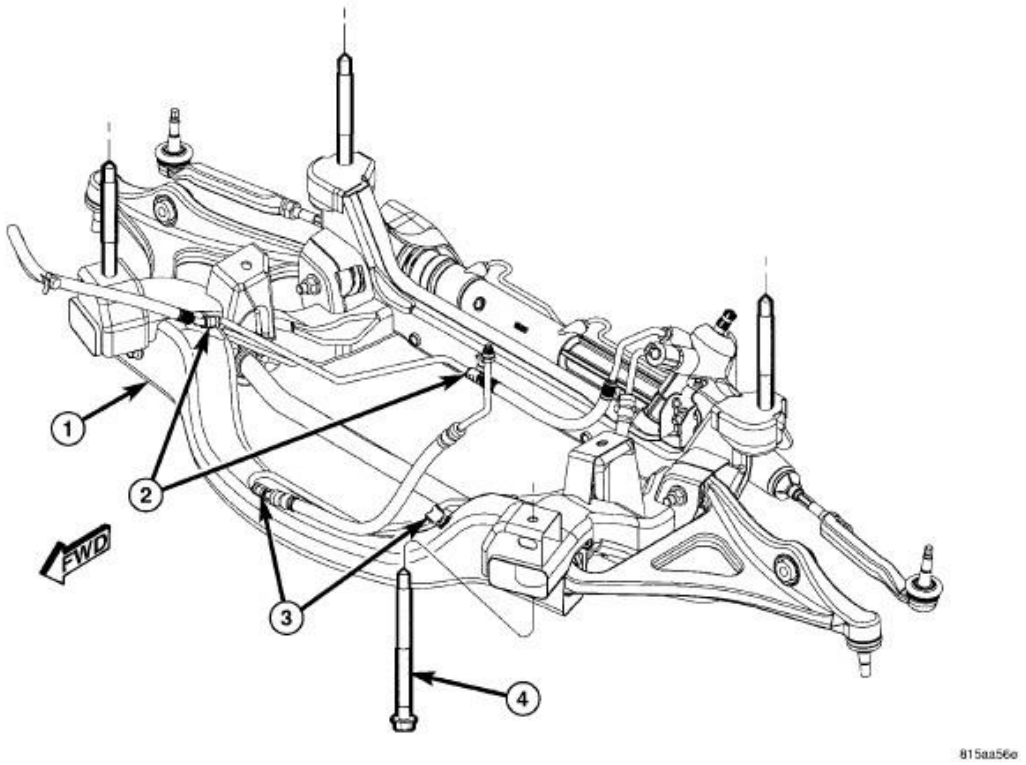

Fig. 33: ENGINE CRADLE
Courtesy of CHRYSLER LLC

1. Install control arms. Refer to **Front Suspension/Front/ARM, Lower Control - Installation** .
2. To aid installation, raise engine cradle to marked location.
3. Install four engine cradle bolts (4) and raise cradle. Tighten cradle bolts to 185 N.m (136 ft. lbs.).

4. Install stabilizer with isolators and retainers onto cradle. Refer to **Front Suspension/Front/STABILIZER BAR, Front - Installation** .

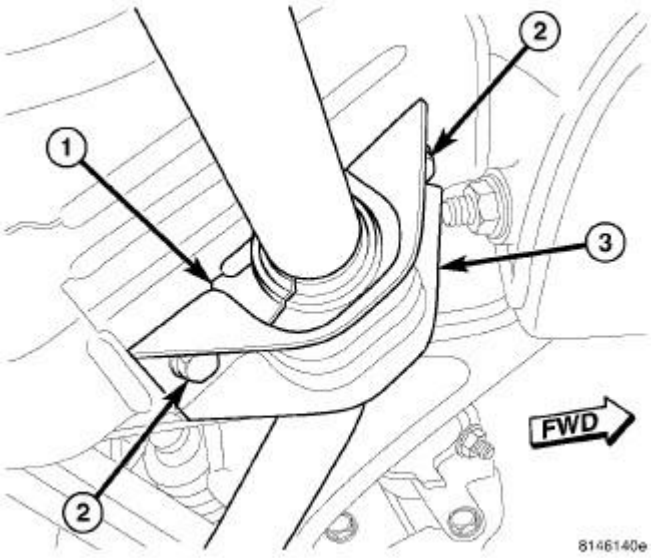

Fig. 34: STABILIZER BAR BUSHING AND RETAINER
Courtesy of CHRYSLER LLC

5. On each side of vehicle, install bolts (2) fastening stabilizer bar isolator retainer (3) in place. Tighten bolts to 60 N.m (44 ft. lbs.).
6. Tighten engine mount nuts to 60 N.m (44 ft. lbs.).
7. Tighten left and right ball joint nut (4) to 122 N.m (90 ft. lbs.) attaching lower control arm ball joint stud to knuckle (3).

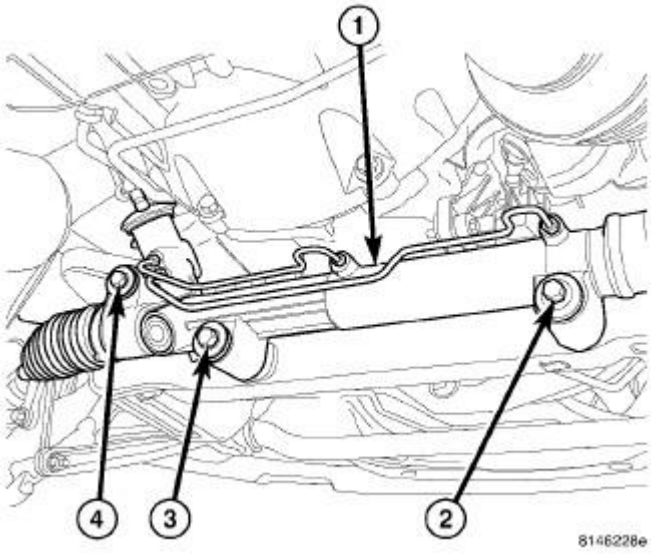

Fig. 35: AWD GEAR MOUNTING BOLTS

Courtesy of CHRYSLER LLC

8. Install steering gear (1) and support from the exhaust system. Refer to **Steering/Gear - Installation** .
9. Install steering gear lower mounting bolts (2 and 3). Tighten to 142 N.m (105 ft. lbs.).
10. Install steering gear upper mounting bolt (4) and nut.

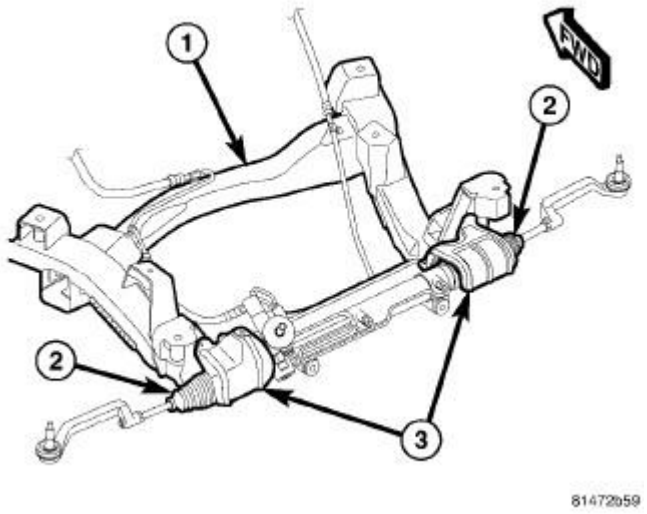

Fig. 36: INNER TIE ROD BELLOWS HEAT SHIELD
Courtesy of CHRYSLER LLC

11. Install heat shield (3) and mounting screws above each inner tie rod bellow.

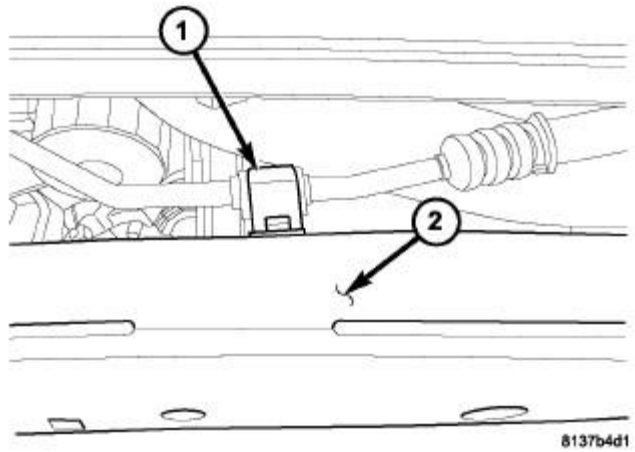

Fig. 37: HOSE MOUNTING BRACKET TO CRADLE

Courtesy of CHRYSLER LLC

12. Install two pressure line retainer bolts (1) on cradle (2).

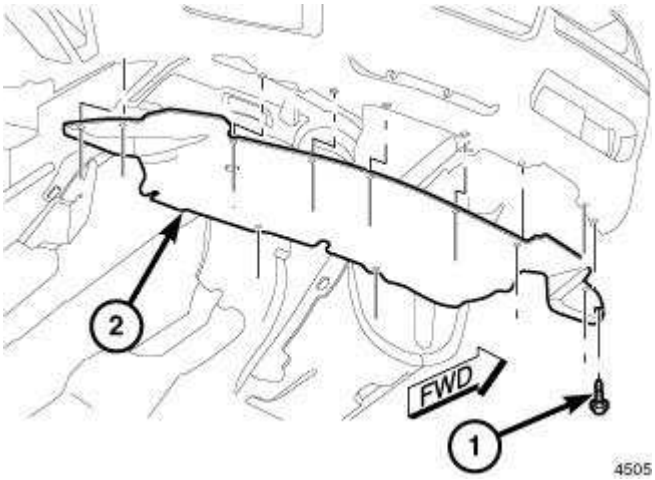

Fig. 38: FRONT BELLY PAN
Courtesy of CHRYSLER LLC

13. Install front belly pan.

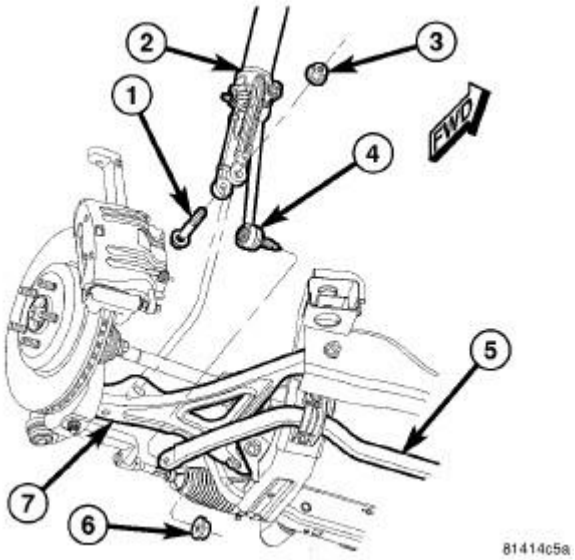

Fig. 39: SHOCK ATTACHMENT AT LOWER CONTROL ARM
Courtesy of CHRYSLER LLC

14. Install nut (3) and bolt (1) attaching shock clevis bracket (2) to lower control arm (7). Tighten to 174 N.m (128 ft. lbs.).
15. On each side of vehicle, install nut (3) fastening stabilizer link (4) to stabilizer bar (5). Slide link ball joint stem on to bar. Tighten link nut to 81N.m (60 ft. lbs.).

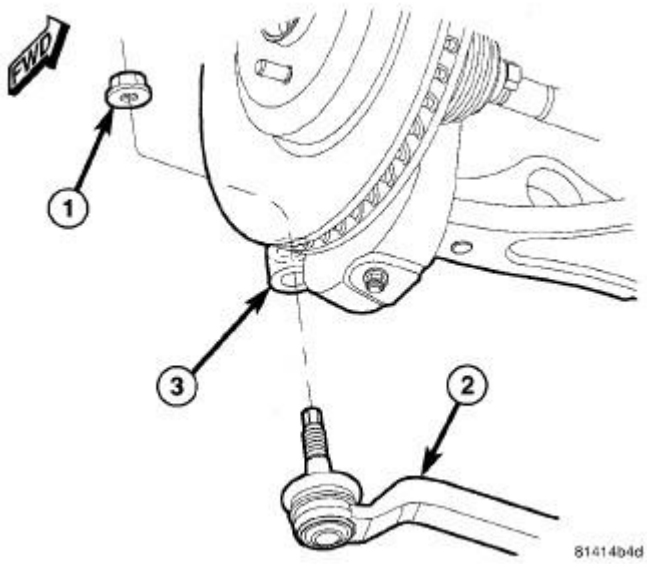

Fig. 40: TIE ROD ATTACHMENT AT KNUCKLE
Courtesy of CHRYSLER LLC

16. Install outer tie rod (2) end nut (1) at each knuckle (3). Tighten end nut to 86 N.m (63 ft. lbs.).

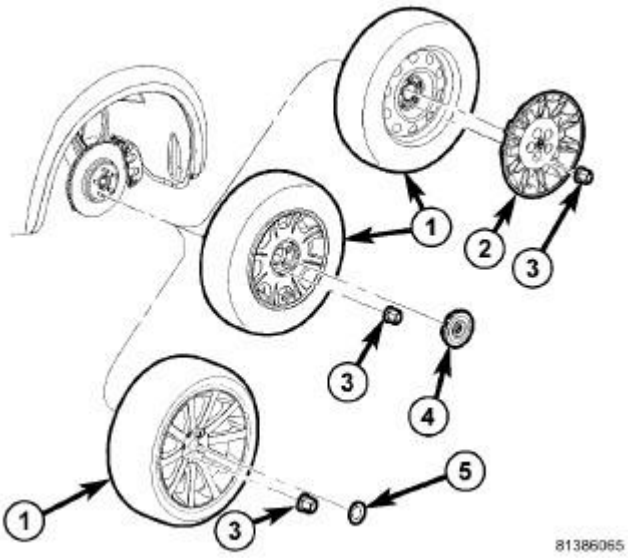

Fig. 41: TIRE AND WHEEL MOUNTING
Courtesy of CHRYSLER LLC

17. Install tire and wheel assembly (1). Refer to **Tires and Wheels - Installation** .
18. Lower vehicle from hoist.
19. Install power steering fluid into pump reservoir. Refer to **Steering/Pump/FLUID - Standard Procedure** .

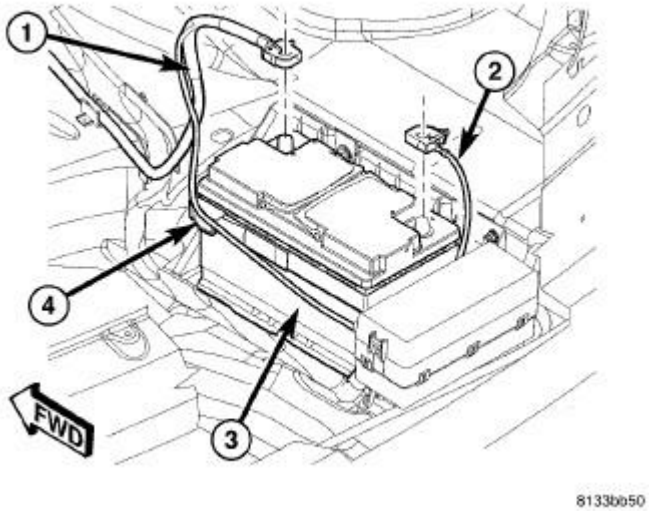

Fig. 42: BATTERY AND CABLES
Courtesy of CHRYSLER LLC

20. Connect negative battery cable (2).
21. Perform vehicle alignment. Refer to **Front Suspension/Wheel Alignment - Standard Procedure** .

CROSSMEMBER, REAR

Removal

REMOVAL

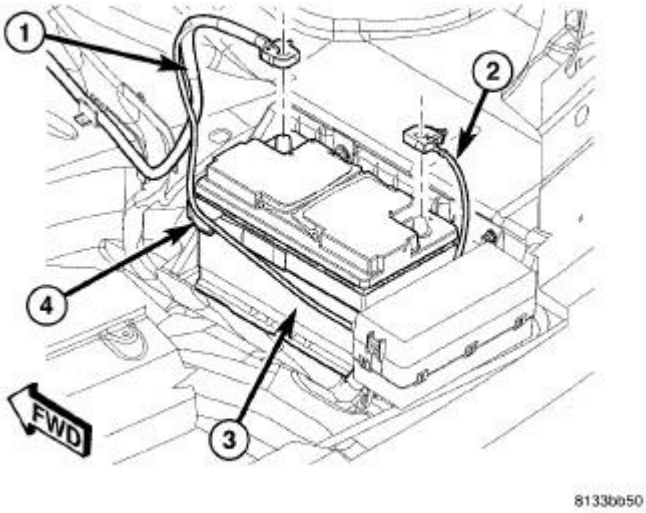

Fig. 43: BATTERY AND CABLES

Courtesy of CHRYSLER LLC

1. Disconnect and isolate battery negative cable (2) from battery post.
2. Raise and support vehicle. Refer to **Vehicle Quick Reference/Hoisting - Standard Procedure** .

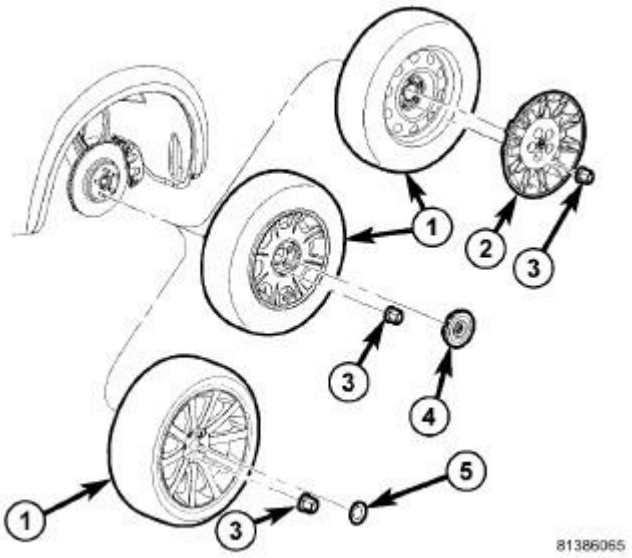

Fig. 44: TIRE AND WHEEL MOUNTING
Courtesy of CHRYSLER LLC

3. On each side of vehicle rear, remove wheel mounting nuts (3), then tire and wheel assembly (1).

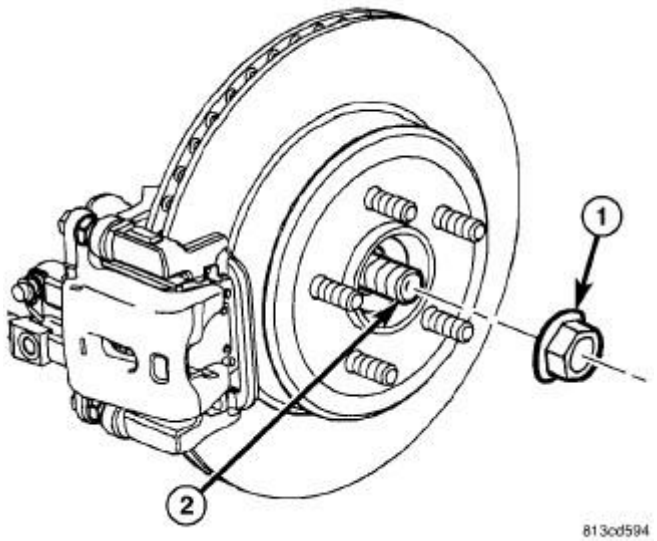

Fig. 45: HUB NUT

Courtesy of CHRYSLER LLC

4. On each side of vehicle rear, while a helper applies brakes to keep hub from rotating, remove hub nut (1) from half shaft (2).

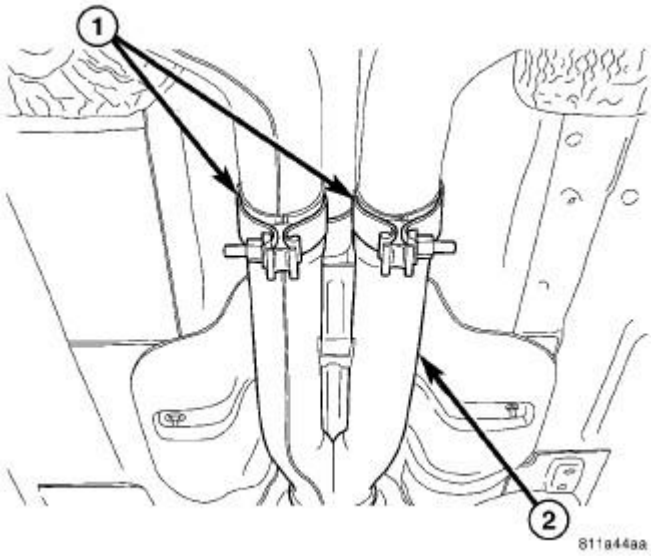

Fig. 46: Exhaust System
Courtesy of CHRYSLER LLC

5. Remove rear exhaust system (2) (dual-outlet exhaust shown in illustration).
6. Remove rear axle differential. Refer to **Differential and Driveline/Rear Axle - 215RII - Removal** .
7. Slide each axle half shaft from hub and bearing and remove from vehicle.

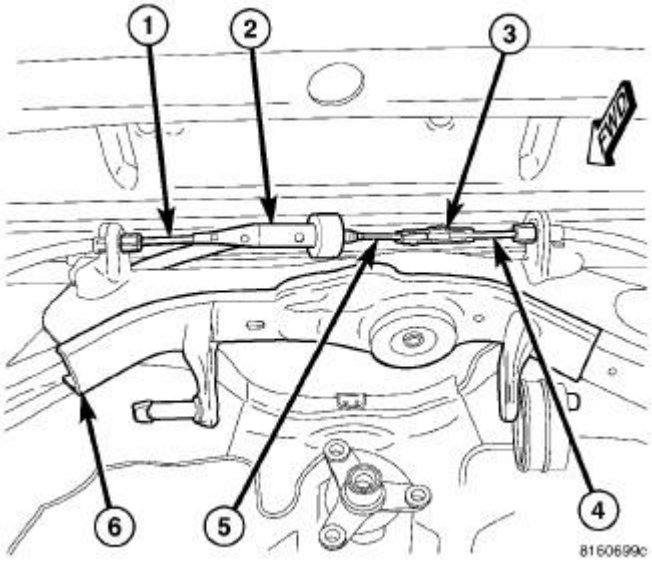

Fig. 47: CABLES AT EQUALIZER
Courtesy of CHRYSLER LLC

NOTE: Due to short travel and low spring tension, it is not necessary to lock-out parking brake lever to service parking brake components.

8. Disconnect right rear parking brake cable (4) at connector (3) to front parking brake cable (5).
9. Disconnect left rear parking brake cable (1) at equalizer (2). **Leave equalizer on front cable.**

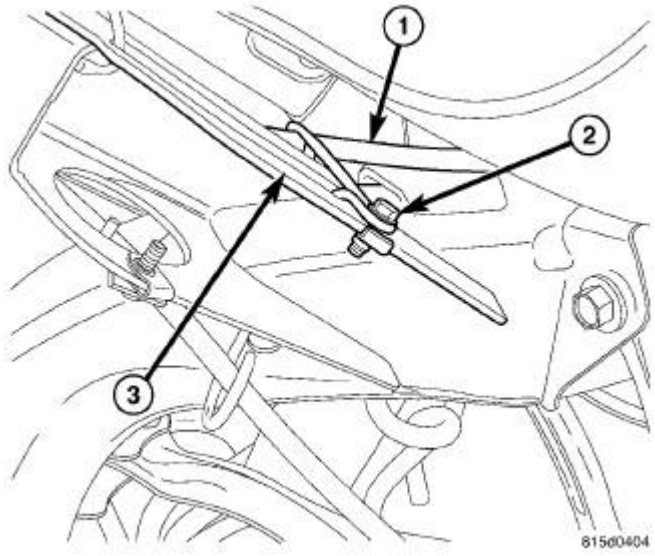

Fig. 48: FRONT CABLE AT LEFT FRONT OF CROSSMEMBER
Courtesy of CHRYSLER LLC

10. Remove screw (2) fastening front parking brake cable (1) routing bracket to rear crossmember front flange (3). Remove J-nut from crossmember.

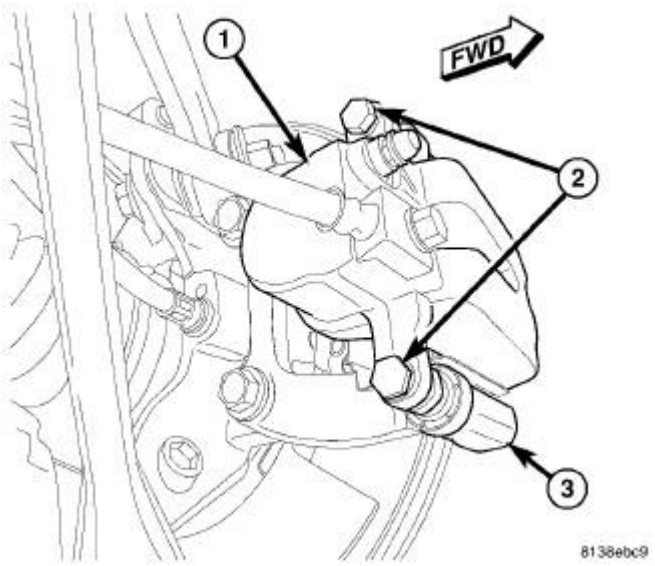

Fig. 49: REAR CALIPER MOUNTING
Courtesy of CHRYSLER LLC

11. If equipped with standard or premium disc brakes, on each rear disc brake:
    a. While holding guide pins from turning, remove disc brake caliper guide pin bolts (2).
    b. Remove brake caliper (1) from brake adapter (3) and pads.
    c. Guide brake caliper up through suspension, following brake hose path. Support caliper above rear suspension using with bungee cord or wire to keep caliper from overextending brake hose when crossmember is lowered.

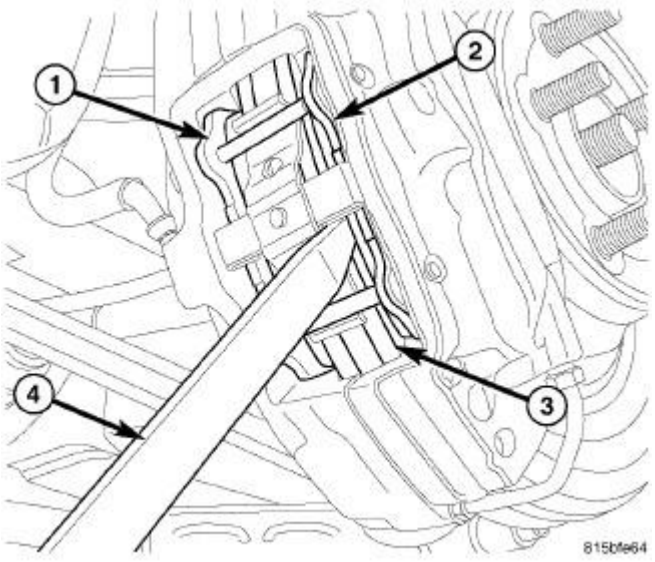

Fig. 50: PUSHING BACK PISTONS IN BORE
Courtesy of CHRYSLER LLC

CAUTION: When pushing pistons back into caliper bores, use only a trim stick as shown or other suitable soft tool. Never use a screwdriver or other metal pry bar due to potential damage to braking surface of rotor, caliper, pistons or dust boots.

12. If equipped with SRT8 disc brakes, on each rear disc brake, place trim stick (4) between brake pad (2) and outer edge of rotor (3).
13. If equipped with SRT8 disc brakes, on each rear disc brake, using trim stick, slowly apply pressure against brake pad (2) until both pistons (on that side of caliper) are completely bottomed in bores of caliper half.

NOTE: Repeat above procedure to opposite brake pad (1) and pistons as necessary.

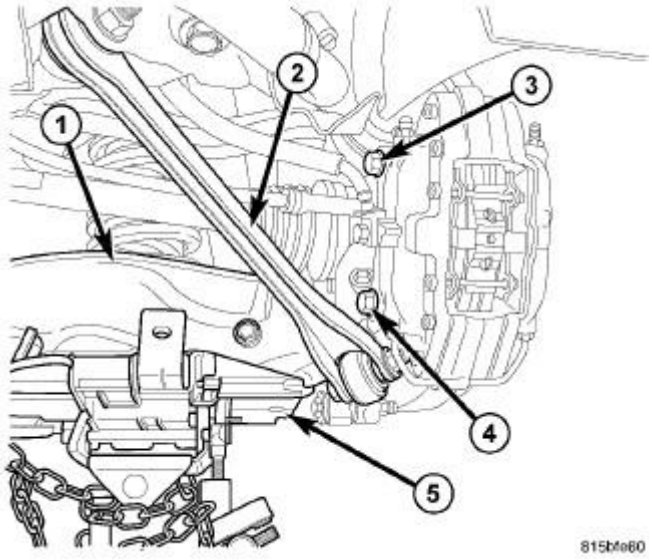

Fig. 51: ACCESSING REAR CALIPER MOUNTING BOLTS
Courtesy of CHRYSLER LLC

14. If equipped with SRT8 disc brakes, on each rear disc brake, support spring link (1) using a transmission jack (5) or other appropriate jack. Raise spring link just enough to access brake caliper lower mounting bolt (4) from above compression link (2).

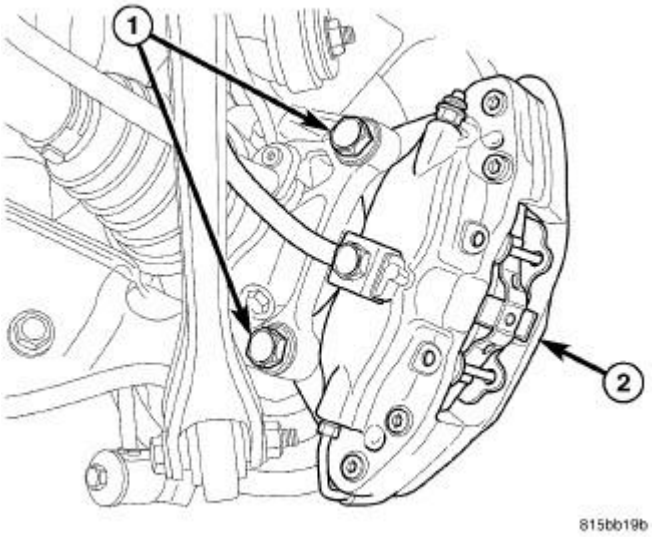

Fig. 52: REAR CALIPER MOUNTING - SRT8
Courtesy of CHRYSLER LLC

15. If equipped with SRT8 disc brakes, on each rear disc brake, remove the lower and upper caliper mounting bolts (1).
16. If equipped with SRT8 disc brakes, on each rear disc brake, remove brake caliper (2) with pads from knuckle and brake rotor. Hang assembly out of way using wire or a bungee cord. Use care not to overextend brake hose when doing this.
17. If equipped with SRT8 disc brakes, remove jack from under spring link.

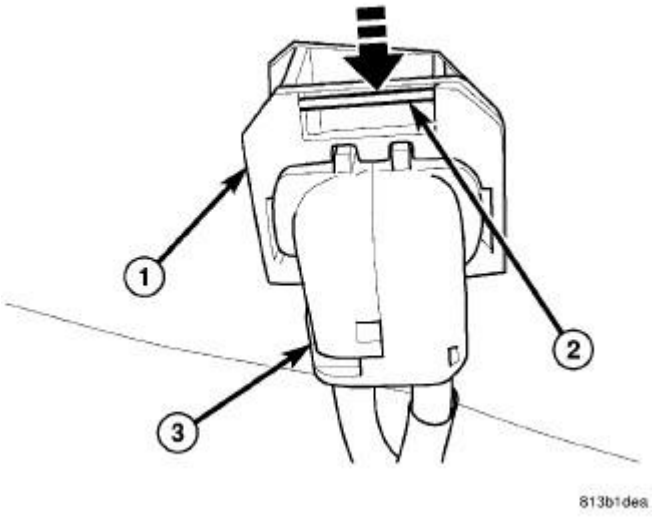

Fig. 53: RELEASE WHEEL SPEED SENSOR CONNECTOR
Courtesy of CHRYSLER LLC

NOTE: **To remove wheel speed sensor connector from body wiring harness connector, move retaining clip (2) and pull sensor connector outward.**

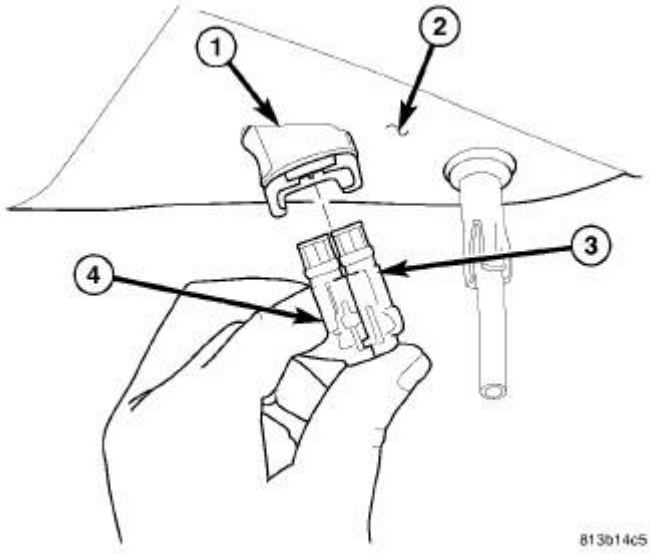

Fig. 54: SENSOR CONNECTION TO BODY CONNECTOR
Courtesy of CHRYSLER LLC

18. Remove wheel speed sensor connectors (3 and 4) from body wiring harness connector (1) located in luggage compartment floor pan (2).

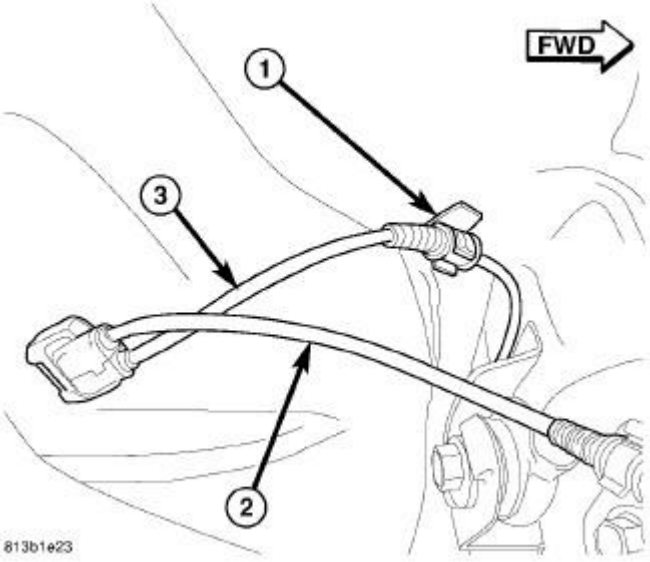

Fig. 55: LEFT/RIGHT REAR WHEEL SPEED SENSOR ROUTING
Courtesy of CHRYSLER LLC

19. Unclip left wheel speed sensor cable (3) from routing clip (1) near body connector.

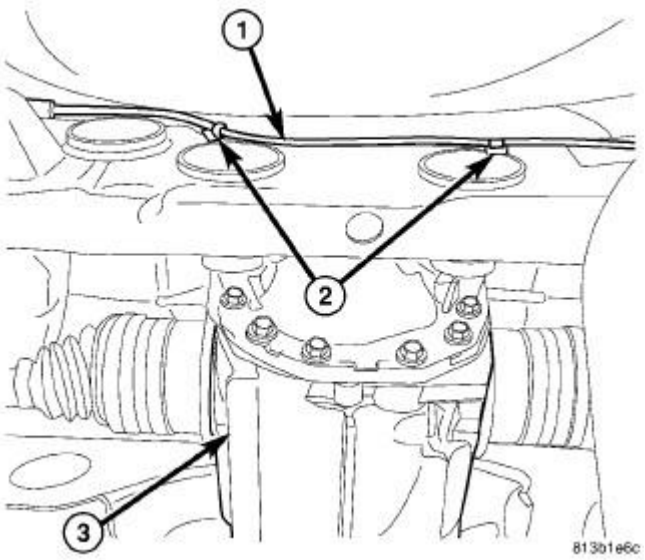

Fig. 56: LEFT WSS ROUTING OVER REAR DIFFERENTIAL
Courtesy of CHRYSLER LLC

20. Unclip left sensor cable (1) from routing clips (2) along rear of crossmember near rear differential (3).

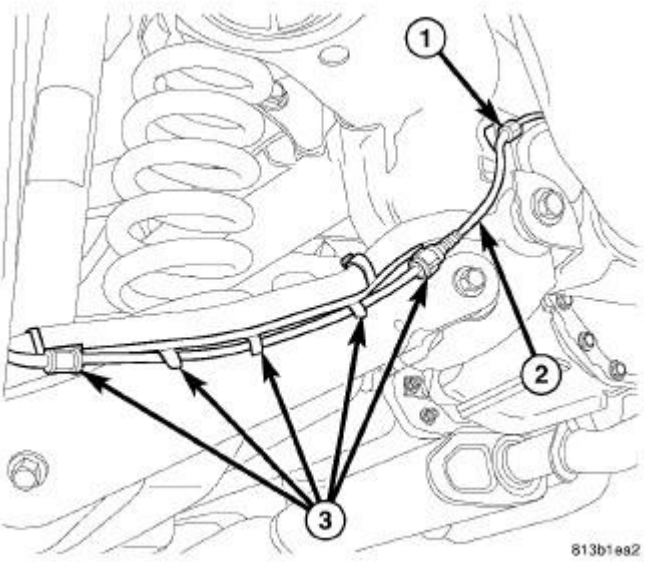

Fig. 57: WSS ROUTING ALONG LEFT TOE LINK
Courtesy of CHRYSLER LLC

21. Unclip left sensor cable (2) from routing clip (1) above toe link mount on rear crossmember.

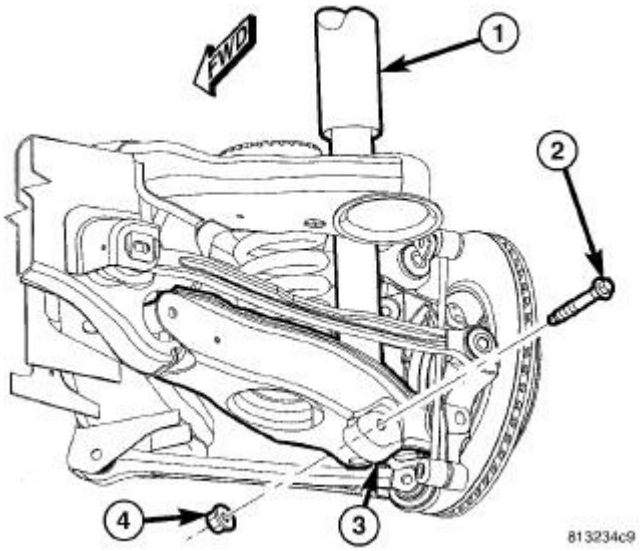

Fig. 58: SHOCK MOUNTING - LOWER
Courtesy of CHRYSLER LLC

22. On each side of vehicle, remove shock absorber (1) lower mounting bolt (2) and nut (4).

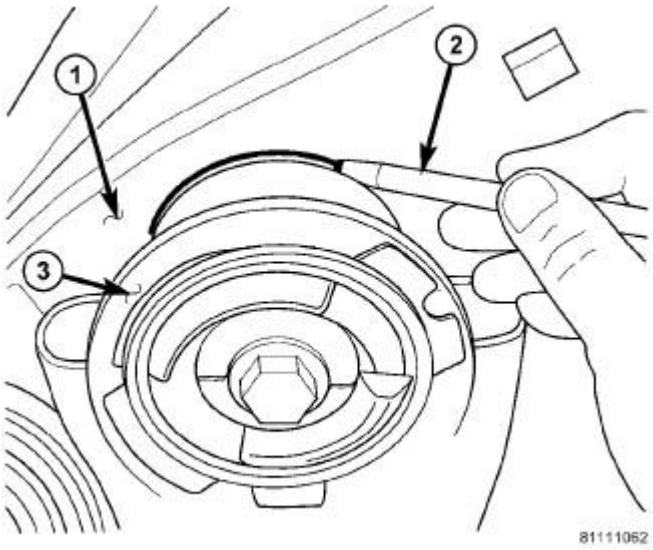

Fig. 59: Marking Location Of Crossmember Mount To Body
Courtesy of CHRYSLER LLC

1 - BODY
2 - MARKER (OR CRAYON)
3 - CROSSMEMBER BUSHING FLANGE

23. Carefully mark location of rear crossmember on body at all four mount (bushing) locations using

a marker or crayon. **Do not use a scratch awl to mark location.**

24. Position an extra pair of jack stands under and support forward end of engine cradle to help stabilize vehicle during rear suspension removal/installation.

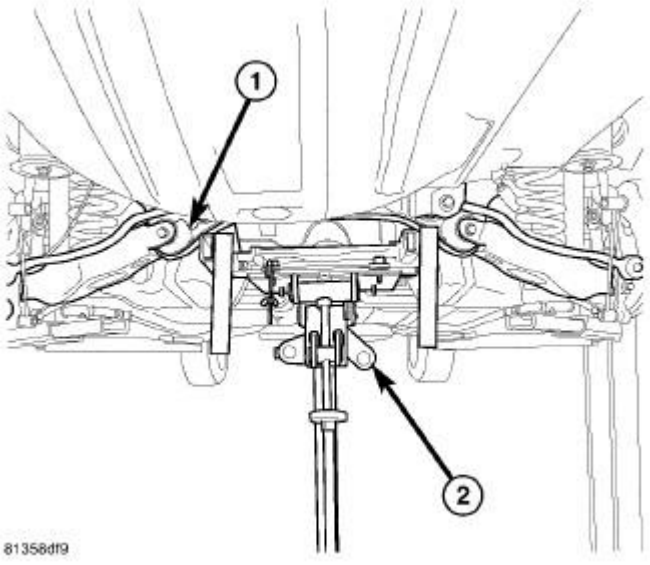

Fig. 60: JACK POSITIONED BENEATH CROSSMEMBER
Courtesy of CHRYSLER LLC

25. Position under-hoist utility jack or transmission jack (2) under center of rear crossmember (1). Raise jack head to contact crossmember and secure in place. **When securing crossmember to jack, be sure not to secure stabilizer bar.**

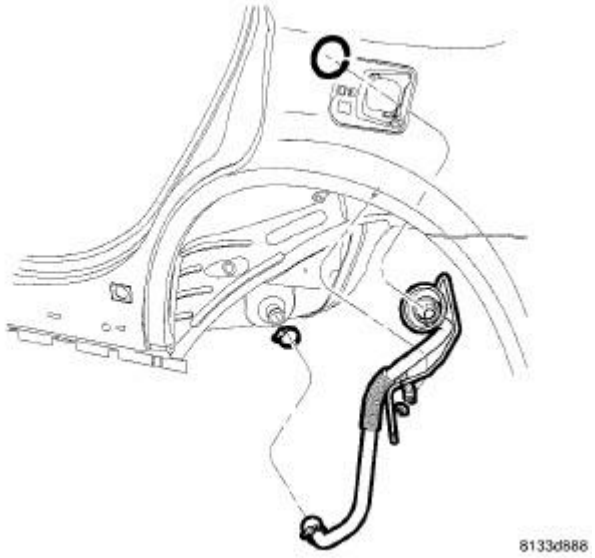

Fig. 61: FILLER TUBE ASSEMBLY
Courtesy of CHRYSLER LLC

WARNING: Before opening fuel system, review all Warnings and Cautions.

26. Remove fuel filler tube. Refer to **Fuel System/Fuel Delivery/TUBE, Fuel Tank Filler - Removal** .

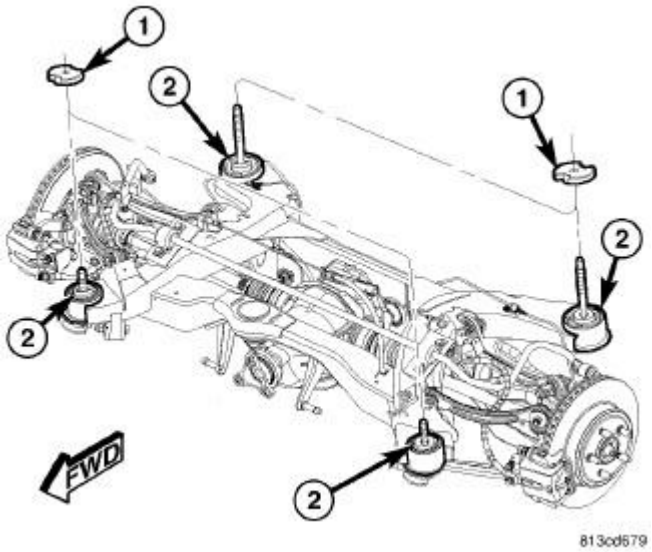

Fig. 62: AWD CROSSMEMBER SPACERS
Courtesy of CHRYSLER LLC

NOTE: If equipped with AWD, when removing crossmember mounting bolts in following step, be sure to not to misplace spacers (1) between crossmember mounts (2) and body.

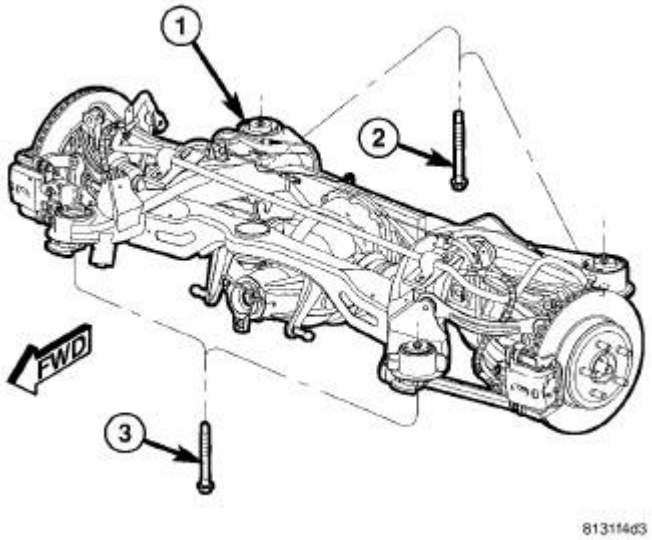

Fig. 63: REAR CROSSMEMBER MOUNTING BOLTS
Courtesy of CHRYSLER LLC

27. Remove both front (3) and both rear (2) mounting bolts fastening crossmember (1) in place.
28. **Slowly** lower crossmember using jack until crossmember is at a comfortable working level to access link and stabilizer bar fasteners.

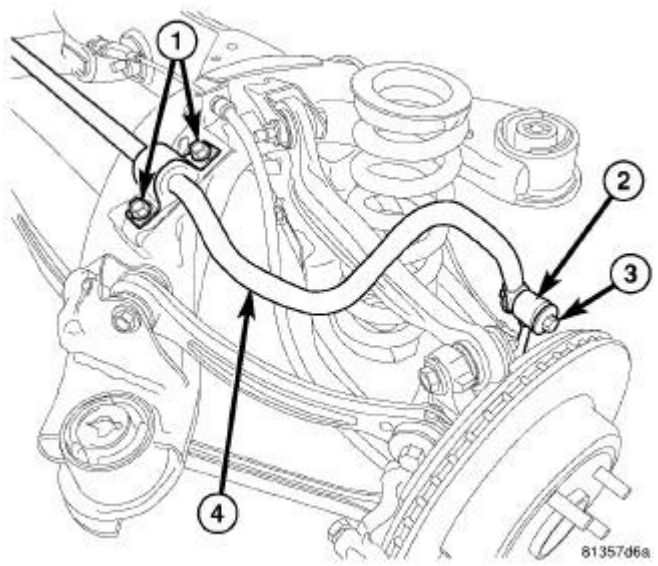

Fig. 64: REAR STABILIZER BAR MOUNTING
Courtesy of CHRYSLER LLC

29. On each end, remove bolt (3) and nut fastening stabilizer bar (4) to stabilizer link (2).
30. Remove bolts (1) fastening each stabilizer bar cushion retainer to crossmember.
31. Remove stabilizer bar (4) with cushions and retainers.

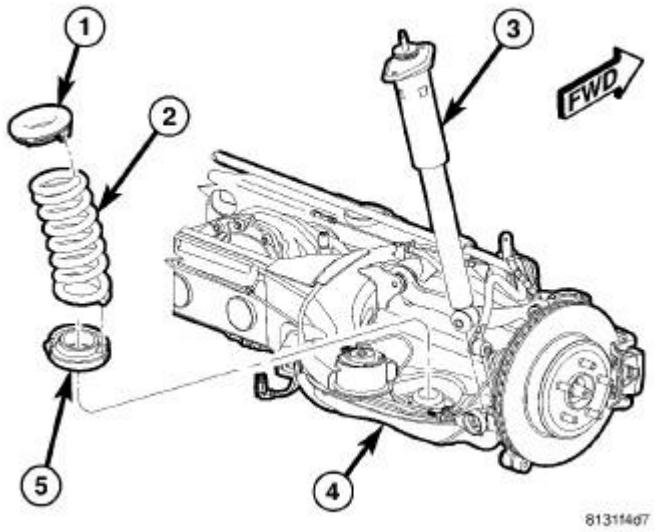

Fig. 65: COIL SPRING AND SHOCK ASSEMBLY
Courtesy of CHRYSLER LLC

32. Remove coil springs and isolators (1, 2 and 5) from spring links.

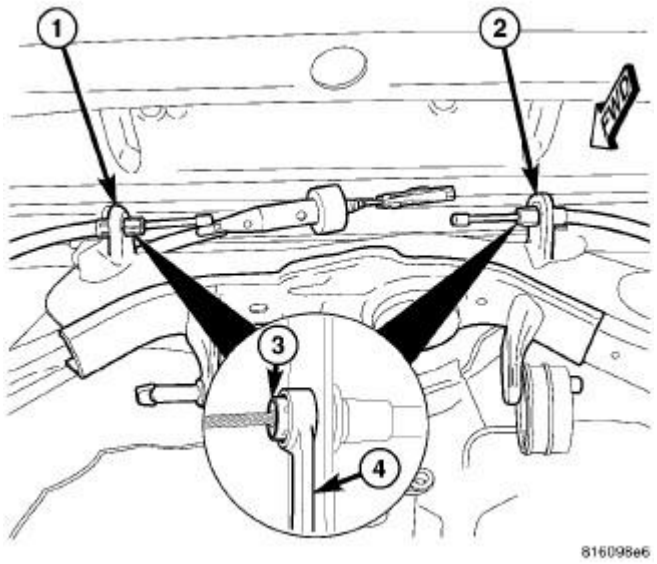

Fig. 66: CABLES AT CROSSMEMBER BRACKET
Courtesy of CHRYSLER LLC

33. For each parking brake cable, place 13 mm 12-point box wrench (4) over cable strand and completely onto cable retainer (3) as shown at crossmember bracket (1 - left) (2 - right). It may be necessary to wiggle wrench around somewhat to collapse retainer fingers. With wrench in place, pull cable from bracket.

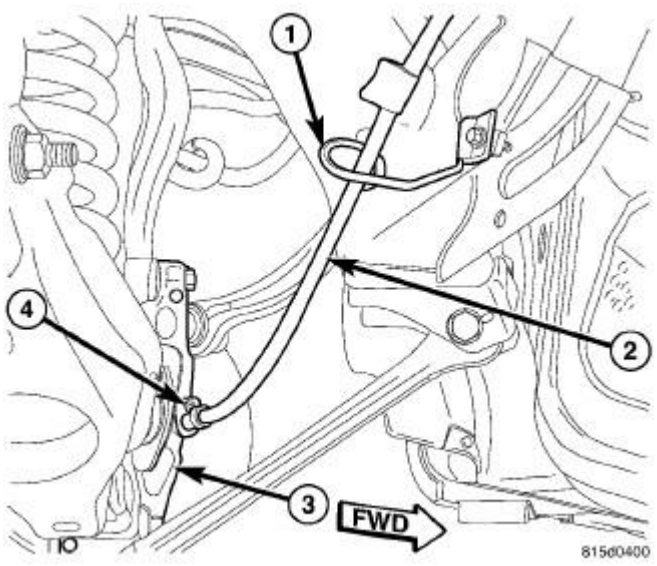

Fig. 67: REAR CABLE ROUTING TO KNUCKLE
Courtesy of CHRYSLER LLC

34. On each side, remove screw fastening parking brake cable routing guide (1) to crossmember. Remove J-nuts from crossmember.

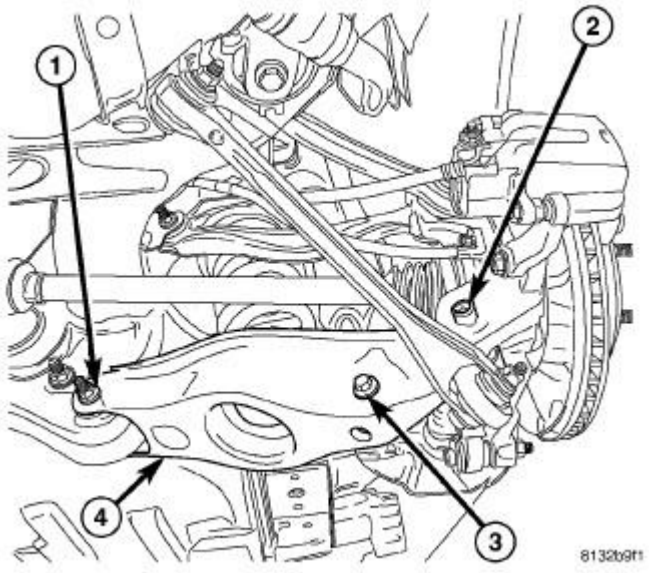

Fig. 68: SPRING LINK MOUNTING
Courtesy of CHRYSLER LLC

NOTE: For installation purposes, when removing fasteners for any rear suspension links, it is important to note which bolt fastens what component and in what direction it is installed in.

35. On each side of crossmember, remove bolt and nut (1) fastening spring link (4) to crossmember.

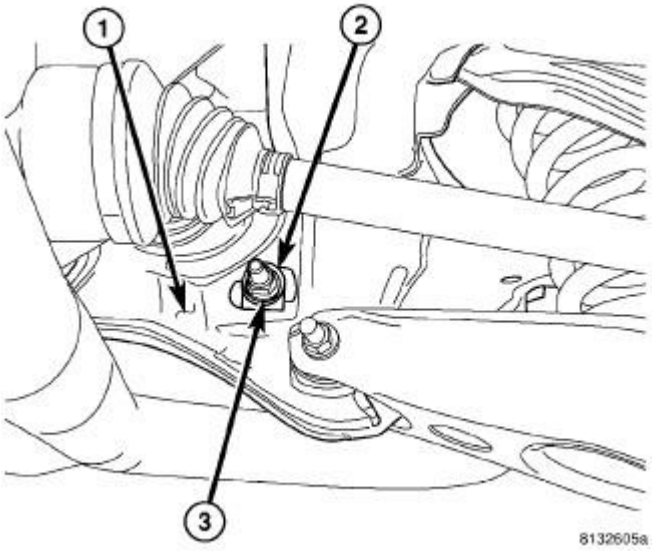

Fig. 69: REAR TOE ADJUSTMENT BOLT NUT
Courtesy of CHRYSLER LLC

36. On each side of crossmember, while holding toe adjustment cam bolt from rotating, remove nut (3) securing toe link at crossmember (1).

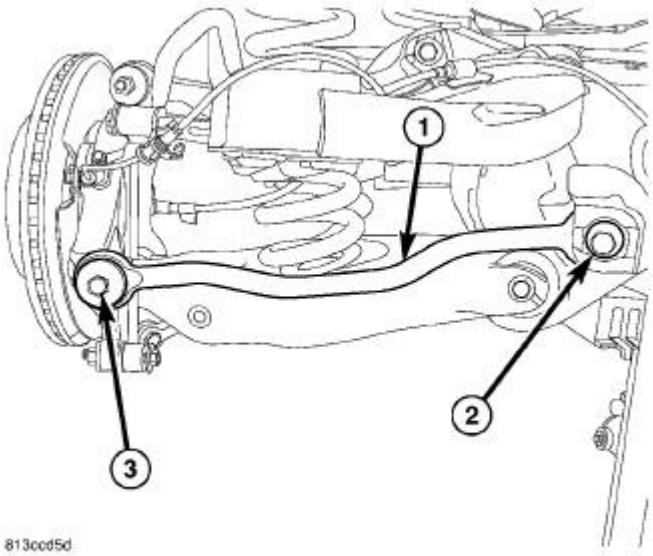

Fig. 70: TOE LINK MOUNTING
Courtesy of CHRYSLER LLC

37. On each side of crossmember, slide cam bolt (2) attaching toe link rearward, out of

crossmember and link (1).

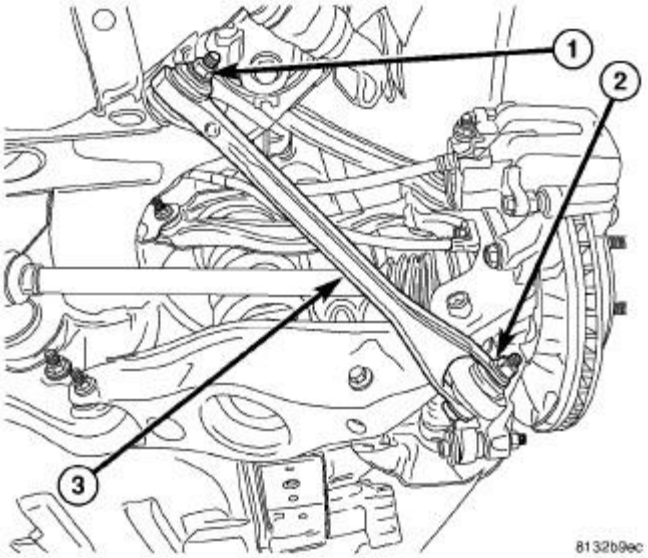

Fig. 71: COMPRESSION LINK MOUNTING
Courtesy of CHRYSLER LLC

38. On each side of crossmember, remove bolt and nut (1) mounting link (3) at crossmember.

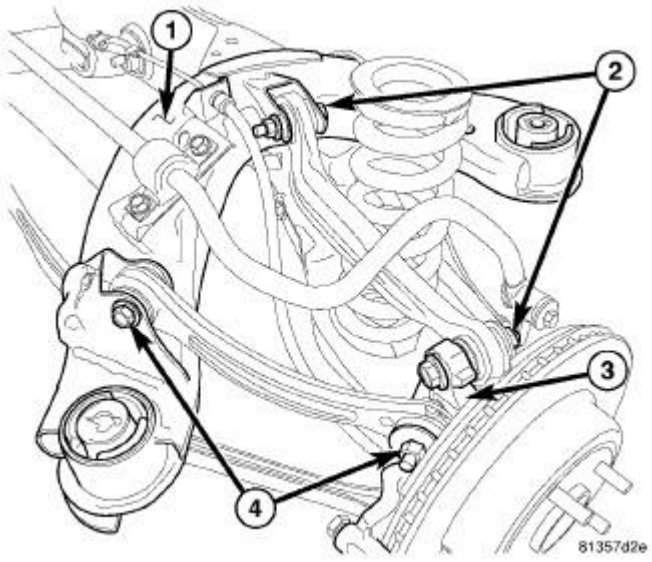

Fig. 72: CAMBER AND TENSION LINKS
Courtesy of CHRYSLER LLC

39. On each side of crossmember, remove nut and bolt (4) mounting tension link to crossmember (1).
40. On each side of crossmember, remove nut and bolt (2) mounting camber link to crossmember

(1).

41. Carefully lift knuckle with links and parking brake cable attached from rear suspension crossmember.
42. Remove crossmember from jack.

Installation

INSTALLATION

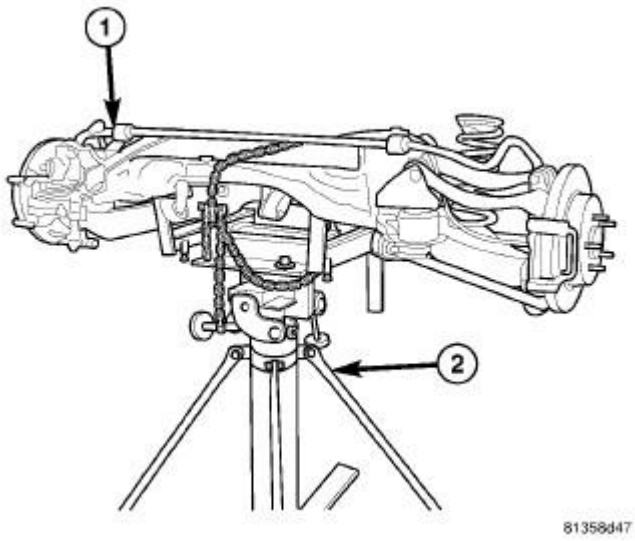

Fig. 73: REAR CROSSMEMBER POSITIONED ON JACK
Courtesy of CHRYSLER LLC

1. Install rear crossmember (1) on jack (2) head in same position in which it was removed and secure in place.

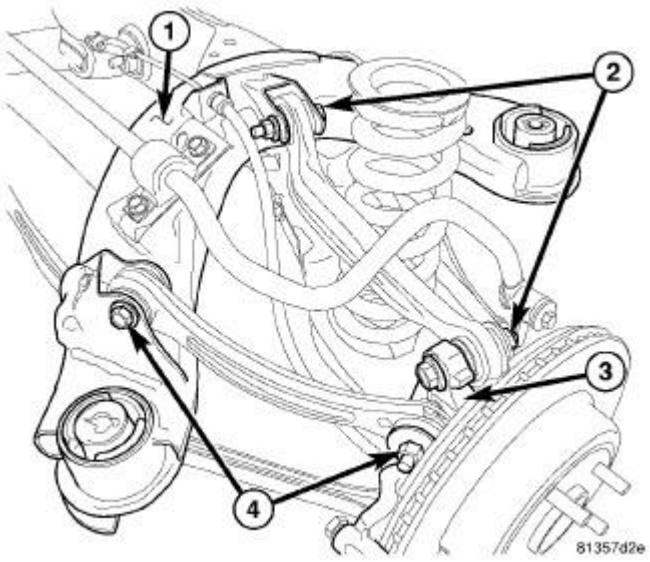

Fig. 74: CAMBER AND TENSION LINKS
Courtesy of CHRYSLER LLC

2. Carefully place one side knuckle with links and parking brake cable attached as an assembly into mounted position on rear suspension crossmember. Install nut and bolt (2) mounting camber link to crossmember (1) to hold assembly in place. **Do not tighten at this time.**
3. Carefully place opposite side knuckle with links and parking brake cable attached as an assembly into mounted position on rear suspension crossmember. Install nut and bolt (2) mounting camber link to crossmember (1) to hold assembly in place. **Do not tighten at this time.**
4. On each side of crossmember, install nut and bolt (4) mounting each tension link to crossmember (1). **Do not tighten at this time.**

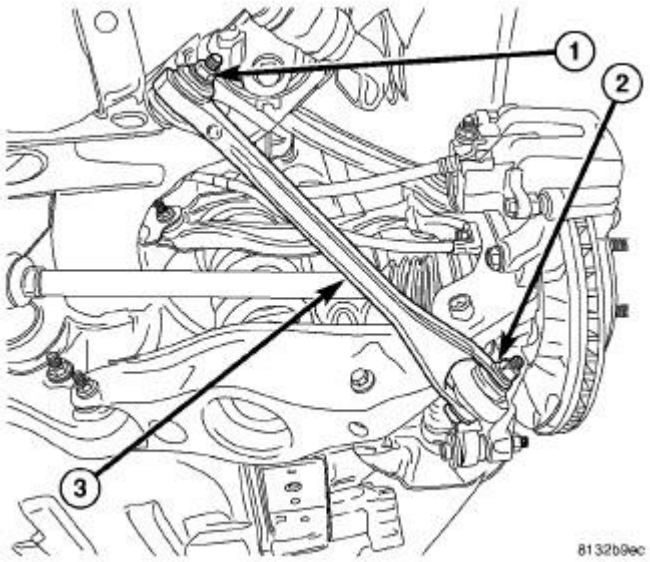

Fig. 75: COMPRESSION LINK MOUNTING
Courtesy of CHRYSLER LLC

5. On each side of crossmember, Install bolt and nut (1) mounting each compression link (3) at crossmember. **Do not tighten at this time.**

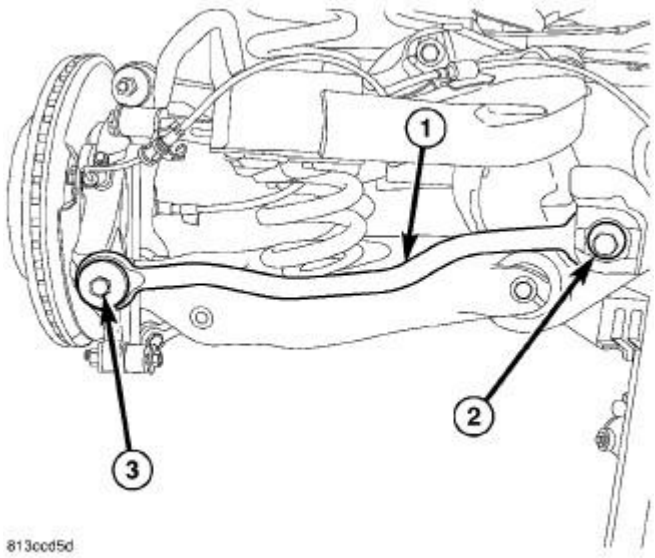

Fig. 76: TOE LINK MOUNTING
Courtesy of CHRYSLER LLC

6. On each side of crossmember, slide cam bolt (2) attaching toe link through crossmember and link (1) from rear.

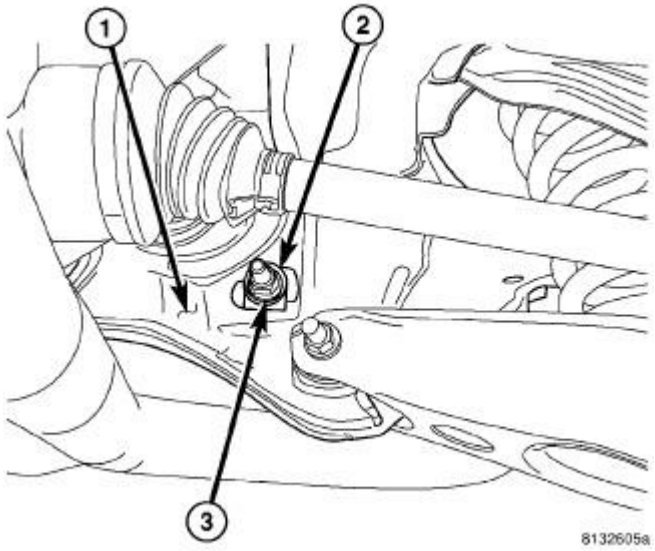

Fig. 77: REAR TOE ADJUSTMENT BOLT NUT
Courtesy of CHRYSLER LLC

7. On each side of crossmember, while holding toe adjustment cam bolt from rotating, install cam washer (2) and nut (3) securing toe link at crossmember (1). **Do not tighten at this time.**

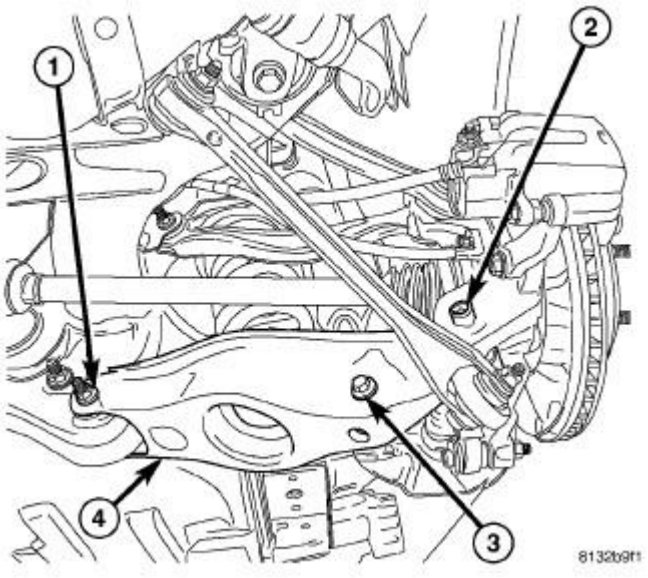

Fig. 78: SPRING LINK MOUNTING
Courtesy of CHRYSLER LLC

8. On each side of crossmember, install bolt and nut (1) fastening spring link (4) to crossmember. **Do not tighten at this time.**

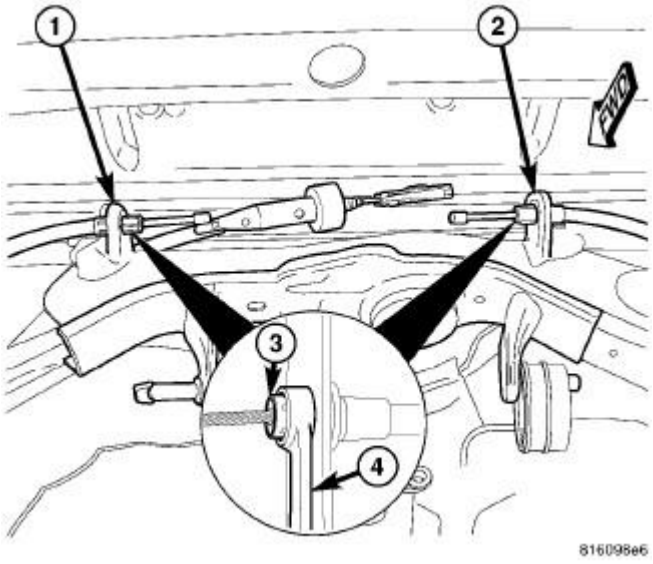

Fig. 79: CABLES AT CROSSMEMBER BRACKET
Courtesy of CHRYSLER LLC

9. On each side of crossmember rear, guide leading end of rear parking brake through

crossmember bracket (1 - left) (2 - right) near equalizer and press cable housing retainer into bracket allowing retainer fingers to lock cable in place.

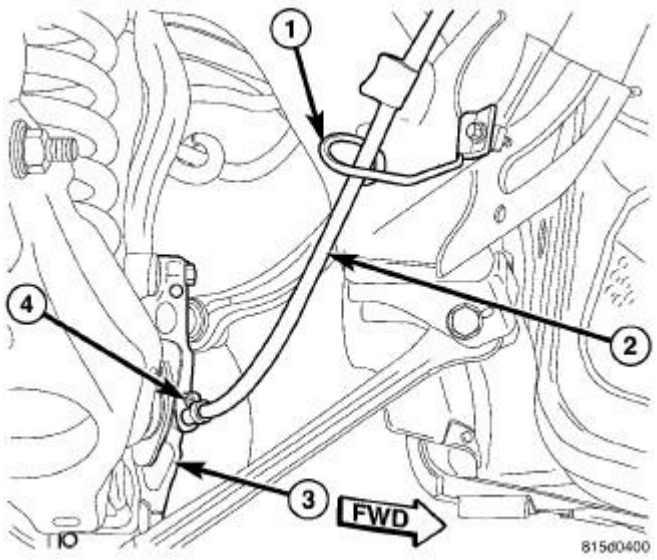

Fig. 80: REAR CABLE ROUTING TO KNUCKLE
Courtesy of CHRYSLER LLC

10. On each side of crossmember rear, install J-nut for parking brake cable guide.
11. On each side, install screw fastening parking brake cable routing guide (1) to crossmember.

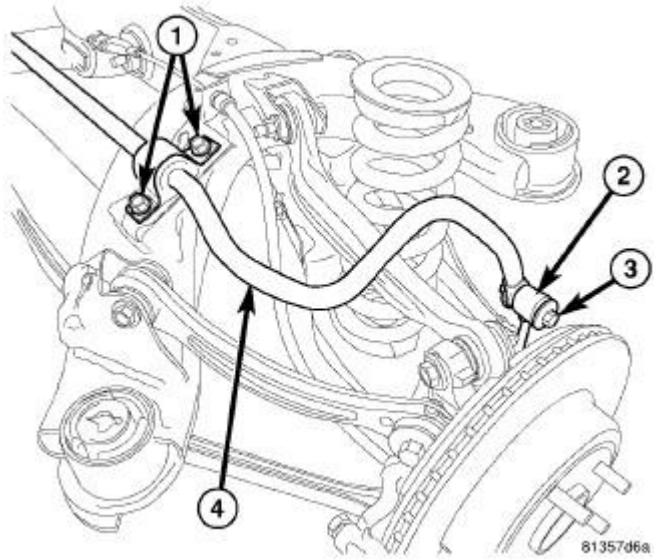

Fig. 81: REAR STABILIZER BAR MOUNTING
Courtesy of CHRYSLER LLC

12. Install stabilizer bar (4) with cushions and retainers on crossmember.

13. Install cushion retainer mounting bolts (1). **Do not tighten at this time.**
14. Install bolt (3) and nut fastening stabilizer bar ends to each stabilizer link (2). **Do not tighten at this time.**
15. Tighten cushion retainer mounting bolts (1) to 60 N.m (44 ft. lbs.).

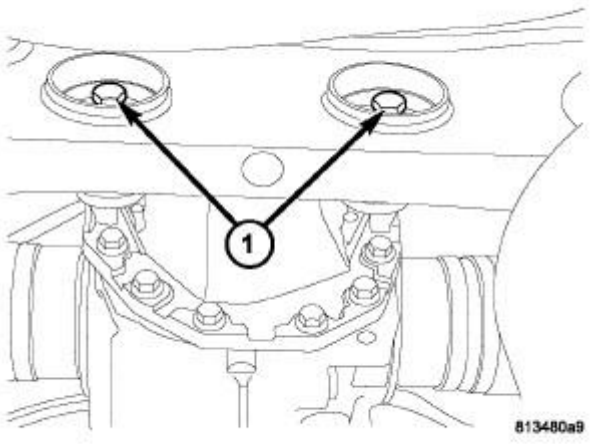

Fig. 82: Rear Axle-to-Crossmember Bolts
Courtesy of CHRYSLER LLC

CAUTION: Differential mounting bolts (1) must be installed through bushings prior to crossmember installation in vehicle. Bolts cannot be inserted through bushings once crossmember is installed.

16. Transfer differential mounting bolts (1) from original crossmember differential mount bushings to bushings in replacement crossmember. Install bolts from rear. Be sure to insert bolts through correct mount bushings in crossmember depending on rear axle differential (198 mm axle differential shown in illustration).

NOTE: Do not install coil springs on spring links at this time.

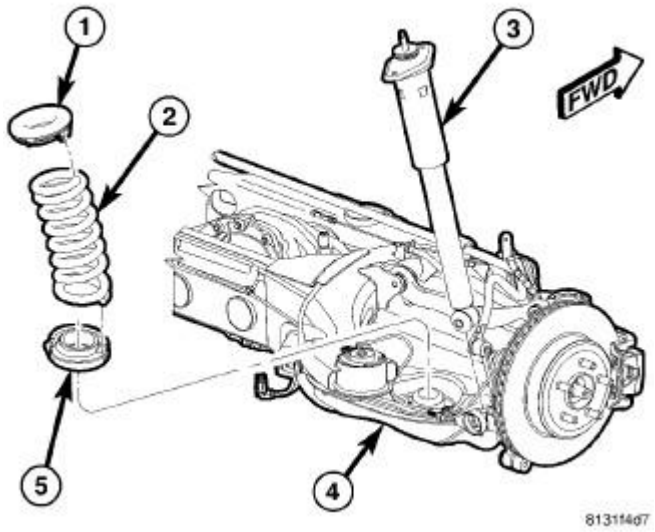

Fig. 83: COIL SPRING AND SHOCK ASSEMBLY
Courtesy of CHRYSLER LLC

17. Raise crossmember to body mounting points. As crossmember is raised, align shocks (3) with pockets in spring links. **Do not install bolts at this time.**

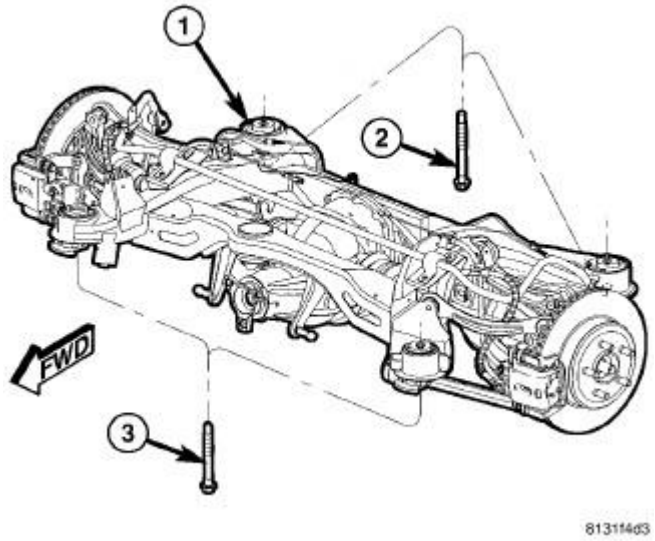

Fig. 84: REAR CROSSMEMBER MOUNTING BOLTS
Courtesy of CHRYSLER LLC

NOTE: There are four crossmember mounting bolts. Rear mounting bolts (2) are longer than front mounting bolts (3). Do not interchange mounting bolts.

18. Continue to raise crossmember (1) with jack until crossmember mounting bolts (2 and 3) can be

installed. Install left side crossmember mounting bolts, but not the right side bolts. It is not necessary to tighten bolts at this point.

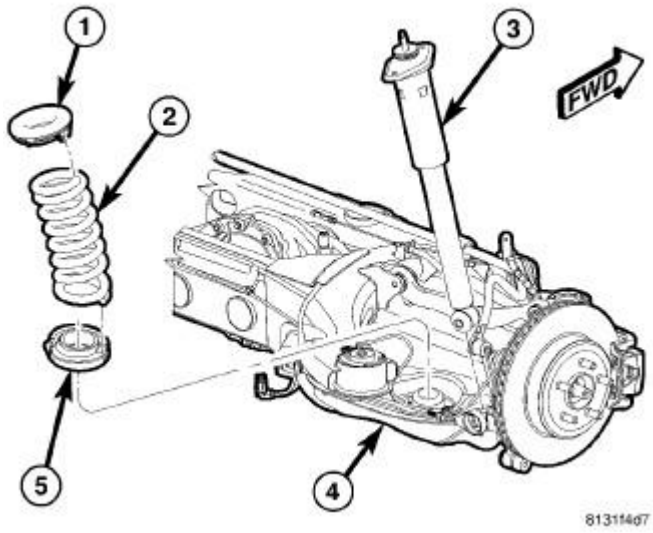

Fig. 85: COIL SPRING AND SHOCK ASSEMBLY
Courtesy of CHRYSLER LLC

CAUTION: To avoid damaging other components of vehicle, do not lower crossmember any further than necessary to install coil spring (2).

19. **Slowly** lower jack allowing right side of crossmember to drop. **Do not lower jack at a fast rate.** Lower jack just enough to allow spring (2) Installation. **Do not lower jack any further than necessary.**

NOTE: Before installing coil spring, make sure isolators (1 and 5) are completely installed on ends of spring.

20. Install coil spring (2) with isolators into spring pocket of spring link fitting the lower isolator to the shape of the pocket, then align top of spring with body mount.

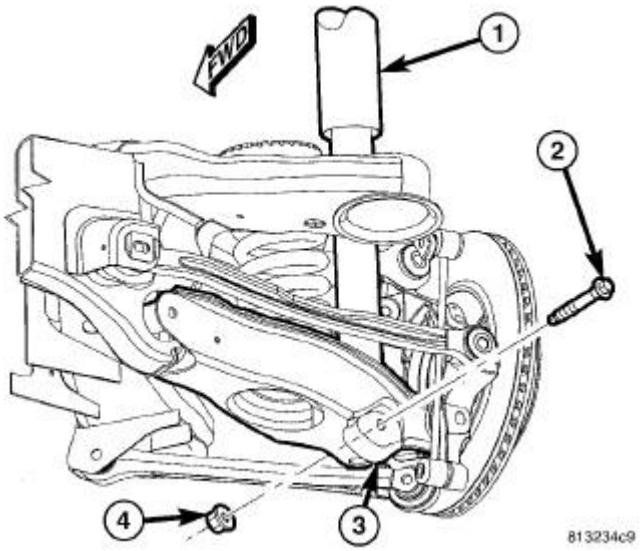

Fig. 86: SHOCK MOUNTING - LOWER
Courtesy of CHRYSLER LLC

21. Carefully raise jack, guiding coil spring and lower end of shock absorber (1) into mounted positions. Once shock absorber (1) lower mounting hole lines up with hole in spring link (3), stop jacking.
22. Install lower shock mounting bolt (2) and nut (4). **Do not tighten at this time.**

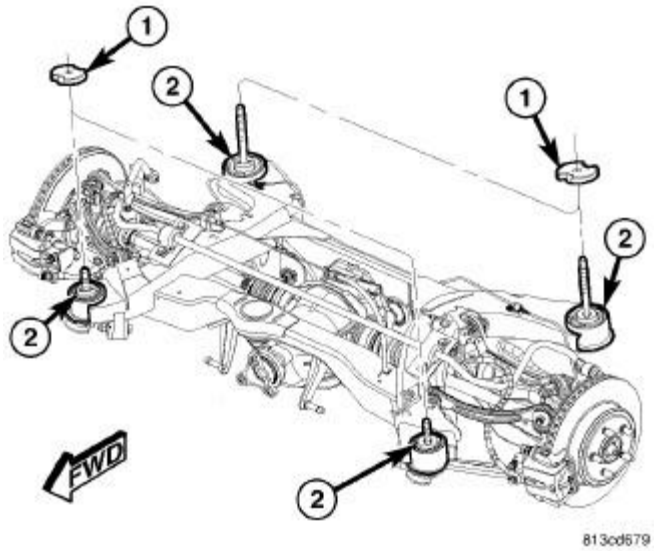

Fig. 87: AWD CROSSMEMBER SPACERS
Courtesy of CHRYSLER LLC

23. If vehicle is equipped with AWD, insert spacers (1) on top of right crossmember mount bushings (2) before crossmember is raised into place.

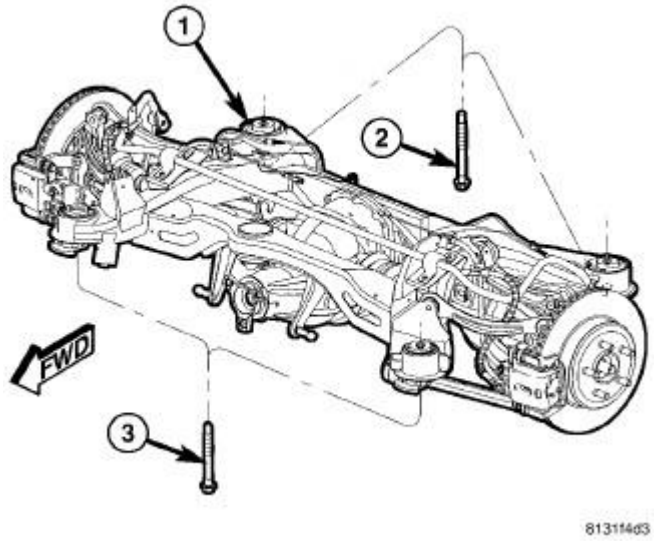

Fig. 88: REAR CROSSMEMBER MOUNTING BOLTS
Courtesy of CHRYSLER LLC

NOTE: There are four crossmember mounting bolts. Rear mounting bolts (2) are longer than front mounting bolts (3). Do not interchange mounting bolts.

24. Raise right side of crossmember (1) into mounted position. Install right side crossmember mounting bolts (2 and 3). **Snug, but do not fully tighten bolts at this time.**
25. Remove both front and rear crossmember mounting bolts (2 and 3) on **left** side of vehicle.

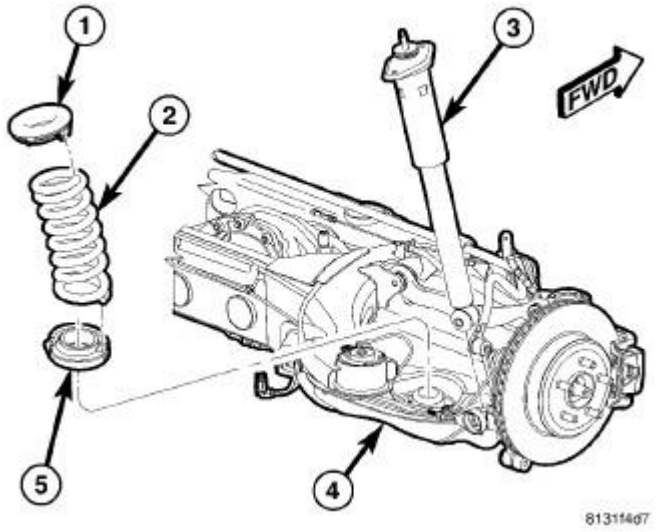

Fig. 89: COIL SPRING AND SHOCK ASSEMBLY
Courtesy of CHRYSLER LLC

CAUTION: To avoid damaging other components of vehicle, do not lower crossmember any further than necessary to install coil spring (2).

26. **Slowly** lower jack allowing left side of crossmember to drop. **Do not lower jack at a fast rate.** Lower jack just enough to allow spring (2) Installation. **Do not lower jack any further than necessary.**

NOTE: Before installing coil spring, make sure isolators (1 and 5) are completely installed on ends of spring.

27. Install coil spring (2) with isolators into spring pocket of spring link fitting the lower isolator to the shape of the pocket, then align top of spring with body mount.

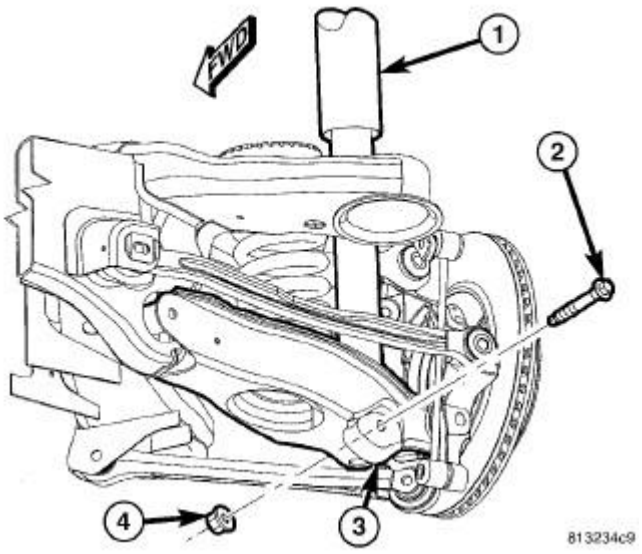

Fig. 90: SHOCK MOUNTING - LOWER
Courtesy of CHRYSLER LLC

28. Carefully raise jack, guiding coil spring and lower end of shock absorber (1) into mounted positions. Once shock absorber (1) lower mounting hole lines up with hole in spring link (3), stop jacking.
29. Install lower shock mounting bolt (2) and nut (4). **Do not tighten at this time.**

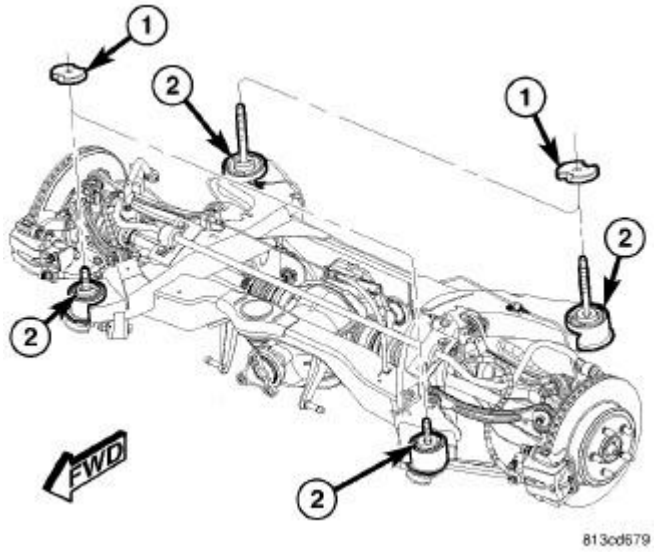

Fig. 91: AWD CROSSMEMBER SPACERS
Courtesy of CHRYSLER LLC

30. If vehicle is equipped with AWD, insert spacers (1) on top of left crossmember mount bushings (2) before crossmember is raised into place.

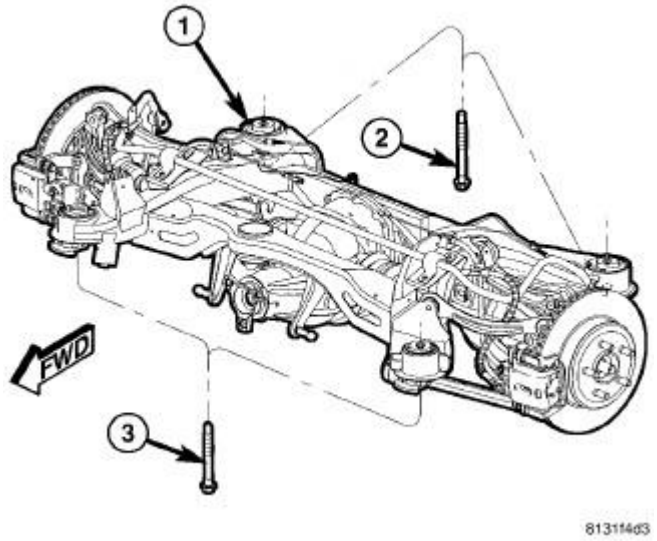

Fig. 92: REAR CROSSMEMBER MOUNTING BOLTS
Courtesy of CHRYSLER LLC

NOTE: There are four crossmember mounting bolts. Rear mounting bolts (2) are longer than front mounting bolts (3). Do not interchange mounting bolts.

31. Raise left side of crossmember (1) into mounted position. Install left side crossmember

mounting bolts (2 and 3). **Snug, but do not fully tighten bolts at this time.**

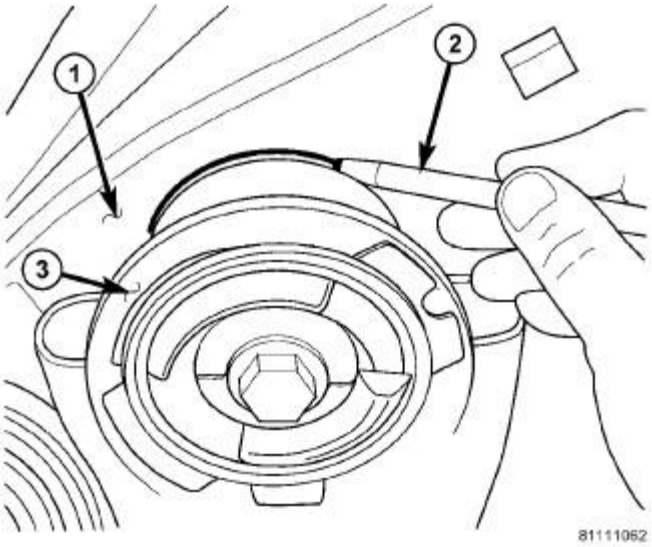

Fig. 93: Marking Location Of Crossmember Mount To Body
Courtesy of CHRYSLER LLC

1 - BODY 2 - MARKER (OR CRAYON) 3 - CROSSMEMBER BUSHING FLANGE

32. Shift crossmember as necessary to line up mounts (3) with location marks drawn on body (1) before removal.

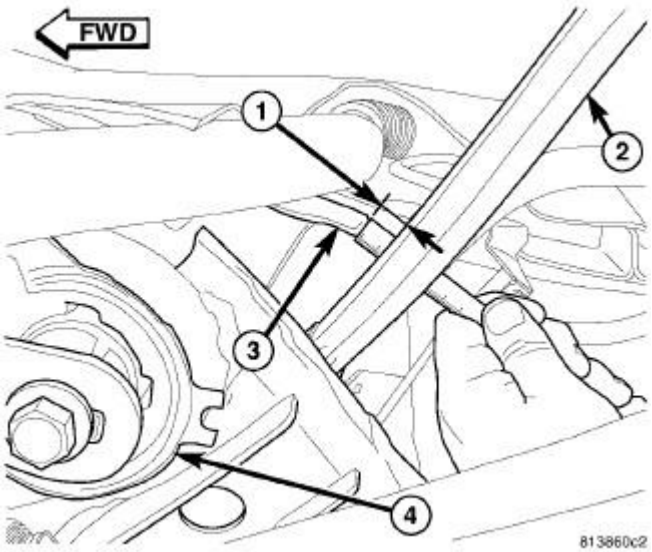

Fig. 94: MEASURING TENSION LINK CLEARANCE

Courtesy of CHRYSLER LLC

33. Once mounts are lined up with location marks, on both sides of vehicle, measure distance (1) between the tension link (2) and weld flange (3) on body directly in front of it, just outboard of the front mount bushing (4). **This distance must be at least 12 mm to allow proper clearance for suspension movement.** If distance is less than 12 mm on either side of vehicle, shift that side of rear crossmember directly rearward until distance is 12 mm or greater. To do so, loosen 3 mounting bolts slightly, leaving one on opposite side of shift snugged to pivot off of. Shift crossmember rearward and snug loosened bolts. Remeasure opposite side to be sure it still maintains minimum 12 mm distance.

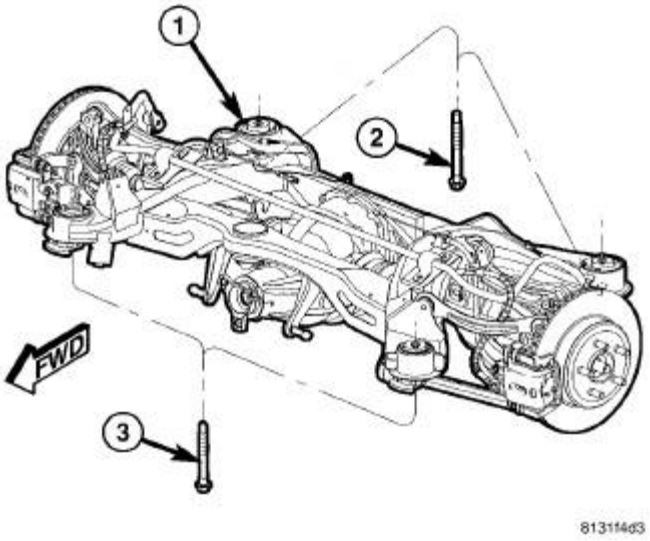

Fig. 95: REAR CROSSMEMBER MOUNTING BOLTS
Courtesy of CHRYSLER LLC

34. Tighten all four crossmember mounting bolts (2 and 3) to 180 N.m (133 ft. lbs.).

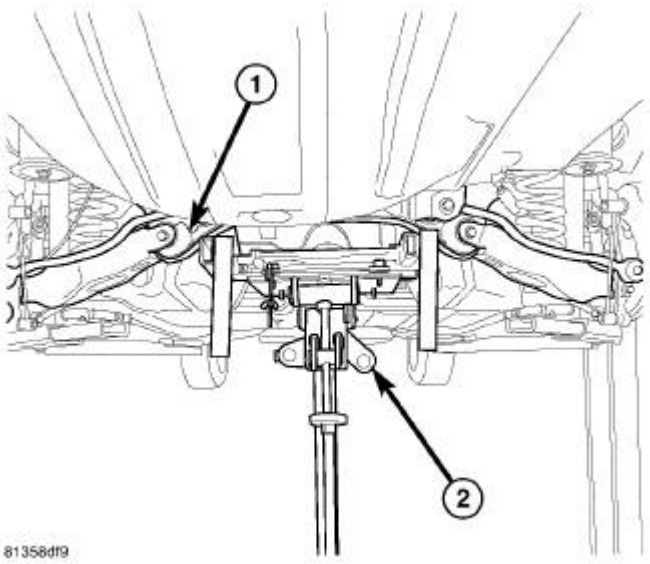

Fig. 96: JACK POSITIONED BENEATH CROSSMEMBER
Courtesy of CHRYSLER LLC

35. Remove jack (2) from under rear crossmember.



Fig. 97: FILLER TUBE ASSEMBLY
Courtesy of CHRYSLER LLC

36. Install fuel filler tube. Refer to **Fuel System/Fuel Delivery/TUBE, Fuel Tank Filler - Installation** .

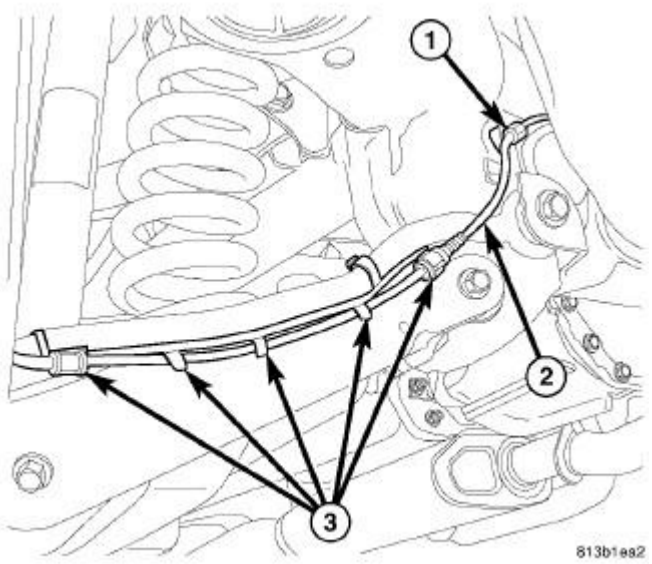

Fig. 98: WSS ROUTING ALONG LEFT TOE LINK
Courtesy of CHRYSLER LLC

37. Clip left rear wheel speed sensor cable (2) to routing clip (1) above toe link mount on rear crossmember.

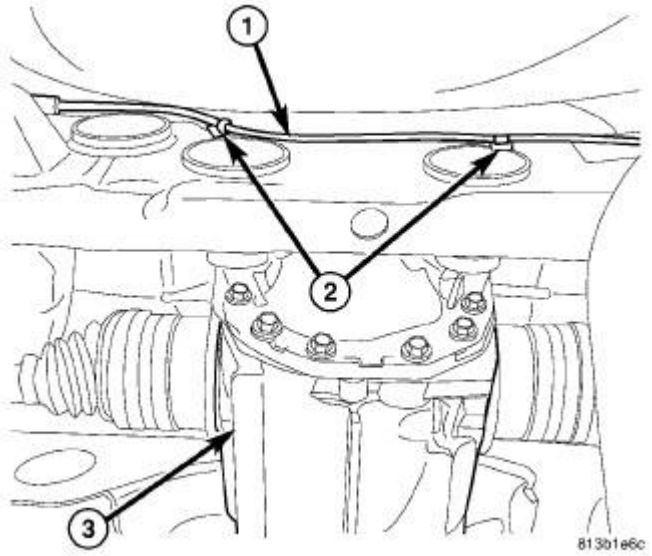

Fig. 99: LEFT WSS ROUTING OVER REAR DIFFERENTIAL
Courtesy of CHRYSLER LLC

38. Clip left rear wheel speed sensor cable (1) to routing clips (2) along rear of crossmember near rear differential (3).

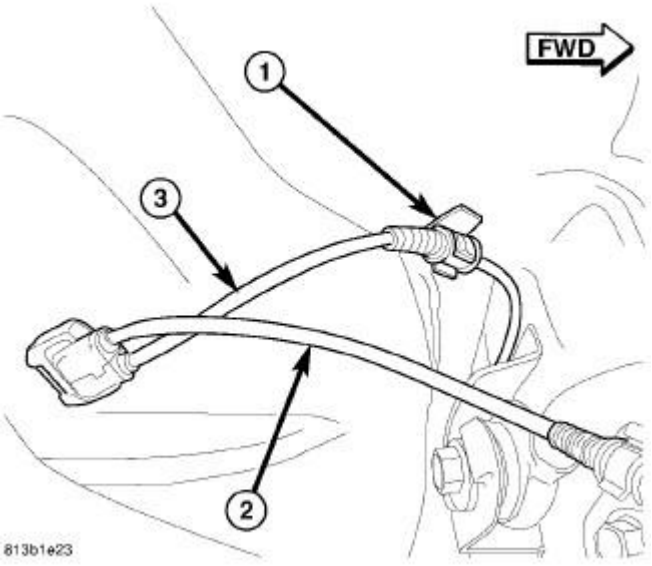

Fig. 100: LEFT/RIGHT REAR WHEEL SPEED SENSOR ROUTING
Courtesy of CHRYSLER LLC

39. Clip left rear wheel speed sensor cable (3) to routing clip (1) near body connector.

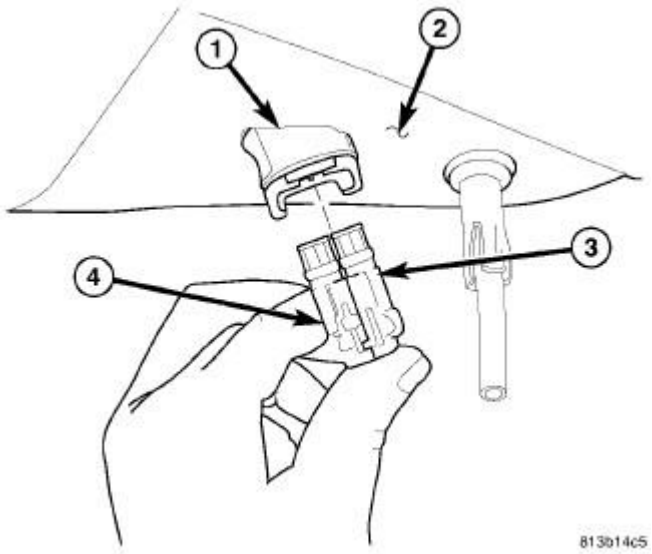

Fig. 101: SENSOR CONNECTION TO BODY CONNECTOR
Courtesy of CHRYSLER LLC

40. Match left rear wheel speed sensor connector (4) to right sensor connector (3) to make one connector.
41. Insert speed sensor connectors (3 and 4) into body wiring harness connector (1) located in luggage compartment floor pan (2). When installing connector, make sure retaining clip on body connector is properly in place and sensor connector cannot be pulled out.

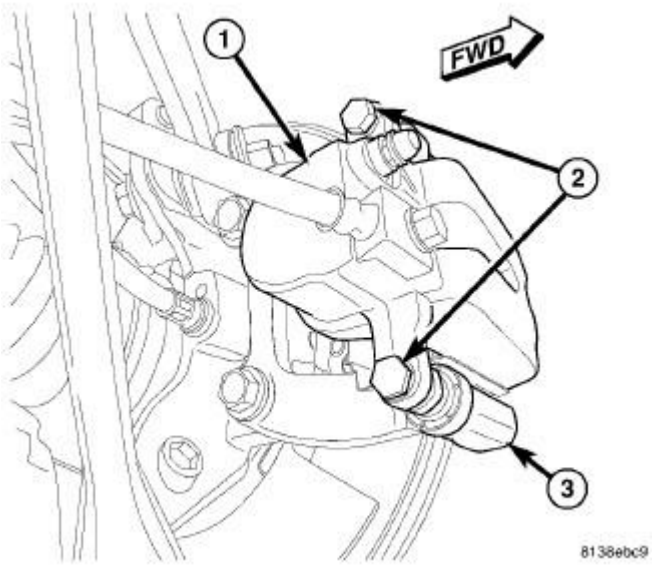

Fig. 102: REAR CALIPER MOUNTING
Courtesy of CHRYSLER LLC

42. If equipped with standard or premium disc brakes, on each rear disc brake:
    a. Push caliper guide pins into caliper adapter to clear caliper mounting bosses when installing.
    b. Guide caliper and brake hose down through rear suspension, then slide caliper over brake pads and onto caliper adapter (3).
    c. Align caliper mounting holes with guide pins, then install guide pin bolts (2). While holding guide pins from turning, tighten bolts to 31 N.m (23 ft. lbs.) torque.
    d. Make sure brake hose is properly routed and will not come in contact with suspension components.
43. If equipped with SRT8 disc brakes, at each rear disc brake, support spring link using a transmission jack or other appropriate jack as indicated in removal procedure. See **Frame and Bumpers/Frame/CROSSMEMBER - Removal**

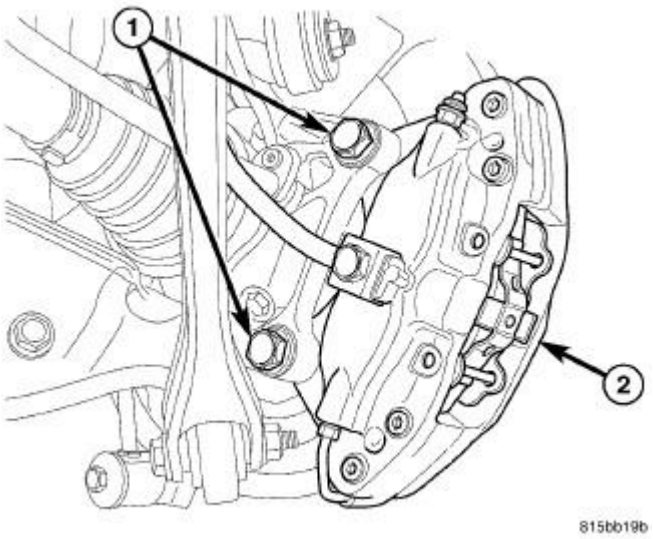

Fig. 103: REAR CALIPER MOUNTING - SRT8
Courtesy of CHRYSLER LLC

44. If equipped with SRT8 disc brakes, on each rear disc brake, slide caliper with pads (2) over brake rotor and align with knuckle.
45. If equipped with SRT8 disc brakes, on each rear disc brake, install caliper mounting bolts (1). Tighten bolts to 130 N.m (96 ft. lbs.).
46. If equipped with SRT8 disc brakes, on each rear disc brake, remove jack from under spring link.

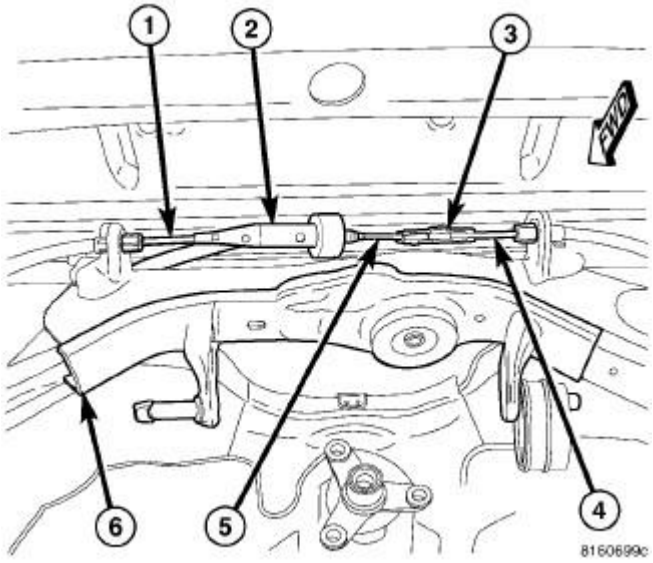

Fig. 104: CABLES AT EQUALIZER
Courtesy of CHRYSLER LLC

47. Route front parking brake cable with equalizer above rear crossmember.

NOTE: Due to short travel and low spring tension, it is not necessary to lock-out parking brake lever to service parking brake components.

48. Connect left rear parking brake cable (1) to equalizer (2).
49. Connect right rear parking brake cable (4) to connector (3) already attached to front parking brake cable (5).

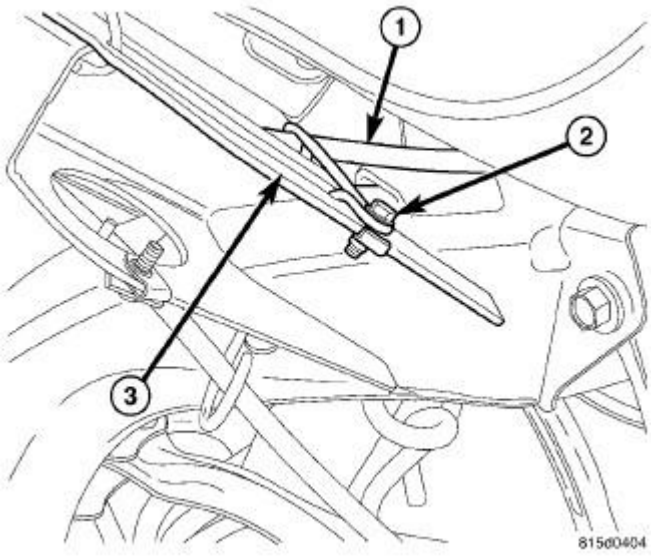

Fig. 105: FRONT CABLE AT LEFT FRONT OF CROSSMEMBER
Courtesy of CHRYSLER LLC

50. Install J-nut for mounting parking brake cable routing bracket to crossmember.
51. Insert front parking brake cable routing bracket locating pin into front flange of crossmember (3), then install screw (2) fastening cable (1) routing bracket to rear crossmember.

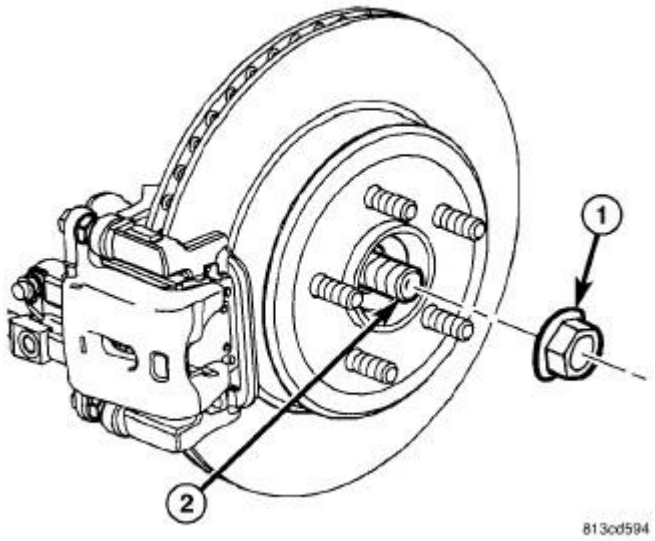

Fig. 106: HUB NUT
Courtesy of CHRYSLER LLC

NOTE: Always install a new hub nut. The original hub nut is one-time use only and should be discarded when removed.

52. On each side of vehicle, slide an axle half shaft (2) through hub and bearing and install hub nut (1). **Do not tighten hub nuts at this time.**
53. Install rear axle differential. Refer to **Differential and Driveline/Rear Axle - 215RII - Installation** .
54. While a helper applies brakes to keep hub from turning, tighten hub nut to 213 N.m (157 ft. lbs.).

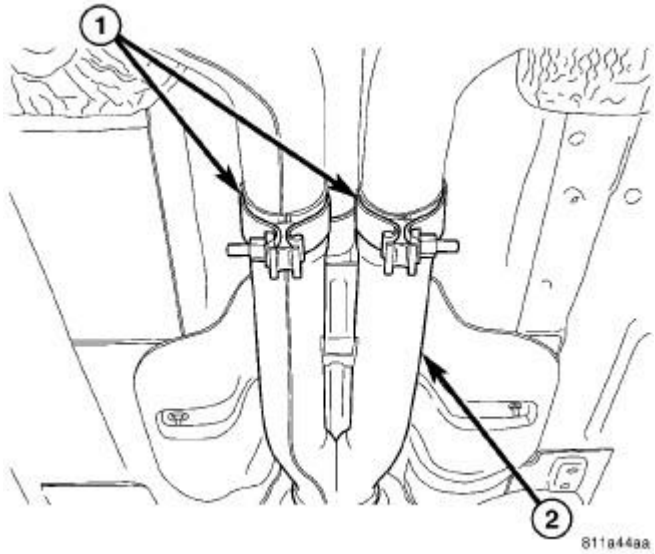

Fig. 107: Exhaust System

Courtesy of CHRYSLER LLC

55. Install rear exhaust system (2) (dual-outlet exhaust shown in illustration).

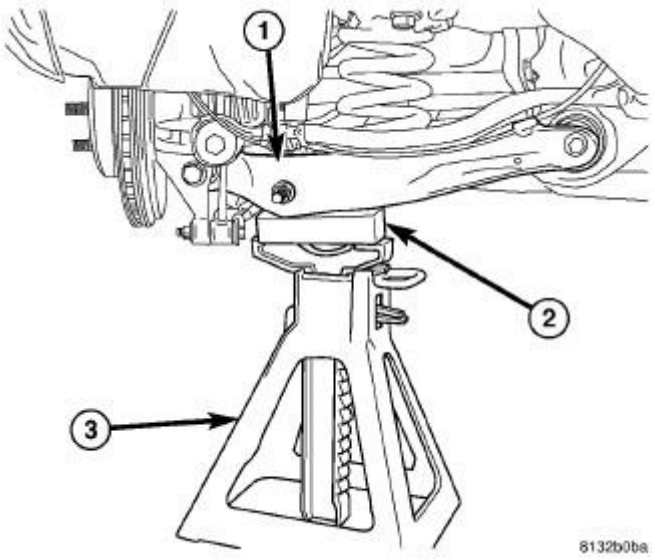

Fig. 108: JACK STAND UNDER CONTROL ARM
Courtesy of CHRYSLER LLC

56. Lower vehicle until front tires contact floor but rear is still suspended. Place jack stands under each rear suspension spring link. Place an appropriate wooden block between stand and link to avoid damaging spring link, then lower vehicle until full vehicle weight is supported by suspension.

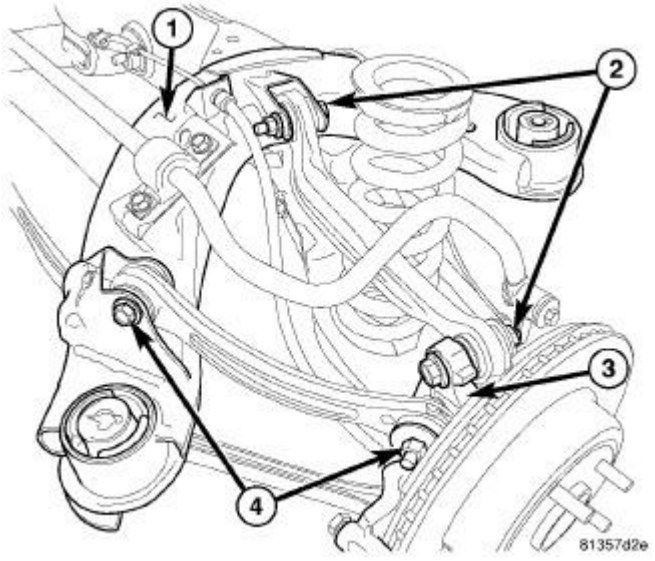

Fig. 109: CAMBER AND TENSION LINKS
Courtesy of CHRYSLER LLC

57. Tighten camber link bolt (2) at crossmember to 85 N.m (63 ft. lbs.).
58. Tighten tension link bolt nut (2) at crossmember to 85 N.m (63 ft. lbs.).

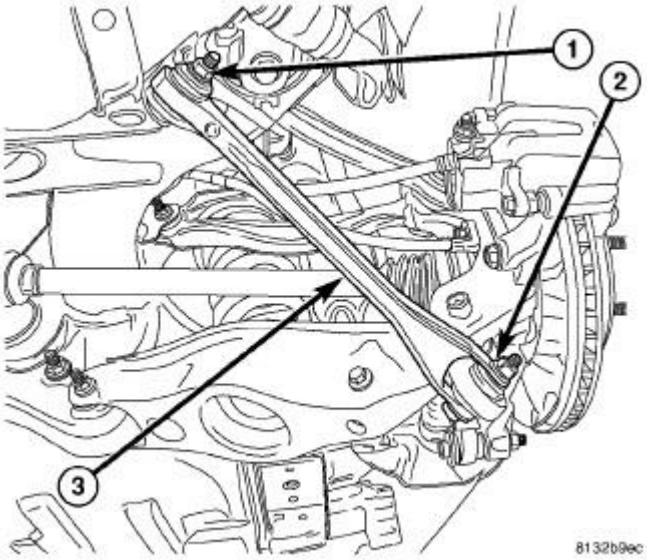

Fig. 110: COMPRESSION LINK MOUNTING
Courtesy of CHRYSLER LLC

59. Tighten compression link bolt (2) at crossmember to 85 N.m (63 ft. lbs.) torque.

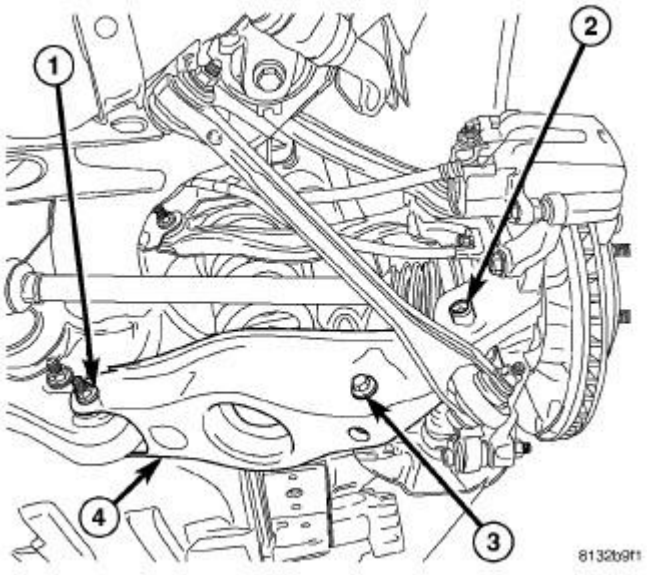

Fig. 111: SPRING LINK MOUNTING
Courtesy of CHRYSLER LLC

60. Tighten spring link bolt (1) at crossmember to 108 N.m (80 ft. lbs.).

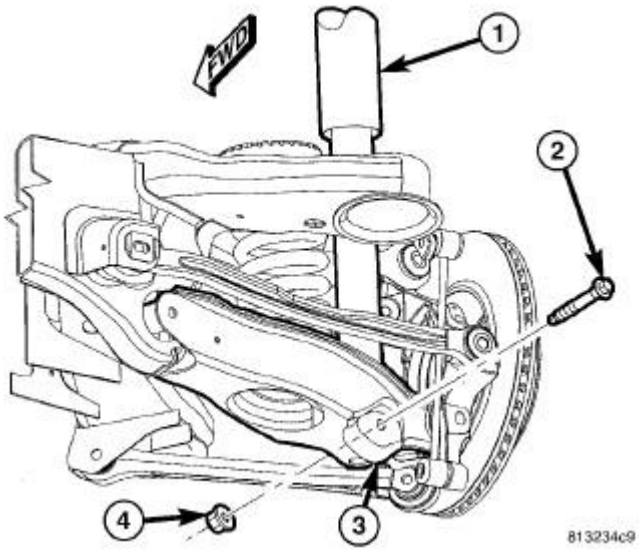

Fig. 112: SHOCK MOUNTING - LOWER
Courtesy of CHRYSLER LLC

61. Tighten shock absorber lower mounting bolt nut (4) to 72 N.m (53 ft. lbs.).

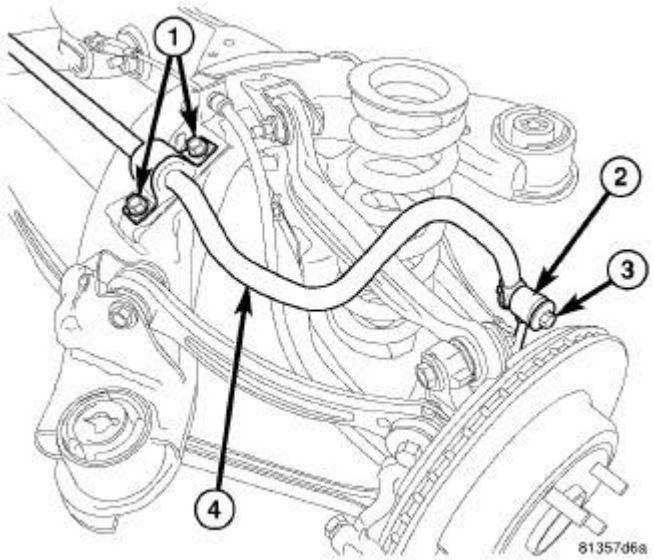

Fig. 113: REAR STABILIZER BAR MOUNTING
Courtesy of CHRYSLER LLC

62. Tighten stabilizer link bolts (3) to 61 N.m (45 ft. lbs.).

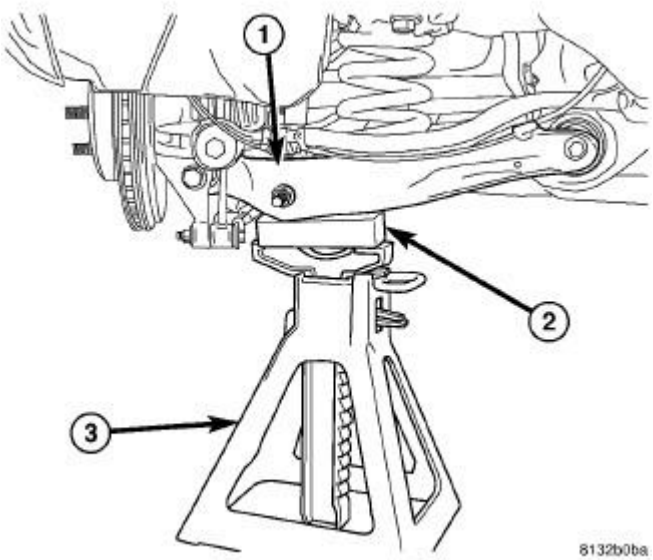

Fig. 114: JACK STAND UNDER CONTROL ARM
Courtesy of CHRYSLER LLC

63. Raise vehicle and remove jack stands (3).

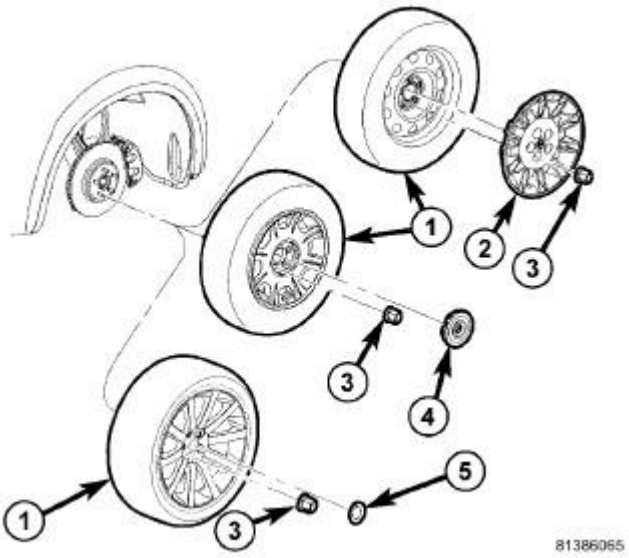

Fig. 115: TIRE AND WHEEL MOUNTING
Courtesy of CHRYSLER LLC

64. Install tire and wheel assemblies (1). Tighten wheel mounting nuts (3) to 150 N.m (110 ft. lbs.). Refer to **Tires and Wheels - Installation** .
65. Lower vehicle.

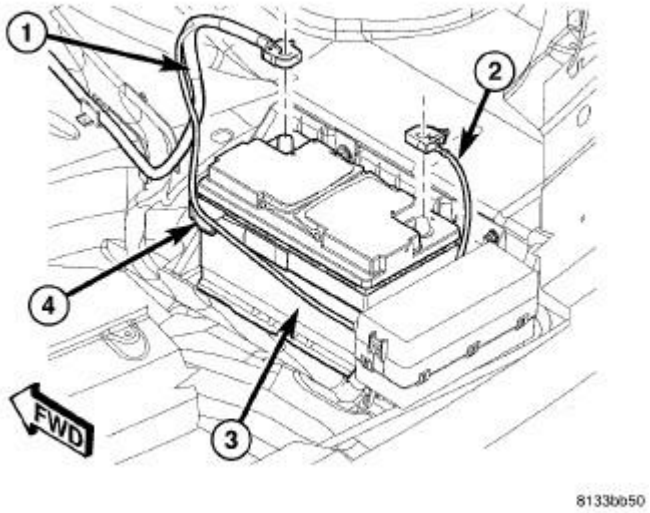

Fig. 116: BATTERY AND CABLES
Courtesy of CHRYSLER LLC

66. Connect battery negative cable (2) to battery post. It is important that this is performed properly. Refer to **Electrical - Engine Systems/Battery System - Standard Procedure** .
67. Pump brake pedal several times to ensure vehicle has a firm brake pedal before moving vehicle.
68. Perform wheel alignment, paying special attention to thrust angle. If rear crossmember needs to be shifted to align thrust angle, try to avoid compromising tension link clearance (Refer to 33). Refer to **Front Suspension/Wheel Alignment - Standard Procedure** .

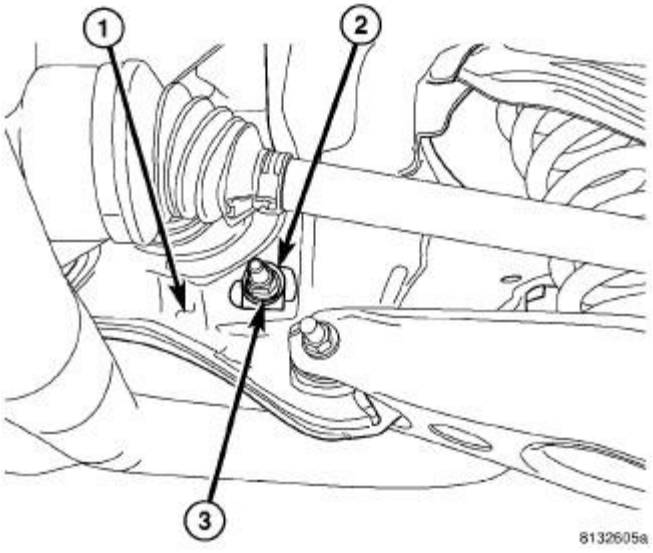

Fig. 117: REAR TOE ADJUSTMENT BOLT NUT
Courtesy of CHRYSLER LLC

69. On each side of crossmember, while holding cam bolt from turning, tighten toe link cam bolt nut (2) to 108 N.m (80 ft. lbs.) torque.

ISOLATOR, REAR CROSSMEMBER, DIFFERENTIAL

Removal

REMOVAL

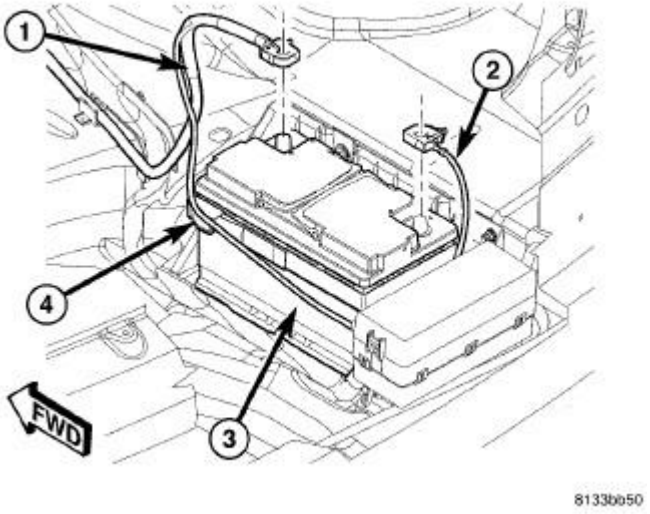

Fig. 118: BATTERY AND CABLES
Courtesy of CHRYSLER LLC

1. Disconnect and isolate battery negative cable (2) from battery post. Refer to **Electrical - Engine Systems/Battery System - Standard Procedure** .
2. Raise and support vehicle. Refer to **Vehicle Quick Reference/Hoisting - Standard Procedure** .

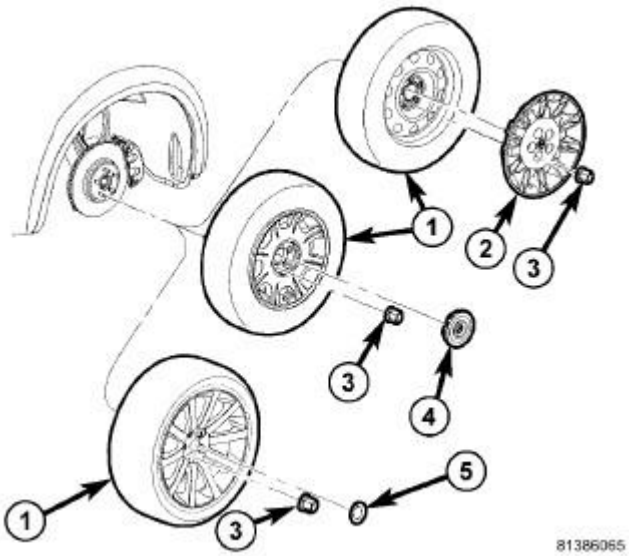

Fig. 119: TIRE AND WHEEL MOUNTING
Courtesy of CHRYSLER LLC

3. On each side of vehicle rear, remove wheel mounting nuts (3), then tire and wheel assembly (1).

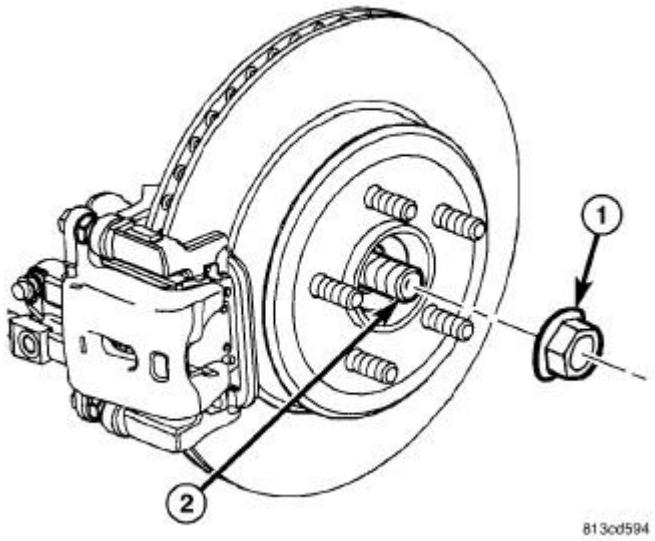

Fig. 120: HUB NUT
Courtesy of CHRYSLER LLC

4. On each side of vehicle rear, while a helper applies brakes to keep hub from rotating, remove hub nut (1) from half shaft (2).

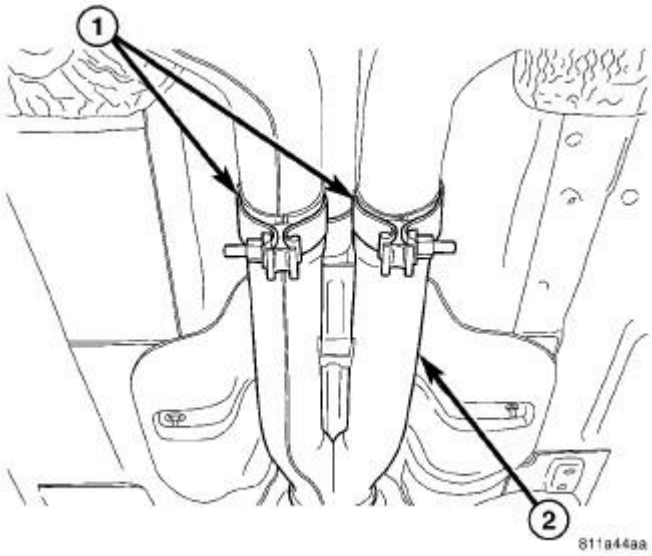

Fig. 121: Exhaust System
Courtesy of CHRYSLER LLC

5. Remove rear exhaust system (2) (dual-outlet exhaust shown in illustration).
6. Remove rear axle differential. Refer to **Differential and Driveline/Rear Axle - 215RII - Removal** .
7. Slide each axle half shaft from hub and bearing and remove from vehicle.

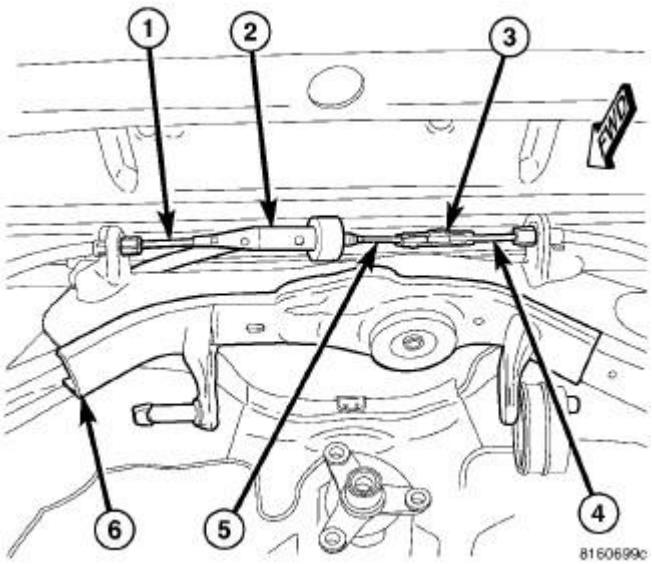

Fig. 122: CABLES AT EQUALIZER
Courtesy of CHRYSLER LLC

NOTE: Due to short travel and low spring tension, it is not necessary to lock-out parking brake lever to service parking brake components.

8. Disconnect front parking brake cable (5) at connector (3) to right rear parking brake cable (4) above axle differential.

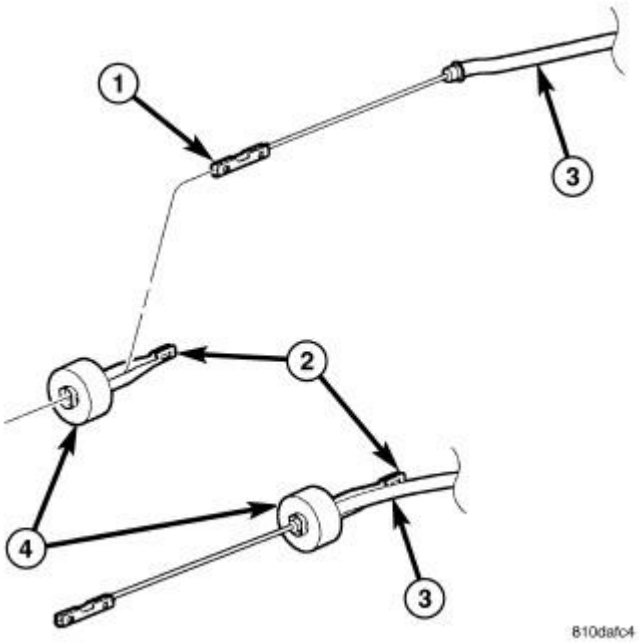

Fig. 123: FRONT CABLE TO EQUALIZER
Courtesy of CHRYSLER LLC

9. Remove front parking brake cable (3) from equalizer (2).

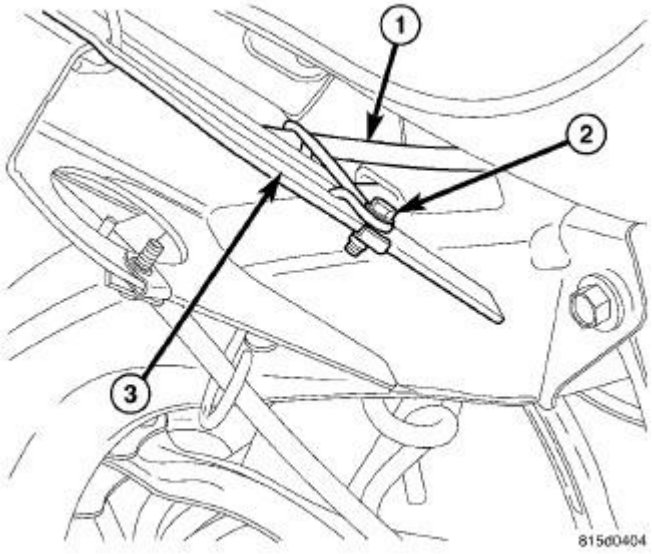

Fig. 124: FRONT CABLE AT LEFT FRONT OF CROSSMEMBER
Courtesy of CHRYSLER LLC

10. Remove screw (2) fastening front parking brake cable (1) routing bracket to rear crossmember front flange (3).

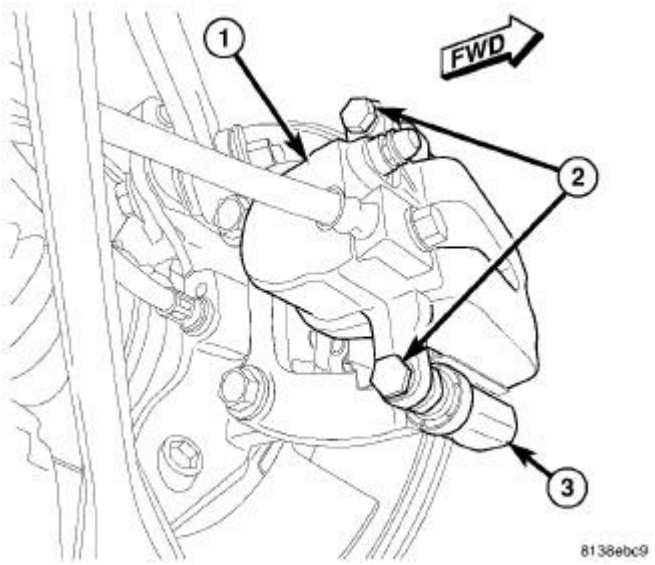

Fig. 125: REAR CALIPER MOUNTING
Courtesy of CHRYSLER LLC

11. If equipped with standard or premium disc brakes, on each rear disc brake:
    a. While holding guide pins from turning, remove disc brake caliper guide pin bolts (2).
    b. Remove brake caliper (1) from brake adapter (3) and pads.
    c. Guide brake caliper up through suspension, following brake hose path. Support caliper above rear suspension using with bungee cord or wire to keep caliper from overextending brake hose when crossmember is lowered.

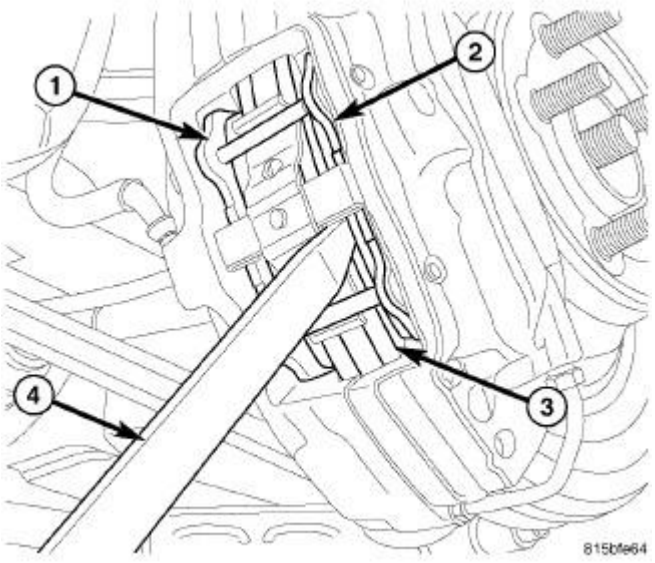

Fig. 126: PUSHING BACK PISTONS IN BORE
Courtesy of CHRYSLER LLC

CAUTION: When pushing pistons back into caliper bores, use only a trim stick as shown in illustration or other suitable soft tool. Never use a screwdriver or other metal pry bar due to potential damage to braking surface of rotor, caliper, pistons or dust boots.

12. If equipped with SRT8 disc brakes, on each rear disc brake, place trim stick (4) between brake pad (2) and outer edge of rotor (3).
13. If equipped with SRT8 disc brakes, on each rear disc brake, using trim stick, slowly apply pressure against brake pad (2) until both pistons (on that side of caliper) are completely bottomed in bores of caliper half.

NOTE: Repeat above procedure to opposite brake pad (1) and pistons as necessary.

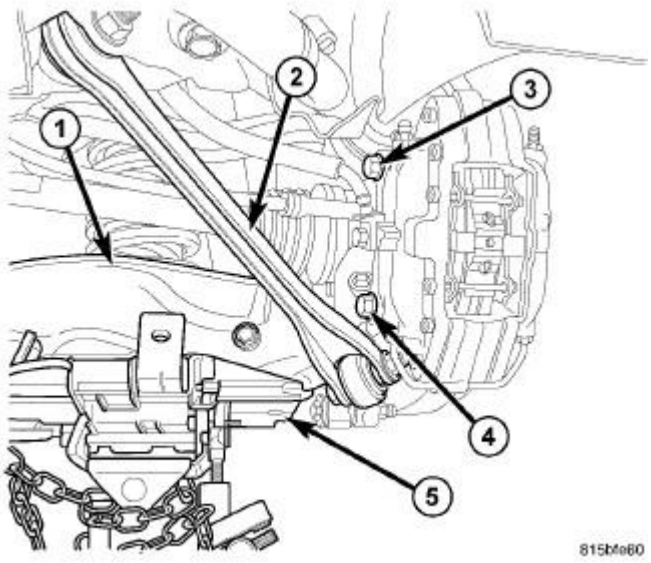

Fig. 127: ACCESSING REAR CALIPER MOUNTING BOLTS
Courtesy of CHRYSLER LLC

14. If equipped with SRT8 disc brakes, on each rear disc brake, support spring link (1) using a transmission jack (5) or other appropriate jack. Raise spring link just enough to access brake caliper lower mounting bolt (4) from above compression link (2).

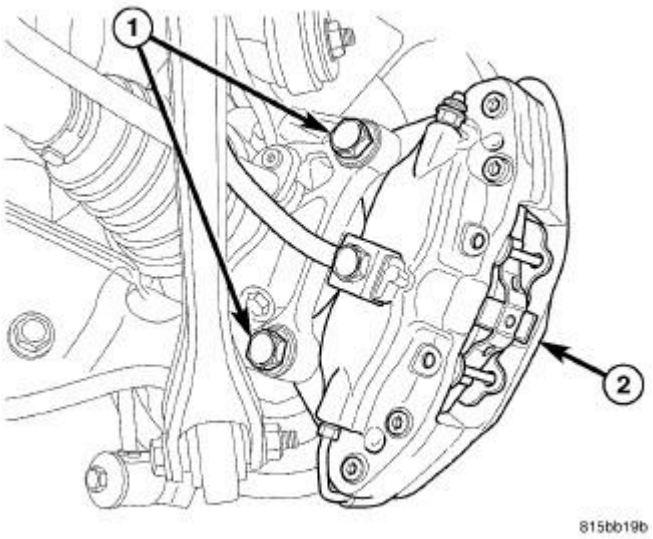

Fig. 128: REAR CALIPER MOUNTING - SRT8
Courtesy of CHRYSLER LLC

15. If equipped with SRT8 disc brakes, on each rear disc brake, remove the lower and upper caliper mounting bolts (1).
16. If equipped with SRT8 disc brakes, on each rear disc brake, remove brake caliper (2) with pads from knuckle and brake rotor. Hang assembly out of way using wire or a bungee cord. Use care not to overextend brake hose when doing this.
17. If equipped with SRT8 disc brakes, remove jack from under spring link.

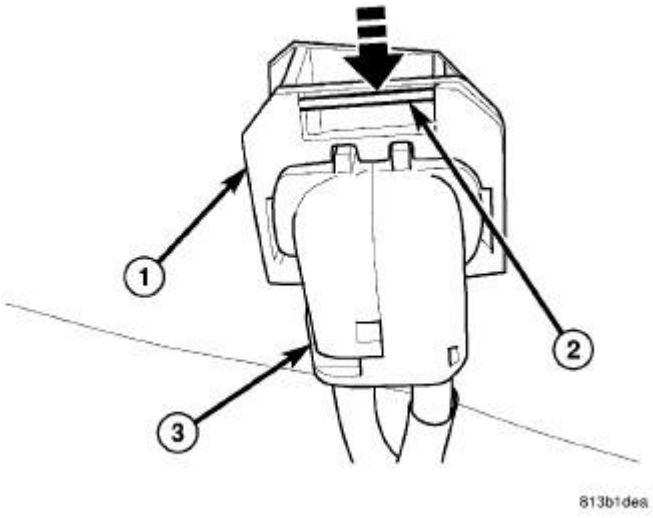

Fig. 129: RELEASE WHEEL SPEED SENSOR CONNECTOR
Courtesy of CHRYSLER LLC

NOTE: **To remove wheel speed sensor connector from body wiring harness connector, move retaining clip (2) and pull sensor connector outward.**

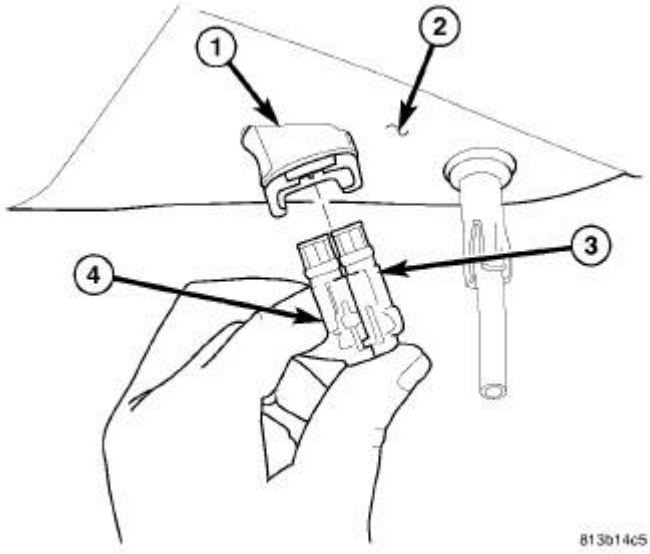

Fig. 130: SENSOR CONNECTION TO BODY CONNECTOR
Courtesy of CHRYSLER LLC

18. Remove wheel speed sensor connectors (3 and 4) from body wiring harness connector (1) located in luggage compartment floor pan (2).

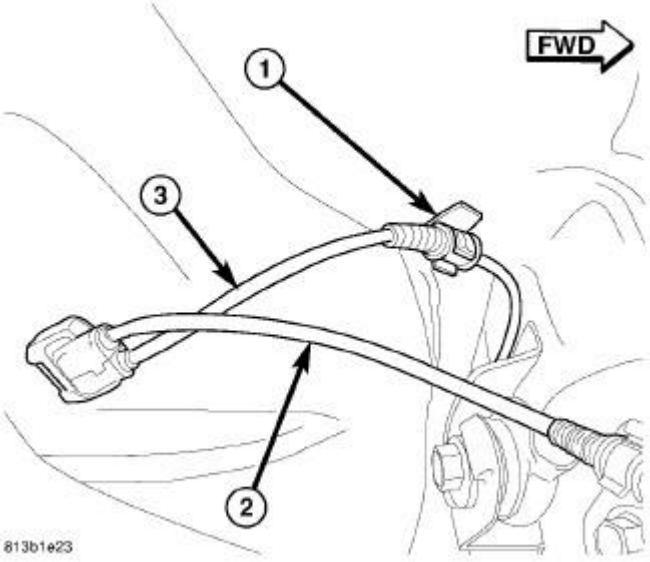

Fig. 131: LEFT/RIGHT REAR WHEEL SPEED SENSOR ROUTING
Courtesy of CHRYSLER LLC

19. Unclip left wheel speed sensor cable (3) from routing clip (1) near body connector.

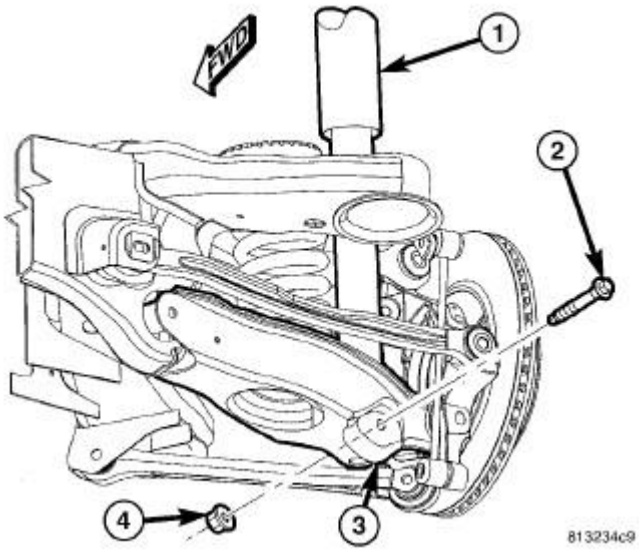

Fig. 132: SHOCK MOUNTING - LOWER
Courtesy of CHRYSLER LLC

20. On each side of vehicle, remove shock absorber (1) lower mounting bolt (2) and nut (4).

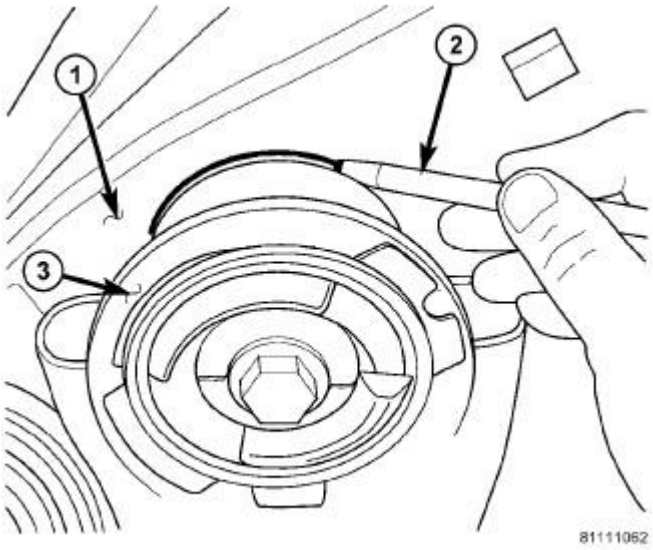

Fig. 133: Marking Location Of Crossmember Mount To Body
Courtesy of CHRYSLER LLC

1 - BODY
2 - MARKER (OR CRAYON)
3 - CROSSMEMBER BUSHING FLANGE

21. Carefully mark location of rear crossmember on body at all four mount (bushing) locations using

a marker or crayon. **Do not use a scratch awl to mark location.**

22. Position an extra pair of jack stands under and support forward end of engine cradle to help stabilize vehicle during rear suspension removal/installation.

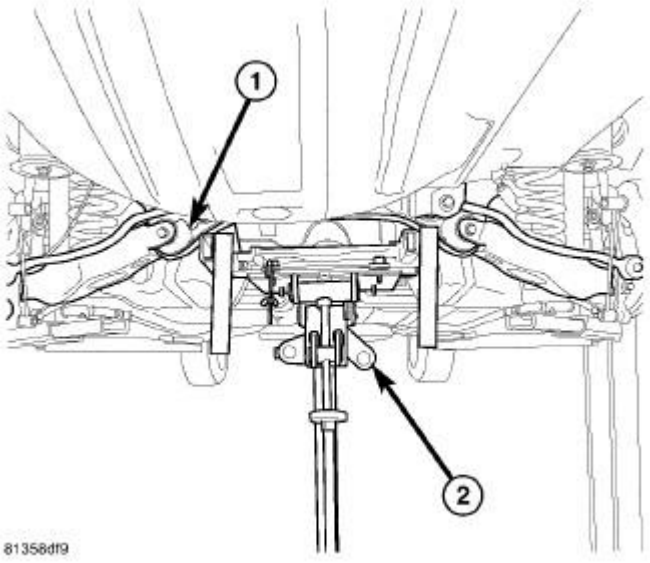

Fig. 134: JACK POSITIONED BENEATH CROSSMEMBER
Courtesy of CHRYSLER LLC

23. Position under-hoist utility jack or transmission jack (2) under center of rear crossmember (1). Raise jack head to contact crossmember and secure in place.

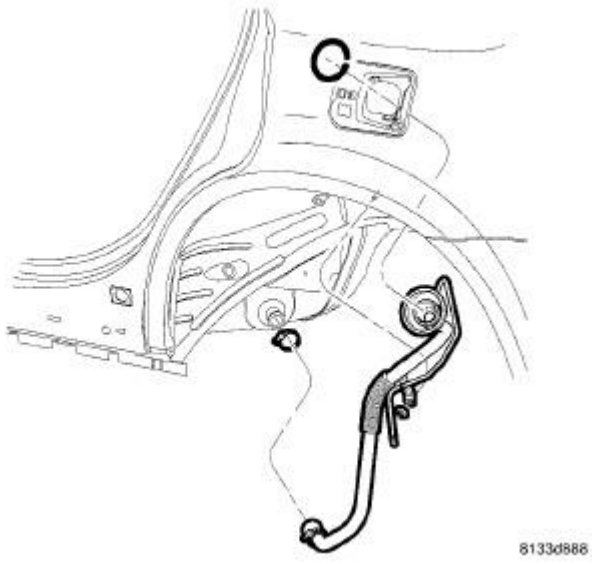

Fig. 135: FILLER TUBE ASSEMBLY
Courtesy of CHRYSLER LLC

WARNING: Before opening fuel system, review all Warnings and Cautions.

24. Remove fuel filler tube. Refer to **Fuel System/Fuel Delivery/TUBE, Fuel Tank Filler - Removal** .

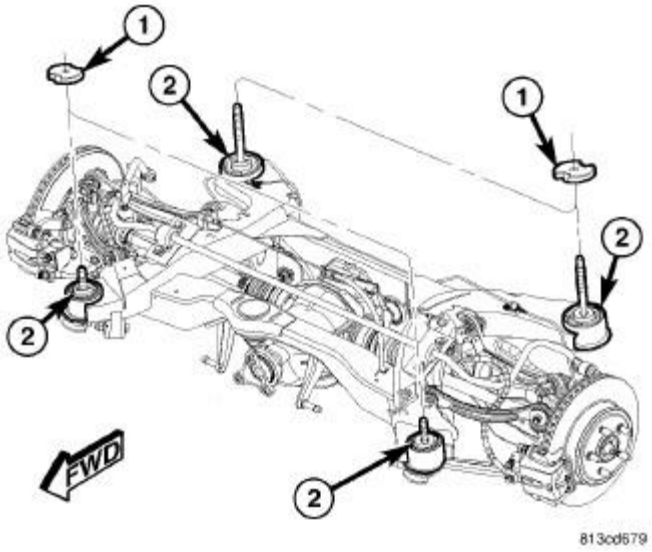

Fig. 136: AWD CROSSMEMBER SPACERS
Courtesy of CHRYSLER LLC

NOTE: If equipped with AWD, when removing crossmember mounting bolts in following step, be sure to not to misplace spacers (1) between crossmember mounts (2) and body.

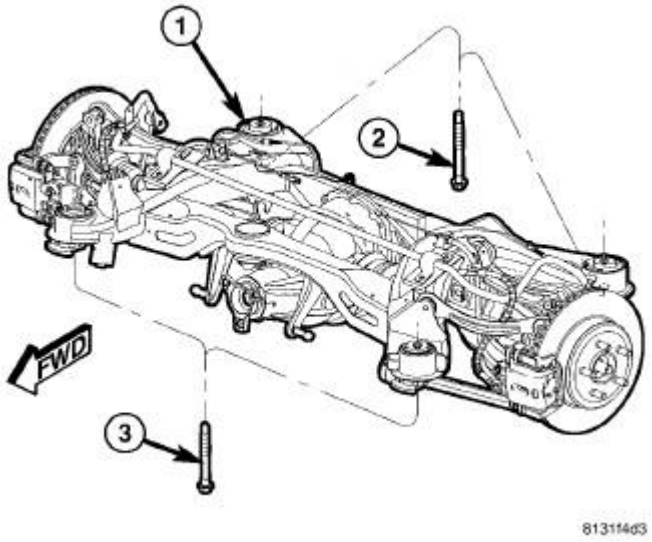

Fig. 137: REAR CROSSMEMBER MOUNTING BOLTS
Courtesy of CHRYSLER LLC

25. Remove both front (3) and both rear (2) mounting bolts fastening crossmember (1) in place.
26. **Slowly** lower crossmember using jack until crossmember is at a comfortable working level.

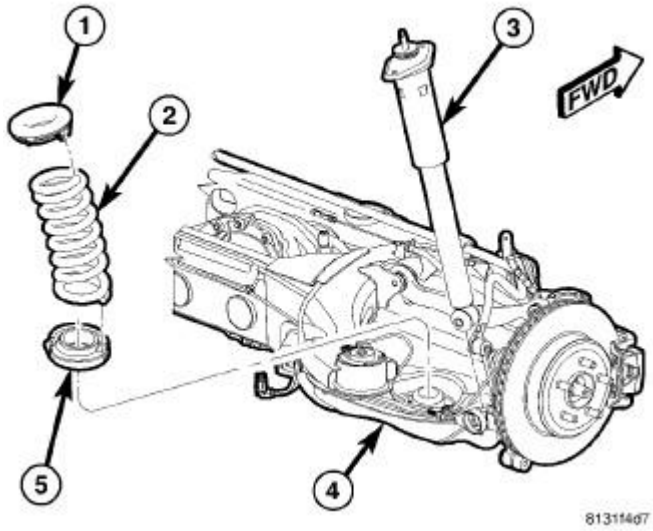

Fig. 138: COIL SPRING AND SHOCK ASSEMBLY
Courtesy of CHRYSLER LLC

27. Remove coil springs and isolators (1, 2 and 5) from spring links.

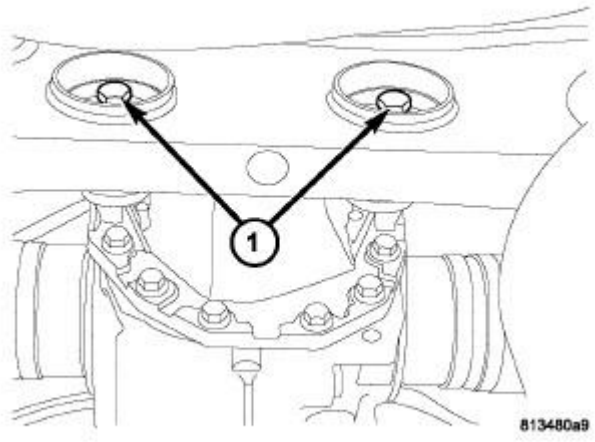

Fig. 139: Rear Axle-to-Crossmember Bolts
Courtesy of CHRYSLER LLC

28. Remove bolt (1) from bushing prior to removal.

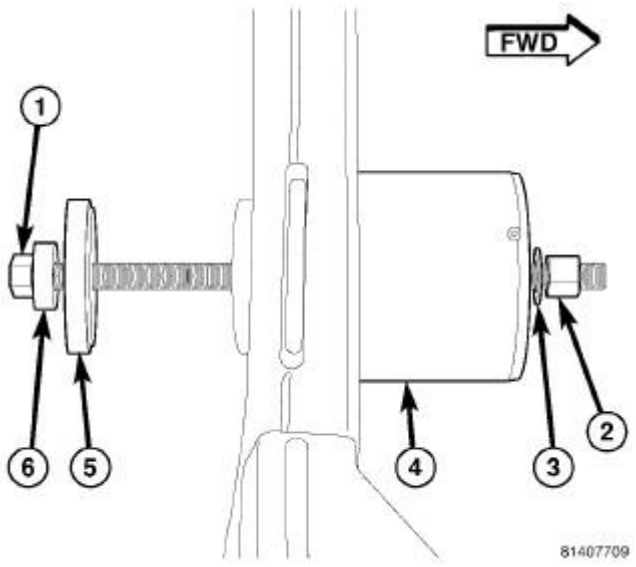

Fig. 140: TOOLS ASSEMBLED FOR BUSHING REMOVAL
Courtesy of CHRYSLER LLC

NOTE: Prior to using Special Tool 9520, lubricate Bolt (1) threads to provide ease of use and promote tool longevity.

NOTE: When installing Thrust Bearing (6), be sure to place hardened side toward Bolt head.

29. Assemble tools (See following list) over bushing as shown in illustration.
    - (1) Bolt
    - (2) Nut
    - (3) Washer
    - (4) Receiver 9520-4
    - (5) Remover 9520-3
    - (6) Thrust Bearing
30. While holding Nut (2) from rotating, **using hand tools** , tighten Bolt (1) until Remover (5) comes in contact with bushing and Receiver (4) sets squarely against crossmember.
31. Continue to tighten Bolt (1), pressing bushing out of crossmember.
32. Remove tools with bushing.

Installation

INSTALLATION

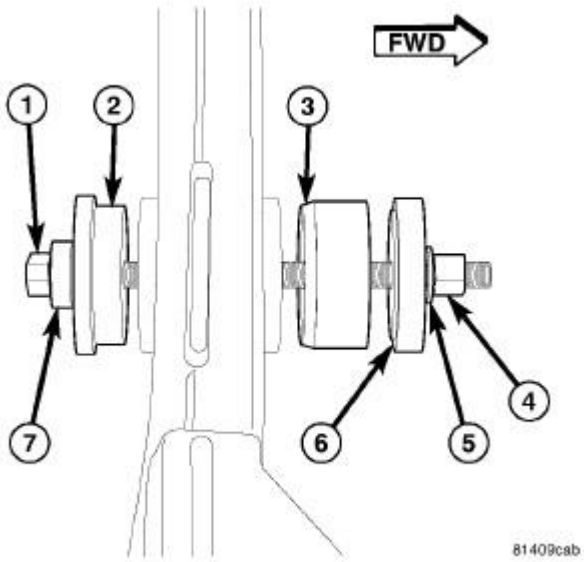

Fig. 141: TOOLS ASSEMBLED FOR BUSHING INSTALLATION
Courtesy of CHRYSLER LLC

NOTE: It is important that tapered end (3) of bushing be installed first into forward end of crossmember to ease installation.

NOTE: When installing Thrust Bearing (7), be sure to place hardened side toward Bolt head.

1. Insert tapered end of NEW bushing (3) into forward end of crossmember bushing bore.
2. Assemble tools (See following list) through crossmember and bushing as shown in illustration.
   - (1) Bolt
   - (2) Disc 9520-1
   - (3) Bushing
   - (4) Nut
   - (5) Washer
   - (6) Installer 9520-2
   - (7) Thrust Bearing
3. Insert Installer (6) into end of bushing and Disc (2) into opposite end of crossmember bushing bore.
4. While holding Nut (4) from rotating, tighten Bolt (1) **using hand tools** , pressing bushing into crossmember. Stop when Installer (6) bottoms against bushing bore.
5. Remove tools.

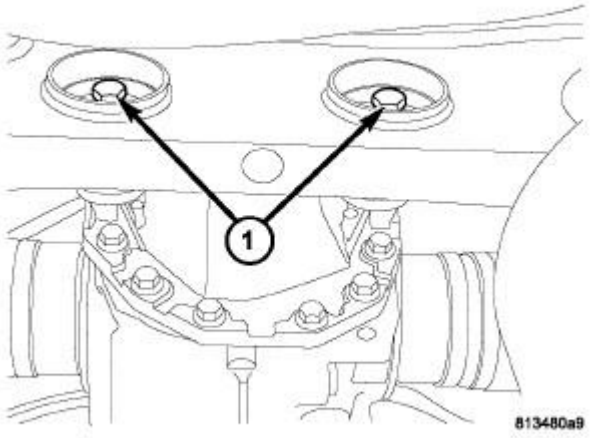

Fig. 142: Rear Axle-to-Crossmember Bolts
Courtesy of CHRYSLER LLC

CAUTION: Differential mounting bolts (1) must be installed through bushings prior to crossmember installation in vehicle. Bolts cannot be inserted through bushings once crossmember is installed.

6. Insert differential mounting bolt (1) through mount bushing from rear (198 mm axle differential shown in illustration. Other axles differ, but similar).

NOTE: Do not install coil springs on spring links at this time.

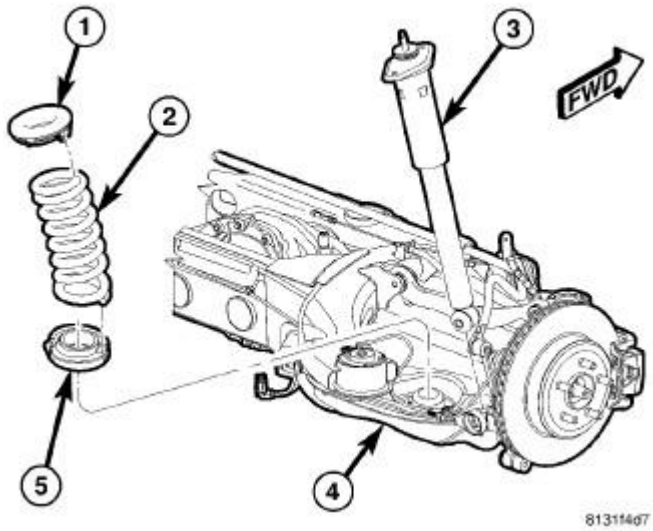

Fig. 143: COIL SPRING AND SHOCK ASSEMBLY

Courtesy of CHRYSLER LLC

7. Raise crossmember to body mounting points. As crossmember is raised, align shocks (3) with pockets in spring links. **Do not install bolts at this time.**

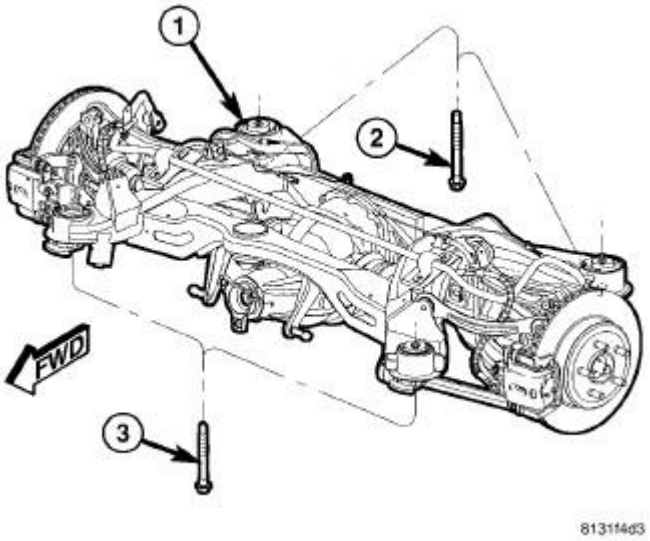

Fig. 144: REAR CROSSMEMBER MOUNTING BOLTS
Courtesy of CHRYSLER LLC

NOTE: There are four crossmember mounting bolts. Rear mounting bolts (2) are longer than front mounting bolts (3). Do not interchange mounting bolts.

8. Continue to raise crossmember (1) with jack until crossmember mounting bolts (2 and 3) can be installed. Install left side crossmember mounting bolts, but not the right side bolts. It is not necessary to tighten bolts at this point.

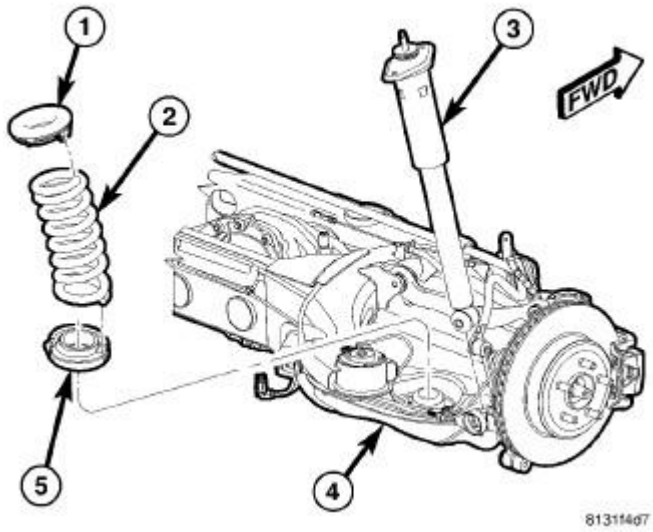

Fig. 145: COIL SPRING AND SHOCK ASSEMBLY
Courtesy of CHRYSLER LLC

CAUTION: To avoid damaging other components of vehicle, do not lower crossmember any further than necessary to install coil spring (2).

9. **Slowly** lower jack allowing right side of crossmember to drop. **Do not lower jack at a fast rate.** Lower jack just enough to allow spring (2) Installation. **Do not lower jack any further than necessary.**

NOTE: Before installing coil spring, make sure isolators (1 and 5) are completely installed on ends of spring.

10. Install coil spring (2) with isolators into spring pocket of spring link fitting the lower isolator to the shape of the pocket, then align top of spring with body mount.

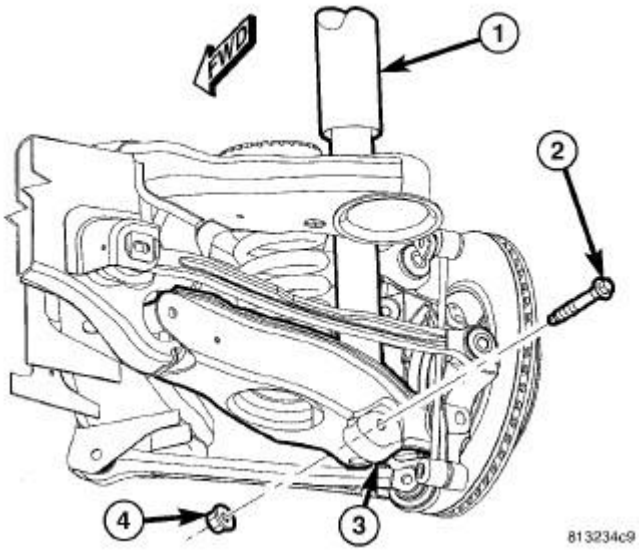

Fig. 146: SHOCK MOUNTING - LOWER
Courtesy of CHRYSLER LLC

11. Carefully raise jack, guiding coil spring and lower end of shock absorber (1) into mounted positions. Once shock absorber (1) lower mounting hole lines up with hole in spring link (3), stop jacking.
12. Install lower shock mounting bolt (2) and nut (4). **Do not tighten at this time.**

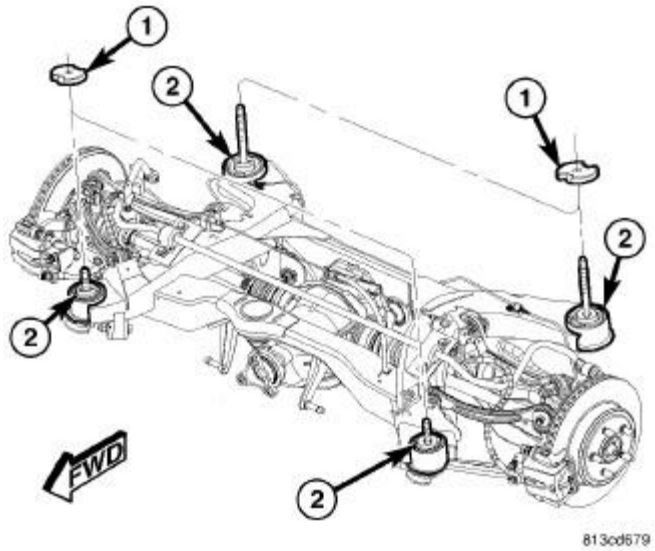

Fig. 147: AWD CROSSMEMBER SPACERS
Courtesy of CHRYSLER LLC

13. If vehicle is equipped with AWD, insert spacers (1) on top of right crossmember mount bushings (2) before crossmember is raised into place.

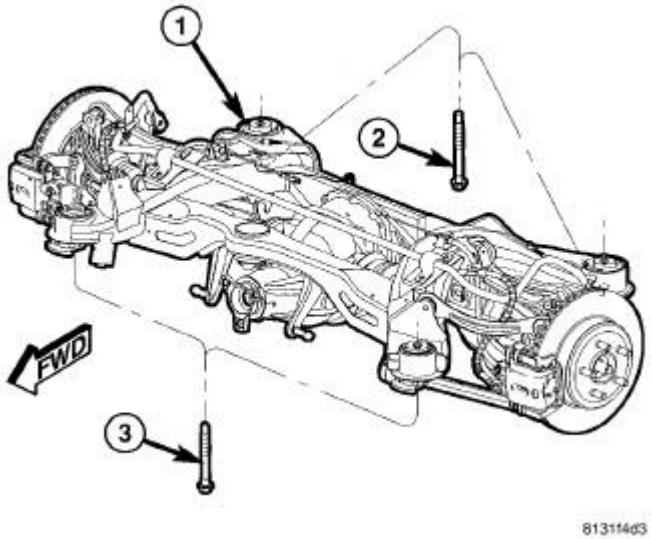

Fig. 148: REAR CROSSMEMBER MOUNTING BOLTS
Courtesy of CHRYSLER LLC

NOTE: There are four crossmember mounting bolts. Rear mounting bolts (2) are longer than front mounting bolts (3). Do not interchange mounting bolts.

14. Raise right side of crossmember (1) into mounted position. Install right side crossmember mounting bolts (2 and 3). **Snug, but do not fully tighten bolts at this time.**
15. Remove both front and rear crossmember mounting bolts (2 and 3) on **left** side of vehicle.

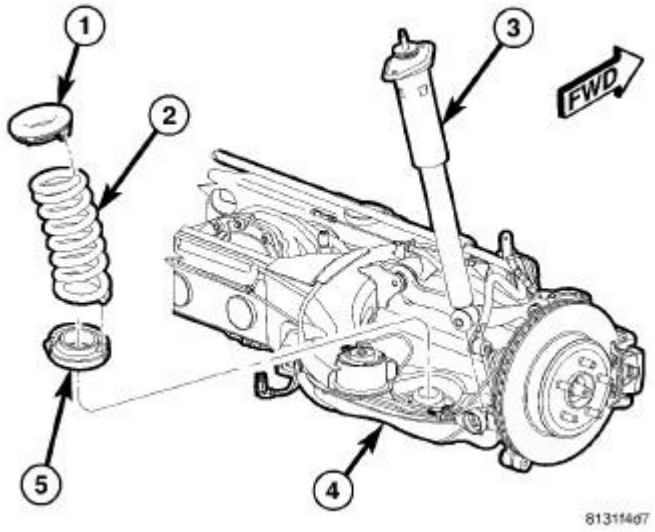

Fig. 149: COIL SPRING AND SHOCK ASSEMBLY
Courtesy of CHRYSLER LLC

CAUTION: To avoid damaging other components of vehicle, do not lower crossmember any further than necessary to install coil spring (2).

16. **Slowly** lower jack allowing left side of crossmember to drop. **Do not lower jack at a fast rate.** Lower jack just enough to allow spring (2) Installation. **Do not lower jack any further than necessary.**

NOTE: Before installing coil spring, make sure isolators (1 and 5) are completely installed on ends of spring.

17. Install coil spring (2) with isolators into spring pocket of spring link fitting the lower isolator to the shape of the pocket, then align top of spring with body mount.

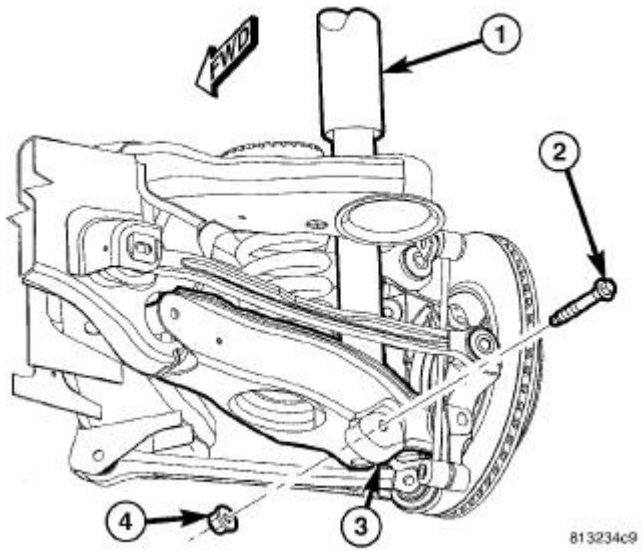

Fig. 150: SHOCK MOUNTING - LOWER
Courtesy of CHRYSLER LLC

18. Carefully raise jack, guiding coil spring and lower end of shock absorber (1) into mounted positions. Once shock absorber (1) lower mounting hole lines up with hole in spring link (3), stop jacking.
19. Install lower shock mounting bolt (2) and nut (4). **Do not tighten at this time.**

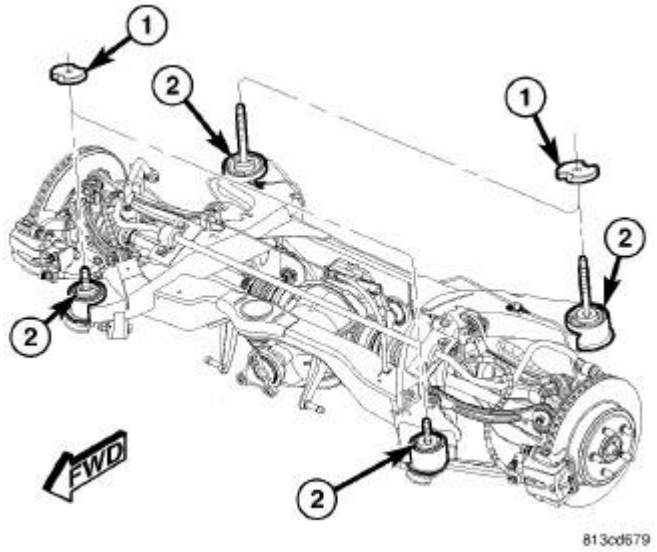

Fig. 151: AWD CROSSMEMBER SPACERS
Courtesy of CHRYSLER LLC

20. If vehicle is equipped with AWD, insert spacers (1) on top of left crossmember mount bushings (2) before crossmember is raised into place.

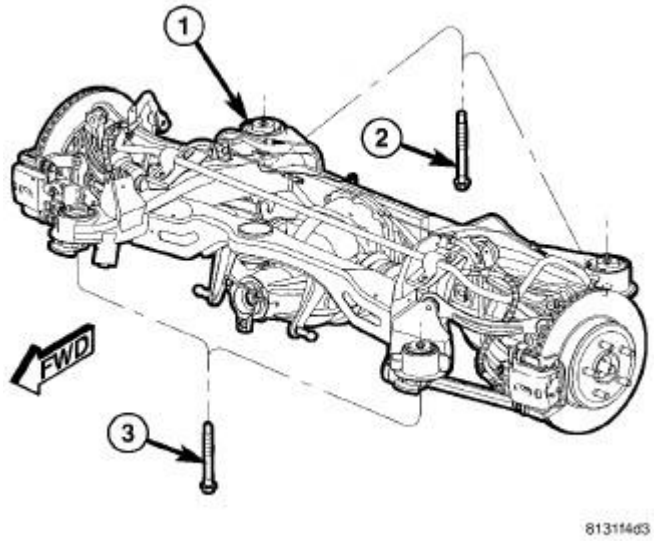

Fig. 152: REAR CROSSMEMBER MOUNTING BOLTS
Courtesy of CHRYSLER LLC

NOTE: There are four crossmember mounting bolts. Rear mounting bolts (2) are longer than front mounting bolts (3). Do not interchange mounting bolts.

21. Raise left side of crossmember (1) into mounted position. Install left side crossmember

mounting bolts (2 and 3). **Snug, but do not fully tighten bolts at this time.**

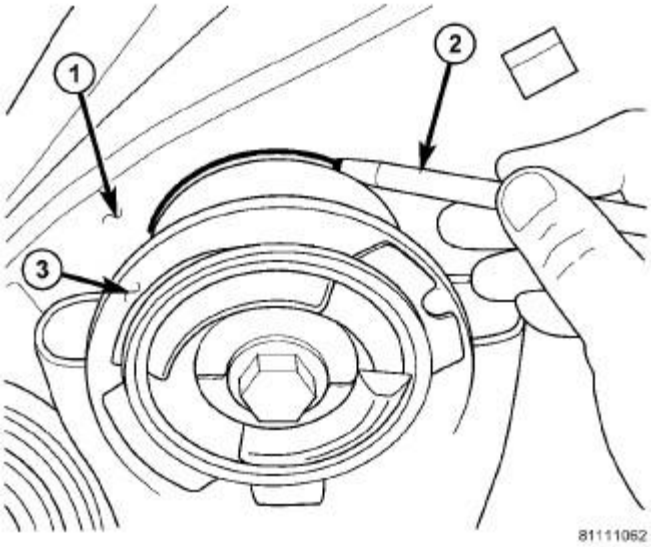

Fig. 153: Marking Location Of Crossmember Mount To Body
Courtesy of CHRYSLER LLC

1 - BODY 2 - MARKER (OR CRAYON) 3 - CROSSMEMBER BUSHING FLANGE

22. Shift crossmember as necessary to line up mounts (3) with location marks drawn on body (1) before removal.

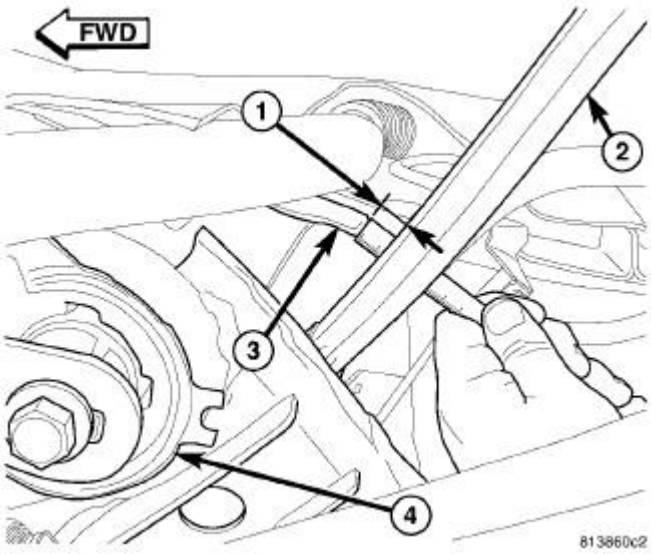

Fig. 154: MEASURING TENSION LINK CLEARANCE

Courtesy of CHRYSLER LLC

23. Once mounts are lined up with location marks, on both sides of vehicle, measure distance (1) between the tension link (2) and weld flange (3) on body directly in front of it, just outboard of the front mount bushing (4). **This distance must be at least 12 mm to allow proper clearance for suspension movement.** If distance is less than 12 mm on either side of vehicle, shift that side of rear crossmember directly rearward until distance is 12 mm or greater. To do so, loosen 3 mounting bolts slightly, leaving one on opposite side of shift snugged to pivot off of. Shift crossmember rearward and snug loosened bolts. Remeasure opposite side to be sure it still maintains minimum 12 mm distance.

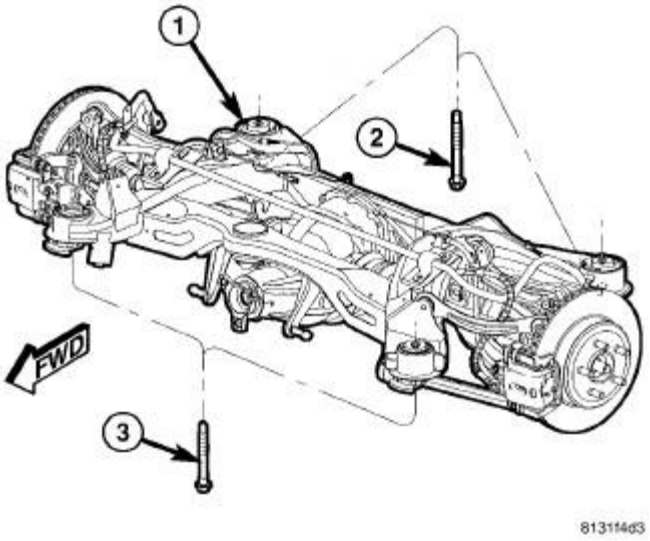

Fig. 155: REAR CROSSMEMBER MOUNTING BOLTS
Courtesy of CHRYSLER LLC

24. Tighten all four crossmember mounting bolts (2 and 3) to 180 N.m (133 ft. lbs.).

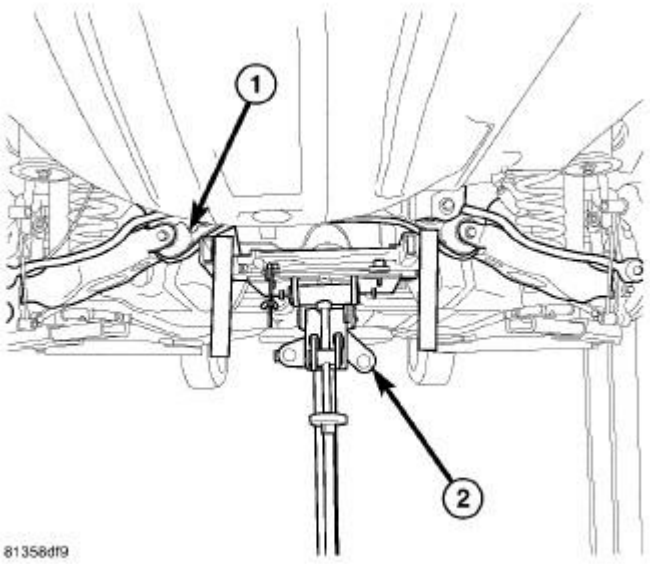

Fig. 156: JACK POSITIONED BENEATH CROSSMEMBER
Courtesy of CHRYSLER LLC

25. Remove jack (2) from under rear crossmember.



Fig. 157: FILLER TUBE ASSEMBLY
Courtesy of CHRYSLER LLC

26. Install fuel filler tube. Refer to **Fuel System/Fuel Delivery/TUBE, Fuel Tank Filler - Installation** .

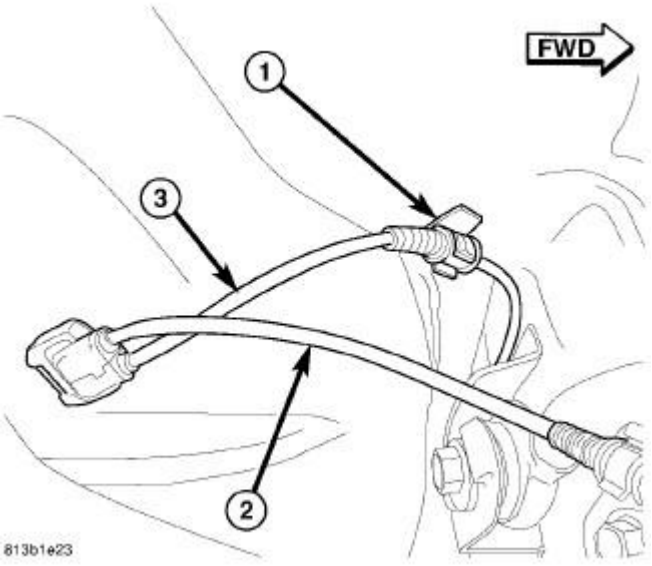

Fig. 158: LEFT/RIGHT REAR WHEEL SPEED SENSOR ROUTING
Courtesy of CHRYSLER LLC

27. Clip left rear wheel speed sensor cable (3) to routing clip (1) near body connector.

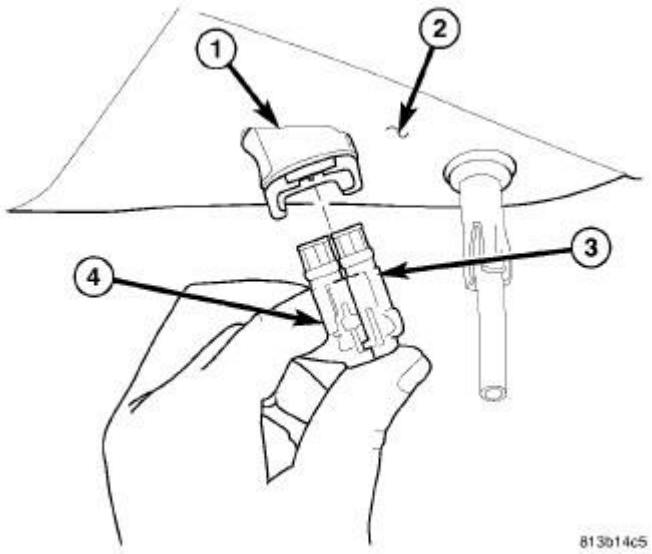

Fig. 159: SENSOR CONNECTION TO BODY CONNECTOR
Courtesy of CHRYSLER LLC

28. Match left rear wheel speed sensor connector (4) to right sensor connector (3) to make one connector.
29. Insert speed sensor connectors (3 and 4) into body wiring harness connector (1) located in luggage compartment floor pan (2). When installing connector, make sure retaining clip on body connector is properly in place and sensor connector cannot be pulled out.

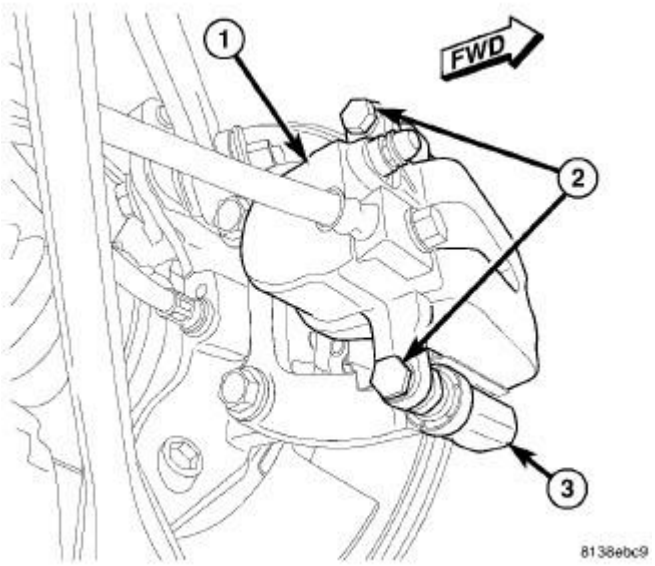

Fig. 160: REAR CALIPER MOUNTING
Courtesy of CHRYSLER LLC

CAUTION: Extreme caution should be taken not to cross-thread caliper guide pin bolts (2) when they are installed.

30. If equipped with standard or premium disc brakes, on each rear disc brake:
    a. Push caliper guide pins into caliper adapter to clear caliper mounting bosses when installing.
    b. Guide caliper and brake hose down through rear suspension, then slide caliper over brake pads and onto caliper adapter (3).
    c. Align caliper mounting holes with guide pins, then install guide pin bolts (2). While holding guide pins from turning, tighten bolts to 31 N.m (23 ft. lbs.) torque.
    d. Make sure brake hose is properly routed and will not come in contact with suspension components.
31. If equipped with SRT8 disc brakes, at each rear disc brake, support spring link using a transmission jack or other appropriate jack as indicated in removal procedure. See **Frame and Bumpers/Frame/ISOLATOR, Rear Crossmember - Removal**

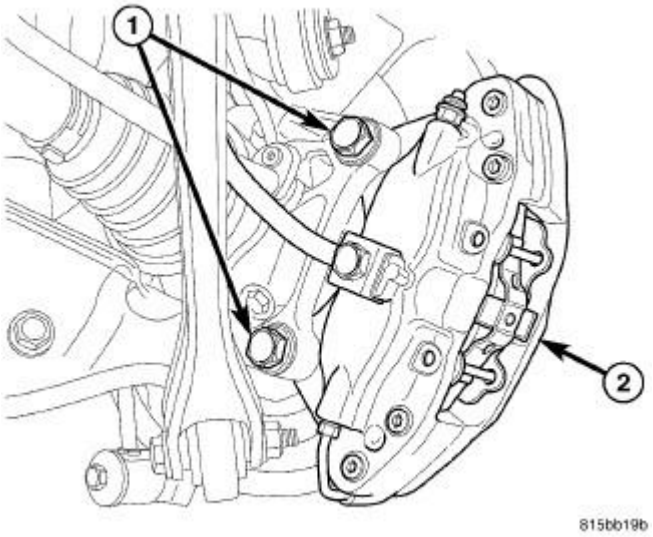

Fig. 161: REAR CALIPER MOUNTING - SRT8
Courtesy of CHRYSLER LLC

32. If equipped with SRT8 disc brakes, on each rear disc brake, slide caliper with pads (2) over brake rotor and align with knuckle.
33. If equipped with SRT8 disc brakes, on each rear disc brake, install caliper mounting bolts (1). Tighten bolts to 130 N.m (96 ft. lbs.) torque.
34. If equipped with SRT8 disc brakes, on each rear disc brake, remove jack from under spring link.

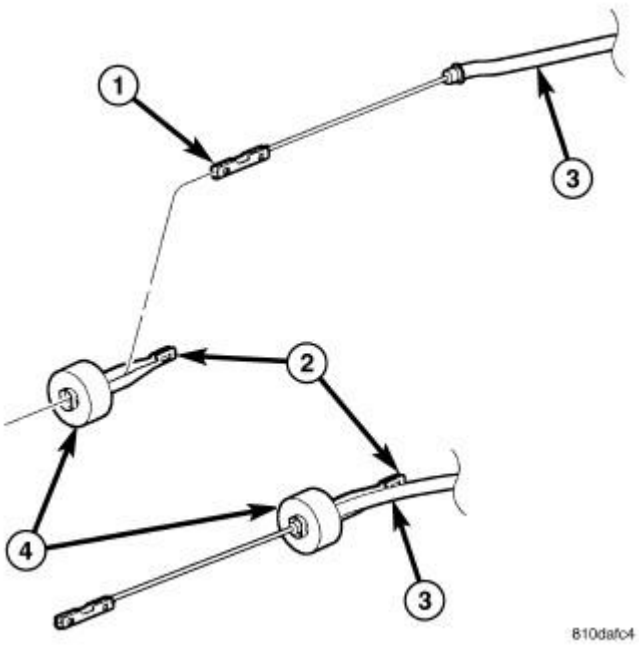

Fig. 162: FRONT CABLE TO EQUALIZER

Courtesy of CHRYSLER LLC

35. Route parking brake cable above rear crossmember, then slide cable (1, 3) through equalizer (2) above rear axle differential (once installed).

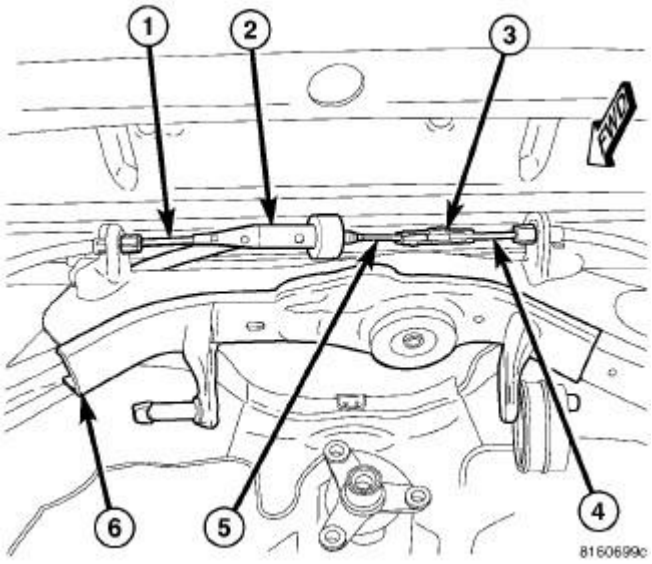

Fig. 163: CABLES AT EQUALIZER
Courtesy of CHRYSLER LLC

NOTE: Due to short travel and low spring tension, it is not necessary to lock-out parking brake lever to service parking brake components.

36. Connect front parking brake cable (5) at connector (3) to right rear parking brake cable (4).

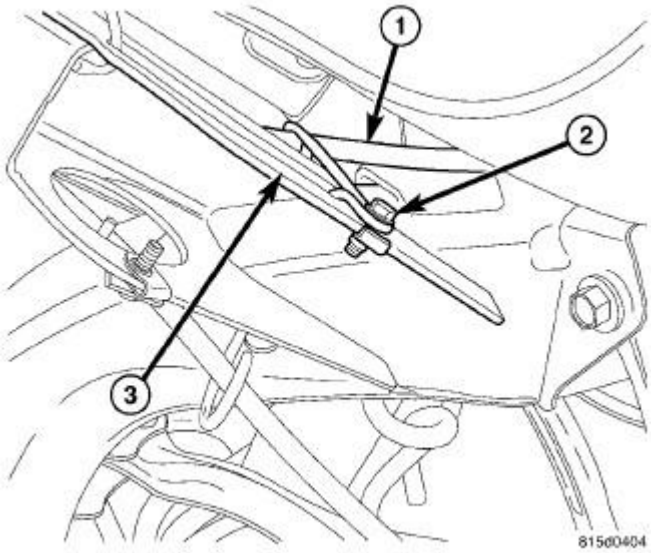

Fig. 164: FRONT CABLE AT LEFT FRONT OF CROSSMEMBER
Courtesy of CHRYSLER LLC

37. Insert front parking brake cable routing bracket locating pin into front flange of crossmember (3), then install screw (2) fastening cable (1) routing bracket to rear crossmember.

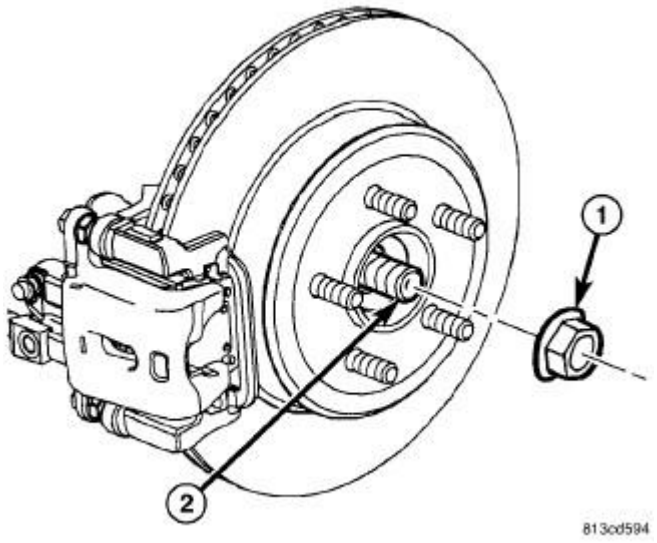

Fig. 165: HUB NUT
Courtesy of CHRYSLER LLC

NOTE: Always install a new hub nut. The original hub nut is one-time use only and should be discarded when removed.

38. On each side of vehicle, slide an axle half shaft (2) through hub and bearing and install hub nut (1). **Do not tighten hub nuts at this time.**
39. Install rear axle differential. Refer to **Differential and Driveline/Rear Axle - 215RII - Installation** .
40. While a helper applies brakes to keep hub from turning, tighten hub nut to 213 N.m (157 ft. lbs.).

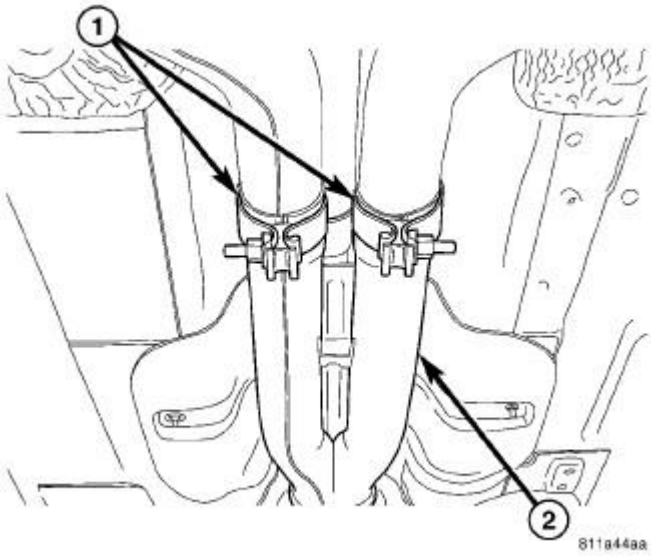

Fig. 166: Exhaust System
Courtesy of CHRYSLER LLC

41. Install rear exhaust system (2) (dual-outlet exhaust shown in illustration).

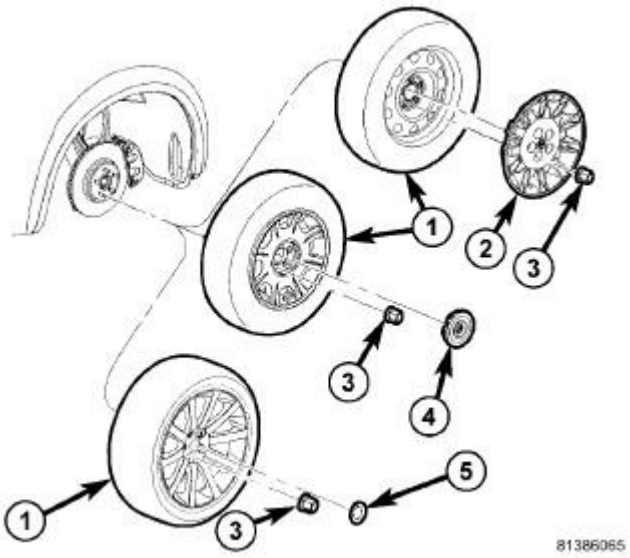

Fig. 167: TIRE AND WHEEL MOUNTING
Courtesy of CHRYSLER LLC

42. Install tire and wheel assemblies (1). Tighten wheel mounting nuts (3) to 150 N.m (110 ft. lbs.). Refer to **Tires and Wheels - Installation** .
43. Lower vehicle.

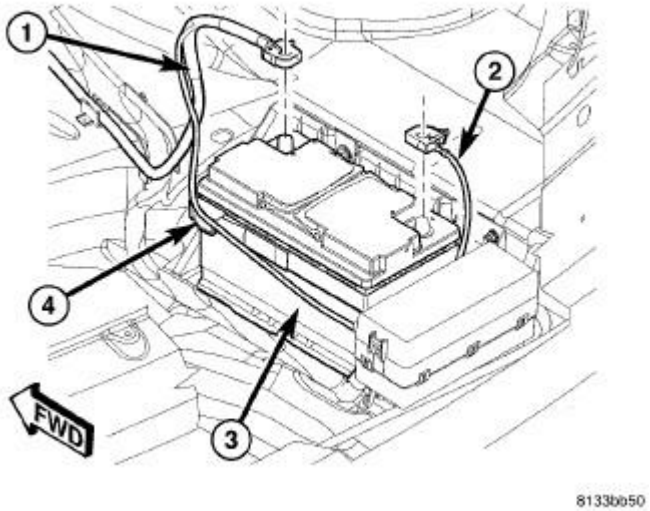

Fig. 168: BATTERY AND CABLES
Courtesy of CHRYSLER LLC

44. Connect battery negative cable (2) to battery post. It is important that this is performed properly. Refer to **Electrical - Engine Systems/Battery System - Standard Procedure** .
45. Pump brake pedal several times to ensure vehicle has a firm brake pedal before moving vehicle.
46. Position vehicle on alignment rack/drive-on lift. Raise vehicle as necessary to access mounting bolts.

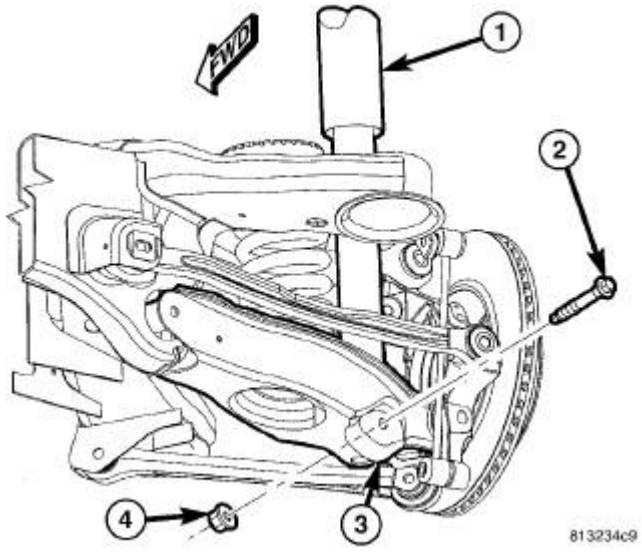

Fig. 169: SHOCK MOUNTING - LOWER
Courtesy of CHRYSLER LLC

47. Tighten shock absorber lower mounting bolt nuts (4) to 72 N.m (53 ft. lbs.).
48. Perform wheel alignment, paying special attention to thrust angle. If rear crossmember needs to be shifted to align thrust angle, try to avoid compromising tension link clearance (Refer to 23). Refer to **Front Suspension/Wheel Alignment - Standard Procedure** .

ISOLATOR, REAR CROSSMEMBER, FRONT MOUNT

Removal

REMOVAL

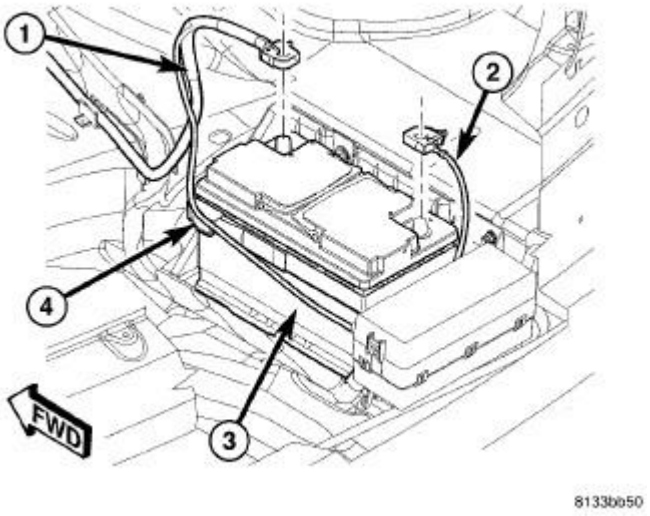

Fig. 170: BATTERY AND CABLES
Courtesy of CHRYSLER LLC

1. Disconnect and isolate battery negative cable (2) from battery post.
2. Raise and support vehicle. Refer to **Vehicle Quick Reference/Hoisting - Standard Procedure** .

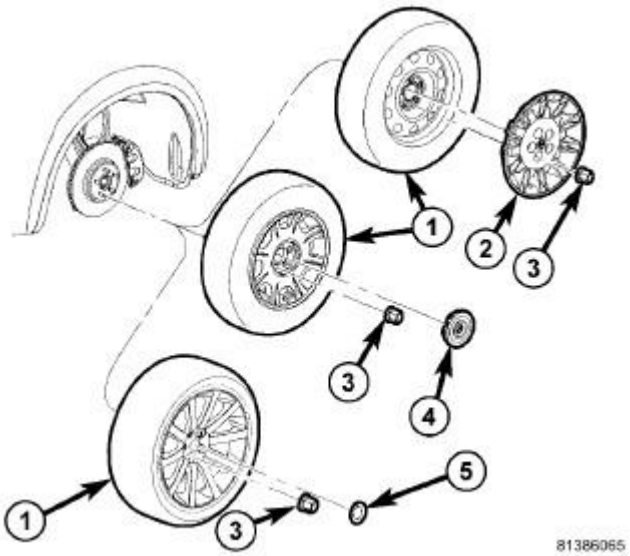

Fig. 171: TIRE AND WHEEL MOUNTING
Courtesy of CHRYSLER LLC

3. On each side of vehicle rear, remove wheel mounting nuts (3), then tire and wheel assembly (1).

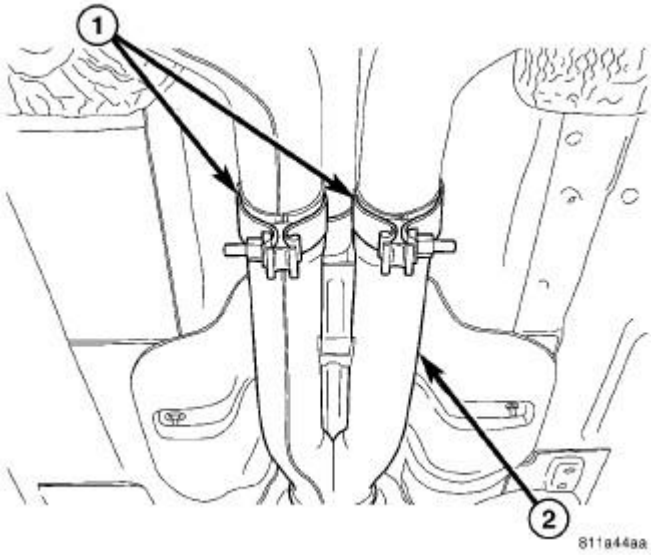

Fig. 172: Exhaust System
Courtesy of CHRYSLER LLC

4. Remove rear exhaust system (2) (dual-outlet exhaust shown in illustration).

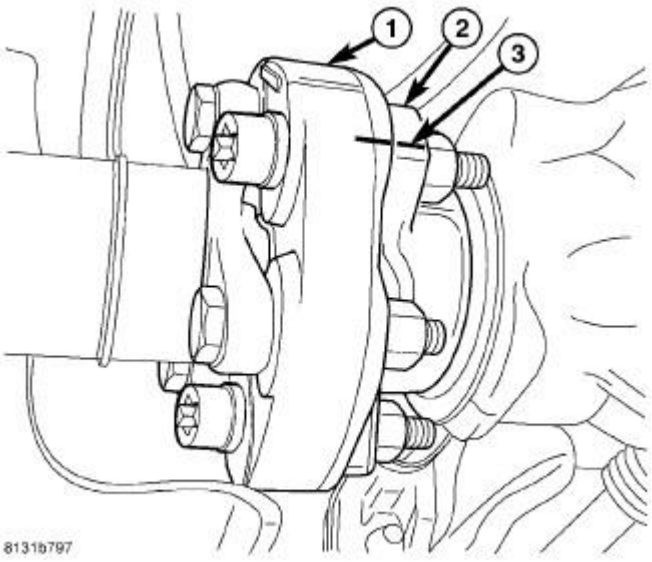

Fig. 173: Alignment Marks - Axle End Shown
Courtesy of CHRYSLER LLC

5. Apply alignment index marks (3) to the propeller shaft rubber coupler (1) and axle flange (2).

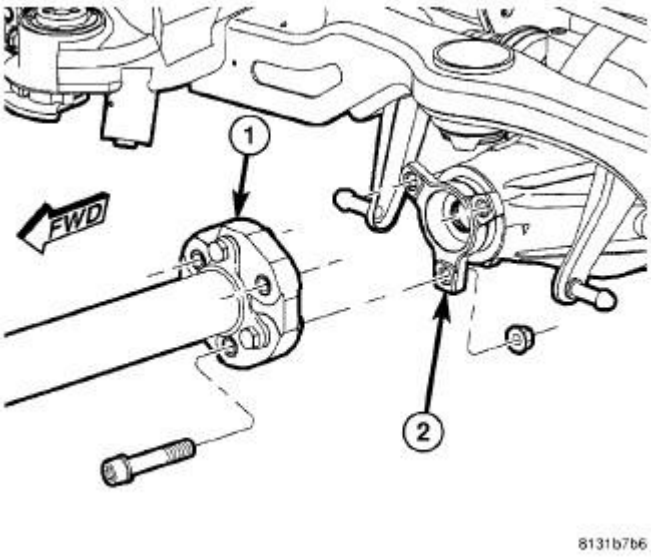

Fig. 174: Propeller Shaft at Rear Axle
Courtesy of CHRYSLER LLC

6. Remove three (four if equipped with 215 MM axle) propeller shaft coupler-to-axle flange bolts and nuts.

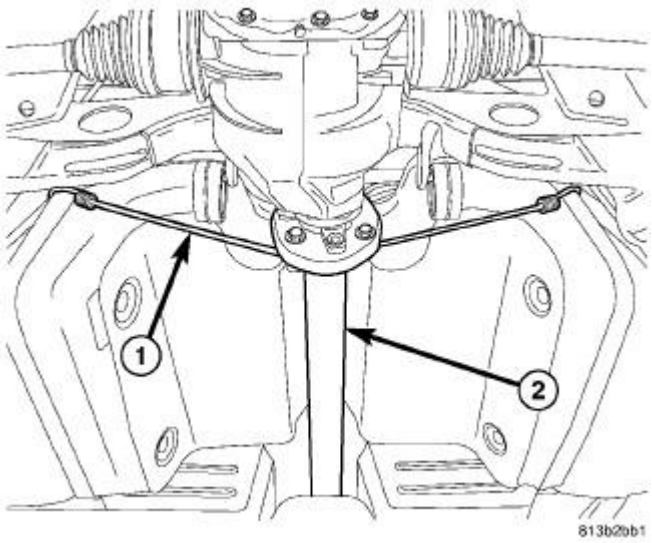

Fig. 175: PROP SHAFT SUPPORT BY BUNGEE CORD
Courtesy of CHRYSLER LLC

7. Support propeller shaft (2) using a bungee cord (1). Attach ends of cord to fuel tank straps as shown in illustration.

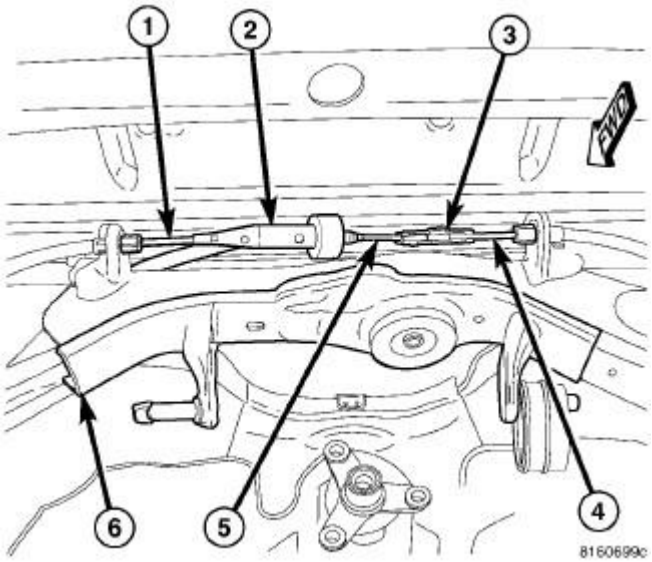

Fig. 176: CABLES AT EQUALIZER
Courtesy of CHRYSLER LLC

NOTE: Due to short travel and low spring tension, it is not necessary to lock-out parking brake lever to service parking brake components.

8. Disconnect front parking brake cable (5) at connector (3) to right rear parking brake cable (4)

above axle differential.

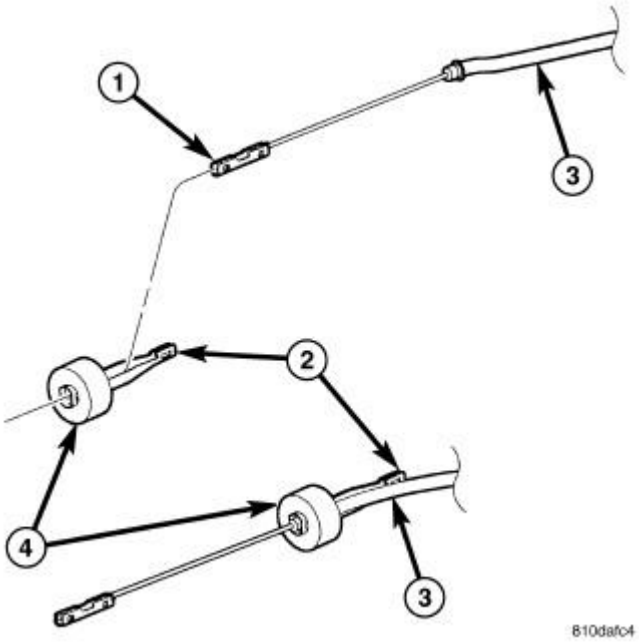

Fig. 177: FRONT CABLE TO EQUALIZER
Courtesy of CHRYSLER LLC

9. Remove front parking brake cable (3) from equalizer (2).

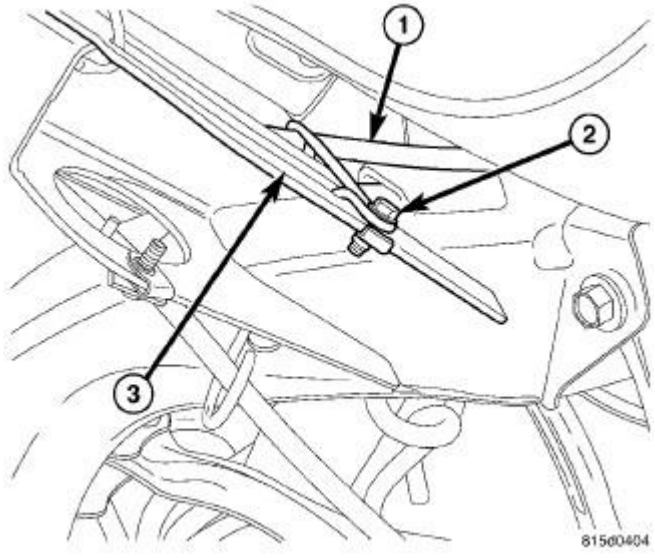

Fig. 178: FRONT CABLE AT LEFT FRONT OF CROSSMEMBER
Courtesy of CHRYSLER LLC

10. Remove screw (2) fastening front parking brake cable (1) routing bracket to rear crossmember

front flange (3).

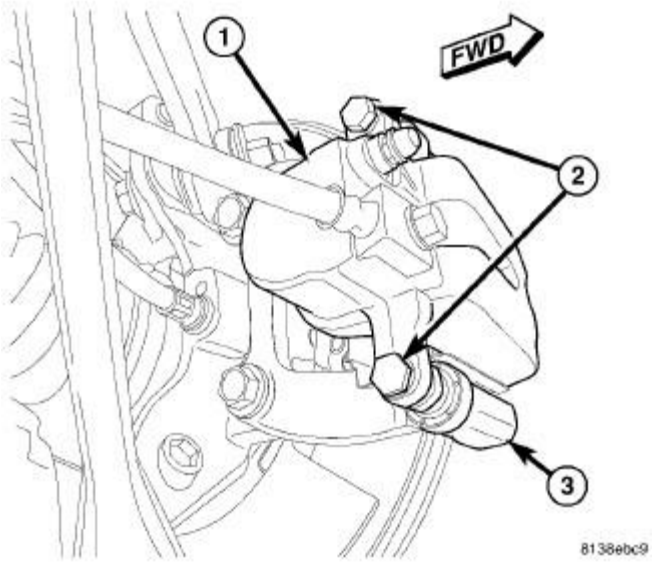

Fig. 179: REAR CALIPER MOUNTING
Courtesy of CHRYSLER LLC

11. If equipped with standard or premium disc brakes, on each rear disc brake:
    a. While holding guide pins from turning, remove disc brake caliper guide pin bolts (2).
    b. Remove brake caliper (1) from brake adapter (3) and pads.
    c. Guide brake caliper up through suspension, following brake hose path. Support caliper above rear suspension using with bungee cord or wire to keep caliper from overextending brake hose when crossmember is lowered.

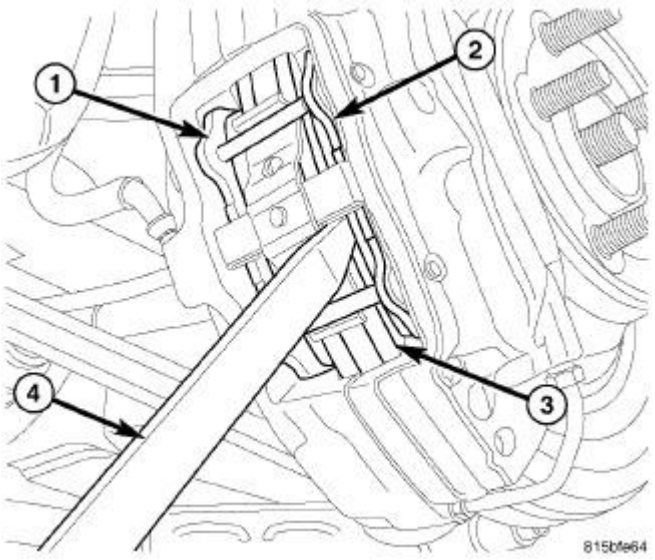

Fig. 180: PUSHING BACK PISTONS IN BORE

Courtesy of CHRYSLER LLC

CAUTION: When pushing pistons back into caliper bores, use only a trim stick as shown in illustration or other suitable soft tool. Never use a screwdriver or other metal pry bar due to potential damage to braking surface of rotor, caliper, pistons or dust boots.

12. If equipped with SRT8 disc brakes, on each rear disc brake, place trim stick (4) between brake pad (2) and outer edge of rotor (3).
13. If equipped with SRT8 disc brakes, on each rear disc brake, using trim stick, slowly apply pressure against brake pad (2) until both pistons (on that side of caliper) are completely bottomed in bores of caliper half.

NOTE: Repeat above procedure to opposite brake pad (1) and pistons as necessary.

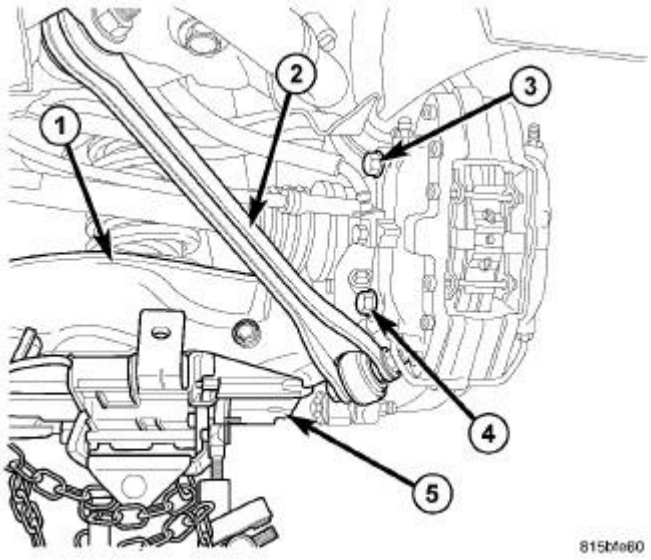

Fig. 181: ACCESSING REAR CALIPER MOUNTING BOLTS
Courtesy of CHRYSLER LLC

14. If equipped with SRT8 disc brakes, on each rear disc brake, support spring link (1) using a transmission jack (5) or other appropriate jack. Raise spring link just enough to access brake caliper lower mounting bolt (4) from above compression link (2).

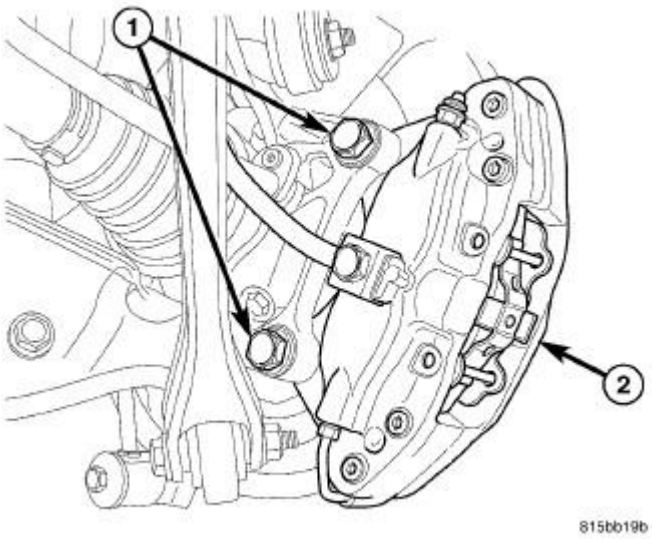

Fig. 182: REAR CALIPER MOUNTING - SRT8
Courtesy of CHRYSLER LLC

15. If equipped with SRT8 disc brakes, on each rear disc brake, remove the lower and upper caliper mounting bolts (1).
16. If equipped with SRT8 disc brakes, on each rear disc brake, remove brake caliper (2) with pads from knuckle and brake rotor. Hang assembly out of way using wire or a bungee cord. Use care not to overextend brake hose when doing this.
17. If equipped with SRT8 disc brakes, remove jack from under spring link.

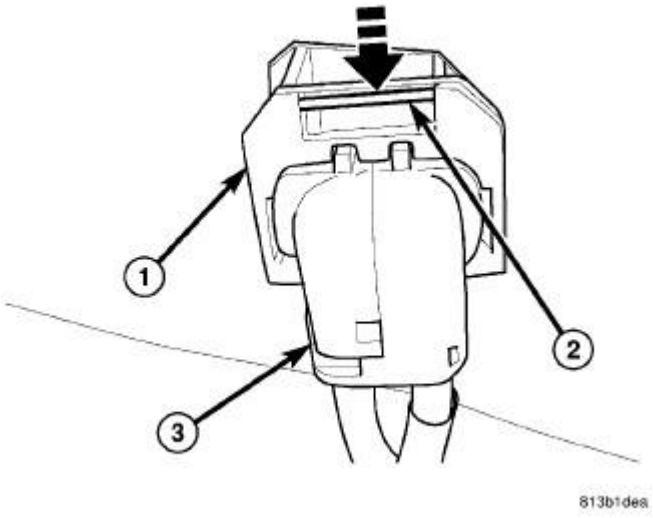

Fig. 183: RELEASE WHEEL SPEED SENSOR CONNECTOR
Courtesy of CHRYSLER LLC

NOTE: To remove wheel speed sensor connector from body wiring harness connector, move retaining clip (2) and pull sensor connector outward.

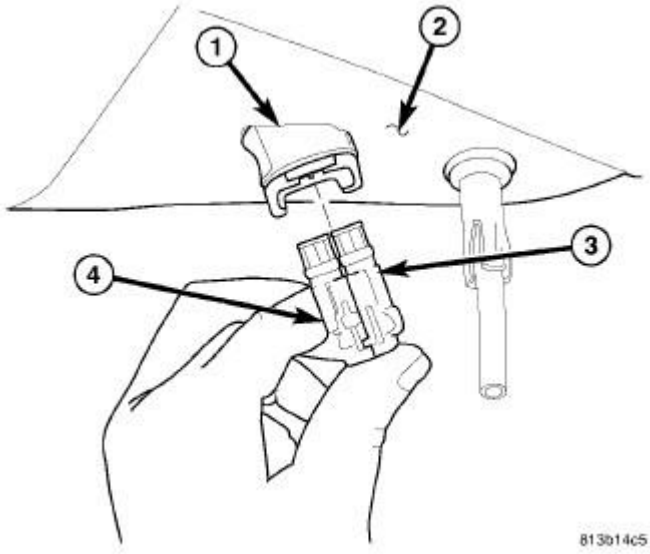

Fig. 184: SENSOR CONNECTION TO BODY CONNECTOR
Courtesy of CHRYSLER LLC

18. Remove wheel speed sensor connectors (3 and 4) from body wiring harness connector (1) located in luggage compartment floor pan (2).

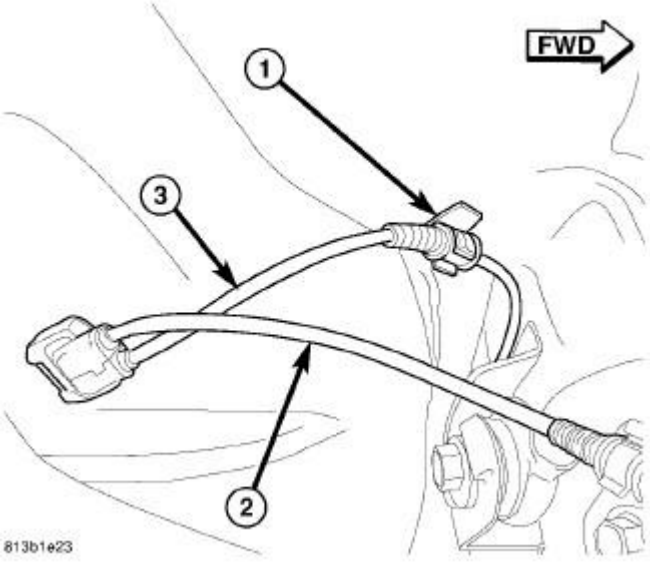

Fig. 185: LEFT/RIGHT REAR WHEEL SPEED SENSOR ROUTING
Courtesy of CHRYSLER LLC

19. Unclip left wheel speed sensor cable (3) from routing clip (1) near body connector.

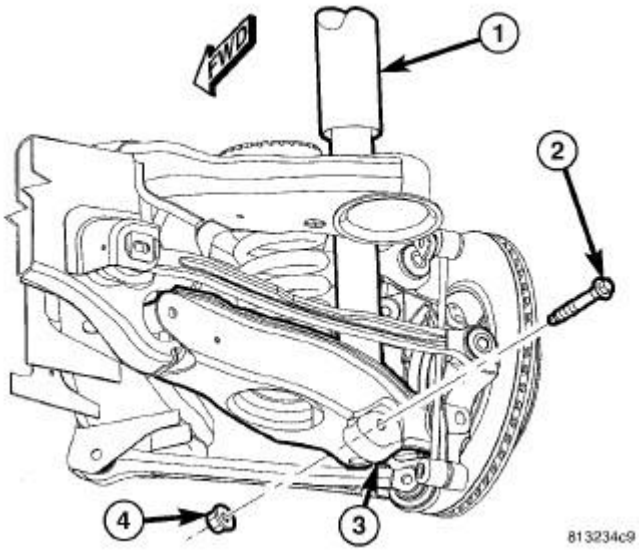

Fig. 186: SHOCK MOUNTING - LOWER
Courtesy of CHRYSLER LLC

20. On each side of vehicle, remove shock absorber (1) lower mounting bolt (2) and nut (4).

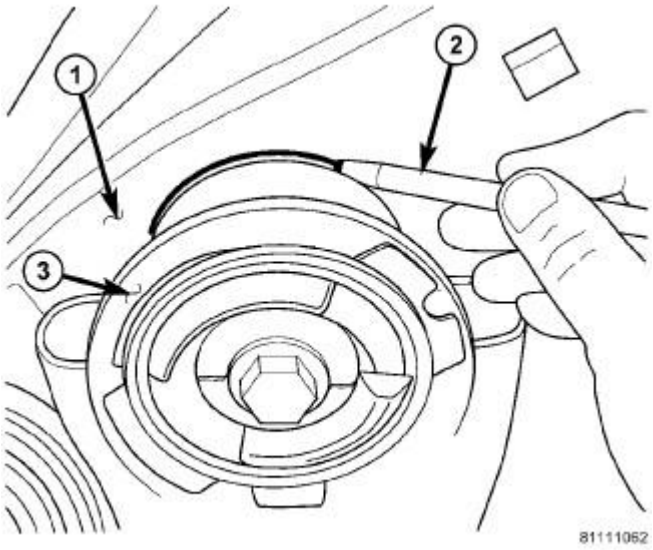

Fig. 187: Marking Location Of Crossmember Mount To Body
Courtesy of CHRYSLER LLC

1 - BODY
2 - MARKER (OR CRAYON)
3 - CROSSMEMBER BUSHING FLANGE

21. Carefully mark location of rear crossmember on body at all four mount (bushing) locations using

a marker or crayon. **Do not use a scratch awl to mark location.**

22. Position an extra pair of jack stands under and support forward end of engine cradle to help stabilize vehicle during rear suspension removal/installation.

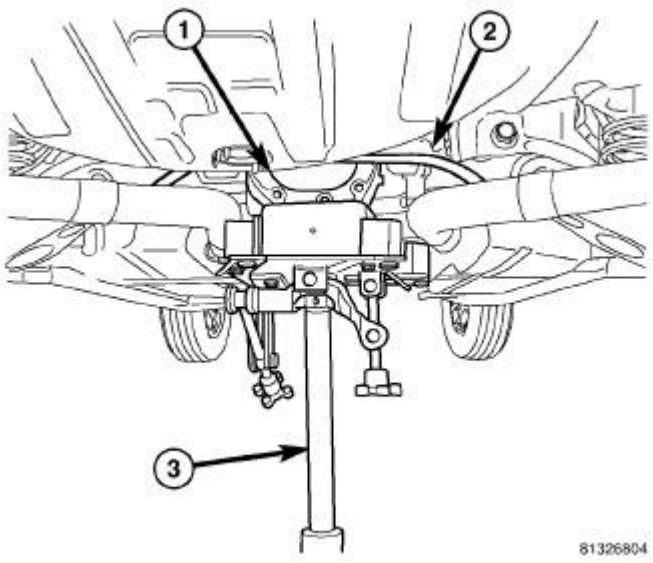

Fig. 188: SUPPORT REAR SUSPENSION USING JACK
Courtesy of CHRYSLER LLC

23. Position under-hoist utility jack or transmission jack (3) under center of rear axle differential (1). Raise jack head to contact differential and secure in place. **When securing crossmember to jack, be sure not to secure stabilizer bar.**

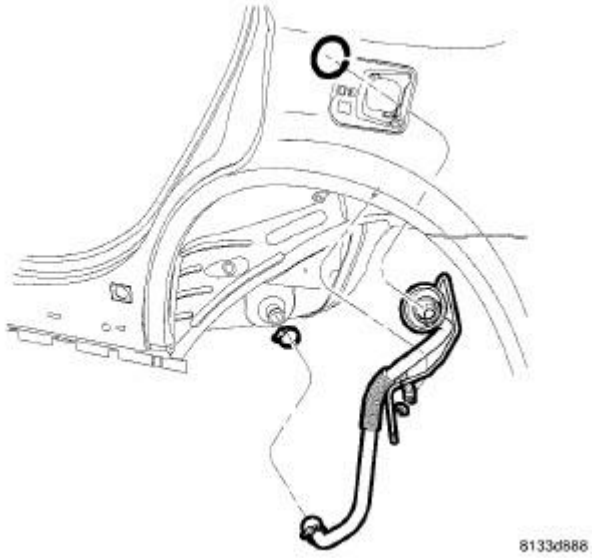

Fig. 189: FILLER TUBE ASSEMBLY
Courtesy of CHRYSLER LLC

WARNING: Before opening fuel system, review all Warnings and Cautions.

24. Remove fuel filler tube. Refer to **Fuel System/Fuel Delivery/TUBE, Fuel Tank Filler - Removal** .

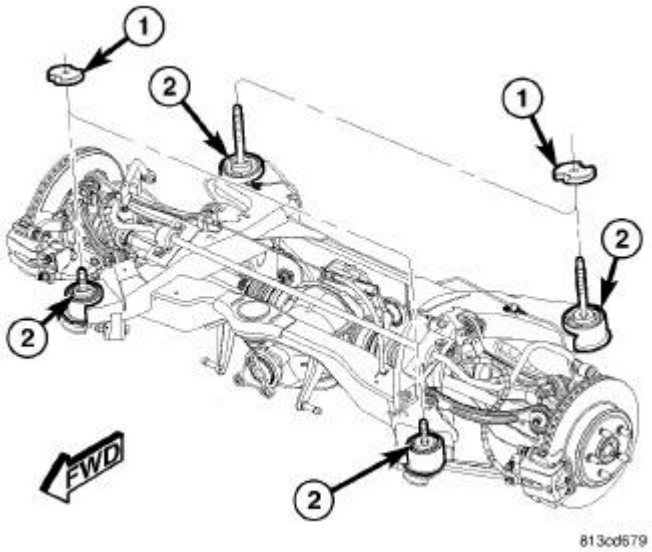

Fig. 190: AWD CROSSMEMBER SPACERS
Courtesy of CHRYSLER LLC

NOTE: If equipped with AWD, when removing crossmember mounting bolts in following step, be sure to not to misplace spacers (1) between crossmember mounts (2) and body.

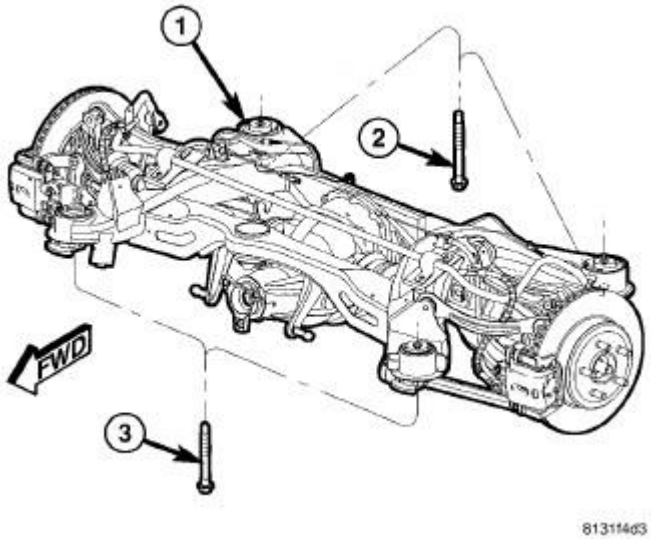

Fig. 191: REAR CROSSMEMBER MOUNTING BOLTS
Courtesy of CHRYSLER LLC

25. Remove both front (3) and both rear (2) mounting bolts fastening crossmember (1) in place.
26. **Slowly** lower crossmember using jack. **Do not lower jack at a fast rate.** Lower just enough to allow propeller shaft removal from rear axle differential. **Do not lower jack any further than necessary.** Slide propeller shaft out of rear axle differential and allow bungee cord previously installed to support.
27. Lower crossmember until crossmember is at a comfortable working level to access bushings. Support rear suspension assembly using jack stands to help stabilize assembly during bushing service.

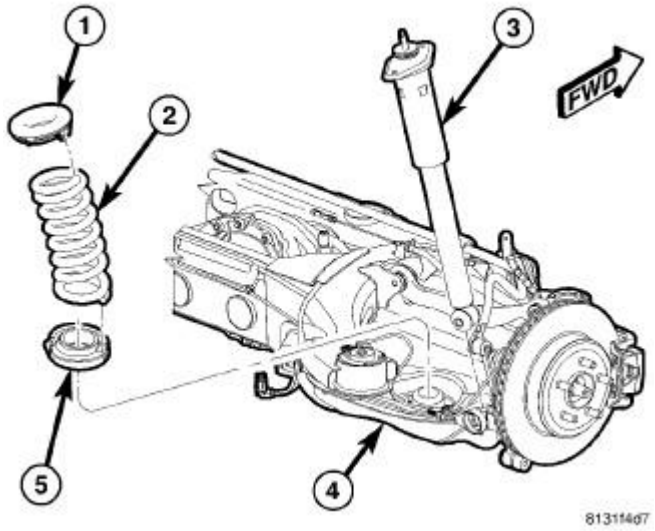

Fig. 192: COIL SPRING AND SHOCK ASSEMBLY
Courtesy of CHRYSLER LLC

28. Remove coil springs (2) with isolators (1 and 5) from spring links (4).

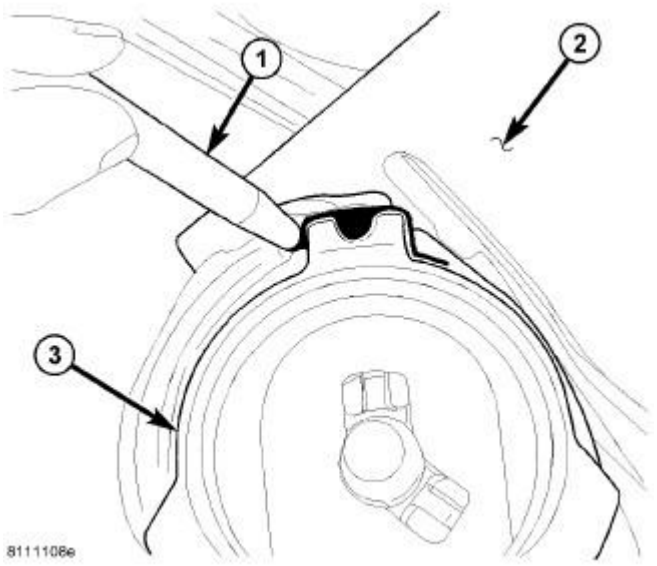

Fig. 193: MARKING LOCATION OF FRONT BUSHING
Courtesy of CHRYSLER LLC

1 - MARKER OR CRAYON
2 - CROSSMEMBER
3 - BUSHING CAN FLANGE

29. As an installation reference, carefully mark location of bushing requiring removal on crossmember (around bushing can flange) using a marker or crayon. **Do not use a scratch awl to mark location.**

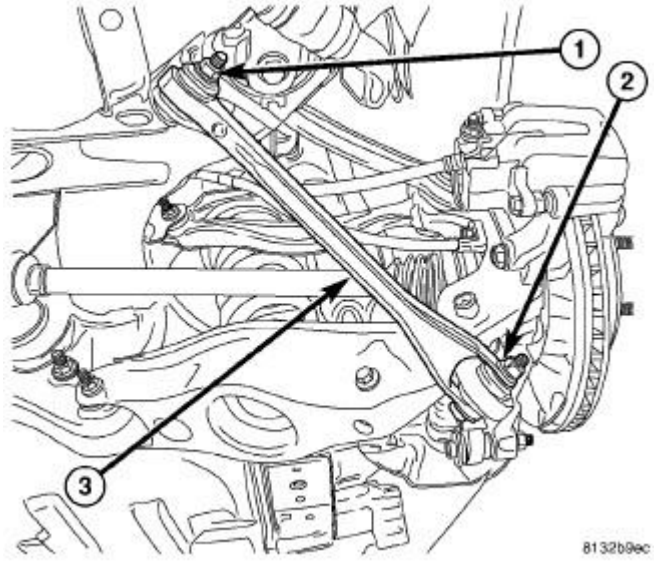

Fig. 194: COMPRESSION LINK MOUNTING
Courtesy of CHRYSLER LLC

30. Remove nut and bolt (1) fastening compression link (3) to crossmember.

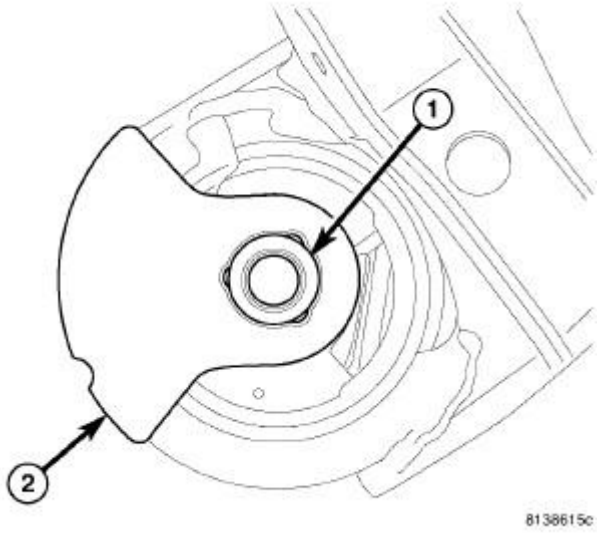

Fig. 195: FRONT BUSHING EAR
Courtesy of CHRYSLER LLC

31. Remove travel limiter (2) from bushing inner metal sleeve (1). To do so, use an appropriate grinding tool to remove inner metal sleeve material until limiter can be safely removed.

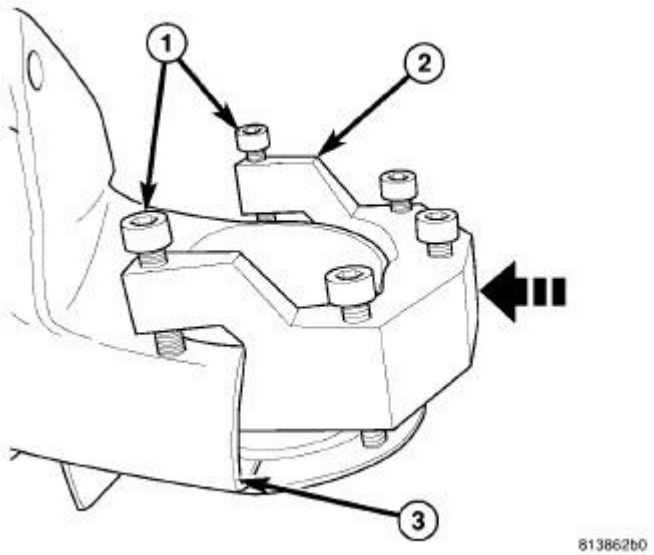

Fig. 196: INSTALLING SUPPORT 9031-9
Courtesy of CHRYSLER LLC

32. Slide Support (2), Special Tool 9031-9, into end of crossmember (3) surrounding bushing bore as shown in illustration.

33. Snug set-screws (1) securing Support (2) to crossmember.

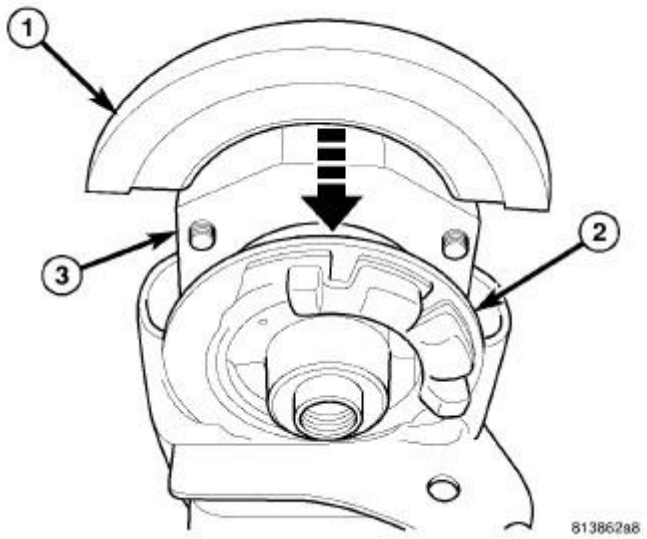

Fig. 197: INSERTING BRACE 9031-10
Courtesy of CHRYSLER LLC

34. Insert Brace (1), Special Tool 9031-10, between Support 9031-9 (3) and bushing bore flange (2) matching step in Brace to bore flange.

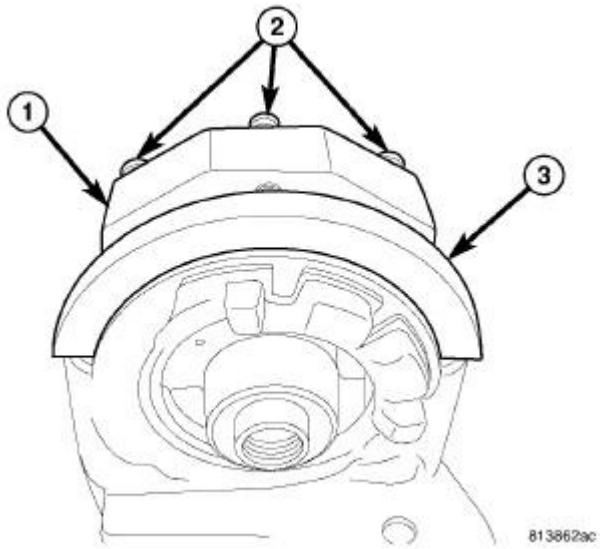

Fig. 198: TIGHTEN SUPPORT 9031-9 SET SCREWS
Courtesy of CHRYSLER LLC

35. Snug set-screws (2) against Brace 9031-10. **Do not overtighten set-screws as they will distort and bend bushing bore flange.**

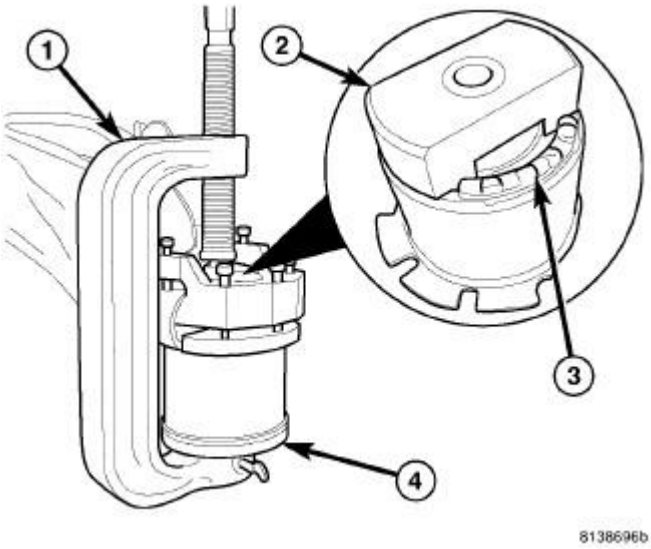

Fig. 199: TOOLS POSITIONED TO REMOVE FRONT BUSHING
Courtesy of CHRYSLER LLC

NOTE: Prior to using Press (1), Special Tool C-4212F Ball Joint Press Installer/Removal, lubricate screw-drive threads to provide ease of use and promote tool longevity.

36. Assemble tools (See following list) over bushing as shown in illustration. Ensure Remover lies between ridges (3) on bushing to properly contact bushing can.
    - (1) Press C-4212F
    - (2) Remover 9031-5A
    - (4) Receiver 9031-8A
37. Tighten Press (1) screw-drive, pressing bushing out of crossmember.
38. Remove all tools.

Installation

INSTALLATION

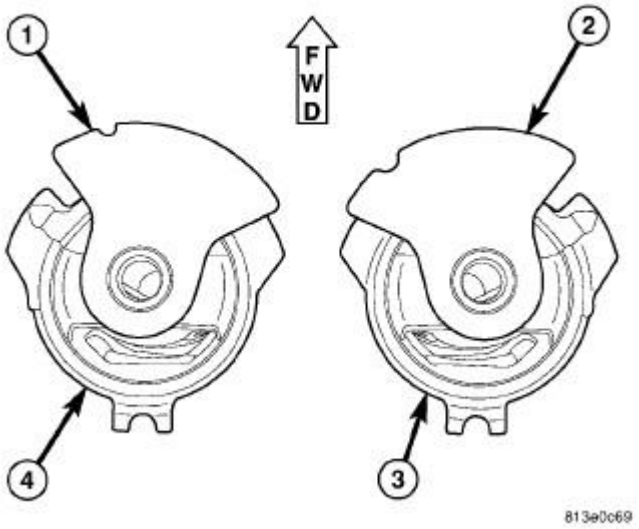

Fig. 200: FRONT BUSHINGS - LEFT AND RIGHT
Courtesy of CHRYSLER LLC

CAUTION: Prior to bushing installation, inspect the bushing to make sure it is the correct side bushing for the job. Left side bushings have the travel limiter (1) tipped to the right in relationship to the bushing (4) can flange as shown in illustration. Right side bushings have the travel limiter (2) tipped to the left in relationship to the bushing (3) can flange as shown in illustration. Once installed, the travel limiters with face slightly outward from straight-ahead position.

CAUTION: It is very important that bushing be installed in same position as original to maintain vehicle ride quality and bushing longevity. That is why bushing, once installed, needs to closely match reference marks applied upon removal of original bushing.

1. Position bushing on crossmember bushing bore aligning bushing can flange with reference marks applied during removal.

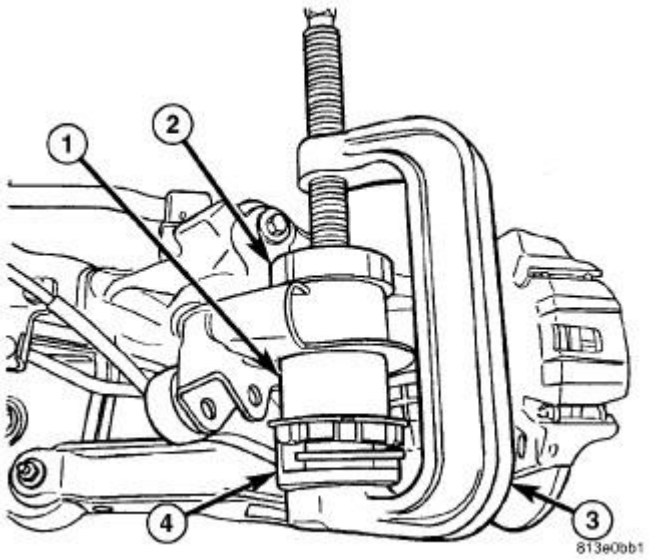

Fig. 201: FRONT BUSHING INSTALLATION
Courtesy of CHRYSLER LLC

2. Assemble tools (See following list) over bushing and crossmember as shown in illustration.

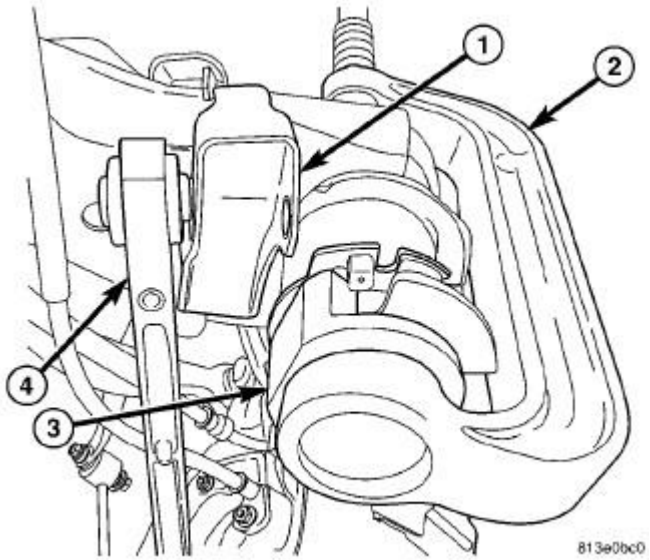

Fig. 202: INSTALLER POSITIONED ON BUSHING
Courtesy of CHRYSLER LLC

NOTE: Ensure Installer (3), Special Tool 9031-7A, is positioned that it will clear compression link bracket (1) while bushing is being installed.

- (2) Receiver 9031-6
- (3) Press C-4212F

- (4) Installer 9031-7A

3. Tighten Press (2) screw-drive, pressing bushing into crossmember. Install bushing until bushing can flange contacts surface of crossmember.
4. Remove tools.
5. Verify bushing closely lines up with reference marks applied during removal.

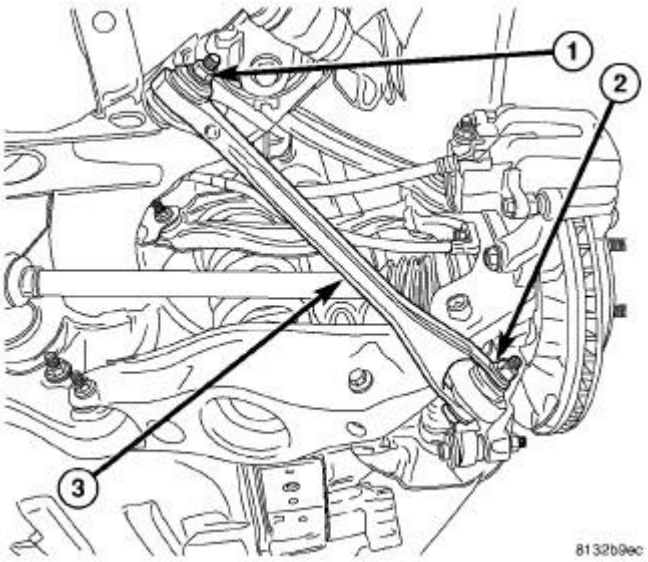

Fig. 203: COMPRESSION LINK MOUNTING
Courtesy of CHRYSLER LLC

6. Install bolt and nut as shown in illustration (1) fastening compression link (3) to crossmember. **Do not tighten bolt at this time.**

NOTE: Do not reinstall coil springs on spring links at this time. Install as directed in later steps.

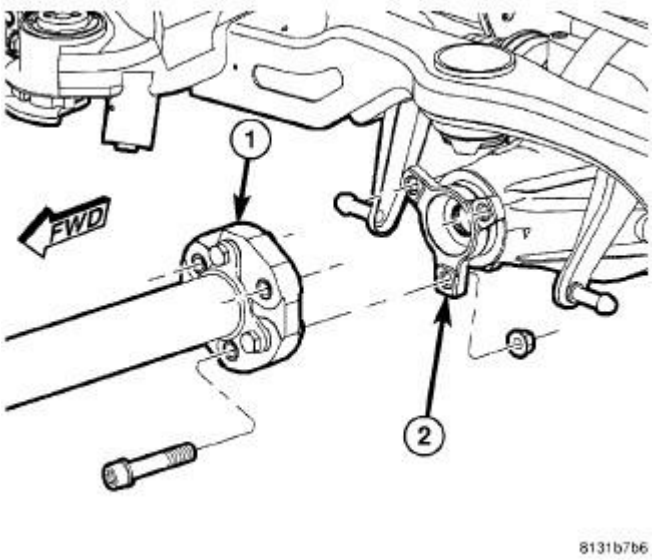

Fig. 204: Propeller Shaft at Rear Axle
Courtesy of CHRYSLER LLC

7. Raise crossmember to body mounting points. As crossmember is raised, slide propeller shaft (1) onto rear axle differential flange (2) and align shock absorbers with pockets in spring links.

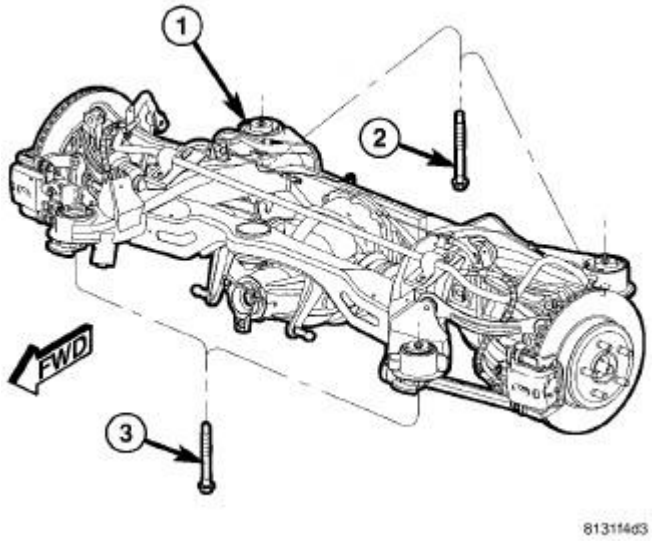

Fig. 205: REAR CROSSMEMBER MOUNTING BOLTS
Courtesy of CHRYSLER LLC

NOTE: There are four crossmember mounting bolts. Rear mounting bolts (2) are longer than front mounting bolts (3). Do not interchange mounting bolts.

8. Continue to raise crossmember (1) with jack until crossmember mounting bolts (2 and 3) can be

installed. Install left side crossmember mounting bolts, but not the right side bolts. It is not necessary to tighten bolts at this point.

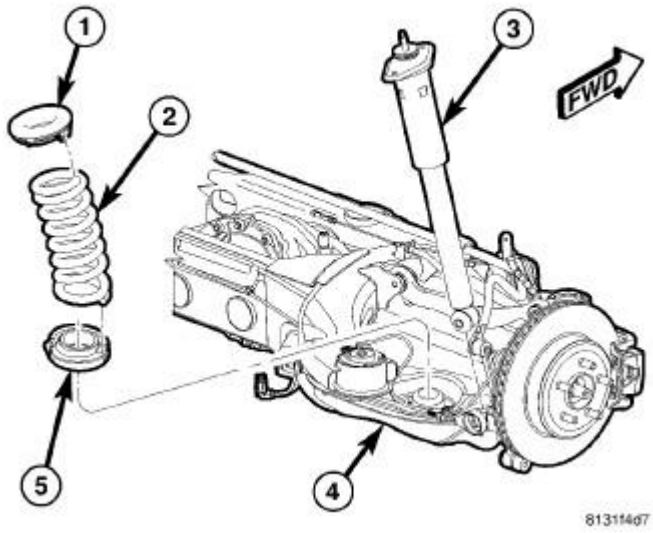

Fig. 206: COIL SPRING AND SHOCK ASSEMBLY
Courtesy of CHRYSLER LLC

CAUTION: To avoid damaging other components of vehicle, do not lower crossmember any further than necessary to install coil spring (2).

9. **Slowly** lower jack allowing right side of crossmember to drop. **Do not lower jack at a fast rate.** Lower jack just enough to allow spring (2) Installation. **Do not lower jack any further than necessary.**

NOTE: Before installing coil spring, make sure isolators (1 and 5) are completely installed on ends of spring.

10. Install coil spring (2) with isolators into spring pocket of spring link fitting the lower isolator to the shape of the pocket, then align top of spring with body mount.

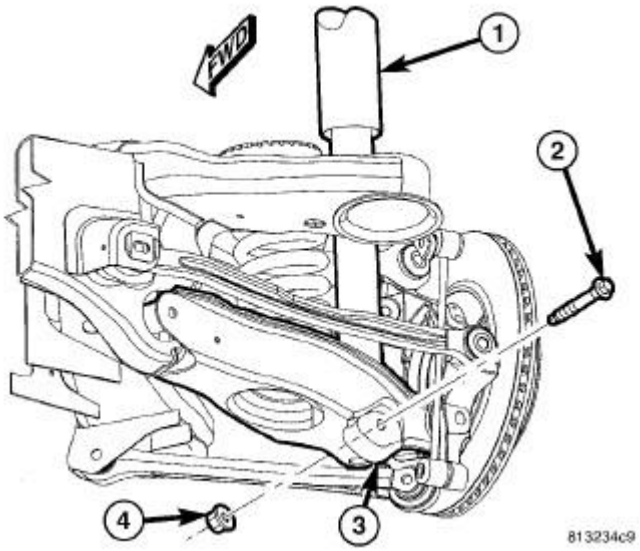

Fig. 207: SHOCK MOUNTING - LOWER
Courtesy of CHRYSLER LLC

11. Carefully raise jack, guiding coil spring and lower end of shock absorber (1) into mounted positions. Once shock absorber (1) lower mounting hole lines up with hole in spring link (3), stop jacking.
12. Install lower shock mounting bolt (2) and nut (4). **Do not tighten at this time.**

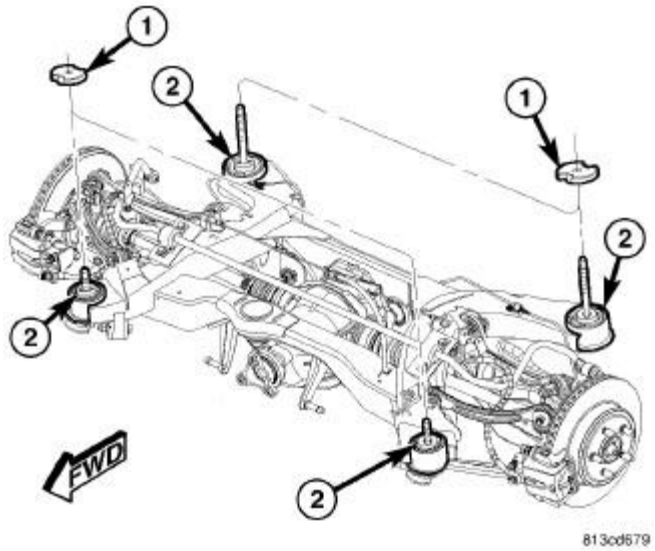

Fig. 208: AWD CROSSMEMBER SPACERS
Courtesy of CHRYSLER LLC

13. If vehicle is equipped with AWD, insert spacers (1) on top of right crossmember mount bushings (2) before crossmember is raised into place.

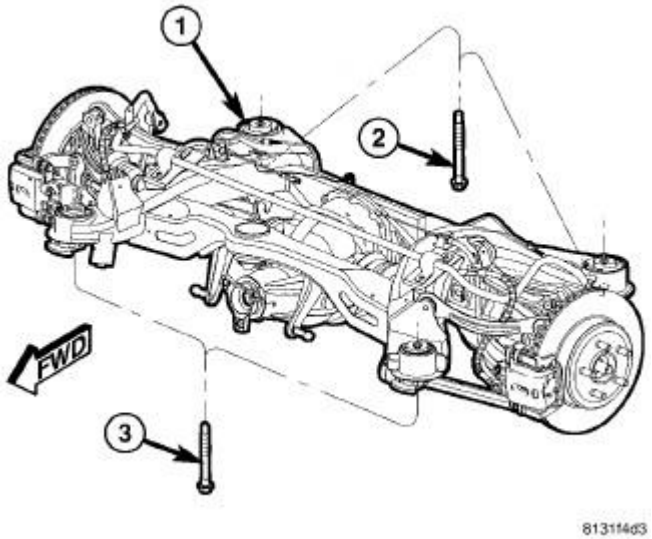

Fig. 209: REAR CROSSMEMBER MOUNTING BOLTS
Courtesy of CHRYSLER LLC

NOTE: There are four crossmember mounting bolts. Rear mounting bolts (2) are longer than front mounting bolts (3). Do not interchange mounting bolts.

14. Raise right side of crossmember (1) into mounted position. Install right side crossmember mounting bolts (2 and 3). **Snug, but do not fully tighten bolts at this time.**
15. Remove both front and rear crossmember mounting bolts (2 and 3) on **left** side of vehicle.

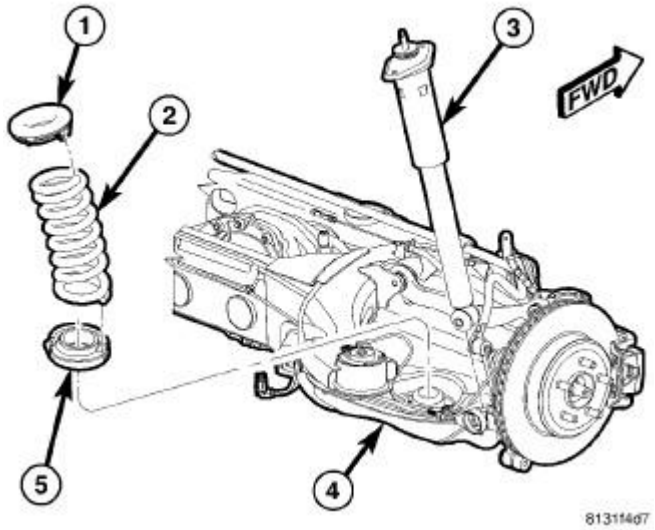

Fig. 210: COIL SPRING AND SHOCK ASSEMBLY
Courtesy of CHRYSLER LLC

CAUTION: To avoid damaging other components of vehicle, do not lower crossmember any further than necessary to install coil spring (2).

16. **Slowly** lower jack allowing left side of crossmember to drop. **Do not lower jack at a fast rate.** Lower jack just enough to allow spring (2) Installation. **Do not lower jack any further than necessary.**

NOTE: Before installing coil spring, make sure isolators (1 and 5) are completely installed on ends of spring.

17. Install coil spring (2) with isolators into spring pocket of spring link fitting the lower isolator to the shape of the pocket, then align top of spring with body mount.

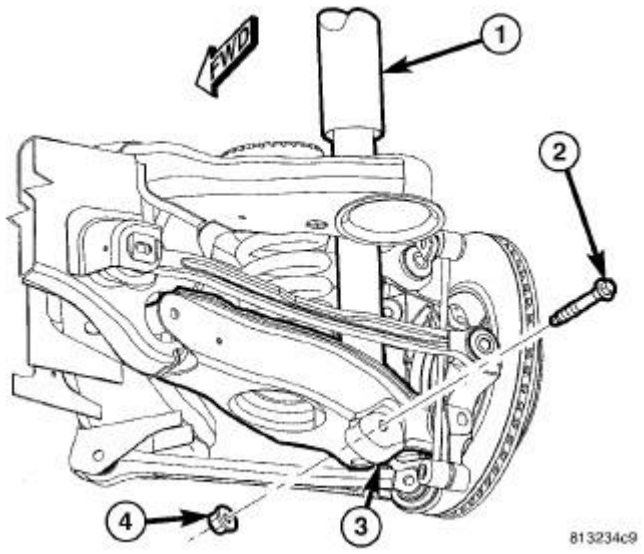

Fig. 211: SHOCK MOUNTING - LOWER
Courtesy of CHRYSLER LLC

18. Carefully raise jack, guiding coil spring and lower end of shock absorber (1) into mounted positions. Once shock absorber (1) lower mounting hole lines up with hole in spring link (3), stop jacking.
19. Install lower shock mounting bolt (2) and nut (4). **Do not tighten at this time.**

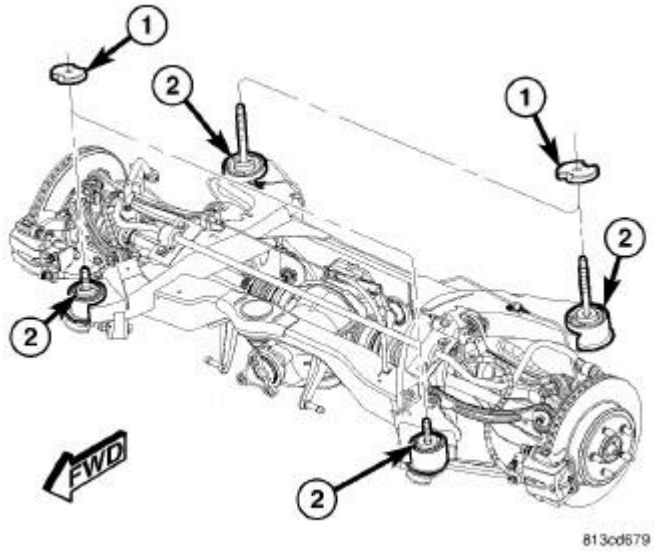

Fig. 212: AWD CROSSMEMBER SPACERS
Courtesy of CHRYSLER LLC

20. If vehicle is equipped with AWD, insert spacers (1) on top of left crossmember mount bushings (2) before crossmember is raised into place.

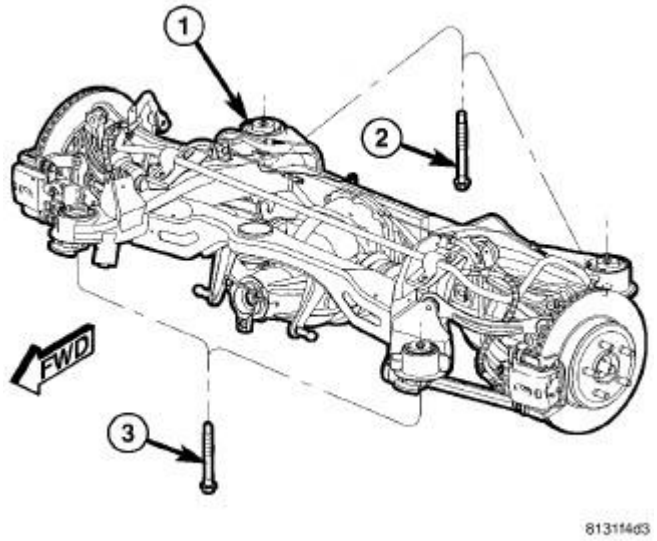

Fig. 213: REAR CROSSMEMBER MOUNTING BOLTS
Courtesy of CHRYSLER LLC

NOTE: There are four crossmember mounting bolts. Rear mounting bolts (2) are longer than front mounting bolts (3). Do not interchange mounting bolts.

21. Raise left side of crossmember (1) into mounted position. Install left side crossmember

mounting bolts (2 and 3). **Snug, but do not fully tighten bolts at this time.**

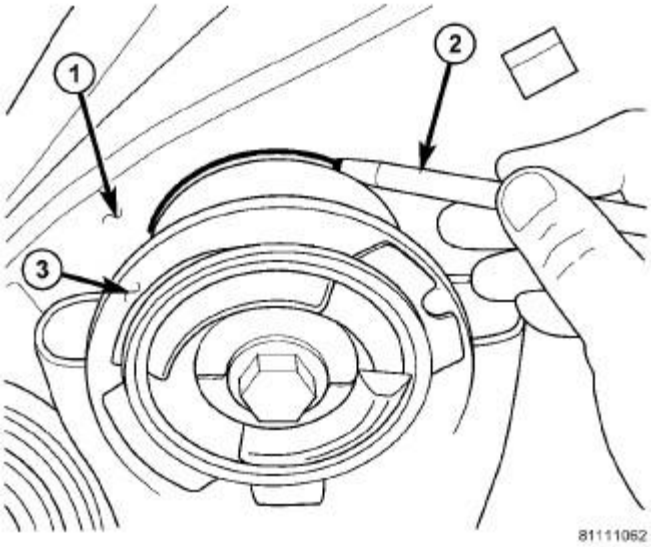

Fig. 214: Marking Location Of Crossmember Mount To Body
Courtesy of CHRYSLER LLC

1 - BODY 2 - MARKER (OR CRAYON) 3 - CROSSMEMBER BUSHING FLANGE

22. Shift crossmember as necessary to line up mounts (3) with location marks drawn on body (1) before removal.

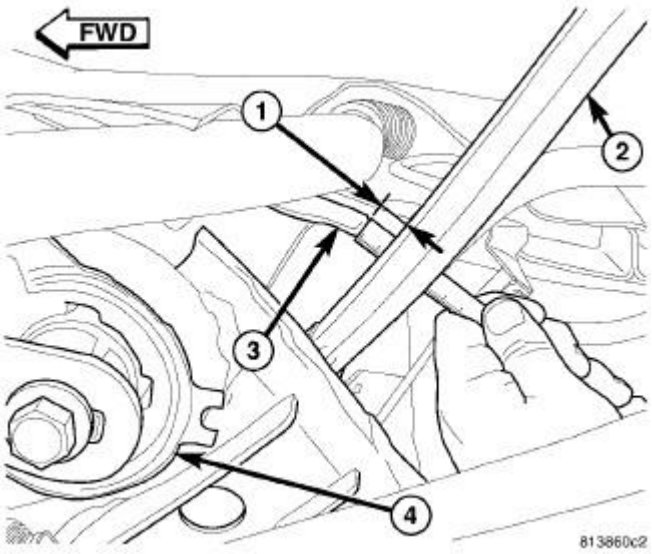

Fig. 215: MEASURING TENSION LINK CLEARANCE

Courtesy of CHRYSLER LLC

23. Once mounts are lined up with location marks, on both sides of vehicle, measure distance (1) between the tension link (2) and weld flange (3) on body directly in front of it, just outboard of the front mount bushing (4). **This distance must be at least 12 mm to allow proper clearance for suspension movement.** If distance is less than 12 mm on either side of vehicle, shift that side of rear crossmember directly rearward until distance is 12 mm or greater. To do so, loosen 3 mounting bolts slightly, leaving one on opposite side of shift snugged to pivot off of. Shift crossmember rearward and snug loosened bolts. Remeasure opposite side to be sure it still maintains minimum 12 mm distance.

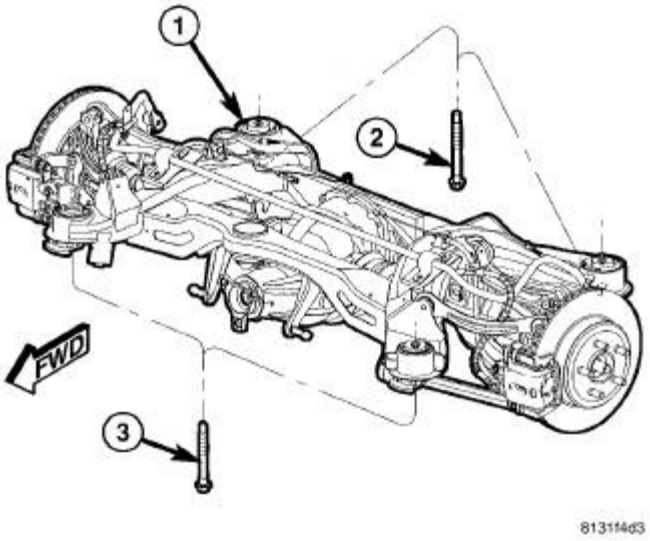

Fig. 216: REAR CROSSMEMBER MOUNTING BOLTS
Courtesy of CHRYSLER LLC

24. Tighten all four crossmember mounting bolts (2 and 3) to 180 N.m (133 ft. lbs.).

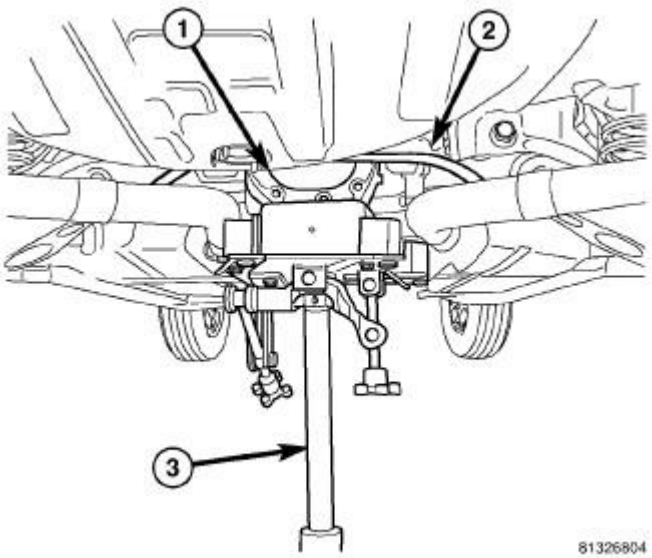

Fig. 217: SUPPORT REAR SUSPENSION USING JACK
Courtesy of CHRYSLER LLC

25. Remove jack (3) from under rear axle differential.

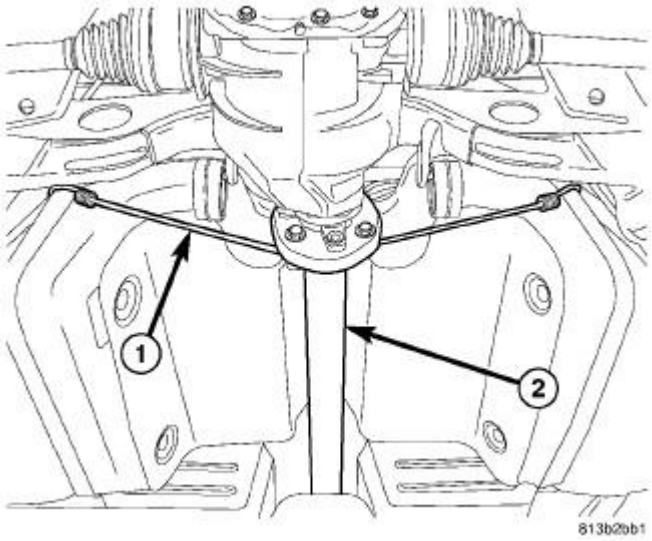

Fig. 218: PROP SHAFT SUPPORT BY BUNGEE CORD
Courtesy of CHRYSLER LLC

26. Remove bungee cord (1) supporting propeller shaft (2).

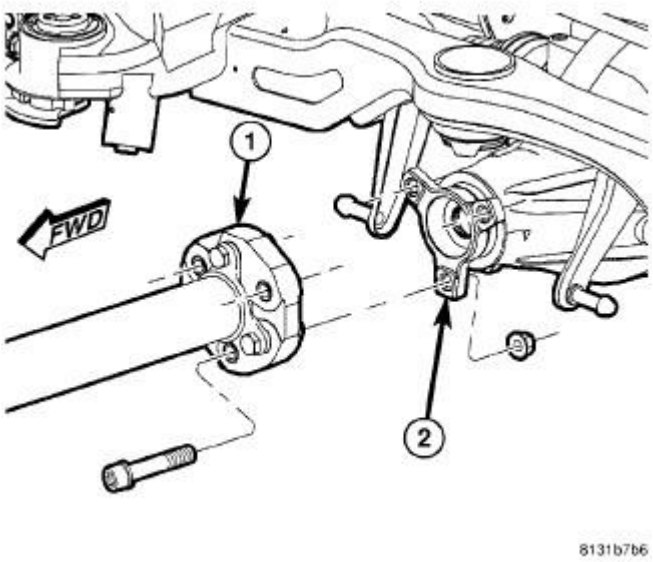

Fig. 219: Propeller Shaft at Rear Axle
Courtesy of CHRYSLER LLC

27. Align propeller shaft index marks placed upon removal. Install propeller shaft rear coupler-to-axle flange bolts and nuts by hand. Tighten propeller shaft rear coupler-to-axle flange bolts to 81 N.m (60 ft. lbs.).

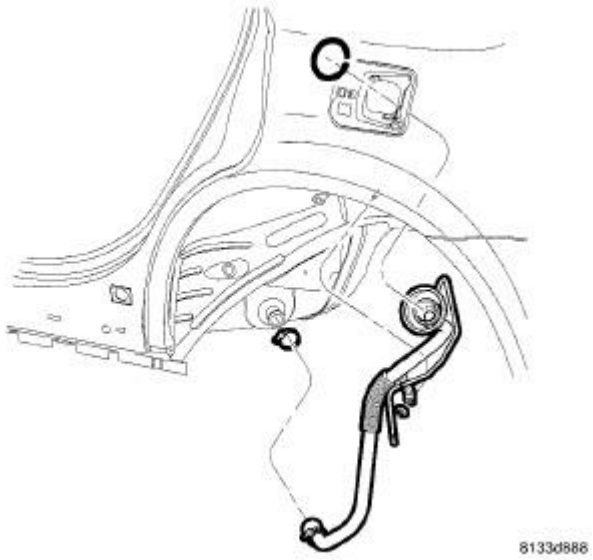

Fig. 220: FILLER TUBE ASSEMBLY
Courtesy of CHRYSLER LLC

28. Install fuel filler tube. Refer to **Fuel System/Fuel Delivery/TUBE, Fuel Tank Filler - Installation** .

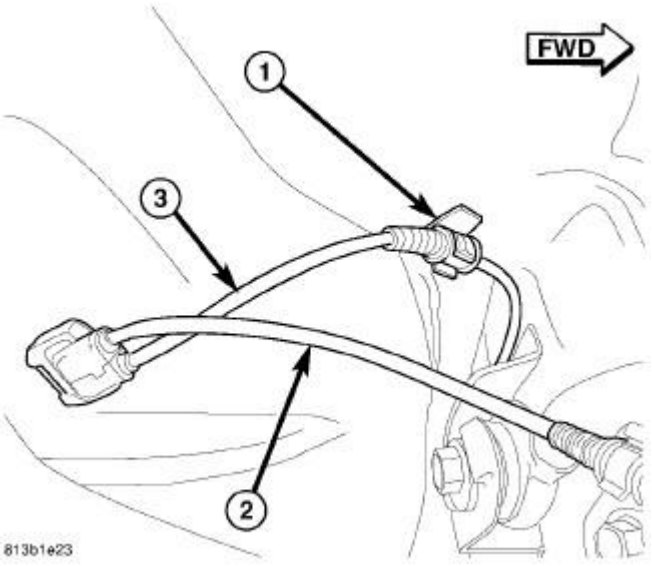

Fig. 221: LEFT/RIGHT REAR WHEEL SPEED SENSOR ROUTING
Courtesy of CHRYSLER LLC

29. Clip left rear wheel speed sensor cable (3) to routing clip (1) near body connector.

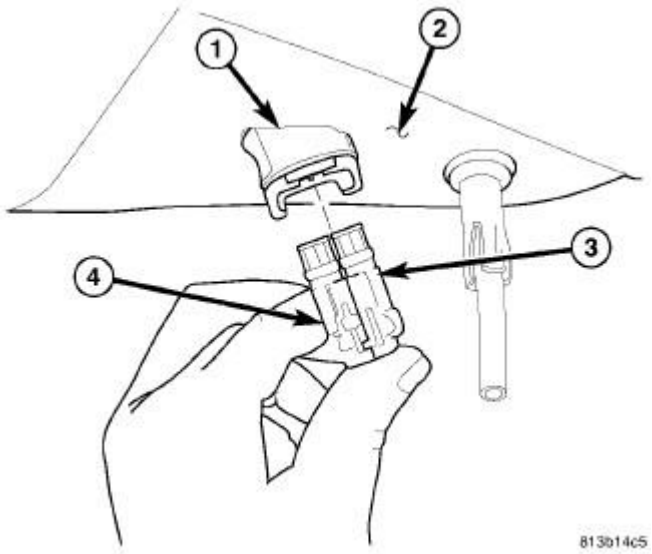

Fig. 222: SENSOR CONNECTION TO BODY CONNECTOR
Courtesy of CHRYSLER LLC

30. Match left rear wheel speed sensor connector (4) to right sensor connector (3) to make one connector.
31. Insert speed sensor connectors (3 and 4) into body wiring harness connector (1) located in luggage compartment floor pan (2). When installing connector, make sure retaining clip on body connector is properly in place and sensor connector cannot be pulled out.

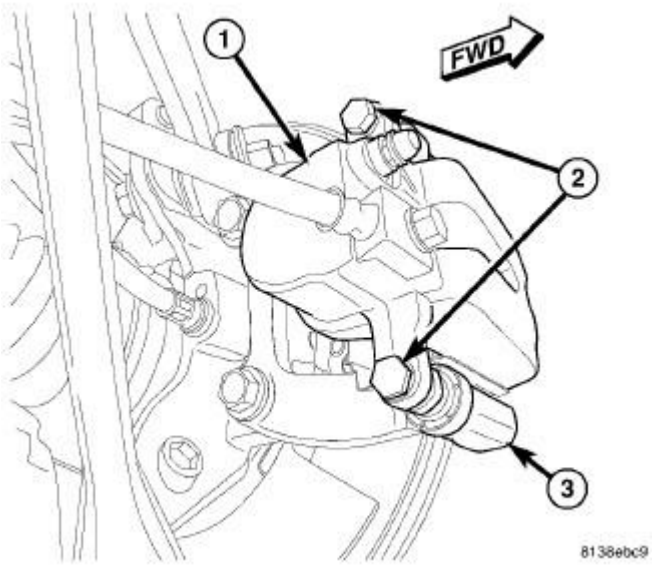

Fig. 223: REAR CALIPER MOUNTING
Courtesy of CHRYSLER LLC

32. If equipped with standard or premium disc brakes, on each rear disc brake:
    a. Push caliper guide pins into caliper adapter to clear caliper mounting bosses when installing.
    b. Guide caliper and brake hose down through rear suspension, then slide caliper over brake pads and onto caliper adapter (3).
    c. Align caliper mounting holes with guide pins, then install guide pin bolts (2). While holding guide pins from turning, tighten bolts to 31 N.m (23 ft. lbs.) torque.
    d. Make sure brake hose is properly routed and will not come in contact with suspension components.
33. If equipped with SRT8 disc brakes, at each rear disc brake, support spring link using a transmission jack or other appropriate jack as indicated in removal procedure. See **Frame and Bumpers/Frame/ISOLATOR, Rear Crossmember - Removal**

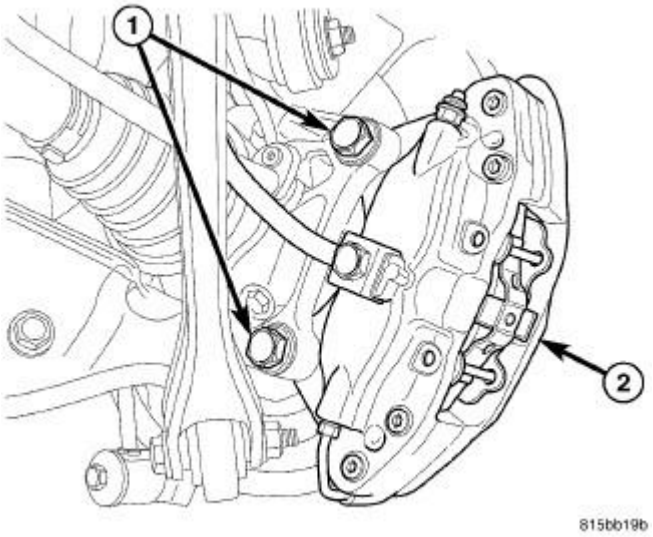

Fig. 224: REAR CALIPER MOUNTING - SRT8
Courtesy of CHRYSLER LLC

34. If equipped with SRT8 disc brakes, on each rear disc brake, slide caliper with pads (2) over brake rotor and align with knuckle.
35. If equipped with SRT8 disc brakes, on each rear disc brake, install caliper mounting bolts (1). Tighten bolts to 130 N.m (96 ft. lbs.) torque.
36. If equipped with SRT8 disc brakes, on each rear disc brake, remove jack from under spring link.

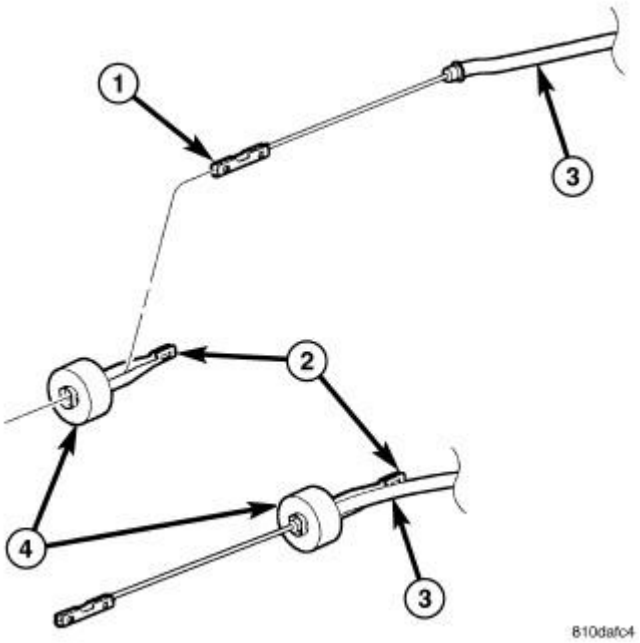

Fig. 225: FRONT CABLE TO EQUALIZER

Courtesy of CHRYSLER LLC

37. Route parking brake cable above rear crossmember, then slide cable (1, 3) through equalizer (2) above rear axle differential (once installed).

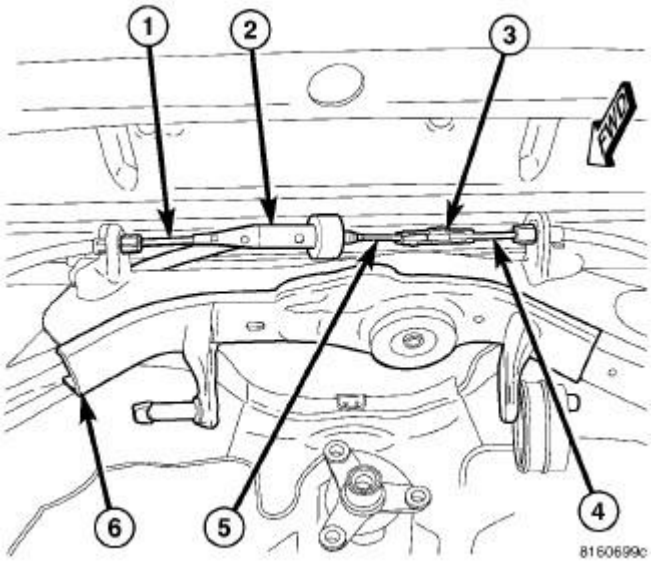

Fig. 226: CABLES AT EQUALIZER
Courtesy of CHRYSLER LLC

NOTE: Due to short travel and low spring tension, it is not necessary to lock-out parking brake lever to service parking brake components.

38. Connect front parking brake cable (5) at connector (3) to right rear parking brake cable (4).

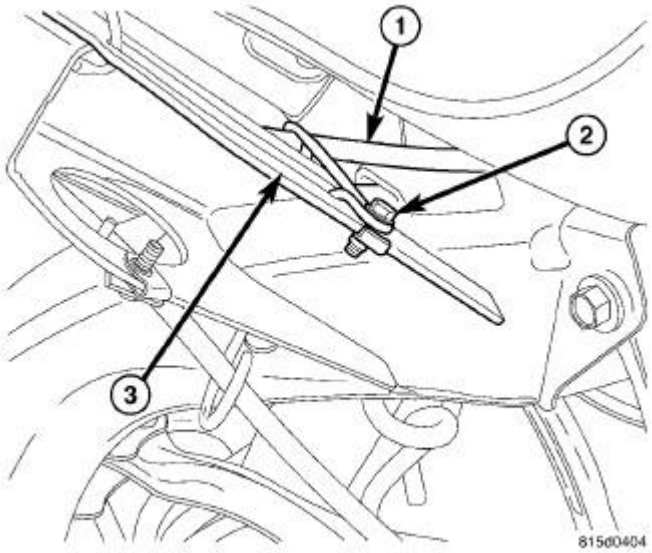

Fig. 227: FRONT CABLE AT LEFT FRONT OF CROSSMEMBER
Courtesy of CHRYSLER LLC

39. Insert front parking brake cable routing bracket locating pin into front flange of crossmember (3), then install screw (2) fastening cable (1) routing bracket to rear crossmember.

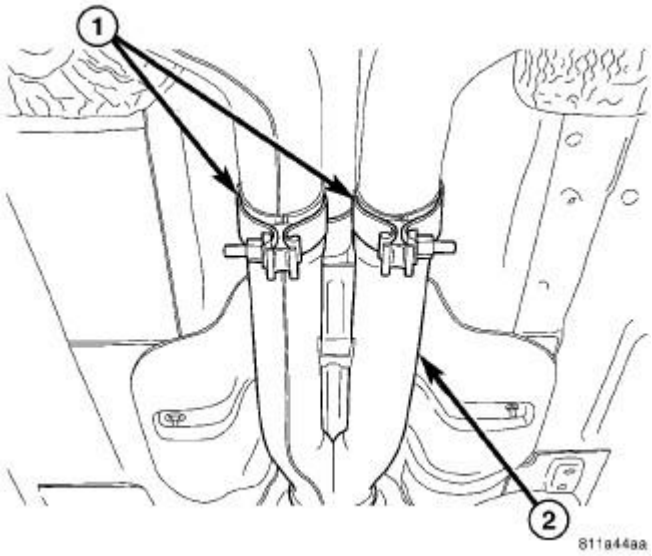

Fig. 228: Exhaust System
Courtesy of CHRYSLER LLC

40. Install rear exhaust system (2) (dual-outlet exhaust shown in illustration).

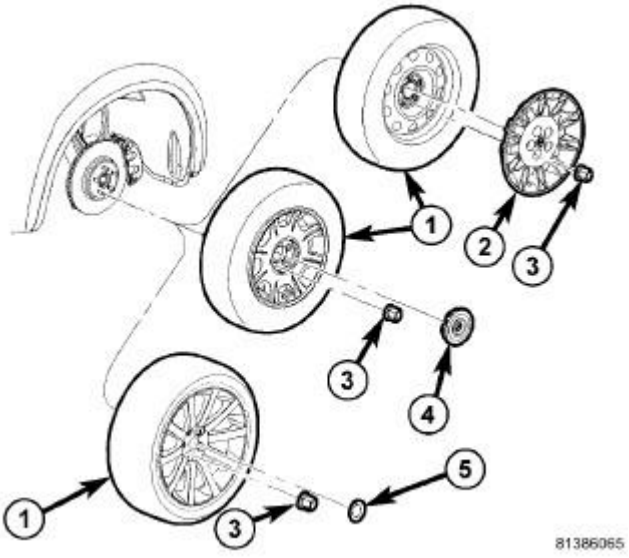

Fig. 229: TIRE AND WHEEL MOUNTING
Courtesy of CHRYSLER LLC

41. Install tire and wheel assemblies (1). Tighten wheel mounting nuts (3) to 150 N.m (110 ft. lbs.). Refer to **Tires and Wheels - Installation** .
42. Lower vehicle until rear wheels are just above floor level.
43. Apply parking brake lever. Release lever, then reapply.
44. Check to make sure rear wheels will not rotate with lever applied.
45. Lower vehicle.

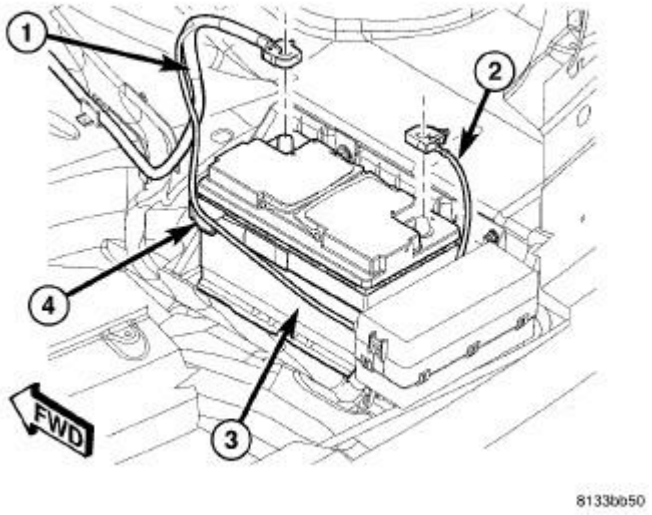

Fig. 230: BATTERY AND CABLES
Courtesy of CHRYSLER LLC

46. Connect battery negative cable (2) to battery post. It is important that this is performed properly. Refer to **Electrical - Engine Systems/Battery System - Standard Procedure** .
47. Pump brake pedal several times to ensure vehicle has a firm brake pedal before moving vehicle.
48. Position vehicle on alignment rack/drive-on lift. Raise vehicle as necessary to access mounting bolts.

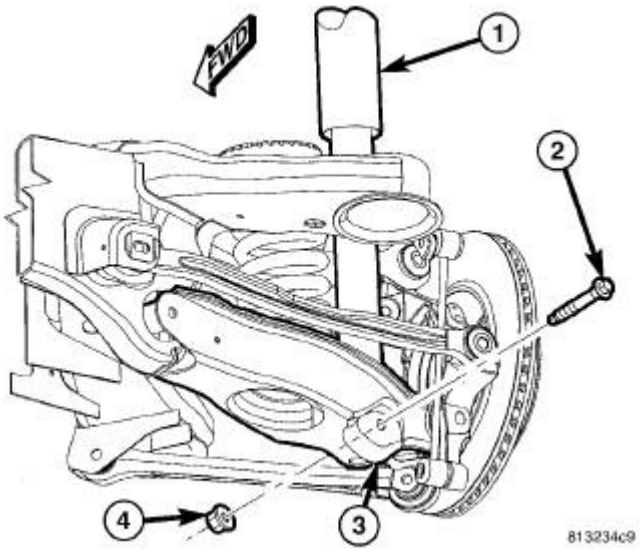

Fig. 231: SHOCK MOUNTING - LOWER
Courtesy of CHRYSLER LLC

49. Tighten shock absorber lower mounting bolt nuts (4) to 72 N.m (53 ft. lbs.).

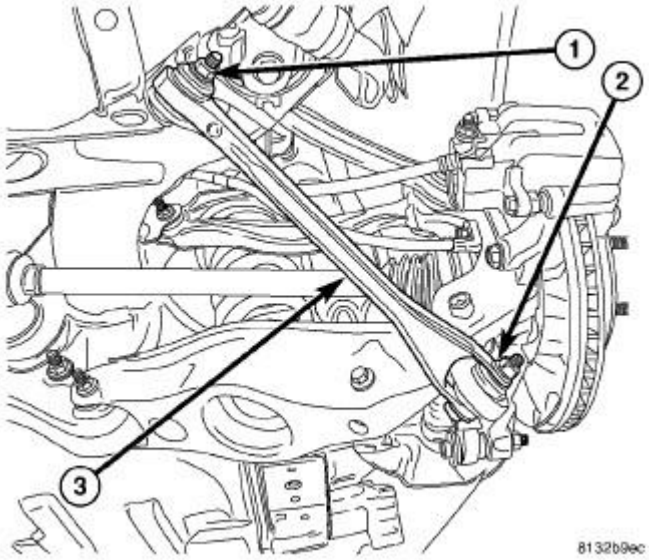

Fig. 232: COMPRESSION LINK MOUNTING
Courtesy of CHRYSLER LLC

50. Tighten compression link bolt and nut (1) at crossmember to 85 N.m (63 ft. lbs.).
51. Perform wheel alignment, paying special attention to thrust angle. If rear crossmember needs to be shifted to align thrust angle, try to avoid compromising tension link clearance (Refer to 23). Refer to **Front Suspension/Wheel Alignment - Standard Procedure** .

ISOLATOR, REAR CROSSMEMBER, REAR MOUNT

Removal

REMOVAL

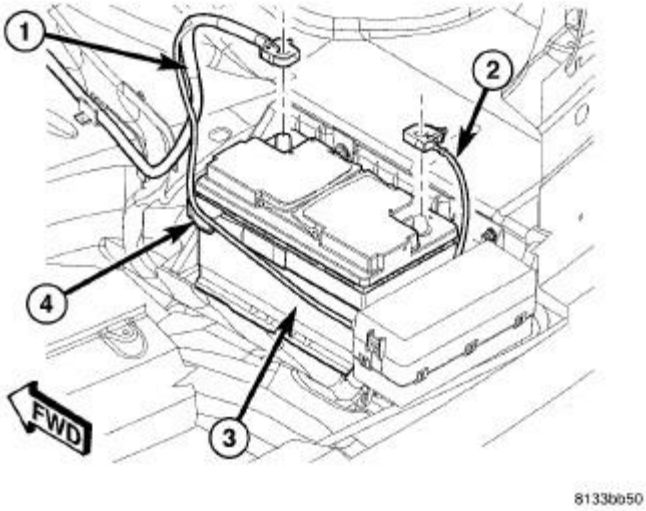

Fig. 233: BATTERY AND CABLES
Courtesy of CHRYSLER LLC

1. Disconnect and isolate battery negative cable (2) from battery post.
2. Raise and support vehicle. Refer to **Vehicle Quick Reference/Hoisting - Standard Procedure** .

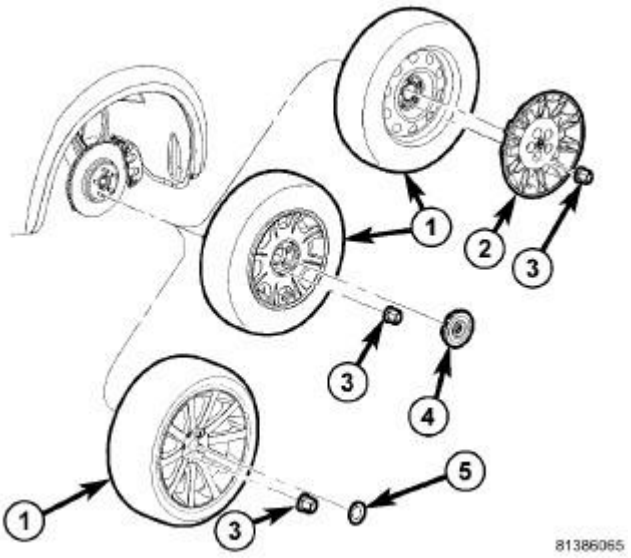

Fig. 234: TIRE AND WHEEL MOUNTING

Courtesy of CHRYSLER LLC

3. On each side of vehicle rear, remove wheel mounting nuts (3), then tire and wheel assembly (1).

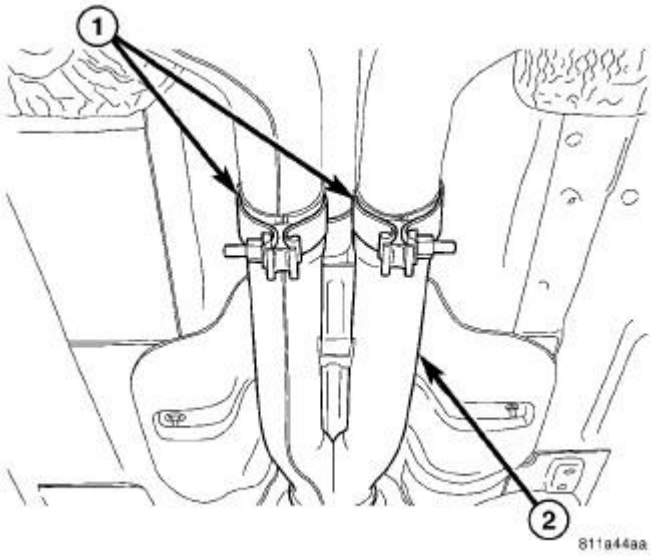

Fig. 235: Exhaust System
Courtesy of CHRYSLER LLC

4. Remove rear exhaust system (2) (dual-outlet exhaust shown in illustration).

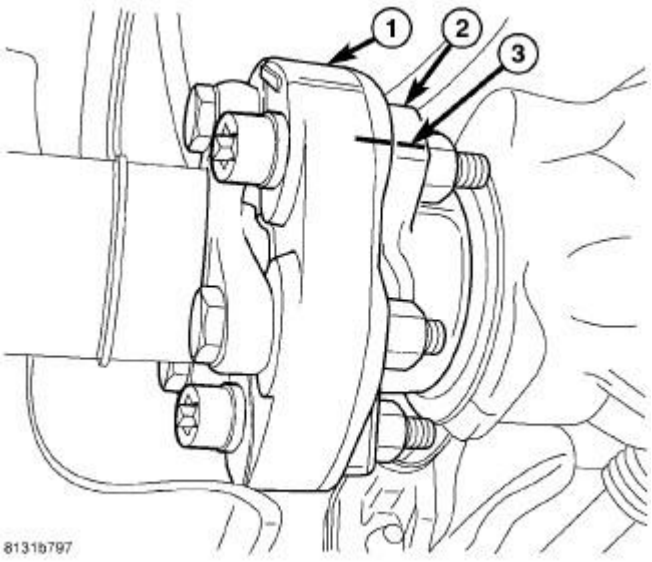

Fig. 236: Alignment Marks - Axle End Shown
Courtesy of CHRYSLER LLC

5. Apply alignment index marks (3) to the propeller shaft rubber coupler (1) and axle flange (2).

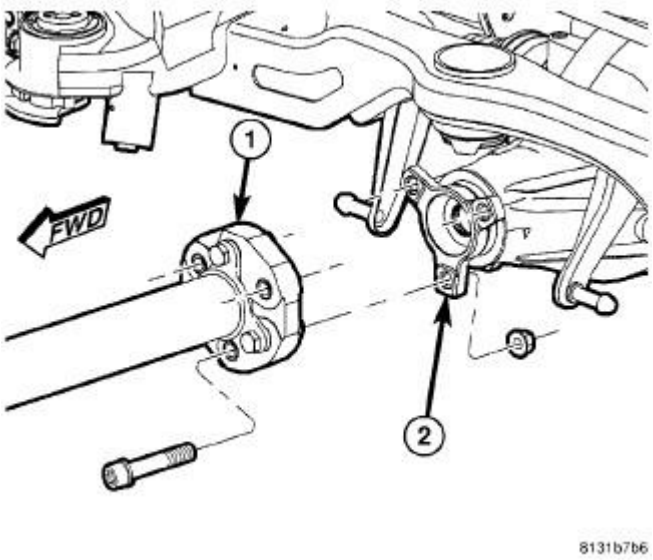

Fig. 237: Propeller Shaft at Rear Axle
Courtesy of CHRYSLER LLC

6. Remove three (four if equipped with 215MM axle) propeller shaft coupler-to-axle flange bolts and nuts.

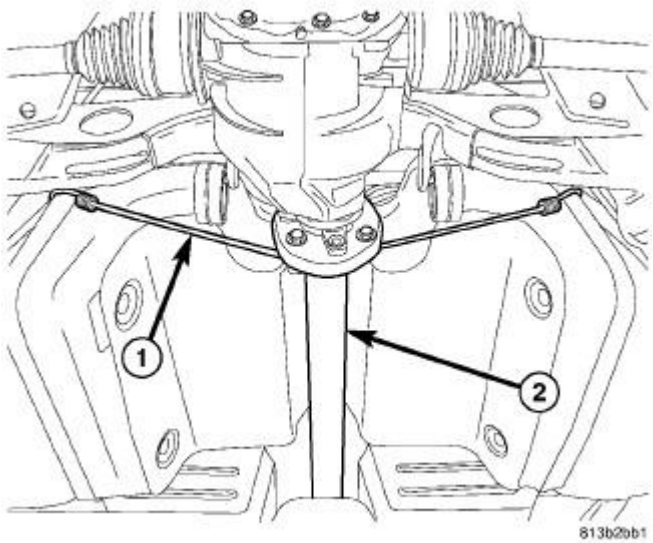

Fig. 238: PROP SHAFT SUPPORT BY BUNGEE CORD
Courtesy of CHRYSLER LLC

7. Support propeller shaft (2) using a bungee cord (1). Attach ends of cord to fuel tank straps as shown in illustration.

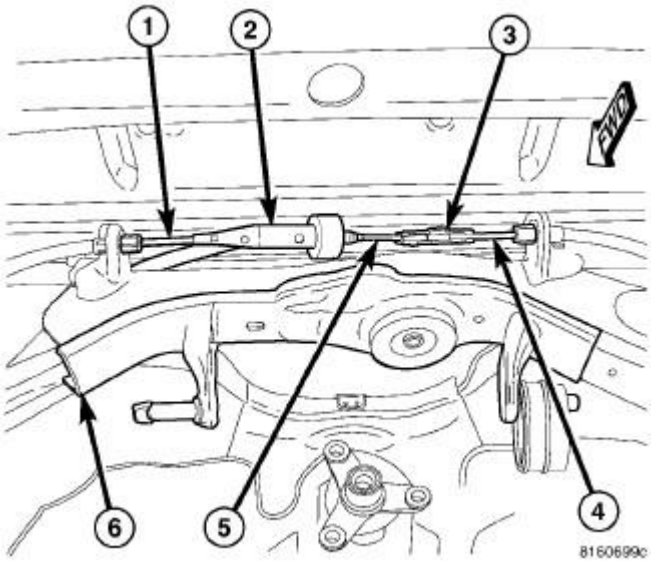

Fig. 239: CABLES AT EQUALIZER
Courtesy of CHRYSLER LLC

NOTE: Due to short travel and low spring tension, it is not necessary to lock-out parking brake lever to service parking brake components.

8. Disconnect front parking brake cable (5) at connector (3) to right rear parking brake cable (4) above axle differential.

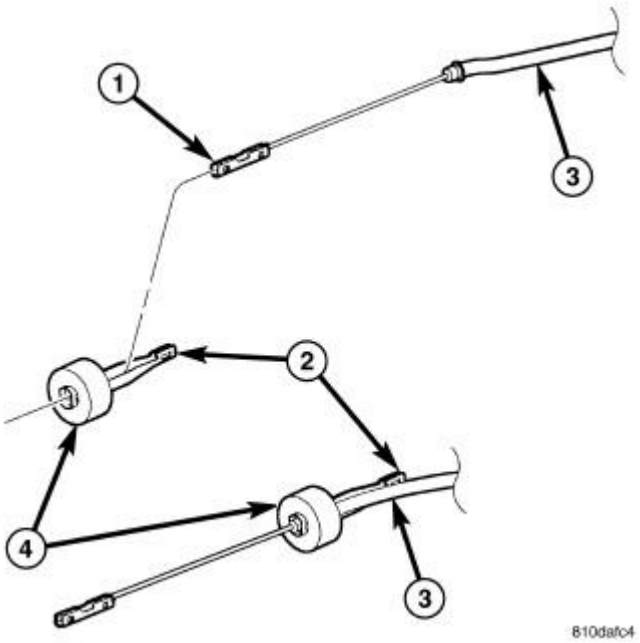

Fig. 240: FRONT CABLE TO EQUALIZER

Courtesy of CHRYSLER LLC

9. Remove front parking brake cable (3) from equalizer (2).

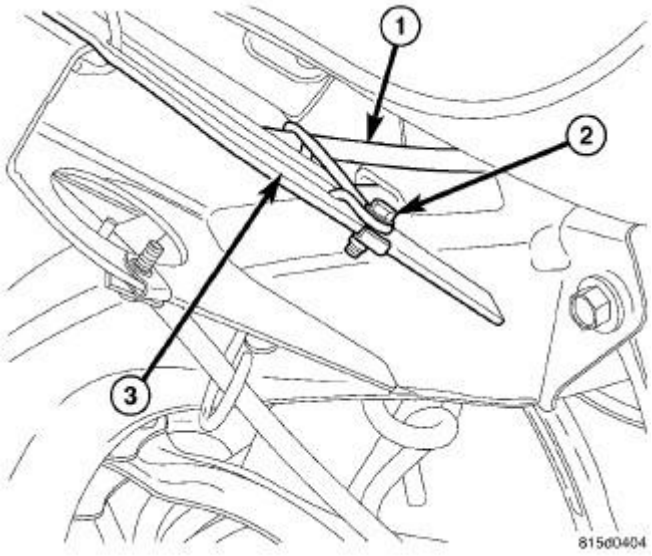

Fig. 241: FRONT CABLE AT LEFT FRONT OF CROSSMEMBER
Courtesy of CHRYSLER LLC

10. Remove screw (2) fastening front parking brake cable (1) routing bracket to rear crossmember front flange (3).

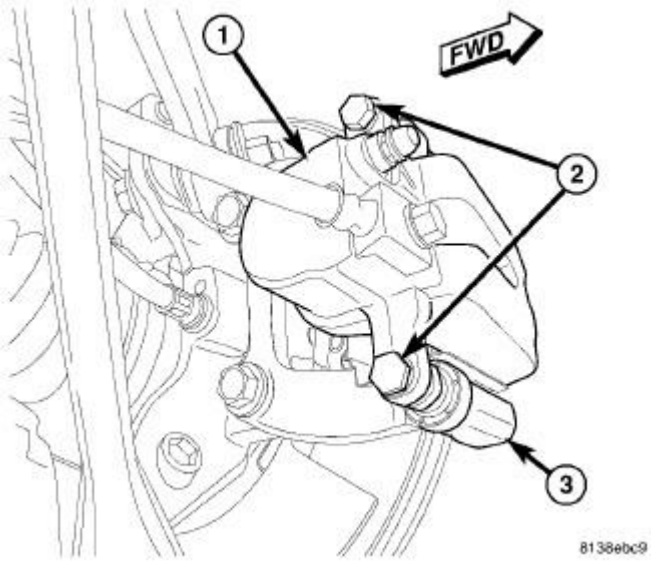

Fig. 242: REAR CALIPER MOUNTING
Courtesy of CHRYSLER LLC

11. If equipped with standard or premium disc brakes, on each rear disc brake:

a. While holding guide pins from turning, remove disc brake caliper guide pin bolts (2).
b. Remove brake caliper (1) from brake adapter (3) and pads.
c. Guide brake caliper up through suspension, following brake hose path. Support caliper above rear suspension using with bungee cord or wire to keep caliper from overextending brake hose when crossmember is lowered.

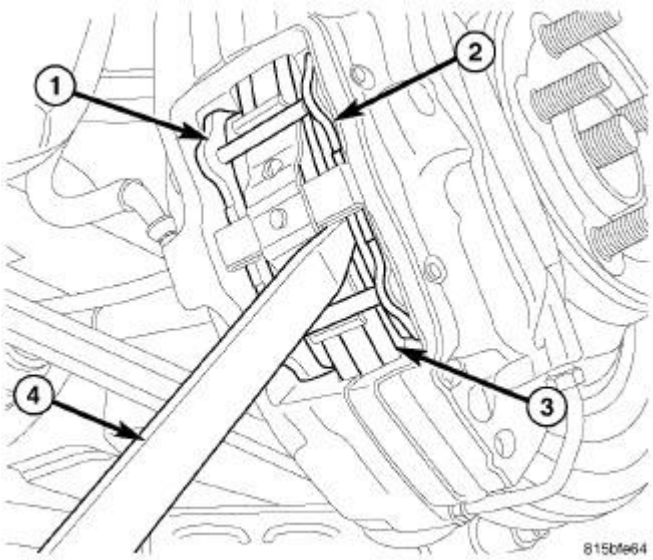

Fig. 243: PUSHING BACK PISTONS IN BORE
Courtesy of CHRYSLER LLC

CAUTION: When pushing pistons back into caliper bores, use only a trim stick as shown in illustration or other suitable soft tool. Never use a screwdriver or other metal pry bar due to potential damage to braking surface of rotor, caliper, pistons or dust boots.

12. If equipped with SRT8 disc brakes, on each rear disc brake, place trim stick (4) between brake pad (2) and outer edge of rotor (3).
13. If equipped with SRT8 disc brakes, on each rear disc brake, using trim stick, slowly apply pressure against brake pad (2) until both pistons (on that side of caliper) are completely bottomed in bores of caliper half.

NOTE: Repeat above procedure to opposite brake pad (1) and pistons as necessary.

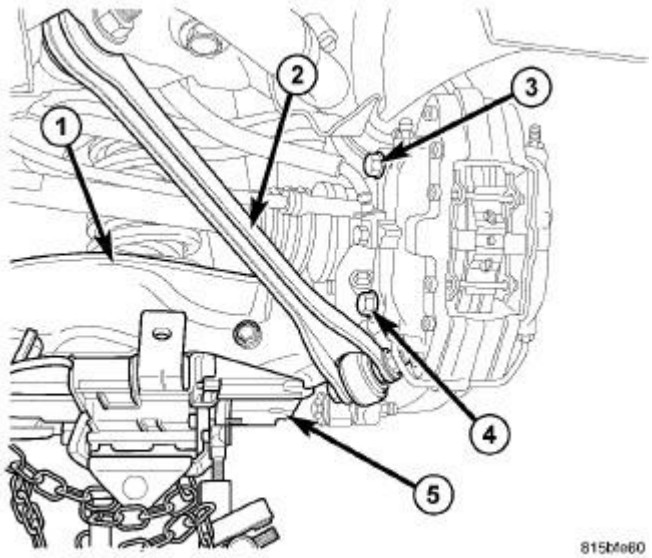

Fig. 244: ACCESSING REAR CALIPER MOUNTING BOLTS
Courtesy of CHRYSLER LLC

14. If equipped with SRT8 disc brakes, on each rear disc brake, support spring link (1) using a transmission jack (5) or other appropriate jack. Raise spring link just enough to access brake caliper lower mounting bolt (4) from above compression link (2).

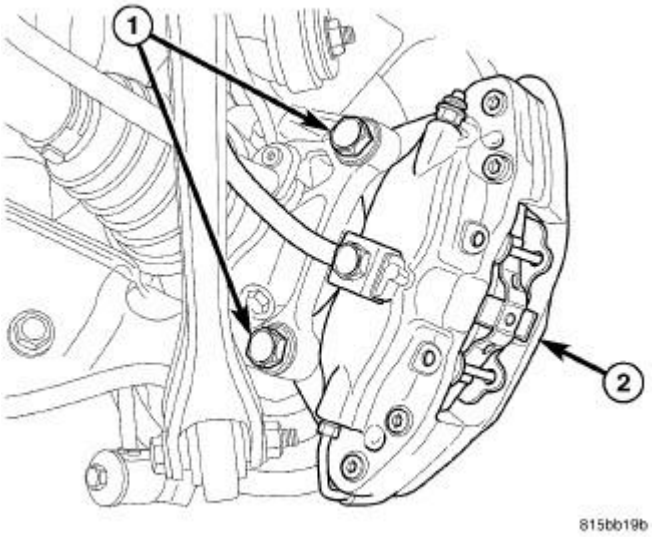

Fig. 245: REAR CALIPER MOUNTING - SRT8
Courtesy of CHRYSLER LLC

15. If equipped with SRT8 disc brakes, on each rear disc brake, remove the lower and upper caliper mounting bolts (1).
16. If equipped with SRT8 disc brakes, on each rear disc brake, remove brake caliper (2) with pads from knuckle and brake rotor. Hang assembly out of way using wire or a bungee cord. Use care

not to overextend brake hose when doing this.

17. If equipped with SRT8 disc brakes, remove jack from under spring link.

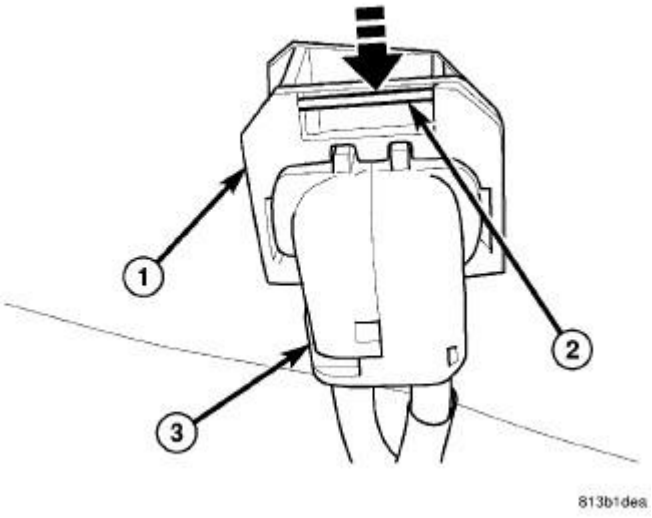

Fig. 246: RELEASE WHEEL SPEED SENSOR CONNECTOR
Courtesy of CHRYSLER LLC

NOTE: To remove wheel speed sensor connector from body wiring harness connector, move retaining clip (2) and pull sensor connector outward.

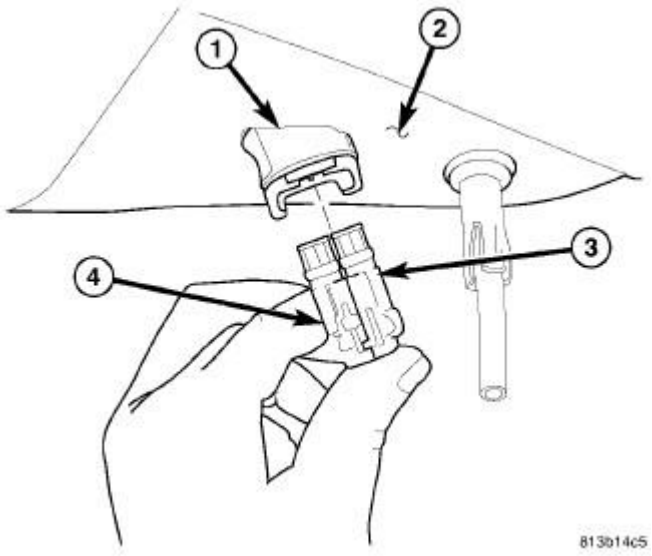

Fig. 247: SENSOR CONNECTION TO BODY CONNECTOR
Courtesy of CHRYSLER LLC

18. Remove wheel speed sensor connectors (3 and 4) from body wiring harness connector (1)

located in luggage compartment floor pan (2).

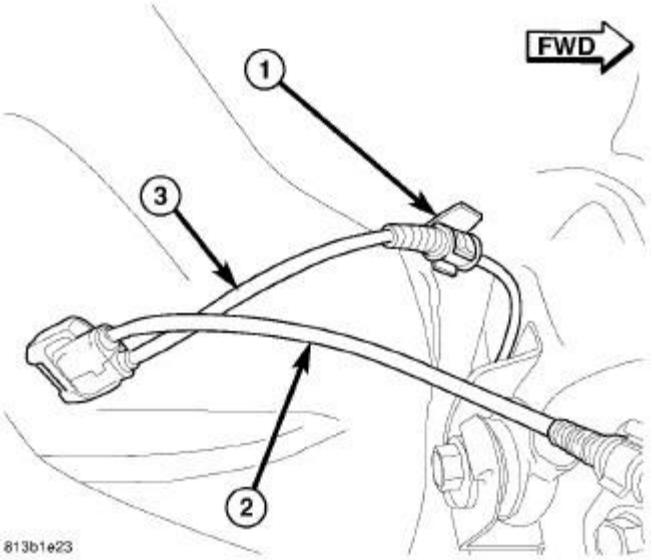

Fig. 248: LEFT/RIGHT REAR WHEEL SPEED SENSOR ROUTING
Courtesy of CHRYSLER LLC

19. Unclip left wheel speed sensor cable (3) from routing clip (1) near body connector.

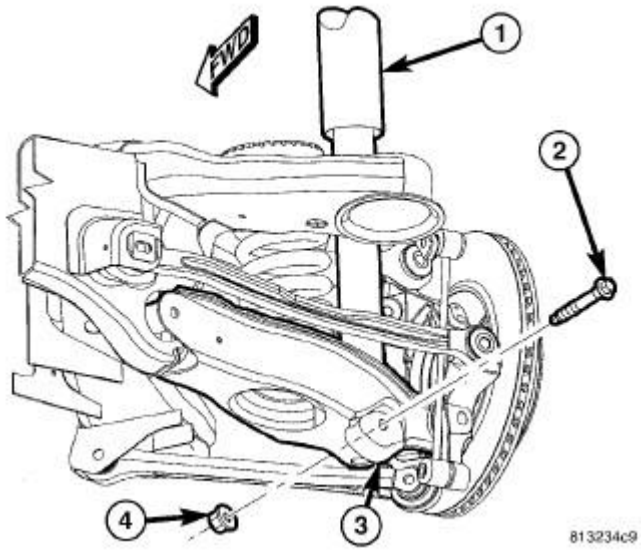

Fig. 249: SHOCK MOUNTING - LOWER
Courtesy of CHRYSLER LLC

20. On each side of vehicle, remove shock absorber (1) lower mounting bolt (2) and nut (4).

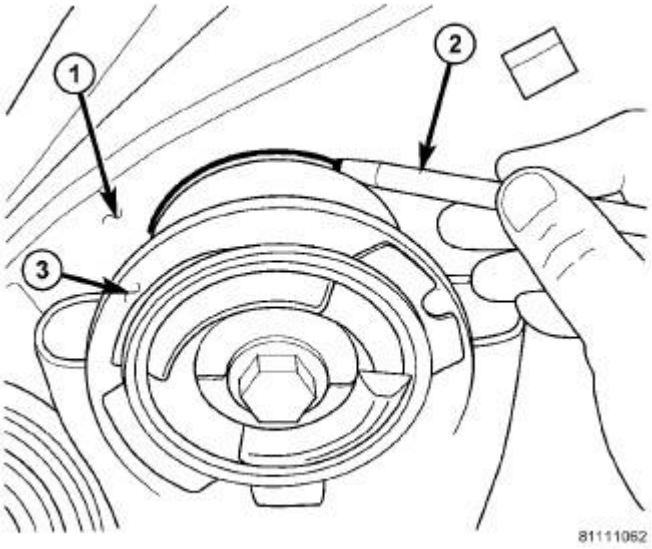

Fig. 250: Marking Location Of Crossmember Mount To Body
Courtesy of CHRYSLER LLC

1 - BODY
2 - MARKER (OR CRAYON)
3 - CROSSMEMBER BUSHING FLANGE

21. Carefully mark location of rear crossmember on body at all four mount (bushing) locations using a marker or crayon. **Do not use a scratch awl to mark location.**
22. Position an extra pair of jack stands under and support forward end of engine cradle to help stabilize vehicle during rear suspension removal/installation.

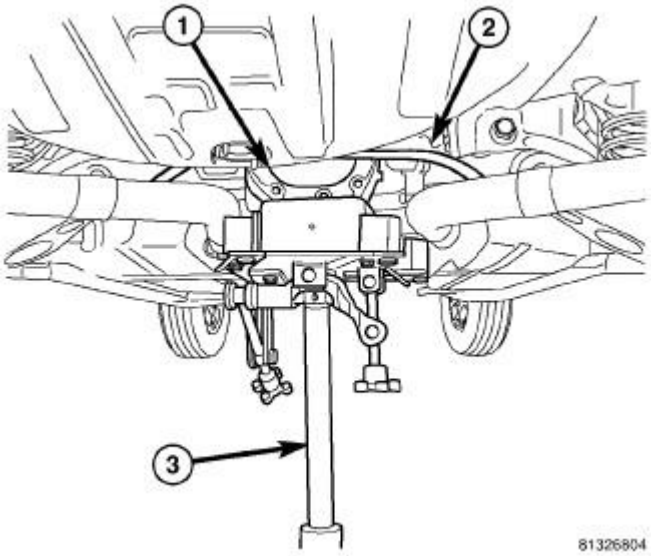

Fig. 251: SUPPORT REAR SUSPENSION USING JACK

Courtesy of CHRYSLER LLC

23. Position under-hoist utility jack or transmission jack (3) under center of rear axle differential (1). Raise jack head to contact differential and secure in place. **When securing crossmember to jack, be sure not to secure stabilizer bar.**



Fig. 252: FILLER TUBE ASSEMBLY
Courtesy of CHRYSLER LLC

WARNING: Before opening fuel system, review all Warnings and Cautions.

24. Remove fuel filler tube. Refer to **Fuel System/Fuel Delivery/TUBE, Fuel Tank Filler - Removal** .

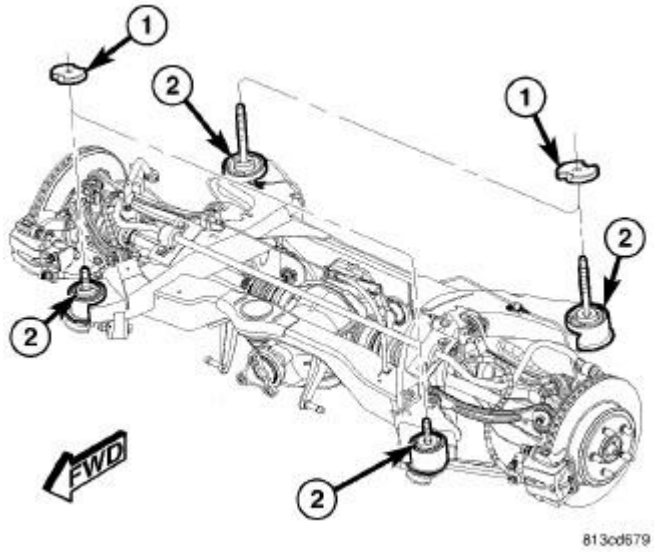

Fig. 253: AWD CROSSMEMBER SPACERS
Courtesy of CHRYSLER LLC

NOTE: If equipped with AWD, when removing crossmember mounting bolts in following step, be sure to not to misplace spacers (1) between crossmember mounts (2) and body.

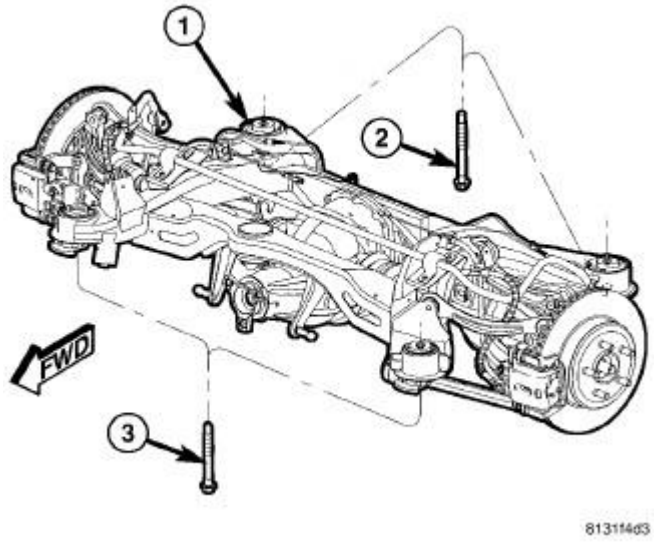

Fig. 254: REAR CROSSMEMBER MOUNTING BOLTS
Courtesy of CHRYSLER LLC

25. Remove both front (3) and both rear (2) mounting bolts fastening crossmember (1) in place.
26. **Slowly** lower crossmember using jack. **Do not lower jack at a fast rate.** Lower just enough to allow propeller shaft removal from rear axle differential. **Do not lower jack any further than**

necessary. Slide propeller shaft out of rear axle differential and allow bungee cord previously installed to support.

27. Lower crossmember until crossmember is at a comfortable working level to access bushings. Support rear suspension assembly using jack stands to help stabilize assembly during bushing service.

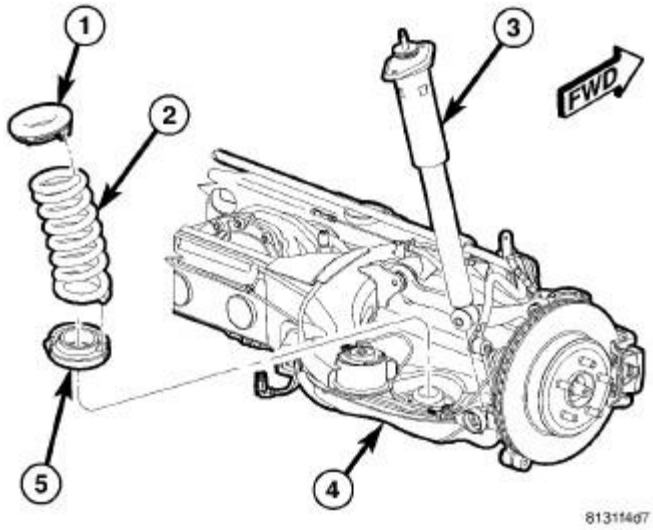

Fig. 255: COIL SPRING AND SHOCK ASSEMBLY
Courtesy of CHRYSLER LLC

28. Remove coil springs (2) with isolators (1 and 5) from spring links (4).

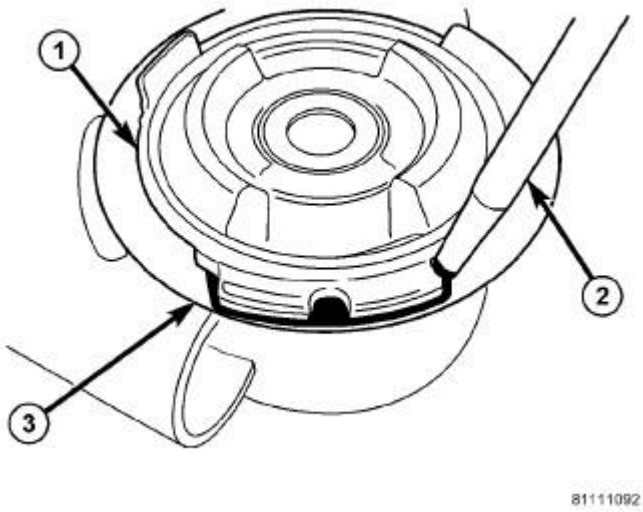

Fig. 256: MARKING LOCATION OF REAR BUSHING
Courtesy of CHRYSLER LLC

1 - BUSHING CAN FLANGE 2 - MARKER OR CRAYON 3 - CROSSMEMBER

29. As an installation reference, carefully mark location of bushing requiring removal on crossmember (around bushing can flange) using a marker or crayon. **Do not use a scratch awl to mark location.**

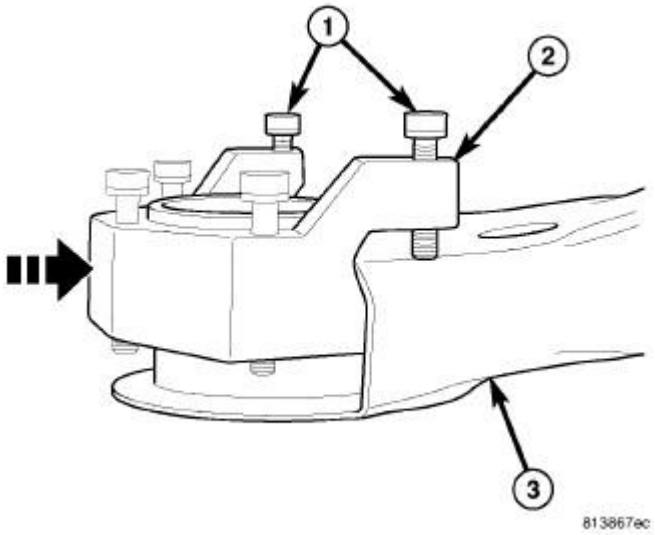

Fig. 257: INSTALLING SUPPORT 9031-11
Courtesy of CHRYSLER LLC

30. Slide Support (2), Special Tool 9031-11, into end of crossmember (3) surrounding bushing bore as shown in illustration.
31. Snug set-screws (1) securing Support (2) to crossmember.

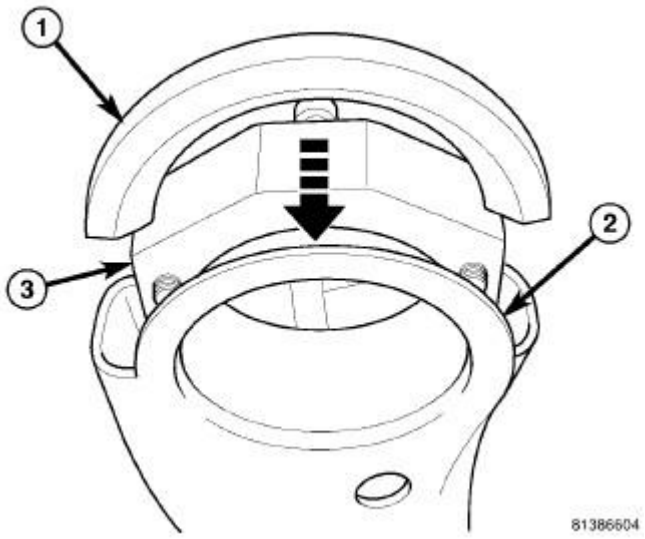

Fig. 258: INSERTING BRACE 9031-12
Courtesy of CHRYSLER LLC

32. Insert Brace (1), Special Tool 9031-12, between Support 9031-11 (3) and bushing bore flange (2) matching angle cut in Brace to bore flange.

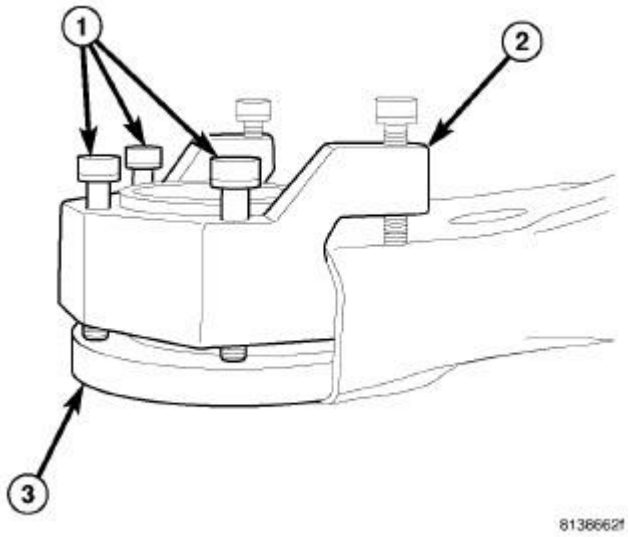

Fig. 259: TIGHTEN SUPPORT 9031-11 SET SCREWS
Courtesy of CHRYSLER LLC

33. Snug set-screws (1) against Brace 9031-12. **Do not overtighten set-screws as they will distort and bend bushing bore flange.**

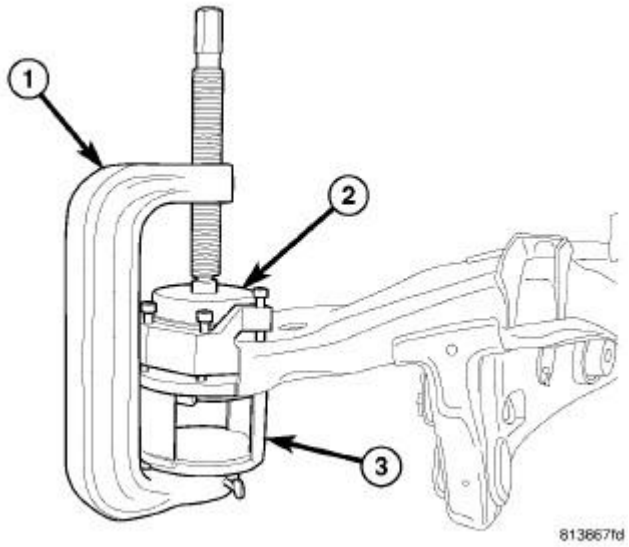

Fig. 260: TOOLS POSITIONED TO REMOVE REAR BUSHING
Courtesy of CHRYSLER LLC

NOTE: Prior to using Press (1), Special Tool C-4212F, lubricate screw-drive threads to provide ease of use and promote tool longevity.

34. Assemble tools (See following list) over bushing as shown in illustration.
    - (1) Press C-4212F
    - (2) Remover 9031-2
    - (3) Receiver 9031-1
35. Tighten Press (1) screw-drive, pressing bushing out of crossmember.
36. Remove all tools.

Installation

INSTALLATION

CAUTION: It is very important that bushing be installed in same position as original to maintain vehicle ride quality and bushing longevity. That is why bushing, once installed, needs to closely match reference marks applied upon removal of original bushing.

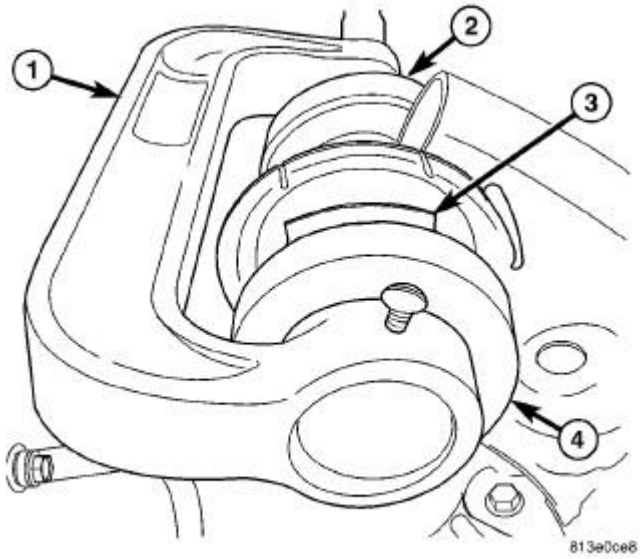

Fig. 261: REAR BUSHING INSTALLATION
Courtesy of CHRYSLER LLC

1. Position bushing on crossmember bushing bore aligning bushing can flange (3) with reference marks applied during removal.
2. Assemble tools (See following list) over bushing (3) and crossmember as shown in illustration.
   - (1) Press C-4212F
   - (2) Receiver 9031-3
   - (4) Installer 9031-4
3. Tighten Press (1) screw-drive, pressing bushing into crossmember. Install bushing until bushing can flange contacts surface of crossmember.
4. Remove tools.
5. Verify bushing closely lines up with reference marks applied during removal.

NOTE: Do not reinstall coil springs on spring links at this time. Install as directed in later steps.

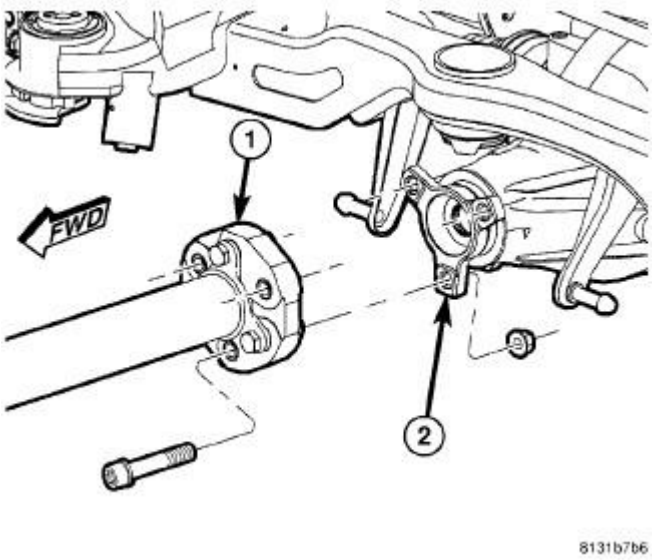

Fig. 262: Propeller Shaft at Rear Axle
Courtesy of CHRYSLER LLC

6. Raise crossmember to body mounting points. As crossmember is raised, slide propeller shaft (1) onto rear axle differential flange (2) and align shock absorbers with pockets in spring links.

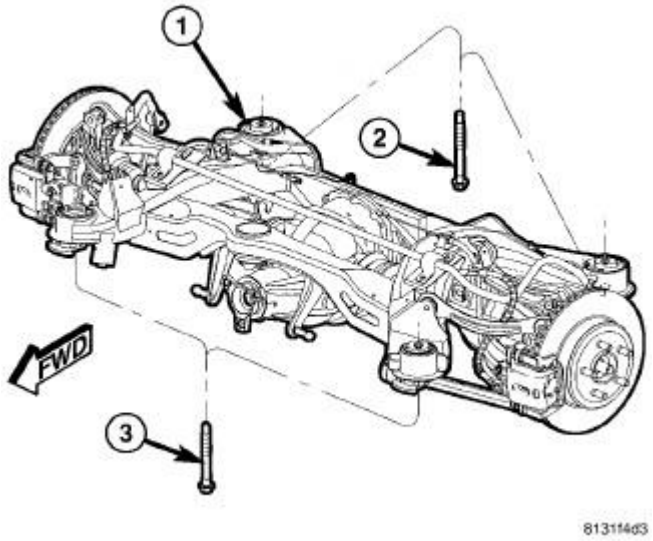

Fig. 263: REAR CROSSMEMBER MOUNTING BOLTS
Courtesy of CHRYSLER LLC

NOTE: There are four crossmember mounting bolts. Rear mounting bolts (2) are longer than front mounting bolts (3). Do not interchange mounting bolts.

7. Continue to raise crossmember (1) with jack until crossmember mounting bolts (2 and 3) can be

installed. Install left side crossmember mounting bolts, but not the right side bolts. It is not necessary to tighten bolts at this point.

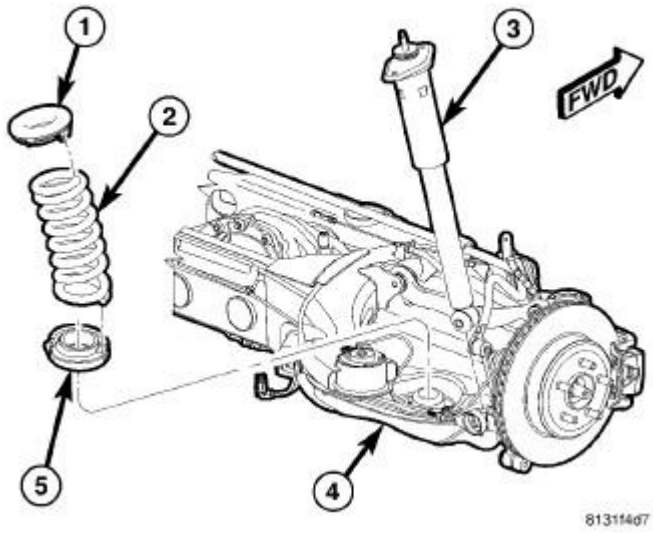

Fig. 264: COIL SPRING AND SHOCK ASSEMBLY
Courtesy of CHRYSLER LLC

CAUTION: To avoid damaging other components of vehicle, do not lower crossmember any further than necessary to install coil spring (2).

8. **Slowly** lower jack allowing right side of crossmember to drop. **Do not lower jack at a fast rate.** Lower jack just enough to allow spring (2) Installation. **Do not lower jack any further than necessary.**

NOTE: Before installing coil spring, make sure isolators (1 and 5) are completely installed on ends of spring.

9. Install coil spring (2) with isolators into spring pocket of spring link fitting the lower isolator to the shape of the pocket, then align top of spring with body mount.

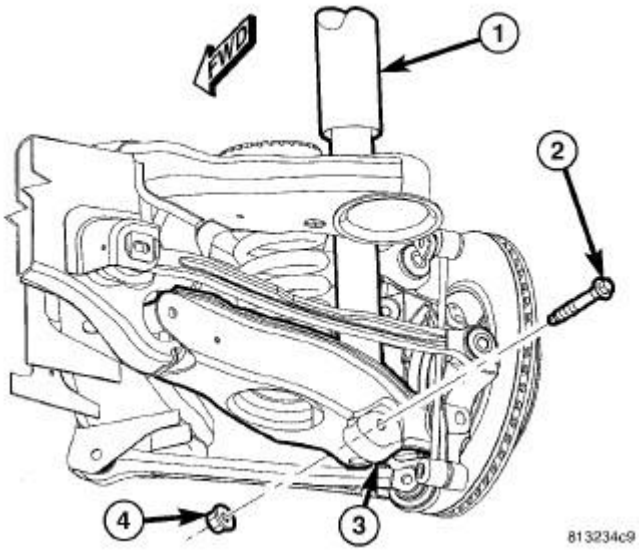

Fig. 265: SHOCK MOUNTING - LOWER
Courtesy of CHRYSLER LLC

10. Carefully raise jack, guiding coil spring and lower end of shock absorber (1) into mounted positions. Once shock absorber (1) lower mounting hole lines up with hole in spring link (3), stop jacking.
11. Install lower shock mounting bolt (2) and nut (4). **Do not tighten at this time.**

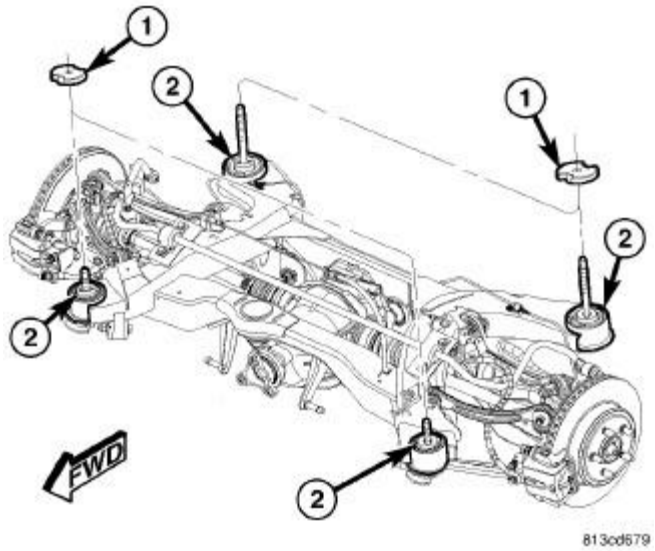

Fig. 266: AWD CROSSMEMBER SPACERS
Courtesy of CHRYSLER LLC

12. If vehicle is equipped with AWD, insert spacers (1) on top of right crossmember mount bushings (2) before crossmember is raised into place.

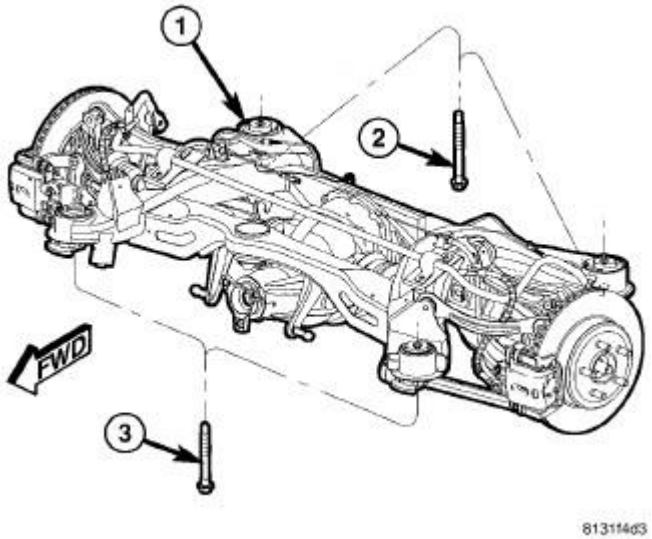

Fig. 267: REAR CROSSMEMBER MOUNTING BOLTS
Courtesy of CHRYSLER LLC

NOTE: There are four crossmember mounting bolts. Rear mounting bolts (2) are longer than front mounting bolts (3). Do not interchange mounting bolts.

13. Raise right side of crossmember (1) into mounted position. Install right side crossmember mounting bolts (2 and 3). **Snug, but do not fully tighten bolts at this time.**
14. Remove both front and rear crossmember mounting bolts (2 and 3) on **left** side of vehicle.

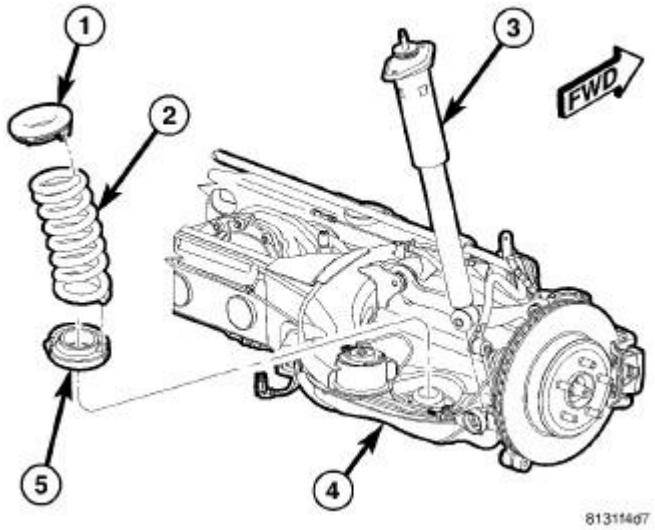

Fig. 268: COIL SPRING AND SHOCK ASSEMBLY
Courtesy of CHRYSLER LLC

CAUTION: To avoid damaging other components of vehicle, do not lower crossmember any further than necessary to install coil spring (2).

15. **Slowly** lower jack allowing left side of crossmember to drop. **Do not lower jack at a fast rate.** Lower jack just enough to allow spring (2) Installation. **Do not lower jack any further than necessary.**

NOTE: Before installing coil spring, make sure isolators (1 and 5) are completely installed on ends of spring.

16. Install coil spring (2) with isolators into spring pocket of spring link fitting the lower isolator to the shape of the pocket, then align top of spring with body mount.

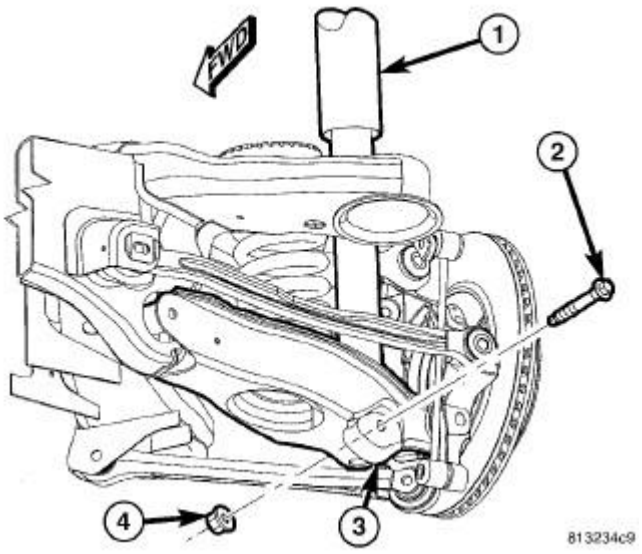

Fig. 269: SHOCK MOUNTING - LOWER
Courtesy of CHRYSLER LLC

17. Carefully raise jack, guiding coil spring and lower end of shock absorber (1) into mounted positions. Once shock absorber (1) lower mounting hole lines up with hole in spring link (3), stop jacking.
18. Install lower shock mounting bolt (2) and nut (4). **Do not tighten at this time.**

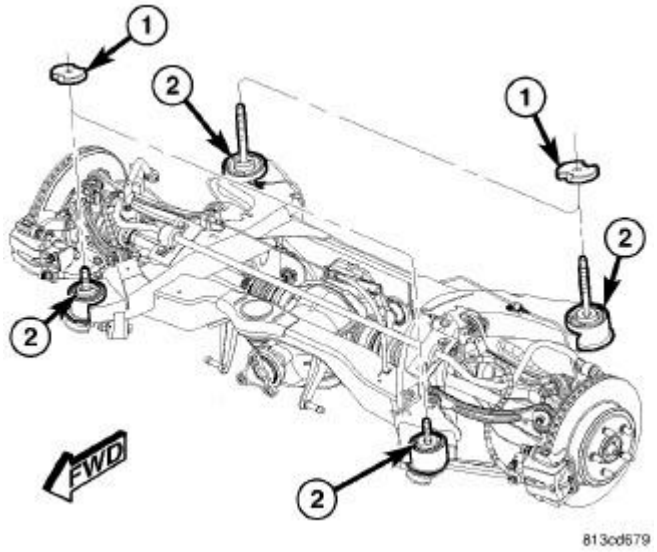

Fig. 270: AWD CROSSMEMBER SPACERS
Courtesy of CHRYSLER LLC

19. If vehicle is equipped with AWD, insert spacers (1) on top of left crossmember mount bushings (2) before crossmember is raised into place.

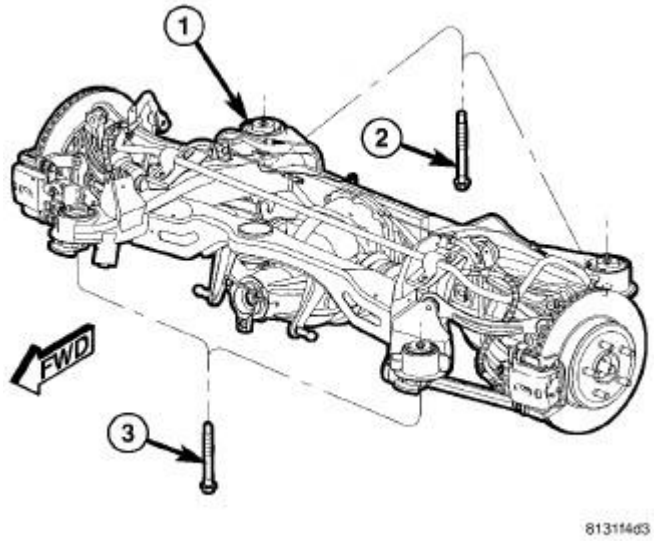

Fig. 271: REAR CROSSMEMBER MOUNTING BOLTS
Courtesy of CHRYSLER LLC

NOTE: There are four crossmember mounting bolts. Rear mounting bolts (2) are longer than front mounting bolts (3). Do not interchange mounting bolts.

20. Raise left side of crossmember (1) into mounted position. Install left side crossmember

mounting bolts (2 and 3). **Snug, but do not fully tighten bolts at this time.**

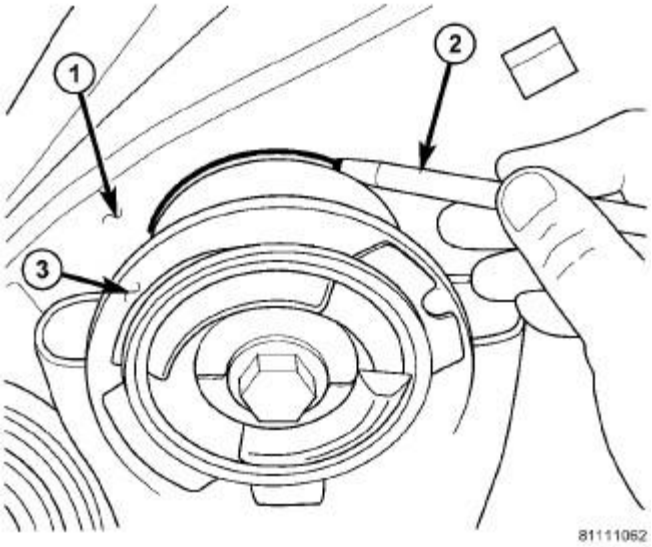

Fig. 272: Marking Location Of Crossmember Mount To Body
Courtesy of CHRYSLER LLC

1 - BODY 2 - MARKER (OR CRAYON) 3 - CROSSMEMBER BUSHING FLANGE

21. Shift crossmember as necessary to line up mounts (3) with location marks drawn on body (1) before removal.

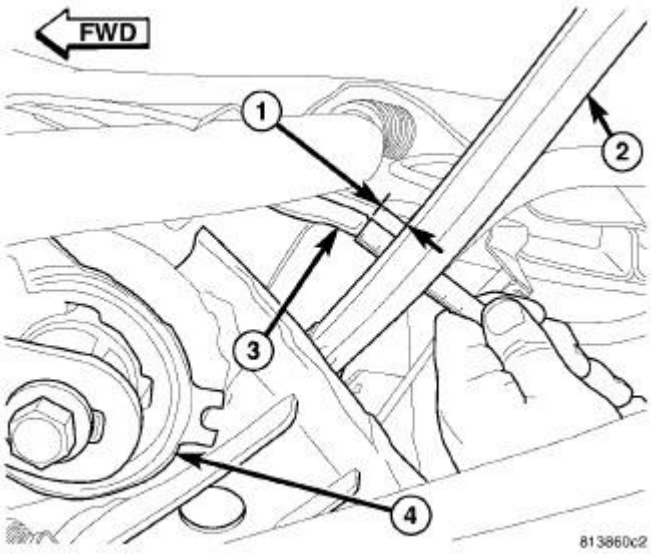

Fig. 273: MEASURING TENSION LINK CLEARANCE

Courtesy of CHRYSLER LLC

22. Once mounts are lined up with location marks, on both sides of vehicle, measure distance (1) between the tension link (2) and weld flange (3) on body directly in front of it, just outboard of the front mount bushing (4). **This distance must be at least 12 mm to allow proper clearance for suspension movement.** If distance is less than 12 mm on either side of vehicle, shift that side of rear crossmember directly rearward until distance is 12 mm or greater. To do so, loosen 3 mounting bolts slightly, leaving one on opposite side of shift snugged to pivot off of. Shift crossmember rearward and snug loosened bolts. Remeasure opposite side to be sure it still maintains minimum 12 mm distance.

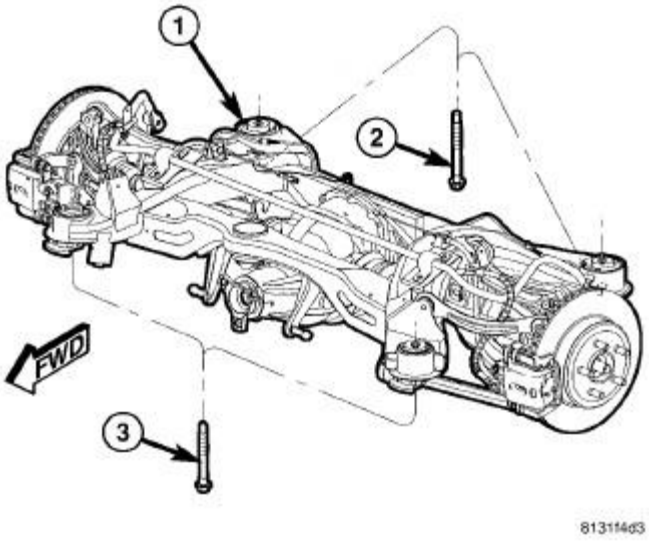

Fig. 274: REAR CROSSMEMBER MOUNTING BOLTS
Courtesy of CHRYSLER LLC

23. Tighten all four crossmember mounting bolts (2 and 3) to 180 N.m (133 ft. lbs.).

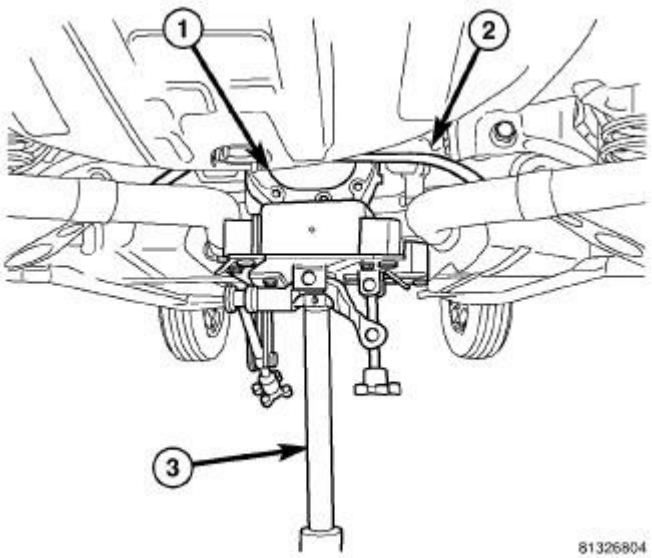

Fig. 275: SUPPORT REAR SUSPENSION USING JACK
Courtesy of CHRYSLER LLC

24. Remove jack (3) from under rear axle differential.

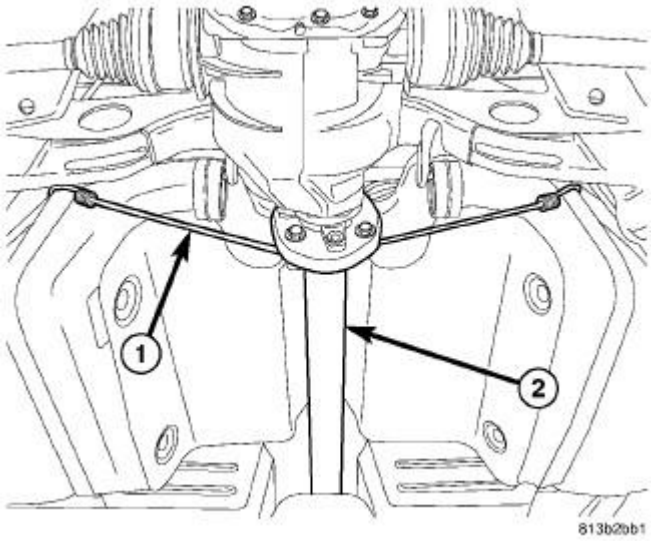

Fig. 276: PROP SHAFT SUPPORT BY BUNGEE CORD
Courtesy of CHRYSLER LLC

25. Remove bungee cord (1) supporting propeller shaft (2).

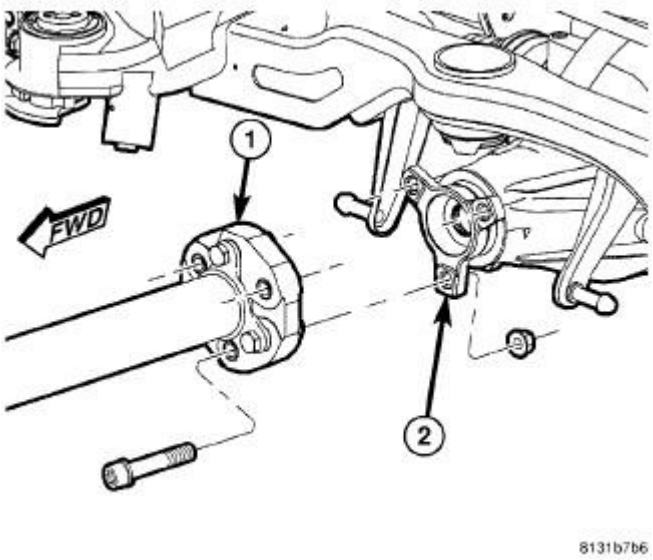

Fig. 277: Propeller Shaft at Rear Axle
Courtesy of CHRYSLER LLC

26. Align propeller shaft index marks placed upon removal. Install propeller shaft rear coupler-to-axle flange bolts and nuts by hand. Tighten propeller shaft rear coupler-to-axle flange bolts to 81 N.m (60 ft. lbs.).

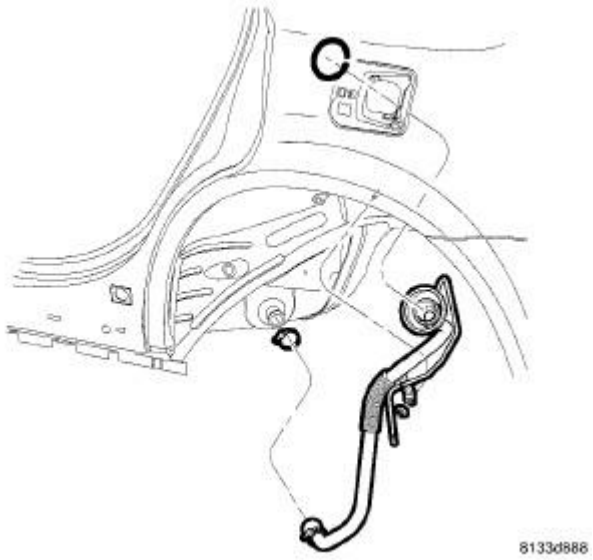

Fig. 278: FILLER TUBE ASSEMBLY
Courtesy of CHRYSLER LLC

27. Install fuel filler tube. Refer to **Fuel System/Fuel Delivery/TUBE, Fuel Tank Filler - Installation** .

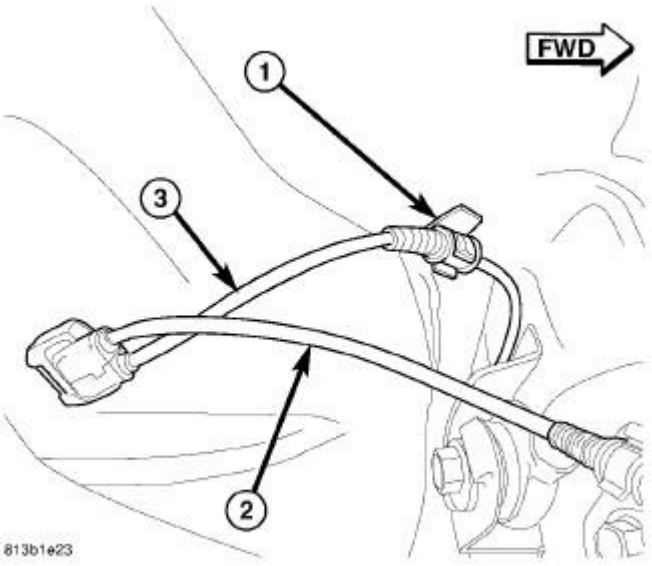

Fig. 279: LEFT/RIGHT REAR WHEEL SPEED SENSOR ROUTING
Courtesy of CHRYSLER LLC

28. Clip left rear wheel speed sensor cable (3) to routing clip (1) near body connector.

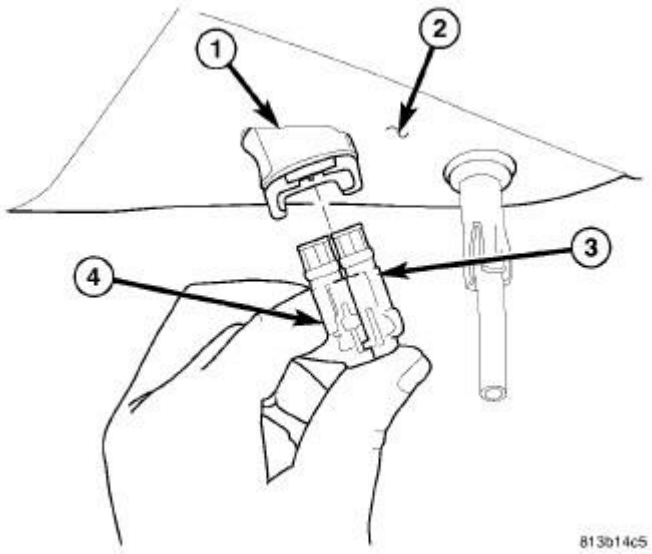

Fig. 280: SENSOR CONNECTION TO BODY CONNECTOR
Courtesy of CHRYSLER LLC

29. Match left rear wheel speed sensor connector (4) to right sensor connector (3) to make one connector.
30. Insert speed sensor connectors (3 and 4) into body wiring harness connector (1) located in luggage compartment floor pan (2). When installing connector, make sure retaining clip on body connector is properly in place and sensor connector cannot be pulled out.

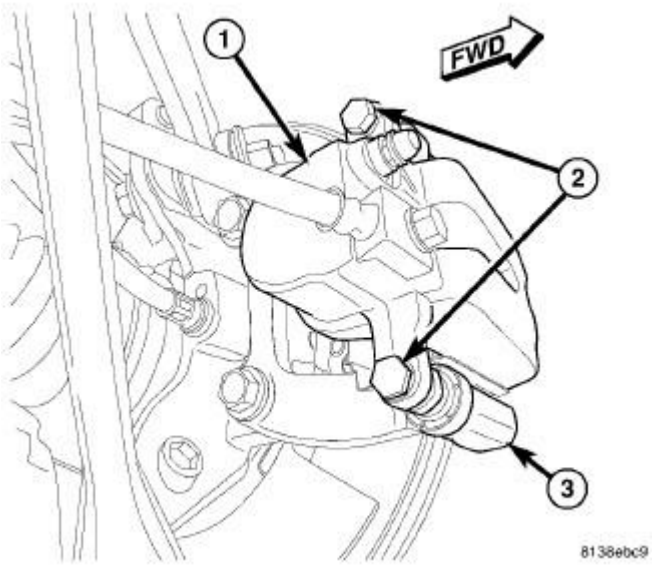

Fig. 281: REAR CALIPER MOUNTING
Courtesy of CHRYSLER LLC

31. If equipped with standard or premium disc brakes, on each rear disc brake:
    a. Push caliper guide pins into caliper adapter to clear caliper mounting bosses when installing.
    b. Guide caliper and brake hose down through rear suspension, then slide caliper over brake pads and onto caliper adapter (3).
    c. Align caliper mounting holes with guide pins, then install guide pin bolts (2). While holding guide pins from turning, tighten bolts to 31 N.m (23 ft. lbs.) torque.
    d. Make sure brake hose is properly routed and will not come in contact with suspension components.
32. If equipped with SRT8 disc brakes, at each rear disc brake, support spring link using a transmission jack or other appropriate jack as indicated in removal procedure. See **Frame and Bumpers/Frame/ISOLATOR, Rear Crossmember - Removal**

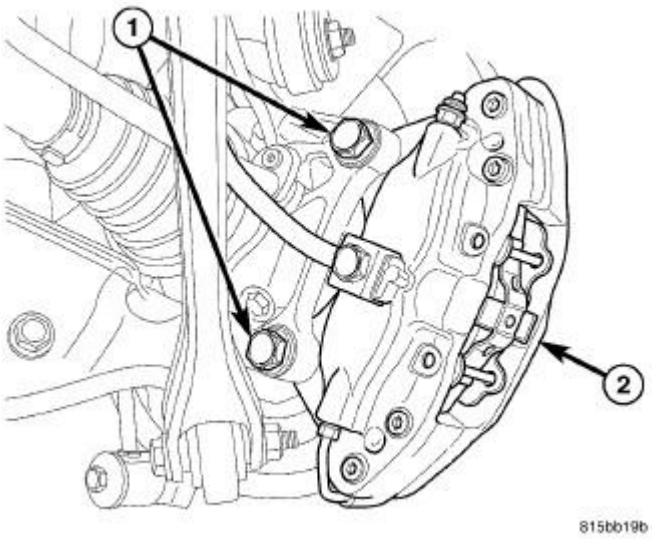

Fig. 282: REAR CALIPER MOUNTING - SRT8
Courtesy of CHRYSLER LLC

33. If equipped with SRT8 disc brakes, on each rear disc brake, slide caliper with pads (2) over brake rotor and align with knuckle.
34. If equipped with SRT8 disc brakes, on each rear disc brake, install caliper mounting bolts (1). Tighten bolts to 130 N.m (96 ft. lbs.) torque.
35. If equipped with SRT8 disc brakes, on each rear disc brake, remove jack from under spring link.

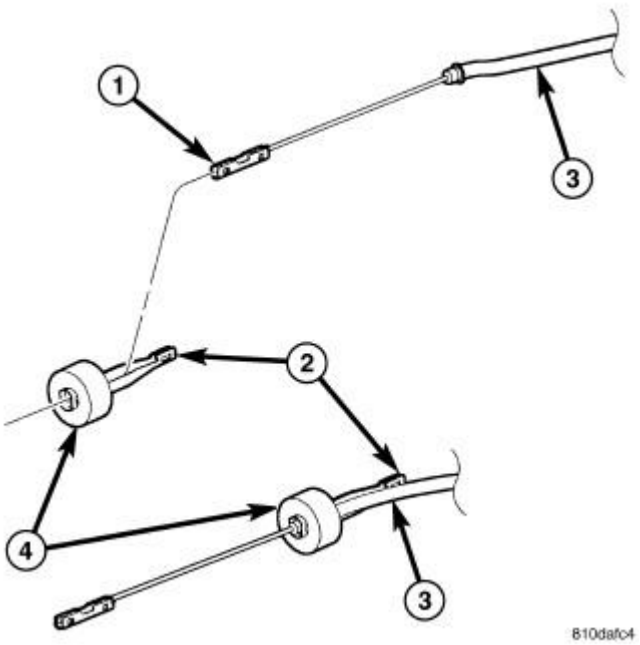

Fig. 283: FRONT CABLE TO EQUALIZER

Courtesy of CHRYSLER LLC

36. Route parking brake cable above rear crossmember, then slide cable (1, 3) through equalizer (2) above rear axle differential (once installed).

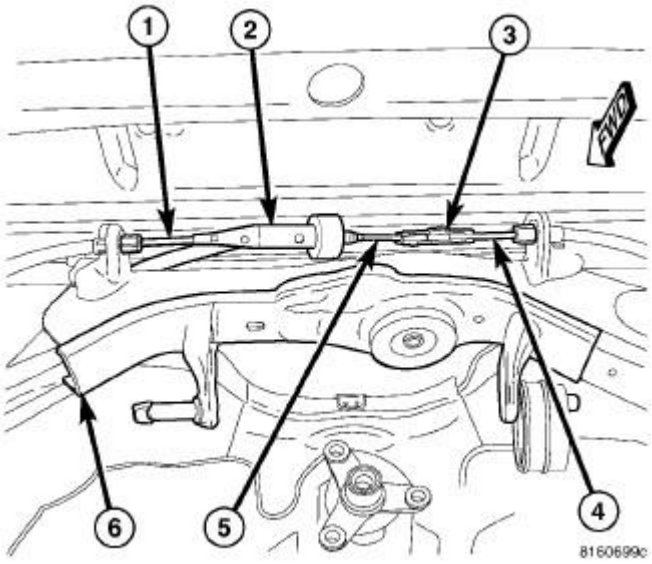

Fig. 284: CABLES AT EQUALIZER
Courtesy of CHRYSLER LLC

NOTE: Due to short travel and low spring tension, it is not necessary to lock-out parking brake lever to service parking brake components.

37. Connect front parking brake cable (5) at connector (3) to right rear parking brake cable (4).

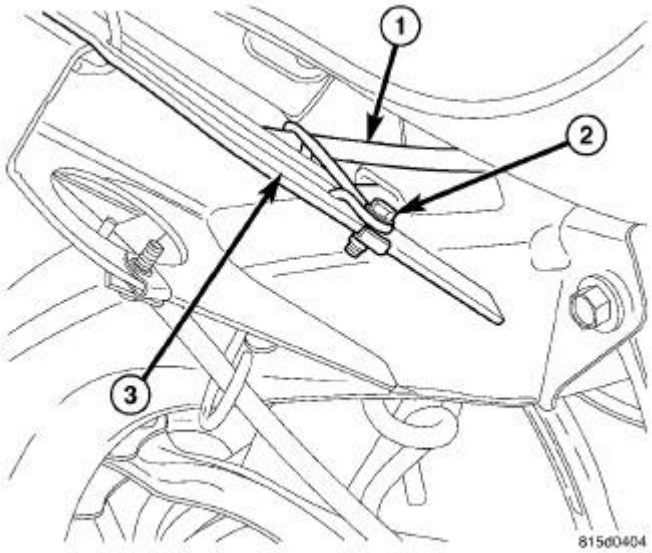

Fig. 285: FRONT CABLE AT LEFT FRONT OF CROSSMEMBER
Courtesy of CHRYSLER LLC

38. Insert front parking brake cable routing bracket locating pin into front flange of crossmember (3), then install screw (2) fastening cable (1) routing bracket to rear crossmember.

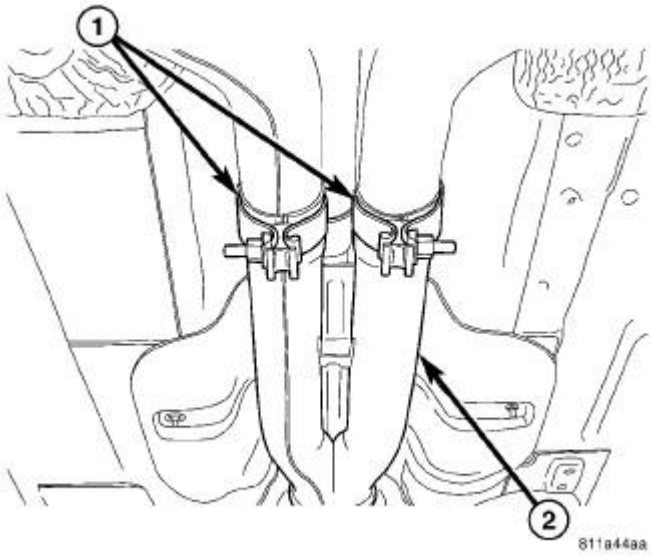

Fig. 286: Exhaust System
Courtesy of CHRYSLER LLC

39. Install rear exhaust system (2) (dual-outlet exhaust shown in illustration).

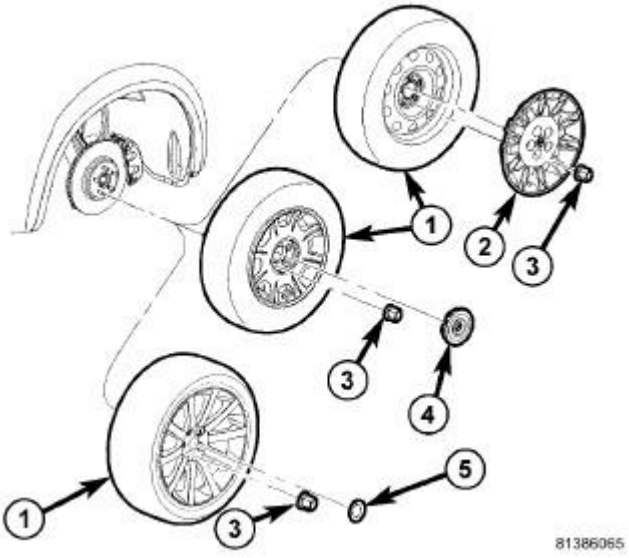

Fig. 287: TIRE AND WHEEL MOUNTING
Courtesy of CHRYSLER LLC

40. Install tire and wheel assemblies (1). Tighten wheel mounting nuts (3) to 150 N.m (110 ft. lbs.). Refer to **Tires and Wheels - Installation** .
41. Lower vehicle until rear wheels are just above floor level.
42. Apply parking brake lever. Release lever, then reapply.
43. Check to make sure rear wheels will not rotate with lever applied.
44. Lower vehicle.

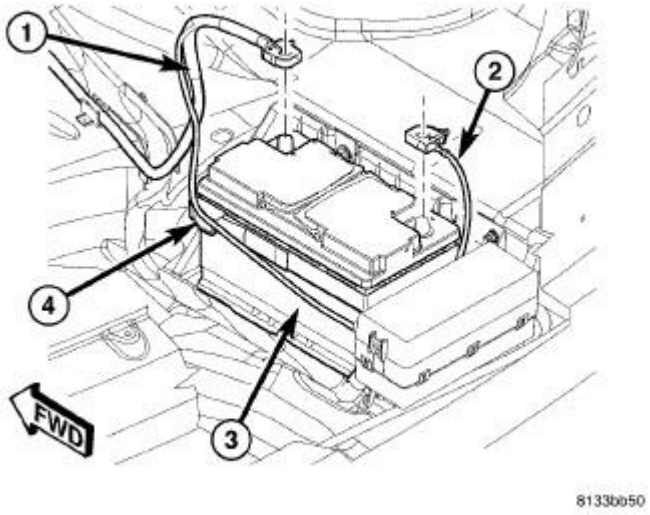

Fig. 288: BATTERY AND CABLES
Courtesy of CHRYSLER LLC

45. Connect battery negative cable (2) to battery post. It is important that this is performed properly. Refer to **Electrical - Engine Systems/Battery System - Standard Procedure** .
46. Pump brake pedal several times to ensure vehicle has a firm brake pedal before moving vehicle.
47. Position vehicle on alignment rack/drive-on lift. Raise vehicle as necessary to access mounting bolts.

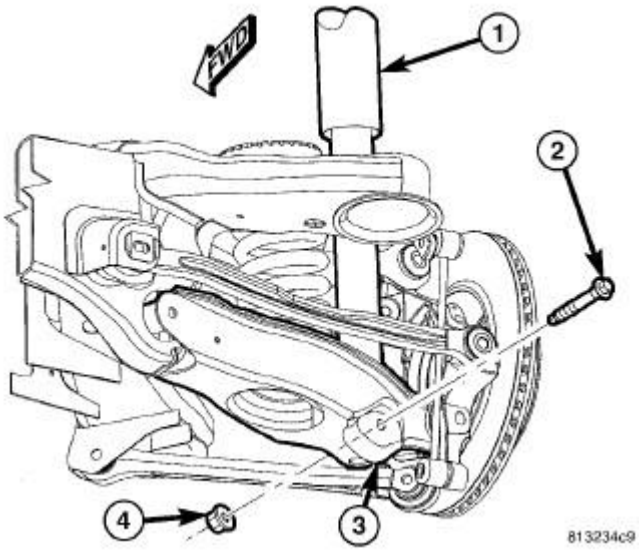

Fig. 289: SHOCK MOUNTING - LOWER
Courtesy of CHRYSLER LLC

48. Tighten shock absorber lower mounting bolt nuts (4) to 72 N.m (53 ft. lbs.).
49. Perform wheel alignment, paying special attention to thrust angle. If rear crossmember needs to be shifted to align thrust angle, try to avoid compromising tension link clearance (Refer to 22). Refer to **Front Suspension/Wheel Alignment - Standard Procedure** .

ISOLATOR, REAR CROSSMEMBER, SPRING LINK

Removal

REMOVAL

1. Raise and support vehicle. Refer to **Vehicle Quick Reference/Hoisting - Standard Procedure** .
2. Access and remove rear spring on side of repair. Refer to **Differential and Driveline/Rear Axle - 215RII - Removal** .

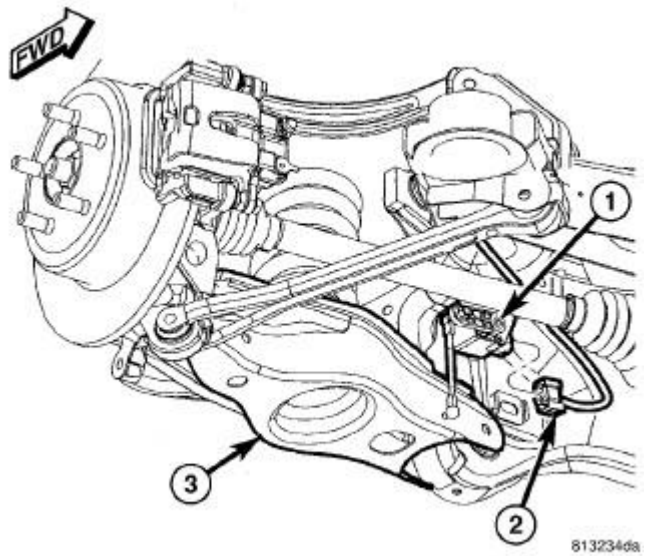

Fig. 290: HEADLAMP LEVELING SENSOR
Courtesy of CHRYSLER LLC

3. Export Only - If servicing right side bushing, disconnect headlamp leveling sensor (1) link at spring link (3).

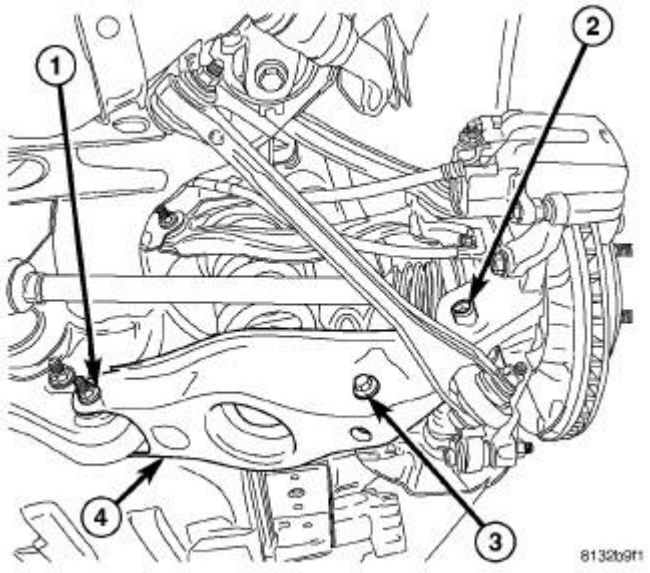

Fig. 291: SPRING LINK MOUNTING
Courtesy of CHRYSLER LLC

4. Remove bolt and nut (1) fastening spring link (4) to crossmember.
5. Position spring link downward, away from bushing in crossmember.

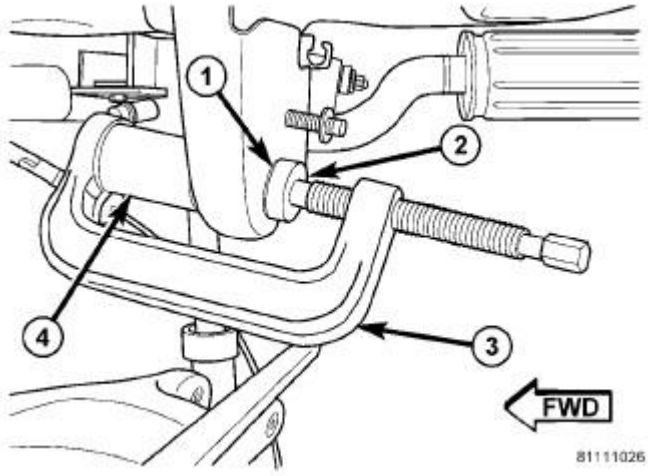

Fig. 292: SPRING LINK BUSHING REMOVAL
Courtesy of CHRYSLER LLC

1 - BUSHING
2 - REMOVER 9032-2
3 - PRESS C-4212F
4 - RECEIVER 9032-1

NOTE: Prior to using Press (3), Special Tool C-4212F, lubricate screw-drive threads to provide ease of use and promote tool longevity.

6. Assemble tools over bushing as shown in illustration (See list). Ensure Receiver, Special Tool 9032-1, sets against crossmember and not welds.
   - (2) Remover 9032-2
   - (3) Press C-4212F
   - (4) Receiver 9032-1
7. Tighten Press screw-drive, pressing bushing out of crossmember.

Installation

INSTALLATION

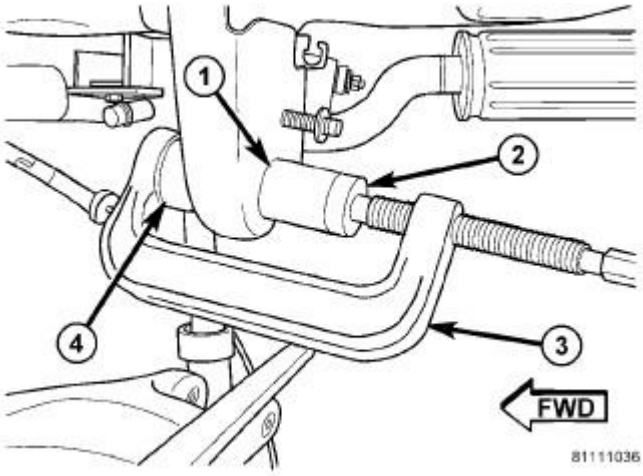

Fig. 293: SPRING LINK BUSHING INSTALLATION
Courtesy of CHRYSLER LLC

1 - BUSHING 2 - REMOVER/INSTALLER 9032-2 3 - PRESS C-4212F 4 - RECEIVER 9032-3

1. Position bushing (1) over rear of crossmember bushing bore.
2. Assemble tools over bushing and crossmember as shown in illustration (See list). Ensure Receiver, Special Tool 9032-3, is positioned to avoid welds on rear of crossmember bushing bore.
    - (2) Remover/Installer 9032-2
    - (3) Press C-4212F
    - (4) Receiver 9032-3
3. Tighten Press screw-drive, pressing bushing into crossmember. Install bushing until screw-drive stops, when bushing contacts Receiver on opposite side of crossmember.
4. Remove tools.

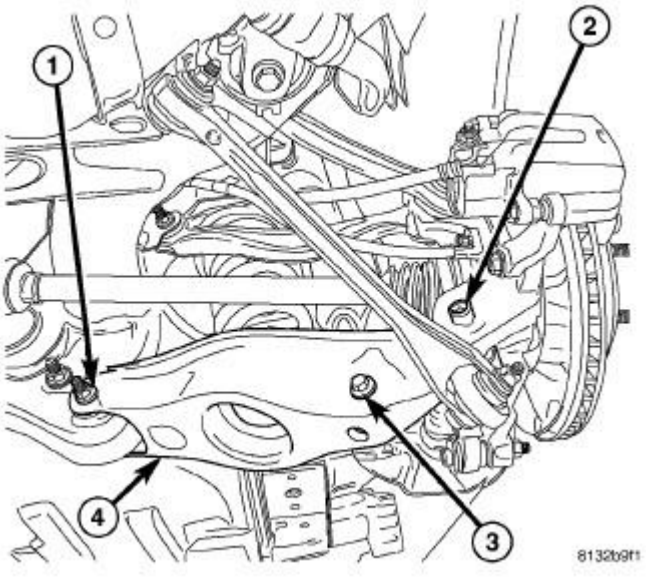

Fig. 294: SPRING LINK MOUNTING
Courtesy of CHRYSLER LLC

5. Swing spring link up to bushing in crossmember and install bolt and nut (1) fastening spring link (4) to crossmember. **Do not tighten bolt at this time.**

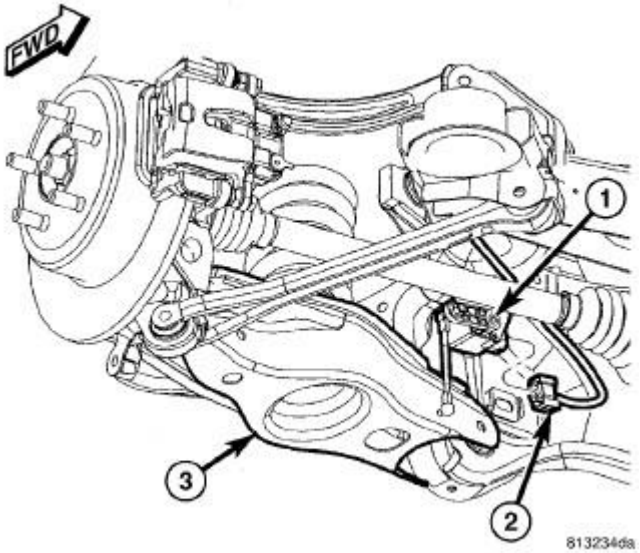

Fig. 295: HEADLAMP LEVELING SENSOR
Courtesy of CHRYSLER LLC

6. Export Only - If servicing right side bushing, connect headlamp leveling sensor (1) link at spring link (3).
7. Install rear spring as well as all components necessary to access it. Refer to **Differential and Driveline/Rear Axle - 215RII - Installation** .

8. Lower vehicle.
9. Position vehicle on alignment rack/drive-on lift. Raise vehicle as necessary to access mounting bolt.

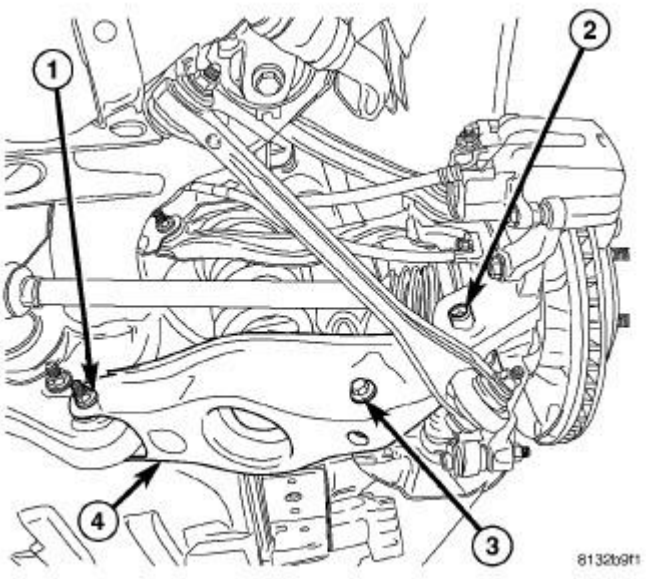

Fig. 296: SPRING LINK MOUNTING
Courtesy of CHRYSLER LLC

10. Tighten spring link bolt (1) at crossmember to 108 N.m (80 ft. lbs.).
11. Perform wheel alignment. Refer to **Front Suspension/Wheel Alignment - Standard Procedure** .

SUSPENSION

Front Suspension - Challenger

STANDARD PROCEDURE

LUBRICATION

There are no serviceable lubrication points on the front or rear suspension. The ball joints are sealed-for-life and require no maintenance.

FRONT

DESCRIPTION

FRONT SUSPENSION

The front suspension for both All-Wheel-Drive (AWD) and Rear-Wheel-Drive (RWD) vehicles is a long and short arm design.

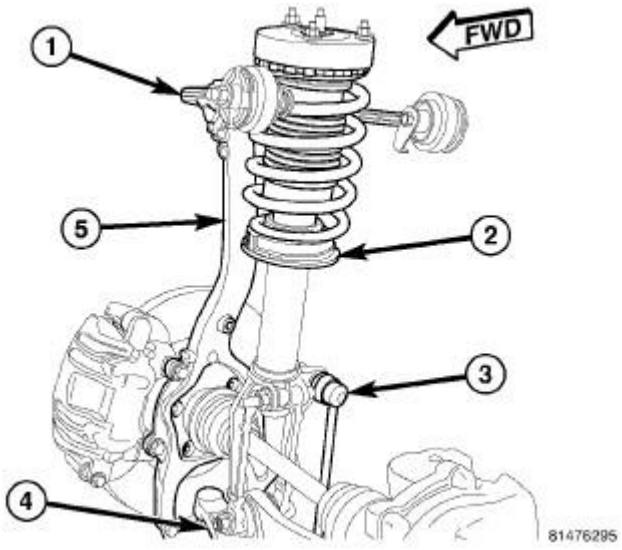

Fig. 1: FRONT SUSPENSION - AWD
Courtesy of CHRYSLER LLC

Each side of the AWD front suspension includes the following components:

- Hub And Bearing
- Knuckle (5)
- Lower Control Arm (4)
- Shock Assembly (2)

- Stabilizer Bar and Link (3)
- Upper Control Arm (1)

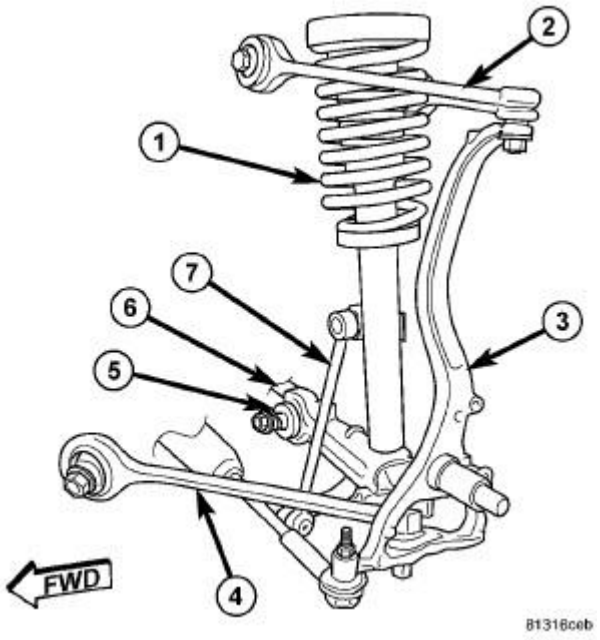

Fig. 2: FRONT SUSPENSION
Courtesy of CHRYSLER LLC

Each side of the RWD front suspension includes the following components:

- Hub And Bearing
- Knuckle (3)
- Lower Control Arm (5)
- Shock Assembly (1)
- Stabilizer Bar (6) and Link (7)
- Tension Strut (4)
- Upper Control Arm (2)

FRONT SUSPENSION - SRT8

The SRT8 front suspension is very similar to the standard RWD front suspension but some components have been modified for better handling and durability. Most component bushings are increased rate bushings. Service of all front suspension components remain the same as the standard RWD components. When components differ, be sure to use only SRT8 components on SRT8 vehicles.

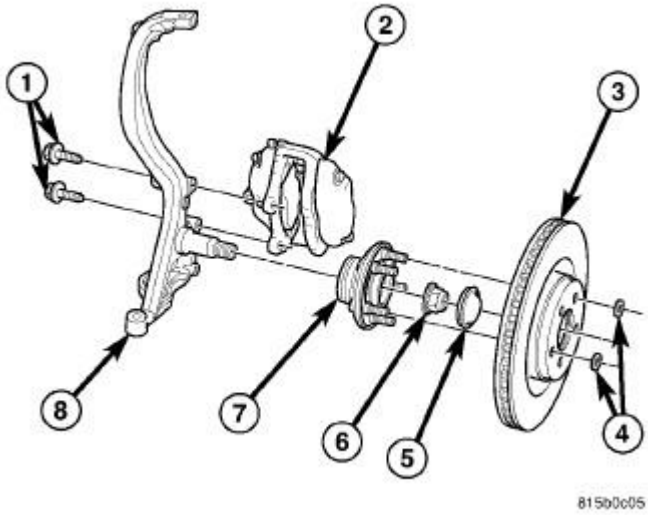

Fig. 3: FRONT DISC BRAKES
Courtesy of CHRYSLER LLC

The front knuckle (8) for the SRT8 is different from the standard RWD knuckle. Although similar in appearance, the knuckle has been modified to accept the larger 20 inch tire and wheel assembly. Also, the mounting bosses for the disc brake caliper have been moved downward to allow for mounting of the Brembo four-piston disc brake caliper (2).

Although serviced the same, the components of the SRT8 shock assembly are unique to this vehicle. The front shock absorber is manufactured by Bilstein®. It can be easily identified by its color. It is painted yellow. Because the shock absorber is a mono-tube design, it is important to handle it with care and not support the shock by it tubular housing.

The front stabilizer bar diameter has been increased for the SRT8 to the size of that used on Export vehicles, 30 mm. It is serviced in the same manner as the standard RWD bar.

SPECIFICATIONS

TORQUE

TORQUE SPECIFICATIONS

DESCRIPTION	N.m	Ft. Lbs.	In. Lbs.
Engine Cradle Mounting Bolts	185	136	-
Hub And Bearing Mounting Bolts	68	50	-
Hub Nut	250	184	-
Knuckle Dust Shield Screws	10	7	89
Lower Control Arm Cradle Nut	176	130	-
Lower Control Arm Ball Joint Nut	68 + 90° TURN	50 + 90° TURN	-
Tension Strut Cradle Nut	176	130	-

Tension Strut Ball Joint Nut	68 + 90° TURN	50 + 90° TURN	-
Shock Absorber Lower Mounting Bolt	174	128	-
Shock Absorber Upper Mounting Nuts	27	20	239
Shock Absorber Shaft Nut	95	70	-
Stabilizer Bar Link Upper (Shock) Nut	128	95	-
Stabilizer Bar Link Lower Nut	128	95	-
Stabilizer Bar Isolator Retainer Bolts	60	44	-
Stabilizer Bar Heat Shield Screws	7	5	62
Upper Control Arm Ball Joint Nut	47 + 90° TURN	35 + 90° TURN	-
Upper Control Arm Body Nuts	75	55	-
Outer Tie Rod Ball Joint Nut	85	63	-
Tie Rod Jam Nut	75	55	-

SPECIAL TOOLS

SPECIAL TOOL

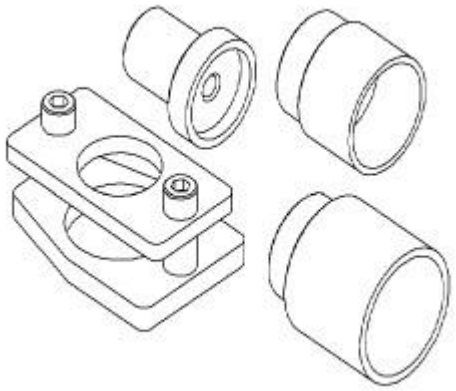

Fig. 4: Remover/Installer, Ball Joint 9320
Courtesy of CHRYSLER LLC

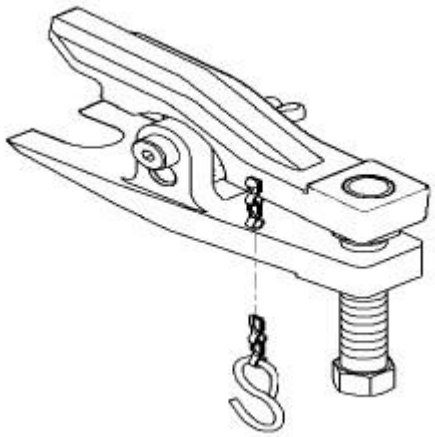

Fig. 5: Remover, Ball Stud 9360

Courtesy of CHRYSLER LLC

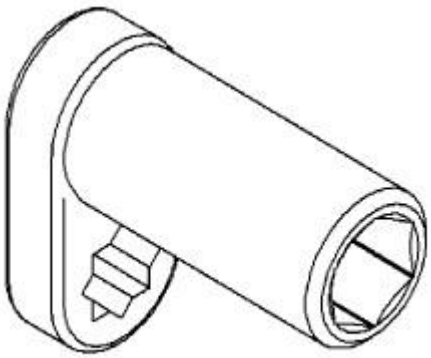

Fig. 6: Wrench, Shock Nut 9362
Courtesy of CHRYSLER LLC

ARM, LOWER CONTROL

Removal

REMOVAL

1. Raise and support vehicle. Refer to **Vehicle Quick Reference/Hoisting - Standard Procedure**

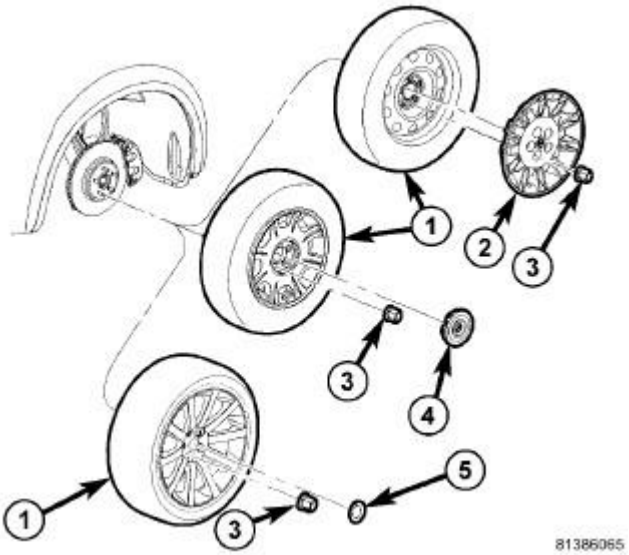

Fig. 7: TIRE AND WHEEL MOUNTING
Courtesy of CHRYSLER LLC

2. Remove wheel mounting nuts (3), then tire and wheel assembly (1).
3. Remove belly pan. Refer to **Body/Exterior/BELLY PAN - Removal**

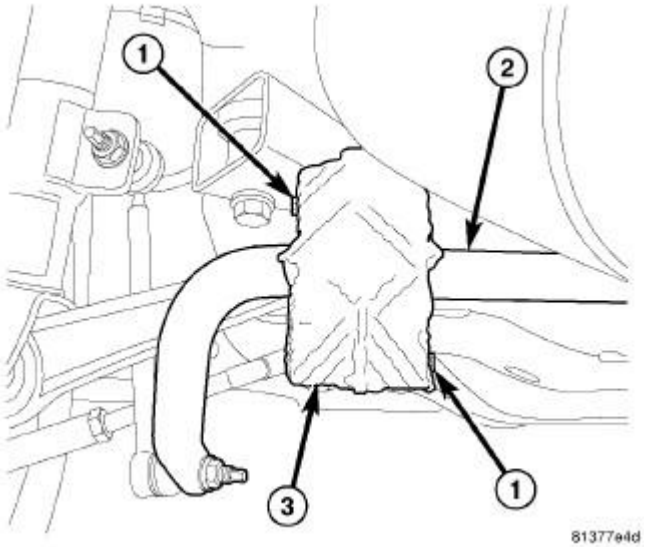

Fig. 8: FRONT STABILIZER BAR HEAT SHIELD
Courtesy of CHRYSLER LLC

4. Remove screws (1) fastening stabilizer bar heat shield (3) on side of control arm repair.

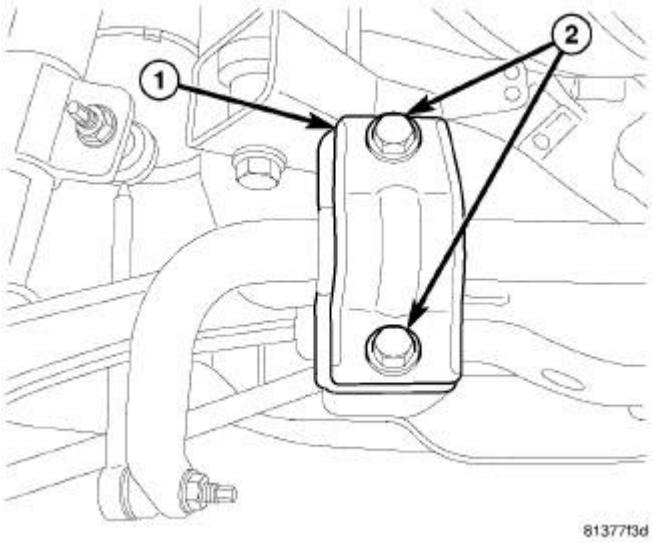

Fig. 9: FRONT STABILIZER BAR BUSHING RETAINER BOLTS
Courtesy of CHRYSLER LLC

5. Remove bolts (2) fastening stabilizer bar bushing retainer (1) in place on side of control arm repair.

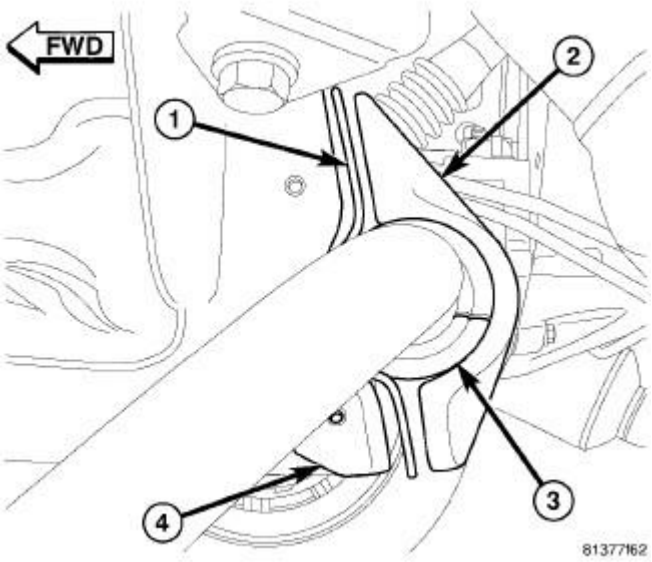

Fig. 10: FRONT STABILIZER BAR BUSHING RETAINER
Courtesy of CHRYSLER LLC

6. Remove retainer halves (1) (2) from around stabilizer bar bushing (3).

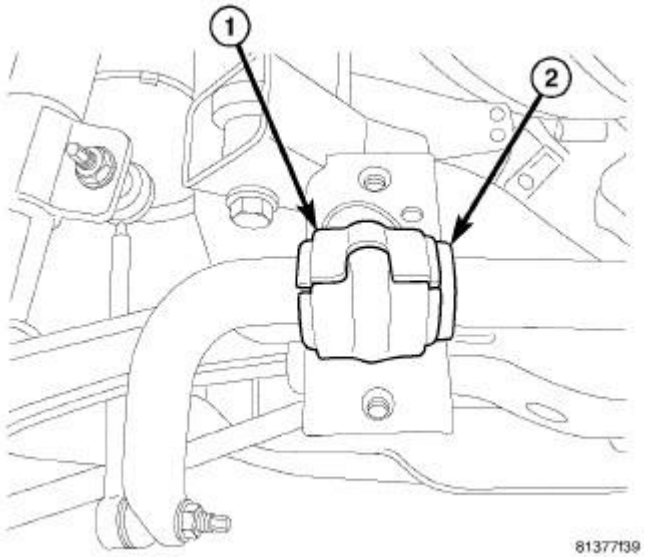

Fig. 11: FRONT STABILIZER BAR BUSHING ON BAR
Courtesy of CHRYSLER LLC

7. Utilizing slit, remove bushing (1) from stabilizer bar (2).

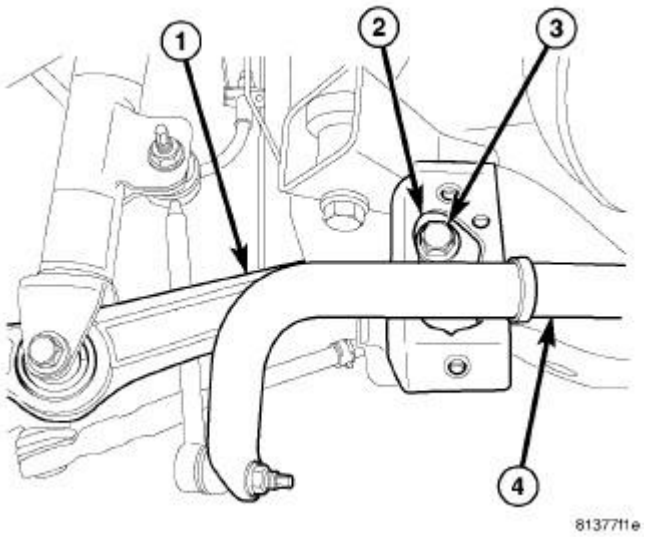

Fig. 12: CONTROL ARM CRADLE BOLT HEAD
Courtesy of CHRYSLER LLC

NOTE: **In the following step, the lower control arm cradle bolt (3) is accessed through the opening (2) created by removal of the bushing from the stabilizer bar (4).**

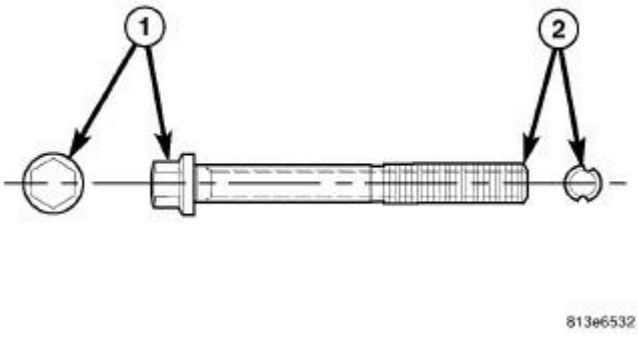

Fig. 13: WHEEL ALIGNMENT ADJUSTMENT BOLT
Courtesy of CHRYSLER LLC

CAUTION: If the lower control arm bolt at the engine cradle has a lengthwise grooved shaft (2), it is a special wheel alignment adjustment bolt and the bolt head (1) must not be rotated in the vehicle or damage to the bolt and engine cradle will result. While holding the bolt in place with a wrench, remove the nut, then slide the bolt out of the bushing and cradle taking note of bolt positioning in engine cradle for reassembly purposes. The bolt needs to be installed in the same position as removed to make sure wheel camber and caster return to adjusted position.

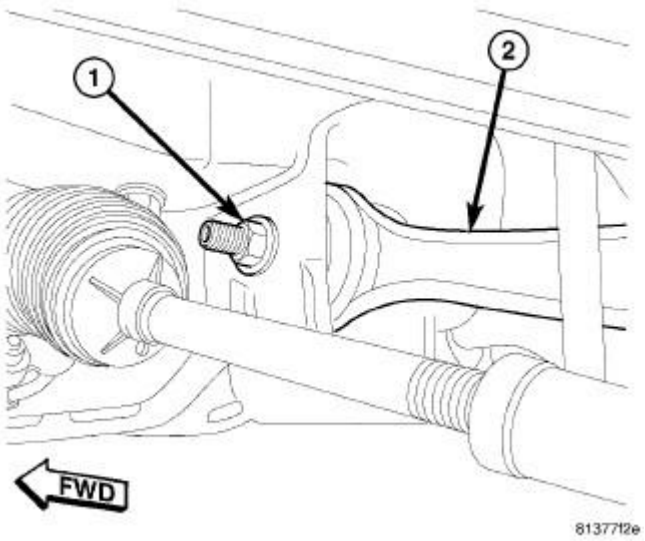

Fig. 14: CONTROL ARM CRADLE BOLT NUT
Courtesy of CHRYSLER LLC

8. Remove bolt and nut (1) securing lower control arm (2) to engine cradle. If bolt has a lengthwise grooved shaft (see above note), remove bolt and nut by holding the bolt in place with a wrench, removing nut, then sliding bolt out of bushing and cradle while taking note of bolt positioning in lower control arm bushing for reassembly purposes.

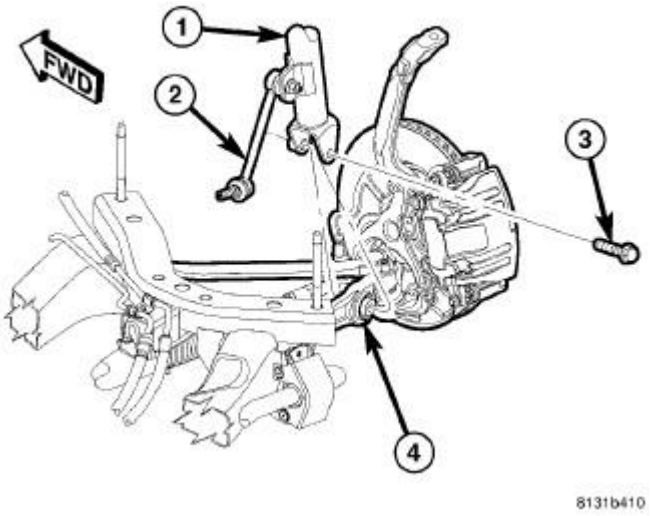

Fig. 15: LOWER SHOCK MOUNTING BOLT
Courtesy of CHRYSLER LLC

9. Remove bolt (3) securing shock assembly (1) to lower control arm (4).

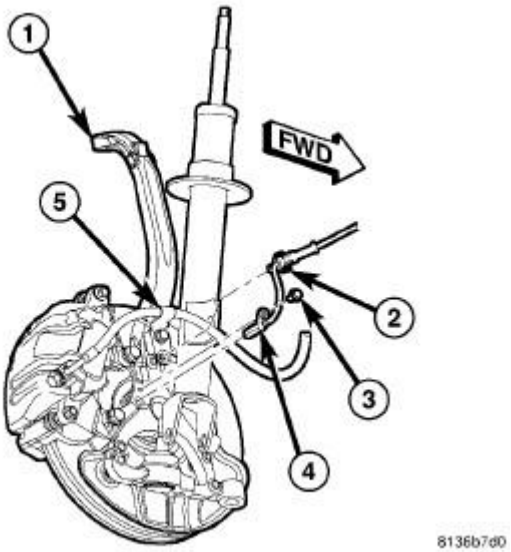

Fig. 16: WHEEL SPEED SENSOR AT FRONT KNUCKLE
Courtesy of CHRYSLER LLC

10. Remove screw (3) fastening wheel speed sensor to knuckle (1). Pull sensor head (4) out of knuckle.
11. Remove wheel speed sensor cable routing clip (2) from brake flex hose routing bracket (5).

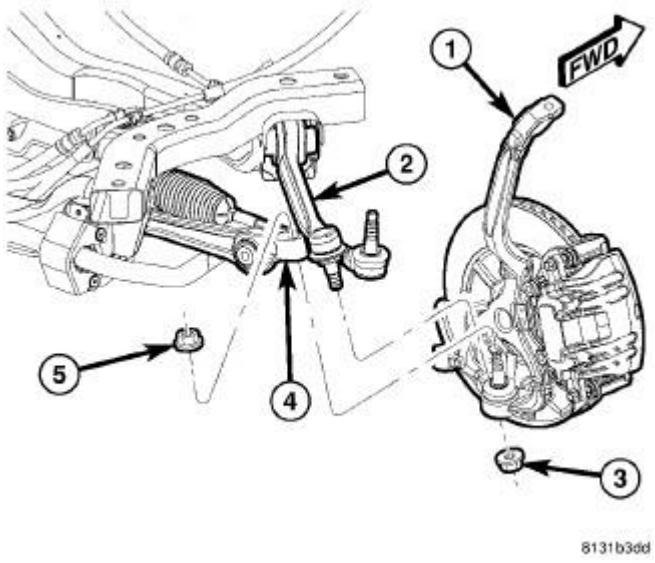

Fig. 17: BALL JOINT ATTACHMENT
Courtesy of CHRYSLER LLC

12. Loosen nut (5) attaching ball joint stud to lower control arm (4). Back nut off until nut is even with end of stud. **Keeping nut on at this location will help keep end of stud from distorting while using Puller in next step.**

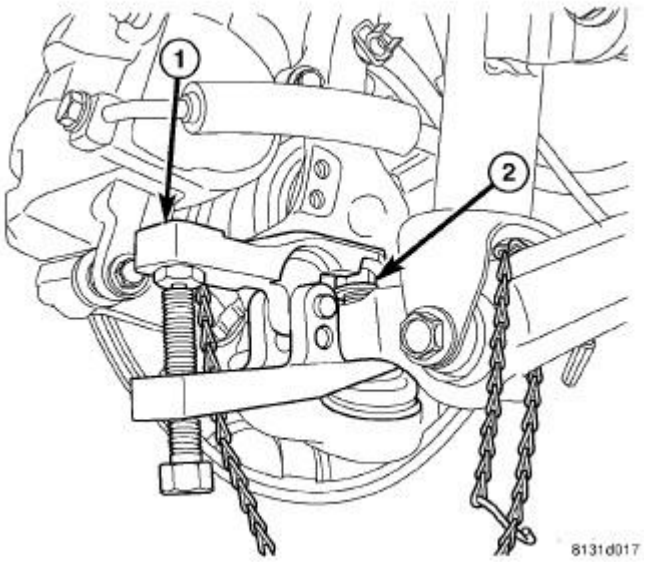

Fig. 18: USING PULLER ON LOWER CONTROL ARM BALL JOINT
Courtesy of CHRYSLER LLC

CAUTION: In following step, use care not to damage ball joint seal boot while sliding Ball Joint Remover 9360, into place past seal boot.

13. Using Ball Joint Remover 9360 (1), separate ball joint stud (2) from lower control arm.

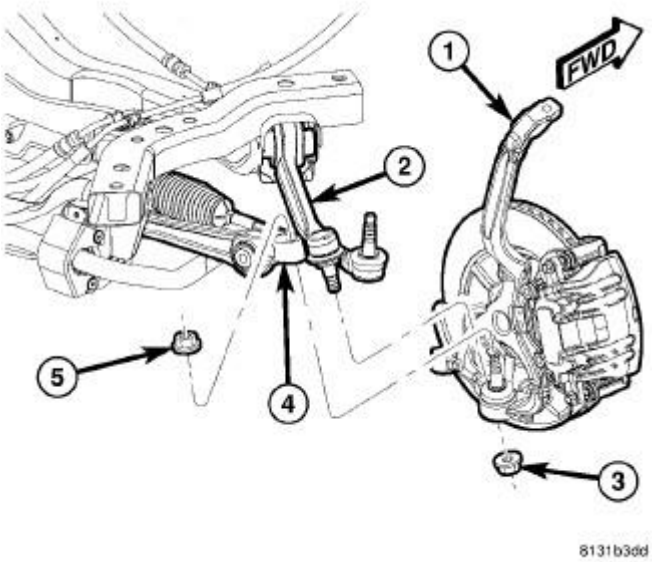

Fig. 19: BALL JOINT ATTACHMENT
Courtesy of CHRYSLER LLC

14. Remove nut (5) from end of ball joint stud attaching lower control arm to knuckle.
15. Pry knuckle downward and slide ball joint stud out of lower control arm. Position knuckle

outward, away from lower control arm.

16. Slide lower control arm out of engine cradle and remove from vehicle.

Installation

INSTALLATION

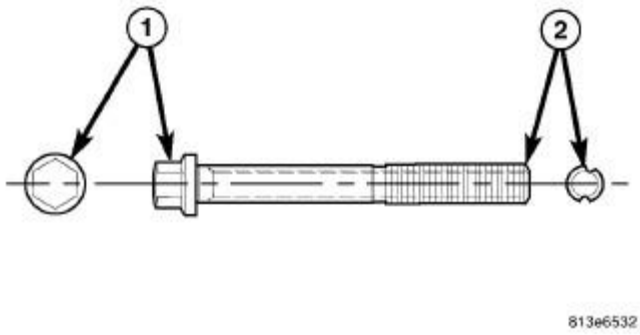

Fig. 20: WHEEL ALIGNMENT ADJUSTMENT BOLT
Courtesy of CHRYSLER LLC

NOTE: If installing a lower control arm engine cradle bolt that is a wheel alignment adjustment bolt (1) (lengthwise grooved shaft (2)), make sure to install it in the same position which it was in upon removal. For more details on installation of this special bolt. See Front Suspension/Wheel Alignment - Standard Procedure.

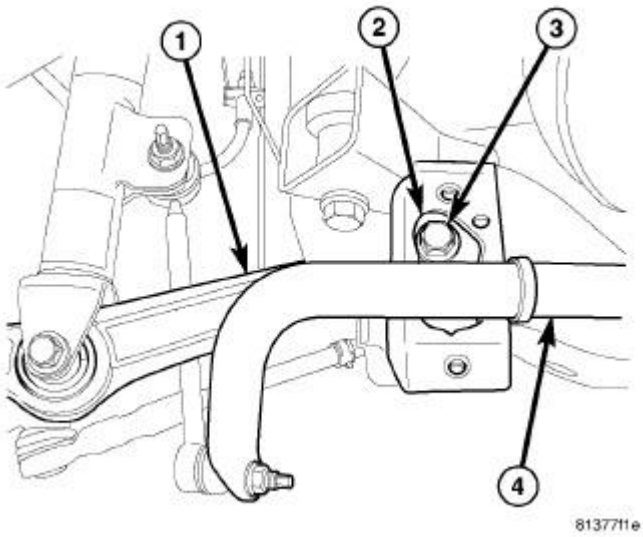

Fig. 21: CONTROL ARM CRADLE BOLT HEAD
Courtesy of CHRYSLER LLC

1. Slide lower control arm (4) into position in engine cradle and install mounting bolt from rear.

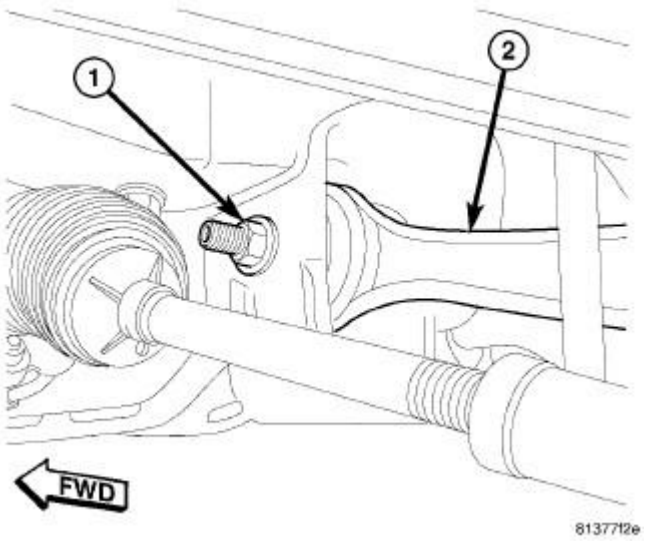

Fig. 22: CONTROL ARM CRADLE BOLT NUT
Courtesy of CHRYSLER LLC

2. Install nut (1) on lower control arm cradle bolt, but **do not tighten at this time** .

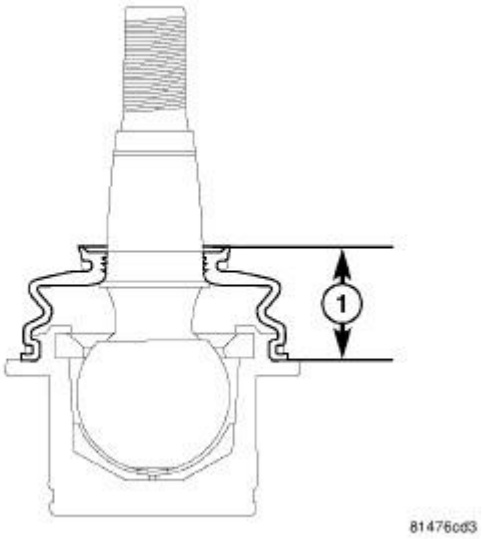

Fig. 23: BALL JOINT SEAL BOOT HEIGHT
Courtesy of CHRYSLER LLC

CAUTION: Before installing knuckle to lower control arm, measure height of ball joint seal boot (1) mounted on knuckle. If seal boot height is above 25.5 mm, any air inside seal boot must be expelled. To do so, follow these steps.

a. **Tip ball joint stud completely to one side.**
b. **Using thumb and index finger, gently squeeze seal boot together at center expelling any air. Do not allow grease to be release.**
c. **Push down very top of seal boot.**
d. **Return ball joint stud to original "centered" position.**
e. **Measure ball joint seal boot height (1) making sure it is within specification.**
f. **Wipe any grease from ball joint stud.**

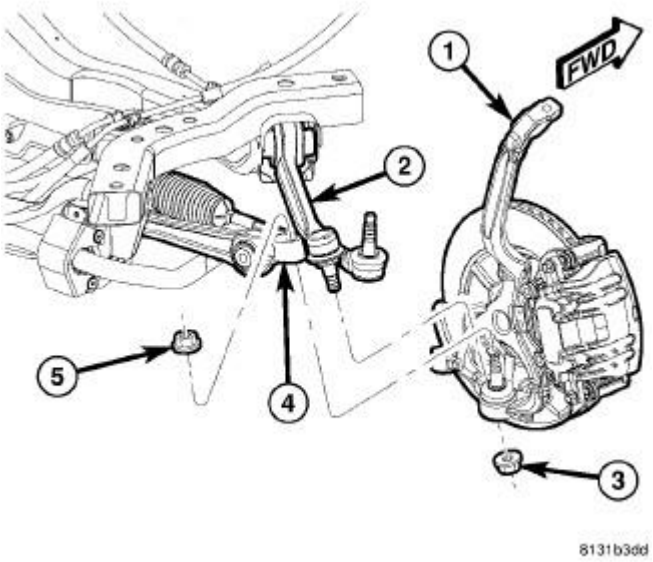

Fig. 24: BALL JOINT ATTACHMENT
Courtesy of CHRYSLER LLC

3. Pull knuckle (1) downward and position lower control arm (4) over ball joint stud. Release knuckle, guiding stud into lower control arm. Install NEW nut (5) on ball joint stud attaching lower control arm (4) to knuckle (1). Tighten nut by holding ball joint stud with a hex wrench while turning nut with a wrench. Tighten nut using crow foot wrench on torque wrench to 68 N.m + 90° turn (50 ft. lbs. + 90° turn).

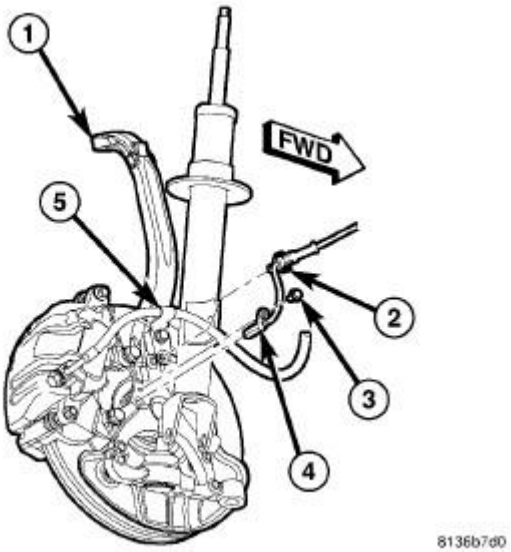

Fig. 25: WHEEL SPEED SENSOR AT FRONT KNUCKLE
Courtesy of CHRYSLER LLC

4. Install wheel speed sensor head (4) into knuckle and install mounting screw (3). Tighten screw to 11 N.m (95 in. lbs.).
5. Attach wheel speed sensor cable and routing clip (2) to brake flex hose routing bracket (5).

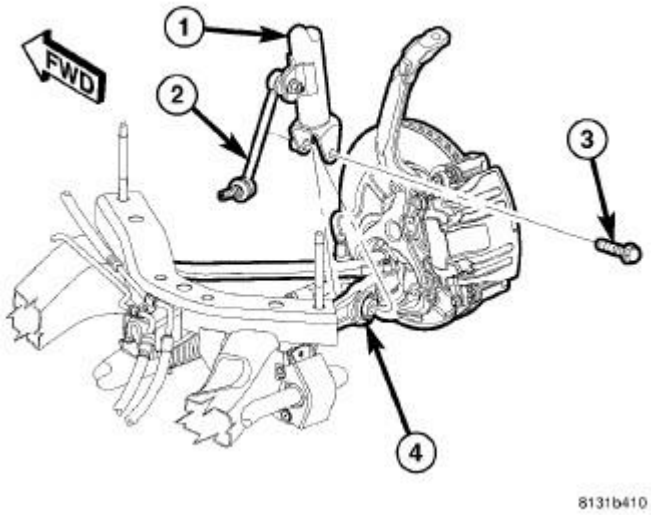

Fig. 26: LOWER SHOCK MOUNTING BOLT
Courtesy of CHRYSLER LLC

6. Install lower shock mounting bolt (3) attaching shock assembly (1) to lower control arm (4). **Do not tighten bolt at this time.**

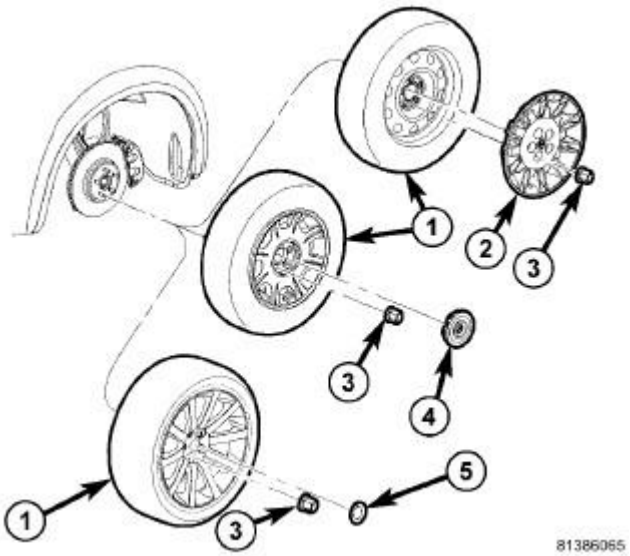

Fig. 27: TIRE AND WHEEL MOUNTING
Courtesy of CHRYSLER LLC

7. Install tire and wheel assembly (1). Refer to **Tires and Wheels - Installation** . Tighten wheel mounting nuts (3) to 150 N.m (110 ft. lbs.) (Police - 190 N.m (140 ft. lbs.)).
8. Lower vehicle.

CAUTION: Because stabilizer bar is disconnected at cradle it is important to use extra care while moving vehicle to alignment rack/drive-on lift.

9. Position vehicle on an alignment rack/drive-on lift.
10. Tighten lower shock mounting bolt (3) to 174 N.m (128 ft. lbs.).

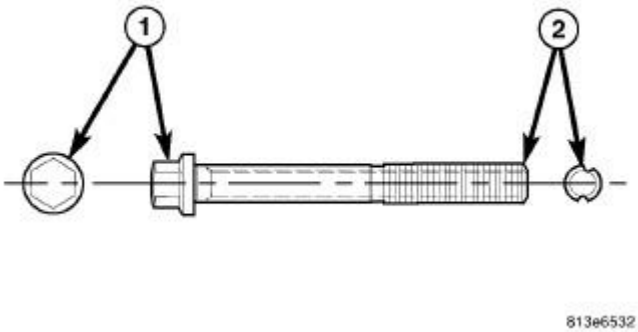

Fig. 28: WHEEL ALIGNMENT ADJUSTMENT BOLT
Courtesy of CHRYSLER LLC

11. Perform wheel alignment. See **Front Suspension/Wheel Alignment - Standard Procedure**

CAUTION: If the control arm engine cradle bolt is a wheel alignment adjustment bolt (lengthwise grooved shaft (2)), be sure to only tighten the nut. Do not rotate the bolt head (1) or damage to the bushing will occur.

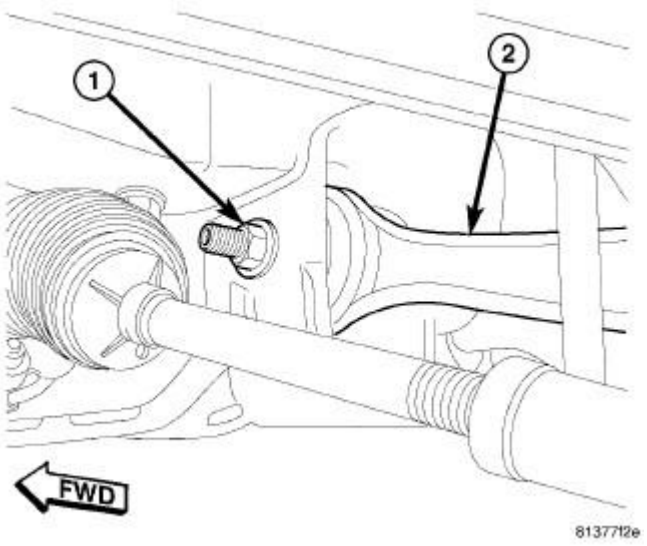

Fig. 29: CONTROL ARM CRADLE BOLT NUT
Courtesy of CHRYSLER LLC

12. Once camber is found to be within specifications, using a crowfoot wrench, tighten lower control arm cradle bolt nut (1) to 176 N.m (130 ft. lbs.) while holding the bolt stationary.

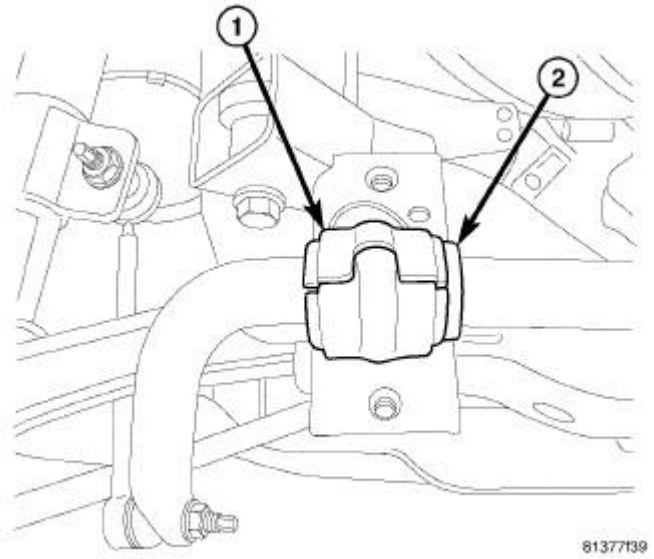

Fig. 30: FRONT STABILIZER BAR BUSHING ON BAR
Courtesy of CHRYSLER LLC

CAUTION: Because of stabilizer bushing outer shape, it is very important to install bushings in position discussed in following step.

13. Utilizing slit in bushing, install stabilizer bar bushing (1) against locating collar on stabilizer bar (2) as shown in illustration. Make sure slit in bushing is positioned toward rear of vehicle.

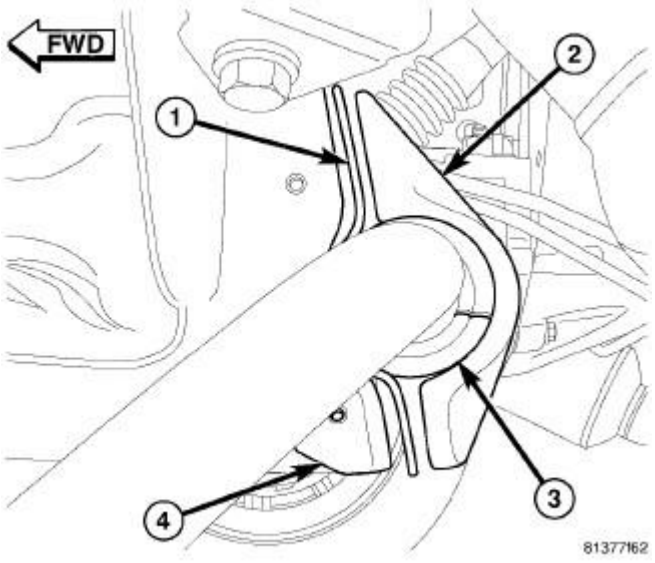

Fig. 31: FRONT STABILIZER BAR BUSHING RETAINER
Courtesy of CHRYSLER LLC

14. Install stabilizer bar bushing retainer halves (1) (2) around bushing (3).

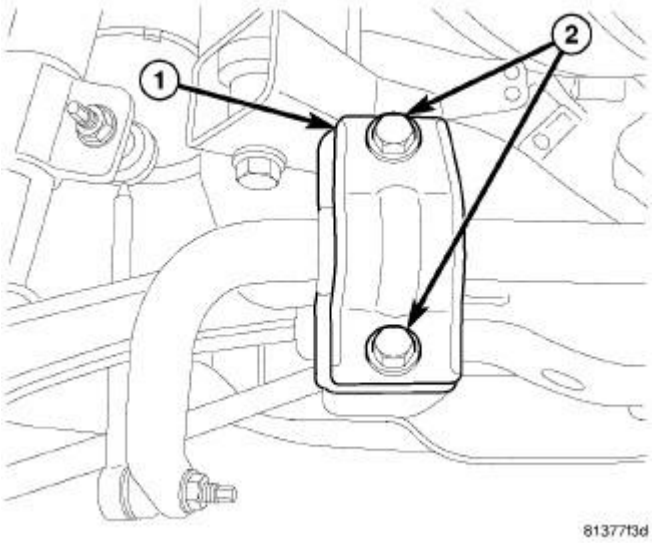

Fig. 32: FRONT STABILIZER BAR BUSHING RETAINER BOLTS
Courtesy of CHRYSLER LLC

15. Install bolts (2) securing stabilizer bar bushing retainer halves (1) to cradle. Tighten bolts to 60 N.m (44 ft. lbs.).

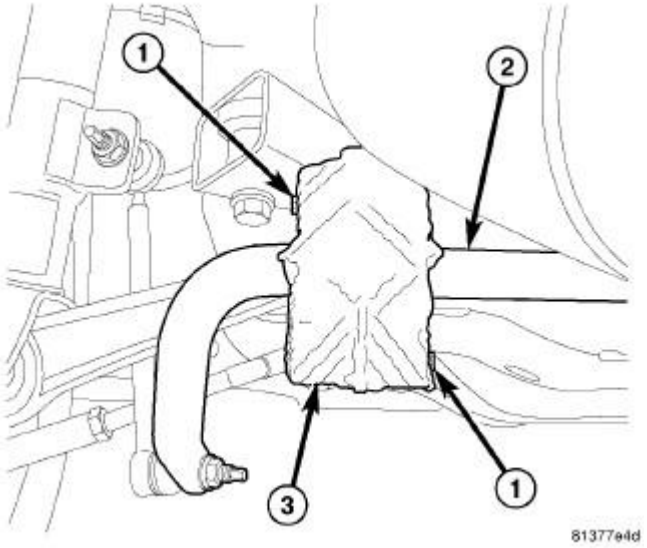

Fig. 33: FRONT STABILIZER BAR HEAT SHIELD
Courtesy of CHRYSLER LLC

16. Install stabilizer bar heat shield (3) over stabilizer bar bushing retainer. Install mounting screws (1).
17. Install belly pan. Refer to **Body/Exterior/BELLY PAN - Installation**

ARM, UPPER CONTROL

Removal

REMOVAL

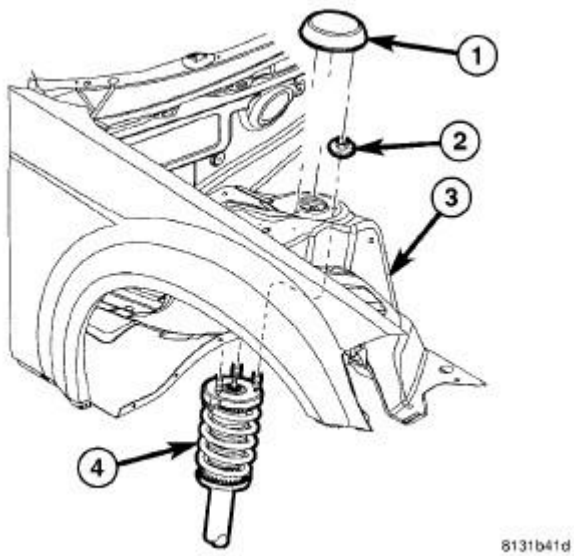

Fig. 34: UPPER SHOCK MOUNTING
Courtesy of CHRYSLER LLC

1. If removing left upper control arm, remove and reposition coolant recovery container. Refer to **Cooling/Engine/BOTTLE, Coolant Recovery - Removal** .
2. If removing right upper control arm, remove the totally integrated power module (TIPM) from mount and reposition. Refer to **Electrical - Wiring/Power Distribution/MODULE, Totally Integrated Power (TIPM) - Removal**
3. If equipped, remove front shock tower cap (1) from top of shock assembly (4).
4. Remove three nuts (2) fastening shock assembly (4) to shock tower (3).

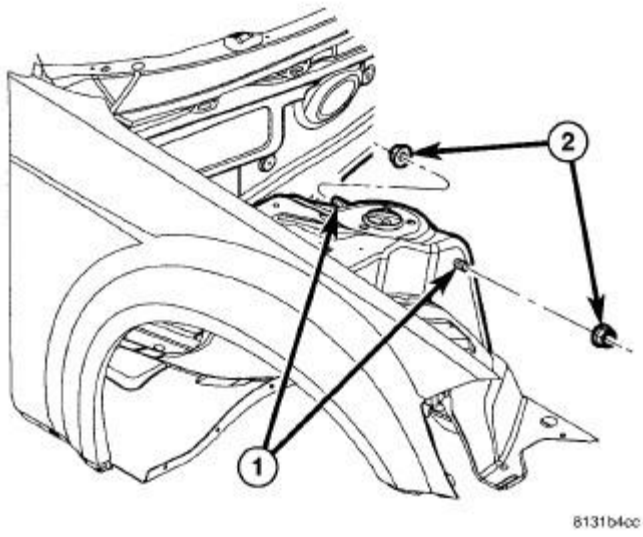

Fig. 35: UPPER CONTROL ARM MOUNTING NUTS
Courtesy of CHRYSLER LLC

5. Remove nuts (2) from upper control arm mounting bolts (1).
6. Raise and support vehicle. Refer to **Vehicle Quick Reference/Hoisting - Standard Procedure** .

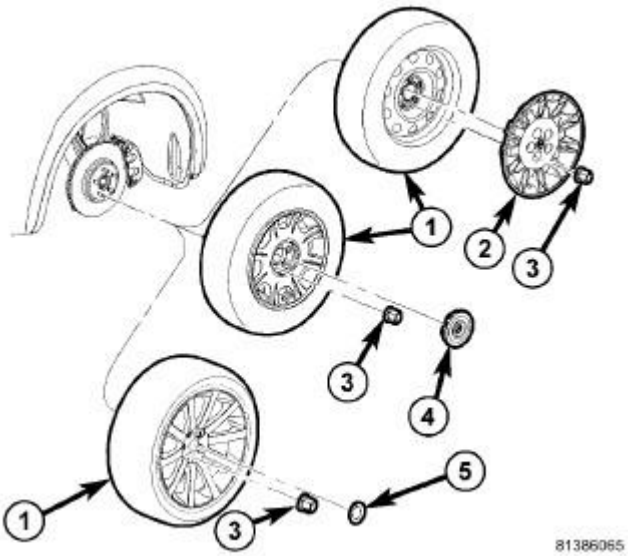

Fig. 36: TIRE AND WHEEL MOUNTING
Courtesy of CHRYSLER LLC

7. Remove wheel mounting nuts (3), then tire and wheel assembly (1).

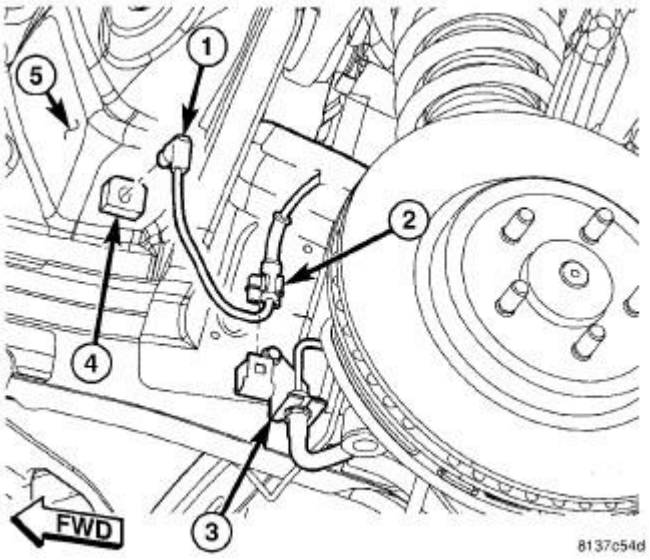

Fig. 37: WHEEL SPEED SENSOR AT BODY CONNECTOR
Courtesy of CHRYSLER LLC

8. Disconnect wheel speed sensor cable routing clip (2) at brake tube bracket (3).

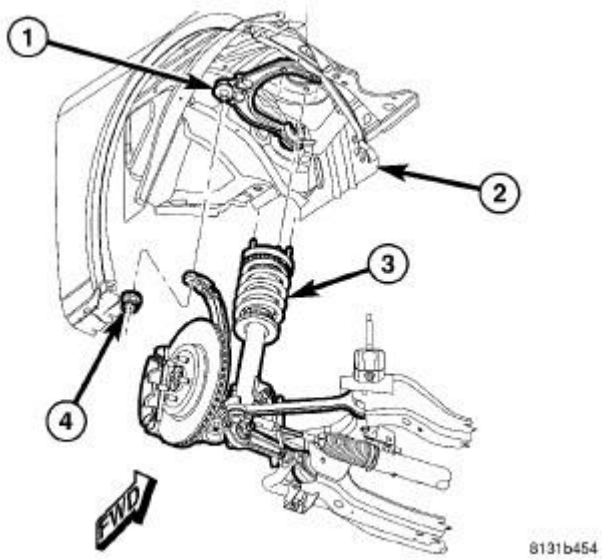

Fig. 38: UPPER BALL JOINT MOUNTING
Courtesy of CHRYSLER LLC

9. Loosen nut (4) attaching upper ball joint stud (1) to knuckle. Back nut off until nut is even with end of stud. **Keeping nut on at this location will help keep end of stud from distorting while using Puller in next step.**

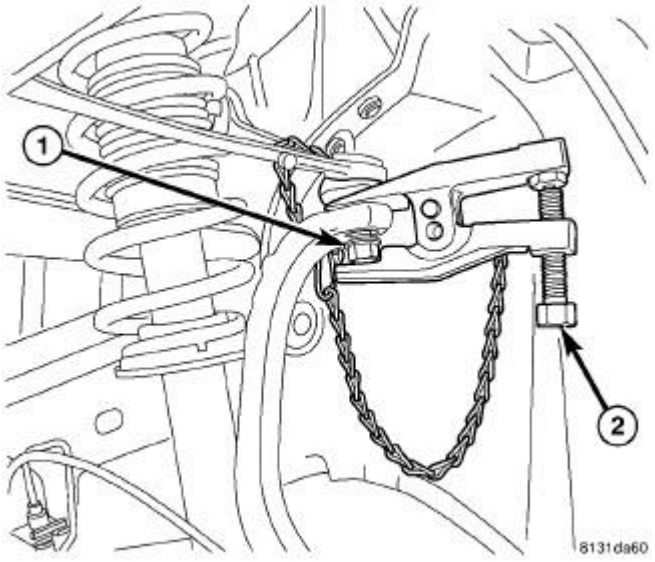

Fig. 39: USING PULLER ON UPPER BALL JOINT
Courtesy of CHRYSLER LLC

CAUTION: In following step, use care not to damage ball joint seal boot while sliding Ball Joint Remover 9360, into place past seal boot.

10. Using Puller 9360 (2), separate upper ball joint stud (1) from knuckle.

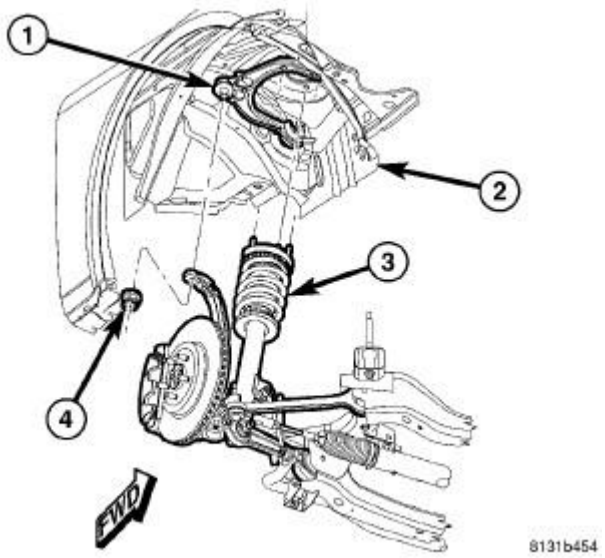

Fig. 40: UPPER BALL JOINT MOUNTING
Courtesy of CHRYSLER LLC

11. Remove nut (4) from end of upper ball joint stud (1).
12. Pull shock assembly (3) downward until studs clear shock tower (2), then pull it outward allowing access to upper control arm mounting bolts.

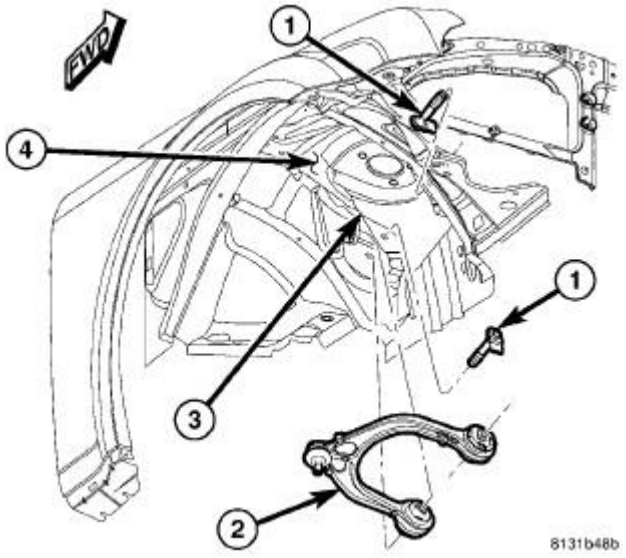

Fig. 41: UPPER CONTROL ARM MOUNTING
Courtesy of CHRYSLER LLC

13. Remove upper control arm mounting (flag) bolts (1).

14. Remove upper control arm (2) from bracket (3) in shock tower (4).

Installation

INSTALLATION

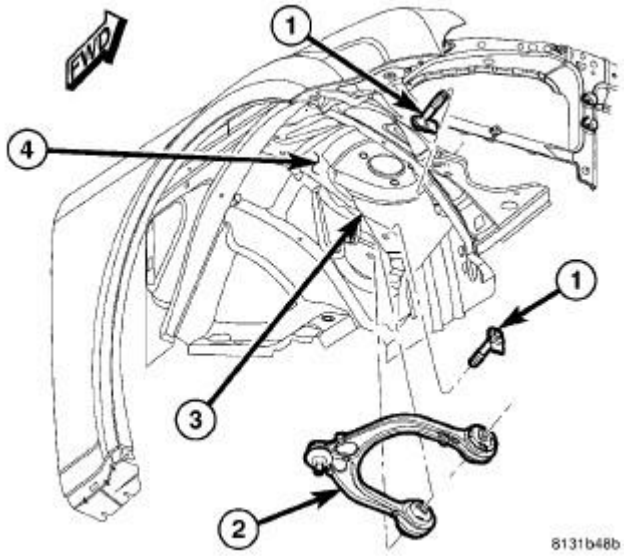

Fig. 42: UPPER CONTROL ARM MOUNTING
Courtesy of CHRYSLER LLC

1. Slide upper control arm (2) into bracket (3) located in shock tower (4).
2. Install upper control arm mounting (flag) bolts (1) through bracket, arm and tower. Position flags on bolt heads outward, toward wheel opening.

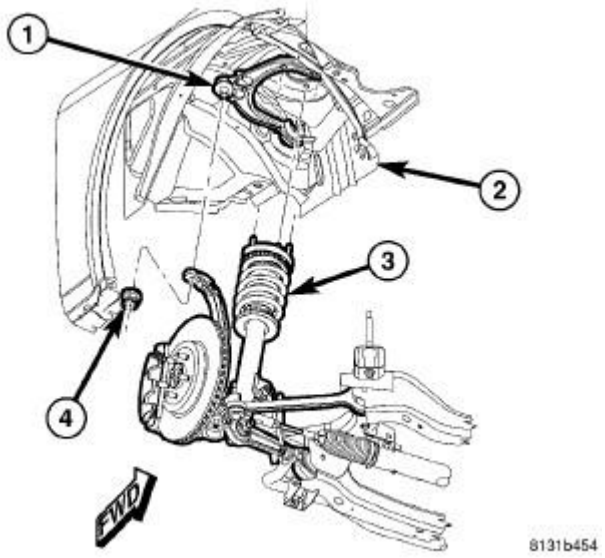

Fig. 43: UPPER BALL JOINT MOUNTING
Courtesy of CHRYSLER LLC

3. Move shock assembly (3) allowing studs to be inserted through shock tower (2) mounting holes.
4. Place upper ball joint stud (1) through hole in top of knuckle and install nut (4). Tighten nut by holding ball joint stud with a hex wrench while turning nut with a wrench. Tighten nut using crow-foot wrench on torque wrench to 47 N.m + 90° turn (35 ft. lbs. + 90° turn).

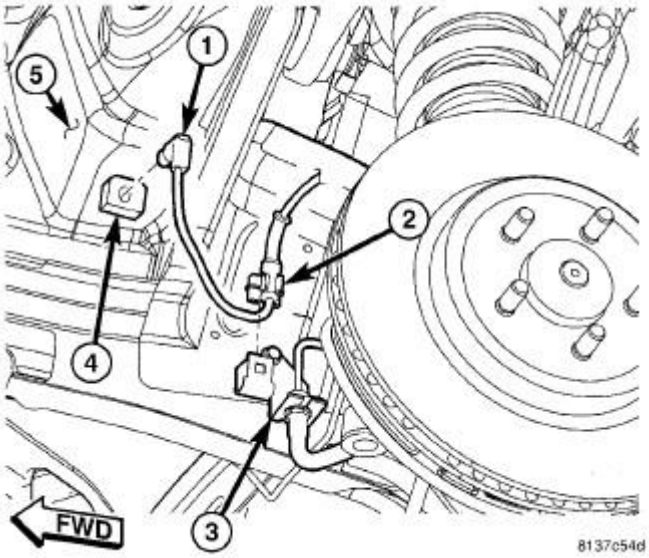

Fig. 44: WHEEL SPEED SENSOR AT BODY CONNECTOR
Courtesy of CHRYSLER LLC

5. Connect wheel speed sensor cable routing clip (2) at brake tube bracket (3).

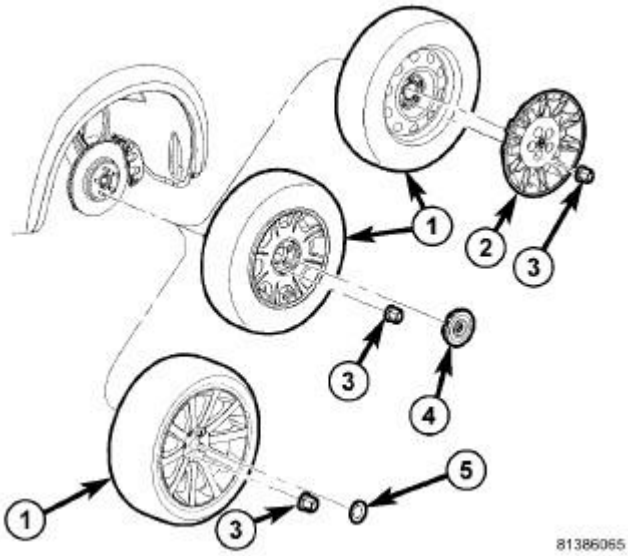

Fig. 45: TIRE AND WHEEL MOUNTING
Courtesy of CHRYSLER LLC

6. Install tire and wheel assembly (1). Refer to **Tires and Wheels - Installation** . Tighten wheel mounting nuts (3) to 150 N.m (110 ft. lbs.) (Police - 190 N.m (140 ft. lbs.)).
7. Lower vehicle to curb position.

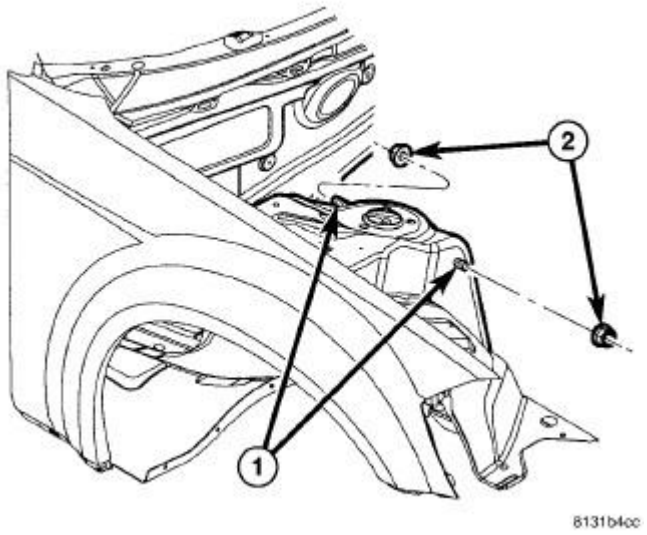

Fig. 46: UPPER CONTROL ARM MOUNTING NUTS
Courtesy of CHRYSLER LLC

8. Install nuts (2) on upper control arm body mounting bolts (1). Tighten nuts to 75 N.m (55 ft. lbs.).

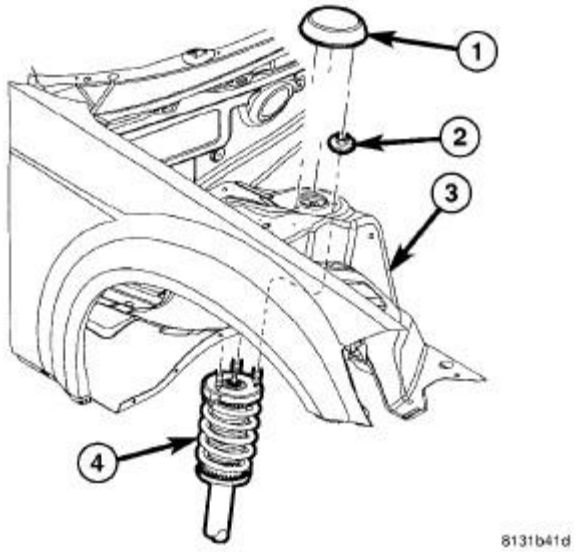

Fig. 47: UPPER SHOCK MOUNTING

Courtesy of CHRYSLER LLC

9. Install three nuts (2) fastening shock assembly (4) to shock tower (3). Tighten nuts to 27 N.m (20 ft. lbs.).
10. If equipped, align shock tower cap (1) with shock mounting nuts (2) and snap into place.
11. If installing left upper control arm, install coolant recovery container. Refer to **Cooling/Engine/BOTTLE, Coolant Recovery - Installation**
12. If installing right upper control arm, install the totally integrated power module (TIPM). Refer to **Electrical - Wiring/Power Distribution/MODULE, Totally Integrated Power (TIPM) - Installation**

BALL JOINT, SUSPENSION, LOWER

Description

DESCRIPTION

There are two lower ball joints on this vehicle. One for the lower control arm and the other for the tension strut. The ball joint for the lower control arm is pressed into the knuckle and the ball joint for the tension strut is part of the tension strut. The ball joints are both "sealed for life" components and cannot be maintenance lubricated. **No attempt should ever be made to add any lubrication to these ball joints.**

The ball joint for the lower control arm is a ball joint and seal boot cartridge type and can be replaced as a separate component of the knuckle. The boot cannot be serviced separately. To service this ball joint. See **Front Suspension/Front/KNUCKLE, Steering - Disassembly**.

Neither the ball joint, nor the seal boot for the tension strut can be serviced as a separate component. The entire tension strut must be replaced if either are damaged.

The ball joint connection to the lower control arm and the ball joint connection at the knuckle is achieved by an interference fit created by the tapered stud of the ball joint and a tapered hole in the steering knuckle. The ball joint stud is retained in the steering knuckle using a locking nut.

Diagnosis and Testing

LOWER BALL JOINT

1. Raise vehicle on a drive-on hoist.

   NOTE: If a drive-on hoist is not available, use wooden blocks with jack stands to support the lower control arm in the ball joint area. Place the jack stands appropriately and lower the hoist placing weight on the lower control arm. The lower control arms should now be supporting the vehicle weight.

2. Using a jack, lift the front end off the hoist and position a wooden block underneath lower control arm supporting that portion of the vehicles weight.

3. Remove tire and wheel assembly. Refer to **Tires and Wheels - Removal** .
4. Attach a dial indicator as follows:
    a. Tension Strut - Attach a dial indicator to base of tension strut, then align dial indicator's contact pointer with direction of stud axis and touch machined flat on knuckle near ball joint. Zero dial indicator.
    b. Lower Control Arm - Attach a dial indicator to base of lower control arm, then align dial indicator's contact pointer with direction of stud axis and touch machined flat on knuckle near ball joint. Zero dial indicator.

NOTE: Use care when applying the load to the knuckle so as to not damage components of the suspension.

5. Insert a pry bar and rest it against lower control arm or tension strut (depending on which is being tested) and use lever principle to push knuckle upward until dial indicator no longer moves.
6. Record any ball joint movement. If movement in the lower control arm exceeds 1.5 mm (.059 in.), the ball joint is faulty.
7. If the ball joint for the lower control arm needs replaced, it can be serviced separately. See **Front Suspension/Front/KNUCKLE, Steering - Disassembly**.
8. If the tension strut ball joint needs replaced, the entire tension strut needs to be replaced. See **Front Suspension/Front/STRUT, Tension - Removal**.

Removal

REMOVAL

To service the lower ball joint for the lower control arm, the knuckle must be removed from the vehicle, then the ball joint can be removed. See **Front Suspension/Front/KNUCKLE, Steering - Removal** and **Front Suspension/Front/KNUCKLE, Steering - Disassembly**.

Installation

INSTALLATION

To install the ball joint for the lower control arm. See **Front Suspension/Front/KNUCKLE, Steering - Assembly**.

BALL JOINT, SUSPENSION, UPPER

Description

DESCRIPTION

The upper ball joint is pressed into the upper control arm. The ball joint is a "sealed for life" component and cannot be maintenance lubricated. This ball joint is lubricated for life at the time of assembly. **No attempt should be made to ever add any lubrication to this ball joint.**

Neither the upper ball joint, nor the seal boot can be serviced as a separate component. The entire upper control arm must be replaced if either are damaged.

The ball joint connection at the knuckle is achieved by an interference fit created by the tapered stud of the ball joint and a tapered hole in the steering knuckle. The ball joint stud is retained in the steering knuckle using a locking nut.

Diagnosis and Testing

UPPER BALL JOINT

1. Raise vehicle on a drive-on hoist.

   NOTE: If a drive-on hoist is not available, use wooden blocks with jack stands to support the lower control arm in the ball joint area. Place the jack stands appropriately and lower the hoist placing weight on the lower control arm. The lower control arms should now be supporting the vehicle weight.

2. Using a jack, lift the front end off the hoist and position a wooden block underneath lower control arm supporting that corner of the vehicles weight.
3. Remove tire and wheel assembly. Refer to **Tires and Wheels - Removal**
4. Attach a dial indicator to body of upper control arm, then align dial indicator's contact pointer with direction of stud axis and touch machined flat on end of knuckle near ball joint. Zero dial indicator.

   NOTE: Use care when applying the load to the knuckle so as to not damage components of suspension.

5. Insert a pry bar and rest it against bottom of upper control arm and use lever principle to push arm upward until dial indicator no longer moves.
6. Record any ball joint movement. If movement in the control arm exceeds 1.5 mm (.059 in.), the ball joint is faulty.
7. If the ball joint needs replaced, the entire upper control arm needs to be replaced. See **Front Suspension/Front/ARM, Upper Control - Removal**

HUB AND BEARING

Description

DESCRIPTION

The front wheel bearing and wheel hub of this vehicle are a one-piece sealed unit or hub and bearing unit type assembly.

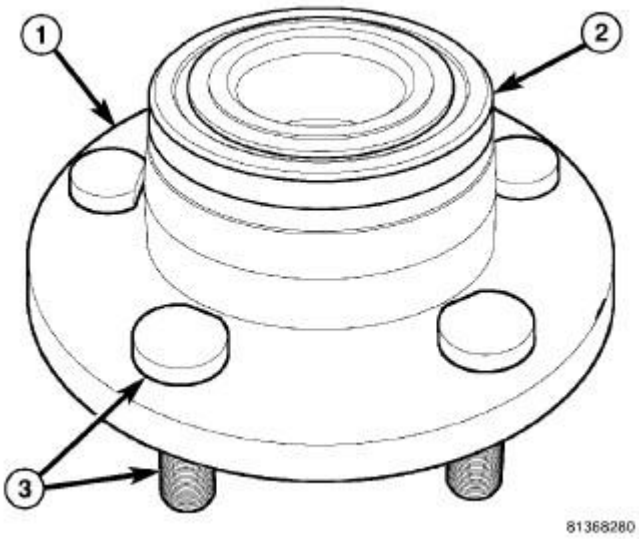

Fig. 48: FRONT HUB AND BEARING
Courtesy of CHRYSLER LLC

On Rear-Wheel Drive SRT8 vehicles, the hub and bearing (1) is mounted to the center of the spindle using a retaining nut.

All front hub and bearings have five wheel mounting studs (3) on the hub flange for mounting the wheel to the vehicle. The wheel mounting studs are the only replaceable components of the hub and bearing. Otherwise, the hub and bearing is serviced only as a complete assembly.

A magnetic encoder (2) for the wheel speed sensor is pressed onto the hub and bearing.

Diagnosis and Testing

HUB AND BEARING

NOTE: The hub and bearing is designed for the life of the vehicle and should require no maintenance.

With wheel and brake rotor removed, rotate flanged outer ring of hub. Excessive roughness, lateral play or resistance to rotation may indicate dirt intrusion or bearing failure. If the rear wheel bearings exhibit these conditions during inspection, the hub and bearing assembly should be replaced.

Damaged bearing seals and resulting excessive grease loss may also require bearing replacement. Moderate grease loss from bearing is considered normal and should not require replacement of the hub and bearing assembly.

Removal

REMOVAL

1. Raise and support vehicle. Refer to **Vehicle Quick Reference/Hoisting - Standard Procedure** .

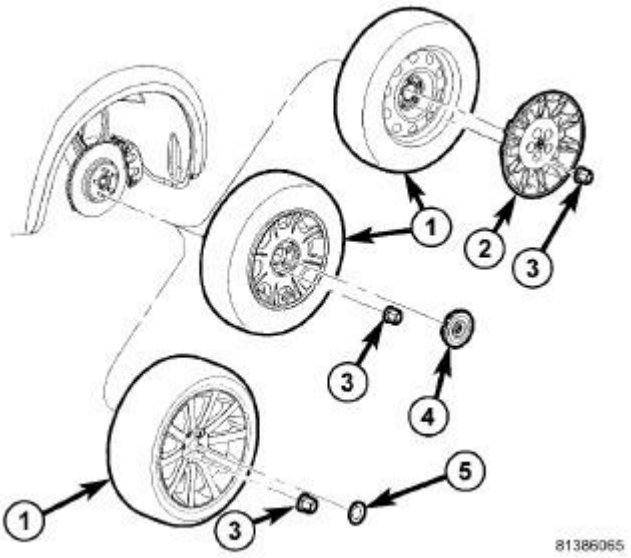

Fig. 49: TIRE AND WHEEL MOUNTING
Courtesy of CHRYSLER LLC

2. Remove wheel mounting nuts (3), then tire and wheel assembly (1).
3. Access and remove front brake rotor. Refer to **Brakes/Hydraulic/Mechanical/ROTOR, Brake - Removal**

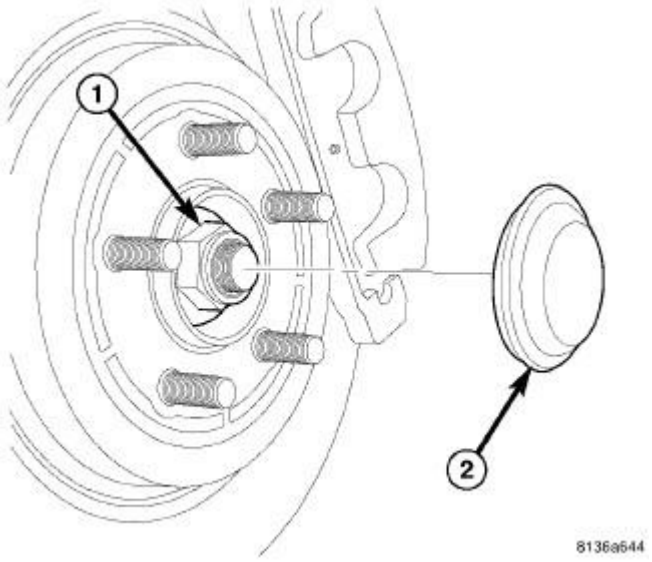

Fig. 50: DUST CAP AND HUB NUT
Courtesy of CHRYSLER LLC

4. Remove dust cap (2). When doing this, avoid damaging internal bore of hub to preserve seal integrity.
5. Remove hub nut (1).
6. Slide hub and bearing off knuckle spindle.

Installation

INSTALLATION

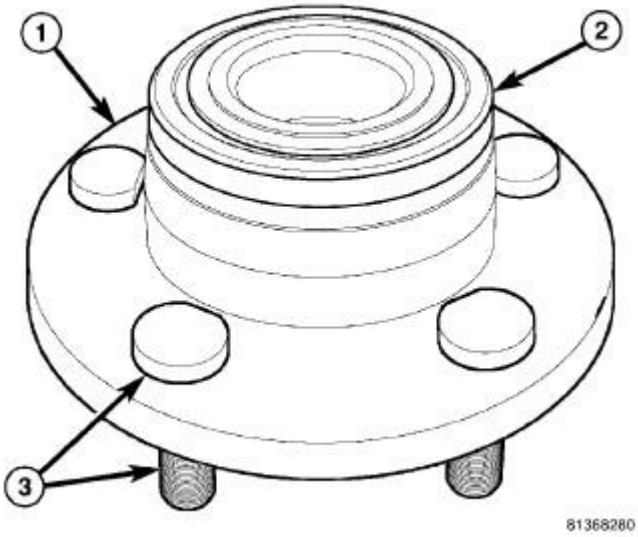

Fig. 51: FRONT HUB AND BEARING
Courtesy of CHRYSLER LLC

NOTE: Prior to installation, inspect magnetic encoder (for wheel speed sensor) (2) for any damage and make sure any metal debris sticking to it is removed.

1. Slide hub and bearing onto knuckle spindle.

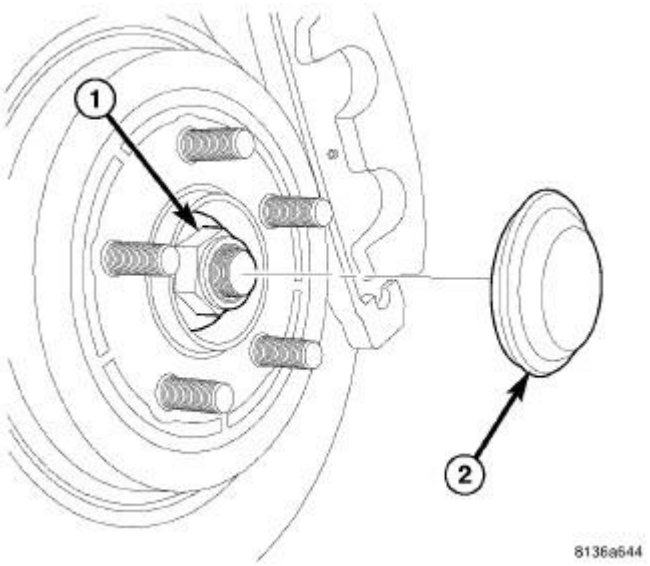

Fig. 52: DUST CAP AND HUB NUT
Courtesy of CHRYSLER LLC

NOTE: Always install a new hub nut. The original hub nut is one-time use only and should be discarded when removed.

2. Install hub nut (1) on end of spindle. Tighten hub nut to 250 N.m (184 ft. lbs.) torque.
3. Install brake rotor, then disc brake caliper and adapter assembly. Refer to **Brakes/Hydraulic/Mechanical/ROTOR, Brake - Installation**

NOTE: Install a new dust cap to preserve seal integrity.

4. Install **new** dust cap (2) on hub and bearing.

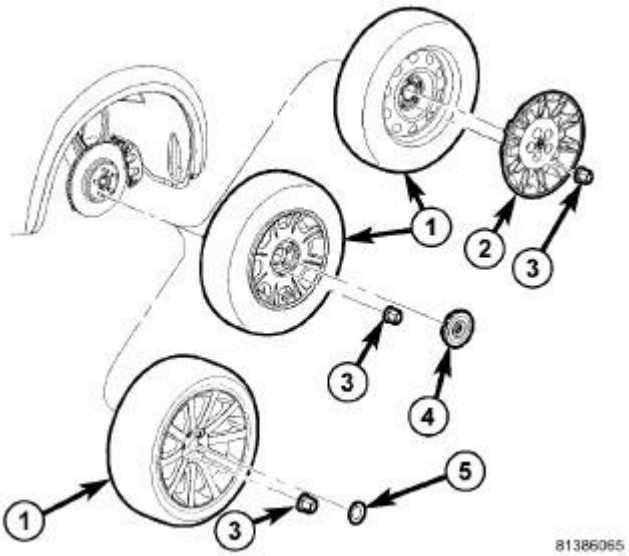

Fig. 53: TIRE AND WHEEL MOUNTING
Courtesy of CHRYSLER LLC

5. Install tire and wheel assembly (1). Refer to **Tires and Wheels - Installation** . Tighten wheel mounting nuts (3) to 150 N.m (110 ft. lbs.) torque.
6. Lower vehicle.

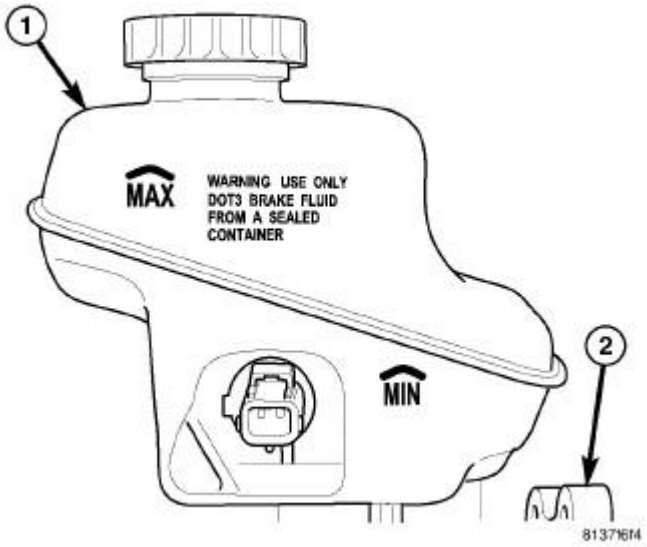

Fig. 54: RESERVOIR FLUID LEVEL MARKINGS
Courtesy of CHRYSLER LLC

7. Pump brake pedal several times to ensure vehicle has a firm brake pedal before moving vehicle.
8. Check and adjust brake fluid level in reservoir (1) as necessary.

9. Road test vehicle and make several stops to wear off any foreign material on brakes and to seat brake pads.

KNUCKLE, STEERING

Removal

REMOVAL

1. Raise and support vehicle. Refer to **Vehicle Quick Reference/Hoisting - Standard Procedure** .

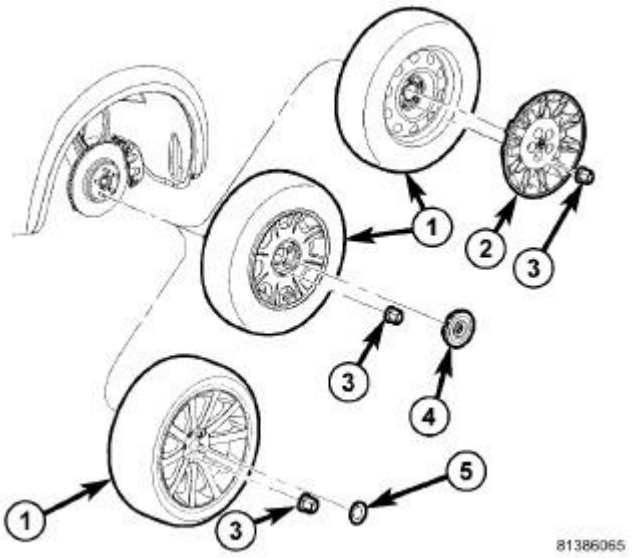

Fig. 55: TIRE AND WHEEL MOUNTING
Courtesy of CHRYSLER LLC

2. Remove wheel mounting nuts (3), then tire and wheel assembly (1).

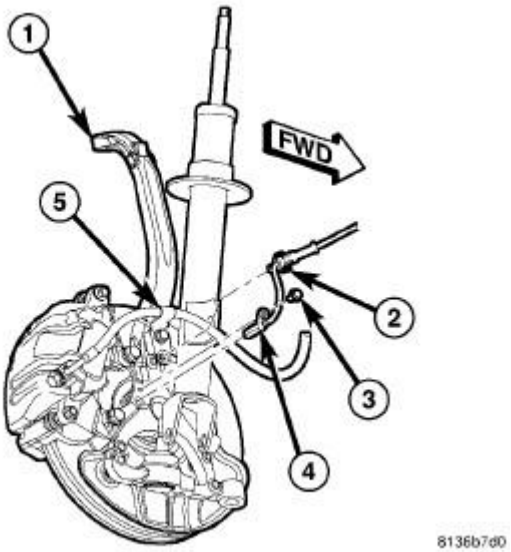

Fig. 56: WHEEL SPEED SENSOR AT FRONT KNUCKLE
Courtesy of CHRYSLER LLC

3. Remove screw (3) fastening wheel speed sensor to knuckle (1). Pull sensor head (4) out of knuckle.
4. Remove wheel speed sensor cable routing clip (2) from brake flex hose routing bracket (5).

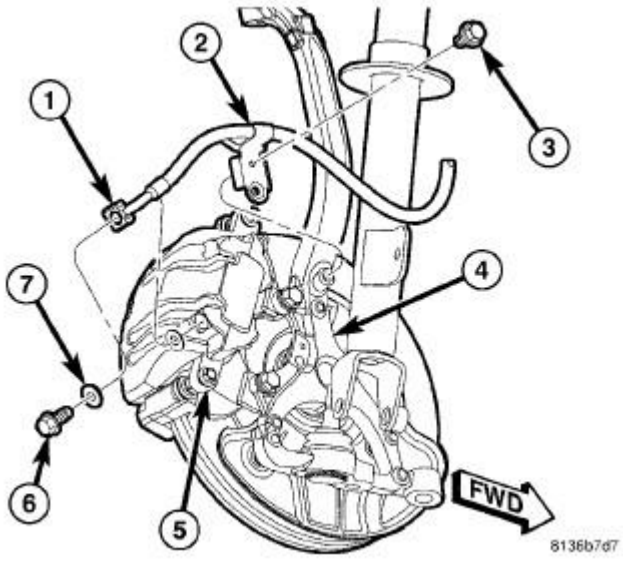

Fig. 57: FRONT BRAKE FLEX HOSE AT CALIPER
Courtesy of CHRYSLER LLC

5. Remove screw (3) fastening brake flex hose routing bracket (2) to knuckle (4).
6. Access and remove front brake rotor. Refer to **Brakes/Hydraulic/Mechanical/ROTOR, Brake - Removal**

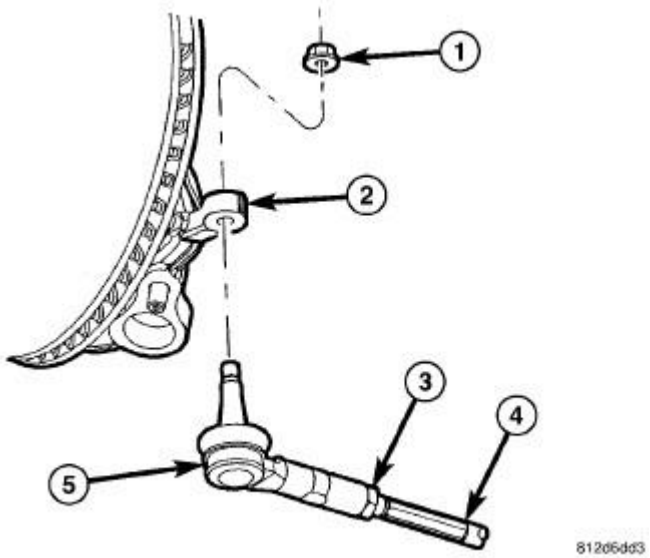

Fig. 58: FRONT OUTER TIE ROD
Courtesy of CHRYSLER LLC

7. Remove nut (1) from outer tie rod end stud.

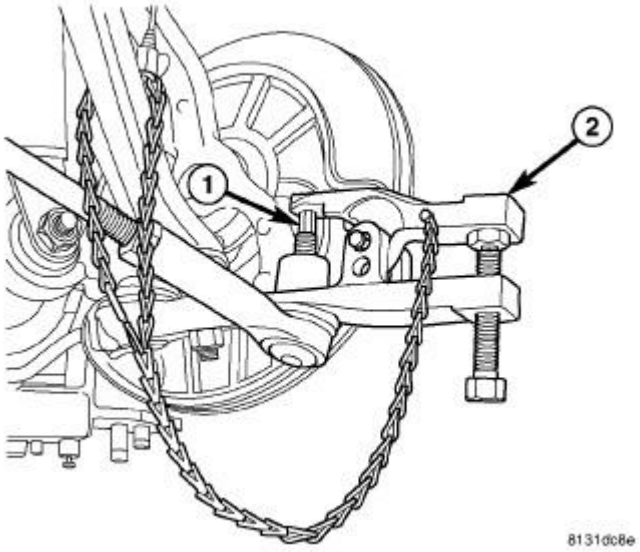

Fig. 59: USING PULLER ON OUTER TIE ROD
Courtesy of CHRYSLER LLC

8. Using Ball Joint Remover 9360 (2), separate tie rod stud (1) from knuckle.

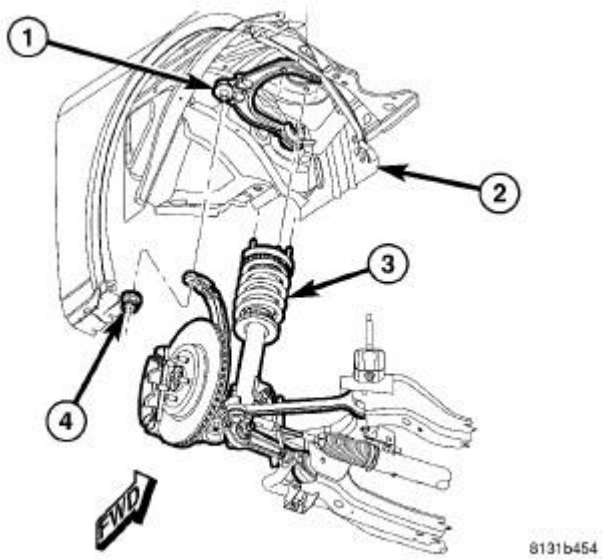

Fig. 60: UPPER BALL JOINT MOUNTING
Courtesy of CHRYSLER LLC

9. Loosen nut (4) attaching upper ball joint stud (1) to knuckle. Back nut off until nut is even with end of stud. **Keeping nut on at this location will help keep end of stud from distorting while using Puller in next step.**

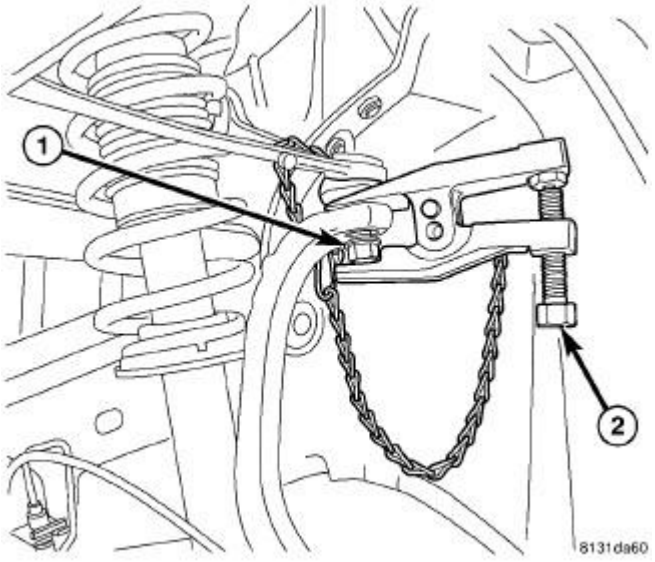

Fig. 61: USING PULLER ON UPPER BALL JOINT
Courtesy of CHRYSLER LLC

CAUTION: In following step, use care not to damage ball joint seal boot while sliding Ball Joint Remover 9360, into place past seal boot.

10. Using Ball Joint Remover 9360 (2), separate upper ball joint stud (1) from knuckle.

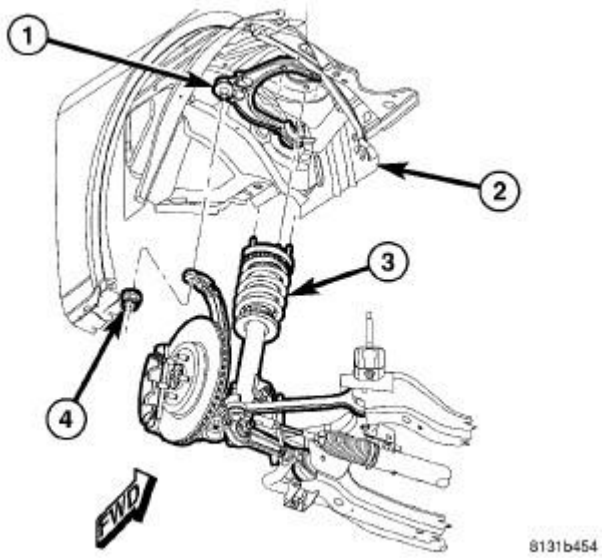

Fig. 62: UPPER BALL JOINT MOUNTING
Courtesy of CHRYSLER LLC

11. Remove nut (4) from end of upper ball joint stud (1).

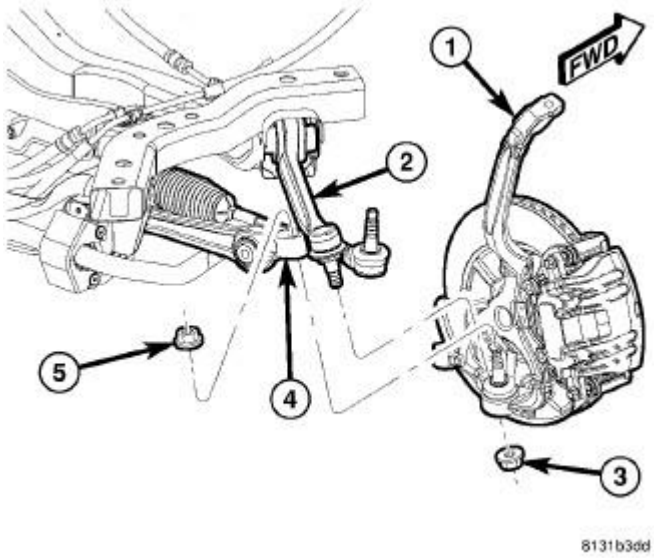

Fig. 63: BALL JOINT ATTACHMENT
Courtesy of CHRYSLER LLC

12. Loosen nut (3) attaching tension strut (2) ball joint stud to knuckle. Back nut off until nut is even with end of stud. **Keeping nut on at this location will help keep end of stud from distorting while using Puller in next step.**

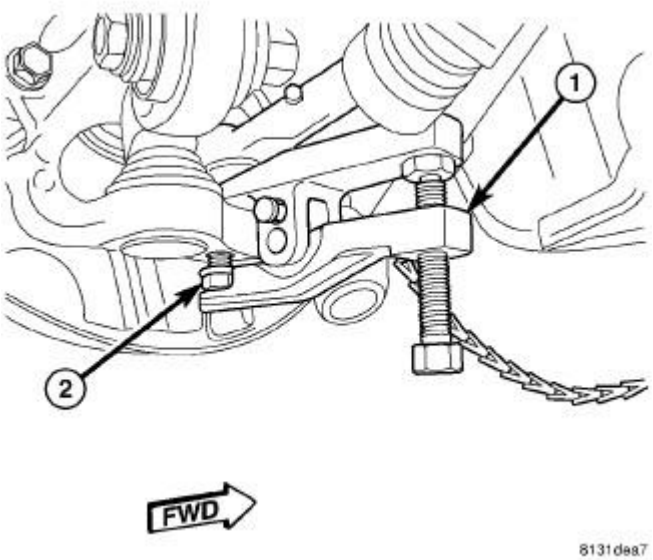

Fig. 64: USING PULLER ON UPPER BALL JOINT
Courtesy of CHRYSLER LLC

CAUTION: In following step, use care not to damage ball joint seal boot while sliding Ball Joint Remover 9360, into place past seal boot.

13. Using Ball Joint Remover 9360 (1), separate tension strut ball joint stud (2) from knuckle.

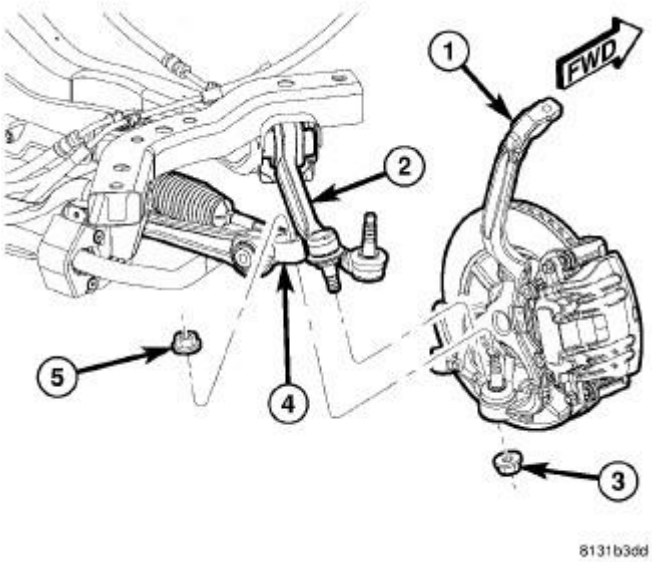

Fig. 65: BALL JOINT ATTACHMENT
Courtesy of CHRYSLER LLC

14. Remove nut (3) from end of tension strut (2) ball joint stud.
15. Loosen nut (5) attaching ball joint stud to lower control arm (4). Back nut off until nut is even

with end of stud. **Keeping nut on at this location will help keep end of stud from distorting while using Puller in next step.**

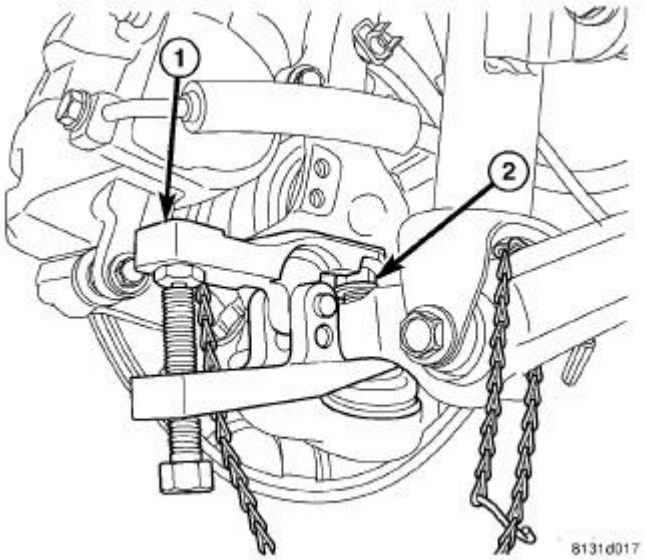

Fig. 66: USING PULLER ON LOWER CONTROL ARM BALL JOINT
Courtesy of CHRYSLER LLC

CAUTION: In following step, use care not to damage ball joint seal boot while sliding Ball Joint Remover 9360, into place past seal boot.

16. Using Ball Joint Remover 9360 (1), separate ball joint stud (2) from lower control arm.

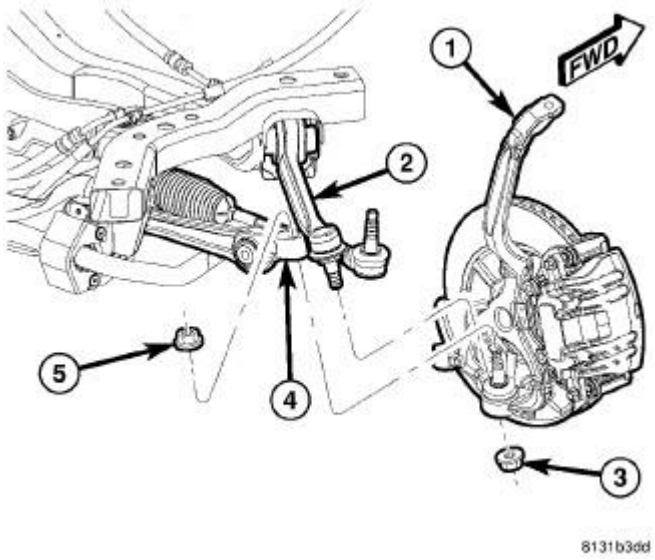

Fig. 67: BALL JOINT ATTACHMENT
Courtesy of CHRYSLER LLC

17. Remove nut (5) from end of ball joint stud attaching lower control arm to knuckle.
18. Remove knuckle from vehicle.

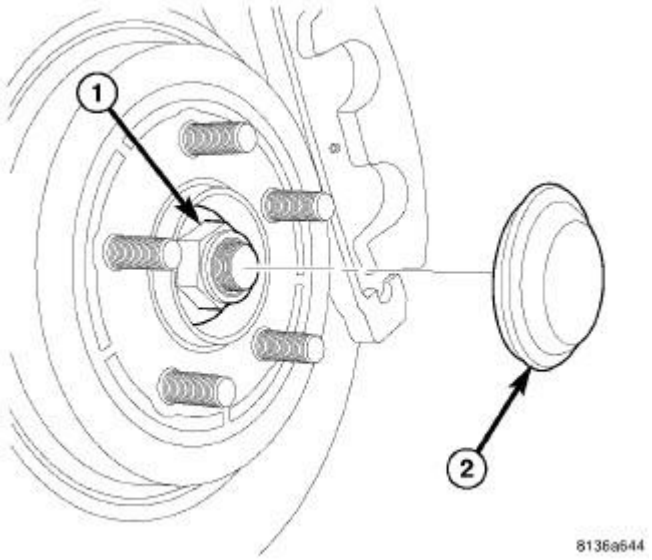

Fig. 68: DUST CAP AND HUB NUT
Courtesy of CHRYSLER LLC

19. If hub and bearing needs to be removed, perform the following:
    a. Remove dust cap (2). When doing this, avoid damaging internal bore of hub to preserve seal integrity.
    b. Remove hub nut (1).
    c. Slide hub and bearing off knuckle spindle.
20. If shield needs to be removed from knuckle, remove 3 mounting screws, then shield.
21. If lower control arm ball joint needs to be removed from knuckle. See **Front Suspension/Front/KNUCKLE, Steering - Disassembly**.

Disassembly

BALL JOINT

NOTE: To perform this procedure, it works best to mount Ball Joint Press C-4212F in a vise.

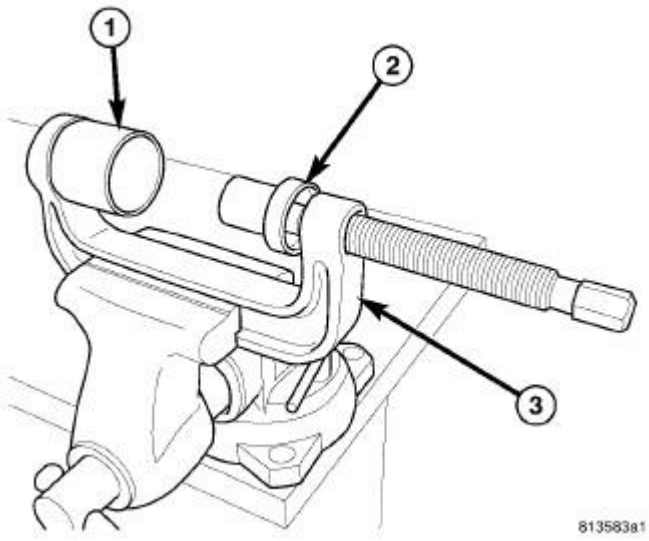

Fig. 69: TOOLS ASSEMBLED FOR BALL JOINT REMOVAL
Courtesy of CHRYSLER LLC

1. Place Ball Joint Remover/Installer 9320 (1) into cup area of Ball Joint Press C-4212F (3) as shown in illustration and tighten set screw.
2. Place Ball Joint Remover/Installer 9320-3 (2) onto end of screw-drive of Ball Joint Press C-4212F (3) as shown in illustration.

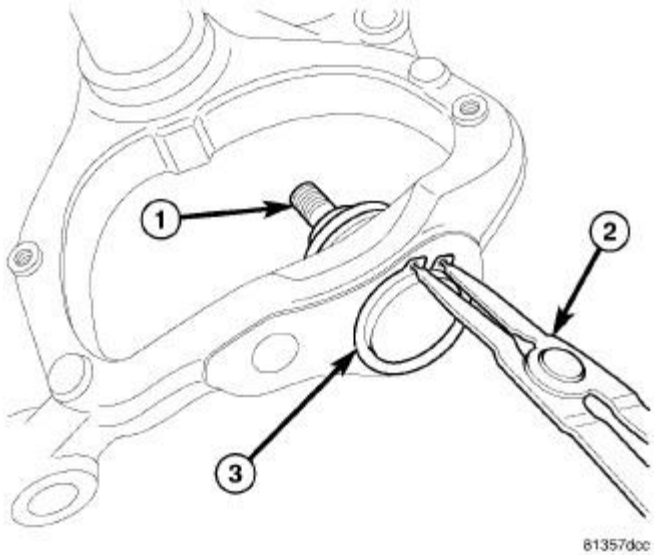

Fig. 70: BALL JOINT SNAP RING
Courtesy of CHRYSLER LLC

3. Using a pair of snap-ring pliers (2), remove snap-ring (3) from bottom of ball joint (1).

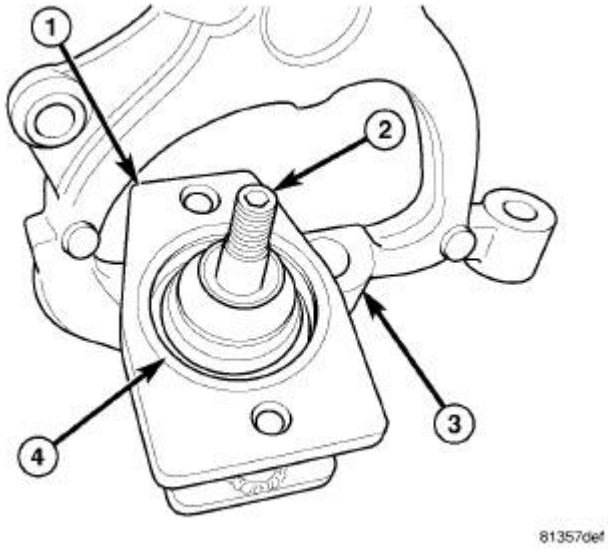

Fig. 71: SUPPORT CLAMP POSITIONED OVER BALL JOINT
Courtesy of CHRYSLER LLC

4. Install halves of Support Clamp (1), Ball Joint Remover/Installer 9320-1 (2) over ball joint (2) and around knuckle surface (3) as shown in illustration. Install and snug Support Clamp (1) screws from underside.

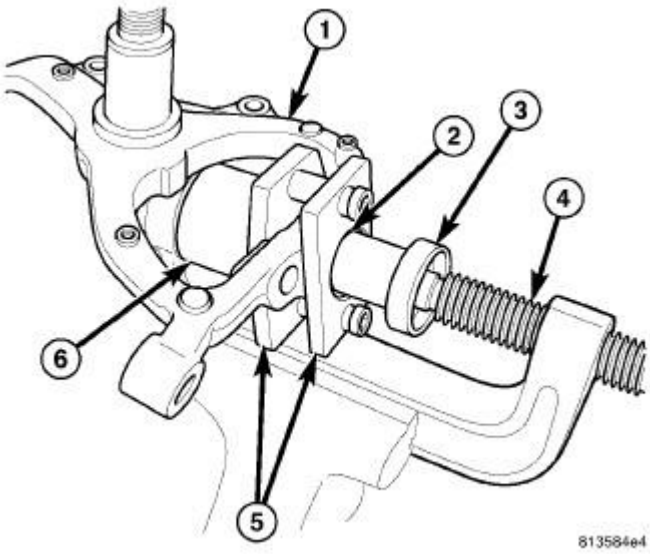

Fig. 72: TOOLS POSITIONED FOR BALL JOINT REMOVAL
Courtesy of CHRYSLER LLC

5. Position knuckle (1) over tools guiding top of ball joint inside of Receiver (6), then hand tighten Press screw-drive (4) until Remover (3) comes into contact with bottom of ball joint (2).

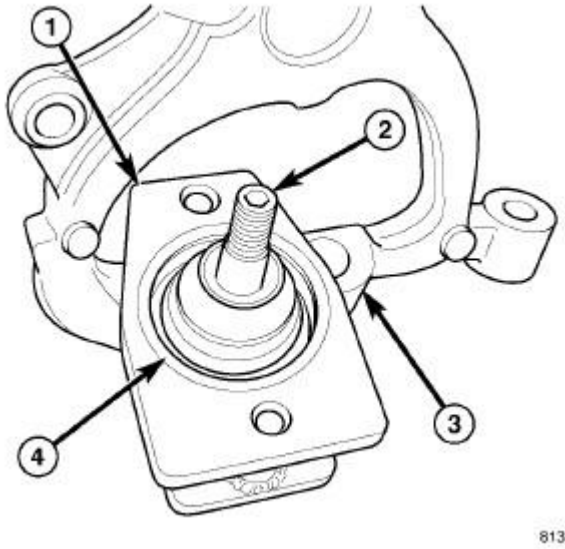

Fig. 73: SUPPORT CLAMP POSITIONED OVER BALL JOINT
Courtesy of CHRYSLER LLC

NOTE: When positioning knuckle over tools, make sure Receiver, Ball Joint Remover/Installer 9320-5, sets into recessed area (4) of Support Clamp, Ball Joint Remover/Installer 9320-1.

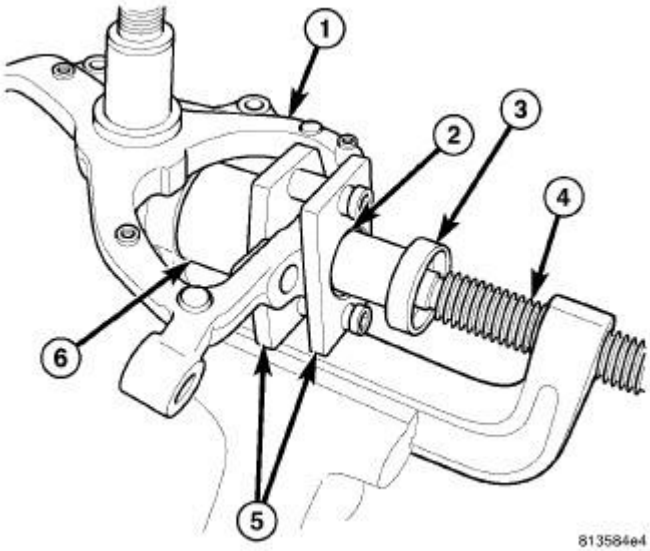

Fig. 74: TOOLS POSITIONED FOR BALL JOINT REMOVAL
Courtesy of CHRYSLER LLC

6. Tighten Press screw-drive (4) forcing ball joint out of knuckle (1) and into Receiver (6).
7. Loosen screw-drive (4) and remove knuckle (1) from Press. Remove ball joint from Receiver (6).

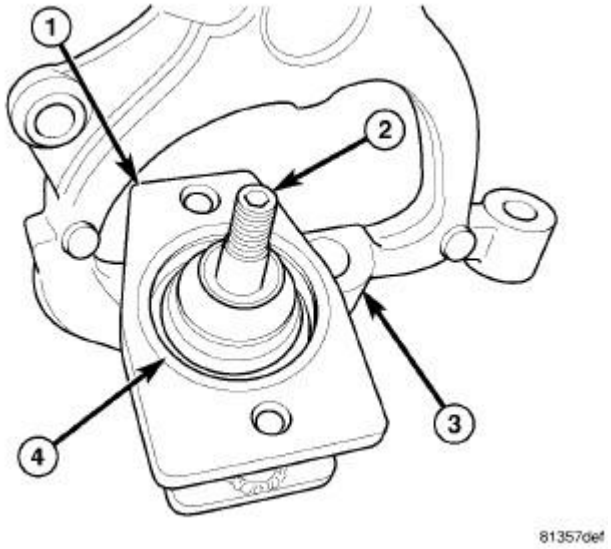

Fig. 75: SUPPORT CLAMP POSITIONED OVER BALL JOINT
Courtesy of CHRYSLER LLC

8. Remove Support Clamp (1) from knuckle (3).

Assembly

BALL JOINT

NOTE: To perform this procedure, it works best to mount Ball Joint Press C-4212F in a vise.

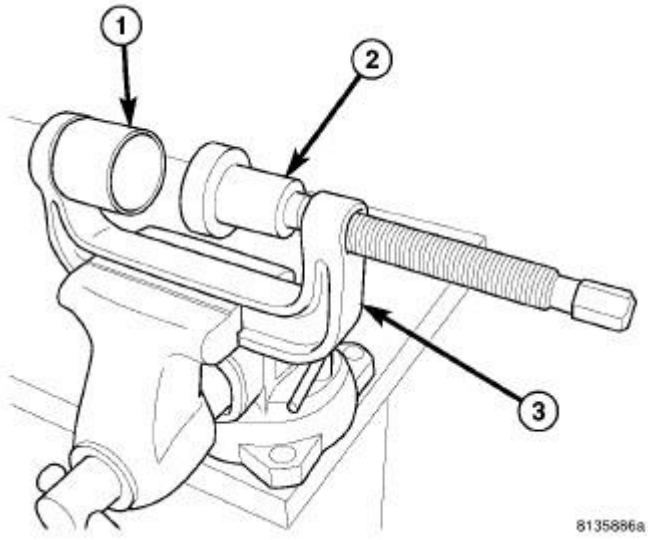

Fig. 76: TOOLS ASSEMBLED FOR BALL JOINT INSTALLATION
Courtesy of CHRYSLER LLC

1. Place Ball Joint Remover/Installer 9320-4 (1) into cup area of Ball Joint Press C-4212F (3) as shown in illustration and tighten set screw.
2. Place Ball Joint Remover/Installer 9320-3, onto end of screw-drive of Ball Joint Press C-4212F (3) as shown in illustration.

   Note: This is the reverse of how Remover is installed on screw-drive for removal.

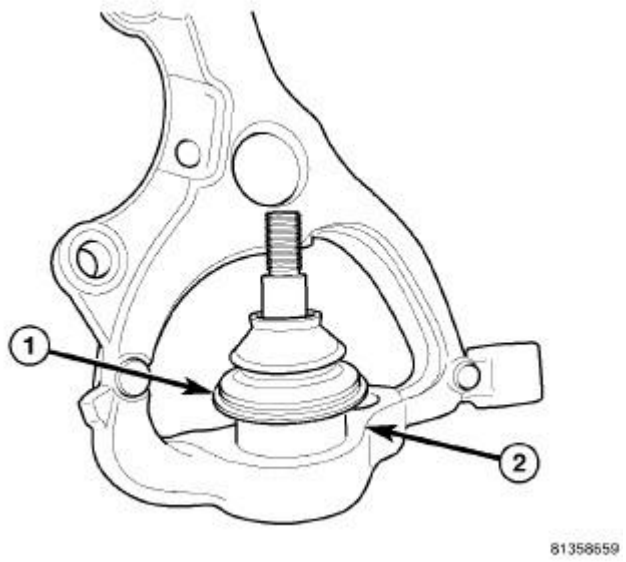

Fig. 77: START BALL JOINT IN KNUCKLE
Courtesy of CHRYSLER LLC

3. Start NEW ball joint (1) into bore of knuckle (2).

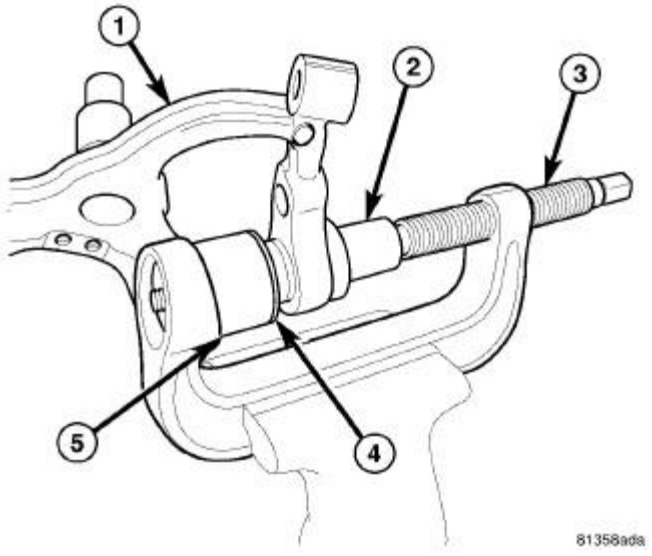

Fig. 78: TOOLS POSITIONED FOR BALL JOINT INSTALLATION

Courtesy of CHRYSLER LLC

4. Position knuckle (1) over tools guiding top of ball joint inside of Installer (5) until outside flange of ball joint (4) comes into contact with Installer, then hand tighten Press screw-drive (3) until Remover (2) comes into contact with bottom of knuckle (1).
5. Using hand tools, tighten screw-drive (3), pressing ball joint into knuckle until flange (4) comes to a stop against the knuckle.
6. Loosen screw-drive and remove knuckle from Press.

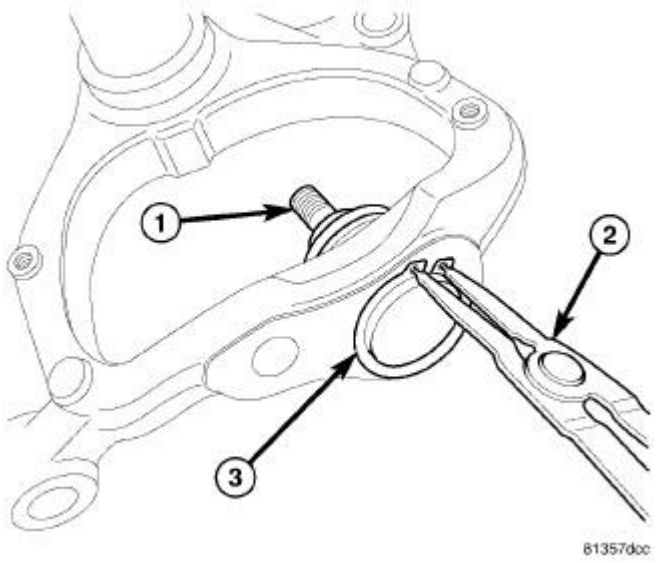

Fig. 79: BALL JOINT SNAP RING
Courtesy of CHRYSLER LLC

7. Install snap-ring (3) into groove on bottom of ball joint.
8. Inspect ball joint for proper fit. Make sure seal boot is uniform and wire rings are in place.
9. Install knuckle on vehicle. See **Front Suspension/Front/KNUCKLE, Steering - Installation**

Installation

INSTALLATION

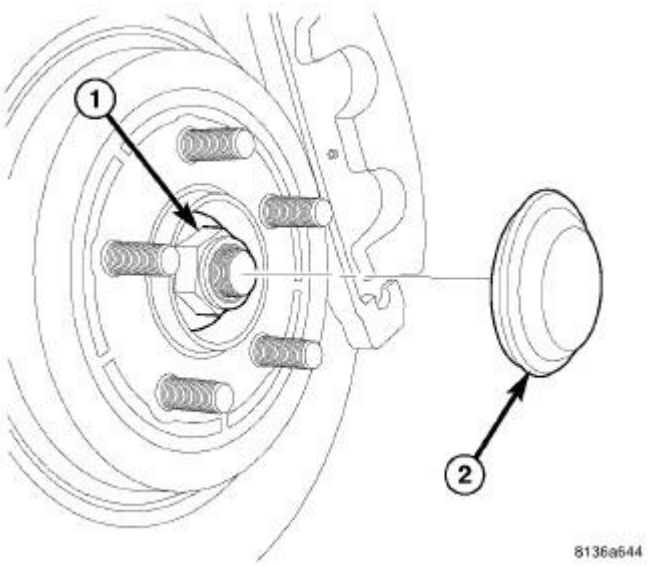

Fig. 80: DUST CAP AND HUB NUT
Courtesy of CHRYSLER LLC

NOTE: Always install a new hub nut. The original hub nut is one-time use only and should be discarded when removed.

1. If shield needs to be installed on knuckle, place shield in place and attach to knuckle using 3 screws. Tighten screws to 10 N.m (89 in. lbs.).
2. If hub and bearing needs to be installed on knuckle, perform the following:
   a. Slide hub and bearing onto knuckle spindle.
   b. Install hub nut (1) on end of spindle. Tighten hub nut to 250 N.m (184 ft. lbs.).
   c. Install NEW dust cap (2).

NOTE: Install a new dust cap to preserve seal integrity.

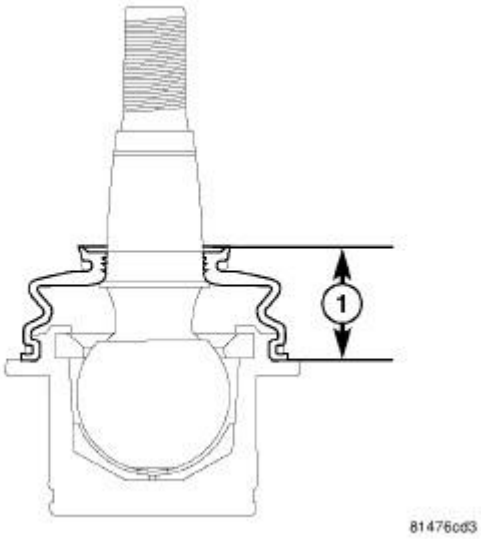

Fig. 81: BALL JOINT SEAL BOOT HEIGHT
Courtesy of CHRYSLER LLC

CAUTION: Before installing knuckle on lower control arm, measure height of ball joint seal boot (1) mounted on knuckle. If seal boot height is above 25.5 mm, any air inside seal boot must be expelled. To do so, follow these steps.

a. **Tip ball joint stud completely to one side.**
b. **Using thumb and index finger, gently squeeze seal boot together at center expelling any air. Do not allow grease to be release.**
c. **Push down very top of seal boot.**
d. **Return ball joint stud to original "centered" position.**
e. **Measure ball joint seal boot height (1) making sure it is within specification.**
f. **Wipe any grease from ball joint stud.**

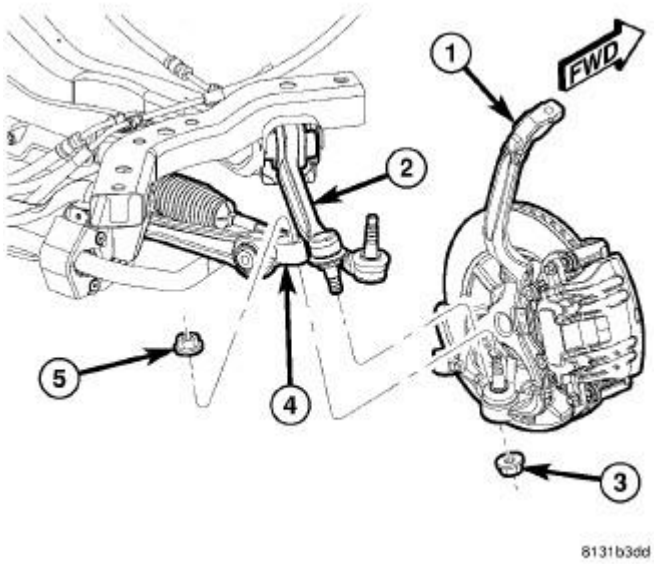

Fig. 82: BALL JOINT ATTACHMENT
Courtesy of CHRYSLER LLC

3. Place knuckle (1) over lower ball joint studs on vehicle and loosely install NEW nuts by hand.

CAUTION: It is important to tighten nuts as described in following steps to avoid damaging ball stud joints.

4. Completely install NEW nut (5) on ball joint stud attaching lower control arm (4) to knuckle (1). Tighten nut by holding ball joint stud with a hex wrench while turning nut with a wrench. Tighten nut using crow foot wrench on torque wrench to 68 N.m + 90° turn (50 ft. lbs. + 90° turn).
5. Completely install NEW nut (3) on ball joint stud attaching tension strut (2) to knuckle (1). Tighten nut by holding ball joint stud with a hex wrench while turning nut with a wrench. Tighten nut using crow foot wrench on torque wrench to 68 N.m + 90° turn (50 ft. lbs. + 90° turn).

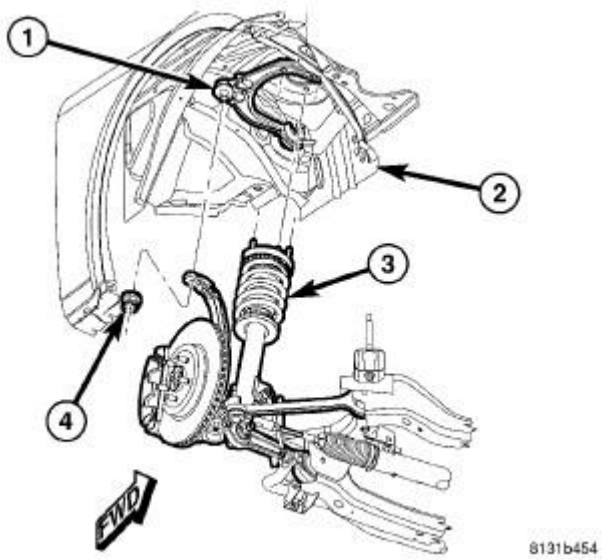

Fig. 83: UPPER BALL JOINT MOUNTING
Courtesy of CHRYSLER LLC

CAUTION: It is important to tighten nut as described in following step to avoid damaging ball stud joint.

6. Place upper ball joint stud (1) through hole in top of knuckle and install nut (4). Tighten nut by holding ball joint stud with a hex wrench while turning nut with a wrench. Tighten nut using crow foot wrench on torque wrench to 47 N.m + 90° turn (35 ft. lbs. + 90° turn).

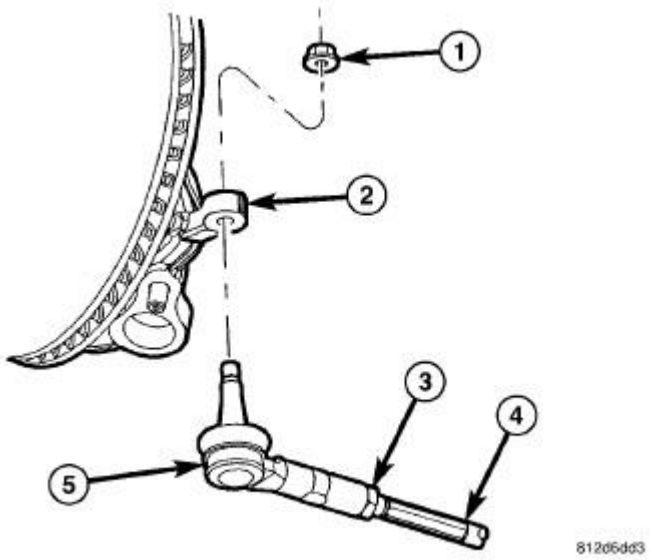

Fig. 84: FRONT OUTER TIE ROD
Courtesy of CHRYSLER LLC

CAUTION: It is important to tighten nut as described in following step to avoid damaging ball stud joint.

7. Place outer tie rod stud through hole in knuckle (2) and install nut (1). Tighten nut by holding stud with a wrench while turning nut with another wrench. Tighten nut using crow foot wrench on torque wrench to 85 N.m (63 ft. lbs.).
8. Install brake rotor, then disc brake caliper and adapter assembly. Refer to **Brakes/Hydraulic/Mechanical/ROTOR, Brake - Installation**

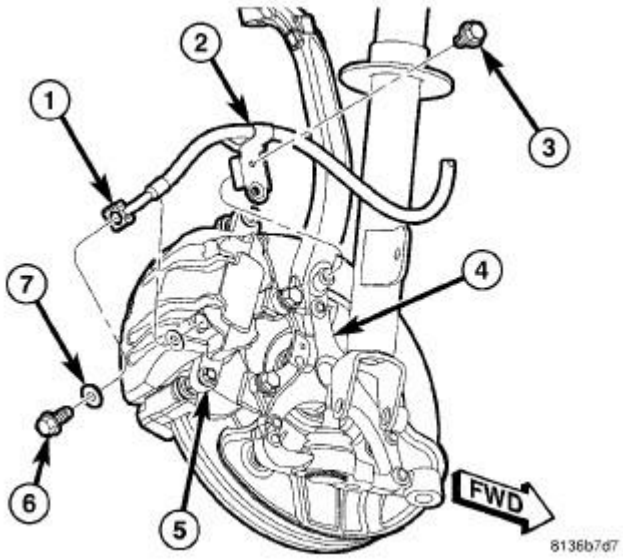

Fig. 85: FRONT BRAKE FLEX HOSE AT CALIPER
Courtesy of CHRYSLER LLC

9. Install screw (3) fastening brake flex hose routing bracket (2) to knuckle (4). Tighten screw to 12 N.m (106 in. lbs.).

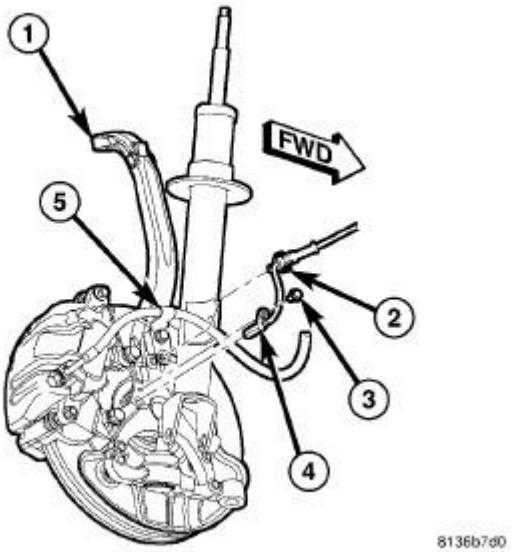

Fig. 86: WHEEL SPEED SENSOR AT FRONT KNUCKLE
Courtesy of CHRYSLER LLC

10. Install wheel speed sensor head (4) into knuckle and install mounting screw (3). Tighten screw to 11 N.m (95 in. lbs.).
11. Attach wheel speed sensor cable and routing clip (2) to brake flex hose routing bracket (5).

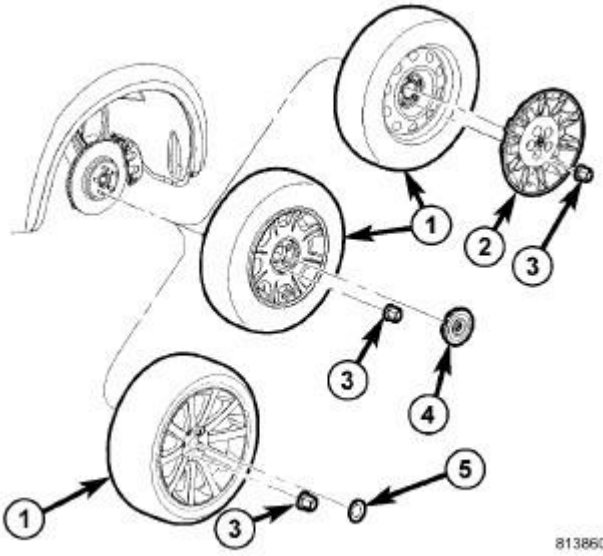

Fig. 87: TIRE AND WHEEL MOUNTING
Courtesy of CHRYSLER LLC

12. Install tire and wheel assembly (1). Refer to **Tires and Wheels - Installation** . Tighten wheel mounting nuts (3) to 150 N.m (110 ft. lbs.) (Police - 190 N.m (140 ft. lbs.)).
13. Lower vehicle.

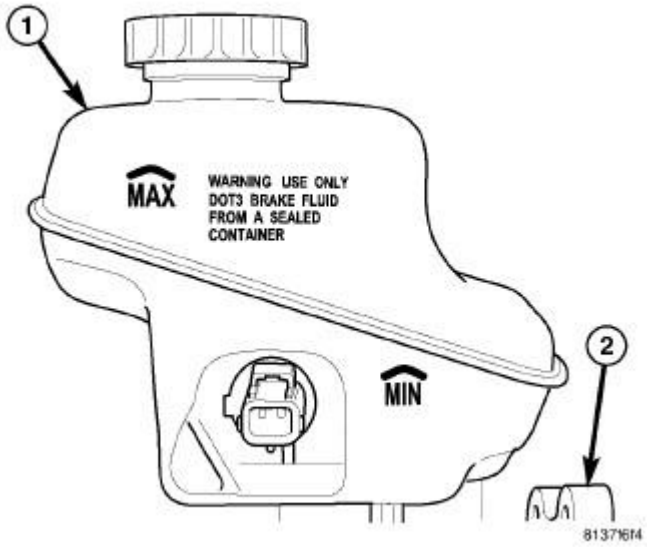

Fig. 88: RESERVOIR FLUID LEVEL MARKINGS
Courtesy of CHRYSLER LLC

14. Pump brake pedal several times to ensure vehicle has a firm brake pedal before moving vehicle.
15. Check and adjust brake fluid level in reservoir (1) as necessary.
16. Perform wheel alignment. See **Front Suspension/Wheel Alignment - Standard Procedure**

SHOCK ABSORBER, SUSPENSION, COIL-OVER

Removal

REMOVAL

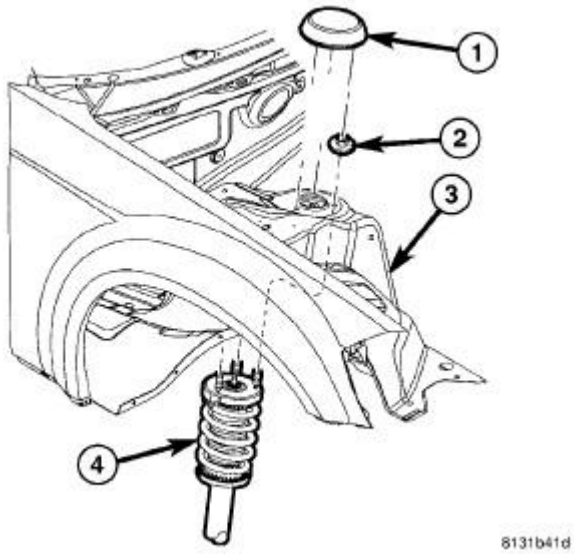

Fig. 89: UPPER SHOCK MOUNTING
Courtesy of CHRYSLER LLC

1. If equipped, remove front shock tower cap (1) from top of shock assembly (4).
2. Remove three nuts (2) fastening shock assembly (4) to shock tower (3).
3. Raise and support vehicle. Refer to **Vehicle Quick Reference/Hoisting - Standard Procedure** .

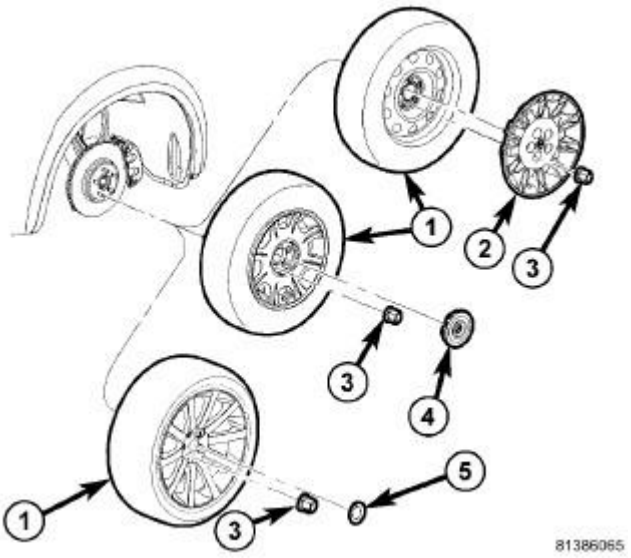

Fig. 90: TIRE AND WHEEL MOUNTING
Courtesy of CHRYSLER LLC

4. Remove wheel mounting nuts (3), then tire and wheel assembly (1).

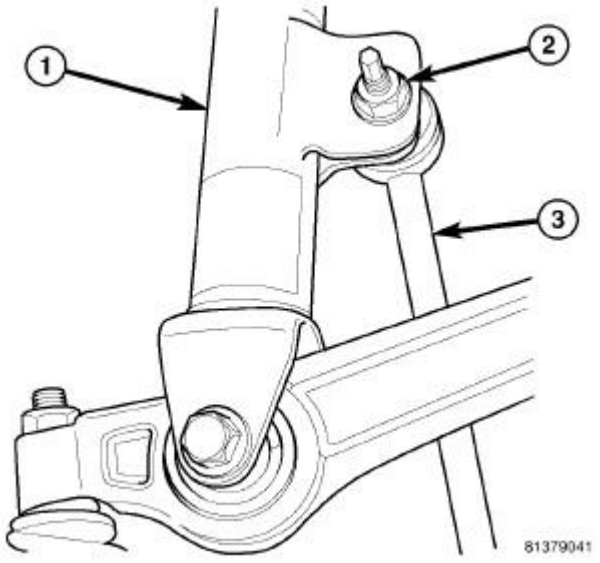

Fig. 91: STABILIZER LINK AT SHOCK ASSEMBLY
Courtesy of CHRYSLER LLC

5. Remove nut (2) fastening stabilizer link (3) to shock assembly (1). Slide link ball joint stem from shock assembly.

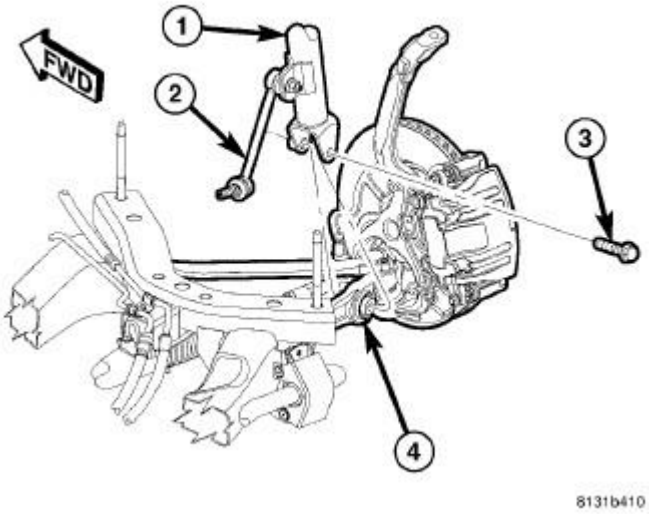

Fig. 92: LOWER SHOCK MOUNTING BOLT
Courtesy of CHRYSLER LLC

6. Remove bolt (3) securing shock assembly (1) to lower control arm (4).

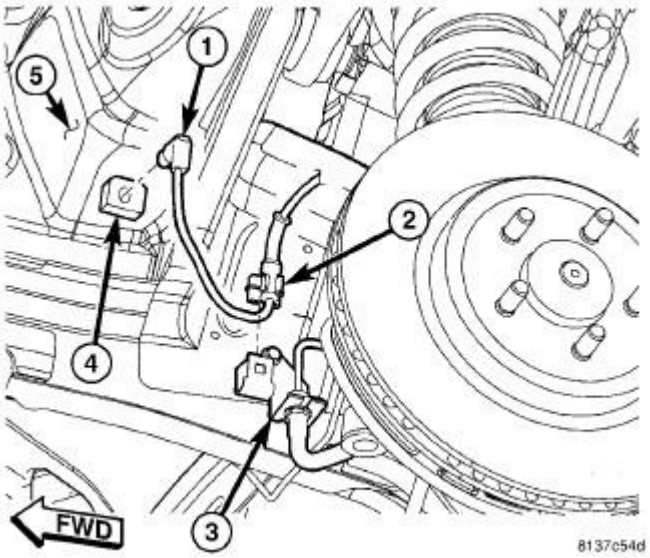

Fig. 93: WHEEL SPEED SENSOR AT BODY CONNECTOR
Courtesy of CHRYSLER LLC

7. Disconnect wheel speed sensor cable routing clip (2) at brake tube bracket (3).

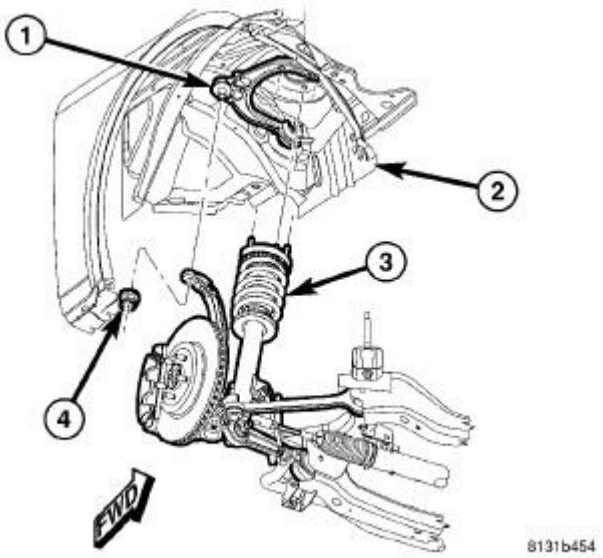

Fig. 94: UPPER BALL JOINT MOUNTING
Courtesy of CHRYSLER LLC

8. Loosen nut (4) attaching upper ball joint stud (1) to knuckle. Back nut off until nut is even with end of stud. **Keeping nut on at this location will help keep end of stud from distorting while using Puller in next step.**

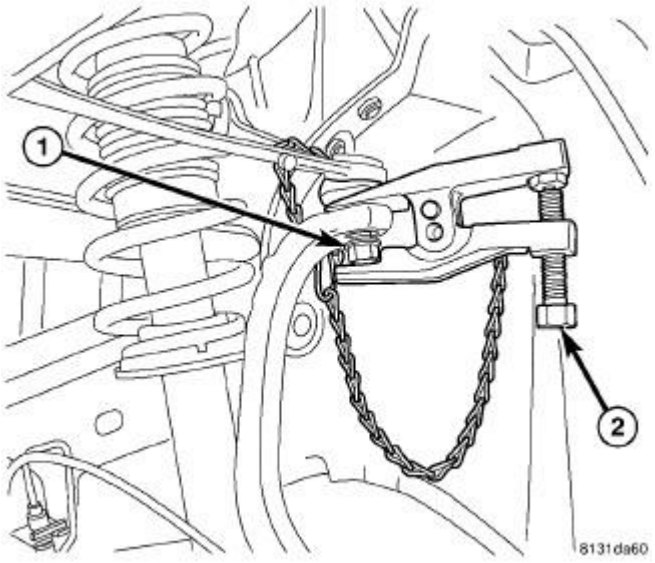

Fig. 95: USING PULLER ON UPPER BALL JOINT
Courtesy of CHRYSLER LLC

CAUTION: In following step, use care not to damage ball joint seal boot while

sliding Ball Joint Remover 9360, into place past seal boot.

9. Using Ball Joint Remover 9360 (2), separate upper ball joint stud (1) from knuckle.

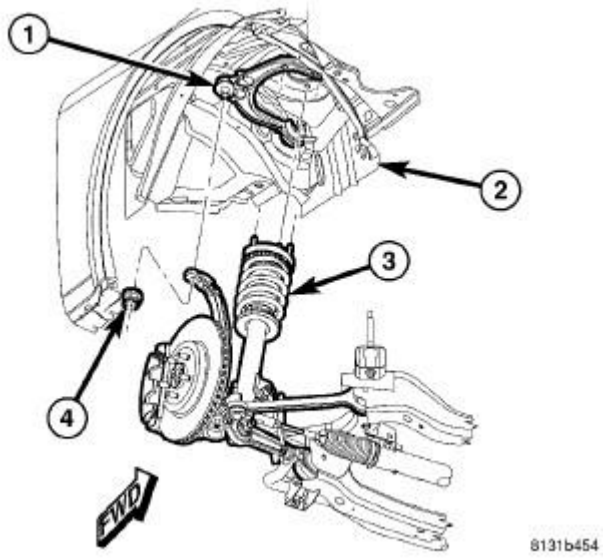

Fig. 96: UPPER BALL JOINT MOUNTING
Courtesy of CHRYSLER LLC

10. Remove nut (4) from end of upper ball joint stud (1).
11. Tip top of knuckle outward using care not to overextend brake flex hose.
12. Remove shock assembly from vehicle.

Disassembly

DISASSEMBLY

The shock assembly must be removed from vehicle for it to be disassembled and assembled.

For shock assembly disassembly and assembly, use of shock Spring Compressor, Pentastar Service Equipment (PSE) tool W-7200, or equivalent, is recommended to compress coil spring. Follow manufacturer's instructions closely.

WARNING: Do not remove shock shaft nut before coil spring is compressed. Coil spring is held under pressure and must be compressed, removing spring tension from upper and lower mounts, before shock removal.

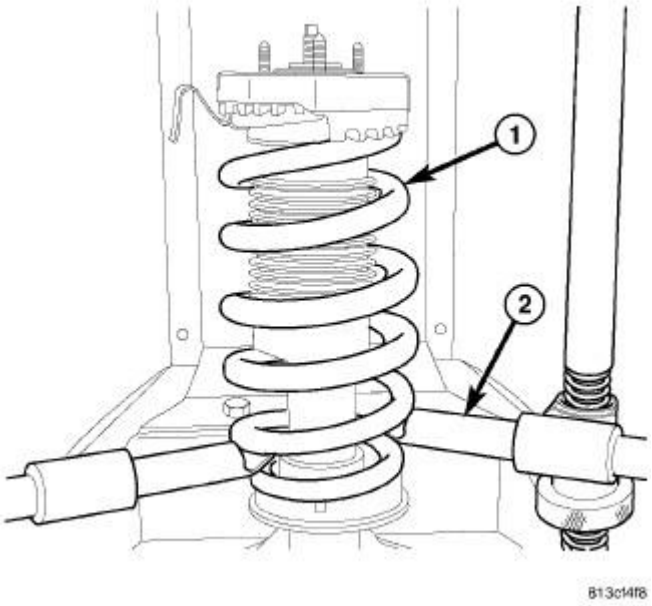

Fig. 97: SHOCK ASSEMBLY IN LOWER HOOKS OF TOOL
Courtesy of CHRYSLER LLC

1. Position shock assembly coil spring (1) on hooks (2) of Compressor following manufacturers instructions. Install clamp securing shock to lower spring coil.

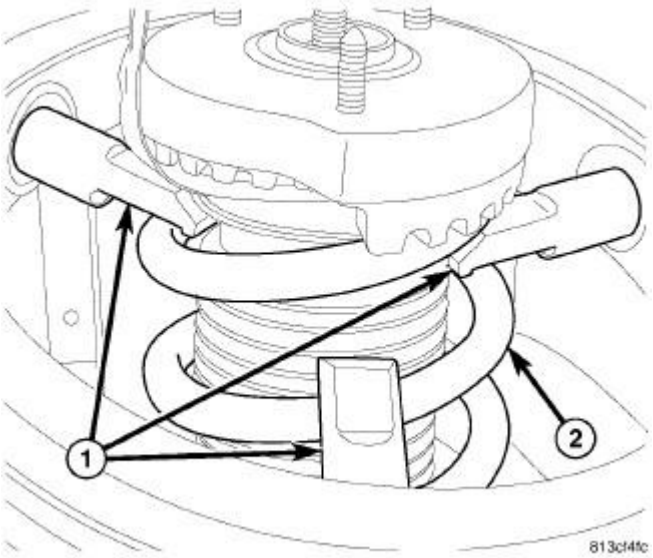

Fig. 98: UPPER HOOKS POSITIONED
Courtesy of CHRYSLER LLC

2. Position Compressor upper hooks (1) on upper coil spring (2) following manufacturers instructions. To ease installation, rotate shock as necessary positioning shock in compressor so

that upper spring coil ends (step in upper mount) at straight outward position from Compressor.

3. Compress coil spring until all spring tension is removed from upper mount.

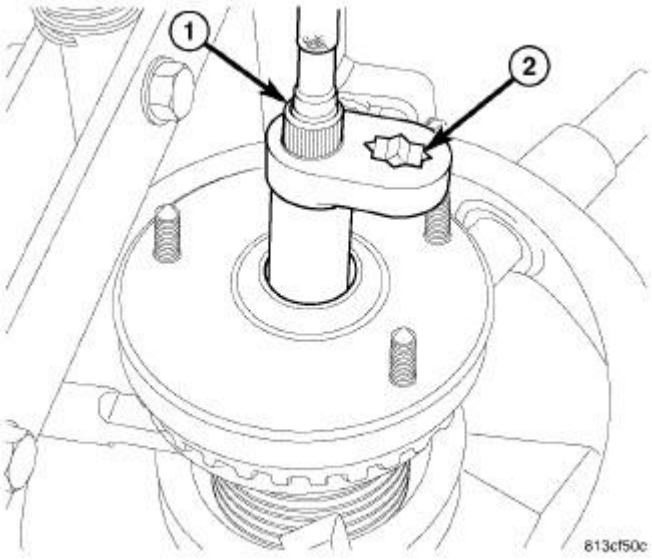

Fig. 99: RETAINING NUT REMOVAL/INSTALLATION
Courtesy of CHRYSLER LLC

4. Position Strut Nut Wrench 9362 (2) on shock shaft retaining nut. Next, insert 8 mm socket though Wrench onto hex located on end of shock shaft. While holding shock shaft from turning, remove nut from shock shaft using Wrench.
5. Remove clamp from bottom of coil spring and remove shock and lower isolator out through bottom of coil spring.

NOTE: If upper mount or coil spring needs to be serviced, proceed with next step, otherwise, proceed with step 8.

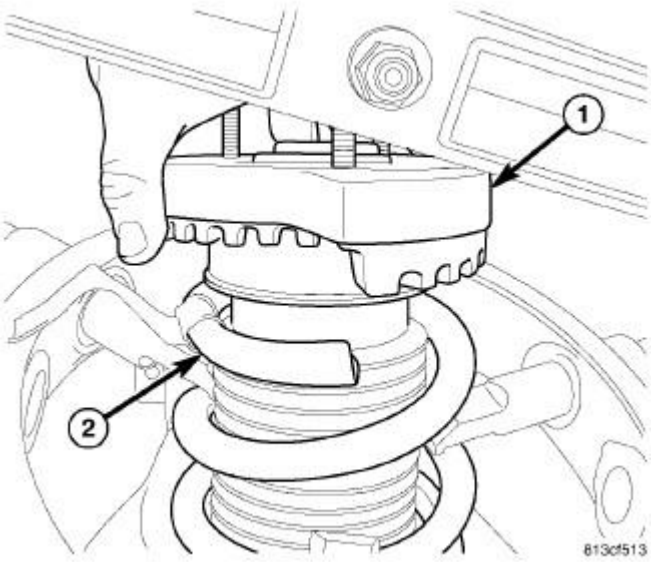

Fig. 100: UPPER MOUNT REMOVAL/INSTALLATION
Courtesy of CHRYSLER LLC

6. Remove upper mount (1) from shock shaft and coil spring.

NOTE: Prior to removing spring from compressor, note location of lower spring coil end in relationship to compressor to ease assembly of components later.

7. Back off Compressor drive, releasing tension from coil spring. Push back compressor upper hooks and remove coil spring from Compressor.

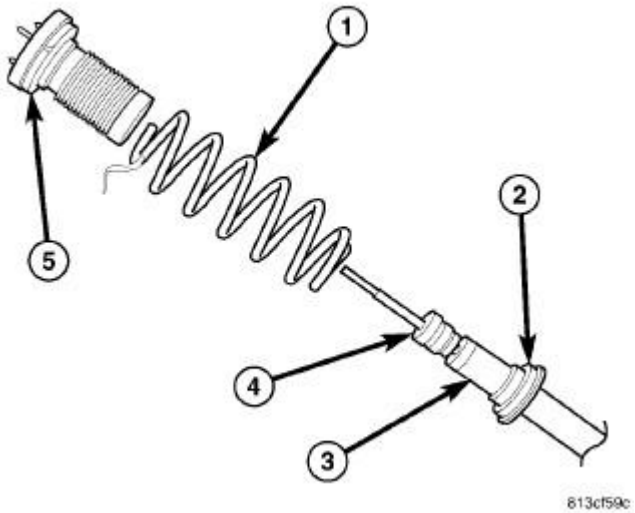

Fig. 101: SHOCK ASSEMBLY EXPLODED VIEW

Courtesy of CHRYSLER LLC

8. Remove jounce bumper (4) from shock shaft by pulling straight up and off.
9. Remove lower isolator (2) from shock body by pulling straight up and off shock shaft.
10. Inspect shock assembly components for following and replace as necessary:

- Inspect shock (3) for any condition of shaft binding over full stroke of shaft.
- Inspect upper mount (5) for cracks and distortion and its retaining studs for any sign of damage.
- Inspect upper spring isolator (5) for severe deterioration.
- Inspect lower spring isolator (2) for severe deterioration.
- Inspect dust shield for tears and deterioration.
- Inspect coil spring (1) for cracks in the coating and corrosion.
- Inspect jounce bumper (4) for cracks and signs of deterioration.

Assembly

ASSEMBLY

CAUTION: Use care not to damage coil spring coating during spring assembly. Damage to coating will jeopardize its corrosion protection.

NOTE: Left and right springs must not be interchanged.

NOTE: If coil spring has been removed from spring compressor, proceed with next step, otherwise, proceed with step 4.

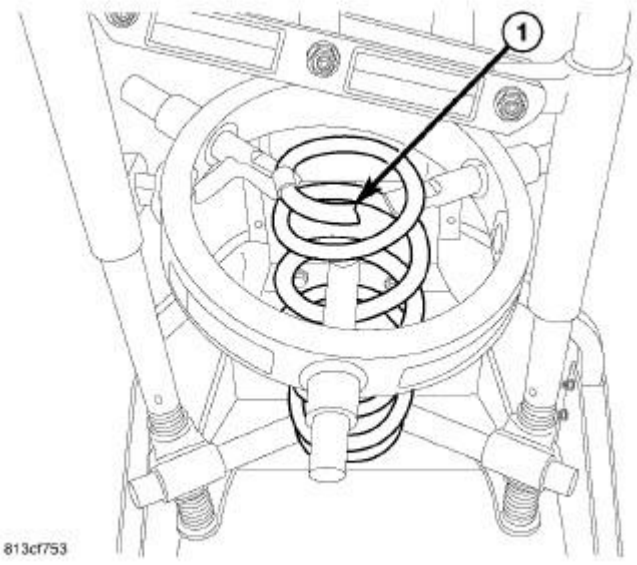

Fig. 102: SPRING POSITIONED IN COMPRESSOR

Courtesy of CHRYSLER LLC

1. Place coil spring **(part number tag end upward)** in compressor lower hooks following manufacturers instructions. To ease shock reassembly, rotate coil spring around until upper coil (1) ends at straight outward position from compressor. Proper orientation of spring to upper mount (once installed) is necessary.
2. Position compressor upper hooks over coil spring following manufacturers instructions.
3. Compress coil spring far enough to allow shock installation.

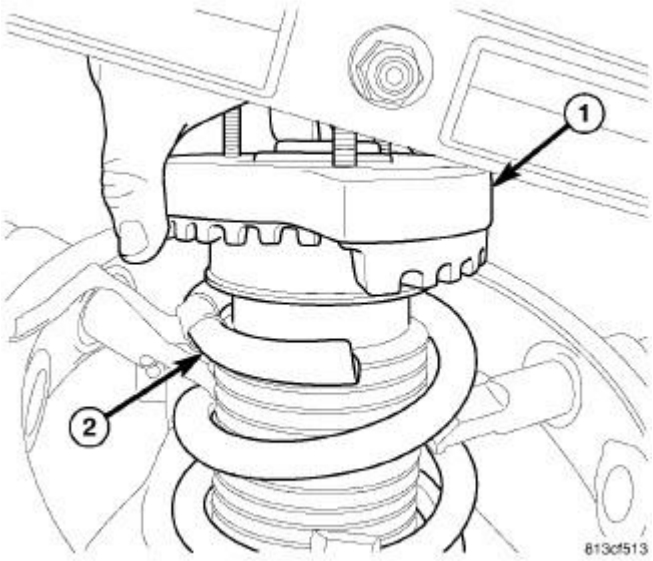

Fig. 103: UPPER MOUNT REMOVAL/INSTALLATION
Courtesy of CHRYSLER LLC

4. If separated, install upper mount (1) onto coil spring (2). Match step in upper isolator to end of spring coil.

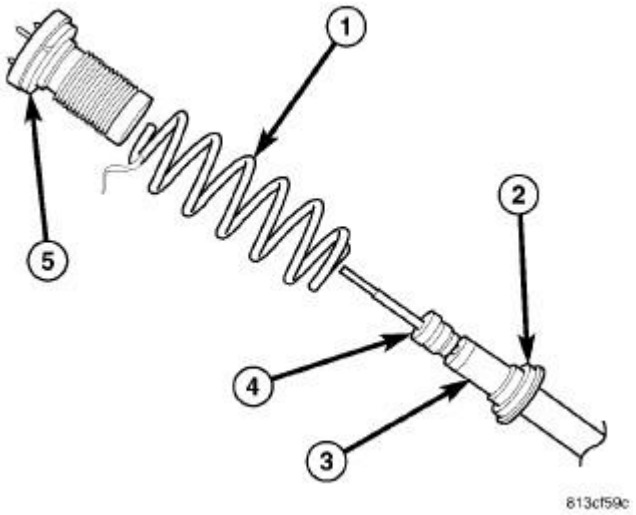

Fig. 104: SHOCK ASSEMBLY EXPLODED VIEW
Courtesy of CHRYSLER LLC

5. Install lower spring isolator (2) on shock body (3).
6. Install jounce bumper (4) on shock shaft, small end first.

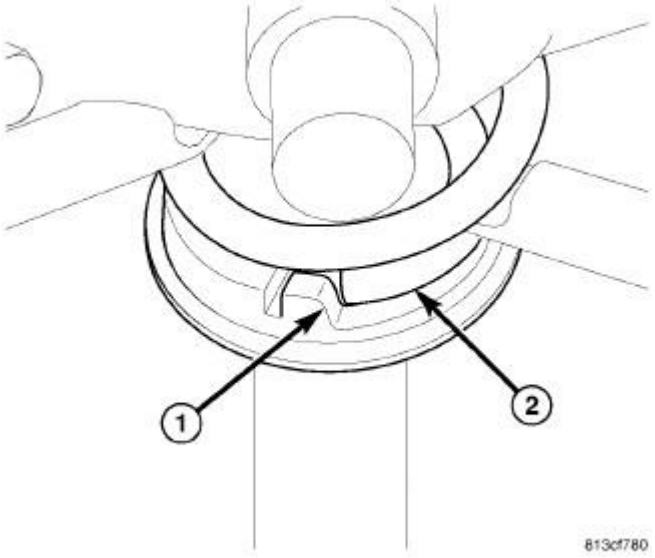

Fig. 105: SPRING POSITIONED AGAINST LOWER ISOLATOR
Courtesy of CHRYSLER LLC

7. Install shock through bottom of coil spring until lower spring isolator (on shock) contacts lower end of coil spring. Match step built into isolator (1) to lower coil end (2).
8. Install clamp to hold shock and coil spring together.

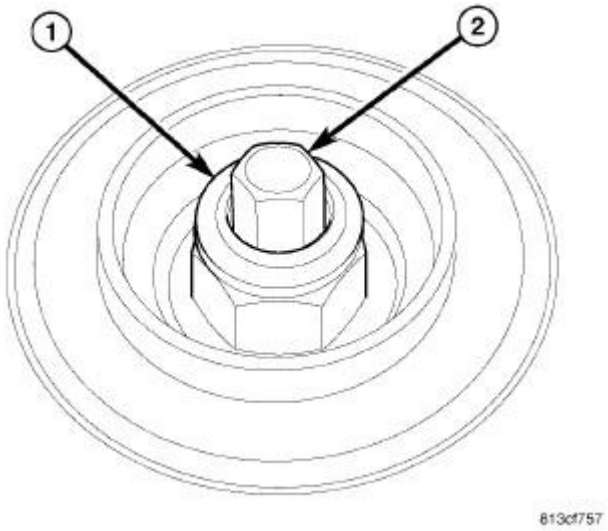

Fig. 106: SHOCK ROD RETAINING NUT
Courtesy of CHRYSLER LLC

9. Install retaining nut (1) on shock shaft (2) as far as possible by hand. Make sure nut is installed far enough for 8 mm socket to grasp hex (2) on end of shaft for tightening.

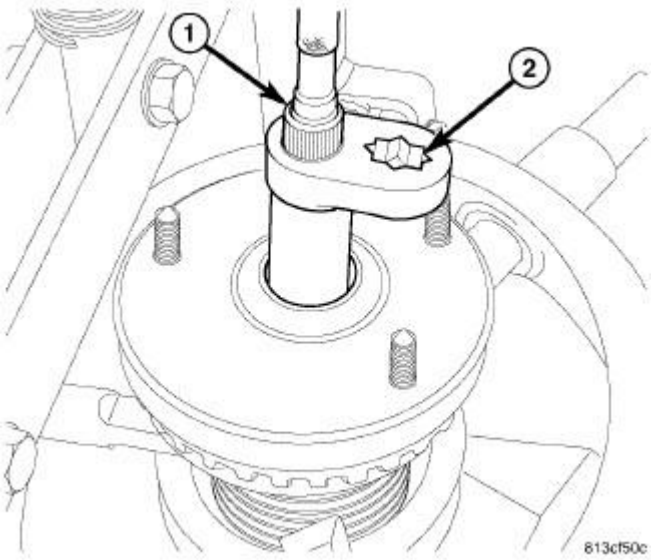

Fig. 107: RETAINING NUT REMOVAL/INSTALLATION
Courtesy of CHRYSLER LLC

10. Install Strut Nut Wrench 9362 (2) (on end of a torque wrench), on shock shaft retaining nut. Next, insert 8 mm socket though Wrench onto hex located on end of shock shaft. While holding shock shaft from turning, tighten nut using Wrench to 90 N.m (66 ft. lbs.) torque.
11. Slowly release tension from coil spring by backing off compressor drive fully. As tension is relieved, make sure shock components are properly in place.

12. Remove clamp from lower end of coil spring and shock. Push back spring compressor upper and lower hooks, then remove shock assembly from spring compressor.
13. Install shock assembly on vehicle. See **Front Suspension/Front/SHOCK ABSORBER, Suspension - Installation**.

Installation

INSTALLATION

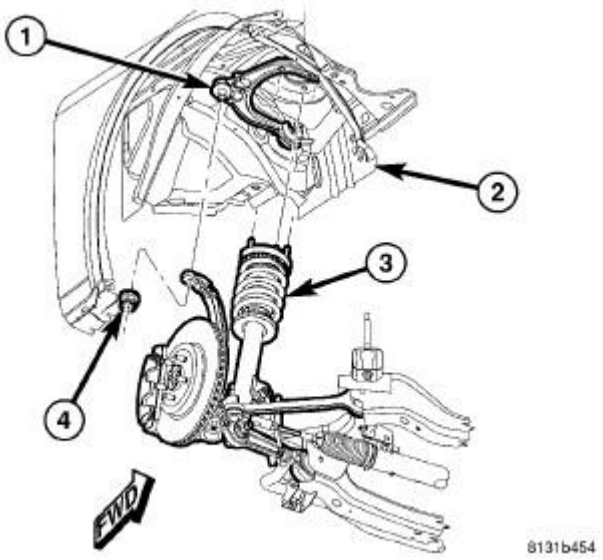

Fig. 108: UPPER BALL JOINT MOUNTING
Courtesy of CHRYSLER LLC

1. Place shock assembly into front suspension using reverse direction in which it was removed.

CAUTION: It is important to tighten nut as described in following step to avoid damaging ball stud joint.

2. Place upper ball joint stud (1) through hole in top of knuckle and install nut (4). Tighten nut by holding ball joint stud with a hex wrench while turning nut with a wrench. Tighten nut using crow foot wrench on torque wrench to 47 N.m + 90° turn (35 ft. lbs. + 90° turn).

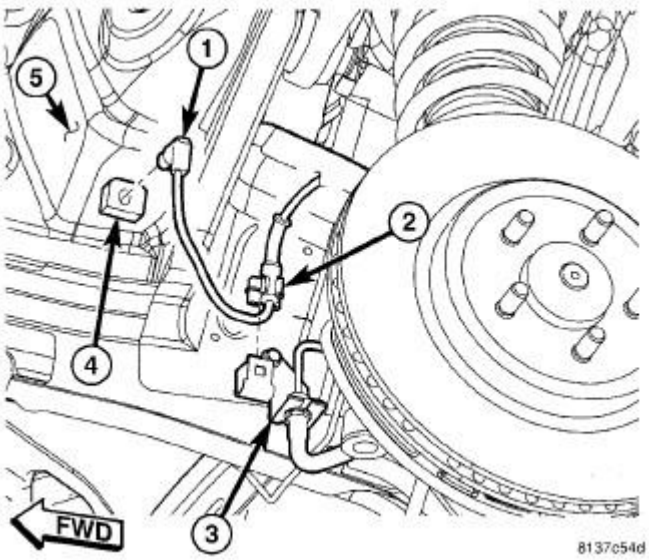

Fig. 109: WHEEL SPEED SENSOR AT BODY CONNECTOR
Courtesy of CHRYSLER LLC

3. Connect wheel speed sensor cable routing clip (2) at brake tube bracket (3).

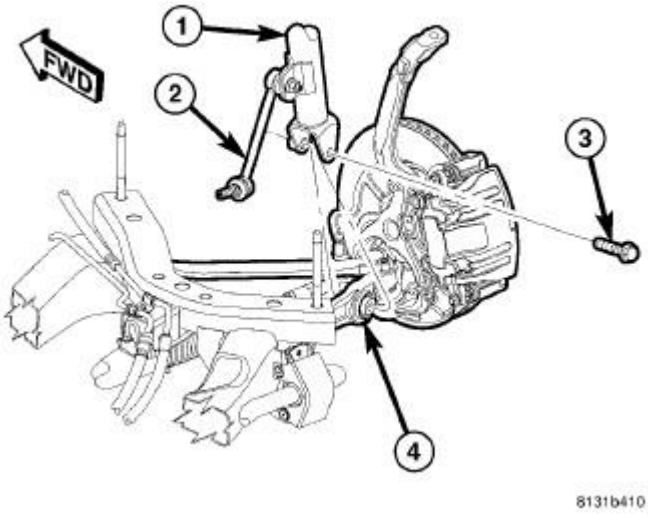

Fig. 110: LOWER SHOCK MOUNTING BOLT
Courtesy of CHRYSLER LLC

4. Install lower shock mounting bolt (3) attaching shock assembly (1) to lower control arm (4). **Do not tighten bolt at this time.**

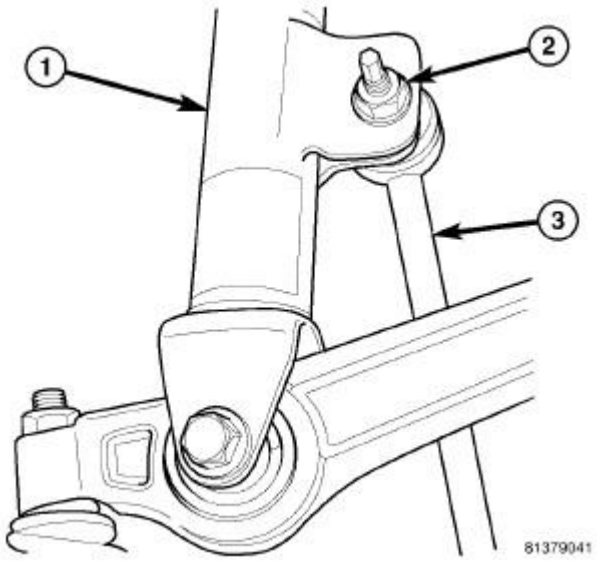

Fig. 111: STABILIZER LINK AT SHOCK ASSEMBLY
Courtesy of CHRYSLER LLC

5. Slide stabilizer link (3) ball joint stem into shock assembly from front. Install nut fastening link (3) to shock assembly (1). Tighten nut by holding ball joint stud while turning nut. Tighten nut using crow foot wrench on torque wrench to 128 N.m (95 ft. lbs.).

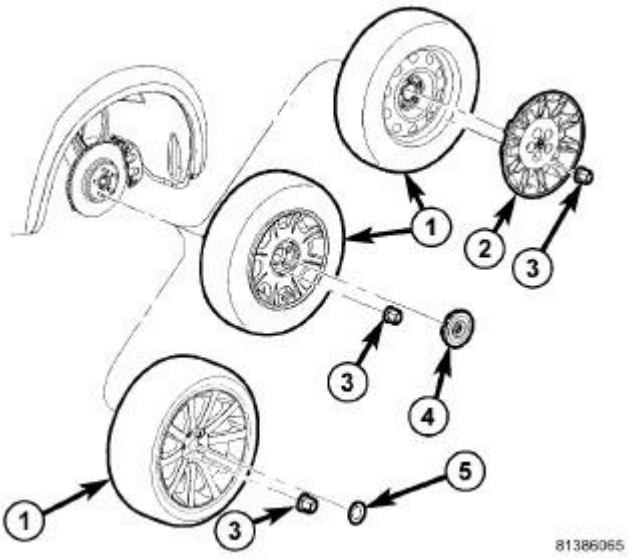

Fig. 112: TIRE AND WHEEL MOUNTING
Courtesy of CHRYSLER LLC

6. Install tire and wheel assembly (1). Refer to **Tires and Wheels - Installation** .
7. Lower vehicle.

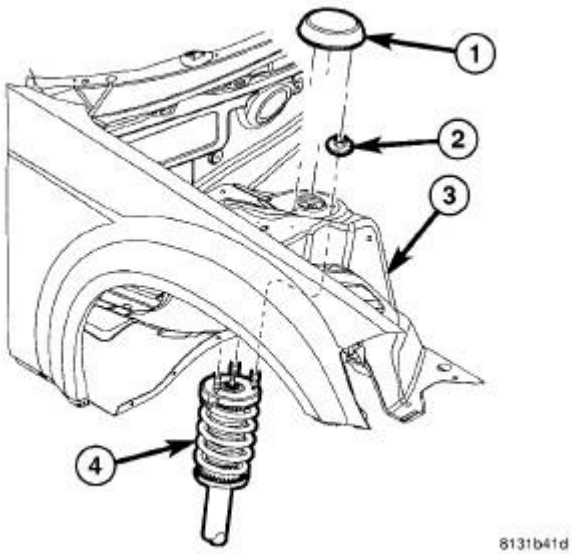

Fig. 113: UPPER SHOCK MOUNTING
Courtesy of CHRYSLER LLC

8. Install three nuts (2) fastening shock assembly (4) to shock tower (3). Tighten nuts to 27 N.m (20 ft. lbs.).
9. If equipped, align shock tower cap (1) with shock mounting nuts (2) and snap into place.

STABILIZER BAR, FRONT

Removal

REMOVAL

1. Raise and support vehicle. Refer to **Vehicle Quick Reference/Hoisting - Standard Procedure**
2. Remove belly pan. Refer to **Body/Exterior/BELLY PAN - Removal** .

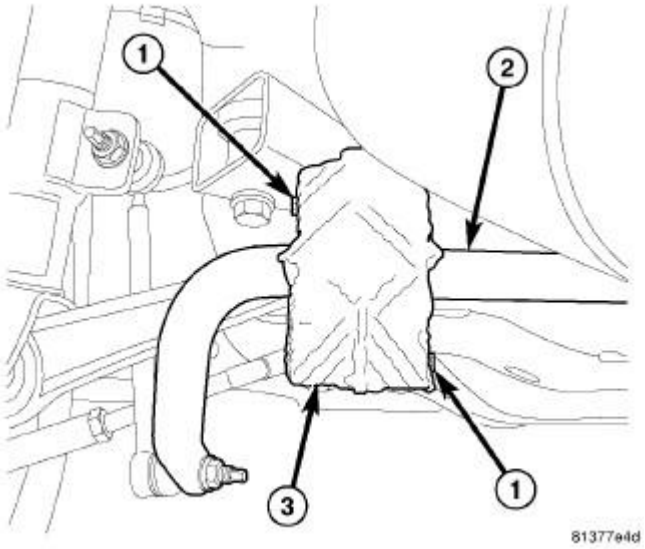

Fig. 114: FRONT STABILIZER BAR HEAT SHIELD
Courtesy of CHRYSLER LLC

3. On each side of vehicle, remove screws (1) fastening stabilizer bar heat shield (3). Remove heat shield.

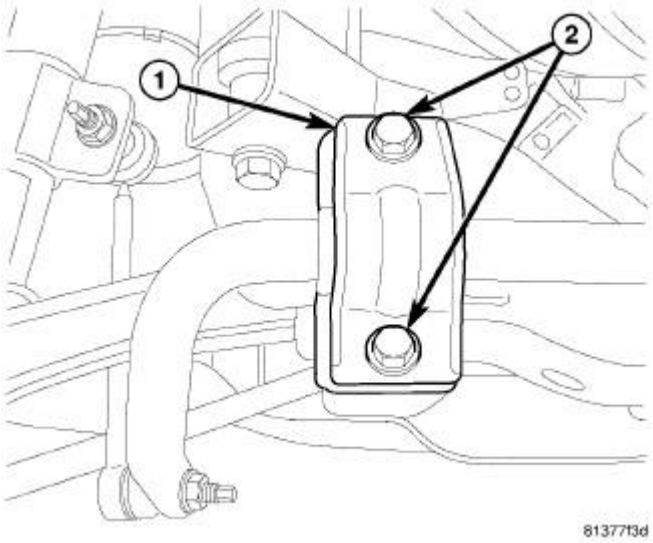

Fig. 115: FRONT STABILIZER BAR BUSHING RETAINER BOLTS
Courtesy of CHRYSLER LLC

4. On each side of vehicle, remove bolts (2) fastening stabilizer bar isolator retainer (1) in place.

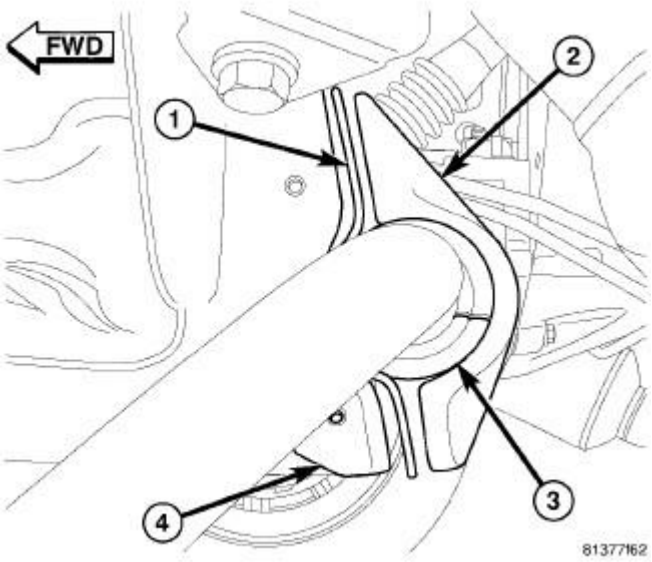

Fig. 116: FRONT STABILIZER BAR BUSHING RETAINER
Courtesy of CHRYSLER LLC

5. On each side of vehicle, remove retainer halves (1) (2) from around stabilizer bar isolator (3).

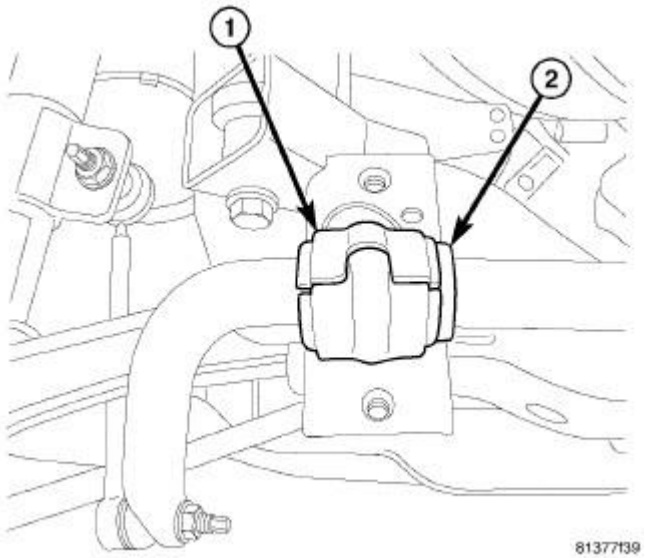

Fig. 117: FRONT STABILIZER BAR BUSHING ON BAR
Courtesy of CHRYSLER LLC

6. Utilizing slit, remove each isolator (1) from stabilizer bar (2).

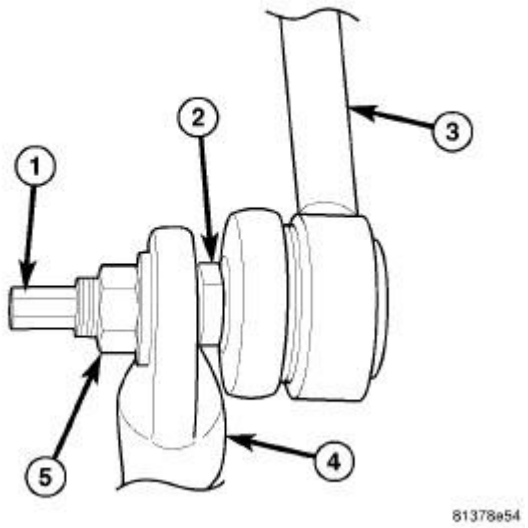

Fig. 118: LINK BALL JOINT AT STABILIZER BAR
Courtesy of CHRYSLER LLC

7. On each side of vehicle, remove nut (5) fastening stabilizer link (3) to stabilizer bar (4). Slide link ball joint stem (1) from bar, then remove bar from vehicle.

Installation

INSTALLATION

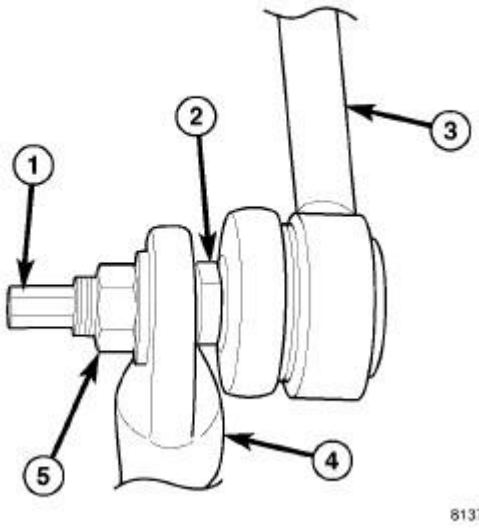

Fig. 119: LINK BALL JOINT AT STABILIZER BAR
Courtesy of CHRYSLER LLC

NOTE: When attaching stabilizer link to stabilizer bar, make sure link ball joint stem is

pointed inboard toward engine cradle.

1. On each side of vehicle, raise stabilizer bar (4) to stabilizer link (3) and slide link ball joint stem (1) through mounting hole in bar. Loosely install nut (5) at this time.

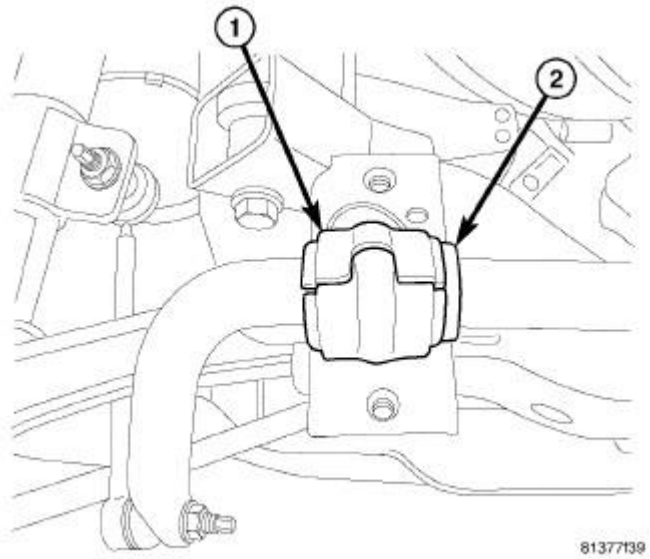

Fig. 120: FRONT STABILIZER BAR BUSHING ON BAR
Courtesy of CHRYSLER LLC

CAUTION: Because of stabilizer isolator outer shape, it is very important to install isolators in position discussed in following step.

2. Utilizing slit in isolator, install each stabilizer bar isolator (1) on bar resting against locating collar (2) as shown in illustration. Make sure slit in isolator is positioned toward rear of vehicle.

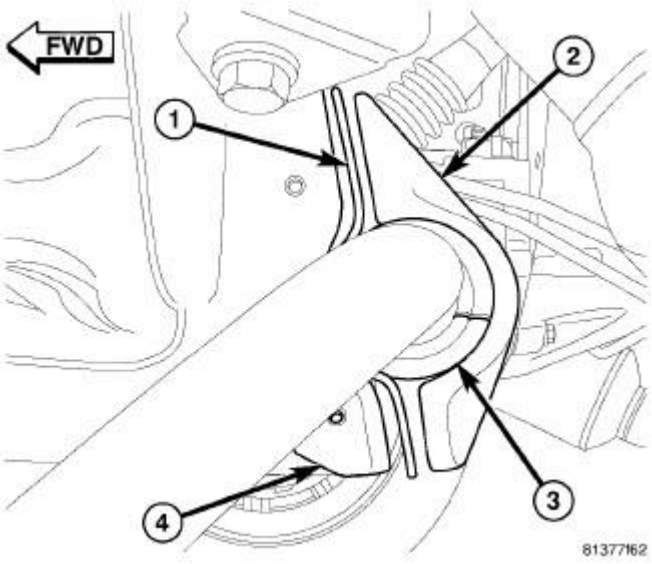

Fig. 121: FRONT STABILIZER BAR BUSHING RETAINER
Courtesy of CHRYSLER LLC

3. On each side of vehicle, install stabilizer bar isolator retainer halves (1) (2) around isolator (3).

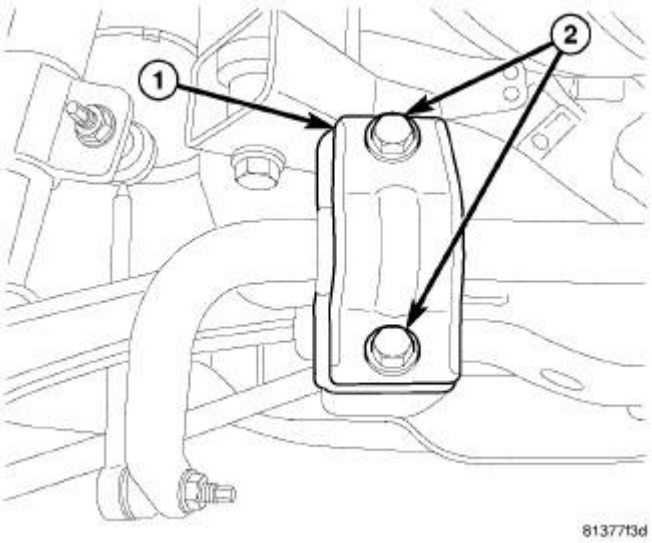

Fig. 122: FRONT STABILIZER BAR BUSHING RETAINER BOLTS
Courtesy of CHRYSLER LLC

4. On each side of vehicle, install bolts (2) securing stabilizer bar isolator retainer halves (1) to cradle. Tighten bolts to 60 N.m (44 ft. lbs.).

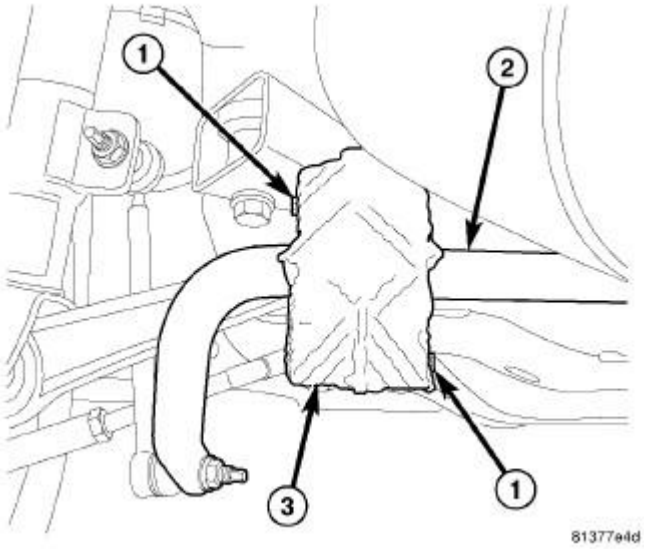

Fig. 123: FRONT STABILIZER BAR HEAT SHIELD
Courtesy of CHRYSLER LLC

5. On each side of vehicle, install stabilizer bar heat shield (3) over stabilizer bar isolator retainer. Install mounting screws (1).

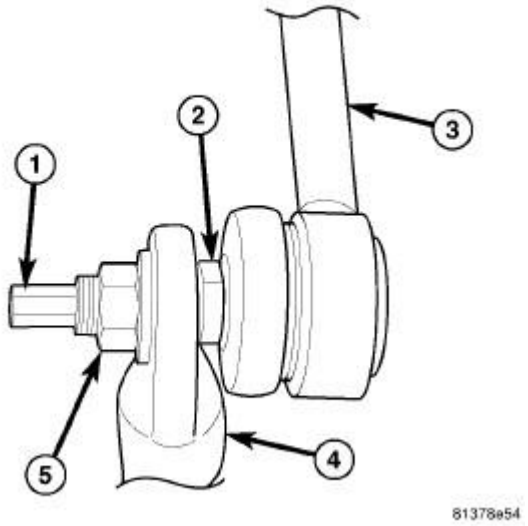

Fig. 124: LINK BALL JOINT AT STABILIZER BAR
Courtesy of CHRYSLER LLC

6. While holding stem from rotating at hex (1) or flat (2) tighten stabilizer link nuts at each end of stabilizer bar (4) to 128 N.m (95 ft. lbs.).
7. Install belly pan. Refer to **Body/Exterior/BELLY PAN - Installation** .
8. Lower vehicle.

STRUT, TENSION

Removal

REMOVAL

1. Raise and support vehicle. Refer to **Vehicle Quick Reference/Hoisting - Standard Procedure**

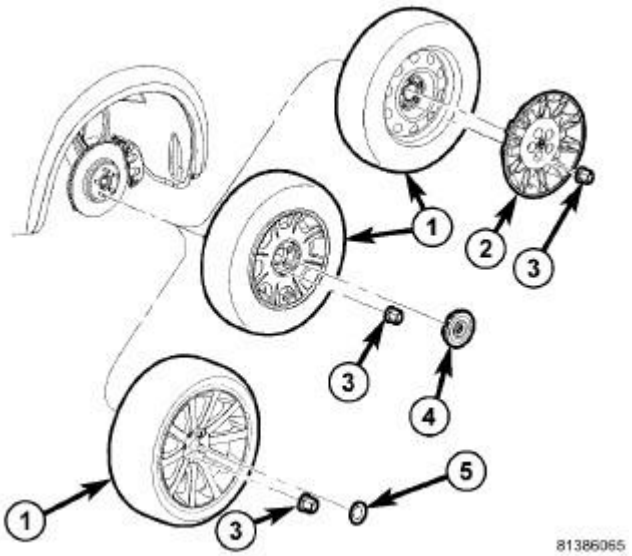

Fig. 125: TIRE AND WHEEL MOUNTING
Courtesy of CHRYSLER LLC

2. Remove wheel mounting nuts (3), then tire and wheel assembly (1).
3. Remove belly pan. Refer to **Body/Exterior/BELLY PAN - Removal**

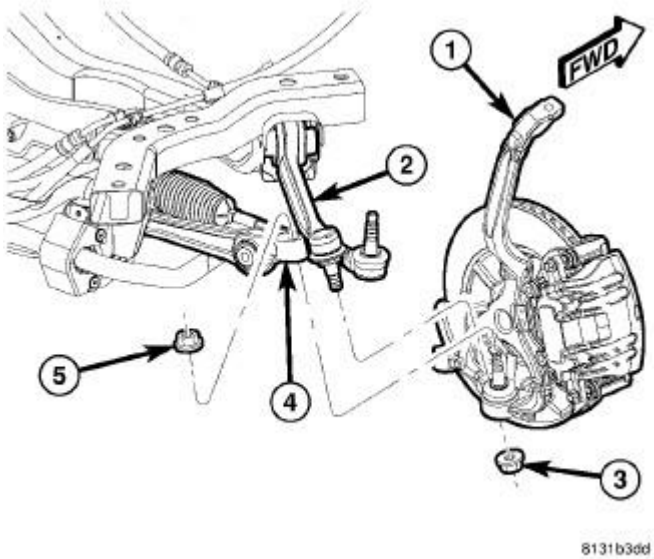

Fig. 126: BALL JOINT ATTACHMENT
Courtesy of CHRYSLER LLC

4. Loosen nut (3) attaching tension strut (2) ball joint stud to knuckle. Back nut off until nut is even with end of stud. **Keeping nut on at this location will help keep end of stud from distorting while using Puller in next step.**

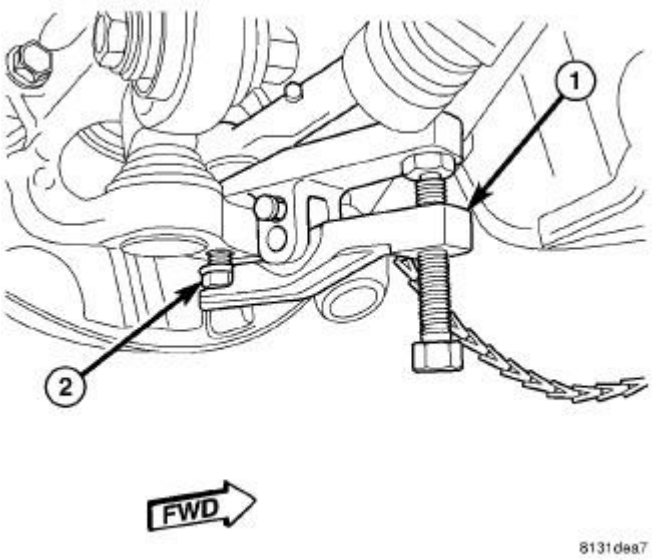

Fig. 127: USING PULLER ON UPPER BALL JOINT
Courtesy of CHRYSLER LLC

CAUTION: In following step, use care not to damage ball joint seal boot while sliding Ball Joint Remover 9360, into place past seal boot.

5. Using Ball Joint Remover 9360 (1) separate tension strut ball joint stud (2) from knuckle.

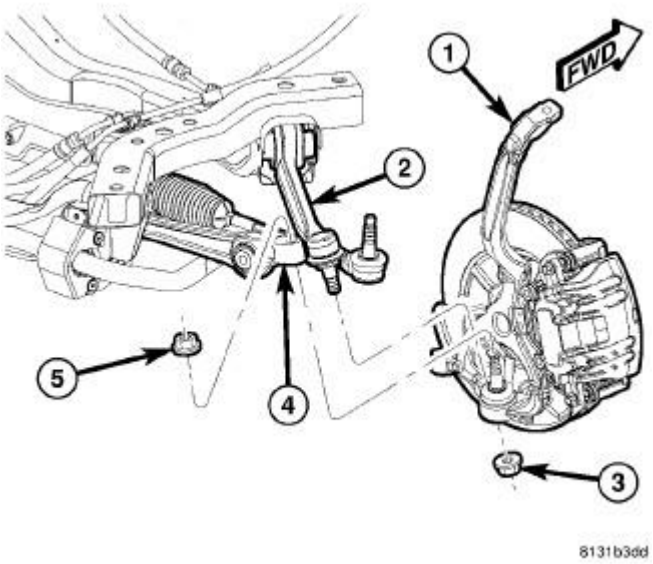

Fig. 128: BALL JOINT ATTACHMENT
Courtesy of CHRYSLER LLC

6. Remove nut (3) from end of tension strut (2) ball joint stud.
7. Rotate knuckle outward and push ball joint upward, out of knuckle.

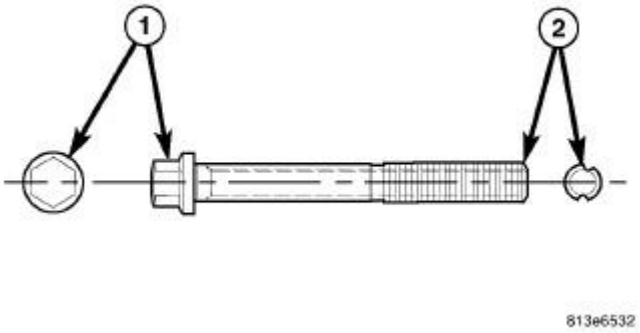

Fig. 129: WHEEL ALIGNMENT ADJUSTMENT BOLT
Courtesy of CHRYSLER LLC

CAUTION: If the tension strut bolt at the engine cradle has a lengthwise grooved shaft (2), it is a special wheel alignment adjustment bolt and the bolt head (1) must not be rotated in the vehicle or damage to the bolt and engine cradle will result. While holding the bolt in place with a wrench, remove the nut, then slide the bolt out of the bushing and cradle taking note of bolt positioning in engine cradle for reassembly purposes. The bolt needs to be installed in the same position as removed to make sure wheel camber and caster return to adjusted position.

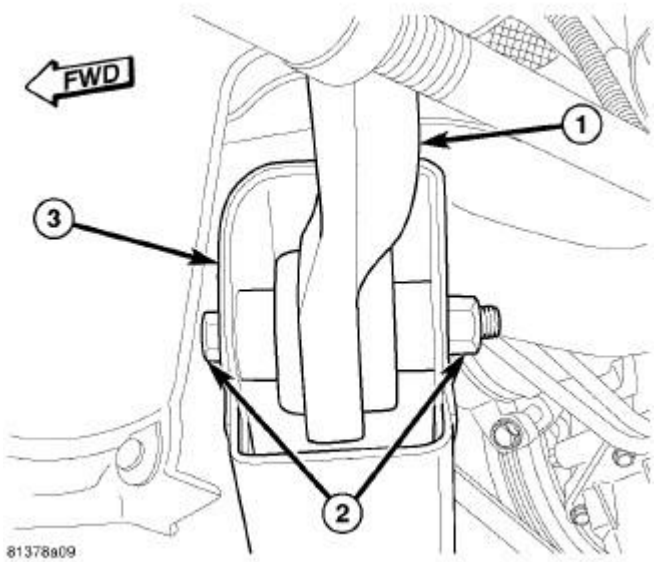

Fig. 130: TENSION STRUT CRADLE BOLT/NUT
Courtesy of CHRYSLER LLC

8. Remove nut and bolt (2) securing tension strut (1) to engine cradle (3).
9. Slide tension strut out of cradle bracket and remove from vehicle.

Installation

INSTALLATION

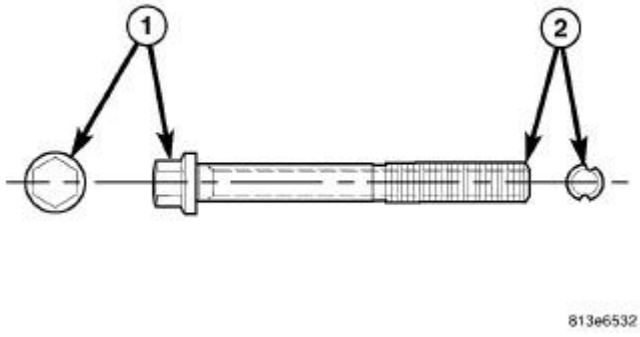

Fig. 131: WHEEL ALIGNMENT ADJUSTMENT BOLT
Courtesy of CHRYSLER LLC

NOTE: If installing a tension strut engine cradle bolt that is a wheel alignment adjustment bolt (lengthwise grooved shaft (2)), make sure to install it in the same position which it was in upon removal. For more details on installation of this special bolt. See Front Suspension/Wheel Alignment - Standard Procedure.

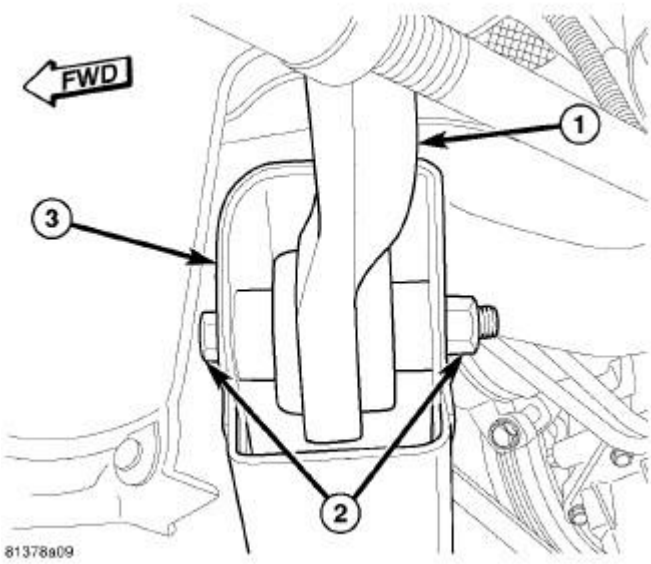

Fig. 132: TENSION STRUT CRADLE BOLT/NUT
Courtesy of CHRYSLER LLC

1. Slide bushing end of tension strut (1) into cradle bracket (3).
2. Install mounting bolt (2) from front through cradle and bushing.
3. Install nut (2), but **do not tighten at this time** .

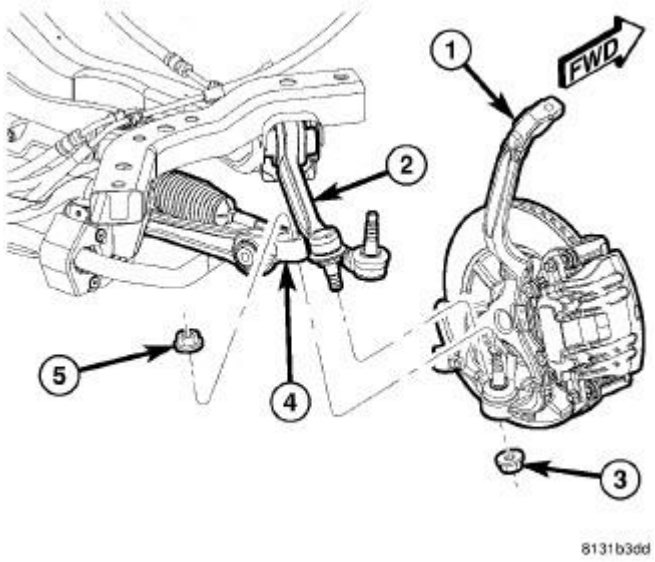

Fig. 133: BALL JOINT ATTACHMENT
Courtesy of CHRYSLER LLC

4. Insert tension strut (2) ball joint stud downward, into knuckle hole.
5. Completely install NEW nut (3) on ball joint stud attaching tension strut (2) to knuckle (1). Tighten nut by holding ball joint stud with a hex wrench while turning nut with a wrench. Tighten

nut using crow foot wrench on torque wrench to 68 N.m + 90° turn (50 ft. lbs. + 90° turn).

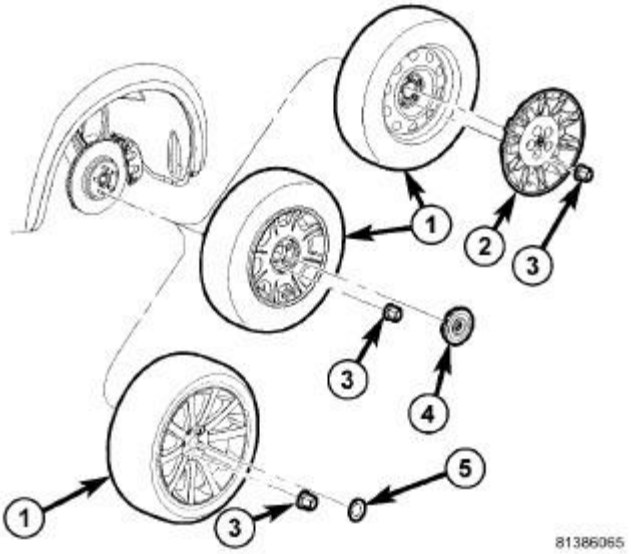

Fig. 134: TIRE AND WHEEL MOUNTING
Courtesy of CHRYSLER LLC

6. Install tire and wheel assembly (1). Refer to **Tires and Wheels - Installation** . Tighten wheel mounting nuts (3) to 150 N.m (110 ft. lbs.) (Police - 190 N.m (140 ft. lbs.)).
7. Lower vehicle.
8. Position vehicle on an alignment rack/drive-on lift.

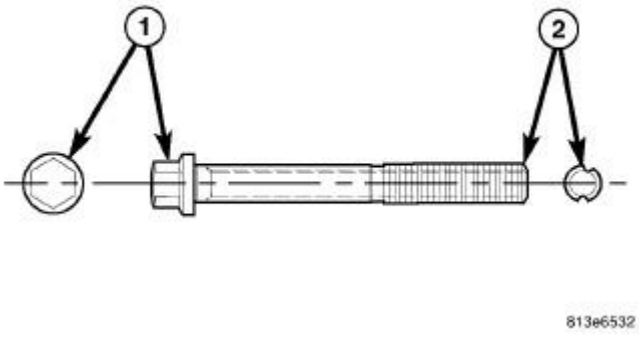

Fig. 135: WHEEL ALIGNMENT ADJUSTMENT BOLT
Courtesy of CHRYSLER LLC

9. Perform wheel alignment. See **Front Suspension/Wheel Alignment - Standard Procedure**

CAUTION: If the tension strut engine cradle bolt is a wheel alignment adjustment bolt (lengthwise grooved shaft (2)), be sure to only tighten the nut. Do not rotate the bolt head (1) or damage to the

bushing will occur.

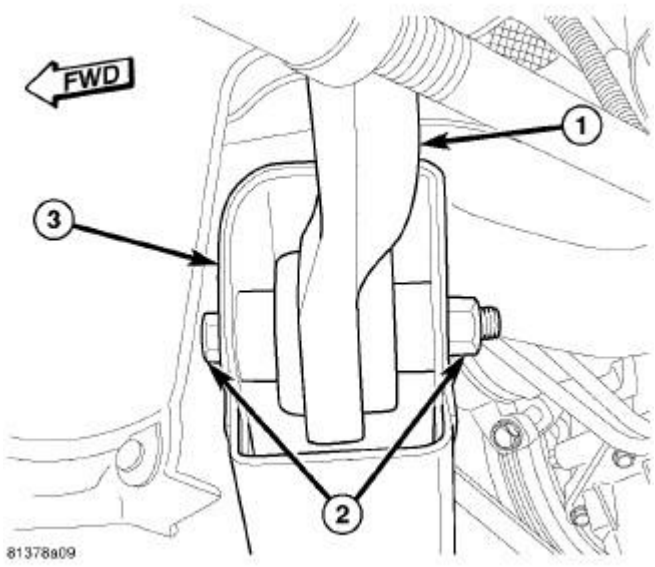

Fig. 136: TENSION STRUT CRADLE BOLT/NUT
Courtesy of CHRYSLER LLC

10. Once alignment is found to be within specifications, using a crowfoot wrench, tighten tension strut cradle bolt nut (2) to 176 N.m (130 ft. lbs.) while holding the bolt stationary.
11. Install belly pan. Refer to **Body/Exterior/BELLY PAN - Installation** .

WHEEL ALIGNMENT

DESCRIPTION

DESCRIPTION

Vehicle wheel alignment is the positioning of all interrelated front and rear suspension angles. These angles affect the handling and steering of the vehicle when it is in motion. Proper wheel alignment is essential for efficient steering, good directional stability, and proper tire wear.

The method of checking a vehicle's front and rear wheel alignment varies depending on the manufacturer and type of equipment used. The manufacturer's instructions should always be followed to ensure accuracy of the alignment, except when Chrysler LLC wheel alignment specifications differ.

On this vehicle, the suspension angles that can be adjusted are as follows:

FRONT:

- Camber (with cradle shift/service adjustment bolt package)
- Caster (with cradle shift/service adjustment bolt package)

- Toe

REAR:

- Toe

Check the wheel alignment and make all wheel alignment adjustments with the vehicle standing at its proper curb height specification. Curb height is the normal riding height of the vehicle. It is measured from a certain point on the vehicle to the ground or a designated area while the vehicle is sitting on a flat, level surface. To properly check curb height. See **Front Suspension/Wheel Alignment - Standard Procedure**.

Typical wheel alignment angles and measurements are described in the following paragraphs.

CAMBER

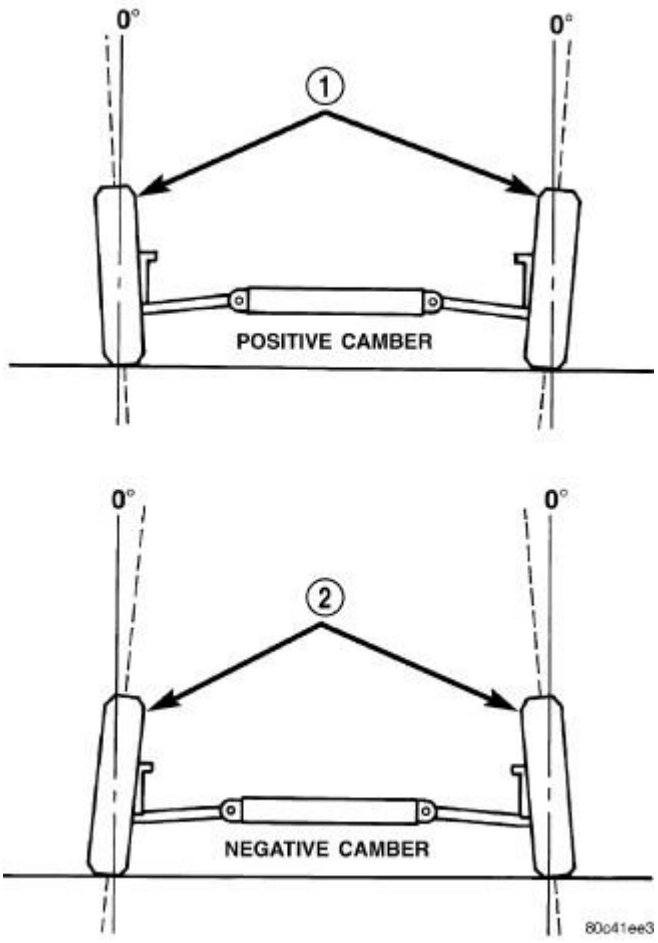

Fig. 137: Camber
Courtesy of CHRYSLER LLC

1 - WHEELS TILTED OUT AT TOP
2 - WHEELS TILTED IN AT TOP

Camber is the inward or outward tilt of the top of the tire and wheel assembly. Inward tilt (2) is negative camber. Outward tilt (1) is positive camber. Camber is measured in degrees of angle relative to a true vertical line. Camber is a tire wearing angle.

- Excessive negative camber will cause tread wear at the inside of the tire.
- Excessive positive camber will cause tread wear on the outside of the tire.

CROSS CAMBER

Cross camber is the difference between left and right camber. To achieve the cross camber reading, subtract the right side camber reading from the left. For example, if the left camber is +0.3° and the right camber is 0.0°, the cross camber would be +0.3°.

CASTER

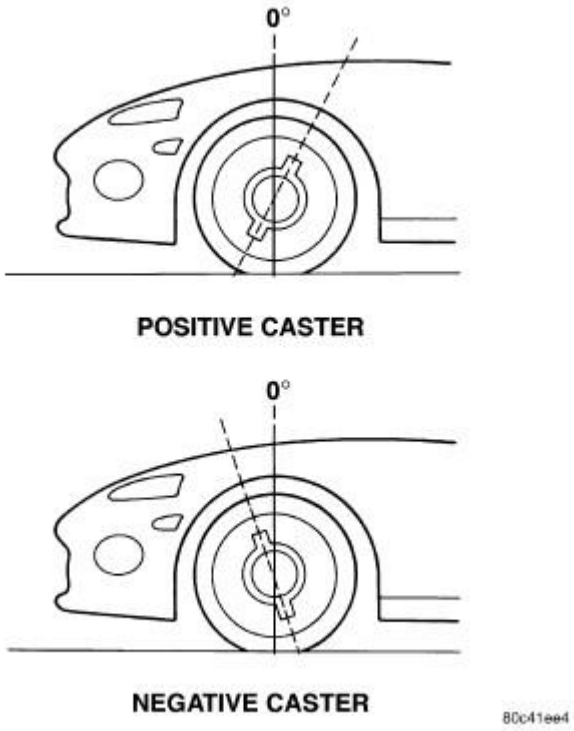

Fig. 138: Caster
Courtesy of CHRYSLER LLC

Caster is the forward or rearward tilt of the steering knuckle in reference to the position of the upper and lower ball joints. Caster is measured in degrees of angle relative to a true vertical center line. This line is viewed from the side of the tire and wheel assembly.

- Forward tilt (upper ball joint ahead of lower) results in a negative caster angle.
- Rearward tilt (upper ball joint trailing lower) results in a positive caster angle.

Although caster does not affect tire wear, a caster imbalance between the two front wheels may cause the vehicle to lead to the side with the least positive caster.

CROSS CASTER

Cross caster is the difference between left and right caster.

TOE

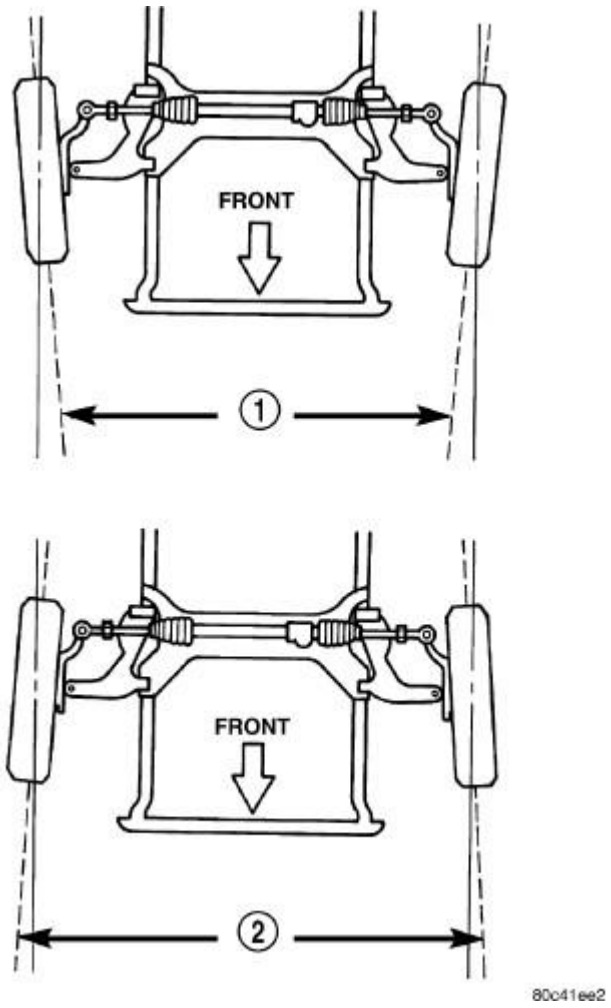

Fig. 139: Toe
Courtesy of CHRYSLER LLC

1 - TOE-IN
2 - TOE-OUT

Toe is the inward or outward angle of the wheels as viewed from above the vehicle.

- Toe-in (1) is produced when the front edges of the wheels on the same axle are closer together than the rear edges.
- Toe-out (2) is produced when the front edges of the wheels on the same axle are farther apart than the rear edges.

Toe-in and toe-out can occur at the front wheels and the rear wheels.

Toe is measured in degrees or inches. The measurement identifies the amount that the front of the wheels point inward (toe-in) or outward (toe-out). Toe is measured at the spindle height. Zero toe means the front and rear edges of the wheels on the same axle are equally distant.

TOE-OUT ON TURNS

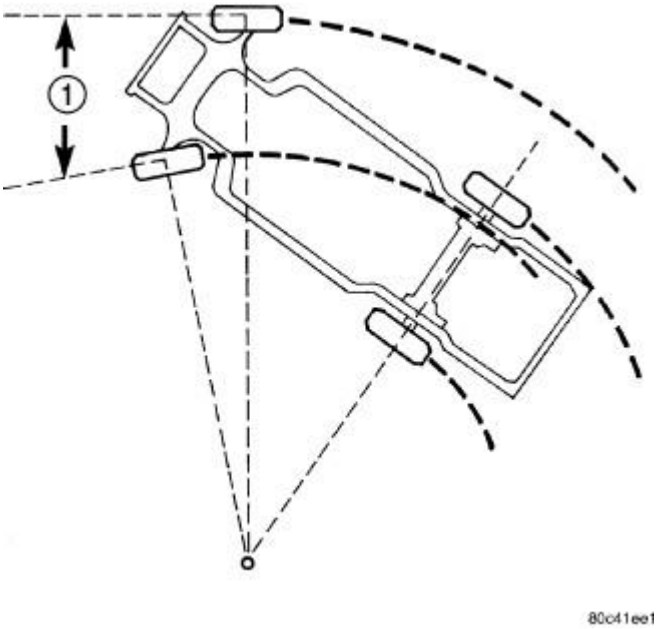

Fig. 140: Toe-Out On Turns
Courtesy of CHRYSLER LLC

1 - TOE-OUT ON TURNS

Toe-out on turns is the relative positioning of the front wheels while steering through a turn. This compensates for each front wheel's turning radius. As the vehicle encounters a turn, the outboard wheel must travel in a larger radius circle than the inboard wheel. The steering system is designed to make each wheel follow its particular radius circle. To accomplish this, the front wheels must progressively toe outward as the steering is turned from center. This eliminates tire scrubbing and undue tire wear when steering a vehicle through a turn.

DYNAMIC TOE PATTERN

Dynamic toe pattern is the inward and outward toe movement of the front and rear tires through the

suspension's jounce and rebound travel. As the vehicle's suspension moves up and down, the toe pattern varies. Toe pattern is critical in controlling the directional stability of the vehicle while in motion. Front and rear dynamic toe pattern is preset by the factory at the time the vehicle is assembled.

It is not necessary to check or adjust front or rear dynamic toe pattern when doing a normal wheel alignment. The only time dynamic toe pattern needs to be checked or adjusted is if the frame of the vehicle has been damaged.

STEERING AXIS INCLINATION (S. A. I.)

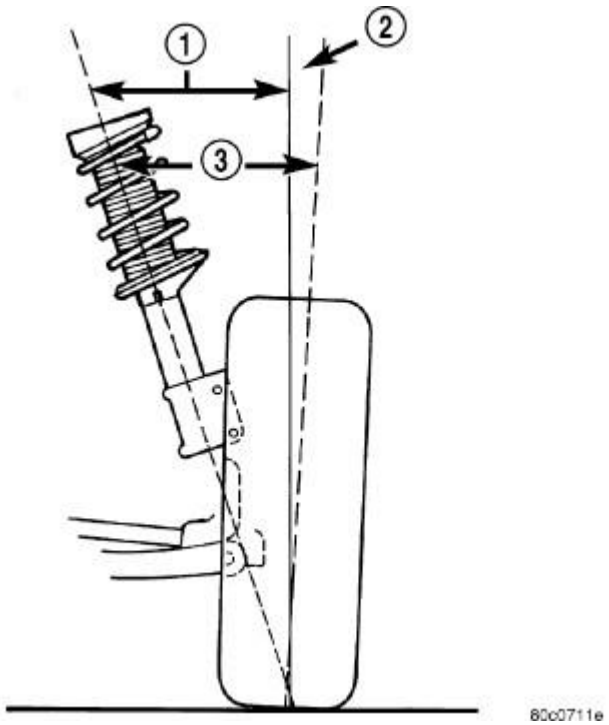

Fig. 141: S.A.I. And I.A.
Courtesy of CHRYSLER LLC

1 - S.A.I.
2 - CAMBER
3 - I.A.

Steering axis inclination is the angle between a true vertical line starting at the center of the tire at the road contact point and a line drawn through the center of the upper ball joint (or strut) and the lower ball joint (1). S.A.I. is built into the vehicle and is not an adjustable angle. If SAI is not within specifications, a bent or damaged suspension component may be the cause.

INCLUDED ANGLE (I. A.)

Included angle (3) is the sum of the SAI angle (1) plus or minus the camber angle (2), depending on whether or not the wheel has positive or negative camber. If camber is positive (2), add the camber

angle to the SAI angle. If camber is negative, subtract the camber angle from the SAI angle. Included angle is not adjustable, but can be used to diagnose a frame misalignment or bent suspension component (spindle, strut).

THRUST ANGLE

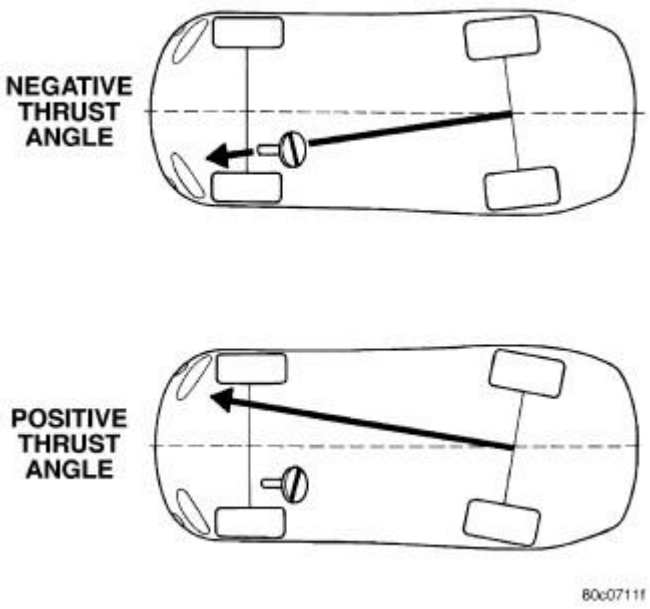

Fig. 142: Thrust Angle
Courtesy of CHRYSLER LLC

Thrust angle is the averaged direction the rear wheels are pointing in relation to the vehicle's center line. The presence of negative or positive thrust angle causes the rear tires to track improperly to the left or right of the front tires (dog tracking).

- Negative thrust angle means the rear tires are tracking to the left of the front tires.
- Positive thrust angle means the rear tires are tracking to the right of the front tires.

Improper tracking can cause undue tire wear, a lead or pull and a crooked steering wheel. Excessive thrust angle can usually be corrected by adjusting the rear wheel toe so that each wheel has one-half of the total toe measurement.

DIAGNOSIS AND TESTING

SUSPENSION AND STEERING

CONDITION	POSSIBLE CAUSES	CORRECTION
Front End Whine On Turns	1. Defective wheel bearing 2. Incorrect wheel alignment	1. Replace wheel bearing. 2. Check and reset wheel

		alignment.
	3. Worn tires	3. Replace tires.
Front End Growl Or Grinding On Turns	1. Defective wheel bearing	1. Replace wheel bearing.
	2. Engine mount grounding	2. Check for motor mount hitting frame rail and reposition engine as required.
	3. AWD - Worn or broken C/V joint	3. Replace C/V joint.
	4. Loose wheel lug nuts	4. Verify wheel lug nut torque.
	5. Incorrect wheel alignment	5. Check and reset wheel alignment.
	6. Worn tires	6. Replace tires.
Front End Clunk Or Snap On Turns	1. Loose lug nuts	1. Tighten wheel lug nuts to specifications.
	2. Worn or loose tie rod	2. Tighten or replace tie rod end.
	3. Worn or loose ball joint	3. Tighten or replace ball joint.
	4. Worn/loose control arm bushing	4. Replace control arm or bushing.
	5. Loose control arm fasteners	5. Tighten control arm fasteners to specified torque.
	6. Loose stabilizer bar	6. Tighten stabilizer bar fasteners to specified torque.
	7. Loose crossmember bolts	7. Tighten crossmember bolts to specified torque.
Front End Whine With Vehicle Going Straight At A Constant Speed	1. Defective wheel bearing	1. Replace hub and bearing assembly.
	2. Incorrect wheel alignment	2. Check and reset wheel alignment.
	3. Worn tires	3. Replace tires.
Front End Growl Or Grinding With Vehicle Going Straight At A Constant Speed	1. Engine mount grounding	1. Reposition engine/mount as required.
Front End Clunk When Accelerating Or Decelerating	1. Worn or broken engine mount	1. Replace engine mount.
	2. Loose lug nuts	2. Tighten wheel lug nuts to specified torque.
	3. Worn or loose ball joint	3. Replace ball joint/control arm.
	4. Worn or loose control arm bushing	4. Replace control arm or bushing.
	5. Loose control arm fasteners	5. Tighten fasteners to specified torque.
	6. Loose crossmember bolts	6. Tighten crossmember bolts to specified torque.
	7. Worn tie rod end	7. Replace tie rod end.

Road Wander	1. Incorrect tire pressure	1. Inflate tires to recommended pressure.
	2. Incorrect front or rear wheel toe	2. Check and reset wheel toe.
	3. Worn wheel bearing	3. Replace hub and bearing.
	4. Worn control arm bushings	4. Replace control arm or bushing.
	5. Excessive friction in steering gear	5. Replace steering gear.
	6. Excessive friction in steering shaft coupling	6. Replace steering intermediate shaft/coupler.
Lateral Pull	1. Unequal tire pressure	1. Inflate all tires to recommended pressure.
	2. Radial tire lead	2. Perform lead correction procedure.
	3. Incorrect front wheel camber	3. Check and reset front wheel camber.
	4. Power steering gear imbalance	4. Replace power steering gear.
	5. Wheel braking	5. Correct braking condition causing lateral pull.
Excessive Steering Free Play	1. Incorrect steering gear adjustment	1. Replace steering gear.
	2. Worn or loose tie rod ends	2. Replace tie rod ends.
	3. Loose steering gear mounting bolts	3. Tighten steering gear mounting bolts to specified torque.
	4. Loose or worn steering shaft coupler	4. Replace steering intermediate shaft/coupler.
Excessive Steering Effort	1. Low tire pressure	1. Inflate all tires to recommended pressure.
	2. Lack of lubricant in steering gear	2. Replace steering gear.
	3. Low power steering fluid level	3. Fill power steering fluid reservoir to correct level. Bleed as necessary.
	4. Loose drive belt	4. Replace adjuster or drive belt.
	5. Lack of lubricant in ball joints	5. Replace ball joints.
	6. Steering gear malfunction	6. Replace steering gear.
	7. Lack of lubricant in steering shaft coupler	7. Replace steering intermediate shaft/coupler.

VEHICLE LEAD/PULL

To assure correct diagnosis, it is important to follow the steps outlined in the order given . Road test the vehicle before and after each step to verify that the lead condition has been corrected. When

evaluating a vehicle, always drive the same road in both directions to get a feel for the effect of road crown and cross wind. A neutral vehicle will exhibit a small amount of drift on both right and left crowned roads (normal crown sensitivity). A vehicle with pronounced lead/pull may have one or more of the following conditions:

1. UNEQUAL TIRE PRESSURE. Adjust tire pressure to the pressure stated on door placard. Make sure the tire pressure is equal on all four tires and evaluate the car. Also verify that the tire size and type are correct and match each other. If the car still has a lead condition go to step 2.
2. TIRE CONICITY. Excessive tire conicity is one of the more frequent causes of vehicle lead. Cross-switch the front tires and evaluate the car. If the car still leads in the same direction or gets worse, return the front tires to their original position, then go to step 3.
3. SUSPENSION ALIGNMENT. Check and record the wheel alignment settings. Non-symmetrical front caster or camber can sometimes cause a lead condition or can be used to fix a lead condition. Adjust the wheel alignment as necessary to preferred settings. See **Front Suspension/Wheel Alignment - Standard Procedure**. If the car still leads, go to step 4.
4. STEERING GEAR VALVE IMBALANCE. Steering gear valve imbalance can sometimes cause a vehicle lead. Although there is no quick test or measurement that can be performed to verify a good or bad steering gear valve, generally the steering efforts will feel much lighter in the lead direction and heavier in the opposite direction with an unbalanced valve. Replace the steering gear only as a "last resort" to solve the problem. To replace the steering gear. Refer to **Steering/Gear - Removal** .

STANDARD PROCEDURE

WHEEL ALIGNMENT

PRE-WHEEL ALIGNMENT INSPECTION

Before any attempt is made to change or correct the wheel alignment, the following inspection and necessary corrections must be made to ensure proper alignment.

1. Verify that the fuel tank is full. If the tank is not full, the reduction in weight will affect the curb height of the vehicle and the alignment angles.
2. The vehicle's passenger and luggage compartments should be free of any load that is not factory equipment.
3. Check the tires on the vehicle. All tires must be the same size and in good condition with approximately the same amount of tread wear. Inflate all the tires to the recommended air pressure.
4. Check the wheel and tire assemblies for excessive radial runout.
5. Inspect lower ball joints and all steering linkage for looseness, binding, wear or damage. Repair as necessary.
6. Check suspension fasteners for proper torque and tighten as necessary.
7. Inspect all suspension component rubber bushings for signs of wear or deterioration. Replace any faulty bushings or components before aligning the vehicle.
8. Check the vehicle's curb height to verify it is within specifications. See **Front**

Suspension/Wheel Alignment - Standard Procedure.

WHEEL ALIGNMENT SETUP

1. Position the vehicle on an alignment rack.
2. Install all required alignment equipment on the vehicle per the alignment equipment manufacturer's instructions. On this vehicle, a four-wheel alignment is recommended.

NOTE: Prior to reading the vehicle's alignment readouts, the front and rear of vehicle should be jounced (suspension compressed/released). Induce jounce (rear first, then front) by grasping the center of the bumper and jouncing each end of vehicle an equal number of times. The bumper should always be released when vehicle is at the bottom of the jounce cycle.

3. Read the vehicle's current front and rear alignment settings. Compare the vehicle's current alignment settings to the vehicle specifications for camber, caster and toe-in. See **Front Suspension/Wheel Alignment - Specifications**.
4. If front camber and caster are not within specifications, proceed to CAMBER AND CASTER. If caster and camber are within specifications, proceed to TOE which can be found following CAMBER AND CASTER. Rear camber and caster are not adjustable. If found not to be within specifications, reinspect for damaged suspension or body components and replace as necessary. If rear toe is not within specifications, adjust rear toe before proceeding to adjust front toe.

CAMBER AND CASTER

Camber and caster settings on this vehicle are determined at the time the vehicle is designed, by the location of the vehicle's suspension components. This is referred to as NET BUILD. The result is no required adjustment of camber and caster after the vehicle is built or when servicing the suspension components. Thus, when performing a wheel alignment, caster and camber are not normally considered adjustable angles. Camber and caster should be checked to ensure they meet vehicle specifications.

If individual front camber or caster is found not to meet alignment specifications, each can be adjusted by shifting the engine cradle if cross-camber and cross-caster are within specifications, or by using an available service adjustment bolt package. Always try to shift the cradle first **(if camber and caster are off slightly)** to correct the misalignment before installing an adjustment bolt package. If an adjustment bolt package installation is necessary, inspect the suspension components for any signs of damage or bending first.

CAUTION: Do not attempt to adjust the vehicles wheel alignment by heating, bending or by performing any other modification to the vehicle's front suspension components or body.

ADJUSTMENT BY SHIFTING CRADLE

CAUTION: Always use care when shifting cradle to avoid damaging other components on the vehicle.

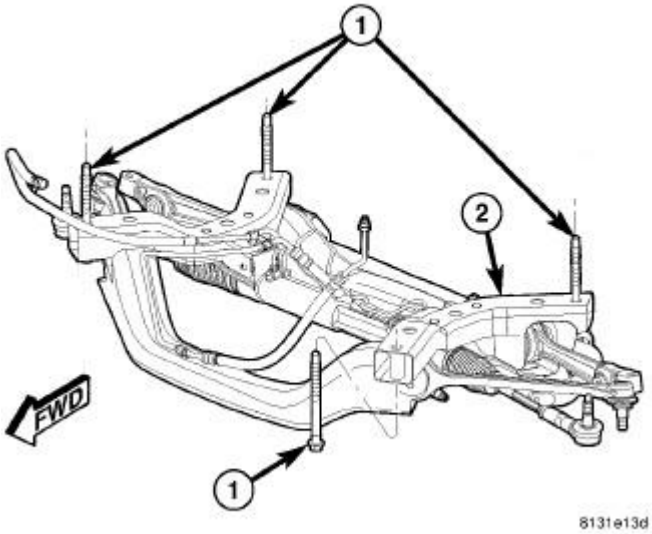

Fig. 143: ENGINE CRADLE MOUNTING BOLTS
Courtesy of CHRYSLER LLC

1. Loosen the four bolts (1) fastening the engine cradle (2) to the frame just enough to allow movement of the cradle.
2. Shift cradle as necessary to bring camber or caster into specifications. When shifting cradle, use care not to move other angles (camber or caster) that are within specifications, out of specifications.
3. Tighten the four bolts (1) fastening the engine cradle (2) to the frame to specifications.
4. Jounce the rear, then front of the vehicle an equal amount of times.
5. Measure camber and caster. If camber and caster are within specifications, proceed to TOE. If camber or caster cannot be brought into specifications, perform the ADJUSTMENT BOLT PACKAGE INSTALLATION.

ADJUSTMENT BOLT PACKAGE INSTALLATION

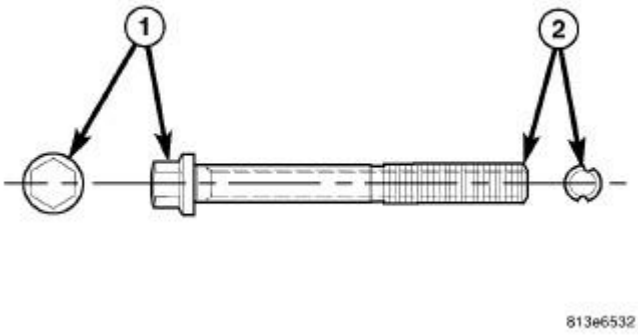

Fig. 144: WHEEL ALIGNMENT ADJUSTMENT BOLT
Courtesy of CHRYSLER LLC

The adjustment bolt package contains 2 special bolts (1). These bolts can be identified by the offset grooves cut into the thread (2). These bolts are designed to replace the inboard mounting bolts of the lower control arm and tension strut. Each bolt allows approximately 0.3 degrees of movement. To adjust camber only, use both bolts, one at the tension strut and the other at the lower control arm. To adjust caster only, use one bolt at the tension strut only.

1. Raise the vehicle by the frame until the tires are not supporting the weight of the vehicle.
2. Remove the belly pan as necessary. Refer to **Body/Exterior/BELLY PAN - Removal**
3. Lower control arm bolt only:
    a. Remove the screws fastening the heat shields covering the stabilizer bar bushing retainers to the cradle. Remove the heat shields.
    b. Remove the four bolts (two each) fastening the stabilizer bar bushing retainers to the cradle.
    c. Swing the stabilizer bar rearward and down out of the way of the control arm mounting bolts.

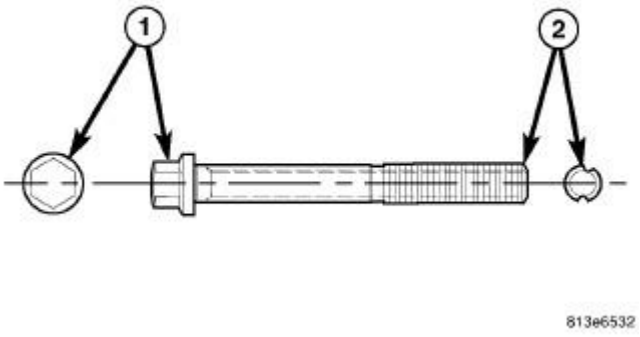

Fig. 145: WHEEL ALIGNMENT ADJUSTMENT BOLT
Courtesy of CHRYSLER LLC

CAUTION: Wheel alignment adjustment bolts have offset grooves cut into the

length of the bolt (2). If removing or installing lower control arm or tension strut mounting bolts that have these grooves, DO NOT ROTATE THE BOLT. To remove the bolt, hold the bolt head stationary and rotate the nut, then slide the bolt straight out of the bushing. This is necessary to avoid damaging the bat wings in the bushing inner metal or cradle.

4. Hold the head of the control arm or tension strut mounting bolt stationary and remove the nut. Slide the bolt straight out of the bushing and discard.

CAUTION: When installing an adjustment bolt, be sure to install it in the correct direction. Lower control arm bolts must be installed from the rear-forward to avoid contact with the stabilizer bar upon installation. Tension strut bolts must be installed from the front-rearward.

NOTE: The grooves on the adjustment bolts are off-center forcing the bolt to be installed in one of two ways depending on whether more positive or negative camber or caster is necessary. The Bolts must be rotated 180° to achieve either more positive or negative camber or caster. DO NOT force the adjustment bolt.

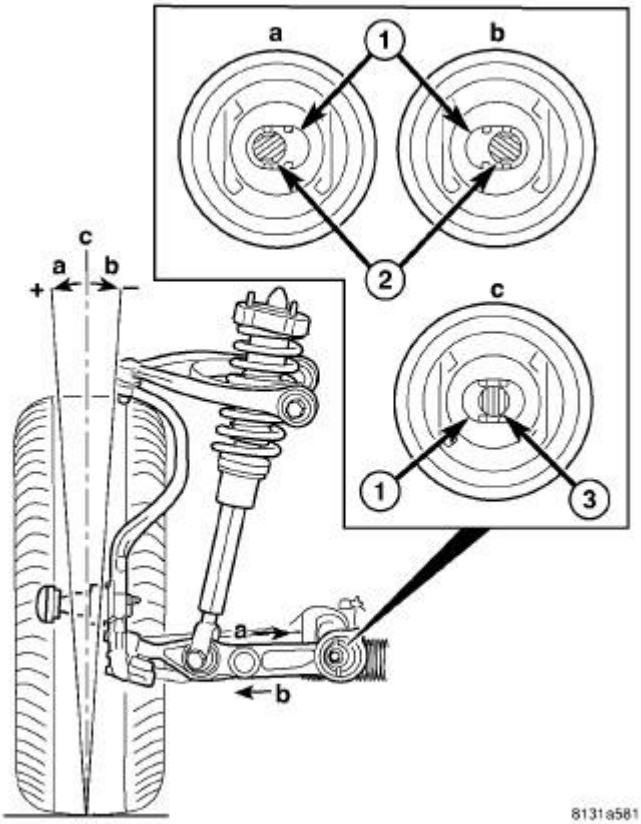

Fig. 146: CAMBER BOLT INSTALLATION
Courtesy of CHRYSLER LLC

NOTE: The original (non-grooved) mounting bolt (3) lies through the center of the hole (1), between the "bat wings" (c).

5. Camber Adjustment - The adjustment bolts are designed to work in conjunction with "bat wing" holes that are formed into the inner metal of the lower control arm bushing (1) allowing for lower control arm movement approximately 0.3° in either direction.

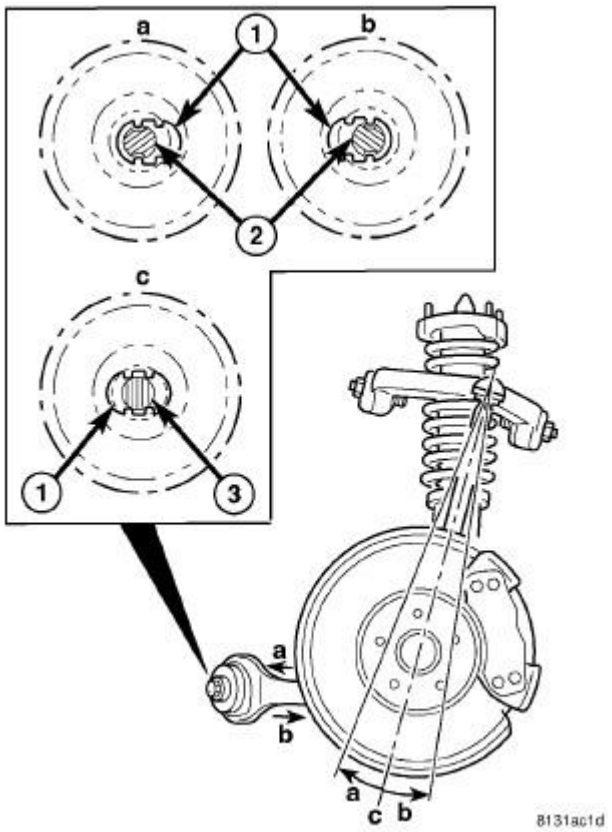

Fig. 147: CASTER BOLT INSTALLATION
Courtesy of CHRYSLER LLC

NOTE: The original (non-grooved) mounting bolt (3) lies through the center of the hole (1), between the "bat wings" (c).

- To achieve more positive camber, refer to (a) in the illustration. Move the control arm or tension strut in the desired direction, then insert the adjustment bolt (2) with a washer installed through the round hole in the engine cradle and bat wing hole (1) in the bushing inner metal.
- To achieve more negative camber, refer to (b) in the illustration. Move the control arm or

tension strut in the desired direction, then insert the adjustment bolt (2) with a washer installed through the round hole in the engine cradle and bat wing hole (1) in the bushing inner metal.

6. Caster Adjustment - The adjustment bolts are designed to work in conjunction with "bat wings" that are formed into the engine cradle (1) allowing for tension strut movement approximately 0.3° in either direction.
   - To achieve more positive caster, refer to (a) in the illustration. Move the tension strut in the desired direction, then insert the adjustment bolt (2) with a washer installed through the bat wing hole in the engine cradle (1) and the round hole in the bushing inner metal.
   - To achieve more negative caster, refer to (b) in the illustration. Move the tension strut in the desired direction, then insert the adjustment bolt (2) with a washer installed through the bat wing hole in the engine cradle (1) and the round hole in the bushing inner metal.
7. Start a NEW nut and a washer (on RWD vehicles) on the end of the mounting bolt by hand, then while holding the head of the bolt stationary, install the nut. **Do not tighten the nut at this time.**
8. Lower the vehicle to curb position. Jounce the rear, then the front of the vehicle an equal amount of times.
9. Using a crowfoot wrench, tighten the adjustment bolt **nut** to 176 N.m (130 ft. lbs.) torque while holding the bolt stationary.
10. Lower control arm adjustment bolt only - Reinstall the stabilizer bar and heat shields.
11. Measure camber and caster. If camber and caster are not within specifications, inspect the suspension components for any signs of damage or bending. If camber and caster (and cross-camber and cross-caster) are within specifications, proceed with TOE to check and adjust toe.
12. Install the belly pan. Refer to **Body/Exterior/BELLY PAN - Installation** .

TOE

CAUTION: If the steering wheel is excessively off-center while driving, outside of Chassis specifications, inadvertent ESP activations may occur on a vehicle so equipped.

1. Center the steering wheel and lock in place using a steering wheel clamp.

NOTE: When performing the toe adjustment procedure, set rear toe to specifications before setting front toe.

2. If rear toe is not within specifications, perform the **REAR TOE** procedure.
3. If front toe is not within specifications, perform the **FRONT TOE** procedure.
4. Remove the steering wheel clamp.
5. Remove the alignment equipment.
6. Road test the vehicle to verify the steering wheel is straight and the vehicle does not wander or pull.

REAR TOE

NOTE: **Perform the following procedure to each side of the vehicle as necessary.**

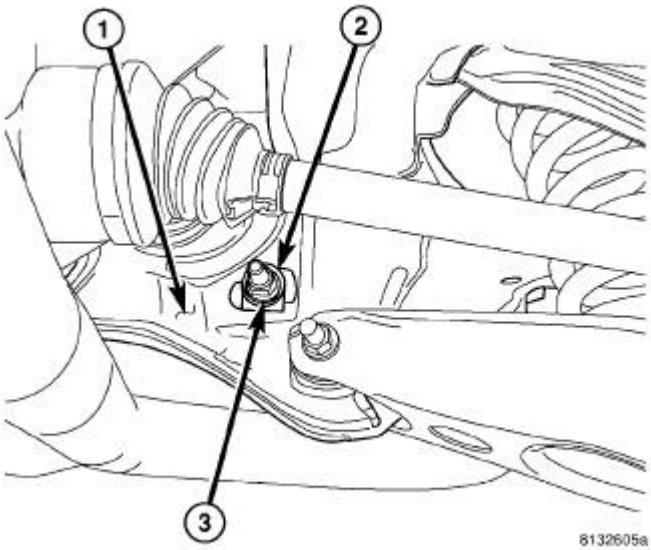

Fig. 148: REAR TOE ADJUSTMENT BOLT NUT
Courtesy of CHRYSLER LLC

1. Loosen the cam bolt nut securing the toe link to the rear crossmember (front of rear crossmember) just enough to rotate the cam bolt (1).

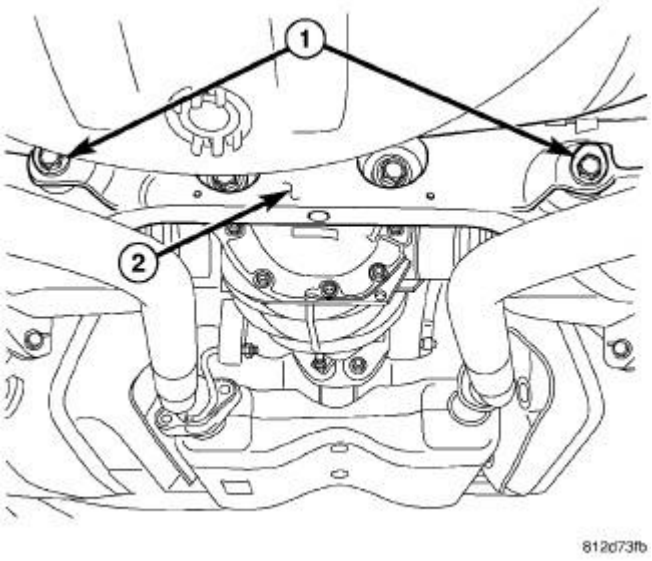

Fig. 149: REAR TOE ADJUSTMENT BOLTS
Courtesy of CHRYSLER LLC

NOTE: **When adjusting rear toe, the eccentric lobes on the toe adjustment cam bolts and washers are not to be facing downward. The lobes should only**

be facing upward or up to 90° to one side or the other from the 12 O'clock position.

2. Rotate the cam bolt head on the opposite side (rear) of the crossmember in either direction until the preferred specification is obtained. See **Front Suspension/Wheel Alignment - Specifications**
3. While holding the cam bolt (1) from turning, tighten the cam bolt nut to specifications.
4. Adjust rear toe on opposite side of vehicle using above procedure as necessary.
5. Once rear toe is set, proceed to FRONT TOE to set the vehicle's front toe.

FRONT TOE

NOTE: Perform the following procedure to each side of the vehicle as necessary.

CAUTION: Do not twist the inner tie rod-to-steering gear boots during front wheel Toe adjustment. Remove the boot clamps (2) at the inner tie rods and make sure the boots move freely on the inner tie rods.

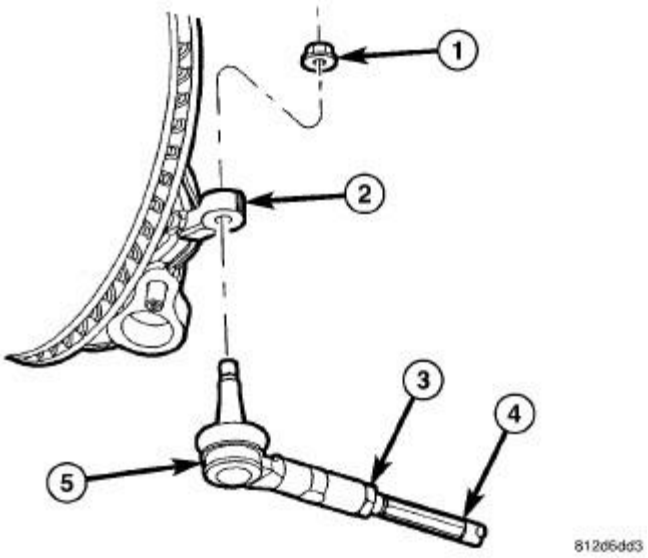

Fig. 150: FRONT OUTER TIE ROD
Courtesy of CHRYSLER LLC

1. Loosen the jam nut (3) at the inner-to-outer tie rod (4-5) connection.

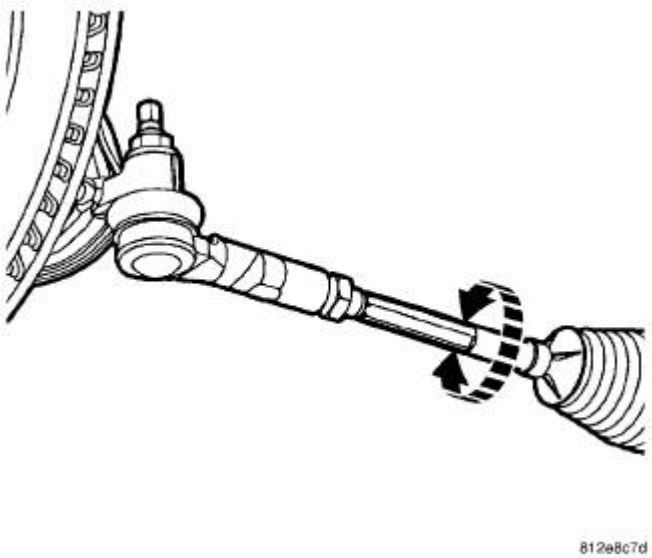

Fig. 151: FRONT TOE ADJUSTMENT
Courtesy of CHRYSLER LLC

2. Grasp the inner tie rod at the hex and rotate as necessary to adjust front toe to the preferred toe specification. See **Front Suspension/Wheel Alignment - Specifications**

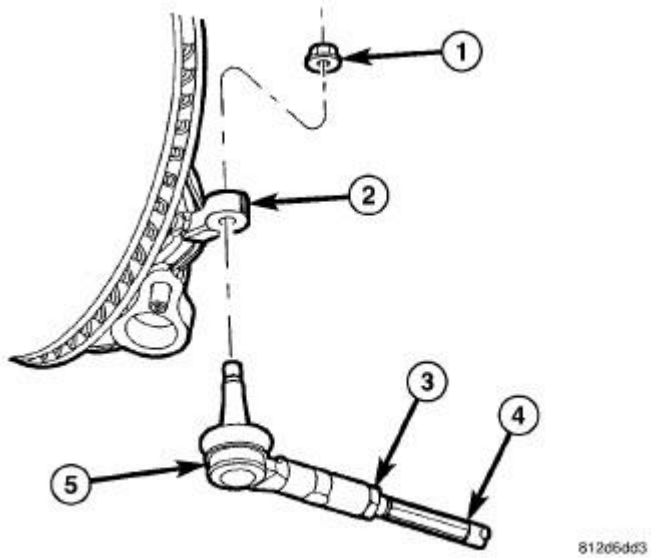

Fig. 152: FRONT OUTER TIE ROD
Courtesy of CHRYSLER LLC

3. Tighten the tie rod jam nut (3) to 75 N.m (55 ft. lbs.) torque using care not to lose adjustment.
4. Make sure the inner tie rod-to-steering gear boot is not twisted, then reinstall the boot clamp at the inner tie rod.
5. Adjust front toe on opposite side of vehicle using the above procedure as necessary.

CURB HEIGHT MEASUREMENT

The wheel alignment is to be checked and all alignment adjustments made with the vehicle at its required curb height specification.

Vehicle height is to be checked with the vehicle on a flat, level surface, preferably a vehicle alignment rack. The tires are to be inflated to the recommended pressure. All tires are to be the same size as standard equipment. Vehicle height is checked with the fuel tank full, and no passenger or luggage compartment load.

Vehicle height is not adjustable. If the measurement is not within specifications, inspect the vehicle for bent or weak suspension components. Compare the parts tag on the suspect coil spring(s) to the parts book and the vehicle sales code, checking for a match. Once removed from the vehicle, compare the coil spring height to a correct new or known good coil spring. The heights should vary if the suspect spring is weak.

NOTE: When measuring, the maximum left-to-right differential is not to exceed 12.5 mm (0.5 in.).

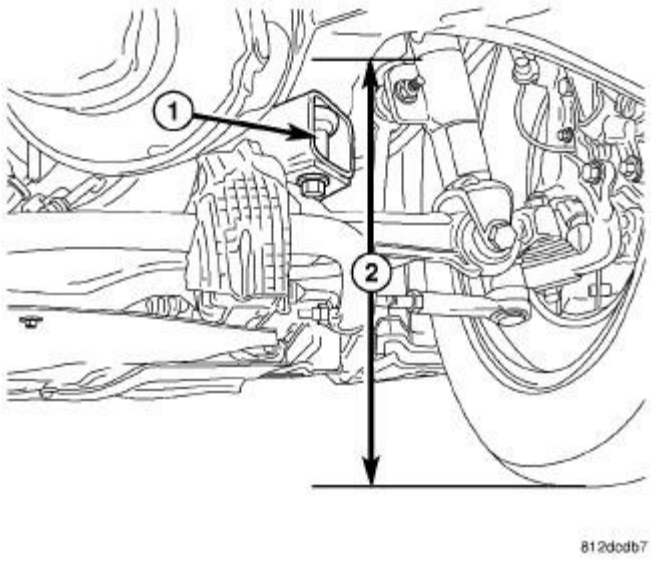

Fig. 153: FRONT CURB HEIGHT MEASUREMENT
Courtesy of CHRYSLER LLC

1. Front - On each side of the vehicle, measure the distance (2) from the frame rail just behind the engine cradle rear mount (1) to the floor or alignment rack/lift runway surface. It may be necessary to measure to the bottom of a straight edge, placed from lift runway to runway, to get an accurate measurement.

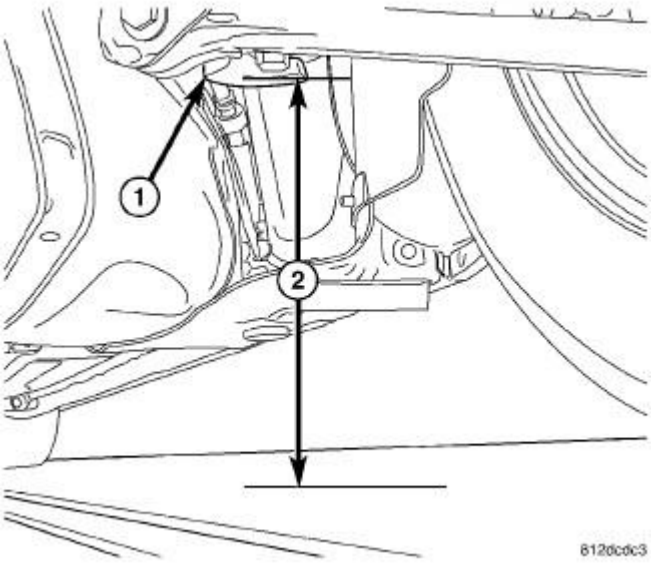

Fig. 154: REAR CURB HEIGHT MEASUREMENT
Courtesy of CHRYSLER LLC

2. Rear - On each side of the vehicle, measure the distance (2) from the travel limiter (1) attached to the front rear crossmember mount bushing to the floor or alignment rack/lift runway surface. It may be necessary to measure to the bottom of a straight edge, placed from lift runway to runway, to get an accurate measurement.
3. Compare the measurements to the specifications listed in the following CURB HEIGHT SPECIFICATIONS chart.

CURB HEIGHT SPECIFICATIONS

MODEL	FRONT	REAR
SRT8	321 mm ± 12 mm 12.64 in. ± 0.47 in	290 mm ± 12 mm 11.42 in. ± 0.47 in.

SPECIFICATIONS

WHEEL ALIGNMENT

NOTE: All specifications are given in degrees.

NOTE: All wheel alignments are to be set at curb height. See Front Suspension/Wheel Alignment - Standard Procedure.

BASE (NON-SRT8) - FRONT

FRONT WHEEL ALIGNMENT	PREFERRED SETTING	ACCEPTABLE RANGE
CAMBER - LEFT	+0.15°	-0.50° to +0.80°
CAMBER - RIGHT	-0.25°	-0.90° to +0.40°

CROSS-CAMBER (Maximum side-to-side difference)	+0.40°	-0.10° to +1.15°
CASTER - LEFT	+8.00°	+7.00° to +9.00°
CASTER - RIGHT	+9.00°	+8.00° to +10.00°
CROSS-CASTER (Maximum side-to-side difference)	-1.00°	-1.60° to -0.40°
TOE - TOTAL**	+0.20°	+0.10° to +0.30°
Notes: ** TOTAL TOE is the sum of both left and right wheel toe settings. TOTAL TOE must be equally split between each wheel on the same axle to ensure the steering wheel is centered after setting toe. Positive toe is toe-in and negative toe is toe-out		

BASE (NON-SRT8) - REAR

REAR WHEEL ALIGNMENT	PREFERRED SETTING	ACCEPTABLE RANGE
CAMBER*	-0.55°	-1.20° to -0.10°
CROSS-CAMBER (Maximum side-to-side difference)	0.00°	-0.80° to +0.80°
TOE - INDIVIDUAL LEFT	+0.17°	+0.02° to +0.32°
TOE - INDIVIDUAL RIGHT	+0.03°	-0.12° to +0.18°
THRUST ANGLE	+0.07°	-0.08° to +0.22°
Notes: * For reference only. These are nonadjustable angles. ** TOTAL TOE is the sum of both left and right wheel toe settings. TOTAL TOE must be equally split between each wheel on the same axle to ensure the steering wheel is centered after setting toe. Positive toe is toe-in and negative toe is toe-out		

SRT8 - FRONT

FRONT WHEEL ALIGNMENT	PREFERRED SETTING	ACCEPTABLE RANGE
CAMBER - LEFT	-0.05°	-0.50° to +0.50°
CAMBER - RIGHT	-0.35°	-0.90° to +0.10°
CROSS-CAMBER (Maximum side-to-side difference)	+0.30°	-0.25° to +0.85°
CASTER - LEFT	+8.30°	+7.30° to +9.30°
CASTER - RIGHT	+9.30°	+8.30° to +10.30°
CROSS-CASTER (Maximum side-to-side difference)	-1.00°	-1.60° to -0.40°
TOE - TOTAL**	+0.20°	+0.10° to +0.30°
Notes: ** TOTAL TOE is the sum of both left and right wheel toe settings. TOTAL TOE must be equally split between each wheel on the same axle to ensure the steering wheel is centered after setting toe. Positive toe is toe-in and negative toe is toe-out		

SRT8 - REAR

REAR WHEEL ALIGNMENT	PREFERRED SETTING	ACCEPTABLE RANGE
CAMBER*	-0.75°	-1.25° to -0.15°
CROSS-CAMBER (Maximum side-to-side difference)	0.00°	-0.80° to +0.80°
TOE - INDIVIDUAL LEFT	+0.17°	+0.02° to +0.32°
TOE - INDIVIDUAL RIGHT	+0.03°	-0.12° to +0.18°
THRUST ANGLE	+0.07°	-0.08° to +0.22°
Notes: * For reference only. These are nonadjustable angles.		

FUEL DELIVERY, GAS

STANDARD PROCEDURE

FUEL SYSTEM PRESSURE RELEASE

WARNING: The fuel system is under constant high pressure even with engine off. Until the fuel pressure has been properly released from the system, do not attempt to open the fuel system. Do not smoke or use open flames/sparks when servicing the fuel system. Wear protective clothing and eye protection. Make sure the area in which the vehicle is being serviced is in a well ventilated area and free of flames/sparks. Failure to comply may result in serious or fatal injury.

1. Remove the fuel pump relay from the Power Distribution Center (PDC). Refer to **Vehicle Quick Reference/Fuse Locations and Types - Specifications** . A relay location label can also be found on the underside of the PDC cover.
2. Start and run the engine until it stalls.
3. Attempt restarting engine until it will no longer run.
4. Turn ignition key to the OFF position.
5. Return fuel pump relay to the Power Distribution Center (PDC).

NOTE: After servicing the fuel system, one or more Diagnostic Trouble Codes (DTC's) may have been stored in the Powertrain Control Module (PCM) memory due to disconnecting the fuel pump module circuit. A diagnostic scan tool must be used to erase a DTC.

DRAINING FUEL TANK

Conventional Procedure

WARNING: The fuel system is under constant high pressure even with engine off. Until the fuel pressure has been properly released from the system, do not attempt to open the fuel system. Do not smoke or use open flames/sparks when servicing the fuel system. Wear protective clothing and eye protection. Make sure the area in which the vehicle is being serviced is in a well ventilated area and free of flames/sparks. Failure to comply may result in serious or fatal injury.

WARNING: No sparks, open flames or smoking. Risk of poisoning from inhaling and swallowing fuel. Pour fuel only into appropriately marked OSHA approved

containers. Wear protective clothing. Risk of injury to eyes and skin from contact with fuel.

NOTE: Due to a one-way check valve installed into the fuel fill fitting at the tank, the tank cannot be drained at the fuel filler tube.

CAUTION: If the electric fuel pump is not operating, and the fuel level is above 5/8 of a tank, the fuel tank must be removed prior to draining. If the fuel level is above 5/8 of a tank and the fuel pump module lock-ring is removed, fuel will spill into the interior of the vehicle.

CAUTION: If the fuel level sending unit is not operating, and the fuel level cannot be determined the fuel tank must be removed prior to draining. If the fuel level is above 5/8 of a tank and the fuel pump module lock-ring is removed, fuel will spill into the interior of the vehicle.

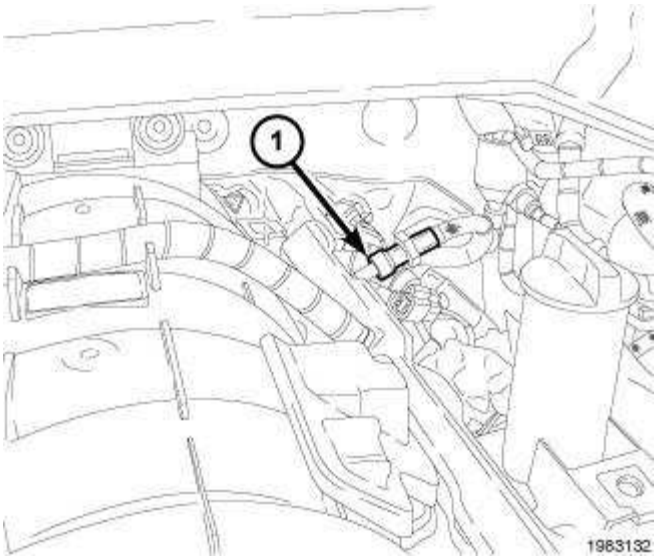

Fig. 1: Fuel Supply Line Quick Connect Fitting At Fuel Rail
Courtesy of CHRYSLER LLC

1. Perform the fuel system pressure release procedure. See **Fuel System/Fuel Delivery - Standard Procedure**.

NOTE: Tool number 6539 is used on 5/16" fuel lines while tool number 6631 is used on 3/8" fuel lines.

2. Attach one end of the special test hose 6631 or 6539 at the fuel line quick-connect fitting (1).
3. Attach the opposite end of the special test hose 6631 or 6539 to the Fuel Chief Gas Caddy 320-FC-P30-A or an OSHA approved gas caddy.
4. Using a diagnostic scan tool, activate the fuel pump until the fuel tank has been evacuated.

Alternative Procedure

WARNING: The fuel system is under constant high pressure even with engine off. Until the fuel pressure has been properly released from the system, do not attempt to open the fuel system. Do not smoke or use open flames/sparks when servicing the fuel system. Wear protective clothing and eye protection. Make sure the area in which the vehicle is being serviced is in a well ventilated area and free of flames/sparks. Failure to comply may result in serious or fatal injury.

WARNING: No sparks, open flames or smoking. Risk of poisoning from inhaling and swallowing fuel. Pour fuel only into appropriately marked OSHA approved containers. Wear protective clothing. Risk of injury to eyes and skin from contact with fuel.

CAUTION: The fuel level of the vehicle must be below 5/8 of a tank before using the "Alternative Procedure". If the fuel level is above 5/8 of a tank and the fuel pump module lock-ring is removed, fuel will spill into the interior of the vehicle.

CAUTION: If the electric fuel pump is not operating, and the fuel level is above 5/8 of a tank, the fuel tank must be removed prior to draining. If the fuel level is above 5/8 of a tank and the fuel pump module lock-ring is removed, fuel will spill into the interior of the vehicle.

CAUTION: If the fuel level sending unit is not operating, and the fuel level cannot be determined the fuel tank must be removed prior to draining. If the fuel level is above 5/8 of a tank and the fuel pump module lock-ring is removed, fuel will spill into the interior of the vehicle.

1. Verify the fuel level is below 5/8 of a tank.
2. Perform the fuel system pressure release procedure. See **Fuel System/Fuel Delivery - Standard Procedure**.
3. Disconnect the negative battery cable.

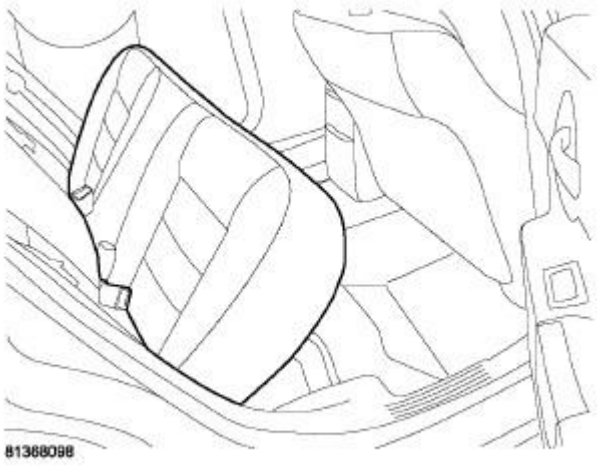

Fig. 2: Rear Seat Up
Courtesy of CHRYSLER LLC

4. Push the rear lower seat cushion up and back and remove the seat cushion.

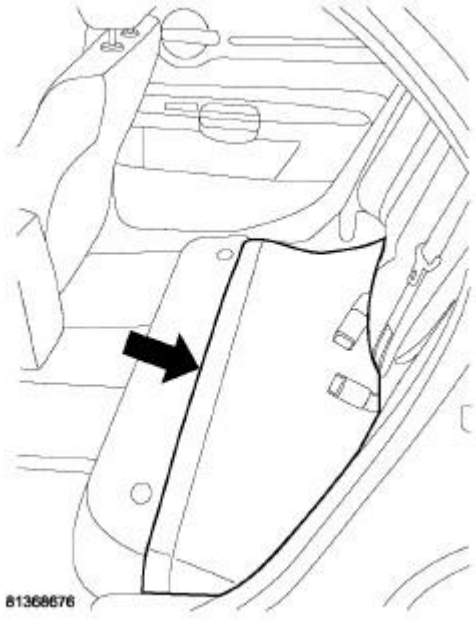

Fig. 3: Foam Pad Under Seat
Courtesy of CHRYSLER LLC

5. Fold back the foam pad covering the fuel pump module plastic access covers.

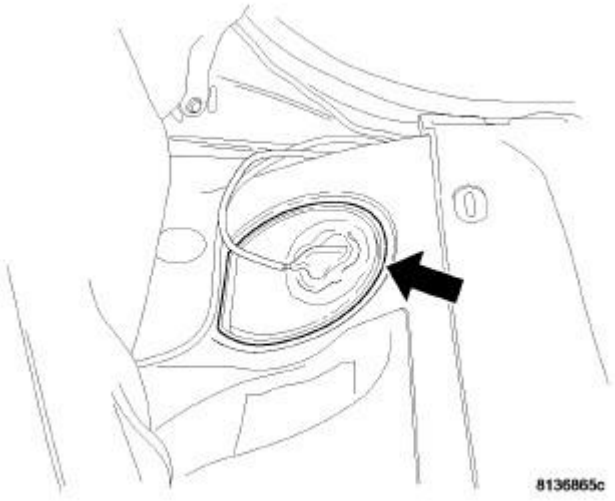

Fig. 4: Module Rubber Access Plug
Courtesy of CHRYSLER LLC

6. Remove the left side fuel pump module plastic access cover.

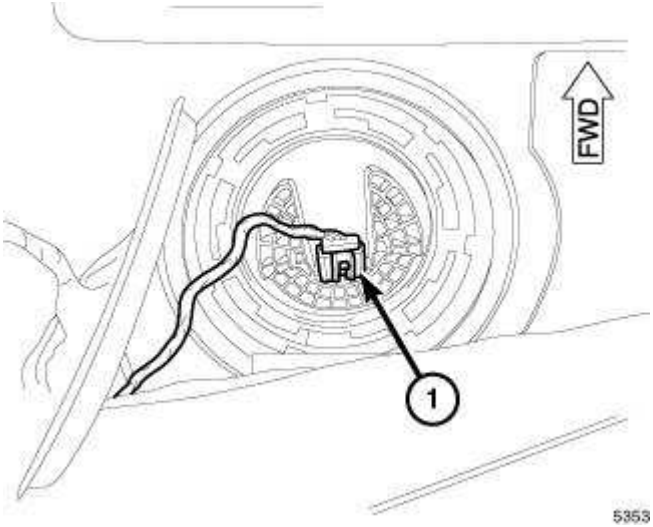

Fig. 5: Left Side Module Electrical Connector
Courtesy of CHRYSLER LLC

7. Disconnect the electrical connector from the fuel pump module.

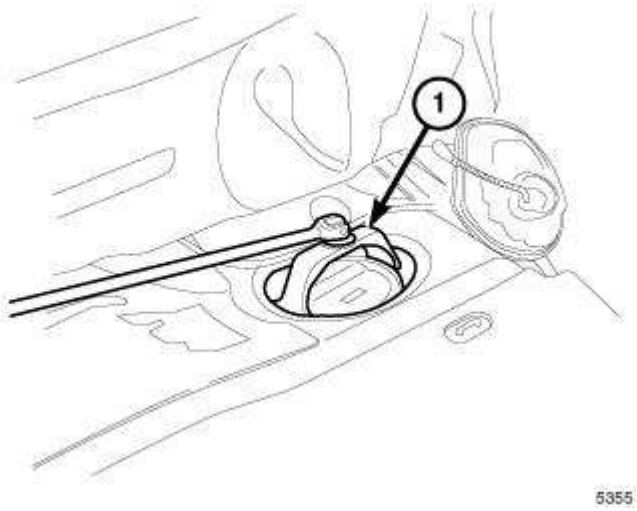

Fig. 6: Tool 9430 Left Side Module
Courtesy of CHRYSLER LLC

CAUTION: An indexing arrow is located on top of the fuel pump module to clock it's position into the fuel tank, note it's location for reassembly.

NOTE: Prior to removing the fuel pump module, use compressed air to remove any accumulated dirt and debris from around fuel tank opening.

8. Mark the fuel pump module orientation.
9. Position the lock ring remover/installer 9340 (1) into the notches on the outside edge of the lock ring.
10. Install a 1/2 inch drive breaker bar into the lock ring remover/installer 9340 (1).
11. Rotate the breaker bar counterclockwise and remove the lock ring.

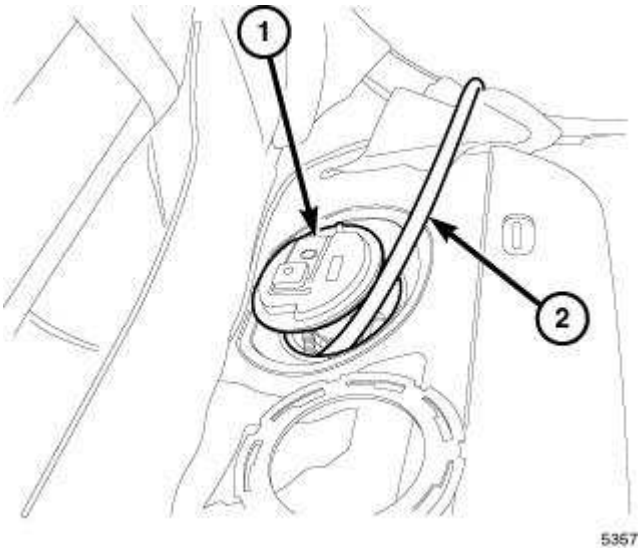

Fig. 7: Fuel Pump Module And 3/8 Inch Hose
Courtesy of CHRYSLER LLC

CAUTION: Do not spill fuel into the interior of the vehicle.

CAUTION: The lower reservoir of the fuel pump module must be drained before removal or fuel can spill into the interior of the vehicle.

12. Lift the fuel pump module up enough to push a 3/8 inch hose into the fuel tank.
13. Attach the opposite end of the hose to the Fuel Chief Gas Caddy 320-FC-P30-A or an OSHA approved gas caddy.
14. Using the Fuel Chief Gas Caddy 320-FC-P30-A or an OSHA approved gas caddy, evacuate the left side of the fuel tank.

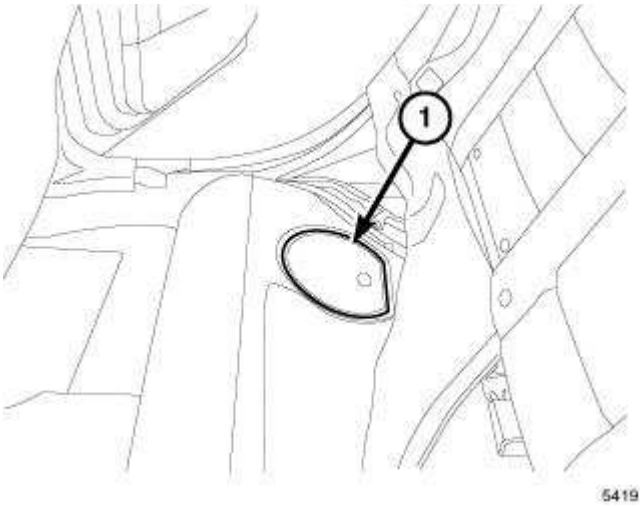

Fig. 8: Access Cover - Right Side Module
Courtesy of CHRYSLER LLC

15. Remove the right side auxiliary fuel pump module plastic access cover (1).

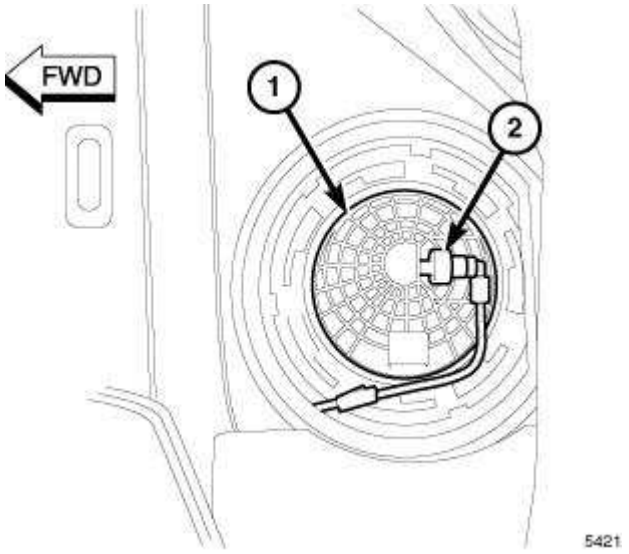

Fig. 9: Right Side Auxiliary Fuel Pump Module And Fuel Supply Line
Courtesy of CHRYSLER LLC

16. Disconnect the fuel supply line (2) and the fuel return line at the auxiliary fuel pump module (1).

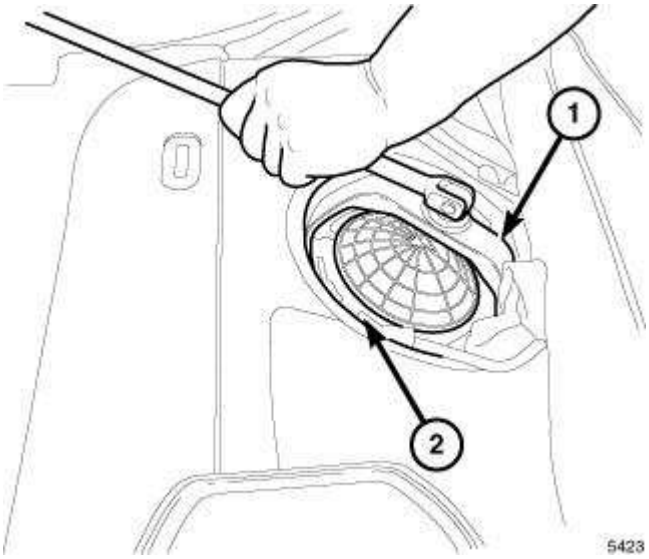

Fig. 10: Tool 9430 Right Side Module
Courtesy of CHRYSLER LLC

CAUTION: An indexing arrow is located on top of the fuel pump module to clock it's position into the fuel tank, note it's location for reassembly.

NOTE: Prior to removing the auxiliary fuel pump module, use compressed air to remove any accumulated dirt and debris from around fuel tank opening.

17. Mark the auxiliary fuel pump module orientation.

18. Position the lock ring remover/installer 9340 (1) into the notches on the outside edge of the lock ring (2).
19. Install a 1/2 inch drive breaker bar into the lock ring remover/installer 9340 (1).
20. Rotate the breaker bar counterclockwise and remove the lock ring.

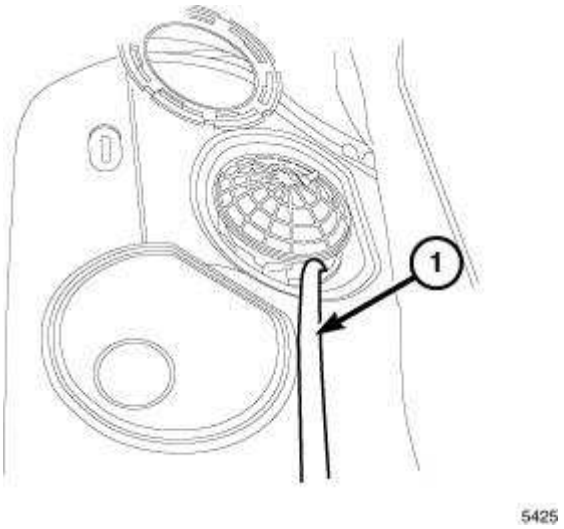

Fig. 11: 3/8 Inch Hose
Courtesy of CHRYSLER LLC

CAUTION: Do not spill fuel into the interior of the vehicle.

CAUTION: The lower reservoir of the fuel pump module must be drained before removal or fuel can spill into the interior of the vehicle.

21. Lift the auxiliary fuel pump module up enough to push a 3/8 inch hose (1) into the fuel tank.
22. Attach the opposite end of the hose to the Fuel Chief Gas Caddy 320-FC-P30-A or an OSHA approved gas caddy.
23. Using the Fuel Chief Gas Caddy 320-FC-P30-A or an OSHA approved gas caddy, evacuate the right side of the fuel tank.

SPECIFICATIONS

FUEL SYSTEM PRESSURE

DESCRIPTION	SPECIFICATION	
Fuel Pressure	400 kpa ±34 kpa	58 psi ± 5 psi

TORQUE

TORQUE SPECIFICATIONS

DESCRIPTION	N.m	Ft. Lbs.	In. Lbs.
Accelerator Pedal to Dash Nuts	12	-	106
Fuel Tank Strap Bolts	27	20	-
Hose Clamps	3.5	-	31
Fuel Rail Mounting Bolts - 3.5L	28	-	250
Fuel Rail Mounting Bolts - 5.7L	11	-	100
Fuel Rail Mounting Bolts - 6.1L	11	-	100

SPECIAL TOOLS

SPECIAL TOOLS

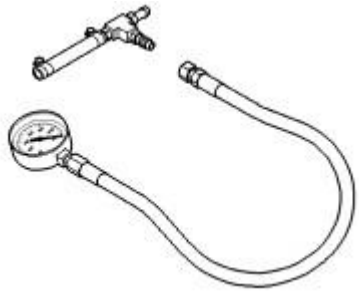

Fig. 12: Fuel Pressure Test Kit - 5069
Courtesy of CHRYSLER LLC

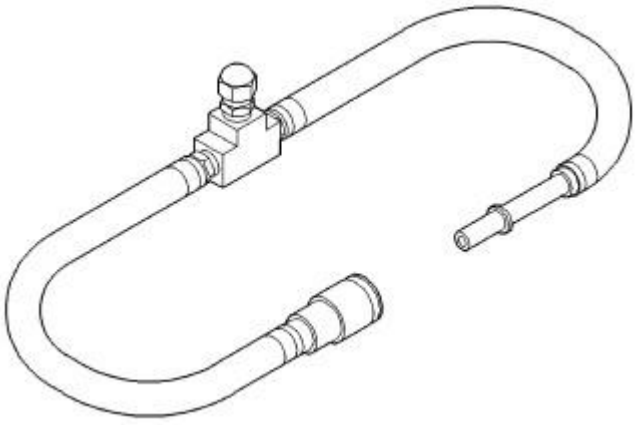

Fig. 13: Fuel Pressure Adapter - 6539
Courtesy of CHRYSLER LLC

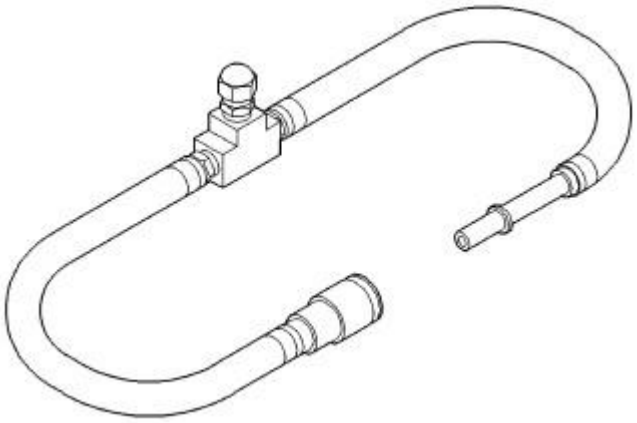

Fig. 14: Fuel Pressure Adapter - 6539
Courtesy of CHRYSLER LLC

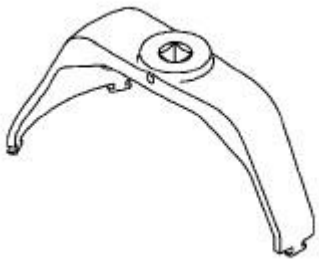

Fig. 15: SAE Fuel Pump Lock Ring Wrench - 9340
Courtesy of CHRYSLER LLC

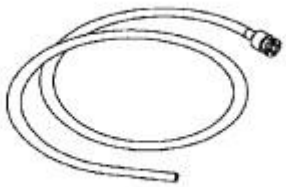

Fig. 16: Adapter, Fuel Pressure - 6668
Courtesy of CHRYSLER LLC

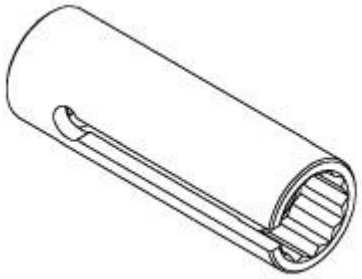

Fig. 17: Oxygen Sensor Socket - C-4907
Courtesy of CHRYSLER LLC

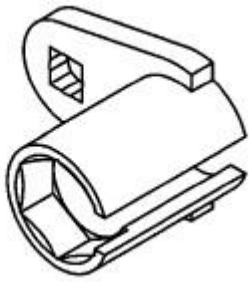

Fig. 18: O2 Sensor Wrench - 8439
Courtesy of CHRYSLER LLC

FITTING, QUICK CONNECT

Standard Procedure

QUICK CONNECT FITTINGS

Different types of quick-connect fittings are used to attach the various fuel system components, lines and tubes. These are a single-button type, a two-button type, a pinch type, a single-tab type, a two-tab type or a plastic retainer ring type. Some are equipped with safety latch clips. Some may require the use of a special tool for disconnection and removal.

DISCONNECTING

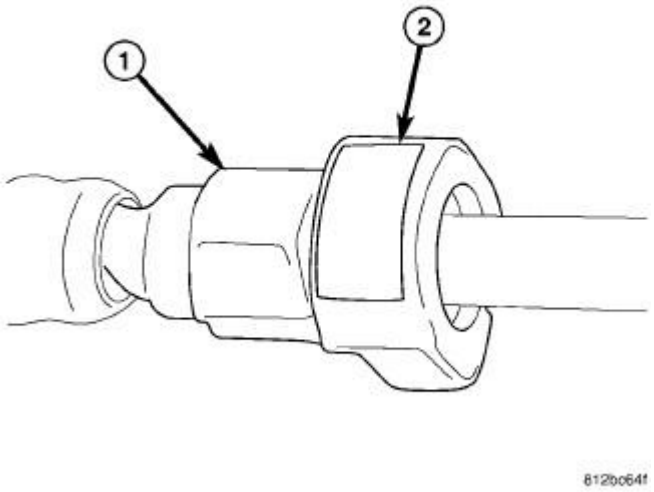

Fig. 19: Single Button Fitting
Courtesy of CHRYSLER LLC

WARNING: The fuel system is under a constant pressure (even with engine off). Before servicing any fuel system hose, fitting or line, fuel system pressure must be released. Refer to FUEL SYSTEM PRESSURE RELEASE.

CAUTION: Before separating a quick-connect fitting, pay attention to what type of fitting is being used . This will prevent unnecessary fitting or fitting latch damage.

CAUTION: The interior components (O-rings, clips) of quick-connect fittings are not serviced separately, but new plastic spacers and latches are available for some types. If service parts are not available, do not attempt to repair the damaged fitting or fuel line (tube). If repair is necessary, replace the complete fuel line (tube) assembly.

1. Perform fuel pressure release procedure. See **Fuel System/Fuel Delivery - Standard Procedure**.
2. Disconnect negative battery cable from battery.
3. Clean fitting of any foreign material before disassembly.
4. Single-Button Type Fitting is equipped with a single push-button (2) located on the quick-connect fitting.

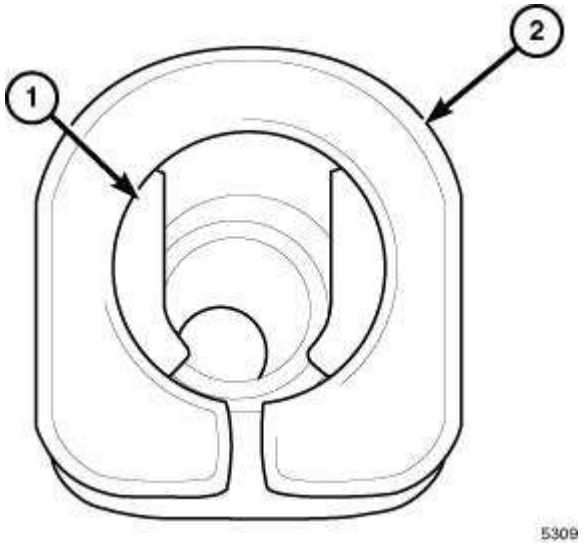

Fig. 20: Fitting Latches
Courtesy of CHRYSLER LLC

5. The push-button is attached to two internal latches (1). To disconnect, press on push-button with your thumb and unlatch fitting from fuel line. **DO NOT ATTEMPT TO PRY OR PULL UP ON PUSH-BUTTON. LATCHES WILL BE BROKEN.**

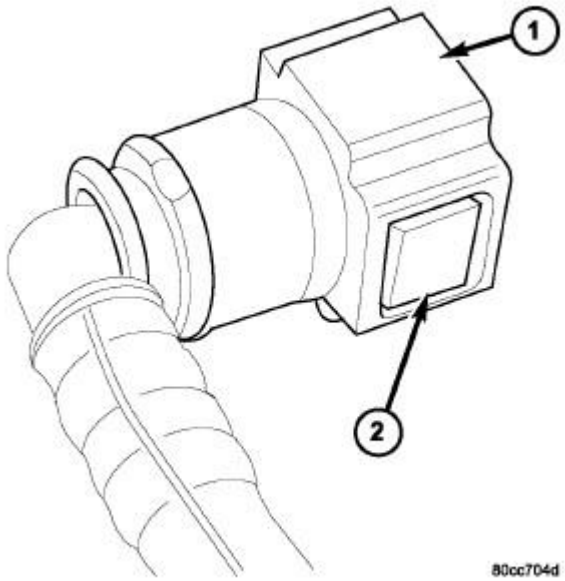

Fig. 21: 2-Button Type Fitting
Courtesy of CHRYSLER LLC

6. Perform fuel pressure release procedure. See **Fuel System/Fuel Delivery - Standard Procedure**.

7. Disconnect negative battery cable from battery.
8. Clean fitting of any foreign material before disassembly.
9. Two-Button Type Fitting fitting (1) is equipped with a push-button located on each side of quick-connect fitting (2). Press on both buttons simultaneously for removal.

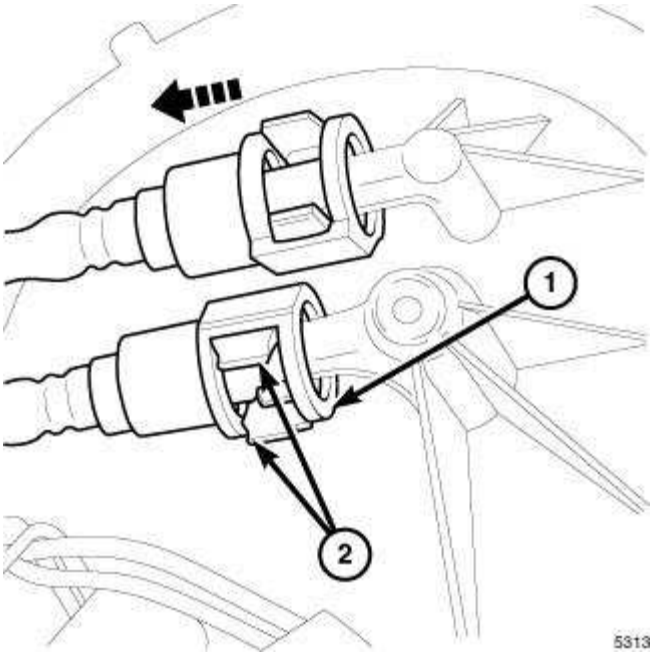

Fig. 22: Pinch Type Quick-Connect Fitting
Courtesy of CHRYSLER LLC

10. Pinch-Type Fitting (1) is equipped with two finger tabs (2). Pinch both tabs together while pulling hose away from fitting.

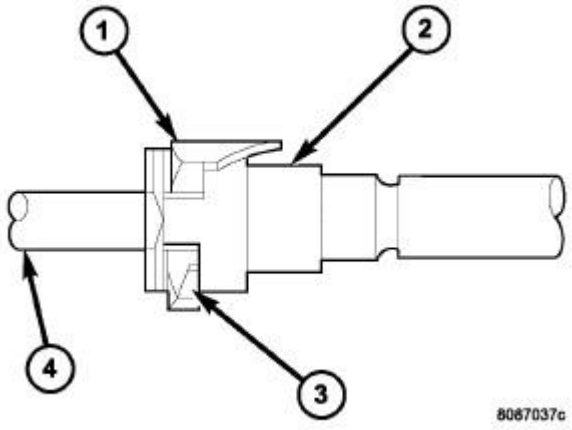

Fig. 23: Single-Tab Type Fitting
Courtesy of CHRYSLER LLC

11. Single-Tab Type Fitting (3) is equipped with a single pull tab (1). The tab is removable. After tab is removed, quick-connect fitting can be separated from fuel system component.

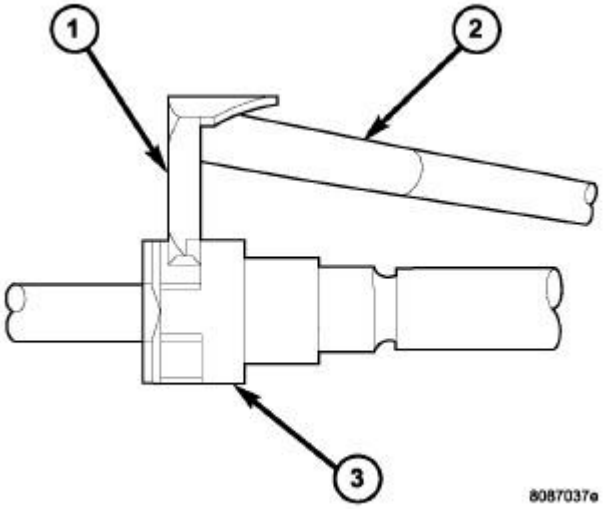

Fig. 24: Disconnecting Single-Tab Type Fitting
Courtesy of CHRYSLER LLC

12. Press release tab on side of fitting to release pull tab (1). **If release tab is not pressed prior to releasing pull tab, pull tab will be damaged.**
13. While pressing release tab on side of fitting, use screwdriver (2) to pry up pull tab.
14. Raise pull tab until it separates from quick-connect fitting.

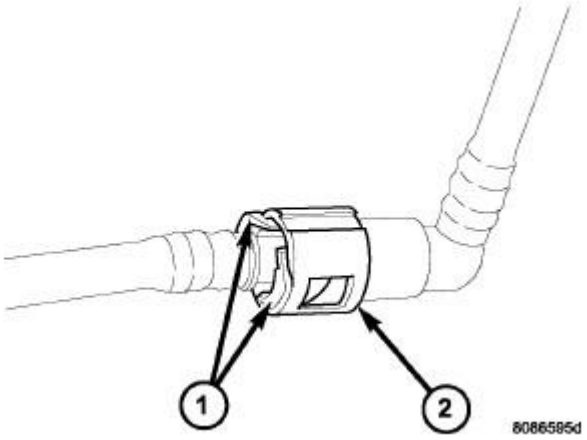

Fig. 25: Typical Two-Tab Type Quick-Connect Fitting
Courtesy of CHRYSLER LLC

15. Two-Tab Type Fitting (2) is equipped with tabs located on both sides of fitting (1). The tabs are supplied for disconnecting quick-connect fitting from component being serviced.

a. To disconnect quick-connect fitting, squeeze plastic retainer tabs (1) against sides of quick-connect fitting with your fingers. Tool use is not required for removal and may damage plastic retainer.
b. Pull fitting from fuel system component being serviced.
c. The plastic retainer will remain on component being serviced after fitting is disconnected. The O-rings and spacer will remain in quick-connect fitting connector body.

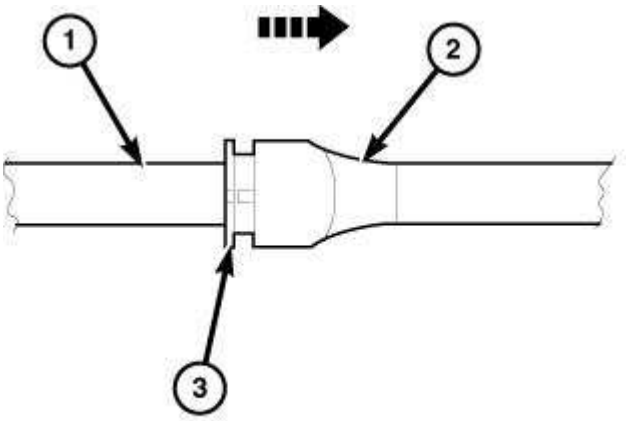

Fig. 26: Plastic Retainer Ring Type Fitting
Courtesy of CHRYSLER LLC

16. Plastic Retainer Ring Type Fitting can be identified by the use of a full-round plastic retainer ring (3).
    a. To release fuel system component from quick-connect fitting, firmly push fitting (2) towards component (1) being serviced while firmly pushing plastic retainer ring (3) into fitting (2). With plastic ring (3) depressed, pull fitting (2) from component (1). **The plastic retainer ring must be pressed squarely into fitting body. If this retainer is cocked during removal, it may be difficult to disconnect fitting. Use an open-end wrench on shoulder of plastic retainer ring to aid in disconnection.**
    b. After disconnection, plastic retainer ring (3) will remain with quick-connect fitting (2) connector body.
    c. Inspect fitting connector body, plastic retainer ring and fuel system component for damage. Replace as necessary.

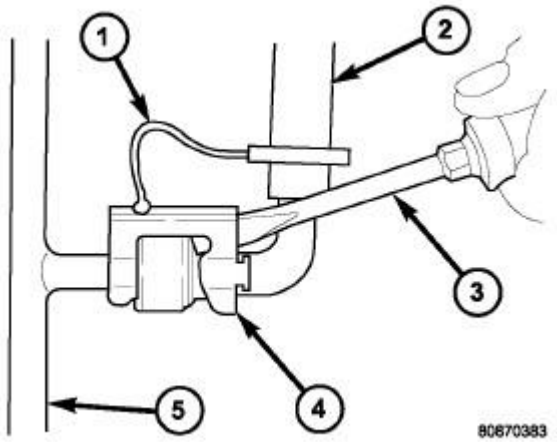

Fig. 27: Latch Clip - Type 1
Courtesy of CHRYSLER LLC

17. **Latch Clips - Type 1:** Depending on vehicle model and engine, 2 different types of safety latch clips are used. Type-1 (4) is tethered to fuel line and type-2 is not. A special tool will be necessary to disconnect fuel line after latch clip is removed. The latch clip may be used on certain fuel line/fuel rail connection, or to join fuel lines together.
18. Pry up on latch clip with a screwdriver (3).
19. Slide latch clip toward fuel rail while lifting with screwdriver.

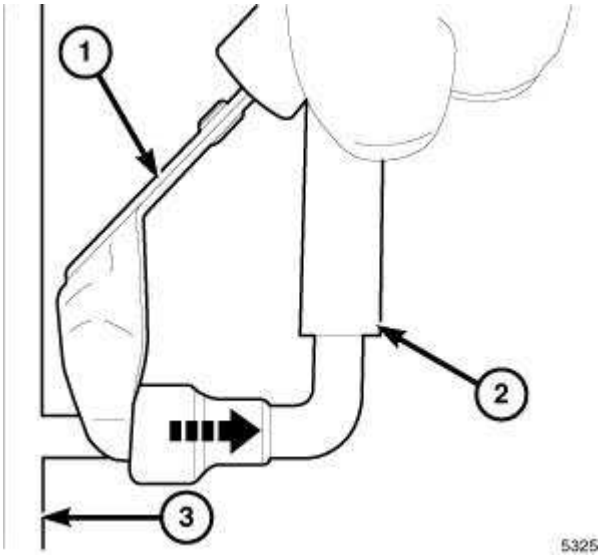

Fig. 28: Fuel Line Disconnection Using Special Tool
Courtesy of CHRYSLER LLC

20. Insert fuel line removal tool (1) into fuel line. Use tool to release locking fingers in end of line.
21. With tool (1) still inserted, pull fuel line (2) from fuel rail (3).
22. After disconnection, locking fingers will remain within quick-connect fitting at end of fuel line.
23. Disconnect quick-connect fitting from fuel system component being serviced.

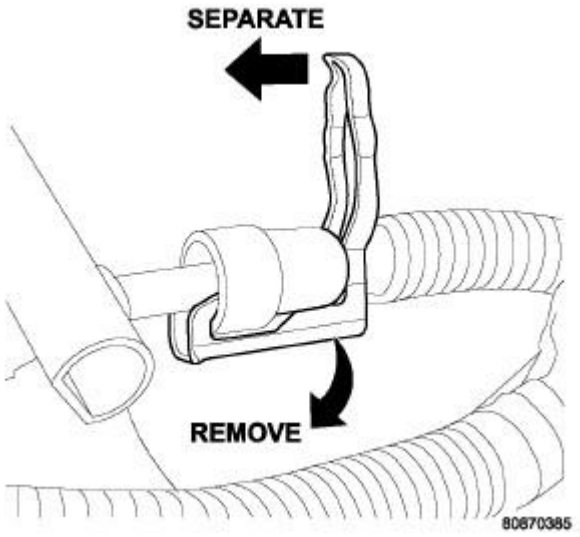

Fig. 29: Latch Clip - Type 2
Courtesy of CHRYSLER LLC

24. **Latch Clips - Type 2:** Depending on vehicle model and engine, 2 different types of safety latch clips are used. Type-1 is tethered to fuel line and type-2 is not. A tool will be necessary to disconnect fuel line after latch clip is removed. The latch clip may be used on certain fuel line/fuel rail connection, or to join fuel lines together.
25. Type 2: Separate and unlatch small arms on end of clip and swing away from fuel line.
26. Slide latch clip toward fuel rail while lifting with screwdriver.

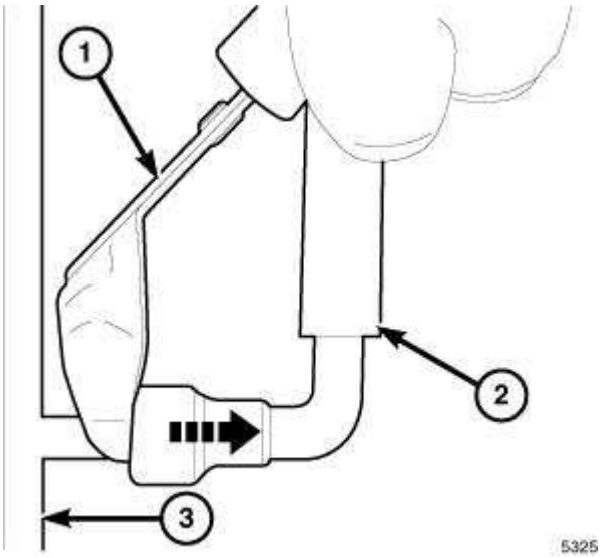

Fig. 30: Fuel Line Disconnection Using Special Tool
Courtesy of CHRYSLER LLC

27. Insert fuel line removal tool (1) into fuel line (2). Use tool to release locking fingers in end of line.

28. With tool still inserted, pull fuel line (2) from fuel rail (3).
29. After disconnection, locking fingers will remain within quick-connect fitting at end of fuel line.
30. Disconnect quick-connect fitting from fuel system component being serviced.

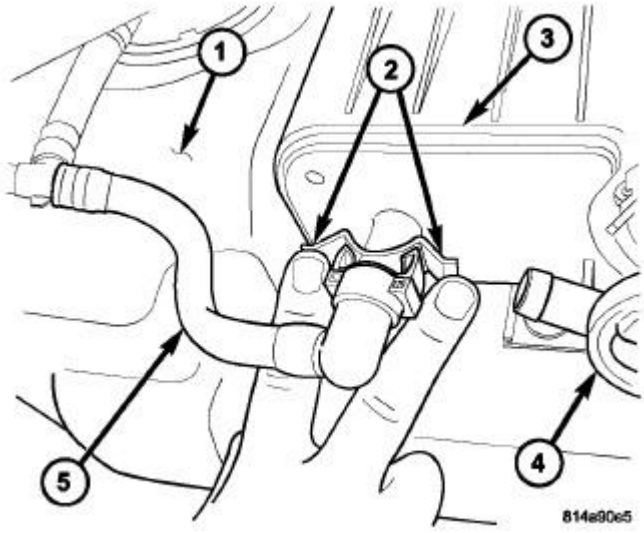

Fig. 31: EVAP Canister Vapor Hose
Courtesy of CHRYSLER LLC

31. **Wing Type:** A special tool will not be necessary to disconnect this type of fitting (2). This line is used on different fuel and emission components. The illustration shows the fitting used on an EVAP canister.
32. Use two fingers to push on fitting wings (2)
33. Pull and disconnect fitting while holding wings.
34. After disconnection, locking fingers will remain within quick-connect fitting.

CONNECTING

1. Inspect quick-connect fitting body and fuel system component for damage. Replace as necessary.
2. Prior to connecting quick-connect fitting to component being serviced, check condition of fitting and component. Clean parts with a lint-free cloth. Lubricate with clean engine oil.
3. Insert quick-connect fitting into fuel tube or fuel system component until built-on stop on fuel tube or component rests against back of fitting.
4. Continue pushing until a click is felt.
5. Single-tab type fitting: Push new tab down until it locks into place in quick-connect fitting.
6. Verify a locked condition by firmly pulling on fuel tube and fitting (15-30 lbs.).
7. Latch Clip Equipped: Install latch clip. **If latch clip will not fit, this indicates fuel line is not properly installed. Recheck fuel line connection.**

8. Connect negative cable to battery.
9. Start engine and check for leaks.

MODULE, FUEL PUMP

Description

DESCRIPTION

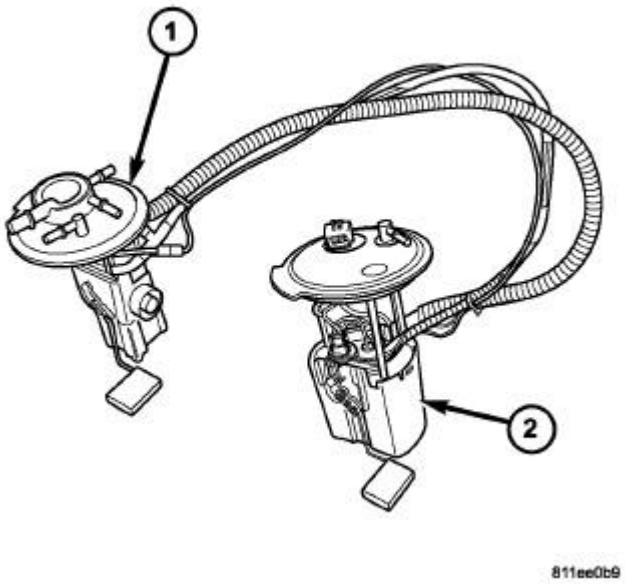

Fig. 32: Fuel Pump Modules
Courtesy of CHRYSLER LLC

This vehicle uses a saddle type tank that has a reservoir on both sides of the rear drive shaft. The fuel pump is in the module on the left side of the vehicle (2) and the fuel pressure regulator is in the module on the right side of vehicle (1). The fuel outlet is on the right side and supplies fuel to the engine. The fitting on the fuel pump module (left side) is a vapor line fitting that connects to the right side module.

Both modules have fuel level sending cards. There are 2 hoses that connect the modules together, one is the fuel supply line the other is a return or siphon hose. The lines are removed from the fuel pump module when servicing either unit. The ORVR (Onboard Refueling Vapor Recovery) control valve is in the right side module.

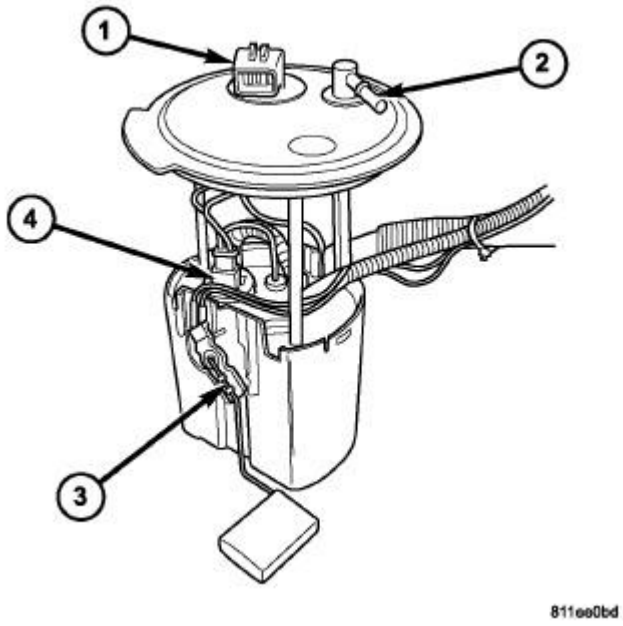

Fig. 33: Driver Side Module
Courtesy of CHRYSLER LLC

Left side fuel module with electrical connector (1), vapor fitting (2), and level sensor (3)

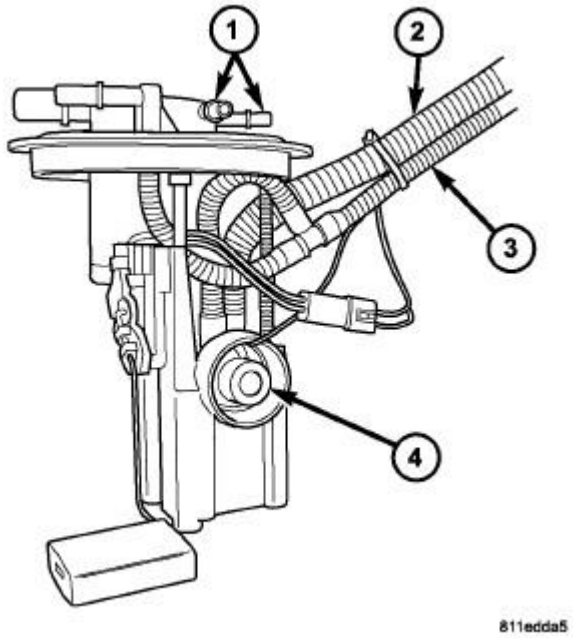

Fig. 34: Passenger Side Module
Courtesy of CHRYSLER LLC

1 - Vapor Fittings 2 - Siphon Hose 3 - Fuel Supply Line 4 - Pressure Regulator

Right side fuel module with vapor fittings (1), siphon hose (2), fuel supply line (3), and pressure regulator (4)

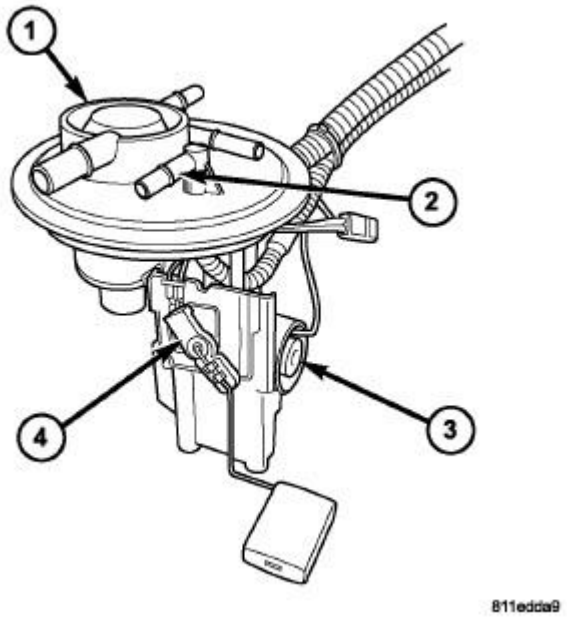

Fig. 35: Passenger Side Module - Top View
Courtesy of CHRYSLER LLC

1 - Control Valve 2 - Fuel Supply Fitting 3 - Fuel Pressure Regulator 4 - Level Sensor

Top view of the right side fuel module with control valve (1), fuel supply fitting (2), fuel pressure regulator (3), and level sensor (4)

Operation

OPERATION

The way the pump works is as follows, fuel enters the reservoir of the driver side module. The fuel pump pumps the fuel through the filter to the passenger side module through a supply line inside tank. The pressure regulator inside the passenger side module regulates the pressure at 58 psi. All unused fuel that is not sent to the engine is fed through a venturi at the bottom of the passenger side

module. This creates a low pressure siphoning effect and draws fuel from the passenger side of the tank and transfers it to the drivers side tank via siphon hose inside the tank. While the vehicle is running the fuel in the passenger side of tank is continuously transferred to the drivers side. Fuel will continue to fill the drivers side tank till it reaches the bridge section and then start to spill over to the passenger side.

As stated above we have two fuel level senders, the reading of these senders are averaged out to give us the fuel gauge reading. When we are diagnosing a sender concern the passenger side reading should never be higher than the Drivers side reading. It is possible, depending on fuel level and driving habit before diagnosing, to spill fuel over to the passenger side that might indeed show a lower resistance value than the driver side.

The fuel gauge gives an indication to the vehicle operator of the level of fuel in the fuel tank. This gauge is controlled by the instrument cluster circuit board based upon cluster programming and a hard wired input received by the cluster from the fuel level sending units on the modules in the fuel tank.

The instrument cluster continually monitors the fuel tank sending units to determine the level of fuel in the fuel tank. The cluster then sends the proper fuel level messages to other electronic modules in the vehicle over the Controller Area Network (CAN) data bus. For further diagnosis of the fuel gauge or the instrument cluster circuitry that controls the gauge. Refer to **Electrical/Instrument Cluster - Diagnosis and Testing** . The fuel gauge is serviced as a unit with the instrument cluster.

The tech needs to order the correct part when replacing, the senders, modules, and tank as all are able to be replaced individually.

Removal

REMOVAL

WARNING: The fuel system is under constant high pressure even with engine off. Until the fuel pressure has been properly released from the system, do not attempt to open the fuel system. Do not smoke or use open flames/sparks when servicing the fuel system. Wear protective clothing and eye protection. Make sure the area in which the vehicle is being serviced is in a well ventilated area and free of flames/sparks. Failure to comply may result in serious or fatal injury.

WARNING: No sparks, open flames or smoking. Risk of poisoning from inhaling and swallowing fuel. Pour fuel only into appropriately marked OSHA approved containers. Wear protective clothing. Risk of injury to eyes and skin from contact with fuel.

1. Perform the fuel pressure release procedure. See **Fuel System/Fuel Delivery - Standard Procedure**.

CAUTION: If the electric fuel pump module is not operating or the fuel level

sending unit is not operating and the fuel level cannot be determined, the fuel tank must be removed prior to draining. If the fuel level is above 5/8 of a tank and the fuel pump module lock-ring is removed, fuel will spill into the interior of the vehicle

2. If required, perform the draining fuel tank procedure. See **Fuel System/Fuel Delivery - Standard Procedure**.
3. Disconnect the negative battery cable.

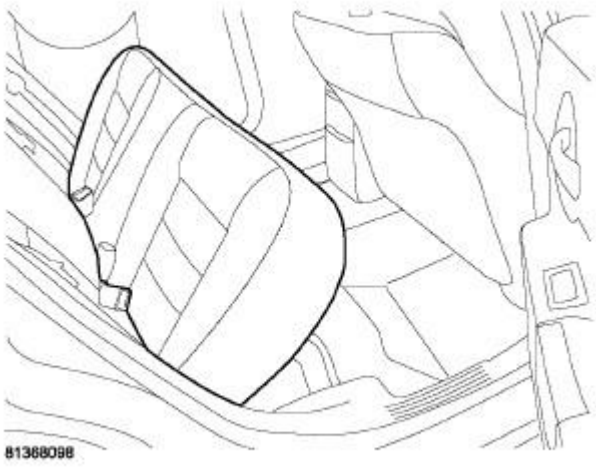

Fig. 36: Rear Seat Up
Courtesy of CHRYSLER LLC

4. Push the rear lower seat cushion up and back and remove the seat cushion.

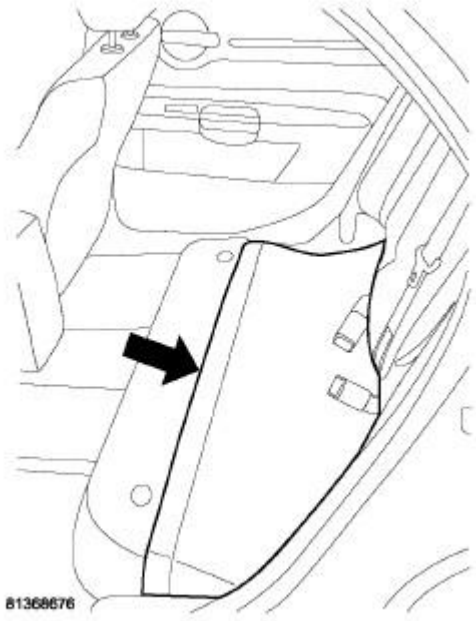

Fig. 37: Foam Pad Under Seat
Courtesy of CHRYSLER LLC

5. Fold back the foam pad covering the fuel pump module plastic access covers.

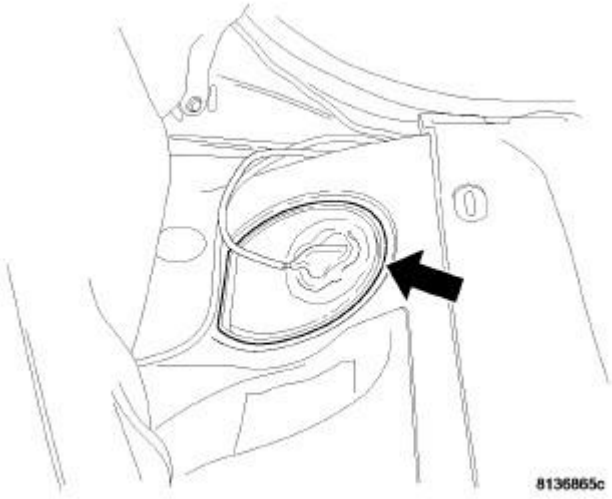

Fig. 38: Module Rubber Access Plug
Courtesy of CHRYSLER LLC

6. Remove the left side fuel pump module plastic access cover.

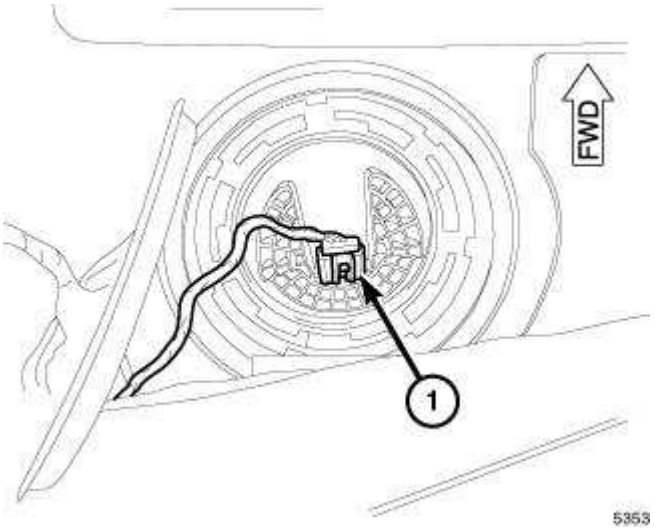

Fig. 39: Left Side Module Electrical Connector
Courtesy of CHRYSLER LLC

7. Disconnect the electrical connector from the fuel pump module.

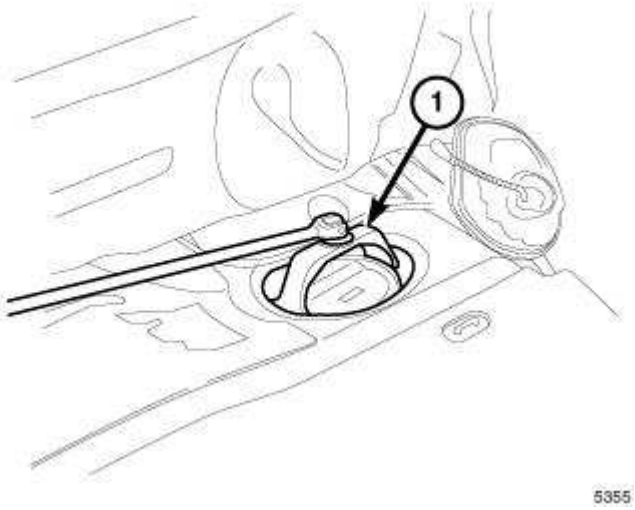

Fig. 40: Tool 9430 Left Side Module
Courtesy of CHRYSLER LLC

CAUTION: An indexing arrow is located on top of the fuel pump module to clock it's position into the fuel tank, note it's location for reassembly.

NOTE: Prior to removing the fuel pump module, use compressed air to remove any accumulated dirt and debris from around fuel tank opening.

8. Mark the fuel pump module orientation.
9. Position the lock-ring remover/installer 9340 (1) into the notches on the outside edge of the

lock-ring.

10. Install a 1/2 inch drive breaker bar into the lock-ring remover/installer 9340 (1).
11. Rotate the breaker bar counterclockwise and remove the lock-ring.

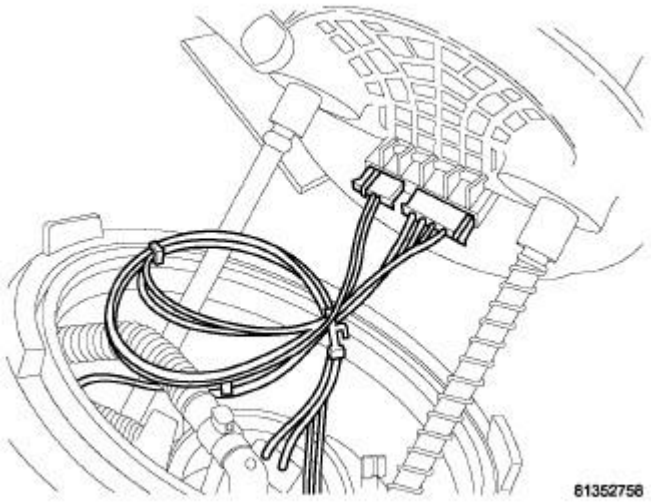

Fig. 41: Module Electrical Connectors
Courtesy of CHRYSLER LLC

12. Raise the fuel pump module up enough to gain access to the lower connections.
13. Disconnect the electrical connectors from under the top of the fuel pump module.
14. Remove the top section of the fuel pump module.

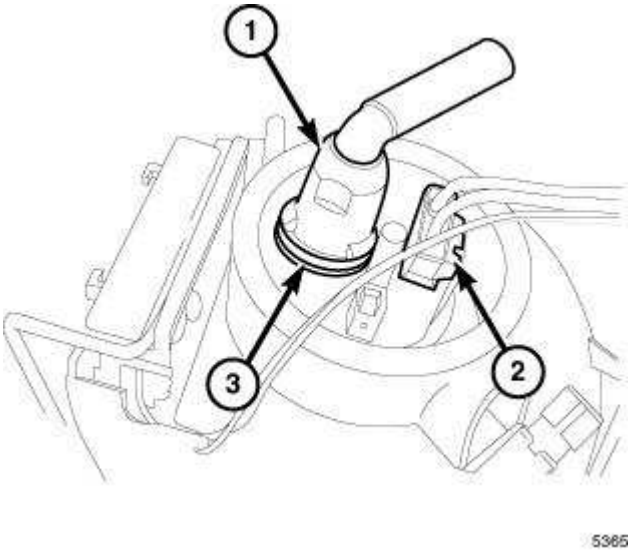

Fig. 42: Fuel Supply Line, Quick Release Tab, And Electrical Connector
Courtesy of CHRYSLER LLC

15. Press the quick connect release tab (3) and remove the fuel supply line (1).
16. Disconnect the lower fuel pump module electrical connector (2).

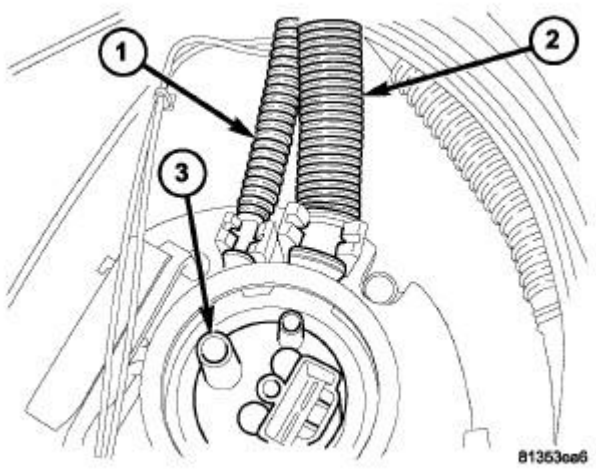

Fig. 43: Fuel Return Lines
Courtesy of CHRYSLER LLC

17. Disconnect the fuel pump module fuel return lines (1,2).

NOTE: Do not spill fuel into the interior of the vehicle.

18. Tip the fuel pump module on its side to drain the remaining fuel from the bottom reservoir and remove from vehicle.

NOTE: Whenever the fuel pump module is serviced, the rubber O-ring seal must be replaced.

19. Remove and discard the rubber O-ring seal.

Installation

INSTALLATION

NOTE: Whenever the fuel pump module is serviced, the rubber O-ring seal must be replaced.

1. Install a new rubber O-ring seal.
2. Lower the fuel pump module into the fuel tank allowing enough room to make the lower connections.

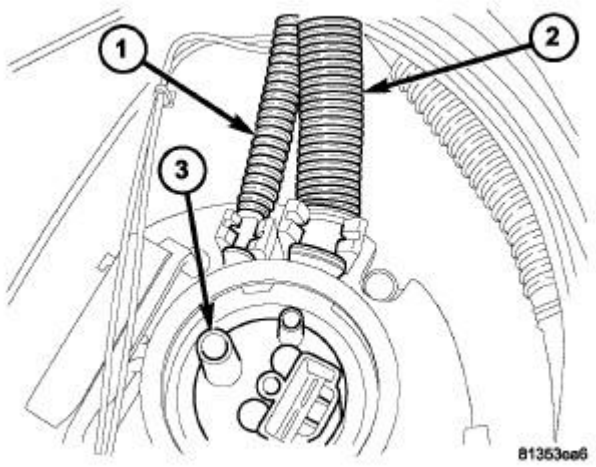

Fig. 44: Fuel Return Lines
Courtesy of CHRYSLER LLC

3. Connect the fuel pump module fuel return lines (1,2).

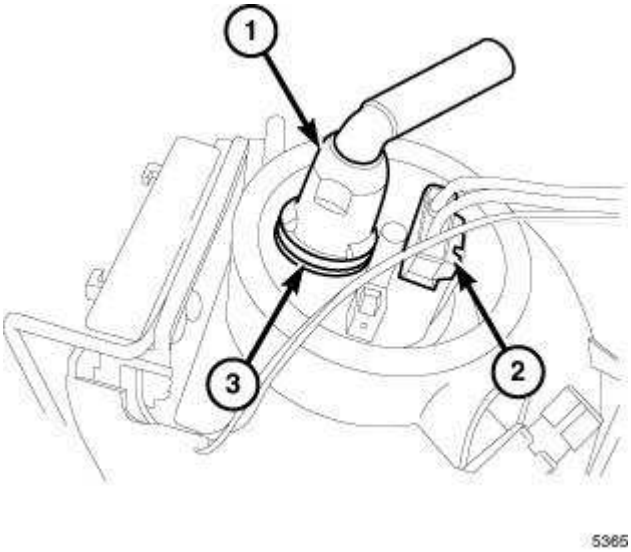

Fig. 45: Fuel Supply Line, Quick Release Tab, And Electrical Connector
Courtesy of CHRYSLER LLC

4. Connect the fuel supply line (1) to the fuel pump module.
5. Connect the lower fuel pump module electrical connector (2).

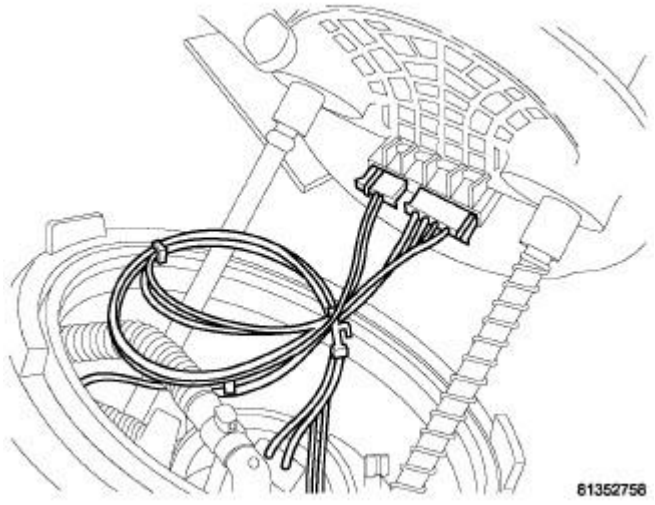

Fig. 46: Module Electrical Connectors
Courtesy of CHRYSLER LLC

6. Connect the electrical connectors at the top of the fuel pump module.
7. Join the upper and lower halves of the fuel pump module together.
8. Position the fuel pump module in the fuel tank.

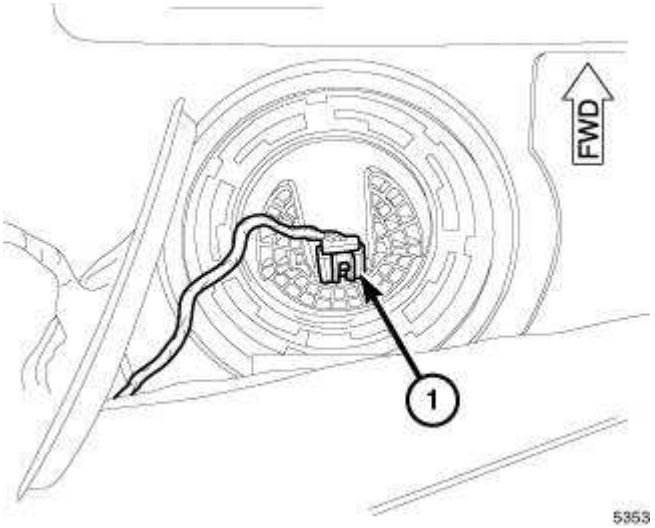

Fig. 47: Left Side Module Electrical Connector
Courtesy of CHRYSLER LLC

CAUTION: An indexing arrow is located on top of the fuel pump module to clock it's position into the fuel tank. The fuel pump module must be installed in the same position as removed.

9. Align the rubber O-ring seal and lower the fuel pump module into position.

10. Position the lock-ring over top of the fuel pump module.
11. Rotate the fuel pump module until the embossed alignment arrow points to the center alignment mark or the same position as noted during removal. This step must be performed to prevent the float from contacting the side of the fuel tank.

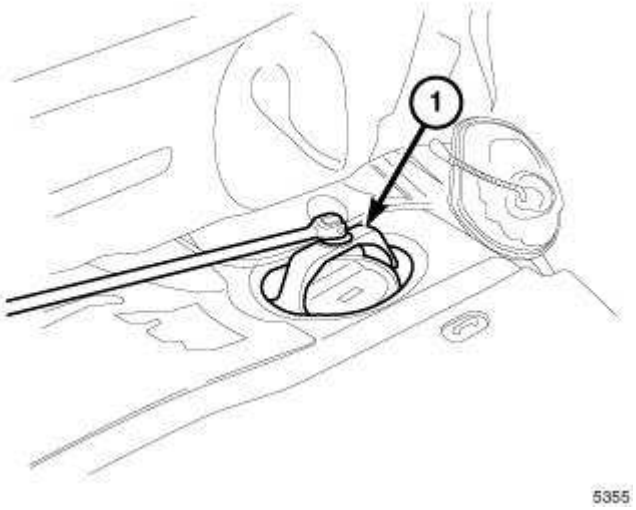

Fig. 48: Tool 9430 Left Side Module
Courtesy of CHRYSLER LLC

12. Install the lock-ring remover/installer 9340 (1) into the notches on the outside edge of the lock-ring.
13. Install a 1/2 inch drive breaker bar into the lock-ring remover/installer 9340 (1).
14. Rotate the breaker bar clockwise until all seven notches of the lock-ring have engaged.

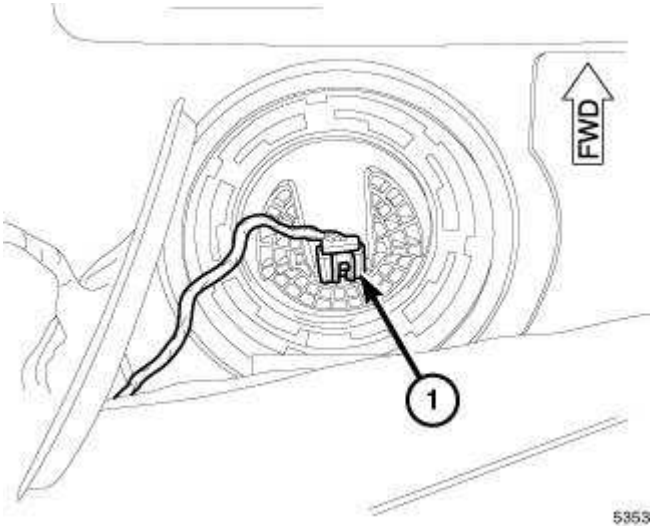

Fig. 49: Left Side Module Electrical Connector
Courtesy of CHRYSLER LLC

15. Connect the electrical connector (1) to the fuel pump module.

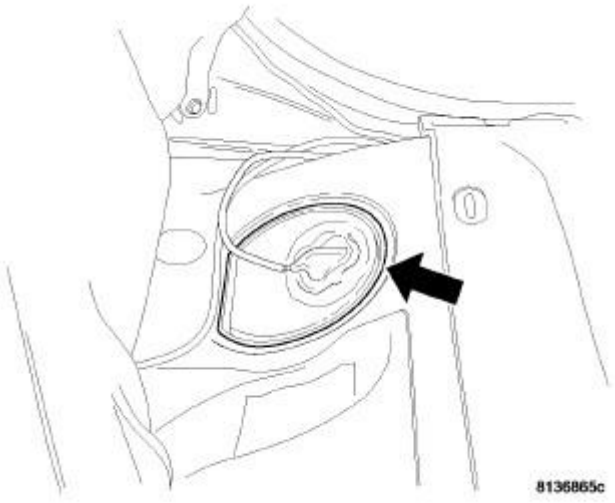

Fig. 50: Module Rubber Access Plug
Courtesy of CHRYSLER LLC

16. Install the fuel pump module rubber access plug.

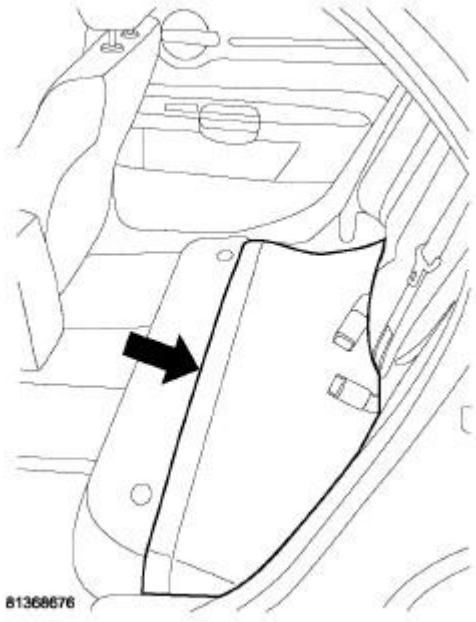

Fig. 51: Foam Pad Under Seat
Courtesy of CHRYSLER LLC

17. Lower the foam pad covering back into place.

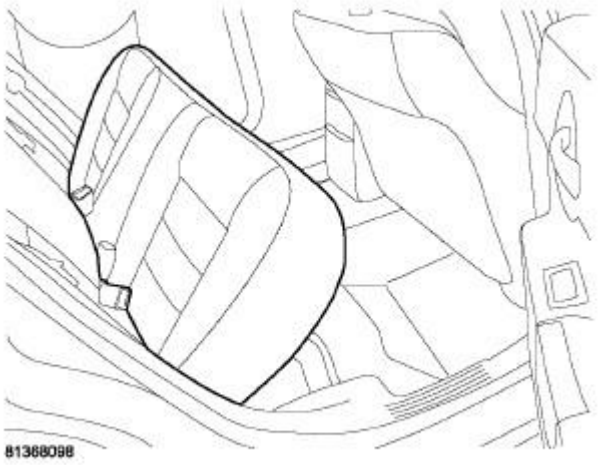

Fig. 52: Rear Seat Up
Courtesy of CHRYSLER LLC

18. Push the rear lower seat cushion back and down and install the seat cushion.
19. Connect the negative battery cable.
20. Fill the fuel tank and check for leaks.

RAIL, FUEL

Removal

3.5L

WARNING: Release fuel system pressure before servicing fuel rail. Service vehicles in well ventilated areas and avoid ignition sources. Never smoke while servicing the vehicle.

1. Release fuel system pressure. Refer to **FUEL SYSTEM PRESSURE RELEASE**. .
2. Disconnect the negative battery cable.
3. Remove intake manifold plenum. Refer to **Engine/Manifolds/MANIFOLD, Intake - Removal** .
4. Cover intake manifold to prevent foreign material from entering engine.
5. Disconnect fuel supply tube quick connect fitting at the rear of the fuel rail. See **Fuel System/Fuel Delivery/FITTING, Quick Connect - Standard Procedure**.

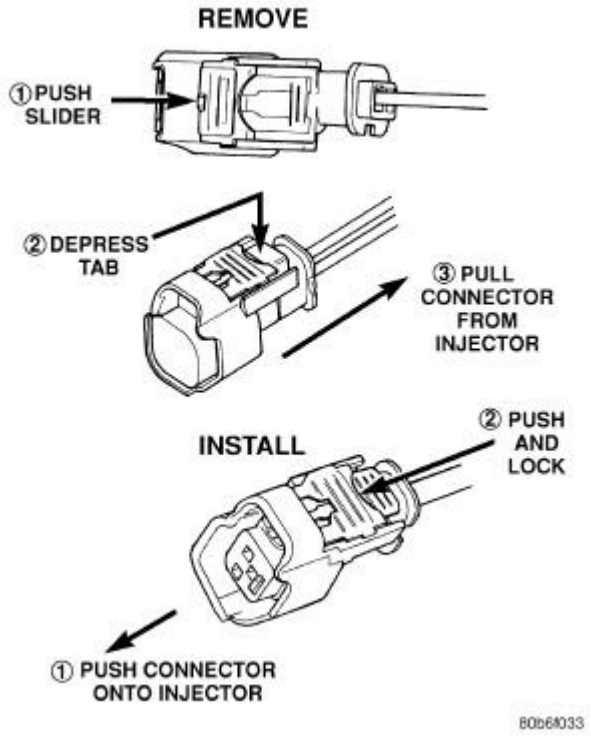

Fig. 53: Removing/Installing Fuel Injector Connector
Courtesy of CHRYSLER LLC

6. Disconnect electrical connectors at fuel injectors. Refer to illustration. Push red colored slider away from injector (1). While pushing slider, depress tab (2) and remove connector (3) from injector. The factory fuel injection wiring harness is numerically tagged (INJ 1, INJ 2, etc.) for injector position identification. If harness is not tagged, note wiring location before removal.

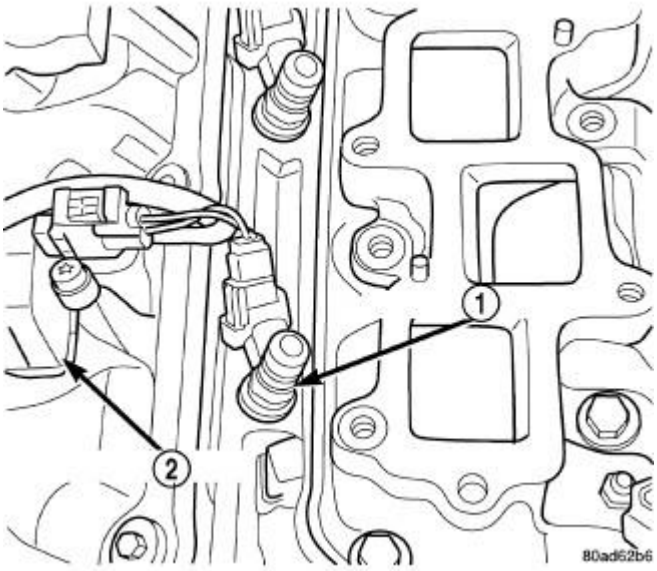

Fig. 54: Injector Electrical Connectors
Courtesy of CHRYSLER LLC

7. Remove mounting bolts on both sides of fuel rail.
8. Lift fuel rail straight up off of cylinder head.
9. Remove retaining clips from fuel injectors at fuel rail.
10. Remove fuel injector from fuel rail.

REMOVAL

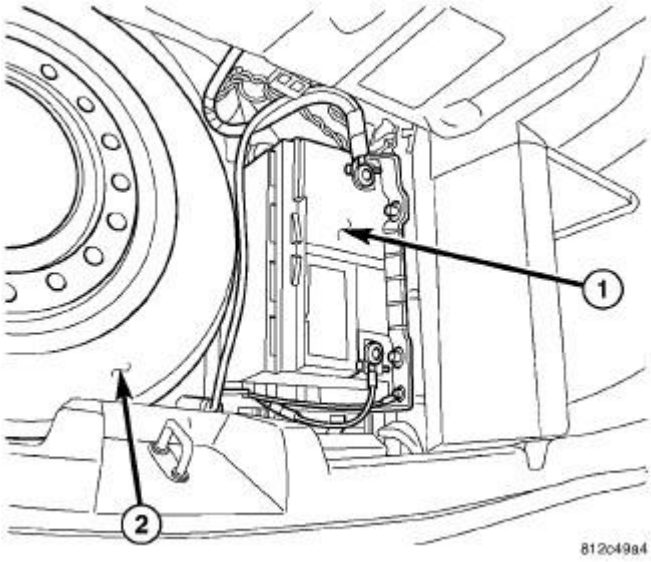

Fig. 55: Locating Battery
Courtesy of CHRYSLER LLC

WARNING: The fuel system is under constant pressure even with engine off. Before servicing fuel rail, fuel system pressure must be released. Failure to follow this warning may result in serious or fatal injury.

CAUTION: The left and right fuel rails are replaced as an assembly. Do not attempt to separate rail halves at connector tube. Due to design of tube, it does not use any clamps. Never attempt to install a clamping device of any kind to tube. When removing fuel rail assembly for any reason, be careful not to bend or kink tube.

1. Remove fuel tank filler tube cap.
2. Perform Fuel System Pressure Release Procedure. See **Fuel System/Fuel Delivery - Standard Procedure**.
3. Remove negative battery cable at battery (1).

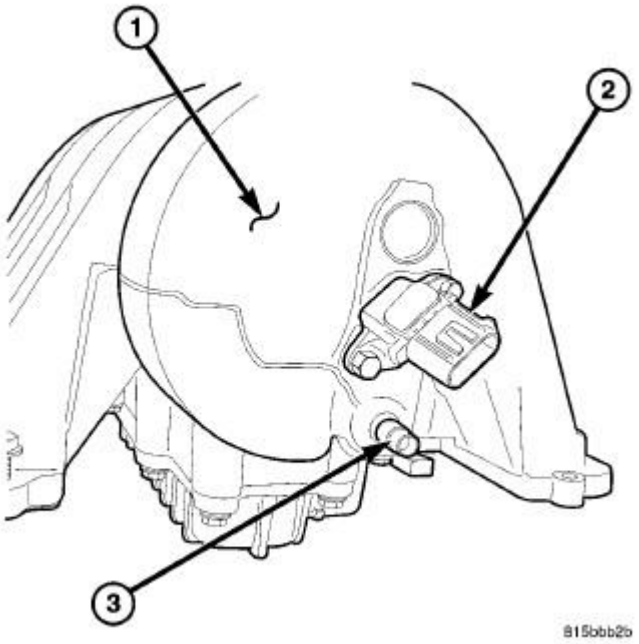

Fig. 56: MAP SENSOR LOCATION
Courtesy of CHRYSLER LLC

4. Remove electrical connector from MAP sensor (2) at rear of intake manifold (1).
5. Disconnect vacuum hose from fitting (3) at rear of intake manifold (1).

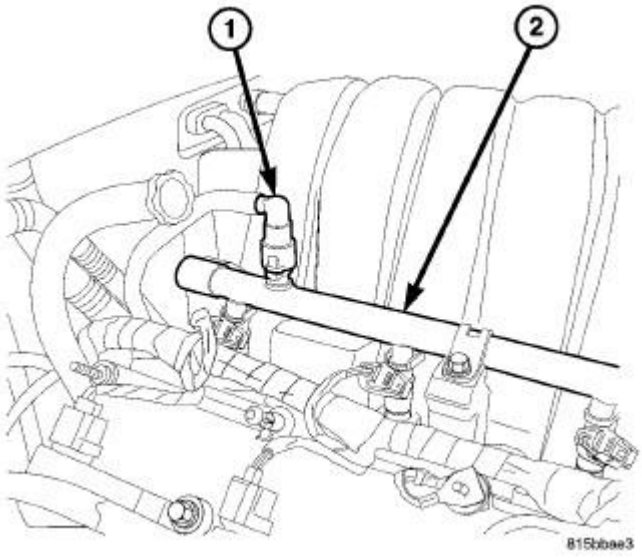

Fig. 57: Fuel Line At Fuel Rail
Courtesy of CHRYSLER LLC

6. Disconnect fuel line (1) at fuel rail (2) fitting. See **Fuel System/Fuel Delivery/FITTING, Quick Connect - Standard Procedure**.

7. Disconnect injector electrical connectors.

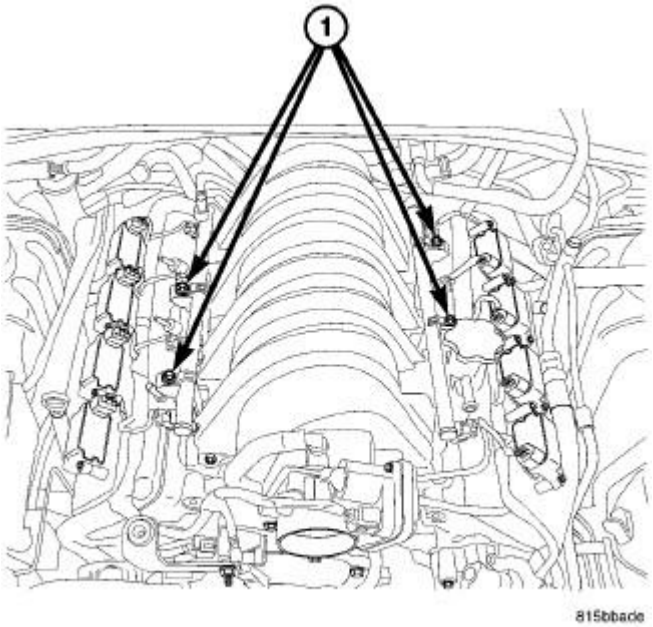

Fig. 58: FUEL RAIL MOUNTING
Courtesy of CHRYSLER LLC

8. Remove four fuel rail mounting bolts (1).
9. Gently rock and pull **left** side of fuel rail until fuel injectors just start to clear machined holes in intake manifold. Gently rock and pull **right** side of rail until injectors just start to clear intake manifold head holes. Repeat this procedure (left/right) until all injectors have cleared machined holes.
10. Remove fuel rail (with injectors attached) from engine.

Installation

3.5L

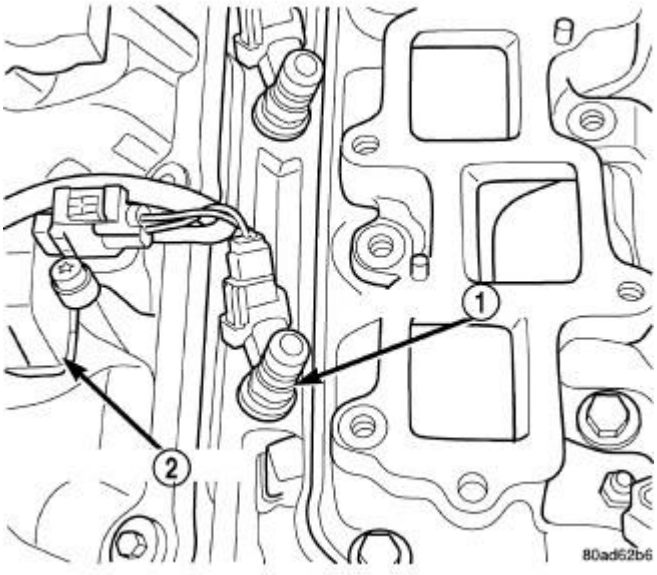

Fig. 59: Injector Electrical Connectors
Courtesy of CHRYSLER LLC

1. Lightly lubricate the fuel injector O-rings with a couple drops of clean engine oil.
2. Install retaining clips on fuel injectors.
3. Push injectors into fuel injector rail until clips are in the correct position.
4. Position fuel rail over cylinder heads, and push rail into place. Tighten fuel rail mounting bolts to 28 N.m (250 in. lbs.) torque.
5. Connect the fuel supply tube quick connect fitting to the fuel rail. See **Fuel System/Fuel Delivery/FITTING, Quick Connect - Standard Procedure**.
6. Connect the electrical connectors to the fuel injectors.
7. Install intake manifold plenum. Refer to **Engine/Manifolds/MANIFOLD, Intake - Installation** .
8. Connect negative cable to battery.
9. Use the scan tool to pressurize the fuel system. Check for leaks.

INSTALLATION

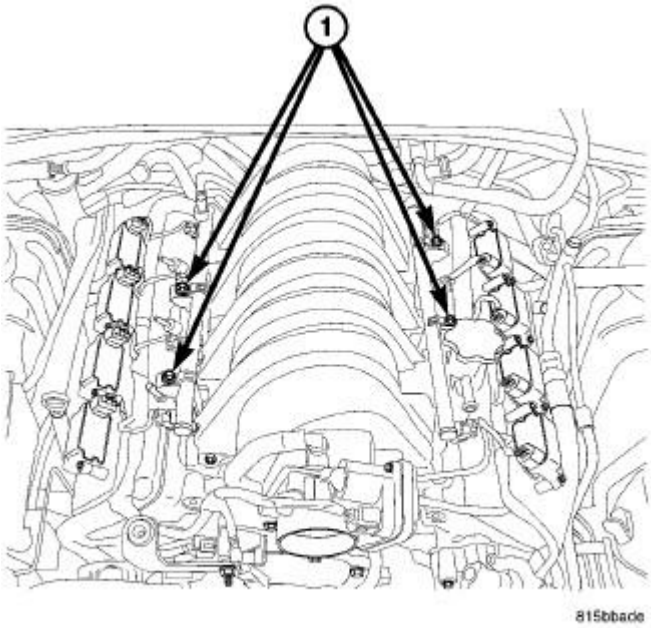

Fig. 60: FUEL RAIL MOUNTING
Courtesy of CHRYSLER LLC

1. Clean out fuel injector machined bores in intake manifold.
2. Apply a small amount of engine oil to each fuel injector O-ring.
3. Position fuel rail/fuel injector assembly to machined injector openings in intake manifold.
4. Guide each injector into intake manifold. Be careful not to tear injector o-rings.
5. Push **right** side of fuel rail down until fuel injectors have bottomed on shoulders. Push **left** fuel rail down until injectors have bottomed on shoulders.
6. Install and tighten four fuel rail mounting bolts (1). Tighten fuel rail mounting bolts to 11 N.m (100 in. lbs.).
7. Connect injector electrical connectors.

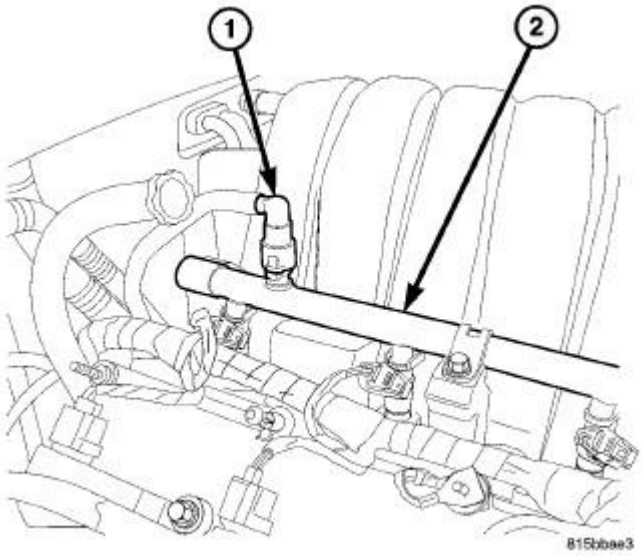

Fig. 61: Fuel Line At Fuel Rail
Courtesy of CHRYSLER LLC

8. Connect fuel line (1) to fuel rail. See **Fuel System/Fuel Delivery/FITTING, Quick Connect - Standard Procedure**.

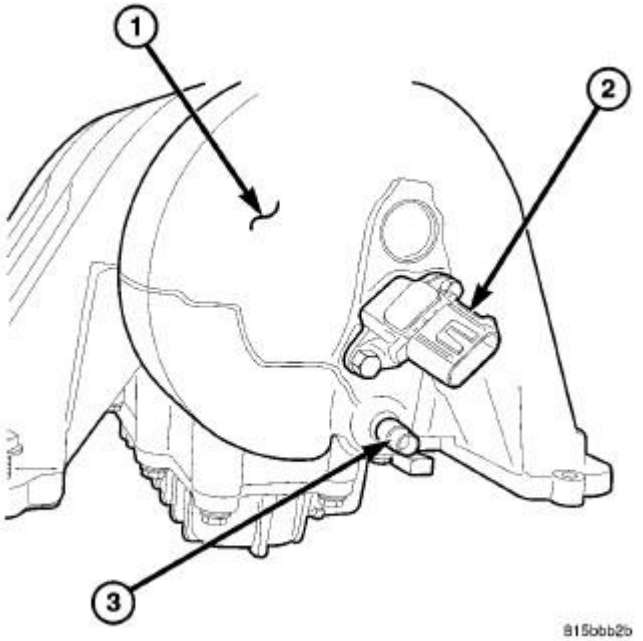

Fig. 62: MAP SENSOR LOCATION
Courtesy of CHRYSLER LLC

9. Connect vacuum hose to fitting (3).
10. Connect electrical connector to MAP sensor (2).

11. Install clean air hose to throttle body.

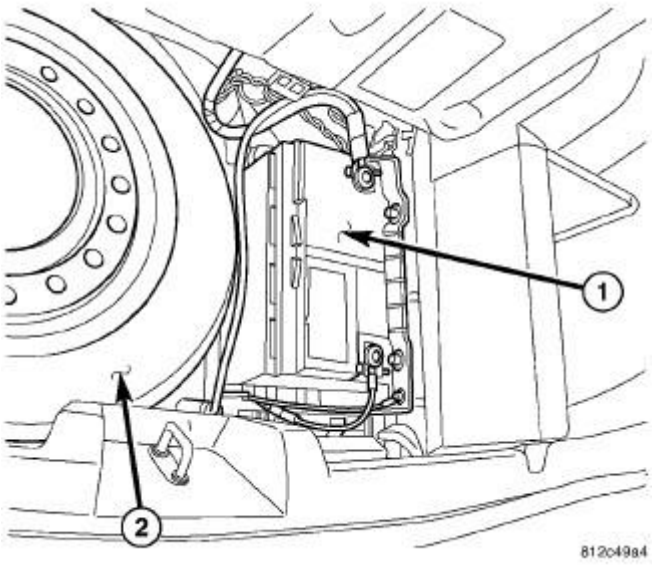

Fig. 63: Locating Battery
Courtesy of CHRYSLER LLC

12. Connect negative battery cable to battery (1).
13. Start engine and check for leaks.

REGULATOR, FUEL PRESSURE

Removal

REMOVAL

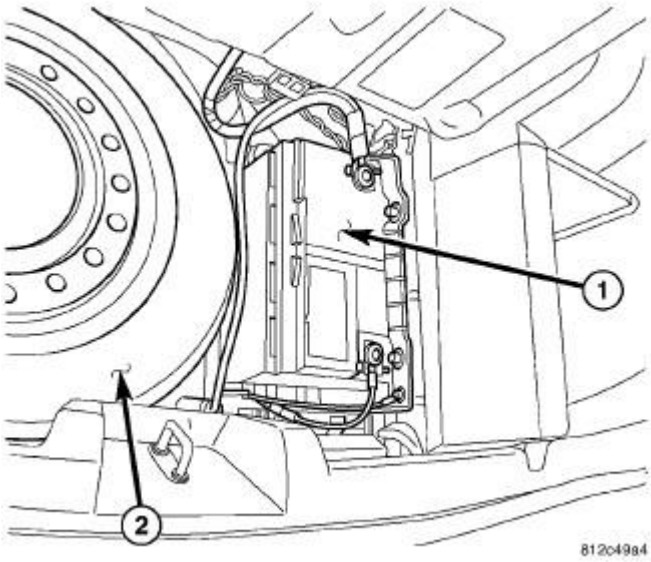

Fig. 64: Locating Battery
Courtesy of CHRYSLER LLC

1. Release the fuel pressure, refer to **FUEL SYSTEM PRESSURE RELEASE**. .
2. Disconnect negative battery cable from battery (1).

CAUTION: The fuel level of the vehicle must be below 5/8 of a tank before you remove the module lock-rings. If the fuel level is above 5/8 of a tank, fuel can spill into the vehicle.

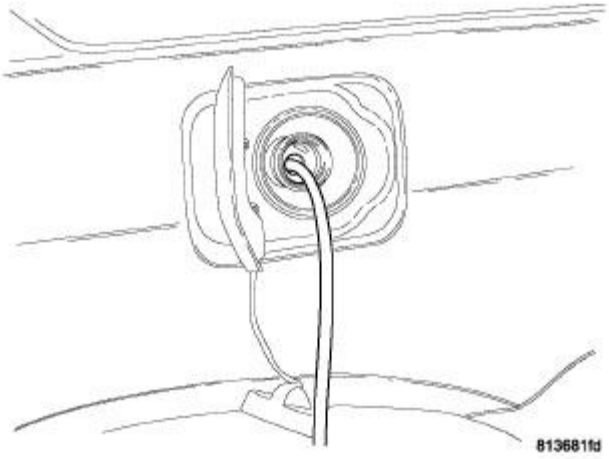

Fig. 65: Draining Fuel
Courtesy of CHRYSLER LLC

3. Partially drain the tank through the filler tube. Use a hard nylon tube with a 30° cut on the end to push past the check valve.

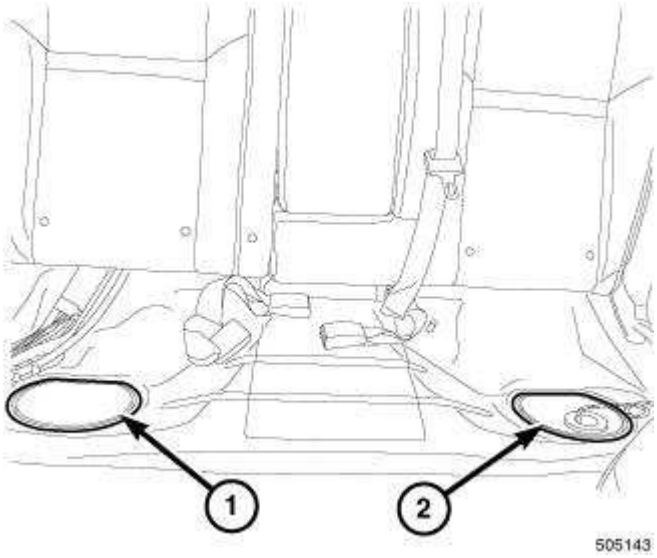

Fig. 66: Plastic Access Covers
Courtesy of CHRYSLER LLC

4. Remove the rear lower seat cushion.
5. Fold back the foam pad covering to access the module covers.
6. Remove plastic access covers (1,2) from floor pan.

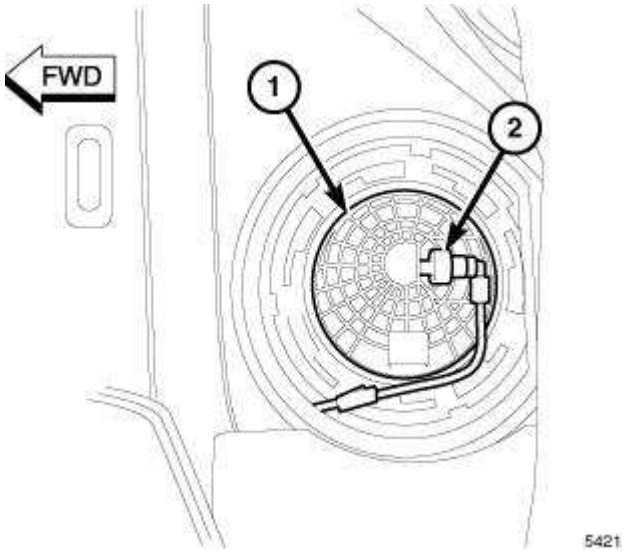

Fig. 67: Right Side Auxiliary Fuel Pump Module And Fuel Supply Line
Courtesy of CHRYSLER LLC

7. Disconnect the fuel supply line (2) from module (1).
8. Mark the module orientation.

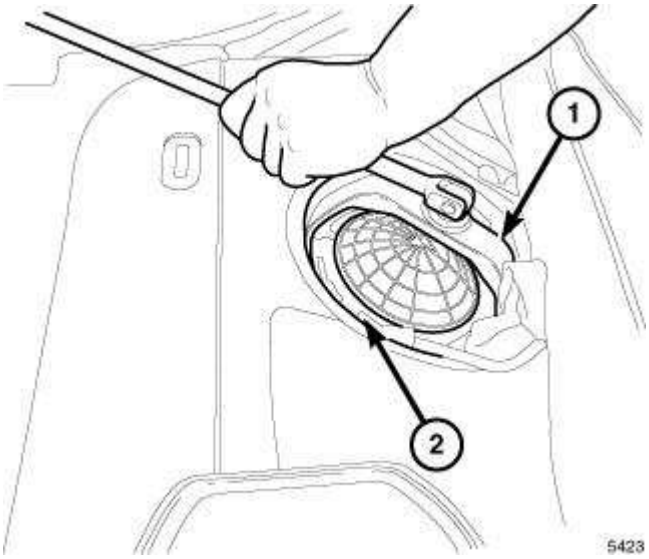

Fig. 68: Tool 9430 Right Side Module
Courtesy of CHRYSLER LLC

9. Use SAE fuel pump lock ring wrench 9340 (1) to remove right side module lock ring (2).

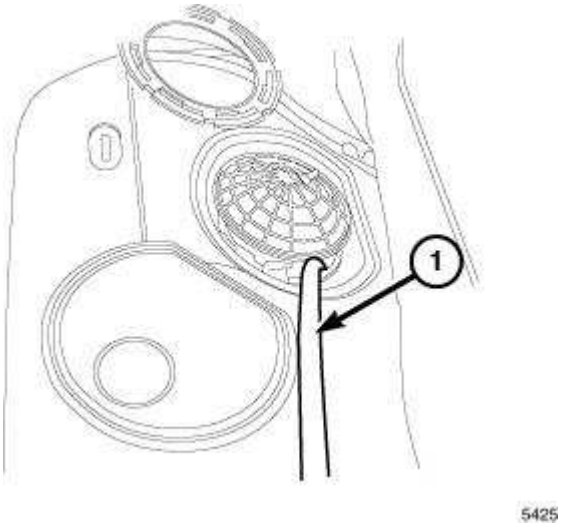

Fig. 69: 3/8 Inch Hose
Courtesy of CHRYSLER LLC

10. Lift module up enough to push hose (1) into tank and drain. Do not spill fuel in interior of vehicle.

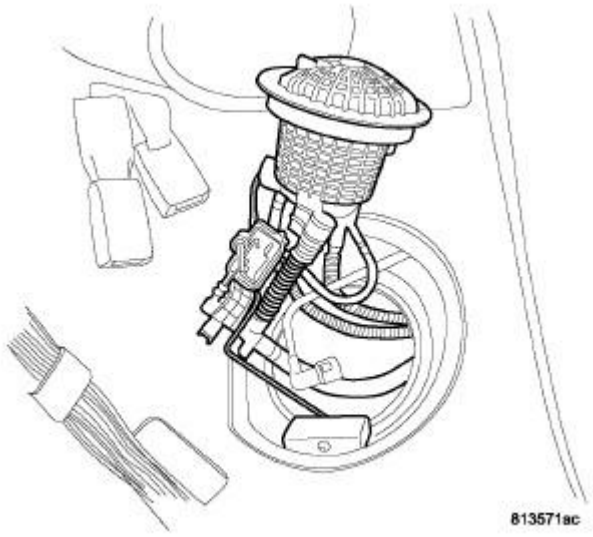

Fig. 70: Removing/Installing Module
Courtesy of CHRYSLER LLC

11. Pull module up and out of fuel tank.
12. Fuel Pressure regulator location.

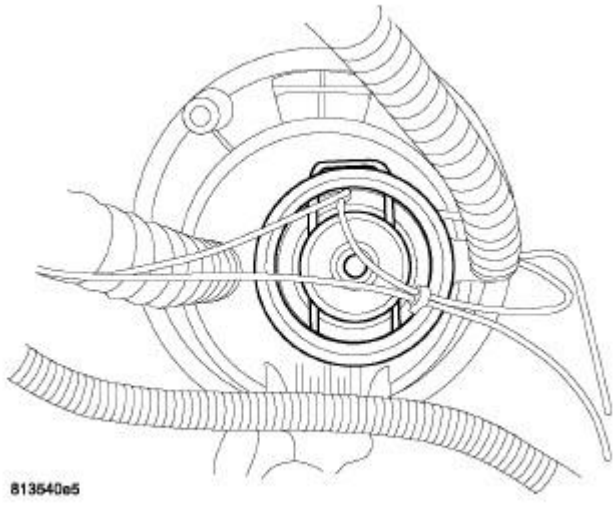

Fig. 71: Fuel Pressure Regulator
Courtesy of CHRYSLER LLC

13. Remove ground wire.

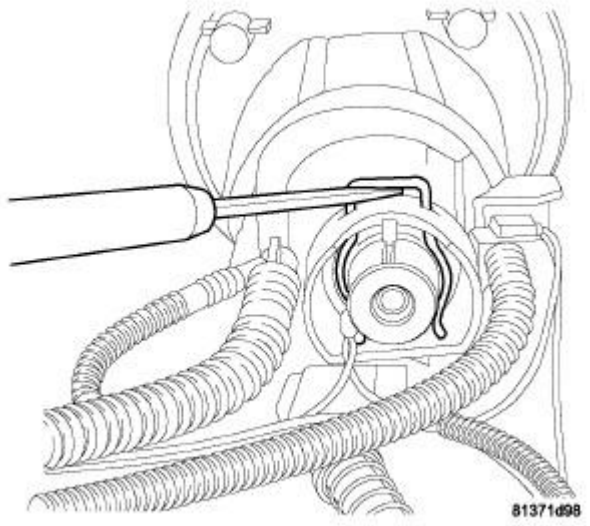

Fig. 72: Removing/Installing Retaining Clip
Courtesy of CHRYSLER LLC

14. Use a screwdriver and pry up on retaining clip.

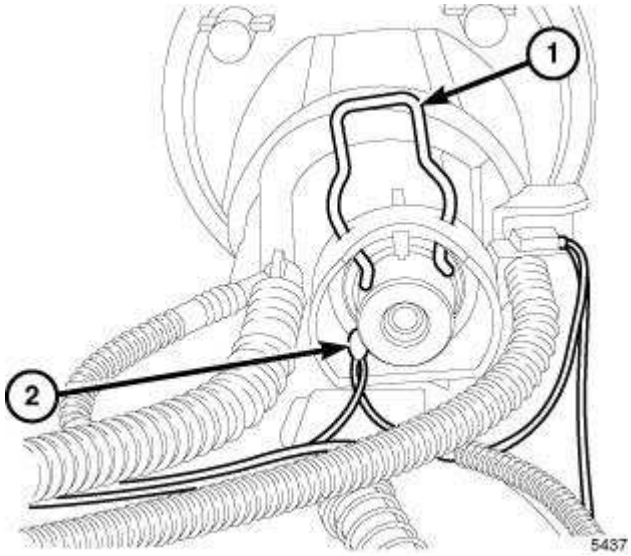

Fig. 73: Retaining Clip
Courtesy of CHRYSLER LLC

15. Remove the fuel pressure regulator retaining clip (1).

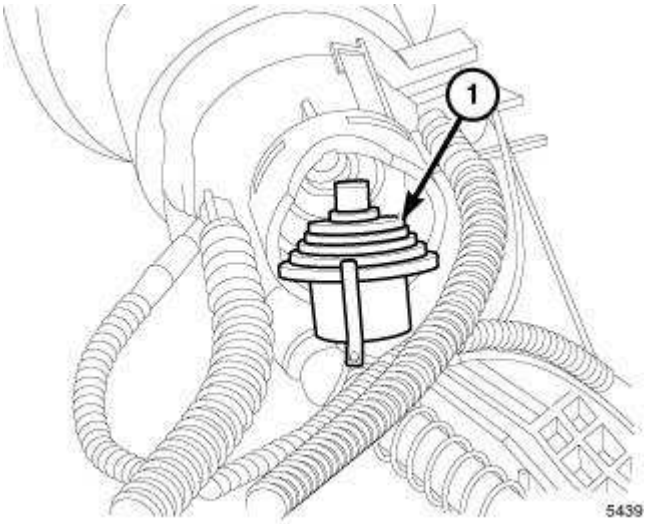

Fig. 74: Removing/Installing Fuel Pressure Regulator
Courtesy of CHRYSLER LLC

16. Remove fuel pressure regulator (1).

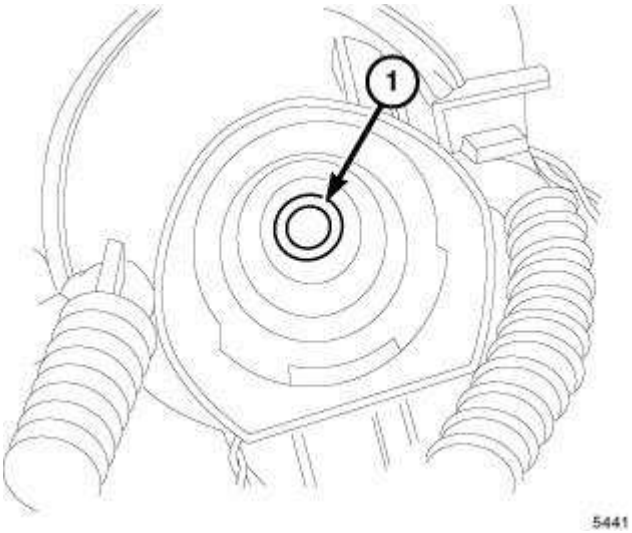

Fig. 75: Removing/Installing O-Ring
Courtesy of CHRYSLER LLC

17. Remove O-ring (1) from module.

Installation

INSTALLATION

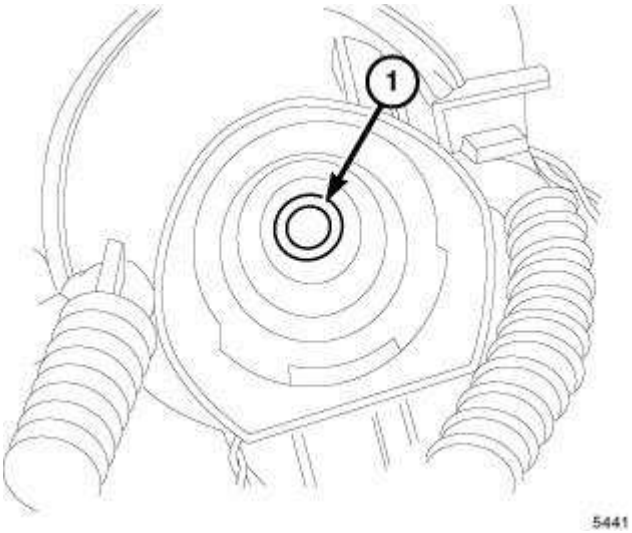

Fig. 76: Removing/Installing O-Ring
Courtesy of CHRYSLER LLC

1. Install o-ring (1).

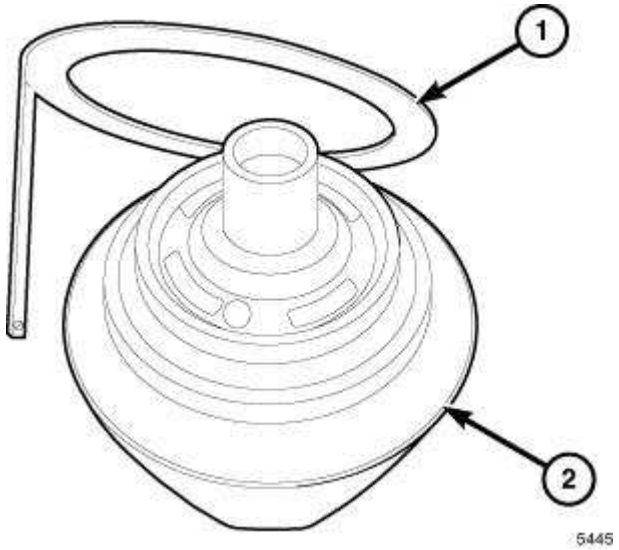

Fig. 77: Removing/Installing Ground Ring
Courtesy of CHRYSLER LLC

2. Install ground ring (1) on fuel pressure reuglator (2).

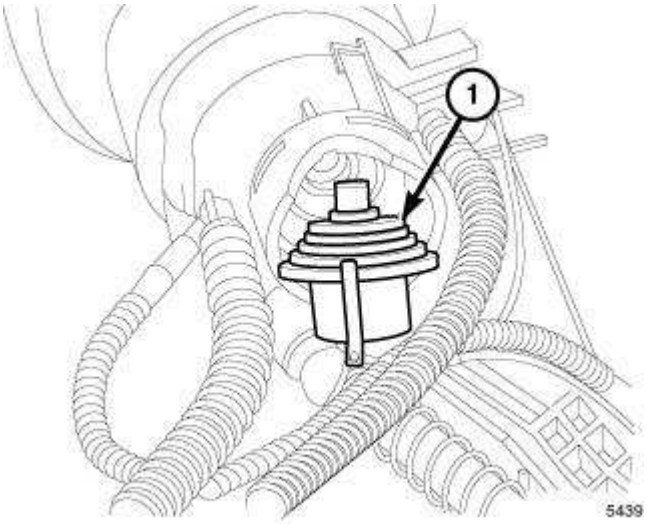

Fig. 78: Removing/Installing Fuel Pressure Regulator
Courtesy of CHRYSLER LLC

3. Install fuel pressure regulator (1) and ground ring. Note location of ground ring.

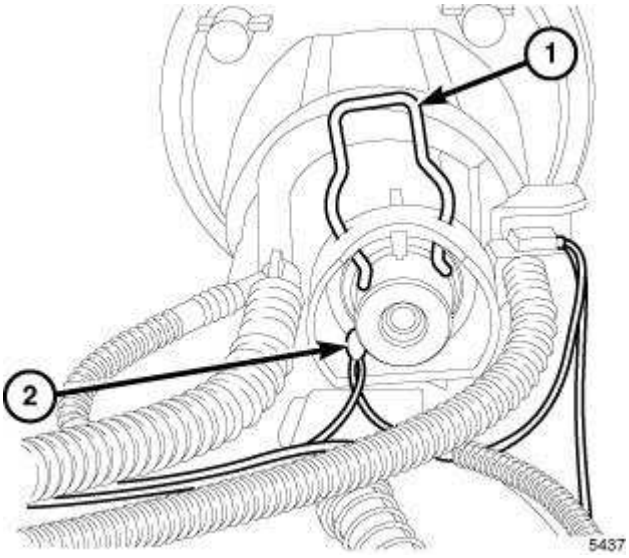

Fig. 79: Retaining Clip
Courtesy of CHRYSLER LLC

4. Install ground wire (2).
5. Install fuel pressure regulator retaining clip (1).

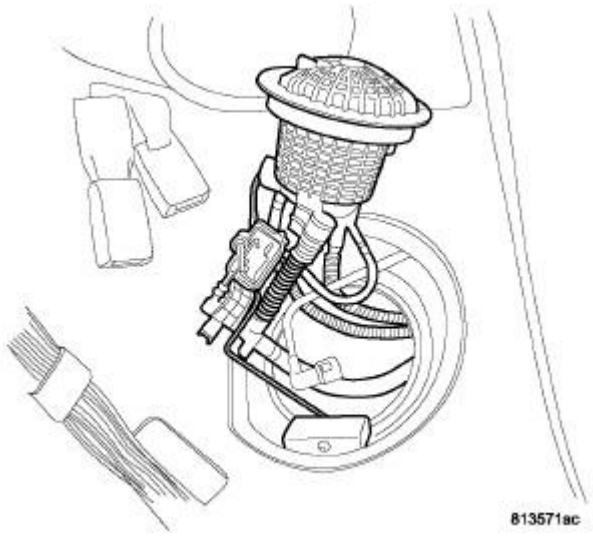

Fig. 80: Removing/Installing Module
Courtesy of CHRYSLER LLC

6. Install module into tank.
7. Align marks on the module for proper orientation.

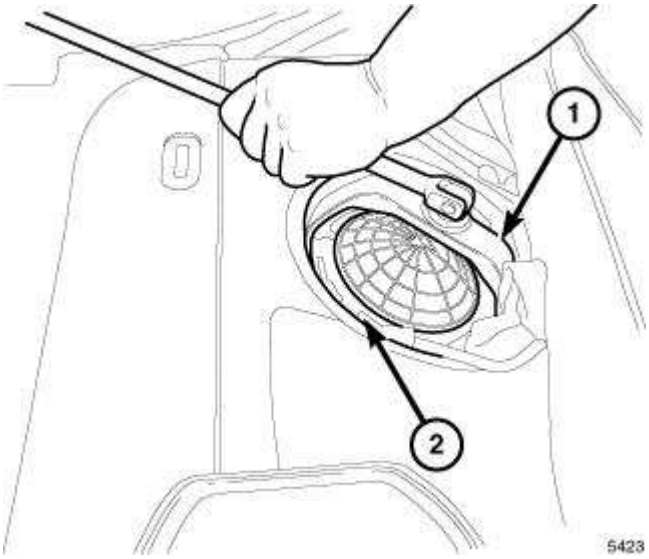

Fig. 81: Tool 9430 Right Side Module
Courtesy of CHRYSLER LLC

8. Install module lock-ring (2).
9. Use SAE fuel pump lock ring wrench 9340 (1) to tighten right side module lock ring.

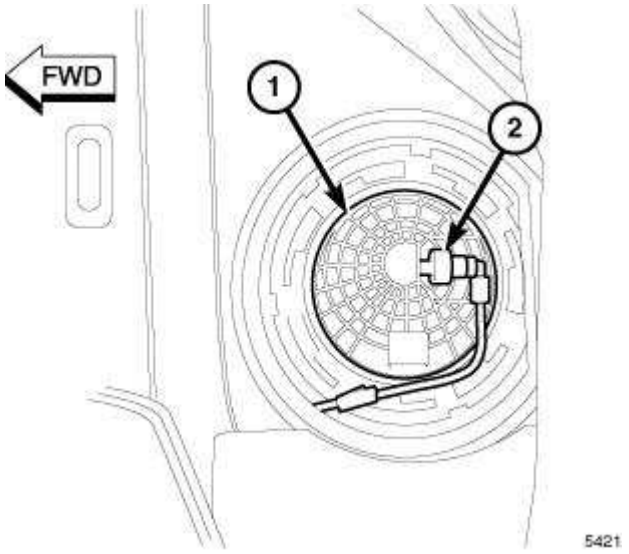

Fig. 82: Right Side Auxiliary Fuel Pump Module And Fuel Supply Line
Courtesy of CHRYSLER LLC

10. Connect the fuel supply line (2) to module (1).

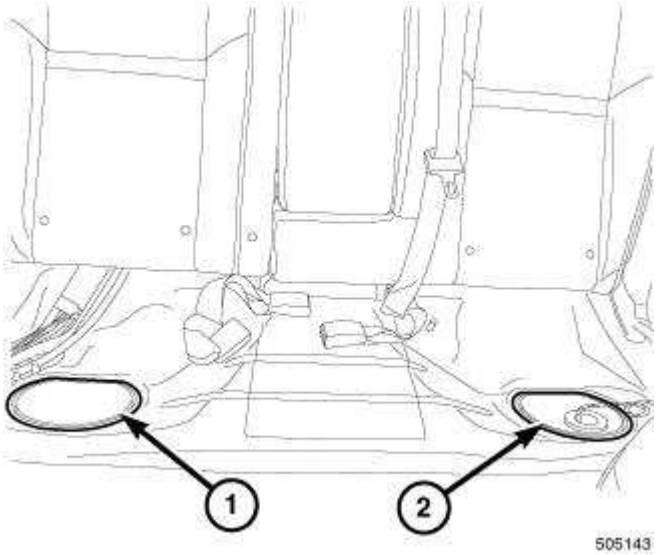

Fig. 83: Plastic Access Covers
Courtesy of CHRYSLER LLC

11. Install floor pan right side plastic access cover (1).
12. Fold the foam pad covering access cover for modules back into place.

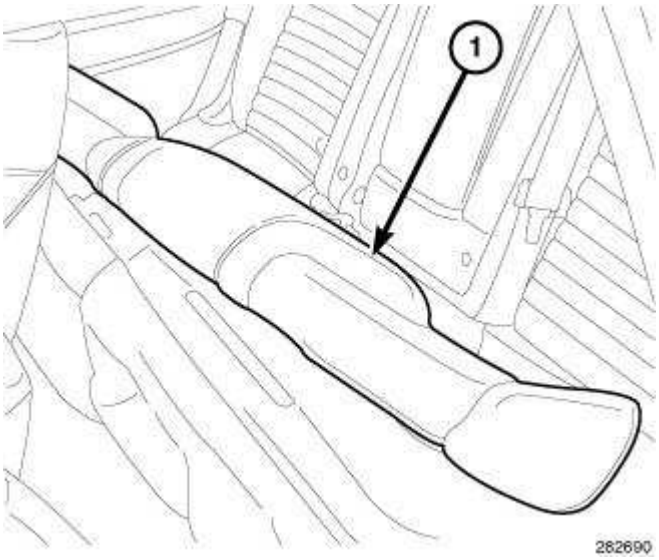

Fig. 84: Rear Lower Seat Cushion
Courtesy of CHRYSLER LLC

13. Install rear lower seat cushion (1).
14. Fill fuel tank.

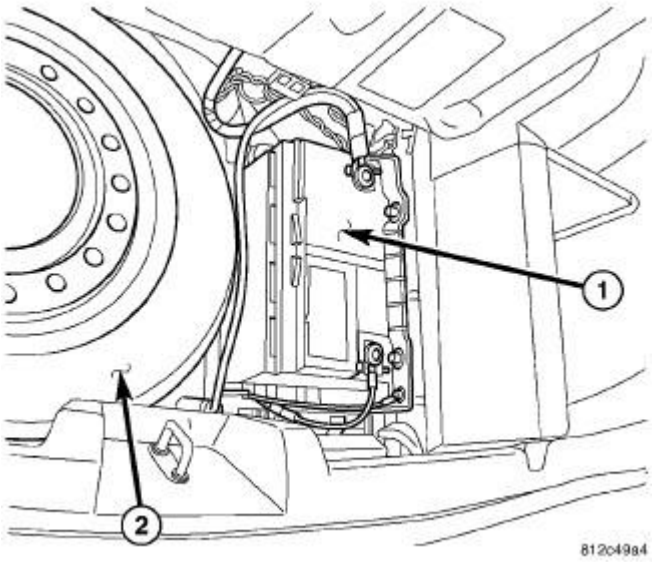

Fig. 85: Locating Battery
Courtesy of CHRYSLER LLC

15. Connect negative battery cable to battery (1).
16. Use the scan tool to pressurize the fuel system and check for leaks.

SENDING UNIT AND SENSOR, FUEL LEVEL

Description

FUEL LEVEL SENDING UNIT and SENSOR

The fuel level sending unit and sensor is integrated with the fuel pump module and is serviced as an assembly.

For fuel pump module removal. See **Fuel System/Fuel Delivery/MODULE, Fuel Pump - Removal**.

TANK, FUEL

Removal

REMOVAL

WARNING: The fuel system is under constant high pressure even with engine off. Until the fuel pressure has been properly released from the system, do not attempt to open the fuel system. Do not smoke or use open flames/sparks when servicing the fuel system. Wear protective clothing and eye protection. Make sure the area in which the vehicle is being serviced is in a well ventilated area and free of flames/sparks. Failure to comply may result in serious or fatal injury.

WARNING: No sparks, open flames or smoking. Risk of poisoning from inhaling and swallowing fuel. Pour fuel only into appropriately marked OSHA approved containers. Wear protective clothing. Risk of injury to eyes and skin from contact with fuel.

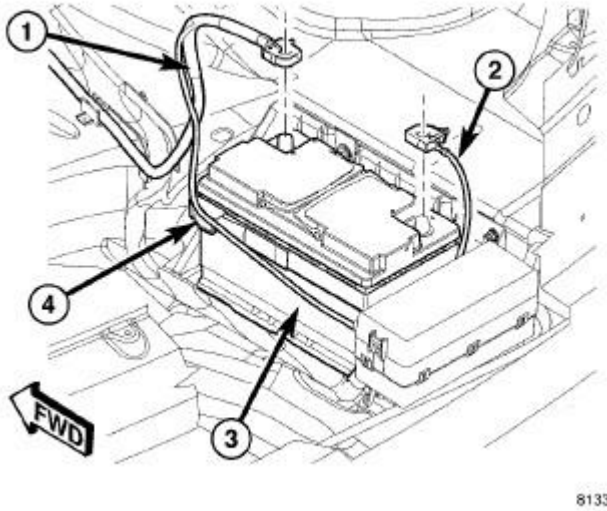

Fig. 86: Disconnecting/Connecting Battery Cables
Courtesy of CHRYSLER LLC

1. Perform the fuel pressure release procedure. See **Fuel System/Fuel Delivery - Standard**

Procedure.

2. Perform the draining fuel tank procedure. See **Fuel System/Fuel Delivery - Standard Procedure**.
3. Disconnect the negative battery cable (2).
4. Raise and support the vehicle.
5. Remove the left rear tire.

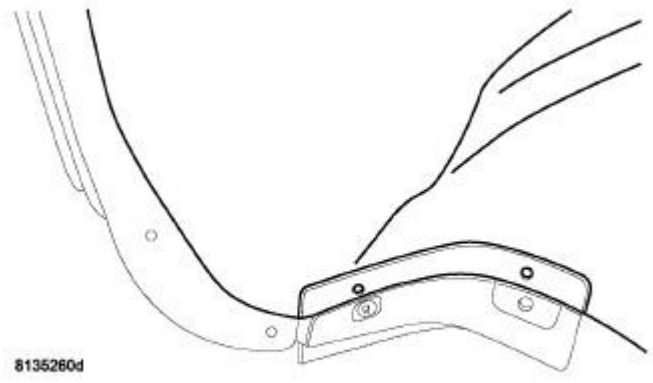

Fig. 87: Splash Shield
Courtesy of CHRYSLER LLC

6. Remove the left rear inner splash shield.

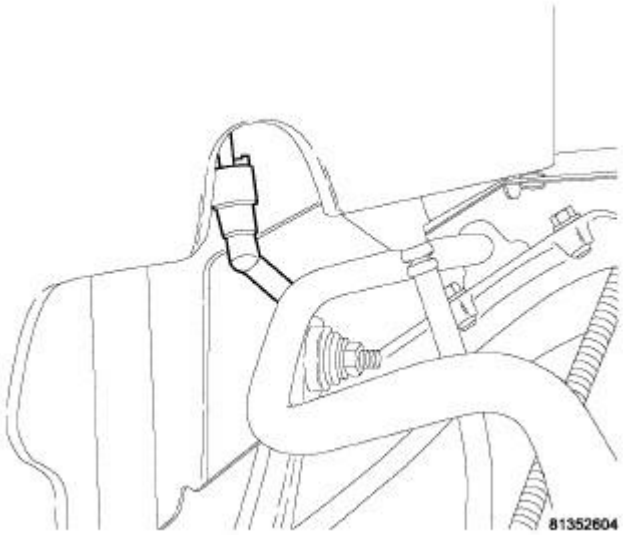

Fig. 88: Vent Line

Courtesy of CHRYSLER LLC

7. Disconnect the fuel filler tube vent line.

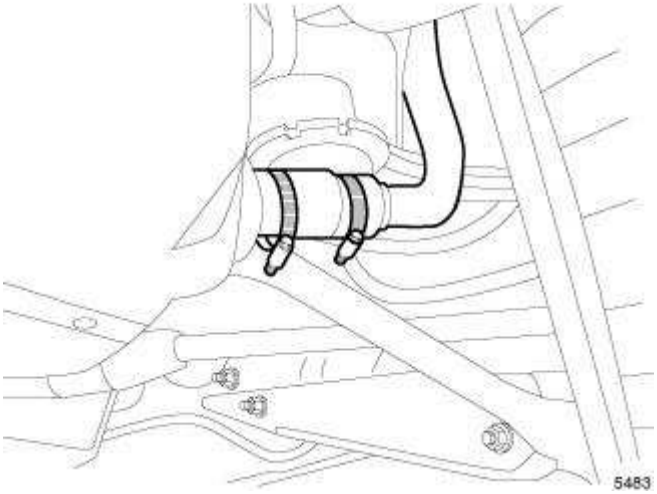

Fig. 89: Filler Tube Hose Clamp
Courtesy of CHRYSLER LLC

8. Remove the hose clamp from the fuel filler tube.

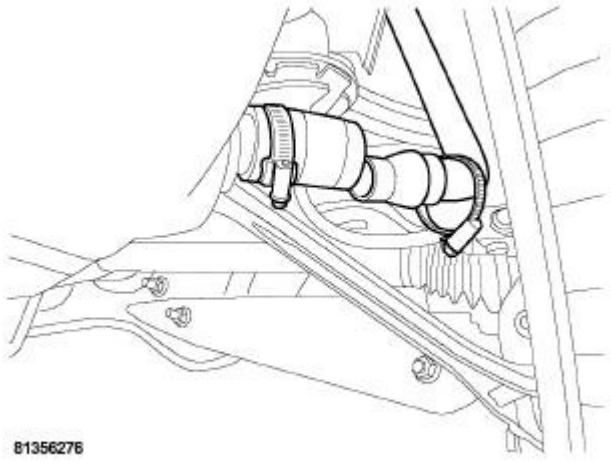

Fig. 90: Filler Tube
Courtesy of CHRYSLER LLC

9. Remove fuel filler tube from the rubber hose on the fuel tank.

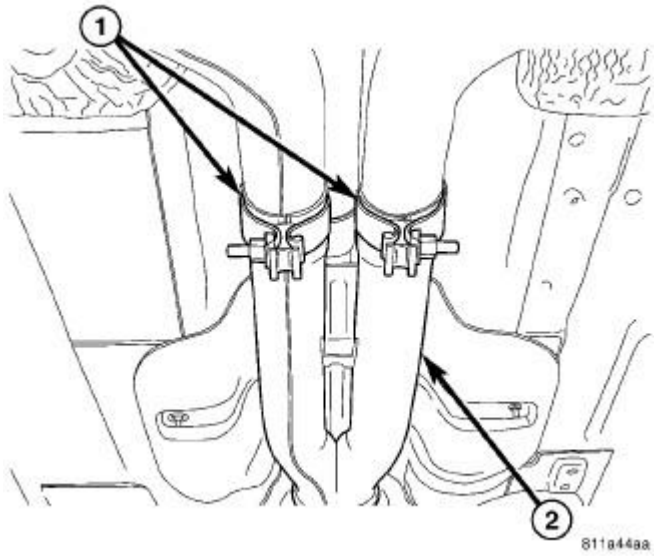

Fig. 91: Exhaust System
Courtesy of CHRYSLER LLC

10. Remove the muffler and tailpipe assembly (2). Refer to **Exhaust System/MUFFLER, Exhaust - Removal** .
11. Remove the propeller shaft. Refer to **Differential and Driveline/Propeller Shaft - Removal** .

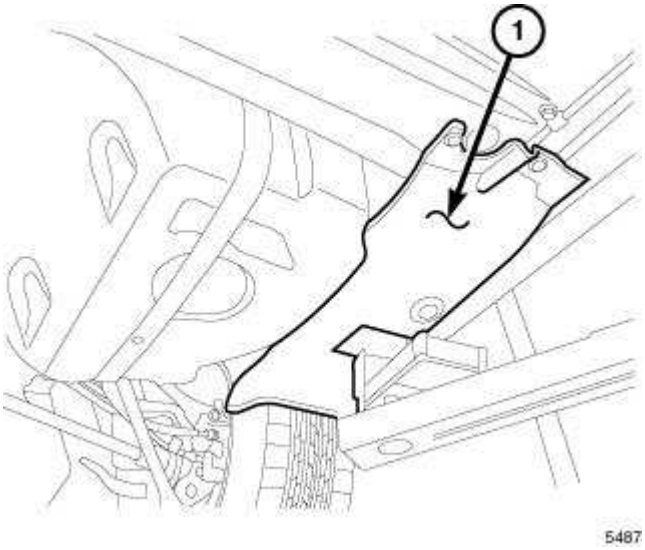

Fig. 92: Left Underbody Splash Shield
Courtesy of CHRYSLER LLC

12. Remove the left underbody splash shield (1).

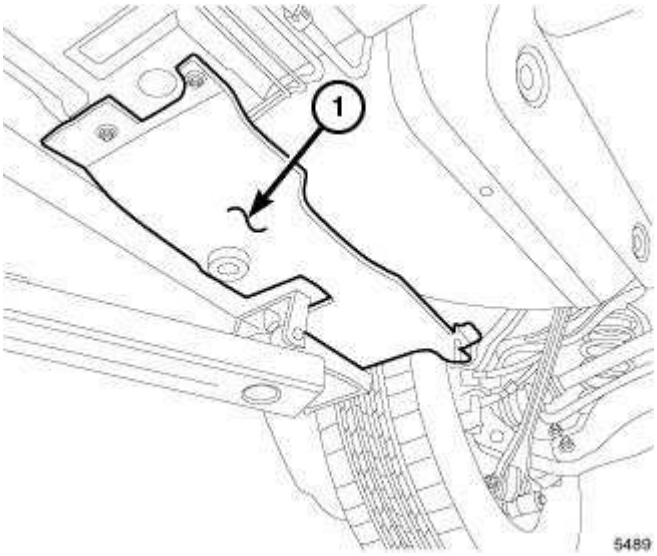

Fig. 93: Right Underbody Splash Shield
Courtesy of CHRYSLER LLC

13. Remove the right underbody splash shield (1).

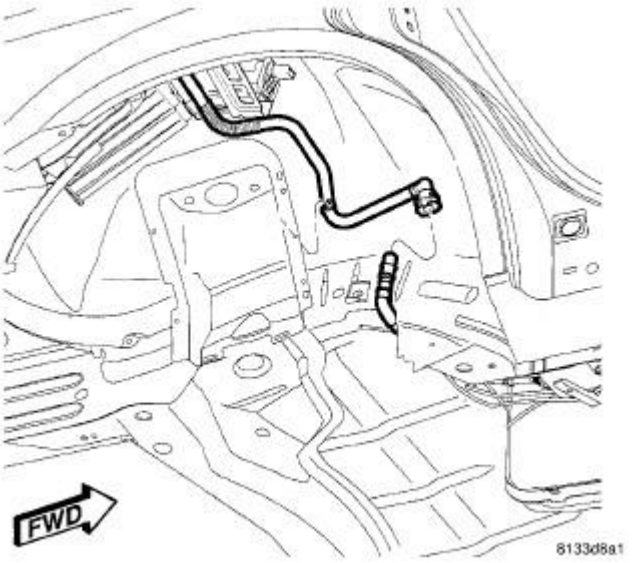

Fig. 94: EVAP Line
Courtesy of CHRYSLER LLC

14. Disconnect the EVAP line in the right rear wheel well.

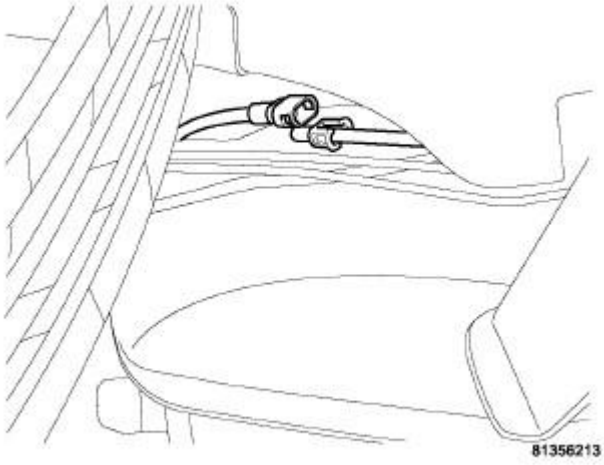

Fig. 95: Disconnecting/Connecting Vapor Line
Courtesy of CHRYSLER LLC

15. Disconnect the vapor line.

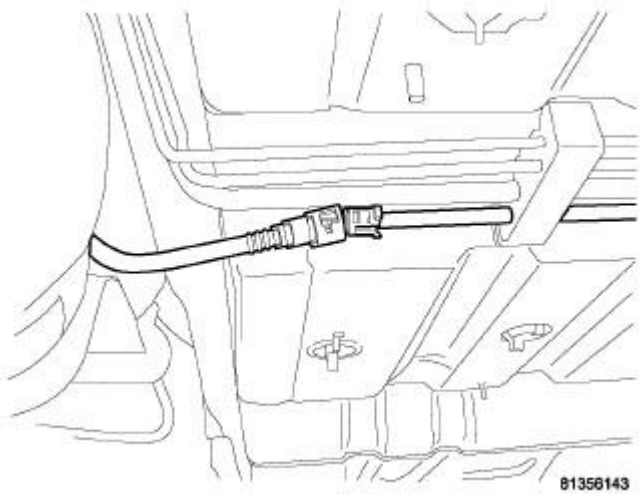

Fig. 96: Disconnecting/Connecting Fuel Supply Line
Courtesy of CHRYSLER LLC

16. Disconnect the fuel supply line.
17. Using a suitable hydraulic jack with a fuel tank adapter, support the fuel tank.

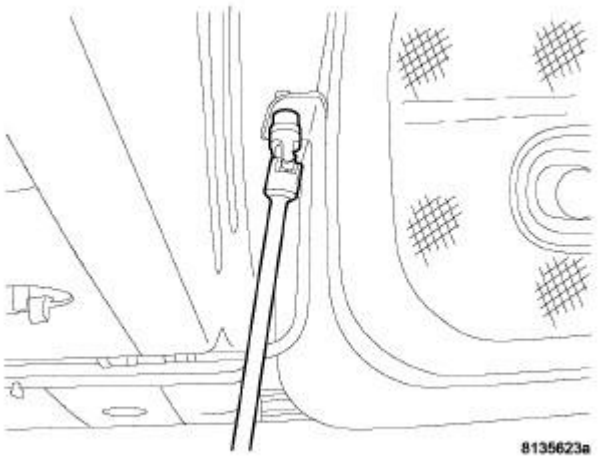

Fig. 97: Fuel Tank Support Strap Retaining Bolts
Courtesy of CHRYSLER LLC

18. Remove the fuel tank support strap retaining bolts.

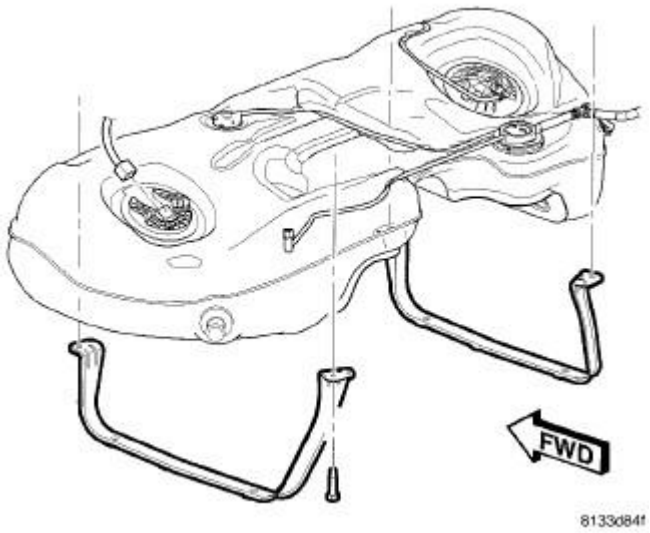

Fig. 98: Fuel Tank Support Straps
Courtesy of CHRYSLER LLC

19. Remove the fuel tank support straps.

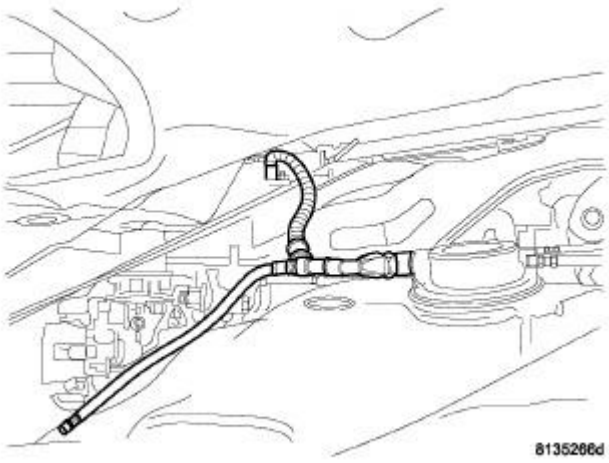

Fig. 99: Fuel Tank Vent Line Routing
Courtesy of CHRYSLER LLC

20. Carefully lower the fuel tank and pull the fuel filler tube vent line through bracket.

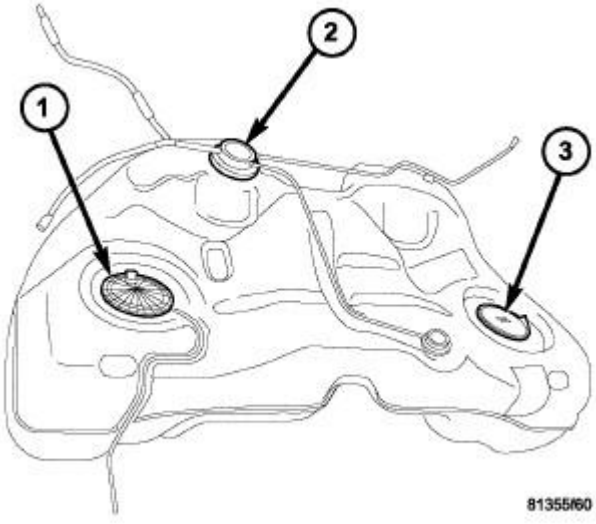

Fig. 100: Fuel Tank Assembly
Courtesy of CHRYSLER LLC

21. Lower and remove the fuel tank from the vehicle.

Installation

INSTALLATION

WARNING: No sparks, open flames or smoking. Risk of poisoning from inhaling and swallowing fuel. Pour fuel only into appropriately marked OSHA approved containers. Wear protective clothing. Risk of injury to eyes and skin from contact with fuel.

1. If removed, install the fuel pump modules. See **Fuel System/Fuel Delivery/MODULE, Fuel Pump - Installation**.

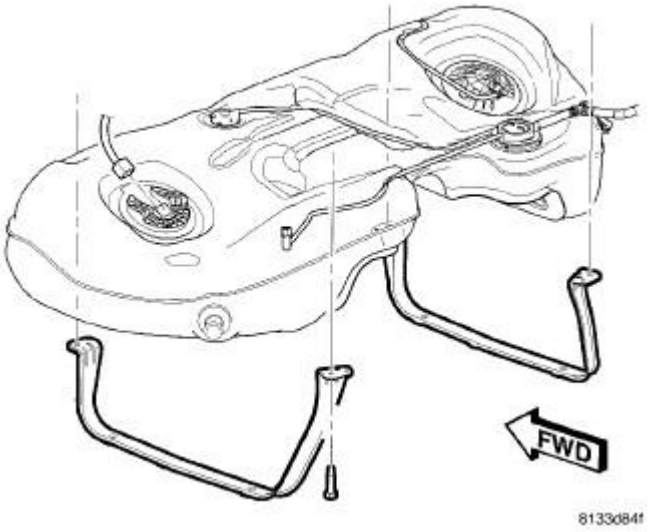

Fig. 101: Fuel Tank Support Straps
Courtesy of CHRYSLER LLC

2. Using a suitable hydraulic jack with a fuel tank adapter, support the fuel tank.
3. Carefully raise the fuel tank into position while guiding the filler tube vent line through bracket.
4. Position the fuel tank support straps.
5. Install fuel tank support strap retaining bolts and tighten to 27 N.m (20 ft. lbs.).

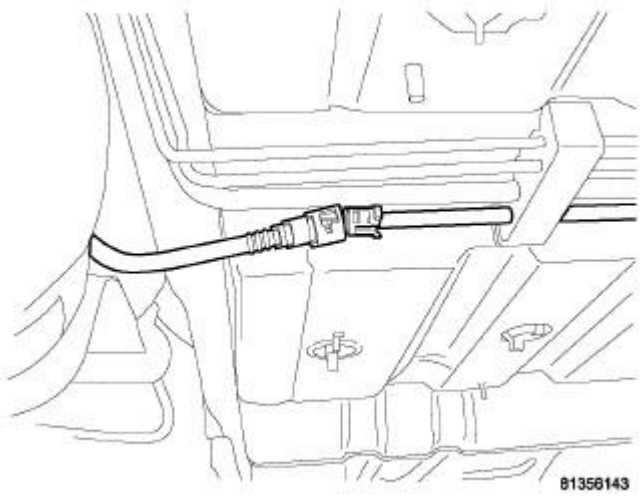

Fig. 102: Disconnecting/Connecting Fuel Supply Line
Courtesy of CHRYSLER LLC

6. Connect the fuel supply line.

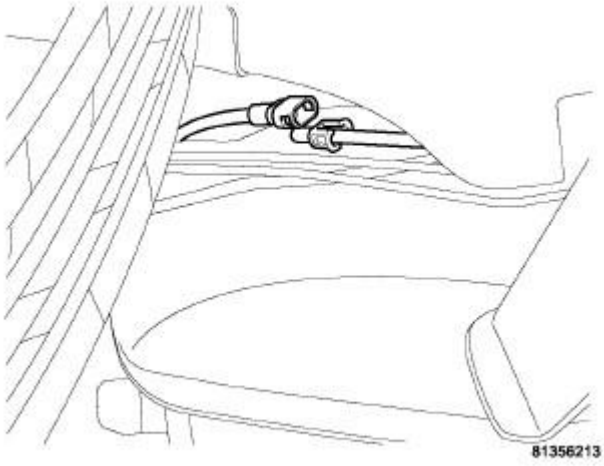

Fig. 103: Disconnecting/Connecting Vapor Line
Courtesy of CHRYSLER LLC

7. Connect the vapor line.

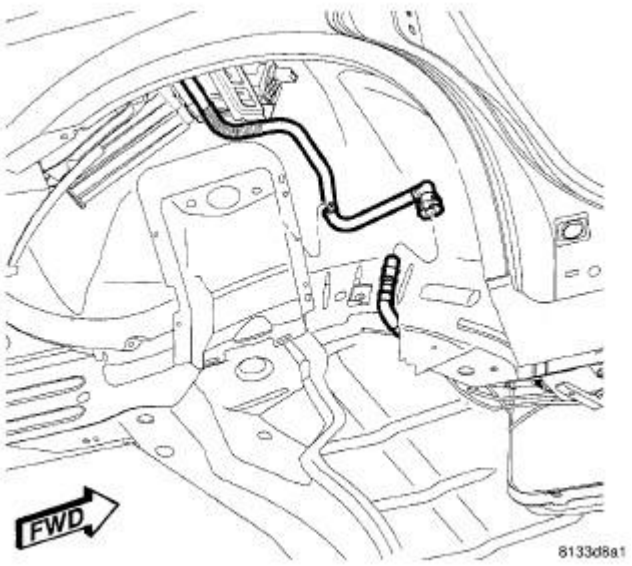

Fig. 104: EVAP Line
Courtesy of CHRYSLER LLC

8. Connect the EVAP line in the right rear wheel well.
9. Install the propeller shaft. Refer to **Differential and Driveline/Propeller Shaft - Installation** .

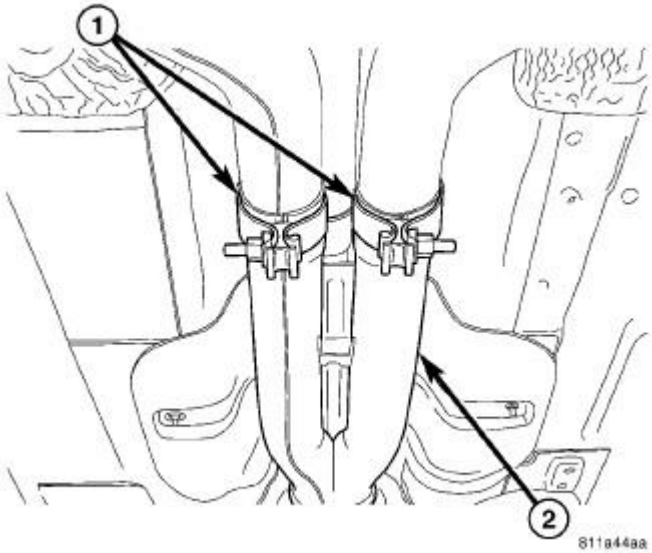

Fig. 105: Exhaust System
Courtesy of CHRYSLER LLC

10. Install the muffler and tailpipe assembly (2). Refer to **Exhaust System/MUFFLER, Exhaust - Installation** .

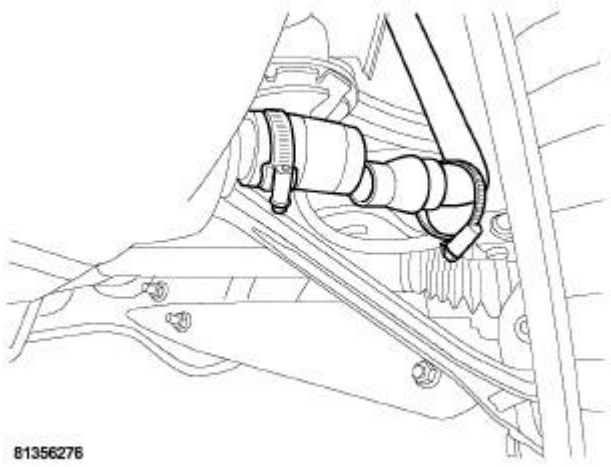

Fig. 106: Filler Tube
Courtesy of CHRYSLER LLC

11. Connect the fuel filler tube to the rubber hose on the fuel tank.

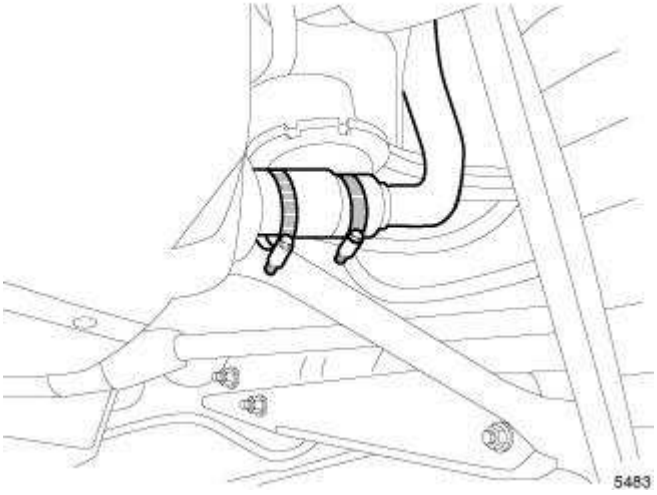

Fig. 107: Filler Tube Hose Clamp
Courtesy of CHRYSLER LLC

12. Install the hose clamp to the rubber hose connecting the fuel filler tube to the fuel tank and tighten clamp to 4 N.m (35 in. lbs.).

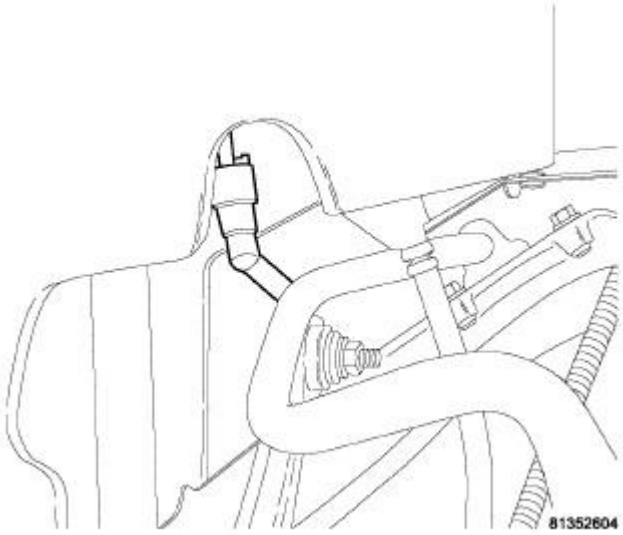

Fig. 108: Vent Line
Courtesy of CHRYSLER LLC

13. Connect the fuel filler tube vent line.

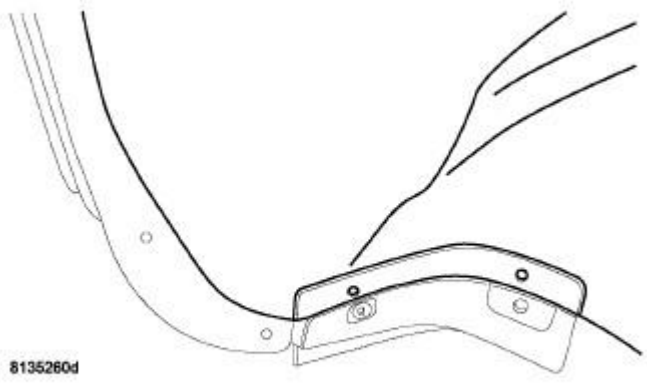

Fig. 109: Splash Shield
Courtesy of CHRYSLER LLC

14. Install the left rear inner splash shield.

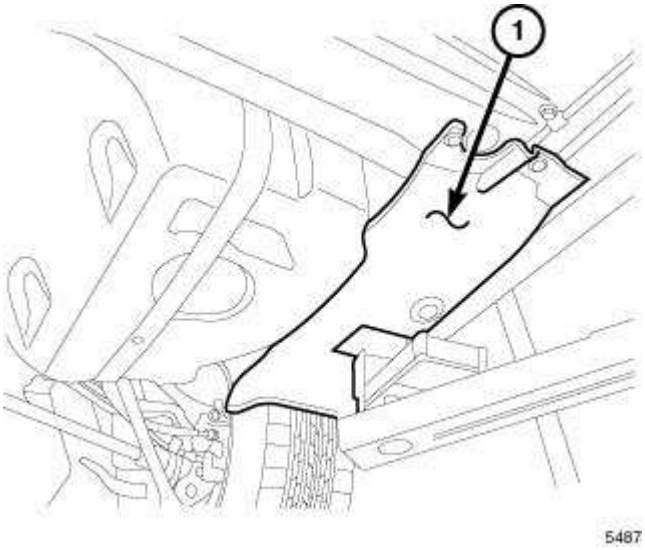

Fig. 110: Left Underbody Splash Shield
Courtesy of CHRYSLER LLC

15. Install the left underbody splash shield (1).

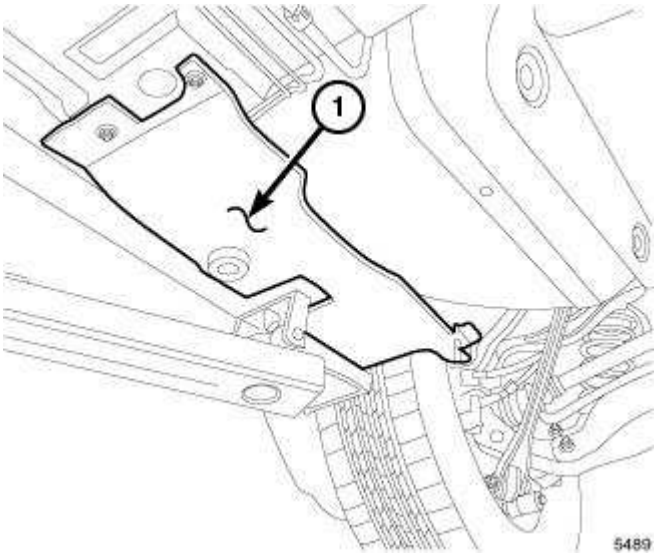

Fig. 111: Right Underbody Splash Shield
Courtesy of CHRYSLER LLC

16. Install the right underbody splash shield (1).
17. Install the left rear tire.
18. Lower the vehicle.
19. Fill the fuel tank.
20. Connect the negative battery cable.
21. Use the scan tool to pressurize the fuel system and check for leaks.

TUBE, FUEL TANK FILLER

Removal

REMOVAL

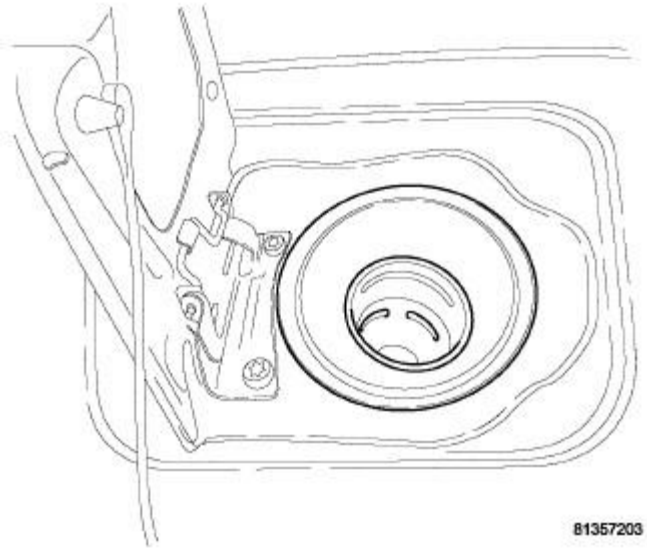

Fig. 112: Filler Tube Door
Courtesy of CHRYSLER LLC

1. Disconnect negative battery cable.
2. Drain fuel from tank.
3. Fuel filler tube assembly.
4. Open filler tube door.

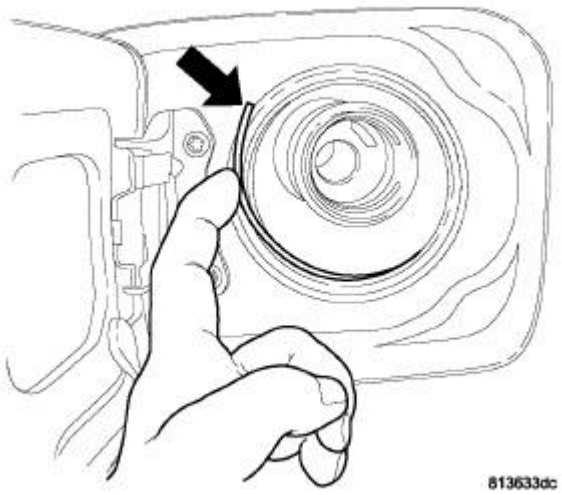

Fig. 113: Removing/Installing Retaining Wire
Courtesy of CHRYSLER LLC

5. Remove retaining wire from inside filler tube rubber.

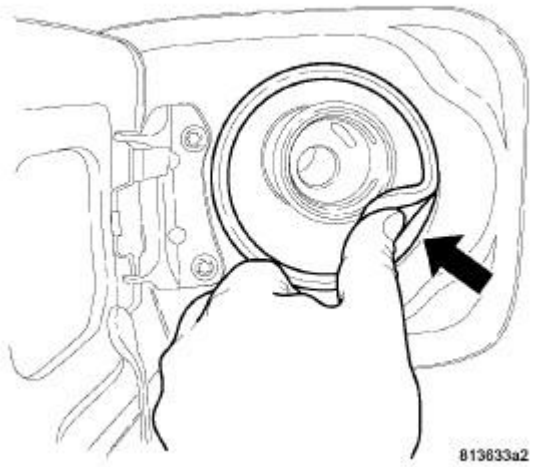

Fig. 114: Rubber At Filler Tube Opening
Courtesy of CHRYSLER LLC

6. Start removing rubber from body sheet metal.

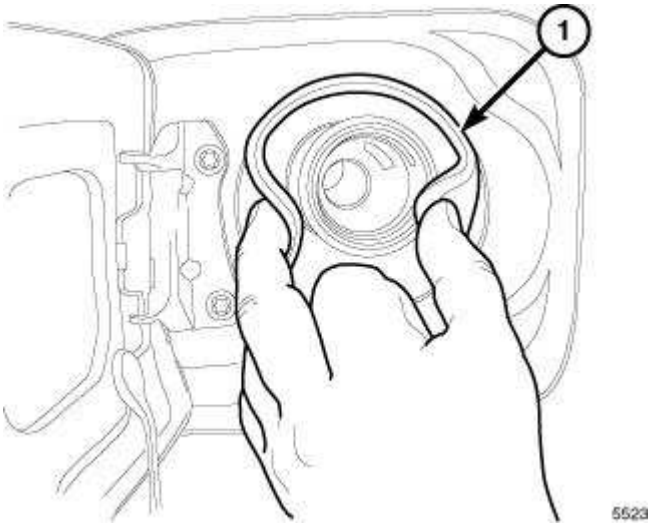

Fig. 115: Squeezing Rubber And Pushing In
Courtesy of CHRYSLER LLC

7. Squeeze rubber and push in.

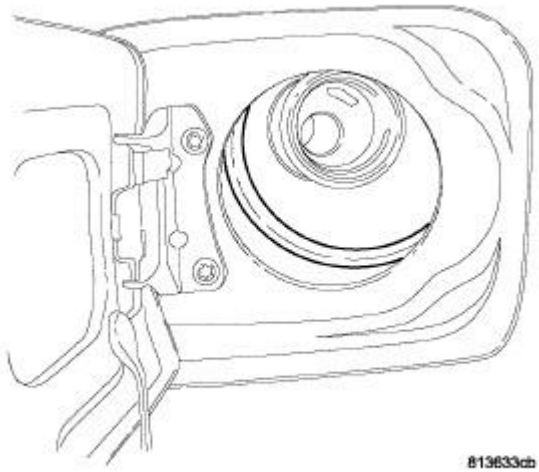

Fig. 116: Filler Tube With Rubber Removed
Courtesy of CHRYSLER LLC

8. Filler tube and rubber removed from body sheet metal.
9. Raise vehicle and support.
10. Remove the left rear tire.
11. Remove the left inner splash shield.

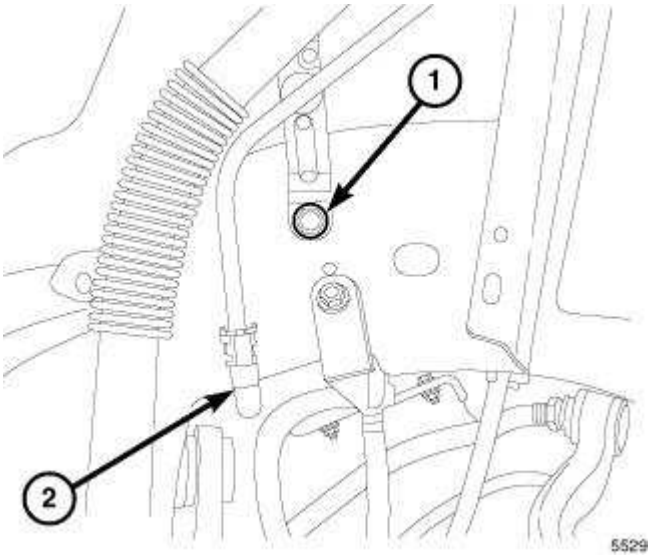

Fig. 117: Filler Tube Vent Line And Mounting Bolt
Courtesy of CHRYSLER LLC

12. Disconnect the filler tube vent line (2).
13. Remove the filler tube mounting bolt (1).

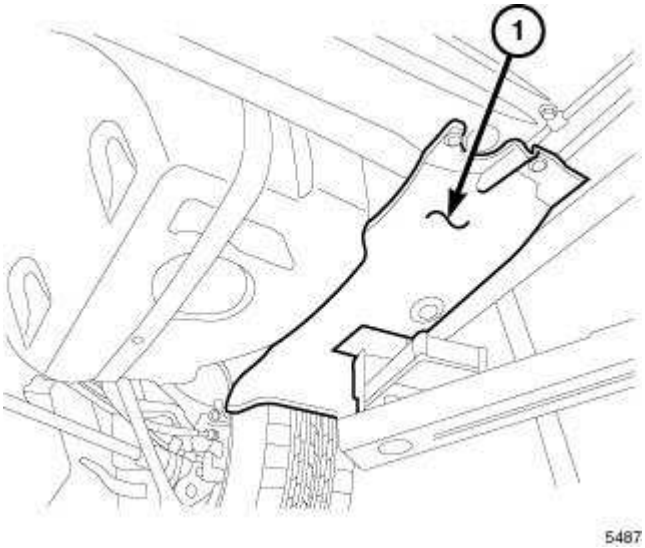

Fig. 118: Left Underbody Splash Shield
Courtesy of CHRYSLER LLC

14. Remove the under body splash shield (1).

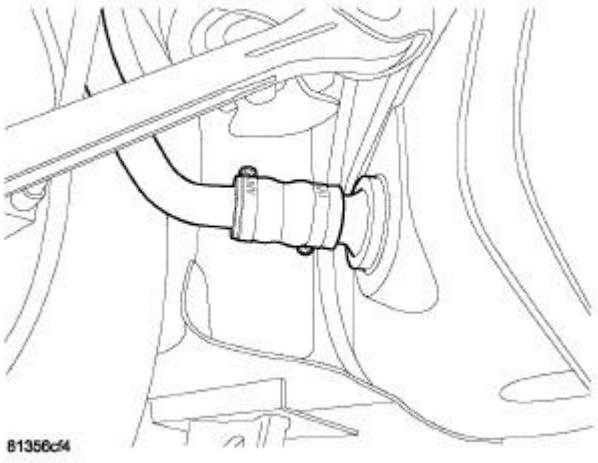

Fig. 119: Filler Tube
Courtesy of CHRYSLER LLC

15. Loosen the filler tube hose clamp. Leave the clamp tight on the hose and fuel tank location.

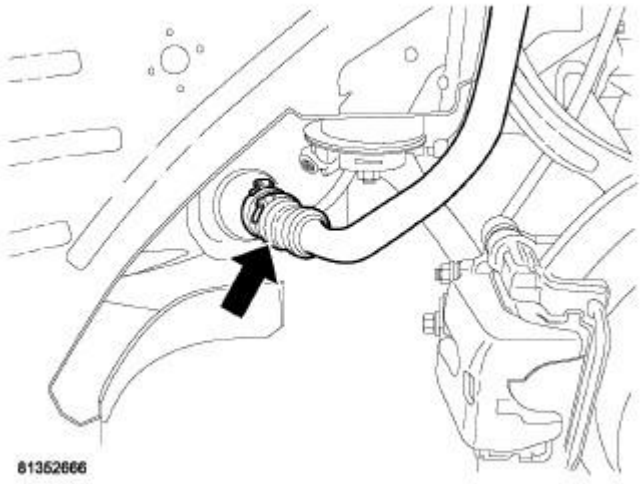

Fig. 120: Filler Tube Hose Clamp
Courtesy of CHRYSLER LLC

16. Move clamp toward the fuel tank.

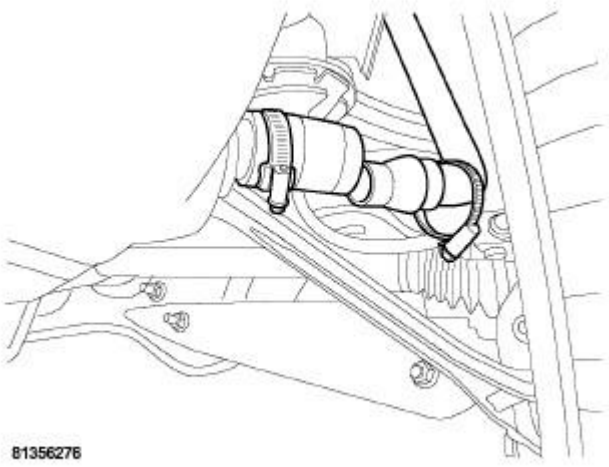

Fig. 121: Filler Tube
Courtesy of CHRYSLER LLC

17. Remove the filler tube assembly from the vehicle.

Installation

INSTALLATION

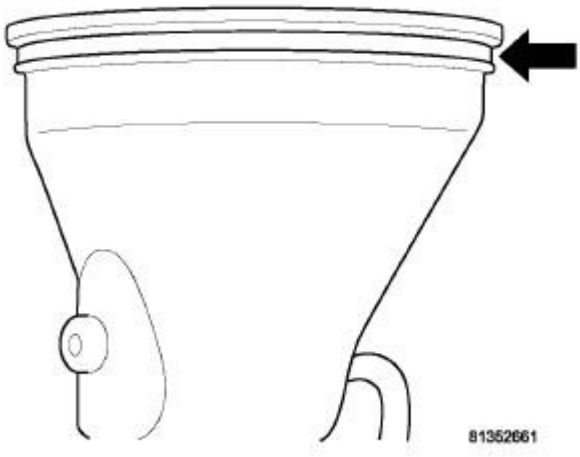

Fig. 122: Identifying Groove In Filler Tube Rubber Profile
Courtesy of CHRYSLER LLC

1. Filler tube assembly.
2. Groove in filler tube rubber is for the body sheet metal.

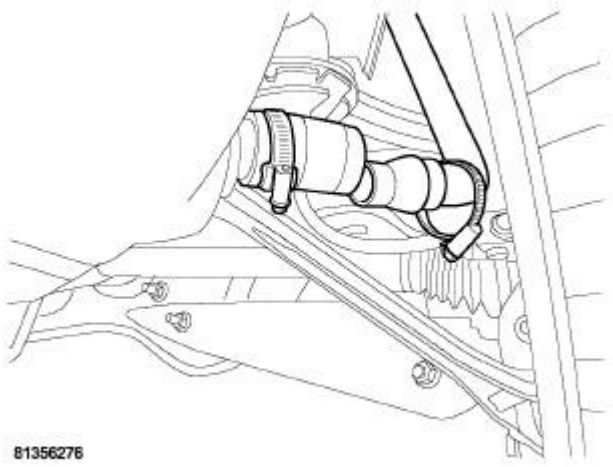

Fig. 123: Filler Tube
Courtesy of CHRYSLER LLC

3. Insert filler tube into the fuel tank rubber hose.

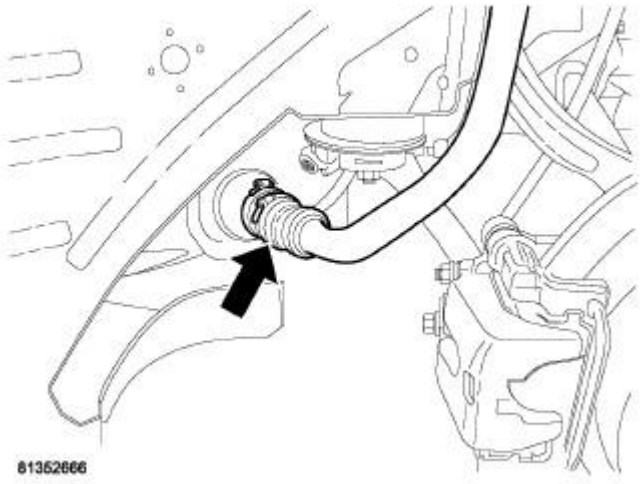

Fig. 124: Filler Tube Hose Clamp
Courtesy of CHRYSLER LLC

4. Slide hose clamp into place and tighten.

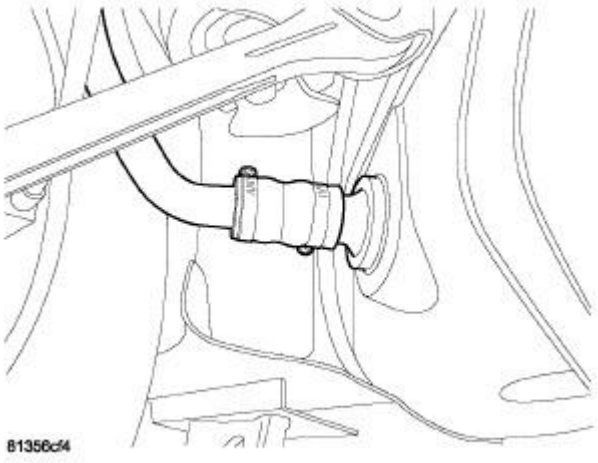

Fig. 125: Filler Tube
Courtesy of CHRYSLER LLC

5. Hose clamp in place and tighen.

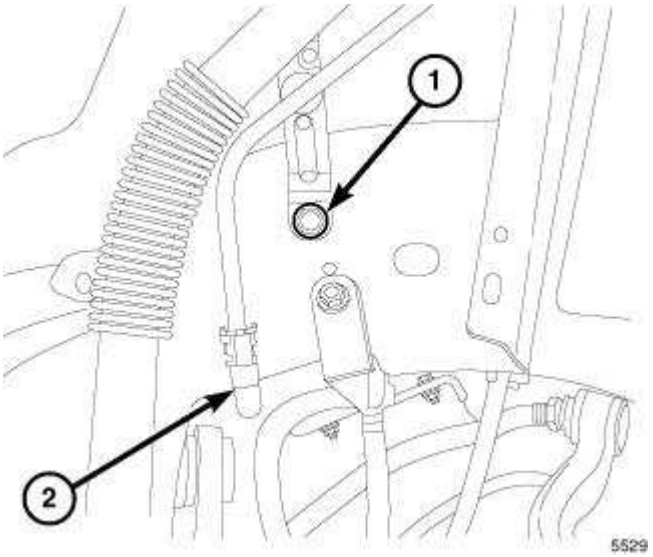

Fig. 126: Filler Tube Vent Line And Mounting Bolt
Courtesy of CHRYSLER LLC

6. Install filler tube mounting bolt (1).
7. Install filler tube vent line (2).

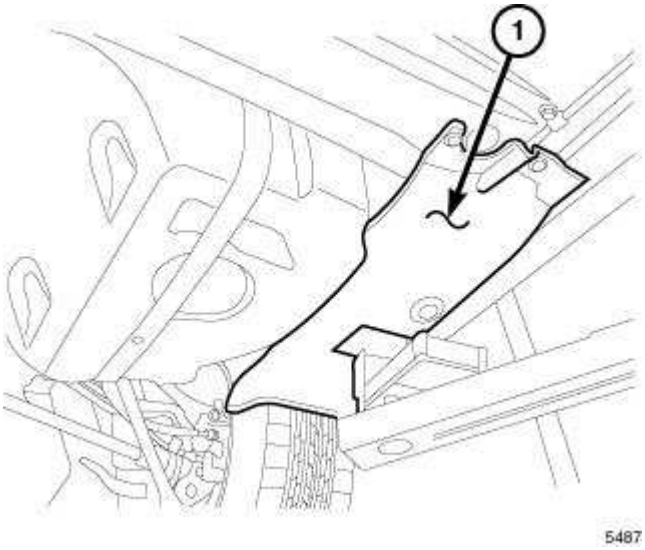

Fig. 127: Left Underbody Splash Shield
Courtesy of CHRYSLER LLC

8. Install the underbody splash shield (1).
9. Install the left inner splash shield.
10. Install the left rear tire.
11. Lower vehicle.

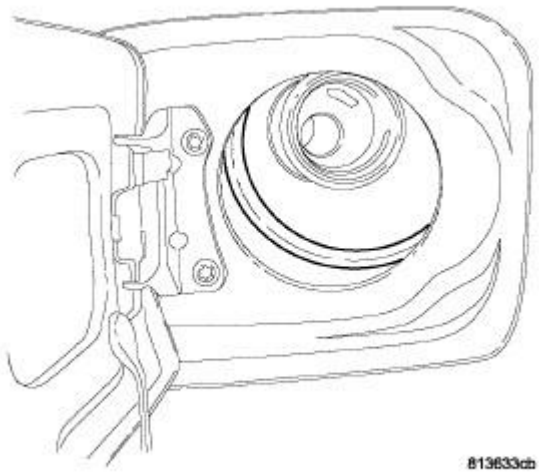

Fig. 128: Filler Tube With Rubber Removed
Courtesy of CHRYSLER LLC

12. Filler tube rubber at body opening.
13. Pull rubber through opening and install to body. Make sure that the sheet metal is in the groove in the rubber.

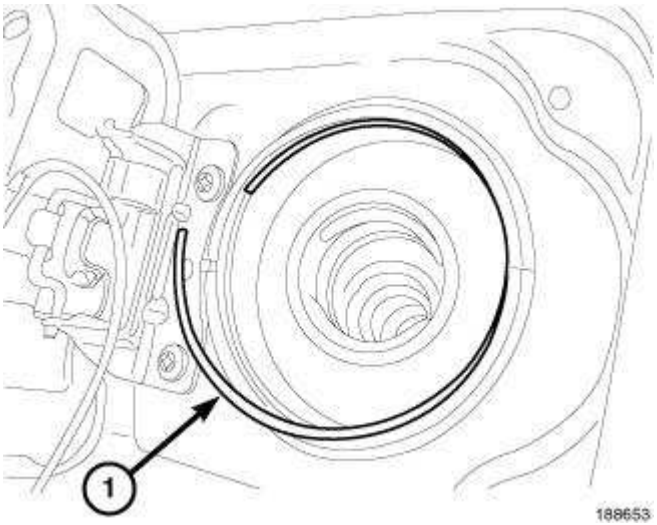

Fig. 129: Metal Wire Retaining Wire
Courtesy of CHRYSLER LLC

14. Start the metal wire retaining wire (1) in the groove on the inside of the filler tube rubber.
15. Work wire retaining wire around the rubber.

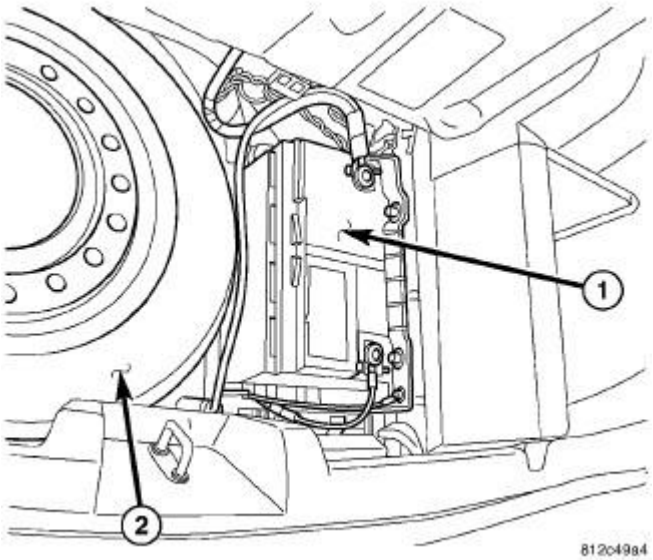

Fig. 130: Locating Battery
Courtesy of CHRYSLER LLC

16. Connect negative battery cable to battery (1).
17. Fill fuel tank.

FUEL INJECTION, GAS

OPERATION

INJECTION SYSTEM

All engines used in this service information have a sequential Multi-Port Electronic Fuel Injection system. The MPI system is computer regulated and provides precise air/fuel ratios for all driving conditions. The Powertrain Control Module (PCM) operates the fuel injection system.

The PCM regulates:

- Ignition timing
- Air/fuel ratio
- Emission control devices
- Cooling fan
- Charging system
- Idle speed
- Vehicle speed control

Various sensors provide the inputs necessary for the PCM to correctly operate these systems. In addition to the sensors, various switches also provide inputs to the PCM.

The PCM can adapt its programming to meet changing operating conditions.

Fuel is injected into the intake port above the intake valve in precise metered amounts through electrically operated injectors. The PCM fires the injectors in a specific sequence. Under most operating conditions, the PCM maintains an air fuel ratio of 14.7 parts air to 1 part fuel by constantly adjusting injector pulse width. Injector pulse width is the length of time the injector is open.

The PCM adjusts injector pulse width by opening and closing the ground path to the injector. Engine RPM (speed) and manifold absolute pressure (air density) are the **primary** inputs that determine injector pulse width.

MODES OF OPERATION

As input signals to the PCM change, the PCM adjusts its response to output devices. For example, the PCM must calculate a different injector pulse width and ignition timing for idle than it does for Wide Open Throttle (WOT). There are several different modes of operation that determine how the PCM responds to the various input signals.

The multi-port fuel injection systems has the following modes of operation:

- Ignition switch ON (Zero RPM)
- Engine start-up
- Engine warm-up
- Cruise
- Idle
- Acceleration

- Deceleration
- Wide-Open-Throttle
- Ignition switch OFF

Within these modes of operation, there are two different types of operation, OPEN LOOP and CLOSED LOOP.

During OPEN LOOP operation the PCM receives input signals and responds according to preset PCM programming. Inputs from the upstream and downstream heated oxygen sensors are not monitored during OPEN LOOP operation, except for heated oxygen sensor diagnostics (they are checked for shorted conditions at all times).

During CLOSED LOOP operation the PCM monitors the inputs from the upstream and downstream heated oxygen sensors. The upstream heated oxygen sensor input tells the PCM if the calculated injector pulse width resulted in the ideal air-fuel ratio of 14.7 to one. By monitoring the exhaust oxygen content through the upstream heated oxygen sensor, the PCM can fine tune injector pulse width. Fine tuning injector pulse width allows the PCM to achieve optimum fuel economy combined with low emissions.

For the PCM to enter CLOSED LOOP operation, the following must occur:

1. Engine coolant temperature must be over 35°F (1.7°C).
    - If the coolant is over 35°F (1.7°C) the PCM will wait 38 seconds.
    - If the coolant is over 50°F (10°C) the PCM will wait 15 seconds.
    - If the coolant is over 167°F (75°C) the PCM will wait 3 seconds.
    - For other temperatures the PCM will interpolate the correct waiting time.
2. O2 sensor must read either greater than 0.745 volts or less than 0.29 volt.

OPEN LOOP operation is used for engine start-up (crank), engine warm-up, deceleration with fuel shutoff and wide open throttle. Under most conditions, acceleration, deceleration (with A/C on), idle and cruise modes, **with the engine at operating temperature** occur in CLOSED LOOP operation.

IGNITION SWITCH ON (ZERO RPM) MODE

When the ignition switch activates the fuel injection system, the following actions occur:

- The PCM monitors the engine coolant temperature sensor and throttle position sensor input. The PCM determines basic fuel injector pulse width from this input.
- The PCM determines atmospheric air pressure from the MAP sensor input to modify injector pulse width.

When the key is in the ON position and the engine is not running (zero rpm), the Auto Shutdown (ASD) and fuel pump relays de-energize after approximately 1 second. Therefore, battery voltage is not supplied to the fuel pump, ignition coil, fuel injectors and heated oxygen sensors.

ENGINE START-UP MODE

This is an OPEN LOOP mode. If the vehicle is in park or neutral (automatic transaxles) or the clutch pedal is depressed (manual transaxles) the ignition switch energizes the starter relay when the engine is not running. The following actions occur when the starter motor is engaged.

- If the PCM receives the camshaft position sensor and crankshaft position sensor signals, it energizes the Auto Shutdown (ASD) relay and fuel pump relay. If the PCM does not receive both signals within approximately one second, it will not energize the ASD relay and fuel pump relay. The ASD and fuel pump relays supply battery voltage to the fuel pump, fuel injectors, ignition coil, (EGR solenoid and PCV heater if equipped) and heated oxygen sensors.
- The PCM energizes the injectors (on the 69° falling edge) for a calculated pulse width until it determines crankshaft position from the camshaft position sensor and crankshaft position sensor signals. The PCM determines crankshaft position within 1 engine revolution.
- After determining crankshaft position, the PCM begins energizing the injectors in sequence. It adjusts injector pulse width and controls injector synchronization by turning the individual ground paths to the injectors On and Off.
- When the engine idles within ±64 RPM of its target RPM, the PCM compares current MAP sensor value with the atmospheric pressure value received during the Ignition Switch On (zero RPM) mode.

Once the ASD and fuel pump relays have been energized, the PCM determines injector pulse width based on the following:

- MAP
- Engine RPM
- Battery voltage
- Engine coolant temperature
- Inlet/Intake air temperature (IAT)
- Throttle position
- The number of engine revolutions since cranking was initiated

During Start-up the PCM maintains ignition timing at 9° BTDC.

ENGINE WARM-UP MODE

This is an OPEN LOOP mode. The following inputs are received by the PCM:

- Manifold Absolute Pressure (MAP)
- Crankshaft position (engine speed)
- Engine coolant temperature
- Inlet/Intake air temperature (IAT)
- Camshaft position
- Knock sensor

- Throttle position
- A/C switch status
- Battery voltage
- Vehicle speed
- Speed control
- O2 sensors

The PCM adjusts injector pulse width and controls injector synchronization by turning the individual ground paths to the injectors On and Off.

The PCM adjusts ignition timing and engine idle speed. Engine idle speed is adjusted through the idle air control motor.

CRUISE OR IDLE MODE

When the engine is at operating temperature this is a CLOSED LOOP mode. During cruising or idle the following inputs are received by the PCM:

- Manifold absolute pressure
- Crankshaft position (engine speed)
- Inlet/Intake air temperature
- Engine coolant temperature
- Camshaft position
- Knock sensor
- Throttle position
- Exhaust gas oxygen content (O2 sensors)
- A/C switch status
- Battery voltage
- Vehicle speed

The PCM adjusts injector pulse width and controls injector synchronization by turning the individual ground paths to the injectors On and Off.

The PCM adjusts engine idle speed and ignition timing. The PCM adjusts the air/fuel ratio according to the oxygen content in the exhaust gas (measured by the upstream and downstream heated oxygen sensor).

The PCM monitors for engine misfire. During active misfire and depending on the severity, the PCM either continuously illuminates or flashes the malfunction indicator lamp (Check Engine light on instrument panel). Also, the PCM stores an engine misfire DTC in memory, if 2nd trip with fault.

The PCM performs several diagnostic routines. They include:

- Oxygen sensor monitor
- Downstream heated oxygen sensor diagnostics during open loop operation (except for shorted)
- Fuel system monitor
- EGR monitor (if equipped)
- Purge system monitor
- Catalyst efficiency monitor
- All inputs monitored for proper voltage range, rationality.
- All monitored components (refer to **EMISSION APPLICATIONS** for On-Board Diagnostics).

The PCM compares the upstream and downstream heated oxygen sensor inputs to measure catalytic convertor efficiency. If the catalyst efficiency drops below the minimum acceptable percentage, the PCM stores a diagnostic trouble code in memory, after 2 trips.

During certain idle conditions, the PCM may enter a variable idle speed strategy. During variable idle speed strategy the PCM adjusts engine speed based on the following inputs.

- A/C status
- Battery voltage
- Battery temperature or Calculated Battery Temperature
- Engine coolant temperature
- Engine run time
- Inlet/Intake air temperature
- Vehicle mileage

ACCELERATION MODE

This is a CLOSED LOOP mode. The PCM recognizes an abrupt increase in Throttle Position sensor output voltage or MAP sensor output voltage as a demand for increased engine output and vehicle acceleration. The PCM increases injector pulse width in response to increased fuel demand.

- Wide Open Throttle-open loop

DECELERATION MODE

This is a CLOSED LOOP mode. During deceleration the following inputs are received by the PCM:

- A/C status
- Battery voltage
- Inlet/Intake air temperature
- Engine coolant temperature
- Crankshaft position (engine speed)
- Exhaust gas oxygen content (upstream heated oxygen sensor)

- Knock sensor
- Manifold absolute pressure
- Throttle position sensor
- IAC motor (solenoid) control changes in response to MAP sensor feedback

The PCM may receive a closed throttle input from the Throttle Position Sensor (TPS) when it senses an abrupt decrease in manifold pressure. This indicates a hard deceleration (Open Loop). In response, the PCM may momentarily turn off the injectors. This helps improve fuel economy, emissions and engine braking.

WIDE-OPEN-THROTTLE MODE

This is an OPEN LOOP mode. During wide-open-throttle operation, the following inputs are used by the PCM:

- Inlet/Intake air temperature
- Engine coolant temperature
- Engine speed
- Knock sensor
- Manifold absolute pressure
- Throttle position

When the PCM senses a wide-open-throttle condition through the Throttle Position Sensor (TPS) it de-energizes the A/C compressor clutch relay. This disables the air conditioning system and disables EGR (if equipped).

The PCM adjusts injector pulse width to supply a predetermined amount of additional fuel, based on MAP and RPM.

IGNITION SWITCH OFF MODE

When the operator turns the ignition switch to the OFF position, the following occurs:

- All outputs are turned off, unless 02 Heater Monitor test is being run. Refer to **EMISSION APPLICATIONS** for On-Board Diagnostics.
- No inputs are monitored except for the heated oxygen sensors. The PCM monitors the heating elements in the oxygen sensors and then shuts down.

FUEL ECONOMY AND MAINTENANCE

A vehicle that is not properly tuned and maintained cannot be expected to perform at its maximum efficiency and can have an adverse effect on fuel economy. The following recommendations will ensure that the vehicle is performing at its maximum efficiency:

- **Use the recommended motor oil grade.** Using the manufacturer's recommended grade of

Mopar® motor oil can improve fuel mileage by 1-2%. Mopar® motor oil labeled "Energy Conserving" contains friction-reducing additives.

- **Check and replace air filters.** Replacing a clogged air filter with a new Mopar® air filter can improve fuel mileage by as much as 10%.
- **Keep the engine tuned.** Repairing a vehicle that is noticeably out of tune can improve fuel mileage by an average of 4%. Maintaining a vehicle and repairing problems, such as a faulty oxygen sensor, can improve mileage by as much as 40%.
- **Keep tires properly inflated.** Underinflated tires can lower fuel mileage by 0.4% for every 1 psi drop in pressure of all four tires.

FUEL CORRECTION or ADAPTIVE MEMORIES

OPERATION

Short Term

Short Term Adaptive or Short Term Fuel Trim (STFT) is an immediate correction to fuel injector pulse width. During Closed Loop operation, Short Term Adaptive makes immediate adjustments to fuel delivery in direct response to the signal from the upstream O2 sensor. The PCM infers air/fuel ratio by monitoring oxygen content measured by the upstream O2 stream sensor.

This is an immediate response to the O2 sensor signal that is not switching or is consistently high or low. If the upstream oxygen sensor voltage is not consistently switching between 2.5 and 3.5 volts, the PCM knows that the base pulse width calculation needs to be modified by adjusting the injector pulse width until the correct O2 sensor voltage is achieved. The need to adjust the injector pulse width may be a result of vehicle operating conditions, engine wear, fuel quality, etc. The maximum range of authority for Short Term Adaptive is ±33%. Short Term Adaptive values are not stores when the ignition is off.

Long Term

The main function of Long Term Adaptive is to make fuel corrections that permit Short Term Adaptive to hover around zero. In order to maintain correct emissions throughout all operating ranges of the engines, a cell structure based on engine rpm and load (MAP) is used.

There are 26 cells used for the NGC. Two of the cells are used only during idle, as determined by throttle position and park/neutral switch input. The other cells each represent a given off-idle manifold pressure and rpm range.

After the vehicle has reached full operating temperature, short term correction factors will update Long Term Adaptive Memory cells based on vehicle load (RPM/MAP) to allow the Short Term Adaptive value to be brought back to near zero. Once this correction factor is updated in the memory, it will be used by the PCM under all operating conditions, open loop and closed loop. However, the values stored in the Long-term are updated only after the vehicle has entered long-term closed loop at full operating temperature. This is done to prevent any transition temperature or start-up compensation form corrupting long term fuel correction.

Long Term and Short Term Adaptive can each change the pulse width by as much as ±33% for a maximum total correction of ±66% from base pulse width calculation. Long Term Adaptive values are used during both Open Loop and Closed Loop operation.

SYSTEM DIAGNOSIS

OPERATION

The PCM can test many of its own input and output circuits. If the PCM senses a fault in a major system, the PCM stores a Diagnostic Trouble Code (DTC) in memory.

For DTC information see On-Board Diagnostics. Refer to **Electrical/Electronic Control Modules/MODULE, Powertrain Control - Description** .

SPECIFICATIONS

TORQUE

TORQUE SPECIFICATIONS

DESCRIPTION	N.m	Ft. Lbs.	In. Lbs.
Camshaft Position Sensor Mounting Bolts	12	-	105
Crankshaft Position Sensor Mounting Bolts	12	-	105
Engine Coolant Temperature Sensor	28	20	-
Knock Sensor bolt - 3.5L	10	7	88.5
Manifold Tuning Valve - 3.5L	2.8	-	25
Oxygen Sensor	41	30	-
Powertrain Control Module	4	-	35
Throttle Body Mounting - 3.5L	5.5	-	50
Throttle Body Mounting Bracket - 3.5L	27	20	-
Short Runner Valve - 3.5L	6.7	-	60
Fuel Rail Bolts - 3.5L	28	-	250
Fuel Rail Bolts - 5.7, 6.1L	11	-	100

SPECIAL TOOLS

SPECIAL TOOLS

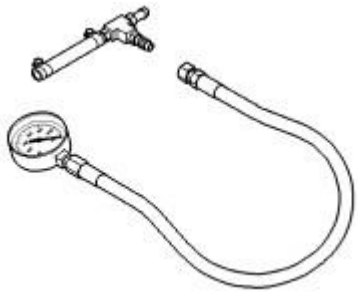

Fig. 131: Fuel Pressure Test Kit - 5069
Courtesy of CHRYSLER LLC

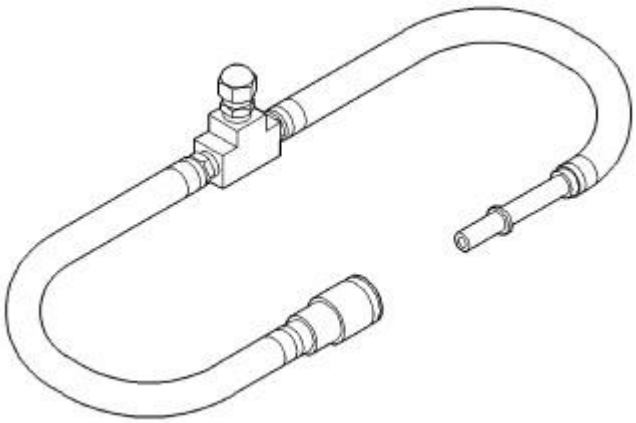

Fig. 132: Fuel Pressure Adapter - 6539
Courtesy of CHRYSLER LLC

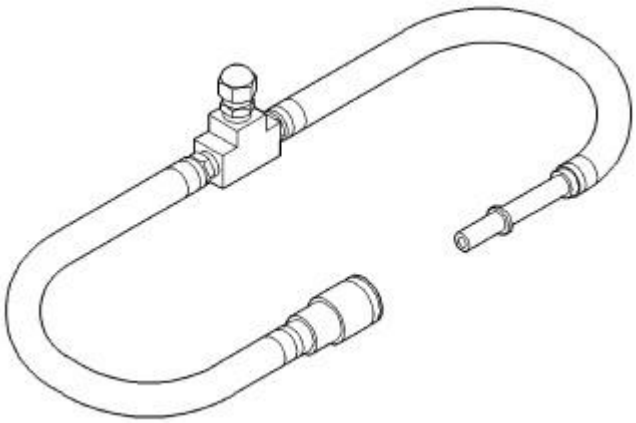

Fig. 133: Fuel Pressure Adapter - 6539
Courtesy of CHRYSLER LLC

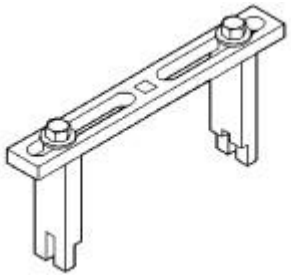

Fig. 134: Spanner Wrench 6856
Courtesy of CHRYSLER LLC

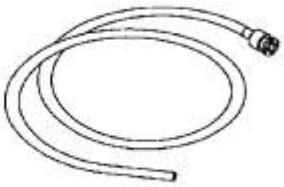

Fig. 135: Adapter, Fuel Pressure - 6668
Courtesy of CHRYSLER LLC

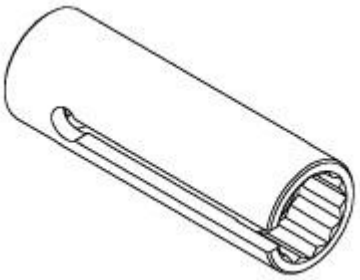

Fig. 136: Oxygen Sensor Socket - C-4907
Courtesy of CHRYSLER LLC

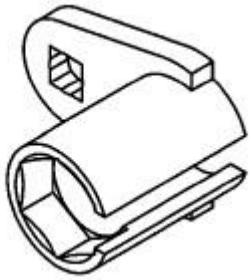

Fig. 137: O2 Sensor Wrench - 8439
Courtesy of CHRYSLER LLC

INJECTOR(S), FUEL

Removal

3.5L

WARNING: The fuel system is under constant pressure even with engine off. Before servicing fuel injector(s), fuel system pressure must be released.

To remove one or more fuel injectors, the fuel rail assembly must be removed from engine.

1. Release fuel system pressure. Refer to **FUEL SYSTEM PRESSURE RELEASE** .
2. Disconnect negative cable to battery.
3. Remove intake manifold plenum. Refer to **Engine/Manifolds/MANIFOLD, Intake - Removal** .
4. Cover intake manifold to prevent foreign material from entering engine.
5. Disconnect fuel supply tube quick connect fittings at the rear of intake manifold. See **Fuel System/Fuel Delivery/FITTING, Quick Connect - Standard Procedure**.

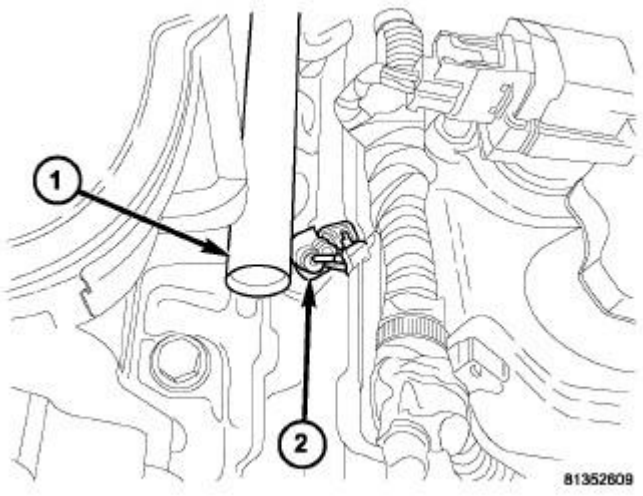

Fig. 138: Fuel Rail And Injector
Courtesy of CHRYSLER LLC

6. If the injector connectors are not tagged with their cylinder number, tag them to identify the correct cylinder
7. Remove electrical connectors from the fuel injectors.
8. Remove fuel rail mounting bolts.
9. Lift fuel rail straight up off of the cylinder head.
10. Remove retaining clips from fuel injectors at fuel rail.
11. Remove fuel injectors.
12. Repeat for remaining injectors.

13. Check injector O-ring for damage. If O-ring is damaged, it must be replaced. Replace the injector clip if it is damaged.

REMOVAL

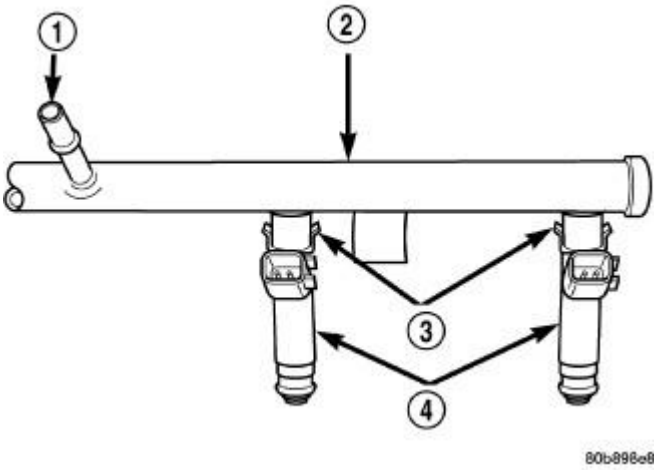

Fig. 139: Fuel Injector Mounting-Typical
Courtesy of CHRYSLER LLC

WARNING: The fuel system is under constant pressure even with engine off. Before servicing fuel injector(s), fuel system pressure must be released.

NOTE: To remove one or more fuel injectors, the fuel rail assembly must be removed from engine.

1. Perform the fuel system pressure release procedure. See **Fuel System/Fuel Delivery - Standard Procedure**
2. Remove the fuel rail assembly. See **Fuel System/Fuel Delivery/RAIL, Fuel - Removal**
3. Remove the fuel injector (4) retaining clip(s) (3) from the fuel rail (2).
4. Remove the injector(s) from the fuel rail assembly.

Installation

3.5L

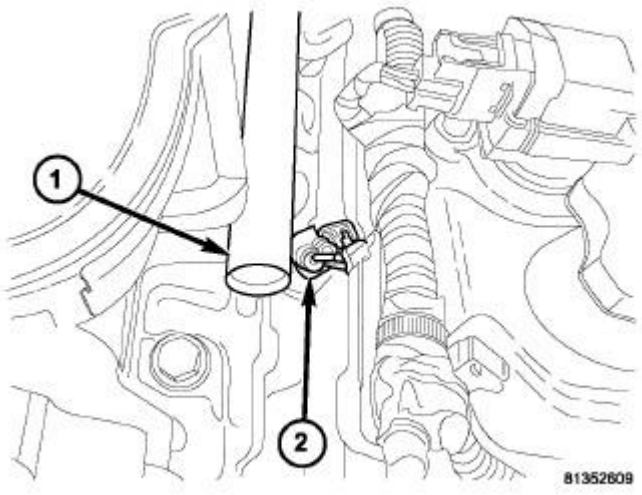

Fig. 140: Fuel Rail And Injector
Courtesy of CHRYSLER LLC

1. Lightly lubricate the fuel injector O-rings with a couple drops of clean engine oil.
2. Install retaining clips on fuel injectors.
3. Push injectors into fuel injector rail until clips are in the correct position.
4. Position fuel rail over cylinder head, and push rail into place. Tighten fuel rail mounting bolts to 11 N.m (100 in. lbs.) torque.
5. Connect fuel supply tube quick connect fittings at the rear of intake manifold. See **Fuel System/Fuel Delivery/FITTING, Quick Connect - Standard Procedure**.
6. Connect electrical connectors to fuel injectors.
7. Install intake manifold plenum. Refer to **Engine/Manifolds/MANIFOLD, Intake - Installation** .
8. Connect negative cable to battery.
9. Use the scan tool to pressurize the fuel system. Check for leaks.

INSTALLATION

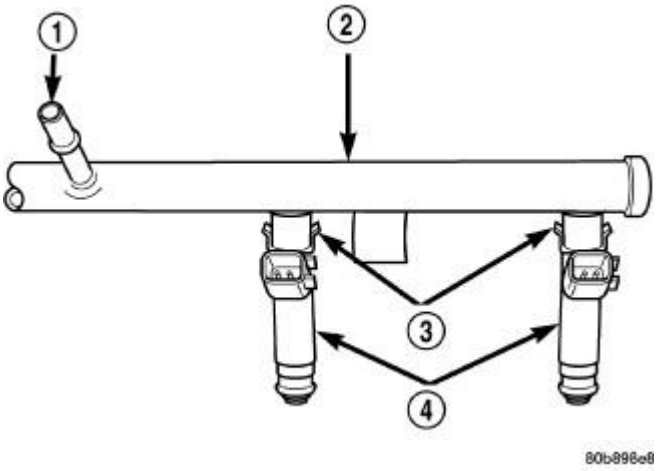

Fig. 141: Fuel Injector Mounting-Typical
Courtesy of CHRYSLER LLC

1. Apply a small amount of engine oil to each fuel injector O-ring. This will help with the fuel rail installation.
2. Install the fuel injector(s) (4) into the fuel rail and install the retainer clip(s) (3).
3. Install the fuel rail assembly. See **Fuel System/Fuel Delivery/RAIL, Fuel - Installation**
4. Start the engine and check for leaks.

PEDAL, ACCELERATOR

Removal

REMOVAL

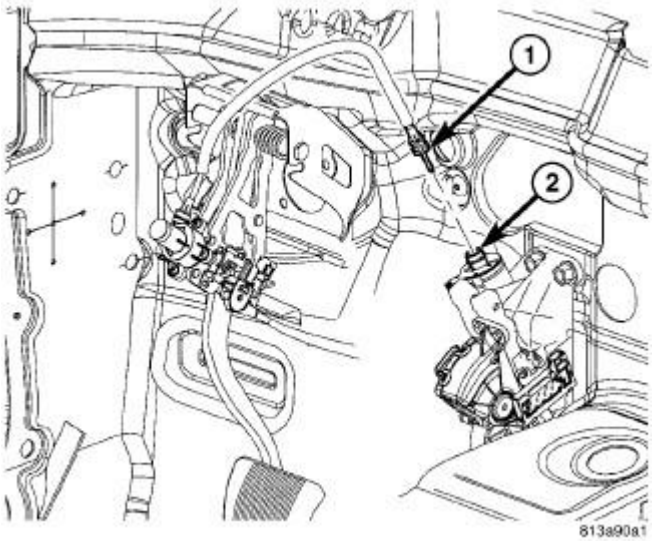

Fig. 142: Adjuster Cable And Accelerator Adjuster Motor

Courtesy of CHRYSLER LLC

1. Disconnect negative battery cable.
2. Disconnect electrical connectors, if equipped with adjustable pedals remove the adjuster cable (1) at accelerator adjuster motor (2).

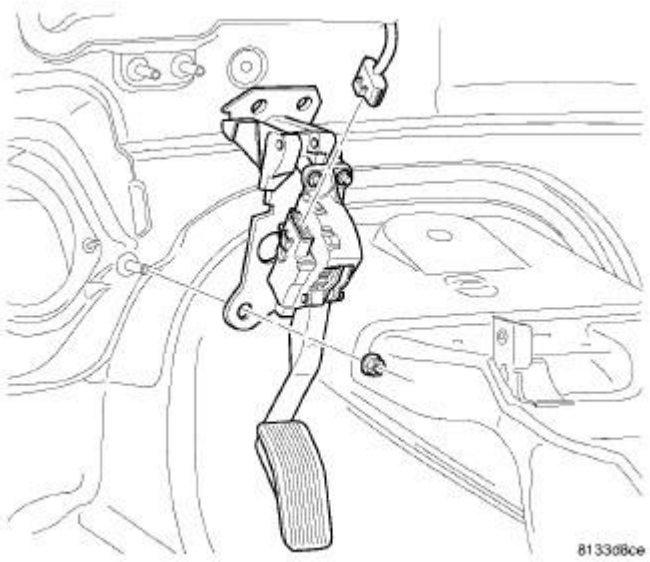

Fig. 143: Removing/Installing Pedal Assembly
Courtesy of CHRYSLER LLC

3. Remove 3 mounting nuts.
4. Remove pedal assembly.

Installation

INSTALLATION

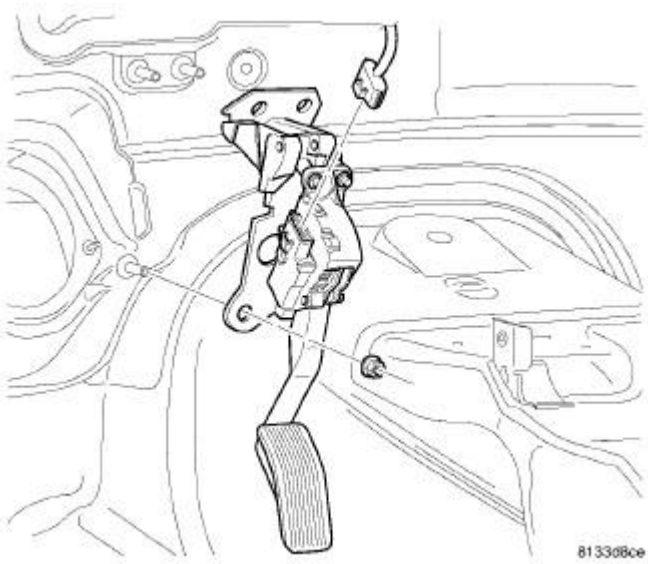

Fig. 144: Removing/Installing Pedal Assembly
Courtesy of CHRYSLER LLC

1. Install pedal assembly to mounting studs.
2. Install nuts.
3. Tighten mounting nuts to 34 N.m (25 ft. lbs.).

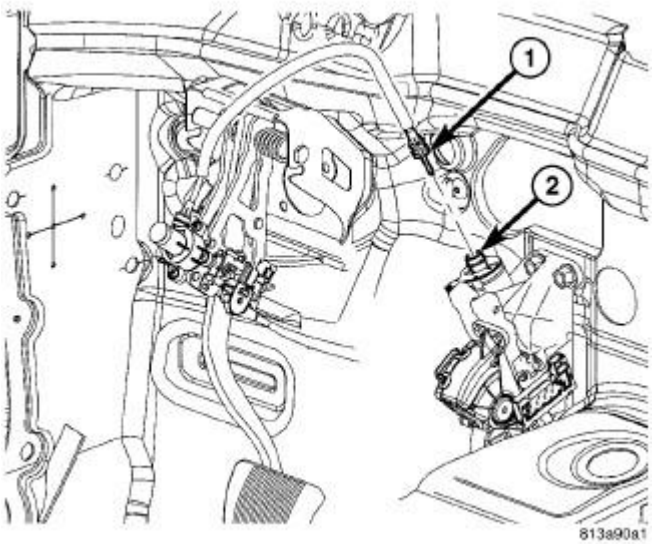

Fig. 145: Adjuster Cable And Accelerator Adjuster Motor
Courtesy of CHRYSLER LLC

4. Connect electrical connector to assembly. If equipped with adjustable pedals perform the synchronization of brake pedal to accelerator pedal.
5. Connect negative battery cable.

6. Synchronize brake pedal to accelerator pedal, then connect adjuster cable (1) to adjuster motor (2). Refer to **Brakes/Hydraulic/Mechanical/PEDAL(S), Brake and/or Accelerator - Installation** .

SENSOR, AIR TEMPERATURE, INLET

Removal

3.5L

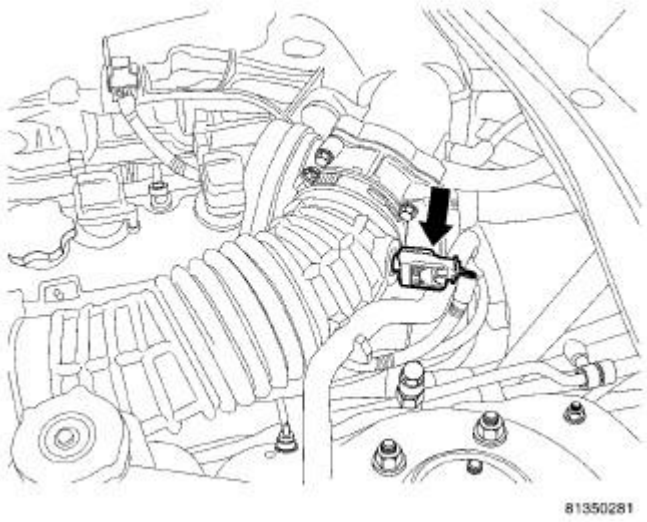

Fig. 146: Locating Inlet Air Temperature Sensor - 3.5L
Courtesy of CHRYSLER LLC

1. Sensor location.
2. Disconnect negative battery cable.

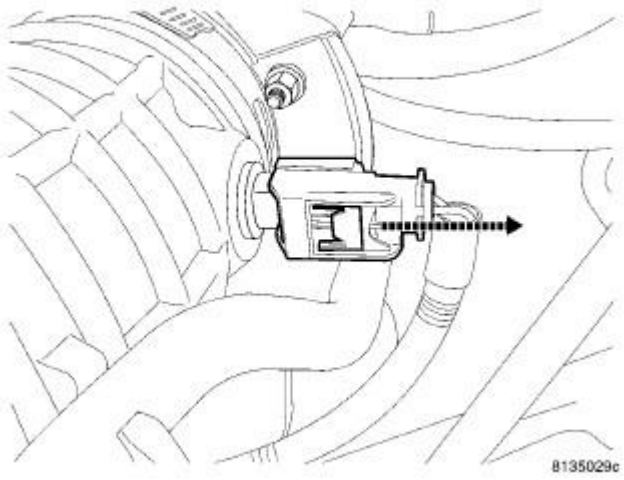

Fig. 147: Inlet Air Temperature Sensor Electrical Connector
Courtesy of CHRYSLER LLC

3. Unlock the electrical connector.
4. Remove electrical connector from sensor.

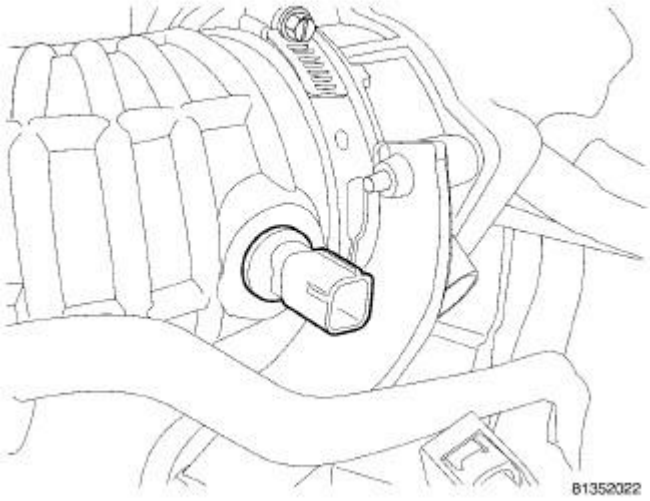

Fig. 148: Identifying Inlet Air Temperature Sensor
Courtesy of CHRYSLER LLC

5. Note sensor orientation.
6. Remove sensor.

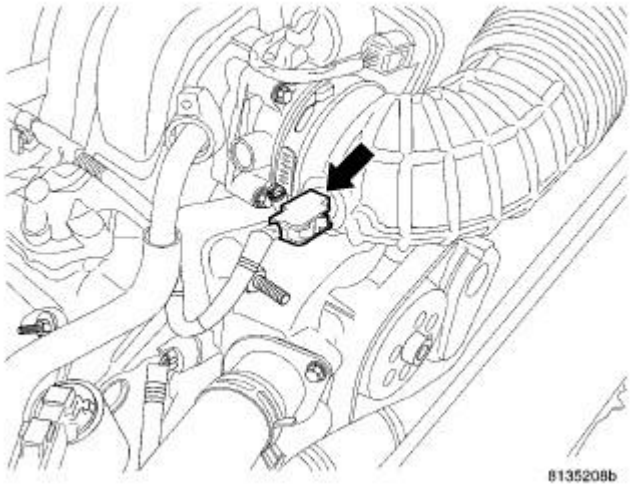

Fig. 149: Locating Inlet Air Temperature Sensor - 5.7L
Courtesy of CHRYSLER LLC

The Inlet Manifold Air Temperature (IAT) sensor is installed into the rubber air intake hose near front of throttle body.

1. Disconnect electrical connector from IAT sensor.
2. Clean dirt from sensor base.
3. Pull sensor from rubber hose.

6.1L

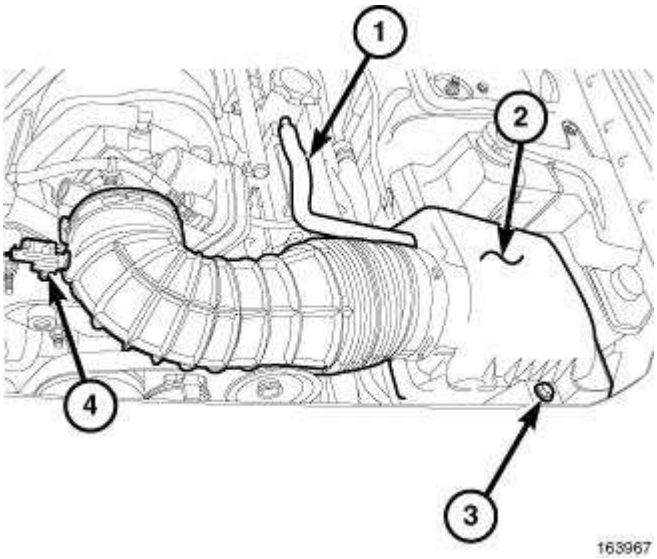

Fig. 150: Air Duct To Throttle Body
Courtesy of CHRYSLER LLC

The Inlet Manifold Air Temperature (IAT) sensor (4) is installed into the rubber air intake hose near front of throttle body.

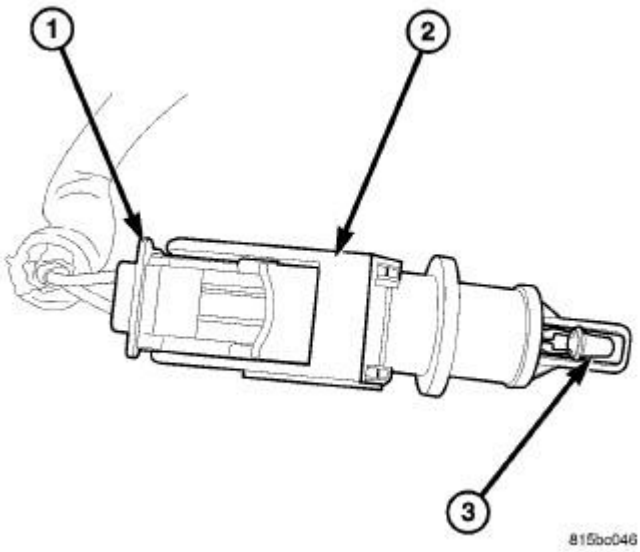

Fig. 151: Inlet Air Temperature Sensor, Electrical Connector, And Sensor Probe
Courtesy of CHRYSLER LLC

1. Pull sensor from rubber hose.
2. Disconnect electrical connector (1) from IAT sensor (2).
3. Check sensor probe (3) for damage.
4. Clean dirt from sensor base.

Installation

3.5L

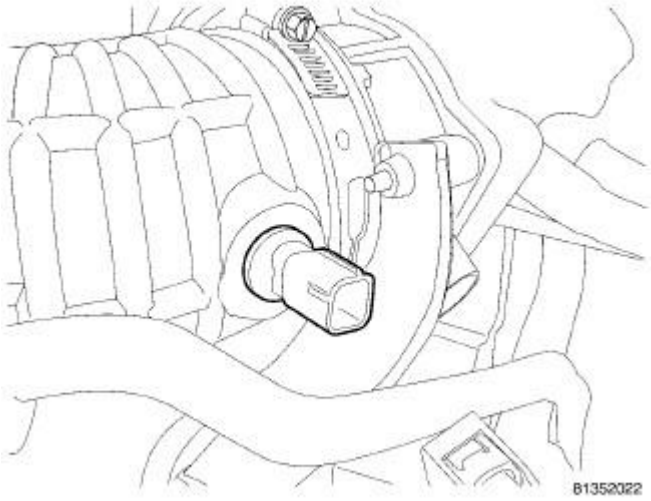

Fig. 152: Identifying Inlet Air Temperature Sensor
Courtesy of CHRYSLER LLC

1. Install sensor. Rotate for proper orientation

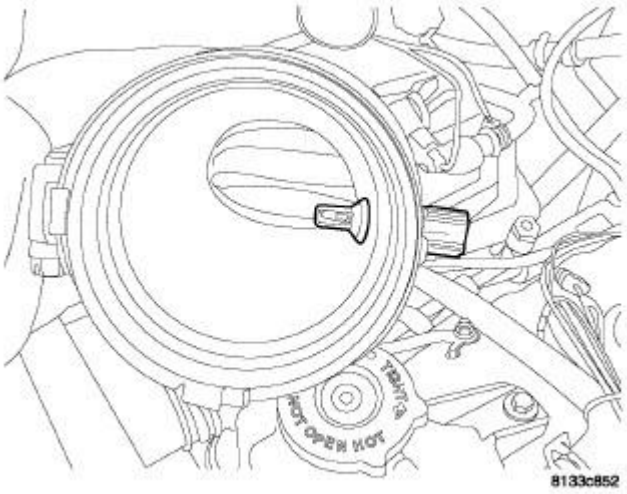

Fig. 153: Inlet Air Temperature Sensor Orientation
Courtesy of CHRYSLER LLC

2. Proper orientation of sensor.

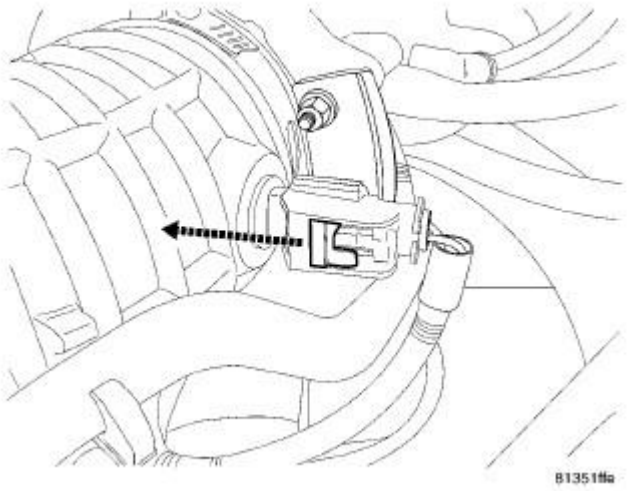

Fig. 154: Removing/Installing Inlet Air Temperature Sensor
Courtesy of CHRYSLER LLC

3. Install electrical connector and lock.
4. Connect negative battery cable.

5.7L

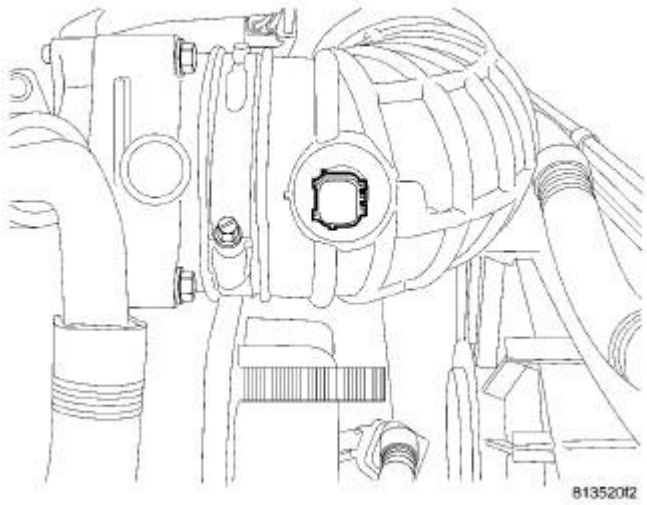

Fig. 155: Identifying Inlet Air Temperature Sensor - 5.7L
Courtesy of CHRYSLER LLC

1. Press sensor into rubber air hose.
2. Rotate sensor into position as shown in illustration. **For proper system operation, sensor**

must be positioned as shown in illustration.

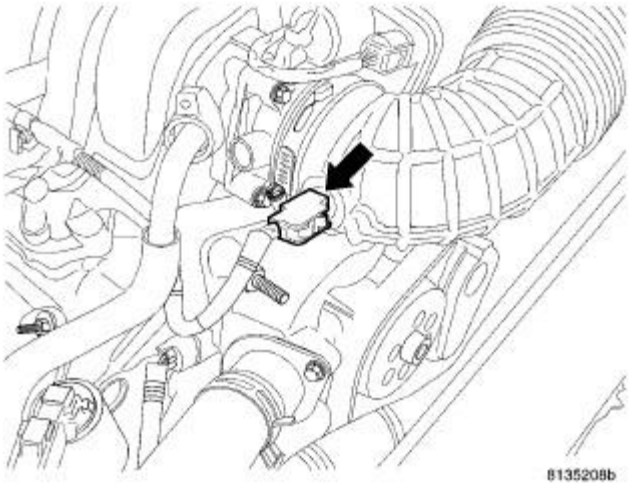

Fig. 156: Locating Inlet Air Temperature Sensor - 5.7L
Courtesy of CHRYSLER LLC

3. Connect electrical connector to sensor.

6.1L

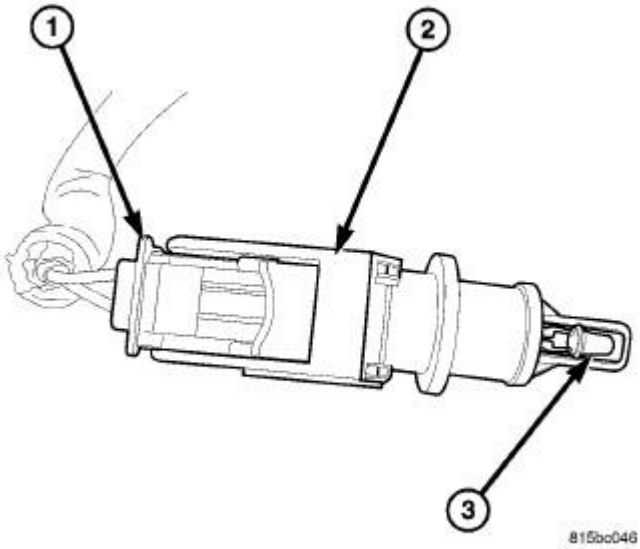

Fig. 157: Inlet Air Temperature Sensor, Electrical Connector, And Sensor Probe
Courtesy of CHRYSLER LLC

1. Connect electrical connector (1) to sensor (2).
2. Press sensor into rubber air hose. Mate the notches. Be careful not to bend or damage probe

(3).

SENSOR, CRANKSHAFT POSITION

Description

DESCRIPTION



Fig. 158: Crankshaft Position Sensor
Courtesy of CHRYSLER LLC

The Crankshaft Position (CKP) sensor (1) is a hall effect device combined with an internal magnet.

The CKP sensor is mounted into the right rear side of the cylinder block. It is positioned and bolted into a machined hole.

Operation

OPERATION

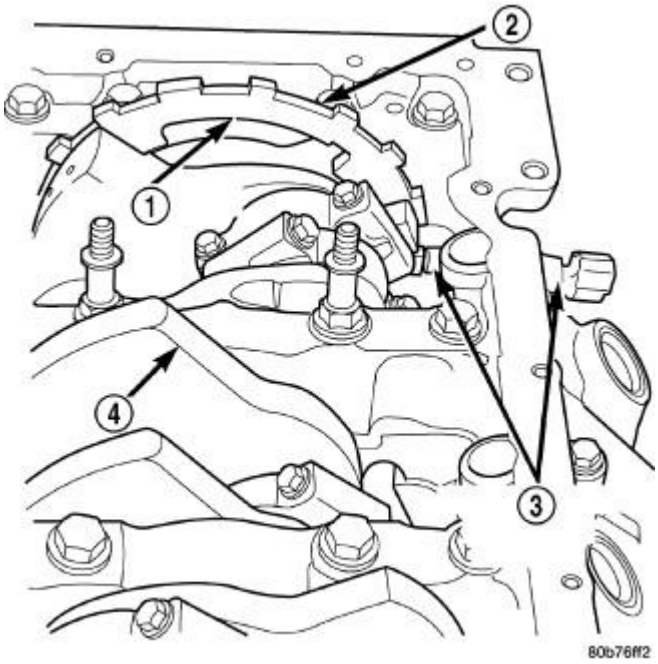

Fig. 159: Crankshaft Position Sensor, Engine Crankshaft, And Tonewheel Notches
Courtesy of CHRYSLER LLC

The engine speed and crankshaft position are provided through the CKP (Crankshaft Position) sensor (3). The sensor generates pulses which sends an input signal to the Powertrain Control Module (PCM). The PCM interprets the sensor input signal to determine the crankshaft position. The PCM then uses this information, along with other inputs, to determine injector sequence and ignition timing.

A tonewheel (targetwheel) is bolted to the engine crankshaft (1). This tonewheel has notches (2) on the outer edge.



Fig. 160: Crankshaft Position Sensor

Courtesy of CHRYSLER LLC

The sensor (1) is a hall effect device combined with an internal magnet. It is also sensitive to steel within a certain distance from it.

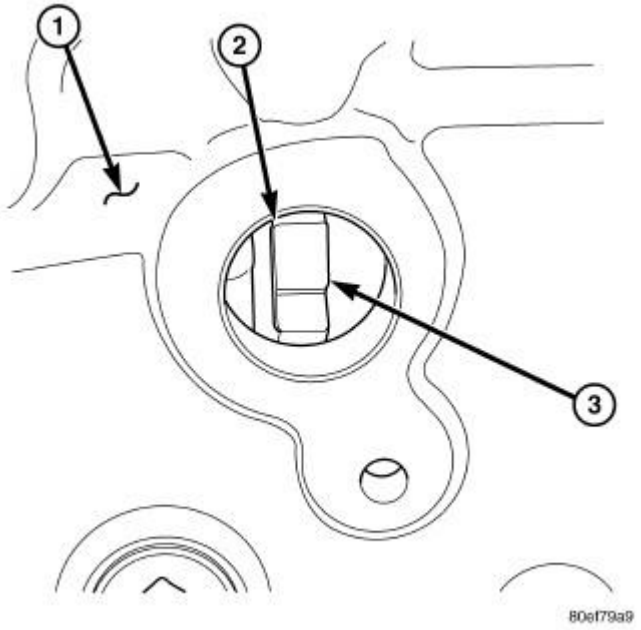

Fig. 161: CKP Sensor Operation And Notches - 5.7L V-8
Courtesy of CHRYSLER LLC

The notches (3) cause a pulse to be generated when they pass under the sensor. The generated pulses are the input signal to the PCM.

Removal

3.5L

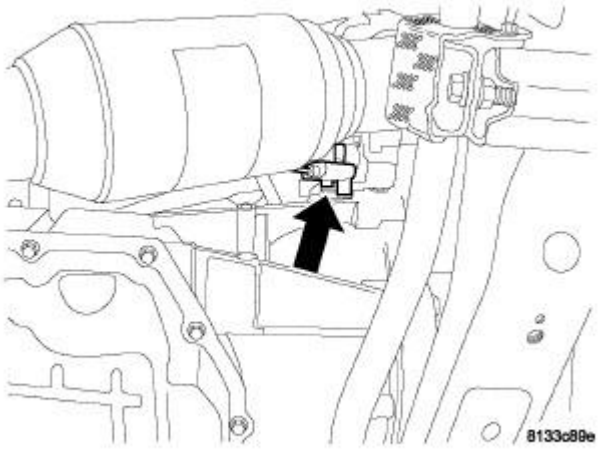

Fig. 162: Crankshaft Position Sensor Location
Courtesy of CHRYSLER LLC

1. Disconnect negative battery cable.
2. Raise vehicle and support.

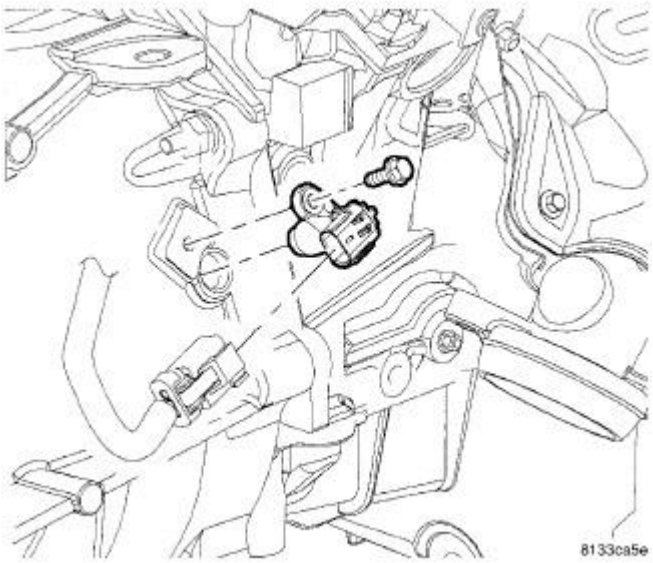

Fig. 163: Crankshaft Position Sensor
Courtesy of CHRYSLER LLC

3. Unlock and disconnect the electrical connector.
4. Remove mounting bolt.
5. Remove sensor.

REMOVAL

The Crankshaft Position (CKP) sensor is located at the right-rear side of the engine block (1). It is positioned and bolted into a machined hole in the engine block.

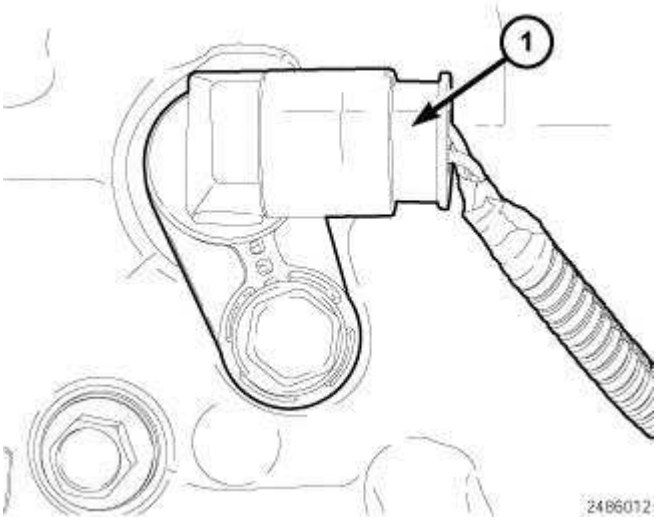

Fig. 164: Crankshaft Position Sensor Electrical Connector
Courtesy of CHRYSLER LLC

1. Disconnect and isolate the negative battery cable.
2. Raise and support the vehicle.
3. Remove the starter motor. Refer to **Electrical/Starting/STARTER - Removal**
4. Disconnect the CKP sensor electrical connector (1).

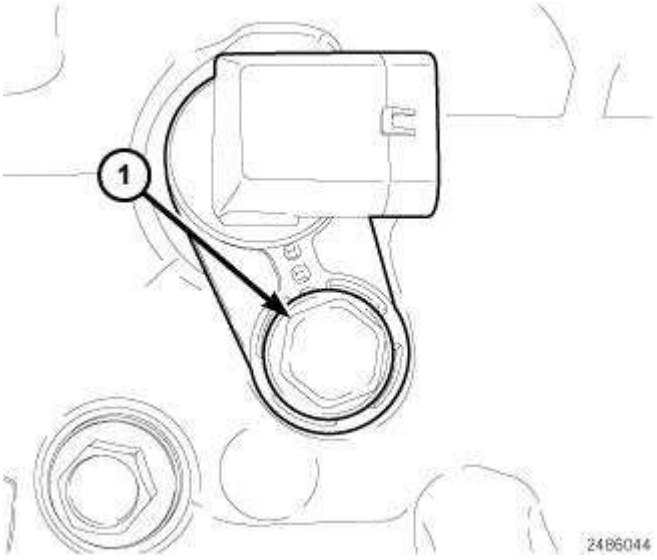

Fig. 165: Crankshaft Position Sensor Mounting Bolt
Courtesy of CHRYSLER LLC

5. Remove the CKP sensor mounting bolt (1).
6. Using a slight twisting motion, remove the CKP sensor from the engine block.



Fig. 166: Crankshaft Position Sensor
Courtesy of CHRYSLER LLC

7. Check the condition of the sensor O-ring (1) and replace if necessary.

Installation

3.5L

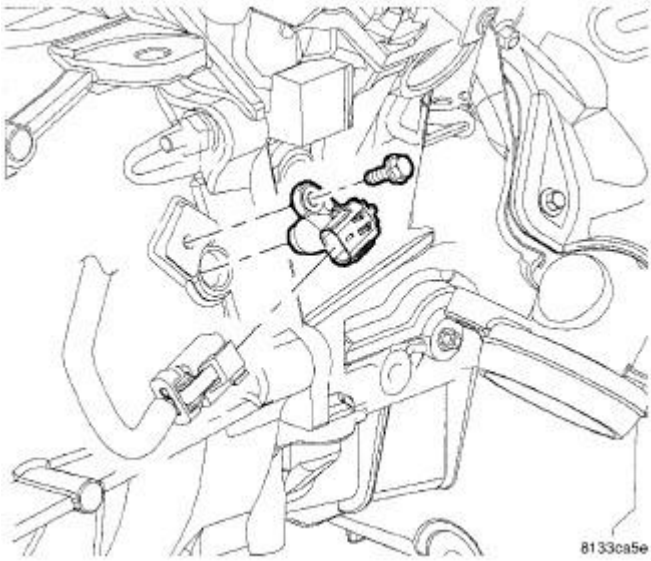

Fig. 167: Crankshaft Position Sensor
Courtesy of CHRYSLER LLC

NOTE: **If reinstalling the sensor, check the sensor O-ring for damage and replace if necessary. Lubricate the O-ring with clean engine oil before installing the sensor.**

1. Push the crankshaft position (CKP) sensor into the transmission case with a twisting motion until fully seated.

CAUTION: **Before tightening the sensor mounting bolt, be sure the sensor is completely flush to the mounting surface. If the sensor is not flush, damage to the sensor mounting tang may result.**

2. While holding the sensor in this position, install and tighten the retaining bolt to 12 N.m (105 in. lbs.).
3. Connect and lock the electrical connector to the CKP sensor.
4. Connect the negative battery cable and tighten nut to 5 N.m (45 in. lbs.).

NOTE: **The Cam/Crank Variation Relearn procedure must be performed anytime there has been a repair/replacement made to a powertrain system, for example: flywheel, valvetrain, camshaft and/or crankshaft sensors or components. Refer to DTC-Based Diagnostics/MODULE, Powertrain Control (PCM) - Standard Procedure**

INSTALLATION



Fig. 168: Crankshaft Position Sensor
Courtesy of CHRYSLER LLC

NOTE: **Before installing the Crankshaft Position (CKP) sensor, check the condition of the sensor O-ring (1) and replace if necessary.**

1. Clean the machined hole in the engine block.
2. Apply a small amount of engine oil to the CKP sensor O-ring (1).
3. Install the CKP sensor into the engine block with a slight twisting motion.

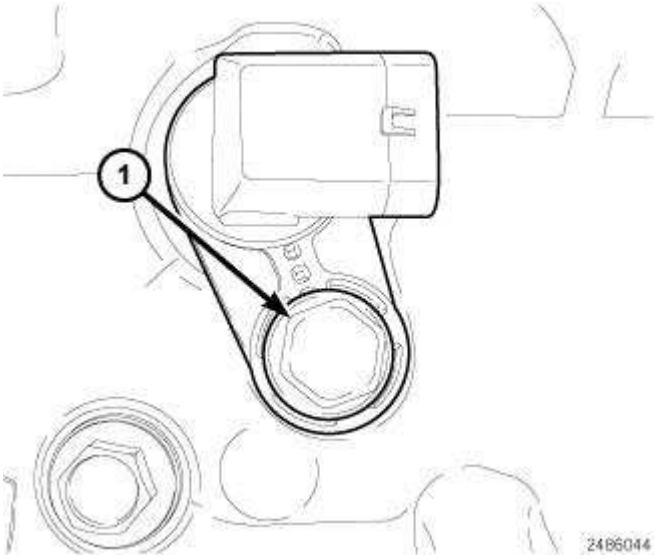

Fig. 169: Crankshaft Position Sensor Mounting Bolt
Courtesy of CHRYSLER LLC

CAUTION: Before tightening the CKP sensor mounting bolt (1), be sure the sensor is completely flush to the cylinder block. If sensor is not flush, damage to the sensor mounting tang may result.

4. Install the CKP sensor mounting bolt (1) and tighten to 12 N.m (9 ft. lbs.).

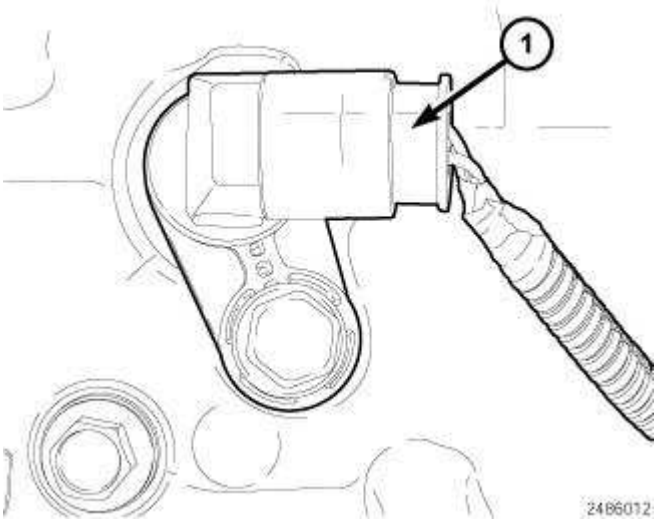

Fig. 170: Crankshaft Position Sensor Electrical Connector
Courtesy of CHRYSLER LLC

5. Connect the CKP sensor electrical connector (1).
6. Install the starter motor. Refer to **Electrical/Starting/STARTER - Installation**
7. Lower the vehicle.
8. Install the negative battery cable.

SENSOR, MANIFOLD AIR PRESSURE (MAP)

Removal

3.5L

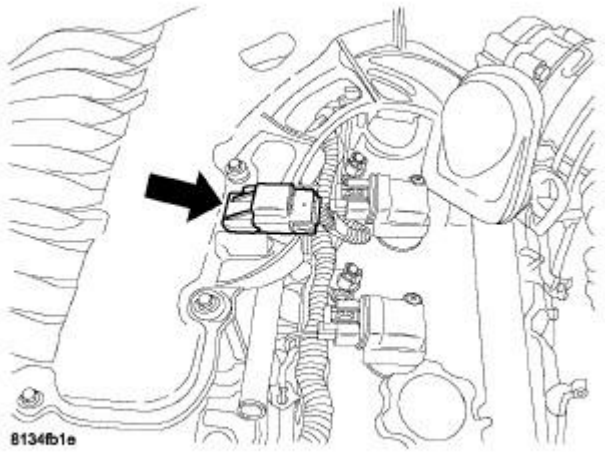

Fig. 171: Locating Manifold Air Pressure (MAP) Sensor
Courtesy of CHRYSLER LLC

1. Sensor location.
2. Disconnect negative battery cable.

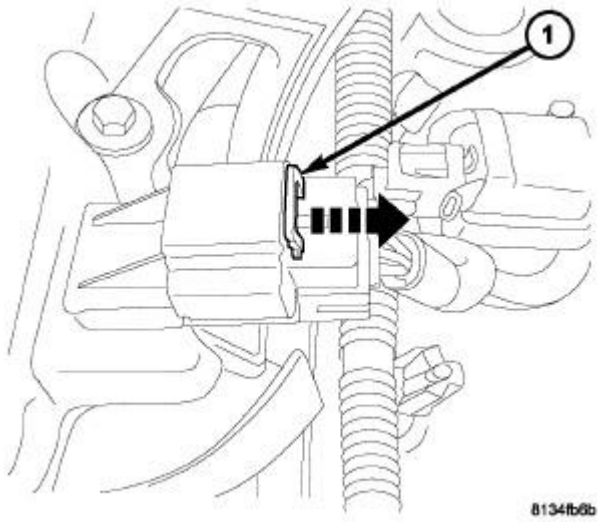

Fig. 172: MAP Sensor Electrical Connector
Courtesy of CHRYSLER LLC

3. Unlock the electrical connector.

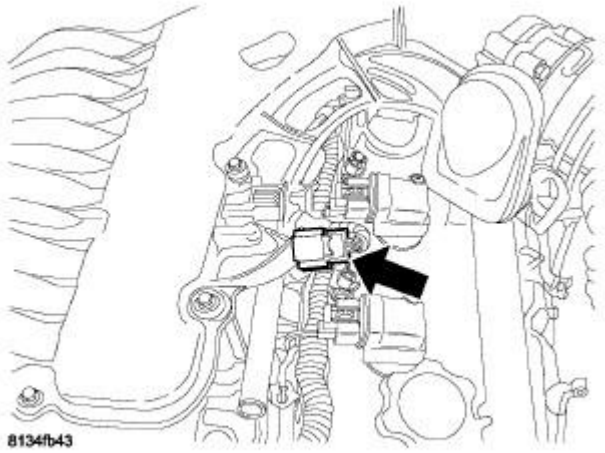

Fig. 173: Disconnecting/Connecting MAP Sensor Electrical Connector
Courtesy of CHRYSLER LLC

4. Disconnect the electrical connector.

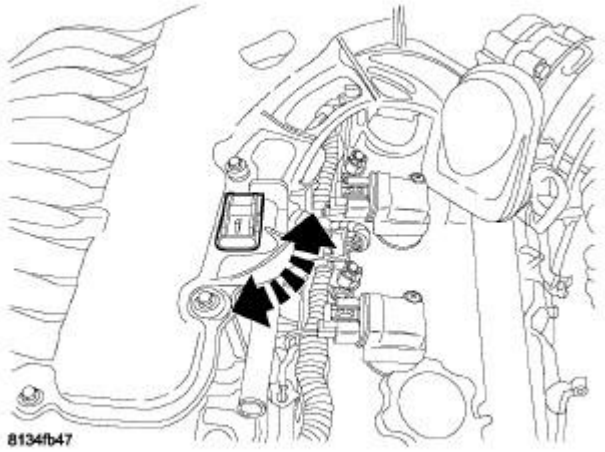

Fig. 174: Rotating MAP Sensor 1/4 Turn Clockwise
Courtesy of CHRYSLER LLC

5. Rotate sensor 1/4 turn clockwise.
6. Pull up on sensor.

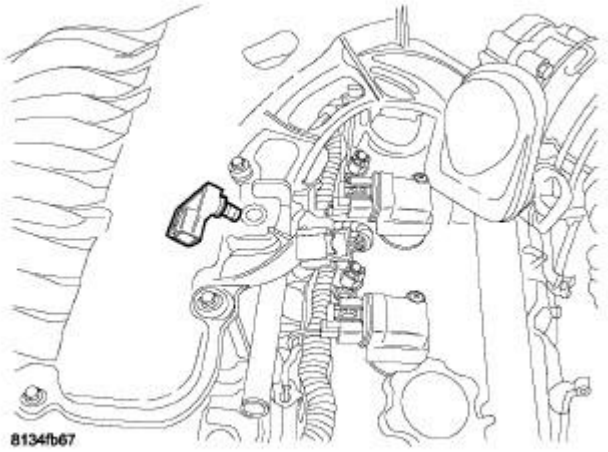

Fig. 175: Removing/Installing MAP Sensor
Courtesy of CHRYSLER LLC

7. Remove sensor.

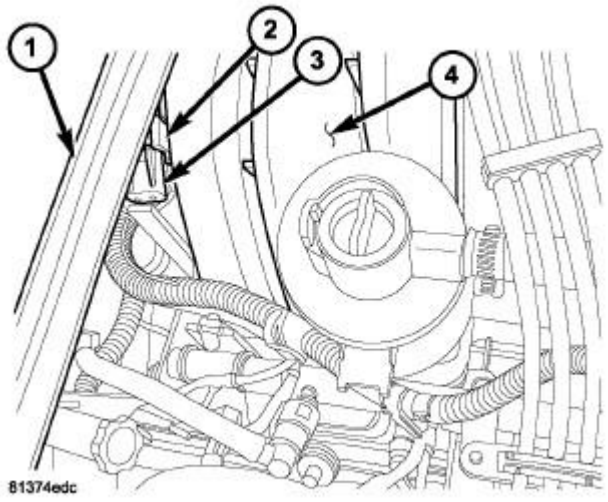

Fig. 176: Locating Manifold Air Pressure (MAP) Sensor - 5.7L
Courtesy of CHRYSLER LLC

The Manifold Absolute Pressure (MAP) sensor (3) is mounted into the top/rear of the intake manifold (4) near the cowl/hood seal (1).

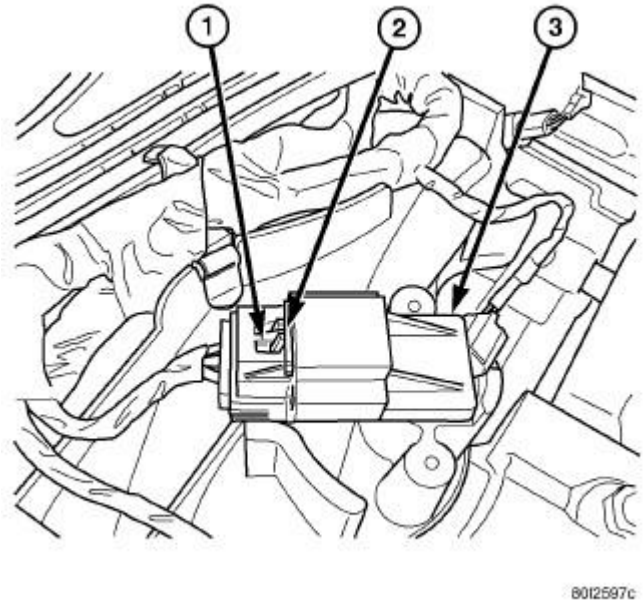

Fig. 177: Removing/Installing MAP Sensor - 5.7L
Courtesy of CHRYSLER LLC

1. Disconnect electrical connector at sensor by sliding release lock out (1). Press down on lock tab (2) for removal.

2. Rotate sensor 1/4 turn counter-clockwise for removal.
3. Check condition of sensor o-ring.

6.1L

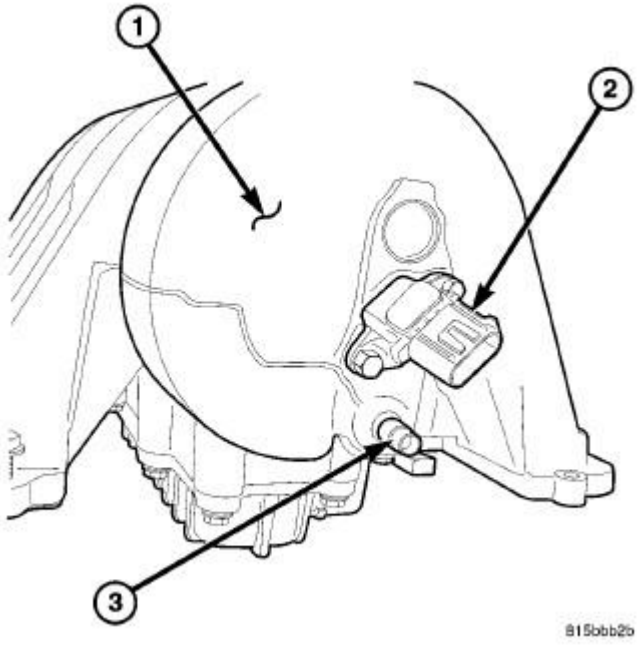

Fig. 178: MAP SENSOR LOCATION
Courtesy of CHRYSLER LLC

The Manifold Absolute Pressure (MAP) sensor (2) is located at the rear of the intake manifold (1).

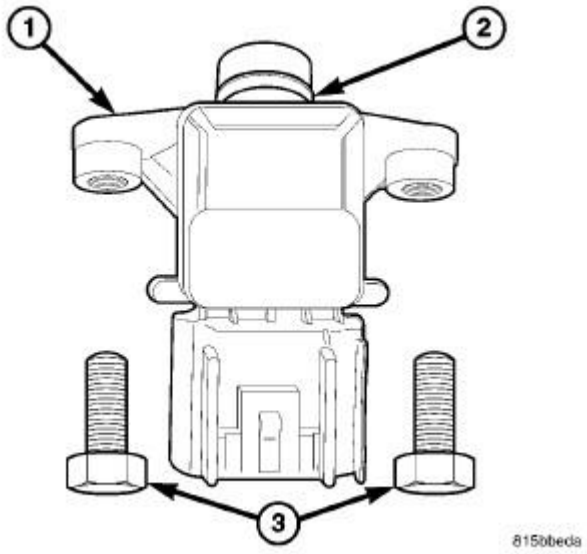

Fig. 179: MAP Sensor Mounting Bolts And O-Ring

Courtesy of CHRYSLER LLC

1. Disconnect electrical connector at sensor.
2. Remove two sensor mounting bolts (3).
3. Check condition of sensor O-ring (2).

Installation

3.5L

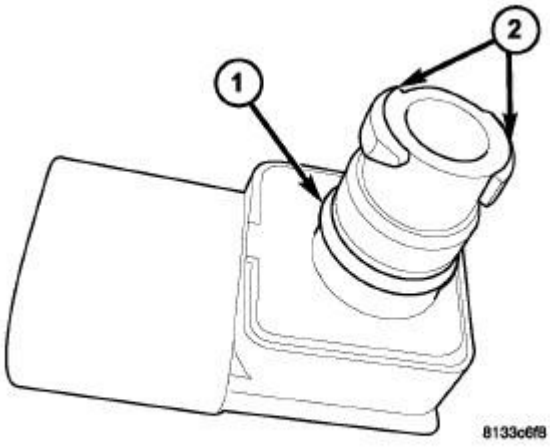

Fig. 180: MAP Sensor And O-Ring
Courtesy of CHRYSLER LLC

1. Clean MAP sensor mounting hole at intake manifold.
2. Check MAP sensor o-ring seal for cuts or tears.

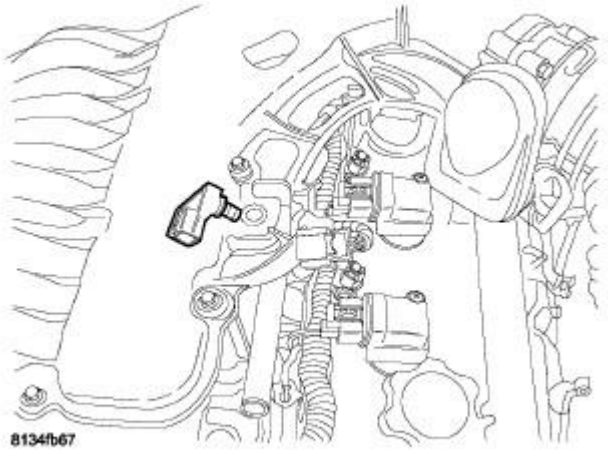

Fig. 181: Removing/Installing MAP Sensor
Courtesy of CHRYSLER LLC

3. Position sensor into intake manifold.

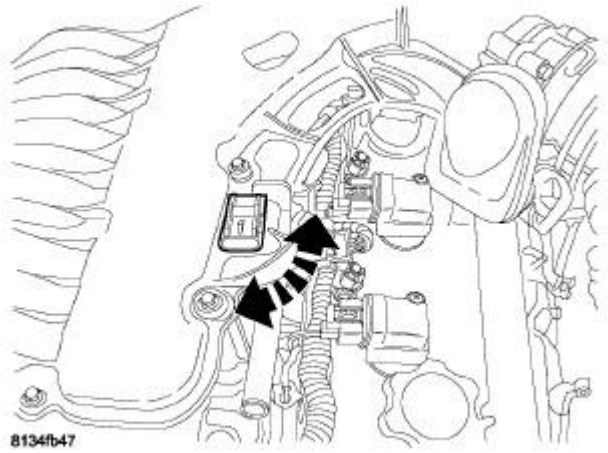

Fig. 182: Rotating MAP Sensor 1/4 Turn Clockwise
Courtesy of CHRYSLER LLC

4. Rotate sensor 1/4 turn clockwise for installation.

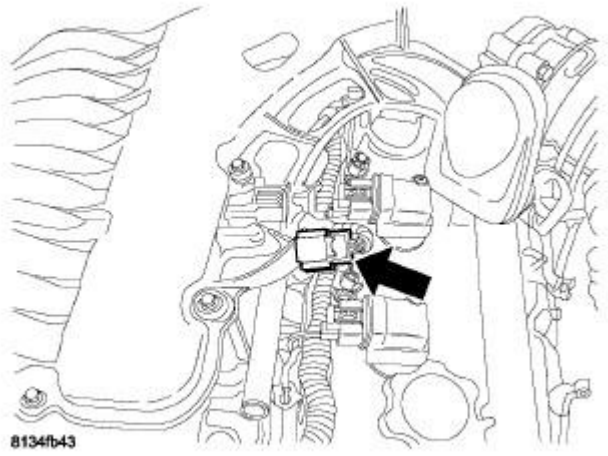

Fig. 183: Disconnecting/Connecting MAP Sensor Electrical Connector
Courtesy of CHRYSLER LLC

5. Connect electrical connector to sensor.
6. Lock electrical connector.
7. Connect negative battery cable.

5.7L

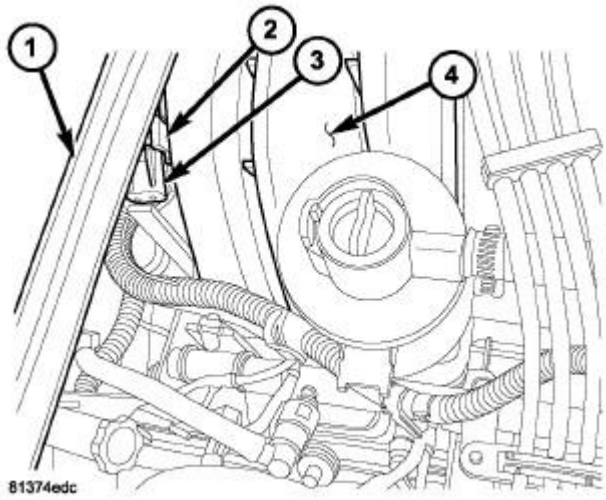

Fig. 184: Locating Manifold Air Pressure (MAP) Sensor - 5.7L
Courtesy of CHRYSLER LLC

1. Clean MAP sensor mounting hole at intake manifold.

2. Check MAP sensor o-ring seal for cuts or tears.
3. Position sensor (3) into intake manifold.
4. Rotate sensor 1/4 turn clockwise for installation.
5. Connect electrical connector (2) to sensor (3).

6.1L

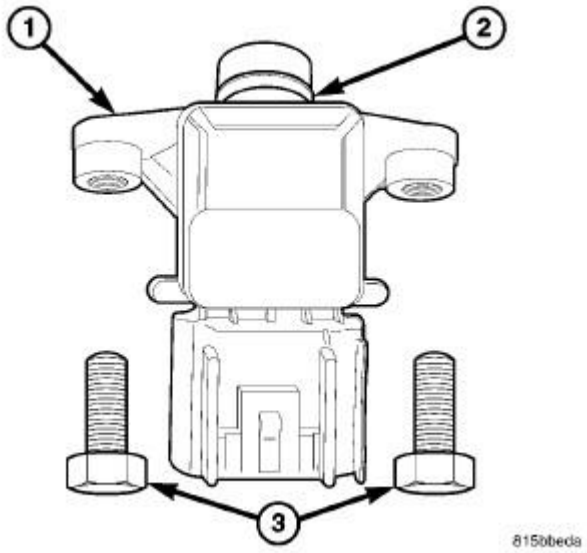

Fig. 185: MAP Sensor Mounting Bolts And O-Ring
Courtesy of CHRYSLER LLC

1. Clean MAP sensor mounting hole at rear of intake manifold.
2. Check MAP sensor o-ring seal (2) for cuts or tears.
3. Position sensor (1) into intake manifold.
4. Install two sensor mounting bolts (3).
5. Connect electrical connector to sensor.

SENSOR, OXYGEN

Removal

3.5L

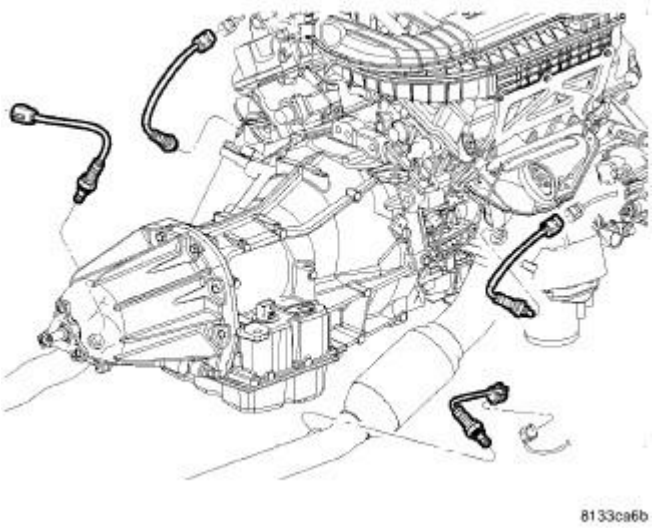

Fig. 186: Oxygen Sensor Location
Courtesy of CHRYSLER LLC

The engines uses two heated oxygen sensors, one in each exhaust manifold.

CAUTION: Never apply any type of grease to the oxygen sensor electrical connector, or attempt any soldering of the sensor wiring harness.

WARNING: The exhaust manifold, exhaust pipes and catalytic converter become very hot during engine operation. Allow engine to cool before removing oxygen sensor.

CAUTION: When disconnecting sensor electrical connector, do not pull directly on wire going into sensor.

1. Remove the negative battery cable.
2. Raise vehicle and support.
3. Disconnect the heated oxygen sensor electrical connector.
4. Use a socket such as Snap-On YA8875 or a crow foot wrench to remove oxygen sensor.

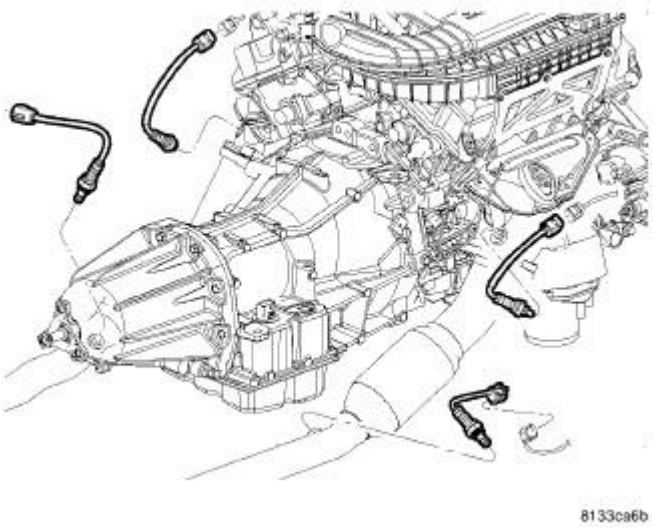

Fig. 187: Oxygen Sensor Location
Courtesy of CHRYSLER LLC

Refer to illustration for typical O2S (oxygen sensor) locations if equipped with four oxygen sensors.

CAUTION: Never apply any type of grease to the oxygen sensor electrical connector, or attempt any soldering of the sensor wiring harness.

WARNING: The exhaust manifold, exhaust pipes and catalytic converter become very hot during engine operation. Allow engine to cool before removing oxygen sensor.

1. Raise and support vehicle.
2. Disconnect wire connector from O2S sensor.

CAUTION: When disconnecting sensor electrical connector, do not pull directly on wire going into sensor.

3. Remove O2S sensor with an oxygen sensor removal and installation tool.
4. Clean threads in exhaust pipe using appropriate tap.

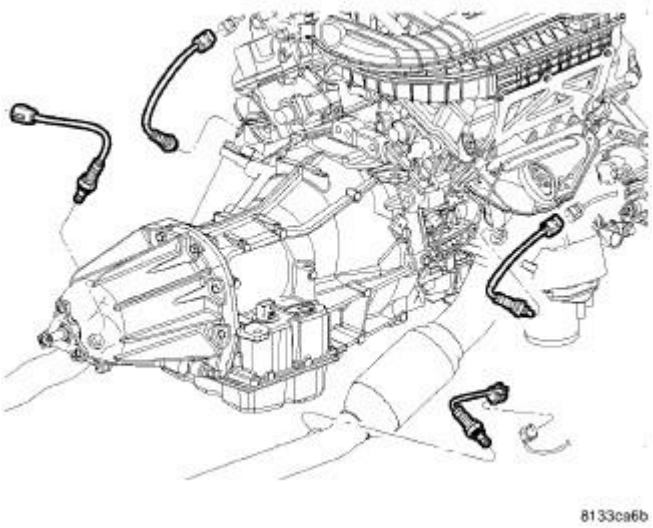

Fig. 188: Oxygen Sensor Location
Courtesy of CHRYSLER LLC

Refer to illustration for typical O2S (oxygen sensor) locations if equipped with four oxygen sensors.

CAUTION: Never apply any type of grease to the oxygen sensor electrical connector, or attempt any soldering of the sensor wiring harness.

WARNING: The exhaust manifold, exhaust pipes and catalytic converter become very hot during engine operation. Allow engine to cool before removing oxygen sensor.

1. Raise and support vehicle.
2. Disconnect wire connector from O2S sensor.

CAUTION: When disconnecting sensor electrical connector, do not pull directly on wire going into sensor.

3. Remove O2S sensor with an oxygen sensor removal and installation tool.
4. Clean threads in exhaust pipe using appropriate tap.

Installation

3.5L

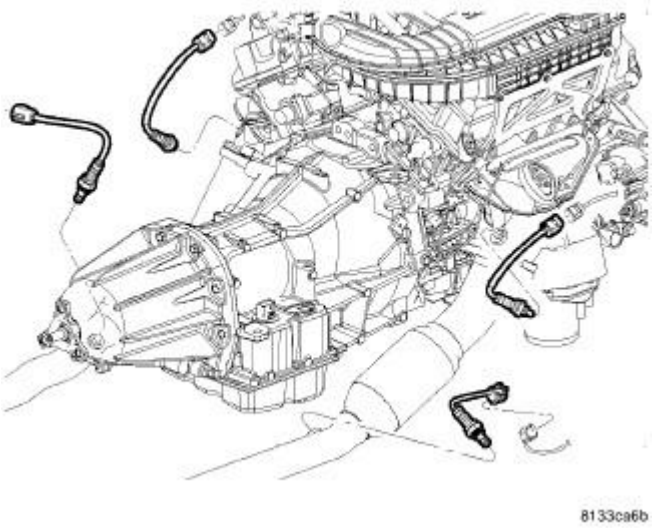

Fig. 189: Oxygen Sensor Location
Courtesy of CHRYSLER LLC

NOTE: When replacing an O2 Sensor, the PCM RAM memory must be cleared, either by disconnecting the PCM C-1 connector or momentarily disconnecting the Battery negative terminal. The NGC learns the characteristics of each O2 heater element and these old values should be cleared when installing a new O2 sensor. The customer may experience driveability issues if this is not performed.

CAUTION: Never apply any type of grease to the oxygen sensor electrical connector, or attempt any soldering of the sensor wiring harness.

The engines uses two heated oxygen sensors, one in each exhaust manifold.

1. After removing the sensor, the exhaust manifold threads must be cleaned with an 18 mm X 1.5 + 6E tap. If reusing the original sensor, coat the sensor threads with an anti-seize compound such as Loctite 771- 64 or equivalent. New sensors have compound on the threads and do not require an additional coating. Tighten the sensor to 41 N.m (30 ft. lbs.) torque.
2. Connect the heated oxygen sensor electrical connector.
3. Lower vehicle.
4. Install the negative battery cable.

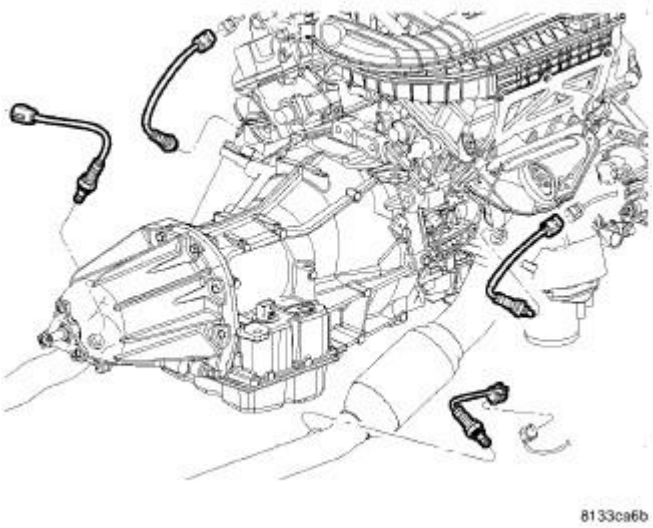

Fig. 190: Oxygen Sensor Location
Courtesy of CHRYSLER LLC

NOTE: When replacing an O2 Sensor, the PCM's RAM memory must be cleared. This can be done by either by disconnecting the PCM's C-1 connector, or by momentarily disconnecting the negative battery cable. The PCM learns the characteristics of each O2 heater element, and these old values should be cleared when installing a new O2 sensor. Driveability problems may be experienced if this step is not performed.

CAUTION: Never apply any type of grease to the oxygen sensor electrical connector, or attempt any soldering of the sensor wiring harness.

Threads of new oxygen sensors are factory coated with anti-seize compound to aid in removal.**DO NOT add any additional anti-seize compound to threads of a new oxygen sensor.**

1. Install O2S sensor. Tighten to 41 N.m (30 ft. lbs.) torque.
2. Connect O2S sensor wire connector.
3. Lower vehicle.

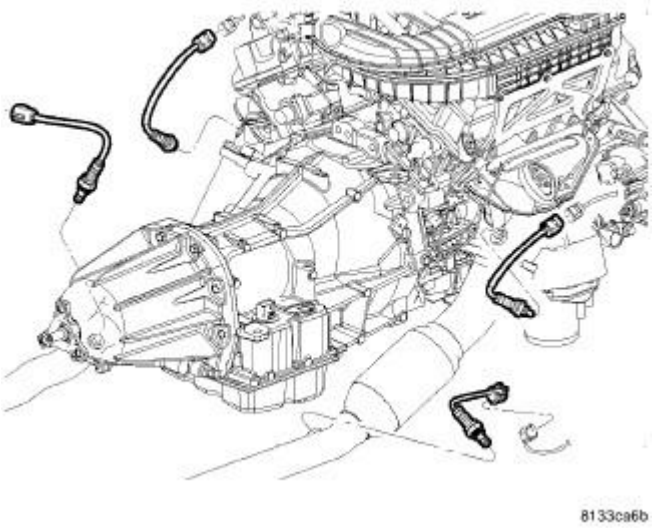

Fig. 191: Oxygen Sensor Location
Courtesy of CHRYSLER LLC

NOTE: When replacing an O2 Sensor, the PCM's RAM memory must be cleared. This can be done by either by disconnecting the PCM's C-1 connector, or by momentarily disconnecting the negative battery cable. The PCM learns the characteristics of each O2 heater element, and these old values should be cleared when installing a new O2 sensor. Driveability problems may be experienced if this step is not performed.

CAUTION: Never apply any type of grease to the oxygen sensor electrical connector, or attempt any soldering of the sensor wiring harness.

Threads of new oxygen sensors are factory coated with anti-seize compound to aid in removal.**DO NOT add any additional anti-seize compound to threads of a new oxygen sensor.**

1. Install O2S sensor. Tighten to 41 N.m (30 ft. lbs.).
2. Connect O2S sensor wire connector.
3. Lower vehicle.

SOLENOID, SHORT RUNNER VALVE

Operation

OPERATION

The SRV system operates under WOT conditions above 5000 rpm to maximize engine performance. When actuated by the PCM, the SRV solenoid energizes, allowing mechanical linkage to redirect the intake air flow to six short runners. The PCM looks for a current spike when actuating the solenoid. If

the spike is not present, the PCM sets the DTC.

Removal

REMOVAL

1. Disconnect negative battery cable.

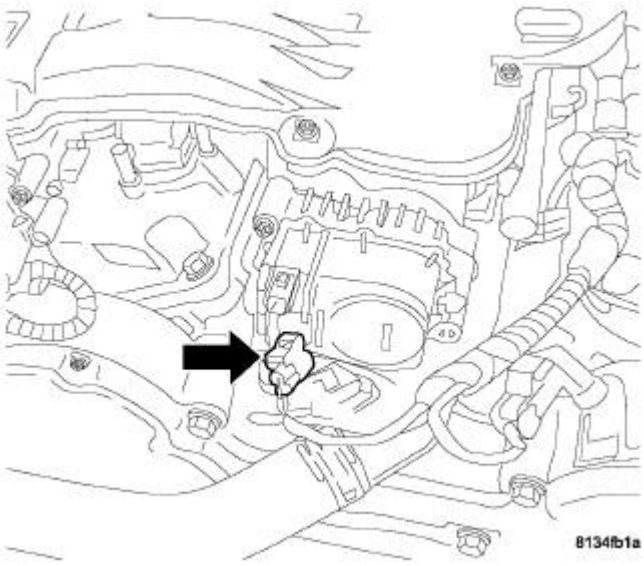

Fig. 192: Short Runner Valve Solenoid Electrical Connector
Courtesy of CHRYSLER LLC

2. Remove the electrical connector.

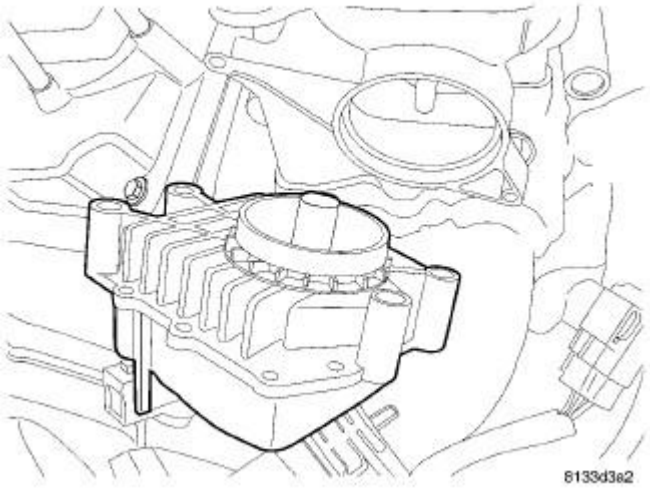

Fig. 193: Short Runner Valve

Courtesy of CHRYSLER LLC

3. Remove the 2 mounting bolts.
4. Remove the Short Runner Valve.

Installation

INSTALLATION

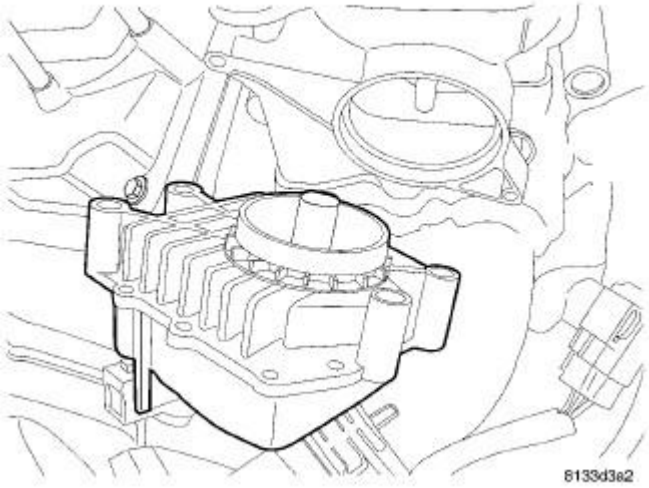

Fig. 194: Short Runner Valve
Courtesy of CHRYSLER LLC

1. Install the Sort Runner Valve. Align the slot in the valve with the tab on the intake manifold shaft.
2. Install the 2 mounting bolts.
3. Tighten bolts to 2.8 N.m (25 in. lbs.).

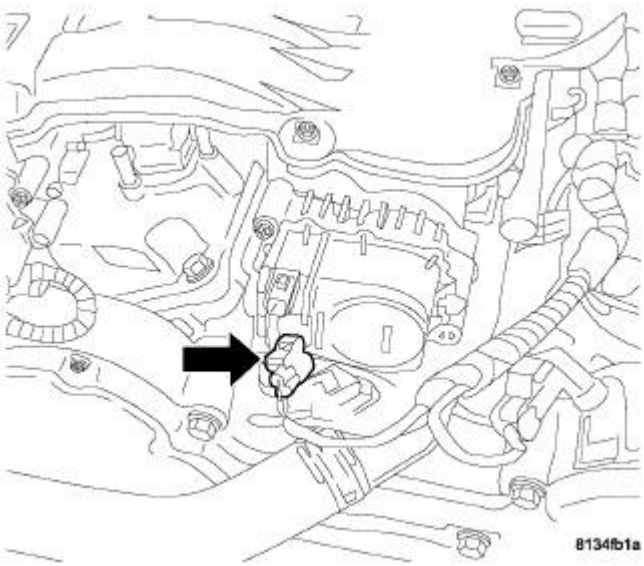

Fig. 195: Short Runner Valve Solenoid Electrical Connector
Courtesy of CHRYSLER LLC

4. Connect the electrical connector.
5. Connect negative battery cable.

THROTTLE BODY

Removal

3.5L

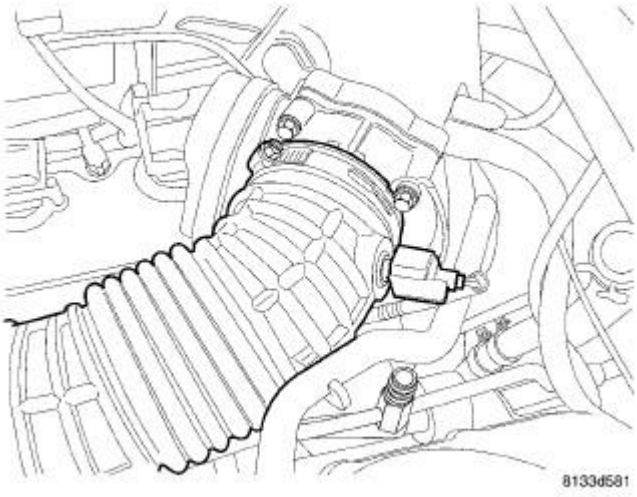

Fig. 196: Air Inlet Hose
Courtesy of CHRYSLER LLC

1. Disconnect negative cable from battery
2. Remove the inlet hose from throttle body.

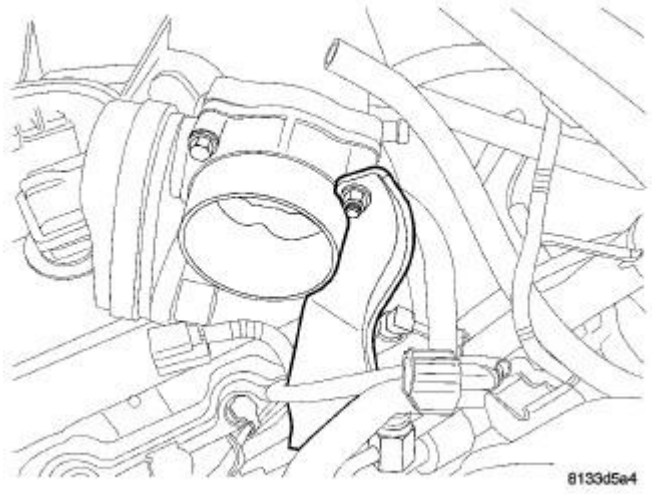

Fig. 197: Throttle Body Support Bracket
Courtesy of CHRYSLER LLC

3. Disconnect electrical connectors.
4. Disconnect vacuum hose.
5. Remove the throttle body support bracket.
6. Remove throttle body bolts.

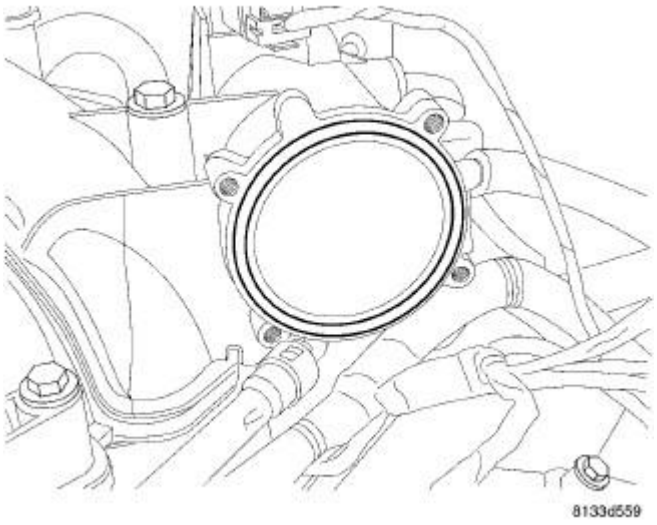

Fig. 198: Throttle Body Mating Surfaces

Courtesy of CHRYSLER LLC

7. Clean mating surfaces.

5.7L

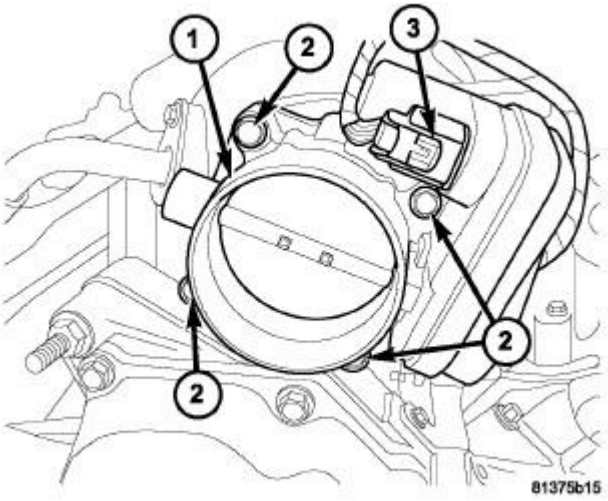

Fig. 199: Throttle Body - 5.7L
Courtesy of CHRYSLER LLC

CAUTION: Do not use spray (carb) cleaners on any part of the throttle body. Do not apply silicone lubricants to any part of the throttle body.

1. Remove rubber air duct at front of throttle body.
2. Disconnect electrical connector (3) at throttle body (1).
3. Remove four throttle body mounting bolts (2).
4. Remove throttle body from intake manifold.

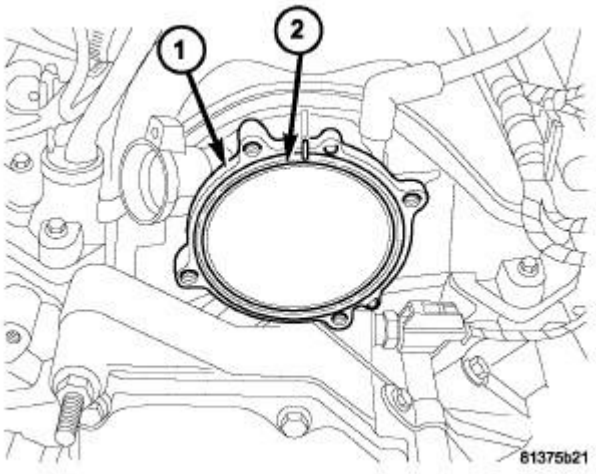

Fig. 200: Throttle Body O-Ring At Front Of Intake Manifold
Courtesy of CHRYSLER LLC

5. Check condition of throttle body o-ring (2) at front of intake manifold (1).

6.1L

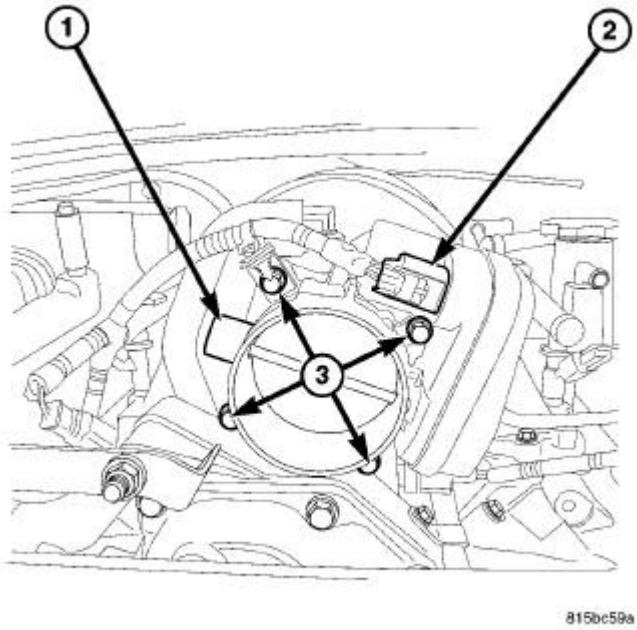

Fig. 201: Throttle Body - 6.1L
Courtesy of CHRYSLER LLC

CAUTION: Do not use spray (carb) cleaners on any part of the throttle body. Do not

apply silicone lubricants to any part of the throttle body.

1. Remove rubber air duct at front of throttle body.
2. Disconnect electrical connector (2) at throttle body (1).
3. Remove four throttle body mounting bolts (3).
4. Remove throttle body from intake manifold.

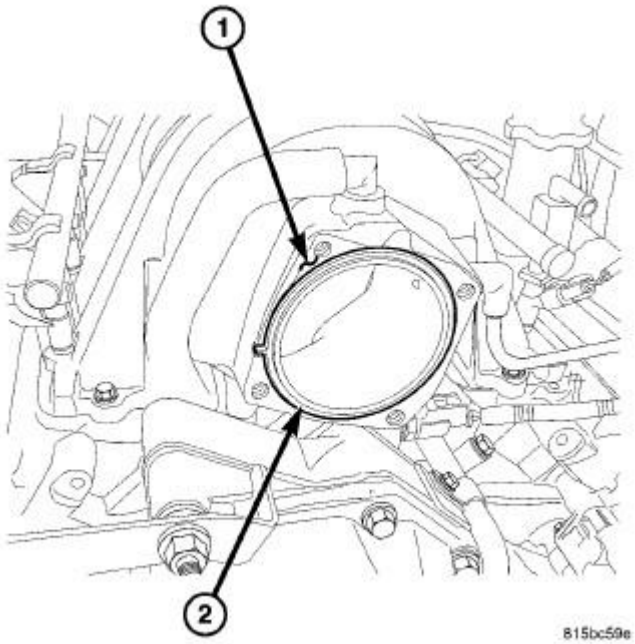

Fig. 202: Throttle Body O-Ring At Front Of Intake Manifold
Courtesy of CHRYSLER LLC

5. Check condition of throttle body O{-ring (2) at front of intake manifold (1).

Installation

3.5L

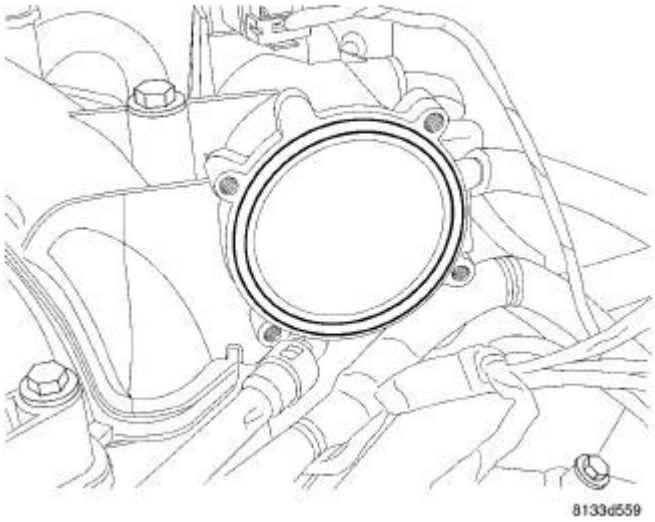

Fig. 203: Throttle Body Mating Surfaces
Courtesy of CHRYSLER LLC

CAUTION: Do not apply silicone lubricants to any part of the throttle body.

1. Install throttle gasket.

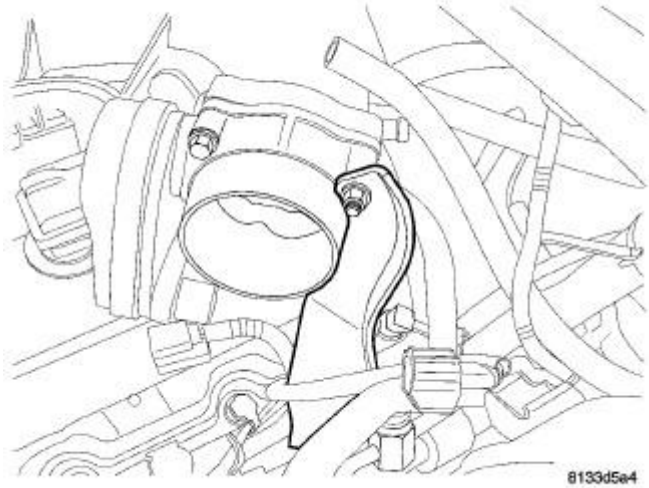

Fig. 204: Throttle Body Support Bracket
Courtesy of CHRYSLER LLC

2. Install throttle body and bolts.

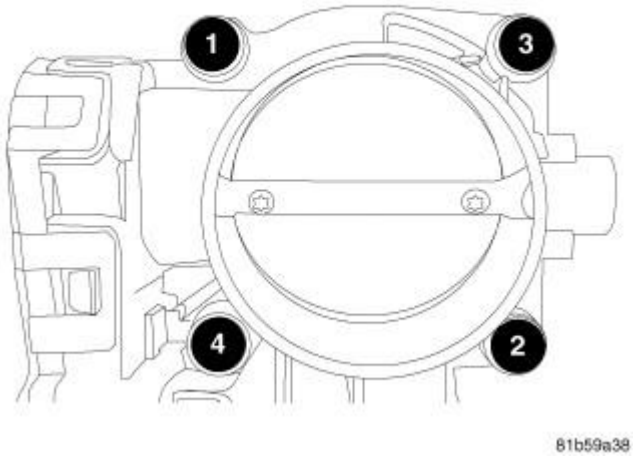

Fig. 205: Throttle Body Bolts Torque Sequence
Courtesy of CHRYSLER LLC

CAUTION: The throttle body must be torqued in a mandatory torque sequence. Tighten in a criss - cross pattern to specification.

3. Tighten the bolts in a mandatory torque criss - cross pattern sequence to 5.5 N.m (50 in. lbs.).
4. Install the throttle body support bracket to the bottom of the throttle body. Tighten the bolts to 27 N.m (20 ft. lbs.).

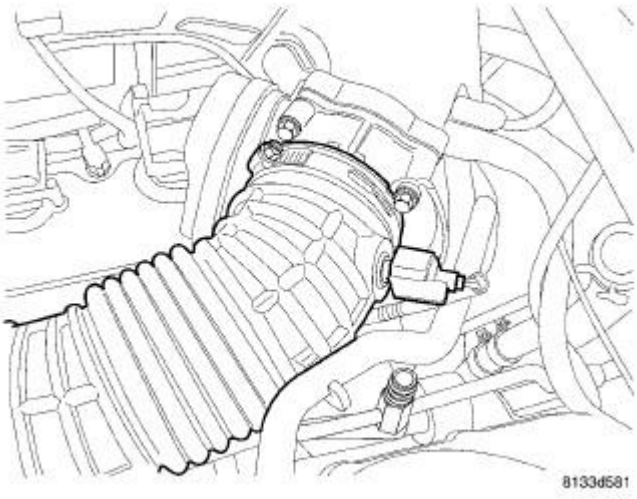

Fig. 206: Air Inlet Hose
Courtesy of CHRYSLER LLC

5. Install inlet hose and tighten clamp.

6. Connect negative cable to battery.
7. Use a scan tool and perform the ETC RELEARN function.

5.7L

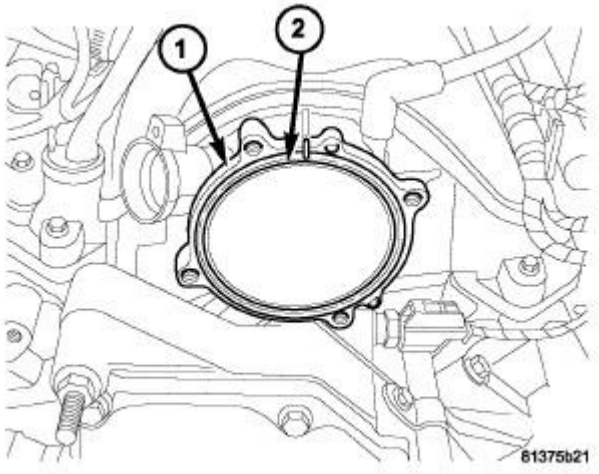

Fig. 207: Throttle Body O-Ring At Front Of Intake Manifold
Courtesy of CHRYSLER LLC

1. Clean and check condition of throttle body-to-intake manifold o-ring (2).
2. Clean mating surfaces of throttle body and intake manifold (1).

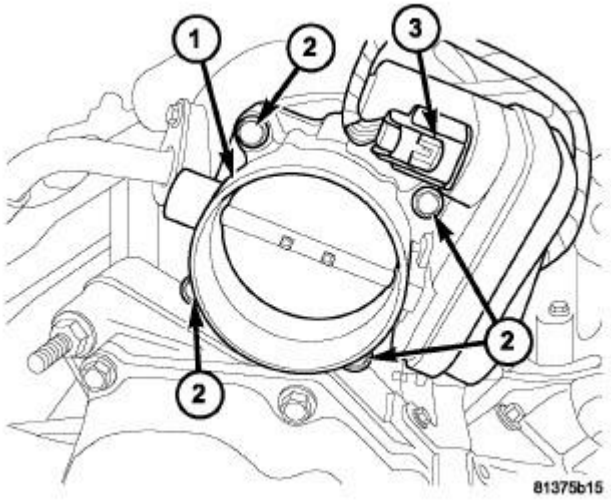

Fig. 208: Throttle Body - 5.7L
Courtesy of CHRYSLER LLC

CAUTION: Do not use spray (carb) cleaners on any part of the throttle body. Do not apply silicone lubricants to any part of the throttle body.

3. Install throttle body to intake manifold by positioning throttle body to manifold alignment pins.
4. Install and tighten four mounting bolts (2). Refer to **TORQUE** .
5. Install electrical connector (3).
6. Install rubber air hose to throttle body.
7. A Scan Tool may be used to learn electrical parameters. Go to the Miscellaneous menu, and then select ETC Relearn. If the relearn is not preformed, a Diagnostic Trouble Code (DTC) will be set. If necessary, use a scan tool to erase any Diagnostic Trouble Codes (DTC's) from PCM.

6.1L

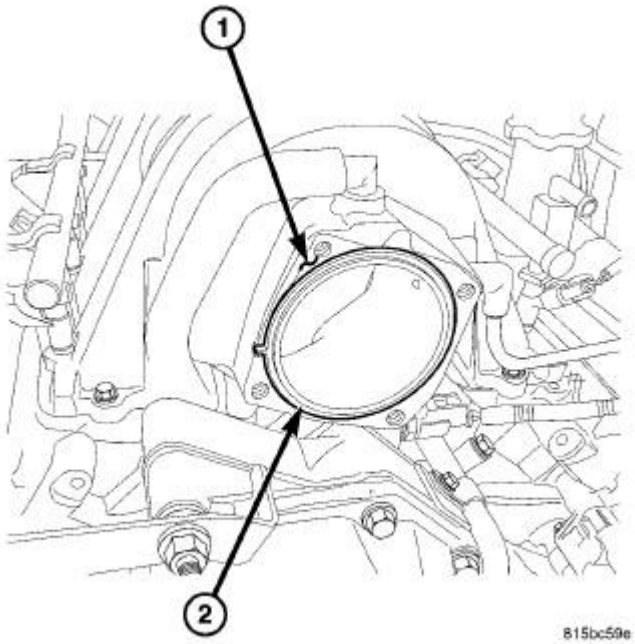

Fig. 209: Throttle Body O-Ring At Front Of Intake Manifold
Courtesy of CHRYSLER LLC

1. Clean and inspect the throttle body-to-intake manifold O-ring (2).
2. Clean mating surfaces of throttle body and intake manifold (1).

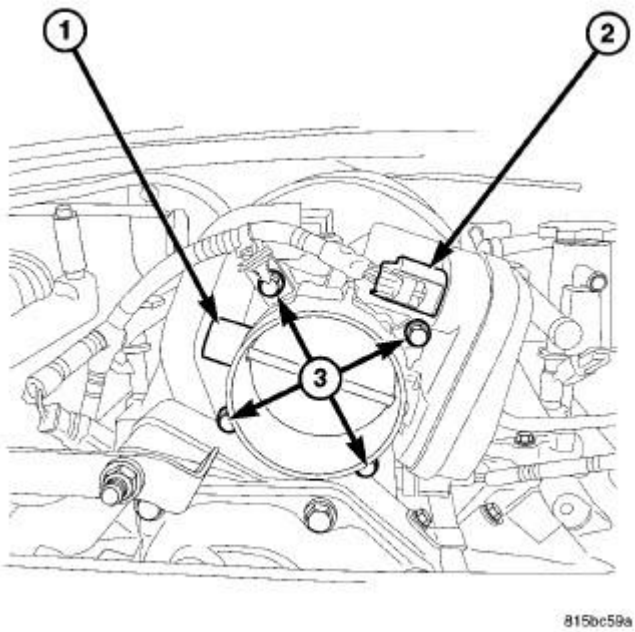

Fig. 210: Throttle Body - 6.1L
Courtesy of CHRYSLER LLC

CAUTION: Do not use spray (carb) cleaners on any part of the throttle body. Do not apply silicone lubricants to any part of the throttle body.

3. Install throttle body to intake manifold by positioning throttle body to manifold alignment pins.
4. Install and tighten four mounting bolts (3). See **Fuel System/Fuel Delivery - Specifications**.
5. Install electrical connector (2). To lock connector, slide the red colored tab towards throttle body. Pull firmly on connector to verify a good lock.
6. Install rubber air hose to throttle body.
7. A scan tool may be used to learn electrical parameters. Go to the Miscellaneous menu, and then select ETC Relearn. If the relearn is not preformed, a Diagnostic Trouble Code (DTC) will be set. If necessary, use a scan tool to erase any Diagnostic Trouble Codes (DTC's) from PCM.

VALVE, MANIFOLD TUNING

Removal

3.5L

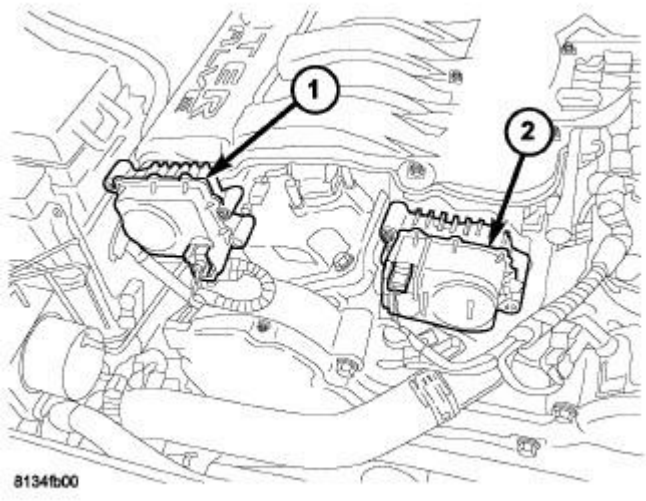

Fig. 211: Manifold Tuning Valve And Short Runner Valve
Courtesy of CHRYSLER LLC

1 - Manifold Tuning Valve 2 - Short Runner Valve

1. Manifold Tuning Valve location.

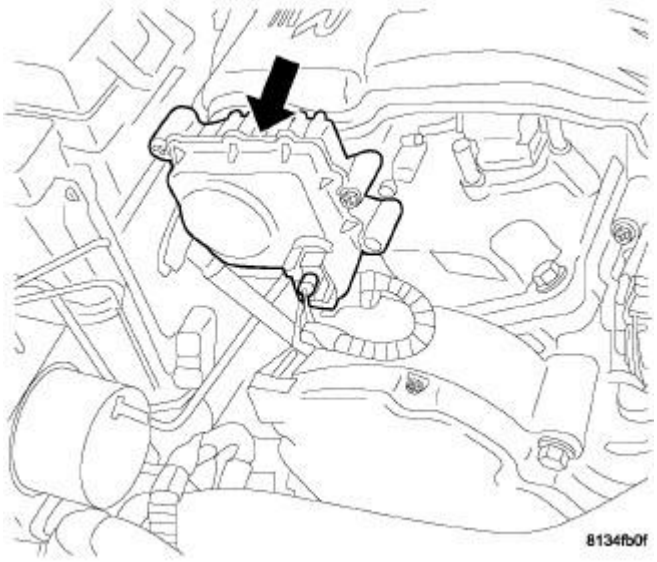

Fig. 212: Manifold Tuning Valve Location
Courtesy of CHRYSLER LLC

2. Disconnect negative battery cable.

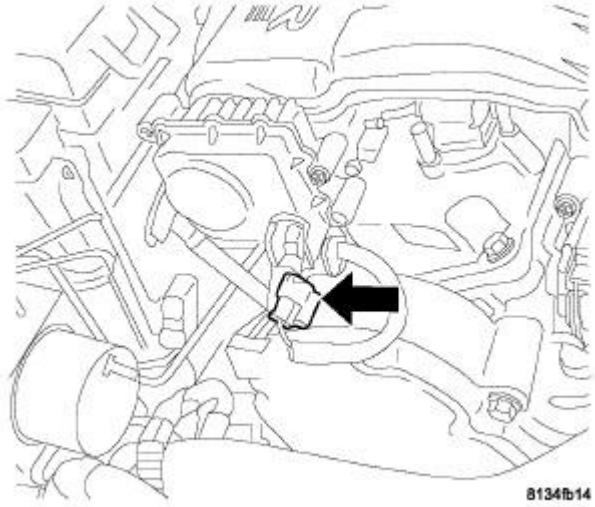

Fig. 213: Manifold Tuning Valve Electrical Connector
Courtesy of CHRYSLER LLC

3. Remove the electrical connector.
4. Remove the 2 mounting bolts.

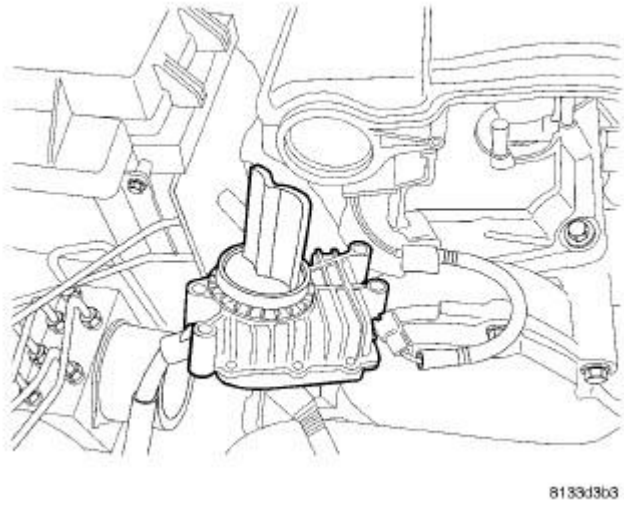

Fig. 214: Removing/Installing Manifold Tuning Valve
Courtesy of CHRYSLER LLC

5. Remove the Manifold Tuning Valve.

Installation

3.5L

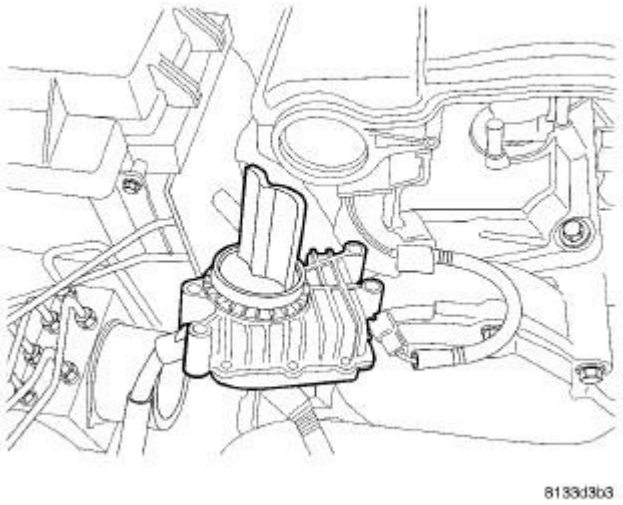

Fig. 215: Removing/Installing Manifold Tuning Valve
Courtesy of CHRYSLER LLC

1. Install the Manifold Tuning Valve.
2. Install the 2 mounting bolts.
3. Tighten bolts to 2.8 N.m (25 in. lbs.).

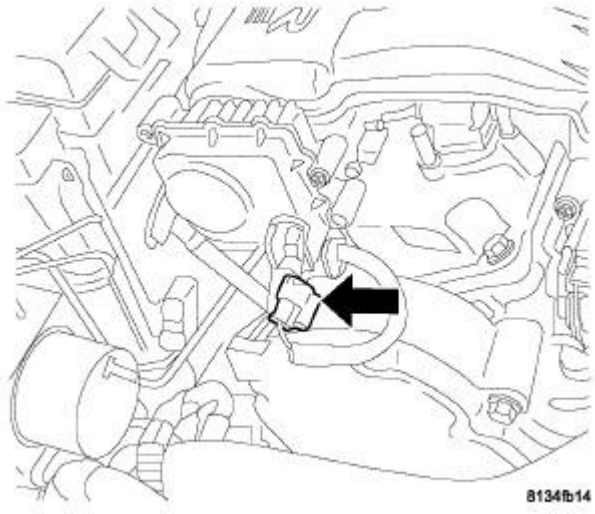

Fig. 216: Manifold Tuning Valve Electrical Connector
Courtesy of CHRYSLER LLC

4. Connect the electrical connector.
5. Connect negative battery cable.

VALVE, SHORT RUNNER

Description

DESCRIPTION

The intake manifold features a dual shaft Short Runner Valve (SRV) system to maximize both low end torque and peak power. The SRV is bolted to the rear of the intake manifold and can be service separately from the manifold.

The SRV system operates under Wide Open Throttle conditions to maximize engine performance. When activated by the PCM, the SRV actuates a mechanical linkage to redirect the intake air flow to eight short runners. The PCM looks for a signal feedback when the actuator is activated. If the signal feedback is not present, the PCM sets the DTC.

Removal

REMOVAL

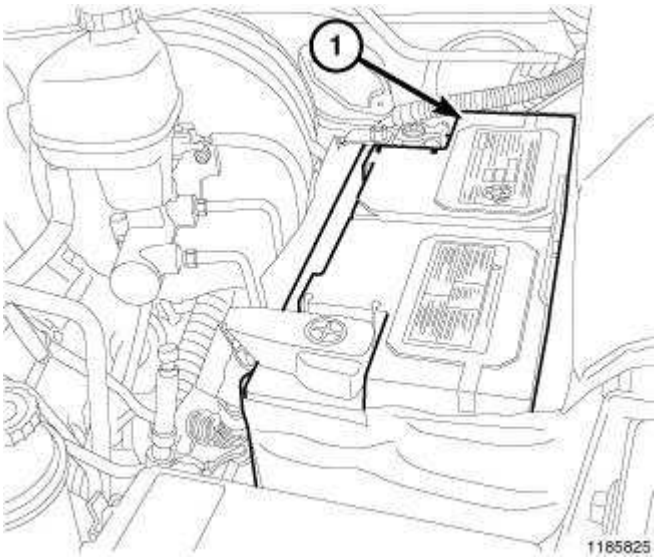

Fig. 217: Battery
Courtesy of CHRYSLER LLC

1. Disconnect the negative battery cable (1).

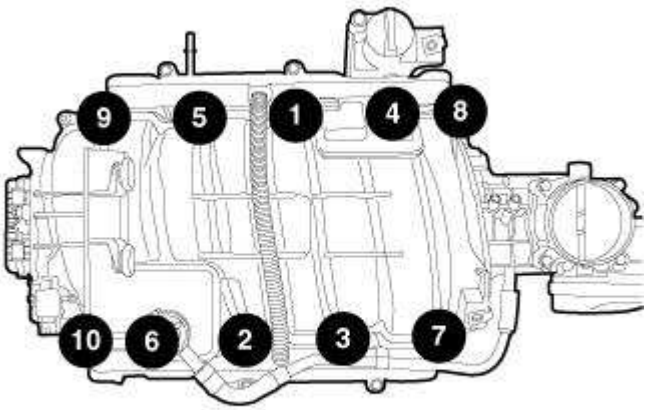

Fig. 218: Intake Manifold Retaining Bolt Removal & Tightening Sequence
Courtesy of CHRYSLER LLC

2. Remove the intake manifold and throttle body as an assembly. Refer to **Engine/Manifolds/MANIFOLD, Intake - Removal**

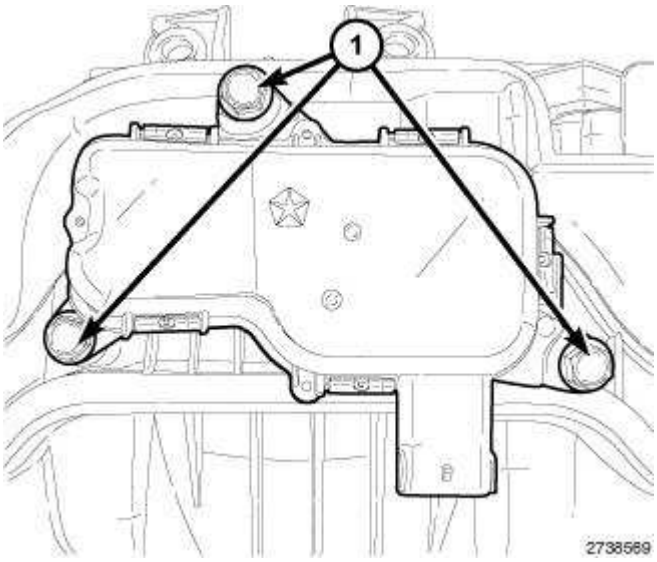

Fig. 219: Short Runner Valve Actuator Retaining Bolts
Courtesy of CHRYSLER LLC

3. Remove the short runner valve actuator retaining bolts (1) and remove valve.

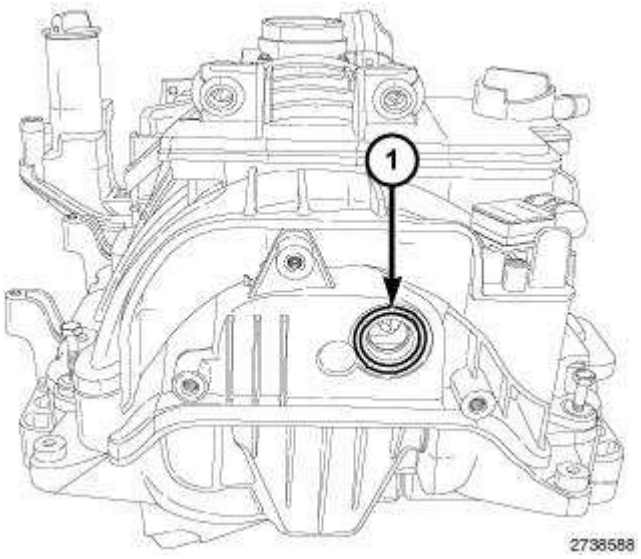

Fig. 220: Short Runner Valve Actuator Rubber O-Ring Seal
Courtesy of CHRYSLER LLC

4. Remove and discard the short runner valve actuator rubber O-ring seal (1).

Installation

INSTALLATION

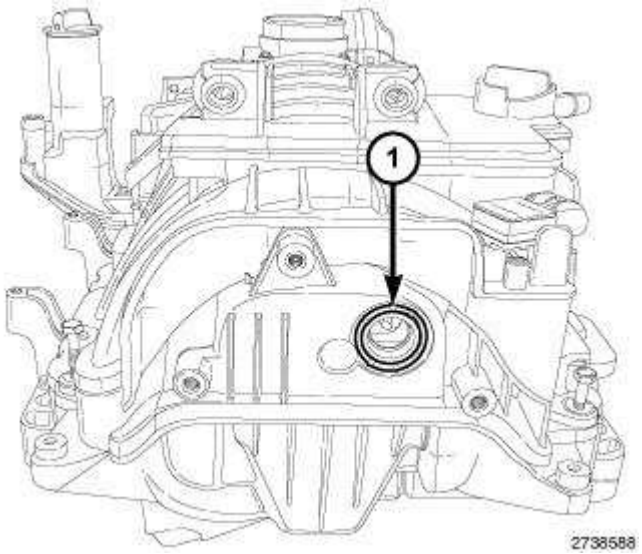

Fig. 221: Short Runner Valve Actuator Rubber O-Ring Seal
Courtesy of CHRYSLER LLC

1. Install a new short runner valve actuator rubber O-ring seal (1).

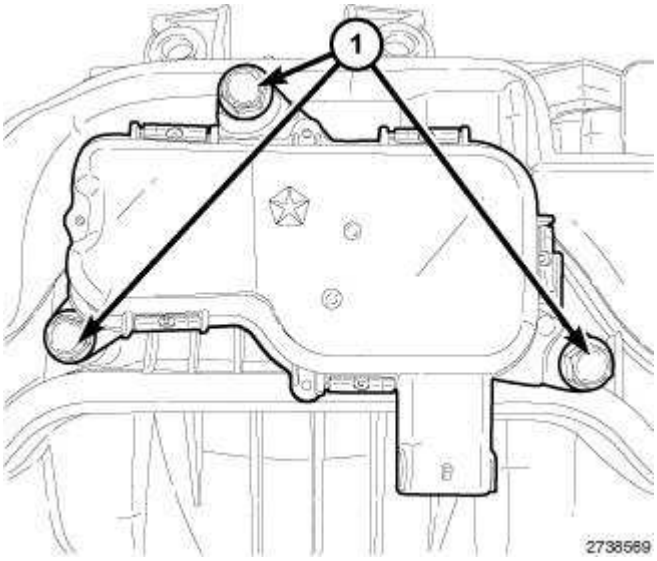

Fig. 222: Short Runner Valve Actuator Retaining Bolts
Courtesy of CHRYSLER LLC

2. Position the short runner valve actuator, install the retaining bolts (1) and tighten to 5 N.m (44 in. lb.).

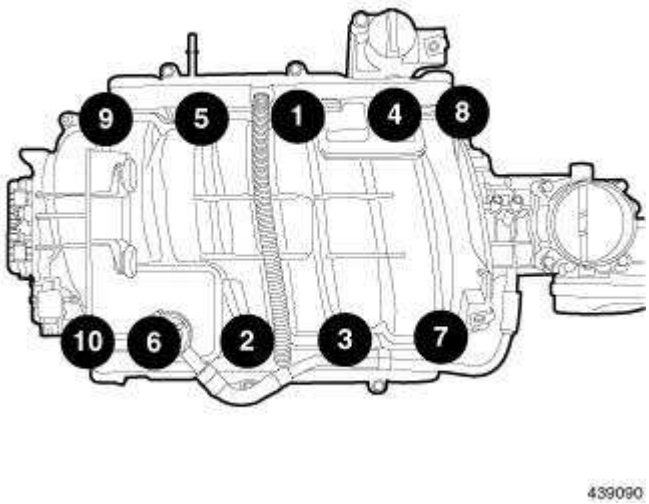

Fig. 223: Intake Manifold Retaining Bolt Removal & Tightening Sequence
Courtesy of CHRYSLER LLC

3. Install the intake manifold and throttle body as an assembly. Refer to **Engine/Manifolds/MANIFOLD, Intake - Installation** .

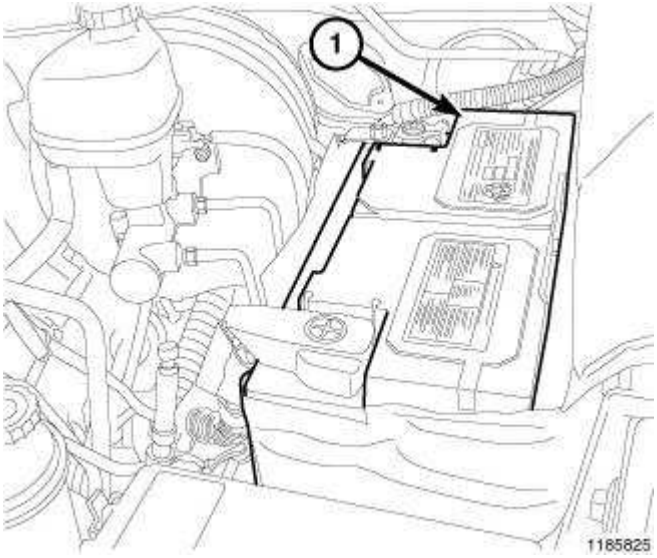

Fig. 224: Battery
Courtesy of CHRYSLER LLC

4. Connect the negative battery cable (1).

ELECTRICAL

Fuses & Circuit Breakers - Challenger

IDENTIFICATION

CAUTION: When battery is disconnected, vehicle computer and memory systems may lose memory data. Driveability problems may exist until computer systems have completed a relearn cycle.

INTEGRATED POWER MODULE (IPM)

For integrated power module location, see **Fig. 1**.

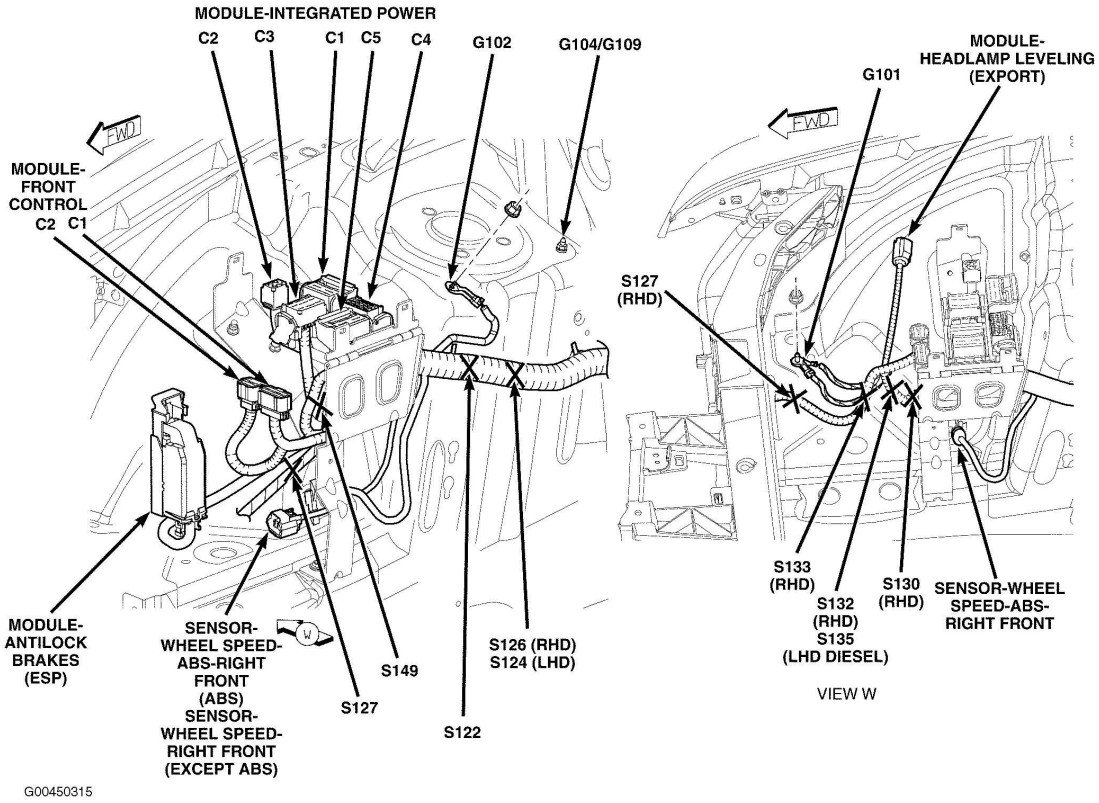

Fig. 1: Locating Integrated Power Module
Courtesy of CHRYSLER CORP.

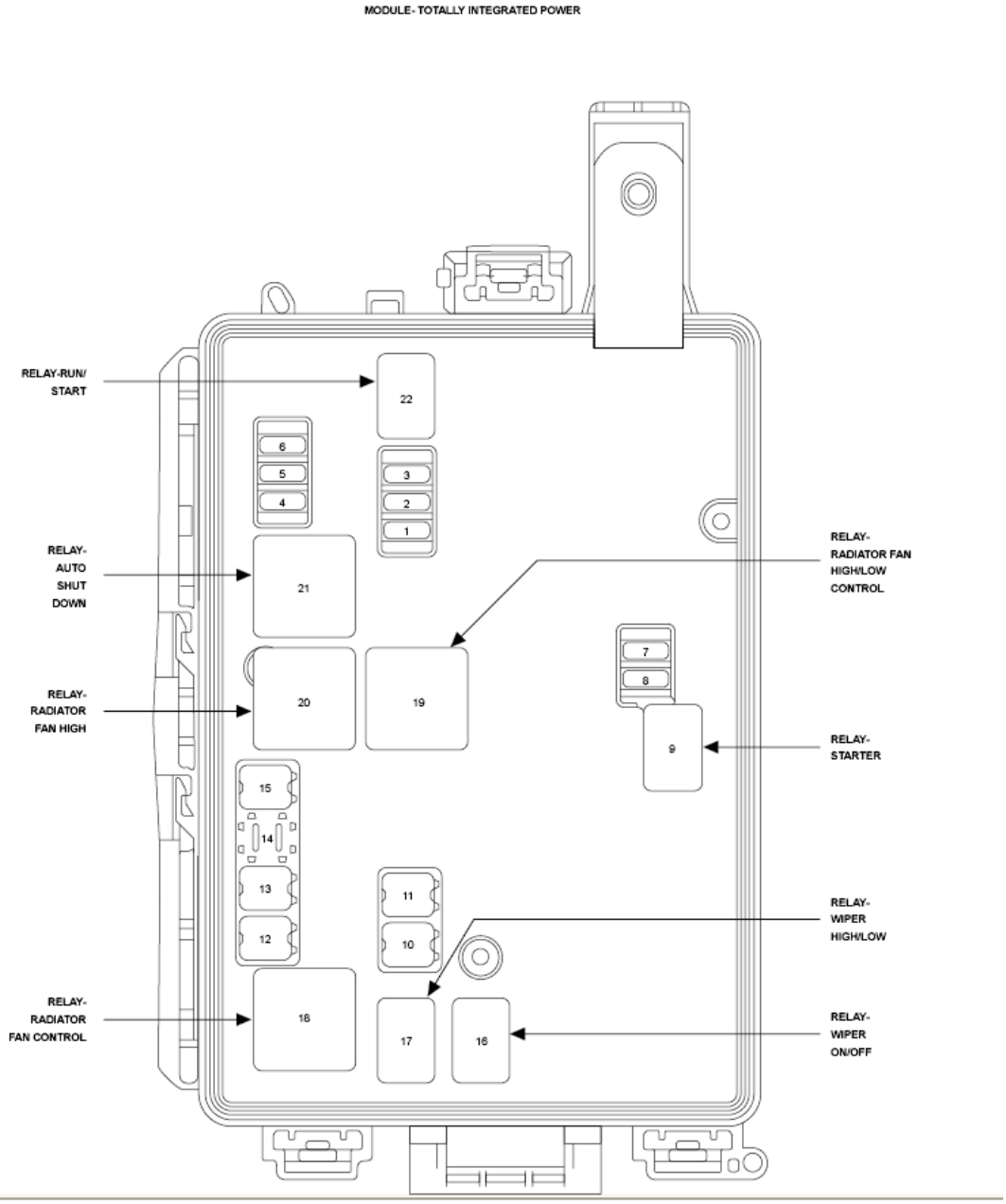

Fig. 2: Identifying Integrated Power Module Components
Courtesy of CHRYSLER CORP.

Integrated Power Module Components

FUSE NO.	AMPS	FUNCTION
1	15A	Washer Motor
2	25A	Powertrain Control Module (PCM)
3	25A	Ignition Run/Start
4	25A	Alternator/EGR Solenoid
5	-	-
6	25A	Ignition Coils/Injectors

7	-	-
8	25A	Starter
9	-	-
10	30A	Windshield Wiper
11	30A	Anti-Lock Brake System (ABS) Valves - If Equipped
12	40A	Radiator Fan Lo/High
13	50A	Anti-Lock Brake System (ABS) Pump Motor - If Equipped
14	-	-
15	50A	Radiator Fan
16	-	-
17	-	-
18	-	-
19	-	-
20	-	-
21	-	-
22	-	-

POWER DISTRIBUTION CENTER (PDC)

For power distribution center location, see **Fig. 3**.

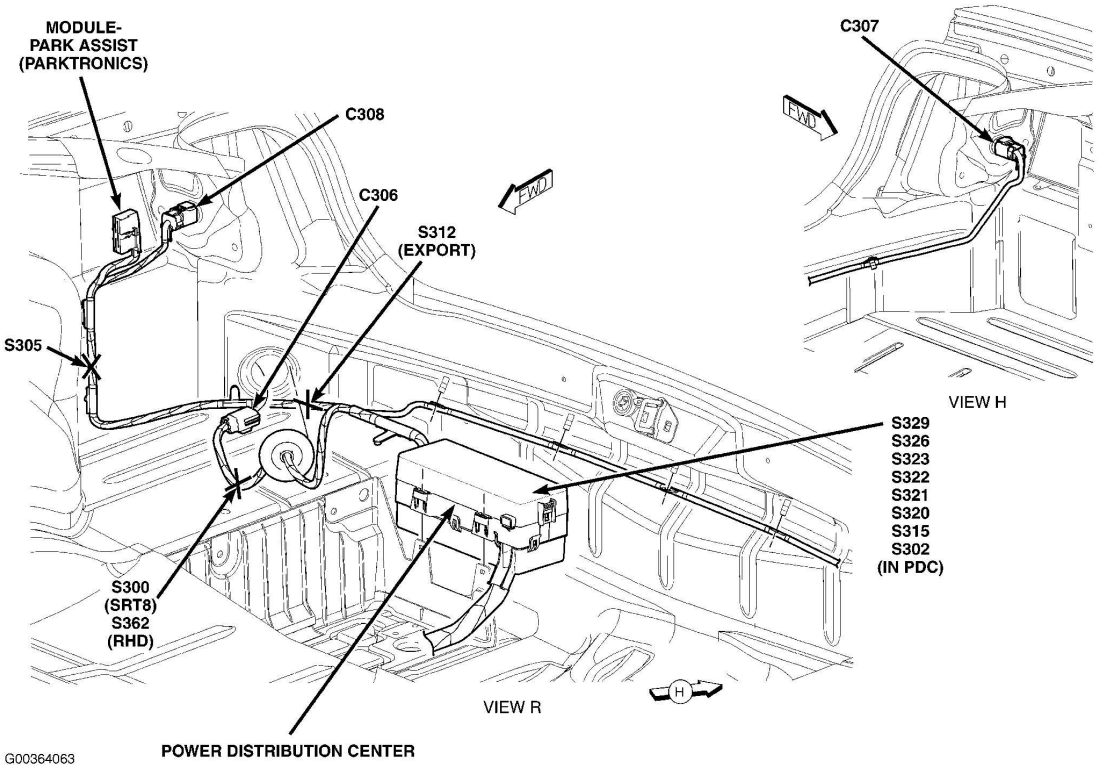

Fig. 3: Locating Power Distribution Center

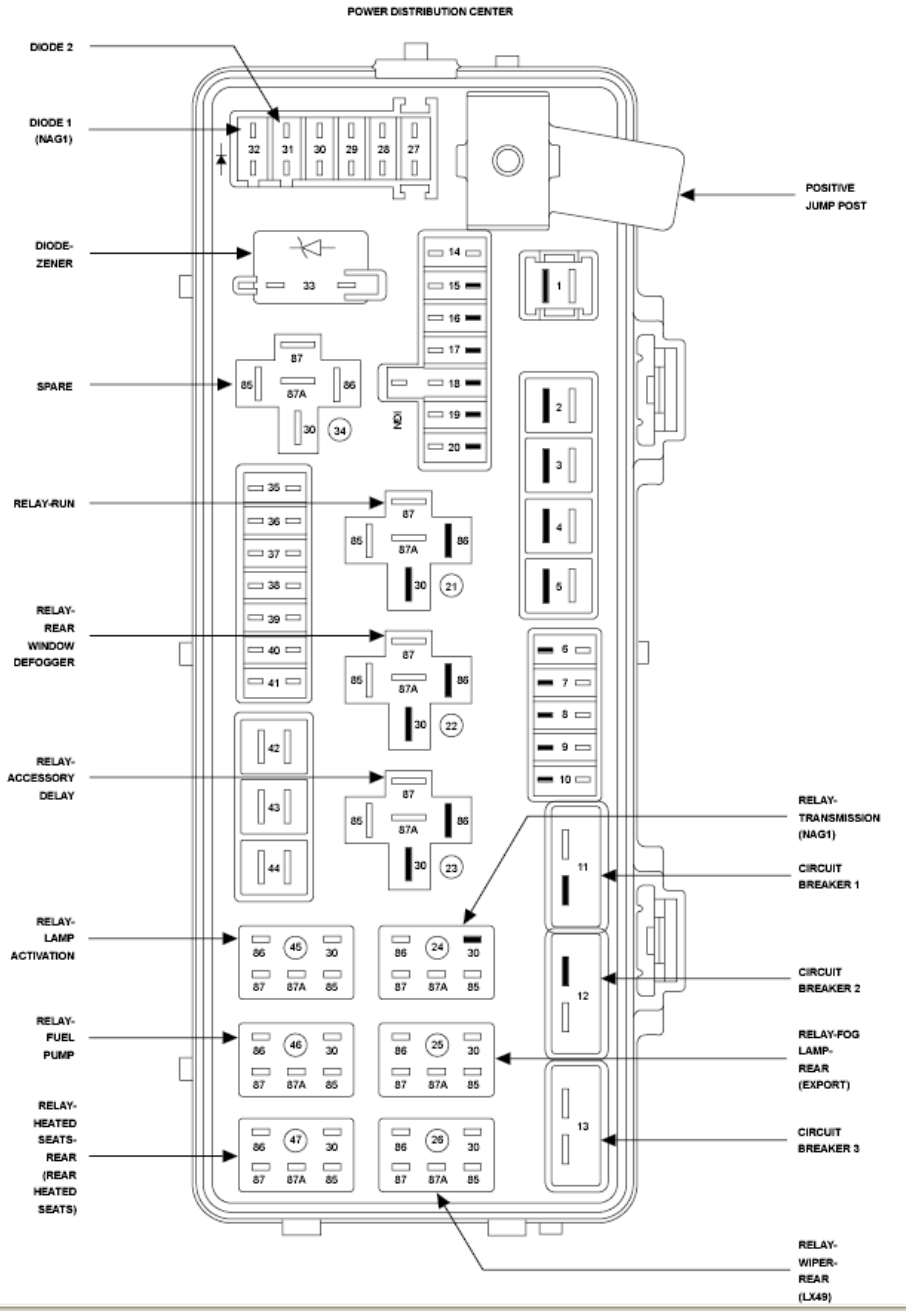

Fig. 4: Identifying Power Distribution Center Components
Courtesy of CHRYSLER CORP.

Power Distribution Center Components

FUSE NO.	AMPS	FUNCTION
1	60A	Ignition Off Draw (IOD)
2	40A	Integrated Power Module (IPM)
3	-	-

4	40A	Integrated Power Module (IPM)
5	30A	Heated Seats - If Equipped
6	20A	Fuel Pump
7	15A	Sub Amp - If Equipped
8	15A	Diagnostic Link Connector (DLC)/Wireless Control Module (WCM)/Wireless Ignition Node (WIN)
9	20A	Power Outlet
10	-	-
11	-	-
12	-	-
13	-	-
14	10A	AC Heater Control/Cluster/Security Module - If Equipped
15	-	-
16	-	-
17	20A	Cluster
18	20A	Selectable Power Outlet
19	10A	Stop Lights
20	-	-
21	-	-
22	-	-
23	-	-
24	-	-
25	-	-
26	-	-
27	10A	Occupant Restraint Controller (ORC)
28	10A	Ignition Run
29	5A	Cluster/Electronic Stability Program (ESP)/Powertrain Control Module (PCM)/Stop Light Switch
30	10A	Door Modules/Power Mirrors/Steering Control Module (SCM)
31	-	-
32	-	-
33	-	-
34	-	-
35	5A	Antenna Module - If Equipped/Power Mirrors
36	20A	Hands Free Phone - If Equipped/Radio
37	15A	Transmission
38	10A	Cargo Light/Vehicle Information Module - If Equipped
39	10A	Heated Mirrors - If Equipped
40	5A	Auto Inside Rearview Mirror - If Equipped Heated Seats - If Equipped/Switch Bank
41	10A	AC Heater Control/Headlights/Tire Pressure Monitoring - If

		Equipped
42	30A	Front Blower Motor
43	30A	Rear Window Defroster
44	20A	Amplifier - If Equipped/Sunroof - If Equipped

ACCESSORIES AND EQUIPMENT

Heated Glass - Service Information - Challenger

DESCRIPTION

DESCRIPTION

CAUTION: Grid lines can be damaged or scraped off with sharp instruments. Care should be taken in cleaning glass or removing foreign materials, decals or stickers. Normal glass cleaning solvents or hot water used with rags or toweling is recommended.

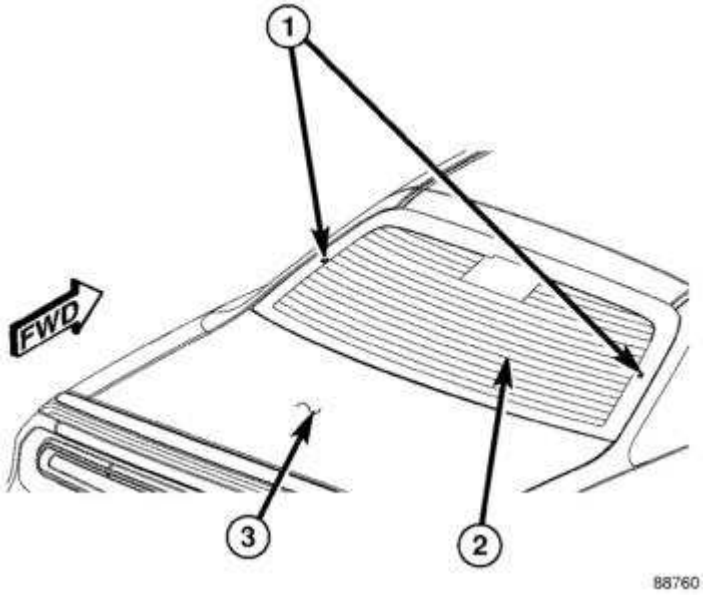

Fig. 1: Identifying Vertical Bus Bars, Grid Lines & Rear Window
Courtesy of CHRYSLER LLC

The rear window defogger system, also known as electric backlight (EBL), consists of two vertical bus bars (1) linked by a series of grid lines (2) fired onto the inside surface of the rear window (3).

The EBL system is turned On or Off by a switch and timing circuit integral to the A/C-heater control located at the center of the instrument panel.

Circuit protection is provided by two cartridge fuses located in the power distribution center (PDC). One fuse is for the heated rear window grid circuit and the other fuse is for the heated outside mirror grid circuit, when equipped.

OPERATION

OPERATION

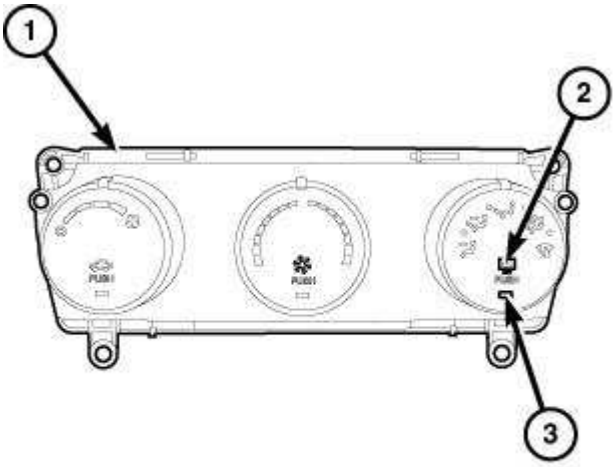

Fig. 2: Identifying A/C-heater Control, Indicator Lamp & Rear Window Defogger Switch
Courtesy of CHRYSLER LLC

The electric backlight (EBL) system is controlled by a momentary switch (2) located in the A/C-heater control (1) on the instrument panel. When the rear window defogger switch is pressed to ON, the A/C-heater control energizes the rear window defogger (EBL) relay and fused battery current is then directed through the relay and to the rear window defogger grid lines and to the heated outside rear view mirrors, when equipped. The grid lines heat the glass to help clear the rear window and outside mirror surfaces of fog or frost.

An amber indicator (3) in the rear window defogger switch will illuminate to indicate when the EBL system is turned on. The A/C-heater control contains the EBL system control circuitry including the timer logic.

NOTE: The EBL system turns off automatically after 10 minutes of initial operation. Each following activation cycle of the EBL system will last 5 minutes.

The EBL system will automatically turn off after a programmed time interval of about 10 minutes as long as the ignition switch is in RUN. After the initial time interval has expired, if the rear window defogger switch is pressed to ON again during the same ignition cycle, the EBL system will automatically turn off after about 5 minutes. The EBL system will also turn off if the ignition switch is turned to any position other than RUN or by manually pressing the rear window defogger switch a second time.

Repair of the rear window defogger grid lines, bus bars, terminals or pigtail wires can be accomplished using the Mopar® Rear Window Defogger Repair Kit (Part Number 04549275) or equivalent. See **Electrical - Heated/Cooled Systems/Heated Glass/GRID, Defogger - Standard Procedure**.

DIAGNOSIS AND TESTING

ELECTRIC BACKLIGHT (EBL) SYSTEM

NOTE: **Illumination of the defogger switch indicator lamp does not necessarily mean that electrical current is reaching the rear glass heating grid lines.**

NOTE: **See SYSTEM WIRING DIAGRAMS for circuit descriptions and diagrams of the rear window defogger system.**

Operation of the electric backlight (EBL) system can be confirmed by the following:

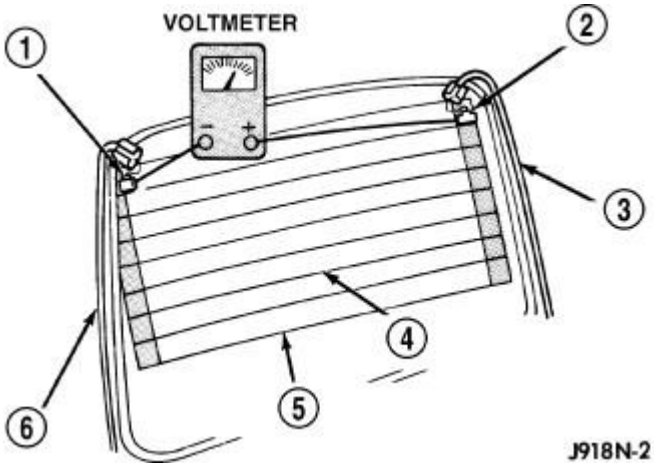

Fig. 3: Rear Window Glass Grid Test
Courtesy of CHRYSLER LLC

1. Use a scan tool and check for diagnostic trouble codes (DTCs) related to the A/C-heater control. If no DTCs are found, go to 2. If any DTCs are found, repair as required, then proceed to 2.
2. Turn the ignition switch to RUN. Set the rear window defogger switch to ON. Rear window defogger operation can be checked by feeling the rear window glass, or the heated outside rear view mirror glass, when equipped with heated mirrors. A distinct difference in temperature between the grid lines (5) and the adjacent clear glass or the heated mirror glass should be detected within 3 to 4 minutes of operation.
3. If a temperature difference is not detected, use a 12-volt DC voltmeter and contact the rear glass heating grid terminal A (1) with the negative lead, and terminal B (2) with the positive lead. The voltmeter should read battery voltage. If the voltmeter does not read battery voltage, check the following:
    - Confirm the ignition switch is in RUN.
    - Confirm the rear window defogger switch is ON.
    - Confirm the EBL feed wire (3) is connected to the heating grid positive terminal and that there is continuity between the EBL relay and the heating grid.
    - Confirm the EBL ground wire (6) is connected to the heating grid negative terminal and that there is continuity to ground.
    - Check the EBL relay and fuses located in the power distribution center (PDC) in the engine compartment. The relay and fuses must be tight in their receptacles and all electrical connections must be secure.
4. If broken defogger grid lines or bus bars are suspected, use a 12-volt DC voltmeter and contact

the rear glass heating grid ground terminal A with the negative lead and each rear glass heating grid line at its mid-point (4) with the positive lead. The voltmeter should read approximately 6 volts at each grid line mid-point. If the voltmeter does not read approximately 6 volts, repair the open grid line(s) or bus bar(s). See **Electrical - Heated/Cooled Systems/Heated Glass/GRID, Defogger - Standard Procedure**.

5. If the EBL system operation has been verified but the rear window defogger indicator lamp does not illuminate, replace the A/C-heater control. Refer to **Heating and Air Conditioning/Controls/CONTROL, A/C and Heater - Removal** .

GRID, DEFOGGER, REAR

STANDARD PROCEDURE

GRID LINE AND TERMINAL REPAIR

WARNING: Materials contained in the Repair Kit (Part Number 04549275) may cause skin or eye irritation. The kit contains epoxy resin and amine type hardener, which are harmful if swallowed. Avoid contact with the skin and eyes. For skin contact, wash the affected areas with soap and water. For contact with the eyes, flush with plenty of water. Do not take internally. If taken internally, induce vomiting and call a physician immediately. Use with adequate ventilation. Do not use near fire or flame. Contains flammable solvents. Keep out of the reach of children. Failure to follow these instructions may result in serious or fatal injury.

Repair of the rear glass heating grid lines, bus bars, terminals or pigtail wires can be accomplished using the Mopar® Rear Window Defogger Repair Kit (Part Number 04549275) or equivalent.

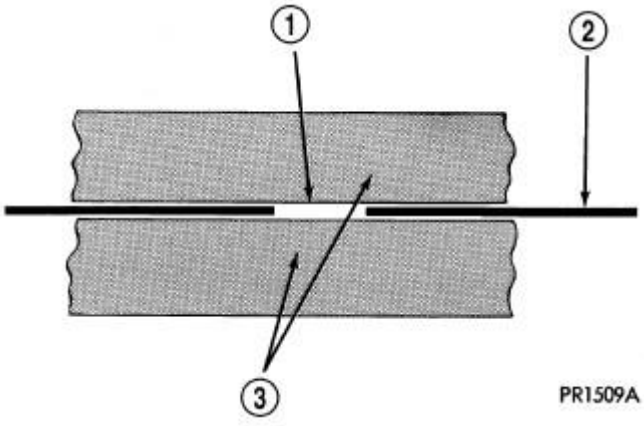

Fig. 4: Grid Line Repair - Typical
Courtesy of CHRYSLER LLC

1. Mask the repair area with masking tape (3) so that the conductive epoxy can be applied neatly. Extend the epoxy application onto the grid line (2) or the bus bar on each side of the break (1).
2. Follow the instructions in the repair kit for preparing the damaged area.

3. Remove the package separator clamp and mix the two conductive epoxy components thoroughly within the packaging. Fold the package in half and cut the center corner to dispense the epoxy.
4. Apply the epoxy through the slit in the masking tape or template. Overlap both ends of the break by at least 19 millimeters (0.75 inch).
5. For a terminal or pigtail wire replacement, mask the adjacent areas so the epoxy can be extended onto the adjacent grid line as well as the bus bar. Apply a thin layer of epoxy to the area where the terminal or pigtail wire was fastened and onto the adjacent grid line.
6. Apply a thin layer of conductive epoxy to the terminal or bare wire end of the pigtail and place it in the proper location on the bus bar. To prevent the terminal or pigtail wire from moving while the epoxy is curing, it must be wedged or clamped.
7. Carefully remove the masking tape or template.

CAUTION: Do not allow the glass surface to exceed 204° C (400° F) when using a heat gun, or the glass may fracture.

8. Allow the epoxy to cure 24 hours at room temperature or carefully use a heat gun for 15 minutes. When using a heat gun, hold it approximately 25.4 centimeters (10 inches) from the repair and do not allow the glass surface to exceed 204° C (400° F).
9. After the conductive epoxy is properly cured, remove the wedge or clamp from the terminal or pigtail wire.
10. Connect the wire harness leads to the grid terminals or pigtail wires and verify EBL operation.

RELAY, DEFOGGER, REAR

DESCRIPTION

DESCRIPTION

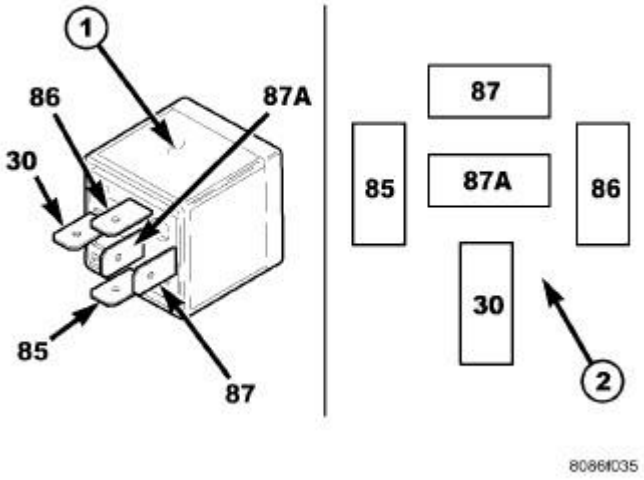

Fig. 5: Rear Window Defogger (EBL) Relay
Courtesy of CHRYSLER LLC

The rear window defogger (EBL) relay (1) is an International Standards Organization (ISO)-type relay. Relays conforming to the ISO specifications have common physical dimensions, current capacities, terminal functions and patterns (2). The EBL relay is a electromechanical device that switches battery current through a fuse in the power distribution center (PDC) to the rear window defogger grid and when equipped, switches battery current through a fuse in the PDC to the heated outside rear view mirrors. The EBL relay is energized when the relay coil is provided a ground path by the control circuitry within the A/C-heater control.

The EBL relay is located in the PDC at the rear of the vehicle, near the battery.

OPERATION

OPERATION

The ISO-standard rear window defogger (EBL) relay is an electromechanical switch that uses a low current input controlled by the A/C-heater control to control the high current output to the rear window defogger grid lines. The movable, common feed relay contact is held against the fixed, normally closed relay contact by spring pressure. When the electromagnetic relay coil is energized, it draws the movable common feed relay contact away from the fixed, normally closed relay contact and, holds it against the fixed, normally open relay contact. This action allows high current to flow to the rear window defogger grid lines.

When the relay coil is de-energized, spring pressure returns the movable relay contact back against the fixed, normally closed contact point. The resistor or diode is connected in parallel with the relay coil, and helps to dissipate voltage spikes and electromagnetic interference that can be generated as the electromagnetic field of the relay coil collapses.

The EBL relay terminals are connected to the vehicle electrical system through a receptacle in the

power distribution center (PDC). The inputs and outputs of the EBL relay include:

- The common feed terminal (30) receives a battery current input from a fused B(+) circuit at all times.
- The coil ground terminal (85) receives a ground through the EBL relay control circuit only when the A/C-heater control electronically pulls the circuit to ground.
- The coil battery terminal (86) receives a battery current input from a fused B(+) circuit at all times.
- The normally open terminal (87) provides battery current to the rear window defogger grid through the EBL relay output circuit and a fuse located in the PDC only when the EBL relay coil is energized.
- The normally closed terminal (87A) is not connected to any circuit in this application, but provides a battery current output only when the EBL relay coil is de-energized.

The EBL relay cannot be repaired and must be replaced if inoperative or damaged. See **SYSTEM WIRING DIAGRAMS** for diagnosis and testing of the EBL relay and for complete rear window defogger (EBL) wiring diagrams.

REMOVAL

REMOVAL

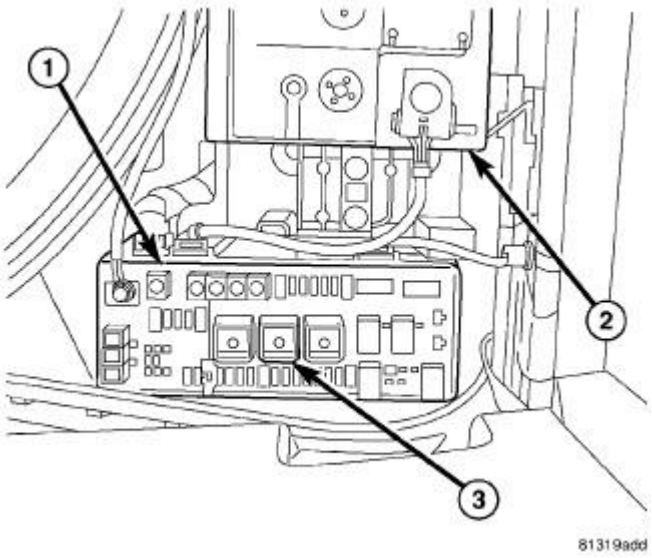

Fig. 6: EBL Relay Location
Courtesy of CHRYSLER LLC

1. Disconnect and isolate the negative battery cable.
2. Open the cover of the power distribution center (PDC) (1) located at the rear of the vehicle near the battery (2).
3. Remove the EBL relay (3) from the PDC.

INSTALLATION

INSTALLATION

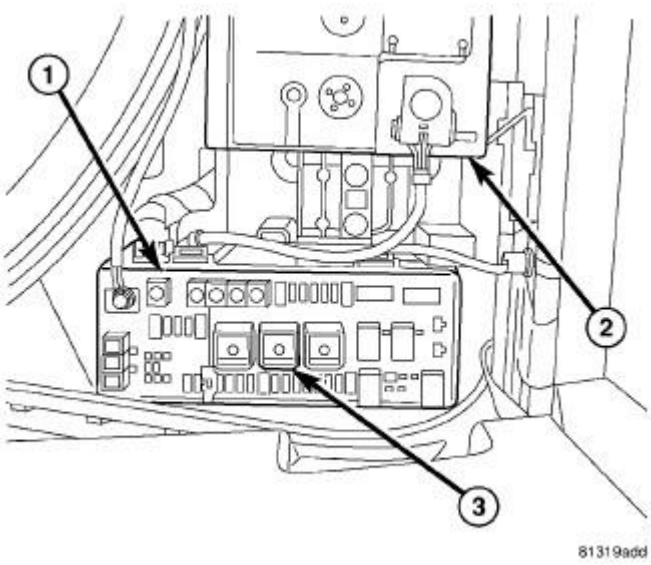

Fig. 7: EBL Relay Location
Courtesy of CHRYSLER LLC

1. Position the EBL relay (3) into the proper receptacle of the power distribution center (PDC) (1) located at the rear of the vehicle near the battery (2).
2. Align the EBL relay terminals with the terminal cavities in the PDC receptacle and push down firmly on the relay until the terminals are fully seated.
3. Close the cover of the PDC.
4. Reconnect the negative battery cable.

SWITCH, DEFOGGER, REAR

DESCRIPTION

DESCRIPTION

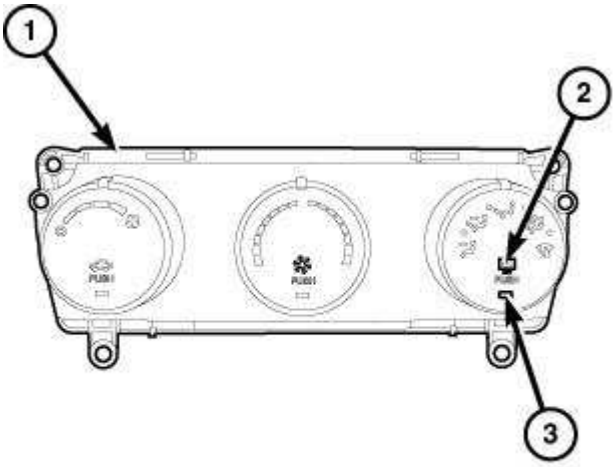

Fig. 8: Identifying A/C-heater Control, Indicator Lamp & Rear Window Defogger Switch
Courtesy of CHRYSLER LLC

The switch for the rear window defogger (EBL) system (2) is integrated into the A/C-heater control (1), located in the center of the instrument panel. When the rear window defogger switch is activated, the timing circuit integral to the A/C-heater control operates the rear window defogger (EBL) relay. An amber indicator (3) in the rear window defogger switch will illuminate to indicate when the EBL system is turned on.

When the EBL relay is activated, current is directed to the rear window defogger grid lines and when equipped, to the heated outside rear view mirrors. The grid lines heat the window and mirror glass to help clear the surfaces of fog or frost.

OPERATION

OPERATION

When the rear window defogger switch is activated, the A/C-heater control operates the rear window defogger (EBL) relay and the amber indicator lamp will illuminate. The EBL relay controls the current flow to the heating grid of the rear window and to the heated outside rear view mirrors, when equipped.

NOTE: The EBL system turns off automatically after 10 minutes of initial operation. Each following activation cycle of the EBL system will last 5 minutes.

The EBL system will automatically turn off after a programmed time interval of about 10 minutes as long as the ignition switch is in RUN. After the initial time interval has expired, if the rear window defogger switch is pressed to ON again during the same ignition cycle, the EBL system will automatically turn off after about 5 minutes. The EBL system will also turn off if the ignition switch is turned to any position other than RUN or by manually pressing the rear window defogger switch a second time.

NOTE: **ATC A/C-heater controls are NOT interchangeable between other model years or other vehicle lines. If replacement of the A/C-heater control is required, only use the control designed for the vehicle being serviced.**

The rear window defogger switch and the rear window defogger indicator lamp cannot be repaired and the A/C-heater control must be replaced if found inoperative or damaged. Refer to **Heating and Air Conditioning/Controls/CONTROL, A/C and Heater - Removal** .

ACCESSORIES AND EQUIPMENT

Heated Mirrors - Service Information - Challenger

DESCRIPTION

DESCRIPTION

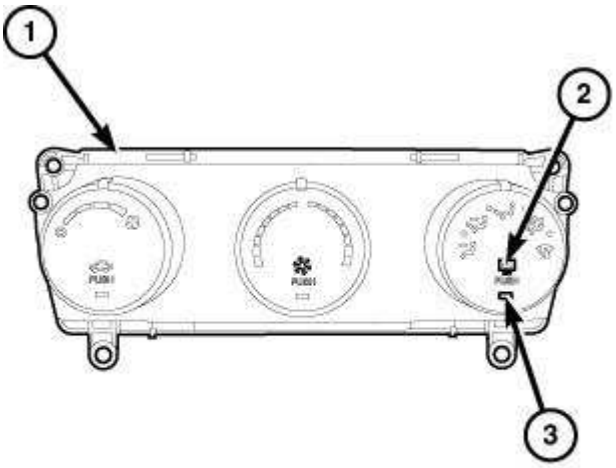

Fig. 1: Identifying A/C-heater Control, Indicator Lamp & Rear Window Defogger Switch
Courtesy of CHRYSLER LLC

The optional heated mirror system is controlled by the momentary rear window defogger switch (2), which is integral to the A/C-heater control (1). An amber indicator lamp (3) will illuminate to indicate when the rear window defogger (EBL) system is turned on.

The heated mirror system only operates in concert with the EBL system, and will automatically turn off after a programmed time interval of about 10 minutes as long as the ignition switch is in RUN. After the initial time interval has expired, if the rear window defogger switch is pressed to ON again during the same ignition cycle, the heated mirror system will automatically turn off after about 5 minutes. The heated mirror system will also turn off if the ignition switch is turned to any position other than RUN or by manually pressing the rear window defogger switch a second time.

Circuit protection is provided by a fuse located in the power distribution center (PDC).

OPERATION

OPERATION

When the rear window defogger switch is pressed, the rear window defogger (EBL) system becomes activated and an electric heater grid located behind the glass of each of the outside rear view mirrors is energized. When energized, each of these heater grids produce heat to help clear the outside rear view mirrors of ice, snow, or fog.

If the outside mirror heating grids are both inoperative. Refer to **Electrical - Heated/Cooled Systems/Heated Glass - Diagnosis and Testing** in this service information. If only one of the outside mirror heating grids is inoperative. Refer to **Electrical - Power Systems/Power Mirrors - Diagnosis and Testing** .

The heating grid behind each outside mirror glass cannot be repaired and the mirror glass must be replaced if found inoperative or damaged. Refer to **Body/Exterior/MIRROR, Outside Rearview - Removal** .

Heated Seats - Service Information - Challenger

DESCRIPTION

DESCRIPTION

WARNING: The front passenger seat assembly contains critical components that affect the front passenger airbag deployment. Correctly functioning front passenger seat components are critical for the Occupant Classification System (OCS) to properly classify the front passenger and calculate the proper airbag deployment. Unapproved modifications or service procedures to the front passenger seat assembly, its related components, or trim cover may inadvertently change the airbag deployment in case of a frontal crash. Failure to follow these instructions may result in serious or fatal injury. The following requirements must be strictly adhered to:

- **Do not modify the front passenger seat assembly or components in any way.**
- **Do not modify the front seat center console or center position seat in any way.**
- **Do not use prior or future model year seat trim covers not designated for the specific model being repaired. Always use the correct seat trim cover specified for the vehicle.**
- **Do not replace the seat trim cover with an aftermarket trim cover.**
- **Do not add a secondary trim cover other than those approved by Chrysler/Mopar.**
- **At no time should any Supplemental Restraint System (SRS) component or SRS related component or fastener be modified or replaced with any part except those which are approved by Chrysler/Mopar.**

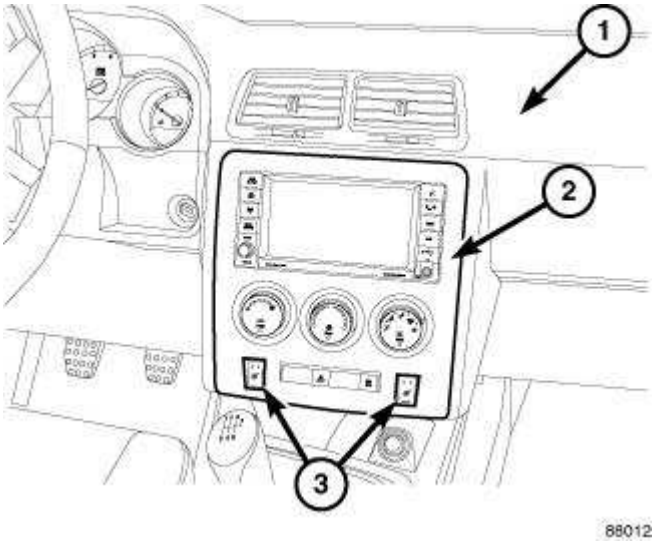

Fig. 1: Instrument Panel, Center Stack & Heated Seat Switches
Courtesy of CHRYSLER LLC

Vehicles with the heated seat option can be identified by the two heated seat switches (3) located in the center stack (2) of the instrument panel (1). The heated seat system allows the driver and front passenger to select from two different levels of electrical seat heating (HI/LO). The heated seat system for this vehicle includes the following major components, which are described in further detail later in this service information:

- **Heated Seat Elements** - There are four heated seat elements are used per vehicle. Two heated seat elements are integral to each seat, one in the seat back and the other in the seat cushion.
- **Heated Seat Module** - There is one heated seat module in each vehicle with heated seats. The heated seat module is mounted under the right front seat and contains the control logic and software for the front heated seat system. The module communicates on the Controller Area Network (CAN) data bus.
- **Heated Seat Switches** - Each heated seat is operated by a heated seat switch. These switches are mounted on the center stack of the instrument panel.
- **Instrument Cluster** - A Cab Compartment Node (CCN) is part of the instrument cluster on this vehicle. The CCN uses integrated software and information carried on the CAN data bus. The CCN serves as the link between the heated seat switches and the heated seat module.

OPERATION

OPERATION

The heated seat system operates on battery current received through a fuse in the Totally Integrated Power Module (TIPM). Fused ignition switch output (run) circuits are used, so that the heated seat system will only operate when the ignition switch is in the On position. The heated seat system will turn Off automatically whenever the ignition switch is turned to any position except On.

A Heated Seat Module is used to control the heated seat system. The module responds to heated seat switch messages and ignition switch status inputs by controlling the 12v output to the front seat heating elements through integral solid-state relays.

When either of the heated seat switches are depressed a resistance signal is sent to the Cab Compartment Node (CCN) or instrument cluster. The CCN then sends a message via the Controller Area Network (CAN) data bus to the heated seat module, signaling the module to energize the heating element for the selected seat. Amber Light Emitting Diodes (LEDS) in the top portion of each switch indicate the level of heat in use: Two LEDs are illuminated for high, one for low, and none for off. Pressing the switch once will select high-level heating. Pressing the switch a second time will select low-level heating. Pressing the switch a third time will shut the heating elements off.

The heated seat module energizes an integral solid-state relay, which supplies battery current to the heating elements. When high-temperature heating is selected, the heaters provide a boosted heat level during the first four minutes of operation after heating is activated. The heat output then drops to the normal high-temperature level. If high-level heating is selected, the control system will automatically switch to the low level after two hours of continuous operation. At that time, the number of illuminated LEDs changes from two to one, indicating the change. Operation on the low setting also turns off automatically after two hours.

The module will automatically turn off the heating elements if it detects an OPEN or LOW short in the heating element circuit.

DIAGNOSIS AND TESTING

HEATED SEAT SYSTEM

In order to obtain conclusive testing, the heated seat system and the Controller Area Network (CAN) data bus circuit must be checked. **Any diagnosis of the heated seat system should begin with, the use of a scan tool and the appropriate diagnostic service information.**

Refer to SYSTEM WIRING DIAGRAMS for complete circuit schematic or connector pin-out information.

NOTE: Vehicles equipped with the heated seat option utilize a low voltage cut-off feature. This feature turns off power to the heated seat system anytime vehicle voltage is below 11.1v or above 15.5v. Be certain to check the vehicle electrical system for proper voltage anytime the power seat system appears inoperative.

Before any testing of the power seat system is attempted, the battery should be fully-charged.

MODULE, HEATED SEAT

DESCRIPTION

DESCRIPTION

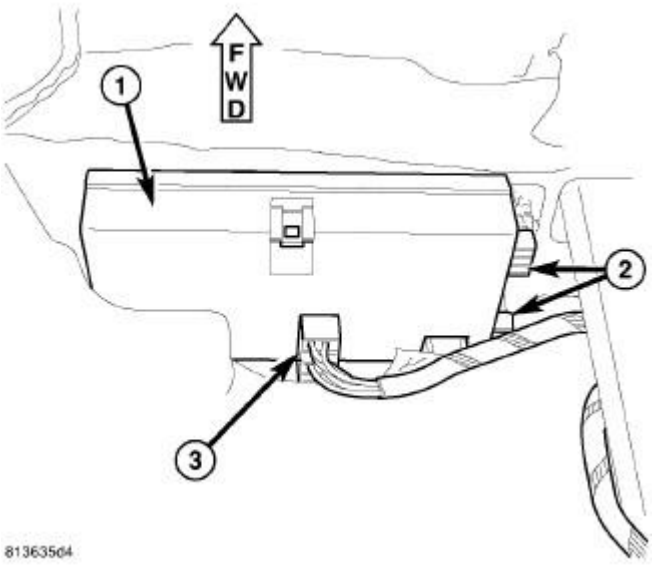

Fig. 2: Heated Seat Module
Courtesy of CHRYSLER LLC

The heated seat module (1) is located under the right front seat. It has a single electrical connector (3) and four locking tabs (2) that secure it to the floor cross member. The module can be accessed through the separation between the front and rear carpet assemblies.

The heated seat module is a microprocessor designed to use Controller Area Network (CAN) data bus messages from the instrument cluster also known as the Cabin Compartment Node (CCN). The CCN receives inputs from the heated seat switches and in turn signals the heated seat module to operate the heated seat elements for both front seats.

OPERATION

OPERATION

The heated seat module operates on fused battery current received from the ignition switch. The module is grounded to the body at all times through the electrical connector. Inputs to the module include Controller Area Network (CAN) data bus messages and standard hardwired 12volt power and ground. In response to the CAN inputs the heated seat module will control the battery current to the appropriate heated seat elements.

When a heated seat switch CAN data bus signal is received by the heated seat module, the module energizes the selected heated seat element. The Low heat set point is about 38°C (100.4°F), and the High heat set point is about 42°C (107.6°F).

If the heated seat module detects a heated seat element OPEN or SHORT circuit, it will record and store the appropriate diagnostic trouble code (DTC).

DIAGNOSIS AND TESTING

HEATED SEAT MODULE

In order to obtain conclusive testing, the heated seat system and the Controller Area Network (CAN) data bus circuit must be checked. **Any diagnosis of the heated seat system should begin with, the use of a scan tool and the appropriate diagnostic service information.**

Refer to SYSTEM WIRING DIAGRAMS for complete circuit schematic or connector pin-out information.

NOTE: Vehicles equipped with the heated seat option utilize a low voltage cut-off feature. This feature turns off power to the heated seat system anytime vehicle voltage is below 11.0v or above 15.5v. Be certain to check the vehicle electrical system for proper voltage anytime the power seat system appears inoperative.

Before any testing of the power seat system is attempted, the battery should be fully-charged.

REMOVAL

REMOVAL

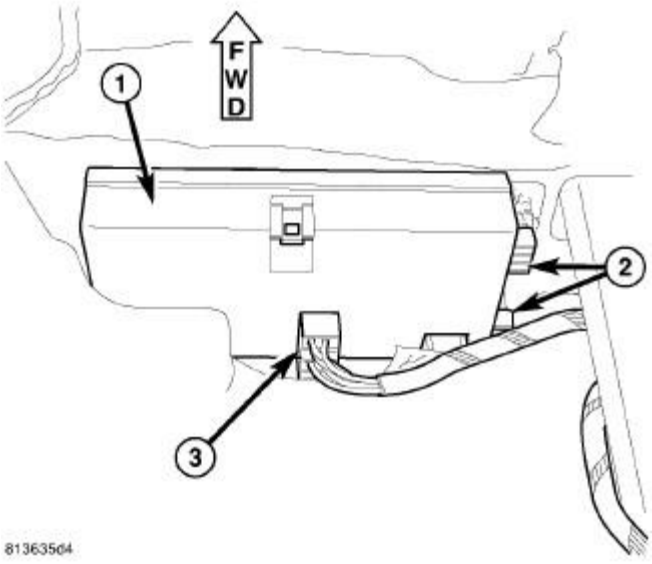

Fig. 3: Heated Seat Module
Courtesy of CHRYSLER LLC

1. Disconnect and isolate the battery negative cable.
2. Remove the right front seat from the vehicle. Refer to **Body/Seats/SEAT - Removal** .
3. Reposition the front carpet assembly aside to gain access to the heated seat module (1).
4. Disconnect the wire harness connector (3) from the heated seat module (1).
5. Unsnap the heated seat module retaining clips (2) from the floor crossmember.
6. Remove the heated seat module (1) from the vehicle.

INSTALLATION

INSTALLATION

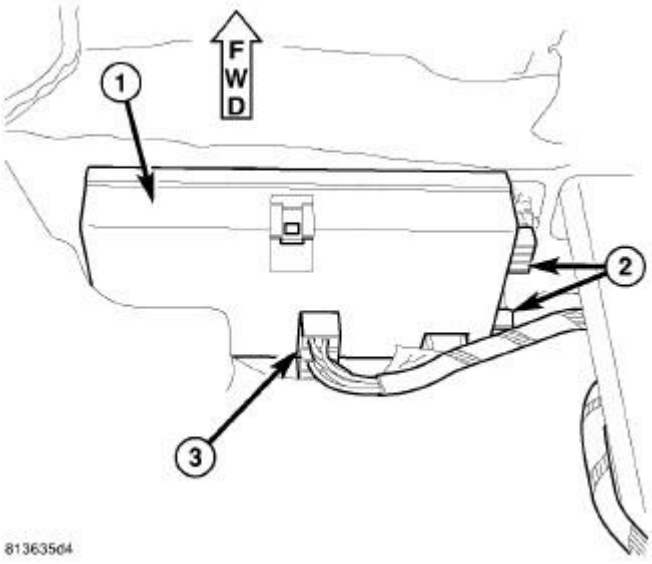

Fig. 4: Heated Seat Module
Courtesy of CHRYSLER LLC

1. Install the heated seat module (3) into the vehicle.
2. Position the tab into the hole in the floor crossmember. Firmly apply even pressure to the heated seat module (3) until the retaining clips (2) snap into place.
3. Connect the electrical connector (3) to the heated seat module (1).
4. Reposition the front carpet assembly.
5. Install the right front seat. Refer to **Body/Seats/SEAT - Installation** .
6. Connect the battery negative cable.
7. Check for proper heated seat system operation.

PAD, HEATER

DESCRIPTION

DESCRIPTION

Vehicles equipped with the optional heated seat system have two, carbon fiber heated seat elements, located in each front seat. One heating element is used for each seat cushion and another for each seat back.

Each of the heated seat element consists of multiple heating circuits operating in parallel throughout the carbon fiber element. The heated seat elements are captured between the leather trim cover and the seat cushion assembly. If a malfunction occurs in one or more of the individual carbon fiber

circuits, the others will continue to provide heat.

The heated seat elements cannot be repaired. If found to be damaged or inoperative, a new heating element assembly must be installed.

OPERATION

OPERATION

One end of the heated seat element is connected to ground at all times through a splice under the seat. Battery current is directed to the other end of the heated seat element by the heated seat module. The heated seat module will energize the heated seat element when the heated seat switch is depressed in the Low or High position.

As electrical current passes through the heated seat element, the resistance of the wire used in the element disperses some of the electrical current in the form of heat. The heat produced by the heated seat element then radiates through the underside of the seat cushion and seat back trim covers, warming the seat cover and its occupant.

DIAGNOSIS AND TESTING

HEATED SEAT ELEMENT

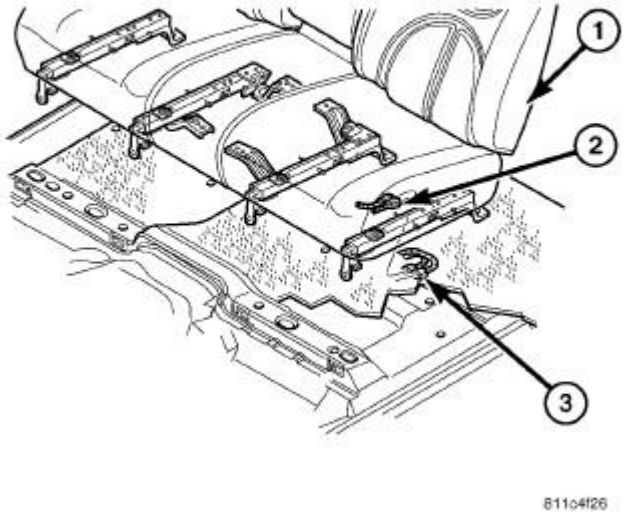

Fig. 5: Wire Harness Connectors
Courtesy of CHRYSLER LLC

Refer to SYSTEM WIRING DIAGRAMS for complete circuit schematic or connector pin-out information.

The wire harness connectors (2 AND 3) for the heating elements are located under the seat (1).

NOTE: When checking heated seat elements for continuity, be certain to move the heating element being checked. Moving the element, such as sitting in the seat will eliminate the possibility of an intermittent open in the element which would only be evident if the element was in a certain position. Failure to check the element in various positions could result in an incomplete test.

1. Locate and disconnect the seat electrical connector.
2. Check the resistance between the circuit leading in and out of the suspect heated seat element. The resistance should be between 3.8 - 4.8 ohms for a seat cushion element and 4.3 - 5.4 ohms for a seat back element. If OK. See **Electrical - Heated/Cooled Systems/Heated Seats - Diagnosis and Testing**. If not OK, replace the inoperative heated seat element.

REMOVAL

REMOVAL

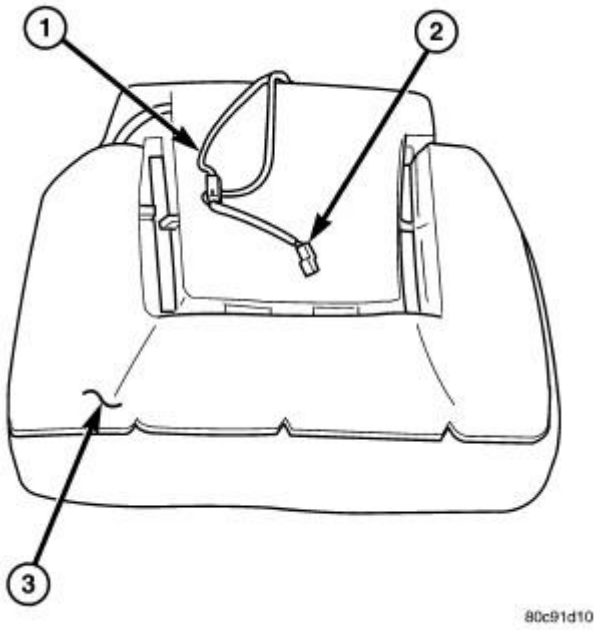

Fig. 6: Identifying Seat Back Element Electrical Connector And Heating Element
Courtesy of CHRYSLER LLC

NOTE: The factory installed heating element can be removed from foam cushion (3) by carefully peeling the element off along the adhesive lines.

1. Disconnect and isolate the battery negative cable.
2. Remove the appropriate seat cushion. Refer to **Body/Seats/COVER, Seat Cushion - Removal** or seat back trim cover. Refer to **Body/Seats/SEAT BACK - Removal**

3. Disconnect the inoperative heated seat cushion or seat back element electrical connectors (2).
4. Carefully peel the heating element off of the foam pad (3), being careful not to remove excessive foam in the process.

INSTALLATION

INSTALLATION

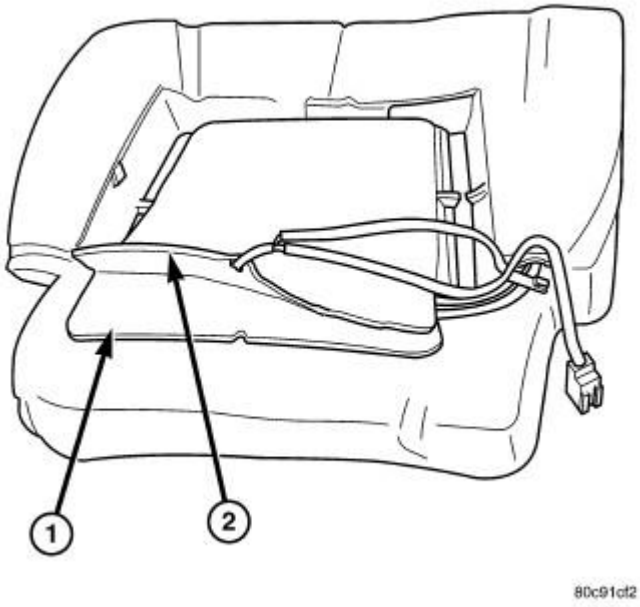

Fig. 7: Peeling Off Adhesive Backing On Back Of Replacement Heating Element
Courtesy of CHRYSLER LLC

1. Peel the adhesive backing from the back of the replacement heating element (2), and place on foam pad directly where the original element was placed (there will be adhesive marks on the foam outlining the factory installed element) (1).

CAUTION: During the installation of the replacement heating element, be careful not to fold or crease the element assembly. Folds or creases will cause premature failure.

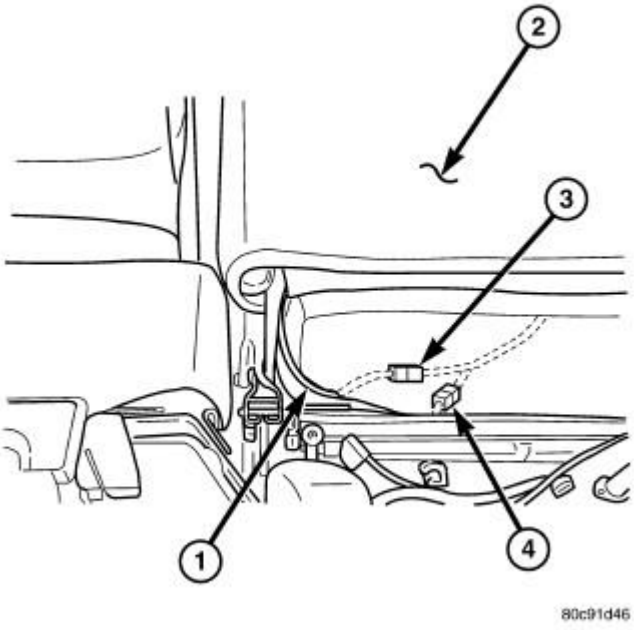

Fig. 8: Identifying Heating Element Electrical Connectors
Courtesy of CHRYSLER LLC

2. Connect the new heating element electrical connectors (3 and 4).
3. Connect the battery negative cable.
4. Verify heated seat system operation.
5. Install the appropriate seat cushion. Refer to **Body/Seats/COVER, Seat Cushion - Installation** or seat back trim cover. Refer to **Body/Seats/SEAT BACK - Installation**

NOTE: **Make certain the heated seat wire harness is correctly routed through the seat cushion and seat back. The excess wire between the cushion and back elements should be securely tucked between the rear of the cushion foam and the rear carpet flap of the trim cover. The factory installed heater element should be completely removed from the system and discarded.**

SWITCH, HEATED SEAT

DESCRIPTION

DESCRIPTION

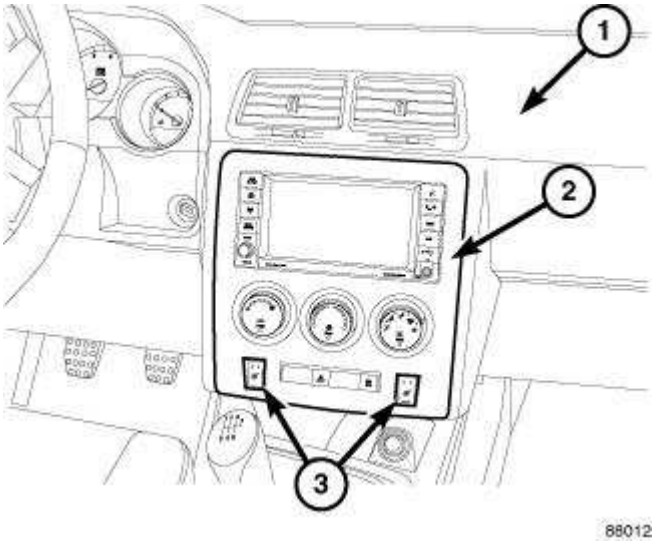

Fig. 9: Instrument Panel, Center Stack & Heated Seat Switches
Courtesy of CHRYSLER LLC

The heated seat switches (3) are located in the instrument panel (1). The two switches are snapped into mounting holes in the instrument panel center bezel (2). The two heated seat switches are identical in appearance and construction.

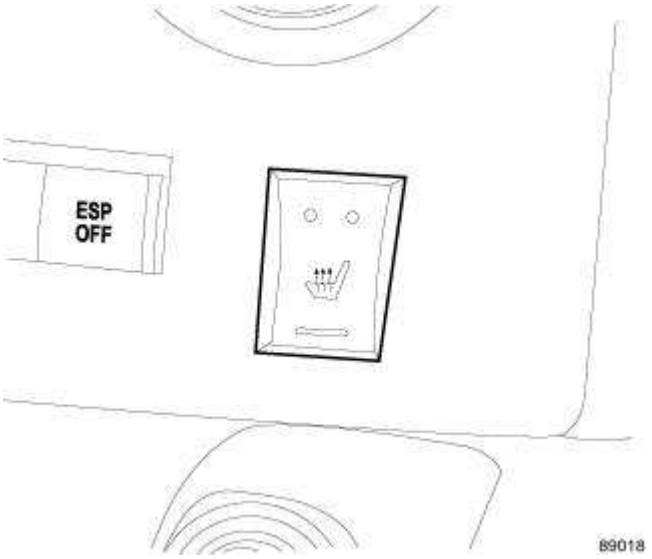

Fig. 10: Heated Seat Switch
Courtesy of CHRYSLER LLC

Each heated seat switch provides a resistor multiplexed signal to the Cab Compartment Node (CCN). Amber Light Emitting Diodes (LEDS) in the top portion of each switch indicate the level of heat in use: two LEDs are illuminated for high, one for low, and none for off. Pressing the switch once selects high level heating. Pressing the switch a second time selects low level heating. Pressing the switch a third time shuts the heating elements off.

The LED indicators in each heated seat switch cannot be repaired. If the LED indicators are

inoperative or damaged, or the switch is inoperative or damaged the individual heated seat switch assembly must be replaced.

OPERATION

OPERATION

The heated seat switches receive battery current through a fused ignition switch output (run) circuit when the ignition switch is in the On position. Depressing the heated seat switch provides a hard-wired resistor multiplexed signal to the Cabin Compartment Node (CCN). The CCN is responsible for supplying the Controller Area Network (CAN) data bus message to the heated seat module, signaling the module to power the heated seat element of the selected seat and maintain the temperature setting.

If the heated seat switch is depressed to a different position (Low or High) than the currently selected state, the CCN will go through the process again to change the temperature setting. If a heated seat switch is depressed a second time to the same position as the currently selected state, the CCN and heated seat module interprets the second input as a request to turn the seat heater OFF. The CCN will then signal the heated seat module to turn the heated seat elements for that seat off.

DIAGNOSIS AND TESTING

HEATED SEAT SWITCH

In order to obtain conclusive testing, the heated seat system and the Controller Area Network (CAN) data bus circuit must be checked. **Any diagnosis of the heated seat system should begin with, the use of a scan tool and the appropriate diagnostic service information.**

Refer to SYSTEM WIRING DIAGRAMS for complete circuit schematic or connector pin-out information.

NOTE: Vehicles equipped with the heated seat option utilize a low voltage cut-off feature. This feature turns off power to the heated seat system anytime vehicle voltage is below 11.0v or above 15.5v. Be certain to check the vehicle electrical system for proper voltage anytime the power seat system appears inoperative.

Before any testing of the power seat system is attempted, the battery should be fully-charged.

REMOVAL

REMOVAL

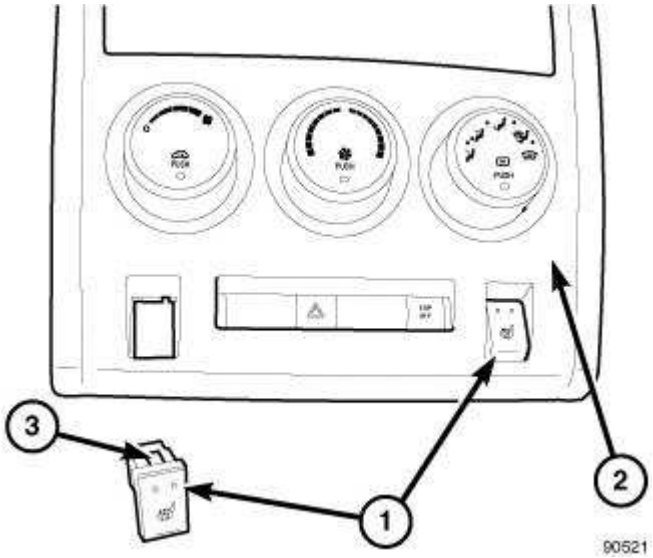

Fig. 11: Heated Seat Switch, Center Bezel & Tabs
Courtesy of CHRYSLER LLC

1. Disconnect and isolate the battery negative cable.
2. Remove the center bezel (2) from the instrument panel. Refer to **Body/Instrument Panel/BEZEL, Instrument Panel - Removal** .
3. Disconnect the heated seat switch electrical connector.
4. From the back of the center bezel (2) squeeze the two tabs (3) at the top and bottom of the switch and push the heated seat switch (1) through the opening of the center bezel.

INSTALLATION

INSTALLATION

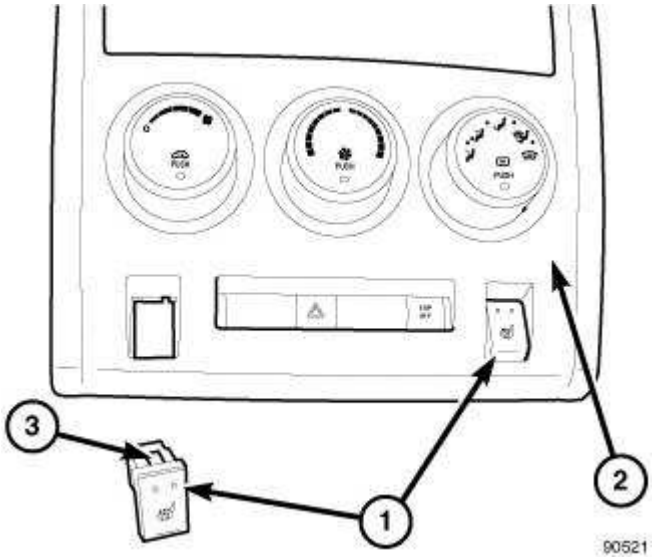

Fig. 12: Heated Seat Switch, Center Bezel & Tabs
Courtesy of CHRYSLER LLC

1. From the front of the center bezel (2), carefully push the heated seat switch (1) in through the front of the bezel until both tabs (3) lock into place.
2. Connect the heated seat switch electrical connector.
3. Install the center bezel (2) into the instrument panel. Refer to **Body/Instrument Panel/BEZEL, Instrument Panel - Installation** .
4. Connect the battery negative cable.
5. Verify heated seat operation.

TRANSMITTER, UNIVERSAL

DESCRIPTION

DESCRIPTION

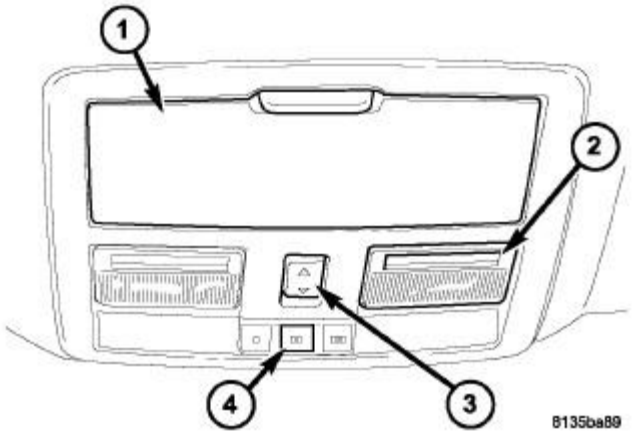

Fig. 1: Identifying Overhead Console Components
Courtesy of CHRYSLER LLC

The universal transmitter transceiver is integral to the overhead console. The only visible component of the universal transmitter are the three transmitter push buttons (4) at the front of the overhead console. The buttons are marked with one, two or three illuminated dots, respectively, for identification of each channel.

Each of the three universal transmitter push buttons controls an independent radio transmitter channel. Each of these three channels can be trained to transmit a different radio frequency signal for the remote operation of garage door openers, motorized gate openers, home or office lighting, security systems or just about any other device that can be equipped with a radio receiver in the 286 to 399 MegaHertz (MHz) frequency range for remote operation. The universal transmitter is capable of operating systems using either rolling code or non-rolling code technology. The system will not transmit operating signals if the Vehicle Theft Security System is armed.

The universal transmitter cannot be repaired, and is available for service only as a unit. This unit includes the push button switches and the plastic module.

DIAGNOSIS AND TESTING

UNIVERSAL TRANSMITTER

If the Universal Transmitter is inoperative, but the Electronic Vehicle Information Center (EVIC) is operating normally. See **Electrical - Message Systems/Universal Transmitter/TRANSMITTER, Universal - Standard Procedure** for instructions on training the Transmitter. Retrain the Transmitter with a known good transmitter as instructed and test the Transmitter operation again.

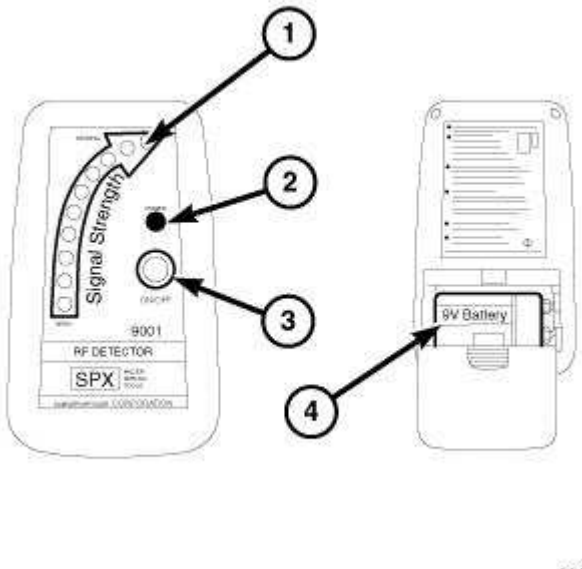

Fig. 2: Radio Frequency Detector #9001
Courtesy of CHRYSLER LLC

If the unit is still inoperative, test the universal transmitter with Radio Frequency Detector special tool as described below:

1. Turn the Radio Frequency (RF) Detector ON. A "chirp" will sound and the green power Light Emitting Diode (LED) will light. If the green LED does not light, replace the battery.
2. Hold the RF detector within one inch of the TRAINED universal transmitter and press any of the transmitters buttons.
3. The red signal detection LEDs will light and the tool will beep if a radio signal is detected. Repeat this test for each button. If any button is inoperative, replace the universal transmitter assembly. See **Electrical - Message Systems/Universal Transmitter/TRANSMITTER, Universal - Removal**.

If both the Transmitter and the EVIC module are inoperative. Refer to **Electrical - Message Systems/Message Center/CENTER, Electronic Vehicle Information - Diagnosis and Testing** for further diagnosis. Refer to the appropriate **SYSTEM WIRING DIAGRAMS** for complete circuit schematic or connector pin-out information.

STANDARD PROCEDURE

PROGRAMMING TRANSMITTER CODES

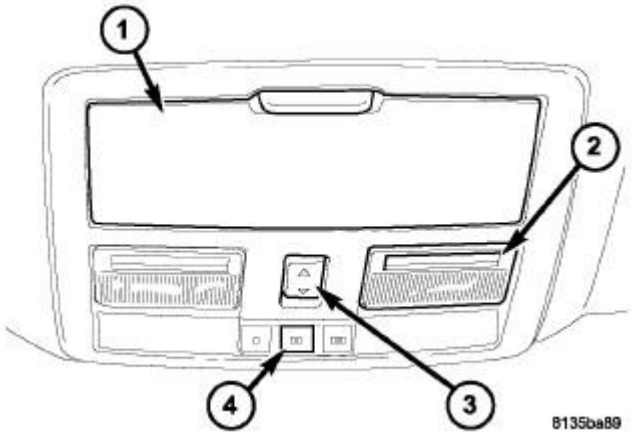

Fig. 3: Identifying Overhead Console Components
Courtesy of CHRYSLER LLC

CAUTION: Vehicle exhaust contains carbon monoxide, a dangerous gas. Do not run the vehicle's exhaust while training the transceiver. Exhaust gas can cause serious or fatal injury.

CAUTION: Your motorized door or gate will open and close while you are training the Universal Transceiver. Do not train the transceiver if people or pets are in the path of the door or gate. A moving door or gate can cause serious or fatal injury to people and pets or damage to objects.

The Electronic Vehicle Information Center (EVIC) features a driver-interactive display which includes HomeLink® system messages. The EVIC is located in the lower part of the speedometer.

1. Press and hold the two outer HomeLink® buttons (4), and release only when the EVIC display shows "Channels Cleared" (after 20 seconds). **Do not** hold the buttons for longer than 30 seconds and **do not** repeat step one to program a second and/or third hand-held transmitter to the remaining two HomeLink® buttons.
2. Position the end of your hand-held transmitter 1-3 inches (3-8 cm) away from the HomeLink® buttons.
3. Simultaneously press and hold both the HomeLink® button that you want to train and the hand-held transmitter buttons. **Do not release the buttons until step 4 has been completed.**
4. The EVIC display will show "Channel X Training" (where X is Channel 1, 2, or 3). Release both buttons after the EVIC display shows "Channel X Trained".

NOTE: If the EVIC display shows "Did Not Train" repeat steps 2-4.

5. Press and hold the just trained HomeLink® button and observe the EVIC display. If the EVIC display shows "Channel X Transmit" (where X is Channel 1, 2, or 3), programming is complete and your device should activate when the HomeLink® button is pressed and released.

NOTE: **To program the remaining two HomeLink® buttons, begin with "Programming" step two. Do not repeat step one.**

NOTE: **If your hand-held transmitter appears to program the universal transceiver, but your garage door does not operate using the transmitter and your garage door opener was manufactured after 1995, your garage door opener may have a multiple security code system (rolling code system). Please proceed to steps 6-8 to complete the programming of a rolling code equipped device (most common garage door openers require this step.**

6. At the garage door opener receiver (motor-head unit) in the garage, locate the "learn" or "smart" button. This can usually be found where the hanging antenna wire is attached to the motor-head unit.
7. Firmly press and release the "learn" or "smart" button. (The name and color of the button may vary by manufacturer.)

NOTE: **There are 30 seconds in which to initiate step eight.**

8. Return to the vehicle and firmly **press, hold for two seconds and release** the programmed HomeLink® button. Repeat the **"press/hold/release"** sequence a second time, and, depending on the brand of the garage door opener (or other rolling code equipped device), repeat this sequence a third time to complete the programming.
9. HomeLink® should now activate your rolling code equipped device.
10. To program the remaining two HomeLink® buttons, begin with "Programming" **step two. Do not repeat step one.**

ERASING TRANSMITTER CODES

NOTE: **Individual channels cannot be erased. Erasing the transmitter codes will erase ALL programmed codes.**

To erase programming from the three buttons (individual buttons cannot be erased but can be "reprogrammed" - note below), follow the step noted:

- Press and hold the two outer HomeLink® buttons and release only when the Electronic Vehicle Information Center (EVIC) display shows "Channels Cleared" (after 20 seconds). Release both buttons. Do not hold for longer that 30 seconds. HomeLink® is now in the train (or learning) mode and can be programmed at any time. See **Electrical - Message Systems/Universal Transmitter/TRANSMITTER, Universal - Standard Procedure**.

REPROGRAMMING TRANSMITTER CODES

CAUTION: **Vehicle exhaust contains carbon monoxide, a dangerous gas. Do not run the vehicle's exhaust while training the transceiver. Exhaust gas can cause serious or fatal injury.**

CAUTION: Your motorized door or gate will open and close while you are training the Universal Transceiver. Do not train the transceiver if people or pets are in the path of the door or gate. A moving door or gate can cause serious or fatal injury to people and pets or damage to objects.

To program a device to HomeLink® using a HomeLink® button previously trained, follow these steps:

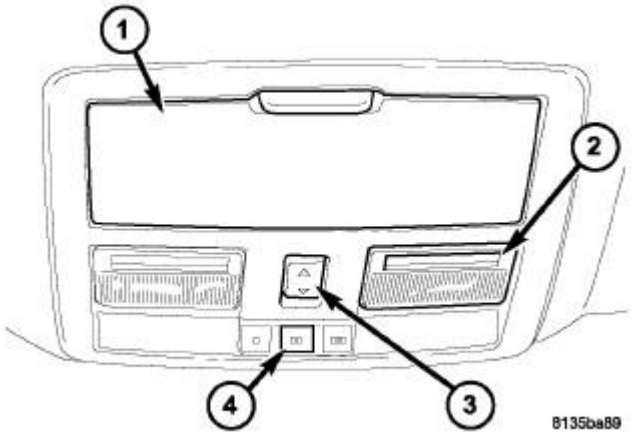

Fig. 4: Identifying Overhead Console Components
Courtesy of CHRYSLER LLC

1. Press and hold the desired HomeLink® button (4). **Do NOT** release the button.
2. The EVIC display will show "Channel X Transmit" (where X is Channel 1, 2, or 3) for 20 seconds and then change to "Channel X Training". Without releasing the HomeLink® button, proceed to step 3.
3. Position the end of your hand-held transmitter 1-3 inches (3-8 cm) away from the HomeLink® buttons.
4. Simultaneously press and hold both the HomeLink® button that you want to train and the hand-held transmitter buttons. **Do not release the buttons until step 4 has been completed.**
5. Press and hold the just trained HomeLink® button and observe the EVIC display. If the EVIC display shows "Channel X Transmit" (where X is Channel 1, 2, or 3), programming is complete and your device should activate when the HomeLink® button is pressed and released.

NOTE: To program the remaining two HomeLink® buttons, begin with "Programming" step two. Do not repeat step one.

NOTE: If your hand-held transmitter appears to program the universal transceiver, but your garage door does not operate using the transmitter and your garage door opener was manufactured after 1995, your garage door opener may have a multiple security code system (rolling code system). Please proceed to steps 6-8 to complete the programming of a rolling code equipped device (most common garage door openers require this step).

6. At the garage door opener receiver (motor-head unit) in the garage, locate the "learn" or "smart" button. This can usually be found where the hanging antenna wire is attached to the motor-head unit.
7. Firmly press and release the "learn" or "smart" button. (The name and color of the button may vary by manufacturer.)

NOTE: There are 30 seconds in which to initiate step eight.

8. Return to the vehicle and firmly **press, hold for two seconds and release** the programmed HomeLink® button. Repeat the **"press/hold/release"** sequence a second time, and, depending on the brand of the garage door opener (or other rolling code equipped device), repeat this sequence a third time to complete the programming.
9. HomeLink® should now activate your rolling code equipped device.

REMOVAL

REMOVAL

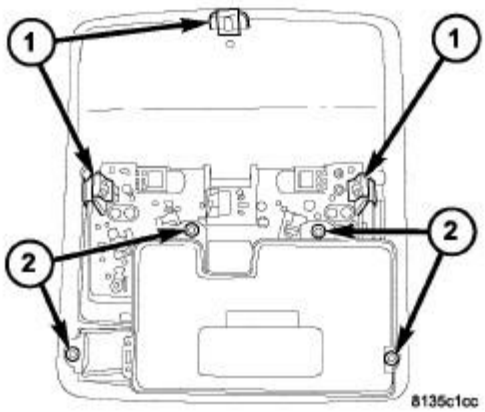

Fig. 5: Universal Transmitter Retaining Screws
Courtesy of CHRYSLER LLC

1. Disconnect and isolate the battery negative cable.
2. Remove the overhead console assembly. Refer to **Electrical - Message Systems/Overhead Console - Removal** .
3. Remove the universal transmitter retaining screws (2) and separate the transmitter from the overhead console.

INSTALLATION

INSTALLATION

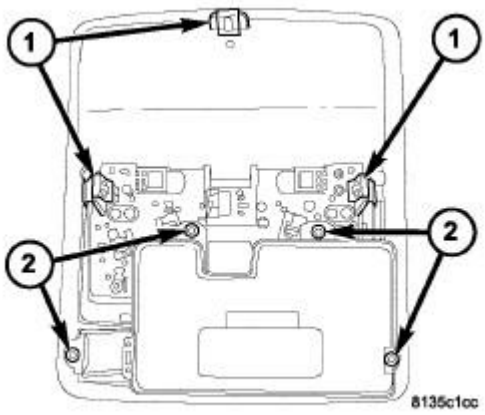

Fig. 6: Universal Transmitter Retaining Screws
Courtesy of CHRYSLER LLC

NOTE: **In addition to the Universal Transmitter operation the Electronic Overhead Module is responsible for some of the compass functions. Anytime the Electronic Overhead Module is replaced the compass variance value must be set. Refer to Electrical - Message Systems/Message Center/CENTER, Electronic Vehicle Information - Standard Procedure .**

1. Position the universal transmitter onto the overhead console assembly and install the retaining screws (2).
2. Install the overhead console assembly. Refer to **Electrical - Message Systems/Overhead Console - Installation** .
3. Connect the battery negative cable.
4. Program the universal transmitter codes. Refer to **Electrical - Message Systems/Message Center/CENTER, Electronic Vehicle Information - Standard Procedure** .

ACCESSORIES AND EQUIPMENT

Horn System - Service Information - Challenger

DESCRIPTION

DESCRIPTION

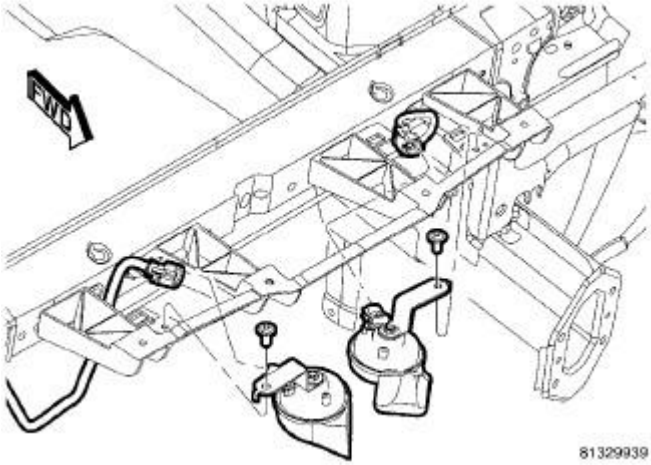

Fig. 1: Horn Mounting
Courtesy of CHRYSLER LLC

The dual-note horn system features two electromagnetic horn units. The horn system includes the following major components:

- **Horn** - The two horns are located behind the grille below a trim cover.
- **Horn Switch** - The horn switch is molded into the driver airbag trim cover.

OPERATION

OPERATION

The horn system operates on battery current received through a fuse in the Integrated Power Module (IPM). The horn system circuit is designed so the system remains operational, regardless of the ignition switch position.

DIAGNOSIS AND TESTING

DIAGNOSIS AND TESTING - HORN SYSTEM

The most reliable, efficient, and accurate means to diagnose the horn system requires the use of a scan tool and the proper Diagnostic Procedures information.

Refer to SYSTEM WIRING DIAGRAMS .

In most cases, any problem involving continually sounding horns can be quickly alleviated by removing the horn fuse from the Integrated Power Module (IPM).

WARNING: Disable the airbag system before attempting any steering wheel, steering column, seat belt tensioner, side airbag, or instrument panel component diagnosis or service. Disconnect and isolate the battery negative (ground) cable, then wait two minutes for the airbag system capacitor to discharge before performing further diagnosis or service. This is the only sure way to disable the airbag system. Failure to take the proper precautions could result in accidental airbag deployment and possible serious or fatal injury.

HORN

REMOVAL

REMOVAL

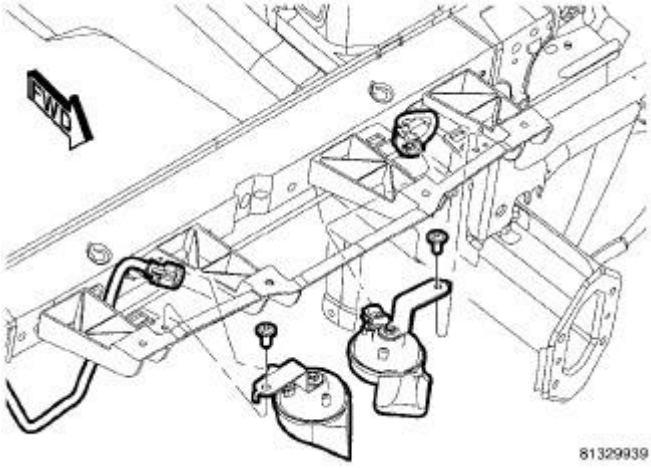

Fig. 2: Horn Mounting
Courtesy of CHRYSLER LLC

NOTE: A battery reconnect procedure must be performed anytime the battery has been disconnected. Refer to Electrical - Engine Systems/Battery System - Standard Procedure .

1. Disconnect and isolate the battery negative cable.
2. Remove cover above horn.
3. Disconnect electrical harness connector.
4. Remove mounting fastener and remove horn.

INSTALLATION

INSTALLATION

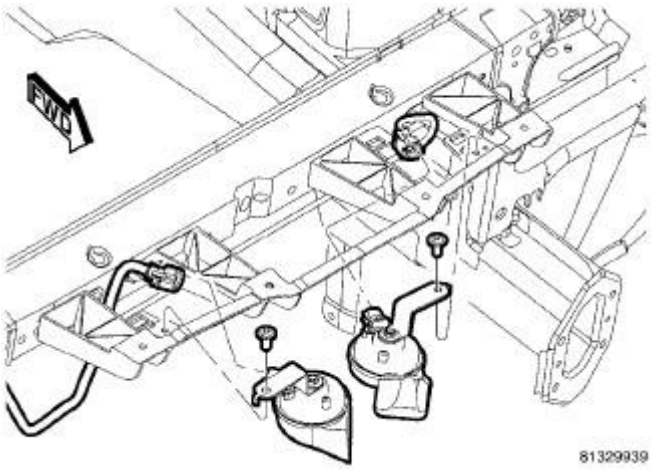

Fig. 3: Horn Mounting
Courtesy of CHRYSLER LLC

NOTE: A battery reconnect procedure must be performed anytime the battery has been disconnected. Refer to Electrical - Engine Systems/Battery System - Standard Procedure .

1. Position horn. Install and tighten mounting fasteners.
2. Connect electrical harness connector.
3. Install cover above horn.
4. Connect battery negative cable.

SWITCH, HORN

DESCRIPTION

DESCRIPTION

The horn switch is molded into the driver airbag cover. The horn switch cannot be serviced separately. Refer to **Restraints/COVER, Driver Air Bag - Removal** .

DIAGNOSIS AND TESTING

HORN SWITCH

The most reliable, efficient, and accurate means to diagnose the horn system requires the use of a scan tool and the proper Diagnostic Procedures information.

For complete circuit diagrams, refer to SYSTEM WIRING DIAGRAMS .

WARNING: Disable the airbag system before attempting any steering wheel, steering column, seat belt tensioner, side airbag, or instrument panel component diagnosis or service. Disconnect and isolate the battery negative (ground) cable, then wait two minutes for the airbag system capacitor to discharge before performing further diagnosis or service. This is the only sure way to disable the airbag system. Failure to take the proper precautions could result in accidental airbag deployment and possible serious or fatal injury.

HVAC

Heating & Air Conditioning - Service Information - Challenger

DESCRIPTION

HEATING AND AIR CONDITIONING SYSTEM

A manual temperature control (MTC) single zone type heating-A/C system is standard equipment on this vehicle.

To maintain the performance level of the heating, ventilation and air conditioning (HVAC) system, the engine cooling system must be properly maintained. The use of a bug screen is not recommended. Any obstructions in front of the radiator or A/C condenser will reduce the performance of the A/C and engine cooling systems.

The engine cooling system includes the radiator, thermostat, radiator hoses and the engine coolant pump. See **COOLING** for more information before opening or attempting any service to the engine cooling system.

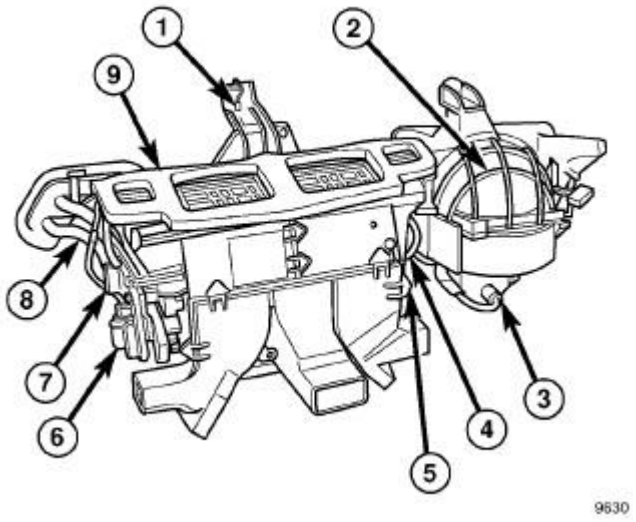

Fig. 1: (HVAC) Housing
Courtesy of CHRYSLER LLC

This vehicle is equipped with a heater, ventilation and air conditioning (HVAC) housing (1) that combines A/C, heating, and ventilating capabilities into a single unit mounted within the passenger compartment behind the instrument panel. The HVAC housing includes:

- Recirculation-air door and actuator (2)
- Blower motor (3)
- Blower motor resistor (4)

- Evaporator temperature sensor (5)
- Mode-air doors and actuator (6)
- Blend-air door and actuator (7)
- Heater core (8)
- A/C evaporator (9)

Based upon the system and selected mode, conditioned air can exit the HVAC housing through one or a combination of the three main housing outlets: defrost, panel or floor. The defrost and panel outlets are located on the top of the HVAC housing and the floor outlets are located on the bottom of the HVAC housing. Once the conditioned air exits the HVAC housing, it is further directed through molded plastic ducts to the outlets within the vehicle interior. These outlets and their locations are as follows:

- **Defroster Outlets** - Two large defroster outlets are located near the center of the instrument panel top cover, near the base of the windshield.
- **Side Window Demister Outlets** - There are two side window demister outlets, one is located at each outboard end of the instrument panel top cover, near the belt line at the A-pillars.
- **Panel Outlets** - There are four panel outlets in the instrument panel, one located near each outboard end of the instrument panel facing the rear of the vehicle and one located on each side of the instrument panel center bezel.
- **Floor Outlets** - There is one floor outlet located above each side of the floor panel center tunnel near the dash panel. There is also one outlet located under each front seat.
- **Console Outlets** - There are two console outlets located at the back of the center floor console facing the rear of the vehicle.

OPERATION

OPERATION

The manual temperature control (MTC) heating-A/C system used in this vehicle is a blend-air type system. In a blend-air system, a blend-air door controls the amount of conditioned air that is allowed to flow through, or around, the heater core. The temperature control determines the discharge air temperature by operating the blend door actuator, which move the blend-air door. This design allows almost immediate control of output air temperature.

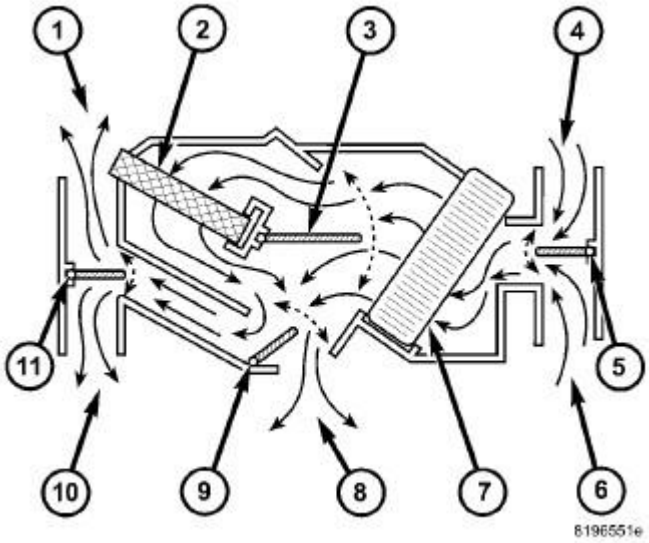

Fig. 2: Blend Air System Schematic
Courtesy of CHRYSLER LLC

The heating-A/C system pulls outside (ambient) air through the fresh air intake (4) located at the cowl panel at the base of the windshield and into the air inlet housing above the heating, ventilation and air conditioning (HVAC) housing and then passes through the A/C evaporator (7). Air flow is then directed either through or around the heater core (2). This is done by adjusting the position of the blend-air door (3) with the temperature control located on the A/C-heater control in the instrument panel. Air flow is then directed out the floor outlet (8), instrument panel outlet (10) or the defroster outlet (1) in various combinations by adjusting the position of the mode-air doors (9 and 11) using the mode control located on the A/C-heater control. The temperature and mode control uses electrical actuators to operate the air doors.

The velocity of the air flow out of the outlets can be adjusted with the blower speed control located on the A/C-heater control.

The fresh air intake can be shut off by pressing the Recirculation button on the A/C-heater control. This will operate the electrically actuated recirculation-air door (5), which closes off the fresh air intake. With the fresh air intake closed, the conditioned air within the vehicle is pulled back into the HVAC housing through the recirculation air intake (6) located within the passenger compartment.

The A/C compressor can be engaged by pressing the A/C (snowflake) button on the A/C-heater control. It will automatically engage when the mode control is set in any Floor to Defrost position. This will remove heat and humidity from the air before it is directed through or around the heater core. The mode control on the A/C-heater control is used to direct the conditioned air to the selected system outlets.

The two slot-type defroster outlets receive airflow from the HVAC housing through the molded plastic defroster ducts, which connect to the HVAC housing defroster outlets. The airflow from the defroster outlets is directed by fixed vanes in the defroster outlet grilles and cannot be adjusted. The defroster outlet grilles are integral to the instrument panel top cover.

The side window demister outlets receive airflow from the HVAC housing through the molded plastic demister ducts. The demisters direct air from the HVAC housing through the outlets located on the top corners of the instrument panel. The airflow from the side window demister outlets is directed by fixed vanes in the demister outlet grilles and cannot be adjusted. The side window demister outlet grilles are serviceable from the instrument panel. The demisters operate when the controls are set in Heat, Floor, Mix and Defrost modes.

The four instrument panel outlets receive airflow from the HVAC housing through two molded plastic main panel ducts. One duct directs air flow out of the right side instrument panel outlets, while the other duct delivers air flow to the left side outlets. Each of these outlets can be individually adjusted to direct the flow of air.

The floor outlets receive airflow from the HVAC housing through the floor distribution ducts which are integral to the rear cover of the HVAC air distribution housing. Two plastic rear distribution ducts and one center console duct attach to the rear cover and provide conditioned air to the rear seating positions. The two console outlets can be individually adjusted to direct the flow of air, but the floor outlets cannot be adjusted.

NOTE: **It is important to keep the HVAC air intake opening clear of debris. Leaf particles and other debris that is small enough to pass through the cowl opening screen can accumulate within the HVAC housing. The closed, warm, damp and dark environment created within the housing is ideal for the growth of certain molds, mildews and other fungi. Any accumulation of decaying plant matter provides an additional food source for fungal spores, which enter the housing with the fresh intake-air. Excess debris, as well as objectionable odors created by decaying plant matter and growing fungi can be discharged into the passenger compartment during heater-A/C operation if the air intake opening is not kept clear of debris.**

The A/C system is designed for the use of non-CFC, R-134a refrigerant and uses an A/C expansion valve to meter the flow of refrigerant to the A/C evaporator. The A/C evaporator cools and dehumidifies the incoming air prior to blending it with the heated air. To maintain minimum evaporator temperatures and prevent evaporator freezing, an evaporator temperature sensor is used. The sensor is located downstream of the evaporator and supplies an evaporator temperature signal to the A/C-heater control. The A/C-heater control sends the request for A/C to the cabin compartment node (CCN) on the CAN B bus. The CCN then broadcasts the A/C request on the CAN B bus, where it is read and processed by the totally integrated power module (TIPM), which in turn broadcasts the A/C request on the CAN C bus, where it is read and processed by the powertrain control module (PCM).

DIAGNOSIS AND TESTING

A/C PERFORMANCE

The A/C system is designed to provide the passenger compartment with low temperature and low humidity air. The A/C evaporator, located in the HVAC housing is cooled to temperatures near the freezing point. As warm damp air passes over the fins of the A/C evaporator, the air transfers its heat to the refrigerant in the evaporator coils and the moisture in the air condenses on the evaporator fins.

During periods of high heat and humidity, an A/C system will be more effective in the Recirculation mode (max-A/C). With the system in the Recirculation mode, only air from the passenger compartment passes through the A/C evaporator. As the passenger compartment air dehumidifies, the A/C system performance levels rise.

Humidity has an important bearing on the temperature of the air delivered to the interior of the vehicle. It is important to understand the effect that humidity has on the performance of the A/C system. When humidity is high, the A/C evaporator has to perform a double duty. It must lower the air temperature, and it must lower the temperature of the moisture in the air that condenses on the evaporator fins. Condensing the moisture in the air transfers heat energy into the evaporator fins and coils. This reduces the amount of heat the A/C evaporator can absorb from the air. High humidity greatly reduces the ability of the A/C evaporator to lower the temperature of the air.

However, evaporator capacity used to reduce the amount of moisture in the air is not wasted. Wringing some of the moisture out of the air entering the vehicle adds to the comfort of the passengers. Although, an owner may expect too much from their A/C system on humid days. A performance test is the best way to determine whether the system is performing up to design standards. This test also provides valuable clues as to the possible cause of trouble with the A/C system.

A/C PERFORMANCE TEST

WARNING: Refer to the applicable warnings and cautions for this system before performing the following operation. See Heating and Air Conditioning/Plumbing - Warning. See Heating and Air Conditioning/Plumbing - Caution. Failure to follow these instructions may result in serious or fatal injury.

CAUTION: The use of an A/C recycling/charging station for purposes of determining the actual charge level of an A/C system is not recommend. Service recycling/charging stations do not reflect the correct amount of refrigerant charge in the A/C system after a single "reclaim" cycle. Tests have shown that it takes up to two or more "reclaim" cycles to remove all of the refrigerant charge, depending on the equipment being used. Use only the following procedure for determining the proper A/C system charge level.

1. Make sure the following conditions are met in the area where the test is to be performed:
   - Maximum ambient temperature: 110°F (43.3°C)
   - Minimum ambient temperature: 60° F (15.5°C)
   - Minimum relative humidity: 20%
   - Maximum relative humidity: 90%
2. Operate the heating-A/C system under the following conditions.
   - Engine at normal operating temperature
   - Engine at normal idle speed
   - No sun-load in the cabin of the vehicle

- Vehicle doors and windows closed
- Transmission in Park or Neutral with the parking brake set (depending on transmission application)
- A/C-heater controls set to Recirculation mode, full cool, panel mode, high blower and with A/C compressor engaged. If the A/C compressor does not engage, see the **A/C SYSTEM DIAGNOSIS** table
- All panel outlet vanes open and positioned straight rearward

NOTE: If the following step is not performed, the results of this test will not be accurate.

3. Using a scan tool, operate the engine cooling fans at high speed from the Totally Integrated Power Module (TIPM) Electronic Control Unit (ECU) view.
4. Insert a thermometer in the driver side center panel air outlet and operate the A/C system until the thermometer temperature stabilizes or a minimum of 5 minutes.

NOTE: This procedure requires you to know what the temperature and relative humidity is in your location at the time of the test. This information can be obtained from multiple sources, such as the internet or local news media.

5. With the A/C compressor clutch engaged, compare the observed panel outlet air temperature along with ambient temperature and the relative humidity of the work area to the Maximum Panel Outlet Temperature chart.
6. If the air outlet temperature fails to meet the specifications in the Maximum Panel Outlet Temperature chart, see the **A/C SYSTEM DIAGNOSIS** table.

A/C SYSTEM DIAGNOSIS

Condition	Possible Causes	Correction
Rapid A/C compressor clutch cycling (ten or more cycles per minute).	1. Low refrigerant system charge.	1. See **REFRIGERANT SYSTEM LEAKS** . Test the refrigerant system for leaks. Repair, evacuate and charge the refrigerant system, if required.
Equal pressures, but the compressor clutch does not engage.	1. No refrigerant in the refrigerant system.	1. See **REFRIGERANT SYSTEM LEAKS** . Test the refrigerant system for leaks. Repair, evacuate and charge the refrigerant system, if required.
	2. Open fuse.	2. See **SYSTEM WIRING DIAGRAMS** . Check the fuses in the totally integrated power module (TIPM) and the rear power distribution center (PDC). Repair the shorted circuit or component and replace the fuse(s), if required.
	3. Inoperative A/C compressor clutch coil.	3. See **A/C COMPRESSOR CLUTCH COIL** . Test the compressor clutch coil

		and replace, if required.
	4. Improperly installed or inoperative evaporator temperature sensor.	4. See **SENSOR, Evaporator Temperature** . Test the sensor and replace, if required.
	5. Inoperative A/C pressure transducer.	5. See **TRANSDUCER, A/C Pressure** . Test the sensor and replace, if required.
	6. Inoperative Powertrain Control Module (PCM).	6. See appropriate Engine ELECTRICAL DIAGNOSTICS article. Test the Powertrain Control Module (PCM) and replace, if required.
Normal pressures, but A/C Performance Test air temperatures at center panel outlet are too high.	1. Excessive refrigerant oil in system.	1. See **OIL, Refrigerant** . Recover the refrigerant from the refrigerant system and inspect the refrigerant oil content. Restore the refrigerant oil to the proper level, if required.
	2. Blend door actuator improperly installed or inoperative.	2. See **ACTUATOR, Blend Door** . Inspect the actuator for proper operation and replace, if required.
	3. Blend-air door inoperative or sealing improperly.	3. See **HOUSING, HVAC** . Inspect the blend-air door for proper operation and sealing. Repair if required.
The low side pressure is normal or slightly low, and the high side pressure is too low.	1. Low refrigerant system charge.	1. See **REFRIGERANT SYSTEM LEAKS** . Test the refrigerant system for leaks. Repair, evacuate and charge the refrigerant system, if required.
	2. Refrigerant flow through the A/C evaporator is restricted.	2. See **EVAPORATOR, A/C** . Replace the restricted A/C evaporator, if required.
	3. Inoperative A/C compressor.	3. See **COMPRESSOR, A/C** . Replace the A/C compressor, if required.
The low side pressure is normal or slightly high, and the high side pressure is too high.	1. A/C condenser air flow restricted.	1. See **CONDENSER, A/C** . Check the A/C condenser for damaged fins, foreign objects obstructing air flow through the condenser fins, and missing or improperly installed air seals. Clean, repair, or replace components as required.
	2. Refrigerant flow through the A/C receiver/drier is restricted.	2. See **DRIER, A/C Receiver** . Replace the restricted A/C receiver/drier, if required.
	3. Inoperative radiator cooling fans.	3. See **COOLING** . Test the radiator cooling fans and replace, if required.
	4. Refrigerant system overcharged.	4. See **REFRIGERANT SYSTEM CHARGE** . Recover the refrigerant from the refrigerant system. Charge the

		refrigerant system to the proper level, if required.
	5. Air in the refrigerant system.	5. See **REFRIGERANT SYSTEM LEAKS** . Test the refrigerant system for leaks. Repair, evacuate and charge the refrigerant system, if required.
	6. Engine overheating.	6. See **COOLING** . Test the engine cooling system and repair, if required.
The low side pressure is too high, and the high side pressure is too low.	1. Accessory drive belt slipping.	1. See **COOLING** . Inspect the accessory drive belt condition and tension. Repair as required.
	2. Inoperative A/C expansion valve.	2. See **VALVE, A/C Expansion** . Test and replace the valve, if required.
	3. Inoperative A/C compressor.	3. See **COMPRESSOR, A/C** . Replace the A/C compressor, if required.
The low side pressure is too low, and the high side pressure is too high.	1. Restricted refrigerant flow through the refrigerant lines.	1. See **LINE, A/C Liquid**, **LINE, A/C Suction** and **LINE, A/C Discharge** in this service information. Inspect the refrigerant lines for kinks, tight bends or improper routing. Correct the routing or replace the refrigerant line, if required.
	2. Restricted refrigerant flow through the A/C expansion valve.	2. See **VALVE, A/C Expansion** . Test and replace the valve, if required.
	3. Restricted refrigerant flow through the A/C condenser.	3. See **CONDENSER, A/C** . Replace the restricted A/C condenser, if required.

HEATER PERFORMANCE

See **COOLING** before performing the following tests. Check the engine coolant level and flow, engine coolant reserve/recovery system operation, accessory drive belt condition and tension, radiator air flow and the fan drive operation. Perform the A/C System Performance Test, which is found within the HVAC System Test. Refer to **DTC-Based Diagnostics/HVAC - Standard Procedure** . If any Diagnostic Trouble Codes (DTCs) are found in the A/C-heater control or the Powertrain Control Module (PCM), repair as necessary.

MAXIMUM HEATER OUTPUT

Engine coolant is delivered to the heater core through two heater hoses. With the engine idling at normal operating temperature, set the temperature control to the full hot position, the mode control to the floor position, and the blower motor control to the highest speed position. Using a test thermometer, check the temperature of the air being discharged at the front floor outlets. Compare the test thermometer reading to the Heater Temperature Reference chart.

HEATER TEMPERATURE REFERENCE

Ambient Air Temperature	16° C (60° F)	21° C (70° F)	27° C (80° F)	32° C (90° F)
Minimum Heater System Air Outlet Temperature	52° C (125° F)	56° C (133° F)	59° C (139° F)	62° C (144° F)

See **COOLING** if the heater outlet air temperature is below the minimum specification. Both of the heater hoses should be hot to the touch. The coolant return heater hose should be slightly cooler than the coolant supply heater hose. If the return hose is much cooler than the supply hose, locate and repair the engine coolant flow obstruction in the cooling system.

OBSTRUCTED COOLANT FLOW

Possible locations or causes of obstructed coolant flow are as follows:

- Inoperative water pump.
- Inoperative thermostat.
- Pinched or kinked heater hoses.
- Improper heater hose routing.
- Plugged heater hoses or supply and return ports at the cooling system connections.
- Plugged heater core.

If proper coolant flow through the cooling system is verified, and heater outlet air temperature is low, a mechanical problem may exist.

MECHANICAL PROBLEMS

Possible locations or causes of insufficient heat due to mechanical problems are as follows:

- Obstructed cowl air intake.
- Obstructed heater system outlets.
- Inoperative engine thermostat.
- Inoperative blower motor system.
- Inoperative A/C-heater control.
- Inoperative blend door actuator(s).
- Inoperative, obstructed or improperly installed blend-air door.

TEMPERATURE CONTROL

If the heater outlet air temperature cannot be adjusted with the temperature control on the A/C-heater control, the following could require service:

- Inoperative A/C-heater control.

- Inoperative blend door actuator(s).
- Inoperative, obstructed or improperly installed blend-air door.
- Improper engine coolant temperature.
- Inoperative related wiring harness or connectors.

SPECIFICATIONS

A/C SYSTEM

Item	Description	Notes
A/C Compressor	Denso 10S17 - 3.5L Engine	ND-8 PAG oil
	Denso 10SRE18 - 5.7L/6.1L Engines	
Freeze-up Control	Evaporator Temperature Sensor	HVAC housing mounted
Low psi Control	A/C Pressure Transducer	A/C Liquid line mounted - opens below 110 kPa (16 psi), closes above 220 kPa (32 psi)
High psi Control	A/C Pressure Transducer	A/C Liquid line mounted - opens above 3219 kPa (476 psi), closed below 2937 kPa (426 psi)
R-134a Refrigerant Charge Capacity	0.737 kg (1.625 lbs.)	Also see A/C Underhood Specification Label located in the engine compartment
A/C Clutch Coil Draw	3.2 - 3.3 amps	@ 12V ± 0.5V @ 21° C (70° F)
A/C Clutch Coil Resistance	3.6 ± 0.2 ohms	When measured across coil lead connector
A/C Clutch Air Gap	0.35 - 0.60 mm (0.014 - 0.024 in.)	

TORQUE

Description	N.m	Ft. Lbs.	In. Lbs.
All Screws NOT Listed Below	2	-	17
A/C Compressor to 3.5L Engine Bolts	26	19	-
A/C Compressor to 5.7L Engine Bolts	50	37	-
A/C Compressor to 6.1L Engine Bolts	50	37	-
A/C Condenser to	5	-	44

Radiator Bolts			
A/C Expansion Valve to Evaporator Tube Tapping Block Bolts	11	-	97
Air Distribution Housing Halves Screws	2.2	-	20
Air Distribution Housing to HVAC Housing Screws	2.2	-	20
Air Inlet Housing to HVAC Housing Screws	2.2	-	20
Blower Motor Screws	2.2	-	20
Compressor Shaft Bolt	19	-	168
Flange to HVAC Housing Screws	2.2	-	20
Floor Console Duct to Floor Panel Screws	2.2	-	20
Fresh Air Inlet Housing/Water Separator Filter Housing to Dash Panel Nuts	7	-	62
Heater Core Retaining Bracket to Air Distribution Housing Screw	2.2	-	20
HVAC Housing Halves Screws	2.2	-	20
HVAC Housing to Engine Side of Dash Panel Nuts	7	-	62
HVAC Housing to Passenger Side of Dash Panel Nuts	3	-	26
Instrument Panel/demister Ducts to Instrument Panel Screw	2.2	-	20
Liquid Line Front to Rear Section Nut	22	16	-
Refrigerant Lines to A/C Expansion Valve Nut	23	17	-
Refrigerant Line to A/C Compressor Nut	23	17	-

Refrigerant Line to A/C Condenser Nut	22	16	-
Refrigerant Line Bracket to Strut Tower Bolt	11	-	97
Receiver/drier to A/C Condenser Bolt	22	16	-
Receiver/drier Bracket to A/C Condenser Screw	5	-	44
Suction Line Front to Rear Section Nut	22	16	-
Strut Support to Strut Tower Bolts	38	28	-

SPECIAL TOOLS

SPECIAL TOOLS

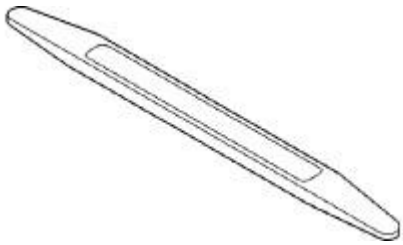

Fig. 3: Trim Stick C-4755
Courtesy of CHRYSLER LLC

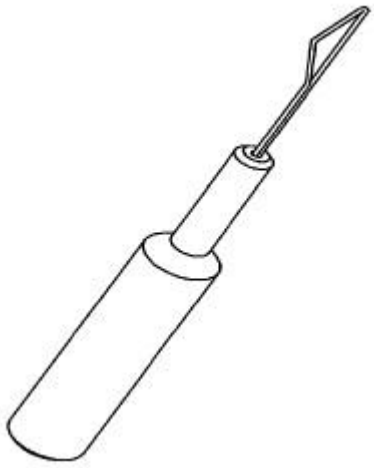

Fig. 4: Back Probe Tool 6801
Courtesy of CHRYSLER LLC

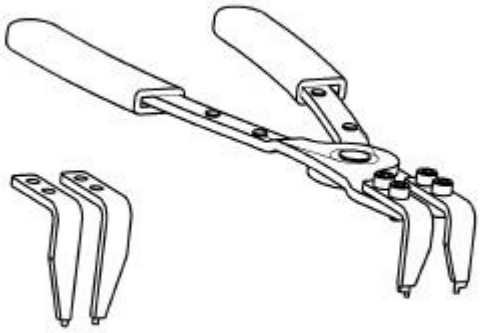

Fig. 5: Pliers, A/C Snap Ring 9764
Courtesy of CHRYSLER LLC

CONTROLS

ACTUATOR, BLEND DOOR

Description

DESCRIPTION

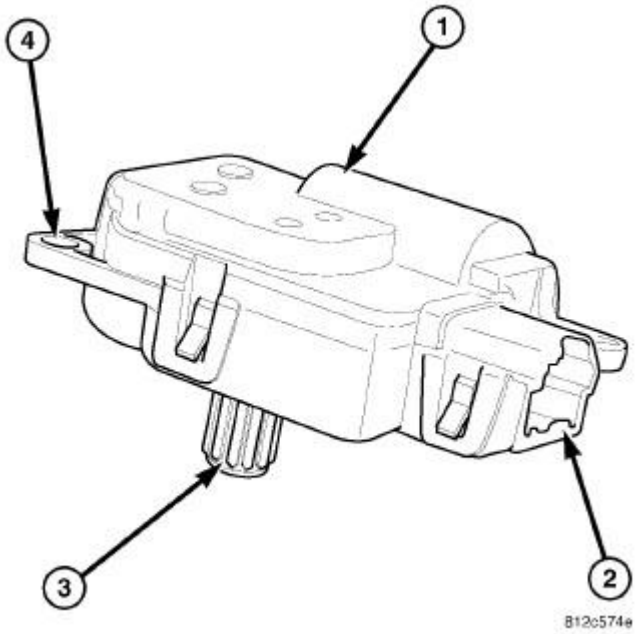

Fig. 6: Actuator-Air Door Description
Courtesy of CHRYSLER LLC

The blend door actuator (1) is a e reversible, 12 volt direct current (DC), servo motor. Models equipped with the MTC single zone heating-A/C system have a single blend-air door, which is controlled by a single blend door actuator.

The blend door actuator for the single zone heating-A/C system is located on the driver side end of the HVAC air distribution housing, close to the dash panel.

The blend door actuator is interchangeable with the actuators for the mode-air door and the recirculation-air door. Each actuator is contained within an identical black molded plastic housing with an integral wire connector receptacle (2). Each actuator also has an identical output shaft with splines (3) that connect it to its respective door linkage and three integral mounting tabs (4) that allow the actuator to be secured to the HVAC housing. The blend door actuator does not require mechanical indexing to the blend-air door, as it is electronically calibrated by the A/C-heater control.

Operation

OPERATION

The blend door actuator is connected to the A/C-heater control through the vehicle electrical system by a dedicated two-wire lead and connector of the HVAC wire harness. The blend door actuator can move the blend-air door in two directions. When the A/C-heater control pulls the voltage on one side of the motor connection high and the other connection low, the blend-air door will move in one direction. When the A/C-heater control reverses the polarity of the voltage to the motor, the blend-air door moves in the opposite direction.

When the A/C-heater control makes the voltage to both connections high or both connections low, the blend-air door stops and will not move. The A/C-heater control uses a pulse-count positioning system to monitor the operation and relative position of the blend door actuator and the blend-air door. The A/C-heater control learns the blend-air doors stop positions during the calibration procedure and will store a diagnostic trouble code (DTC) for any problems it detects in the blend door actuator circuit.

The blend door actuator is diagnosed using a scan tool. Refer to **DTC-Based Diagnostics/HVAC - Diagnosis and Testing** .

The blend door actuator cannot be adjusted or repaired and must be replaced if inoperative or damaged.

Removal

REMOVAL

WARNING: Disable the airbag system before attempting any steering wheel, steering column, or instrument panel component diagnosis or service. Disconnect and isolate the negative battery (ground) cable, then wait two minutes for the airbag system capacitor to discharge before performing further

diagnosis or service. This is the only sure way to disable the airbag system. Failure to take the proper precautions could result in accidental airbag deployment and possible serious or fatal injury.

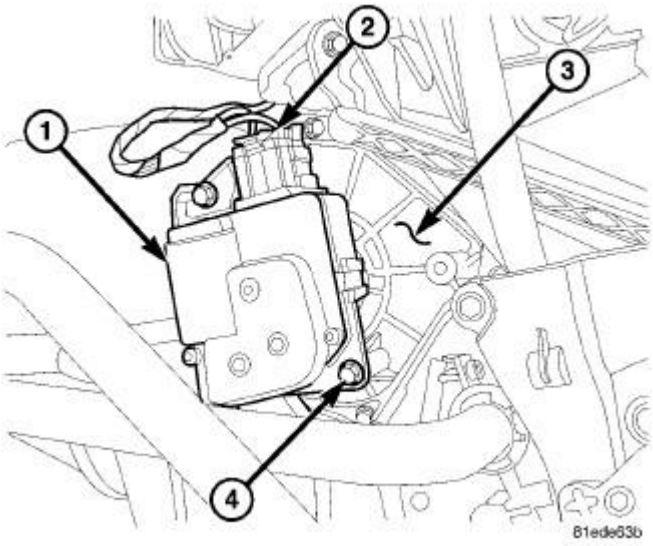

Fig. 7: Actuator-Blend Door-Single/Dual Driver Removal & Installation
Courtesy of CHRYSLER LLC

1. Disconnect and isolate the negative battery cable.
2. If equipped, remove the instrument panel silencer from the driver side of the instrument panel.
3. Remove the two screws (4) that secure the blend door actuator (1) to the driver side of the HVAC air distribution housing (3).
4. Remove the blend door actuator from the air distribution housing, disconnect the HVAC wire harness connector (2) and remove the actuator.

Installation

INSTALLATION

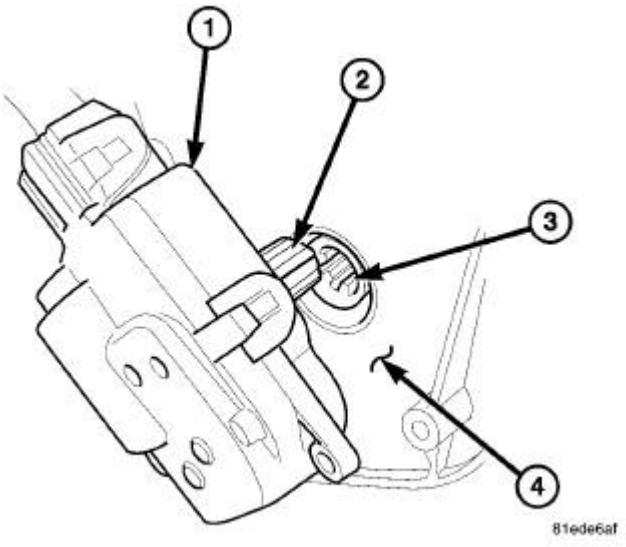

Fig. 8: Actuator-Blend Door-LF Align
Courtesy of CHRYSLER LLC

1. Position the blend door actuator (1) into the vehicle.
2. Install the blend door actuator onto the driver side of the HVAC air distribution housing (4). If necessary, rotate the actuator slightly to align the splines on the actuator output shaft (2) with those on the blend door cam (3).

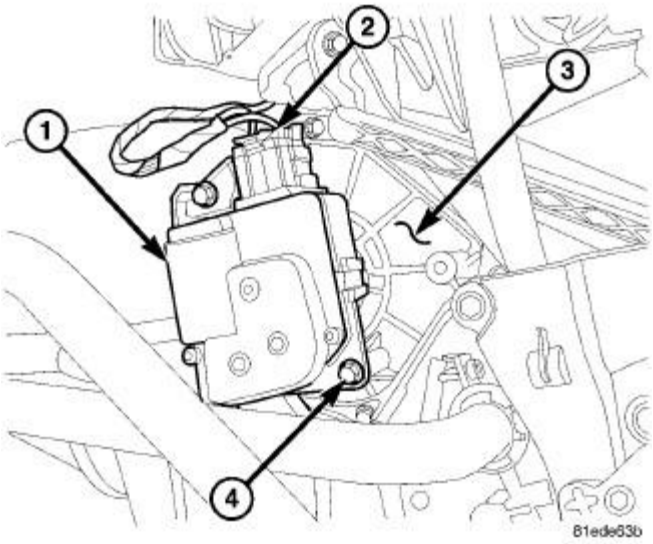

Fig. 9: Actuator-Blend Door-Single/Dual Driver Removal & Installation
Courtesy of CHRYSLER LLC

3. Install the two screws (4) that secure the blend door actuator (1) to the air distribution housing (3). Tighten the screws to 2 N.m (17 in. lbs.).

4. Connect the HVAC wire harness connector (2) to the blend door actuator.
5. If equipped, install the instrument panel silencer onto the driver side of the instrument panel.
6. Reconnect the negative battery cable.
7. Initiate the Actuator Calibration function using a scan tool. Refer to **DTC-Based Diagnostics/HVAC - Standard Procedure** .

ACTUATOR, MODE DOOR

Description

DESCRIPTION

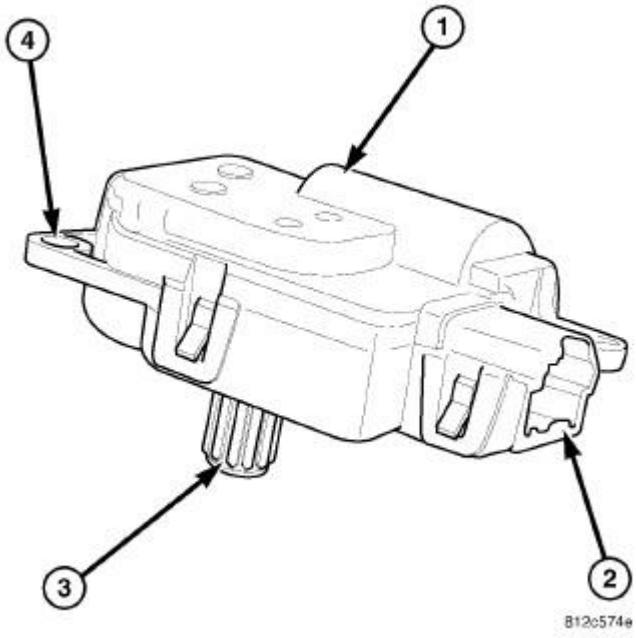

Fig. 10: Actuator-Air Door Description
Courtesy of CHRYSLER LLC

The mode door actuator (1) is a reversible, 12-volt direct current (DC), servo motor. The mode door actuator is located on the driver side end of the HVAC air distribution housing, close to the instrument panel. The mode door actuator is mechanically connected to the floor, defrost/demist and the panel-air doors.

The mode door actuator is interchangeable with the actuators for the blend-air door and the recirculation-air door. Each actuator is contained within an identical black molded plastic housing with an integral wire connector receptacle (2). Each actuator also has an identical output shaft with splines (3) that connect it to its door linkage and three integral mounting tabs (4) that allow the actuator to be secured to the HVAC housing. The mode door actuator does not require mechanical indexing to the mode-air doors, as it is electronically calibrated by the A/C-heater control.

Operation

OPERATION

The mode door actuator is connected to the A/C-heater control through the vehicle electrical system by a dedicated two-wire lead and connector of the HVAC wire harness. The mode door actuator can move the floor, defrost/demist and the panel-air doors in two directions. When the A/C-heater control pulls the voltage on one side of the motor connection high and the other connection low, the mode-air doors will move in one direction. When the A/C-heater control reverses the polarity of the voltage to the motor, the mode-air doors moves in the opposite direction.

When the A/C-heater control makes the voltage to both connections high or both connections low, the mode-air doors stop and will not move. The A/C-heater control uses a pulse-count positioning system to monitor the operation and relative position of the mode door actuator and the mode-air doors. The A/C-heater control learns the mode-air doors stop position during the calibration procedure and will store a diagnostic trouble code (DTC) for any problems it detects in the mode door actuator circuits.

The mode door actuator is diagnosed using a scan tool. Refer to **DTC-Based Diagnostics/HVAC - Diagnosis and Testing** .

The mode door actuator cannot be adjusted or repaired and must be replaced if inoperative or damaged.

Removal

REMOVAL

WARNING: Disable the airbag system before attempting any steering wheel, steering column, or instrument panel component diagnosis or service. Disconnect and isolate the negative battery (ground) cable, then wait two minutes for the airbag system capacitor to discharge before performing further diagnosis or service. This is the only sure way to disable the airbag system. Failure to take the proper precautions could result in accidental airbag deployment and possible serious or fatal injury.

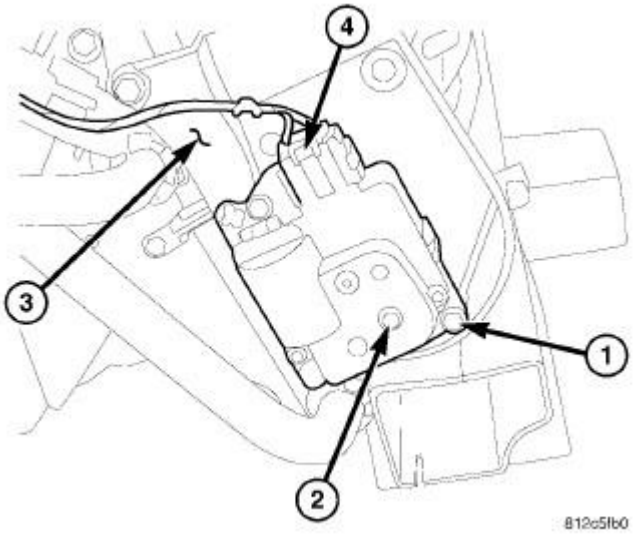

Fig. 11: ACTUATOR-MODE DOOR REMOVAL & INSTALLATION
Courtesy of CHRYSLER LLC

1. Disconnect and isolate the negative battery cable.
2. Remove the instrument panel silencer from the driver side of the instrument panel. Refer to **Body/Instrument Panel/PANEL, Silencer - Removal** .
3. Remove the screws (1) that secure the mode door actuator (2) to the driver side of the HVAC air distribution housing (3).
4. Remove the mode door actuator from the air distribution housing and disconnect the HVAC wire harness connector (4) and remove the actuator from the vehicle.

Installation

INSTALLATION

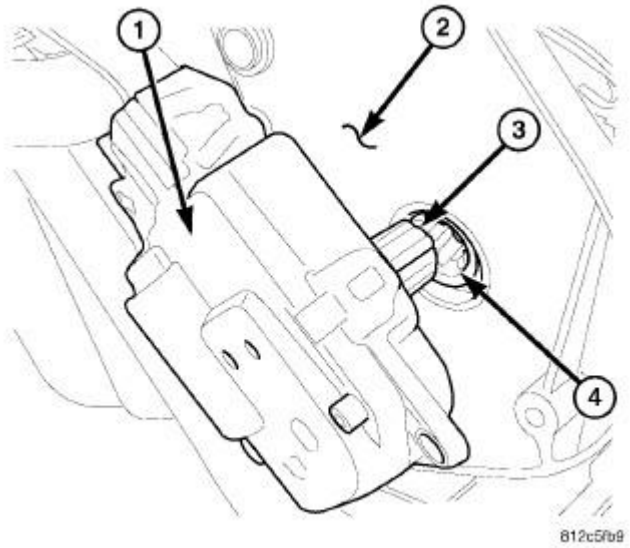

Fig. 12: Actuator-Mode Door Align
Courtesy of CHRYSLER LLC

1. Position the mode door actuator (1) into the vehicle.
2. Install the mode door actuator onto the driver side of the HVAC air distribution housing (2). If necessary, rotate the actuator slightly to align the splines on the actuator output shaft (3) with those on the mode door cam (4).

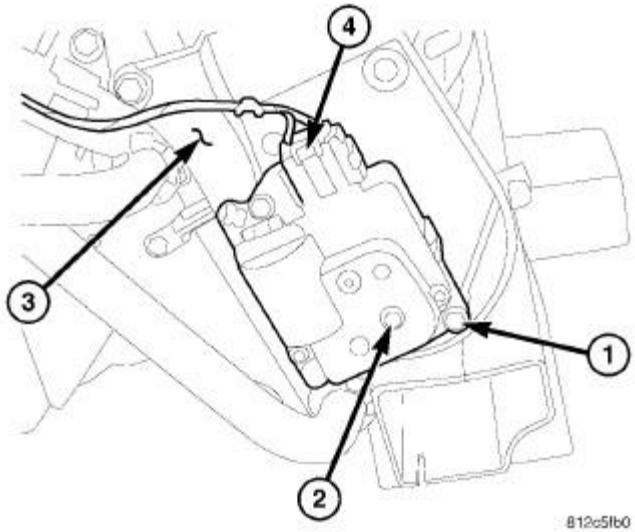

Fig. 13: ACTUATOR-MODE DOOR REMOVAL & INSTALLATION
Courtesy of CHRYSLER LLC

3. Install the screws (1) that secure the mode door actuator (2) to the driver side of the air distribution housing (3). Tighten the screws to 2 N.m (17 in. lbs.).

4. Connect the HVAC wire harness connector (4) to the mode door actuator.
5. Install the instrument panel silencer onto the driver side of the instrument panel. Refer to **Body/Instrument Panel/PANEL, Silencer - Installation** .
6. Reconnect the negative battery cable.
7. Initiate the Actuator Calibration function using a scan tool. Refer to **DTC-Based Diagnostics/HVAC - Standard Procedure** .

ACTUATOR, RECIRCULATION DOOR

Description

DESCRIPTION

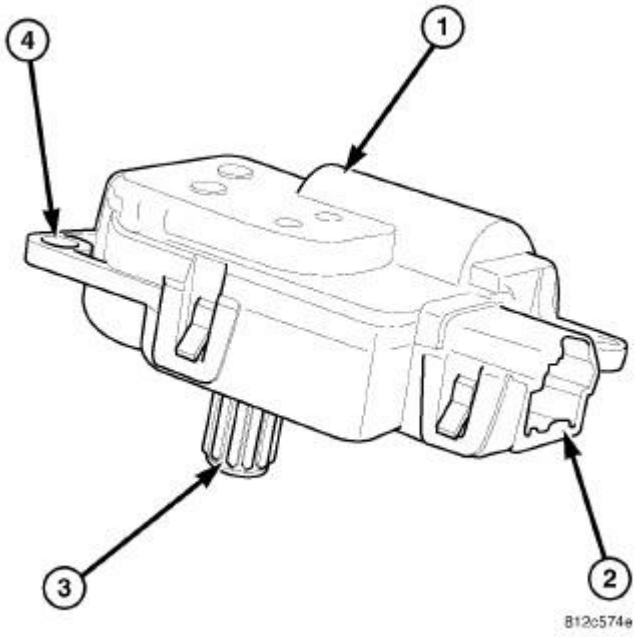

Fig. 14: Actuator-Air Door Description
Courtesy of CHRYSLER LLC

The recirculation door actuator (1) is a reversible, 12 volt direct current (DC), servo motor. The recirculation door actuator is located on the inboard side of the HVAC air inlet housing and is directly connected to the pivot shaft of the recirculation-air door.

The recirculation door actuator is interchangeable with the actuators for the blend-air door(s) and the mode-air doors. Each actuator is contained within an identical black molded plastic housing with an integral wire connector receptacle (2). Each actuator also has an identical output shaft with splines (3) that connect it to its door linkage and three integral mounting tabs (4) that allow the actuator to be secured to the air inlet housing. The recirculation door actuator does not require mechanical indexing to the recirculation-air door, as it is electronically calibrated by the A/C-heater control.

Operation

OPERATION

The recirculation door actuator is connected to the A/C-heater control through the vehicle electrical system by a dedicated two-wire lead and connector of the HVAC wire harness. The recirculation door actuator moves the recirculation-air door in two directions. When the A/C-heater control pulls the voltage on one side of the motor connection high and the other connection low, the recirculation-air door will move in one direction. When the A/C-heater control reverses the polarity of the voltage to the motor, the recirculation-air door moves in the opposite direction.

When the A/C-heater control makes the voltage to both connections high or low, the recirculation-air door stops and will not move.

The A/C-heater control uses a pulse-count positioning system to monitor the operation and relative position of the recirculation door actuator and the recirculation-air door. The A/C-heater control learns the recirculation-air door stop positions during the calibration procedure and stores a diagnostic trouble code (DTC) for any problems it detects in the recirculation door actuator circuits.

The recirculation door actuator is diagnosed using a scan tool. Refer to **DTC-Based Diagnostics/HVAC - Diagnosis and Testing** .

The recirculation door actuator cannot be adjusted or repaired and must be replaced if inoperative or damaged.

Removal

REMOVAL

WARNING: Disable the airbag system before attempting any steering wheel, steering column, or instrument panel component diagnosis or service. Disconnect and isolate the negative battery (ground) cable, then wait two minutes for the airbag system capacitor to discharge before performing further diagnosis or service. This is the only sure way to disable the airbag system. Failure to take the proper precautions could result in accidental airbag deployment and possible serious or fatal injury.

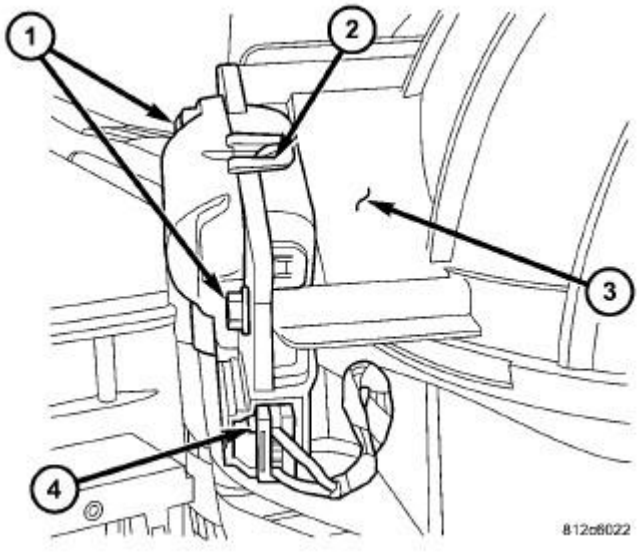

Fig. 15: ACTUATOR-RECIRCULATION DOOR REMOVAL & INSTALLATION
Courtesy of CHRYSLER LLC

1. Disconnect and isolate the negative battery cable.
2. Remove the glove box from the instrument panel. Refer to **Body/Instrument Panel/GLOVE BOX, Instrument Panel - Removal** .
3. Remove the screws (1) that secure the recirculation door actuator (2) to the HVAC air inlet housing (3).
4. Remove the recirculation door actuator from the air inlet housing and disconnect the HVAC wire harness connector (4) and remove the actuator from the vehicle.

Installation

INSTALLATION

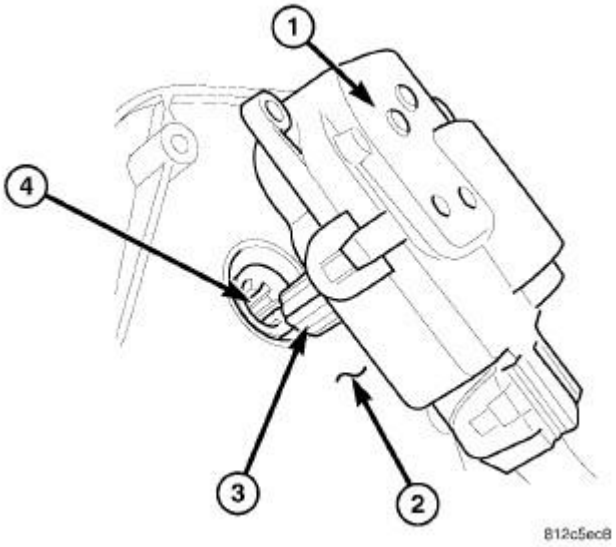

Fig. 16: Actuator-Blend Door-LF Align
Courtesy of CHRYSLER LLC

1. Position the recirculation door actuator (1) into the vehicle.
2. Install the recirculation door actuator onto the HVAC air inlet housing (2). If necessary, rotate the actuator slightly to align the splines on the actuator output shaft (3) with those on the recirculation door pivot shaft (4).

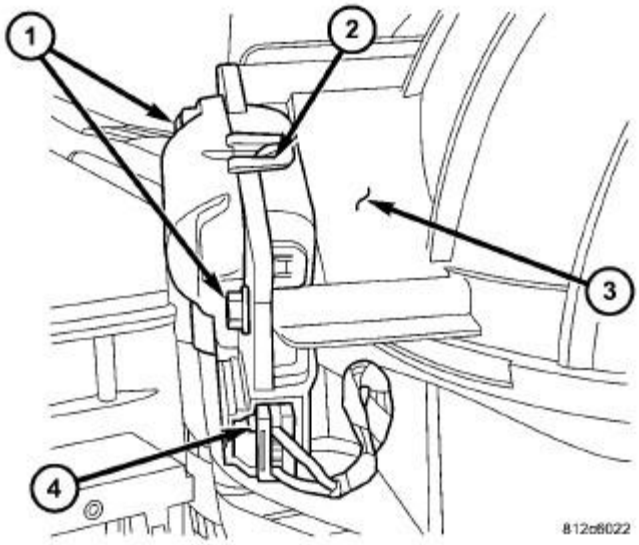

Fig. 17: ACTUATOR-RECIRCULATION DOOR REMOVAL & INSTALLATION
Courtesy of CHRYSLER LLC

3. Install the screws (1) that secure the recirculation door actuator (2) to the air inlet housing (3). Tighten the screws to 2 N.m (17 in. lbs.).

4. Connect the HVAC wire harness connector (4) to the recirculation door actuator.
5. Install the glove box into the instrument panel. Refer to **Body/Instrument Panel/GLOVE BOX, Instrument Panel - Installation** .
6. Reconnect the negative battery cable.
7. Initiate the Actuator Calibration function using a scan tool. Refer to **DTC-Based Diagnostics/HVAC - Standard Procedure** .

CONTROL, A/C AND HEATER

Description

DESCRIPTION

The A/C-heater control for the manual temperature control (MTC) single zone system allows one temperature setting for the entire vehicle. All controls are identified by ISO graphic symbols.

The heating-A/C system uses a dedicated microprocessor to drive the electrically operated door actuators. This control provides the vehicle operator with a number of setting options to help control the climate and comfort within the vehicle.

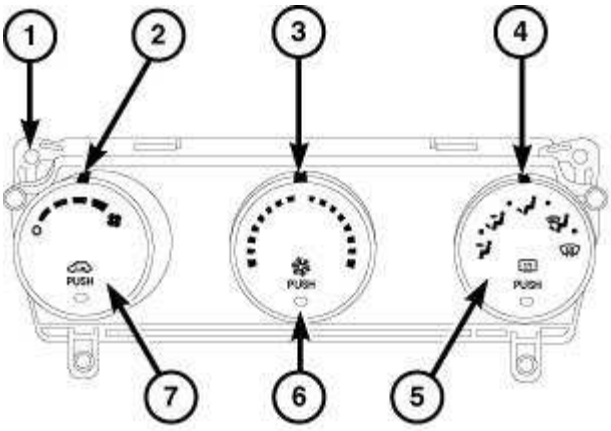

Fig. 18: Identifying A/C Heater Control
Courtesy of CHRYSLER LLC

The A/C-heater control (1) is located in the instrument panel and contains:

- a rotary control for blower motor speed selection and to turn the blower motor off (2).
- a rotary control for temperature control of the discharged air (3).
- a rotary control for mode control of the discharged air (4).
- a push-button control with indicator lamp to turn the rear window defogger system on and off (5).
- a push-button control with indicator lamp to turn the A/C system on and off (6).

- a push-button control with indicator lamp for recirculation control of the discharged air (7).

Prior to replacing an A/C-heater control, perform the HVAC System Test and the Actuator Calibration function to verify that the concern is not a system issue. Refer to **DTC-Based Diagnostics/HVAC - Standard Procedure** .

The A/C-heater control and A/C system and is diagnosed using a scan tool. Refer to **DTC-Based Diagnostics/HVAC - Diagnosis and Testing** .

The A/C-heater control cannot be adjusted or repaired and must be replaced if inoperative or damaged.

Removal

REMOVAL

WARNING: Disable the airbag system before attempting any steering wheel, steering column, or instrument panel component diagnosis or service. Disconnect and isolate the negative battery (ground) cable, then wait two minutes for the airbag system capacitor to discharge before performing further diagnosis or service. This is the only sure way to disable the airbag system. Failure to take the proper precautions could result in accidental airbag deployment and possible serious or fatal injury.

NOTE: A/C-heater controls are NOT interchangeable between other vehicle lines. If replacement of the A/C-heater control is required, only use the control designed for the vehicle being serviced.

NOTE: Take the proper precautions to protect the front face of the instrument panel center bezel from cosmetic damage during this service procedure.

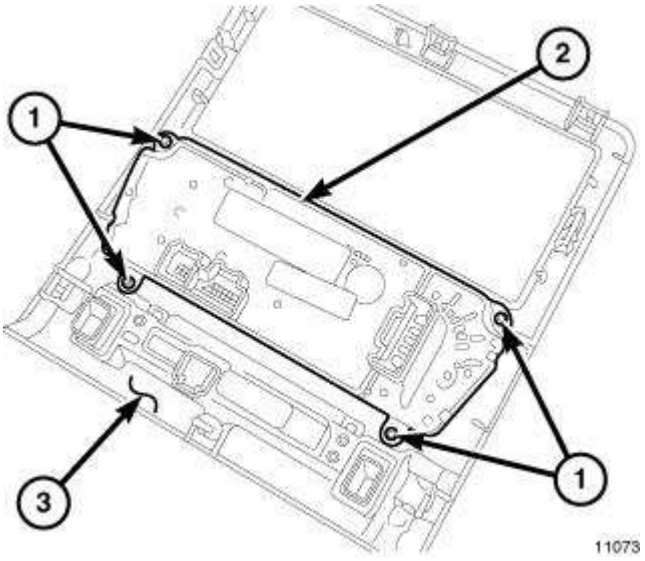

Fig. 19: Removing/Installing A/C-Heater Control At Rear Side Panel Center Bezel
Courtesy of CHRYSLER LLC

1. Disconnect and isolate the negative battery cable.
2. Remove the center bezel (3) from the instrument panel and place it on a workbench. Refer to **Body/Instrument Panel/BEZEL, Instrument Panel - Removal** .
3. Remove the four screws (1) that secure the A/C-heater control (2) to the instrument panel center bezel and remove the control.

Installation

INSTALLATION

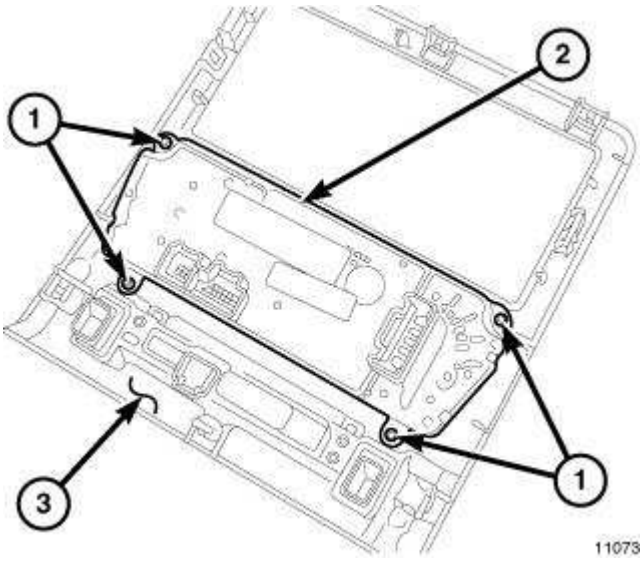

Fig. 20: Removing/Installing A/C-Heater Control At Rear Side Panel Center Bezel
Courtesy of CHRYSLER LLC

1. Position the A/C-heater control (2) into the instrument panel center bezel (3).
2. Install the four screws (1) that secure the A/C-heater control to the instrument panel center bezel. Tighten the screws to 2 N.m (17 in. lbs.).
3. Install the instrument panel center bezel. Refer to **Body/Instrument Panel/BEZEL, Instrument Panel - Installation** .

NOTE: The A/C-heater control automatically performs the Actuator Calibration function when the ignition is initially turned on when installing a new control or reinstalling the original control. However, the Actuator Calibration function must be manually initiated using a scan tool if the A/C-heater control has been previously installed in another vehicle.

4. Reconnect the negative battery cable.
5. Initiate the Actuator Calibration function using a scan tool. Refer to **DTC-Based**

Diagnostics/HVAC - Standard Procedure .

RESISTOR, BLOWER MOTOR

Description

DESCRIPTION

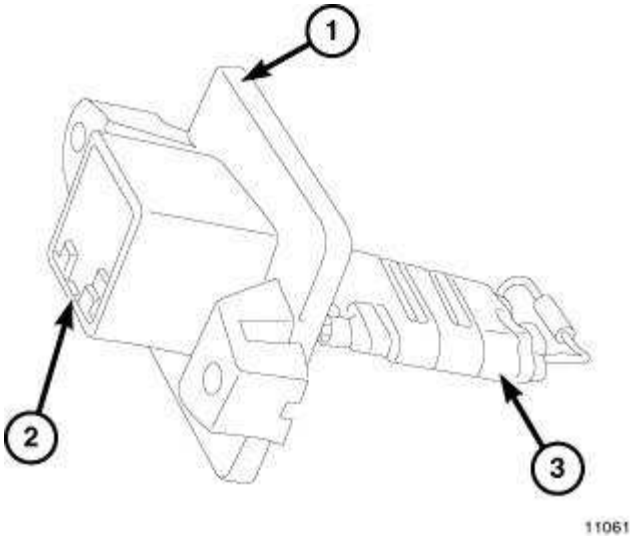

Fig. 21: Blower Motor Resistor Consists Of A Molded Plastic Mounting Plate
Courtesy of CHRYSLER LLC

A blower motor resistor is used with the manual temperature control (MTC) heating-A/C system.

The blower motor resistor is mounted to the rear of the HVAC housing, directly behind the glove box. The blower motor resistor consists of a molded plastic mounting plate (1) with an integral wire connector receptacle (2). Concealed behind the mounting plate are coiled resistor wires contained within a ceramic heat sink (3).

The blower motor resistor is accessed for service by removing the glove box.

Operation

OPERATION

The blower motor resistor is connected to the vehicle electrical system through a dedicated wire lead and connector of the HVAC wire harness. The blower motor resistor has multiple resistor wires, each of which will reduce the current flow through the blower motor to change the blower motor speed.

The blower motor control in the MTC heating-A/C system directs the ground path for the blower motor through the correct resistor wire to obtain the selected speed. With the blower motor control in the lowest speed position, the ground path for the blower motor is applied through all of the resistor wires. Each higher speed selected with the blower motor control applies the blower motor ground path through fewer of the resistor wires, increasing the blower motor speed.

The blower motor resistor cannot be adjusted or repaired and must be replaced if inoperative or damaged (such as a cracked ceramic heat sink).

Diagnosis and Testing

Diagnosis and Testing

WARNING: Disable the airbag system before attempting any steering wheel, steering column, or instrument panel component diagnosis or service. Disconnect and isolate the negative battery (ground) cable, then wait two minutes for the airbag system capacitor to discharge before performing further diagnosis or service. This is the only sure way to disable the airbag system. Failure to take the proper precautions may result in accidental airbag deployment and possible serious or fatal injury.

NOTE: See SYSTEM WIRING DIAGRAMS for circuit descriptions and diagrams. Wiring Information includes wiring diagrams, proper wire and connector repair procedures, further details on wire harness routing and retention, as well as pin-out and location views for the various wire harness connectors, splices and grounds.

1. Disconnect and isolate the negative battery cable.
2. Disconnect the wire harness connector from the blower motor resistor. See **Heating and Air Conditioning/Controls/RESISTOR, Blower Motor - Removal**.
3. Using an ohmmeter, check for continuity between all of the blower motor resistor terminals. In each case there should be continuity. If OK, repair the wire harness circuits between the blower motor speed control and the blower motor resistor or blower motor as required. If not OK, replace the inoperative blower motor resistor.

Removal

REMOVAL

WARNING: Disable the airbag system before attempting any steering wheel, steering column, or instrument panel component diagnosis or service. Disconnect and isolate the negative battery (ground) cable, then wait two minutes for the airbag system capacitor to discharge before performing further diagnosis or service. This is the only sure way to disable the airbag system. Failure to take the proper precautions could result in accidental airbag deployment and possible serious or fatal injury.

WARNING: The blower motor resistor may get very hot during normal operation. If the blower motor was turned on prior to servicing the blower motor resistor, wait five minutes to allow the blower motor resistor to cool before performing diagnosis or service. Failure to take this precaution can result in possible injury.

CAUTION: Do not operate the blower motor with the blower motor resistor removed from the circuit. Failure to take this precaution can result in vehicle damage.

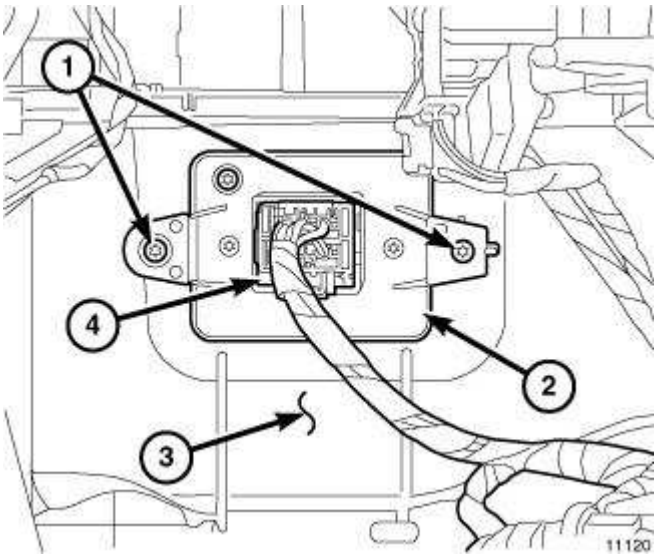

Fig. 22: Identifying Screws, Blower Motor Resistor, HVAC Housing & Wire Harness Connector
Courtesy of CHRYSLER LLC

1. Disconnect and isolate the negative battery cable.
2. Remove the glove box from the instrument panel. Refer to **Body/Instrument Panel/GLOVE BOX, Instrument Panel - Removal** .
3. Disconnect the wire harness connector (4) from the blower motor resistor (2).
4. Remove the two screws (1) that secure the blower motor resistor to the HVAC housing (3) and remove the resistor.

Installation

INSTALLATION

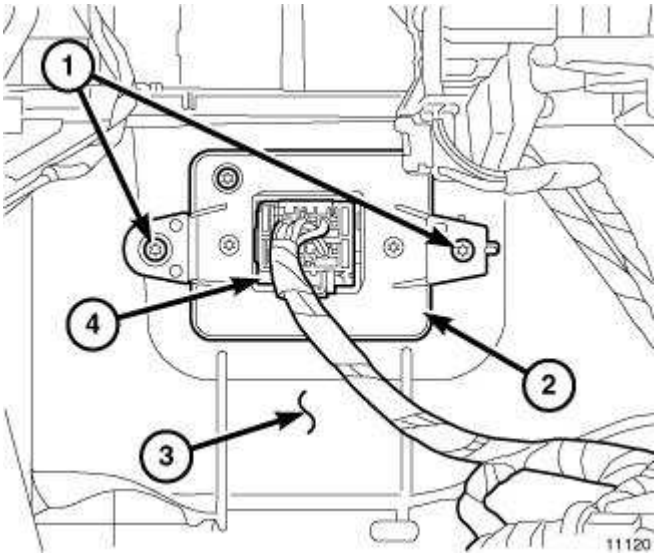

Fig. 23: Identifying Screws, Blower Motor Resistor, HVAC Housing & Wire Harness Connector
Courtesy of CHRYSLER LLC

1. Position the blower motor resistor (2) into the HVAC housing (3).
2. Install the two screws (1) that secure the blower motor resistor to the HVAC housing. Tighten the screws to 2 N.m (17 in. lbs.).
3. Connect the wire harness connector (4) to the blower motor resistor and engage the locking tab.
4. Install the glove box into the instrument panel. Refer to **Body/Instrument Panel/GLOVE BOX, Instrument Panel - Installation** .
5. Reconnect the negative battery cable.

SENSOR, EVAPORATOR TEMPERATURE

Description

DESCRIPTION

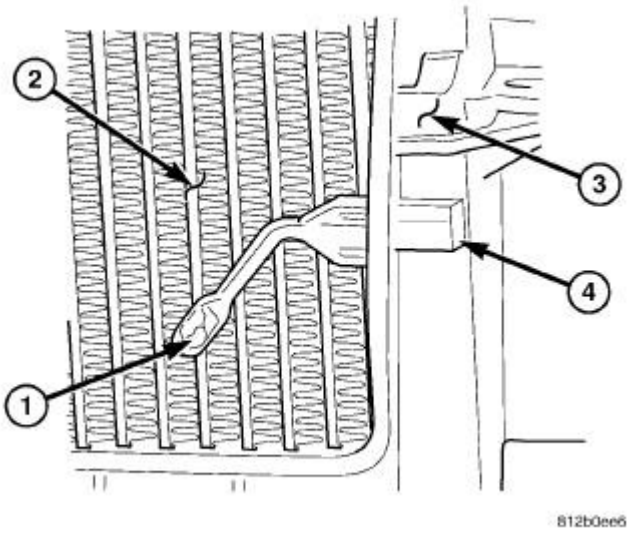

Fig. 24: Sensor-Evaporator Temperature
Courtesy of CHRYSLER LLC

The evaporator temperature sensor (1) measures the temperature of the conditioned air downstream of the A/C evaporator (2). The evaporator temperature sensor is an electrical thermistor within a molded plastic case that is inserted into the HVAC housing (3) near the coldest point of the A/C evaporator. Two terminals within the connector receptacle (4) connect the sensor to the vehicle electrical system through a wire lead and connector of the HVAC wire harness.

The external location of the evaporator temperature sensor allows the sensor to be removed or installed without disturbing the refrigerant in the A/C system.

Operation

OPERATION

The evaporator temperature sensor monitors the temperature of the conditioned air downstream of the A/C evaporator and supplies an input signal to the A/C-heater control. The A/C-heater control uses the evaporator temperature sensor input signal to optimize A/C system performance and to protect the A/C system from evaporator freezing. The evaporator temperature sensor will change its internal resistance in response to the temperatures it monitors and is connected to the A/C-heater control through sensor ground circuit and a 5-volt reference signal circuit. As the temperature of the A/C evaporator decreases, the internal resistance of the evaporator temperature sensor decreases.

The A/C-heater control uses the monitored voltage reading as an indication of evaporator temperature. The A/C-heater control is programmed to respond to this input by requesting the powertrain control module (PCM) to cycle the A/C compressor clutch as necessary to optimize A/C system performance and to protect the A/C system from evaporator freezing.

The evaporator temperature sensor is diagnosed using a scan tool. Refer to **DTC-Based Diagnostics/HVAC - Diagnosis and Testing** .

The evaporator temperature sensor cannot be adjusted or repaired and must be replaced if inoperative or damaged.

Removal

REMOVAL

WARNING: Disable the airbag system before attempting any steering wheel, steering column or instrument panel component diagnosis or service. Disconnect and isolate the negative battery (ground) cable and wait two minutes for the airbag system capacitor to discharge before performing further diagnosis or service. This is the only sure way to disable the airbag system. Failure to follow these instructions may result in accidental airbag deployment and possible serious or fatal injury.

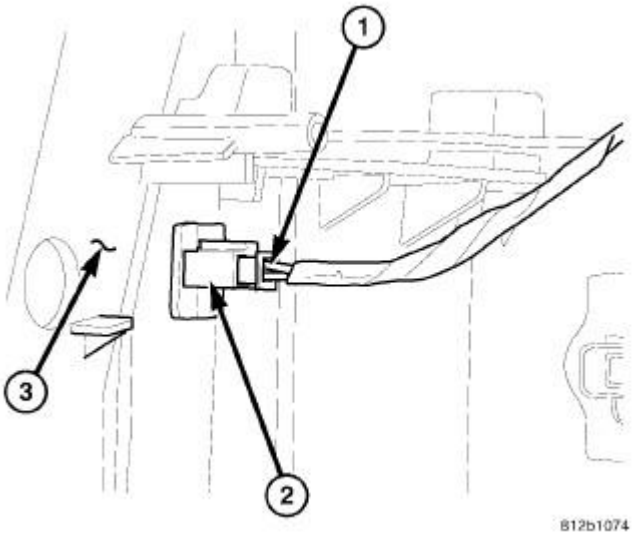

Fig. 25: Sensor-Evaporator Temperature Removal & Installation
Courtesy of CHRYSLER LLC

1. Disconnect and isolate the negative battery cable.
2. Remove the glove box from the instrument panel. Refer to **Body/Instrument Panel/GLOVE BOX, Instrument Panel - Removal** .
3. Disconnect the HVAC wire harness connector (1) from the evaporator temperature sensor (2) located on the HVAC housing (3) and remove the sensor.

Installation

INSTALLATION

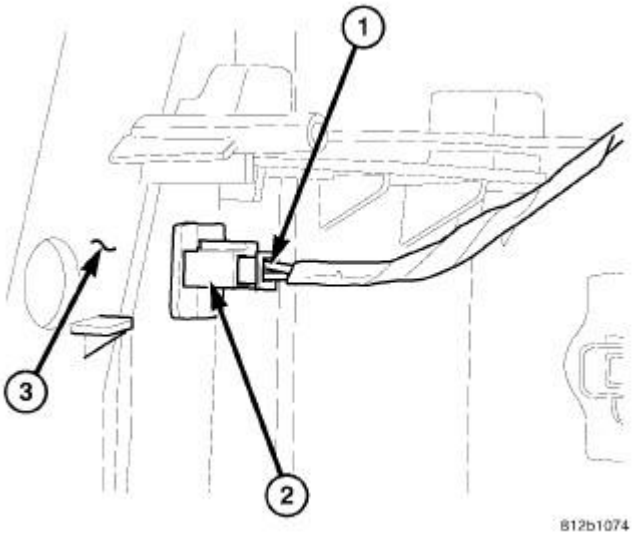

Fig. 26: Sensor-Evaporator Temperature Removal & Installation
Courtesy of CHRYSLER LLC

1. Install the evaporator temperature sensor (2) into HVAC housing (3).
2. Connect the HVAC wire harness connector (1) to the evaporator temperature sensor.
3. Install the glove box into the instrument panel. Refer to **Body/Instrument Panel/GLOVE BOX, Instrument Panel - Installation** .
4. Reconnect the negative battery cable.

TRANSDUCER, A/C PRESSURE

Description

DESCRIPTION

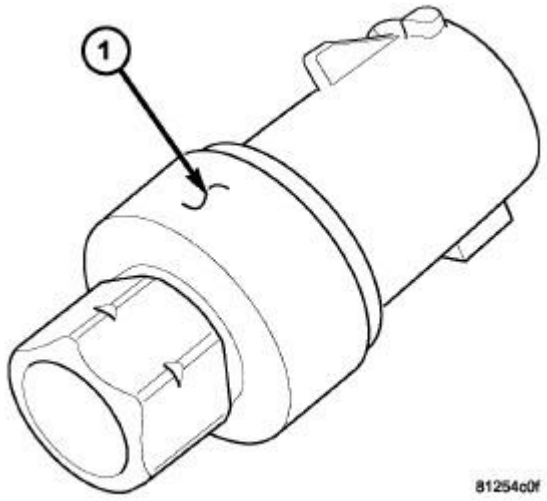

Fig. 27: A/C Pressure Transducer
Courtesy of CHRYSLER LLC

The A/C pressure transducer (1) is a switch that is installed on a fitting located on the A/C liquid line. An internally threaded fitting on the A/C pressure transducer connects it to the externally threaded Schrader-type fitting on the A/C liquid line. A rubber O-ring seals the connection between the A/C pressure transducer and the liquid line fitting. The A/C pressure transducer is connected to the vehicle electrical system by a molded plastic connector with three terminals.

Operation

OPERATION

The A/C pressure transducer monitors the pressures in the high side of the refrigerant system through its connection to a fitting on the A/C liquid line. The A/C pressure transducer will change its internal resistance in response to the pressures it monitors. A Schrader-type valve in the liquid line fitting permits the A/C pressure transducer to be removed or installed without disturbing the refrigerant in the A/C system.

The totally integrated power module (TIPM) provides a five volt reference signal and a sensor ground to the A/C pressure transducer. The powertrain control module (PCM) monitors the output voltage of the A/C pressure transducer on the CAN B bus to determine refrigerant pressure. The PCM is programmed to respond to the A/C pressure transducer and other sensor inputs and control the operation of the A/C compressor clutch and the radiator cooling fan to help optimize A/C system performance and to protect the system components from damage. The PCM will disengage the A/C compressor clutch when high side pressure rises above 3082 kPa (447 psi) and re-engage the clutch when high side pressure drops below 2937 kPa (426 psi). The A/C pressure transducer will also disengage the A/C compressor clutch if the high side pressure drops below 110 kPa (16 psi) and will re-engage the clutch when the high side pressure rises above 221 kPa (32 psi). If the refrigerant pressure rises above 1655 kPa (240 psi), the PCM will actuate the cooling fan. The A/C pressure transducer input to the PCM will also prevent the A/C compressor clutch from engaging when

ambient temperatures are below about 4.5° C (40° F) due to the pressure/temperature relationship of the refrigerant.

The A/C pressure transducer is tested using a scan tool. Refer to **DTC-Based Diagnostics/MODULE, Powertrain Control (PCM) - Diagnosis and Testing** .

The A/C pressure transducer cannot be adjusted or repaired and must be replaced if inoperative or damaged.

Removal

REMOVAL

NOTE: It is not necessary to discharge the refrigerant system to replace the A/C pressure transducer.

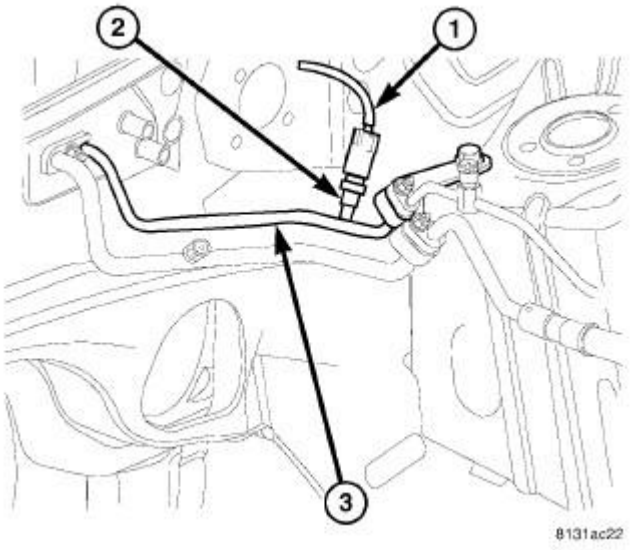

Fig. 28: Transducer-A/C Pressure Removal & Installation
Courtesy of CHRYSLER LLC

1. Disconnect and isolate the negative battery cable.
2. Disconnect the wire harness connector (1) from the A/C pressure transducer (2).
3. Remove the A/C pressure transducer from the A/C liquid line (3) and remove and discard the O-ring seal.

Installation

INSTALLATION

NOTE: Use only the specified O-ring as it is made of special material for R-134a. Use only refrigerant oil of the type required for the A/C compressor.

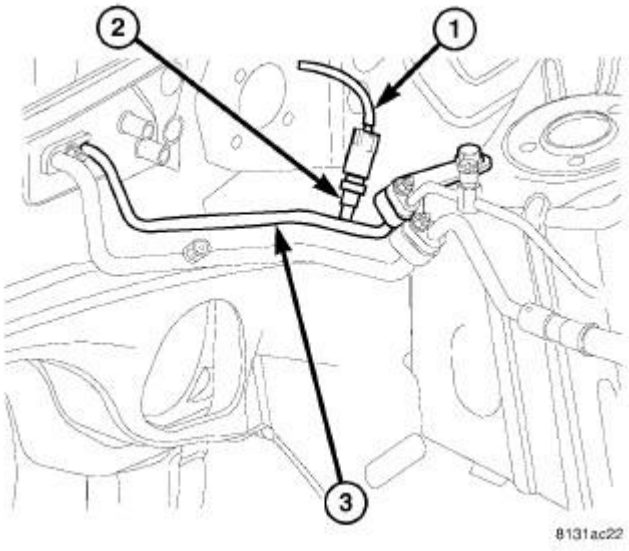

Fig. 29: Transducer-A/C Pressure Removal & Installation
Courtesy of CHRYSLER LLC

1. Lubricate a new rubber O-ring seal with clean refrigerant oil and install it onto the liquid line fitting.
2. Install the A/C pressure transducer (2) onto the A/C liquid line (3). Tighten the A/C pressure transducer securely.
3. Connect the wire harness connector (1) to the A/C pressure transducer.
4. Reconnect the negative battery cable.

DISTRIBUTION

DUCT, DEFROSTER

Removal

REMOVAL

WARNING: Disable the airbag system before attempting any steering wheel, steering column, or instrument panel component diagnosis or service. Disconnect and isolate the battery negative (ground) cable, then wait two minutes for the airbag system capacitor to discharge before performing further diagnosis or service. This is the only sure way to disable the airbag system. Failure to take the proper precautions could result in accidental airbag deployment and possible serious or fatal injury.

NOTE: Take the proper precautions to protect the front face of the instrument panel from cosmetic damage.

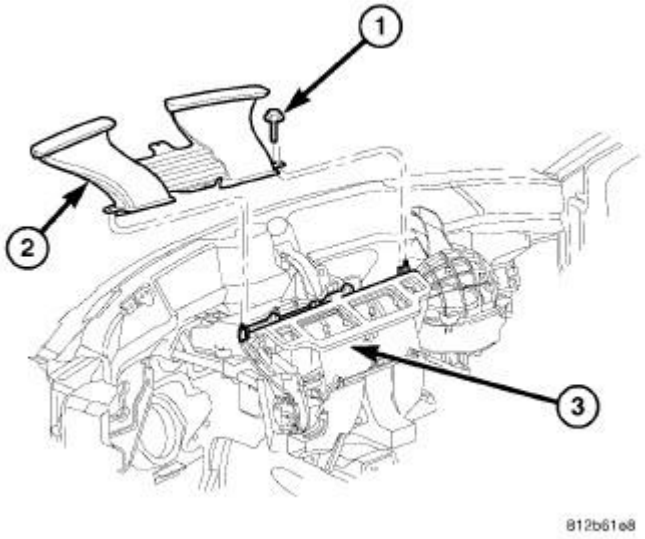

Fig. 30: DUCT-DEFROSTER REMOVAL & INSTALLATION
Courtesy of CHRYSLER LLC

1. Remove the instrument panel and place it on a workbench. Refer to **Body/Instrument Panel/PANEL, Instrument - Removal** .
2. Remove the four screws (1) that secure the defroster duct (2) to the top of the HVAC air distribution housing (3) and remove the duct.

Installation

INSTALLATION

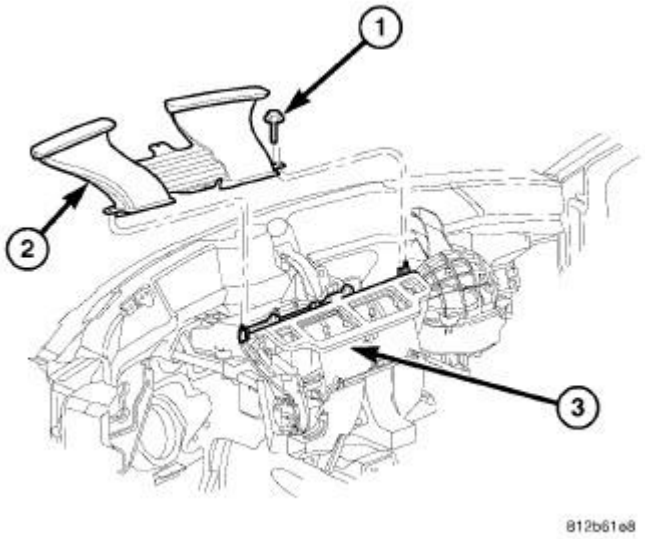

Fig. 31: DUCT-DEFROSTER REMOVAL & INSTALLATION
Courtesy of CHRYSLER LLC

1. Position the defroster duct (2) onto the top of the HVAC air distribution housing (3).
2. Install the four screws (1) that secure the defroster duct to the air distribution housing. Tighten the screws to 2 N.m (17 in. lbs.).
3. Install the instrument panel. Refer to **Body/Instrument Panel/PANEL, Instrument - Installation** .

DUCT, FLOOR CONSOLE

Removal

REMOVAL

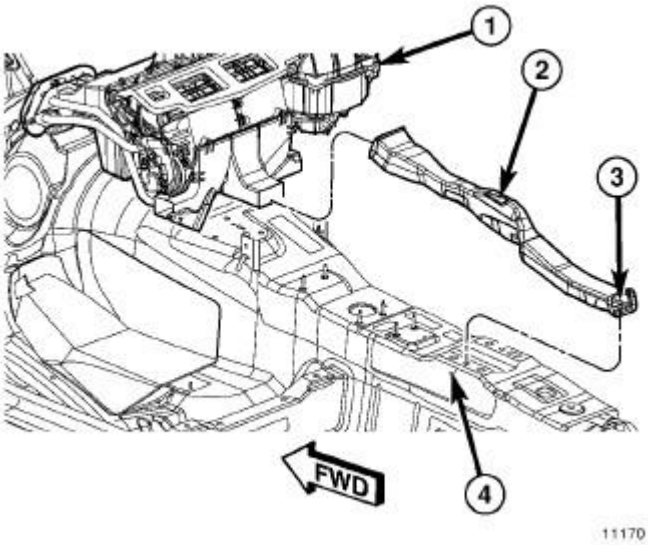

Fig. 32: Identifying Floor Distribution Duct, Floor Console Duct, Retainer & Center Floor Panel
Courtesy of CHRYSLER LLC

1. Remove the center floor console. Refer to **Body/Interior/CONSOLE, Floor - Removal** .
2. Remove the retainer (3) that secures the floor console duct (2) to the center floor panel (4).
3. Disconnect the floor console duct from the floor distribution duct (1) and remove the console duct from the vehicle.

Installation

INSTALLATION

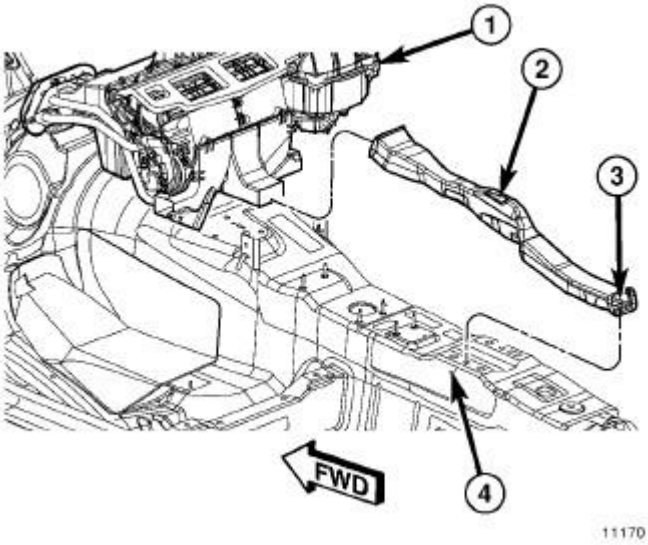

Fig. 33: Identifying Floor Distribution Duct, Floor Console Duct, Retainer & Center Floor Panel
Courtesy of CHRYSLER LLC

1. Position the floor console duct (2) into the vehicle.
2. Connect the floor console duct to the floor distribution duct (1).
3. Install the retainer (3) that secures the floor console duct to the center floor panel (4).
4. Install the center floor console. Refer to **Body/Interior/CONSOLE, Floor - Installation** .

DUCT, FLOOR DISTRIBUTION

Removal

REMOVAL

WARNING: Disable the airbag system before attempting any steering wheel, steering column or instrument panel component diagnosis or service. Disconnect and isolate the negative battery (ground) cable and wait two minutes for the airbag system capacitor to discharge before performing further diagnosis or service. This is the only sure way to disable the airbag system. Failure to follow these instructions may result in accidental airbag deployment and possible serious or fatal injury.

NOTE: Take the proper precautions to protect the front face of the instrument panel from cosmetic damage.

FRONT FLOOR DISTRIBUTION DUCT

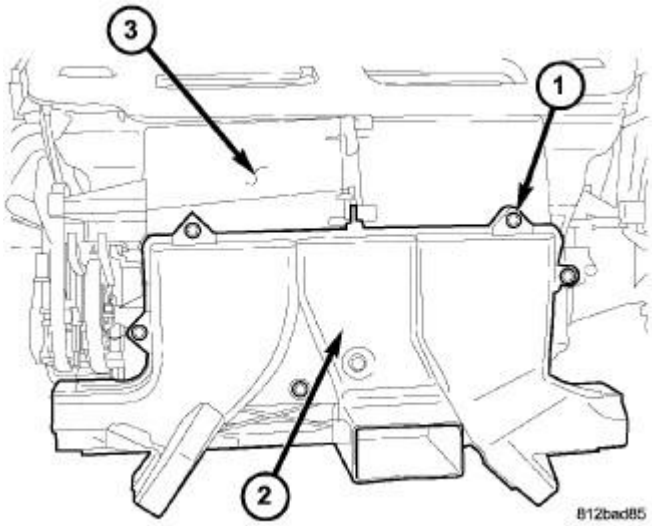

Fig. 34: Duct-Front Floor Distribution
Courtesy of CHRYSLER LLC

1. Remove the HVAC air distribution housing. See **Heating and Air Conditioning/Distribution/HOUSING, HVAC - Removal**.
2. Remove the six screws (1) that secure the front floor distribution duct (2) to the bottom of the air distribution housing (3) and remove the duct.

INTERMEDIATE FLOOR DISTRIBUTION DUCTS

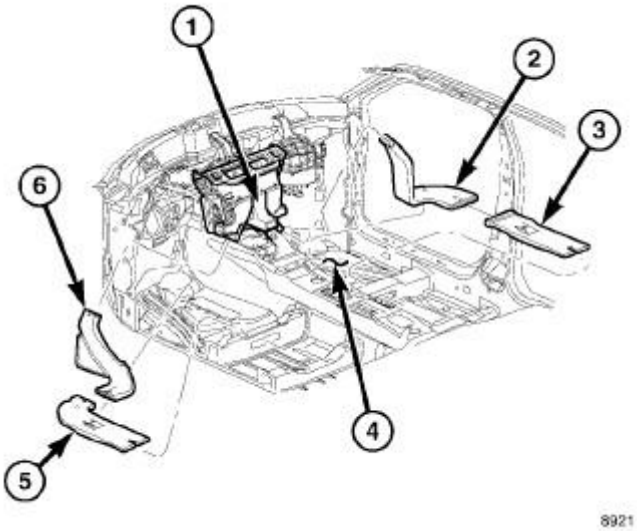

Fig. 35: Ducts-Intermediate Floor Distribution
Courtesy of CHRYSLER LLC

1. Remove the center floor console. Refer to **Body/Interior/CONSOLE, Floor - Removal** .

2. Remove the front seats. Refer to **Body/Seats/SEAT - Removal** .
3. Roll back the front floor carpet from under the instrument panel toward the rear of the vehicle. Refer to **Body - Warning** .
4. Disengage the passenger side front intermediate floor distribution duct (2) from the stud located on the passenger side of the floor support (4).
5. Disconnect the passenger side front intermediate floor distribution duct from the front floor distribution duct (1).
6. Disconnect the passenger side front intermediate floor distribution duct from the passenger side rear intermediate floor distribution duct (3).
7. Remove the passenger side rear intermediate floor distribution duct from the floor support.
8. Disengage the driver side rear intermediate floor distribution duct (5) from the stud located on the driver side of the floor support.
9. Disconnect the driver side front intermediate floor distribution duct (6) from the front floor distribution duct.
10. Disconnect the driver side front intermediate floor distribution duct from the driver side rear intermediate floor distribution duct.
11. Remove the driver side rear intermediate floor distribution duct from the floor support.

Installation

INSTALLATION

FRONT FLOOR DISTRIBUTION DUCT

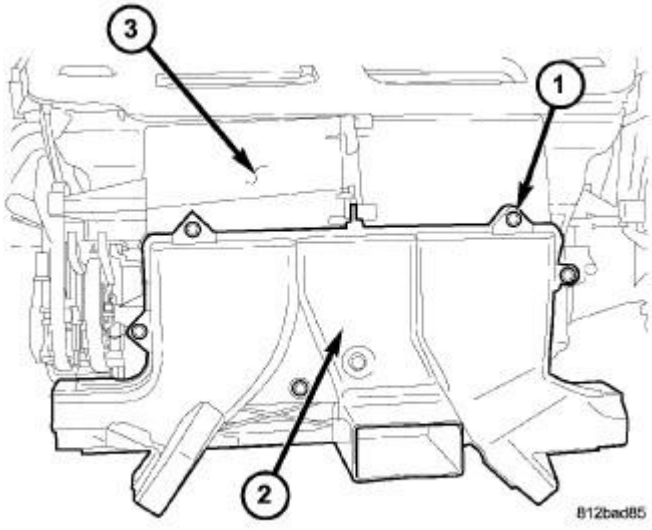

Fig. 36: Duct-Front Floor Distribution
Courtesy of CHRYSLER LLC

1. Position the front floor distribution duct (2) to the bottom of the HVAC air distribution housing (3).

2. Install the six screws (1) that secure the front floor distribution duct to the air distribution housing. Tighten the screws to 2 N.m (17 in. lbs.).
3. Install the air distribution housing. See **Heating and Air Conditioning/Distribution/DUCT, Floor Distribution - Installation**.

INTERMEDIATE FLOOR DISTRIBUTION DUCTS

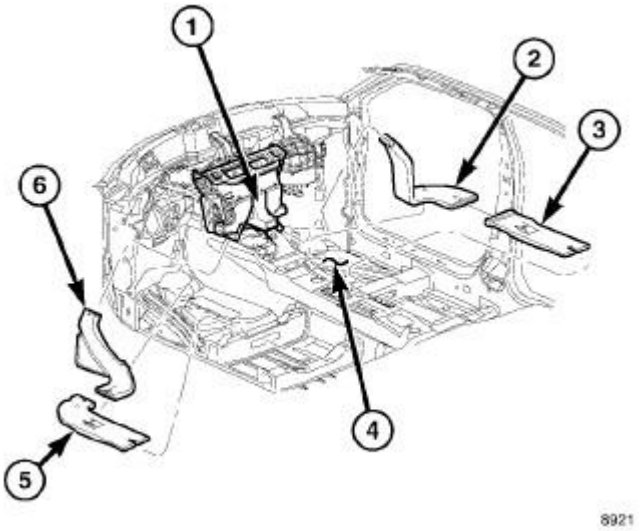

Fig. 37: Ducts-Intermediate Floor Distribution
Courtesy of CHRYSLER LLC

1. Install the driver side rear intermediate floor distribution duct (5) and the passenger side rear intermediate floor distribution duct (3) into the slots in the floor support (4).
2. Connect the driver side front intermediate floor distribution duct (6) to the driver side rear intermediate floor distribution duct.
3. Connect the driver side front intermediate floor distribution duct to the front floor distribution duct (1).
4. Engage the driver side rear intermediate floor distribution duct to the stud located on the driver side of the floor support.
5. Connect the passenger side front intermediate floor distribution duct (2) to the passenger side rear intermediate floor distribution duct.
6. Connect the passenger side front intermediate floor distribution duct to the front floor distribution duct.
7. Engage the passenger side front intermediate floor distribution duct to the stud located on the passenger side of the floor support.
8. Install the carpet onto the front floor panel and under the instrument panel. Refer to **Body - Warning** .
9. Install the front seats. Refer to **Body/Seats/SEAT - Installation** .
10. Install the center floor console. Refer to **Body/Interior/CONSOLE, Floor - Installation** .

DUCT, INSTRUMENT PANEL

Removal

REMOVAL

WARNING: Disable the airbag system before attempting any steering wheel, steering column, or instrument panel component diagnosis or service. Disconnect and isolate the battery negative (ground) cable, then wait two minutes for the airbag system capacitor to discharge before performing further diagnosis or service. This is the only sure way to disable the airbag system. Failure to take the proper precautions could result in accidental airbag deployment and possible serious or fatal injury.

NOTE: Take the proper precautions to protect the front face of the instrument panel from cosmetic damage.

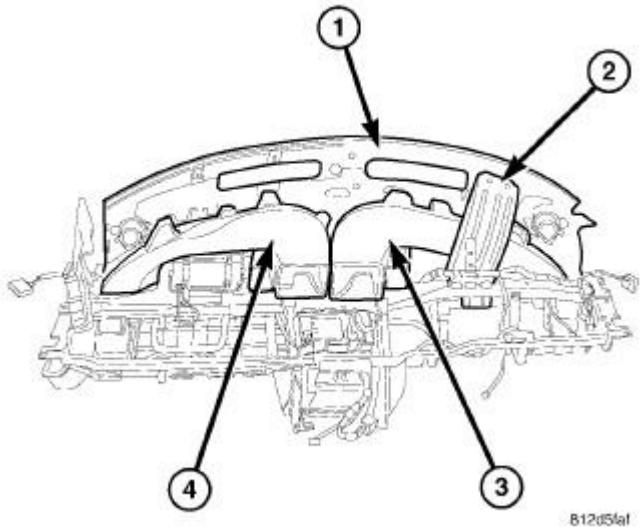

Fig. 38: DUCTS-INSTRUMENT PANEL REMOVAL & INSTALLATION
Courtesy of CHRYSLER LLC

1. Remove the instrument panel and place it on a workbench. Refer to **Body/Instrument Panel/PANEL, Instrument - Removal** .
2. Remove the screw that secures the instrument panel top pad (1) to the reinforcement bracket (2).
3. Remove the four screws that secure the driver side instrument panel duct and demister duct assembly (3) to the instrument panel and remove the duct assembly.
4. Remove the four screws that secure the passenger side instrument panel duct and demister duct assembly (4) to the instrument panel and remove the duct assembly.

Installation

INSTALLATION

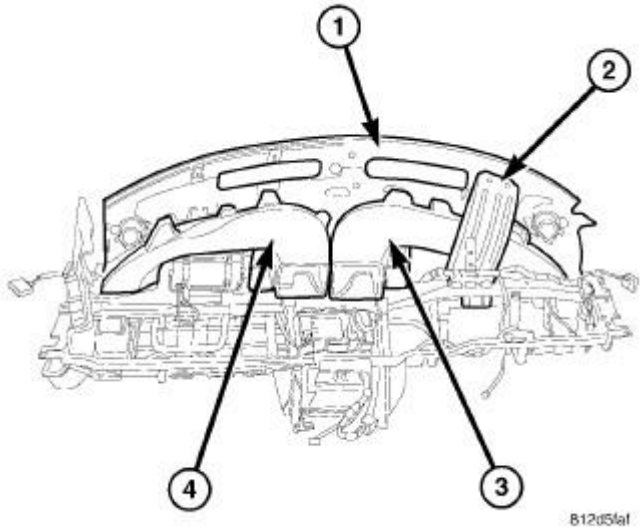

Fig. 39: DUCTS-INSTRUMENT PANEL REMOVAL & INSTALLATION
Courtesy of CHRYSLER LLC

1. Position the passenger side instrument panel duct and demister duct assembly (4) into the instrument panel.
2. Install the passenger side instrument panel duct and demister duct assembly onto the outlets of the instrument panel. Make sure that the ducts are correctly installed over the instrument panel and demister outlet seals.
3. Install the four screws that secure the passenger side instrument panel duct and demister duct assembly to the instrument panel. Tighten the screws to 2.2 N.m (20 in. lbs.).
4. Position the driver side instrument panel duct and demister duct assembly (3) into the instrument panel.
5. Install the driver side instrument panel duct and demister duct assembly onto the outlets of the instrument panel. Make sure that the ducts are correctly installed over the instrument panel and demister outlet seals.
6. Install the four screws that secure the driver side instrument panel duct and demister duct assembly to the instrument panel. Tighten the screws to 2.2 N.m (20 in. lbs.).
7. Install the screw that secures the instrument panel top pad (1) to the reinforcement bracket (2). Tighten the screw to 2.2 N.m (20 in. lbs.).
8. Install the instrument panel. Refer to **Body/Instrument Panel/PANEL, Instrument - Installation** .

DUCT, INSTRUMENT PANEL DEMISTER

Removal

REMOVAL

WARNING: Disable the airbag system before attempting any steering wheel, steering column, or instrument panel component diagnosis or service. Disconnect and isolate the battery negative (ground) cable, then wait two minutes for the airbag system capacitor to discharge before performing further diagnosis or service. This is the only sure way to disable the airbag system. Failure to take the proper precautions could result in accidental airbag deployment and possible serious or fatal injury.

NOTE: Take the proper precautions to protect the front face of the instrument panel from cosmetic damage.

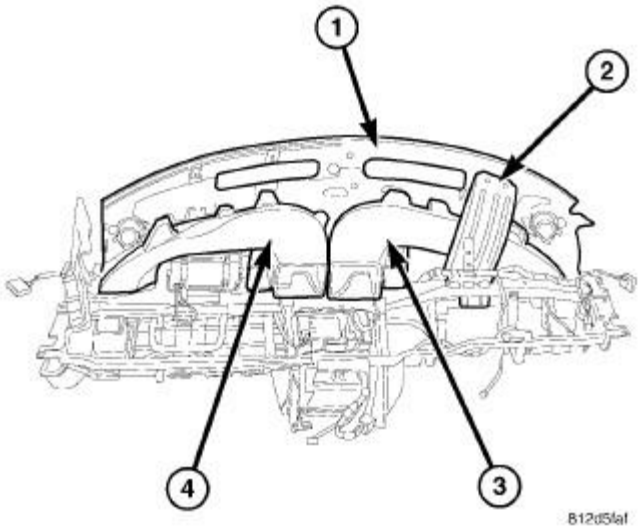

Fig. 40: DUCTS-INSTRUMENT PANEL REMOVAL & INSTALLATION
Courtesy of CHRYSLER LLC

1. Remove the instrument panel and place it on a workbench. Refer to **Body/Instrument Panel/PANEL, Instrument - Removal** .
2. Remove the screw that secures the instrument panel top pad (1) to the reinforcement bracket (2).
3. Remove the four screws that secure the driver side instrument panel duct and demister duct assembly (3) to the instrument panel and remove the duct assembly.
4. Remove the four screws that secure the passenger side instrument panel duct and demister duct assembly (4) to the instrument panel and remove the duct assembly.

Installation

INSTALLATION

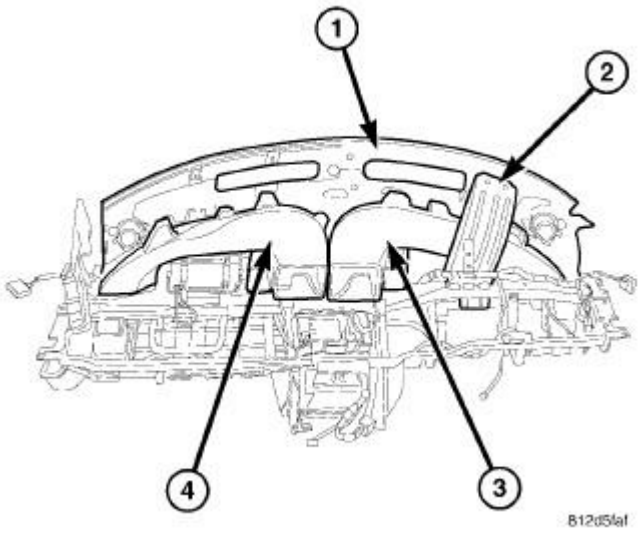

Fig. 41: DUCTS-INSTRUMENT PANEL REMOVAL & INSTALLATION
Courtesy of CHRYSLER LLC

1. Position the passenger side instrument panel duct and demister duct assembly (4) into the instrument panel.
2. Install the passenger side instrument panel duct and demister duct assembly onto the outlets of the instrument panel. Make sure that the ducts are correctly installed over the instrument panel and demister outlet seals.
3. Install the four screws that secure the passenger side instrument panel duct and demister duct assembly to the instrument panel. Tighten the screws to 2.2 N.m (20 in. lbs.).
4. Position the driver side instrument panel duct and demister duct assembly (3) into the instrument panel.
5. Install the driver side instrument panel duct and demister duct assembly onto the outlets of the instrument panel. Make sure that the ducts are correctly installed over the instrument panel and demister outlet seals.
6. Install the four screws that secure the driver side instrument panel duct and demister duct assembly to the instrument panel. Tighten the screws to 2.2 N.m (20 in. lbs.).
7. Install the screw that secures the instrument panel top pad (1) to the reinforcement bracket (2). Tighten the screw to 2.2 N.m (20 in. lbs.).
8. Install the instrument panel. Refer to **Body/Instrument Panel/PANEL, Instrument - Installation** .

FILTER, PARTICULATE AIR

Description

DESCRIPTION

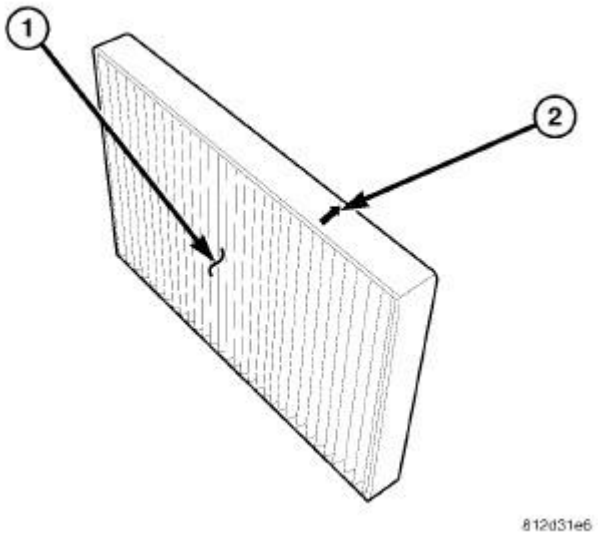

Fig. 42: Filter-Particulate Air Description
Courtesy of CHRYSLER LLC

All models are equipped with a particulate air filter (1) that helps purify the outside air entering the HVAC housing. The filter is mounted in the engine compartment, inside of the fresh air inlet housing of the heating-A/C system.

The filter should be replaced at least every 24,000 km (15,000 miles) or each year and checked if heating-A/C system performance seems lower than expected. The particulate air filter is labeled with "REAR OF VEHICLE" and an arrow (2) to indicate air flow direction through the filter.

Removal

REMOVAL

NOTE: LHD model shown in illustrations. RHD model similar.

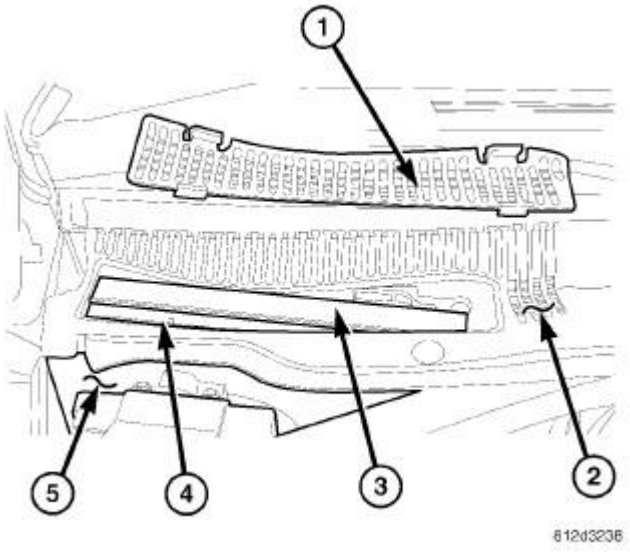

Fig. 43: Door-Particulate Air Filter Removal & Installation
Courtesy of CHRYSLER LLC

1. Remove the air inlet grille (1) from the wiper module screen (2) located near the dash panel in the engine compartment.
2. Open the filter door (3) on the top of the particulate air filter housing (4) located inside of the dash panel plenum (5).

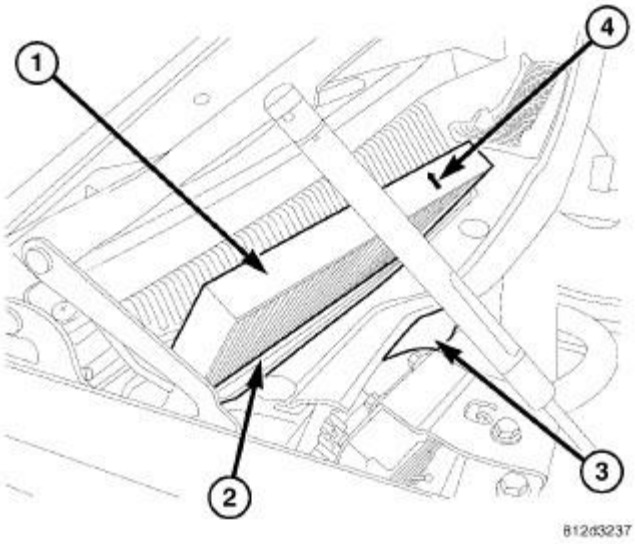

Fig. 44: FILTER-PARTICULATE AIR REMOVAL & INSTALLATION
Courtesy of CHRYSLER LLC

NOTE: To aid in reinstallation, note the installed position of the particulate air filter prior to removal of the filter.

3. Remove the particulate air filter (1) from the particulate air filter housing (2) located inside of the dash panel plenum (3). Note the direction of air flow indicated by an arrow (4) on the filter.

Installation

INSTALLATION

NOTE: The particulate air filter is labeled with "REAR OF VEHICLE" and an arrow to indicate air flow direction through the filter. Make sure to properly install the particulate air filter. Failure to properly install the filter will result in the need to replace the filter sooner than required by design.

NOTE: LHD model shown in illustrations. RHD model similar.

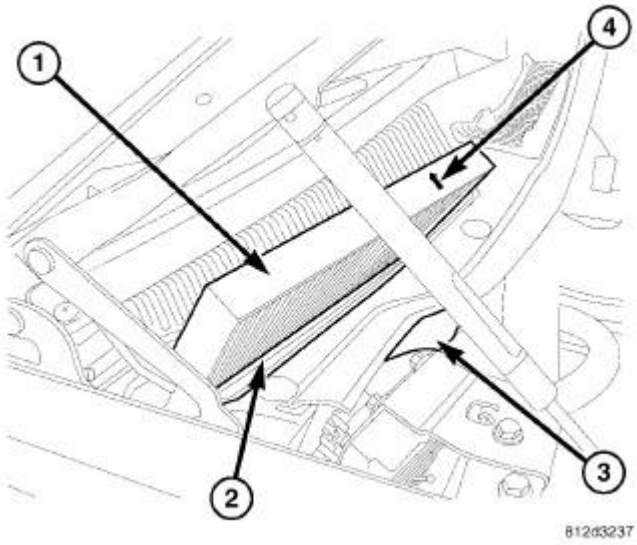

Fig. 45: FILTER-PARTICULATE AIR REMOVAL & INSTALLATION
Courtesy of CHRYSLER LLC

1. Install the particulate air filter (1) into the particulate air filter housing (2) located inside of the dash panel plenum (3). Insert the particulate air filter down directly into the filter housing with the arrow (4) on the filter pointing to the rear of the vehicle. The particulate air filter is held in place by friction between the filter element and the filter housing, so no fasteners are required.

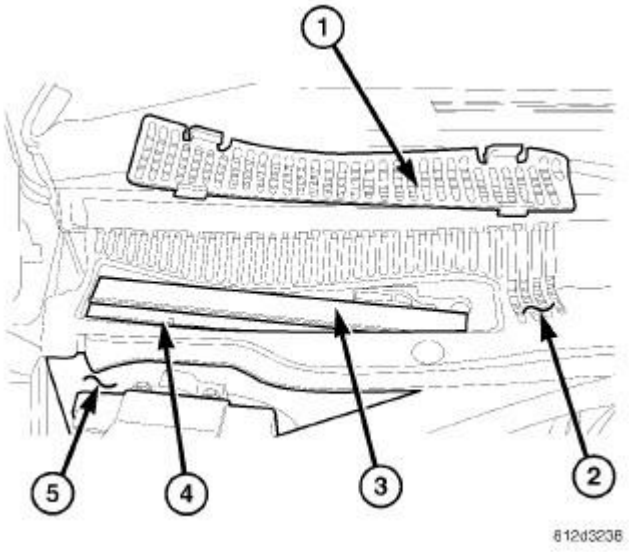

Fig. 46: Door-Particulate Air Filter Removal & Installation
Courtesy of CHRYSLER LLC

2. Close the filter door (3) on the top of the particulate air filter housing (4) located inside of the dash panel plenum (5).
3. Install the air inlet grille (1) onto the wiper module screen (2).

HOUSING, HVAC

Description

DESCRIPTION

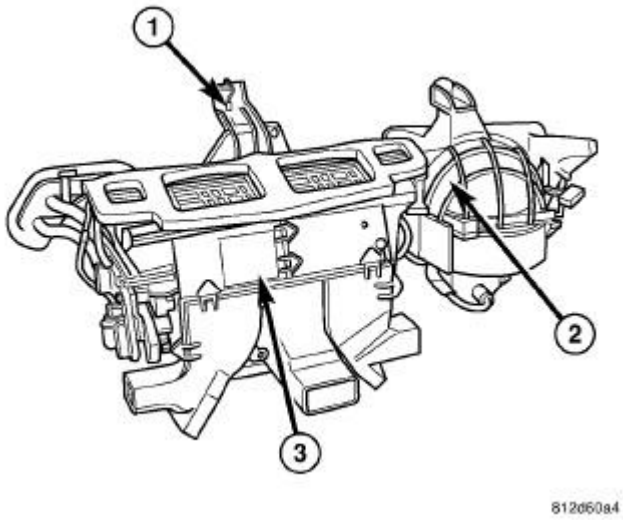

Fig. 47: Housing-HVAC Description

Courtesy of CHRYSLER LLC

This model uses a housing assembly that combines heating, A/C and ventilation capabilities into a single unit. The HVAC housing assembly is mounted in the passenger compartment and consists of three separate housings:

- **HVAC housing** - The HVAC housing (1) is mounted to the dash panel behind the instrument panel and contains the A/C evaporator and the blower motor resistor. The HVAC housing consists of an upper and a lower housing that are attached together with mounting provisions for the air inlet housing, blower motor, air distribution housing and the HVAC wire harness.
- **Air inlet housing** - The air inlet housing (2) is mounted to the right end of the HVAC housing and contains the recirculation-air door and actuator.
- **Air distribution housing** - The air distribution housing (3) is mounted to the rear of the HVAC housing and contains the heater core, blend-air door and actuator, mode-air doors and actuator and door linkage.

The heating-A/C system is a blend-air type system. The blend-air door controls the amount of conditioned air that is allowed to flow through, or around, the heater core.

The A/C system is designed for the use of a non-CFC, R-134a refrigerant and uses an A/C evaporator to cool and dehumidify the incoming air prior to blending it with the heated air. The temperature control determines the discharge air temperature by operating the blend door actuator, which moves the blend-air door. This allows an almost immediate control of the output air temperature of the system. The mode door actuator operates the mode-air doors which direct the flow of the conditioned air out the various air outlets, depending on the mode selected. The recirculation door actuator operates the recirculation-air door which closes off the fresh air intake and recirculates the air already inside the vehicle. The electric door actuators are connected to the vehicle electrical system by the HVAC wire harness. The blower motor controls the velocity of air flowing through the HVAC housing assembly by spinning the blower wheel within the HVAC housing at the selected speed by use of the blower motor resistor.

The air distribution housing must be removed from the HVAC housing and disassembled for service of the mode-air and blend-air doors. The air inlet housing must be removed from HVAC housing and disassembled for service of the recirculation-air door. The HVAC housing must be removed from the vehicle and disassembled to service the A/C evaporator.

Removal

HOUSING-AIR DISTRIBUTION

WARNING: Refer to the applicable warnings and cautions for this system before performing the following operation. See Heating and Air Conditioning/Plumbing - Warning. See Heating and Air Conditioning/Plumbing - Caution. Failure to follow these instructions may result in possible serious or fatal injury.

WARNING: Disable the airbag system before attempting any steering wheel, steering

column or instrument panel component diagnosis or service. Disconnect and isolate the negative battery (ground) cable and wait two minutes for the airbag system capacitor to discharge before performing further diagnosis or service. This is the only sure way to disable the airbag system. Failure to follow these instructions may result in accidental airbag deployment and possible serious or fatal injury.

WARNING: The heater core tubes are not serviced separately from the heater core. The heater core tubes should not be repositioned, loosened or removed from the heater core. Failure to follow these instructions may result in a coolant leak and possible serious or fatal injury.

NOTE: The air distribution housing must be removed from the HVAC housing and disassembled for service of the mode-air and blend-air doors.

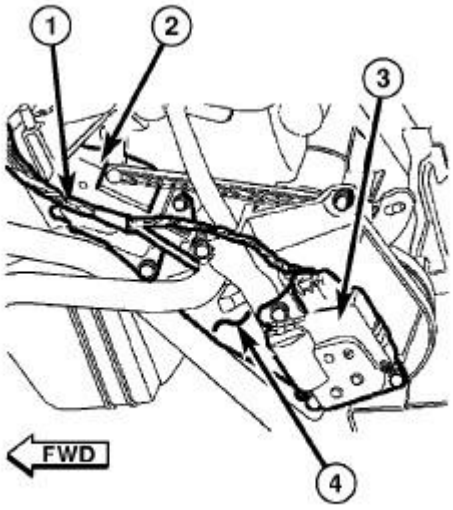

Fig. 48: HVAC Wire Harness-Actuators Removal/Installation
Courtesy of CHRYSLER LLC

1. Disconnect and isolate the negative battery cable.
2. Remove the HVAC housing assembly and place it on a suitable workbench. See **Heating and Air Conditioning/Distribution/HOUSING, HVAC - Removal**.
3. Disconnect the HVAC wire harness (1) from the mode door actuator (2) and the blend door actuator (3) located on the driver side of the air distribution housing (4).

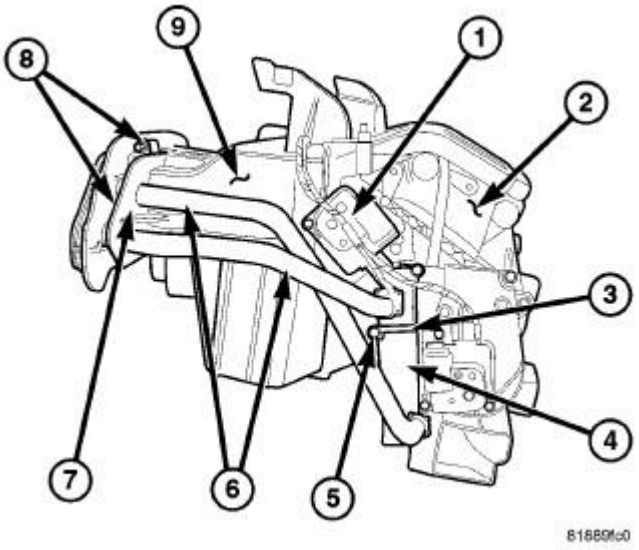

Fig. 49: Heater Core Removal & Installation
Courtesy of CHRYSLER LLC

4. Remove the blend door actuator (1) from the driver side of the HVAC air distribution housing (2). See **Heating and Air Conditioning/Controls/ACTUATOR, Blend Door - Removal**.
5. Remove the two screws (8) that secure the flange (7) to the front of the HVAC housing near the dash panel and remove the flange.
6. Remove the screw (5) that secures the heater core retaining bracket (3) to the driver side of the HVAC air distribution housing and remove the bracket.
7. Disengage the heater core tubes (6) from the HVAC housing and carefully pull the heater core (4) straight out of the side of the air distribution housing.

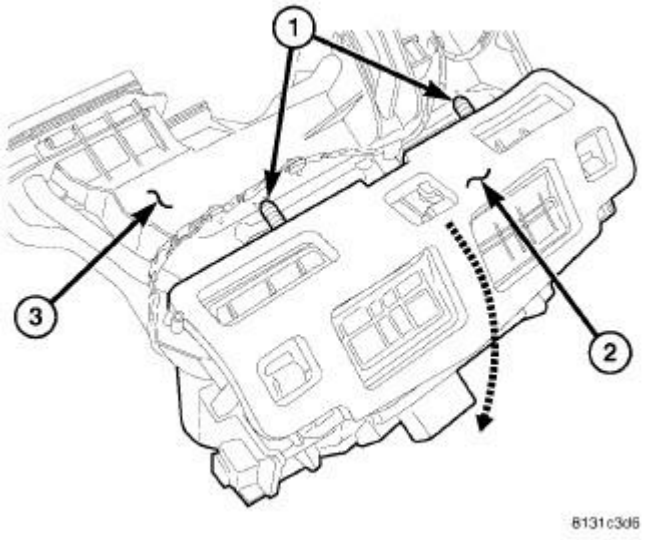

Fig. 50: Housing-Air Distribution Removal

Courtesy of CHRYSLER LLC

8. Remove the two screws (1) that secure the air distribution housing (2) to the rear of the HVAC housing (3).
9. Tilt the top of the air distribution housing rearward to disconnect the distribution housing from the tab-and-slot type retainers located at the bottom of the housing.
10. Disconnect the air distribution housing from rear floor distribution ducts.
11. Remove the air distribution housing from the vehicle.
12. If required, disassemble the air distribution housing. See **Heating and Air Conditioning/Distribution/HOUSING, HVAC - Disassembly**.

HOUSING-AIR INLET

WARNING: Refer to the applicable warnings and cautions for this system before performing the following operation. See Heating and Air Conditioning/Plumbing - Warning. See Heating and Air Conditioning/Plumbing - Caution. Failure to follow the warnings and cautions could result in possible serious or fatal injury.

WARNING: Disable the airbag system before attempting any steering wheel, steering column, or instrument panel component diagnosis or service. Disconnect and isolate the negative battery (ground) cable, then wait two minutes for the airbag system capacitor to discharge before performing further diagnosis or service. This is the only sure way to disable the airbag system. Failure to take the proper precautions could result in accidental airbag deployment and possible serious or fatal injury.

NOTE: The air inlet housing must be removed from HVAC housing and disassembled for service of the recirculation-air door.

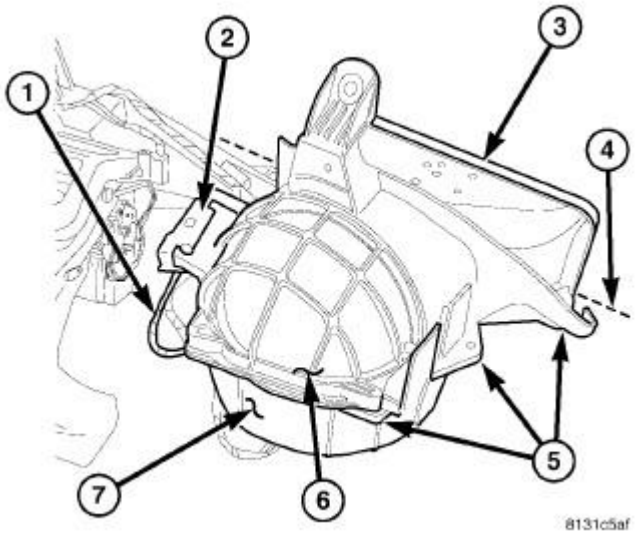

Fig. 51: Housing-Air Inlet Removal & Installation
Courtesy of CHRYSLER LLC

1. Disconnect and isolate the negative battery cable.
2. Remove the HVAC housing assembly. See **Heating and Air Conditioning/Distribution/HOUSING, HVAC - Removal**.
3. Disconnect the HVAC wire harness (1) from the recirculation door actuator (2).
4. Carefully cut the foam seal (3) along the parting line (4) of the air inlet housing (6). If the seal is deformed or damaged, it must be replaced.
5. Remove the five screws (5) that secure the air inlet housing to HVAC housing (7).
6. Remove the air inlet housing from the HVAC housing.
7. If required, disassemble the air inlet housing. See **Heating and Air Conditioning/Distribution/HOUSING, HVAC - Disassembly**.

HOUSING-FRESH AIR INLET

WARNING: Refer to the applicable warnings and cautions for this system before performing the following operation. See Heating and Air Conditioning/Plumbing - Warning. See Heating and Air Conditioning/Plumbing - Caution. Failure to follow these instructions may result in serious or fatal injury.

NOTE: The fresh air inlet housing must be removed from the vehicle for removal of the HVAC housing.

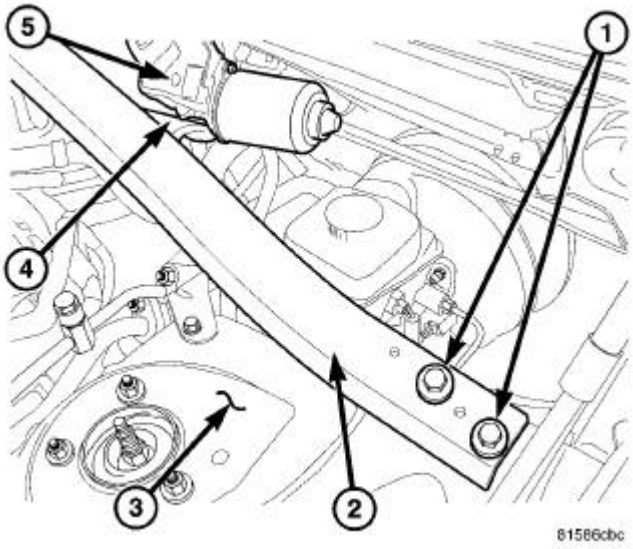

Fig. 52: Strut Support- Driver Side
Courtesy of CHRYSLER LLC

1. Disconnect and isolate the negative battery cable.
2. Remove the cowl top panel from the dash panel. Refer to **Body/Exterior/COVER, Cowl Panel - Removal** .
3. Remove the two bolts (1) that secure the strut support (2) to the driver side strut tower (3).
4. Disengage the wiper motor (5) from the bracket (4) located on the strut support.

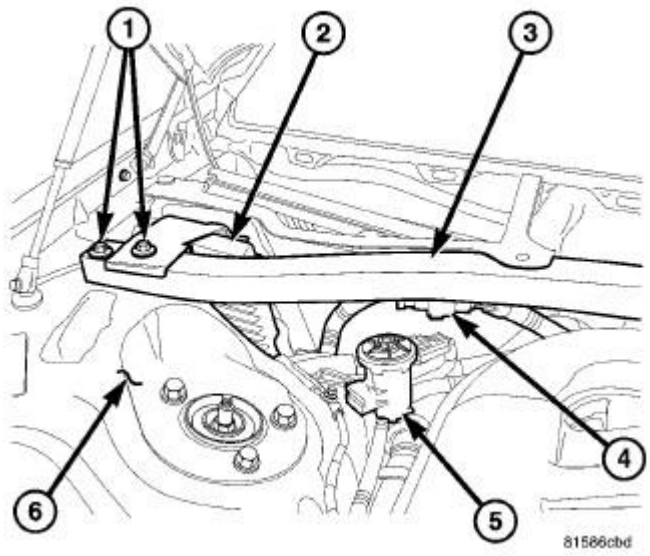

Fig. 53: Strut Support- Passenger Side
Courtesy of CHRYSLER LLC

5. Disengage the retainer that secures the wire harness (4) to the bottom of the strut support (3).

6. Remove the purge solenoid (5) from its mounting bracket and position the solenoid out of the way.
7. Remove the two bolts (1) that secure the strut support to the passenger side strut tower (6) and remove the support from the engine compartment.
8. Position the powertrain control module (PCM) out of the way.

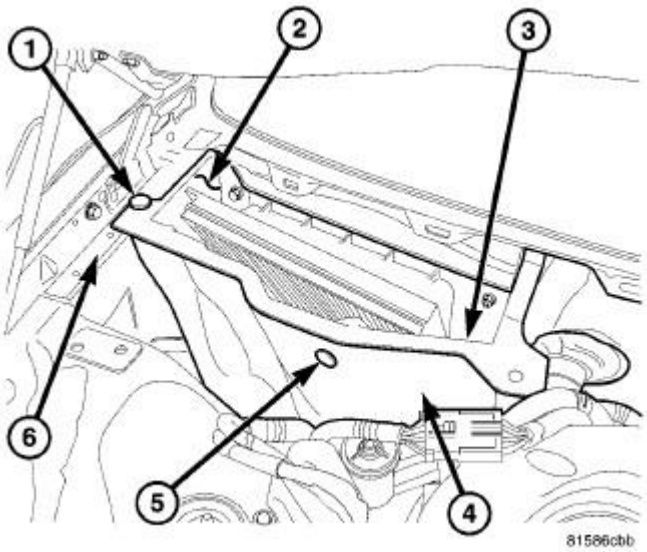

Fig. 54: Push Pins-Fresh Air inlet Housing
Courtesy of CHRYSLER LLC

9. Remove the push-pin retainer (1) that secures the fresh air inlet housing (2) to the passenger side inner fender (6).
10. Disengage the wire harness retainer (3) from inside the bottom of the fresh air inlet housing, if equipped.
11. Remove the push-pin retainer (5) that secures the insulator (4) to the front of the fresh air inlet housing and position the insulator out of the way.

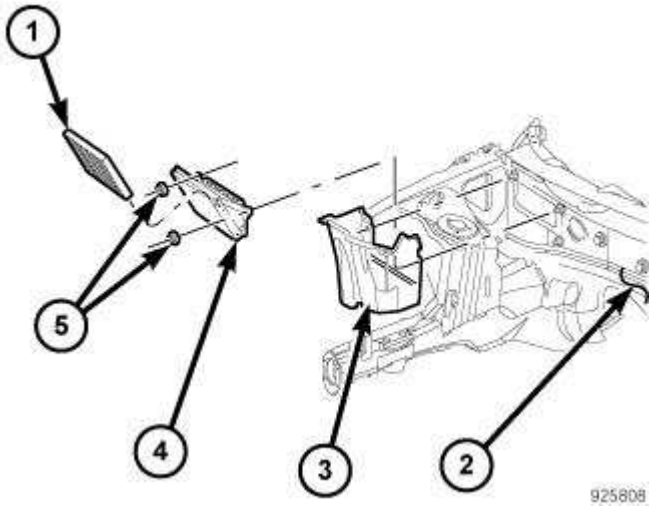

Fig. 55: Fresh Air inlet Housing
Courtesy of CHRYSLER LLC

12. Remove the two nuts (5) that secure the fresh air inlet housing (3), particulate air filter (1) and filter housing (4) to the dash panel (2).
13. Remove the fresh air inlet housing, particulate air filter and filter housing as an assembly from the dash panel.

HOUSING-HVAC ASSEMBLY

WARNING: Disable the airbag system before attempting any steering wheel, steering column or instrument panel component diagnosis or service. Disconnect and isolate the negative battery (ground) cable and wait two minutes for the airbag system capacitor to discharge before performing further diagnosis or service. This is the only sure way to disable the airbag system. Failure to follow these instructions may result in accidental airbag deployment and possible serious or fatal injury.

WARNING: Disable the airbag system before attempting any steering wheel, steering column, or instrument panel component diagnosis or service. Disconnect and isolate the negative battery (ground) cable, then wait two minutes for the airbag system capacitor to discharge before performing further diagnosis or service. This is the only sure way to disable the airbag system. Failure to take the proper precautions could result in accidental airbag deployment and possible serious or fatal injury.

NOTE: The HVAC housing must be removed from the vehicle and disassembled for service of the A/C evaporator.

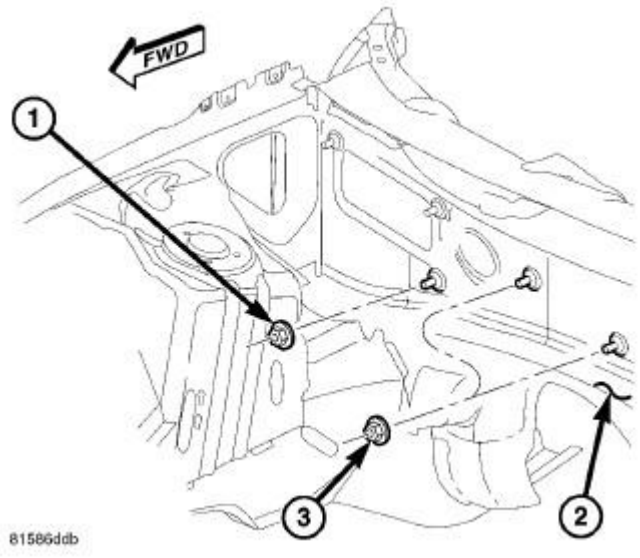

Fig. 56: Housing-HVAC-Exterior Removal & Installation
Courtesy of CHRYSLER LLC

1. Recover the refrigerant from the refrigerant system. See **Heating and Air Conditioning/Plumbing - Standard Procedure**.
2. Drain the engine cooling system. Refer to **Cooling - Standard Procedure** .
3. Disconnect and isolate the negative battery cable.
4. Remove the fresh air inlet housing from the dash panel. See **Heating and Air Conditioning/Distribution/HOUSING, HVAC - Removal**.
5. Disconnect the A/C liquid line and the A/C suction line from the A/C evaporator. See **Heating and Air Conditioning/Plumbing/LINE, A/C Liquid - Removal**.
6. Disconnect the heater hoses from the heater core tubes.
7. Remove the three nuts (1 and 3) that secure the HVAC housing to the engine compartment side of the dash panel (2).

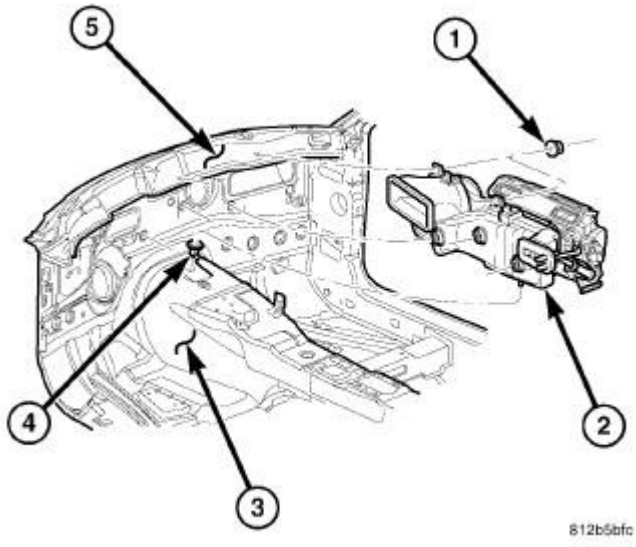

Fig. 57: Housing-HVAC-Interior Removal & Installation
Courtesy of CHRYSLER LLC

8. Remove the instrument panel from the passenger compartment. Refer to **Body/Instrument Panel/PANEL, Instrument - Removal** .
9. Disconnect the floor console duct. See **Heating and Air Conditioning/Distribution/DUCT, Floor Console - Removal**.
10. Disconnect the rear floor distribution ducts. See **Heating and Air Conditioning/Distribution/DUCT, Floor Distribution - Removal**.
11. Remove the defroster ducts. See **Heating and Air Conditioning/Distribution/DUCT, Defroster - Removal**.
12. Remove the two nuts (1) that secure the HVAC housing (2) to the passenger compartment side of the dash panel (5).
13. Pull the HVAC housing assembly rearward so that the mounting studs clear the dash panel.
14. Lift the HVAC housing assembly upwards so that the condensate drain tube clears the grommet (4) in the floor panel (3) and remove the HVAC housing assembly from the passenger compartment.
15. If required, disassemble the HVAC housing assembly. See **Heating and Air Conditioning/Distribution/HOUSING, HVAC - Disassembly**.

Disassembly

HOUSING-AIR DISTRIBUTION

NOTE: The air distribution housing must be removed from the HVAC housing and disassembled for service of the mode-air and blend-air doors.

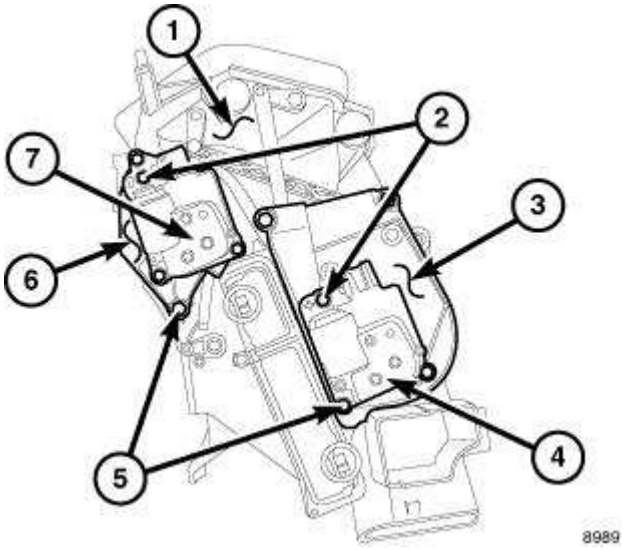

Fig. 58: Air Housing-Actuators and Brackets-LH Removal & Installation
Courtesy of CHRYSLER LLC

1. Remove the air distribution housing (1) from the HVAC housing and place it on a workbench. See **Heating and Air Conditioning/Distribution/HOUSING, HVAC - Removal**.
2. Remove the screws (2) that secure the mode door actuator (4) and the blend door actuator (7) to the driver side of the air distribution housing and remove the actuators.
3. Remove the screws (5) that secure the blend door actuator mounting bracket (6) and the mode door actuator mounting bracket (3) to the driver side of the air distribution housing and remove the mounting brackets.

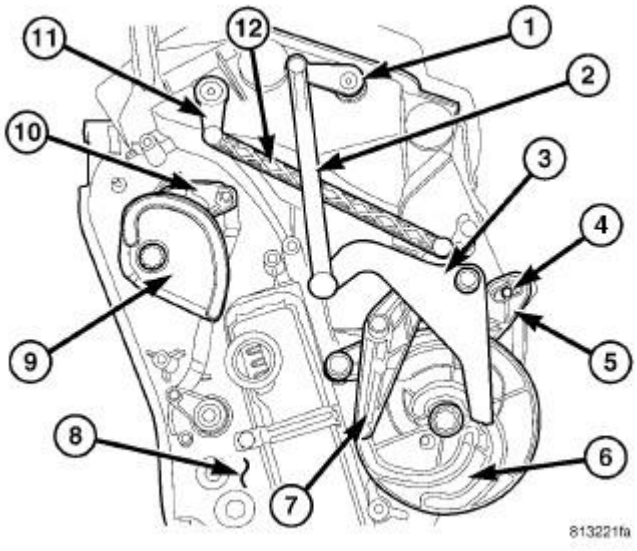

Fig. 59: Air Housing-Actuator Linkages-LH Removal & Installation
Courtesy of CHRYSLER LLC

4. Remove the instrument panel door linkage (3) from the pivot shaft located on the driver side of

the air distribution housing (8) and carefully disconnect the linkage rod (2) from the instrument panel door lever (1).

5. Remove the defrost/demister door linkage (7) from the pivot shaft on the air distribution housing and carefully disconnect the linkage rod (12) from the defrost/demister door lever (11).
6. Remove the mode door cam (6) from the air distribution housing.
7. Remove the floor door linkage (5) from the floor door lever (4) and the air distribution housing.
8. Remove the blend door cam (9) from the blend door lever (10) and the air distribution housing.

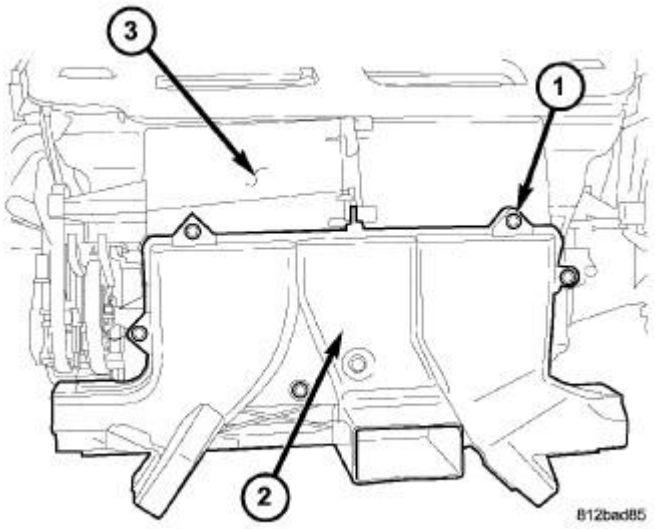

Fig. 60: Duct-Front Floor Distribution
Courtesy of CHRYSLER LLC

9. Remove the six screws (1) that secure the front floor distribution duct (2) to the bottom of the air distribution housing (3) and remove the duct.

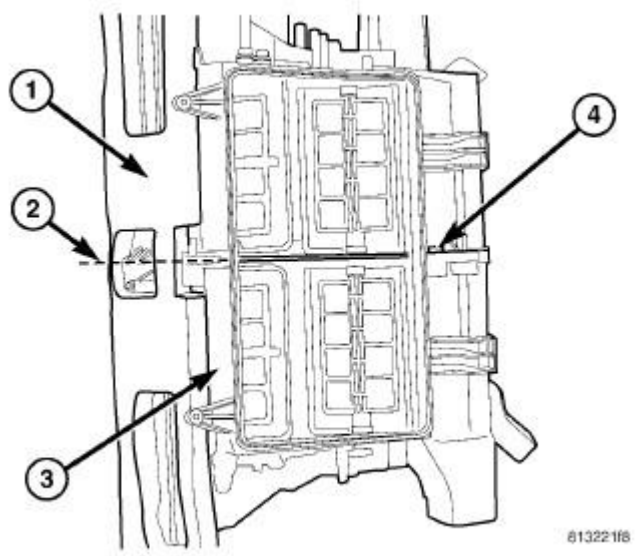

Fig. 61: Air Housing-Seal and Screws Removal & Installation
Courtesy of CHRYSLER LLC

10. Carefully cut the foam seal (1) along the parting line (2) of the two halves of the air distribution housing (3). If the seal is deformed or damaged, it must be replaced.
11. Remove the screws (4) that secure the two halves of the air distribution housing together.

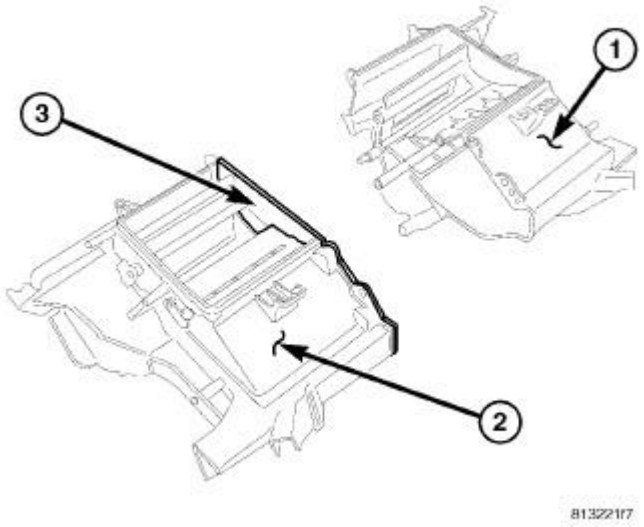

Fig. 62: Air Housing-Partition Removal & Installation
Courtesy of CHRYSLER LLC

12. Carefully separate the left half of the air distribution housing (1) from the right half of the housing (2).
13. Remove the center partition (3).

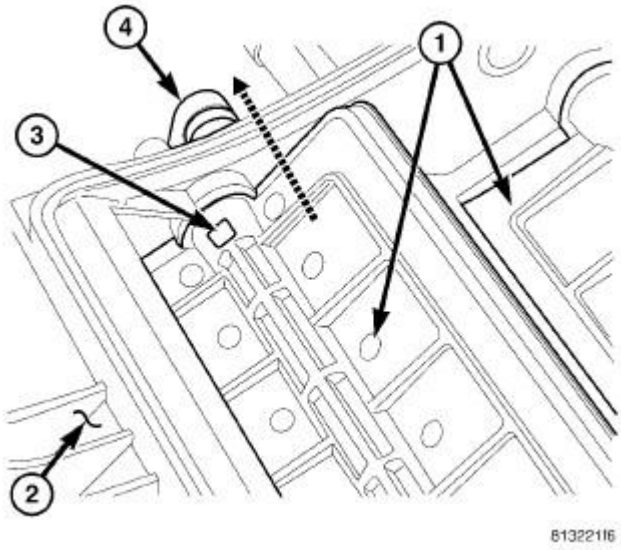

Fig. 63: Air Housing-Air Doors Removal/Installation
Courtesy of CHRYSLER LLC

14. To remove the air doors (1) from the air distribution housing (2), first carefully push down on the tab (3) of the air door lever (4) located in the pivot shaft of the air door being removed.

NOTE: If the seal on the air door is deformed or damaged, the air door must be replaced.

15. Gently pull the air door lever out of the pivot shaft and remove the air door(s) from the air distribution housing as required.

HOUSING-AIR INLET

NOTE: The air inlet housing must be removed from HVAC housing and disassembled for service of the recirculation-air door.

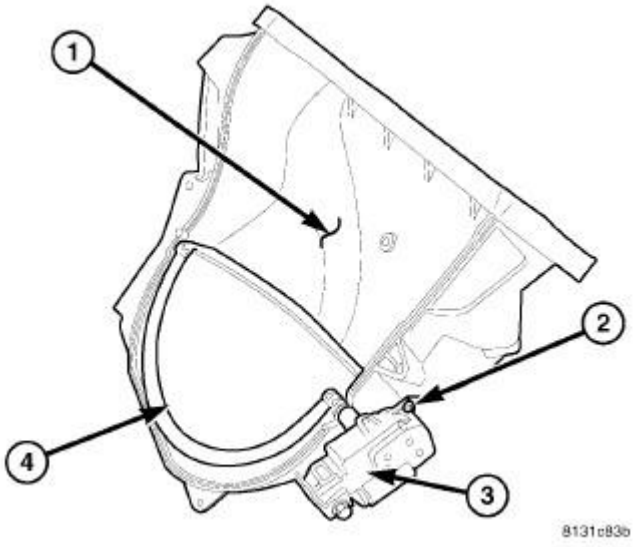

Fig. 64: Identifying Air Inlet Housing, Screws, Recirculation Door Actuator & Recirculation-air Door
Courtesy of CHRYSLER LLC

1. Remove the air inlet housing (1) from the HVAC housing and place it on a workbench. See **Heating and Air Conditioning/Distribution/HOUSING, HVAC - Removal**.
2. Remove the three screws (2) that secure the recirculation door actuator (3) to the air inlet housing and remove the actuator.
3. Remove the recirculation-air door (4) from the air inlet housing.

HOUSING-HVAC

NOTE: The HVAC housing must be removed from the vehicle and disassembled for service of the A/C evaporator.

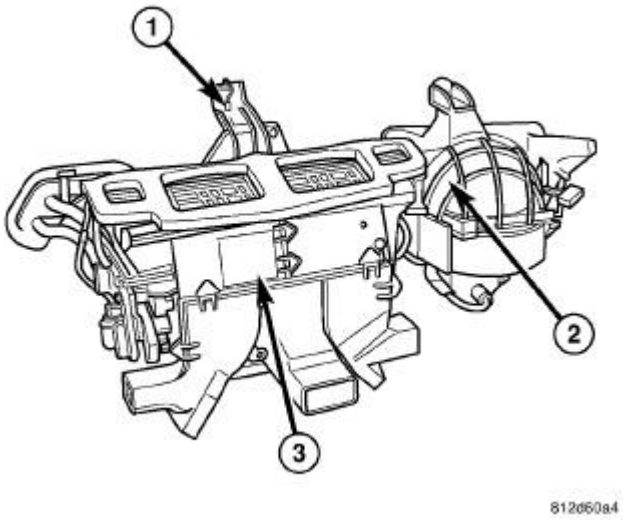

Fig. 65: Housing-HVAC Description
Courtesy of CHRYSLER LLC

1. Remove the HVAC housing assembly and place it on a workbench. See **Heating and Air Conditioning/Distribution/HOUSING, HVAC - Removal**.
2. Remove the air distribution housing (3) from the HVAC housing (1). See **Heating and Air Conditioning/Distribution/HOUSING, HVAC - Removal**.
3. Remove the air inlet housing (2) from the HVAC housing. See **Heating and Air Conditioning/Distribution/HOUSING, HVAC - Removal**.

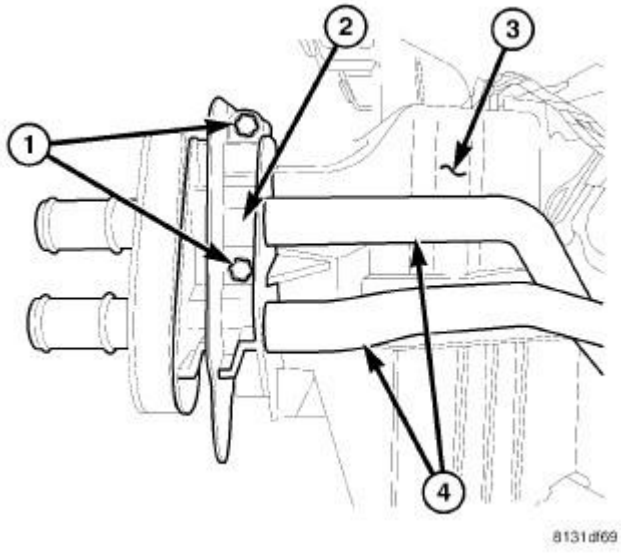

Fig. 66: HVAC Housing-Flange Removal & Installation
Courtesy of CHRYSLER LLC

4. Remove the two screws (1) that secure the flange (2) to the front of the HVAC housing (3).
5. Remove the flange and the heater core tubes (4) from the HVAC housing.

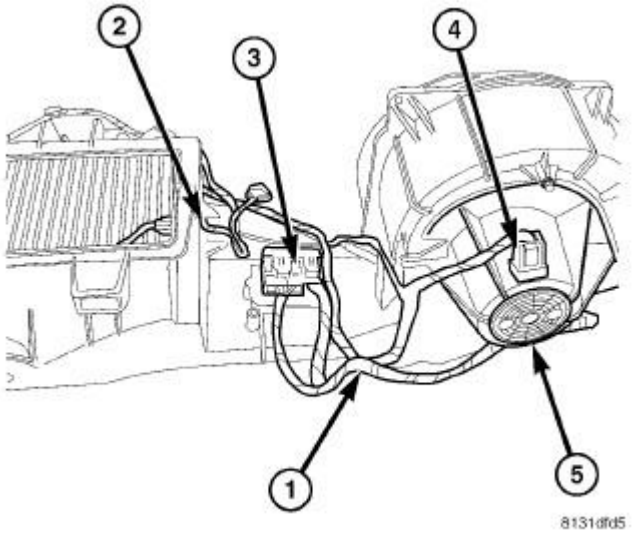

Fig. 67: HVAC Housing-Controls Removal & Installation
Courtesy of CHRYSLER LLC

6. Disconnect the HVAC wiring harness (1) from the evaporator temperature sensor (2), blower motor resistor (3) and the blower motor (4).
7. Disengage the two HVAC wire harness retainers (5) from the blower motor and remove the blower motor from the HVAC housing. See **Heating and Air Conditioning/Distribution/MOTOR, Blower - Removal**.
8. Remove the blower motor resistor. See **Heating and Air Conditioning/Controls/RESISTOR, Blower Motor - Removal**.
9. Remove the evaporator temperature sensor. See **Heating and Air Conditioning/Controls/SENSOR, Evaporator Temperature - Removal**.

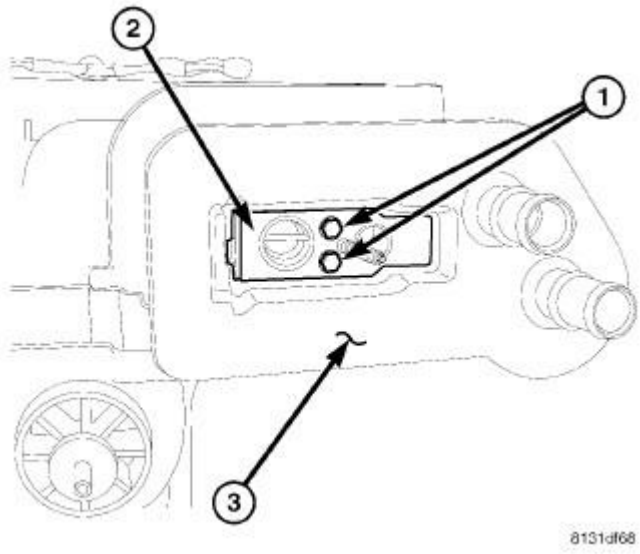

Fig. 68: Valve-A/C Expansion Removal & Installation
Courtesy of CHRYSLER LLC

10. Remove the two bolts (1) that secure the A/C expansion valve (2) to the evaporator tube tapping block located within the foam seal (3).
11. Remove the A/C expansion valve from the evaporator tube tapping block and foam seal.
12. Remove the O-ring seals from the evaporator tube fittings and discard.
13. Install plugs in, or tape over the opened evaporator tube fittings and all expansion valve ports.

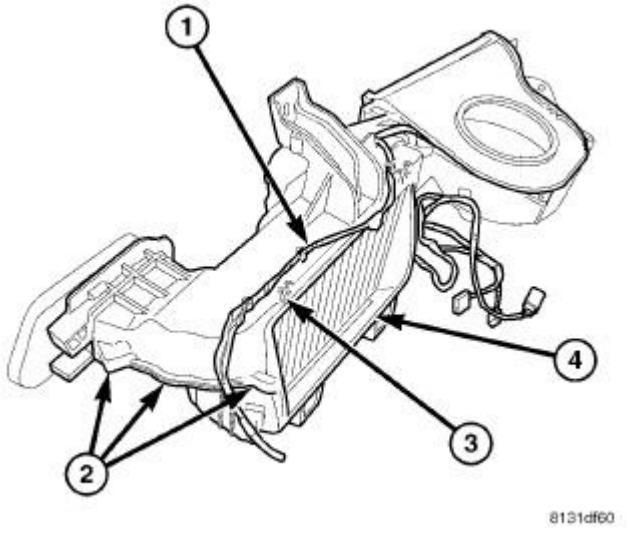

Fig. 69: Housing-HVAC
Courtesy of CHRYSLER LLC

14. Remove the HVAC wiring harness (1).

15. Remove the ten screws (2) that secure the upper half of the HVAC housing (3) to the lower half of the HVAC housing (4).
16. Separate the two halves of the HVAC housing.

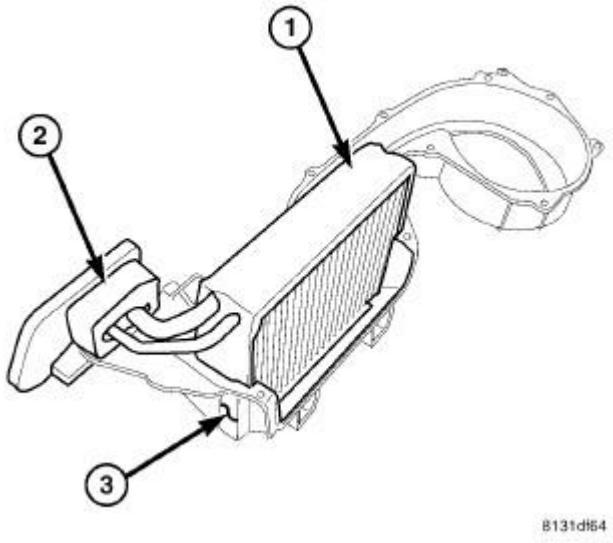

Fig. 70: Evaporator-A/C Removal & Installation
Courtesy of CHRYSLER LLC

17. Carefully lift the A/C evaporator (1) and foam seal (2) out of the lower half of the HVAC housing (3).
18. If required, remove the foam seal from the tapping block of the A/C evaporator. If the seal is deformed or damaged, it must be replaced.

Assembly

HOUSING-AIR DISTRIBUTION

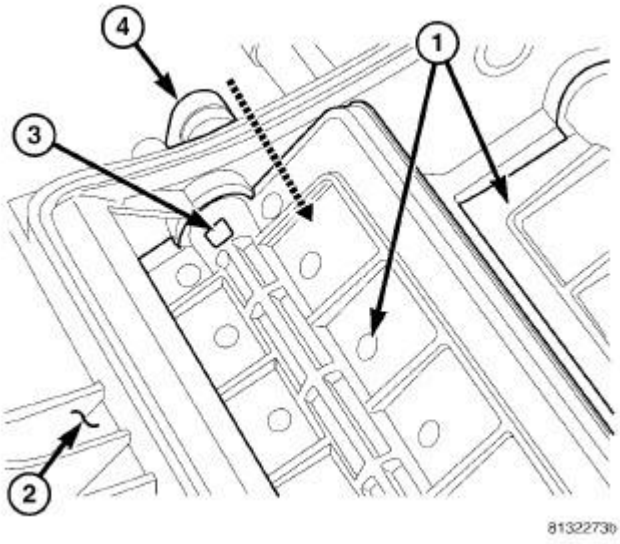

Fig. 71: Air Housing-Air Doors Install
Courtesy of CHRYSLER LLC

1. Install the air doors (1) into the air distribution housing (2) as required. Align the air door with the pivot shaft hole in the housing.
2. Align and install the air door lever (4) into the pivot shaft of the air door. Make sure that the tab (3) on the door lever is securely engaged to the pivot shaft.

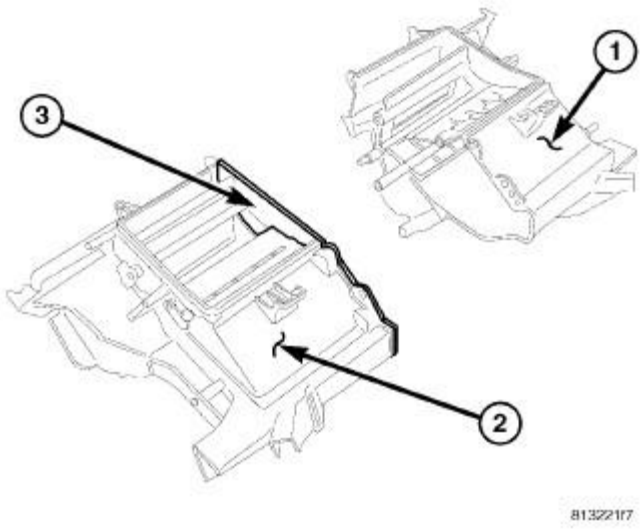

Fig. 72: Air Housing-Partition Removal & Installation
Courtesy of CHRYSLER LLC

3. Align the air door pivot shafts with the pivot holes in the center partition (3) and install the partition onto the left half of the air distribution housing (1).

4. Align the air door pivot shafts to each other and carefully install the left half of the air distribution housing to the right half of the housing (2).

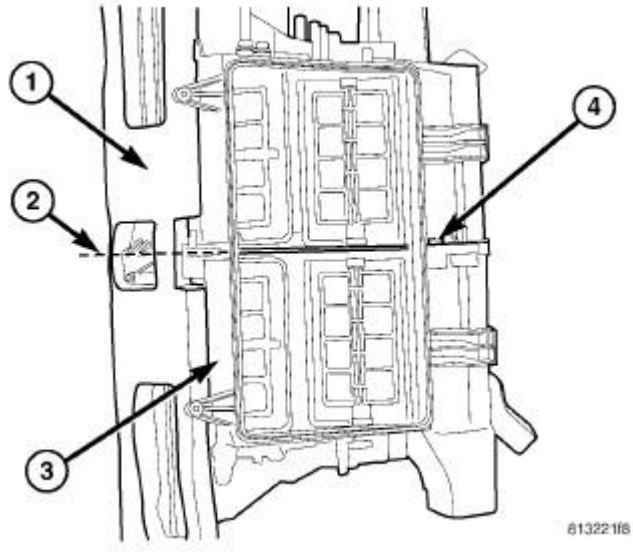

Fig. 73: Air Housing-Seal and Screws Removal & Installation
Courtesy of CHRYSLER LLC

5. Install the screws (4) that secure the two halves of the air distribution housing (3) together. Tighten the screws to 2.2 N.m (20 in. lbs.).
6. Inspect the foam seal (1), especially at the parting line (2). If the seal is deformed or damaged, it must be replaced.

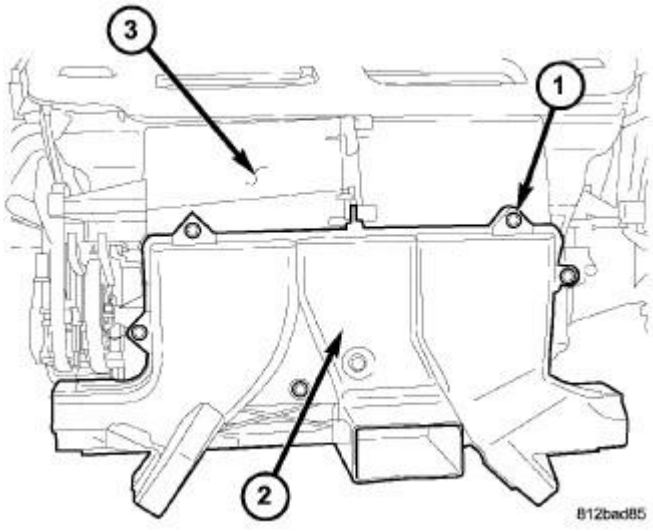

Fig. 74: Duct-Front Floor Distribution
Courtesy of CHRYSLER LLC

7. Position the front floor distribution duct (2) onto the air distribution housing (3).
8. Install the six screws (1) that secure the front floor distribution duct to the air distribution housing. Tighten the screws to 2 N.m (17 in. lbs.).

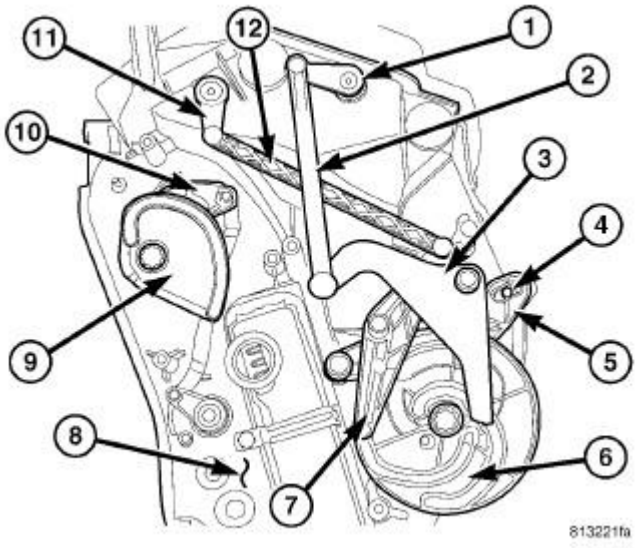

Fig. 75: Air Housing-Actuator Linkages-LH Removal & Installation
Courtesy of CHRYSLER LLC

9. Install the blend door cam (9) onto the blend door lever (10) and the pivot shaft located on the driver side of the air distribution housing (8).
10. Install the floor door linkage (5) onto the floor door lever (4) and the pivot shaft on air distribution housing.

NOTE: Align the guide pin on the floor door linkage with the guides on the mode door cam during installation of the floor door linkage.

11. Install the mode door cam (6) onto the pivot shaft on air distribution housing.
12. Connect the defrost/demister door linkage rod (12) onto the defrost/demister door lever (11).

NOTE: Align the guide pin on the defrost/demister linkage with the guides on the mode door cam during installation of the defrost/demister linkage.

13. Install the defrost/demister linkage (7) onto the pivot shaft on air distribution housing.
14. Connect the instrument panel door linkage rod (2) onto the instrument panel door lever (1).

NOTE: Align the guide pin on the instrument panel linkage with the guides on the mode door cam during installation of the instrument panel linkage.

15. Install the instrument panel linkage (3) onto the pivot shaft on air distribution housing.

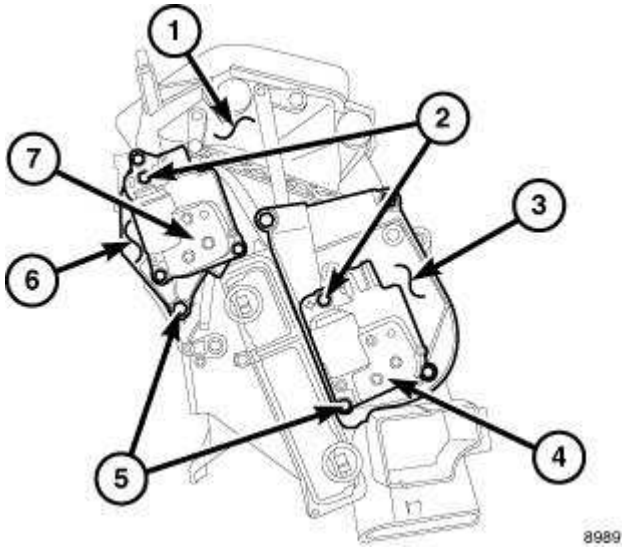

Fig. 76: Air Housing-Actuators and Brackets-LH Removal & Installation
Courtesy of CHRYSLER LLC

16. Position the blend door actuator mounting bracket (6) and the mode door actuator mounting bracket (3) onto the driver side of the air distribution housing (1).
17. Install the screws (5) that secure the mounting brackets to the air distribution housing. Tighten the screws to 2 N.m (17 in. lbs.).
18. Position the blend door actuator (7) onto the air distribution housing. If necessary, rotate the actuator slightly to align the splines on the actuator output shaft with those on the blend door cam. See **Heating and Air Conditioning/Controls/ACTUATOR, Blend Door - Installation**.
19. Position the mode door actuator (4) onto the air distribution housing. If necessary, rotate the actuator slightly to align the splines on the actuator output shaft with those on the mode door cam. See **Heating and Air Conditioning/Controls/ACTUATOR, Mode Door - Installation**.
20. Install the screws (2) that secure the blend door actuator to the air distribution housing. Tighten the screws to 2 N.m (17 in. lbs.).
21. Position the mode door actuator mounting bracket (6) onto the driver side of the air distribution housing (1).
22. Install the screws that secure the blend door actuator mounting bracket to the air distribution housing. Tighten the screws to 2 N.m (17 in. lbs.).
23. Position the blend door actuator (7) onto the air distribution housing. If necessary, rotate the actuator slightly to align the splines on the actuator output shaft with those on the blend-air door linkage. See **Heating and Air Conditioning/Controls/ACTUATOR, Blend Door - Installation**.
24. Install the screws (2) that secure the blend door and mode door actuators to the air distribution housing. Tighten the screws to 2 N.m (17 in. lbs.).
25. Install the air distribution housing onto the HVAC housing. See **Heating and Air Conditioning/Distribution/HOUSING, HVAC - Installation**.

HOUSING-AIR INLET

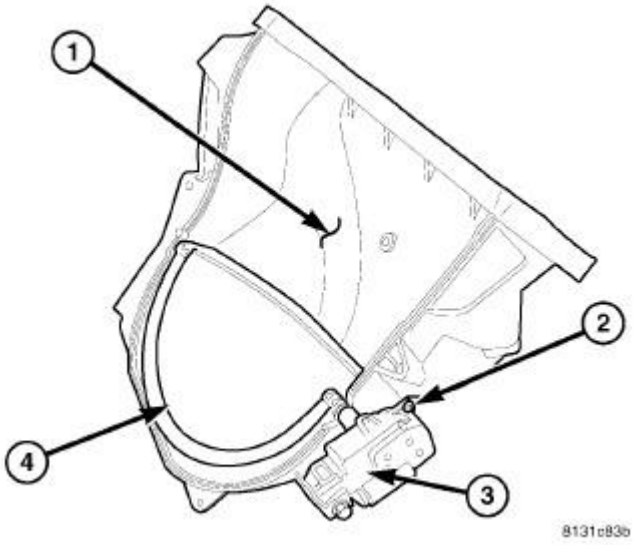

Fig. 77: Identifying Air Inlet Housing, Screws, Recirculation Door Actuator & Recirculation-air Door
Courtesy of CHRYSLER LLC

1. Position the recirculation-air door (4) into the air inlet housing (1).

CAUTION: Make sure that the recirculation-air door pivot shaft is properly seated in the pivot seats located on the air inlet housing.

2. Install the recirculation door actuator (3) onto the air inlet housing. If necessary, rotate the actuator slightly to align the splines on the actuator output shaft with those on the recirculation door pivot shaft. See **Heating and Air Conditioning/Controls/ACTUATOR, Recirculation Door - Installation**.
3. Install the three screws (2) that secure the recirculation door actuator to the air inlet housing. Tighten the screws to 2 N.m (17 in. lbs.).
4. Install the air inlet housing onto the HVAC housing. See **Heating and Air Conditioning/Distribution/HOUSING, HVAC - Installation**.

HOUSING-HVAC

CAUTION: Be certain to adjust the refrigerant oil level when servicing the A/C refrigerant system. See Heating and Air Conditioning/Plumbing/OIL, Refrigerant - Standard Procedure. Failure to properly adjust the refrigerant oil level will prevent the A/C system from operating as designed and can cause serious A/C compressor damage.

NOTE: When replacing multiple A/C system components, refer to the REFRIGERANT OIL CAPACITIES chart to determine how much oil should be added to the refrigerant system. See Heating and Air Conditioning/Plumbing/OIL, Refrigerant

- Standard Procedure.

NOTE: If the A/C evaporator is being replaced, add 60 milliliters (2 fluid ounces) of refrigerant oil to the refrigerant system. Use only refrigerant oil of the type recommended for the A/C compressor in the vehicle.

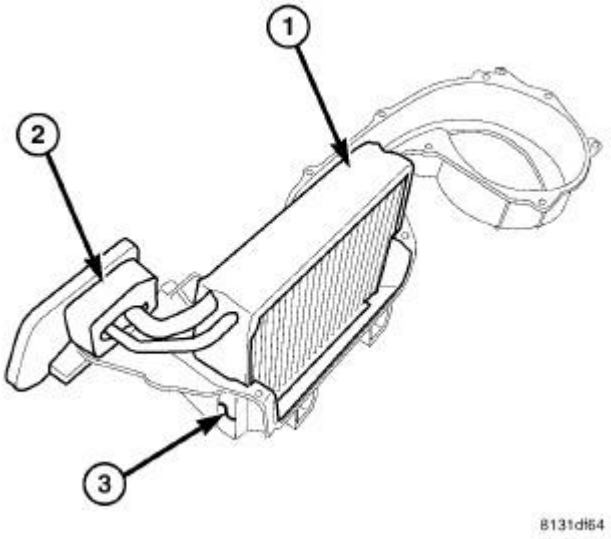

Fig. 78: Evaporator-A/C Removal & Installation
Courtesy of CHRYSLER LLC

1. If removed, install the foam seal (2) over the tapping block of the A/C evaporator (1). If the seal is deformed or damaged, it must be replaced.
2. Install the A/C evaporator into the lower half of the HVAC housing (3). Make sure that the evaporator drain within the HVAC housing is clean and unrestricted and that the insulator around the A/C evaporator is properly installed.

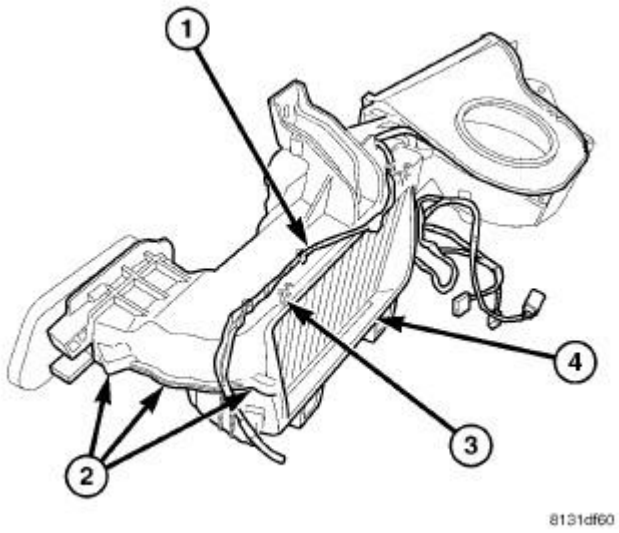

Fig. 79: Housing-HVAC
Courtesy of CHRYSLER LLC

3. Install the upper half of the HVAC housing (3) onto the lower half of the HVAC housing (4).
4. Install the screws (2) that secure the two halves of the HVAC housing together. Tighten the screws to 2.2 N.m (20 in lbs.).
5. Install the HVAC wiring harness (1). Make sure the harness is routed through all wiring retainers.

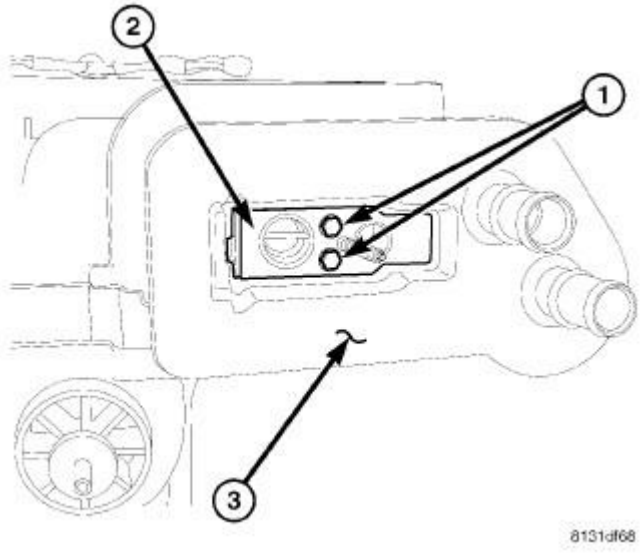

Fig. 80: Valve-A/C Expansion Removal & Installation
Courtesy of CHRYSLER LLC

6. Remove the tape or plugs from the evaporator tube fittings and all of the expansion valve ports.

7. Lubricate new rubber O-ring seals with clean refrigerant oil and install them on the evaporator tube fittings. Use only the specified O-rings as they are made of a special material for the R-134a system. Use only refrigerant oil of the type recommended for the A/C compressor in the vehicle.
8. Install the A/C expansion valve (2) onto the evaporator tube tapping block located within the foam seal (3).
9. Install the two bolts (1) that secure the A/C expansion valve to the evaporator tube tapping block. Tighten the bolts to 11 N.m (97 in. lbs.).

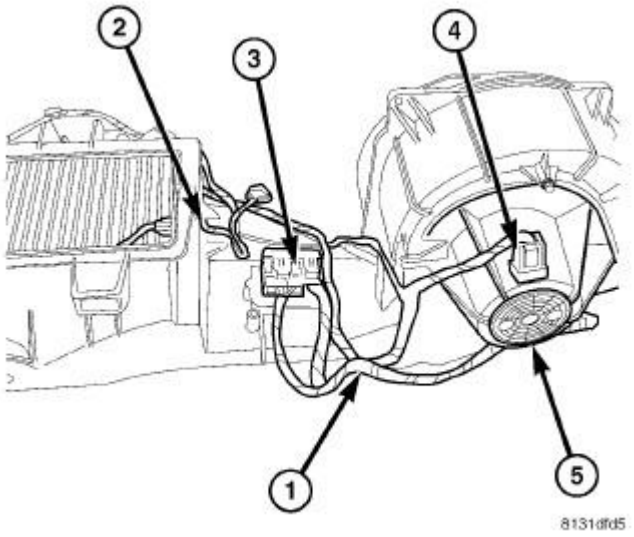

Fig. 81: HVAC Housing-Controls Removal & Installation
Courtesy of CHRYSLER LLC

10. Install the evaporator temperature sensor (2). See **Heating and Air Conditioning/Controls/SENSOR, Evaporator Temperature - Installation**.
11. Install the blower motor resistor (3). See **Heating and Air Conditioning/Controls/RESISTOR, Blower Motor - Installation**.
12. Install the blower motor (4). See **Heating and Air Conditioning/Distribution/MOTOR, Blower - Installation**.
13. Connect the HVAC wire harness (1) to the evaporator temperature sensor, blower motor resistor and the blower motor.
14. Install the two HVAC wire harness retainers (5) onto the blower motor.

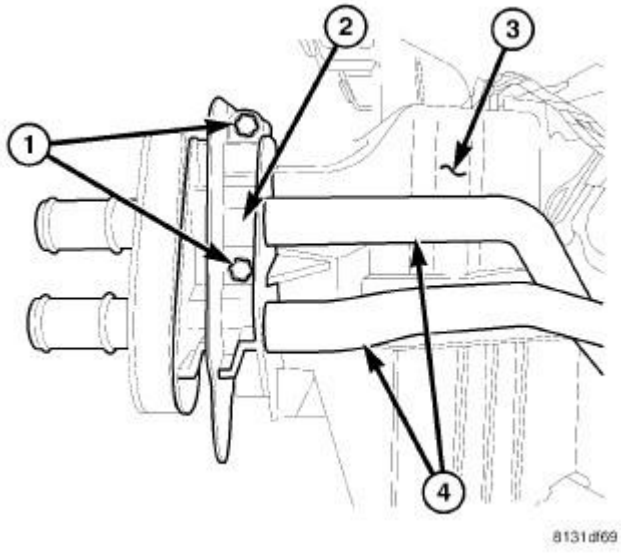

Fig. 82: HVAC Housing-Flange Removal & Installation
Courtesy of CHRYSLER LLC

15. Install the heater core tubes (4) and the flange (2) to the front of the HVAC housing (3).
16. Install the two screws (1) that secure the flange to the HVAC housing. Tighten the screws to 2.2 N.m (20 in. lbs.).

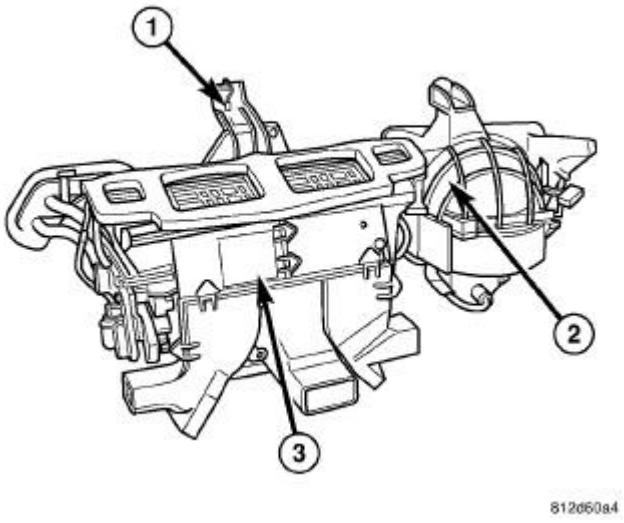

Fig. 83: Housing-HVAC Description
Courtesy of CHRYSLER LLC

17. Install the air inlet housing (2) onto the HVAC housing (1). See **Heating and Air Conditioning/Distribution/HOUSING, HVAC - Installation**.
18. Install the air distribution housing (3) onto the HVAC housing. See **Heating and Air**

Conditioning/Distribution/HOUSING, HVAC - Installation.

19. Install the HVAC housing assembly. See **Heating and Air Conditioning/Distribution/HOUSING, HVAC - Installation**.
20. If the A/C evaporator is being replaced, add 60 milliliters (2 fluid ounces) of refrigerant oil to the refrigerant system. When replacing multiple A/C system components, refer to the **REFRIGERANT OIL CAPACITIES** chart to determine how much oil should be added to the refrigerant system. See **Heating and Air Conditioning/Plumbing/OIL, Refrigerant - Standard Procedure**. Use only refrigerant oil of the type recommended for the A/C compressor in the vehicle.

Installation

HOUSING-AIR DISTRIBUTION

WARNING: The heater core tubes are not serviced separately from the heater core. The heater core tubes should not be repositioned, loosened or removed from the heater core. Failure to follow these instructions may result in a coolant leak and possible serious or fatal injury.

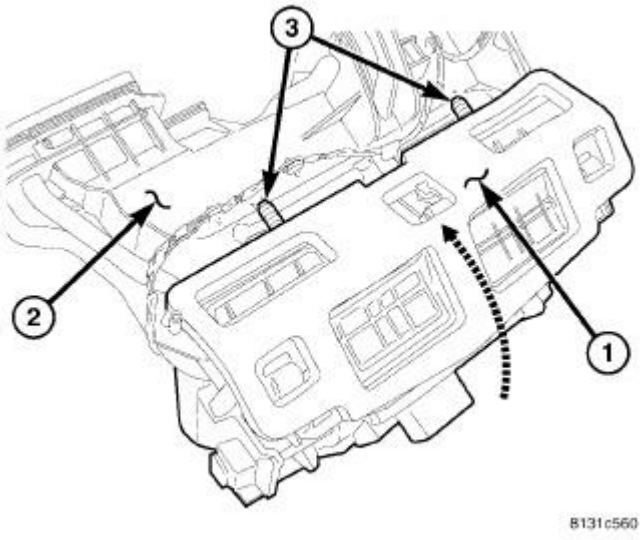

Fig. 84: Housing-Air Distribution Install
Courtesy of CHRYSLER LLC

1. Position the air distribution housing (1) into the vehicle.
2. Install the air distribution housing onto the rear of the HVAC housing (2) by inserting the tabs on the bottom of the distribution housing into the slots located on the bottom of the HVAC housing and tipping the distribution housing forward until it is properly aligned with the HVAC housing.
3. Connect the floor distribution ducts to the air distribution housing.
4. Install the screws (3) that secure the air distribution housing to the HVAC housing. Tighten the screws to 2.2 N.m (20 in. lbs.).

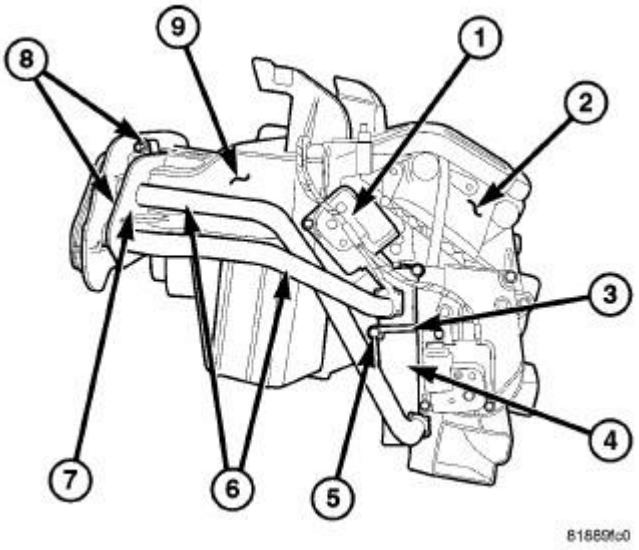

Fig. 85: Heater Core Removal & Installation
Courtesy of CHRYSLER LLC

5. Carefully install the heater core (4) into the driver side of the HVAC air distribution housing (2) and position the heater core tubes (6) to the HVAC housing (9).
6. Install heater core retaining bracket (3) onto the air distribution housing and install the retaining screw (5). Tighten the screw to 2.2 N.m (20 in. lbs.).
7. Install the flange (7) over the heater core tubes and onto the HVAC housing and install the two flange retaining screws (8). Tighten the screws to 2.2 N.m (20 in. lbs.).
8. Install the blend door actuator (1) to the driver side of the air distribution housing. See **Heating and Air Conditioning/Controls/ACTUATOR, Blend Door - Installation**.

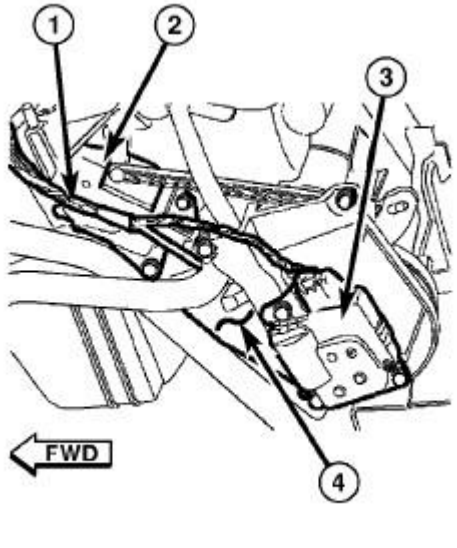

Fig. 86: HVAC Wire Harness-Actuators Removal/Installation

Courtesy of CHRYSLER LLC

9. Connect the HVAC wire harness (1) to the mode door actuator (2) and the blend door actuator (3) located on the driver side of the air distribution housing (4).
10. Install the HVAC housing assembly. See **Heating and Air Conditioning/Distribution/HOUSING, HVAC - Installation**.
11. Reconnect the negative battery cable.
12. If the heater core is being replaced, flush the cooling system. Refer to **Cooling - Standard Procedure** .
13. Refill the engine cooling system. Refer to **Cooling - Standard Procedure** .
14. Evacuate the refrigerant system. See **Heating and Air Conditioning/Plumbing - Standard Procedure**.
15. Charge the refrigerant system. See **Heating and Air Conditioning/Plumbing - Standard Procedure**.
16. Initiate the Actuator Calibration function using a scan tool. Refer to **DTC-Based Diagnostics/HVAC - Standard Procedure** .

HOUSING-AIR INLET

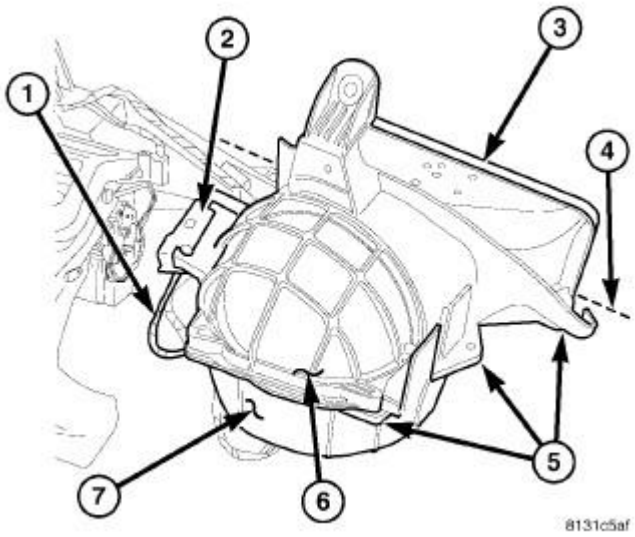

Fig. 87: Housing-Air Inlet Removal & Installation
Courtesy of CHRYSLER LLC

1. Position the air inlet housing (6) onto the HVAC housing (7).

CAUTION: Make sure that the recirculation-air door pivot shaft is properly seated in the pivot seats located on the top of the HVAC housing.

2. Install the five screws (5) that secure the air inlet housing to the HVAC housing. Tighten the

screws to 2.2 N.m (20 in. lbs.).

3. Inspect the foam seal (3). If the seal is deformed or damaged, it must be replaced.
4. Connect the HVAC wire harness (1) to the recirculation door actuator (2).
5. Install the HVAC housing assembly. See **Heating and Air Conditioning/Distribution/HOUSING, HVAC - Installation**.
6. Reconnect the negative battery cable.

HOUSING-FRESH AIR INLET

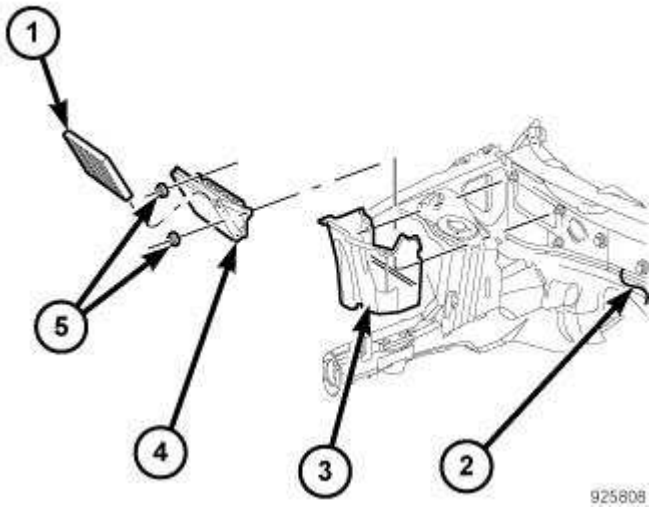

Fig. 88: Fresh Air inlet Housing
Courtesy of CHRYSLER LLC

1. Position the fresh air inlet housing (3), particulate air filter (1) and filter housing (4) as an assembly onto the engine compartment side of the dash panel (2).
2. Install the two nuts (5) that secure the fresh air inlet housing and filter housing to the dash panel. Tighten the nuts to 7 N.m (62 in. lbs.).

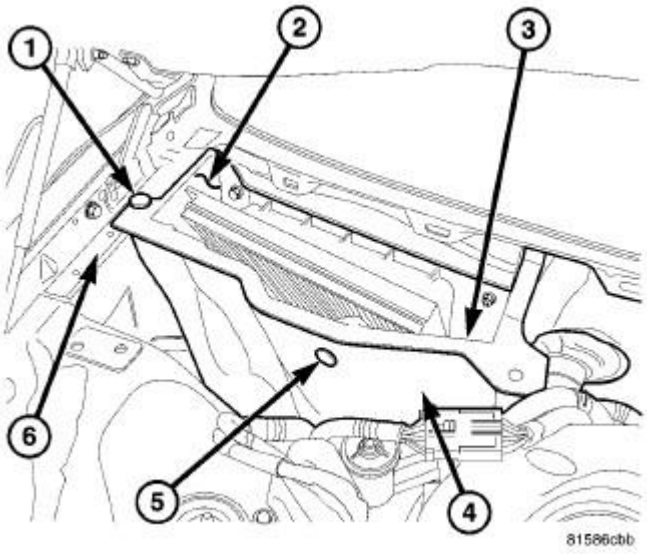

Fig. 89: Push Pins-Fresh Air inlet Housing
Courtesy of CHRYSLER LLC

3. Position the insulator (4) into its installed location and install the push-pin retainer (5) that secures the insulator to the front of the fresh air inlet housing (2).
4. Install the push-pin retainer (1) that secures the fresh air inlet housing to the right inner fender (6).
5. Reach under the fresh air inlet housing and install the wire harness retainer (3) into the bottom of the air inlet housing, if equipped.

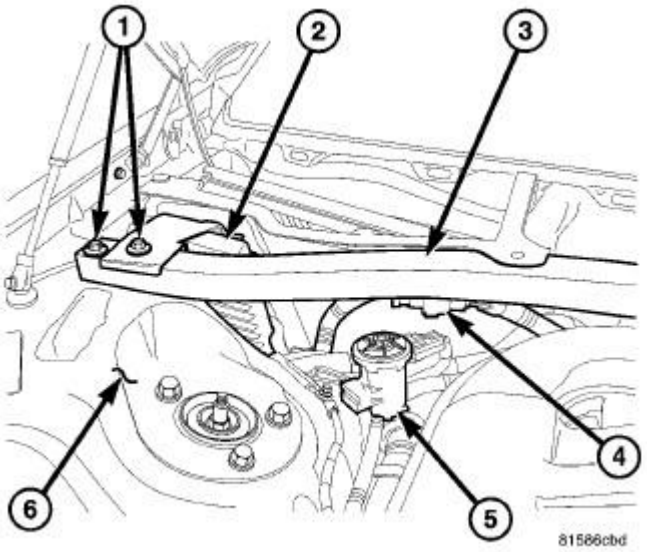

Fig. 90: Strut Support- Passenger Side
Courtesy of CHRYSLER LLC

6. Position the powertrain control module (PCM) into its installed location.
7. Position the strut support (3) into the engine compartment and loosely install the two bolts (1) that secure the strut support and the PCM to the passenger side strut tower (6).
8. Install the purge solenoid (5) onto its mounting bracket located on the right strut tower.
9. Engage the retainer that secures the wire harness (4) to the bottom of the strut support.

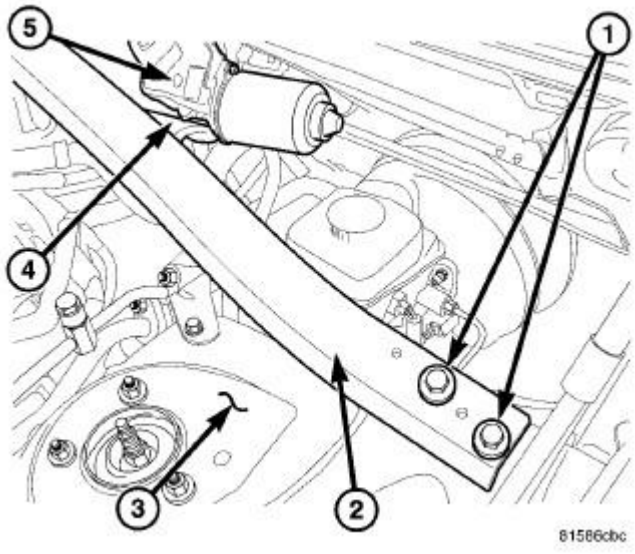

Fig. 91: Strut Support- Driver Side
Courtesy of CHRYSLER LLC

10. Engage the wiper motor (5) to the bracket (4) located on the strut support (2).
11. Position the strut support to the driver side strut tower and loosely install the two bolts (1) that secure the support to the tower.
12. Tighten all four bolts that secure the strut support to 38 N.m (28 ft. lbs.).
13. Install the cowl top panel onto the dash panel. Refer to **Body/Exterior/COVER, Cowl Panel - Installation** .
14. Reconnect the negative battery cable.

HOUSING-HVAC ASSEMBLY

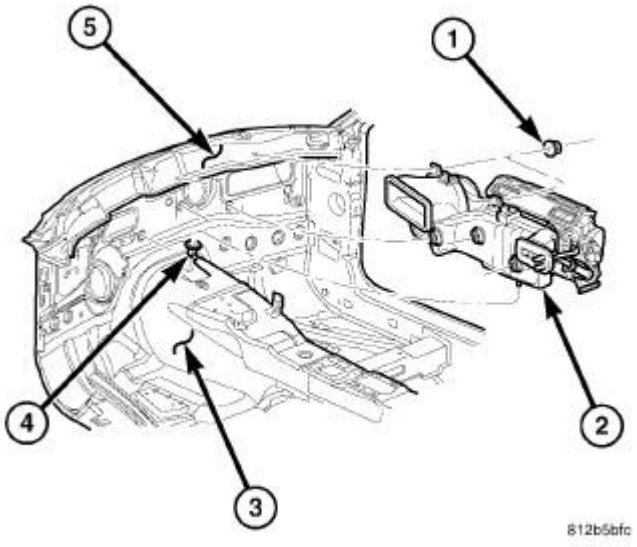

Fig. 92: Housing-HVAC-Interior Removal & Installation
Courtesy of CHRYSLER LLC

1. Position the HVAC housing (2) into the passenger compartment with the mounting studs in their proper locations in the dash panel (5) and the condensate drain tube into the grommet (4) on the floor panel (3).
2. Install the two nuts (1) that secure the HVAC housing to the passenger compartment side of the dash panel. Tighten the nuts to 3 N.m (26 in. lbs.).
3. Install the defroster ducts. See **Heating and Air Conditioning/Distribution/DUCT, Defroster - Installation**.
4. Connect the rear floor distribution ducts. See **Heating and Air Conditioning/Distribution/DUCT, Floor Distribution - Installation**.
5. Connect the floor console duct. See **Heating and Air Conditioning/Distribution/DUCT, Floor Console - Installation**.
6. Install the instrument panel. Refer to **Body/Instrument Panel/PANEL, Instrument - Installation** .

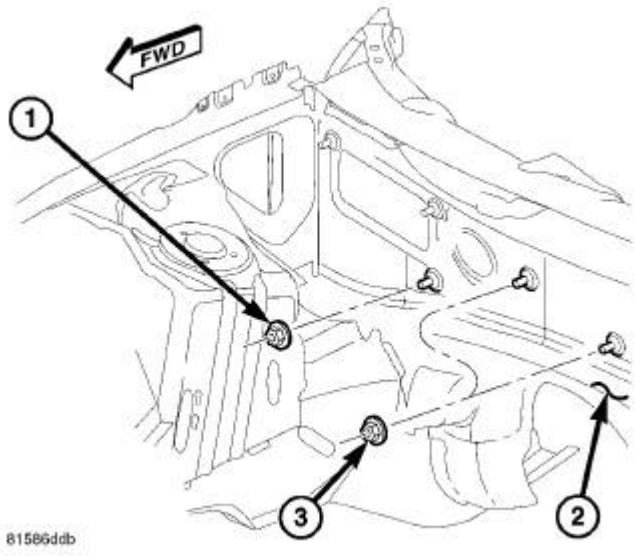

Fig. 93: Housing-HVAC-Exterior Removal & Installation
Courtesy of CHRYSLER LLC

7. Install the three nuts (1 and 3) that secure the HVAC housing to the engine compartment side of the dash panel (2). Tighten the nuts to 7 N.m (62 in. lbs.).
8. Connect the heater hoses to the heater core tubes.
9. Connect the A/C suction and liquid lines to the A/C evaporator. See **Heating and Air Conditioning/Plumbing/LINE, A/C Liquid - Installation**.
10. Install the fresh air inlet housing to the engine compartment side of the dash panel. See **Heating and Air Conditioning/Distribution/HOUSING, HVAC - Installation**.
11. Reconnect the negative battery cable.
12. If the heater core was replaced, flush the cooling system. Refer to **Cooling - Standard Procedure** .
13. Refill the engine cooling system. Refer to **Cooling - Standard Procedure** .
14. Evacuate the refrigerant system. See **Heating and Air Conditioning/Plumbing - Standard Procedure**.
15. Charge the refrigerant system. See **Heating and Air Conditioning/Plumbing - Standard Procedure**.
16. Initiate the Actuator Calibration function using a scan tool. Refer to **DTC-Based Diagnostics/HVAC - Standard Procedure** .

MOTOR, BLOWER

Description

DESCRIPTION

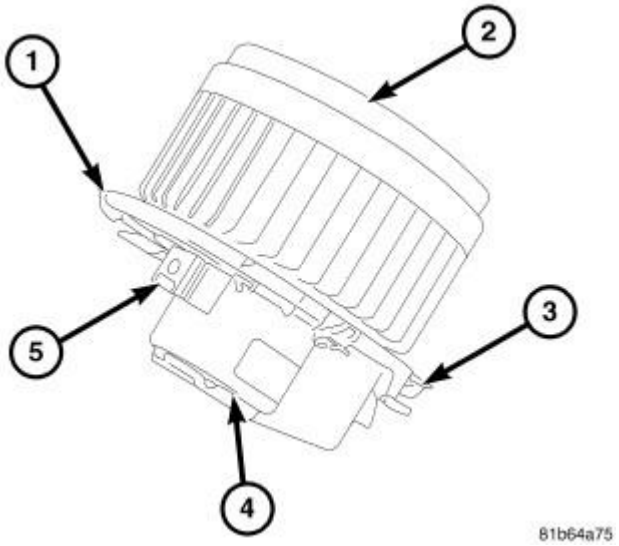

Fig. 94: Blower Motor Description
Courtesy of CHRYSLER LLC

The blower motor is mounted to the bottom of the HVAC housing, on the passenger side of the vehicle. The blower motor assembly is a squirrel type blower cage (2) connected to a 12-volt, direct current (DC) motor located within a plastic housing (4). The blower motor has an integral wire harness bracket (1), three mounting provisions (3) and a wire connector receptacle (5).

The blower motor can be accessed for service from underneath the instrument panel.

Operation

OPERATION

The blower motor is used to control the velocity of air moving through the HVAC housing by spinning the blower wheel within the HVAC air inlet housing at the selected speed.

The blower motor will operate whenever the ignition switch is in the On position and the blower motor control in any position except Off.

Blower motor speed is controlled by directing the ground path for the blower motor through the correct resistor wire to obtain the selected speed.

The blower motor and blower wheel are factory balanced and cannot be adjusted or repaired and must be replaced as an assembly if inoperative or damaged.

Diagnosis and Testing

BLOWER MOTOR

WARNING: Disable the airbag system before attempting any steering wheel, steering column or instrument panel component diagnosis or service. Disconnect

and isolate the negative battery (ground) cable and wait two minutes for the airbag system capacitor to discharge before performing further diagnosis or service. This is the only sure way to disable the airbag system. Failure to follow these instructions may result in accidental airbag deployment and possible serious or fatal injury.

NOTE: See SYSTEM WIRING DIAGRAMS for circuit descriptions and diagrams.

OPERATION

Possible causes of an inoperative blower motor include:

- Open fuse
- Inoperative blower motor resistor
- Inoperative blower motor switch
- Inoperative mode control switch
- Inoperative blower motor
- Inoperative blower motor circuit wiring or wire harness connectors

NOISE

To determine if the blower motor is the source of the noise, simply switch the blower motor from Off to On. To verify that the blower motor is the source of the noise, unplug the blower motor wire harness connector and operate the heater-A/C system. If the noise goes away, possible causes include:

- Foreign material on fresh air inlet screen
- Foreign material in blower wheel
- Foreign material in the HVAC housing
- Improper blower motor mounting
- Deformed or damaged blower wheel
- Worn blower motor bearings or brushes

VIBRATION

Possible causes of blower motor vibration include:

- Improper blower motor mounting
- Foreign material in blower wheel
- Deformed or damaged blower wheel
- Worn blower motor bearings

Removal

REMOVAL

WARNING: Disable the airbag system before attempting any steering wheel, steering column, or instrument panel component diagnosis or service. Disconnect and isolate the negative battery (ground) cable, then wait two minutes for the airbag system capacitor to discharge before performing further diagnosis or service. This is the only sure way to disable the airbag system. Failure to take the proper precautions could result in accidental airbag deployment and possible serious or fatal injury.

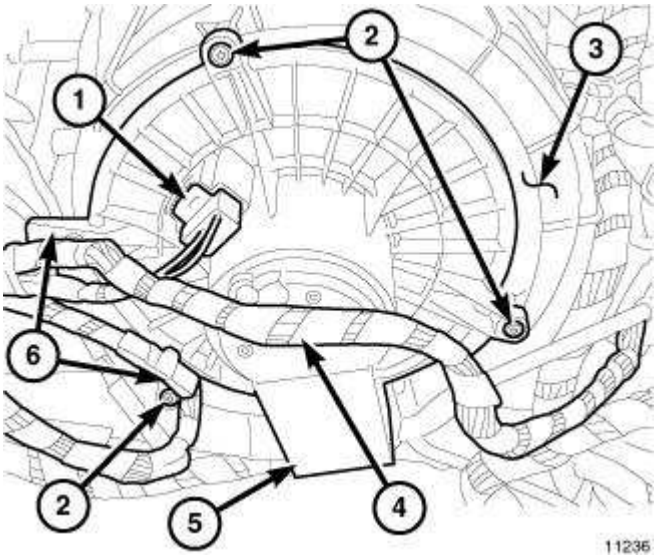

Fig. 95: Wire Harness Connector From Blower Motor
Courtesy of CHRYSLER LLC

1. Disconnect and isolate the negative battery cable.
2. Remove the instrument panel silencer from the passenger side of the instrument panel. Refer to **Body/Instrument Panel/PANEL, Silencer - Removal** .
3. Disengage the wire harness connector locking tab and disconnect the wire harness connector (1) from the blower motor (5).
4. Disengage the wire harness (4) from the two wire harness retainers (6).
5. Remove the three screws (2) that secure the blower motor to the HVAC housing (3).
6. Remove the blower motor from the HVAC housing.

Installation

INSTALLATION

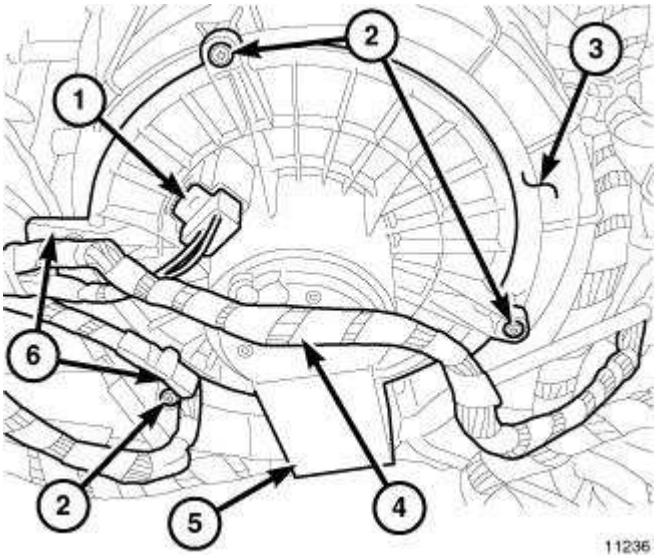

Fig. 96: Wire Harness Connector From Blower Motor
Courtesy of CHRYSLER LLC

1. Position the blower motor (5) into the HVAC housing (3).
2. Install the three screws (2) that secure the blower motor to the HVAC housing. Tighten the screws to 2.2 N.m (20 in. lbs.).
3. Connect the wire harness connector (1) to the blower motor and engage the wire harness connector locking tab.
4. Engage the HVAC wire harness onto the two wire harness retainers (6).
5. Install the instrument panel silencer onto the passenger side of the instrument panel. Refer to **Body/Instrument Panel/PANEL, Silencer - Installation** .
6. Reconnect the negative battery cable.

OUTLET, AIR

Description

DESCRIPTION

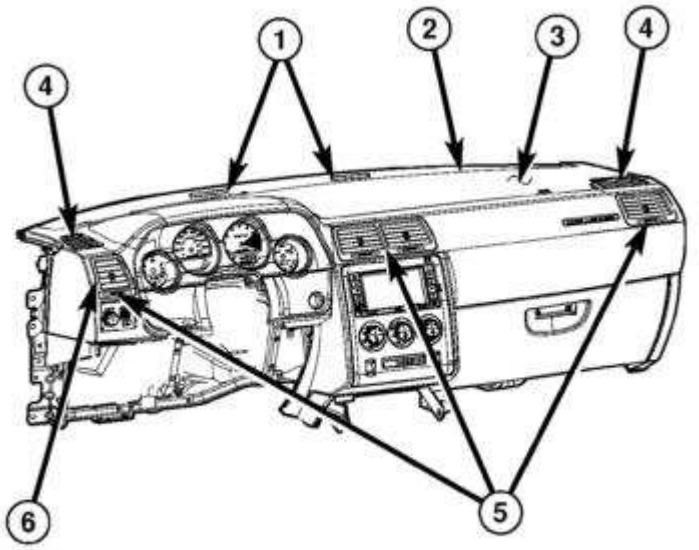

Fig. 97: Identifying Defroster Air Outlets, Defroster Grille, Instrument Panel, Air Outlets & Grille
Courtesy of CHRYSLER LLC

There are two defroster air outlets (1) in the defroster grille (2) located on the top of the instrument panel (3). The airflow from the defroster outlets is directed by fixed vanes in the defroster grille and cannot be adjusted. The defroster air outlets are not serviceable from the defroster grille.

There are two side window demister air outlets (4). One located on each end of the instrument panel top cover. The airflow from the side window demister air outlets is directed by fixed vanes in the outlets and cannot be adjusted. The side window demister air outlets are only serviced with the top cover.

There are four instrument panel air outlets (5). One air outlet is located near each outboard end of the instrument panel facing the rear of the vehicle and two air outlets are located at the top of the instrument panel center bezel. Each of the instrument panel air outlets contain a non-serviceable grille with movable vanes (6) that are used to direct or shut off the flow of the conditioned air leaving the instrument panel outlets. All instrument panel air outlets can be serviced separately.

Removal

REMOVAL

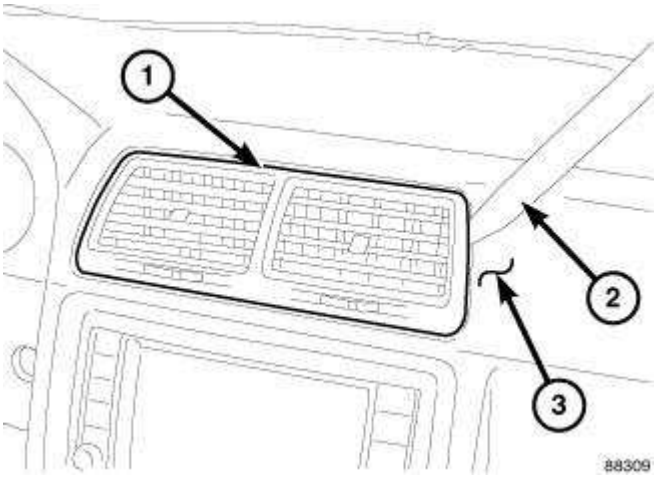

Fig. 98: Identifying Instrument Panel Air Outlet, Trim Stick & Instrument Panel
Courtesy of CHRYSLER LLC

NOTE: Center outlet shown in illustration. Other outlets similar.

1. Gently pry on both sides of the instrument panel air outlet (1) being serviced using Trim Stick C-4755 (2) or equivalent until the air outlet snap clip retainers are released from the face of the instrument panel (3).
2. Gently pull the air outlet from the instrument panel.

Installation

INSTALLATION

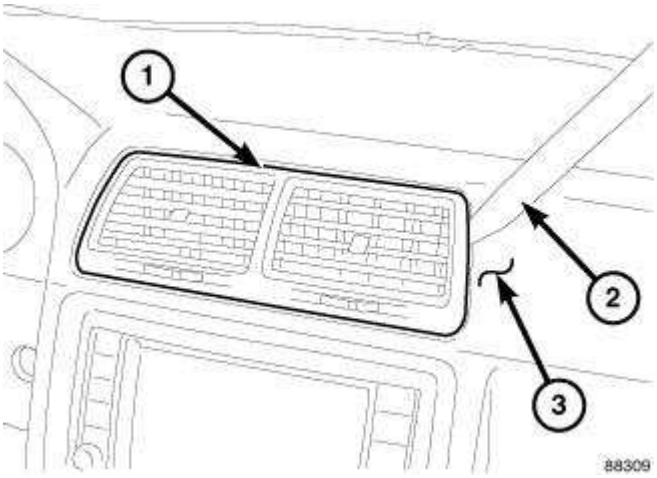

Fig. 99: Identifying Instrument Panel Air Outlet, Trim Stick & Instrument Panel
Courtesy of CHRYSLER LLC

NOTE: Center outlet shown in illustration. Other outlets similar.

1. Position the air outlet (1) into its location on the instrument panel (3).

NOTE: **Make sure that the foam seal on the outlet is properly installed and the air outlet is properly aligned to the duct within the instrument panel opening.**

2. Align the air outlet foam seal with the duct in the instrument panel and engage the outlet to the instrument panel. Gently push on the air outlet until the snap clip retainers on the outlet are fully engaged to the instrument panel.

PLUMBING

DESCRIPTION

DESCRIPTION

The A/C refrigerant lines and hoses are used to carry the refrigerant between the various A/C system components. The refrigerant lines and hoses for the R-134a A/C system consist of a barrier-hose design with a nylon tube sandwiched between rubber layers. The nylon tube helps to contain the R-134a refrigerant, which has a small molecular structure. The ends of the refrigerant lines are made from lightweight aluminum with brazed fittings.

Any kinks or sharp bends in the refrigerant lines and hoses will reduce the capacity of the entire A/C system and can reduce the flow of refrigerant within the system.

OPERATION

OPERATION

High pressures are produced in the refrigerant system when the A/C compressor is operating. Extreme care must be exercised to make sure that each of the refrigerant system connections is pressure-tight and leak free. It is a good practice to inspect all flexible hose refrigerant lines at least once a year to make sure they are in good condition and properly routed.

The refrigerant lines and hoses are coupled to other A/C system components with block-type fittings. A flat steel gasket with an integral O-ring (dual plane seal) is used to mate the refrigerant line fittings with A/C system components to ensure the integrity of the refrigerant system.

The refrigerant lines and hoses cannot be repaired and must be replaced if leaking or damaged.

WARNING

WARNING

WARNING: **The A/C system contains refrigerant under high pressure. Repairs should only be performed by qualified service personnel. Serious or fatal injury may result from improper service procedures.**

WARNING: **Avoid breathing the refrigerant and refrigerant oil vapor or mist. Exposure**

may irritate the eyes, nose, and/or throat. Wear eye protection when servicing the A/C refrigerant system. Serious eye injury can result from direct contact with the refrigerant. If eye contact occurs, seek medical attention immediately.

WARNING: Do not expose the refrigerant to open flame. Poisonous gas is created when refrigerant is burned. An electronic leak detector is recommended. Serious or fatal injury may result from improper service procedures.

WARNING: If accidental A/C system discharge occurs, ventilate the work area before resuming service. Large amounts of refrigerant released in a closed work area will displace the oxygen and cause suffocation and serious or fatal injury.

WARNING: The evaporation rate of R-134a refrigerant at average temperature and altitude is extremely high. As a result, anything that comes in contact with the refrigerant will freeze. Always protect the skin or delicate objects from direct contact with the refrigerant.

WARNING: The R-134a service equipment or the vehicle refrigerant system should not be pressure tested or leak tested with compressed air. Some mixtures of air and R-134a have been shown to be combustible at elevated pressures. These mixtures are potentially dangerous, and may result in fire or explosion causing property damage and serious or fatal injury.

WARNING: The engine cooling system is designed to develop internal pressures up to 145 kPa (21 psi). Do not remove or loosen the coolant pressure cap, cylinder block drain plugs, radiator drain, radiator hoses, heater hoses, or hose clamps while the engine cooling system is hot and under pressure. Allow the vehicle to cool for a minimum of 15 minutes before opening the cooling system for service. Failure to observe this warning can result in serious burns from the heated engine coolant.

CAUTION

CAUTION

CAUTION: Never add R-12 to a refrigerant system designed to use R-134a. Do not use R-12 equipment or parts on an R-134a A/C system. These refrigerants are not compatible and damage to the A/C system will result.

CAUTION: Never use R-12 refrigerant oil in an A/C system designed to use R-134a refrigerant oil. These refrigerant oils are not compatible and damage to the A/C system will result.

CAUTION: The use of A/C system sealers may result in damage to A/C refrigerant recovery/evacuation/recharging equipment and/or A/C system. Many federal, state/provincial and local regulations prohibit the recharge of A/C systems with known leaks. Chrysler LLC recommends the detection of A/C system leaks through the use of approved leak detectors and fluorescent leak detection dyes. Vehicles found with A/C system sealers should be treated as contaminated and replacement of the entire A/C refrigerant system is recommended. A/C systems found to be contaminated with A/C system sealers, A/C stop-leak products or seal conditioners voids the warranty for the A/C system.

CAUTION: Recover the refrigerant before opening any fitting or connection. Open the fittings with caution, even after the system has been discharged. Never open or loosen a connection before recovering the refrigerant.

CAUTION: If equipped, do not remove the secondary retention clip from any spring-lock coupler connection while the refrigerant system is under pressure. Recover the refrigerant before removing the secondary retention clip. Open the fittings with caution, even after the system has been discharged. Never open or loosen a connection before recovering the refrigerant.

CAUTION: The internal parts of the A/C system will remain stable as long as moisture-free refrigerant and refrigerant oil is used. Abnormal amounts of dirt, moisture or air can upset the chemical stability. This may cause operational troubles or even serious damage if present in more than very small quantities. Before disconnecting a component, clean the outside of the fittings thoroughly to prevent contamination from entering the refrigerant system. Keep service tools and the work area clean. Do not open the refrigerant system or uncap a replacement component until you are ready to service the system. Immediately after disconnecting a component from the refrigerant system, seal the open fittings with a cap or plug. This will prevent contamination from entering the A/C system.

CAUTION: Refrigerant oil will absorb moisture from the atmosphere if left uncapped. Do not open a container of refrigerant oil until you are ready to use it. Replace the cap on the oil container immediately after using. Store refrigerant oil only in a clean, airtight, and moisture-free container.

CAUTION: Do not overcharge the refrigerant system. Overcharging will cause excessive compressor head pressure and can cause compressor noise and A/C system failure.

DIAGNOSIS AND TESTING

REFRIGERANT SYSTEM LEAKS

WARNING: R-134a service equipment or vehicle A/C system should not be pressure tested or leak tested with compressed air. Mixture of air and R-134a can be combustible at elevated pressures. These mixtures are potentially dangerous and may result in fire or explosion causing property damage and possible serious or fatal injury.

Avoid breathing A/C refrigerant and lubricant vapor or mist. Exposure may irritate eyes, nose and throat. Use only approved service equipment meeting SAE requirements to discharge an R-134a system. If accidental system discharge occurs, ventilate work area before resuming service.

NOTE: If the A/C system refrigerant charge is empty or low, a leak in the A/C system is likely. Visually inspect all A/C lines, fittings and components for an oily residue. Oil residue can be an indicator of an A/C system leak location.

NOTE: The only way to correctly determine if the A/C system is fully charged with refrigerant to perform the A/C Performance Test. See Heating and Air Conditioning - Diagnosis and Testing.

Connect a suitable manifold gauge set and determine if the static A/C system pressure is above or below 345 kPa (50 psi). See **Heating and Air Conditioning/Plumbing - Standard Procedure**. If less than 345 kPa (50 psi), proceed to **SYSTEM EMPTY**. If greater than 345 kPa (50 psi), go to **SYSTEM LOW**.

SYSTEM EMPTY

1. Evacuate the refrigerant system to the lowest degree of vacuum possible (approximately -88 kPa (- 26 in. Hg) or greater vacuum). See **Heating and Air Conditioning/Plumbing - Standard Procedure**. Determine if the system holds a vacuum for 15 minutes. If vacuum is held, a leak is probably not present. If system will not maintain vacuum level, proceed to step 2.
2. Prepare and dispense 0.284 kilograms (10 ounces) of R-134a refrigerant into the evacuated refrigerant system. See **Heating and Air Conditioning/Plumbing - Standard Procedure** and proceed to step 1 of the System Low procedure.

SYSTEM LOW

1. Position the vehicle in a wind free work area. This will aid in detecting small leaks.
2. Operate the heating-A/C system with the engine at idle under the following conditions for at least 5 minutes.
   - Doors or windows open
   - Transmission in Park
   - A/C-heater controls set to outside air, full cool, panel mode, high blower and with A/C compressor engaged

CAUTION: A leak detector only designed for R-12 refrigerant will not detect

leaks in an R-134a refrigerant system.

3. Shut the vehicle Off and wait 2-7 minutes. Then use an electronic leak detector that is designed to detect R-134a refrigerant and search for leaks. Fittings, lines or components that appear to be oily usually indicate a refrigerant leak. To inspect the A/C evaporator for leaks, insert the leak detector probe into the drain tube opening or an air outlet. A dye for R-134a is available to aid in leak detection. Use only Chrysler LLC approved refrigerant dye.

STANDARD PROCEDURE

REFRIGERANT SYSTEM SERVICE EQUIPMENT

WARNING: Eye protection must be worn when servicing an A/C refrigerant system. Turn all valves off (rotate clockwise) on the equipment being used before connecting or disconnecting service equipment from the refrigerant system. Failure to follow these instructions may result in serious or fatal injury.

WARNING: Refer to the applicable warnings and cautions for this system before performing the following operation. See Heating and Air Conditioning/Plumbing - Warning. See Heating and Air Conditioning/Plumbing - Caution. Failure to follow these instructions may result in serious or fatal injury.

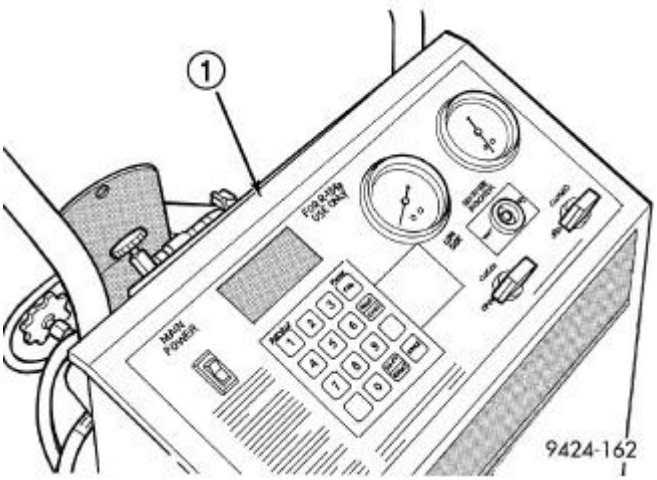

Fig. 100: Identifying R-134A Refrigerant Recovery/Recycling/Charging Station
Courtesy of CHRYSLER LLC

When servicing the A/C system, use an R-134a refrigerant recovery/recycling/charging station (1) that meets SAE standard J2788. Per SAE standard J2788, refrigerant recovery stations must recover 95% of the refrigerant system within 30 minutes at 21.1° C (70° F) and be able to measure the amount of refrigerant removed from the system to an accuracy of 28 grams (1 oz.). When charging, the refrigerant recovery station must charge the system to an accuracy of 14 grams (0.5 oz.). Contact an automotive service equipment supplier for refrigerant recovery/recycling/charging equipment. See

the operating instructions supplied by the equipment manufacturer for proper care and use of this equipment.

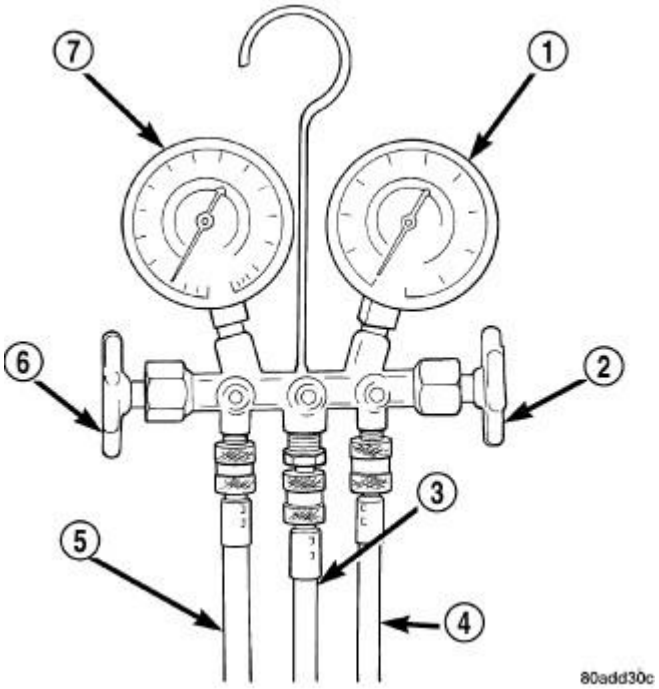

Fig. 101: Identifying Manifold Gauge Set
Courtesy of CHRYSLER LLC

A manifold gauge set (1) may be needed with some recovery/recycling/charging equipment. The manifold gauge set should have manual shut-off valves (2 and 6), or automatic back-flow valves located at the service port connector end of the manifold gauge set hoses (4 and 5). This will prevent refrigerant from being released into the atmosphere.

MANIFOLD GAUGE SET CONNECTIONS

CAUTION: Do not use an R-12 manifold gauge set on an R-134a system. The refrigerants are not compatible and system damage will result.

RECOVERY/RECYCLING/EVACUATION/CHARGING HOSE - The center manifold hose (Yellow, or White, with Black stripe) (3) is used to recover, evacuate, and charge the refrigerant system. When the low or high pressure valves on the manifold gauge set are opened the refrigerant in the system will escape through this hose.

HIGH PRESSURE GAUGE HOSE - The high pressure hose (Red with Black stripe) (4) attaches to the high side service port. This service port is located on the A/C liquid line next to the left shock tower. On this model, an A/C pressure transducer is also installed on the liquid line. A/C high-side pressures can be read using a scan tool. Refer to **DTC-Based Diagnostics/MODULE, Powertrain Control (PCM) - Diagnosis and Testing** .

LOW PRESSURE GAUGE HOSE - The low pressure hose (Blue with Black stripe) (5) attaches to the low side service port. This service port is located on the A/C suction line behind the left shock tower.

REFRIGERANT SYSTEM RECOVERY

WARNING: Refer to the applicable warnings and cautions for this system before performing the following operation. See Heating and Air Conditioning/Plumbing - Warning. See Heating and Air Conditioning/Plumbing - Caution. Failure to follow these instructions may result in possible serious or fatal injury.

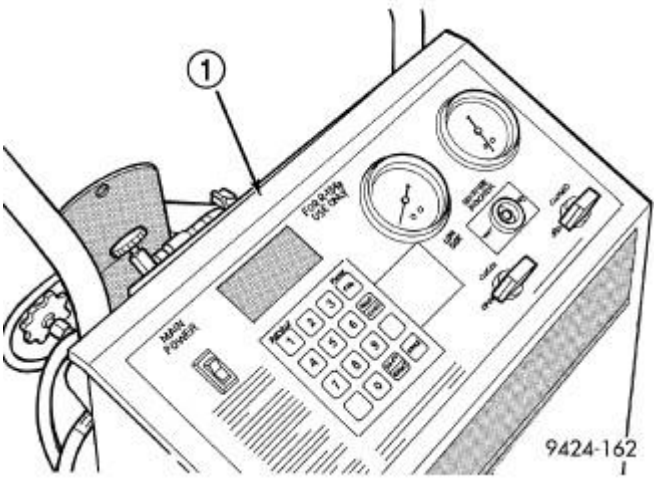

Fig. 102: Identifying R-134A Refrigerant Recovery/Recycling/Charging Station
Courtesy of CHRYSLER LLC

When servicing the A/C system, use an R-134a refrigerant recovery/recycling/charging station (1) that meets SAE standard J2788. Per SAE standard J2788, refrigerant recovery stations must recover 95% of the refrigerant system within 30 minutes at 21.1° C (70° F) and be able to measure the amount of refrigerant removed from the system to an accuracy of 28 grams (1 oz.). See the operating instructions supplied by the equipment manufacturer for the proper care and use of this equipment.

REFRIGERANT SYSTEM EVACUATE

NOTE: Special effort must be used to prevent moisture from entering the A/C system oil. Moisture in the oil is very difficult to remove and will cause a reliability problem with the A/C compressor.

If an A/C compressor designed to use R-134a refrigerant is left open to the atmosphere for an extended period of time, it is recommended that the refrigerant oil be drained and replaced with new oil, or a new A/C compressor be used. This will eliminate the possibility of contaminating the refrigerant system.

If the refrigerant system has been open to the atmosphere, it must be evacuated before the system can be filled. Moisture and air mixed with the refrigerant will raise the compressor head pressure

above acceptable operating levels. This will reduce the performance of the A/C system and damage the A/C compressor. Moisture will boil at near room temperature when exposed to vacuum. Use the following procedure to evacuate the refrigerant system:

NOTE: **When connecting the service equipment coupling to the line fitting, verify that the valve of the coupling is fully closed. This will reduce the amount of effort required to make the connection.**

1. Recover the refrigerant system. See **Heating and Air Conditioning/Plumbing - Standard Procedure**.
2. Connect a suitable charging station, refrigerant recovery machine or a manifold gauge set with vacuum pump and refrigerant recovery equipment. See **Heating and Air Conditioning/Plumbing - Standard Procedure**.
3. Open the suction and discharge valves and start the vacuum pump. The vacuum pump should run a minimum of 45 minutes prior to charge to eliminate all moisture in system. When the suction gauge reads to the lowest degree of vacuum possible (approximately -88 kPa (- 26 in. Hg) or greater) for 30 minutes, close all valves and turn off vacuum pump. If the system fails to reach specified vacuum, the refrigerant system likely has a leak that must be corrected. If the refrigerant system maintains specified vacuum for at least 30 minutes, start the vacuum pump, open the suction and discharge valves. Then allow the system to evacuate an additional 10 minutes.
4. Close all valves. Turn off and disconnect the vacuum pump.
5. Charge the refrigerant system. See **Heating and Air Conditioning/Plumbing - Standard Procedure**.

REFRIGERANT SYSTEM CHARGE

WARNING: **Refer to the applicable warnings and cautions for this system before performing the following operation. See Heating and Air Conditioning/Plumbing - Warning. See Heating and Air Conditioning/Plumbing - Caution. Failure to follow these instructions may result in serious or fatal injury.**

NOTE: **The Underhood HVAC Specification Label contains the refrigerant fill specification of the vehicle being serviced.**

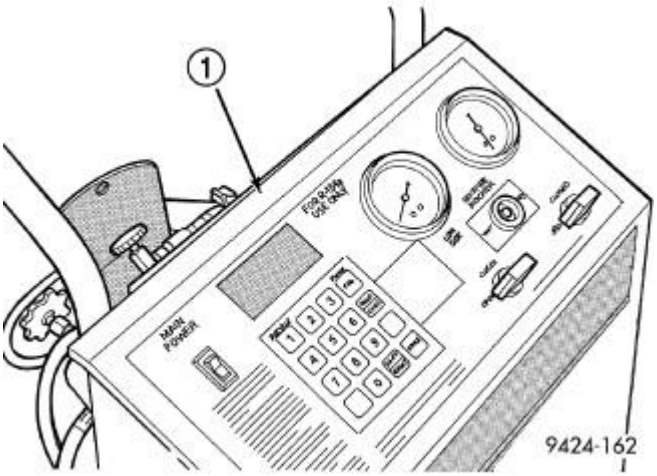

Fig. 103: Identifying R-134A Refrigerant Recovery/Recycling/Charging Station
Courtesy of CHRYSLER LLC

After all refrigerant system leaks have been repaired and the refrigerant system has been evacuated, a refrigerant charge can be injected into the system

When servicing the A/C system, use an R-134a refrigerant recovery/recycling/charging station (1) that meets SAE standard J2788. Per SAE standard J2788, refrigerant recovery stations must charge the system to an accuracy of 14 grams (0.5 oz.). See the operating instructions supplied by the equipment manufacturer for proper care and use of this equipment.

CHARGING PROCEDURE

CAUTION: A small amount of refrigerant oil is removed from the A/C system each time the refrigerant system is recovered and evacuated. Before charging the A/C system, you MUST replenish any oil lost during the recovery process. Refer the equipment manufacturer instructions for more information.

1. Evacuate the refrigerant system. See **Heating and Air Conditioning/Plumbing - Standard Procedure**.
2. Connect an R-134a refrigerant recovery/recycling/charging station that meets SAE standard J2788 to the refrigerant system.
3. Measure the proper amount of refrigerant and heat it to 52° C (125° F) with the charging station. See **Heating and Air Conditioning/Plumbing/REFRIGERANT - Specifications**. See the operating instructions supplied by the equipment manufacturer for proper use of this equipment.
4. Open both the suction and discharge valves, then open the charge valve to allow the heated refrigerant to flow into the system.
5. When the transfer of refrigerant has stopped, close both the suction and discharge valves.
6. If all of the refrigerant charge did not transfer from the dispensing device, open all of the windows in the vehicle and set the heating-A/C system controls so that the A/C compressor is engaged and the blower motor is operating at its lowest speed setting. Run the engine at a

steady high idle (about 1400 RPM). If the A/C compressor does not engage, test the compressor clutch circuits and repair as required.

WARNING: Take care not to open the discharge (high pressure) valve at this time. Failure to follow this warning may result in serious or fatal injury.

7. Open the low-side valve to allow the remaining refrigerant to transfer to the refrigerant system.
8. Disconnect the charging station from the refrigerant system service ports.
9. Reinstall the caps onto the refrigerant system service ports.

COMPRESSOR, A/C

Description

A/C CLUTCH

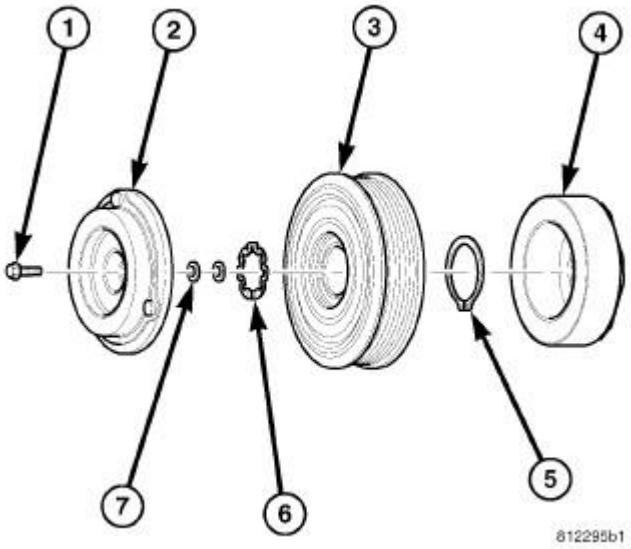

Fig. 104: A/C Compressor Clutch Components
Courtesy of CHRYSLER LLC

NOTE: Typical A/C clutch assembly shown in illustration.

The clutch assembly for the A/C compressors consists of a stationary electromagnetic A/C clutch field coil (4), pulley bearing and pulley assembly (3), clutch plate (2) and shims (7). These components provide the means to engage and disengage the A/C compressor from the engine accessory drive belt.

The A/C clutch field coil and the pulley bearing and pulley assembly are both retained on the nose of the A/C compressor with snap rings (5 and 6). The clutch plate is splined to the compressor shaft and secured with a bolt (1).

A/C COMPRESSOR

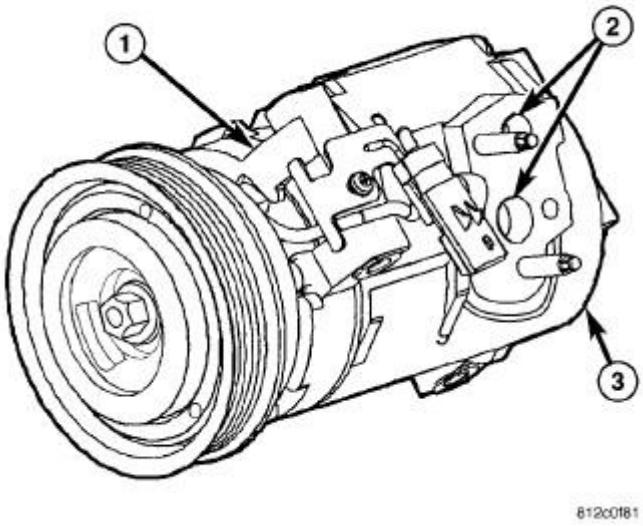

Fig. 105: A/C Compressor -Typical
Courtesy of CHRYSLER LLC

NOTE: Typical A/C compressor shown in illustration.

The A/C system on all models use a Denso, ten cylinder, double-acting swash plate-type A/C compressor (1). The A/C compressor has both the suction and discharge ports (2) located on the cylinder head (3) at the rear of the compressor.

A label identifying the use of R-134a refrigerant is located on the A/C compressor.

HIGH PRESSURE RELIEF VALVE

A high pressure relief valve is located on the compressor cylinder head at the rear of the A/C compressor. See **Heating and Air Conditioning/Plumbing/COMPRESSOR, A/C - Description**. This mechanical valve is designed to vent refrigerant from the A/C system to protect against damage to the A/C compressor and other A/C system components caused by condenser air flow restriction or an overcharge of refrigerant.

Operation

A/C CLUTCH

The clutch components for the A/C compressor provide the means to engage and disengage the compressor from the engine accessory drive belt. When the electromagnetic A/C clutch field coil is energized, it magnetically draws the clutch plate into contact with the clutch pulley and drives the compressor shaft. When the coil is not energized, the pulley freewheels on the clutch hub bearing, which is part of the pulley assembly.

A/C compressor clutch engagement is controlled by the powertrain control module (PCM). When the A/C-heater control is set to any A/C position, it sends a request signal on the CAN-B bus to the totally integrated power module (TIPM), which then transfers the request on the CAN-C Bus to the PCM, which determines if operating conditions are correct for A/C clutch engagement. When all operating conditions have been met, the PCM sends a signal on a dedicated hard-wired circuit back to the totally integrated power module (TIPM) to energize the internal A/C clutch high side driver. When energized, the A/C clutch high side driver provides battery current to the A/C clutch field coil.

The A/C clutch control system is diagnosed using a scan tool. Refer to **DTC-Based Diagnostics/MODULE, Powertrain Control (PCM) - Diagnosis and Testing** .

The A/C compressor clutch components cannot be adjusted or repaired and must be replaced if inoperative or damaged.

A/C COMPRESSOR

The A/C compressor is driven by the engine through an electric clutch, drive pulley and belt arrangement. The A/C compressor is lubricated by refrigerant oil that is circulated throughout the refrigerant system with the refrigerant.

The A/C compressor draws in low-pressure refrigerant vapor from the A/C evaporator through its suction port. It then compresses the refrigerant into a high-pressure, high-temperature refrigerant vapor, which is then pumped to the A/C condenser through the compressor discharge port.

CAUTION: Be certain to adjust the refrigerant system oil level when replacing an A/C compressor. See Heating and Air Conditioning/Plumbing/OIL, Refrigerant - Standard Procedure. Failure to properly adjust the refrigerant oil level can prevent the A/C system from operating as designed and can cause serious A/C compressor damage.

The A/C compressor cannot be repaired and must be replaced if inoperative or damaged. The compressor clutch, pulley and bearing assembly, and clutch field coil are available for service. If an internal failure of the A/C compressor has occurred, the A/C receiver/drier must also be replaced. See **Heating and Air Conditioning/Plumbing/DRIER, A/C Receiver - Removal**.

HIGH PRESSURE RELIEF VALVE

The high pressure relief valve vents refrigerant from the A/C system when a discharge pressure of 3445 to 4135 kPa (500 to 600 psi) or above is reached. The high pressure relief valve closes with a minimum discharge pressure of 2756 kPa (400 psi) is reached.

The high pressure relief valve vents only enough refrigerant to reduce the A/C system pressure, and then re-seats itself. The majority of the refrigerant is conserved in the A/C system. If the high pressure relief valve vents refrigerant, it does not mean the valve is inoperative.

The high pressure relief valve is factory-calibrated and cannot be adjusted or repaired, and must not be removed or otherwise disturbed. The valve is only serviced as a part of the A/C compressor.

Diagnosis and Testing

A/C SYSTEM NOISE TESTING

When investigating an A/C system related noise, you must first know the conditions under which the noise occurs. These conditions include: weather, vehicle speed, transmission in gear or neutral, engine speed, engine temperature, and any other special conditions. Noises that develop during A/C operation can often be misleading. For example: What sounds like a failed front engine bearing or connecting rod, may be caused by loose bolts, nuts, mounting brackets or a loose compressor clutch assembly.

Drive belts are speed sensitive. At different engine speeds and depending upon drive belt tension, drive belts can develop noises that are mistaken for an A/C compressor noise. Improper drive belt tension can cause a misleading noise when the compressor clutch is engaged, which may not occur when the compressor clutch is disengaged. Check the accessory drive belt condition and tension as described in Cooling before beginning this procedure.

1. Select a quiet area for testing. Duplicate the complaint conditions as much as possible. Turn the A/C compressor On and Off several times to clearly identify the compressor noise. Listen to the A/C compressor while the clutch is engaged and disengaged. Probe the A/C compressor with an engine stethoscope or a long screwdriver with the handle held to your ear to better localize the source of the noise.
2. Loosen all of the compressor mounting hardware and retighten. Check the compressor clutch retainer. Be certain that the clutch field coil is mounted securely to the A/C compressor, and that the clutch plate and pulley are properly aligned and have the correct air gap. See **Heating and Air Conditioning/Plumbing/COMPRESSOR, A/C - Installation**.
3. To duplicate high-ambient temperature conditions (high head pressure), restrict the air flow through the A/C condenser. Install a manifold gauge set or a scan tool to be certain that the discharge pressure does not exceed 2760 kPa (400 psi).
4. Check the refrigerant system plumbing for incorrect routing, rubbing or interference, which can cause unusual noises. Also check the refrigerant lines and hoses for kinks or sharp bends that will restrict refrigerant flow, which can cause noises. See **Heating and Air Conditioning/Plumbing - Description**.
5. If the noise is from opening and closing of the high pressure relief valve, recover, evacuate and recharge the refrigerant system. See **Heating and Air Conditioning/Plumbing - Standard Procedure**.
6. If the high pressure relief valve still does not seat properly, replace the A/C compressor. See **Heating and Air Conditioning/Plumbing/COMPRESSOR, A/C - Removal**.

A/C COMPRESSOR CLUTCH COIL

The A/C compressor clutch coil electrical circuit is controlled by the powertrain control module (PCM) through the totally integrated power module (TIPM). The A/C clutch coil can be tested by either measuring clutch field coil resistance or by measuring current draw. Begin testing of a suspected compressor clutch coil problem by performing the preliminary checks.

PRELIMINARY CHECKS

1. If the A/C compressor clutch will not engage, perform the A/C System Performance Test, which is found within the HVAC System Test. Refer to **Non-DTC Diagnostics/HVAC - Diagnosis and Testing** . If no diagnostic trouble codes (DTCs) are found in the A/C-heater control, PCM or the TIPM, go to step 2. If any DTCs are found, repair as required.
2. If the A/C compressor clutch still will not engage, verify the refrigerant charge level. See **Heating and Air Conditioning - Diagnosis and Testing**. If the refrigerant charge level is OK, go to **COIL RESISTANCE TEST** and/or **COIL CURRENT DRAW TEST**. If the refrigerant charge level is not OK, adjust the refrigerant charge as required.

COIL RESISTANCE TEST

1. Disconnect and isolate the negative battery cable.
2. Disconnect the wire harness connector from the A/C clutch field coil connector.
3. Use an ohm meter and Back Probe Tool 6801 and measure the resistance of the clutch field coil at the field coil connector terminals.
4. See the **A/C CLUTCH FIELD COIL SPECIFICATIONS** table for the acceptable A/C clutch coil resistance. Specifications apply for a work area temperature of 21° C (70° F).
    a. If the A/C clutch coil reading is below specifications, the coil is shorted and must be replaced.
    b. If the A/C clutch coil reading is above specifications, the coil is open and must be replaced.

COIL CURRENT DRAW TEST

1. Verify the battery state of charge. Refer to **Electrical - Engine Systems/Battery System/BATTERY - Diagnosis and Testing** .
2. Connect an ammeter (0 to 10 ampere scale selected) in series with the clutch field coil feed terminal using Back Probe Tool 6801. Connect a voltmeter (0 to 20 volt scale selected) to measure voltage across the battery and the clutch coil.
3. With the A/C-heater control in the A/C mode and the blower motor at low speed, start the engine and allow it to run at a normal idle speed.
4. The A/C clutch should engage immediately, and the clutch field coil supply voltage should be within two volts of the battery voltage. If the field coil supply voltage is OK, go to step 5. If the field coil supply voltage is not within two volts of battery voltage, test the clutch field coil feed circuit for excessive voltage drop and repair as necessary.
5. See the **A/C CLUTCH FIELD COIL SPECIFICATIONS** table for the acceptable A/C clutch field coil current draw. Specifications apply for a work area temperature of 21° C (70° F). If voltage is more than 12.5 volts, add electrical loads by turning on electrical accessories until voltage reads below 12.5 volts.
    a. If the A/C clutch field coil current reading is zero, the coil is open and must be replaced.
    b. If the A/C clutch field coil current reading is above specifications, the coil is shorted and must be replaced.

A/C CLUTCH FIELD COIL SPECIFICATIONS

Coil Resistance	Current Draw
3.6 ± 0.2 ohms	3.2 - 3.3 amps @ 11.5 - 12.5 volts

Standard Procedure

A/C CLUTCH PLATE INSPECTION

NOTE: The A/C clutch can be serviced in the vehicle. The refrigerant system can remain fully-charged during compressor clutch, pulley and bearing assembly, or coil replacement.

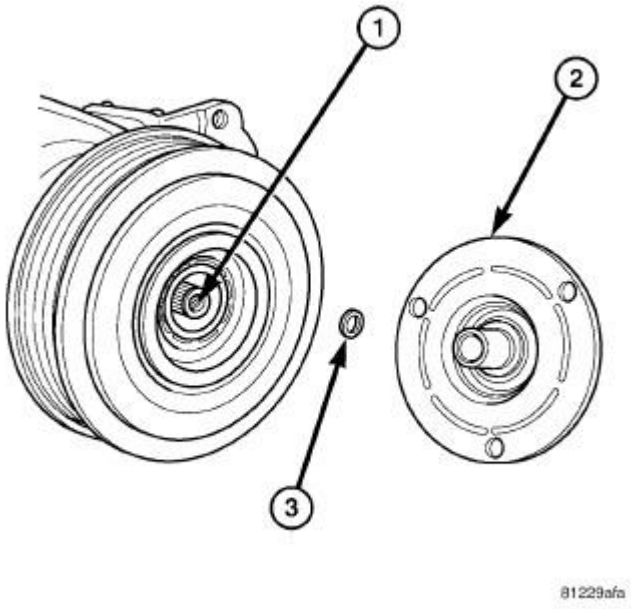

Fig. 106: Identifying Compressor Shaft, Clutch Plate & Shim
Courtesy of CHRYSLER LLC

Examine the friction surfaces of the pulley and the clutch plate (2) for wear. The pulley and clutch plate should be replaced if excessive wear or scoring is found.

If the friction surfaces are oily, inspect the shaft and nose area of the A/C compressor (1) for refrigerant oil. If refrigerant oil is found, the compressor shaft seal is leaking and the A/C compressor must be replaced.

Check the pulley bearing for roughness or excessive leakage of grease. The pulley and clutch plate should be replaced if bearing roughness or excessive leakage is found.

Removal

A/C CLUTCH

NOTE: **The compressor clutch assembly can be serviced with the refrigerant system fully-charged and with the A/C compressor installed on the engine.**

NOTE: **Typical A/C compressor and clutch assembly shown in illustrations.**

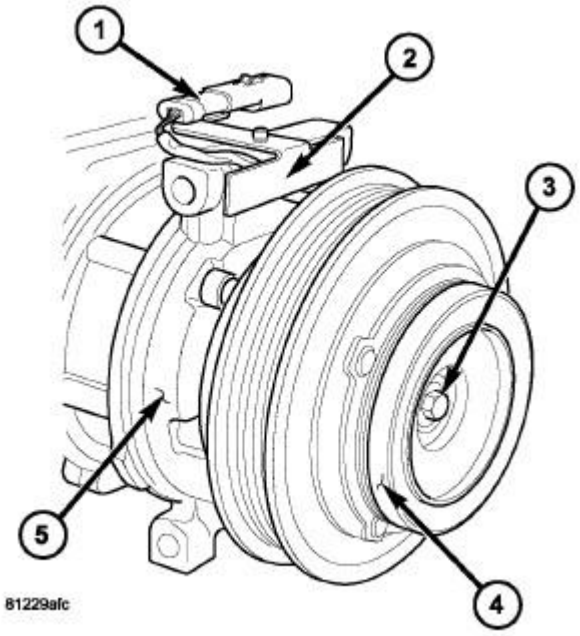

Fig. 107: A/C Compressor Shaft Bolt
Courtesy of CHRYSLER LLC

1. Disconnect and isolate the negative battery cable.
2. Remove the air intake hose and the air cleaner housing. Refer to **Engine/Air Intake System/BODY, Air Cleaner - Removal** .
3. Remove the radiator fan and shroud assembly. Refer to **Cooling/Engine/FAN, Cooling - Removal** .
4. Remove the accessory drive belt. Refer to **Cooling/Accessory Drive/BELT, Serpentine - Removal** .
5. Disconnect the engine wire harness from the compressor clutch field coil connector (1) located on the top of the A/C compressor (5).

   NOTE: **Some models (depending on engine application) may require the A/C compressor to be removed from its installed location to gain access to the compressor shaft bolt and/or pulley and field coil snap rings. However, the refrigerant system can still remain fully charged.**

6. Carefully remove the compressor clutch field coil connector and wire lead from the connector bracket (2).

7. Remove the compressor shaft bolt (3). A band-type oil filter wrench or a strap wrench may be used to hold the clutch plate (4) from rotating during bolt removal.

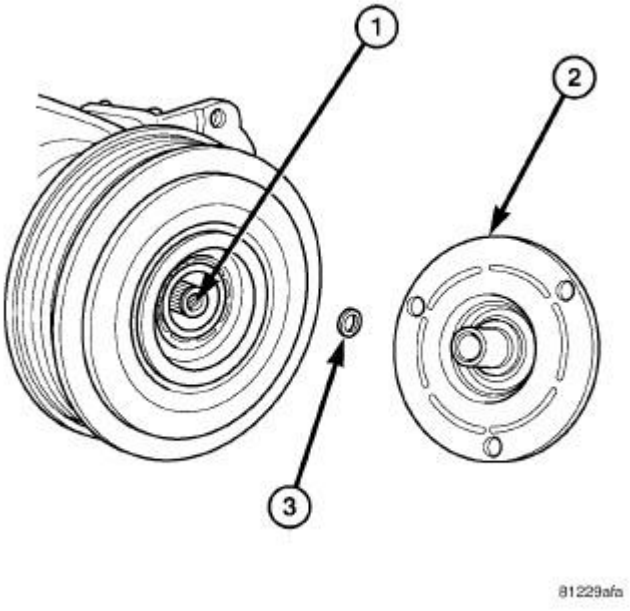

Fig. 108: Clutch Plate and Shim(s)
Courtesy of CHRYSLER LLC

CAUTION: Do not pry between the clutch plate and the pulley and bearing assembly to remove the clutch plate from the compressor shaft as this may damage the clutch plate.

NOTE: Use care not to lose any clutch shim(s) during removal of the clutch plate, as they may be reused during the clutch plate installation process.

8. Tap the clutch plate (2) lightly with a plastic mallet to release it from the splines on the compressor shaft (1) and remove the clutch plate and shim(s) (3).

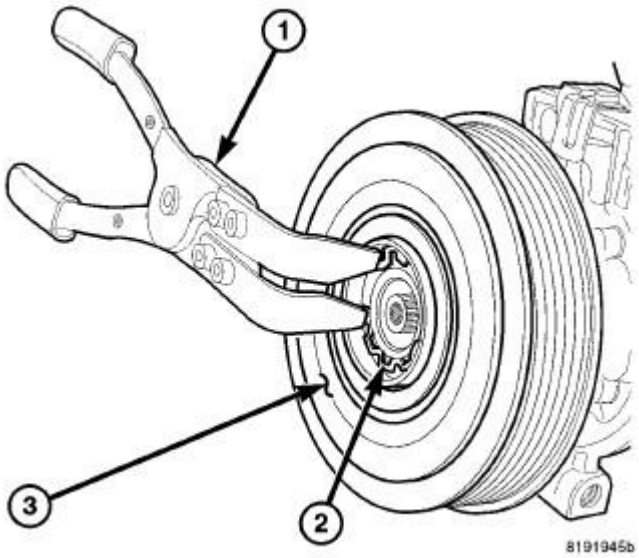

Fig. 109: Clutch Pulley and Snap Ring
Courtesy of CHRYSLER LLC

9. Using A/C Snap Ring Pliers 9764 or equivalent (1), remove the snap ring (2) that secures the pulley and bearing assembly (3) to the front of the A/C compressor and remove the pulley and bearing assembly.

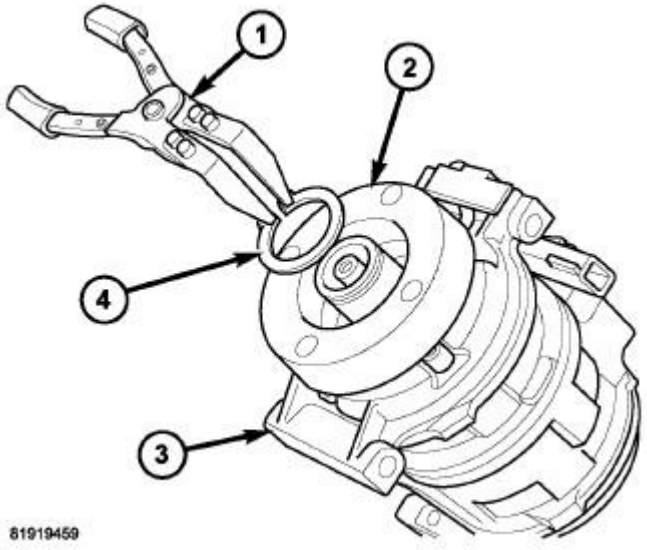

Fig. 110: Clutch Coil and Snap Ring
Courtesy of CHRYSLER LLC

10. Using A/C Snap Ring Pliers 9764 or equivalent (1), remove the snap ring (4) that secures the compressor clutch field coil (2) to the front of the A/C compressor (3) and remove the field coil.

WARNING: Refer to the applicable warnings and cautions for this system before performing the following operation. See Heating and Air Conditioning/Plumbing - Warning. See Heating and Air Conditioning/Plumbing - Caution. Failure to follow these instructions may result in serious or fatal injury.

CAUTION: The A/C receiver/drier must be replaced if an internal failure of the A/C compressor has occurred. Failure to replace the A/C receiver/drier can cause serious damage to the replacement A/C compressor.

NOTE: The A/C compressor may be removed and repositioned without disconnecting the refrigerant lines or discharging the refrigerant system. Discharging is not necessary if servicing the compressor clutch, clutch field coil or engine.

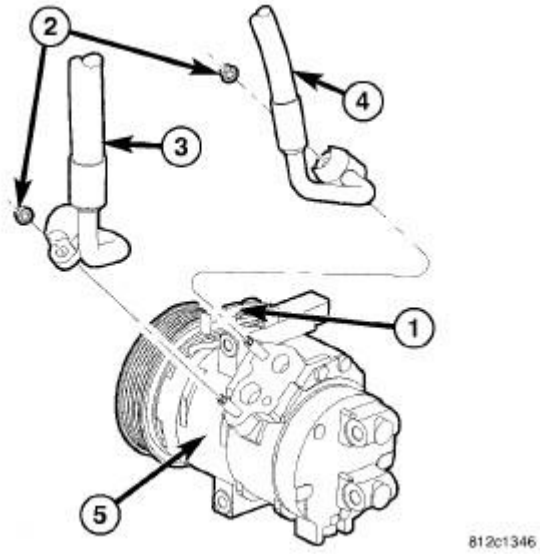

Fig. 111: COMPRESSOR-A/C LINES REMOVAL & INSTALLATION
Courtesy of CHRYSLER LLC

1. Disconnect and isolate the negative battery cable.
2. Recover the refrigerant from the refrigerant system. See **Heating and Air Conditioning/Plumbing - Standard Procedure**.
3. Remove the air cleaner housing. Refer to **Engine/Air Intake System/BODY, Air Cleaner - Removal** .
4. Remove the accessory drive belt. Refer to **Cooling/Accessory Drive/BELT, Serpentine - Removal** .
5. Disconnect the engine wire harness from the compressor clutch field coil connector (1).
6. Remove the nuts (2) that secure the A/C suction line (3) and A/C discharge line (4) to the A/C compressor (5).
7. Disconnect the suction and discharge lines from the A/C compressor and remove and discard

the dual plane seals.

8. Install plugs in, or tape over all of the opened refrigerant line fittings and the compressor ports.

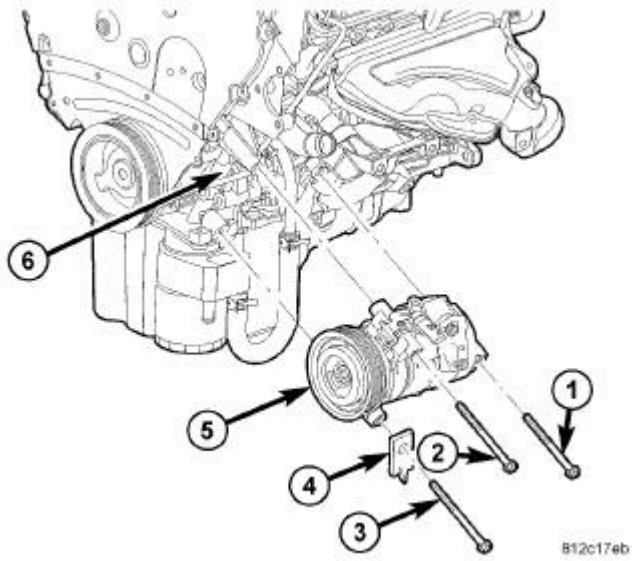

Fig. 112: COMPRESSOR REMOVAL & INSTALLATION
Courtesy of CHRYSLER LLC

9. Raise and support the vehicle.
10. Remove the front belly pan. Refer to **Body/Exterior/BELLY PAN - Removal** .

NOTE: Bolt 3 securing the A/C compressor to the engine cannot be fully removed until the compressor is positioned away from the cylinder block.

11. Fully loosen the bolt (3) that secures the A/C compressor (5) and automatic transmission cooler line bracket (4) (if equipped) to the cylinder block (6).
12. Support the A/C compressor and remove the bolts (1 and 2) that secure the compressor to the cylinder block.

CAUTION: Use care not to deform or damage the automatic transmission cooler lines and retaining bracket when repositioning the A/C compressor.

13. Position the A/C compressor to gain clearance to remove bolt 3 and remove the bolt.
14. Remove the A/C compressor from the engine compartment.

5.7L ENGINE

WARNING: Refer to the applicable warnings and cautions for this system before performing the following operation. See Heating and Air Conditioning/Plumbing - Warning. See Heating and Air

Conditioning/Plumbing - Caution. Failure to follow these instructions may result in serious or fatal injury.

CAUTION: The A/C receiver/drier must be replaced if an internal failure of the A/C compressor has occurred. Failure to replace the A/C receiver/drier can cause serious damage to the replacement A/C compressor.

NOTE: The A/C compressor may be removed and repositioned without disconnecting the refrigerant lines or discharging the refrigerant system. Discharging is not necessary if servicing the compressor clutch, clutch coil or engine.

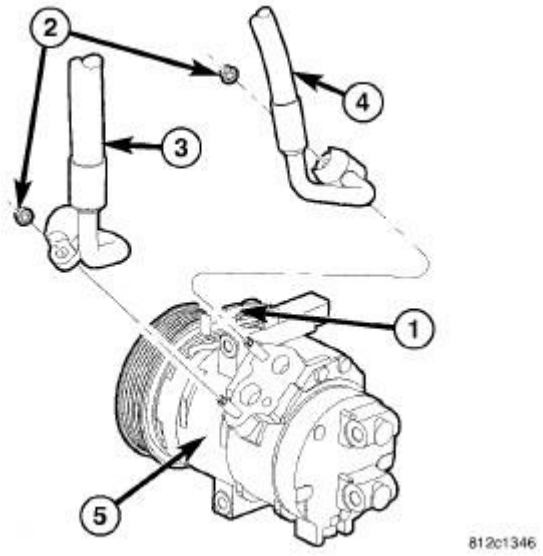

Fig. 113: COMPRESSOR-A/C LINES REMOVAL & INSTALLATION
Courtesy of CHRYSLER LLC

NOTE: Typical A/C compressor and refrigerant lines shown in illustration.

1. Disconnect and isolate the negative battery cable.
2. Recover the refrigerant from the refrigerant system. See **Heating and Air Conditioning/Plumbing - Standard Procedure**.
3. Remove the air cleaner housing. Refer to **Engine/Air Intake System/BODY, Air Cleaner - Removal** .
4. Remove the accessory drive belt. Refer to **Cooling/Accessory Drive/BELT, Serpentine - Removal** .
5. Disconnect the engine wire harness from the compressor clutch field coil connector (1).
6. Remove the nuts (2) that secure the A/C suction line (3) and A/C discharge line (4) to the A/C compressor (5).
7. Disconnect the suction and discharge lines from the A/C compressor and remove and discard the dual plane seals.

8. Install plugs in, or tape over all of the opened refrigerant line fittings and the compressor ports.

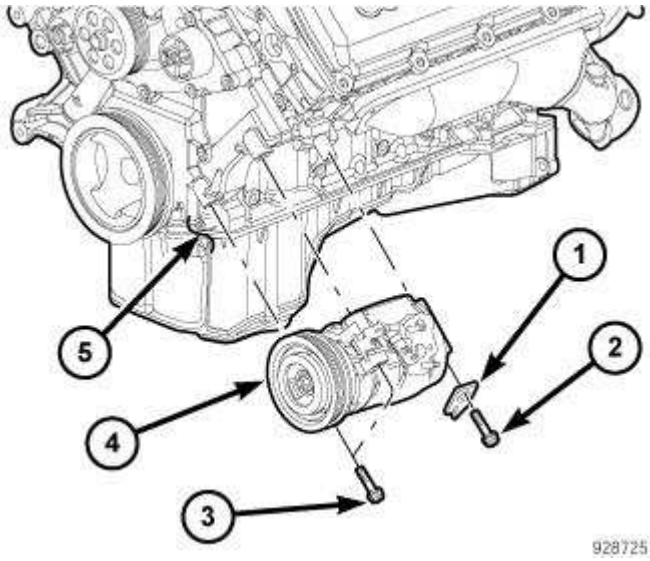

Fig. 114: COMPRESSOR-A/C 5.7L REMOVAL & INSTALLATION
Courtesy of CHRYSLER LLC

9. Raise and support the vehicle.
10. Remove the front belly pan. Refer to **Body/Exterior/BELLY PAN - Removal** .
11. Remove the bolt (2) that secures the rear of the A/C compressor (4) and the automatic transmission cooler line bracket (1), if equipped, to the cylinder block (5).
12. Support the A/C compressor and remove the two bolts (3) that secure the front of the compressor to the cylinder block.
13. Position the cooler lines out of the way and remove the A/C compressor from the engine compartment.

6.1L ENGINE

WARNING: Refer to the applicable warnings and cautions for this system before performing the following operation. See Heating and Air Conditioning/Plumbing - Warning. See Heating and Air Conditioning/Plumbing - Caution. Failure to follow these instructions may result in serious or fatal injury.

CAUTION: The A/C receiver/drier must be replaced if an internal failure of the A/C compressor has occurred. Failure to replace the A/C receiver/drier can cause serious damage to the replacement A/C compressor.

NOTE: The A/C compressor may be removed and repositioned without disconnecting the refrigerant lines or discharging the refrigerant system. Discharging is not necessary if servicing the compressor clutch, clutch field coil or engine.

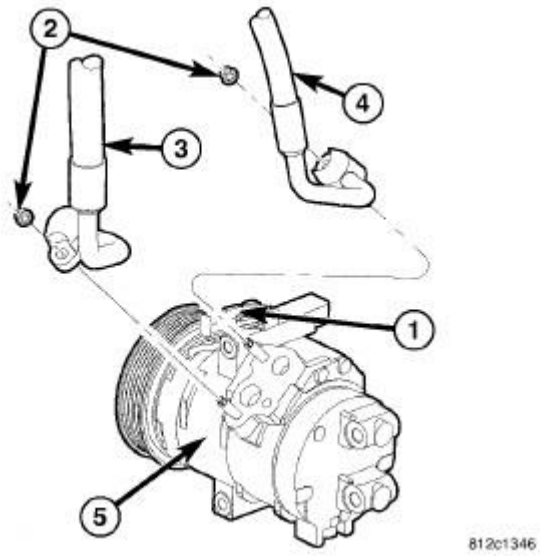

Fig. 115: COMPRESSOR-A/C LINES REMOVAL & INSTALLATION
Courtesy of CHRYSLER LLC

NOTE: Typical A/C compressor and refrigerant lines shown in illustration.

1. Disconnect and isolate the negative battery cable.
2. Recover the refrigerant from the refrigerant system. See **Heating and Air Conditioning/Plumbing - Standard Procedure**.
3. Remove the air cleaner housing. Refer to **Engine/Air Intake System/BODY, Air Cleaner - Removal** .
4. Remove the accessory drive belt. Refer to **Cooling/Accessory Drive/BELT, Serpentine - Removal** .
5. Disconnect the engine wire harness from the compressor clutch field coil connector (1).
6. Remove the nuts (2) that secure the A/C suction line (3) and A/C discharge line (4) to the A/C compressor (5).
7. Disconnect the suction and discharge lines from the A/C compressor and remove and discard the dual plane seals.
8. Install plugs in, or tape over all of the opened refrigerant line fittings and the compressor ports.

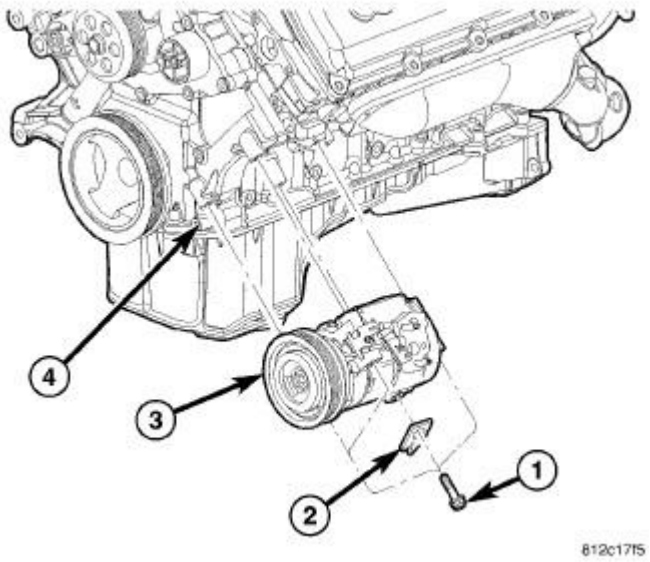

Fig. 116: COMPRESSOR-A/C 6.1L REMOVAL & INSTALLATION
Courtesy of CHRYSLER LLC

9. Raise and support the vehicle.
10. Remove the front belly pan. Refer to **Body/Exterior/BELLY PAN - Removal** .
11. Support the A/C compressor (3) and remove the bolts (1) that secure the automatic transmission cooler line bracket (2) and the compressor to the cylinder block (4).
12. Position the transmission cooler lines out of the way and remove the A/C compressor from the engine compartment.

Installation

A/C CLUTCH

NOTE: Typical A/C compressor and clutch assembly shown in illustrations.

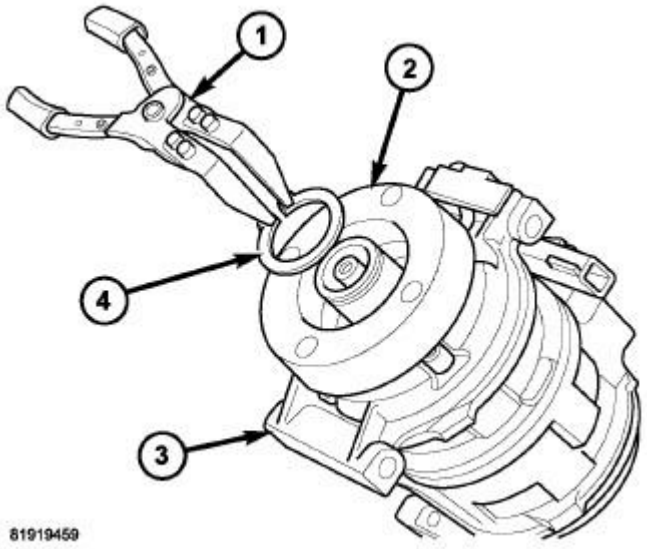

Fig. 117: Clutch Coil and Snap Ring
Courtesy of CHRYSLER LLC

1. Align the dowel pin on the back of the compressor clutch field coil (2) with the hole in the front of the A/C compressor (3) and position the field coil onto the compressor. Be certain that the compressor clutch field coil wire lead is properly routed so that it is not pinched between the A/C compressor and the field coil.

   CAUTION: The snap ring must be fully and properly seated in the groove or it will vibrate out, resulting in a clutch failure and severe damage to the A/C compressor.

   NOTE: A new snap ring must be used to secure the compressor clutch field coil to the A/C compressor. The bevel side of the snap ring must face outward and both snap ring eyelets must be oriented to the right or to the left of the field coil dowel pin location on the A/C compressor.

2. Using A/C Snap Ring Pliers 9764 or equivalent (1), install the snap ring (4) that secures the compressor clutch field coil to the front of the A/C compressor. Be certain that the snap ring is fully and properly seated in the groove and oriented correctly.

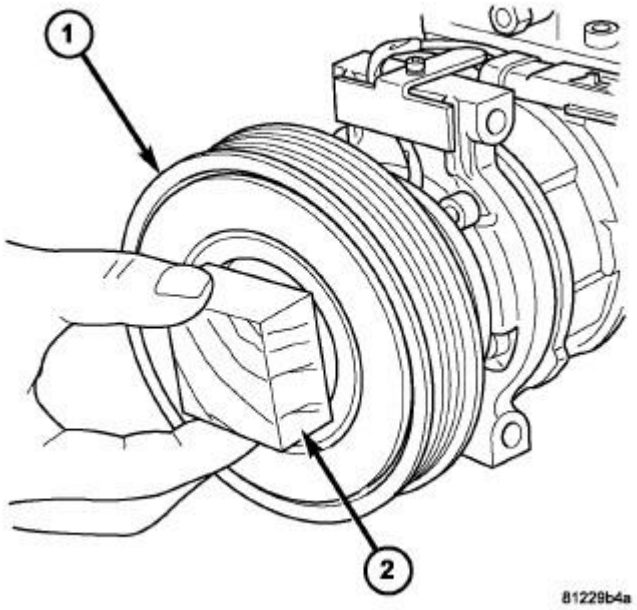

Fig. 118: Clutch Pulley - Installation
Courtesy of CHRYSLER LLC

CAUTION: Be certain to position the A/C clutch coil wire lead so that it is not damaged during A/C compressor pulley and bearing installation.

CAUTION: When installing the pulley and bearing assembly, DO NOT mar the friction surfaces of the pulley or premature failure of the A/C clutch will result.

3. Install the pulley and bearing assembly (1) onto the front of the A/C compressor. If necessary, tap the pulley gently with a block of wood (2) placed on the pulley friction surface.

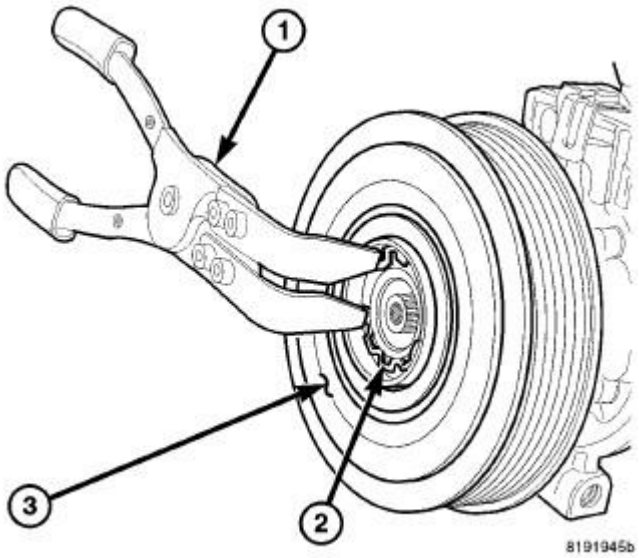

Fig. 119: Clutch Pulley and Snap Ring
Courtesy of CHRYSLER LLC

CAUTION: The snap ring must be fully and properly seated in the groove or it will vibrate out, resulting in a clutch failure and severe damage to the A/C compressor.

NOTE: A new snap ring must be used to secure the pulley and bearing assembly to the A/C compressor. The bevel side of the snap ring must face outward.

4. Using A/C Snap Ring Pliers 9764 or equivalent (1), install the snap ring (2) that secures the pulley and bearing assembly (3) to the front of the A/C compressor. Be certain that the snap ring is fully and properly seated in the groove.

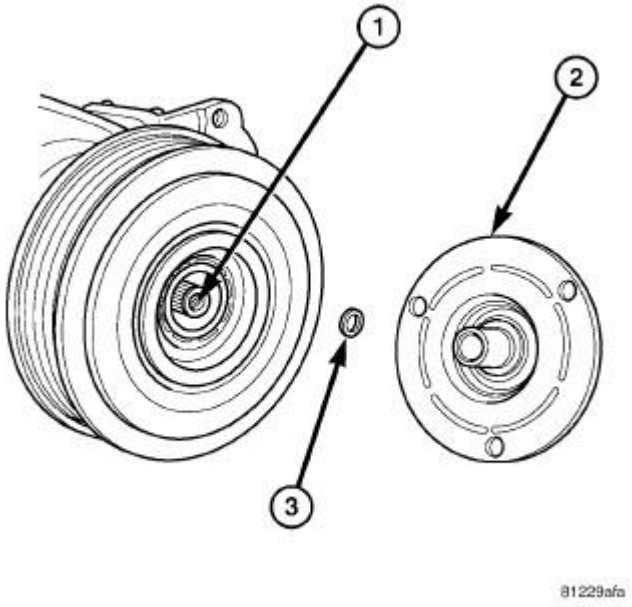

Fig. 120: Clutch Plate and Shim(s)
Courtesy of CHRYSLER LLC

5. If the original clutch plate (2) and pulley and bearing assembly are to be reused, reinstall the original shim(s) (3) onto the compressor shaft (1). If a new clutch plate and pulley and bearing assembly are being used, install a trial stack of shims 2.54 mm (0.010 in.) thick onto the compressor shaft.

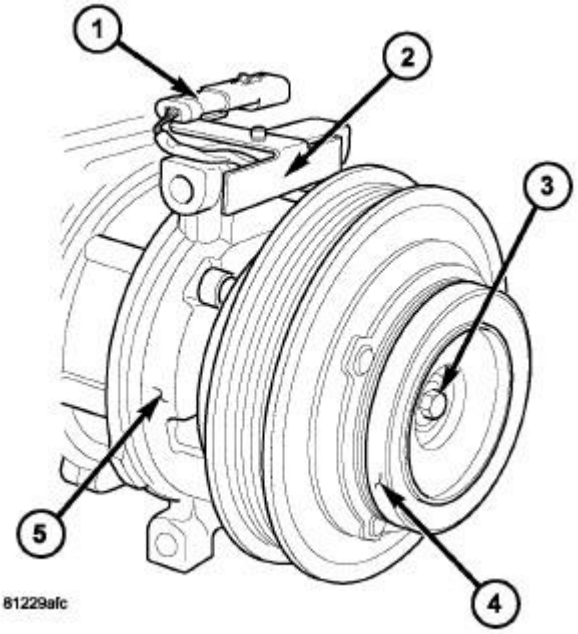

Fig. 121: A/C Compressor Shaft Bolt
Courtesy of CHRYSLER LLC

6. Install the clutch plate (4) onto the front of the A/C compressor (5).
7. Install the compressor shaft bolt (3). Tighten the bolt to 19 N.m (168 in. lbs.).

NOTE: The shims may compress after tightening the shaft bolt. Check the air gap in four or more places to verify the air gap is correct. Spin the pulley before performing a final check of the air gap.

NOTE: On models with the clutch plate recessed into the pulley, use a 90° wire gap gauge to measure the clutch air gap. On other models, use a blade type feeler gauge to measure the air gap.

8. With the clutch plate assembled tight against the shim(s), measure the air gap between the clutch plate and the pulley and bearing assembly. The air gap should be between 0.35 - 0.60 mm (0.014 - 0.024 in.). If the air gap is not between specifications, add or subtract shims as needed until the correct air gap is obtained.

CAUTION: Be certain that the compressor clutch coil wire lead is routed so that it is not pinched between the A/C compressor and the coil connector bracket.

9. Carefully route the compressor clutch field coil wire lead behind the connector bracket (2).
10. Install the compressor clutch field coil connector (1) onto the connector bracket.
11. Connect the engine wire harness to the compressor clutch field coil connector.
12. Install the accessory drive belt. Refer to **Cooling/Accessory Drive/BELT, Serpentine - Installation** .
13. Install the radiator fan and shroud assembly. Refer to **Cooling/Engine/FAN, Cooling - Installation** .
14. Install the air cleaner housing and air intake hose. Refer to **Engine/Air Intake System/BODY, Air Cleaner - Installation** .
15. Reconnect the negative battery cable.

3.5L ENGINE

CAUTION: If the A/C compressor is being replaced, be certain to adjust the refrigerant system oil level. See Heating and Air Conditioning/Plumbing/OIL, Refrigerant - Standard Procedure. Failure to properly adjust the refrigerant oil level will prevent the A/C system from operating as designed and can cause serious A/C compressor damage.

CAUTION: The A/C receiver/drier must be replaced if an internal failure of the A/C compressor has occurred. Failure to replace the A/C receiver/drier can

cause serious damage to the replacement A/C compressor.

NOTE: When replacing multiple A/C system components, refer to the REFRIGERANT OIL CAPACITIES chart to determine how much oil should be removed from the new A/C compressor. See Heating and Air Conditioning/Plumbing/OIL, Refrigerant - Standard Procedure.

NOTE: Replacement of the refrigerant line O-ring seals and gaskets is required anytime a refrigerant line is disconnected. Failure to replace the rubber O-ring seals and metal gaskets could result in a refrigerant system leak.

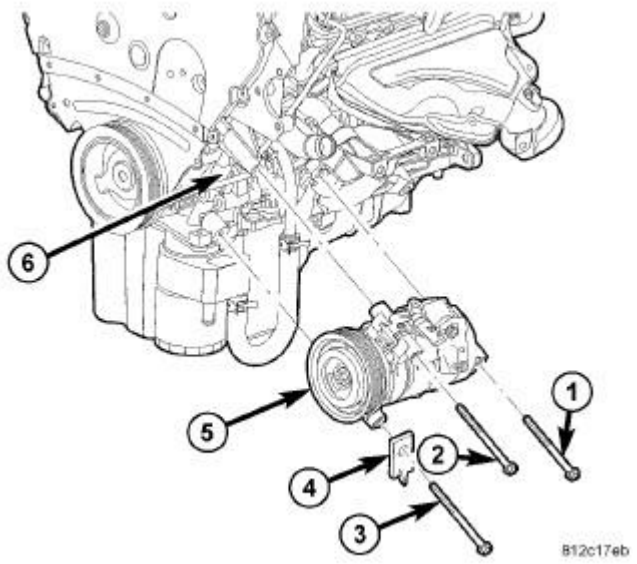

Fig. 122: COMPRESSOR REMOVAL & INSTALLATION
Courtesy of CHRYSLER LLC

1. If the A/C compressor (5) is being replaced, the refrigerant oil in the old compressor must be first drained and measured. Then the oil in the new A/C compressor must be drained. Finally, the new compressor must be refilled with the same amount of new refrigerant oil that was drained out of the old compressor. See **Heating and Air Conditioning/Plumbing/OIL, Refrigerant - Standard Procedure**. When replacing multiple A/C system components, refer to the **REFRIGERANT OIL CAPACITIES** chart to determine how much oil should be added to the refrigerant system. See **Heating and Air Conditioning/Plumbing/OIL, Refrigerant - Standard Procedure**. Use only refrigerant oil of the type recommended for the A/C compressor in the vehicle.

CAUTION: When equipped, use care not to deform or damage the automatic transmission cooler lines and retaining bracket when repositioning the A/C compressor.

NOTE: Bolt 3 that secures the A/C compressor and transmission cooler line

bracket (when equipped) must be installed through the bracket and the lower front mounting hole of the compressor prior to final positioning of the compressor to the cylinder block.

2. Loosely install the bolt (3) that secures the A/C compressor and automatic transmission cooler line bracket (4) (when equipped) to the compressor and position the compressor, bracket and bolt to the cylinder block (6).
3. Loosely install the bolts (1 and 2) that secure the A/C compressor to the cylinder block.
4. Tighten all three bolts that secure the A/C compressor to the engine in the following order to 26 N.m (19 ft. lbs.):
    1. Upper front bolt.
    2. Lower front bolt.
    3. Rear bolt.
5. Install the front belly pan. Refer to **Body/Exterior/BELLY PAN - Installation** .
6. Lower the vehicle.

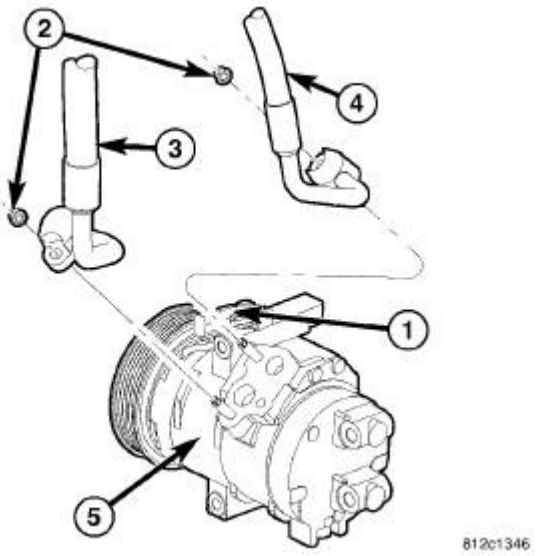

Fig. 123: COMPRESSOR-A/C LINES REMOVAL & INSTALLATION
Courtesy of CHRYSLER LLC

7. Remove the tape or plugs from the opened fittings on the A/C suction line (3) and the A/C discharge line (4) and the compressor ports.
8. Lubricate new dual plane seals with clean refrigerant oil and install them onto the suction and the discharge line fittings. Use only the specified seals as they are made of a special material for the R-134a system. Use only refrigerant oil of the type recommended for the A/C compressor in the vehicle.
9. Connect the suction and discharge lines onto the A/C compressor (5).
10. Install the nuts (2) that secure the suction and discharge lines to the A/C compressor. Tighten the nuts to 23 N.m (17 ft. lbs.).

11. Connect the engine wire harness to the compressor clutch field coil connector (1).
12. Install the accessory drive belt. Refer to **Cooling/Accessory Drive/BELT, Serpentine - Installation** .
13. Replace the A/C receiver/drier if the A/C compressor is being replaced due to an internal failure. See **Heating and Air Conditioning/Plumbing/DRIER, A/C Receiver - Installation**.
14. Install the air cleaner housing. Refer to **Engine/Air Intake System/BODY, Air Cleaner - Installation** .
15. Reconnect the negative battery cable.
16. Evacuate the refrigerant system. See **Heating and Air Conditioning/Plumbing - Standard Procedure**.
17. Charge the refrigerant system. See **Heating and Air Conditioning/Plumbing - Standard Procedure**.

5.7L ENGINE

CAUTION: If the A/C compressor is being replaced, be certain to adjust the refrigerant system oil level. See Heating and Air Conditioning/Plumbing/OIL, Refrigerant - Standard Procedure. Failure to properly adjust the refrigerant oil level will prevent the A/C system from operating as designed and can cause serious A/C compressor damage.

CAUTION: The A/C receiver/drier must be replaced if an internal failure of the A/C compressor has occurred. Failure to replace the A/C receiver/drier can cause serious damage to the replacement A/C compressor.

NOTE: When replacing multiple A/C system components, refer to the REFRIGERANT OIL CAPACITIES chart to determine how much oil should be removed from the new A/C compressor. See Heating and Air Conditioning/Plumbing/OIL, Refrigerant - Standard Procedure.

NOTE: Replacement of the refrigerant line O-ring seals and gaskets is required anytime a refrigerant line is disconnected. Failure to replace the rubber O-ring seals and metal gaskets could result in a refrigerant system leak.

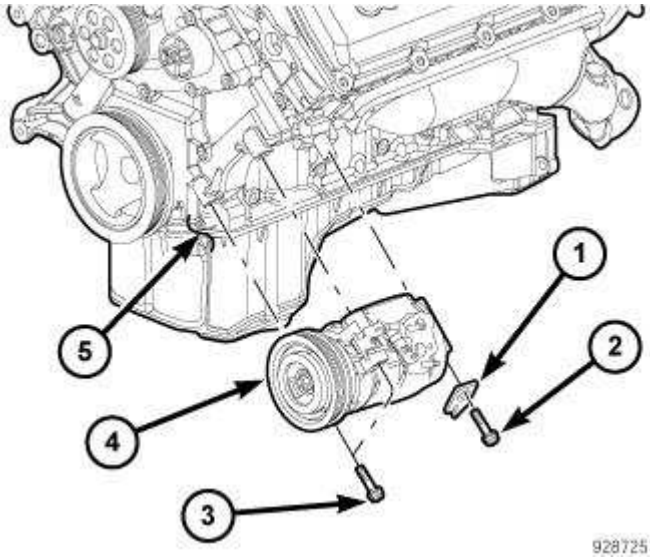

Fig. 124: COMPRESSOR-A/C 5.7L REMOVAL & INSTALLATION
Courtesy of CHRYSLER LLC

1. If the A/C compressor (4) is being replaced, the refrigerant oil in the old compressor must be first drained and measured. Then the oil in the new A/C compressor must be drained. Finally, the new compressor must be refilled with the same amount of new refrigerant oil that was drained out of the old compressor. See **Heating and Air Conditioning/Plumbing/OIL, Refrigerant - Standard Procedure**. When replacing multiple A/C system components, refer to the **REFRIGERANT OIL CAPACITIES** chart to determine how much oil should be added to the refrigerant system. See **Heating and Air Conditioning/Plumbing/OIL, Refrigerant - Standard Procedure**. Use only refrigerant oil of the type recommended for the A/C compressor in the vehicle.
2. Position the A/C compressor into the engine compartment.
3. Loosely install the two bolts (3) that secure the front of the A/C compressor to the cylinder block (5).
4. Loosely install the bolt (2) that secures the rear of the A/C compressor and the automatic transmission cooler line bracket (1), if equipped, to the cylinder block.
5. Tighten the three bolts in the following order to 50 N.m (37 ft. lbs.).
    1. Upper front bolt
    2. Lower front bolt
    3. Rear bolt
6. Install the front belly pan. Refer to **Body/Exterior/BELLY PAN - Installation** .
7. Lower the vehicle.

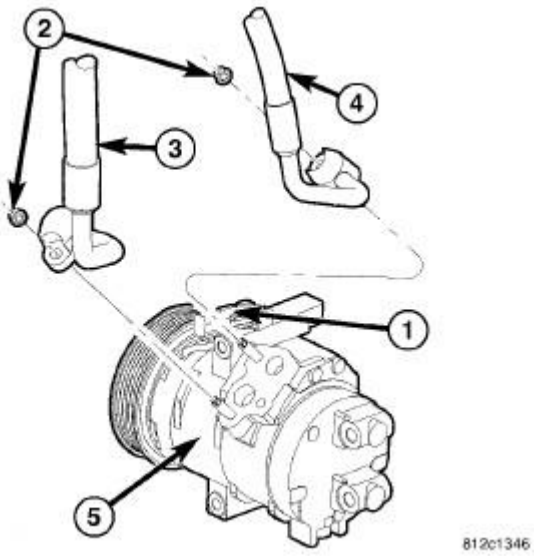

Fig. 125: COMPRESSOR-A/C LINES REMOVAL & INSTALLATION
Courtesy of CHRYSLER LLC

NOTE: Typical A/C compressor and refrigerant lines shown in illustration.

8. Remove the tape or plugs from the opened fittings on the A/C suction line (3) and the A/C discharge line (4) and the compressor ports.
9. Lubricate new dual plane seals with clean refrigerant oil and install them onto the suction and the discharge line fittings. Use only the specified seals as they are made of a special material for the R-134a system. Use only refrigerant oil of the type recommended for the A/C compressor in the vehicle.
10. Connect the suction and discharge lines onto the A/C compressor (5).
11. Install the nuts (2) that secure the suction and discharge lines to the A/C compressor. Tighten the nuts to 23 N.m (17 ft. lbs.).
12. Connect the engine wire harness to the compressor clutch field coil connector (1).
13. Install the accessory drive belt. Refer to **Cooling/Accessory Drive/BELT, Serpentine - Installation** .
14. Replace the A/C receiver/drier if the A/C compressor is being replaced due to an internal failure. See **Heating and Air Conditioning/Plumbing/DRIER, A/C Receiver - Removal**.
15. Install the air cleaner housing. Refer to **Engine/Air Intake System/BODY, Air Cleaner - Installation** .
16. Reconnect the negative battery cable.
17. Evacuate the refrigerant system. See **Heating and Air Conditioning/Plumbing - Standard Procedure**.
18. Charge the refrigerant system. See **Heating and Air Conditioning/Plumbing - Standard Procedure**.

CAUTION: If the A/C compressor is being replaced, be certain to adjust the refrigerant system oil level. See Heating and Air Conditioning/Plumbing/OIL, Refrigerant - Standard Procedure. Failure to properly adjust the refrigerant oil level will prevent the A/C system from operating as designed and can cause serious A/C compressor damage.

CAUTION: The A/C receiver/drier must be replaced if an internal failure of the A/C compressor has occurred. Failure to replace the A/C receiver/drier can cause serious damage to the replacement A/C compressor.

NOTE: When replacing multiple A/C system components, refer to the REFRIGERANT OIL CAPACITIES chart to determine how much oil should be removed from the new A/C compressor. See Heating and Air Conditioning/Plumbing/OIL, Refrigerant - Standard Procedure.

NOTE: Replacement of the refrigerant line O-ring seals and gaskets is required anytime a refrigerant line is disconnected. Failure to replace the rubber O-ring seals and metal gaskets could result in a refrigerant system leak.

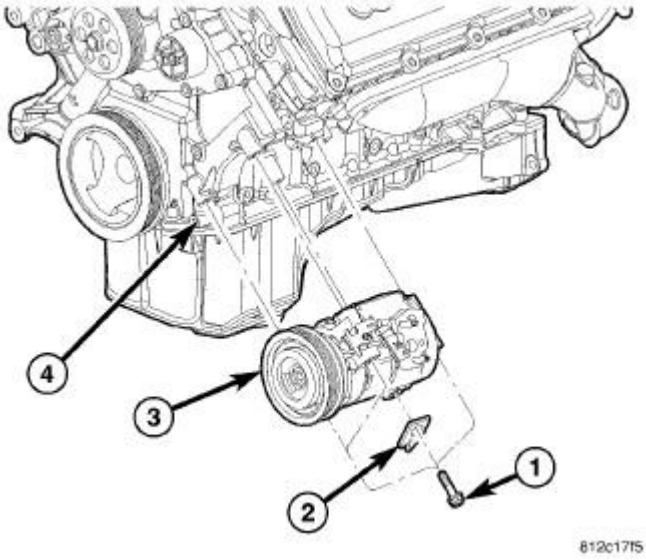

Fig. 126: COMPRESSOR-A/C 6.1L REMOVAL & INSTALLATION
Courtesy of CHRYSLER LLC

1. If the A/C compressor (3) is being replaced, the refrigerant oil in the old compressor must be first drained and measured. Then the oil in the new A/C compressor must be drained. Finally, the new compressor must be refilled with the same amount of new refrigerant oil that was drained out of the old compressor. See **Heating and Air Conditioning/Plumbing/OIL, Refrigerant - Standard Procedure**. When replacing multiple A/C system components, refer to the **REFRIGERANT OIL CAPACITIES** chart to determine how much oil should be added to the refrigerant system. See **Heating and Air Conditioning/Plumbing/OIL, Refrigerant - Standard**

Procedure. Use only refrigerant oil of the type recommended for the A/C compressor in the vehicle.

2. Position the A/C compressor into the engine compartment and reposition the transmission cooler lines and bracket (2).
3. Loosely install all the bolts (1) that secure the A/C compressor and the automatic transmission cooler line bracket to the cylinder block (4).
4. Tighten the bolts to 50 N.m (37 ft. lbs.):
5. Install the front belly pan. Refer to **Body/Exterior/BELLY PAN - Installation** .
6. Lower the vehicle.

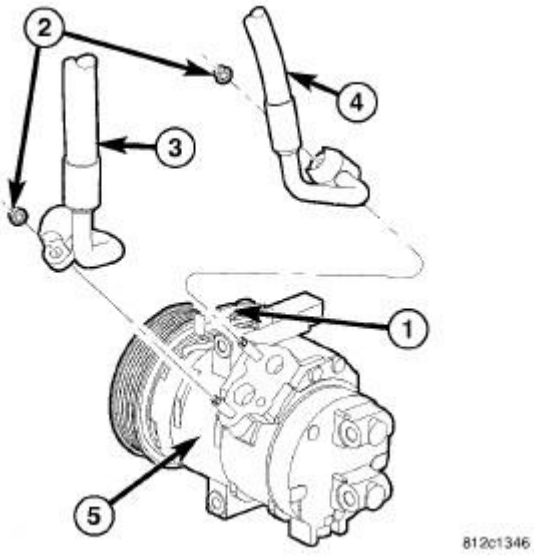

Fig. 127: COMPRESSOR-A/C LINES REMOVAL & INSTALLATION
Courtesy of CHRYSLER LLC

NOTE: Typical A/C compressor and refrigerant lines shown in illustration.

7. Remove the tape or plugs from the opened fittings on the A/C suction line (3) and the A/C discharge line (4) and the compressor ports.
8. Lubricate new dual plane seals with clean refrigerant oil and install them onto the suction and the discharge line fittings. Use only the specified seals as they are made of a special material for the R-134a system. Use only refrigerant oil of the type recommended for the A/C compressor in the vehicle.
9. Connect the suction and discharge lines onto the A/C compressor (5).
10. Install the nuts (2) that secure the suction and discharge lines to the A/C compressor. Tighten the nuts to 23 N.m (17 ft. lbs.).
11. Connect the engine wire harness to the compressor clutch field coil connector (1).
12. Install the accessory drive belt. Refer to **Cooling/Accessory Drive/BELT, Serpentine - Installation** .

13. Replace the A/C receiver/drier if the A/C compressor is being replaced due to an internal failure. See **Heating and Air Conditioning/Plumbing/DRIER, A/C Receiver - Removal** and **Heating and Air Conditioning/Plumbing/DRIER, A/C Receiver - Installation**.
14. Install the air cleaner housing. Refer to **Engine/Air Intake System/BODY, Air Cleaner - Installation** .
15. Reconnect the negative battery cable.
16. Evacuate the refrigerant system. See **Heating and Air Conditioning/Plumbing - Standard Procedure**.
17. Charge the refrigerant system. See **Heating and Air Conditioning/Plumbing - Standard Procedure**.

CONDENSER, A/C

Description

DESCRIPTION

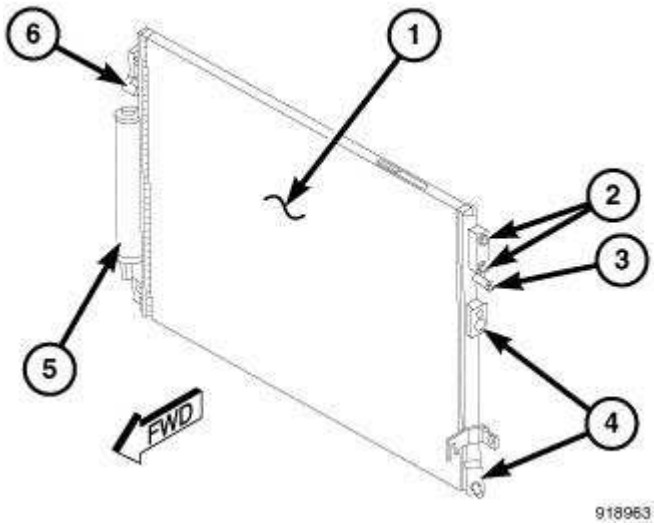

Fig. 128: Power Steering Cooler Is Integrated Into A/C Condenser
Courtesy of CHRYSLER LLC

The A/C condenser (1) is located in the front of the engine compartment behind the front fascia. The A/C condenser is a heat exchanger that allows the high-pressure refrigerant gas being discharged by the A/C compressor to give up its heat to the air passing over the condenser fins, which causes the refrigerant to cool and change to a liquid state.

The A/C condenser is equipped with two fittings for the integral automatic transmission cooler when equipped with an automatic transmission (2), fittings for the integral power steering cooler (3), tapping blocks for the A/C refrigerant lines (4), a tapping block for the receiver/drier (5) and integral mounting brackets (6).

Operation

OPERATION

When air passes through the fins of the A/C condenser, the high-pressure refrigerant gas within the A/C condenser gives up its heat. The refrigerant then condenses as it leaves the A/C condenser and becomes a high-pressure liquid. The volume of air flowing over the condenser fins is critical to the proper cooling performance of the A/C system. Therefore, it is important that there are no objects placed in front of the radiator grille openings at the front of the vehicle or foreign material on the condenser fins that might obstruct proper air flow. Also, any factory-installed air seals or shrouds must be properly reinstalled following radiator or A/C condenser service.

NOTE: Replacement of the refrigerant line O-ring seals and gaskets is required anytime a refrigerant line is disconnected. Failure to replace the rubber O-ring seals and metal gaskets could result in a refrigerant system leak.

The A/C condenser has no serviceable parts. The O-ring seals used on the connections are made from a special type of rubber not affected by R-134a refrigerant. The O-ring seals and gaskets must be replaced whenever a refrigerant line is disconnected from the A/C condenser.

The A/C condenser cannot be repaired and must be replaced if leaking or damaged.

Removal

REMOVAL

WARNING: Refer to the applicable warnings and cautions for this system before performing the following operation. See Heating and Air Conditioning/Plumbing - Warning. See Heating and Air Conditioning/Plumbing - Caution. Failure to follow these instructions may result in serious or fatal injury.

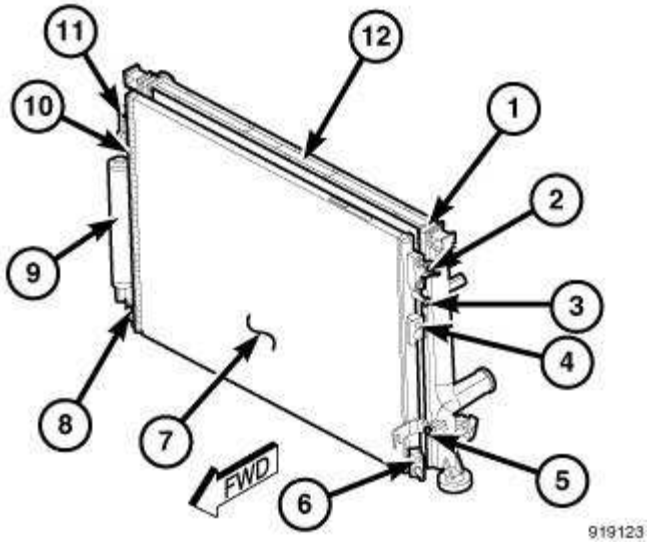

Fig. 129: A/C Condenser & Radiator
Courtesy of CHRYSLER LLC

NOTE: **Illustration shown with A/C condenser and radiator removed from vehicle for clarity.**

1. Disconnect and isolate the negative battery cable.
2. Recover the refrigerant from the refrigerant system. See **Heating and Air Conditioning/Plumbing - Standard Procedure**.
3. Remove the front fascia. Refer to **Frame and Bumpers/Bumpers/FASCIA, Front - Removal** .
4. If equipped, disconnect the automatic transmission cooler lines from the transmission cooler ports (1). Refer to **Cooling - Standard Procedure** .
5. Disconnect the power steering cooler lines from the two power steering cooler fittings (3 and 10).
6. Install plugs in the power steering cooler fittings and automatic transmission cooler ports, as equipped.
7. Disconnect the A/C discharge line and the A/C liquid line from the refrigerant line tapping blocks (4 and 6). See **Heating and Air Conditioning/Plumbing/LINE, A/C Liquid - Removal**. See **Heating and Air Conditioning/Plumbing/LINE, A/C Discharge - Removal**.
8. Install plugs in, or tape over the opened refrigerant line fittings and condenser ports.
9. Remove the four bolts (2, 5, 8 and 11) that secure A/C condenser (7) to the radiator (12).
10. Carefully tilt the bottom of the A/C condenser forward and lower the condenser out of the vehicle.
11. If required, place the A/C condenser onto a workbench and remove A/C receiver/drier (9). See **Heating and Air Conditioning/Plumbing/DRIER, A/C Receiver - Removal**.

Installation

INSTALLATION

CAUTION: **Be certain to adjust the refrigerant oil level when servicing the A/C refrigerant system. See Heating and Air Conditioning/Plumbing/OIL, Refrigerant - Standard Procedure. Failure to properly adjust the refrigerant oil level will prevent the A/C system from operating as designed and can cause serious A/C compressor damage.**

NOTE: **When replacing multiple A/C system components, refer to the REFRIGERANT OIL CAPACITIES chart to determine how much oil should be added to the refrigerant system. See Heating and Air Conditioning/Plumbing/OIL, Refrigerant - Standard Procedure.**

NOTE: **If only the A/C condenser is being replaced, add 30 milliliters (1 fluid ounce) of refrigerant oil to the refrigerant system. Use only refrigerant oil of the type recommended for the A/C compressor in the vehicle.**

NOTE: **Replacement of the refrigerant line O-ring seals and gaskets is required anytime**

a refrigerant line is disconnected. Failure to replace the rubber O-ring seals and metal gaskets could result in a refrigerant system leak.

NOTE: **Be certain that each of the radiator and condenser air seals are installed in their proper locations. These air seals are required for the A/C and engine cooling systems to perform as designed.**

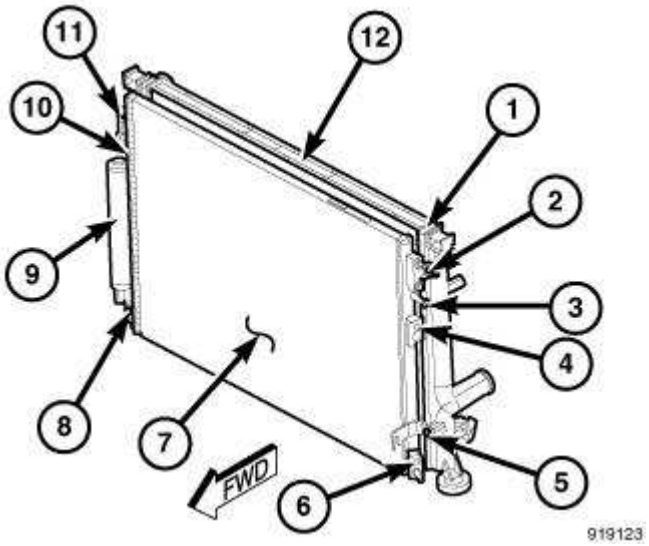

Fig. 130: A/C Condenser & Radiator
Courtesy of CHRYSLER LLC

NOTE: **Illustration shown with A/C condenser and radiator removed from vehicle for clarity.**

1. If removed, install the A/C receiver/drier (9) onto the A/C condenser (7). See **Heating and Air Conditioning/Plumbing/DRIER, A/C Receiver - Installation**.
2. Carefully position the A/C condenser onto the radiator (12).
3. Install the four bolts (2, 5, 8 and 11) that secure the A/C condenser to the radiator. Tighten the bolts to 5 N.m (44 in. lbs.).
4. Remove the tape or plugs from the opened refrigerant line fittings and condenser ports.
5. Connect the A/C discharge line and the A/C liquid line onto the refrigerant line tapping blocks (4 and 6). See **Heating and Air Conditioning/Plumbing/LINE, A/C Discharge - Installation**. See **Heating and Air Conditioning/Plumbing/LINE, A/C Liquid - Installation**.
6. Remove the plugs and connect the power steering cooler lines to the power steering cooler fittings (3 and 10). Make sure the retaining clamps are securely engaged.
7. If equipped, remove the plugs and connect the automatic transmission cooler lines to the cooler ports (1). Refer to **Cooling - Standard Procedure** .
8. Install the front fascia. Refer to **Frame and Bumpers/Bumpers/FASCIA, Front - Installation** .
9. Reconnect the negative battery cable.

10. Evacuate the refrigerant system. Refer to **REFRIGERANT**.
11. If the A/C condenser is being replaced, add 30 milliliters (1 fluid ounce) of refrigerant oil to the refrigerant system. When replacing multiple A/C system components, refer to the **REFRIGERANT OIL CAPACITIES** chart to determine how much oil should be added to the refrigerant system. See **Heating and Air Conditioning/Plumbing/OIL, Refrigerant - Standard Procedure**. Use only refrigerant oil of the type recommended for the A/C compressor in the vehicle.
12. Charge the refrigerant system. Refer to **REFRIGERANT**.
13. If equipped, check the automatic transmission fluid level. Refer to **Transmission and Transfer Case/Automatic - NAG1/FLUID and FILTER - Standard Procedure** . Fill as required. Refer to **Transmission and Transfer Case/Automatic - NAG1/FLUID and FILTER - Standard Procedure** .

CORE, HEATER

Description

DESCRIPTION

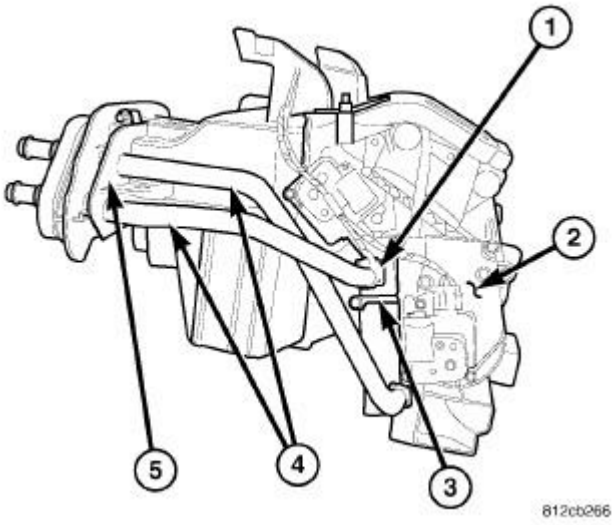

Fig. 131: Core-Heater Description
Courtesy of CHRYSLER LLC

NOTE: LHD model shown in illustration. RHD model similar.

The heater core (1) is mounted into the driver side of HVAC air distribution housing (2), located behind the instrument panel. The heater core is a heat exchanger made of rows of tubes and fins and is secured to the air distribution housing by a plastic retaining bracket (3). The heater core tubes (4) are secured to the HVAC housing by a removable flange (5).

The heater core tubes are not serviced separately from the heater core. The HVAC housing must be removed from the vehicle to service the heater core.

Operation

OPERATION

Engine coolant is circulated through the heater hoses to the heater core at all times. As the coolant flows through the heater core, heat is removed from the engine and is transferred to the heater core tubes and fins. Air directed through the heater core picks up the heat from the heater core fins. The blend-air door(s) allows control of the heater output air temperature by regulating the amount of air flowing through the heater core. The blower motor speed controls the volume of air flowing through the HVAC housing.

The heater core cannot be repaired and must be replaced if restricted, leaking or damaged.

Removal

REMOVAL

WARNING: Disable the airbag system before attempting any steering wheel, steering column or instrument panel component diagnosis or service. Disconnect and isolate the negative battery (ground) cable and wait two minutes for the airbag system capacitor to discharge before performing further diagnosis or service. This is the only sure way to disable the airbag system. Failure to follow these instructions may result in accidental airbag deployment and possible serious or fatal injury.

WARNING: The heater core tubes are not serviced separately from the heater core. The heater core tubes should not be repositioned, loosened or removed from the heater core. Failure to follow this warning could result in a coolant leak and possible serious or fatal injury.

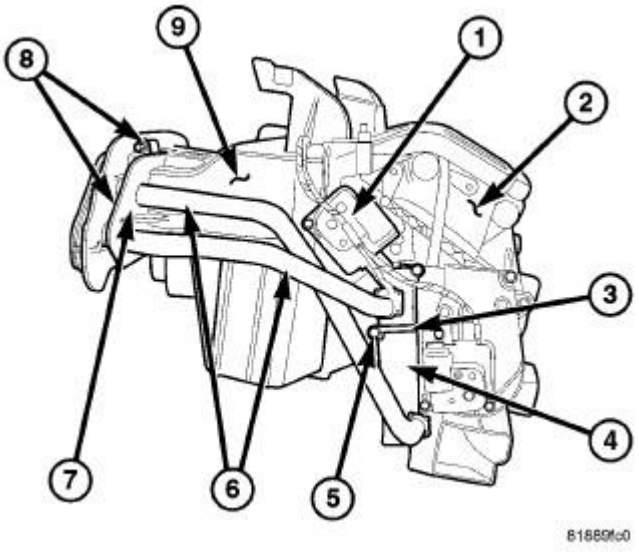

Fig. 132: Heater Core Removal & Installation
Courtesy of CHRYSLER LLC

NOTE: LHD model shown in illustration. RHD model similar.

1. Disconnect and isolate the negative battery cable.
2. Remove the HVAC housing assembly (9) and place it on a suitable workbench. See **Heating and Air Conditioning/Distribution/HOUSING, HVAC - Removal**.
3. On LHD models, remove the blend door actuator (1) from the driver side of the HVAC air distribution housing (2). See **Heating and Air Conditioning/Controls/ACTUATOR, Blend Door - Removal**.
4. Remove the two screws (8) that secure the flange (7) to the front of the HVAC housing near the dash panel and remove the flange.
5. Remove the screw (5) that secures the heater core retaining bracket (3) to the driver side of the HVAC air distribution housing and remove the bracket.
6. Disengage the heater core tubes (6) from the HVAC housing and carefully pull the heater core (4) straight out of the side of the air distribution housing.

Installation

INSTALLATION

WARNING: The heater core tubes are not serviced separately from the heater core. The heater core tubes should not be repositioned, loosened or removed from the heater core. Failure to follow this warning could result in a coolant leak and possible serious or fatal injury.

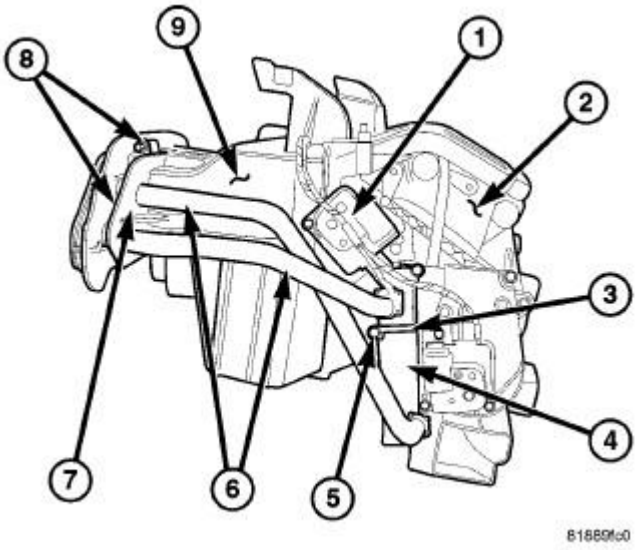

Fig. 133: Heater Core Removal & Installation
Courtesy of CHRYSLER LLC

NOTE: LHD model shown in illustration. RHD model similar.

1. Carefully install the heater core (4) into the driver side of the HVAC air distribution housing (2) and position the heater core tubes (6) to the HVAC housing (9).
2. Install heater core retaining bracket (3) onto the air distribution housing and install the retaining screw (5). Tighten the screw to 2.2 N.m (20 in. lbs.).
3. Install the flange (7) over the heater core tubes and onto the HVAC housing and install the two flange retaining screws (8). Tighten the screws to 2.2 N.m (20 in. lbs.).
4. On LHD models, install the blend door actuator (1) to the driver side of the air distribution housing. See **Heating and Air Conditioning/Controls/ACTUATOR, Blend Door - Installation**.
5. Install the HVAC housing assembly. See **Heating and Air Conditioning/Distribution/HOUSING, HVAC - Installation**.
6. Reconnect the negative battery cable.
7. If the heater core is being replaced, flush the cooling system. Refer to **Cooling - Standard Procedure** .
8. Refill the engine cooling system. Refer to **Cooling - Standard Procedure** .
9. Evacuate the refrigerant system. See **Heating and Air Conditioning/Plumbing - Standard Procedure**.
10. Charge the refrigerant system. See **Heating and Air Conditioning/Plumbing - Standard Procedure**.

CORE, SERVICE PORT VALVE

Description

DESCRIPTION

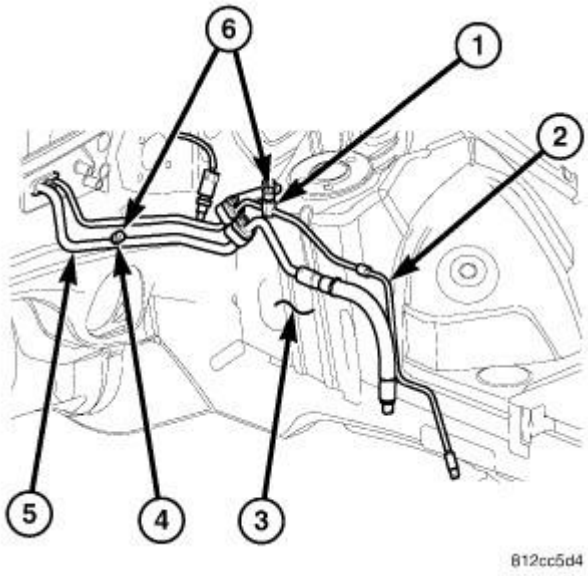

Fig. 134: Refrigerant System Service Ports Description
Courtesy of CHRYSLER LLC

NOTE: LHD model shown in illustration. RHD model similar.

Refrigerant system service ports are used to recover, recycle, evacuate, charge and test the A/C refrigerant system. Unique sizes are used on the two service ports for the R-134a refrigerant system to ensure the system is not accidentally contaminated with R-12 refrigerant or by service equipment used for R-12 refrigerant.

The high side service port (1) is located on the liquid line (2) near the left shock tower (3). The low side service port (4) is located on the suction line (5) near the left shock tower. Both the high side and low side A/C service port valve cores are serviceable.

NOTE: The protective cap aids in service port sealing and helps protect the refrigerant system from contamination. Remember to always reinstall the protective cap onto the service port when refrigerant system service is complete.

Each of the service ports has a threaded plastic protective cap (6) installed over it from the factory. The service port caps are serviceable items.

Removal

REMOVAL

WARNING: Refer to the applicable warnings and cautions for this system before performing the following operation. See Heating and Air Conditioning/Plumbing - Warning. See Heating and Air

Conditioning/Plumbing - Caution. **Failure to follow the warnings and cautions may result in serious or fatal injury.**

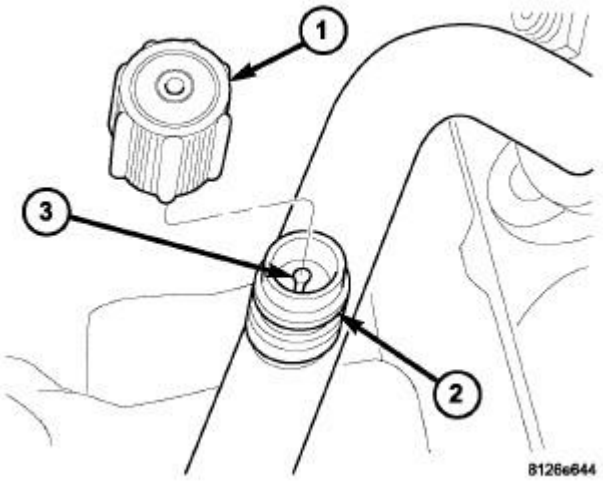

Fig. 135: Identifying A/C Service Port Components
Courtesy of CHRYSLER LLC

NOTE: Typical A/C service port shown in illustration.

1. Remove the protective cap (1) from the service port (2).
2. Recover the refrigerant from the refrigerant system. See **Heating and Air Conditioning/Plumbing - Standard Procedure**.
3. Using a Schrader-type valve core tool, remove the valve core (3) from the service port.
4. Install a plug in, or tape over the opened service port(s).

Installation

INSTALLATION

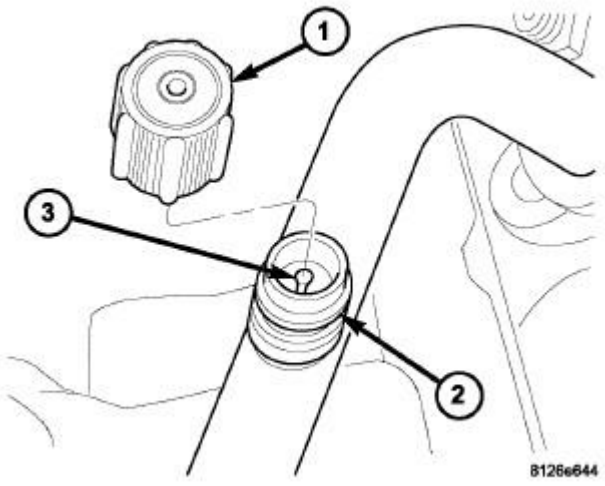

Fig. 136: Identifying A/C Service Port Components
Courtesy of CHRYSLER LLC

NOTE: Typical A/C service port shown in illustration.

1. Lubricate the valve core (3) with clean refrigerant oil prior to installation. Use only refrigerant oil of the type recommended for the A/C compressor in the vehicle.
2. Remove the tape or plug from the service port (2).

CAUTION: A valve core that is not fully seated in the A/C service port can result in damage to the valve during refrigerant system evacuation and charge. Such damage may result in a loss of system refrigerant while uncoupling the charge adapters.

3. Install and tighten the valve core into the service port(s) using a Schrader type valve core tool.
4. Evacuate and charge the refrigerant system. See **Heating and Air Conditioning/Plumbing - Standard Procedure**.

NOTE: The protective cap helps aid in service port sealing and helps protect the refrigerant system from contamination. Remember to always reinstall the protective cap onto the service port when refrigerant system service is complete.

5. Install the protective cap (1) onto the service port.

DRIER, A/C RECEIVER

Description

DESCRIPTION

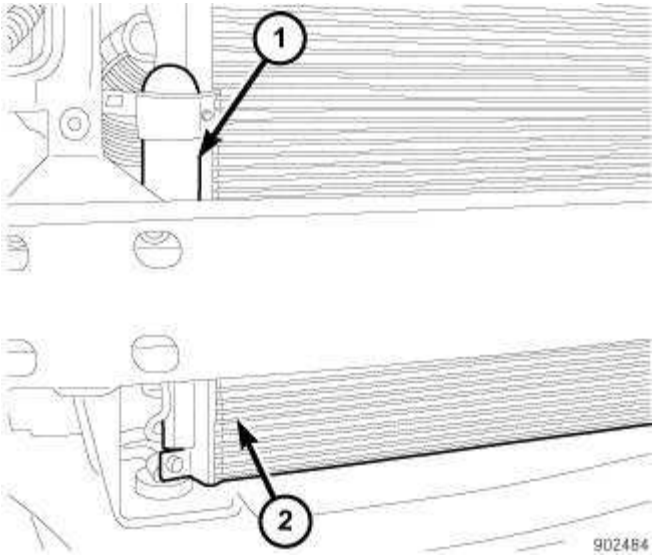

Fig. 137: Receiver/Drier Description
Courtesy of CHRYSLER LLC

The receiver/drier (1) stores unnecessary refrigerant, filters the refrigerant, helps remove moisture from the refrigerant and retains any refrigerant vapor that may leave the A/C condenser (2) until it becomes a liquid. The receiver/drier is installed on the high-side of the A/C system and is connected directly to the right end of the A/C condenser. The receiver/drier can be easily serviced by removing the front fascia.

Operation

OPERATION

The A/C receiver/drier performs a filtering action to prevent foreign material in the refrigerant from contaminating the A/C expansion valve. Refrigerant enters the A/C receiver/drier as a high-pressure, low temperature liquid. Desiccant inside the A/C receiver/drier absorbs any moisture which may have entered and become trapped within the refrigerant system. In addition, during periods of high demand operation of the A/C system, the A/C receiver/drier acts as a reservoir to store surplus refrigerant.

NOTE: Replacement of the refrigerant line O-ring seals and gaskets is required anytime a refrigerant line is disconnected. Failure to replace the rubber O-ring seals and metal gaskets could result in a refrigerant system leak.

The A/C receiver/drier has no serviceable parts except for the O-ring seals, gaskets and the high side service port valve and cap. The O-ring seals used on the connections are made from a special type of rubber not affected by R-134a refrigerant. The O-ring seals and gaskets must be replaced whenever the A/C receiver/drier is removed.

The A/C receiver/drier cannot be repaired and must be replaced if leaking or damaged, or if an internal failure of the A/C compressor has occurred.

Removal

REMOVAL

WARNING: Refer to the applicable warnings and cautions for this system before performing the following operation. See Heating and Air Conditioning/Plumbing - Warning. See Heating and Air Conditioning/Plumbing - Caution. Failure to follow these instructions may result in serious or fatal injury.

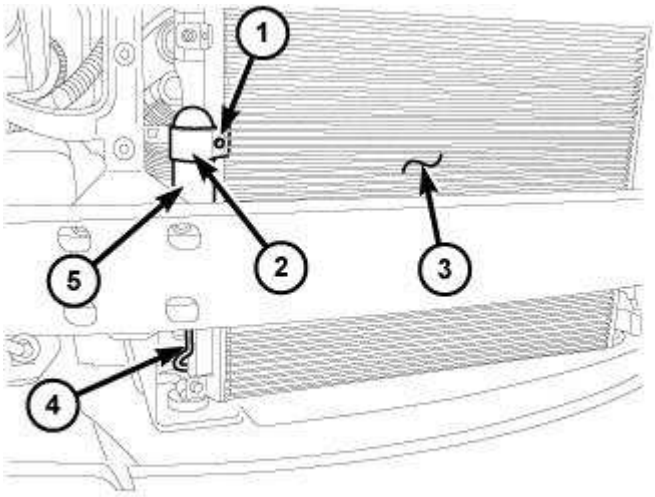

Fig. 138: RECEIVER/DRIER REMOVAL & INSTALLATION
Courtesy of CHRYSLER LLC

1. Disconnect and isolate the negative battery cable.
2. Recover the refrigerant from the refrigerant system. See **Heating and Air Conditioning/Plumbing - Standard Procedure**.
3. Remove the front fascia. Refer to **Frame and Bumpers/Bumpers/FASCIA, Front - Removal** .
4. Remove the screw (1) that secures the receiver/drier mounting bracket (2) to the right end of the A/C condenser (3).
5. Remove the bolt (4) that secures the receiver/drier (5) to the A/C condenser.
6. Disconnect the receiver/drier from the A/C condenser and remove and discard the dual-plane seal.
7. Install plugs in, or tape over the opened receiver/drier fitting and the condenser ports.

Installation

INSTALLATION

CAUTION: Be certain to adjust the refrigerant oil level when servicing the A/C refrigerant system. See Heating and Air Conditioning/Plumbing/OIL,

Refrigerant - Standard Procedure. Failure to properly adjust the refrigerant oil level prevents the A/C system from operating as designed and can cause serious A/C compressor damage.

CAUTION: The A/C receiver/drier must be replaced if an internal failure of the A/C compressor has occurred. Failure to replace the A/C receiver/drier can cause serious damage to the replacement A/C compressor.

NOTE: When replacing multiple A/C system components, refer to the REFRIGERANT OIL CAPACITIES chart to determine how much oil should be added to the refrigerant system. See Heating and Air Conditioning/Plumbing/OIL, Refrigerant - Standard Procedure.

NOTE: If only the A/C receiver/drier is being replaced, add 30 milliliters (1 fluid ounce) of refrigerant oil to the refrigerant system. Use only refrigerant oil of the type recommended for the A/C compressor in the vehicle.

NOTE: Replacement of the refrigerant line O-ring seals and gaskets is required anytime a refrigerant line is disconnected. Failure to replace the rubber O-ring seals and metal gaskets could result in a refrigerant system leak.

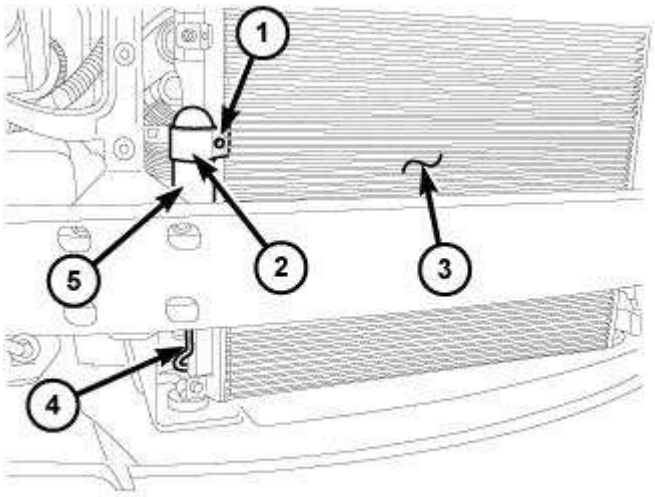

Fig. 139: RECEIVER/DRIER REMOVAL & INSTALLATION
Courtesy of CHRYSLER LLC

1. Position the receiver/drier (5) into the engine compartment.
2. Remove the tape or plugs from the receiver/drier fitting and the ports of the A/C condenser (3).
3. Lubricate a new dual-plane seal with clean refrigerant oil and install it onto the receiver/drier fitting. Use only the specified seal, as it is made of a special material for the R-134a system. Use only refrigerant oil of the type recommended for the A/C compressor in the vehicle.

4. Connect the receiver/drier to the right end of the A/C condenser.
5. Install the bolt (4) that secures the receiver/drier to the A/C condenser. Tighten the bolt to 22 N.m (16 ft. lbs.).
6. Install the receiver/drier mounting bracket (2) onto the A/C condenser.
7. Install the screw (1) securing the receiver/drier mounting bracket onto the A/C condenser. Tighten the screw to 5 N.m (44 in. lbs.).
8. Install the front fascia. Refer to **Frame and Bumpers/Bumpers/FASCIA, Front - Installation** .
9. Reconnect the negative battery cable.
10. Evacuate the refrigerant system. Refer to **REFRIGERANT**.
11. If the A/C receiver/drier is being replaced, add 30 milliliters (1 fluid ounce) of refrigerant oil to the refrigerant system. When replacing multiple A/C system components, refer to the **REFRIGERANT OIL CAPACITIES** chart to determine how much oil should be added to the refrigerant system. See **Heating and Air Conditioning/Plumbing/OIL, Refrigerant - Standard Procedure**. Use only refrigerant oil of the type recommended for the A/C compressor in the vehicle.
12. Charge the refrigerant system. See **Heating and Air Conditioning/Plumbing - Standard Procedure**.

EVAPORATOR, A/C

Description

DESCRIPTION

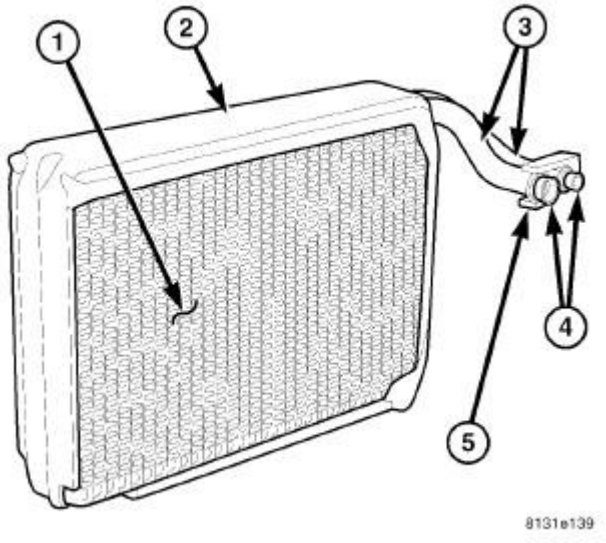

Fig. 140: Evaporator-A/C Description
Courtesy of CHRYSLER LLC

NOTE: LHD model shown in illustration. RHD model similar.

The A/C evaporator (1) for the heating-A/C system is located within the HVAC housing, behind the instrument panel. The A/C evaporator and its insulator (2) are positioned in the HVAC housing so that all air entering the housing must pass over the evaporator fins before it is distributed through the heating-A/C system ducts and outlets. However, air passing over the evaporator fins will only be conditioned when the A/C compressor is engaged and circulating refrigerant through the A/C evaporator.

The A/C evaporator tubes (3) are connected and sealed to the A/C expansion valve by use of rubber O-rings (4) and a tapping block (5).

The A/C evaporator can only be serviced by removing and disassembling the HVAC housing assembly.

Operation

OPERATION

Refrigerant enters the A/C evaporator from the A/C expansion valve as a low-temperature, low-pressure mixture of liquid and gas. As air flows over the fins of the A/C evaporator, the humidity in the air condenses on the fins, and the heat from the air is absorbed by the refrigerant. Heat absorption causes the refrigerant to boil and vaporize. The refrigerant becomes a low-pressure gas when it leaves the A/C evaporator.

NOTE: Replacement of the refrigerant line O-ring seals and gaskets is required anytime a refrigerant line or expansion valve is disconnected. Failure to replace the rubber O-ring seals and metal gaskets could result in a refrigerant system leak.

The A/C evaporator has no serviceable parts except for the O-ring seals. The O-ring seals used on the connections are made from a special type of rubber not affected by R-134a refrigerant. The O-ring seals must be replaced whenever the A/C expansion valve is removed from the A/C evaporator.

The A/C evaporator cannot be repaired and must be replaced if leaking or damaged.

Removal

REMOVAL

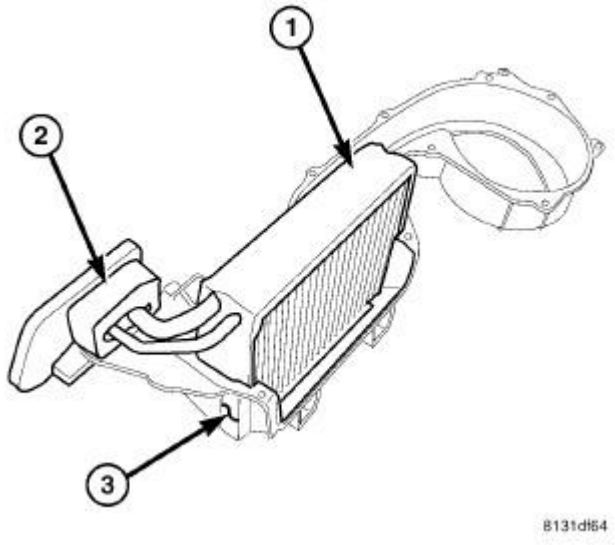

Fig. 141: Evaporator-A/C Removal & Installation
Courtesy of CHRYSLER LLC

NOTE: LHD model shown in illustration. RHD model similar.

1. Remove the HVAC housing assembly. See **Heating and Air Conditioning/Distribution/HOUSING, HVAC - Removal**.
2. Disassemble the HVAC housing as necessary to access the A/C evaporator (1). See **Heating and Air Conditioning/Distribution/HOUSING, HVAC - Disassembly**.
3. Carefully lift the A/C evaporator and the foam seal (2) out of the lower half of the HVAC housing (3).
4. If required, remove the foam seal from the tapping block of the A/C evaporator. If the seal is deformed or damaged, it must be replaced.

Installation

INSTALLATION

CAUTION: Be certain to adjust the refrigerant oil level when servicing the A/C refrigerant system. See Heating and Air Conditioning/Plumbing/OIL, Refrigerant - Standard Procedure. Failure to properly adjust the refrigerant oil level will prevent the A/C system from operating as designed and can cause serious A/C compressor damage.

NOTE: When replacing multiple A/C system components, refer to the REFRIGERANT OIL CAPACITIES chart to determine how much oil should be added to the refrigerant system. See Heating and Air Conditioning/Plumbing/OIL, Refrigerant - Standard Procedure.

NOTE: **If only the A/C evaporator is being replaced, add 60 milliliters (2 fluid ounces) of refrigerant oil to the refrigerant system. Use only refrigerant oil of the type recommended for the A/C compressor in the vehicle.**

NOTE: **Replacement of the refrigerant line O-ring seals and gaskets is required anytime a refrigerant line is disconnected. Failure to replace the rubber O-ring seals and metal gaskets could result in a refrigerant system leak.**

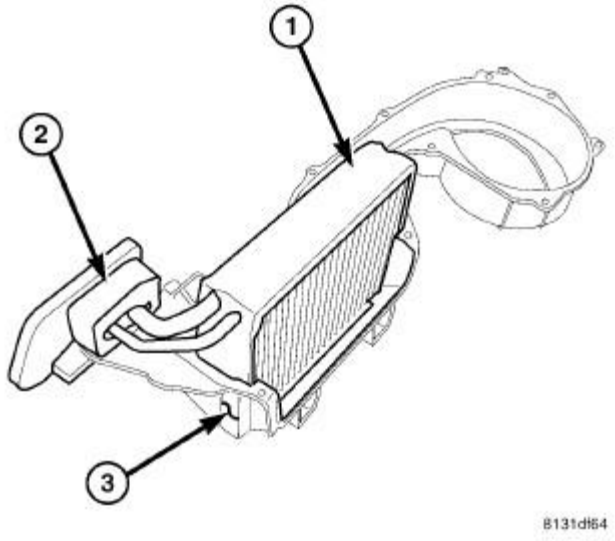

Fig. 142: Evaporator-A/C Removal & Installation
Courtesy of CHRYSLER LLC

NOTE: **LHD model shown in illustration. RHD model similar.**

1. If removed, install the foam seal (2) over the tapping block of the A/C evaporator (1). If the seal is deformed or damaged, it must be replaced.
2. Install the A/C evaporator into the lower half of the HVAC housing (3). Make sure that the evaporator drain within the HVAC housing is clean and unrestricted and that the insulator around the A/C evaporator is properly installed.
3. Assemble the HVAC housing. See **Heating and Air Conditioning/Distribution/HOUSING, HVAC - Assembly**.
4. Install the HVAC housing assembly. See **Heating and Air Conditioning/Distribution/HOUSING, HVAC - Installation**.
5. If the A/C evaporator is being replaced, add 60 milliliters (2 fluid ounces) of refrigerant oil to the refrigerant system. When replacing multiple A/C system components, refer to the **REFRIGERANT OIL CAPACITIES** chart to determine how much oil should be added to the refrigerant system. See **Heating and Air Conditioning/Plumbing/OIL, Refrigerant - Standard Procedure**. Use only refrigerant oil of the type recommended for the A/C compressor in the vehicle.

LINE, A/C DISCHARGE

Description

DESCRIPTION

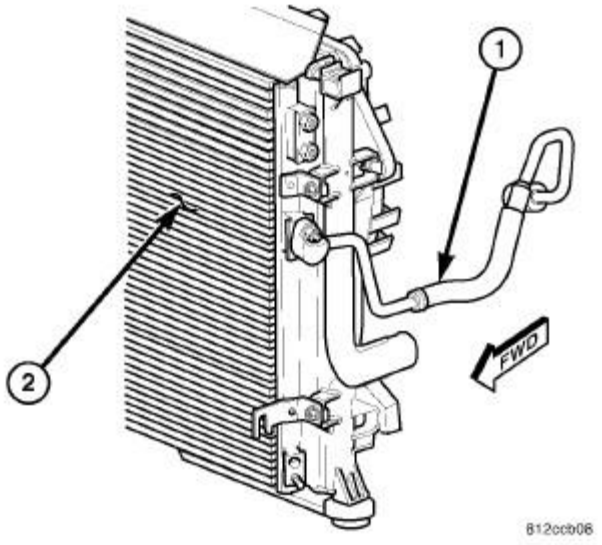

Fig. 143: Line-A/C Discharge Description
Courtesy of CHRYSLER LLC

The A/C discharge line (1) is the refrigerant line that carries refrigerant from the A/C compressor to the A/C condenser (2).

NOTE: Replacement of the refrigerant line O-ring seals and gaskets is required anytime a refrigerant line is disconnected. Failure to replace the rubber O-ring seals and metal gaskets could result in a refrigerant system leak.

The A/C discharge line has no serviceable parts except for the dual plane seals. The seals used on the connections are made from a special type of rubber not affected by R-134a refrigerant. The seals must be replaced whenever the A/C discharge line is disconnected.

The A/C discharge line cannot be repaired and must be replaced if leaking or damaged.

Removal

REMOVAL

WARNING: Refer to the applicable warnings and cautions for this system before performing the following operation. See Heating and Air Conditioning/Plumbing - Warning. See Heating and Air Conditioning/Plumbing - Caution. Failure to follow these instructions may

result in serious or fatal injury.

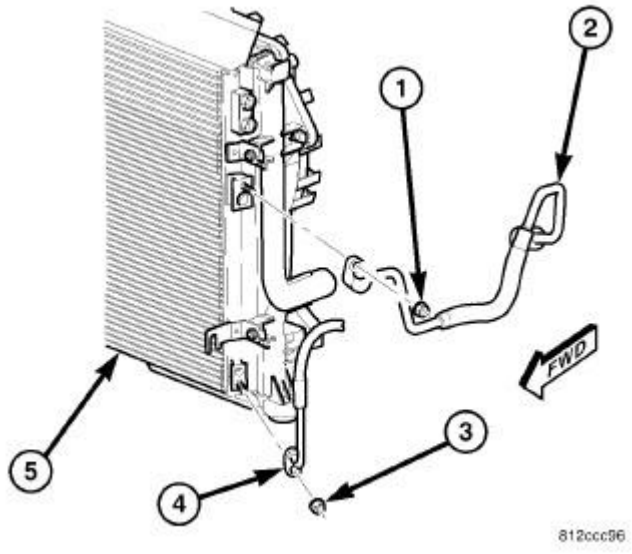

Fig. 144: LINE-A/C DISCHARGE REMOVAL & INSTALLATION
Courtesy of CHRYSLER LLC

1. Disconnect and isolate the negative battery cable.
2. Recover the refrigerant from the refrigerant system. See **Heating and Air Conditioning/Plumbing - Standard Procedure**.
3. Remove the air cleaner housing. Refer to **Engine/Air Intake System/BODY, Air Cleaner - Removal** .
4. Reach through the headlamp opening in the upper radiator support and remove the nut (1) that secures the A/C discharge line (2) to the A/C condenser (5).
5. Disconnect the A/C discharge line from the A/C condenser and remove and discard the dual plane seal.
6. Install plugs in, or tape over the discharge line fitting and condenser inlet port.

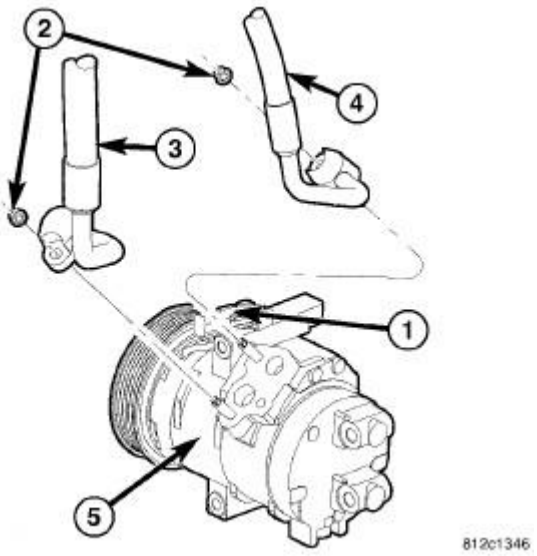

Fig. 145: COMPRESSOR-A/C LINES REMOVAL & INSTALLATION
Courtesy of CHRYSLER LLC

NOTE: Typical A/C compressor and refrigerant lines shown in illustration.

7. Remove the nut (2) that secures the A/C discharge line (4) to the A/C compressor (5).
8. Disconnect the A/C discharge line from the A/C compressor and remove and discard the dual plane seal.
9. Install plugs in, or tape over the opened refrigerant line fitting and the compressor port.
10. Remove the A/C discharge line from the engine compartment.

Installation

INSTALLATION

CAUTION: Be certain to adjust the refrigerant oil level when servicing the A/C refrigerant system. See Heating and Air Conditioning/Plumbing/OIL, Refrigerant - Standard Procedure. Failure to properly adjust the refrigerant oil level will prevent the A/C system from operating as designed and can cause serious A/C compressor damage.

NOTE: When replacing multiple A/C system components, refer to the REFRIGERANT OIL CAPACITIES chart to determine how much oil should be added to the refrigerant system. See Heating and Air Conditioning/Plumbing/OIL, Refrigerant - Standard Procedure.

NOTE: Replacement of the refrigerant line O-ring seals and gaskets is required anytime a refrigerant line is disconnected. Failure to replace the rubber O-ring seals and metal gaskets could result in a refrigerant system leak.

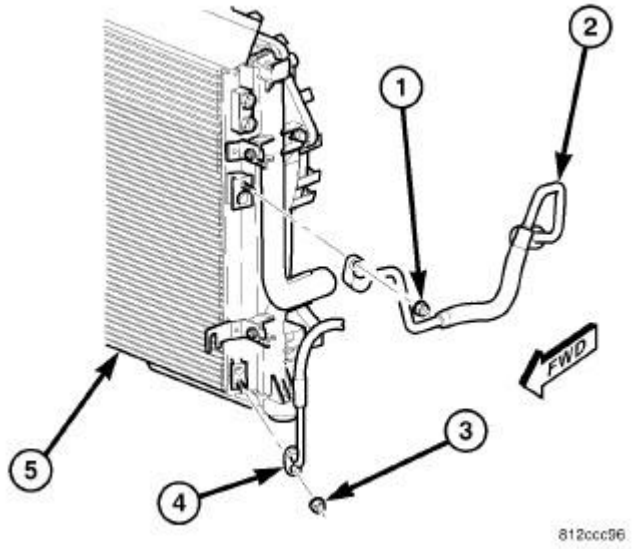

Fig. 146: LINE-A/C DISCHARGE REMOVAL & INSTALLATION
Courtesy of CHRYSLER LLC

1. Position the A/C discharge line (2) into the engine compartment.
2. Remove the tape or plugs from the opened discharge line fitting and the inlet port on the A/C condenser (5).
3. Lubricate a new dual plane seal with clean refrigerant oil and install it onto the discharge line fitting. Use only the specified seal as it is made of a special material for the R-134a system. Use only refrigerant oil of the type recommended for the A/C compressor in the vehicle.
4. Install the A/C discharge line onto the A/C condenser.
5. Reach through the headlamp opening in the upper radiator support and install the nut (1) that secures the A/C discharge line to the A/C condenser. Tighten the nut to 22 N.m (16 ft. lbs.).

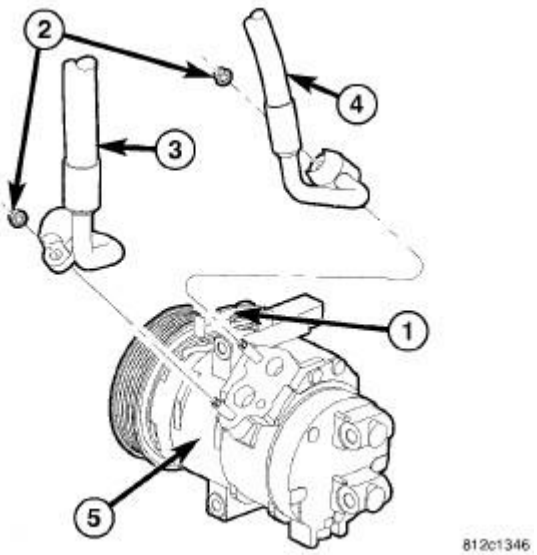

Fig. 147: COMPRESSOR-A/C LINES REMOVAL & INSTALLATION
Courtesy of CHRYSLER LLC

NOTE: Typical A/C compressor and refrigerant lines shown in illustration.

6. Remove the tape or plugs from the opened fitting on the A/C discharge line (4) and the outlet port on the A/C compressor (5).
7. Lubricate a new dual plane seal with clean refrigerant oil and install it onto the discharge line fitting. Use only the specified seal as it is made of a special material for the R-134a system. Use only refrigerant oil of the type recommended for the A/C compressor in the vehicle.
8. Install the A/C discharge line onto the A/C compressor.
9. Install the nut (2) that secures the A/C discharge line to the A/C compressor. Tighten the nut to 23 N.m (17 ft. lbs.).
10. Install the air cleaner housing. Refer to **Engine/Air Intake System/BODY, Air Cleaner - Installation** .
11. Reconnect the negative battery cable.
12. Evacuate the refrigerant system. See **Heating and Air Conditioning/Plumbing - Standard Procedure**.
13. Adjust the refrigerant oil level. See **Heating and Air Conditioning/Plumbing/OIL, Refrigerant - Standard Procedure**.
14. Charge the refrigerant system. See **Heating and Air Conditioning/Plumbing - Standard Procedure**.

LINE, A/C LIQUID

Description

DESCRIPTION

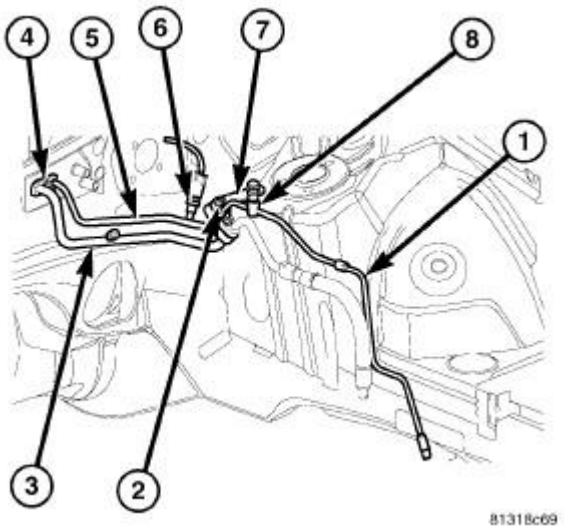

Fig. 148: Line-A/C liquid Description
Courtesy of CHRYSLER LLC

NOTE: LHD model shown in illustration. RHD model similar.

The A/C liquid line is the refrigerant line that carries refrigerant from the A/C condenser to the A/C evaporator. The A/C liquid line is serviced in two sections. The front section of the liquid line (1) connects to the rear section of the liquid line (5) with a nut (2) and includes the high side service port (8). The rear section of the A/C liquid line includes the fitting for the A/C pressure transducer (6) and a mounting bracket (7) and is secured to the A/C expansion valve by a tapping plate (4). The rear section of the A/C liquid line is serviced as an assembly with the rear section of the A/C suction line (3).

NOTE: Replacement of the refrigerant line O-ring seals and gaskets is required anytime a refrigerant line is disconnected. Failure to replace the rubber O-ring seals and metal gaskets could result in a refrigerant system leak.

The A/C liquid line has no serviceable parts except for the dual plane seals, high-side service port valve and its protective cap. The seals used on the connections are made from a special type of rubber not affected by R-134a refrigerant. The seals must be replaced whenever the A/C liquid line is disconnected.

The A/C liquid lines cannot be repaired and must be replaced if leaking or damaged.

Removal

REMOVAL

WARNING: Refer to the applicable warnings and cautions for this system before performing the following operation. See Heating and Air Conditioning/Plumbing - Warning. See Heating and Air Conditioning/Plumbing - Caution. Failure to follow these instructions may result in serious or fatal injury.

NOTE: The A/C liquid line is serviced in two sections. The rear section of the liquid line is serviced as an assembly with the rear section of the A/C suction line.

FRONT SECTION

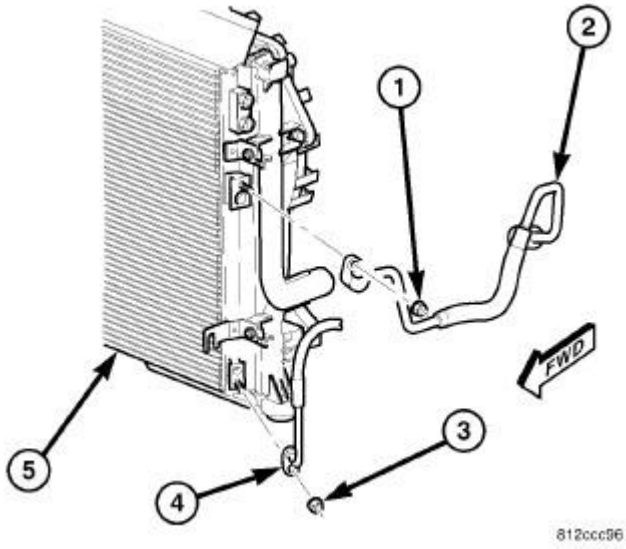

Fig. 149: LINE-A/C DISCHARGE REMOVAL & INSTALLATION
Courtesy of CHRYSLER LLC

1. Disconnect and isolate the negative battery cable.
2. Recover the refrigerant from the refrigerant system. See **Heating and Air Conditioning/Plumbing - Standard Procedure**.
3. Remove the air cleaner housing. Refer to **Engine/Air Intake System/BODY, Air Cleaner - Removal** .
4. Raise and support the vehicle.
5. Remove the front belly pan. Refer to **Body/Exterior/BELLY PAN - Removal** .
6. Remove the nut (3) that secures the front section of the A/C liquid line (4) to the A/C condenser (5).
7. Disconnect the A/C liquid line from the A/C condenser and remove and discard the dual plane seal.
8. Install plugs in, or tape over the opened liquid line fitting and condenser outlet port.

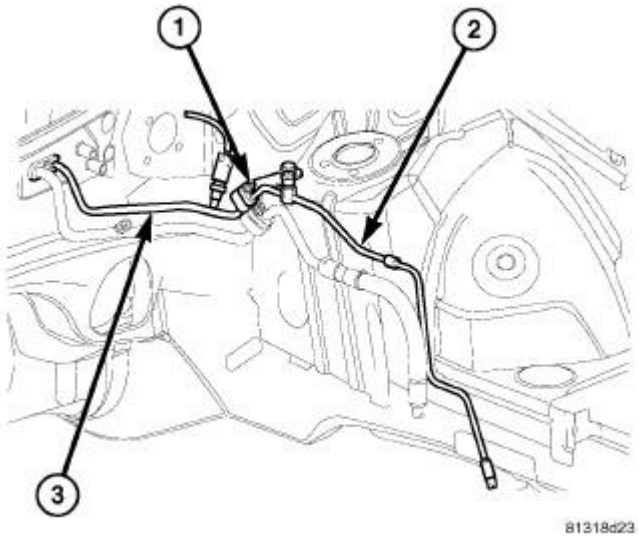

Fig. 150: Removing/Installing Front Liquid A/C Line
Courtesy of CHRYSLER LLC

NOTE: LHD model shown in illustration. RHD model similar.

9. Lower the vehicle.
10. Remove the nut (1) that secures the front section of the A/C liquid line (2) to the rear section of the liquid line (3).
11. Disconnect the front section of the A/C liquid line from the rear section of the liquid line and remove and discard the dual plane seal.
12. Install plugs in, or tape over the opened liquid line fittings.
13. Remove the front section of the A/C liquid line from the engine compartment.

REAR SECTION

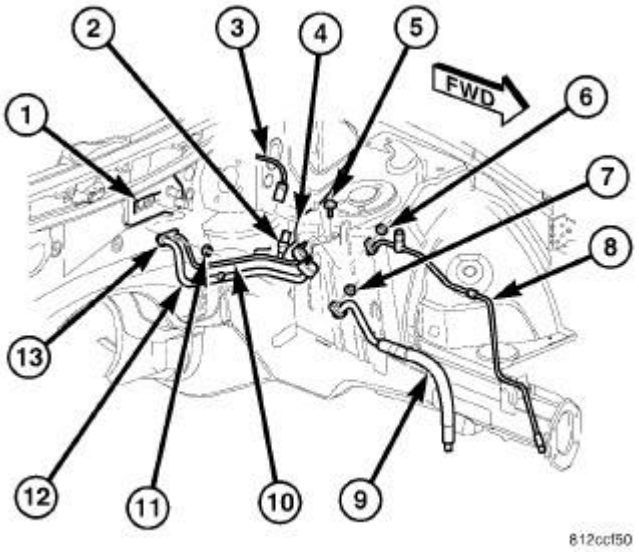

Fig. 151: Line-A/C Liquid/Suction-Rear Removal & Installation
Courtesy of CHRYSLER LLC

NOTE: LHD model shown in illustration. RHD model similar.

1. Disconnect and isolate the negative battery cable.
2. Recover the refrigerant from the refrigerant system. See **Heating and Air Conditioning/Plumbing - Standard Procedure**.
3. On LHD models, remove the air cleaner housing. Refer to **Engine/Air Intake System/BODY, Air Cleaner - Removal** .
4. Remove the nut (6) that secures the front section of the A/C liquid line (8) to the rear section of the liquid line (10).
5. Disconnect the front section of the A/C liquid line from the rear section of the liquid line and remove and discard the dual plane seal.
6. Install plugs in, or tape over the opened liquid line fittings.
7. Remove the nut (7) that secures the front section of the A/C suction line (9) to the rear section of the suction line (12).
8. Disconnect the front section of the A/C suction line from the rear section of the suction line and remove and discard the dual plane seal.
9. Install plugs in, or tape over the opened suction line fittings.
10. Disconnect the wire harness (3) from the A/C pressure transducer (2).
11. Remove the bolt (5) that secures the refrigerant line mounting bracket to the left front shock tower (4).
12. Remove the nut (11) that secures the liquid and suction line tapping block (13) to the A/C expansion valve (1).
13. Disconnect the rear section of the A/C liquid and suction lines from the A/C expansion valve.
14. Remove the dual plane seal from the suction and liquid line fittings and discard.

15. Install plugs in, or tape over the opened suction and liquid line fittings and the expansion valve ports.
16. Remove the rear section of the A/C liquid and suction lines as an assembly from the engine compartment.
17. If required, remove the A/C pressure transducer from the rear section of the A/C liquid line. See **Heating and Air Conditioning/Controls/TRANSDUCER, A/C Pressure - Removal**.

Installation

INSTALLATION

CAUTION: Be certain to adjust the refrigerant oil level when servicing the A/C refrigerant system. See Heating and Air Conditioning/Plumbing/OIL, Refrigerant - Standard Procedure. Failure to properly adjust the refrigerant oil level will prevent the A/C system from operating as designed and can cause serious A/C compressor damage.

NOTE: When replacing multiple A/C system components, refer to the REFRIGERANT OIL CAPACITIES chart to determine how much oil should be added to the refrigerant system. See Heating and Air Conditioning/Plumbing/OIL, Refrigerant - Standard Procedure.

NOTE: Replacement of the refrigerant line O-ring seals and gaskets is required anytime a refrigerant line is disconnected. Failure to replace the rubber O-ring seals and metal gaskets could result in a refrigerant system leak.

NOTE: The A/C liquid line is serviced in two sections. The rear section of the liquid line is serviced as an assembly with the rear section of the A/C suction line.

FRONT SECTION

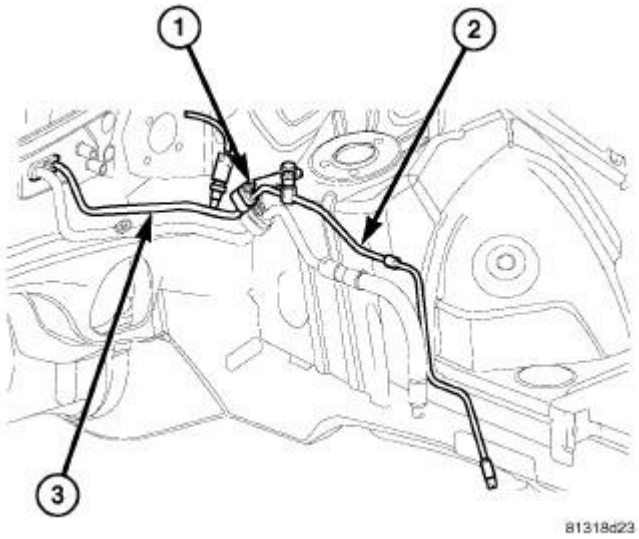

Fig. 152: Removing/Installing Front Liquid A/C Line
Courtesy of CHRYSLER LLC

NOTE: LHD model shown in illustration. RHD model similar.

1. Position the front section of the liquid line (2) into the engine compartment.
2. Remove the tape or plugs from the fittings that connect the front section of the A/C liquid line to the rear section of the A/C liquid line (3).
3. Lubricate a new dual plane seal with clean refrigerant oil and install it onto the liquid line fitting. Use only the specified seal as it is made of a special material for the R-134a system. Use only refrigerant oil of the type recommended for the A/C compressor in the vehicle.
4. Connect the front section of the A/C liquid line to the rear section of the A/C liquid line.
5. Install the nut (1) that secures the front section of the A/C liquid line to the rear section of the A/C liquid line. Tighten the nut to 22 N.m (16 ft. lbs.).

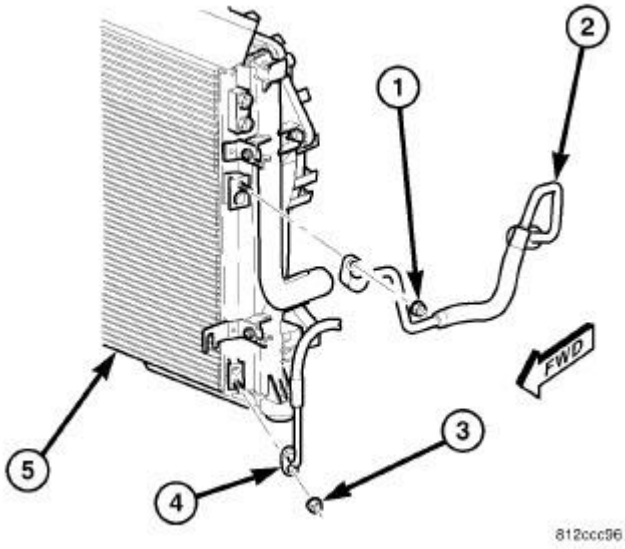

Fig. 153: LINE-A/C DISCHARGE REMOVAL & INSTALLATION
Courtesy of CHRYSLER LLC

6. Raise and support the vehicle.
7. Remove the tape or plugs from the fitting on the front section of the A/C liquid line (4) and the outlet port of the A/C condenser (5).
8. Lubricate a new dual plane seal with clean refrigerant oil and install it onto the liquid line fitting. Use only the specified seal as it is made of a special material for the R-134a system. Use only refrigerant oil of the type recommended for the A/C compressor in the vehicle.
9. Connect the A/C liquid line to the A/C condenser.
10. Install the nut (3) that secures the front section of the A/C liquid line to the A/C condenser. Tighten the nut to 22 N.m (16 ft. lbs.).
11. Install the front belly pan. Refer to **Body/Exterior/BELLY PAN - Installation** .
12. Lower the vehicle.
13. Install the air cleaner housing. Refer to **Engine/Air Intake System/BODY, Air Cleaner - Installation** .
14. Reconnect the negative battery cable.
15. Evacuate the refrigerant system. See **Heating and Air Conditioning/Plumbing - Standard Procedure**.
16. Adjust the refrigerant oil level. See **Heating and Air Conditioning/Plumbing/OIL, Refrigerant - Standard Procedure**.
17. Charge the refrigerant system. See **Heating and Air Conditioning/Plumbing - Standard Procedure**.

REAR SECTION

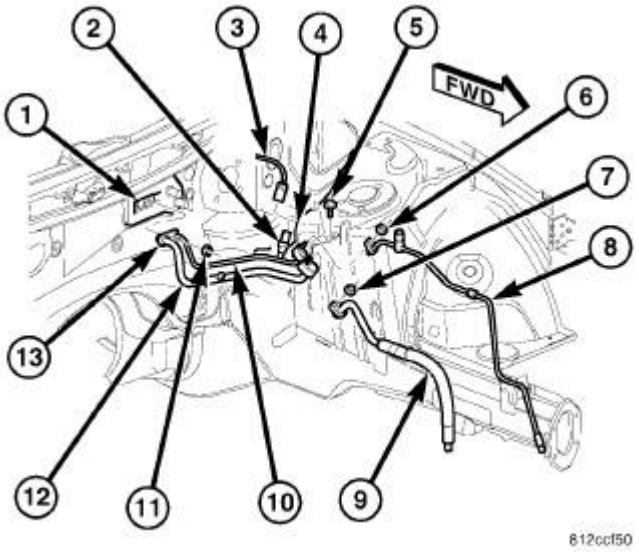

Fig. 154: Line-A/C Liquid/Suction-Rear Removal & Installation
Courtesy of CHRYSLER LLC

NOTE: LHD model shown in illustration. RHD model similar.

1. If removed, install the A/C pressure transducer (2) onto the A/C liquid line (10). See **Heating and Air Conditioning/Controls/TRANSDUCER, A/C Pressure - Installation**.
2. Position the rear section of the A/C liquid line (10) and the rear section of the A/C suction line (12) as an assembly into the engine compartment.
3. Remove the tape or plugs from the suction and liquid line fittings and the ports in the A/C expansion valve (1).
4. Lubricate a new dual plane seal with clean refrigerant oil and install it onto the suction and liquid line fittings. Use only the specified seal as it is made of a special material for the R-134a system. Use only refrigerant oil of the type recommended for the A/C compressor in the vehicle.
5. Connect the rear section of the A/C liquid and suction lines to the A/C expansion valve.
6. Install the nut (11) that secures the liquid and suction line tapping block (13) to the A/C expansion valve. Tighten the nut to 23 N.m (17 ft. lbs.).
7. Install the bolt (5) that secures the refrigerant line mounting bracket to the left front shock tower (4). Tighten the bolt to 11 N.m (97 in. lbs.).
8. Connect the wire harness (3) to the A/C pressure transducer.
9. Remove the tape or plugs from the fittings that connect the front section of the A/C liquid line (8) to the rear section of the A/C liquid line.
10. Lubricate a new dual plane seal with clean refrigerant oil and install it onto the liquid line fitting. Use only the specified seal as it is made of a special material for the R-134a system. Use only refrigerant oil of the type recommended for the A/C compressor in the vehicle.
11. Connect the front section of the A/C liquid line to the rear section of the A/C liquid line.
12. Install the nut (6) that secures the front section of the A/C liquid line to the rear section of the

A/C liquid line. Tighten the nut to 22 N.m (16 ft. lbs.).

13. Remove the tape or plugs from the fittings that connect the front section of the A/C suction line (9) to the rear section of the A/C suction line.
14. Lubricate a new dual plane seal with clean refrigerant oil and install it onto the suction line fitting. Use only the specified seal as it is made of a special material for the R-134a system. Use only refrigerant oil of the type recommended for the A/C compressor in the vehicle.
15. Connect the front section of the A/C suction line to the rear section of the A/C suction line.
16. Install the nut (7) that secures the front section of the A/C suction line to the rear section of the A/C suction line. Tighten the nut to 22 N.m (16 ft. lbs.).
17. Install the air cleaner housing.
18. Reconnect the negative battery cable.
19. Evacuate the refrigerant system. See **Heating and Air Conditioning/Plumbing - Standard Procedure**.
20. Adjust the refrigerant oil level. See **Heating and Air Conditioning/Plumbing/OIL, Refrigerant - Standard Procedure**.
21. Charge the refrigerant system. See **Heating and Air Conditioning/Plumbing - Standard Procedure**.

LINE, A/C SUCTION

Description

DESCRIPTION

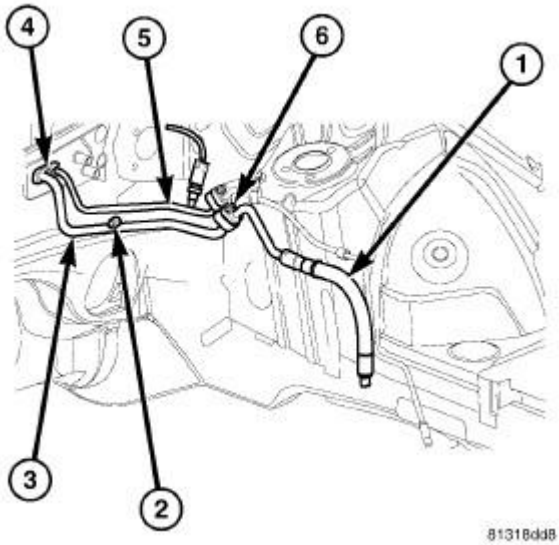

Fig. 155: LINE-A/C SUCTION DESCRIPTION
Courtesy of CHRYSLER LLC

NOTE: LHD model shown in illustration. RHD model similar.

The A/C suction line is the refrigerant line that carries refrigerant from the A/C evaporator to the A/C compressor. The A/C suction line is serviced in two sections. The front section of the suction line (1) connects to the rear section of the suction line (3) with a nut (6). The rear section of the A/C suction line includes the low side service port (2) and is secured to the A/C expansion valve by a tapping plate (4). The rear section of the A/C suction line is serviced as an assembly with the rear section of the A/C liquid line (5).

NOTE: **Replacement of the refrigerant line O-ring seals and gaskets is required anytime a refrigerant line is disconnected. Failure to replace the rubber O-ring seals and metal gaskets could result in a refrigerant system leak.**

The A/C suction line has no serviceable parts except for the dual plane seals, low-side service port valve and its protective cap. The seals used on the connections are made from a special type of rubber not affected by R-134a refrigerant. The seals must be replaced whenever the A/C suction line is disconnected.

The A/C suction lines cannot be repaired and must be replaced if leaking or damaged.

Removal

REMOVAL

WARNING: **Refer to the applicable warnings and cautions for this system before performing the following operation. See Heating and Air Conditioning/Plumbing - Warning. See Heating and Air Conditioning/Plumbing - Caution. Failure to follow these instructions may result in serious or fatal injury.**

NOTE: **The A/C suction line is serviced in two sections. The rear section of the suction line is serviced as an assembly with the rear section of the A/C liquid line.**

FRONT SECTION

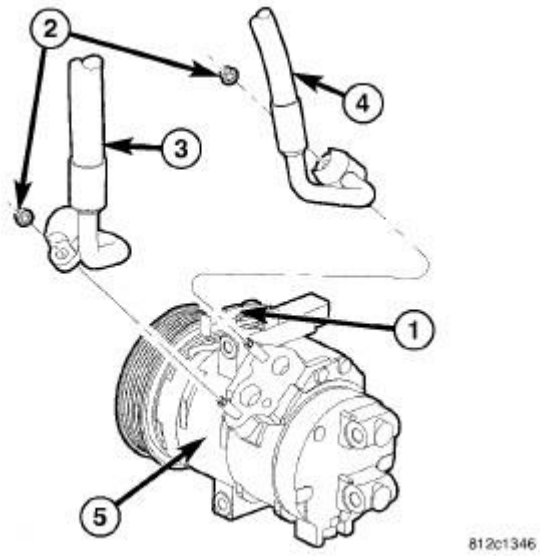

Fig. 156: COMPRESSOR-A/C LINES REMOVAL & INSTALLATION
Courtesy of CHRYSLER LLC

NOTE: Typical A/C compressor and refrigerant lines shown in illustration.

1. Disconnect and isolate the negative battery cable.
2. Recover the refrigerant from the refrigerant system. See **Heating and Air Conditioning/Plumbing - Standard Procedure**.
3. Remove the air cleaner housing. Refer to **Engine/Air Intake System/BODY, Air Cleaner - Removal** .
4. Remove the nut (2) that secures the front section of the A/C suction line (3) to the A/C compressor (5).
5. Disconnect the A/C suction line from the A/C compressor and remove and discard the dual plane seal.
6. Install plugs in, or tape over the opened suction line fitting and compressor inlet port.

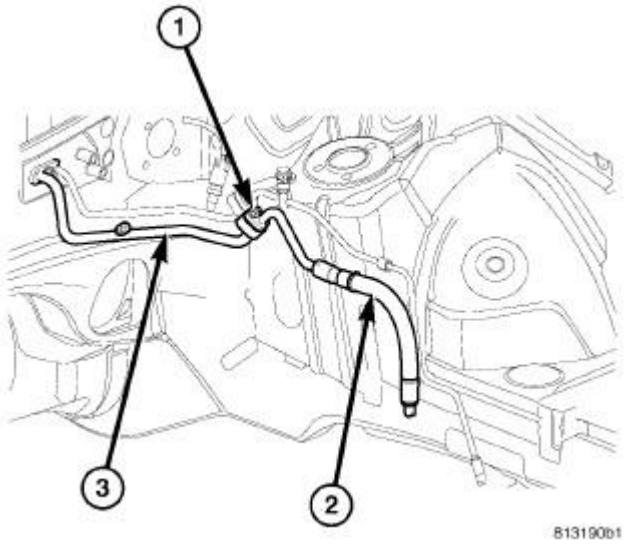

Fig. 157: Removing/Installing Front Suction A/C Line
Courtesy of CHRYSLER LLC

NOTE: LHD model shown in illustration. RHD model similar.

7. Remove the nut (1) that secures the front section of the A/C suction line (2) to the rear section of the suction line (3).
8. Disconnect the front section of the A/C suction line from the rear section of the suction line and remove and discard the dual plane seal.
9. Install plugs in, or tape over the opened suction line fittings.
10. Remove the front section of the A/C suction line from the engine compartment.

REAR SECTION

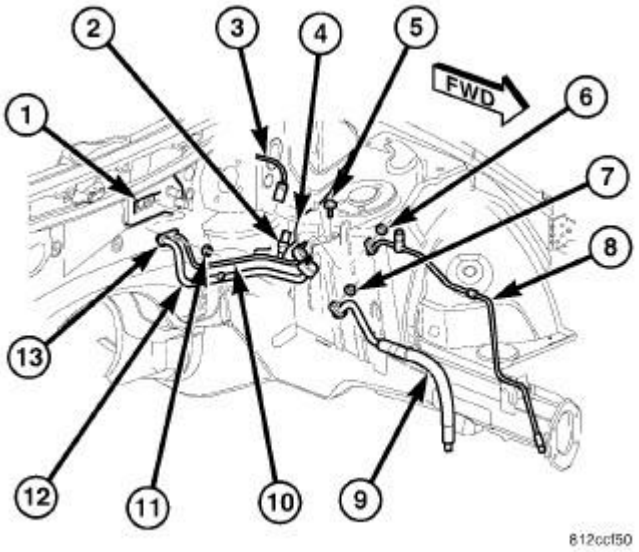

Fig. 158: Line-A/C Liquid/Suction-Rear Removal & Installation
Courtesy of CHRYSLER LLC

NOTE: LHD model shown in illustration. RHD model similar.

1. Disconnect and isolate the negative battery cable.
2. Recover the refrigerant from the refrigerant system. See **Heating and Air Conditioning/Plumbing - Standard Procedure**.
3. Remove the air cleaner housing. Refer to **Engine/Air Intake System/BODY, Air Cleaner - Removal** .
4. Remove the nut (7) that secures the front section of the A/C suction line (9) to the rear section of the suction line (12).
5. Disconnect the front section of the A/C suction line from the rear section of the suction line and remove and discard the dual plane seal.
6. Install plugs in, or tape over the opened suction line fittings.
7. Remove the nut (6) that secures the front section of the A/C liquid line (8) to the rear section of the liquid line (10).
8. Disconnect the front section of the A/C liquid line from the rear section of the liquid line and remove and discard the dual plane seal.
9. Install plugs in, or tape over the opened liquid line fittings.
10. Disconnect the wire harness (3) from the A/C pressure transducer (2).
11. Remove the bolt (5) that secures the refrigerant line mounting bracket to the left front shock tower (4).
12. Remove the nut (11) that secures the liquid and suction line tapping block (13) to the A/C expansion valve (1).
13. Disconnect the rear section of the A/C suction and liquid lines from the A/C expansion valve.
14. Remove the dual plane seal from the suction and liquid line fittings and discard.

15. Install plugs in, or tape over the opened suction and liquid line fittings and the expansion valve ports.
16. Remove the rear section of the A/C suction and liquid lines as an assembly from the engine compartment.
17. If required, remove the A/C pressure transducer from the rear section of the A/C liquid line. See **Heating and Air Conditioning/Controls/TRANSDUCER, A/C Pressure - Removal**.

Installation

INSTALLATION

CAUTION: Be certain to adjust the refrigerant oil level when servicing the A/C refrigerant system. See Heating and Air Conditioning/Plumbing/OIL, Refrigerant - Standard Procedure. Failure to properly adjust the refrigerant oil level will prevent the A/C system from operating as designed and can cause serious A/C compressor damage.

NOTE: When replacing multiple A/C system components, refer to the REFRIGERANT OIL CAPACITIES chart to determine how much oil should be added to the refrigerant system. See Heating and Air Conditioning/Plumbing/OIL, Refrigerant - Standard Procedure.

NOTE: Replacement of the refrigerant line O-ring seals and gaskets is required anytime a refrigerant line is disconnected. Failure to replace the rubber O-ring seals and metal gaskets could result in a refrigerant system leak.

NOTE: The A/C suction line is serviced in two sections. The rear section of the suction line is serviced as an assembly with the rear section of the A/C liquid line.

FRONT SECTION

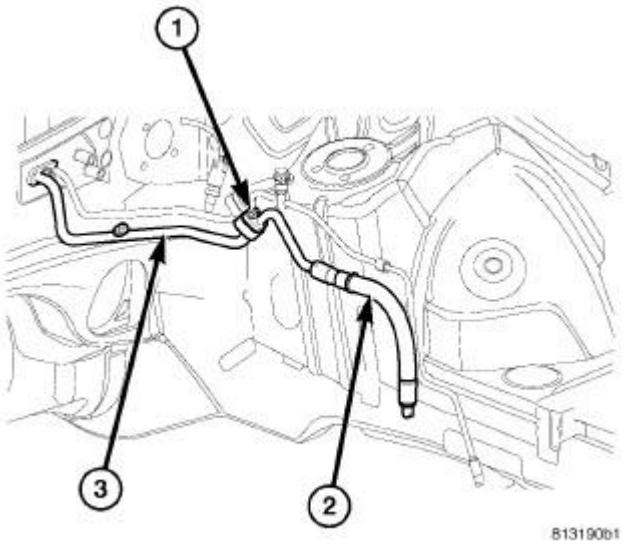

Fig. 159: Removing/Installing Front Suction A/C Line
Courtesy of CHRYSLER LLC

NOTE: LHD model shown in illustration. RHD model similar.

1. Position the front section of the A/C suction line (2) into the engine compartment.
2. Remove the tape or plugs from the fittings that connect the front section of the A/C suction line to the rear section of the A/C suction line (3).
3. Lubricate a new dual plane seal with clean refrigerant oil and install it onto the suction line fitting. Use only the specified seal as it is made of a special material for the R-134a system. Use only refrigerant oil of the type recommended for the A/C compressor in the vehicle.
4. Connect the front section of the A/C suction line to the rear section of the A/C suction line.
5. Install the nut (1) that secures the front section of the A/C suction line to the rear section of the A/C suction line. Tighten the nut to 22 N.m (16 ft. lbs.).

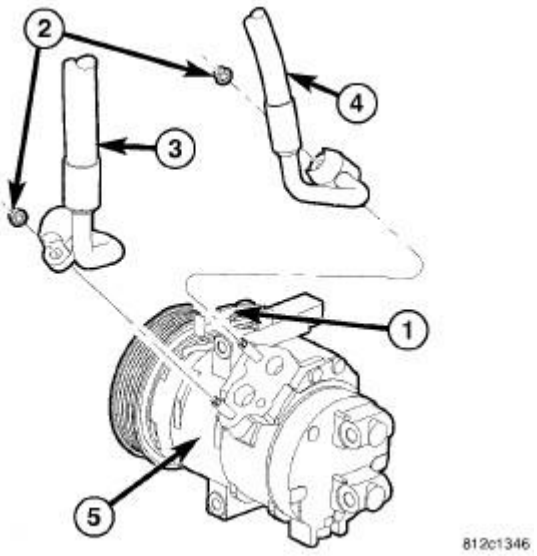

Fig. 160: COMPRESSOR-A/C LINES REMOVAL & INSTALLATION
Courtesy of CHRYSLER LLC

NOTE: Typical A/C compressor and refrigerant lines shown in illustration.

6. Remove the tape or plugs from the fitting on the front section of the A/C suction line (3) and the inlet port of the A/C compressor (5).
7. Lubricate a new dual plane seal with clean refrigerant oil and install it onto the suction line fitting. Use only the specified seal as it is made of a special material for the R-134a system. Use only refrigerant oil of the type recommended for the A/C compressor in the vehicle.
8. Connect the A/C suction line to the A/C compressor.
9. Install the nut (2) that secures the front section of the A/C suction line to the A/C compressor. Tighten the nut to 23 N.m (17 ft. lbs.).
10. Install the air cleaner housing. Refer to **Engine/Air Intake System/BODY, Air Cleaner - Installation** .
11. Reconnect the negative battery cable.
12. Evacuate the refrigerant system. See **Heating and Air Conditioning/Plumbing - Standard Procedure**.
13. Adjust the refrigerant oil level. See **Heating and Air Conditioning/Plumbing/OIL, Refrigerant - Standard Procedure**.
14. Charge the refrigerant system. See **Heating and Air Conditioning/Plumbing - Standard Procedure**.

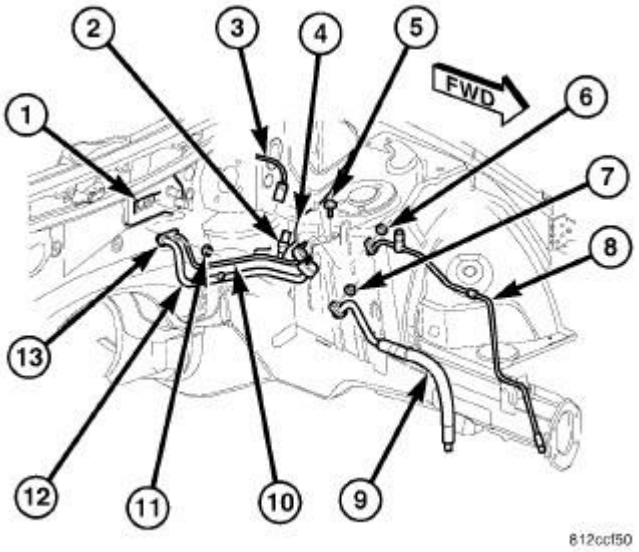

Fig. 161: Line-A/C Liquid/Suction-Rear Removal & Installation
Courtesy of CHRYSLER LLC

NOTE: LHD model shown in illustration. RHD model similar.

1. If removed, install the A/C pressure transducer (2) onto the A/C liquid line (10). See **Heating and Air Conditioning/Controls/TRANSDUCER, A/C Pressure - Installation**.
2. Position the rear section of the A/C suction line (12) and the rear section of the A/C liquid line (10) as an assembly into the engine compartment.
3. Remove the tape or plugs from the suction and liquid line fittings and the ports in the A/C expansion valve (1).
4. Lubricate a new dual plane seal with clean refrigerant oil and install it onto the suction and liquid line fittings. Use only the specified seal as it made of a special material for the R-134a system. Use only refrigerant oil of the type recommended for the A/C compressor in the vehicle.
5. Connect the rear section of the A/C liquid and suction lines to the A/C expansion valve.
6. Install the nut (11) that secures the liquid and suction line tapping block (13) to the A/C expansion valve. Tighten the nut to 23 N.m (17 ft. lbs.).
7. Install the bolt (5) that secures the refrigerant line mounting bracket to the left front shock tower (4). Tighten the bolt to 11 N.m (97 in. lbs.).
8. Connect the wire harness (3) to the A/C pressure transducer.
9. Remove the tape or plugs from the fittings that connect the front section of the A/C liquid line (8) to the rear section of the A/C liquid line.
10. Lubricate a new dual plane seal with clean refrigerant oil and install it onto the liquid line fitting. Use only the specified seal as it is made of a special material for the R-134a system. Use only refrigerant oil of the type recommended for the A/C compressor in the vehicle.
11. Connect the front section of the A/C liquid line to the rear section of the A/C liquid line.
12. Install the nut (6) that secures the front section of the A/C liquid line to the rear section of the

A/C liquid line. Tighten the nut to 22 N.m (16 ft. lbs.).

13. Remove the tape or plugs from the fittings that connect the front section of the A/C suction line (9) to the rear section of the A/C suction line.
14. Lubricate a new dual plane seal with clean refrigerant oil and install it onto the suction line fitting. Use only the specified seal as it is made of a special material for the R-134a system. Use only refrigerant oil of the type recommended for the A/C compressor in the vehicle.
15. Connect the front section of the A/C suction line to the rear section of the A/C suction line.
16. Install the nut (7) that secures the front section of the A/C suction line to the rear section of the A/C suction line. Tighten the nut to 22 N.m (16 ft. lbs.).
17. Install the air cleaner housing.
18. Reconnect the negative battery cable.
19. Evacuate the refrigerant system. See **Heating and Air Conditioning/Plumbing - Standard Procedure**.
20. Adjust the refrigerant oil level. See **Heating and Air Conditioning/Plumbing/OIL, Refrigerant - Standard Procedure**.
21. Charge the refrigerant system. See **Heating and Air Conditioning/Plumbing - Standard Procedure**.

OIL, REFRIGERANT

Description

DESCRIPTION

The refrigerant oil used in R-134a refrigerant systems is a synthetic-based, polyalkylene glycol (PAG), wax-free lubricant. Mineral-based R-12 refrigerant oils are not compatible with PAG oils, and should never be introduced to an R-134a refrigerant system.

There are different PAG oils available, and each contains a different additive package. The A/C compressor used in this vehicle is designed to use ND-8 PAG refrigerant oil. Use only this type of refrigerant oil the refrigerant system.

Operation

OPERATION

After performing any refrigerant recovery or recycling operation, always replenish the refrigerant system with the same amount of the recommended refrigerant oil as was removed. Too little refrigerant oil can cause A/C compressor damage, and too much can reduce A/C system performance.

PAG refrigerant oil is more hygroscopic than mineral oil, and will absorb any moisture it comes into contact with, even moisture in the air. The PAG oil container should always be kept tightly capped until it is ready to be used. After use, recap the oil container immediately to prevent moisture contamination.

Standard Procedure

REFRIGERANT OIL CAPACITY

When an A/C system is assembled at the factory, all components except the A/C compressor are refrigerant oil free. After the refrigerant system has been charged and operated, the refrigerant oil in the A/C compressor is dispersed throughout the refrigerant system. The receiver/drier, A/C evaporator, A/C condenser and the A/C compressor will each retain a significant amount of the needed refrigerant oil.

It is important to have the correct amount of refrigerant oil in the A/C system. This ensures proper lubrication of the A/C compressor. Too little oil will result in damage to the A/C compressor, while too much oil will reduce the cooling capacity of the A/C system and consequently result in higher discharge air temperatures.

CAUTION: The oil used in the A/C compressor is ND-8 PAG R-134a refrigerant oil. Only refrigerant oil of the same type should be used to service the A/C system. Do not use any other refrigerant oil. The oil container should be kept tightly capped until it is ready for use and then tightly capped after use to prevent contamination from dirt and moisture. Refrigerant oil will quickly absorb any moisture it comes in contact with, therefore, special effort must be used to keep all R-134a system components moisture-free. Moisture in the refrigerant oil is very difficult to remove and will cause a reliability problem with the A/C compressor.

NOTE: Most reclaim/recycling equipment will measure the lubricant being removed during recovery. This amount of lubricant should be added back into the system. Refer to the reclaim/recycling equipment manufacturers instructions.

It will not be necessary to check the oil level in the A/C compressor or to add oil, unless there has been an oil loss. An oil loss may occur due to a rupture or leak from a refrigerant line, a connector fitting, a component, or a component seal. If a leak occurs, add 30 milliliters (1 fluid ounce) of refrigerant oil to the refrigerant system after the repair has been made. Refrigerant oil loss will be evident at the leak point by the presence of a wet, shiny surface around the leak.

Refrigerant oil must be added when an A/C condenser, A/C evaporator or A/C receiver/drier is replaced (refer to the REFRIGERANT OIL CAPACITIES chart).

The refrigerant oil level in a new A/C compressor must first be adjusted prior to compressor installation (refer to **COMPRESSOR OIL DRAIN PROCEDURE**).

REFRIGERANT OIL CAPACITIES

COMPONENT	ml.	oz.
Total System Fill	180	6.1
A/C Condenser	30	1.0
A/C Evaporator	60	2.0

A/C Receiver/drier	30	1.0
A/C Compressor	Drain and measure the oil from the old compressor (See COMPRESSOR OIL DRAIN PROCEDURE below)	

COMPRESSOR OIL DRAIN PROCEDURE

CAUTION: Be certain to adjust the refrigerant system oil level when replacing an A/C compressor. Failure to properly drain and measure the refrigerant oil from the A/C compressor can prevent the A/C system from operating as designed and cause serious compressor damage.

The A/C compressor is filled with refrigerant oil from the factory. Use the following procedure to drain and measure refrigerant oil from the A/C compressor.

1. Drain all of the refrigerant oil from the old A/C compressor into a clean measured container.
2. Drain all of the refrigerant oil from the new A/C compressor into a clean measured container.
3. Refill the new A/C compressor with the same amount of refrigerant oil that was drained out of the old compressor. Use only clean refrigerant oil of the type recommended for the A/C compressor in the vehicle.
4. Install the new A/C compressor onto the engine. See **Heating and Air Conditioning/Plumbing/COMPRESSOR, A/C - Installation**.

REFRIGERANT

Description

DESCRIPTION

The refrigerant used in this air conditioning system is a HydroFluoroCarbon (HFC), type R-134a. Unlike R-12, which is a ChloroFluoroCarbon (CFC), R-134a refrigerant does not contain ozone-depleting chlorine. R-134a refrigerant is a non-toxic, non-flammable, clear, and colorless liquefied gas.

Even though R-134a does not contain chlorine, it must be reclaimed and recycled just like CFC-type refrigerants. This is because R-134a is a greenhouse gas and can contribute to global warming. See **Heating and Air Conditioning/Plumbing - Standard Procedure**.

Operation

OPERATION

R-134a refrigerant is not compatible with R-12 refrigerant in an A/C system. Even a small amount of R-12 refrigerant added to an R-134a refrigerant system will cause A/C compressor failure, refrigerant oil sludge or poor A/C system performance. In addition, the polyalkylene glycol (PAG) synthetic refrigerant oils used in an R-134a refrigerant system are not compatible with the mineral-based refrigerant oils used in an R-12 refrigerant system.

R-134a refrigerant system service ports, service tool couplers and refrigerant dispensing bottles have all been designed with unique fittings to ensure that an R-134a refrigerant system is not accidentally contaminated with the wrong refrigerant (R-12). There are also labels posted in the engine compartment of the vehicle and on the A/C compressor to identify that the A/C system is equipped with R-134a refrigerant.

Specifications

REFRIGERANT CHARGE CAPACITY

REFRIGERANT CHARGE CAPACITY

Application	Capacity
All Models	0.737 kg (1.625 lbs.)

VALVE, A/C EXPANSION

Description

DESCRIPTION

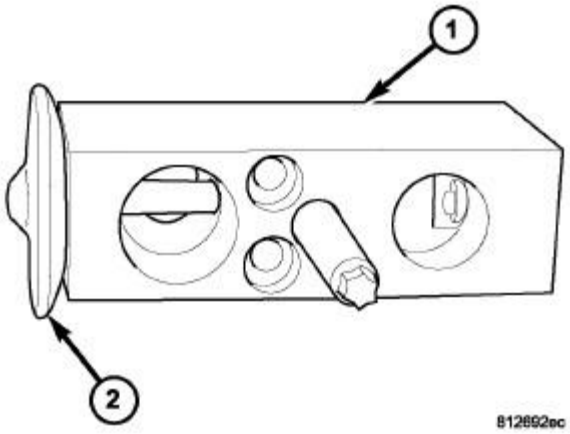

Fig. 162: A/C Expansion Valve-Typical
Courtesy of CHRYSLER LLC

The A/C expansion valve controls the amount of refrigerant entering the A/C evaporator and is of a thermostatic expansion valve (TXV) design. The A/C expansion valve consists of an aluminum H-valve type body (1) with an integral thermal sensor (2) and is located at the dash panel between the A/C refrigerant lines and the A/C evaporator.

Operation

OPERATION

The A/C expansion valve controls the high-pressure, low temperature liquid refrigerant from the A/C liquid line and converts it into a low-pressure, low-temperature mixture of liquid and gas before it

enters the A/C evaporator. A mechanical sensor in the A/C expansion valve monitors the temperature and pressure of the refrigerant leaving the A/C evaporator through the A/C suction line, and adjusts the orifice size at the liquid line port to let the proper amount of refrigerant into the evaporator to meet the vehicle A/C cooling requirements. Controlling the refrigerant flow through the A/C evaporator ensures that none of the refrigerant leaving the A/C evaporator is still in a liquid state, which could damage the A/C compressor.

NOTE: **Replacement of the refrigerant line O-ring seals is required anytime a refrigerant line is disconnected from the expansion valve. Failure to replace the rubber O-ring seals could result in a refrigerant system leak.**

The A/C expansion valve is factory calibrated and cannot be adjusted or repaired and must be replaced if inoperative or damaged.

Diagnosis and Testing

A/C EXPANSION VALVE

WARNING: **Refer to the applicable warnings and cautions for this system before performing the following operation. See Heating and Air Conditioning/Plumbing - Warning. See Heating and Air Conditioning/Plumbing - Caution. Failure to follow these instructions may result in serious or fatal injury.**

NOTE: **The A/C expansion valve should only be tested following testing of the A/C compressor.**

NOTE: **Liquid CO^2 is required to test the A/C expansion valve. This material is available from most welding supply facilities. Liquid CO^2 is also available from companies which service and sell fire extinguishers.**

When testing the A/C expansion valve, the work area and the vehicle temperature must be 21° to 27° C (70° to 85°F). To test the expansion valve:

1. Connect a charging station or manifold gauge set to the refrigerant system service ports. See **Heating and Air Conditioning/Plumbing - Standard Procedure**.
2. Verify the refrigerant system charge level by conducting the A/C Performance Test. See **Heating and Air Conditioning - Diagnosis and Testing**.
3. Close all doors, windows and vents to the passenger compartment.
4. Set the A/C-heater controls so that the A/C compressor is operating, the temperature control is in the highest temperature position, the mode-air doors is directing air output to the floor and the blower motor operating is operating at the highest speed.
5. Start the engine and allow it to idle. After the engine has reached normal operating temperature, allow the passenger compartment to heat up. This will create the need for maximum refrigerant flow into the A/C evaporator.

6. If the refrigerant charge is sufficient, the discharge (high pressure) gauge should read 827 kPa to 1655 kPa (120 psi to 240 psi). The suction (low pressure) gauge should read 207 kPa to 345 kPa (30 psi to 50 psi). If OK, go to step 7. If not OK, replace the inoperative A/C expansion valve.

   WARNING: Protect the skin and eyes from exposure to liquid CO^2 or personal injury can result.

7. If the suction (low pressure) gauge reads within the specified range, freeze the A/C expansion valve for 30 seconds using liquid CO^2 or another suitable super-cold material. **Do not spray R-134a or R-12 refrigerant on the A/C expansion valve for this test.** The suction (low pressure) gauge reading should drop by 69 kPa (10 psi). If OK, go to step 8. If not OK, replace the inoperative A/C expansion valve. See **Heating and Air Conditioning/Plumbing/VALVE, A/C Expansion - Removal**.
8. Allow the A/C expansion valve to thaw. The suction (low pressure) gauge reading should stabilize at 207 kPa to 345 kPa (30 psi to 50 psi). If not OK, replace the inoperative A/C expansion valve. See **Heating and Air Conditioning/Plumbing/VALVE, A/C Expansion - Removal**.

Removal

REMOVAL

WARNING: Refer to the applicable warnings and cautions for this system before performing the following operation. See Heating and Air Conditioning/Plumbing - Warning. See Heating and Air Conditioning/Plumbing - Caution. Failure to follow these instructions may result in serious or fatal injury.

NOTE: LHD model shown in illustrations. RHD model similar.

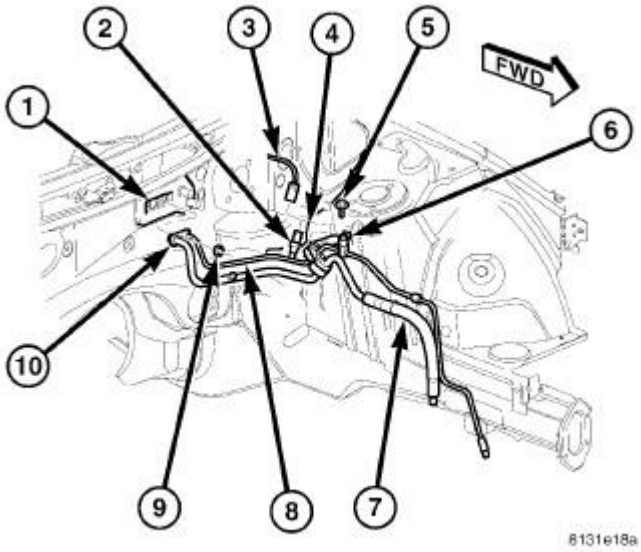

Fig. 163: Valve-A/C Expansion-Refrigerant Lines Removal & Installation
Courtesy of CHRYSLER LLC

1. Disconnect and isolate the negative battery cable.
2. Recover the refrigerant from the refrigerant system. See **Heating and Air Conditioning/Plumbing - Standard Procedure**.
3. Remove the bolt (5) that secures the refrigerant line mounting bracket (6) to the left front shock tower (4).
4. Remove the nut (9) that secures the refrigerant line tapping block (10) to the A/C expansion valve (1).
5. Disconnect the wire harness (3) from the A/C pressure transducer (2) to help allow access to the A/C expansion valve.
6. Disconnect the A/C suction line (7) and the A/C liquid line (8) from the A/C expansion valve and position the refrigerant lines out of the way.
7. Remove the dual plane seal from the suction and liquid line fittings and discard.
8. Install plugs in, or tape over the opened suction and liquid line fittings.

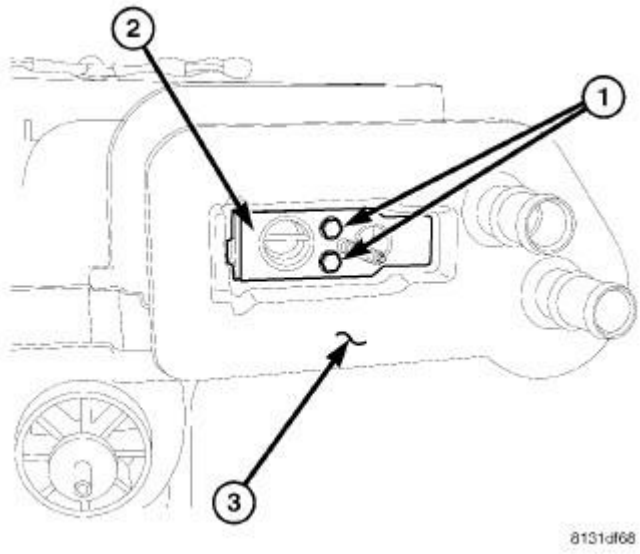

Fig. 164: Valve-A/C Expansion Removal & Installation
Courtesy of CHRYSLER LLC

9. Remove the two bolts (1) that secure the A/C expansion valve (2) to the evaporator tube tapping block located within the foam seal (3).
10. Remove the A/C expansion valve from the evaporator tube tapping block and foam seal.
11. Remove the dual plane seal from the evaporator tube fittings and discard.
12. Install plugs in, or tape over the opened evaporator tube fittings and all expansion valve ports.

Installation

INSTALLATION

CAUTION: Be certain to adjust the refrigerant oil level when servicing the A/C refrigerant system. See Heating and Air Conditioning/Plumbing/OIL, Refrigerant - Standard Procedure. Failure to properly adjust the refrigerant oil level will prevent the A/C system from operating as designed and can cause serious A/C compressor damage.

NOTE: When replacing multiple A/C system components, refer to the REFRIGERANT OIL CAPACITIES chart to determine how much oil should be added to the refrigerant system. See Heating and Air Conditioning/Plumbing/OIL, Refrigerant - Standard Procedure.

NOTE: Replacement of the refrigerant line O-ring seals and gaskets is required anytime a refrigerant line is disconnected. Failure to replace the rubber O-ring seals and metal gaskets could result in a refrigerant system leak.

NOTE: LHD model shown in illustrations. RHD model similar.

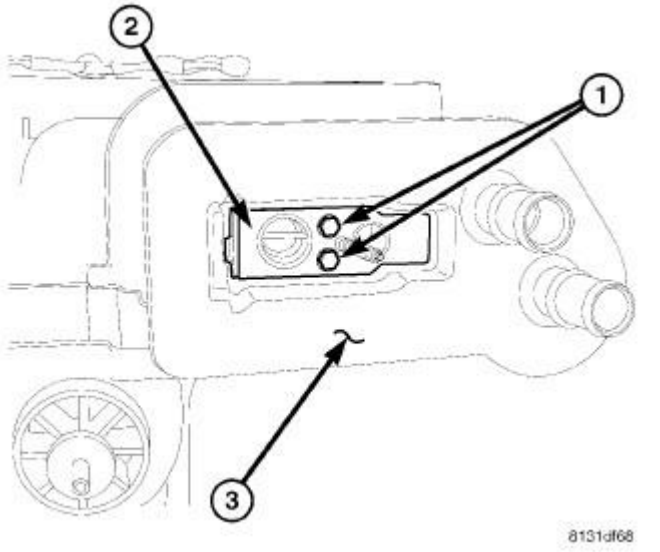

Fig. 165: Valve-A/C Expansion Removal & Installation
Courtesy of CHRYSLER LLC

1. Remove the tape or plugs from the evaporator tube fittings and all of the expansion valve ports.
2. Lubricate a new dual plane seal with clean refrigerant oil and install it onto the evaporator tube fittings. Use only the specified seal as it is made of a special material for the R-134a system. Use only refrigerant oil of the type recommended for the A/C compressor in the vehicle.
3. Install the A/C expansion valve (2) onto the evaporator tube tapping block located within the foam seal (3).
4. Install the two bolts (1) that secure the A/C expansion valve to the evaporator tube tapping block. Tighten the bolts to 11 N.m (97 in. lbs.).

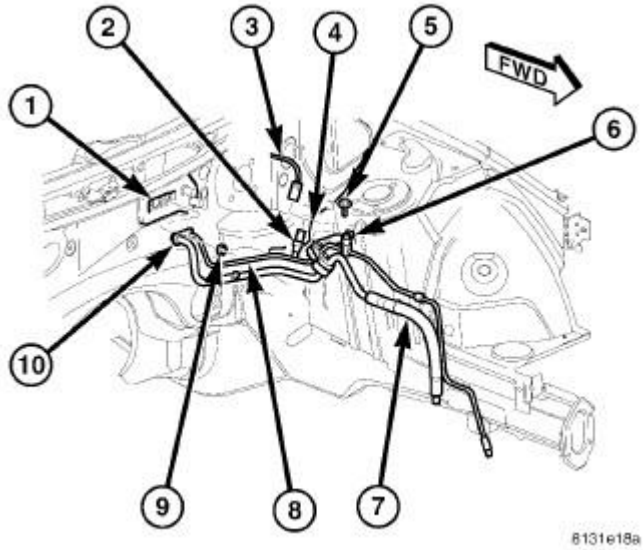

Fig. 166: Valve-A/C Expansion-Refrigerant Lines Removal & Installation

Courtesy of CHRYSLER LLC

5. Remove the tape or plugs from the suction and liquid line fittings.
6. Lubricate a new dual plane seal with clean refrigerant oil and install it onto the suction and liquid line fittings. Use only the specified seal as it is made of a special material for the R-134a system. Use only refrigerant oil of the type recommended for the A/C compressor in the vehicle.
7. Connect the A/C suction line (7) and the A/C liquid line (8) to the A/C expansion valve (1).
8. Install the nut (9) that secures the refrigerant line tapping block (10) to the A/C expansion valve. Tighten the nut to 23 N.m (17 ft. lbs.).
9. Install the bolt (5) that secures the refrigerant line mounting bracket (6) to the left front shock tower (4). Tighten the bolt to 11 N.m (97 in. lbs.).
10. Connect the wire harness (3) to the A/C pressure transducer (2).
11. Reconnect the negative battery cable.
12. Evacuate the refrigerant system. See **Heating and Air Conditioning/Plumbing - Standard Procedure**.
13. Adjust the refrigerant oil level. See **Heating and Air Conditioning/Plumbing/OIL, Refrigerant - Standard Procedure**.
14. Charge the refrigerant system. See **Heating and Air Conditioning/Plumbing - Standard Procedure**.

ENGINE

Ignition Control - Service Information - Challenger

DESCRIPTION

DESCRIPTION

NOTE: All engines use a fixed ignition timing system. Basic ignition timing is not adjustable. All spark advance is determined by the Powertrain Control Module (PCM).

The ignition system used on these engines is referred to as coil on plug. The system's four main components are the coils, crankshaft position sensor, spark plugs, and camshaft position sensors. The coil on plug ignition system utilizes an ignition coil for every cylinder. The ignition coils are mounted directly over the each spark plug.

OPERATION

OPERATION

The crankshaft position sensor and camshaft position sensor are hall effect devices. The camshaft position sensor and crankshaft position sensor generate square wave pulses that are inputs to the Powertrain Control Module (PCM). The PCM determines engine position from these sensors. The PCM calculates injector sequence and ignition timing from crankshaft AND camshaft position.

SPECIFICATIONS

FIRING ORDER

3.5L

The firing order is 1-2-3-4-5-6.

6.1L

The firing order is 1-8-4-3-6-5-7-2.

SPARK PLUGS

SPARK PLUGS

Engine	Supplier	Spark Plug	Electrode Gap
3.5L	NGK	ZFR5LP-13G	1.27 mm (0.050 in.)
5.7L	NGK	LZFR5C-11G	1.00 mm (0.040 in.)
6.1L	NGK	PLZTR5A-13	1.00 mm (0.040 in.)

IGNITION RESISTANCE

IGNITION COIL RESISTANCE

IGNITION COIL RESISTANCE

MANUFACTURER	Engine	Primary Resistance at 21°C-27°C (70°F-80°F)	Secondary Resistance at 21°C-27°C (70°F-80°F)
Diamond Electric Mfg. Corporation	3.5L	0.495 to 0.605 ohms	5.13K to 6.27K ohms
Diamond Electric Mfg. Corporation	6.1L	0.540 to 0.660 ohms	* 9.24K to 11.76K ohms
* Not directly measurable due to diode in circuit.			

TORQUE

TORQUE SPECIFICATIONS

DESCRIPTION	N.m	Ft. Lbs.	In. Lbs.
Camshaft Position Sensor (CMP) - 3.5L	12	-	106
Camshaft Position Sensor (CMP) - 6.1L	12	-	106
Crankshaft Position Sensor (CKP) - 3.5L	12	-	106
Crankshaft Position Sensor (CKP) - 6.1L	12	-	106
Ignition Coil Capacitor Nut - 3.5L	28	20.5	-
Ignition Coil Mounting - 3.5L	8	-	71
Ignition Coil Mounting - 6.1L	12	-	106
Knock Sensor - 3.5L	20	15	-
* Knock Sensor - 6.1L	20	15	-
Spark Plugs - 3.5L	27	20	-
Spark Plugs - 6.1L	17.5	13	-
Negative Battery Cable Nut	5	-	45
* Do not apply any sealant, thread-locker or adhesive to bolts. Poor sensor performance may result.			

CAPACITOR, IGNITION

REMOVAL

3.5L

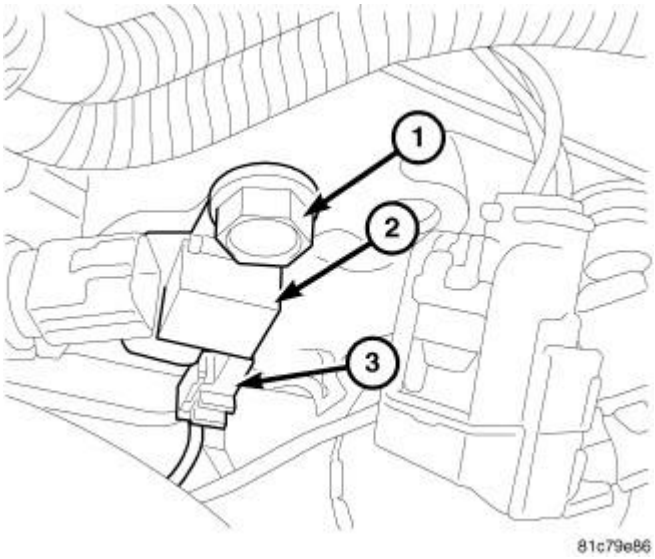

Fig. 1: IGNITION CAPACITOR - 3.5L
Courtesy of CHRYSLER LLC

The ignition capacitor is located on the drivers side of the engine.

1. Disconnect and isolate negative battery cable at battery.
2. Remove electrical connector (3).
3. Remove mounting bolt (1) and ignition capacitor (2).

6.1L

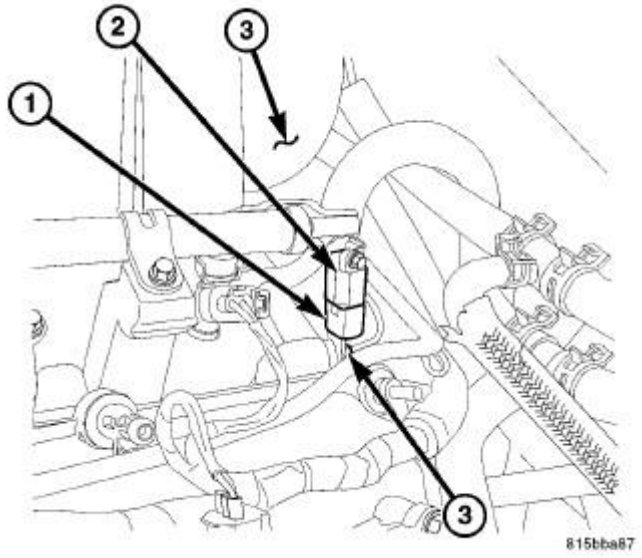

Fig. 2: CAPACITOR - 6.1L
Courtesy of CHRYSLER LLC

The ignition capacitor (2) is attached to the left-rear corner of the intake manifold (3).

1. Disconnect and isolate the negative battery cable.
2. Remove electrical connector (1).
3. Remove mounting bolt and remove capacitor (2).

INSTALLATION

3.5L

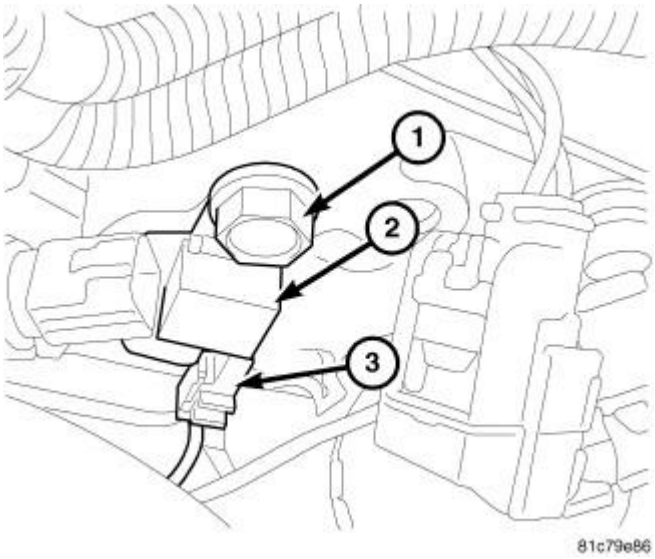

Fig. 3: IGNITION CAPACITOR - 3.5L
Courtesy of CHRYSLER LLC

1. Install ignition coil capacitor (2) and bolt (1).
2. Tighten bolt to 28 N.m (20.5 ft. lbs.).
3. Connect electrical connector (3).
4. Connect negative battery cable and tighten nut to 5 N.m (45 in. lbs.).

6.1L

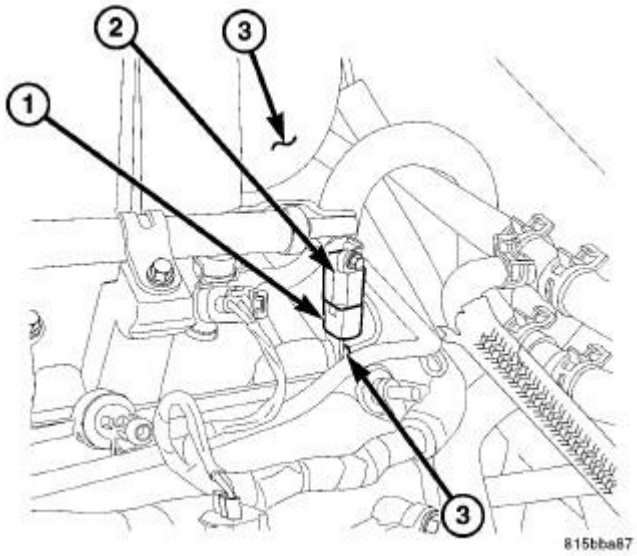

Fig. 4: CAPACITOR - 6.1L
Courtesy of CHRYSLER LLC

1. Install ignition capacitor (2) to left rear corner of intake manifold (3).
2. Install mounting bolt.
3. Install electrical connector (1).
4. Connect negative battery cable and tighten nut to 5 N.m (45 in. lbs.).

COIL, IGNITION

REMOVAL

3.5L

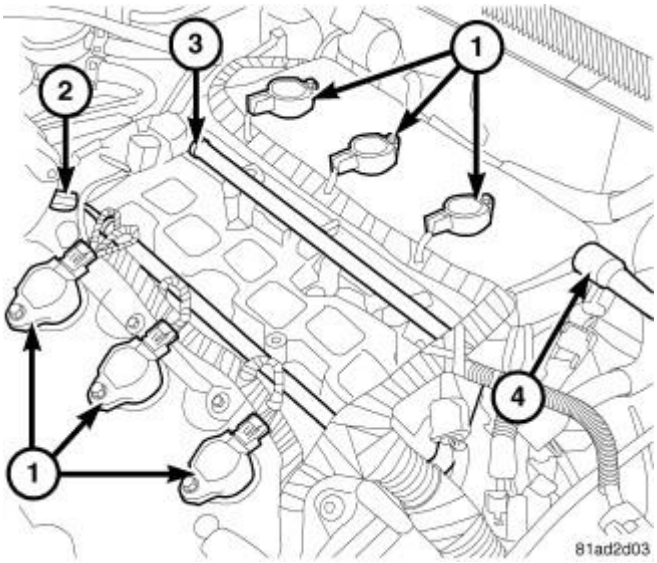

Fig. 5: IGNITION COILS AND FUEL RAIL
Courtesy of CHRYSLER LLC

1. Disconnect and isolate the negative battery cable.
2. Remove the upper intake manifold. Refer to **Engine/Manifolds/MANIFOLD, Intake - Removal** .

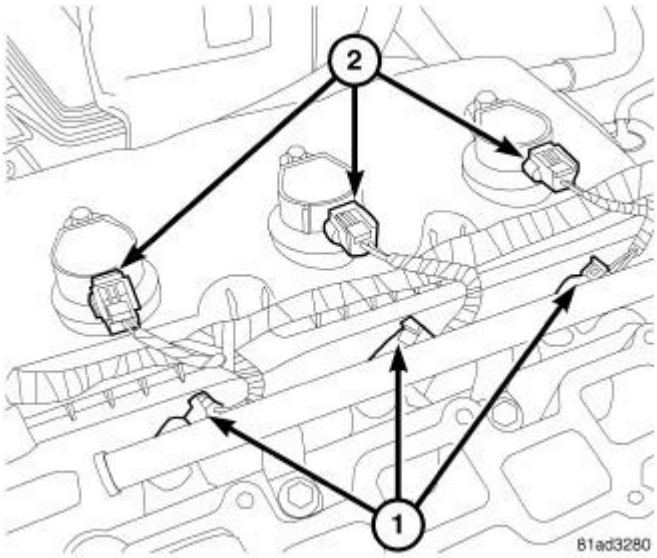

Fig. 6: Identifying Coil & Fuel Injector Connectors
Courtesy of CHRYSLER LLC

3. Unlock and disconnect electrical connector (2) from ignition coils.
4. Remove ignition coil mounting bolts.

CAUTION: Prior to removing the ignition coils, spray compressed air around the coils and spark plugs. If dirt and debris enter the engine, this may cause internal engine damage.

5. Twist, lift and remove ignition coil from engine.

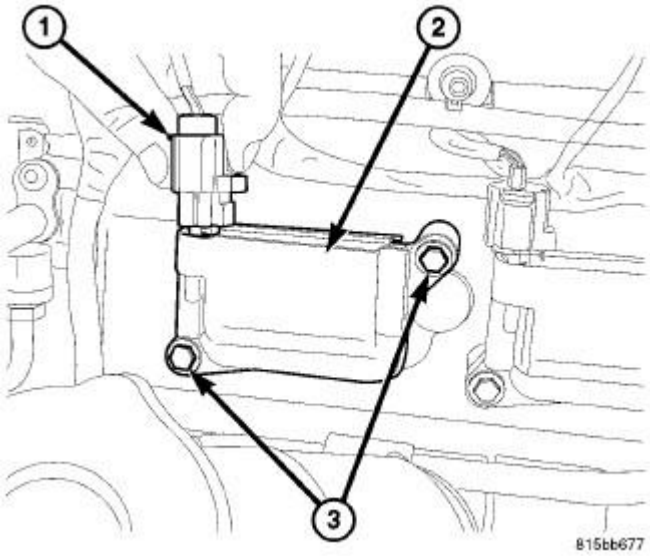

Fig. 7: IGNITION COIL MOUNTING BOLTS - 6.1L
Courtesy of CHRYSLER LLC

1. Disconnect and isolate the negative battery cable.
2. Unlock electrical connector (1) by pressing on tab while pulling electrical connector from coil.
3. Remove two coil mounting bolts (3).

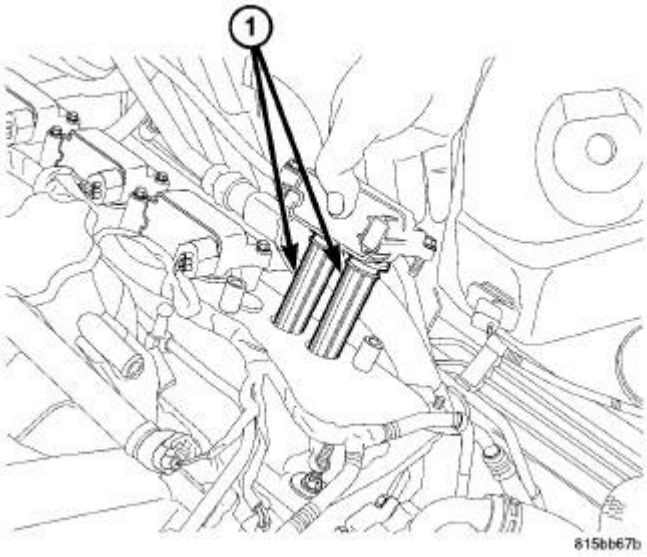

Fig. 8: IGNITION COIL REMOVAL - 6.1L
Courtesy of CHRYSLER LLC

4. Carefully pull up coil from cylinder head opening with a slight twisting action. Twisting will help break loose boots (1) from spark plugs.

INSTALLATION

3.5L

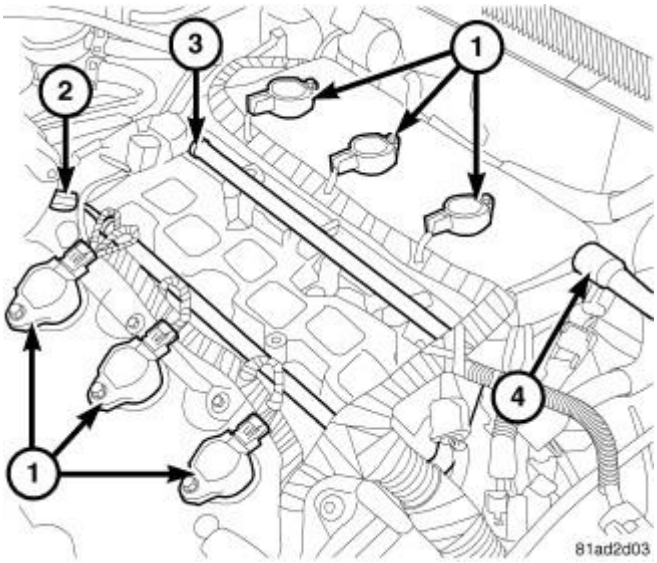

Fig. 9: IGNITION COILS AND FUEL RAIL
Courtesy of CHRYSLER LLC

1. Install ignition coil (1). Tighten bolts to 8 N.m (71 in. lbs.).

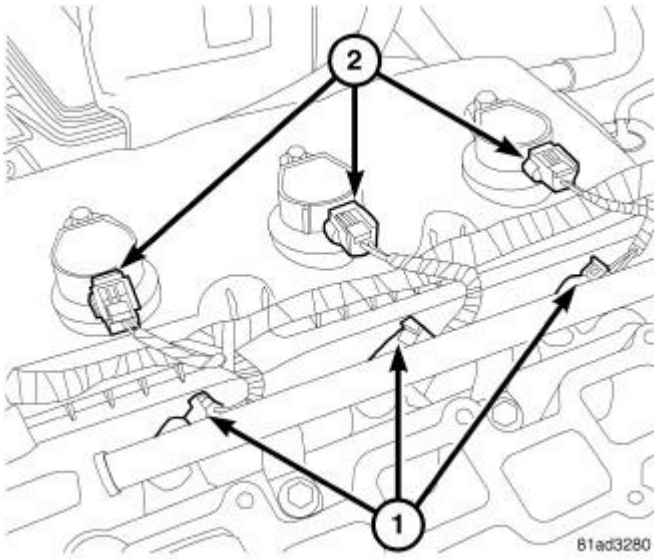

Fig. 10: COIL AND FUEL INJECTOR CONNECTORS
Courtesy of CHRYSLER LLC

2. Connect electrical connector and lock (2).
3. Install intake manifold. Refer to **Engine/Manifolds/MANIFOLD, Intake - Installation** .
4. Connect negative battery cable and tighten nut to 5 N.m (45 in. lbs.).

6.1L

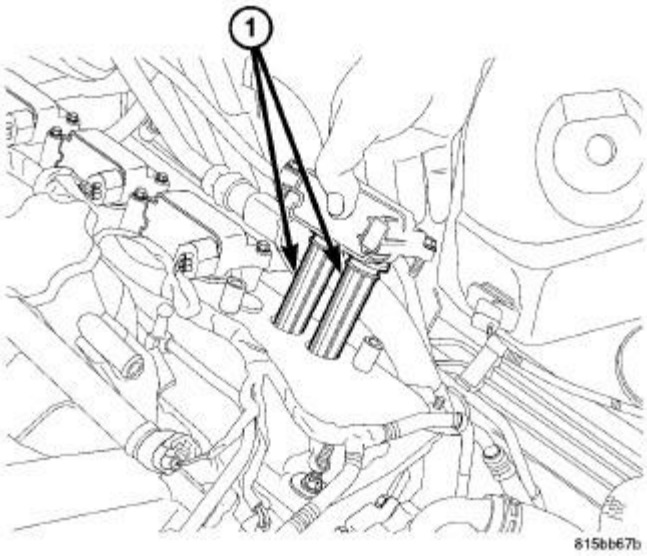

Fig. 11: IGNITION COIL REMOVAL - 6.1L
Courtesy of CHRYSLER LLC

1. Before installing coil(s), apply dielectric grease to inside of spark plug boots (1).

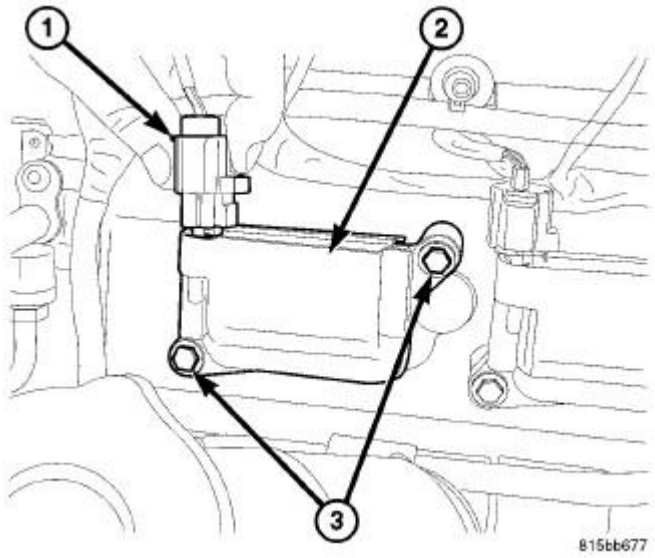

Fig. 12: IGNITION COIL MOUNTING BOLTS - 6.1L
Courtesy of CHRYSLER LLC

2. Position ignition coil into valve cover and push both spark plug boots onto each spark plug.
3. Install two coil mounting bolts (3) and tighten to 12 N.m (106 in. lbs.).
4. Connect electrical connector (1) to coil and lock connector.

5. Connect negative battery cable and tighten nut to 5 N.m (45 in. lbs.).

SENSOR, CAMSHAFT POSITION

REMOVAL

3.5L

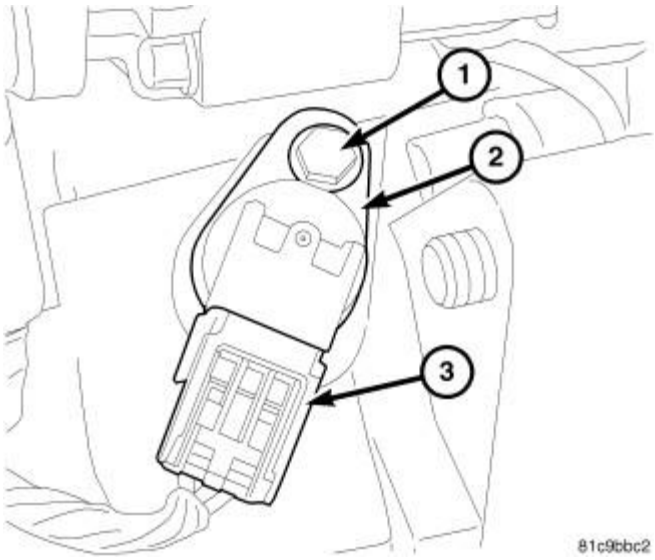

Fig. 13: 3.5L CAMSHAFT SENSOR
Courtesy of CHRYSLER LLC

1. Disconnect and isolate the negative battery cable at battery.
2. Disconnect electrical connector (3) from camshaft position (CMP) sensor (2).
3. Remove bolt (1) and CMP sensor (2).

5.7L/6.1L

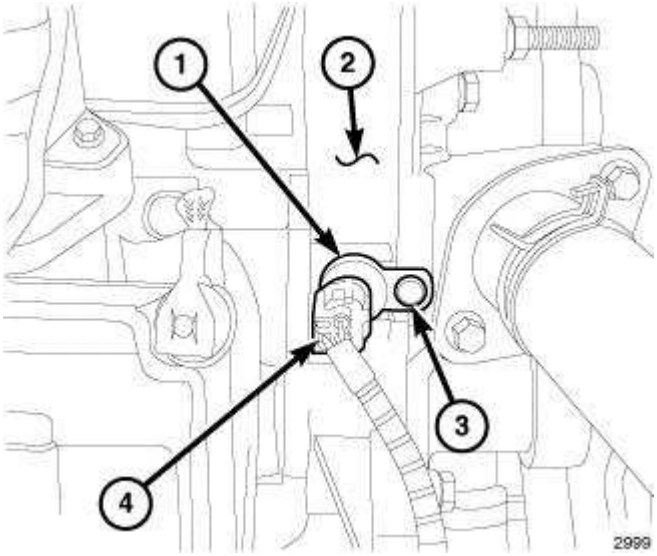

Fig. 14: CAMSHAFT POSITION SENSOR-5.7L
Courtesy of CHRYSLER LLC

1. Disconnect and isolate the negative battery cable.
2. Disconnect the electrical connector (4) at the Camshaft Position (CMP) sensor (1).
3. Remove the CMP sensor mounting bolt (3).
4. Using a slight rotating motion, carefully remove the CMP sensor from the timing chain cover (2).
5. Check the condition of the sensor O-ring.

INSTALLATION

3.5L

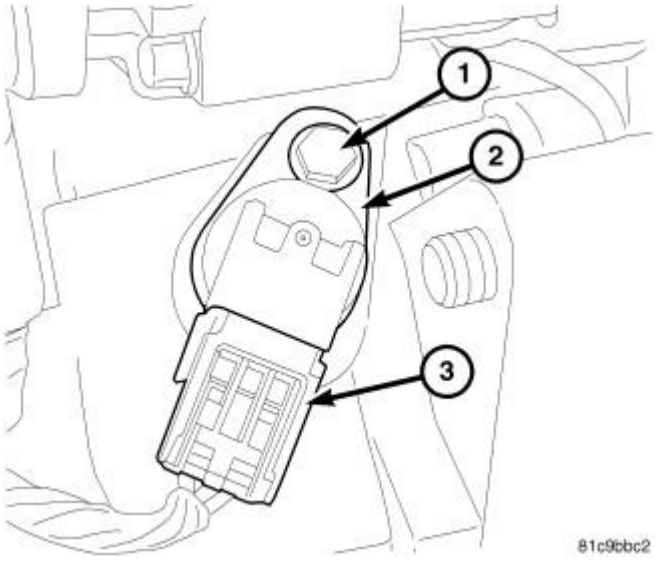

Fig. 15: 3.5L CAMSHAFT SENSOR
Courtesy of CHRYSLER LLC

CAUTION: Install camshaft position (CMP) sensor utilizing twisting motion. Make sure CMP sensor is fully seated. Do not drive CMP sensor into the bore with mounting screw. This may cause CMP sensor to be incorrectly seated causing a faulty signal or no signal at all.

NOTE: If reinstalling the sensor, check the sensor O-ring for damage and replace if necessary. Lubricate the O-ring with clean engine oil before installing the sensor.

1. Push the CMP sensor (2) into the timing belt cover with a twisting motion until fully seated.
2. While holding the sensor (2) in this position, install and tighten the retaining bolt (1) to 12 N.m (106 in. lbs.).
3. Connect and lock the electrical connector (3) to the CMP sensor (2).
4. Connect the negative battery cable and tighten nut to 5 N.m (45 in. lbs.).

NOTE: The Cam/Crank Variation Relearn procedure must be performed anytime there has been a repair/replacement made to a powertrain system, for example: flywheel, valvetrain, camshaft and/or crankshaft sensors or components. Refer to DTC-Based Diagnostics/MODULE, Powertrain Control (PCM) - Standard Procedure

INSTALLATION

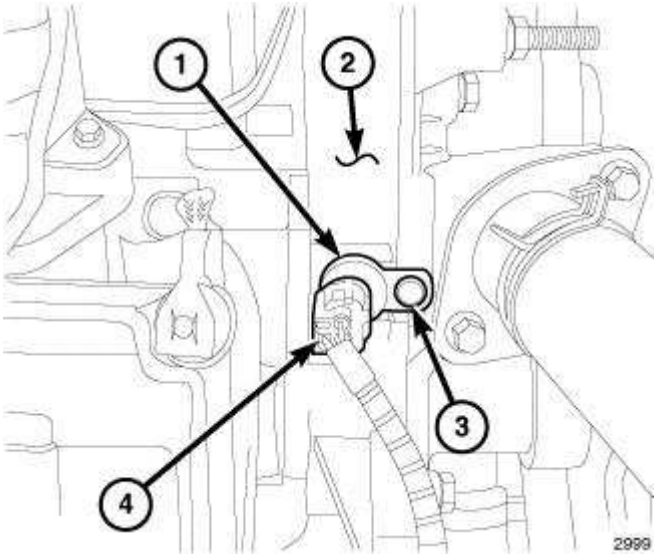

Fig. 16: CAMSHAFT POSITION SENSOR-5.7L
Courtesy of CHRYSLER LLC

CAUTION: Install the Camshaft Position (CMP) sensor using a rotating motion (side to side). Make sure the CMP sensor is fully seated. Do not drive the CMP sensor into the bore with the mounting screw. This may cause the CMP sensor to be incorrectly seated causing a faulty signal or no signal at all.

1. Using a rotating motion, carefully install the CMP sensor (1) into the timing chain cover (2).

CAUTION: Before tightening the sensor mounting bolt, be sure the sensor is completely flush to the timing chain cover. If the sensor is not flush, damage to the sensor mounting tang may result.

2. Install the CMP mounting bolt (3) and tighten to 12 N.m (9 ft. lbs.).
3. Connect the electrical connector (4) to the CMP sensor.
4. Connect the negative battery cable and tighten nut to 5 N.m (45 in. lbs.).

SENSOR, KNOCK

REMOVAL

3.5L

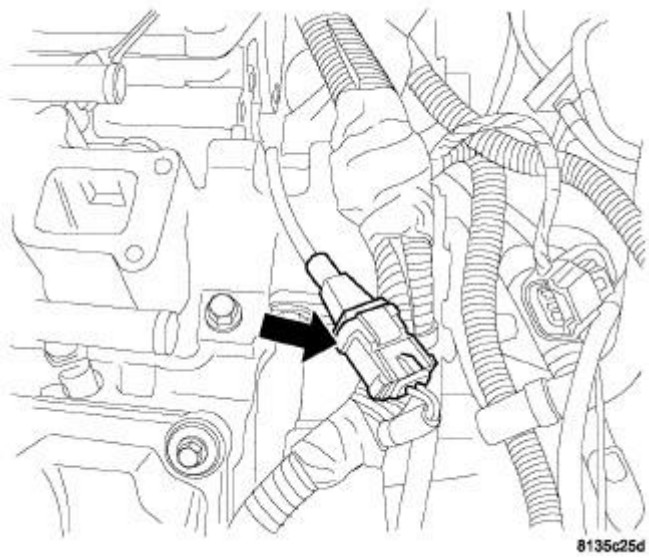

Fig. 17: KNOCK SENSOR CONNECTOR
Courtesy of CHRYSLER LLC

1. Disconnect and isolate the negative battery cable.
2. Remove the upper intake manifold. Refer to **Engine/Manifolds/MANIFOLD, Intake - Removal**
3. Disconnect the electrical connector.

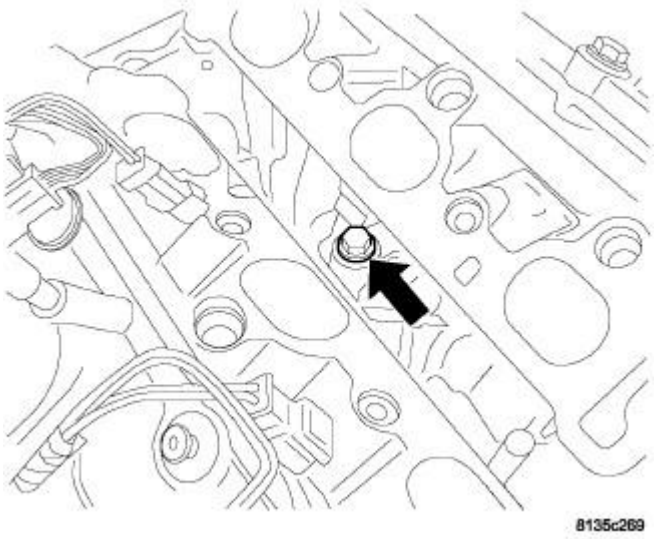

Fig. 18: KNOCK SENSOR LOCATION
Courtesy of CHRYSLER LLC

4. Remove the knock sensor.

REMOVAL

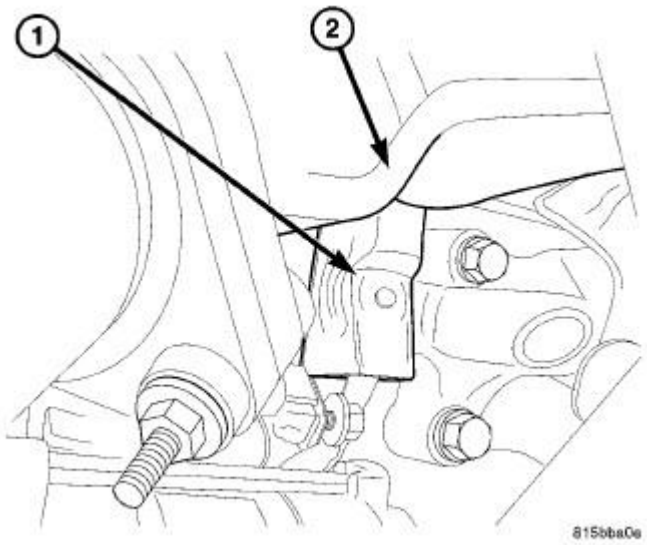

Fig. 19: KNOCK SENSOR HEAT SHIELD - 6.1L
Courtesy of CHRYSLER LLC

Two knock sensors are used. Each sensor is bolted to the outside of cylinder block below the exhaust manifold.

1. Disconnect and isolate the negative battery cable.

2. Raise vehicle.
3. Remove heat shield (1) from knock sensor. Shield snaps to sensor.

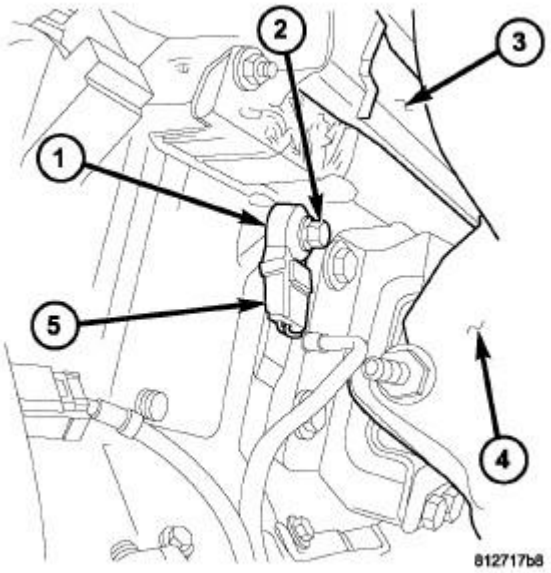

Fig. 20: 5.7L/6.1L KNOCK SENSOR
Courtesy of CHRYSLER LLC

4. Disconnect knock sensor electrical connector (5).
5. Remove sensor mounting bolt (2). Note foam strip on bolt threads. This foam is used only to retain the bolts to sensors for plant assembly. It is not used as a sealant. Do not apply any adhesive, sealant or thread locking compound to these bolts.
6. Remove sensor from engine.

INSTALLATION

3.5L

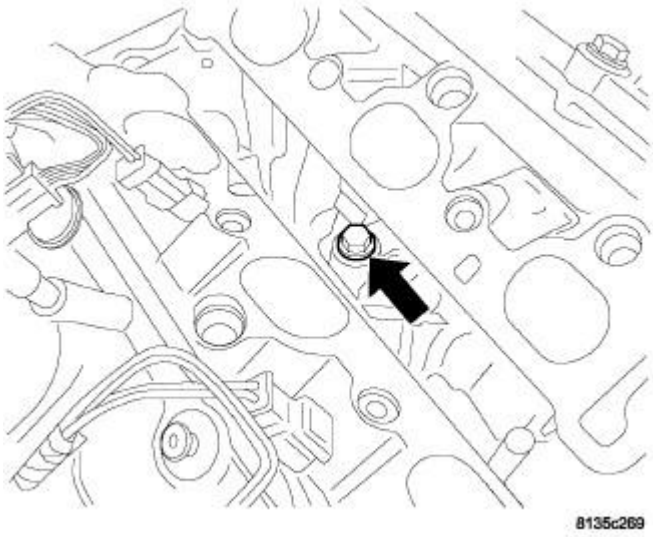

Fig. 21: KNOCK SENSOR LOCATION
Courtesy of CHRYSLER LLC

CAUTION: Over or under tightening effects knock sensor performance, possibly causing improper spark control.

1. Install knock sensor and tighten to 20 N.m (15 ft. lbs.).

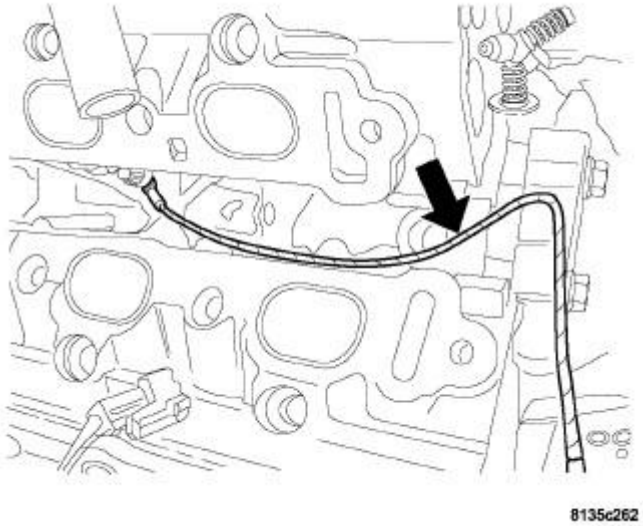

Fig. 22: KNOCK SENSOR WIRE ROUTE
Courtesy of CHRYSLER LLC

2. Route the knock sensor wire in the proper location.
3. Install the intake manifold. Refer to **Engine/Manifolds/MANIFOLD, Intake - Installation**

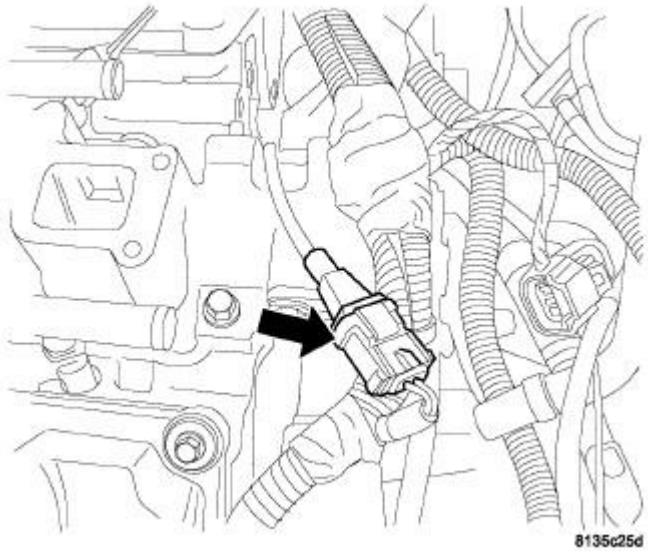

Fig. 23: KNOCK SENSOR CONNECTOR
Courtesy of CHRYSLER LLC

4. Connect electrical connector.
5. Connect negative battery cable and tighten nut to 5 N.m (45 in. lbs.).

INSTALLATION

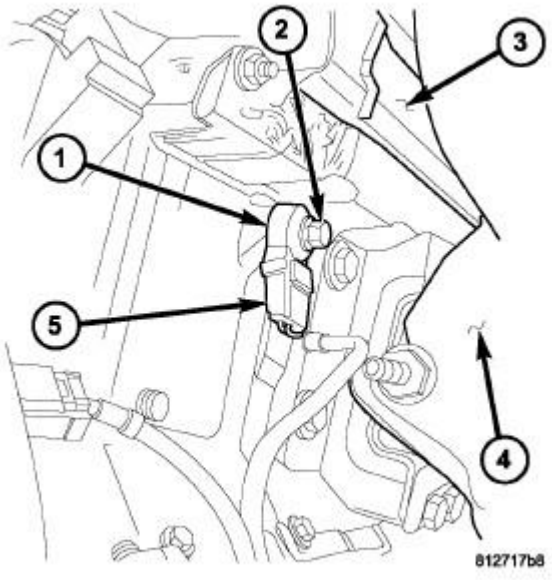

Fig. 24: 5.7L/6.1L KNOCK SENSOR
Courtesy of CHRYSLER LLC

CAUTION: Over or under tightening the sensor mounting bolts will affect knock sensor performance, possibly causing improper spark control.

1. Install knock sensor (1) onto cylinder block.

NOTE: The foam strip used on bolt threads is used only to retain the bolts to sensors for plant assembly. It is not used as a sealant. Do not apply any adhesive, sealant or thread locking compound to these bolts.

2. Install mounting bolt and tighten (2) to 20 N.m (15 ft. lbs.).
3. Connect electrical connector (5) to sensor.

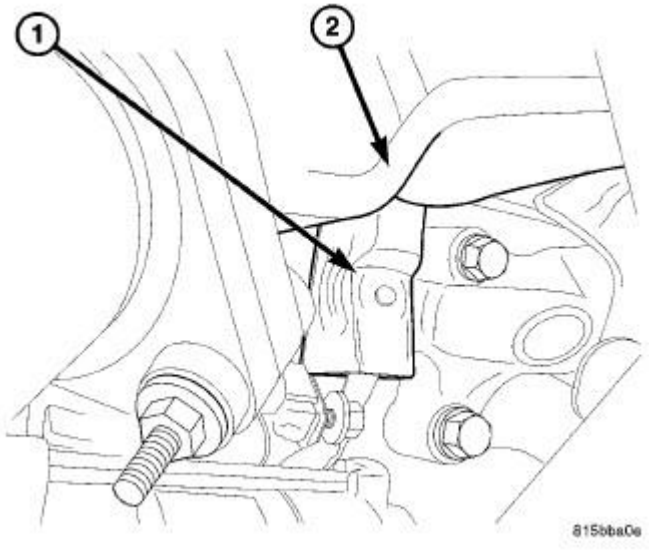

Fig. 25: KNOCK SENSOR HEAT SHIELD - 6.1L
Courtesy of CHRYSLER LLC

4. Install heat shield (1) to sensor.
5. Connect negative battery cable and tighten nut to 5 N.m (45 in. lbs.).

SPARK PLUG

DESCRIPTION

DESCRIPTION

The spark plugs are platinum resistor design. They have resistance values of 3,500 to 20,000 ohms when checked with at least a 1000 volt tester. For spark plug identification and specifications. See **Electrical - Ignition Control/Ignition Control - Specifications**.

Do not use an ohm meter to check the resistance of the spark plugs. This will give an

inaccurate reading.

When the spark plugs use a single or double platinum tips and they have a recommended service life of 100,000 miles for normal driving conditions per schedule A in this manual. The spark plugs have a recommended service life of 75,000 miles for severe driving conditions per schedule B in this manual. A thin platinum pad is welded to both or just the center electrode end(s). Extreme care must be used to prevent spark plug cross threading, incorrect gapping and ceramic insulator damage during plug removal and installation.

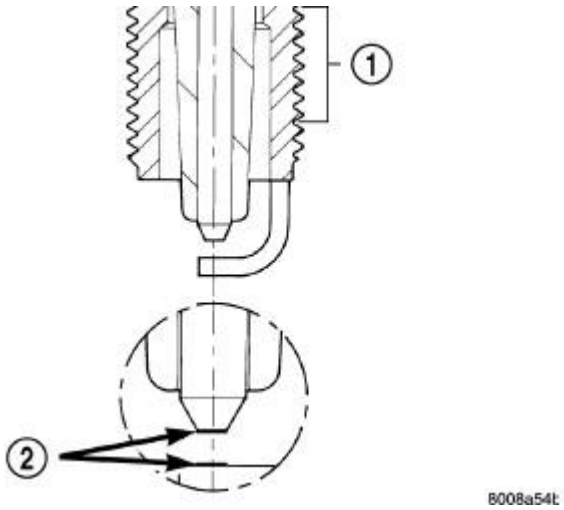

Fig. 26: Platinum Pads
Courtesy of CHRYSLER LLC

1 - APPLY ANTI-SEIZE COMPOUND HERE ONLY 2 - PLATINUM SPARK SURFACE

CAUTION: Cleaning of the platinum plug may damage the platinum tip.

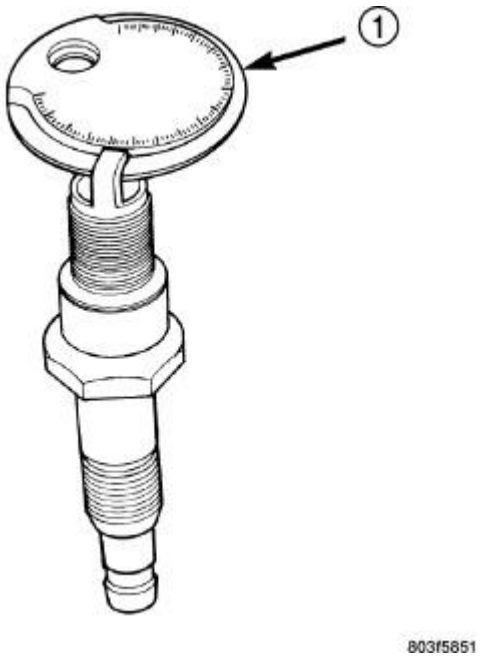

Fig. 27: Setting Spark Plug Electrode Gap
Courtesy of CHRYSLER LLC

1 - TAPER GAUGE

REMOVAL

3.5L

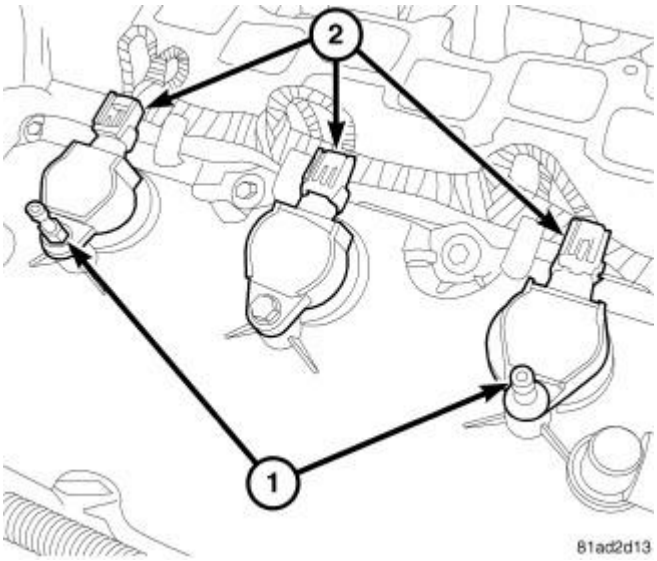

Fig. 28: IGNITION COILS
Courtesy of CHRYSLER LLC

1. Remove engine cover.

2. Disconnect and isolate the negative battery cable.
3. Remove the intake manifold. Refer to **Engine/Manifolds/MANIFOLD, Intake - Removal** .
4. Unlock and disconnect electrical connector (2) from ignition coils.
5. Remove mounting bolts and engine cover studs (1).
6. Twist, lift and remove ignition coil from engine.

CAUTION: Prior to removing the spark plugs, use compressed air to remove any accumulated dirt and debris. If dirt and debris enter the engine, this may cause internal engine damage.

7. Remove spark plug using a quality socket with a rubber or foam insert.

REMOVAL

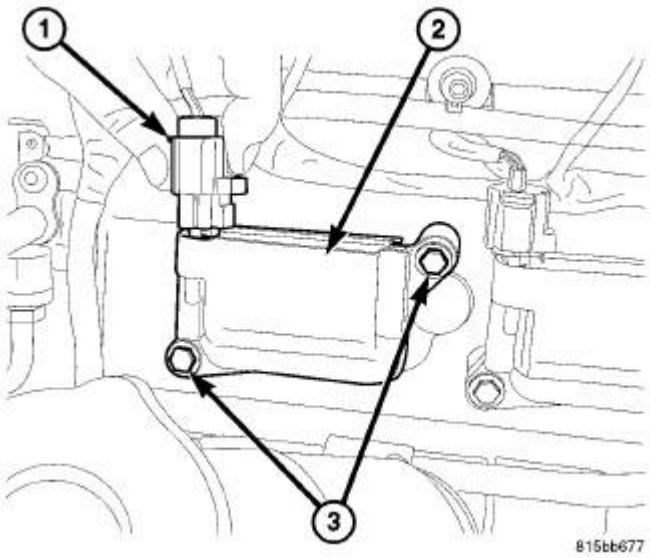

Fig. 29: IGNITION COIL MOUNTING BOLTS - 6.1L
Courtesy of CHRYSLER LLC

1. Disconnect and isolate the negative battery cable.
2. Disconnect coil electrical connectors (1).
3. Remove coil mounting bolts (3).

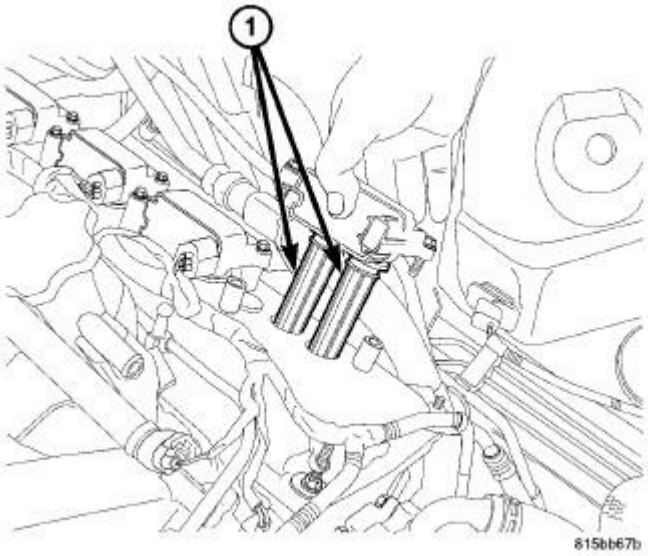

Fig. 30: IGNITION COIL REMOVAL - 6.1L
Courtesy of CHRYSLER LLC

4. Carefully pull up coil from cylinder head opening with a slight twisting action. Twisting will help break loose boots (1) from spark plugs.

CAUTION: Prior to removing the spark plugs, use compressed air to remove any accumulated dirt and debris. If dirt and debris enter the engine, this may cause internal engine damage.

5. Remove spark plugs.

INSTALLATION

3.5L

CAUTION: Handle the spark plugs with care. Do not drop or force the spark plugs into the wells, damage to the electrodes and/or porcelain body may occur.
Always start each spark plug by hand in order to avoid cross-threading the spark plug in the cylinder head.
Always tighten spark plugs to the specified torque. Too much or not enough torque will cause damage to the cylinder head and/or spark plug and may lead to poor engine performance.

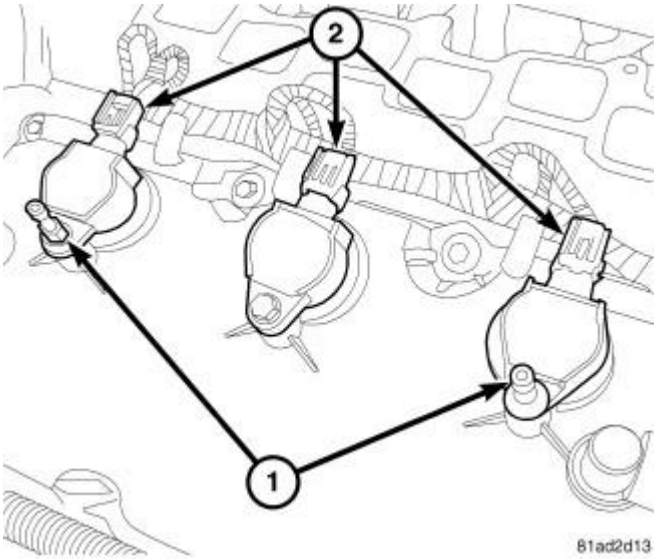

Fig. 31: IGNITION COILS
Courtesy of CHRYSLER LLC

1. To avoid cross threading, start the spark plug into the cylinder head by hand.
2. Tighten spark plugs to 27 N.m (20 ft. lbs.).
3. Install ignition coil.
4. Install engine cover studs (1) in the two outside ignition coils on the front of the engine. Install bolts on the other ignition coils.
5. Tighten studs and bolts to 8 N.m (71 in. lbs.).

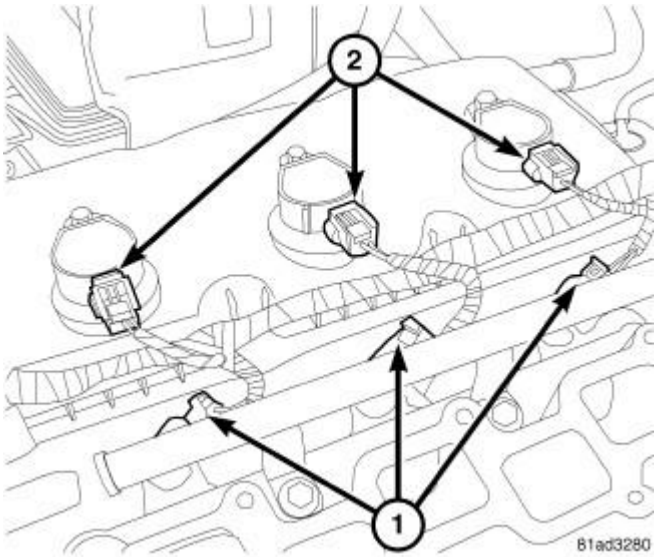

Fig. 32: COIL AND FUEL INJECTOR CONNECTORS
Courtesy of CHRYSLER LLC

6. Connect electrical connector and lock (2).
7. Install intake manifold. Refer to **Engine/Manifolds/MANIFOLD, Intake - Installation** .

8. Reconnect the negative battery cable.
9. Install the engine cover.

INSTALLATION

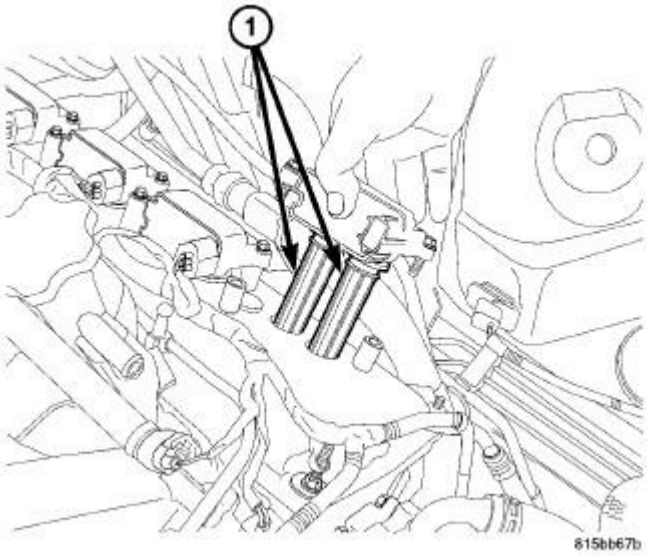

Fig. 33: IGNITION COIL REMOVAL - 6.1L
Courtesy of CHRYSLER LLC

CAUTION: Handle the spark plugs with care. Do not drop or force the spark plugs into the wells, damage to the electrodes and/or porcelain body may occur. Always start each spark plug by hand in order to avoid cross-threading the spark plug in the cylinder head.
Always tighten spark plugs to the specified torque. Too much or not enough torque will cause damage to the cylinder head and/or spark plug and may lead to poor engine performance.

1. To avoid cross threading, start the spark plug into the cylinder head by hand.
2. Tighten spark plugs to 17.5 N.m (13 ft. lbs.).
3. Apply dielectric grease to inside of spark plug boots (1) and install the coil assembly.
4. Position ignition coil into valve cover and push both spark plug boots onto each spark plug.

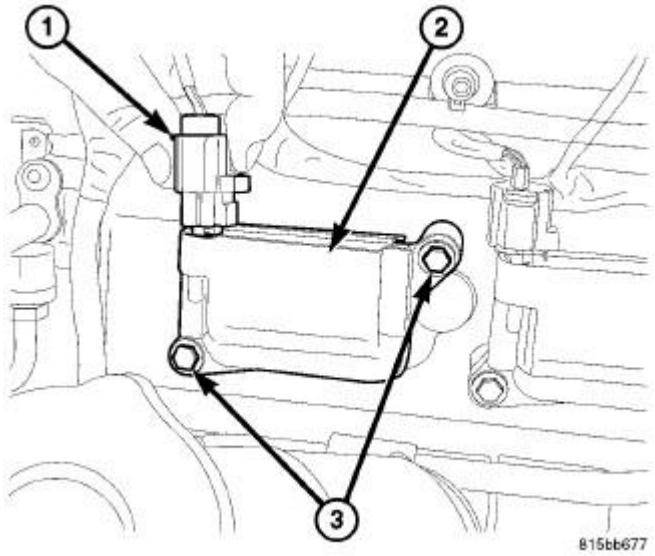

Fig. 34: IGNITION COIL MOUNTING BOLTS - 6.1L
Courtesy of CHRYSLER LLC

5. Install coil mounting bolts (3) and tighten to 12 N.m (106 in. lbs.).
6. Connect coil electrical connectors (1).
7. Connect negative battery cable and tighten nut to 5 N.m (45 in. lbs.).

SWITCH, IGNITION

DESCRIPTION

DESCRIPTION

This vehicle is equipped with a Wireless Ignition Node (WIN). The WIN, along with the FOB with Integrated Key (FOBIK) are the primary components of the keyless ignition system. The only visible component of the WIN is the ignition switch located on the face of the instrument panel just to the inboard side of the steering column. The remainder of the WIN including its mounting provisions and electrical connections are concealed within the instrument panel.

In addition to replacing a conventional keyed ignition switch, the WIN is an integrated electronic receiver that serves as the base station in the vehicle. It communicates with other electronic modules in the vehicle over the Controller Area Network (CAN) data bus.

The WIN interfaces with the Remote Keyless Entry (RKE) FOBIK and the Tire Pressure Monitor (TPM) sensors (if equipped) using Radio Frequency (RF) communication, with the Sentry Key Immobilizer System (SKIS) transponder within the FOBIK using Low Frequency (LF) RF communication.

The WIN cannot be adjusted or repaired, but is flash update capable. If ineffective or damaged the entire WIN must be replaced. Refer to **Electrical - Electronic Control Modules/Electronic Control**

Modules/RECEIVER, Wireless Ignition Node - Removal .

ACCESSORIES AND EQUIPMENT

Lamps/Lighting - Exterior - Service Information - Challenger

DESCRIPTION

DESCRIPTION

The exterior lighting system for this model includes the following exterior lamp units:

- **Center High Mounted Stop Lamp** - A Center High Mounted Stop Lamp (CHMSL) is centered on the rear shelf trim panel at the base of the backlite on sedans, and on the liftgate spoiler just above the liftgate glass opening at the rear of the vehicle on the wagon.
- **Front Fog Lamps** - Vehicles equipped with this option have a fog lamp unit mounted near each outboard end of the front bumper support, behind the lower portion of the front fascia.
- **Front Headlamp Units** - A front headlamp unit is mounted to the front of each front fender panel on either side of the grille opening.
- **License Plate Lamp** - A rear license plate lamp unit is mounted to the rear fascia, just above the license plate tub.
- **Tail Lamp Units** - A tail lamp unit is mounted to the rear of each quarter panel on either side of the liftgate opening.

These exterior lighting lamps and their controls are combined to provide the following exterior lighting features:

- **Automatic Headlamps** - Vehicles with the automatic (auto low) headlamps option are equipped with a unique headlamp switch that includes an **A** (Automatic) position and have an automatic headlamp sensor to sense ambient levels. The automatic headlamp sensor is integral to the sun load sensor located on the top of the instrument panel of vehicles without automatic wipers, or is integral to the Rain Sensor Module (RSM) located on the inside of the windshield below the inside rear view mirror mounting button of vehicles with automatic wipers. When the **A** position of the headlamp switch is selected, the headlamps are turned ON and OFF automatically as ambient light levels dictate.
- **Daytime Running Lamps** - Vehicles manufactured for sale in Canada illuminate the low beam filament of the headlamp bulb in each front lamp unit to serve as the Daytime Running Lamps (DRL). Fleet vehicles manufactured for sale in the United States illuminate the high beam filament of the headlamp bulb in each front lamp unit to serve as the DRL.

Other components of the exterior lighting system for this vehicle include:

- **Backup Lamp Switch** - A Transmission Range Sensor (TRS) integral to the solenoid pack on the valve body of the electronic automatic transmission performs the backup lamp switch function for this model.
- **Brake Lamp Switch** - A plunger-type brake lamp switch is located on the steering column support bracket under the instrument panel and is actuated by the brake pedal arm.

- **Totally Integrated Power Module** - The Totally Integrate Power Module (TIPM) is located in the engine compartment, near the battery and the Power Distribution Center (PDC). Refer to **Electrical - Wiring/Power Distribution - Description** .
- **Headlamp Switch** - A headlamp switch is located on the left side of the instrument panel, below and outboard of the steering column. The headlamp switch includes a rotary knob for the park lamps and headlamps On or Off, and a push button switch for selecting the front fog lamps on vehicles so equipped. The headlamp switch also features a vertical thumbwheel for selecting the panel lamps dimming level, a Parade mode to illuminate all Vacuum Fluorescent Display (VFD) units at full brightness for visibility when driving in daylight with the exterior lighting turned On, and for interior lighting control.
- **Instrument Cluster** - The Electronic Vehicle Information Center (EVIC) is also known as the Cab Control Node (CCN) in this vehicle. The EVIC/CCN is located in the instrument panel above the steering column opening, directly in front of the driver. Refer to **Electrical - Instrument Cluster/Instrument Cluster - Description** .
- **Multi-Function Switch** - The multi-function switch is located on the steering column, just below the steering wheel. A control stalk that extends from the left side of the switch is used to select the turn signal lamps (right or left) and to select the headlamp beam (low, high or optical horn).

OPERATION

OPERATION

AUTOMATIC HEADLAMP SYSTEM

Automatic headlamps are controlled by the Cab Compartment Node (CCN). With the headlamp switch in the AUTO position, the CCN controls the headlamp, parking, side marker, tail and instrumentation lamps based on ambient light levels. Ambient light levels are monitored by the CCN using the ambient light signal present. Ambient light readings are averaged to limit cycling the lamps onand off when passing through areas with varying light levels. The automatic headlamps only function when the engine is running higher than 300 RPM. When the headlamp switch is in the AUTO position (Automatic mode), the headlamp time delay system functions when the ignition switch is placed in any position other than run/start.

DAYTIME RUNNING LAMPS

Power is reduced using Pulse-Width Modulation (PWM) to the high beams, where by power is switched on and off rapidly instead of remaining on continuously. The duration and interval of the power pulses is programmed into the Integrated Power Module (IPM).

HEADLAMP TIME DELAY SYSTEM

The headlamp time delay system is activated by turning the headlamps on (high or low beam) while the engine is running, turning the ignition switch off, and then turning the headlamp switch off. The Cab Compartment Node (CCN) will allows the headlamps to remain on for 90 seconds (configurable) before they automatically turn off. If the key is in the ignition during the headlamp time delay mode, both the headlamps and park lamps (including panel dimming) will be on. Refer to the Owner's Manual for more information.

If the headlamp switch is in the auto headlamp position, the headlamps are on due to the night signal from the ambient light sensor and the ignition switch is in any position other than run/start, the CCN enters a 90 second (configurable) auto headlamps time delay mode. If the key is in the ignition during the headlamp time delay mode, both the headlamps and park lamps (including panel dimming) will be on. If the key is not in the ignition, only the headlamps are on. The CCN allows the headlamps to remain ON for 90 seconds before they automatically turn off. Refer to the Owner's Manual for more information.

WARNING

WARNING

Eye protection should be used when servicing glass components. Personal injury or death could result.

This vehicle contains mercury added devices added by the manufacturer: High Intensity Discharge (HID) headlamps. Remove devices before vehicle disposal. Upon removal of devices, please reuse, recycle, or dispose of as hazardous waste.

Do not back probe any connectors or pierce any wiring to the HID headlamp system. High voltage (a/c voltage) is used in this system and component and personal injury or death could result.

Do not power up the headlamp assembly with the headlamp access cover off. A high voltage a/c (alternating current) shock may occur causing personal injury or death.

On vehicles equipped with airbags, disable the airbag system before attempting any steering wheel, steering column, or instrument panel component diagnosis or service. Disconnect and isolate the battery negative cable, then wait two minutes for the airbag system capacitor to discharge before performing further diagnosis or service. Failure to take the proper precautions could result in accidental airbag deployment and possible personal injury or death.

Do not touch the glass of halogen bulbs with fingers or other possibly oily surface, reduced bulb life will result. Do not use bulbs other than those indicated in the bulb application table. Damage to lamp and/or daytime running lamp module can result. Do not use fuses, circuit breakers or relays having greater amperage value than indicated on the fuse panel or in the owner's manual.

Do not use bulbs other than those listed in the bulb application table. Damage to lamp can result. Do not touch bulbs with fingers or other oily surfaces. Bulb life will be reduced.

STANDARD PROCEDURE

FRONT LAMP AIMING

VEHICLE PREPARATION FOR LAMP ALIGNMENT

1. Check for and replace any burnt out bulbs.
2. Repair or replace any faulty, worn or damaged body or suspension components that could hinder proper lamp alignment.
3. Verify proper tire inflation pressures.
4. Remove any accumulations of mud, snow or ice from the vehicle underbody and clean the front lamp lenses.
5. Verify there is no load in the vehicle (cargo or passengers), except for the driver.
6. The fuel tank should be full. Add 2.94 kilograms (6.5 pounds) of weight over the fuel tank for each estimated gallon of missing fuel.
7. Verify correct vehicle suspension height.

LAMP ALIGNMENT SCREEN PREPARATION

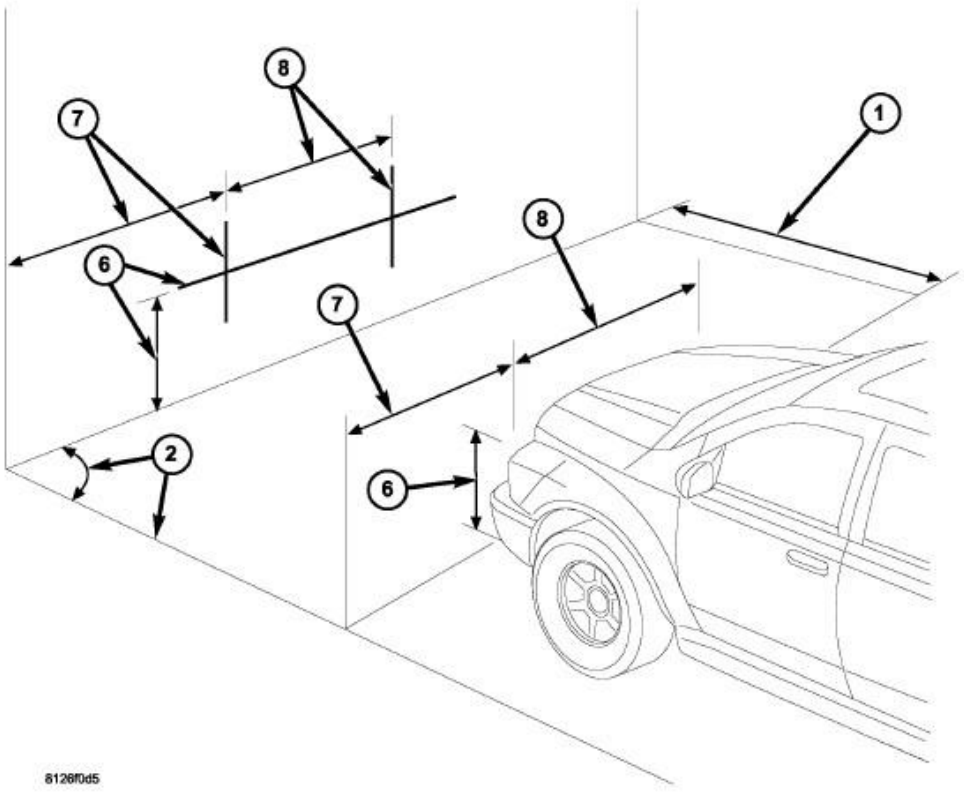

Fig. 1: Lamp Alignment Screen Preparation
Courtesy of CHRYSLER LLC

The following procedure prepares a suitable front lamp alignment screen.

1. Tape a line on a level floor 7.62 meters (25 feet) away from and parallel to the flat wall that will

be used as the lamp alignment screen. The level floor will be used as the horizontal zero reference.

2. An adjacent wall or floor member that is perpendicular to the alignment screen can be used as the vertical zero reference. If there is no adjacent wall or floor member that is perpendicular to the screen, tape a second line on the floor perpendicular to both the alignment screen and the first line, and outboard of either side of where the vehicle will be positioned. This will be used as the vertical zero reference.
3. Position the vehicle so the side of the vehicle is parallel to the vertical zero reference, and the front of the lamp lenses are in the vertical plane of the parallel line taped on the floor 7.62 meters (25 feet) away from the screen.
4. Rock the vehicle side-to-side three times to allow the suspension to stabilize.
5. Jounce the front suspension three times by pushing downward on the front bumper and releasing.
6. Measure the distance between the optical center of one of the lamps being aimed (head or fog) and the floor (horizontal zero reference). Transfer this measurement to the alignment screen with a piece of tape placed horizontally to the floor. This line will be used as the lamp horizontal reference.
7. Measure the distance between the vertical zero reference and the optical center of the nearest lamp being aimed (head or fog). Transfer this measurement to the alignment screen with a piece of tape placed vertically across the appropriate (head or fog) lamp horizontal reference. This is the centerline reference for the first lamp.
8. Measure the distance on center between the first and the second lamp being aimed. Transfer this measurement to the alignment screen with a second piece of tape placed vertically across the appropriate (head or fog) lamp horizontal reference. This is the centerline reference for the second lamp.

HEADLAMP ALIGNMENT

There are two different kinds of headlamp aiming procedures:

- **Visual Aim Optical Left (VOL)**
- **Visual Aim Optical Right (VOR)**

The VOL or VOR is embossed on the lower front of each headlamp unit.

VOL HEADLAMP AIMING

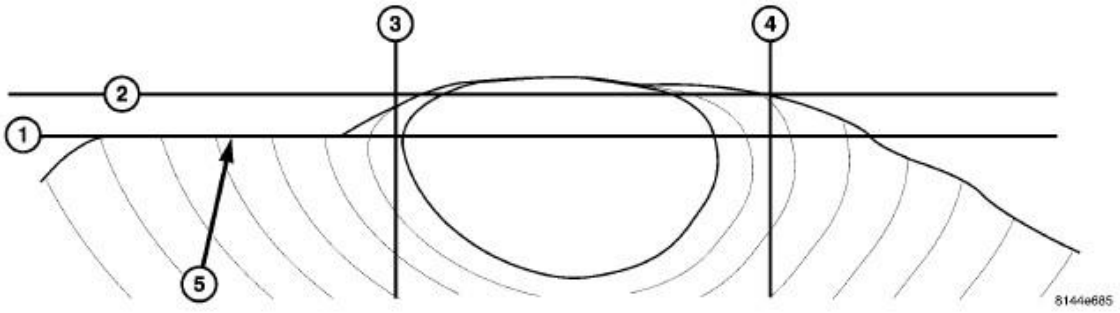

Fig. 2: VOL LAMP AIMING
Courtesy of CHRYSLER LLC

With the horizontal centerline of the headlamp (2) transferred on the wall, measure down 53 mm (2.1 in). This line (1) will be the vertical aiming mark. Using the left side of the headlamp vertical centerline (3), adjust the headlamp unit so the residual light from the headlamp, not the hot spot, is even with the line (1) that was marked previously 53 mm (2.1 in) below the horizontal centerline (2). The ideal alignment should be (5). The right headlamp aiming will be the same, but using the area left of right headlamp vertical centerline (not shown).

1. Turn the headlamps on and select the low beams.
2. Rotate the headlamp vertical adjustment screw (horizontal on export) on each lamp to adjust the beam height as required.

VOR HEADLAMP AIMING

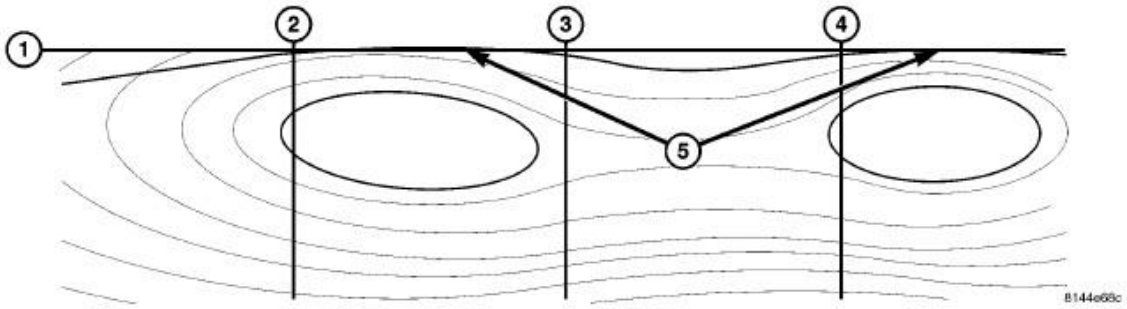

Fig. 3: VOR LAMP AIMING
Courtesy of CHRYSLER LLC

With the horizontal centerline of the headlamp (1) transferred on the wall, this line (1) will be the vertical aiming mark. Using the right side of the headlamp vertical centerline (two for the left and fourfor the right), adjust the headlamp unit so the residual light from the headlamp is even with the horizontal centerline (1). The ideal alignment should be (5).

1. Turn the headlamps On and select the Low beams.
2. Rotate the headlamp vertical adjustment screw (and horizontal on export) on each lamp to adjust the beam height as required.

FOG LAMP ALIGNMENT

A properly aimed front fog lamp projects a pattern on the alignment screen 100 millimeters (4 inches) below the fog lamp centerline and straight ahead of the lamp.

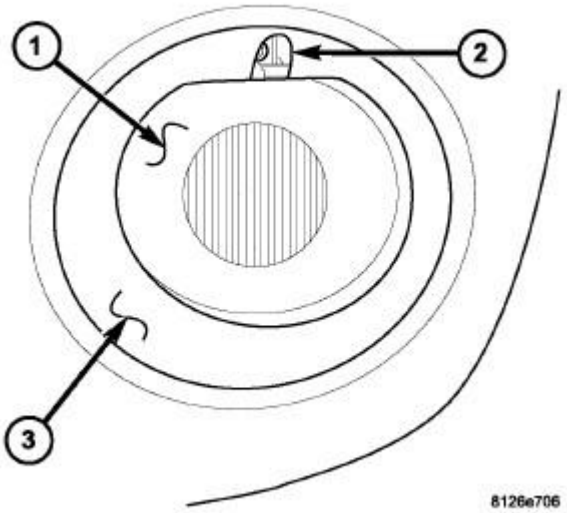

Fig. 4: Identifying Fog Lamp Vertical Adjustment Screw
Courtesy of CHRYSLER LLC

1. Turn the fog lamps on.
2. Rotate the fog lamp vertical adjustment screw (2) on each lamp to adjust the beam height as required.

SPECIFICATIONS

EXTERIOR LAMPS

BULB APPLICATION TABLE

LAMP	BULB
Back-Up	921
CHMSL	LED (Replaced as unit)
Front Fog	9145/H10
Front Park/Turn	3157NAK
Front Sidemarker	194
High Beam Headlamp	9005
License	168
Low Beam Headlamp	DIS
Rear Sidemarker	168
Tail/Stop/Turn	3057

BALLAST, HIGH INTENSITY DISCHARGE (HID)

DESCRIPTION

DESCRIPTION

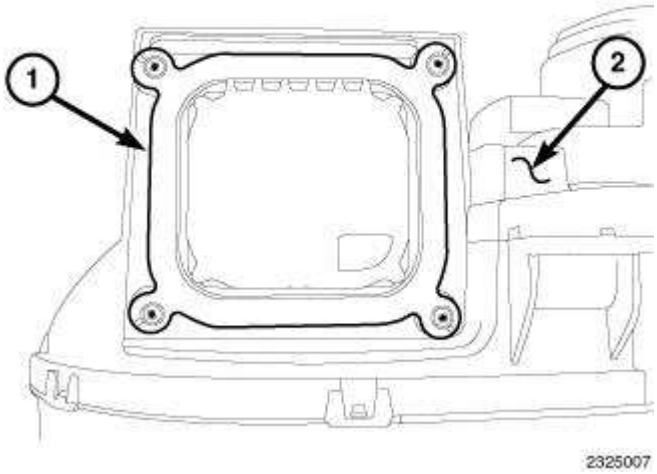

Fig. 5: Identifying Electronic Ballast Module & Front Lamp Unit
Courtesy of CHRYSLER LLC

Vehicles equipped with the optional High Intensity Discharge (HID) headlamps have an electronic ballast module (1) mounted to the underside of each front lamp unit (2). The electronic circuitry of the module is contained within a die cast aluminum module housing, which is secured by four screws through four integral mounting lugs to the molded plastic front lamp unit housing.

The connector receptacles of the module are integral to the side of the housing that is sealed within front lamp unit housing when the module is installed. The connector receptacles contain terminal pins that connect the module to the vehicle electrical system and to the high tension HID cable through dedicated take outs and connectors of the front lamp unit wire harness.

The electronic ballast module cannot be adjusted or repaired and, if damaged or ineffective, it must be replaced.

OPERATION

OPERATION

The electronic ballast module operates on battery current and ground received directly from the Totally Integrated Power Module (TIPM). Each module controls operation of the High Intensity Discharge (HID) igniter and lighting element for the front lamp unit on which it is installed. The TIPM monitors electronic message inputs received from the ElectroMechanical Instrument Cluster (EMIC) (also known as the Cabin Compartment Node/CCN) over the Controller Area Network (CAN) data bus to determine the proper control outputs to the electronic ballast module, which then provides a controlled voltage to operate the HID lamp igniter as appropriate.

The EMIC monitors hard wired multiplexed inputs received from the headlamp switch and electronic message inputs from the Steering Control Module (SCM) over the Local Interface Network (LIN) data

bus based upon multi-function switch inputs to determine the proper lighting request message outputs to send to the TIPM.

When a proper 12 volt Direct Current (DC) control output is received from the TIPM, the HID electronic ballast module activates the HID igniter integral to the lighting element through a high-tension cable to provide a high voltage (up to about 800 volts Alternating Current/AC) surge. The igniter further steps up this AC voltage to up to about 25,000 volts, which creates a light arc between the lighting element electrodes. Once the igniter and electronic ballast module detect a suitably stable light arc, they switch over to a power-limiting mode to sustain the light arc, which requires only about 85 volts to sustain proper lighting element output.

The hard wired electronic ballast module circuits may be diagnosed using conventional diagnostic tools and procedures. However, conventional diagnostic methods will not prove conclusive in the diagnosis of the electronic ballast module or the electronic controls and communication that provide some features of the HID lamp system. Proper diagnosis of the electronic ballast module, the TIPM, the EMIC, the SCM, the CAN data bus, the LIN data bus and the electronic communication related to electronic ballast module operation requires the use of a diagnostic scan tool. Refer to the appropriate diagnostic service information.

REMOVAL

REMOVAL

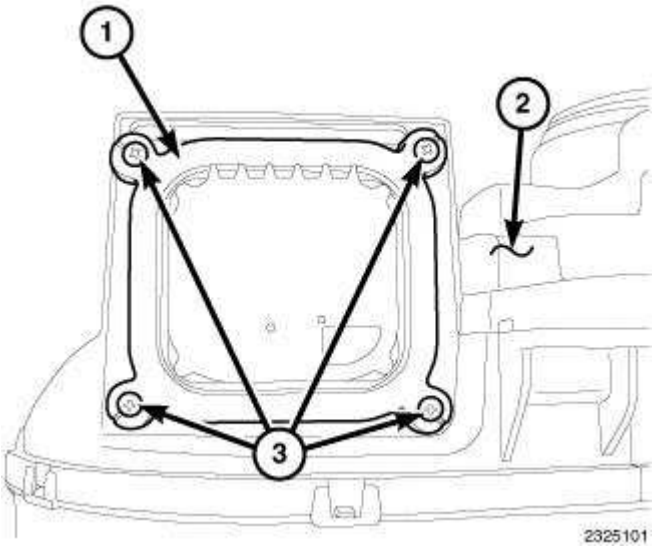

Fig. 6: Identifying Ballast Module, Front Lamp Unit Housing & Screws
Courtesy of CHRYSLER LLC

1. Disconnect and isolate the battery negative cable.
2. Remove the front lamp unit from the vehicle. See **Electrical - Lamps and Lighting/Lamps/Lighting - Exterior/UNIT, Front Lamp - Removal**.
3. Remove the four screws (3) that secure the ballast module (1) to the underside of the front lamp unit housing (2).

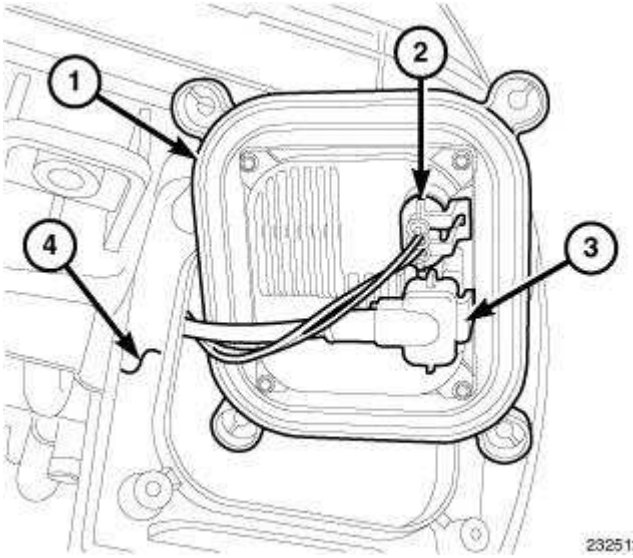

Fig. 7: Identifying High Tension Cable Connector, Wire Harness Connector & Ballast Module
Courtesy of CHRYSLER LLC

4. Pull the ballast module (1) away from the front lamp unit housing far enough to access and disconnect the front lamp unit wire harness connector (2) and the high tension cable connector (3) from the module connector receptacles.
5. Remove the ballast module from the front lamp unit.

INSTALLATION

INSTALLATION

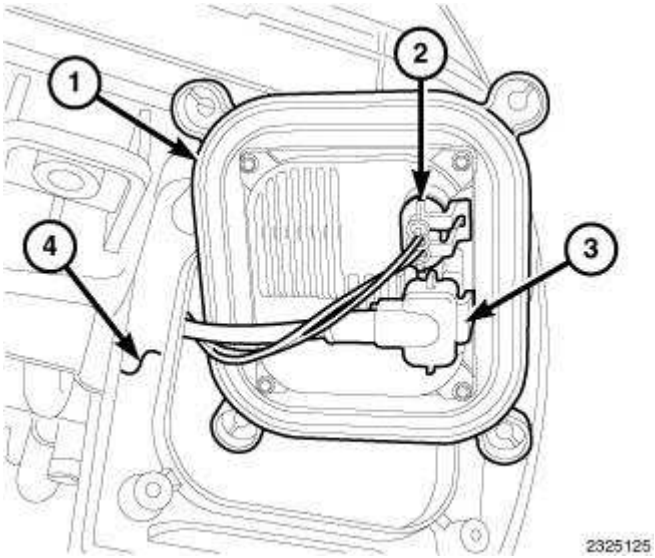

Fig. 8: Identifying High Tension Cable Connector, Wire Harness Connector & Ballast Module
Courtesy of CHRYSLER LLC

1. Position the HID ballast module (1) near the mounting hole on the underside of the front lamp unit housing (4).
2. Reconnect the front lamp unit wire harness connector (2) and the high tension cable connector (3) to the module connector receptacles.

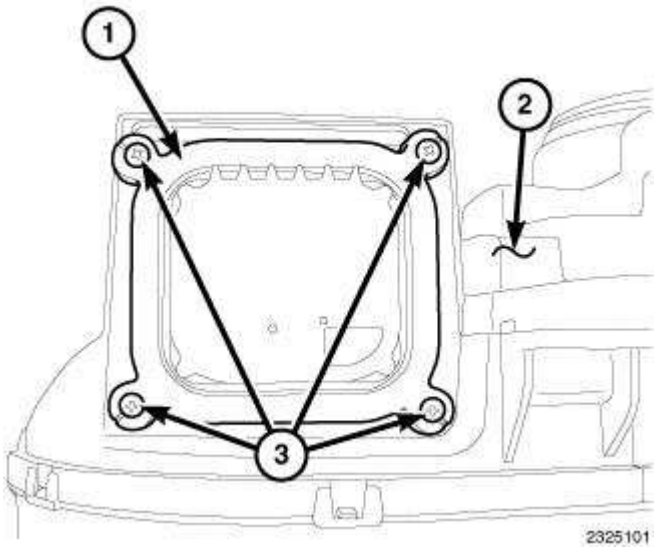

Fig. 9: Identifying Ballast Module, Front Lamp Unit Housing & Screws
Courtesy of CHRYSLER LLC

3. Position the ballast module (1) over the mounting hole of the lamp housing (2).
4. Install and tighten the four screws (3) that secure the ballast module to the underside of the front lamp unit housing. Tighten the screws securely.
5. Reinstall the front lamp unit into the vehicle. See **Electrical - Lamps and Lighting/Lamps/Lighting - Exterior/UNIT, Front Lamp - Installation**.
6. Reconnect the battery negative cable.

LAMP, CENTER HIGH MOUNTED STOP

REMOVAL

REMOVAL

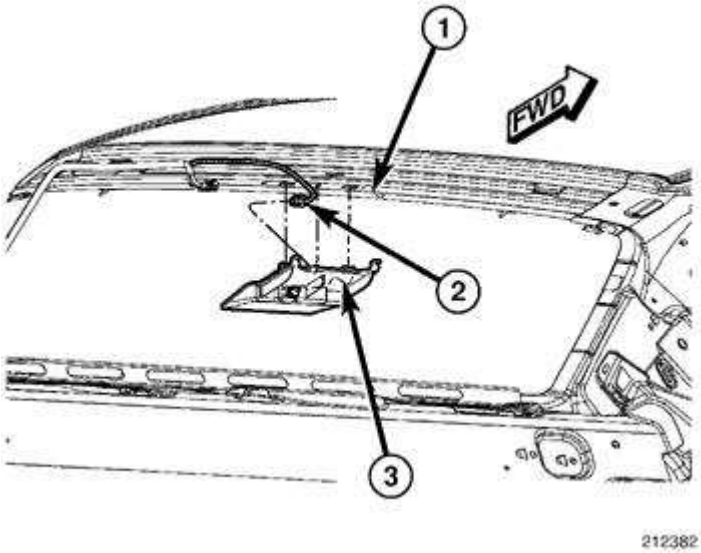

Fig. 10: Identifying CHMSL & Electrical Connector
Courtesy of CHRYSLER LLC

1. Disconnect and isolate the battery negative cable.
2. Lower the rear of the headliner.
3. Disconnect the Center High Mounted Stop Lamp (CHMSL) electrical connector (2).
4. Pull down on the CHMSL (3) and remove it from the vehicle (1).

INSTALLATION

INSTALLATION

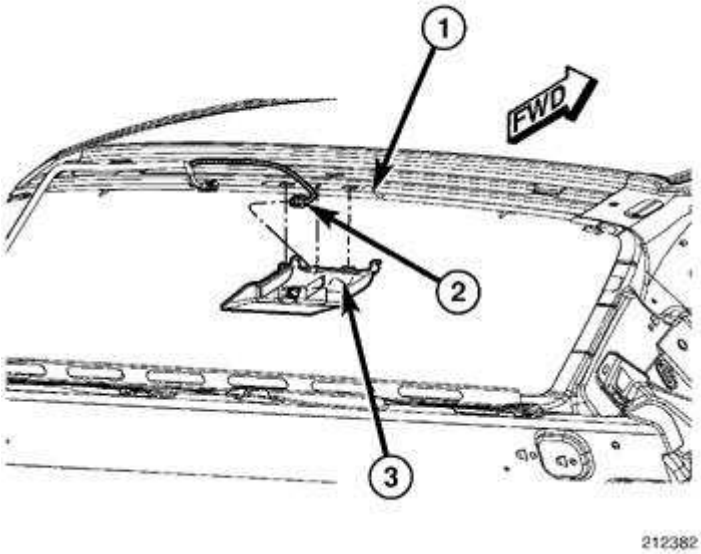

Fig. 11: Identifying CHMSL & Electrical Connector

Courtesy of CHRYSLER LLC

1. Align the tabs of the Center Hight Mount Stop LampCHMSL (3) with the corresponding holes on the vehicle and push up to secure it to the vehicle (1).
2. Connect the Center High Mounted Stop Lamp (CHMSL) electrical connector (2).
3. Raise the rear of the headliner.
4. Connect the battery negative cable.

LAMP, FOG

REMOVAL

REMOVAL

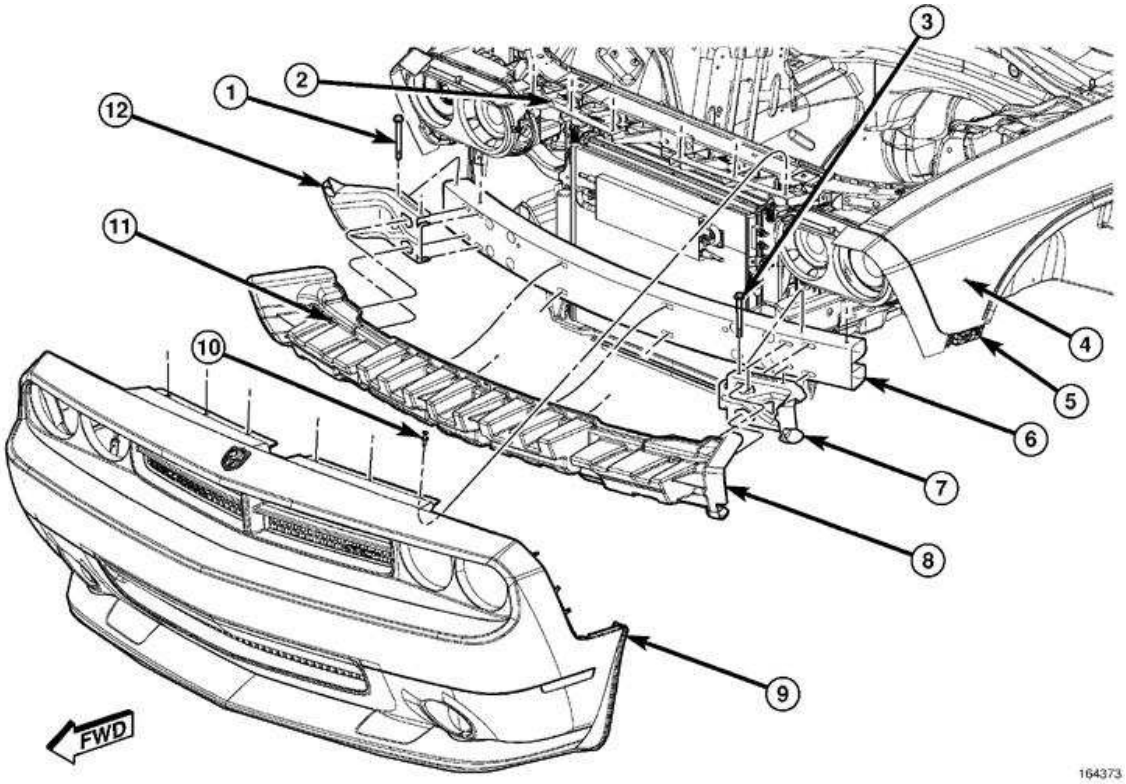

Fig. 12: Identifying Front Fascia Components
Courtesy of CHRYSLER LLC

1. Disconnect and isolate the battery negative cable.
2. Remove the front fascia. Refer to **Frame and Bumpers/Bumpers/FASCIA, Front - Removal** .

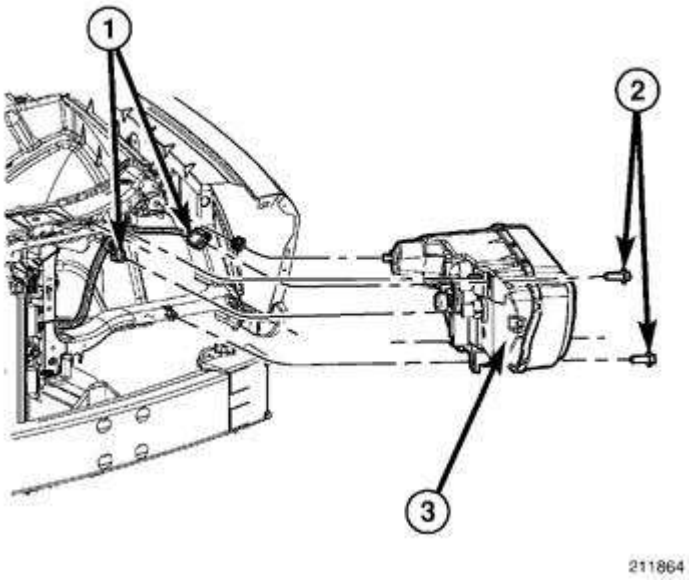

Fig. 13: Headlamp Assembly
Courtesy of CHRYSLER LLC

3. Remove the headlamp assembly. See **Electrical - Lamps and Lighting/Lamps/Lighting - Exterior/UNIT, Front Lamp - Removal**

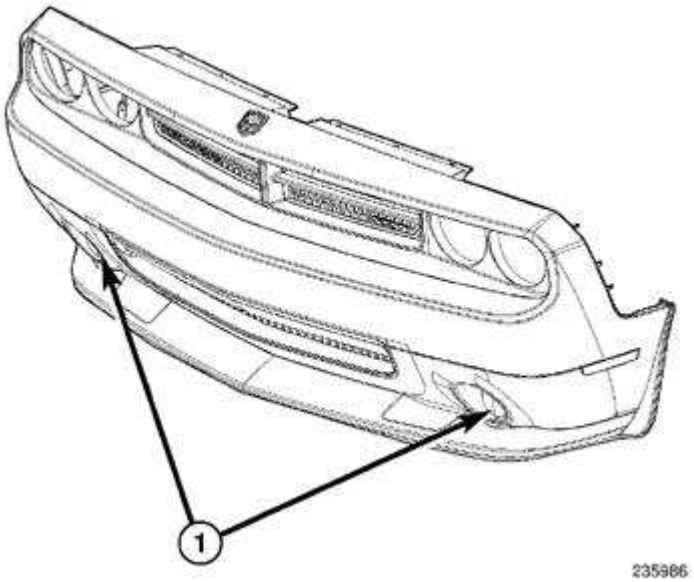

Fig. 14: Fog Lamps
Courtesy of CHRYSLER LLC

4. Disconnect the electrical connector located behind the bumper fascia.
5. Remove the two fog lamp mounting fasteners.
6. Remove the fog lamp (1).

INSTALLATION

INSTALLATION

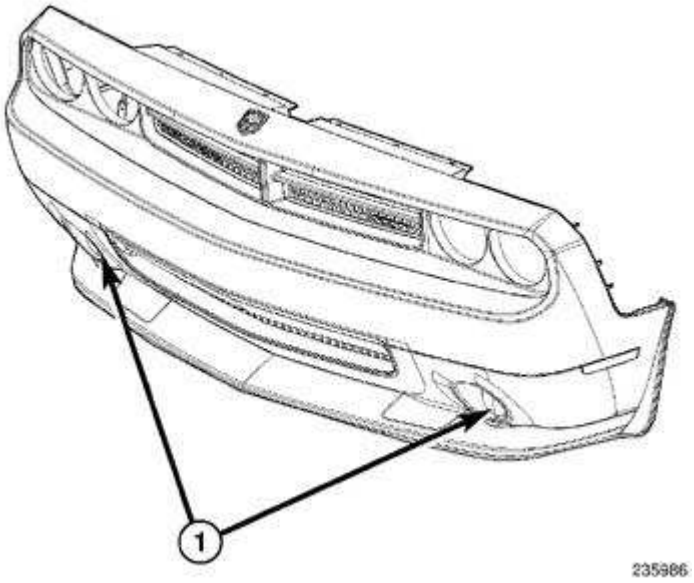

Fig. 15: Fog Lamps
Courtesy of CHRYSLER LLC

1. Position the fog lamp (1) in the fascia opening.
2. Install the two fog lamp unit mounting fasteners.
3. Connect the electrical connector.

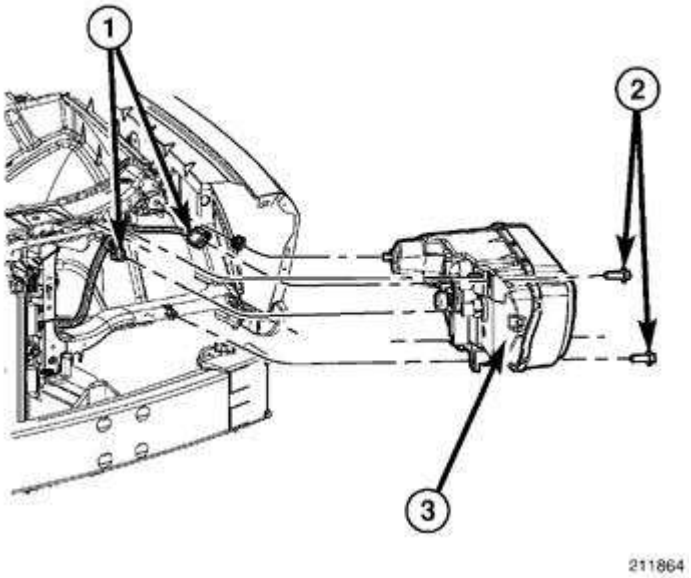

Fig. 16: Headlamp Assembly
Courtesy of CHRYSLER LLC

4. Install the headlamp assembly (3). See **Electrical - Lamps and Lighting/Lamps/Lighting - Exterior/UNIT, Front Lamp - Installation**

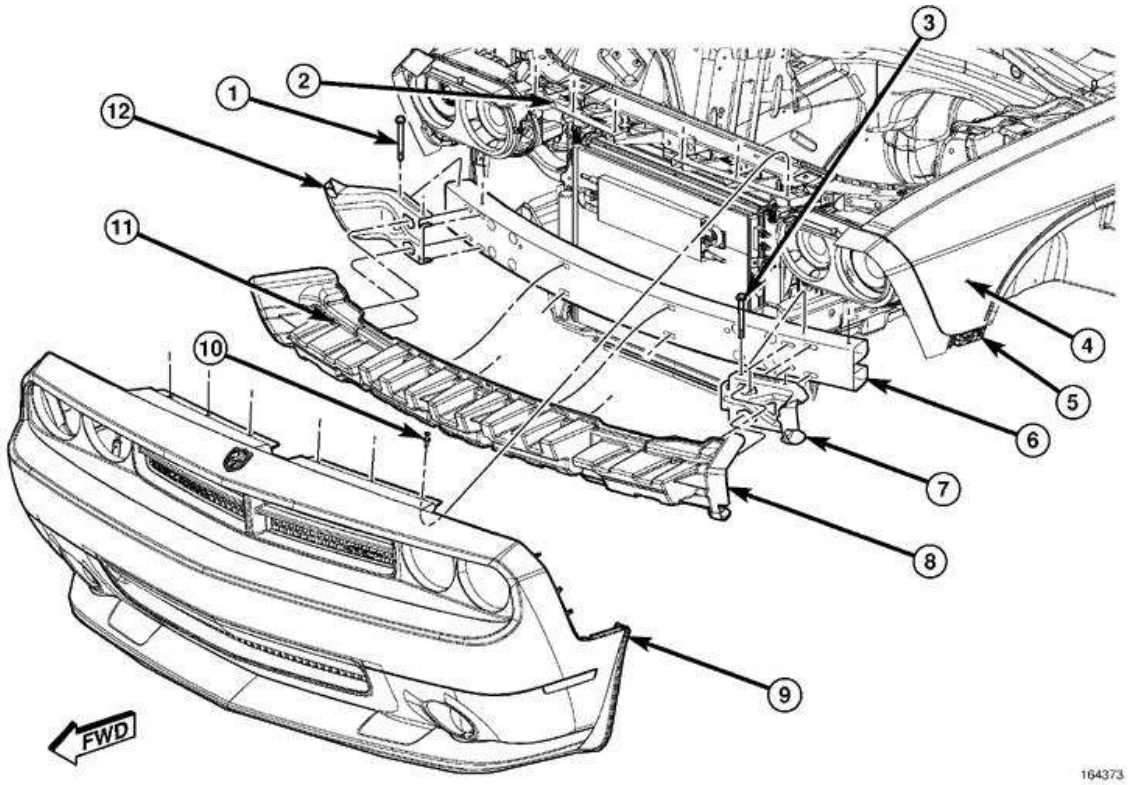

Fig. 17: Identifying Front Fascia Components
Courtesy of CHRYSLER LLC

5. Install the front fascia. Refer to **Frame and Bumpers/Bumpers/FASCIA, Front - Installation** .
6. Connect the battery negative cable.

LAMP, LICENSE PLATE

REMOVAL

REMOVAL

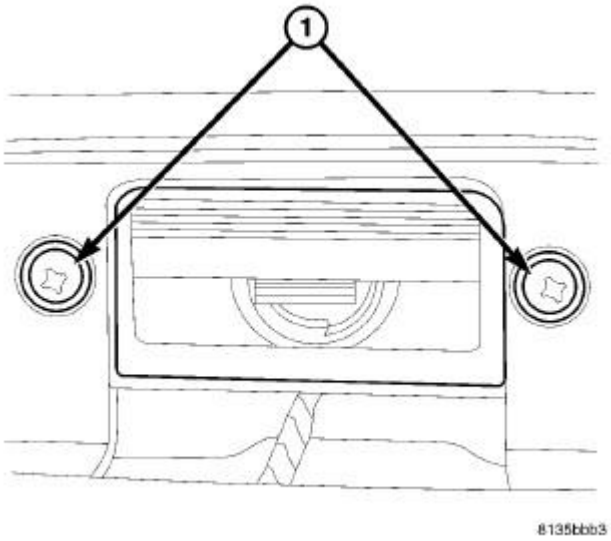

Fig. 18: License Plate Lamp And Mounting Screws
Courtesy of CHRYSLER LLC

1. Remove the two mounting screws (1) to the license lamp unit.



Fig. 19: License Plate Lamp
Courtesy of CHRYSLER LLC

2. Remove the lamp socket from the lamp unit by twisting socket counterclockwise.

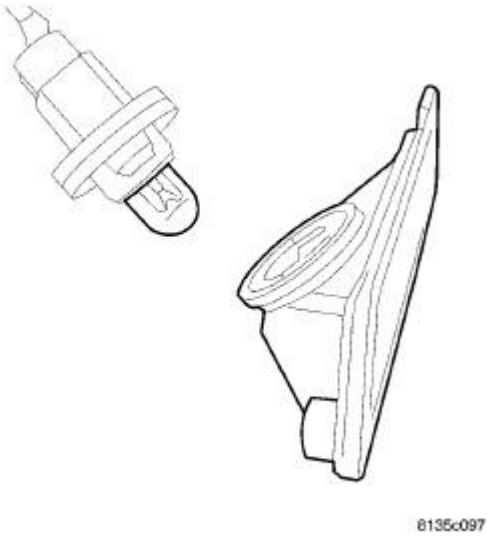

Fig. 20: License Plate Lamp
Courtesy of CHRYSLER LLC

3. Separate socket from lamp.

INSTALLATION

INSTALLATION

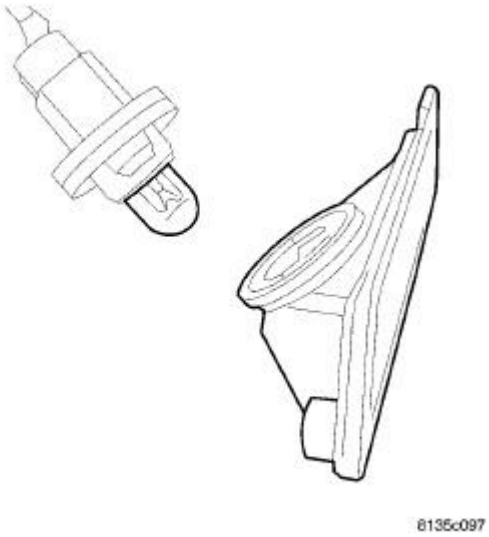

Fig. 21: License Plate Lamp
Courtesy of CHRYSLER LLC

1. Position lamp socket into lamp unit.

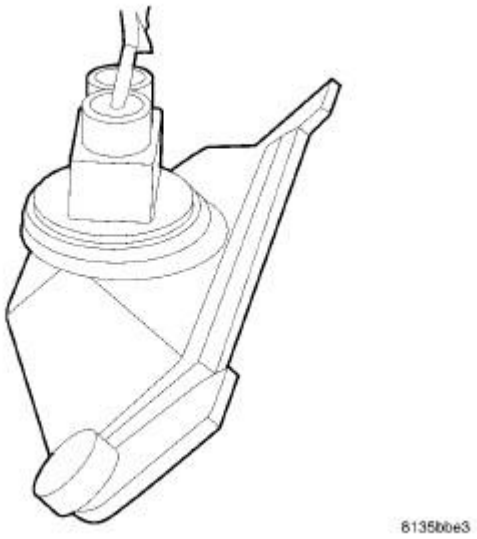

Fig. 22: License Plate Lamp
Courtesy of CHRYSLER LLC

2. Twist the socket clockwise until stops.

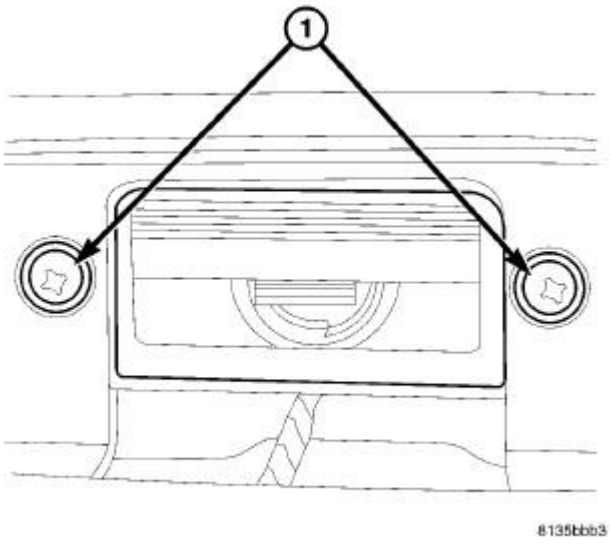

Fig. 23: License Plate Lamp And Mounting Screws
Courtesy of CHRYSLER LLC

3. Maneuver the lamp unit up into rear fascia and install the two retaining screws (1).

LAMP, PARK AND TURN SIGNAL, FRONT

REMOVAL

REMOVAL

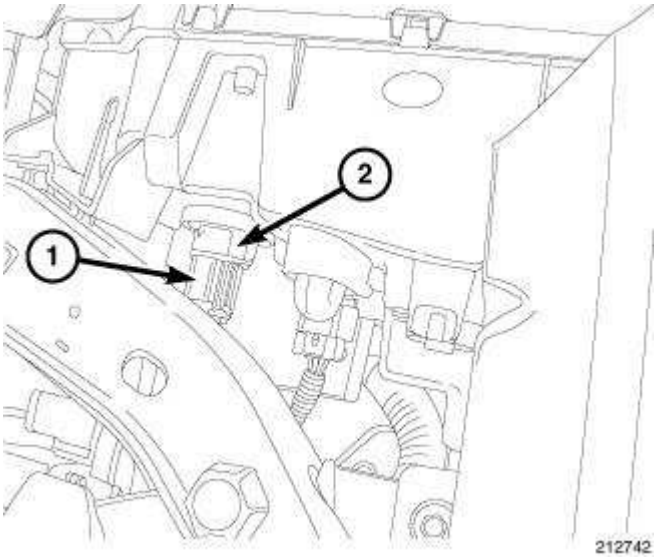

Fig. 24: Removing/Installing Front Park And Turn Signal Lamp
Courtesy of CHRYSLER LLC

1. Disconnect and isolate the battery negative cable.
2. From above the headlamp unit, reach behind and just below the upper radiator crossmember and twist the park/turn signal lamp socket out.
3. Remove the lamp (2) from the socket.

INSTALLATION

INSTALLATION

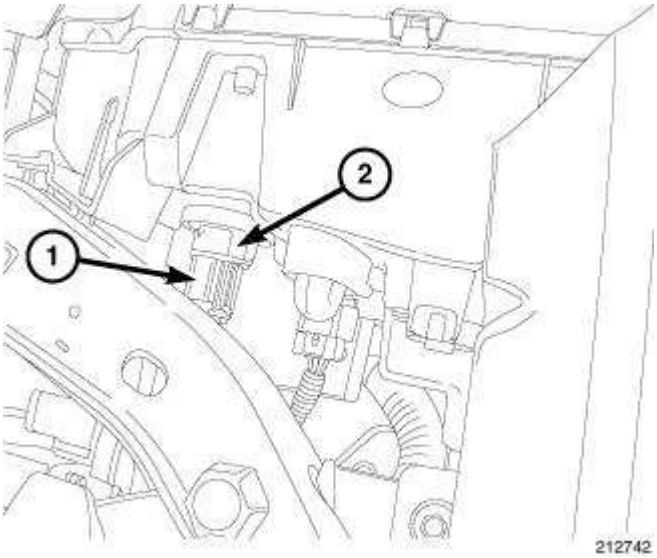

Fig. 25: Removing/Installing Front Park And Turn Signal Lamp
Courtesy of CHRYSLER LLC

1. Install lamp into socket.
2. Install lamp socket (2) into the headlamp unit. Twist socket clockwise.
3. Connect the battery negative cable.

LAMP, TAIL

REMOVAL

REMOVAL

OUTER

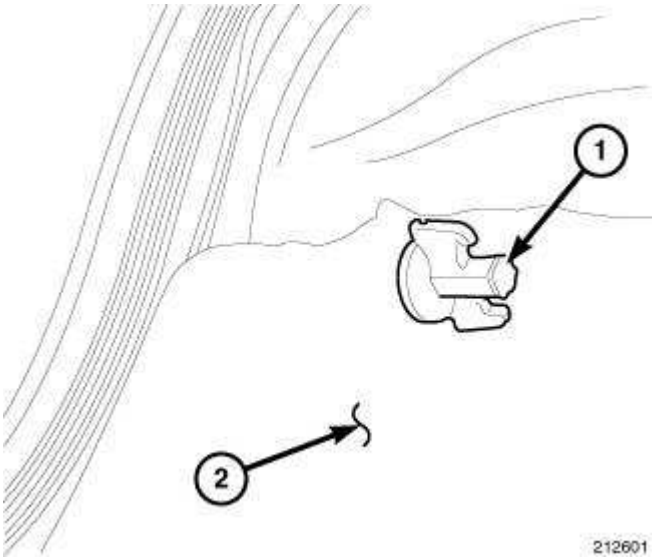

Fig. 26: Identifying Wing Nut & Trunk Trim
Courtesy of CHRYSLER LLC

1. Disconnect and isolate the battery negative cable.
2. From inside the trunk, remove the wing nut (1) and peel back the trunk trim (2).

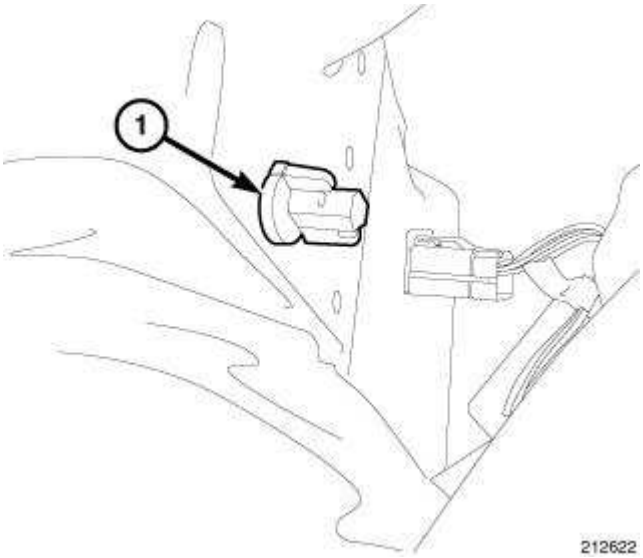

Fig. 27: Wing Nut
Courtesy of CHRYSLER LLC

3. Remove the remaining wing nut (1).

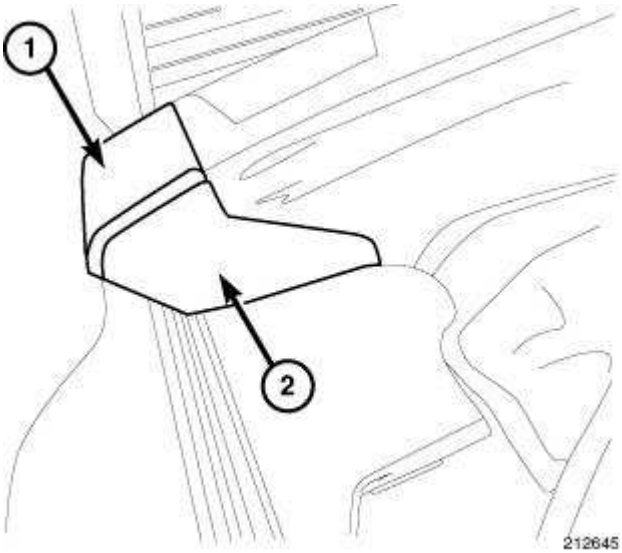

Fig. 28: Identifying Rear Fascia & Upper Fascia Trim Cover
Courtesy of CHRYSLER LLC

4. Remove the upper fascia trim cover (2) from the rear fascia (1).

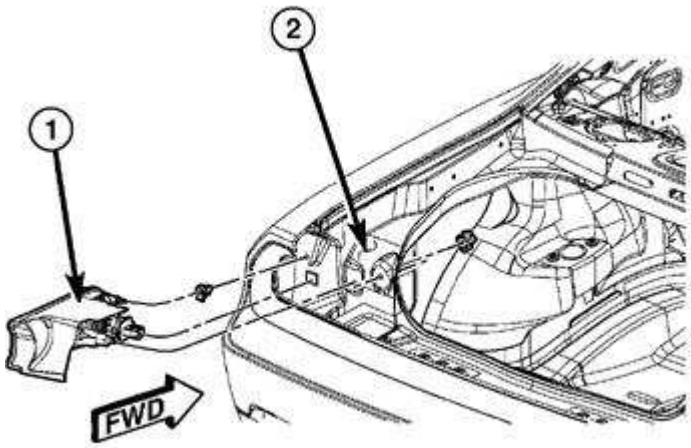

212669

Fig. 29: Identifying Tail Lamp Unit & Quarter Trim Panel
Courtesy of CHRYSLER LLC

5. Pull the tail lamp unit (1) straight out of the rear of the quarter trim panel (2) and disconnect the electrical connector.

CENTER

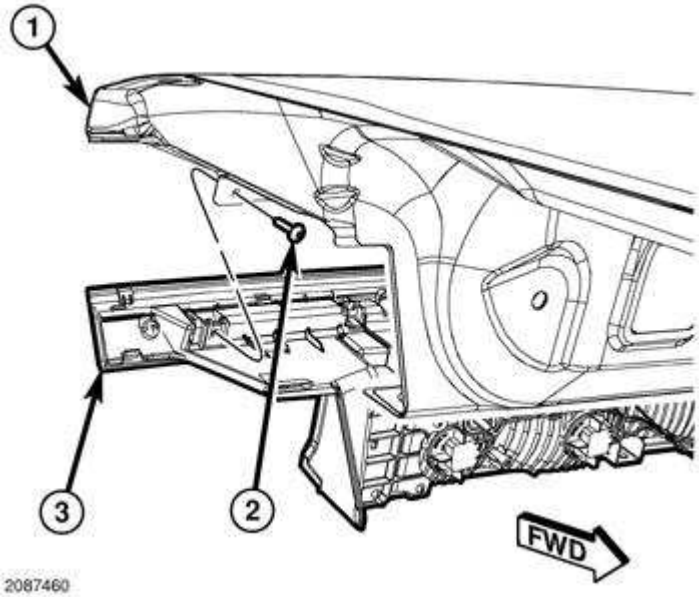

2087460

Fig. 30: Identifying Deck Lid, Center Tail Lamp Unit & Screws
Courtesy of CHRYSLER LLC

1. Disconnect and isolate the negative battery cable
2. Remove the two screws (2) that secure the outboard ends of the center tail lamp unit (3) to the

deck lid (1).

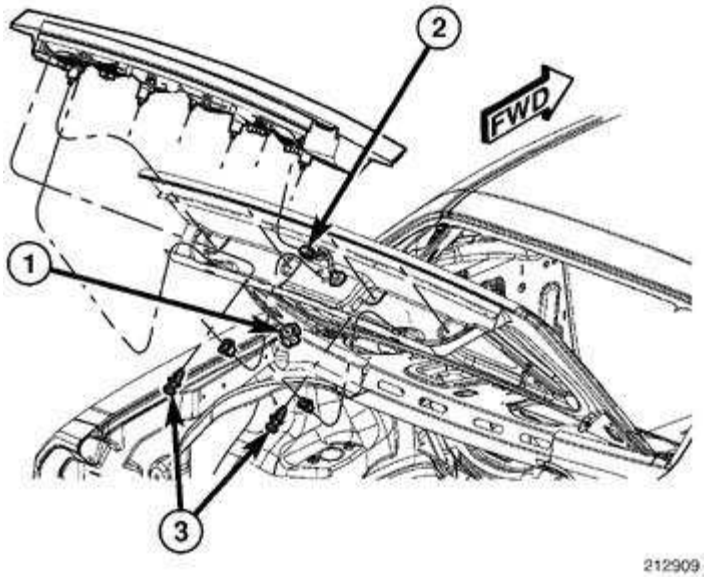

Fig. 31: Identifying Wing Nuts, Electrical Connector & Push Pin Retainers
Courtesy of CHRYSLER LLC

3. Remove the four wing nuts (1) from the back side of the trunk lid.
4. Remove the two push pin retainers (3). from the bottom of the center tail lamp unit.
5. Carefully pull the center tail lamp unit away from the trunk lid and disconnect the electrical connector (2).

INSTALLATION

INSTALLATION

OUTER

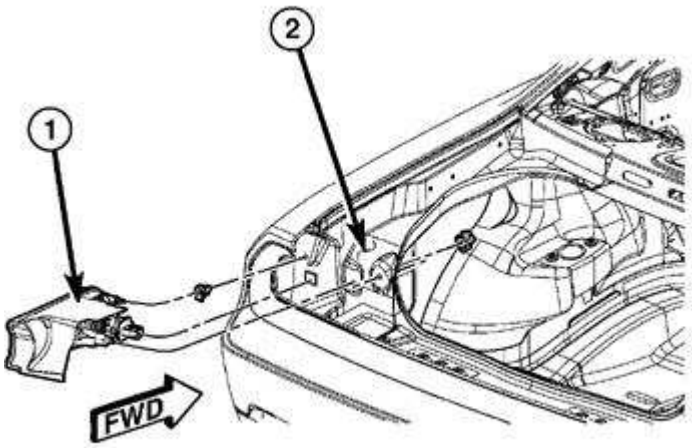

Fig. 32: Identifying Tail Lamp Unit & Quarter Trim Panel
Courtesy of CHRYSLER LLC

1. Connect the electrical connector and position the outer tail lamp unit (1) in the rear quarter panel (2) of vehicle.

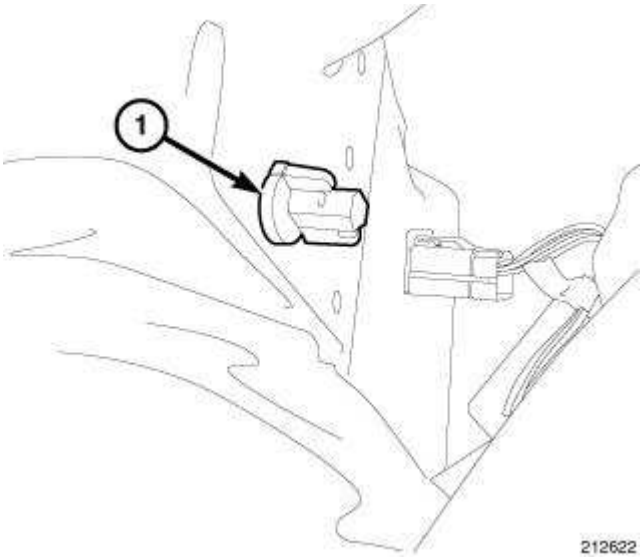

Fig. 33: Wing Nut
Courtesy of CHRYSLER LLC

2. Install the first plastic wing nut (1).

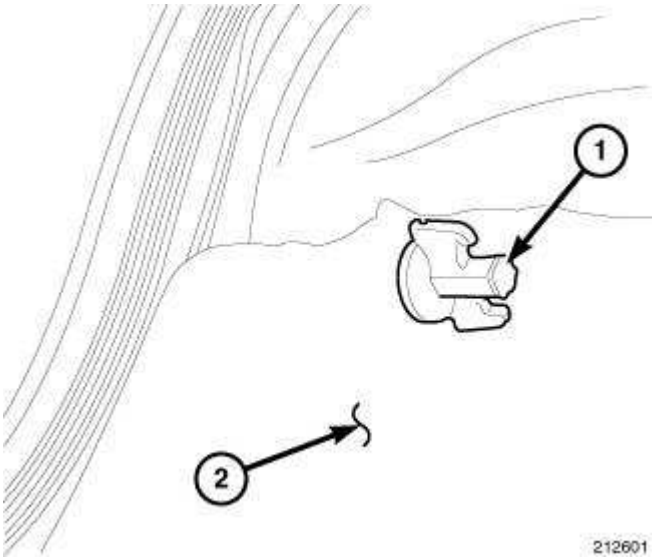

Fig. 34: Identifying Wing Nut & Trunk Trim
Courtesy of CHRYSLER LLC

3. Replace trunk carpeting (2) and install the second wing nut (1).

NOTE: **The Battery Reconnection procedure must be performed after the battery has been reconnected. Refer to Electrical - Engine Systems/Battery System - Standard Procedure .**

4. Reconnect the battery negative cable.

CENTER

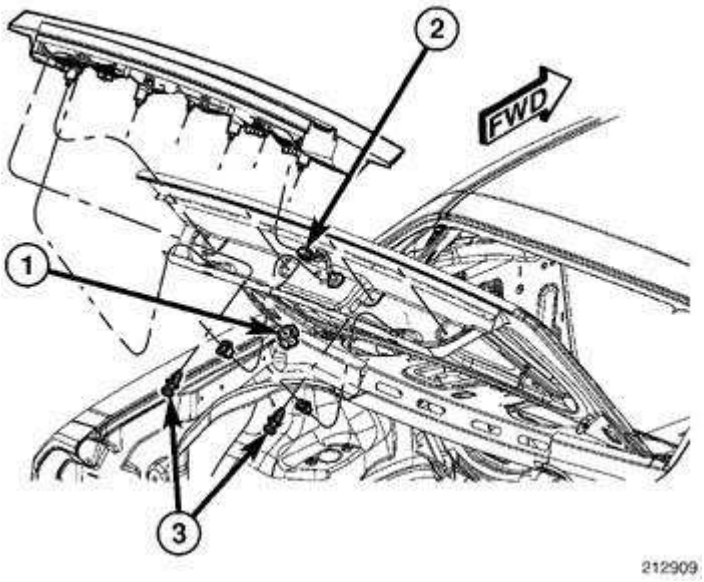

Fig. 35: Identifying Wing Nuts, Electrical Connector & Push Pin Retainers
Courtesy of CHRYSLER LLC

1. Connect the electrical connector (2) to the center tail lamp unit.
2. Position the center tail lamp unit on the trunk lid
3. Install the two push pin retainers (3) to the bottom of the center tail lamp unit.
4. Install the four wing nuts (1) at the back side of the trunk lid.

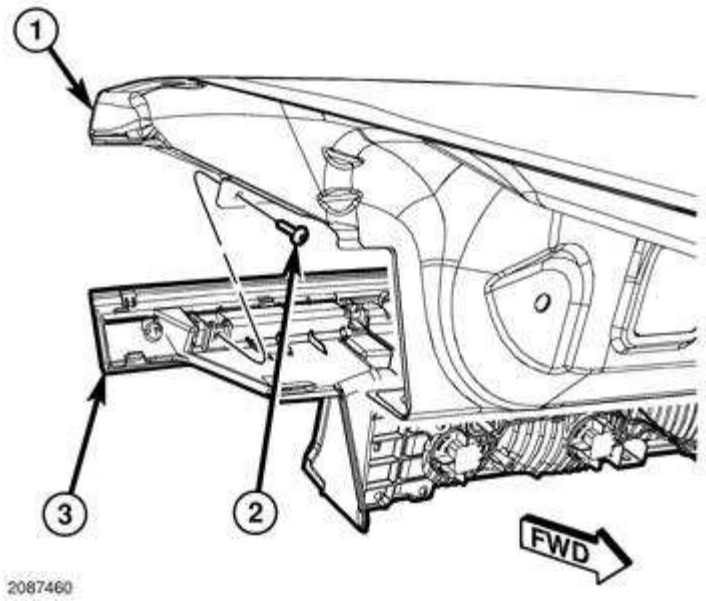

Fig. 36: Identifying Deck Lid, Center Tail Lamp Unit & Screws
Courtesy of CHRYSLER LLC

5. Install and tighten the two screws (2) that secure the outboard ends of the center tail lamp unit (3) to the deck lid (1). Tighten the screws to 3.5 N.m (30 in. lbs.).

NOTE: **The Battery Reconnection procedure must be performed after the battery has been reconnected. Refer to Electrical - Engine Systems/Battery System - Standard Procedure .**

6. Reconnect the battery negative cable.

SENSOR, AUTO HEADLAMP

REMOVAL

REMOVAL

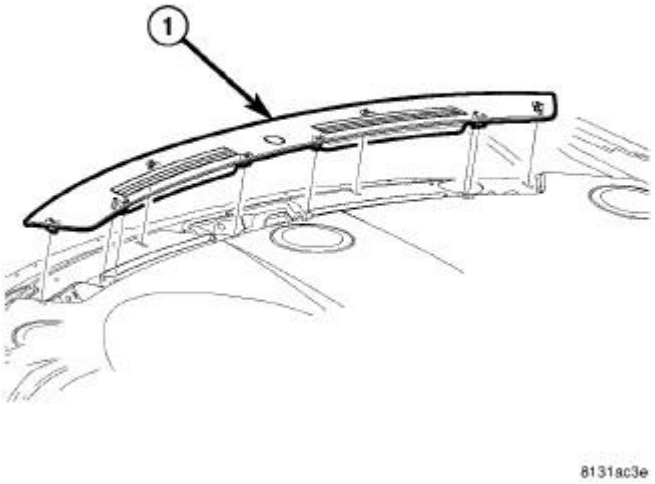

Fig. 37: Defroster Grille
Courtesy of CHRYSLER LLC

1. Disconnect and isolate the battery negative cable.
2. Remove the defroster grille. Refer to **Body/Instrument Panel/GRILLE, Defroster - Removal** .

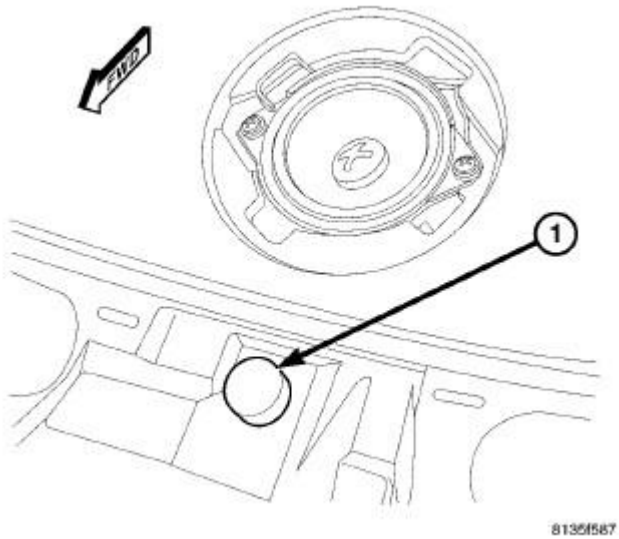

Fig. 38: Auto Headlamp Sensor
Courtesy of CHRYSLER LLC

3. Using a trim stick (special tool #C-4755) or equivalent, gently pry up on the auto headlamp sensor (1).
4. Pull the sensor from the top of the instrument panel.
5. Disconnect the one electrical connector.

INSTALLATION

INSTALLATION

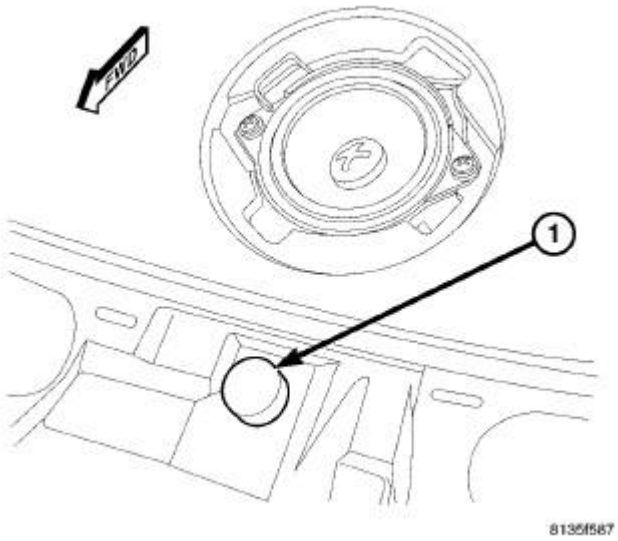

Fig. 39: Auto Headlamp Sensor
Courtesy of CHRYSLER LLC

1. Connect the one electrical connector.
2. Position the auto headlamp sensor (1) in instrument panel and press firmly down to snap into place.

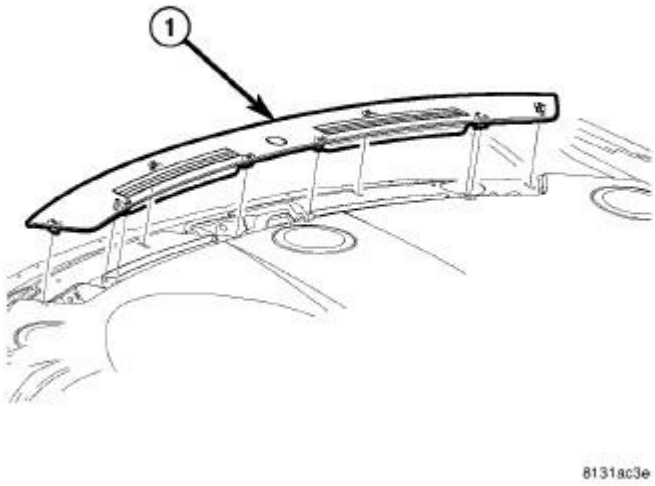

Fig. 40: Defroster Grille
Courtesy of CHRYSLER LLC

3. Install the defroster grille. Refer to **Body/Instrument Panel/GRILLE, Defroster - Installation** .
4. Connect the battery negative cable.

SWITCH, HEADLAMP

REMOVAL

REMOVAL

1. Disconnect and isolate the battery negative cable.

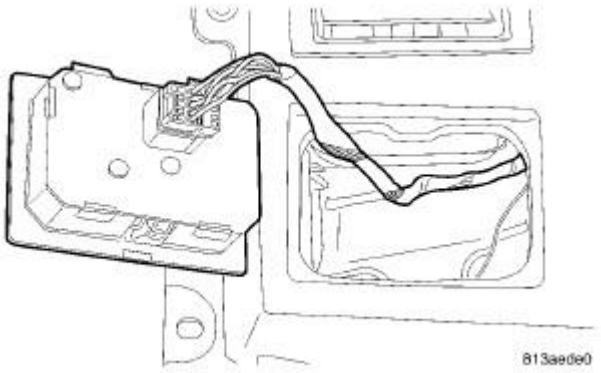

Fig. 41: Removing/Installing Headlamp Switch
Courtesy of CHRYSLER LLC

2. Remove steering column opening cover. Refer to **Body/Instrument Panel/COVER, Steering Column Opening - Removal** .
3. From underneath and behind the instrument panel, push up on the lower clip on headlamp switch then wiggle it down and out of instrument panel.
4. Disconnect the headlamp switch electrical connector.

INSTALLATION

INSTALLATION

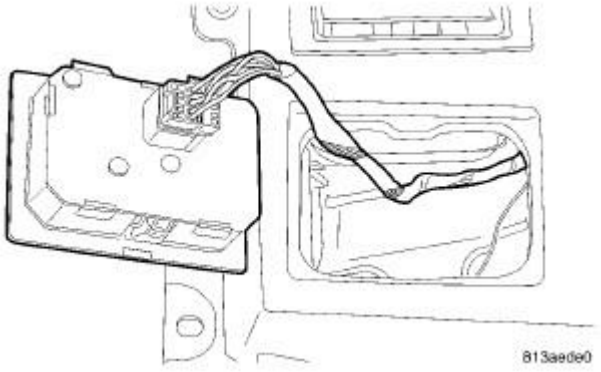

Fig. 42: Removing/Installing Headlamp Switch
Courtesy of CHRYSLER LLC

1. Connect the headlamp switch electrical connector.
2. Position headlamp switch in instrument panel and firmly snap into place.
3. Install the steering column opening cover. Refer to **Body/Instrument Panel/COVER, Steering Column Opening - Installation** .

SWITCH, MULTIFUNCTION

DESCRIPTION

DESCRIPTION

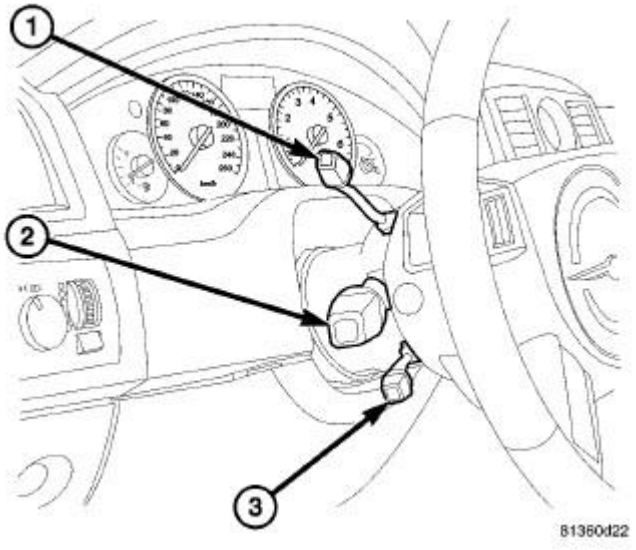

Fig. 43: Multi-Function Switch
Courtesy of CHRYSLER LLC

The multi-function switch (2) is located on the steering column, just below the steering wheel, within the Steering Column Control Module (SCCM).

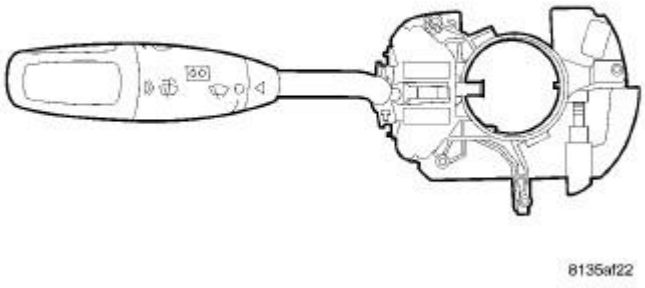

Fig. 44: Control Stalk & Control Knob
Courtesy of CHRYSLER LLC

The only visible components of the multi-function switch are the control stalk and control knob that extend through the SCCM on the left side of the column. The remainder of the switch including its mounting provisions, its electrical connection, and the turn signal cancel actuator are concealed within the SCCM.

Each of the switch controls has white International Control and Display Symbol graphics applied to it, which clearly identify its many functions. Three integral locating posts on the switch housing, slide into channels in a receptacle in the circuit board within the SCCM. A single integral connector receptacle in the circuit board connects the switch to the vehicle electrical system through the instrument panel wire harness.

The multi-function switch provides the vehicle operator with a control interface for the following functions:

- **Front Washer Control** - The multi-function switch control knob provides a momentary position for front washer system operation.
- **Front Wiper Control** - The multi-function switch control knob provides two continuous front wipe switch positions, low speed or high speed; and, an intermittent front wipe mode with six delay interval positions.
- **Headlamp Beam Selection** - The multi-function switch control stalk provides detent switching for selection of the headlamp high or low beams. There is also an intermediate momentary position that allows the headlamp high beam circuits to be momentarily flashed to provide an optical horn feature (sometimes referred to as flash-to-pass) as an optical signalling device.
- **Turn Signal Control** - The multi-function switch control stalk provides momentary non-detent (lane change) switching and detent switching with automatic cancellation for both the left and right turn signal lamps.

The multi-function switch cannot be adjusted or repaired. If any function of the switch is faulty, or if the switch is damaged, the entire switch must be replaced as a unit. Refer to **Steering/Column/MODULE, Steering Column Control - Disassembly** .

OPERATION

OPERATION

The multi-function switch operates as follows:

- **Front Washer Control** - The control knob on the end of the multi-function switch control stalk is depressed towards the steering column to momentarily activate the washer pump in the front washer mode. The washer pump will continue to operate in the front washer mode until the control knob is released. The multi-function switch provides an output by sending electronic front washer switch status messages to the Front Control Module (FCM) over the Controller Area Network (CAN) data bus. The FCM responds by energizing or de-energizing the washer pump in the front washer mode.
- **Front Wiper Control** - The control knob on the end of the multi-function switch control stalk is rotated to one of the continuous front wiper detents, to one of six intermittent (or auto wipe sensitivity positions if so equipped) wiper detents, or to the Off position to select the front wiper mode. The multi-function switch provides an output by sending electronic front wiper switch status messages to the FCM over the CAN data bus. The FCM responds by energizing or de-energizing the wiper on/off and high/low relays in the Power Distribution Center (PDC) for front wiper system control.
- **Headlamp Beam Selection** - The control stalk of the multi-function switch is pushed toward the instrument panel for a latching high beam selection. Pulling the stalk rearward toward the steering wheel for a latching low beam selection. Each time the control stalk is actuated to the momentary position with the headlamps turned off, the headlamp high beams will be illuminated for as long as the control stalk is held in this position. The multi-function switch provides an output to the FCM over the CAN data bus. The FCM energizes or de-energizes the selected low or high beam circuits.
- **Turn Signal Control** - The control stalk of the multi-function switch is moved upward to activate the right turn signal circuitry, and, downward to activate the left turn signal circuitry. The turn signal switch has a detent position in each direction that provides turn signals with automatic cancellation, and an intermediate, momentary position in each direction that provides turn signals only until the control stalk is released. When the control stalk is moved to a turn signal switch detent position, the cancel actuator extends toward the center of the steering column. A turn signal cancel cam that is integral to the clockspring rotates with the steering wheel and the cam lobes contact the cancel actuator when it is extended from the multi-function switch. When the steering wheel is rotated during a turning maneuver, one of the two turn signal cancel cam lobes will contact the turn signal cancel actuator. The cancel actuator latches against the cancel cam rotation in the direction opposite that which is signaled. If the left turn signal detent is selected, the lobes of the cancel cam will ratchet past the cancel actuator when the steering wheel is rotated to the left, but will unlatch the cancel actuator as the steering wheel rotates to the right and returns to center, which will cancel the turn signal event and release the control stalk from the detent so it returns to the neutral Off position. When a turn signal is activated, the multi-function switch provides an output to the FCM over the CAN data bus. In addition, the message is sent to the CCN via the CAN bus to activate the proper signal within the EMIC. The FCM energizes and flashes or de-energizes the selected left or right turn signal circuits.

The multi-function switch can be diagnosed using a diagnostic scan tool and the appropriate diagnostic information.

The multi-function switch cannot be adjusted or repaired. If any function of the switch is faulty, or if the switch is damaged, the entire switch must be replaced as a unit. Refer to **Steering/Column/MODULE, Steering Column Control - Disassembly** .

SWITCH, STOP LAMP

DESCRIPTION

DESCRIPTION

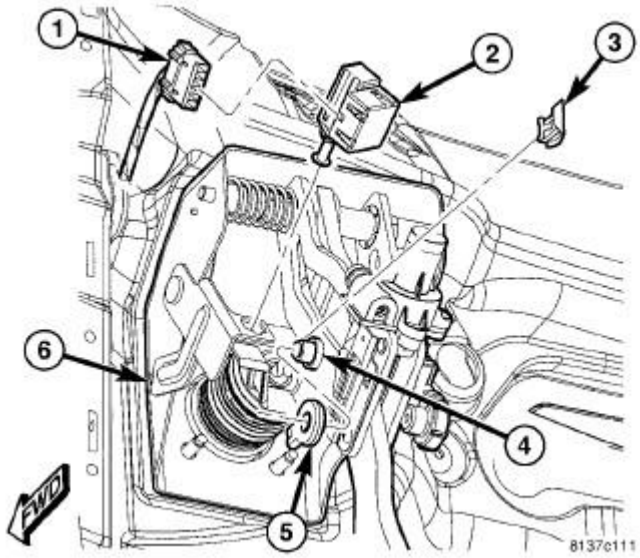

Fig. 45: STOP LAMP SWITCH AND PEDAL ROD
Courtesy of CHRYSLER LLC

The stop lamp switch (2) is located under the instrument panel at the brake pedal arm. This switch contains three internal switches controlling various functions of the vehicle, one of them controls operation of the vehicle's brake lamps. Other functions of the internal switches include speed control deactivation and brake sense for the ABS and the brake transmission shift interlock.

OPERATION

OPERATION

The stop lamp switch has three internal switches used for various functions. Among these are:

- Brake lamp actuation
- Speed control deactivation, and
- Brake sense for ABS and brake transmission shift interlock

When the brake pedal is in the released position, the plunger on the outside of the stop lamp switch is pushed inward by the brake pedal. In this position, the electrical contacts for one internal switch are

open while the electrical contacts for other two internal switches are closed.

When the brake pedal is pressed, the plunger on the outside of the stop lamp switch extends outward. This action closes the electrical contacts for the one internal switch and opens the contacts for the remaining two switches within the stop lamp switch. The internal switch which closes when the brake pedal is pressed completes the circuit to the brake lamps at the rear of the vehicle, thus allowing illumination of the brake lamps and the center-high-mounted stop lamp (CHMSL).

DIAGNOSIS AND TESTING

STOP LAMP SWITCH

NOTE: Before proceeding with this diagnostic test, verify the adjustment of the stop lamp switch to rule out misadjustment. See Electrical - Lamps and Lighting/Lamps/Lighting - Exterior/SWITCH, Stop Lamp - Adjustments

If the electrical circuit has been tested and the stop lamp switch is suspected of being faulty, it can be tested using the following method.

1. Remove the switch from the vehicle. See **Electrical - Lamps and Lighting/Lamps/Lighting - Exterior/SWITCH, Stop Lamp - Removal**

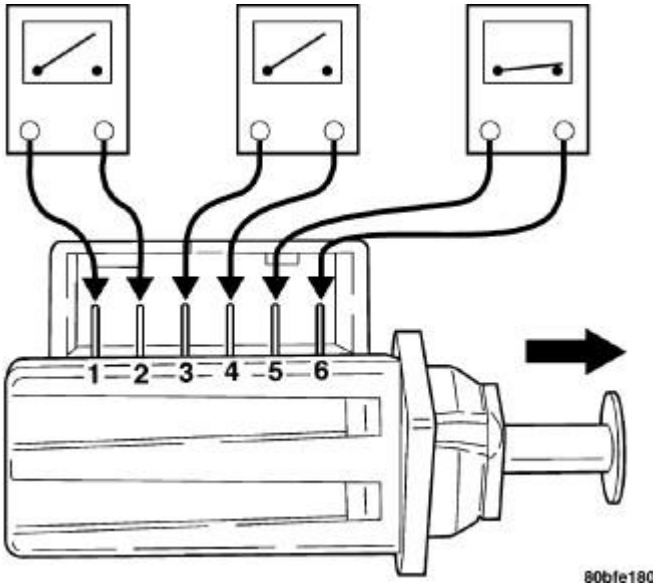

Fig. 46: SWITCH TEST - RELEASED
Courtesy of CHRYSLER LLC

2. With the switch in the released position (plunger extended), use an ohmmeter to test each of the three internal switches as shown in illustration. You should achieve the results as indicated in the figure.

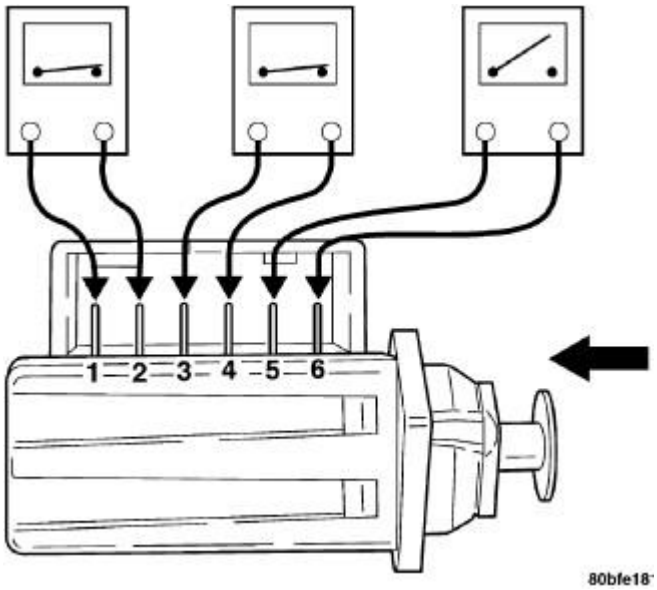

Fig. 47: SWITCH TEST - DEPRESSED POSITION
Courtesy of CHRYSLER LLC

3. Gently push the plunger on the stop lamp switch in until it stops.
4. With the switch in the depressed position (plunger pushed in), use an ohmmeter to test each of the three internal switches as shown in illustration. You should achieve the results as indicated in the figure.

   If you do not achieve the results as indicated in both figures, the switch is faulty and must be replaced.

5. Install the switch in the vehicle. See **Electrical - Lamps and Lighting/Lamps/Lighting - Exterior/SWITCH, Stop Lamp - Installation**

REMOVAL

REMOVAL

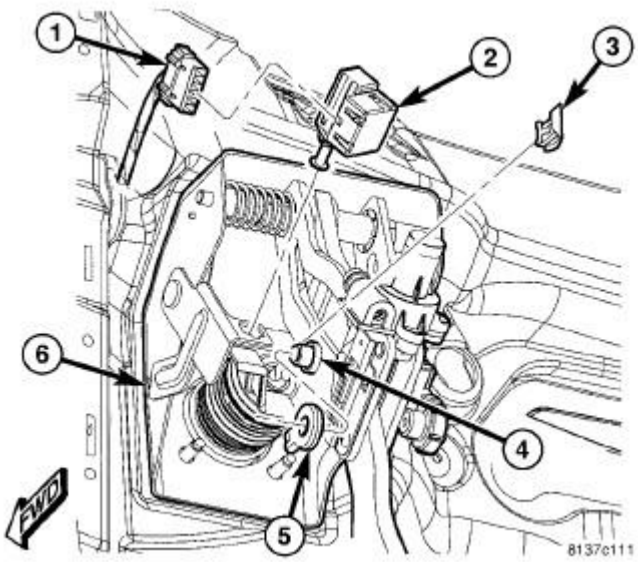

Fig. 48: STOP LAMP SWITCH AND PEDAL ROD
Courtesy of CHRYSLER LLC

1. Depress and hold the brake pedal.
2. Remove the stop lamp switch (2) from it's bracket on the brake pedal assembly (6). To do so, rotate the stop lamp switch in a counterclockwise direction approximately 30 degrees from its proper mounting position. Pull the switch rearward and remove it from its mounting bracket.
3. Disconnect the wiring harness connector (1) from the switch.

INSTALLATION

INSTALLATION

NOTE: Prior to installing the stop lamp switch into its bracket, the plunger must be moved to its fully extended position using the procedure described in 1.

1. Hold the stop lamp switch firmly in one hand. Using your other hand, pull outward on the plunger of the switch until it has ratcheted out to its fully extended position.

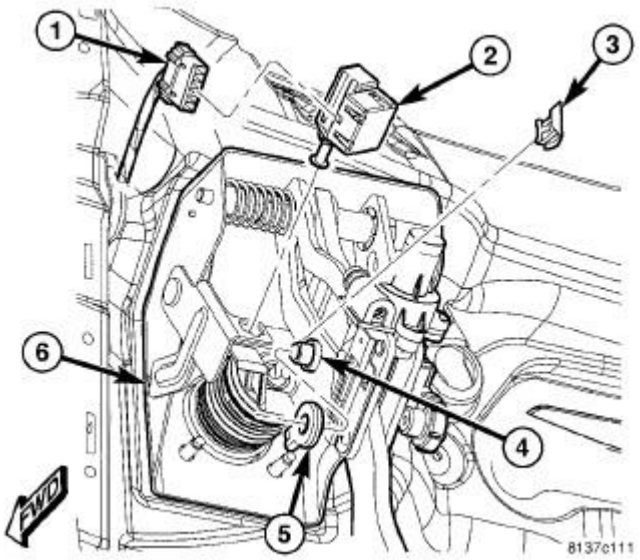

Fig. 49: STOP LAMP SWITCH AND PEDAL ROD
Courtesy of CHRYSLER LLC

2. Connect the wiring harness connector (1) to the stop lamp switch (2).
3. Mount the stop lamp switch into the bracket on the brake pedal assembly (6) as follows: Depress the brake pedal as far down as possible. Install the switch in its bracket by aligning the index key on switch with the notch in the square mounting hole of the mounting bracket. Once the switch is fully seated, rotate the switch clockwise approximately 30 degrees to lock the switch into the bracket.

CAUTION: Do not use excessive force when pulling back on the brake pedal to adjust the stop lamp switch. If to much force is used, damage to the stop lamp switch or striker can result.

4. Gently pull back on brake pedal until the pedal stops moving. This will cause the switch plunger to ratchet backward to the correct position.
5. Check for proper operation of the brake lamps and speed control.

ADJUSTMENTS

STOP LAMP SWITCH ADJUSTMENT

1. Depress and hold the brake pedal.
2. Remove the stop switch from its bracket. To do so, rotate the stop lamp switch in a counterclockwise direction approximately 30 degrees from its proper mounting position. Pull the switch rearward and remove it from it's mounting bracket.
3. Hold the stop lamp switch firmly in one hand. Using your other hand, pull outward on the plunger of the switch until it has ratcheted out to its fully extended position.
4. Mount the stop lamp switch into the bracket as follows: Depress the brake pedal as far down as

possible. Install the switch in its bracket by aligning the index key on switch with the notch in the square mounting hole of the mounting bracket. Once the switch is fully seated, rotate the switch clockwise approximately 30 degrees to lock the switch into the bracket.

CAUTION: Do not use excessive force when pulling back on the brake pedal to adjust the stop lamp switch. If to much force is used, damage to the stop lamp switch or striker can result.

5. Gently pull back on brake pedal until the pedal stops moving. This will cause the switch plunger to ratchet backward to the correct position.
6. Check for proper operation of the brake lamps and speed control.

UNIT, FRONT LAMP

REMOVAL

LAMP

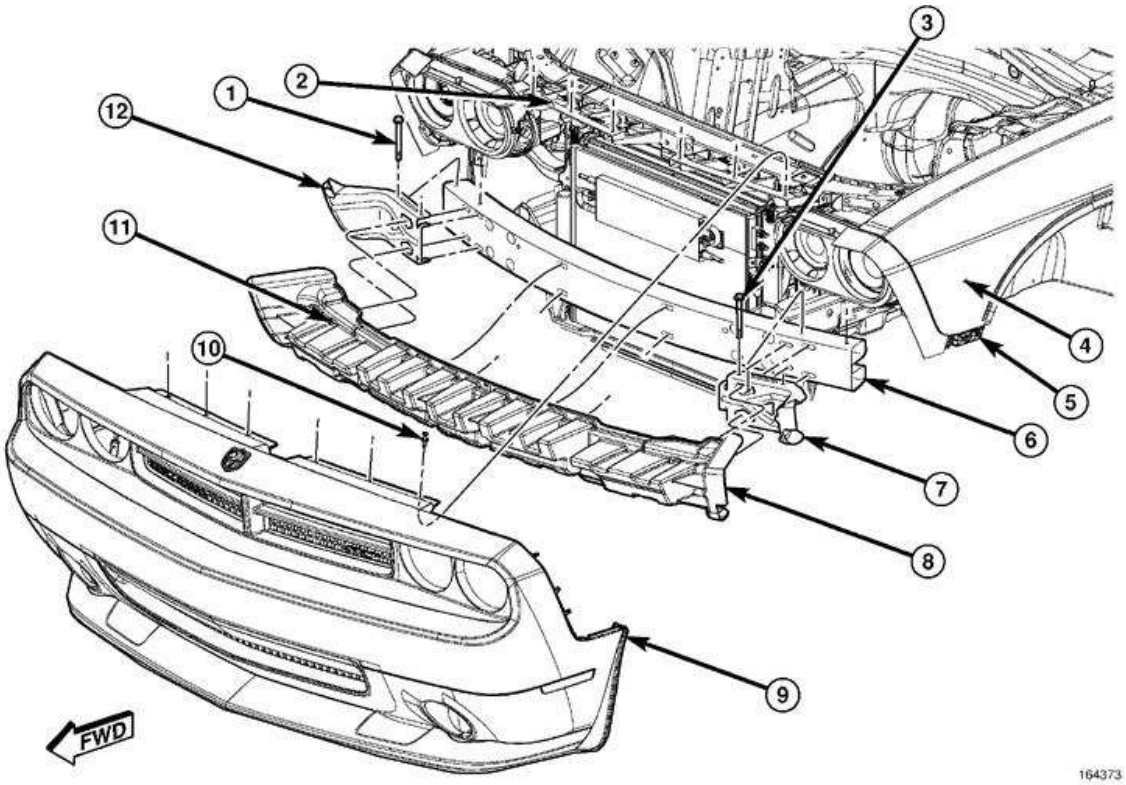

Fig. 50: Identifying Front Fascia Components
Courtesy of CHRYSLER LLC

1. Disconnect and isolate the battery negative cable.
2. Remove the front fascia (9) from the vehicle. Refer to **Frame and Bumpers/Bumpers/FASCIA, Front - Removal** .

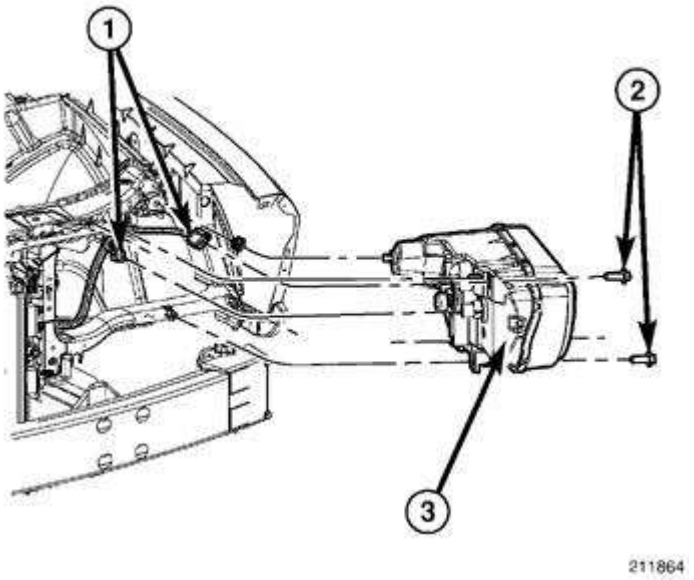

Fig. 51: Headlamp Assembly
Courtesy of CHRYSLER LLC

3. Remove the three screws (2) that secure the front lamp unit (3) to the radiator closure panel.
4. Grasp the front lamp unit firmly and pull it forward far enough to unsnap the ball stud on the upper outboard corner of the lamp housing from the grommet in the radiator closure panel.
5. Pull the lamp away from the vehicle far enough to access and disconnect the wire harness connectors (1) from the connector receptacles on the back of the lamp housing.
6. Remove the front lamp unit from the from the vehicle.

LIGHTING ELEMENT - HIGH INTENSITY DISCHARGE

WARNING: To avoid serious or fatal injury when working on the High Intensity Discharge (HID) headlamp system, be certain to take the proper precautions. The headlamp switch must be in the OFF position. Disconnect and isolate the battery negative cable. There is a risk of death caused by contact with high voltage used in the HID headlamps. There is a risk of explosion or fire caused by highly flammable materials in the vicinity of damaged HID lighting elements. There is a risk of injury caused by exposure to Ultra Violet (UV) light, a risk of burns caused by high component operating temperatures, a risk of mercury poisoning through glass splinters produced by bursting HID lighting elements. There is also a risk of poisoning caused by inhalation of mercury vapors and by toxic salts and mercury compounds being ingested or coming into contact with the skin. Do not come into contact with parts that are under high voltage. Persons with active electronic implants (e.g. heart pacemakers) must never work on HID headlamps. Wear insulated safety shoes, safety glasses and protective gloves. Remove flammable materials and ensure sufficient ventilation in the working area.

CAUTION: Do not contaminate the lighting element glass by touching it with your fingers or by allowing it to contact other oily surfaces. Shortened lighting element life will result.

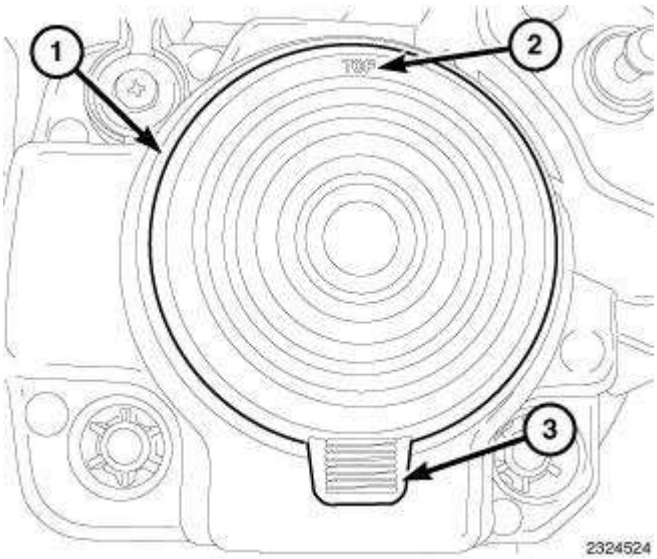

Fig. 52: Identifying Igniter Opening & Tab
Courtesy of CHRYSLER LLC

1. Disconnect and isolate the battery negative cable.
2. Remove the HID front lamp unit from the vehicle. See **Electrical - Lamps and Lighting/Lamps/Lighting - Exterior/UNIT, Front Lamp - Removal**.
3. Place the front lamp unit on a suitable work surface. Be certain to use the appropriate precautions to protect the lamp lens from cosmetic damage.
4. Grasp the tab (3) at the bottom of the rubber boot seal and pull it off of the lighting element and igniter opening (1) on the back of the lamp housing.

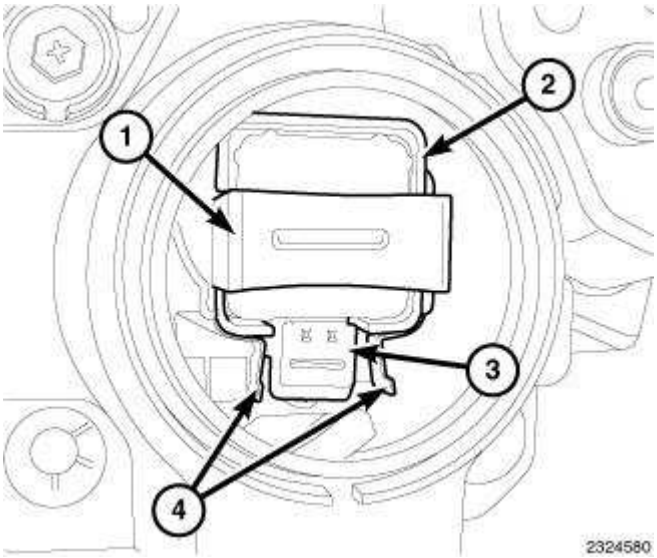

Fig. 53: Identifying Spring Steel Igniter Retainer, Igniter Receptacle, High Tension Cable Connector & Tabs
Courtesy of CHRYSLER LLC

5. Disconnect the high tension cable connector (3) from the connector receptacle integral to the igniter.

WARNING: Use care not to cut your fingers on the sharp edges of the spring steel igniter retainer.

6. Grasp the tabs (4) of the spring steel igniter retainer (1), one at a time, and pull them toward the side and away from the igniter connector far enough to disengage the retainer from the latch feature on each side of the igniter receptacle (2).
7. With the latch feature on each side of the igniter retainer disengaged, remove the retainer from the igniter receptacle.

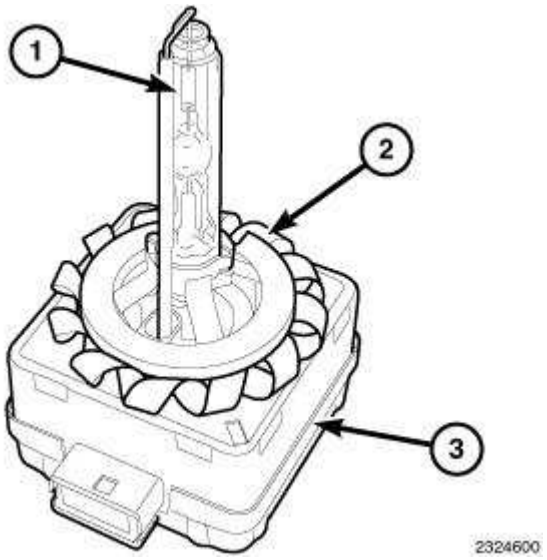

Fig. 54: Identifying Lighting Element, Coiled Metal Grounding Ring & Igniter
Courtesy of CHRYSLER LLC

CAUTION: Use care not to lose and be certain to retrieve the coiled metal grounding ring (2) that must be positioned around the insulator at the base of the lighting element during reinstallation.

8. Pull the igniter (3) and lighting element (1) unit straight out of the igniter receptacle.

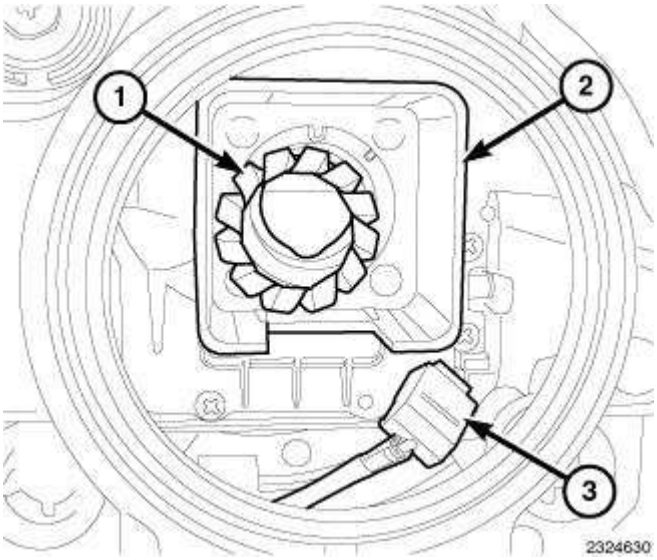

Fig. 55: Identifying Grounding Ring & Igniter Receptacle
Courtesy of CHRYSLER LLC

9. After removing the igniter and lighting element from the igniter receptacle, carefully inspect them to be certain the coiled metal grounding ring is still engaged on the insulator at the base of the lighting element. If it is not engaged on the lighting element, retrieve the grounding ring (1) from the igniter receptacle (2).

INSTALLATION

LAMP

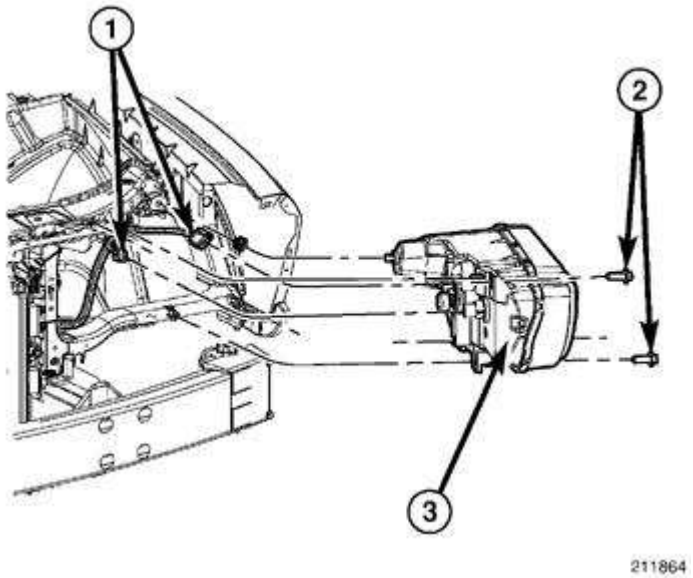

Fig. 56: Headlamp Assembly
Courtesy of CHRYSLER LLC

1. Position the front lamp unit (3) to the front of the vehicle.
2. Reconnect the wire harness connectors (1) to the connector receptacles on the back of the lamp housing.
3. Align the ball stud on the back of the upper outboard corner of the lamp housing with the grommet in the radiator closure panel.
4. Using hand pressure, push firmly and evenly on the upper outboard corner of the lamp until the ball stud snaps into the grommet.
5. Install and tighten the three screws (2) that secure the front lamp unit to the radiator closure panel. Tighten the screws securely.

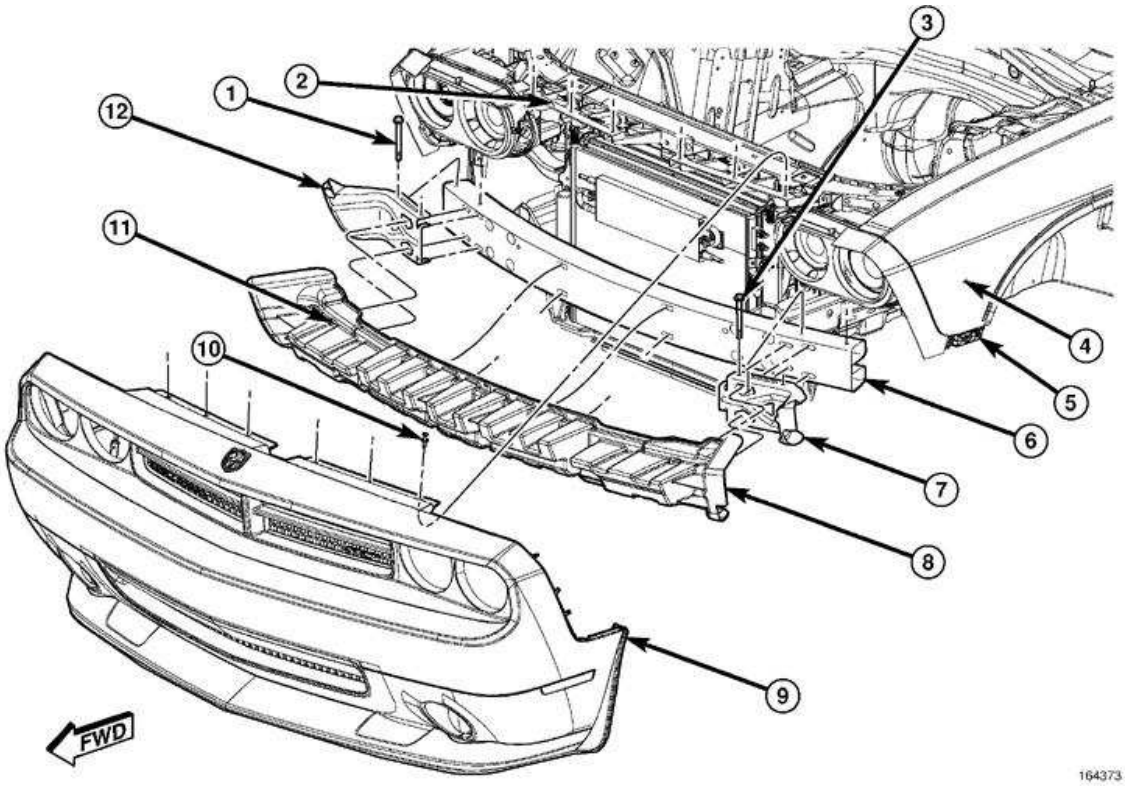

Fig. 57: Identifying Front Fascia Components
Courtesy of CHRYSLER LLC

6. Reinstall the front fascia onto the vehicle. Refer to **Frame and Bumpers/Bumpers/FASCIA, Front - Installation** .
7. Reconnect the battery negative cable.
8. Confirm proper headlamp alignment. See **Electrical - Lamps and Lighting/Lamps/Lighting - Exterior - Standard Procedure**.

LIGHTING ELEMENT - HIGH INTENSITY DISCHARGE

WARNING: To avoid serious or fatal injury when working on the High Intensity Discharge (HID) headlamp system, be certain to take the proper

precautions. The headlamp switch must be in the OFF position. Disconnect and isolate the battery negative cable. There is a risk of death caused by contact with high voltage used in the HID headlamps. There is a risk of explosion or fire caused by highly flammable materials in the vicinity of damaged HID lighting elements. There is a risk of injury caused by exposure to Ultra Violet (UV) light, a risk of burns caused by high component operating temperatures, a risk of mercury poisoning through glass splinters produced by bursting HID lighting elements. There is also a risk of poisoning caused by inhalation of mercury vapors and by toxic salts and mercury compounds being ingested or coming into contact with the skin. Do not come into contact with parts that are under high voltage. Persons with active electronic implants (e.g. heart pacemakers) must never work on HID headlamps. Wear insulated safety shoes, safety glasses and protective gloves. Remove flammable materials and ensure sufficient ventilation in the working area.

CAUTION: Do not contaminate the lighting element glass by touching it with your fingers or by allowing it to contact other oily surfaces. Shortened lighting element life will result.

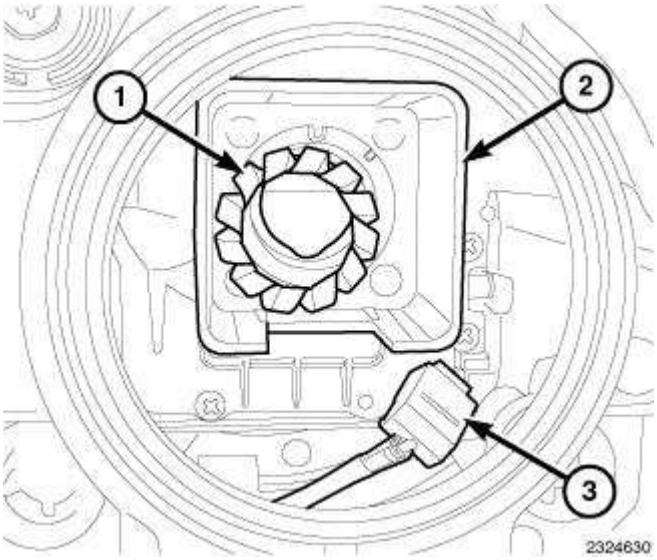

Fig. 58: Identifying Grounding Ring & Igniter Receptacle
Courtesy of CHRYSLER LLC

1. If the coiled metal grounding ring is not engaged on the insulator at the base of the lighting element, retrieve the grounding ring (1) from the igniter receptacle (2). Also be certain the high tension cable connector (3) is accessible and, if necessary, retrieve it from within the front lamp unit housing.

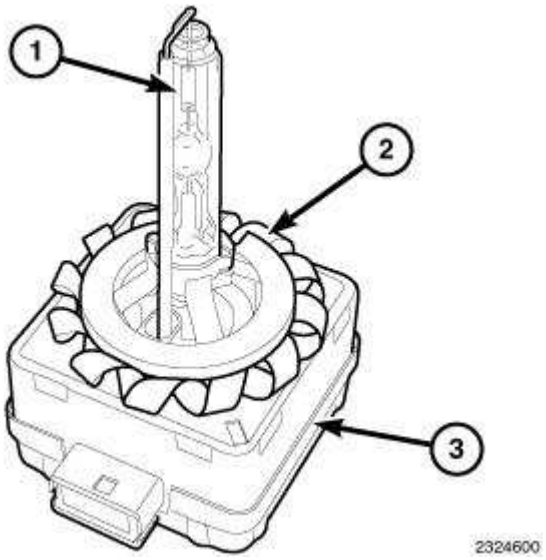

Fig. 59: Identifying Lighting Element, Coiled Metal Grounding Ring & Igniter
Courtesy of CHRYSLER LLC

2. Inspect the lighting element (1) and igniter (3) unit to be certain the coiled metal grounding ring (2) is in position around the insulator at the base of the lighting element.

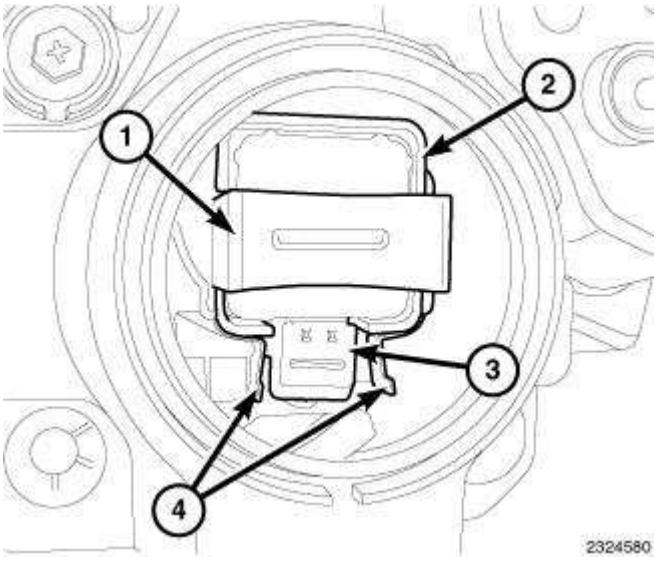

Fig. 60: Identifying Spring Steel Igniter Retainer, Igniter Receptacle, High Tension Cable Connector & Tabs
Courtesy of CHRYSLER LLC

3. Using care not to dislodge the grounding ring, align and insert the lighting element and igniter into the opening of the igniter receptacle (2) until the igniter is fully seated. Continue to hold the igniter firmly engaged in the receptacle until the spring steel igniter retainer (1) has been reinstalled.

WARNING: Use care not to cut your fingers on the sharp edges of the spring

steel igniter retainer.

4. Position the spring steel igniter retainer over the igniter receptacle, then push down firmly and evenly on both sides of the retainer until it snaps into place over the latch feature on each side of the igniter receptacle.
5. Reconnect the high tension cable connector (3) to the connector receptacle integral to the igniter.

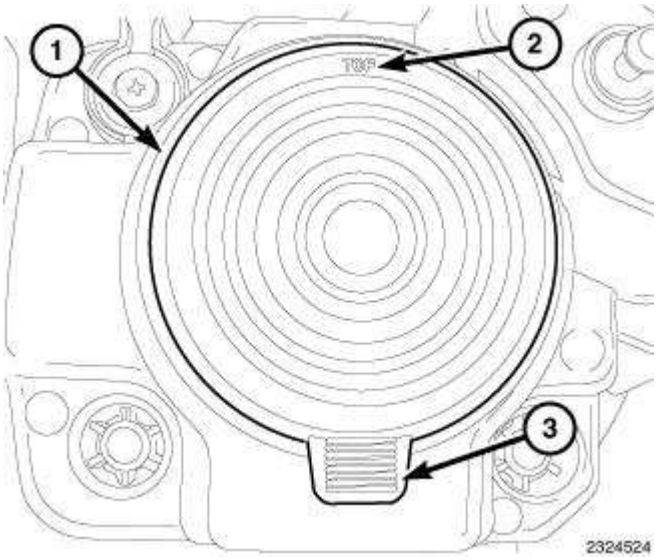

Fig. 61: Identifying Igniter Opening & Tab
Courtesy of CHRYSLER LLC

6. Align and reinstall the rubber boot seal over the lighting element and igniter opening (1) on the back of the lamp housing. Be certain the pull tab (3) is oriented toward the bottom of the lamp housing and the **TOP** text (2) is oriented toward the top.
7. Reinstall the HID front lamp unit into the vehicle. See **Electrical - Lamps and Lighting/Lamps/Lighting - Exterior/UNIT, Front Lamp - Installation**.
8. Reconnect the battery negative cable.

ACCESSORIES AND EQUIPMENT

Lamps/Lighting - Interior - Service Information - Challenger

SPECIFICATIONS

INTERIOR LAMPS

BULB APPLICATION

DODGE	
Door Courtesy	562
Glove Box	194
Overhead Console	578
Shift Indicator	JKLE14140
Trunk	562

LAMP, COURTESY, DOOR

REMOVAL

REMOVAL

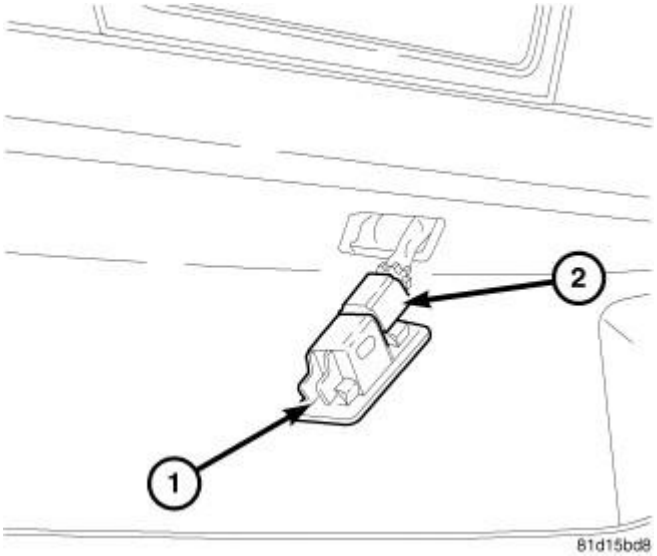

Fig. 1: Identifying LED Unit And Electrical Connector
Courtesy of CHRYSLER LLC

NOTE: The courtesy lamp is illuminated by an LED and is only serviced as an LED unit.

1. Disconnect and isolate the battery negative cable.
2. Using a trim stick or equivalent and gently pry the LED (1) unit from the door panel.

3. Disconnect the electrical (2) connector from the LED unit.

INSTALLATION

INSTALLATION

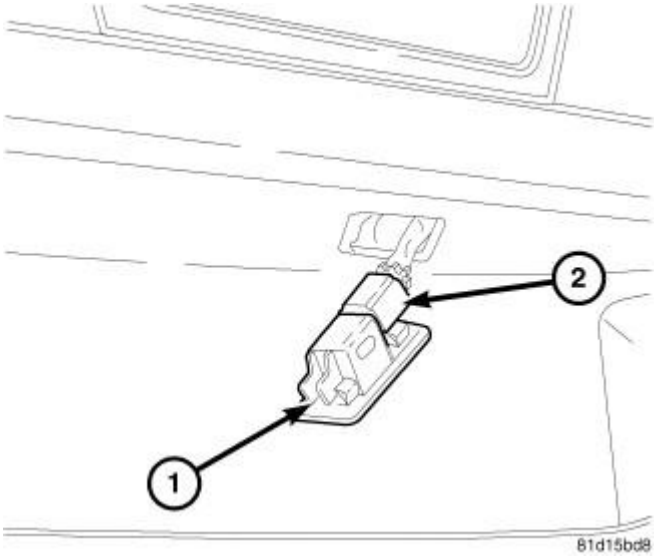

Fig. 2: Identifying LED Unit And Electrical Connector
Courtesy of CHRYSLER LLC

1. Plug electrical connector (2) into the LED unit
2. Install the LED unit (1) into the door panel ensuring it locks securely into place.
3. Connect the battery negative cable.

LAMP, READING

REMOVAL

REMOVAL

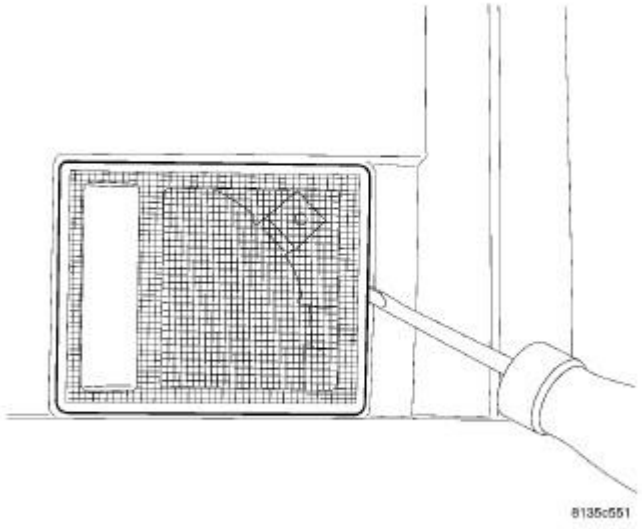

Fig. 3: Prying Reading Lamp Lens
Courtesy of CHRYSLER LLC

1. Disconnect and isolate the battery negative cable.
2. Using a Trim Stick C4755 or equivalent, gently pry the top (toward windshield) side of the reading lamp lens.

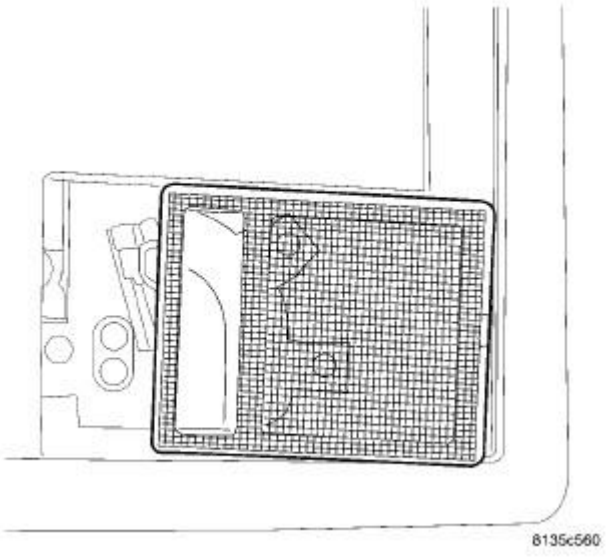

Fig. 4: Reading Lamp Lens
Courtesy of CHRYSLER LLC

3. Lift the top of the lens up and slide toward windshield until the tab is released from the overhead

console.

4. Remove the lamp from overhead console.

INSTALLATION

INSTALLATION

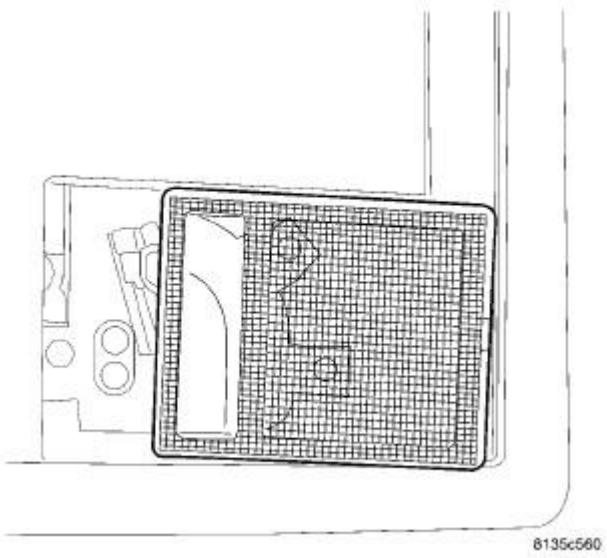

Fig. 5: Reading Lamp Lens
Courtesy of CHRYSLER LLC

1. Firmly push the lamp into the overhead console.
2. Place the tab inside the rear edge of the overhead console. Carefully push down on the side of the lens opposite from the tab side, making sure to snap in both sides of the lens.
3. Connect the battery negative cable.

LAMP, TRANSMISSION RANGE INDICATOR

REMOVAL

REMOVAL

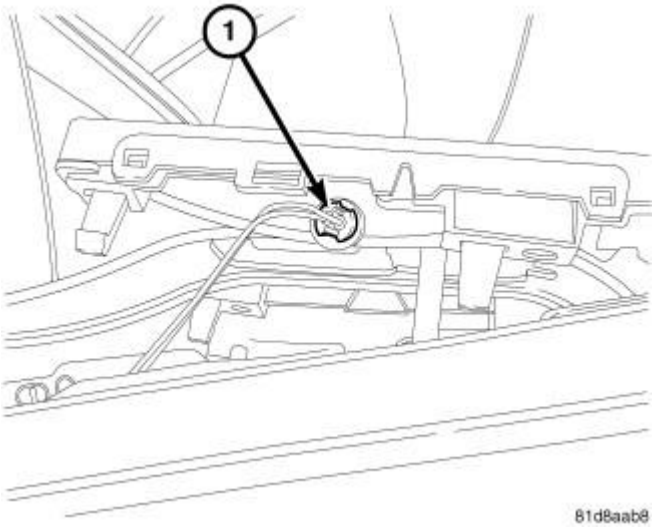

Fig. 6: Identifying Bulb Socket
Courtesy of CHRYSLER LLC

1. Disconnect the battery negative cable.
2. Remove shift console trim ring and shift console trim panel. Refer to **Body/Interior/CONSOLE, Floor - Removal**
3. Using a trim stick or equivalent, gently pry up the shifter bezel lock tabs.
4. Grasp the bulb socket (1) and turn counter clockwise to remove from the shifter assembly.
5. Pull the bulb from the bulb socket.

INSTALLATION

INSTALLATION

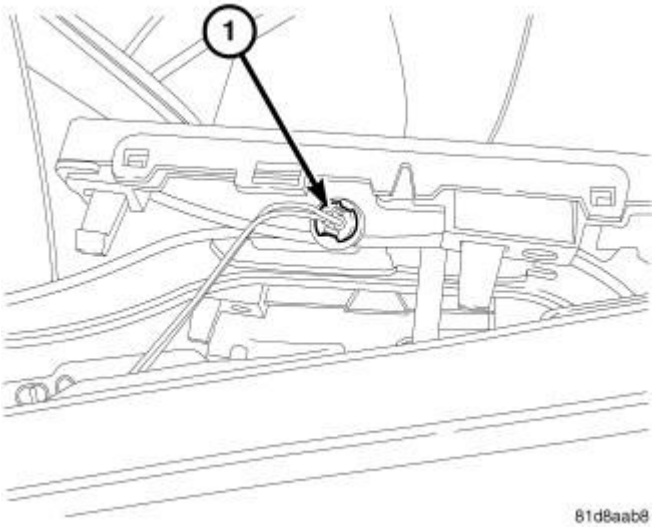

Fig. 7: Identifying Bulb Socket

Courtesy of CHRYSLER LLC

1. Insert new bulb into bulb socket.
2. Install socket into shifter assembly.
3. Snap shifter assembly back into the center console.
4. Install shifter console trim panel and shift console trim ring. Refer to **Body/Interior/CONSOLE, Floor - Installation**
5. Connect battery negative cable.

REMINDER INDICATOR RESET PROCEDURES

Chrysler / Dodge / Plymouth / RAM

ASSYST MAINTENANCE COMPUTER

NOTE: **To determine the appropriate reset procedure, refer to ASSYST MAINTENANCE COMPUTER RESET INDEX. Only vehicles listed in this index have an ASSYST Maintenance Computer reset.**

ASSYST MAINTENANCE COMPUTER RESET INDEX

Model & Year	Reset Procedure
Sprinter	
2003-09	Assyst Maintenance Computer Reset - Procedure 1

ASSYST MAINTENANCE COMPUTER RESET - PROCEDURE 1

When a service as been performed, the ASSYST maintenance computer can be reset as follow:

1. Turn the key to position 2 in the ignition lock and immediately press the "mi" ("km") button twice and hold. Keep the "mi" ("km") button pressed.
2. Within 10 seconds, return the key to position 0 in the ignition lock.
3. Continue to press and hold the "mi" ("km") button. Turn the key to position 2 in the ignition lock. Keep the "mi" ("km") button pressed.
4. The maintenance indicator with the current remaining time/distance is shown.
5. After about 10 seconds, an acoustic signal will sound and the maintenance indicator is displayed with the new remaining time/distance.
6. Release the "mi" ("km") button.

EGR/MAINTENANCE REQUIRED WARNING LIGHT

NOTE: **To determine the appropriate reset procedure, refer to EGR/MAINTENANCE REQUIRED WARNING LIGHT RESET INDEX. Only vehicles listed in this index have an EGR/Maintenance Required Warning Light reset.**

EGR/MAINTENANCE REQUIRED WARNING LIGHT RESET INDEX

Model & Year	Reset Procedure
Colt & Colt Vista	
1978-94	EGR/Maintenance Required Warning Light Reset - Procedure 1
Ram-50	
1985-93	EGR/Maintenance Required Warning Light Reset - Procedure 1

EGR/MAINTENANCE REQUIRED WARNING LIGHT RESET - PROCEDURE 1

1. On some models, an EGR or MAINTENANCE REQUIRED warning light in dash will come on as a reminder to have EGR system serviced (each 50,000 miles), oxygen sensor replaced (each 80,000 miles), or evaporative carbon canister replaced (100,000 miles).
2. After servicing or replacing components, reset mileage counter. Reset switch is located on back of instrument cluster. See **Fig. 1**, **Fig. 2** and **Fig. 3** . Slide switch to opposite side to reset indicator light.
3. Remove light bulb after 120,000 mile service on Ram-50.

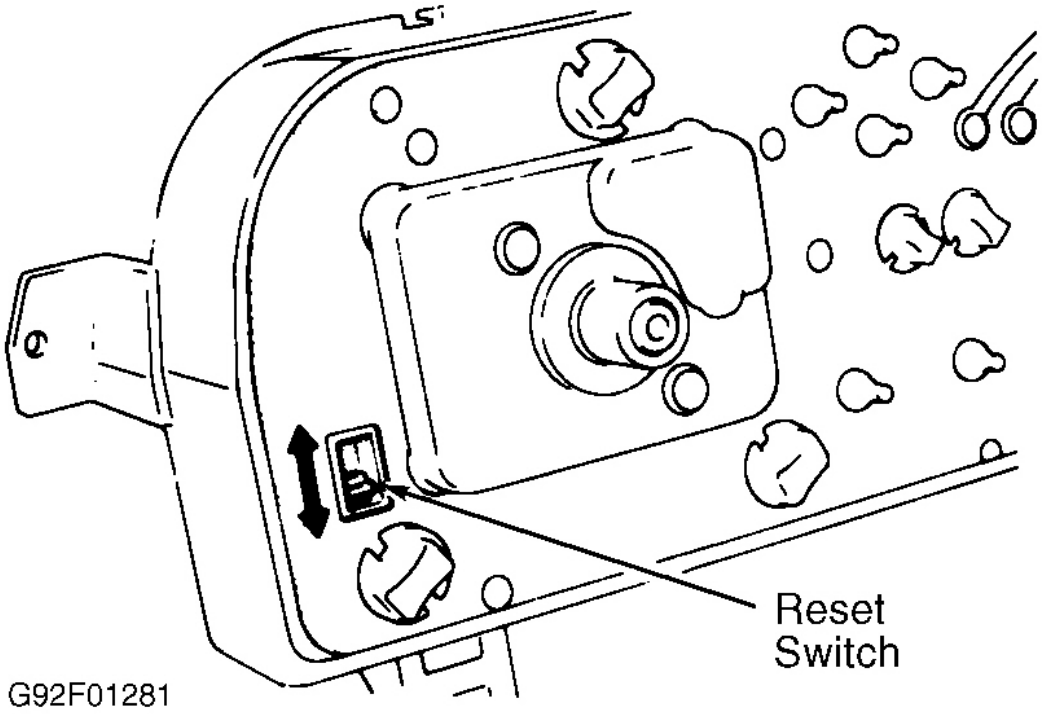

Fig. 1: Locating Warning Light Reset Switch (Colt Vista Shown; Colt Wagon Is Similar)
Courtesy of CHRYSLER CORP.

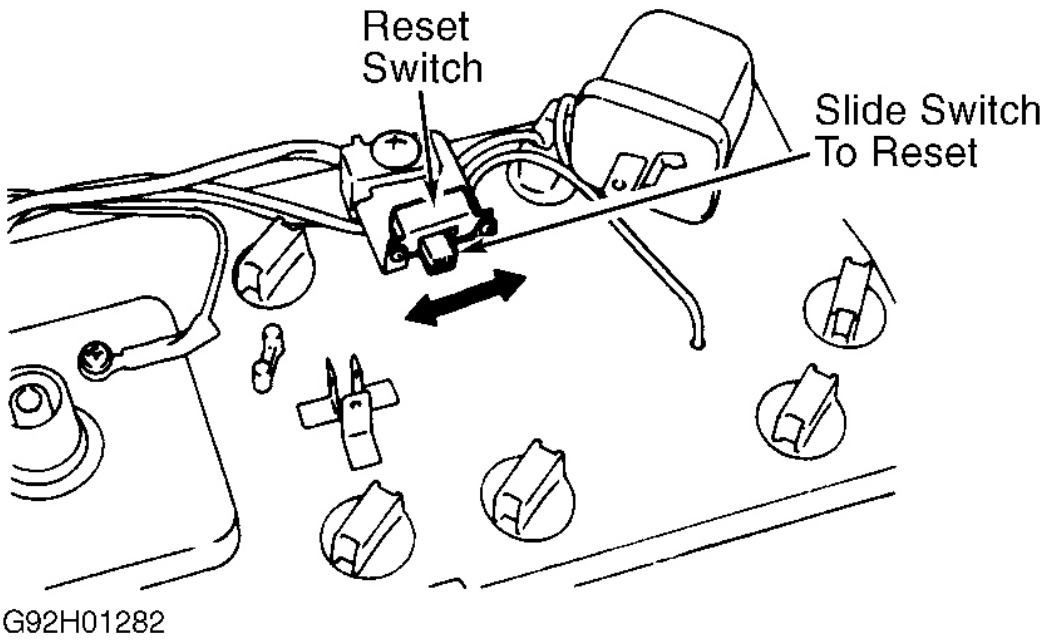

Fig. 2: Locating Warning Light Reset Switch (1985-86 Ram-50)
Courtesy of MITSUBISHI MOTOR SALES OF AMERICA.

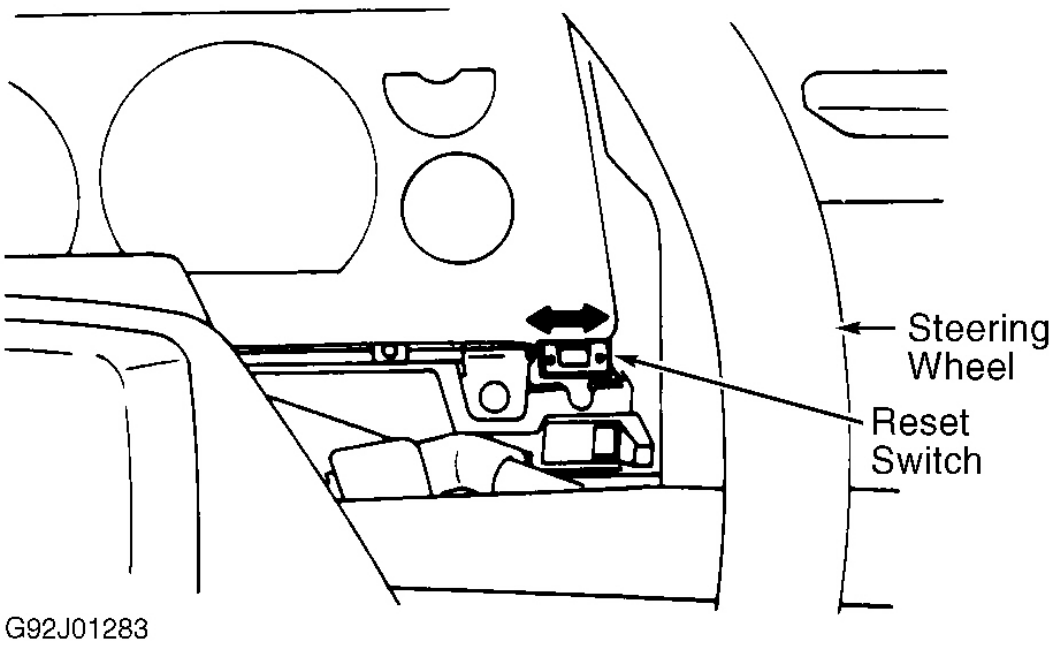

Fig. 3: Locating Warning Light Reset Switch (1987-93 Ram-50)
Courtesy of MITSUBISHI MOTOR SALES OF AMERICA.

EMR MILEAGE RESET

NOTE: To determine the appropriate reset procedure, refer to EMR MILEAGE RESET INDEX. Only vehicles listed in this index have a EMR mileage reset.

EMR MILEAGE RESET INDEX

Model & Year	Reset Procedure
Light Duty Trucks & Vans	
1989-92	EMR Mileage Reset - Procedure 1

EMR MILEAGE RESET - PROCEDURE 1

1. Using DRB-II tester, select EMR MEMORY CHECK. DRB-II display will read, EMR MEMORY CHECK ARE YOU SURE? Press YES key.
2. Display will read, WRITE TEST. Display will read, IS INSTRUMENT PANEL MILEAGE BETWEEN XXXXXX AND XXXXXX? If odometer mileage on vehicle is within specification, press YES key. DRB-II will display EMR MEMORY CHECK TEST COMPLETE.

NOTE: DRB-II may display EMR MEMORY WRITE FAILURE or EMR MEMORY CHECK WRITE REFUSED if there is a problem with SMEC/SBEC.

3. If odometer mileage on vehicle is not within specification shown on DRB-II, press NO key. DRB-II will read DO YOU WANT TO CORRECT EMR MILEAGE? Press YES key on DRB-II. DRB-II will display ENTER MILEAGE SHOWN ON INSTRUMENT PANEL.
4. Enter mileage shown on instrument panel. DO NOT enter tenths. Press ENTER key on DRB-II. DRB-II will ask for verification of entry. If mileage entry was correct, DRB-II will display SETTING ENGINE DATA and EMR MEMORY CHECK TEST COMPLETE. Vehicle must be driven for at least 8 miles for mileage reset to be accepted.

MAINT REQD OR CHECK EGR INDICATOR LIGHT

CAUTION: There is no test procedure for this system. Any attempt to test this system will damage system components.

NOTE: To determine the appropriate reset procedure, refer to MAINT REQD OR CHECK EGR INDICATOR LIGHT RESET INDEX. Only vehicles listed in this index have a MAINT REQD OR CHECK EGR INDICATOR LIGHT reset.

MAINT REQD OR CHECK EGR INDICATOR LIGHT RESET INDEX

Model & Year	Reset Procedure
FWD Vans	
1987-88	Maint REQD Or Check EGR Indicator Light Reset - Procedure 1
Light Duty Trucks	
1988	Maint REQD Or Check EGR Indicator Light Reset - Procedure 1
1989-92	Maint REQD Or Check EGR Indicator Light Reset - Procedure 2
RWD Vans	
1988	Maint REQD Or Check EGR Indicator Light Reset - Procedure 1
1989-92	Maint REQD Or Check EGR Indicator Light Reset - Procedure 2

MAINT REQD OR CHECK EGR INDICATOR LIGHT RESET - PROCEDURE 1

The Service Reminder Indicator (SRI) module is not an emissions warning system. It is only a reminder to perform emissions servicing. Components to be serviced include the EGR system, PCV valve, oxygen sensor, delay valves, and bi-level purge valve.

The SRI module will illuminate the MAINT REQD or CHECK EGR light after a predetermined time. The light will remain on until the SRI module is reset by inserting a small screwdriver into the hole in the module (RWD only) and/or depressing the reset switch (FWD and RWD). Replace 9-volt battery (if equipped).

The SRI module is located on steering column, behind instrument panel on RWD vans and in instrument cluster, under fuel gauge, on FWD vans. See **Fig. 4** or **Fig. 5** . On light trucks except Dakota, SRI module is located behind the far right side of dash panel next to glove box. See **Fig. 6**. On Dakota models, module is located on bracket below headlight switch, on rear of instrument panel. See **Fig. 7**.

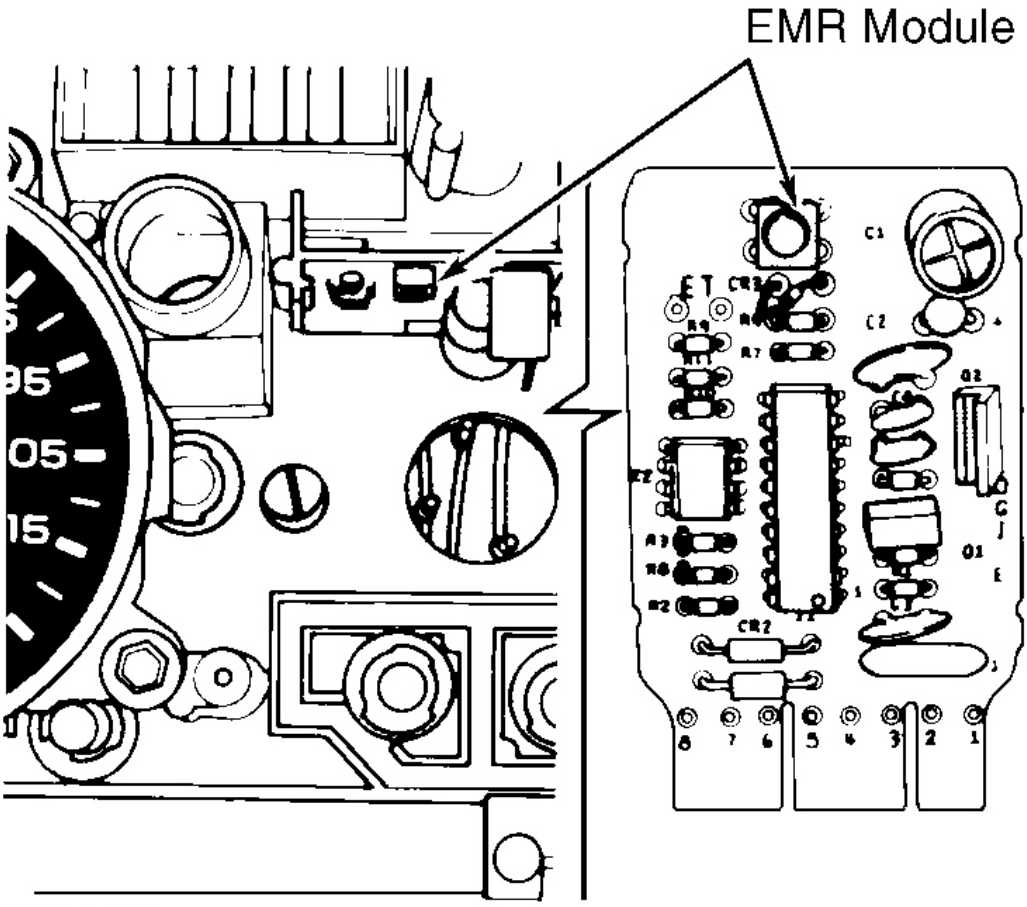

Fig. 4: Locating SRI Module (1987-88 FWD Vans)
Courtesy of CHRYSLER CORP.

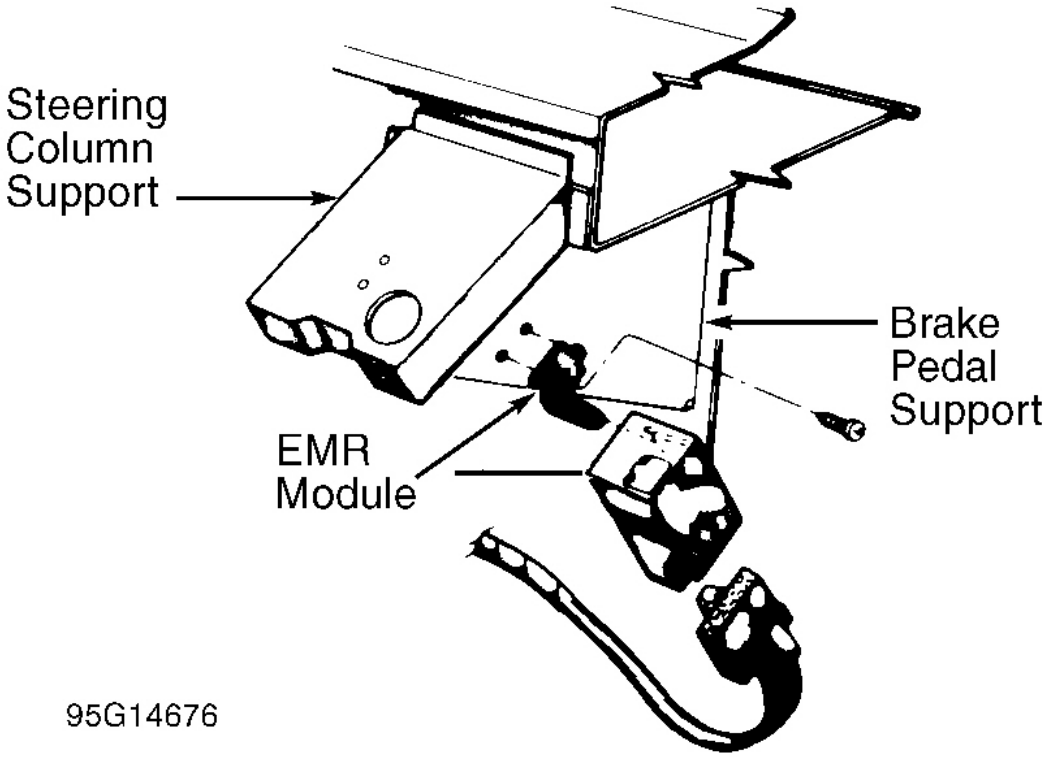

Fig. 5: Locating SRI Module (1988 RWD Vans)
Courtesy of CHRYSLER CORP.

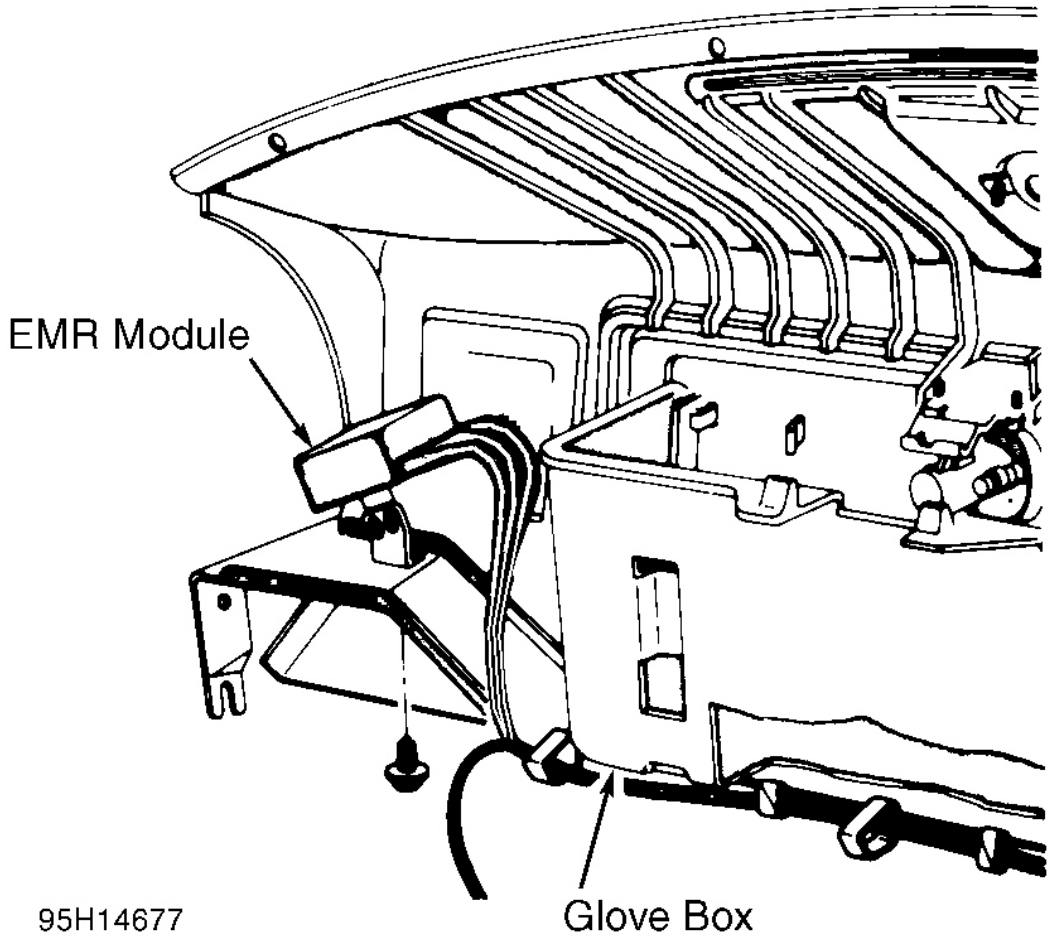

Fig. 6: Locating SRI Module (1988 Light Trucks Except Dakota)
Courtesy of CHRYSLER CORP.

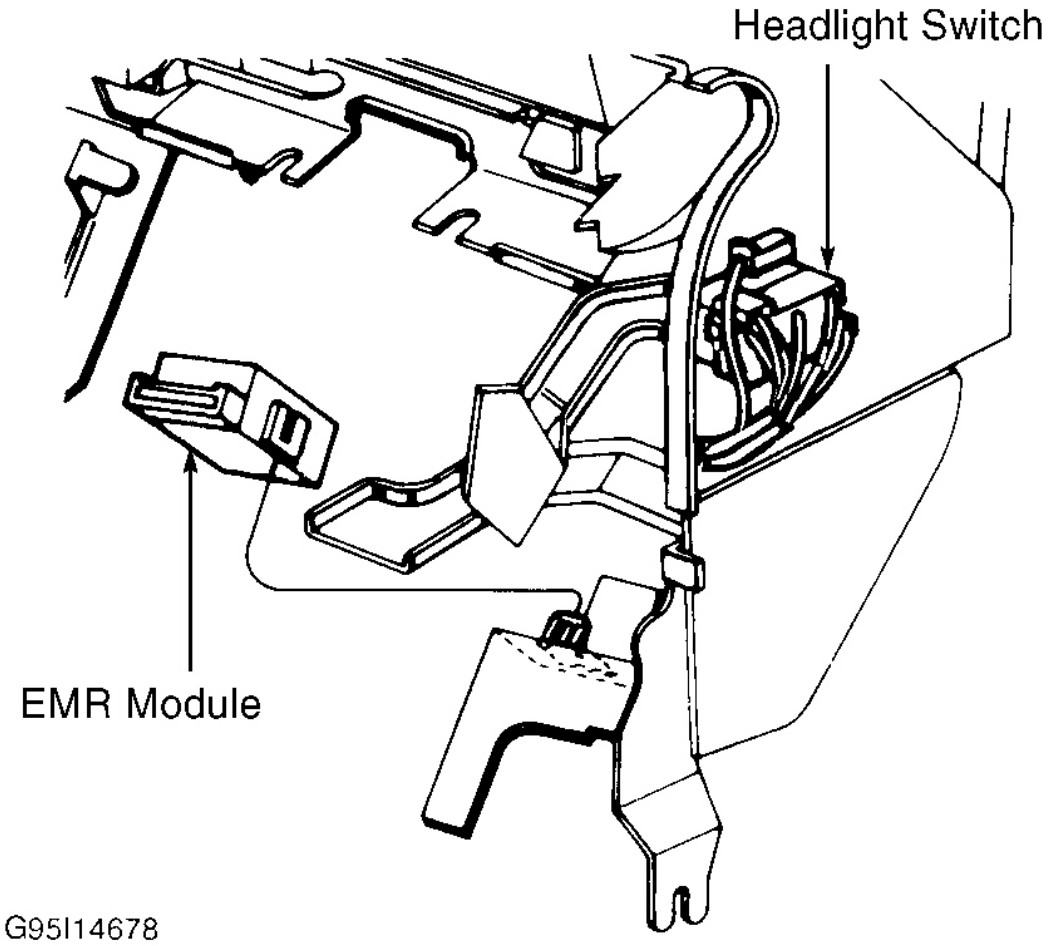

Fig. 7: Locating SRI Module (1988 Dakota)
Courtesy of CHRYSLER CORP.

MAINT REQD OR CHECK EGR INDICATOR LIGHT RESET - PROCEDURE 2

NOTE: If any other scan tool is used, use scan tool manufacturer's instructions.

Attach DRB-II tester to diagnostic connector. Turn ignition on but do not start engine. Access SELECT SYSTEMS function of DRB-II tester. Select appropriate engine. Select with or without A/C. Select FUEL & IGNITION. Select ADJUSTMENTS. Select RESET EMR LIGHT. Reset EMR light. When DRB-II is finished resetting light, DRB-II display will read EMR LIGHT IS RESET.

NOTE: If Single Module Engine Controller (SMEC) or Single Board Engine Controller (SBEC) is replaced, vehicle mileage must be programmed back into the SMEC/SBEC. DRB-II tester MUST be used for this procedure. If the following procedure is not performed, EMR light will not turn on at the proper mileage

intervals.

MAINT REQD OR SERVICE REMINDER INDICATOR (SRI) LIGHT

The components to be serviced include the EGR system, PCV valve, oxygen sensor and some vacuum-operated components. SRI will illuminate after a predetermined mileage. To reset SRI, a Chrysler Diagnostic Readout Box (DRB) Tester or suitable scan tool is required.

NOTE: To determine the appropriate reset procedure, refer to MAINT REQD OR SRI LIGHT RESET INDEX. Only vehicles listed in this index have a MAINT REQD OR SRI LIGHT reset.

MAINT REQD OR SRI LIGHT RESET INDEX

Model & Year	Reset Procedure
Light Duty Trucks & Vans	
1993	Maint REQD Or SRI Light Reset - Procedure 1
Ram Pickup 2500/3500	
1994-02	Maint REQD Or SRI Light Reset - Procedure 2

MAINT REQD OR SRI LIGHT RESET - PROCEDURE 1

1. Attach DRB tester to diagnostic connector. Turn ignition on, but do not start engine. Using DRB, perform Service Reminder Indicator (SRI) memory test. If DRB displays WRITE FAILURE, replace Powertrain Control Module (PCM).
2. If DRB displays WRITE REFUSED, go to step 4. If DRB displays SRI MILEAGE INVALID, update mileage and retest SRI memory. If DRB does not display SRI MILEAGE INVALID, compare SRI mileage stored with instrument panel odometer.
3. If mileage is same, retest SRI memory. If mileage is not same, update mileage and retest SRI memory.
4. PCM was busy. Using DRB, perform SRI memory test. Retest SRI memory 2 or more times, if necessary. If WRITE REFUSED trouble code returns, replace PCM. If WRITE REFUSED does not return, procedure is complete.

MAINT REQD OR SRI LIGHT RESET - PROCEDURE 2

The components to be serviced include the EGR system, PCV valve, and oxygen sensor. The SRI or Maintenance Required will illuminate after a predetermined mileage. To reset the light, a Chrysler Diagnostic Readout Box (DRB) Tester or suitable scan tool is required. Follow scan tool manufacturer's information to reset SRI.

OIL CHANGE REQUIRED MESSAGE

NOTE: To determine the appropriate reset procedure, refer to OIL CHANGE REQUIRED MESSAGE RESET INDEX. Only vehicles listed in this index have an Oil Change

Required Message reset.

OIL CHANGE REQUIRED MESSAGE RESET INDEX

Model & Year	Reset Procedure
200	
2011-15	**Oil Change Required Message Reset - Procedure 1**
300	
2008-15	**Oil Change Required Message Reset - Procedure 1**
Aspen	
2008-09	**Oil Change Required Message Reset - Procedure 1**
Avenger	
2008-15	**Oil Change Required Message Reset - Procedure 1**
Caliber	
2008-12	**Oil Change Required Message Reset - Procedure 1**
Challenger	
2008-15	**Oil Change Required Message Reset - Procedure 1**
Charger	
2008-15	**Oil Change Required Message Reset - Procedure 1**
Dakota	
2008-11	**Oil Change Required Message Reset - Procedure 1**
Dart	
2013-15	**Oil Change Required Message Reset - Procedure 1**
Dodge Pickup	
2008-10	**Oil Change Required Message Reset - Procedure 1**
Durango	
2008-15	**Oil Change Required Message Reset - Procedure 1**
Grand Caravan	
2007-14	**Oil Change Required Message Reset - Procedure 1**
Jouney	
2010-15	**Oil Change Required Message Reset - Procedure 1**
Magnum	
2008	**Oil Change Required Message Reset - Procedure 1**
Nitro	
2008-11	**Oil Change Required Message Reset - Procedure 1**
Pacifica	
2008	**Oil Change Required Message Reset - Procedure 1**
RAM C/V Tradesman	
2012-15	**Oil Change Required Message Reset - Procedure 1**
RAM Pickup (1500/ 2500/ 3500)	
2011-15	**Oil Change Required Message Reset - Procedure 1**
RAM ProMaster (1500/ 2500/ 3500)	

2011-15	**Oil Change Required Message Reset - Procedure 1**
Sebring	
2008-10	**Oil Change Required Message Reset - Procedure 1**
Town & Country	
2008-15	**Oil Change Required Message Reset - Procedure 1**

OIL CHANGE REQUIRED MESSAGE RESET - PROCEDURE 1

NOTE: The message can be temporarily turned off by pressing and releasing the Trip Odometer button in instrument cluster.

To reset oil change indicator after performing scheduled maintenance:

1. Turn ignition on, with engine off.

   NOTE: On vehicles with keyless START, without pressing the brake pedal, push the ENGINE START/STOP button and cycle the ignition to the ON/RUN position (Do not start the engine).

2. Fully depress accelerator pedal slowly 3 times within 10 seconds.
3. Turn ignition off.

   NOTE: On vehicles with keyless START, without pressing the brake pedal, push the ENGINE START/STOP button once to return the ignition to the OFF/LOCK position.

4. Start engine. If indicator message illuminates when engine is started, repeat reset procedure.

PERFORM SERVICE MESSAGE

NOTE: To determine the appropriate reset procedure, refer to PERFORM SERVICE MESSAGE RESET INDEX. Only vehicles listed in this index have a perform service message reset.

PERFORM SERVICE MESSAGE RESET INDEX

Model & Year	Reset Procedure
300M	
2001-04	**Perform Service Message Reset - Procedure 1**
Caravan & Grand Caravan	
2003-07	**Perform Service Message Reset - Procedure 2**
Concorde	
2001-04	**Perform Service Message Reset - Procedure 1**
Intrepid	

2001-04	**Perform Service Message Reset - Procedure 1**
LHS	
2001	**Perform Service Message Reset - Procedure 1**
Dodge Pickup 1500	
2002	**Perform Service Message Reset - Procedure 3**
Town & Country	
2003-07	**Perform Service Message Reset - Procedure 4**

PERFORM SERVICE MESSAGE RESET - PROCEDURE 1

The PERFORM SERVICE message is a warning message delivered from the Electronic Vehicle Information Center (EVIC). This indicates that regular maintenance is due. After regular required maintenance is performed, the counter is reset by pressing and holding the reset button for 3 seconds.

PERFORM SERVICE MESSAGE RESET - PROCEDURE 2

1. The Electronic Vehicle Information Center (EVIC) displays a PERFORM SERVICE message when distance to service interval has been reached, indicating that regular service and maintenance is due. After performing necessary services, reset service distance by selecting a distance to service interval.
2. To program EVIC, turn ignition switch to ON position. Depress and release MENU push button until SERVICE INTV. = is displayed. Press and release STEP button to step through available options. The last selected distance option displayed becomes the service interval at which the PERFORM SERVICE message will be displayed.
3. If a new distance interval is selected, RESET SERVICE DISTANCE? with a yes or no option. When YES is selected, the accumulated distance since the last previous PERFORM SERVICE message will be reset to zero because the service interval has been changed. When NO is selected, the distance until the next PERFORM SERVICE message is reduced by the accumulated distance since the last pervious message.
4. EVIC exits programming mode and returns to its normal operation mode when the C/T button is depressed or when the end of the programmable feature menu list is reached, whichever occurs first.

PERFORM SERVICE MESSAGE RESET - PROCEDURE 3

The Vehicle Information Center (VIC) displays a PERFORM SERVICE message. PERFORM SERVICE message is displayed when "miles/kms" to service is zero, indicating that regular service and maintenance is due. After performing necessary services, reset service distance by pressing the STEP button when in this display will select "Yes" or "No".

PERFORM SERVICE MESSAGE RESET - PROCEDURE 4

1. The Electronic Vehicle Information Center (EVIC) displays a PERFORM SERVICE message when distance to service interval has been reached, indicating that regular service and

maintenance is due. After performing necessary services, reset service distance by selecting a distance to service interval.

2. To program EVIC, turn ignition switch to ON position. Depress and release MENU push button until SERVICE INTV. = is displayed. Press and release STEP button to step through available options. The last selected distance option displayed becomes the service interval at which the PERFORM SERVICE message will be displayed.
3. If a new distance interval is selected, RESET SERVICE DISTANCE? with a yes or no option. When YES is selected, the accumulated distance since the last previous PERFORM SERVICE message will be reset to zero because the service interval has been changed. When NO is selected, the distance until the next PERFORM SERVICE message is reduced by the accumulated distance since the last pervious message.
4. EVIC exits programming mode and returns to its normal operation mode when the C/T button is depressed or when the end of the programmable feature menu list is reached, whichever occurs first.

SERVICE REMINDER INDICATOR LIGHT

NOTE: To determine the appropriate reset procedure, refer to SERVICE REMINDER INDICATOR LIGHT RESET INDEX. Only vehicles listed in this index have a service reminder indicator light reset.

SERVICE REMINDER INDICATOR LIGHT RESET INDEX

Model & Year	Reset Procedure
Models With Electronic Type Counter	
1980	Service Reminder Indicator Light Reset - Procedure 1
Monaco	
1990-92	Service Reminder Indicator Light Reset - Procedure 2

SERVICE REMINDER INDICATOR LIGHT RESET - PROCEDURE 1

A mileage counter activates the service reminder indicator between 12,000 and 30,000 mile intervals, depending on whether mechanical or electronic type is used. On 1987 Dakota models, mileage counter in the odometer will illuminate reminder light at 52,500, 82,500 and 105,000 miles.

The electronic type uses a 9-volt battery which supplies power to the electronic counter, preventing memory loss when vehicle battery is disconnected.

NOTE: Vehicle battery must be connected during resetting procedure to prevent power loss to memory.

To reset electronic type, locate Green, Red, White or Tan plastic case behind instrument panel in lower left cluster area. Slide case from bracket and open cover. Remove 9-volt battery, and insert a small rod or screwdriver into hole in switch, closing contacts. Replace battery with a new 9-volt alkaline type. Close case. Slide case back into bracket. See **Fig. 8**.

NOTE: **Some models use a non-resettable mileage counter. Replace it with a resettable type.**

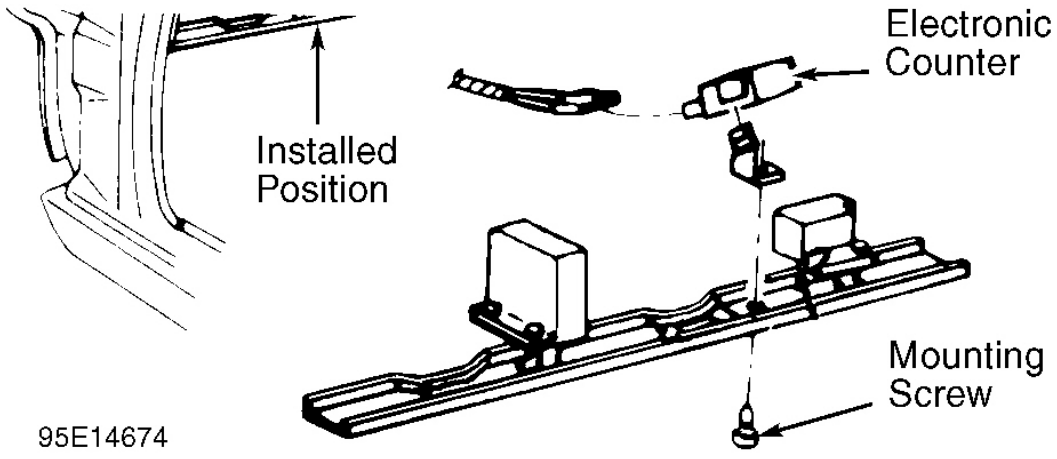

Fig. 8: Chrysler Electronic Type Reset Switch
Courtesy of CHRYSLER CORP.

SERVICE REMINDER INDICATOR LIGHT RESET - PROCEDURE 2

Every 7500 miles, a Vehicle Maintenance Monitor (VMM) will illuminate a SERVICE interval reminder indicator light. This indicates regular maintenance is due. After required service is performed, press RESET button on dash below VMM display. Hold button until a beep is heard. VMM display will now be clear.

SERVICE REMINDER MESSAGE

NOTE: **To determine the appropriate reset procedure, refer to SERVICE REMINDER MESSAGE RESET INDEX. Only vehicles listed in this index have a Service Reminder Message reset.**

SERVICE REMINDER MESSAGE RESET INDEX

Model & Year	Reset Procedure
Imperial	
1990	Service Reminder Message Reset - Procedure 2
Lebaron	
1990	Service Reminder Message Reset - Procedure 2
New Yorker	
1988-89	Service Reminder Message Reset - Procedure 1
1990	Service Reminder Message Reset - Procedure 2

SERVICE REMINDER MESSAGE RESET - PROCEDURE 1

Every 7500 miles or 12 months which ever comes first, a service reminder message on Electronic Vehicle Information Center (EVIC) display will illuminate, indicating an oil change is due. The EVIC is an optional accessory located in the overhead console.

Pressing INFO button with the ignition on will activate a MONITORED SYSTEMS OK message on the display if all systems are operating properly. If service is required, SERVICE REMINDER message will be displayed. Pressing the RESET button after message has been displayed will clear the message.

SERVICE REMINDER MESSAGE RESET - PROCEDURE 2

Every 7500 miles or 12 months which ever comes first, a service reminder message on Electronic Vehicle Information Center (EVIC) display will illuminate, indicating an oil change is due. The EVIC is an optional accessory located in the overhead console.

Pressing INFO button with the ignition on will activate a MONITORED SYSTEMS OK message on the display if all systems are operating properly. If service is required, SERVICE REMINDER message will be displayed. To clear message, press INFO button and within 5 seconds, press SET button.

TIRE PRESSURE MONITOR SYSTEM (TPMS)

NOTE: To determine the appropriate reset procedure, refer to TPMS RESET INDEX. Only vehicles listed in this index have a TPMS reset.

TPMS RESET INDEX

Model & Year	Reset Procedure
200	
2011-15	TPMS Reset - Procedure 1
300	
2005-14	TPMS Reset - Procedure 1
300M	
2002-04	TPMS Reset - Procedure 1
Aspen	
2007-09	TPMS Reset - Procedure 1
Avenger	
2008-14	TPMS Reset - Procedure 1
Caliber	
2007-12	TPMS Reset - Procedure 1
Caravan & Grand Caravan	
2005-14	TPMS Reset - Procedure 1
Challenger	
2008-	TPMS Reset - Procedure 1

Charger	
2006-	**TPMS Reset - Procedure 1**
Crossfire	
2005-08	**TPMS Reset - Procedure 2**
Concorde	
2002-04	**TPMS Reset - Procedure 1**
Dakota	
2008-11	**TPMS Reset - Procedure 4**
Dart	
2013-14	**TPMS Reset - Procedure 1**
Dodge Pickup (1500/ 2500/ 3500) (1)	
2008-10	**TPMS Reset - Procedure 1**
Durango	
2007-14	**TPMS Reset - Procedure 1**
Journey	
2009-10	**TPMS Reset - Procedure 4**
2011-15	**TPMS Reset - Procedure 1**
Nitro	
2007-11	**TPMS Reset - Procedure 1**
Magnum	
2006-08	**TPMS Reset - Procedure 1**
Pacifica	
2004-08	**TPMS Reset - Procedure 1**
Prowler	
2002	**TPMS Reset - Procedure 3**
PT Cruiser	
2008-10	**TPMS Reset - Procedure 1**
RAM C/V Tradesman	
2012-15	**TPMS Reset - Procedure 5**
RAM Pickup (1500/ 2500/ 3500) (1)	
2011-14	**TPMS Reset - Procedure 5**
RAM ProMaster (1500/ 2500/ 3500)	
2014	**TPMS Reset - Procedure 1**
Sebring	
2007-10	**TPMS Reset - Procedure 1**
Sprinter	
2007-09	**TPMS Reset - Procedure 1**
Town & Country	
2002-15	**TPMS Reset - Procedure 1**
Viper	
2005-10	

	TPMS Reset - Procedure 6
2013-14	**TPMS Reset - Procedure 1**
(1) Some early Dodge/RAM Pickup 3500 and Cab & Chassis models may not be equipped with TPMS.	

TPMS RESET - PROCEDURE 1

NOTE: In a low tire pressure siuation, the TPMS indicator light (and message) will turn OFF only after the tires are inflated to the vehicles recommended cold placard pressure value. The vehicle may need to be driven for up to 20 minutes above 20 mph (32 km/h) in order for the TPMS to determine that the inflation pressures are correct.

Once a sensor has been replaced and vehicle has remained stationary for more than 20 minutes, drive vehicle for a minimum of 20 minutes while maintaining a continuous speed above 20 mph (32 km/h). During this time, the system will learn the new sensor ID code and will clear any DTCs automatically. If a sensor cannot be trained, see appropriate manufacturer service information.

NOTE: The sensor IDs can also be programmed using the TPM-RKE Analyzer Tool. Scan each TPM sensor at each road wheel, and store each Sensor ID in the correct location (Left Front, Left Rear, Right Front, and Right Rear). Connect the TPM-RKE Analyzer Tool to the Scan Tool. Then follow the programming steps outlined in the diagnostic Scan Tool for "Program Tire Pressure Sensor ID w/ TPM Tool".

TPMS RESET - PROCEDURE 2

TPMS Indicator Reset

Once a sensor has been replaced and vehicle has remained stationary for more than 20 minutes, drive vehicle for a minimum of 10 minutes while maintaining a continuous speed above 20 mph (32 km/h). During this time, the system will learn the new sensor ID code and will clear any DTCs automatically. If a sensor cannot be trained, see appropriate manufacturer service information.

Tire Sensors Programming

WARNING: In the following procedure, Relearn Magnet (8821) is used. Death or serious injury can occur if magnetically sensitive devices are exposed to the retraining magnet used in the TPM system. Magnets can affect pacemakers.

NOTE: If a tire is changed (tire rotation), one or more tire pressure sensors fail, or if TPM module is replaced, the TPM system needs to relearn tire pressure sensor IDs. To perform this procedure, a Chrysler DRB-III® scan tool and a Relearn Magnet (8821) must be used.

NOTE: **The vehicle's tires must not have been rotated above 5 mph (8 km/h) in the last 2 minutes prior to programming.**

1. Connect Chrysler DRB-III® scan tool to vehicle's Data Link Connector (DLC), which is located beneath instrument panel, near steering column.
2. Using scan tool, access "CHASSIS SYSTEM".
3. Once in "CHASSIS SYSTEM", select "MISCELLANEOUS FUNCTIONS".
4. Select "TRAIN ALL MODE" from the menu selections. Select "YES" to continue.
5. Place Relearn Magnet (8821) over the valve stem for the left front wheel.
6. Each sensor/transmitter will automatically sense the presence of the magnet and begin transmitting. When the tire pressure sensor on each wheel has been programmed, the DRB-III® will automatically beep and direct you to the next wheel to be programmed. Move the magnet to each of the remaining wheels as directed by scan tool.
7. Remove magnet from last tire to be programmed (left rear wheel).
8. Once "TRAINING COMPLETED" is displayed, exit the program function screen and use the following to verify TPM functionality:
    - Verify TPM module programming is complete by viewing the "INPUT/OUTPUT DISPLAY" selection of the DRB-III® and confirming the tire pressure sensors are trained.
    - Verify TPM module programming is complete by viewing the "SENSOR DISPLAY" selection of the DRB-III® and confirming the tire pressure sensor pressure readings are accurate.

TPMS RESET - PROCEDURE 3

NOTE: **If a tire is changed (tire rotation), one or more tire pressure sensors fail, or if TPM module is replaced, the TPM system needs to relearn tire pressure sensor IDs. The procedure is similar to Tire Sensors Programming in TPMS RESET - PROCEDURE 2.**

When tire pressure is low, the "Low Tire" Pressure Indicator Lamp signal circuit will be pulsed to ground by the TPM module for two seconds on and then two seconds off, over and over. The BCM will then illuminate the "Low Tire" Pressure Indicator Lamp at the same rate and sound the audible chime as one single long tone.

When tire pressure is critical, the low tire pressure warning lamp signal circuit will be pulsed to ground by the low tire pressure warning module for one second on and then one second off, over and over. The BCM will then illuminate the "Low Tire" Pressure Indicator Lamp and sound the audible chime at the rate of one second on and one second off.

In either case, the TPM module will continue to pulse to ground the "Low Tire" Pressure Indicator Lamp signal circuit until the sensor/transmitter(s) transmits a pressure above the calibrated thresholds (and car is then driven above 20 mph (32 km/h)) or the ignition is turned off. If the conditions has not been corrected when the ignition is turned off, the indicator lamp will remain off when the ignition is turned on again until the vehicle reaches a speed of approximately 20 mph (32

km/h).

NOTE: In the event a diagnostic trouble code (DTC) is set, the "Low Tire" Pressure Indicator Lamp will illuminate continuously until the ignition is turned off. A low tire pressure condition cannot set a diagnostic trouble code (DTC).

TPMS RESET - PROCEDURE 4

The TPMS will not turn off the indicator lamp until the tire pressure is at or above the Low Pressure (lamp) OFF threshold. The system will automatically update and the TPM indicator lamp will extinguish once the updated tire pressures have been received.

NOTE: If a tire pressure sensor has been replaced, the TPM system needs to relearn tire pressure sensor IDs.

Wireless Control Module (WCM): The WCM automatically learns and stores new sensor IDs while driving "within 10-20 minutes continuously above 15 mph (24 km/h)" after a sensor has been replaced. The learning sequence will initiate when the vehicle has been stopped for more then 20 minutes.

A new sensor ID can also be programmed directly into the WCM by using an RKE-TPM Analyzer in conjunction with a Scan Tool. Scan each TPM sensor at each road wheel, and store each Sensor ID in the correct location. (Left Front, Left Rear, Right Front, and Right Rear) Connect the TPM-RKE Analyzer Tool to the Scan Tool. Then follow the programming steps outlined in the diagnostic Scan Tool for "Program Tire Pressure Sensor ID w/ TPM Tool"

For further information, refer to the Owners Manual or the Appropriate Diagnostic Information.

TPMS RESET - PROCEDURE 5

There are two tire pressure monitoring systems available, a base system and a premium system. The base system does not specify how many tires are low or where they are located. The premium system does indicate which tire is low. Sensor types are the Tire Pressure Monitoring (TPM) module for the 2500/3500 series, or the Wireless Ignition Node (WIN) for the 1500 series.

Base Tire Pressure Monitoring System:

The TPMS will not turn off the indicator lamp until the tire pressure is at or above specified tire pressure. The system will automatically update and the TPM indicator lamp will extinguish once the updated tire pressures have been received.

Premium Tire Pressure Monitoring System:

If the TPMS detects that the tire pressure in any road tire is going low, a chime will sound and the indicator lamp will turn on. In addition to the chime and lamp, a graphic display of the pressure value (s) and position of the low tire(s) will flash in the Electronic Vehicle Information Center (EVIC). Once pressure in the suspect tire(s) raises above the specified tire pressure, and the TPM module receives

a valid transmission from the sensor the lamp will go out. If a system fault is detected due to a missing sensor signal, in addition to a chime and a indicator lamp flashing, a "Check TPM System" text message will be displayed in the instrument cluster, and the tire pressure graphic display will display "- -" in place of the pressure value. After the flash sequence the TPM indicator lamp will remain illuminated. The system will return to normal once the TPM module receives a valid transmission from that sensor location. If a system fault is detected, the indicator lamp will flash on/off for 75 seconds and then remain on solid.

Base and Premium Systems:

NOTE: If a tire pressure sensor has been replaced, the TPM system needs to relearn tire pressure sensor IDs.

The WIN or TPM automatically learns and stores the sensor IDs while driving "within 10-20 minutes continuously above 15 mph (24 km/h)" after a sensor has been replaced. The learning sequence will initiate after the vehicle has been stopped for more than 20 minutes.

A new sensor ID can also be programmed directly into the WIN or TPM module by using a RKE-TPM Analyzer in conjunction with a Scan Tool. Once the new sensor ID has been programmed, the vehicle will need to be driven above 15 mph until the fault is no longer active (lamp extinguishes) and display is updated (for up to 20 minutes).

NOTE: The matching full size spare wheel and tire assembly (if equipped) has a TPM sensor. The spare can be used in place of any of the four road tires. The TPMS will only monitor the pressure in the full size spare when it is used in place of a road tire. Otherwise, a spare with pressure below the low-pressure limit will not cause the TPMS indicator light to illuminate or the chime to sound.

TPMS RESET - PROCEDURE 6

NOTE: If tires have been rotated or a tire pressure sensor has been replaced, the tire pressure sensors must be retrained. Refer to the following procedure to program the module for identification of one new or all tire pressure sensor/transmitters.

NOTE: The vehicle's tires must not have been rotated above 5 mph (8 km/h) in the last two minutes prior to programming.

1. Connect a DRBIII® scan tool to the vehicle's diagnostic connector beneath the instrument panel, to the right of the steering column.
2. Access the Chassis System using the DRBIII.
3. Once in the Chassis System, select Tire Pressure Monitor, followed by Miscellaneous.
4. Select the appropriate function from the next screen displaying the following options:
    - Program LF Pressure Sensor
    - Program RF Pressure Sensor

- Program RR Pressure Sensor
- Program LR Pressure Sensor
- Program Module (4 Sensors)
- Monitor

5. Place a magnet (or special tool 8821), at the valve stem for that wheel as directed by the DRBIII. If the Program Module function has been chosen, the DRBIII will direct you to the left front wheel pressure sensor/transmitter first.

NOTE: **When programming the module (all four sensor/transmitters), the magnet should be moved from wheel to wheel in a clockwise direction starting at the left front wheel.**

6. When that wheels pressure sensor/transmitter has been programmed, the DRBIII will display Program Transmitter Complete or will automatically direct you to the next wheel sensor/transmitter to be programmed.
7. Remove the magnet and if programming the entire module, move the magnet to each of the remaining wheels as directed by the DRBIII. Each sensor/transmitter will automatically sense the presence of the magnet and begin programming.
8. Once Program Transmitter Complete is displayed, exit the program function screen.
9. Verify that the module programming is complete by looking at the tire pressure sensor/transmitter ID's in the Sensor Display using the DRBIII.

DIAGNOSIS AND TESTING

MANUAL TRANSMISSION - TR6060

LOW LUBRICANT LEVEL

A low transmission lubricant level is generally the result of a leak, inadequate lubricant fill, or an incorrect lubricant level check.

Leaks can occur at the mating surfaces of the gear case or from the front/rear seals. A suspected leak could also be the result of an overfill condition.

Leaks at the rear of the housing will be from the oil seals. Leaks at component mating surfaces will probably be the result of inadequate sealer, gaps in the sealer, incorrect bolt tightening, or use of a non-recommended sealer.

A leak at the front of the transmission will be from either the front bearing retainer or retainer seal. Lubricant may be seen dripping from the clutch housing after extended operation. If the leak is severe, it may also contaminate the clutch disc causing the disc to slip, grab, and/or chatter.

A correct lubricant level check can only be made when the vehicle is level. Also allow the lubricant to settle for a minute or so before checking. These recommendations will ensure an accurate check and avoid an underfill or overfill condition. Always check the lubricant level after any addition of fluid to avoid an incorrect lubricant level condition.

HARD SHIFTING

Hard shifting is usually caused by a low lubricant level, improper or contaminated lubricants. The consequence of using non-recommended lubricants is noise, excessive wear, internal bind, and hard shifting. Substantial lubricant leaks can result in gear, shift rail, synchro, and bearing damage. If a leak goes undetected for an extended period, the first indications of component damage are usually hard shifting and noise.

Shift component damage, incorrect clutch adjustment or a damaged clutch pressure plate or disc are additional probable causes of increased shift effort. If clutch problem is advanced, gear clash during shifts can result. Worn or damaged synchro rings can cause gear clash when shifting into any forward gear. In some new or rebuilt transmissions, new synchro rings may tend to stick slightly causing hard or noisy shifts. In most cases, this condition will decline as the rings wear-in.

TRANSMISSION NOISE

Most manual transmissions make some noise during normal operation. Rotating gears generate a mild whine that is audible, but generally only at extreme speeds.

Severe, highly audible transmission noise is generally the initial indicator of a lubricant problem. Insufficient, improper or contaminated lubricant will promote rapid wear of gears, synchros, shift rails, forks and bearings. The overheating caused by a lubricant problem, can also lead to gear and bearing damage.

STANDARD PROCEDURE

DRAIN AND FILL

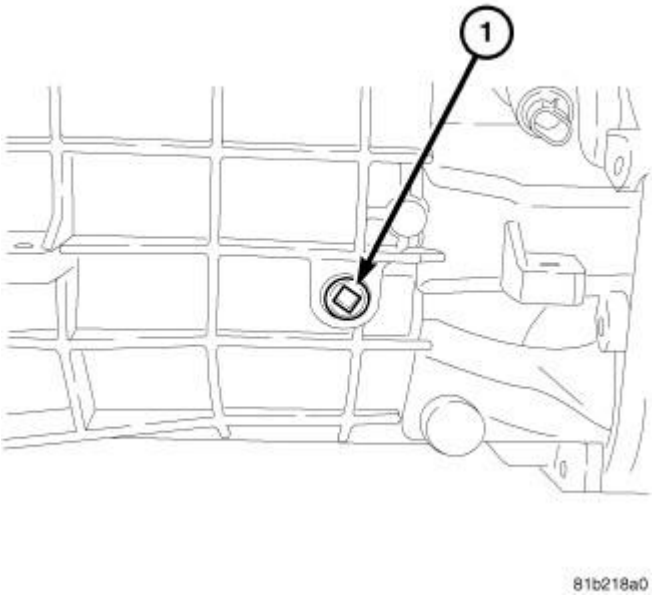

Fig. 1: FILL PLUG
Courtesy of CHRYSLER LLC

CAUTION: Hypoid gear lube must not be used in this transmission. Use of hypoid gear lube will cause hard shifting effort/transmission failure.

1. With vehicle in neutral, position vehicle on hoist.
2. Remove belly pan.
3. Remove drain plug located on the right side of the transmission tail housing.
4. Remove transmission fill plug located on the left side of the transmission case.
5. Install drain plug into tail housing and tighten to 27 N.m (20 ft. lbs.).
6. Fill transmission with Mopar ® ATF + 4. The transmission is full when the fluid level is even with the bottom of the fill hole.
7. Install transmission fill plug (1) and tighten to 27 N.m (20 ft. lbs.).
8. Install belly pan.

REMOVAL

REMOVAL

1. Disconnect battery power source.
2. Hoist and secure the vehicle.
3. Remove the exhaust system and necssary heat shields. Refer to **Exhaust System/MUFFLER, Exhaust - Removal** . Refer to **Exhaust System/RESONATOR, Exhaust - Removal** and refer to **Exhaust System/SHIELD, Heat - Removal** .

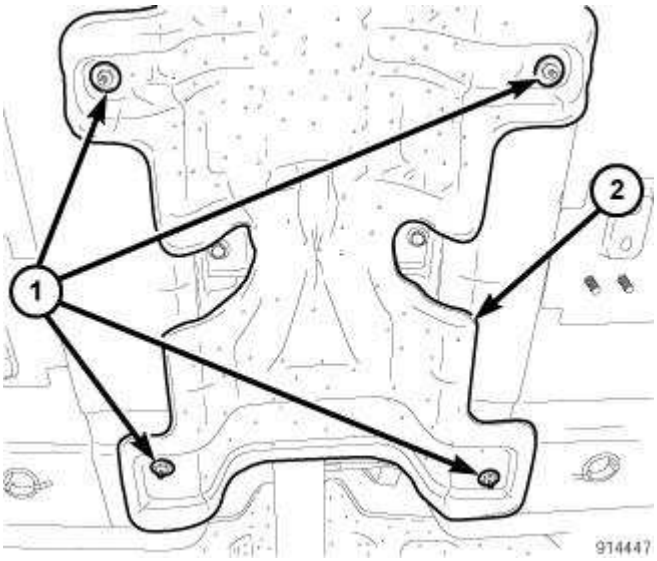

Fig. 2: Identifying Fasteners & Heat Shield
Courtesy of CHRYSLER LLC

4. Remove the fasteners (1) and propeller shaft center bearing heat shield (2).

NOTE: **Failing to mark the original alignment of the propeller shaft and the transmisson output shaft prior to disassembly may result in misalignment of the propeller shaft during reassembly, which in turn, can cause vibration and other driveability concerns.**

5. Mark the propeller shaft and the transmission output shaft flange for alignment during assembly.
6. Remove the propeller shaft center bearing support mounting bolts.
7. Remove the propeller shaft flange mounting bolts, then remove the propeller shaft.

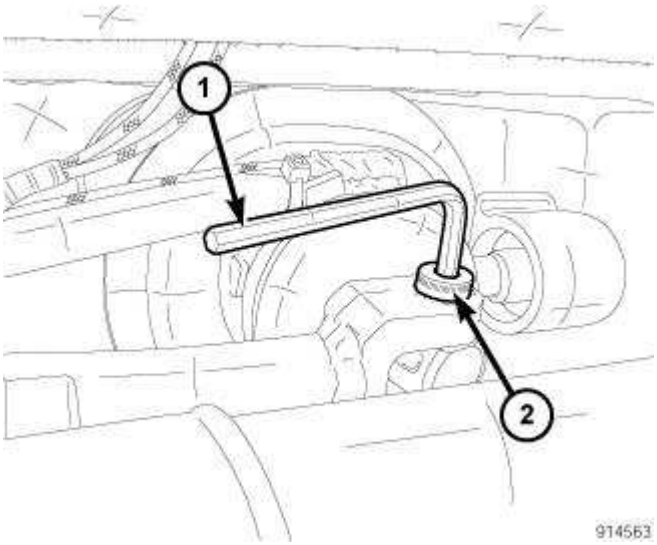

Fig. 3: Shifter Rod
Courtesy of CHRYSLER LLC

NOTE: Place the transmission in first gear for easier access to the through bolt.

8. Remove the shifter rod through bolt (2).

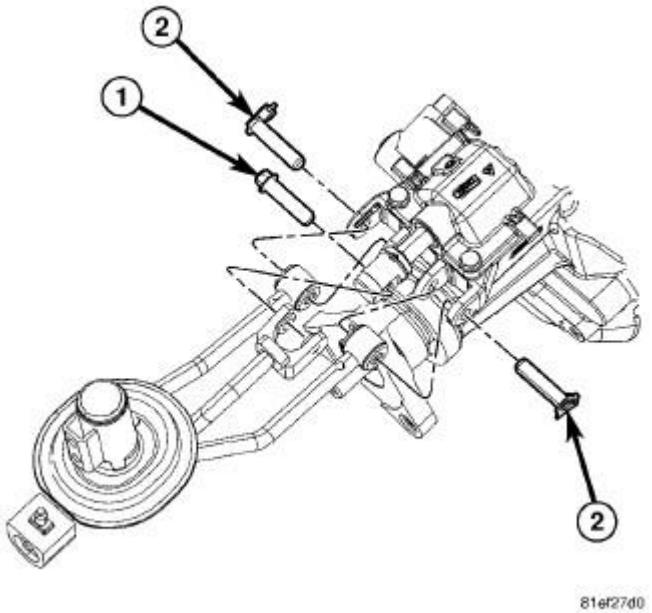

Fig. 4: Identifying Shift Linkage Bolt & Roll Pins
Courtesy of CHRYSLER LLC

9. Remove the shift linkage bolt (1) and the roll pins (2), then separate the shift linkage from the transmission.

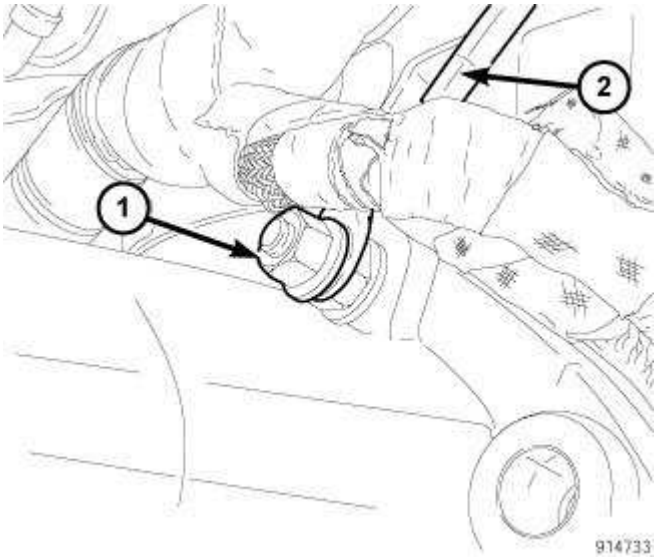

Fig. 5: Identifying Fastener & Ground Strap
Courtesy of CHRYSLER LLC

10. Remove the fastener (1), then remove the ground strap (2).

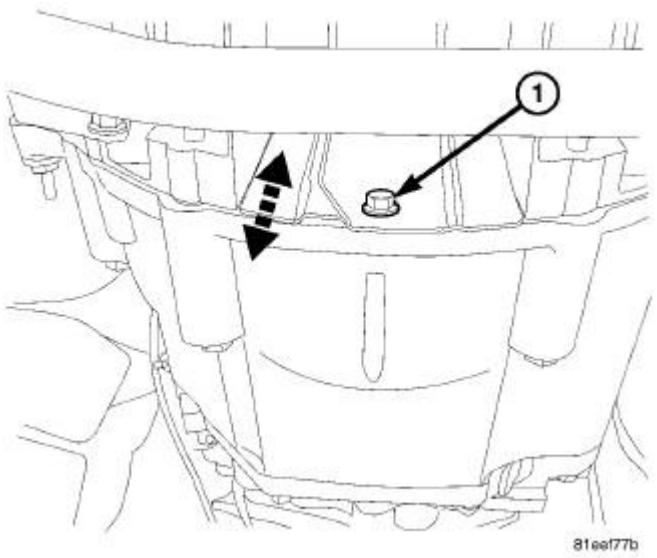

Fig. 6: INSPECTION COVER
Courtesy of CHRYSLER LLC

11. Remove the inspection cover bolt (1) and the inspection cover.

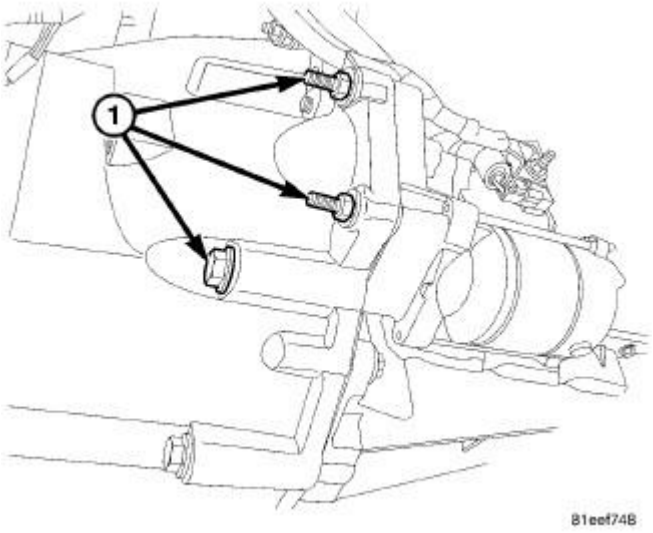

Fig. 7: STARTER BOLTS
Courtesy of CHRYSLER LLC

12. Remove the starter motor mounting bolts (1) and the starter motor. Secure the started aside.
13. Remove all necessary electrical connectors from the transmission.

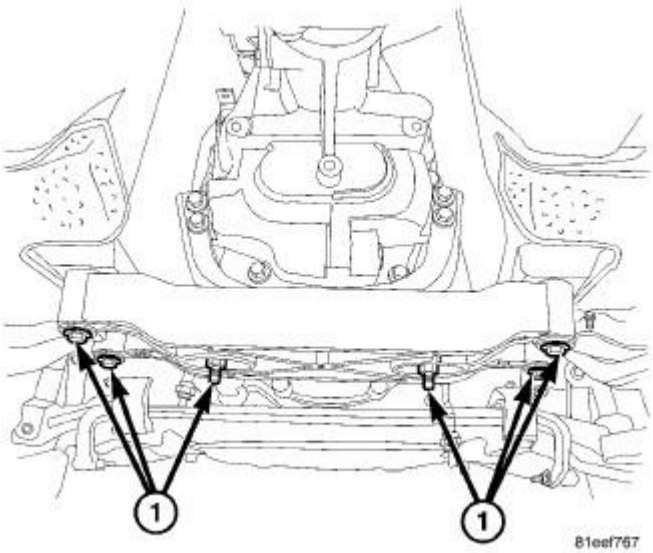

Fig. 8: Identifying Crossmember To Body Bolts
Courtesy of CHRYSLER LLC

14. Raise transmission slightly with service jack to relieve load on crossmember and isolator.
15. Remove the crossmember and isolator lower mounting bolts (1).

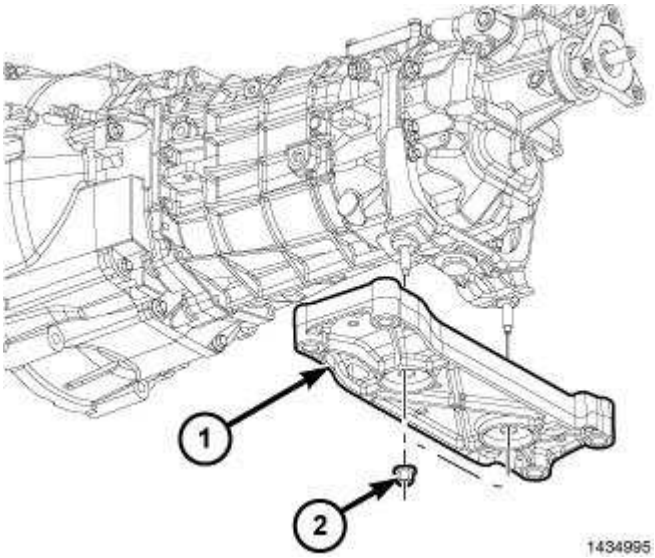

Fig. 9: Identifying Crossmember
Courtesy of CHRYSLER LLC

16. Remove the crossmember.

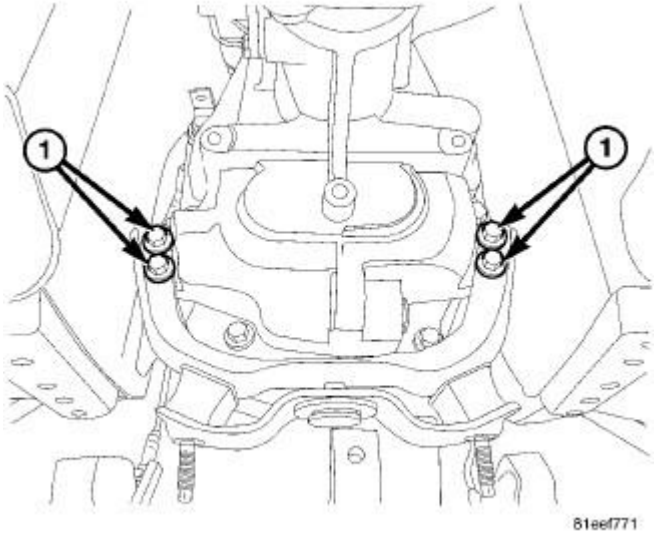

Fig. 10: Transmission Isolator Bracket Upper Bolts
Courtesy of CHRYSLER LLC

1 - ISOLATER MOUNTING BOLTS

17. Remove the transmission isolator bracket upper bolts (1).

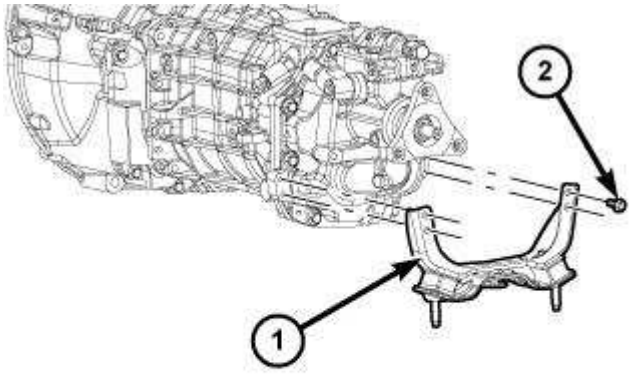

Fig. 11: Isolator Bracket And Mount
Courtesy of CHRYSLER LLC

18. Remove the isolator bracket and mount (1) from the transmission.

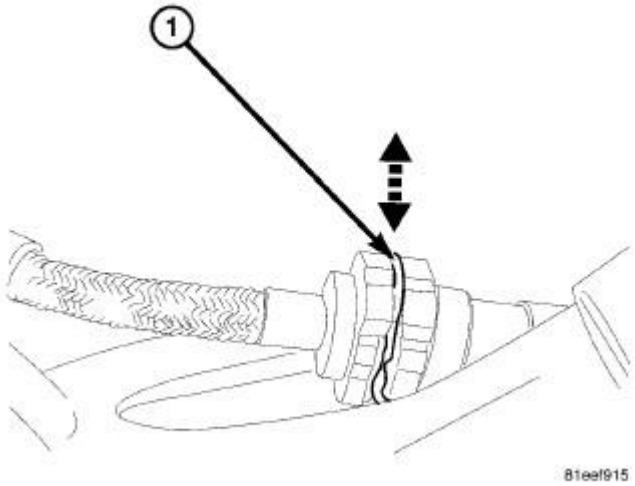

Fig. 12: Identifying Locking Tab
Courtesy of CHRYSLER LLC

19. Raise the clip (1) securing the clutch hydraulic hose to the throw out bearing assembly. Remove and cap the hose.

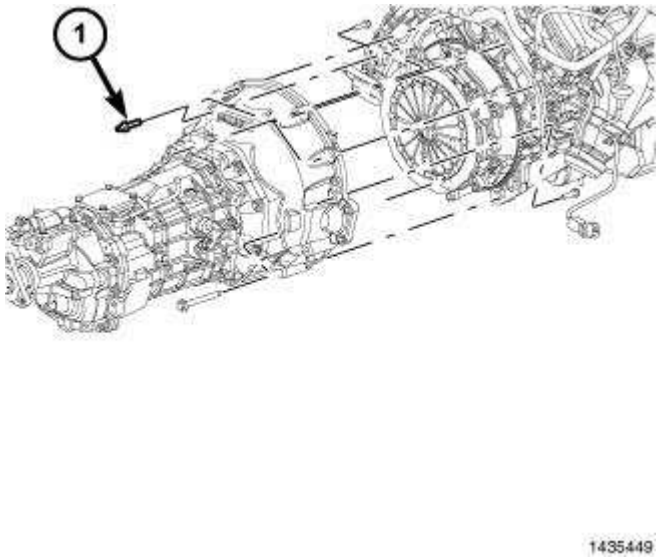

Fig. 13: Identifying Bell Housing Mounting Bolts
Courtesy of CHRYSLER LLC

20. Remove all the bell housing mounting bolts (1) and separate the transmission from the engine block.
21. Slide transmission back so that the input shaft clears pressure plate
22. Carefully lower the transmission.

DISASSEMBLY

DISASSEMBLY

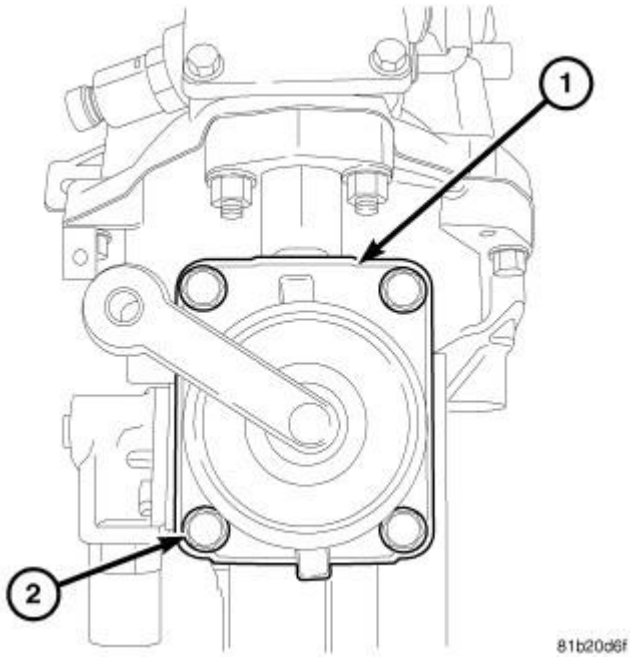

Fig. 14: SHIFT COVER BOLTS

Courtesy of CHRYSLER LLC

1. Remove shift cover (1) bolts (2) and remove cover.

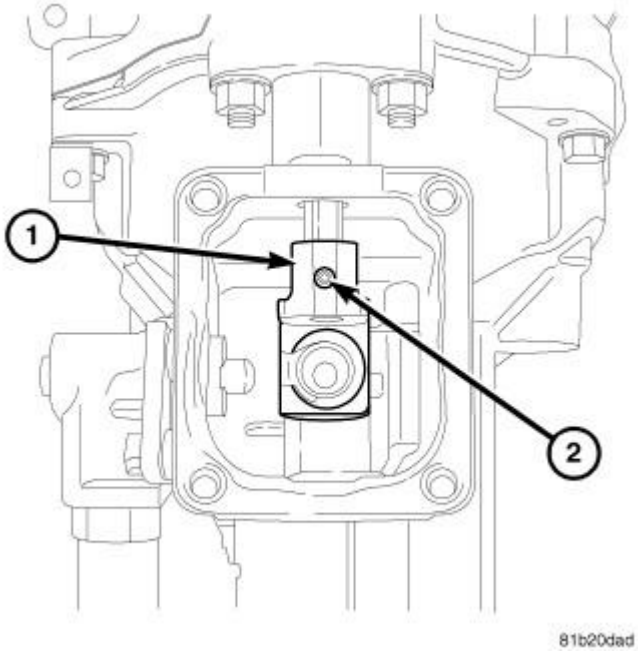

Fig. 15: OFFSET LEVER ROLL PIN
Courtesy of CHRYSLER LLC

2. Remove offset lever (1) roll pin (2) with a hammer and punch.

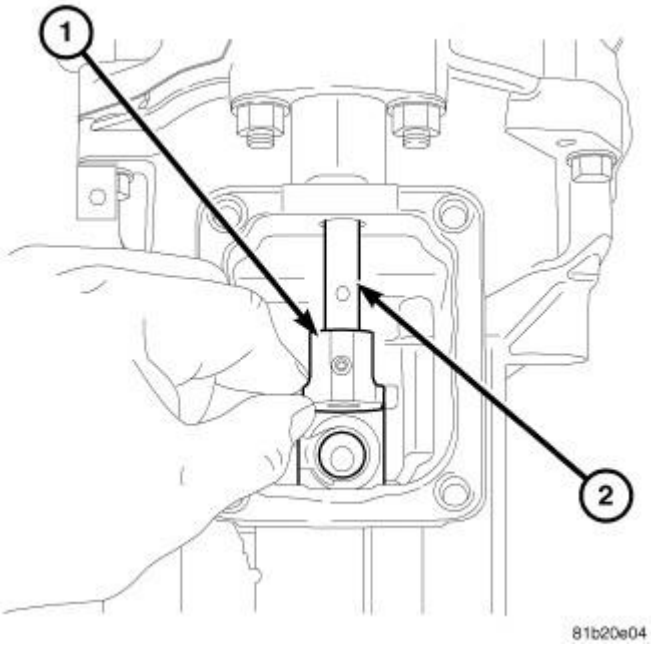

Fig. 16: OFFSET LEVER
Courtesy of CHRYSLER LLC

3. Remove offset lever (1) from shift rail (2).

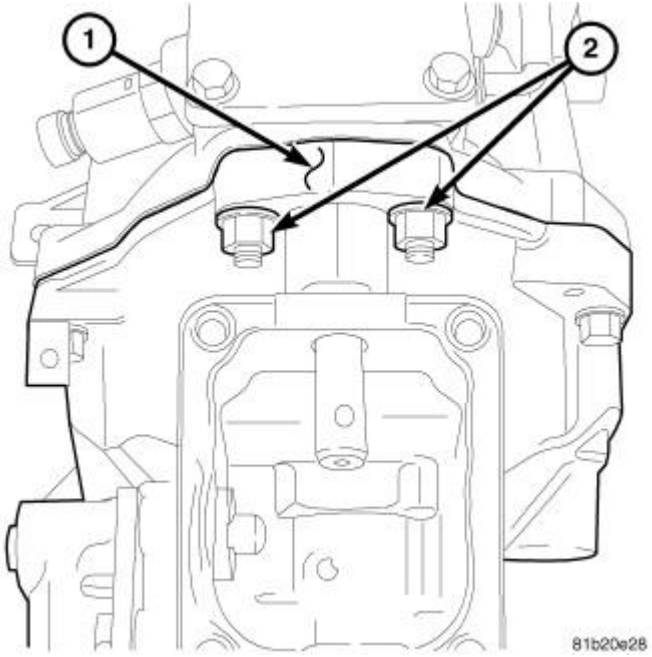

Fig. 17: EXTENSION HOUSING NUTS
Courtesy of CHRYSLER LLC

4. Remove extension housing (1) nuts (2) from transmission studs.

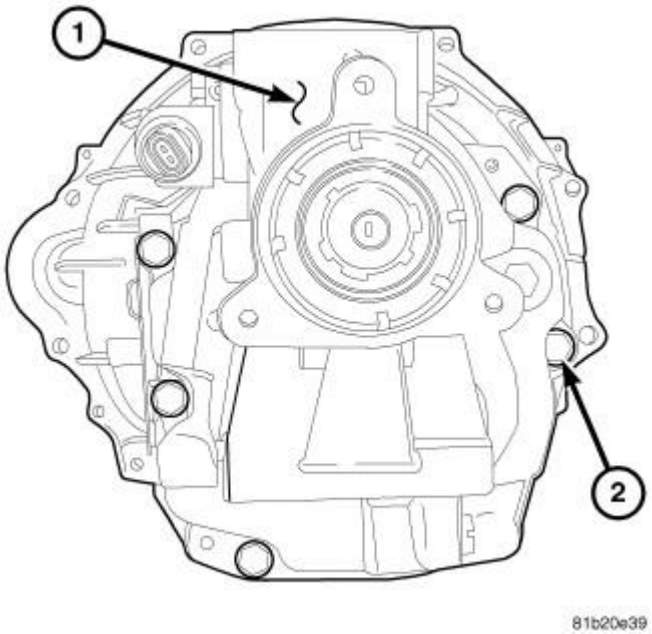

Fig. 18: EXTENSION HOUSING BOLTS
Courtesy of CHRYSLER LLC

5. Remove extension housing (1) bolts (2).

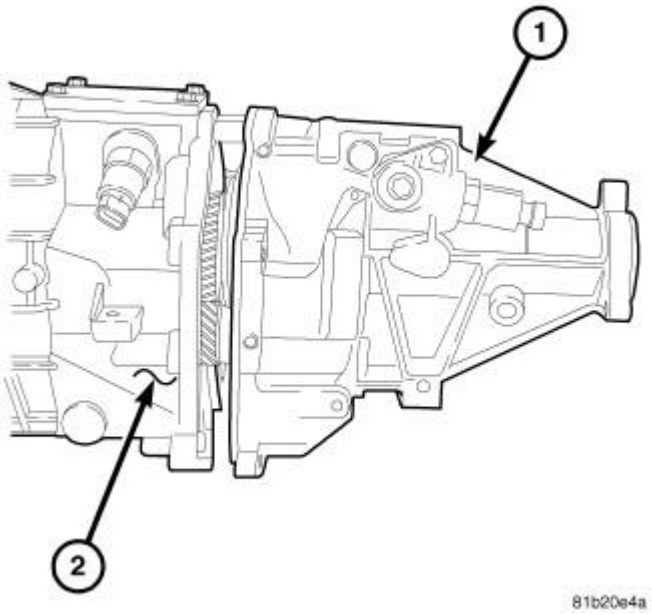

Fig. 19: EXTENSION HOUSING REMOVAL
Courtesy of CHRYSLER LLC

6. Pry extension housing (1) off transmission case (2) at pry points.

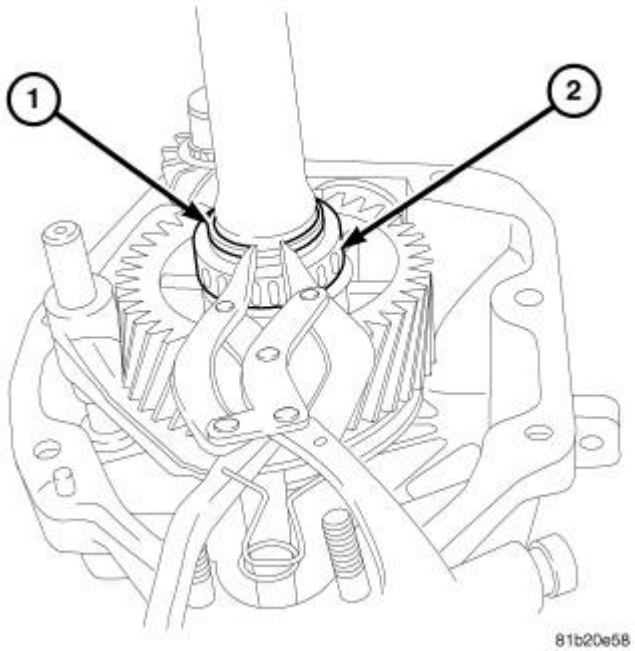

Fig. 20: ROLLER BEARING SNAP-RING
Courtesy of CHRYSLER LLC

7. Stand transmission on Fixture 9387 and bolt adapter to fixture.
8. Install on bench Fixture 9385.
9. Remove mainshaft roller bearing (2) snap ring (1).

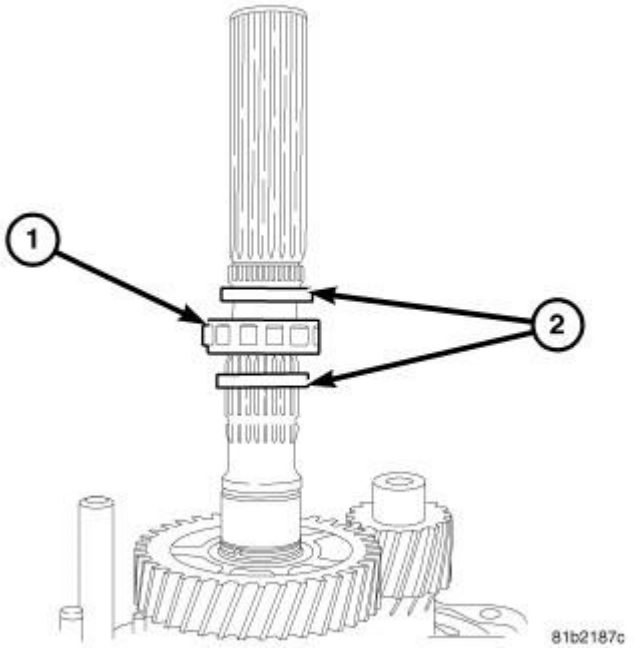

Fig. 21: ROLLER BEARING AND SPACERS
Courtesy of CHRYSLER LLC

10. Remove mainshaft roller bearing (1) and spacers (2) from mainshaft.

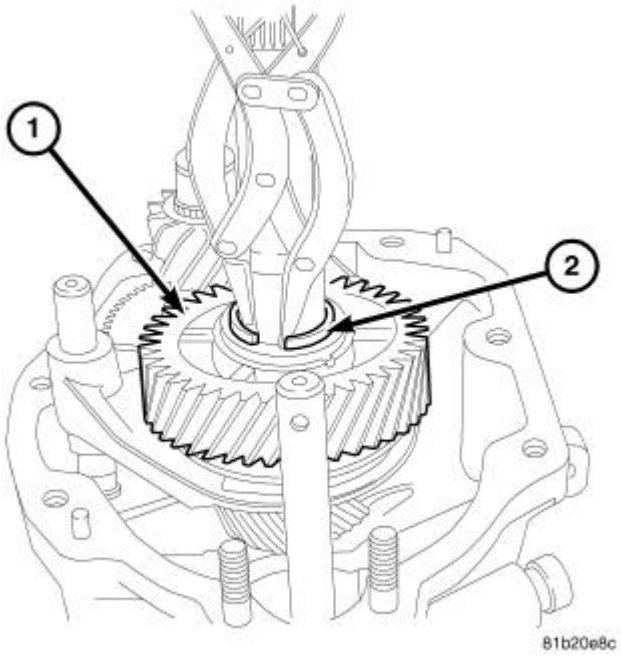

Fig. 22: REVERSE GEAR SNAP RING

Courtesy of CHRYSLER LLC

11. Remove reverse gear (1) snap ring (2) from mainshaft.

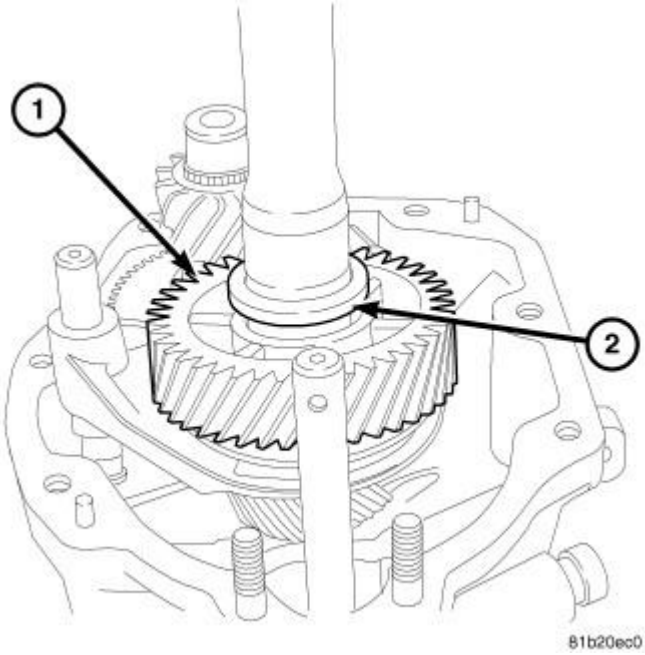

Fig. 23: REVERSE GEAR THRUST WASHER
Courtesy of CHRYSLER LLC

12. Remove reverse gear (1) thrust washer (2) from mainshaft.

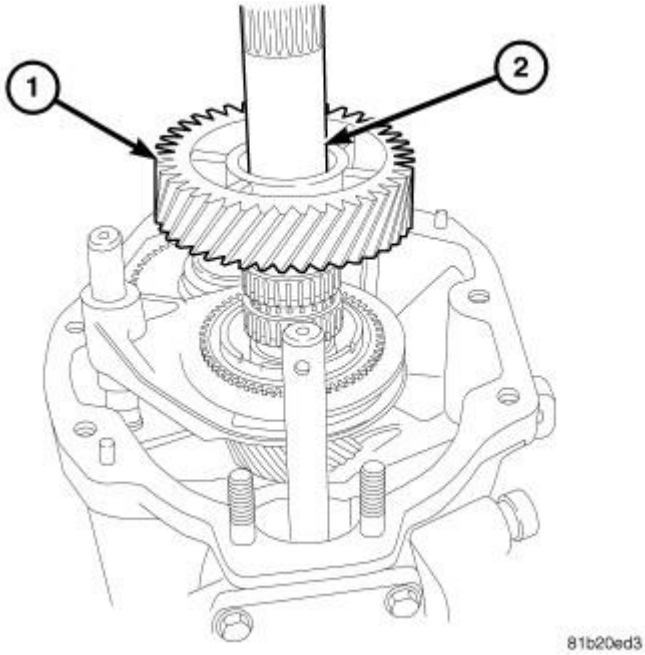

Fig. 24: REVERSE GEAR
Courtesy of CHRYSLER LLC

13. Remove reverse gear (1) from mainshaft (2).

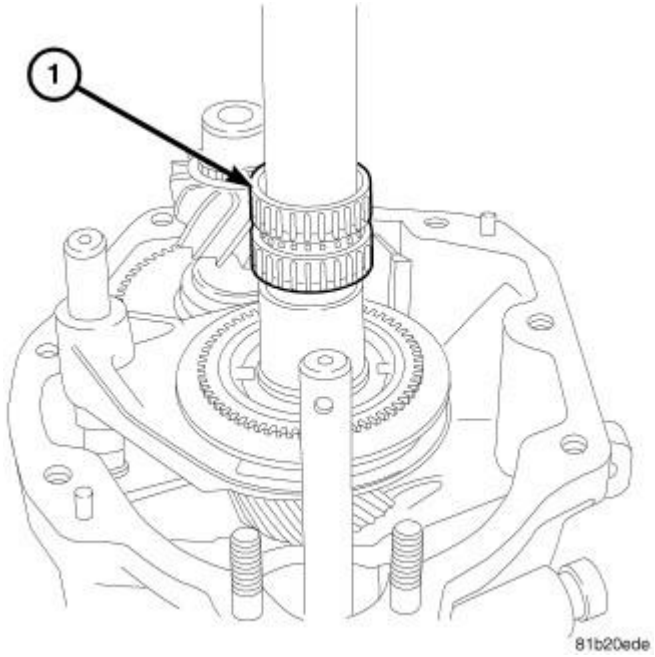

Fig. 25: REVERSE GEAR BEARING
Courtesy of CHRYSLER LLC

14. Remove reverse gear bearing (1) from mainshaft (2).

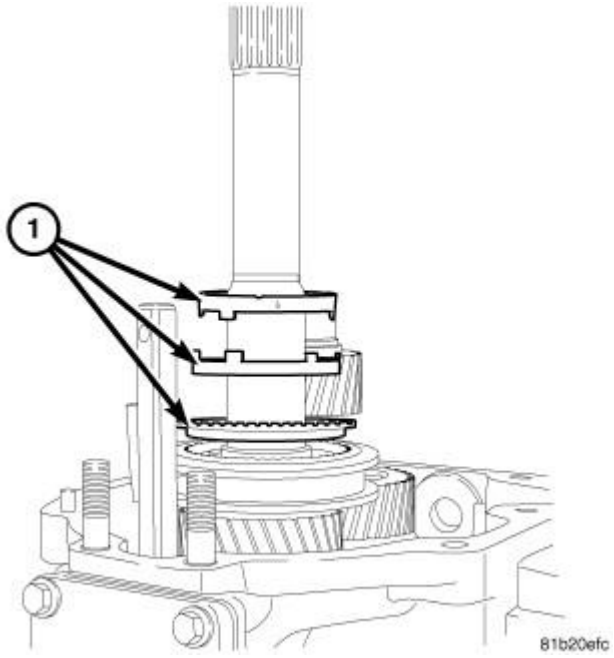

Fig. 26: REVERSE SYCHRO RINGS
Courtesy of CHRYSLER LLC

15. Remove reverse synchronizer rings (1) from reverse synchronizer hub.

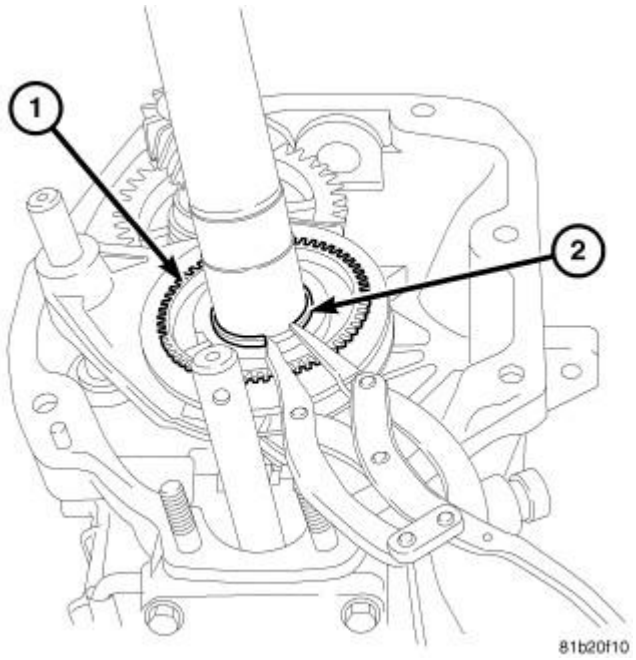

Fig. 27: REVERSE SYCHRO SNAP RING
Courtesy of CHRYSLER LLC

16. Remove reverse synchronizer hub (1) snap ring (2) from mainshaft.

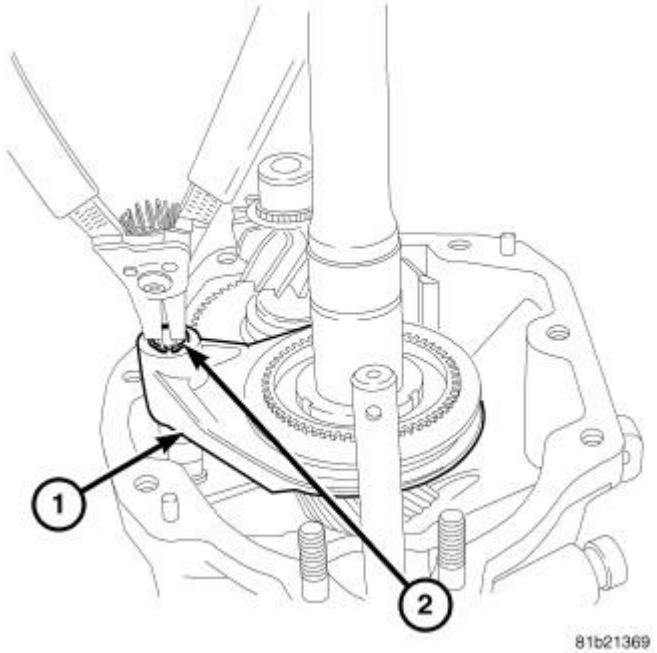

Fig. 28: REVERSE FORK SNAP RING
Courtesy of CHRYSLER LLC

17. Remove reverse shift fork (1) snap ring (2) from shift rail and discard snap ring.

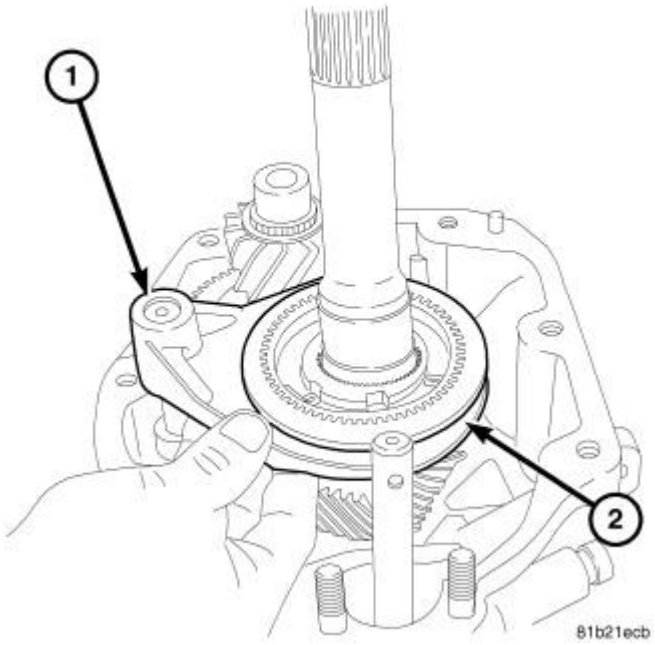

Fig. 29: REVERSE HUB AND FORK
Courtesy of CHRYSLER LLC

18. Remove reverse shift fork (1) synchronizer hub and sleeve as an assembly (2).

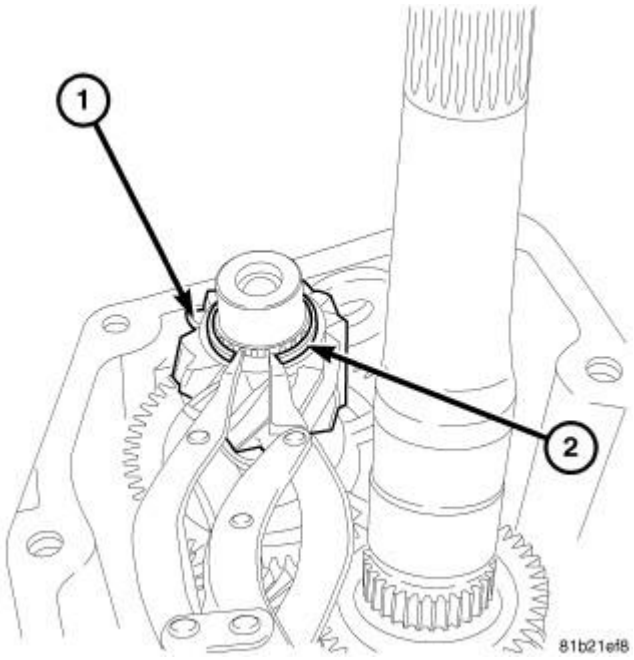

Fig. 30: REVERSE COUNTERSHAFT SNAP RING
Courtesy of CHRYSLER LLC

19. Remove reverse gear (1) snap ring (2) from countershaft.

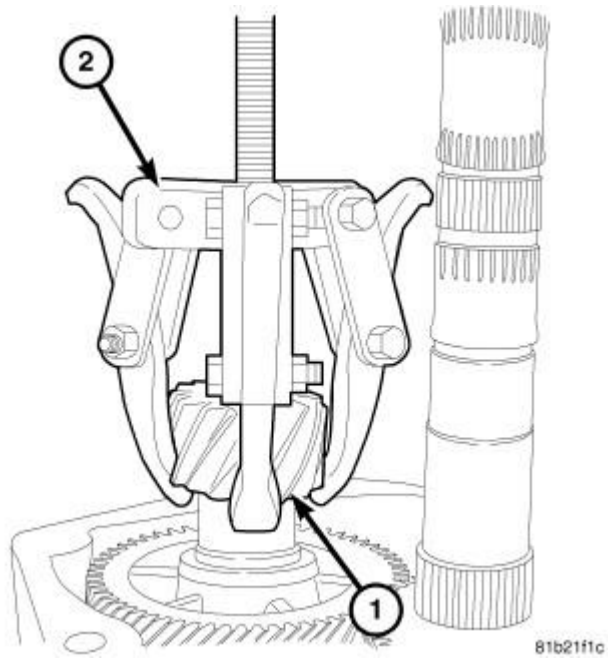

Fig. 31: REVERSE COUNTERSHAFT GEAR
Courtesy of CHRYSLER LLC

20. Remove reverse gear from countershaft (1) with three jaw puller (2) and Button 10027.

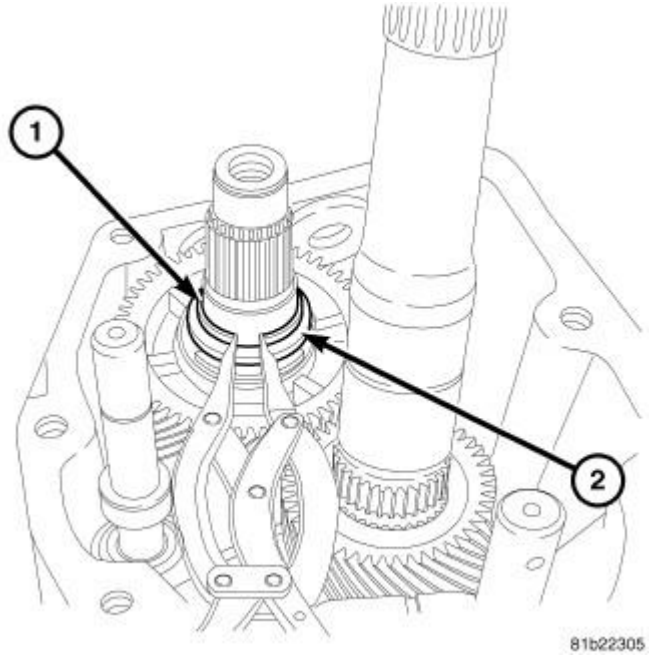

Fig. 32: 5TH GEAR SNAP RING
Courtesy of CHRYSLER LLC

21. Remove fifth gear snap ring (1) from countershaft (2).

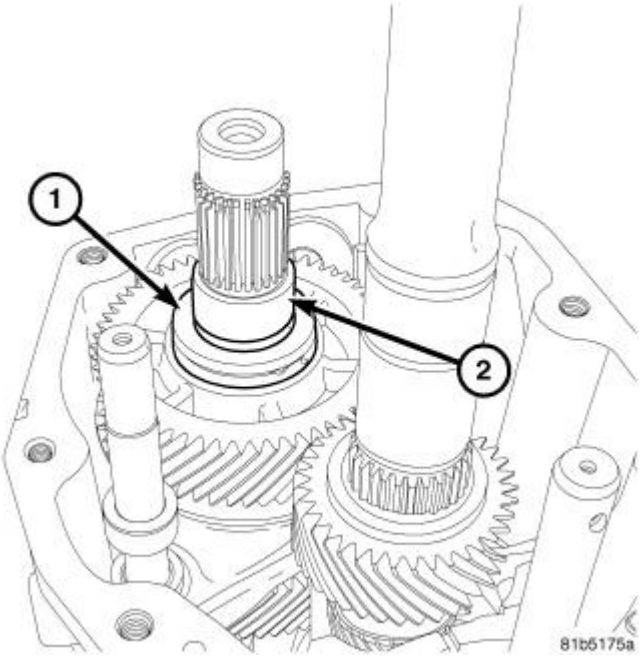

Fig. 33: 5TH THRUST WASHER
Courtesy of CHRYSLER LLC

22. Remove fifth gear thrust washer (1) from countershaft (2).

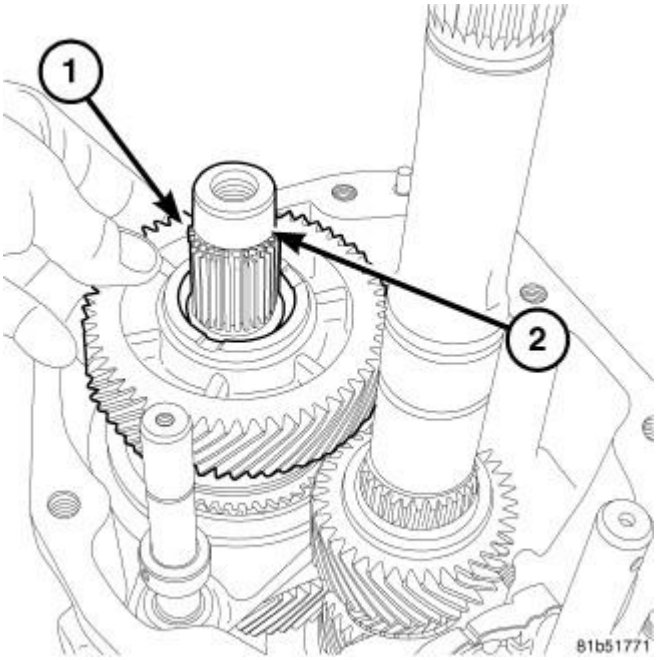

Fig. 34: 5TH GEAR
Courtesy of CHRYSLER LLC

23. Remove fifth gear (1) from countershaft (2).

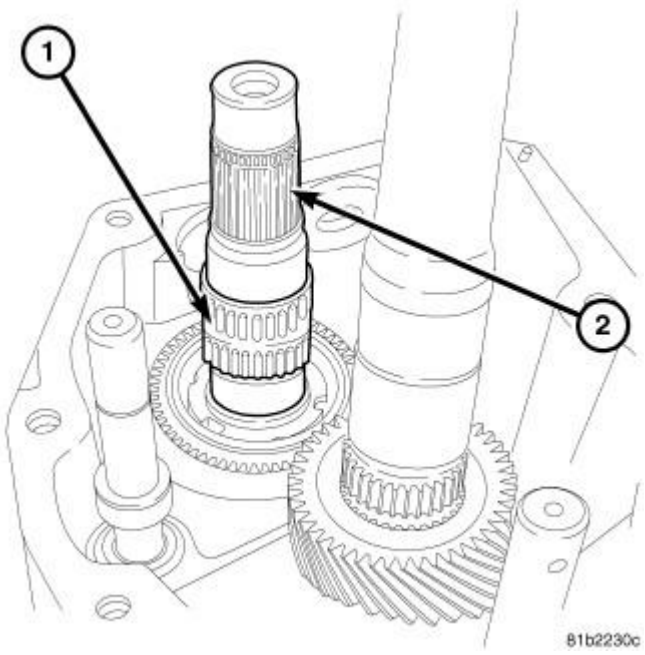

Fig. 35: 5TH GEAR BEARING
Courtesy of CHRYSLER LLC

24. Remove fifth gear bearing (1) from countershaft (2).

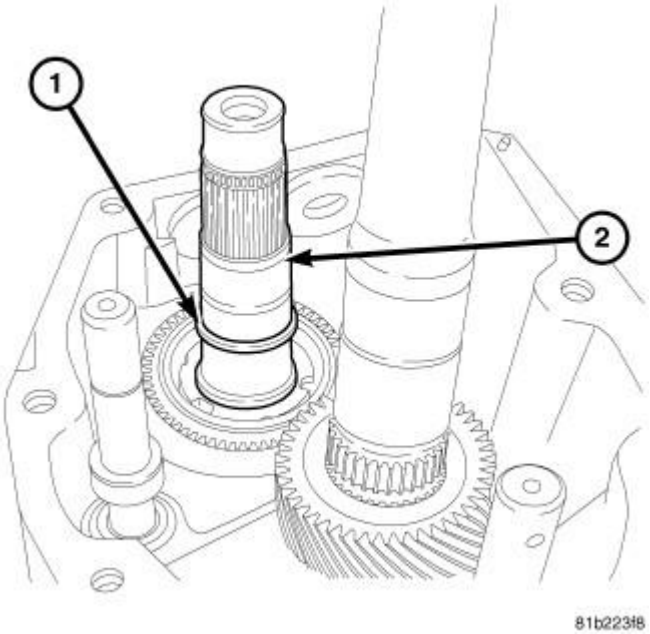

Fig. 36: 5TH GEAR BEARING SPACER
Courtesy of CHRYSLER LLC

25. Remove fifth gear bearing spacer (1) from countershaft (2).

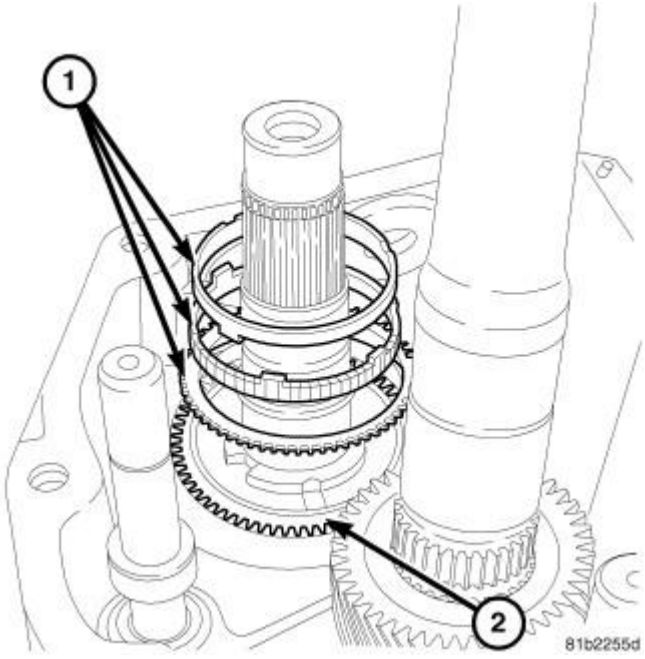

Fig. 37: 5TH GEAR SYNCHRO RINGS
Courtesy of CHRYSLER LLC

26. Remove fifth gear synchronizer rings (1) from 5-6 synchronizer hub (2).

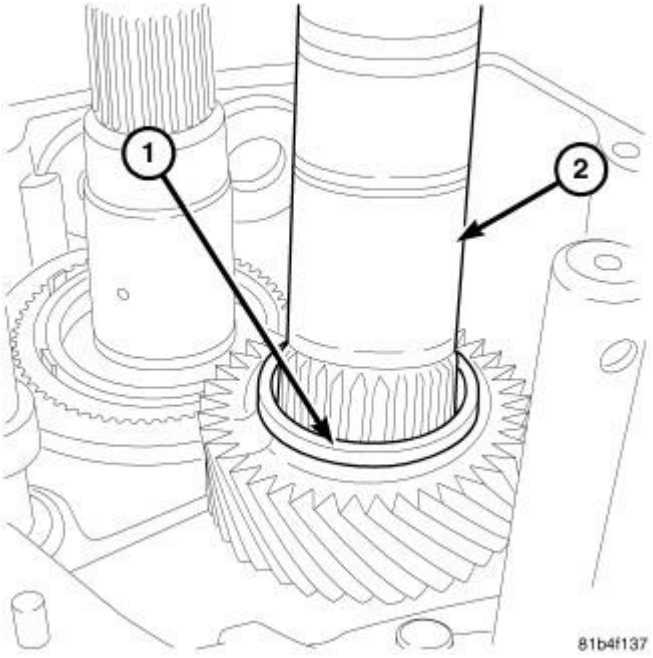

Fig. 38: 5TH RETAINER RING
Courtesy of CHRYSLER LLC

27. Remove fifth gear split ring retainer (1) from mainshaft (2).

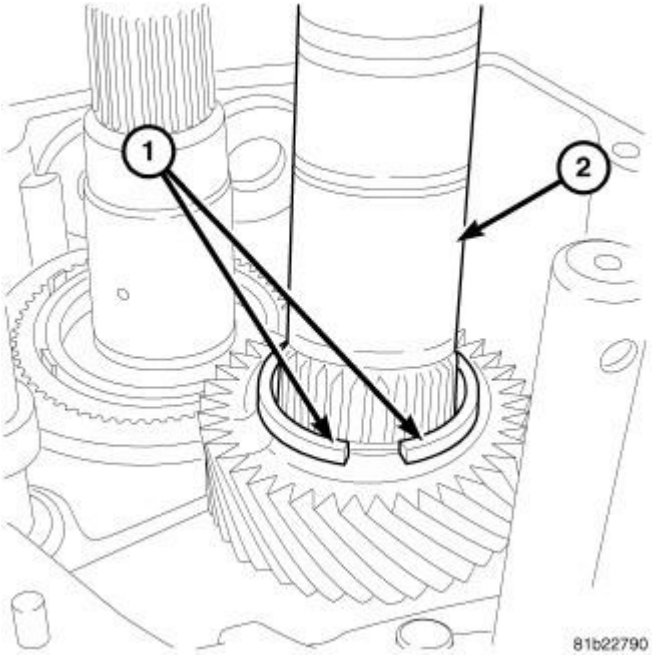

Fig. 39: SPLIT RINGS
Courtesy of CHRYSLER LLC

28. Remove fifth gear split rings (1) from mainshaft (2).

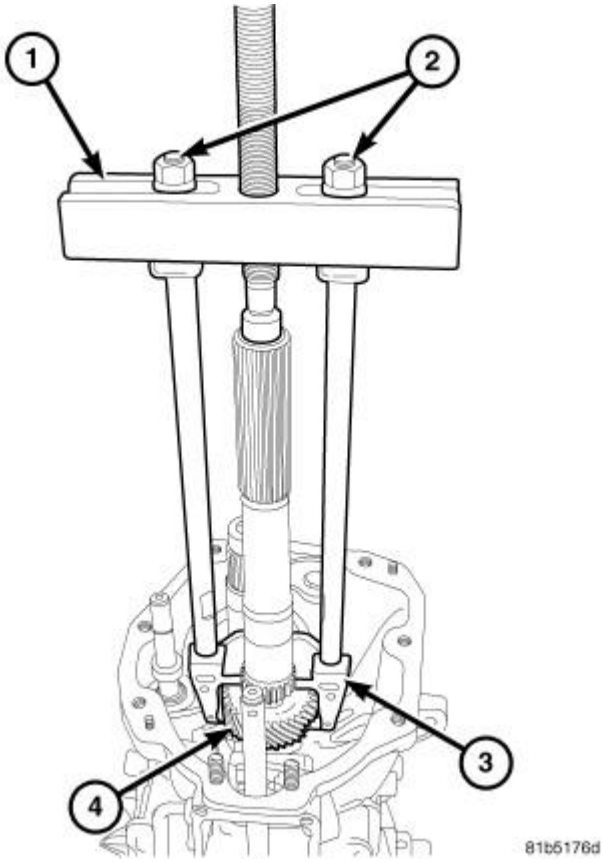

Fig. 40: 5TH GEAR PULLER
Courtesy of CHRYSLER LLC

29. Remove fifth gear (4) from mainshaft with Bridge 9382 (1) Bolts 9378 (2) Puller 9379 (3) and Button 10027.

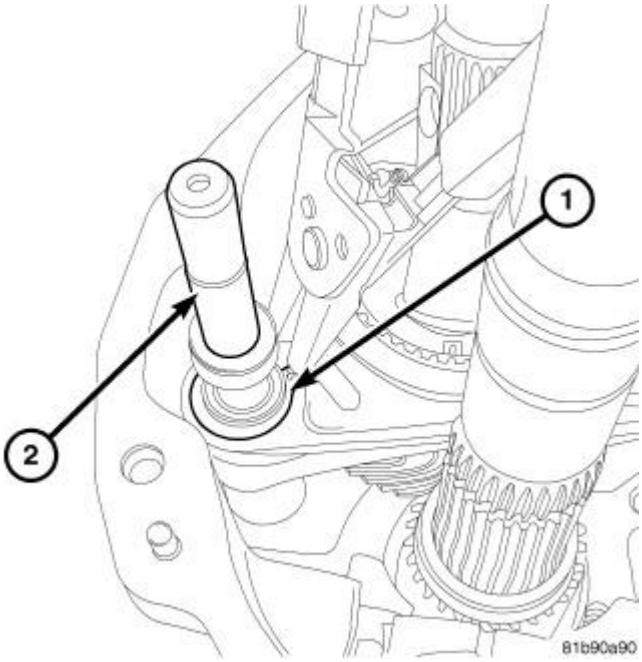

Fig. 41: 5-6 SHIFT FORK SNAP RING
Courtesy of CHRYSLER LLC

30. Remove 5-6 gear shift fork snap ring (1) from shift rail (2).

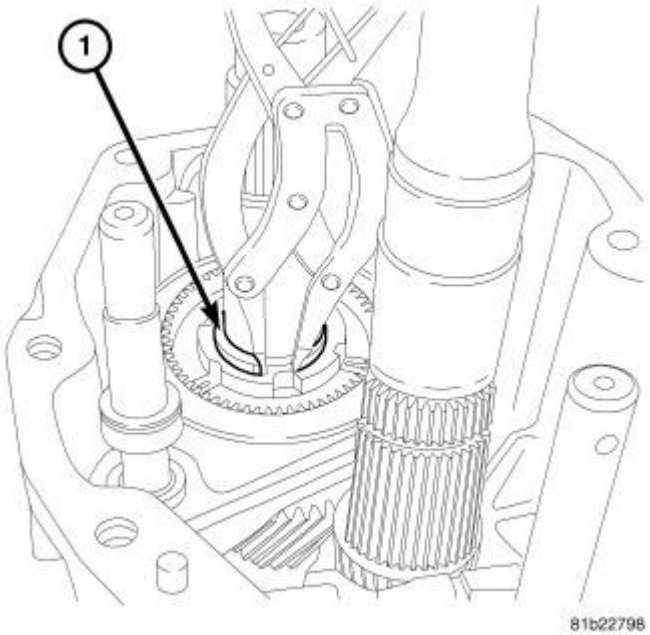

Fig. 42: 5-6 HUB SNAP RING
Courtesy of CHRYSLER LLC

31. Remove 5-6 synchronizer hub snap ring (1) from countershaft.

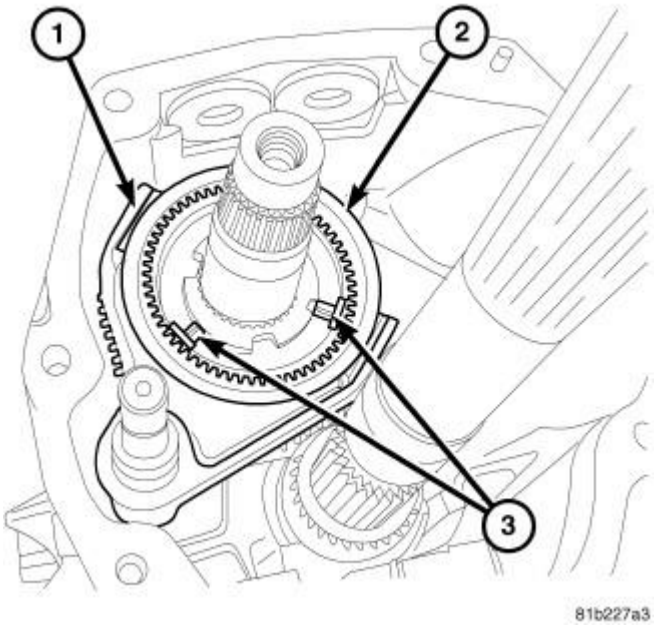

Fig. 43: 5-6 FORK AND SLEEVE
Courtesy of CHRYSLER LLC

32. Remove 5-6 shift fork (1) synchronizer sleeve (2) and detents (3) from 5-6 synchronizer hub.

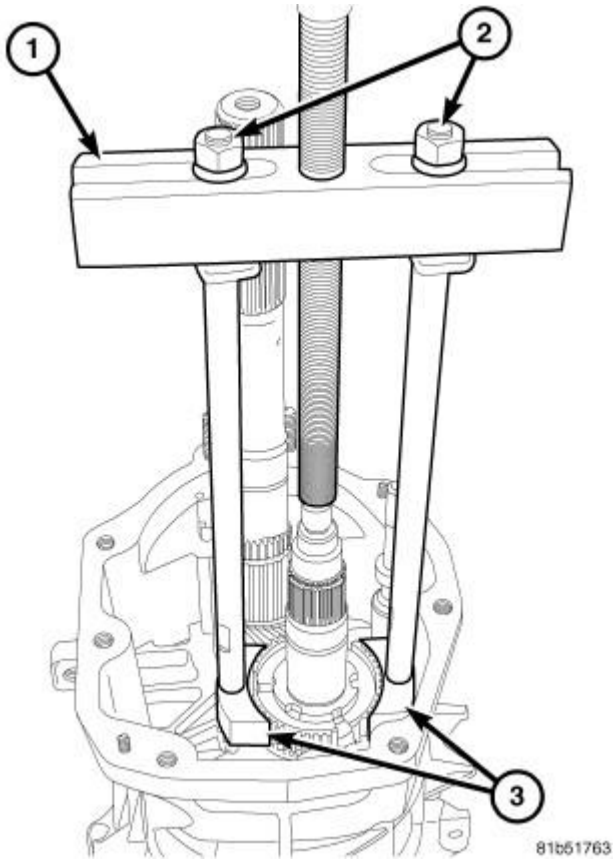

Fig. 44: 5-6 HUB PULLER
Courtesy of CHRYSLER LLC

33. Remove 5-6 synchronizer hub from countershaft with Bridge 9382 (1) Bolts 9378 (2) Puller 10026 (3) and Button 10027.

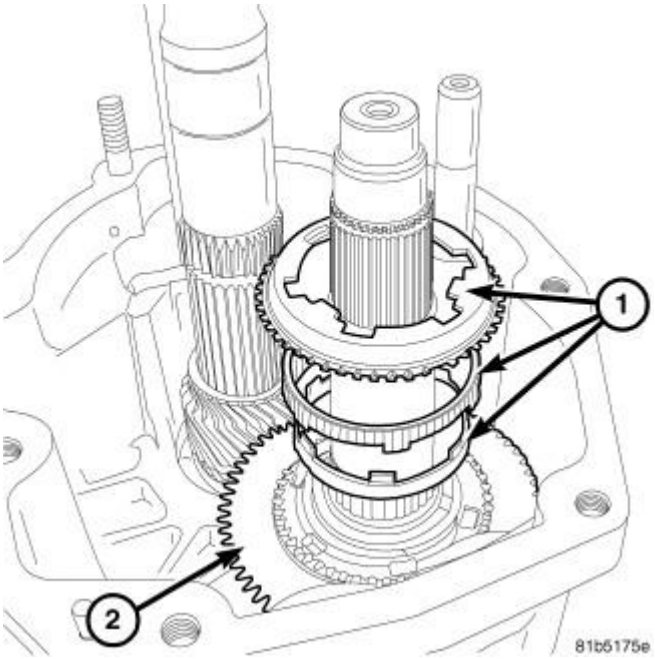

Fig. 45: 6TH SYNCHRO RINGS
Courtesy of CHRYSLER LLC

34. Remove sixth gear synchronizer rings (1) from sixth gear (2).

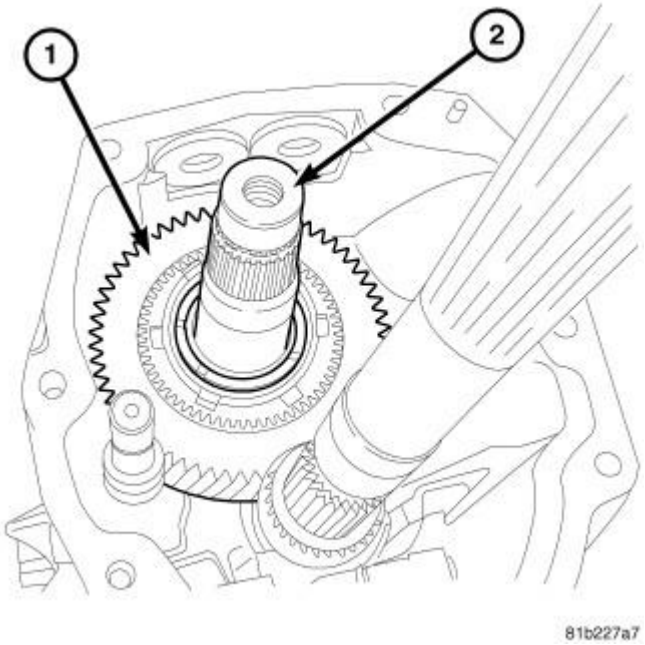

Fig. 46: 6TH GEAR
Courtesy of CHRYSLER LLC

35. Remove sixth gear (1) from countershaft (2).

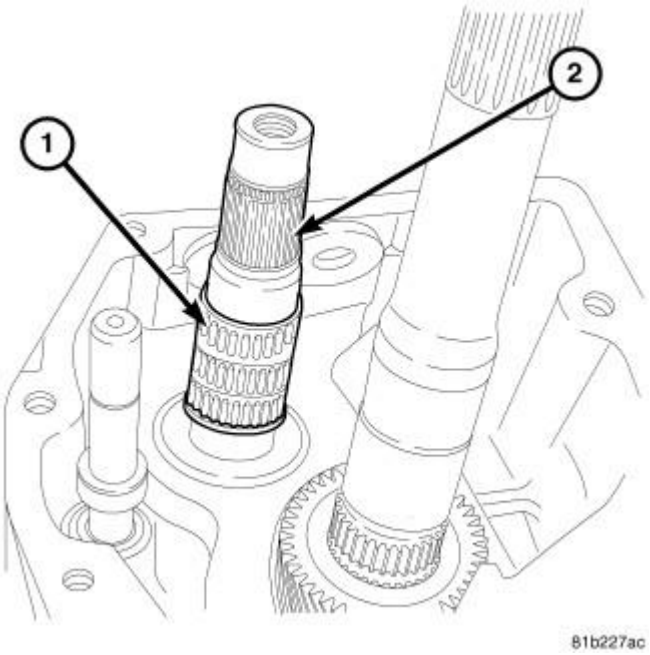

Fig. 47: 6TH GEAR BEARING
Courtesy of CHRYSLER LLC

36. Remove sixth gear bearing (1) from countershaft (2).

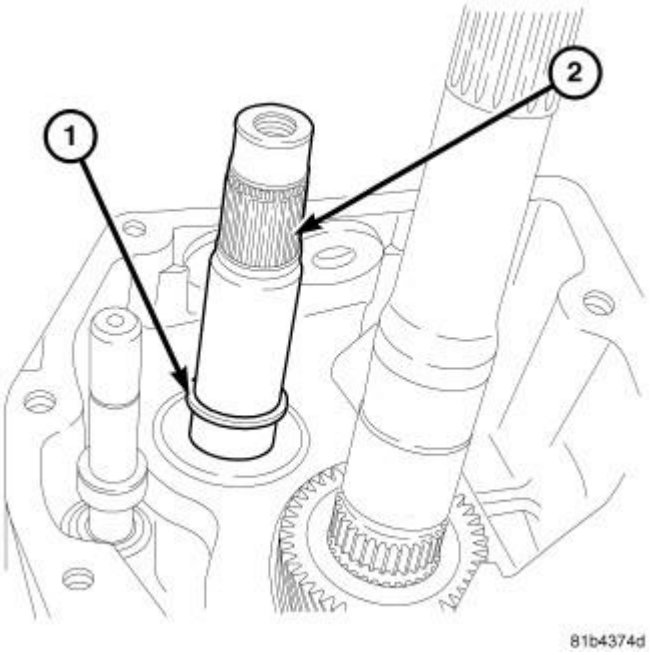

Fig. 48: 6TH BEARING SPACER

Courtesy of CHRYSLER LLC

37. Remove sixth gear bearing spacer (1) from countershaft (2).

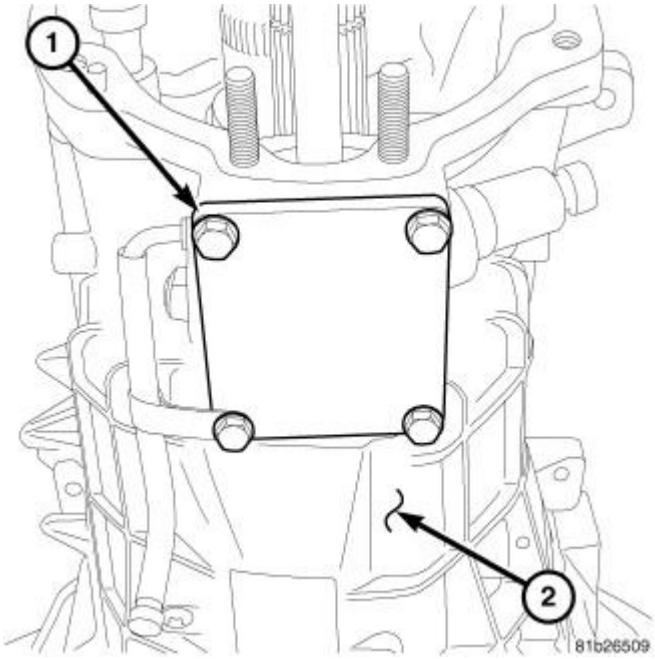

Fig. 49: TOP COVER
Courtesy of CHRYSLER LLC

38. Remove top cover (1) bolts and remove cover from transmission case (2).

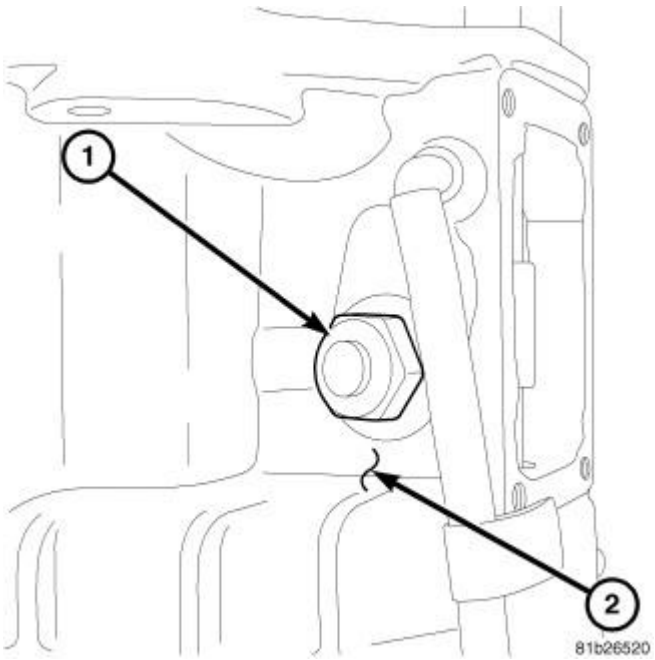

Fig. 50: SIDE DETENT
Courtesy of CHRYSLER LLC

39. Remove shift detent (1) from right side of case (2).

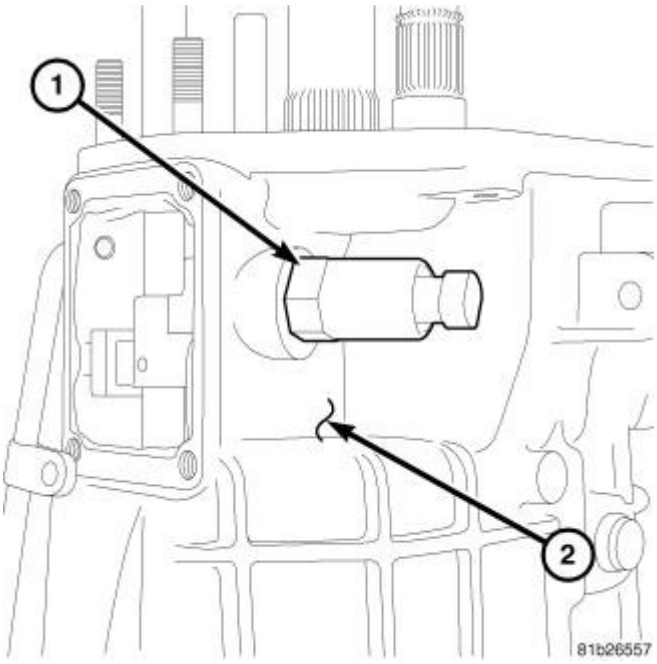

Fig. 51: SKIP SHIFT SOLENOID
Courtesy of CHRYSLER LLC

40. Remove skip shift solenoid (1) from left side of case (2).

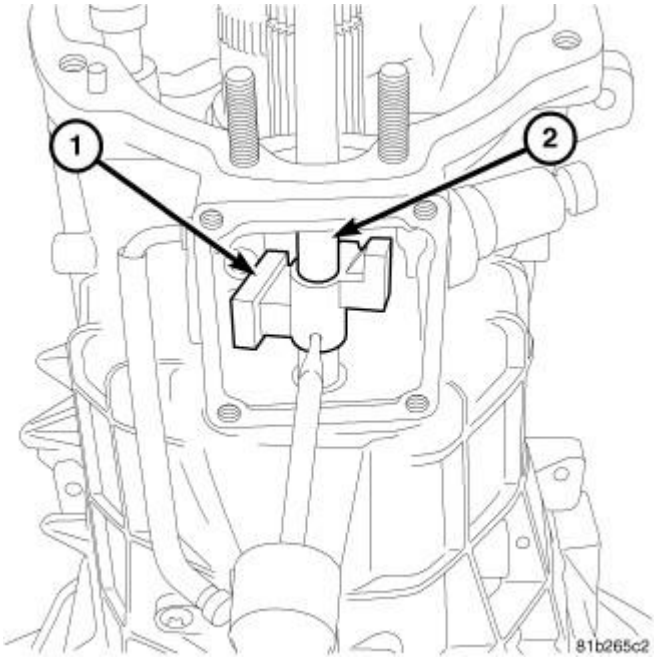

Fig. 52: SKIP SHIFT LEVER
Courtesy of CHRYSLER LLC

41. Drive skip shift lever (1) roll pin down with punch until lever is loose from shift rail (2).

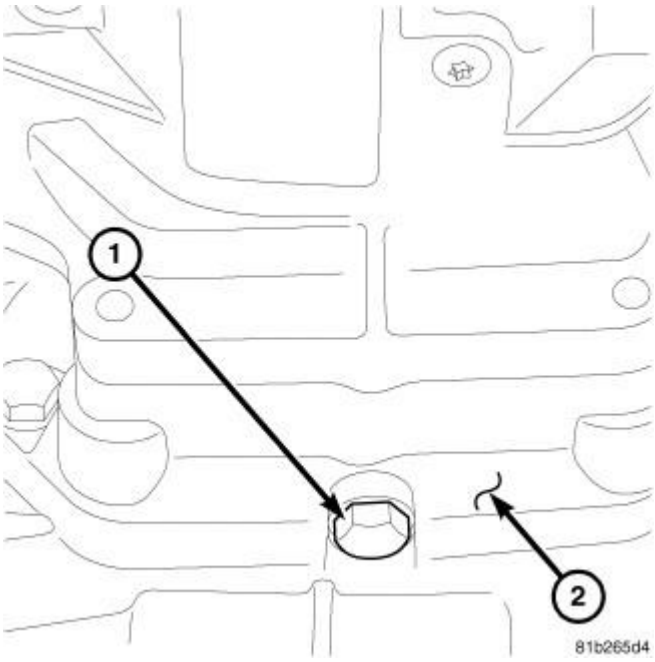

Fig. 53: TOP DETENT
Courtesy of CHRYSLER LLC

42. Remove roller detent bolt (1) from transmission adapter (2).

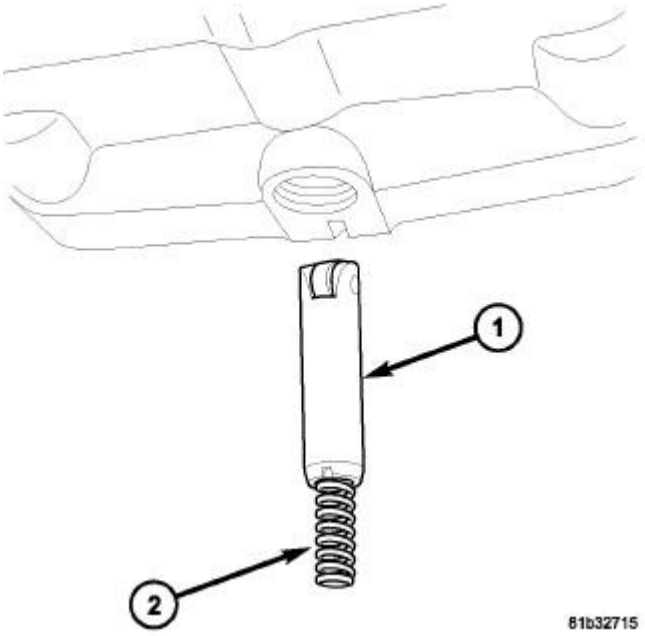

Fig. 54: DETENT AND SPRING
Courtesy of CHRYSLER LLC

43. Remove roller detent (1) and spring (2) from transmission adapter.

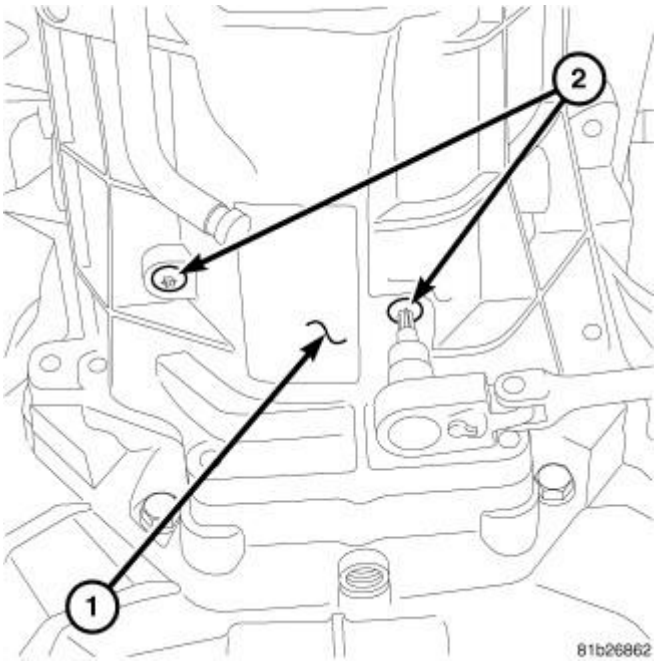

Fig. 55: TORX SCREWS
Courtesy of CHRYSLER LLC

44. Remove shift level guide bolts (1) from top of transmission case (2).

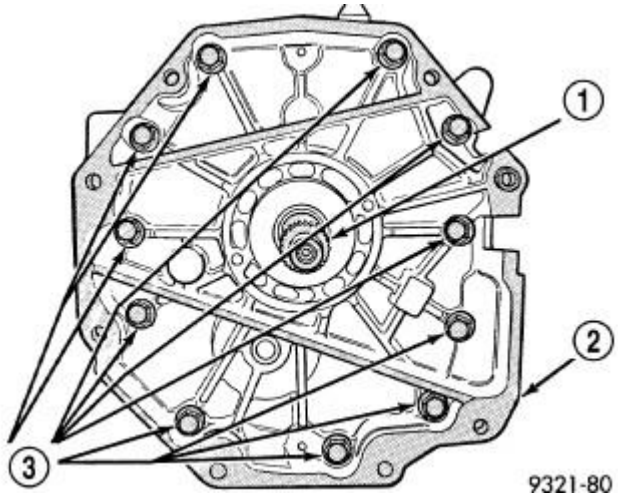

Fig. 56: Adapter Bolt Location
Courtesy of CHRYSLER LLC

45. Remove transmission adapter (2) bolts (3).

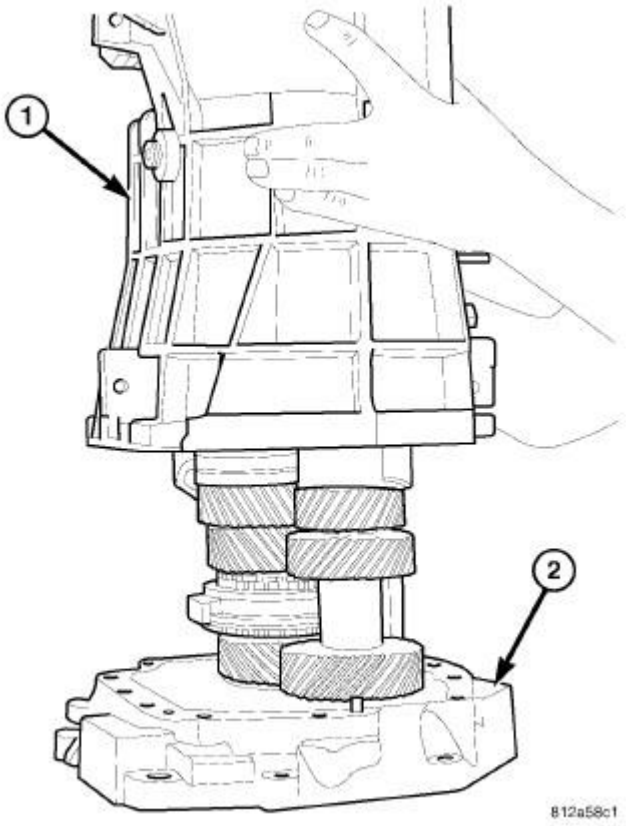

Fig. 57: TRANSMISSION CASE
Courtesy of CHRYSLER LLC

46. Remove transmission case (1) upward off transmission adapter plate (2) and remove skip shift lever from shift rail.

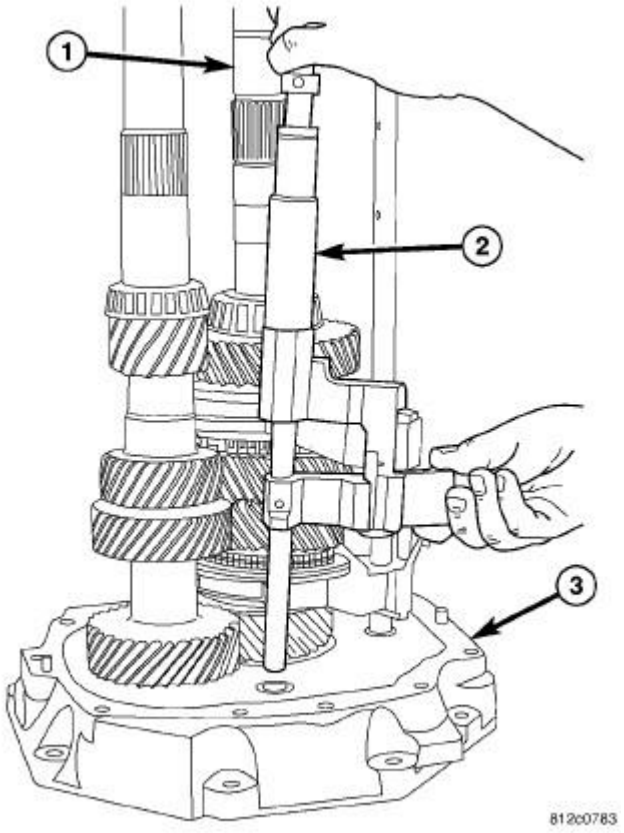

Fig. 58: REVERSE SHAFT RAIL ASSEMBLY
Courtesy of CHRYSLER LLC

47. Remove reverse shift rail (2) assembly from transmission adapter (3).

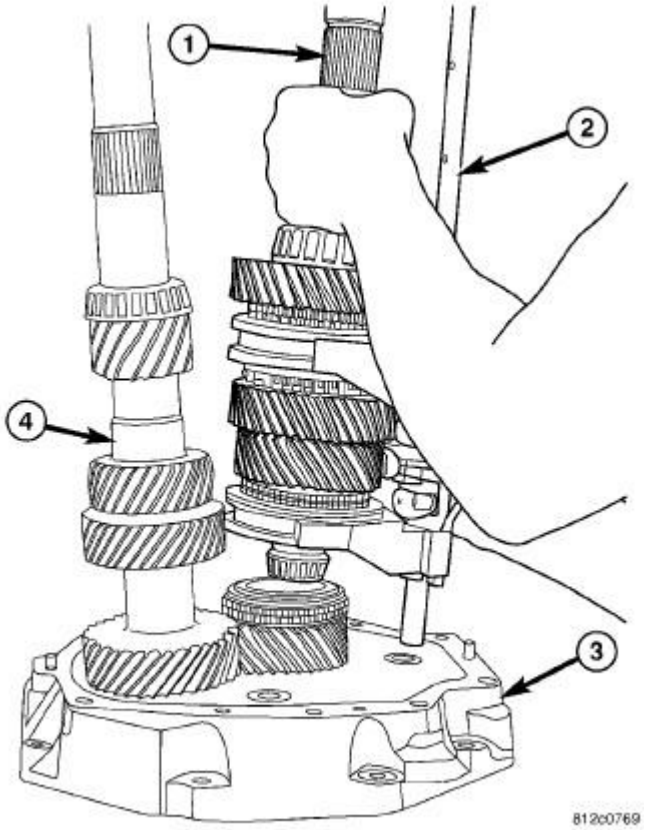

Fig. 59: MAINSHAFT AND SHIFT RAIL
Courtesy of CHRYSLER LLC

48. Tilt countershaft (4) sideways, then remove mainshaft (1) and shift rail (2) from adapter plate (3). Remove countershaft (4) assembly from adapter plate.

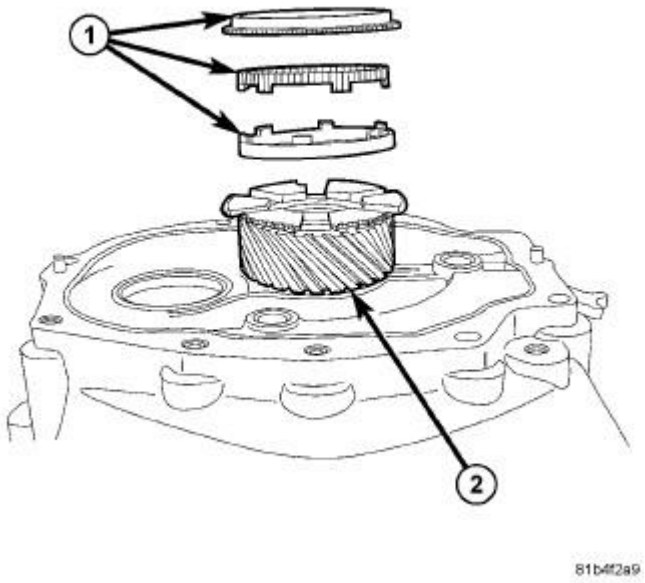

Fig. 60: INPUT SHAFT SYNCHRO RINGS
Courtesy of CHRYSLER LLC

49. Remove input shaft synchronizer ring (1) and input shaft (2) from transmission adapter.

MAINSHAFT

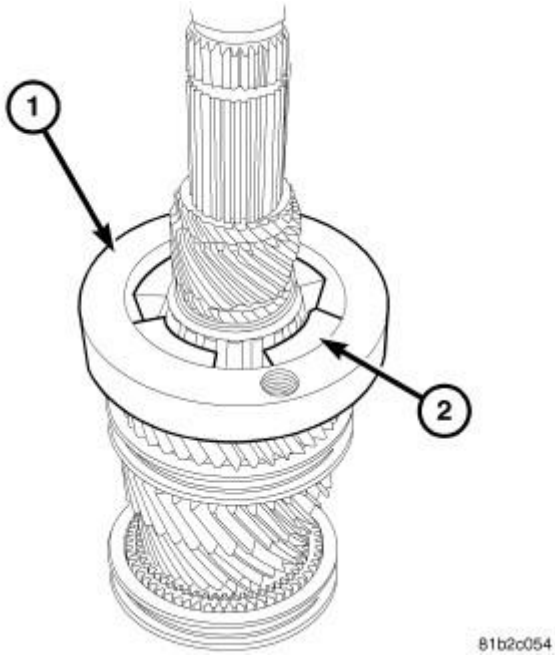

Fig. 61: MAINSHAFT BEARING PULLER
Courtesy of CHRYSLER LLC

1. Position Puller C-293-PA (1) and Adapters C-293-47 (2) on mainshaft bearing. Place Button 10027 in end of mainshaft.

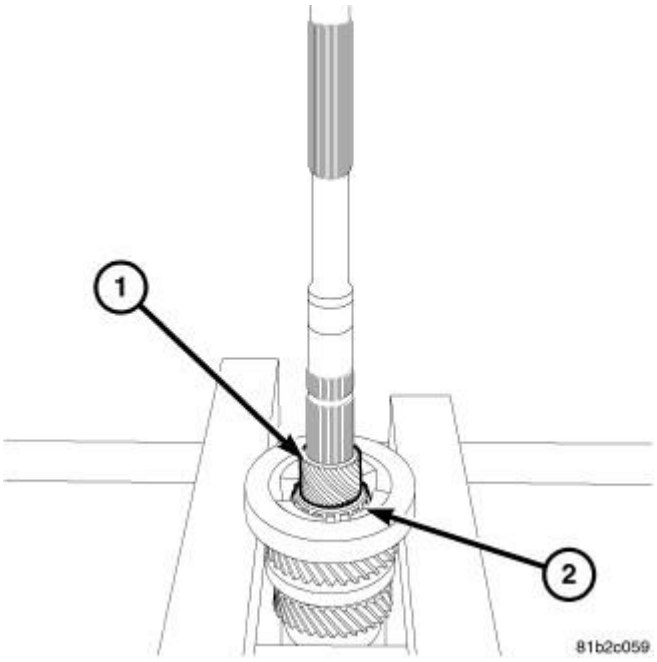

Fig. 62: MAINSHAFT CASE BEARING
Courtesy of CHRYSLER LLC

2. Remove sixth gear (1) and mainshaft bearing (2) with Puller C-293-PA, Adapters C-293-47, Button 10027 and a press.

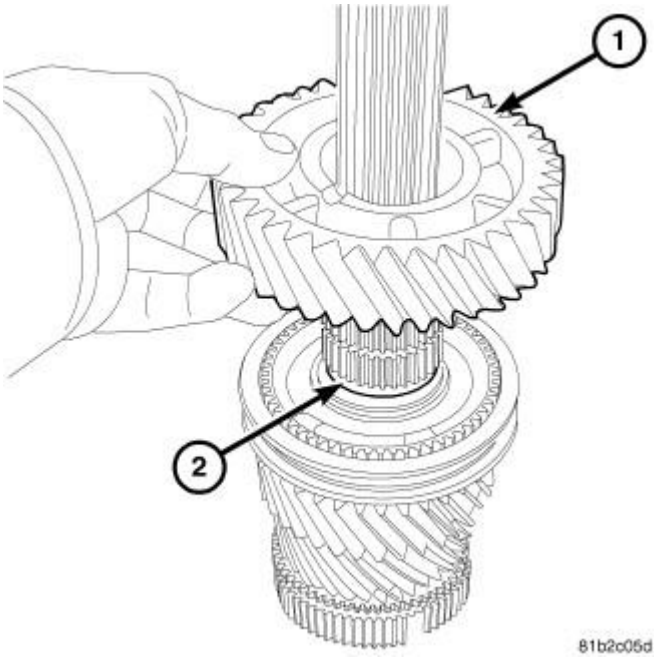

Fig. 63: 1ST GEAR
Courtesy of CHRYSLER LLC

3. Remove first gear (1) from mainshaft (2).

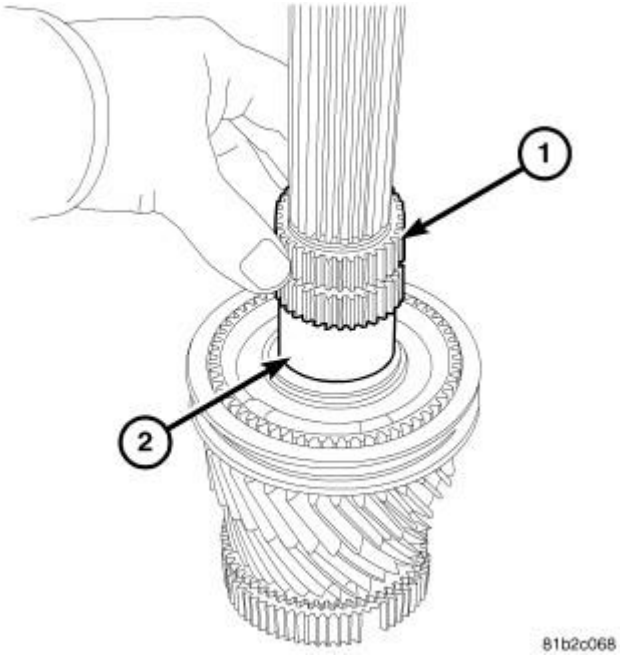

Fig. 64: 1ST GEAR BEARING
Courtesy of CHRYSLER LLC

4. Remove first gear bearing (1) from mainshaft (2).

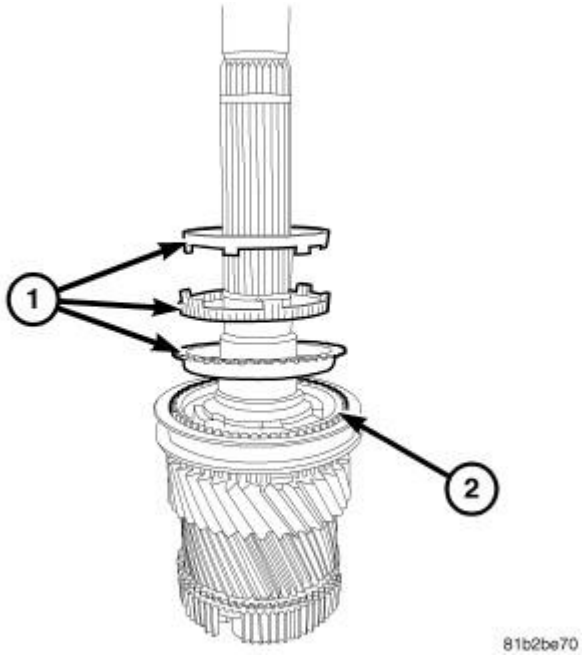

Fig. 65: 1ST GEAR SYNCHRO
Courtesy of CHRYSLER LLC

5. Remove first gear synchronizer rings (1) from 1-2 synchronizer hub (2).

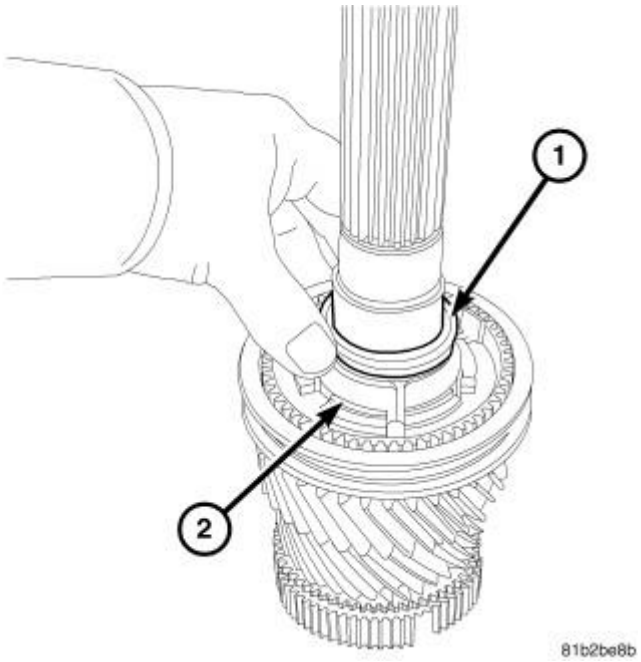

Fig. 66: 1ST SPLIT RING RETAINER
Courtesy of CHRYSLER LLC

6. Remove 1-2 synchronizer hub split ring retainer (1) from split rings (2).

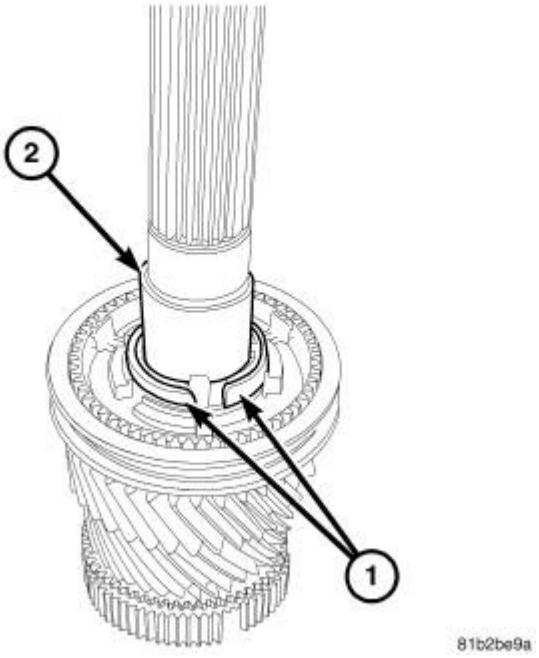

Fig. 67: 1ST SPLIT RINGS
Courtesy of CHRYSLER LLC

7. Remove 1-2 synchronizer hub split rings (1) from mainshaft (2).

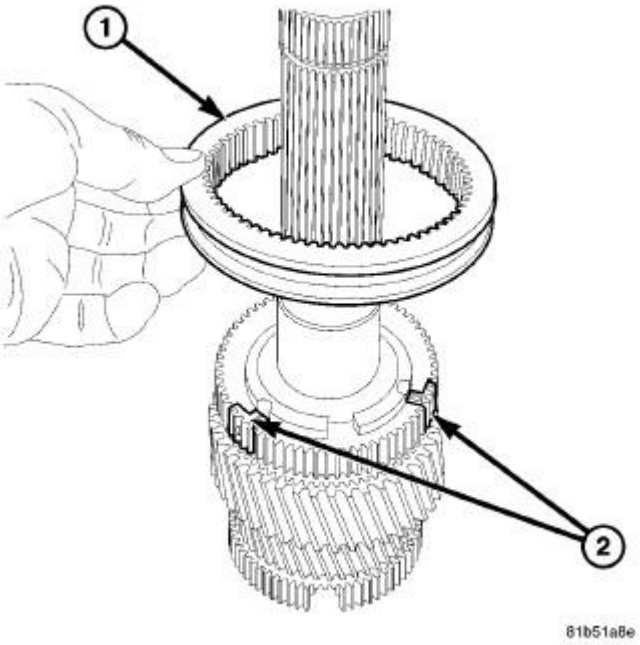

Fig. 68: 1-2 SYNCHRO SLEEVE
Courtesy of CHRYSLER LLC

8. Remove 1-2 synchronizer hub sleeve (1) and detents (2).

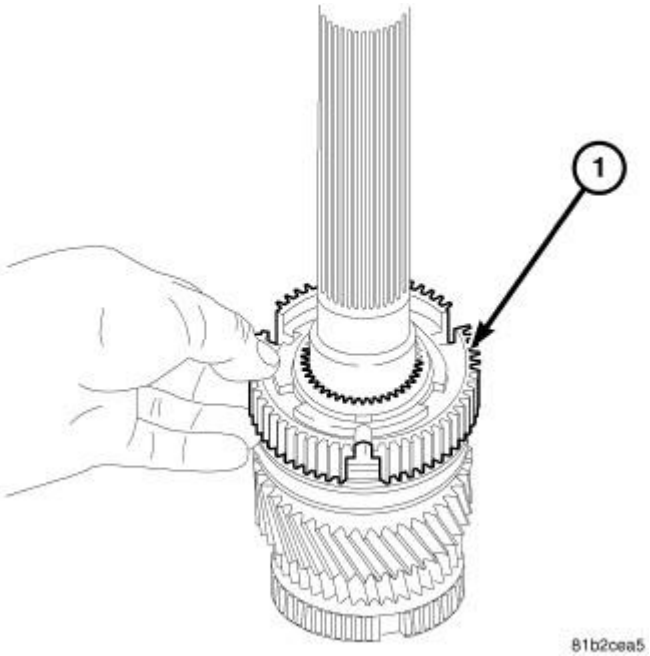

Fig. 69: 1-2 SYNCHRO HUB
Courtesy of CHRYSLER LLC

9. Remove 1-2 synchronizer hub (1) from mainshaft.

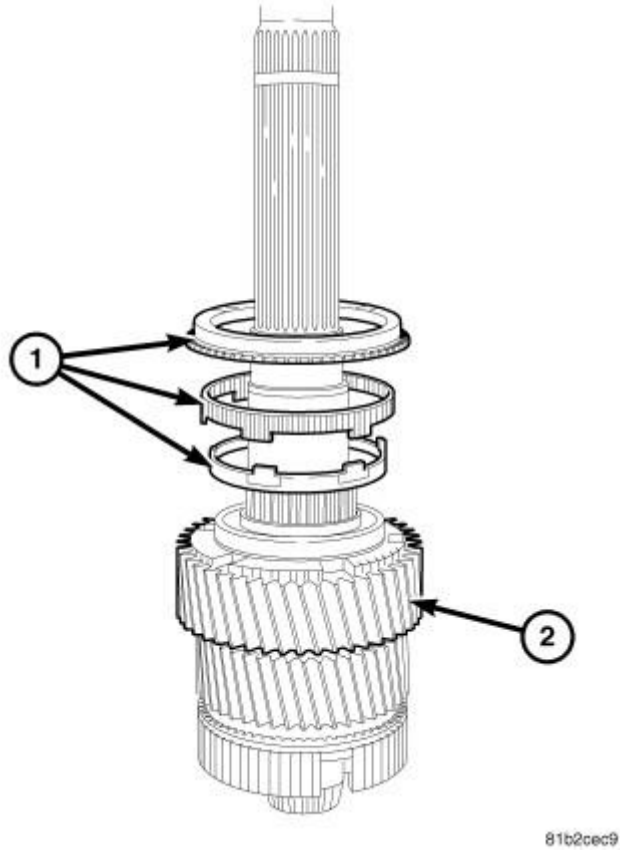

Fig. 70: 2ND GEAR SYNCHRO RINGS
Courtesy of CHRYSLER LLC

10. Remove second gear synchronizer rings (1) from second gear (2).

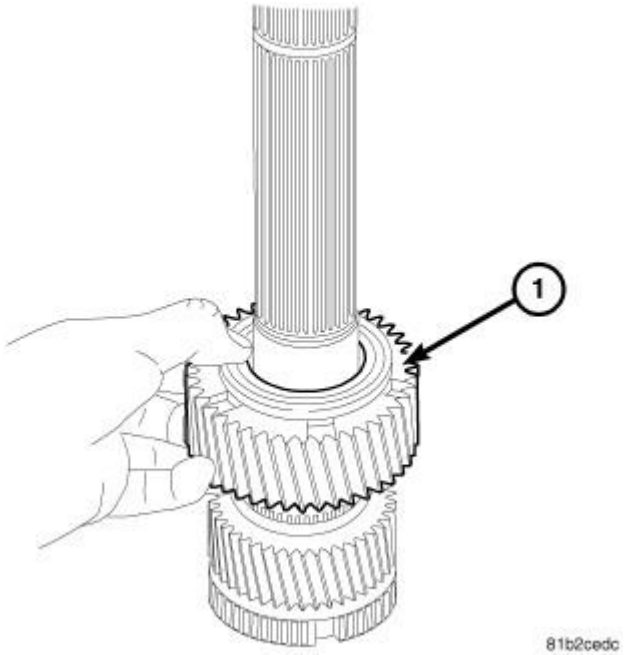

Fig. 71: 2ND GEAR
Courtesy of CHRYSLER LLC

11. Remove second gear (1) from mainshaft.

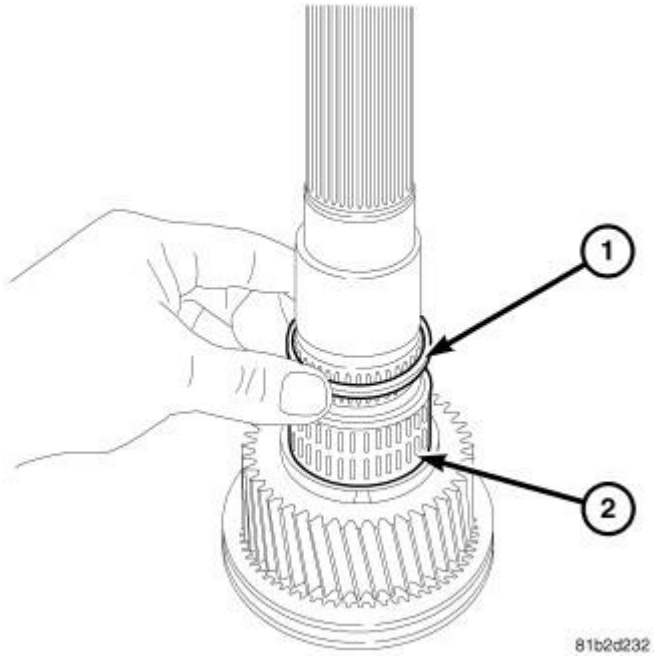

Fig. 72: 2ND BEARING SPACER
Courtesy of CHRYSLER LLC

12. Remove second gear bearing spacer (1) from mainshaft (2).

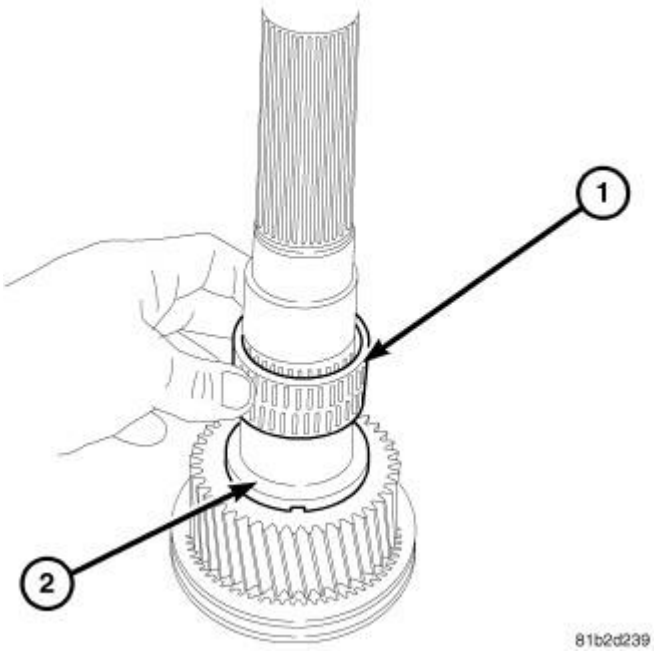

Fig. 73: 2ND GEAR BEARING
Courtesy of CHRYSLER LLC

13. Remove second gear bearing (1) from mainshaft (2).

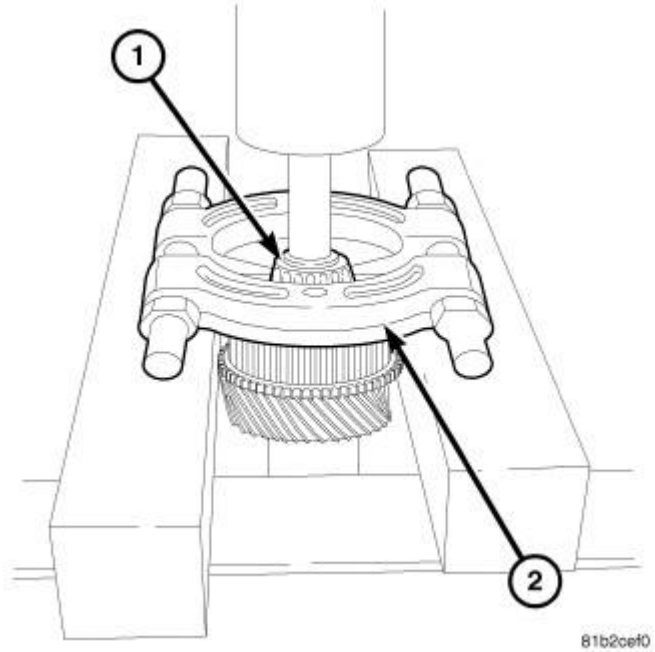

Fig. 74: MAINSHAFT ADAPTER BEARING
Courtesy of CHRYSLER LLC

14. Remove mainshaft transmission adapter bearing (1) with bearing Splitter P-334 (2) and a press.

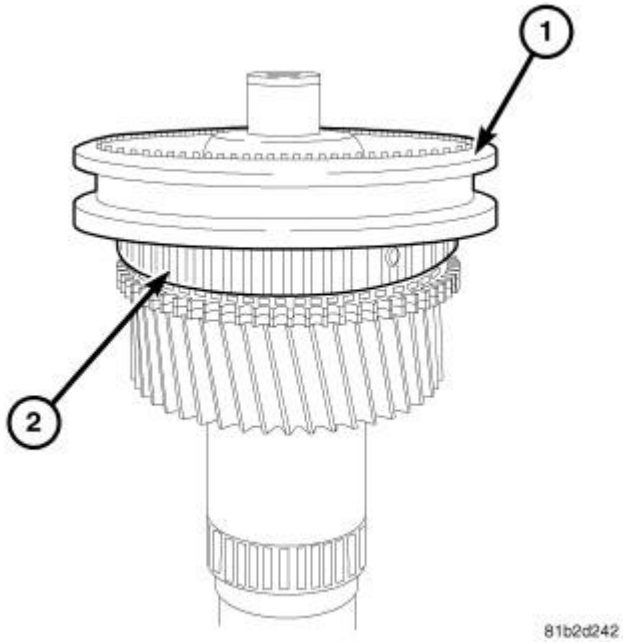

Fig. 75: 3-4 SYNCHRO SLEEVE
Courtesy of CHRYSLER LLC

15. Remove 3-4 synchronizer sleeve (1) from 3-4 synchronizer hub (2).

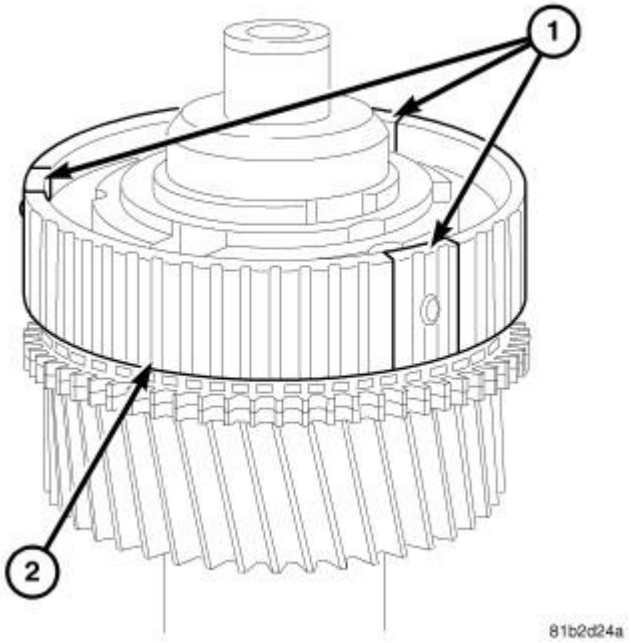

Fig. 76: 3-4 HUB DETENTS
Courtesy of CHRYSLER LLC

16. Remove 3-4 synchronizer detents (1) from 3-4 synchronizer hub (2).

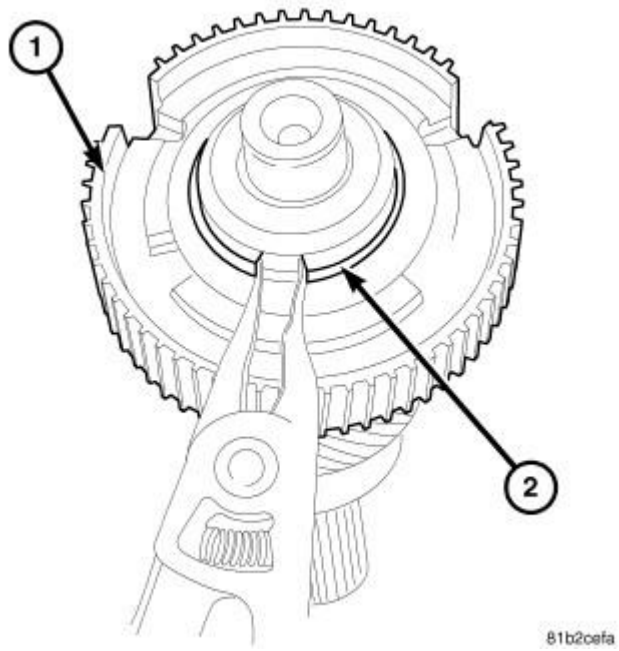

Fig. 77: 3-4 HUB SNAP RING
Courtesy of CHRYSLER LLC

17. Remove 3-4 synchronizer hub (1) snap ring (2) from mainshaft.

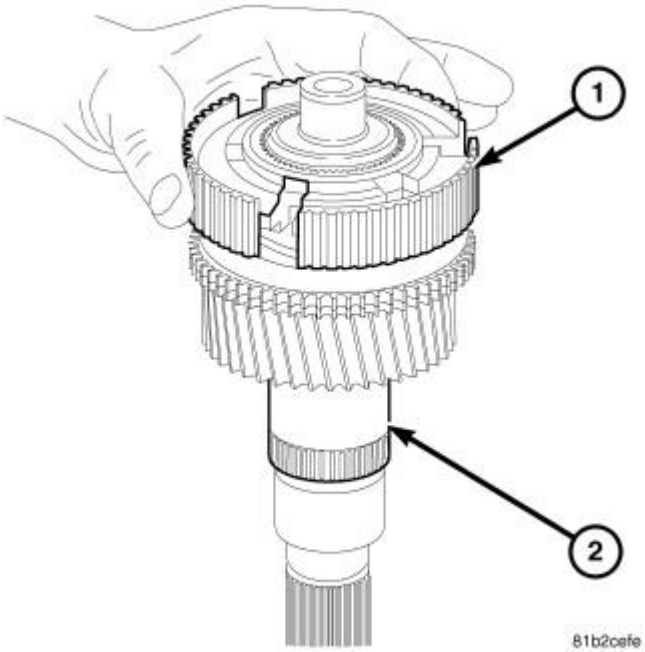

Fig. 78: 3-4 SYNCHRO HUB
Courtesy of CHRYSLER LLC

18. Remove 3-4 synchronizer hub (1) from mainshaft (2).

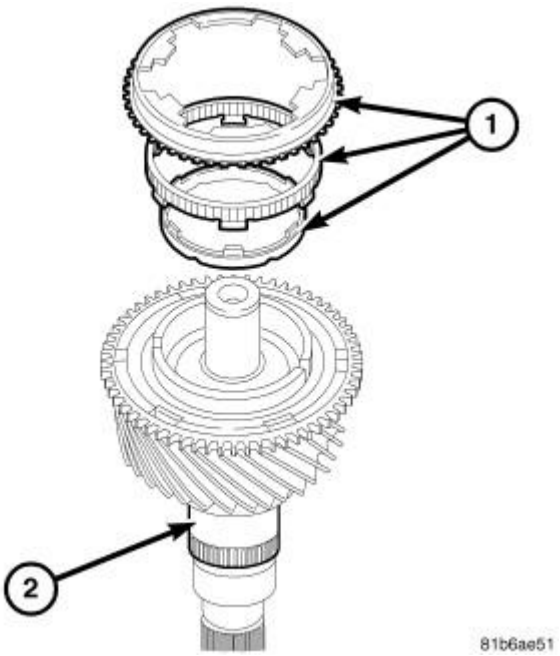

Fig. 79: 3RD GEAR SYNCHRO RINGS
Courtesy of CHRYSLER LLC

19. Remove third gear synchronizer rings (1) from third gear (2).

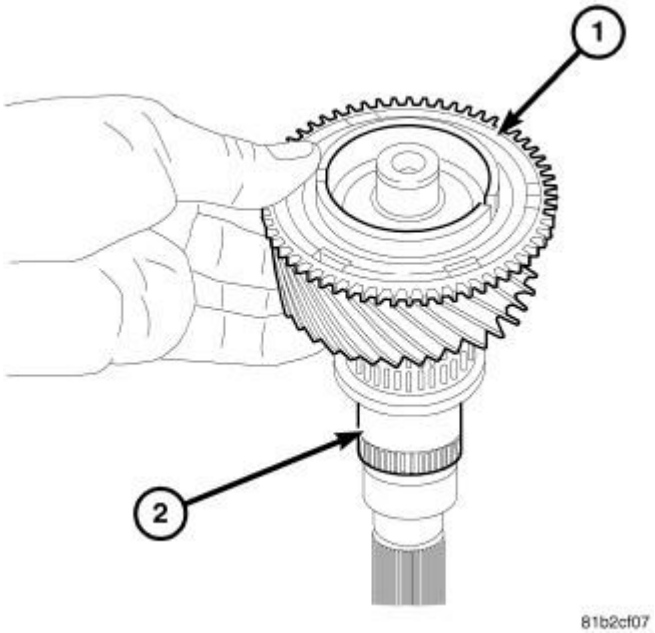

Fig. 80: 3RD GEAR
Courtesy of CHRYSLER LLC

20. Remove third gear (1) from mainshaft (2).

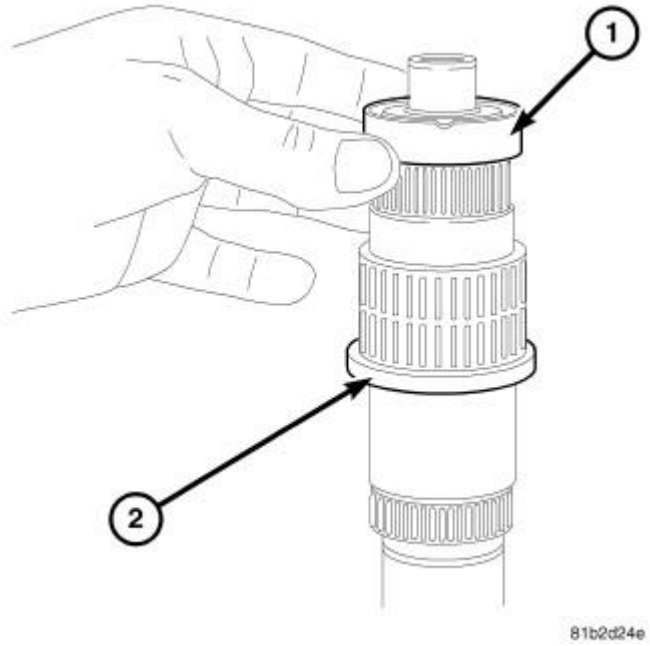

Fig. 81: 3RD GEAR BEARING SPACER
Courtesy of CHRYSLER LLC

21. Remove third gear bearing spacer (1) from mainshaft (2).

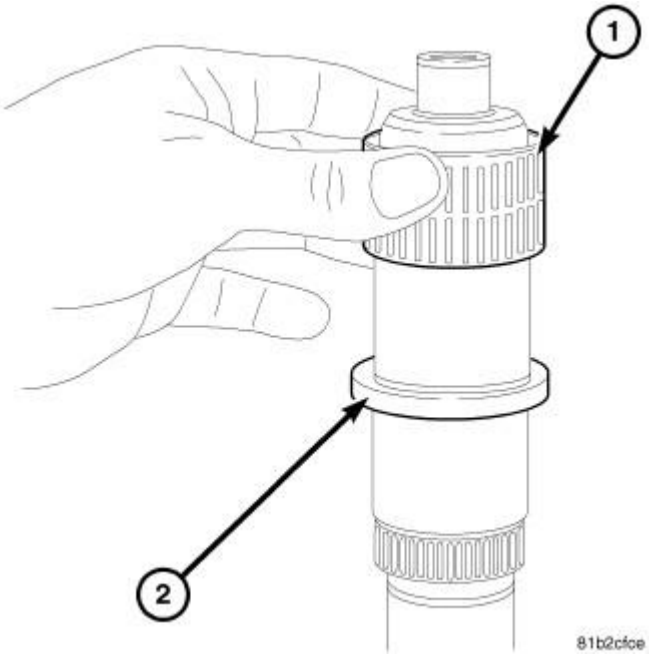

Fig. 82: 3RD GEAR BEARING
Courtesy of CHRYSLER LLC

22. Remove third gear bearing (1) from mainshaft (2).

COUNTERSHAFT

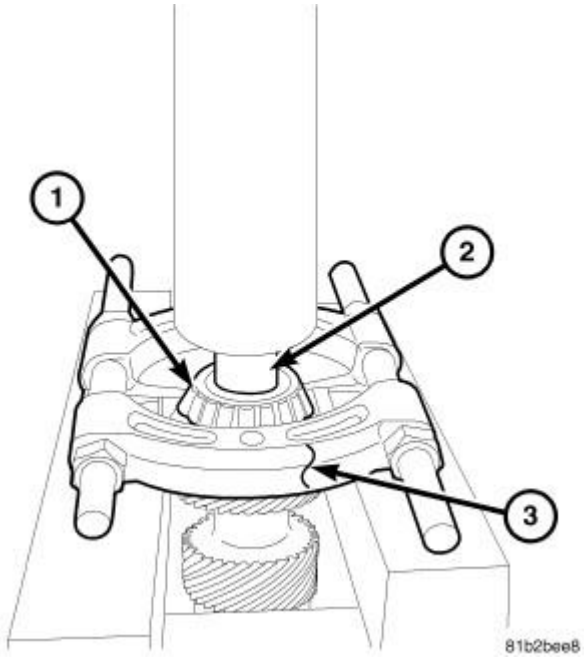

Fig. 83: COUNTERSHAFT ADAPTER BEARING
Courtesy of CHRYSLER LLC

1. Remove countershaft adapter bearings (1) with Adapter 9377 (2) Splitter 1130 (3) and a press.

INPUT SHAFT

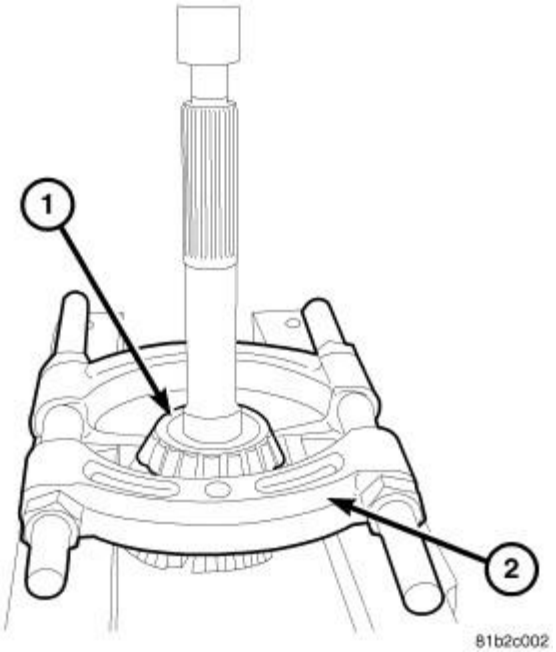

Fig. 84: INPUT SHAFT BEARING
Courtesy of CHRYSLER LLC

1. Remove input shaft bearing (1) with Splitter 1130 (2) and a press.

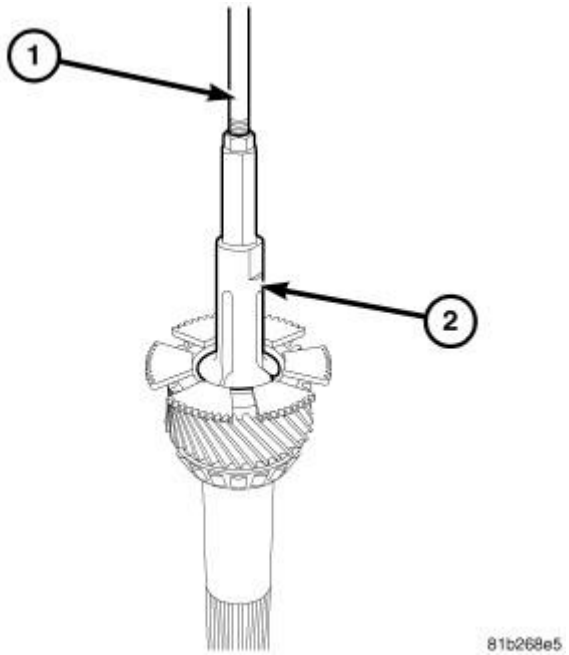

Fig. 85: INPUT SHAFT BREARING CUP
Courtesy of CHRYSLER LLC

2. Remove input shaft bearing cup with Slide Hammer C-3752 (1) and Remover 9381 (1).

EXTENSION HOUSING

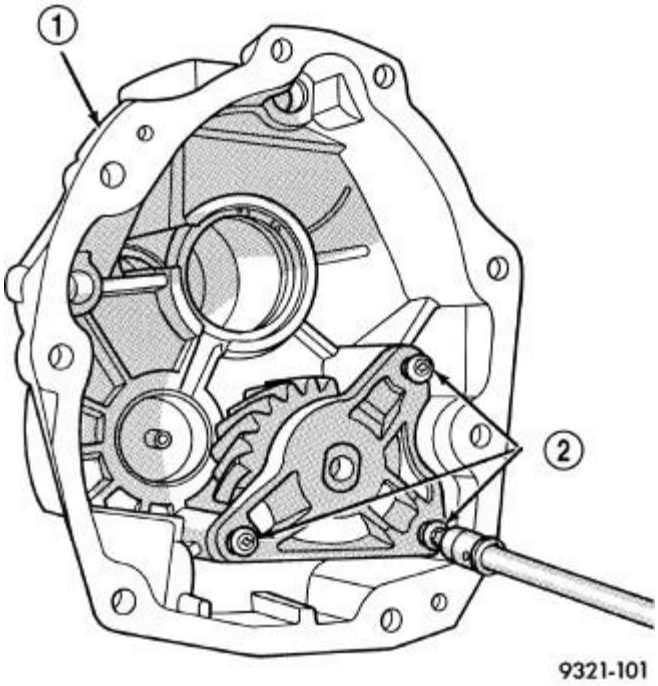

Fig. 86: IDLER GEAR BRACKET BOLTS
Courtesy of CHRYSLER LLC

1. Remove extension housing (1) idler gear bracket bolts (2) and bracket.

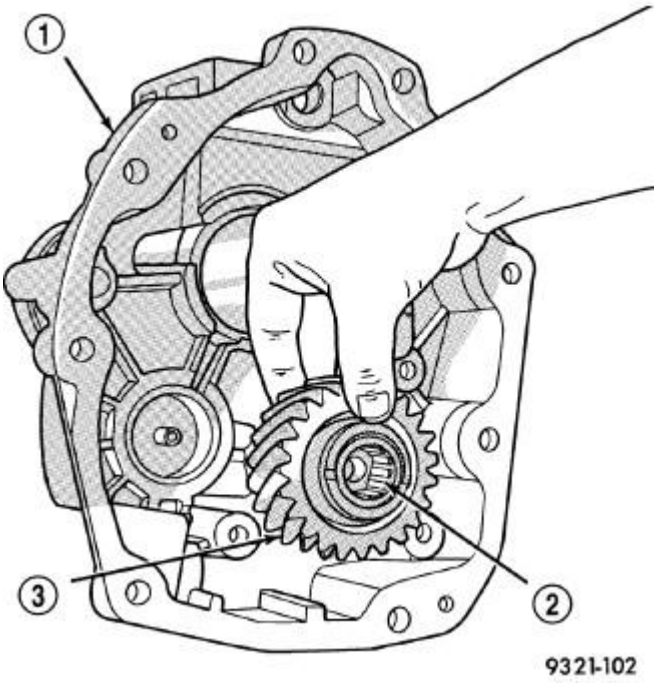

Fig. 87: Thrust Washer, Gear And Bearing
Courtesy of CHRYSLER LLC

2. Remove extension housing (1) idler gear bearing (2) and idler gear (3).
3. Remove idler gear shaft from extension housing.

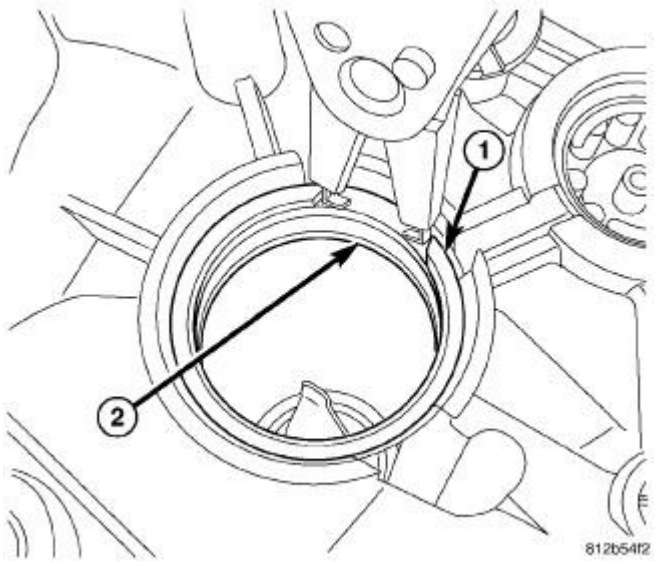

Fig. 88: MAINSHAFT RACE SNAP RING
Courtesy of CHRYSLER LLC

4. Remove mainshaft bearing cup (1) snap ring (2).

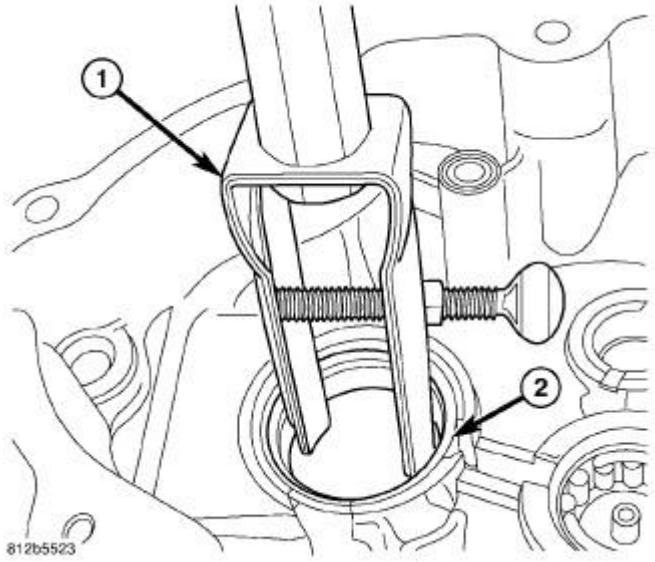

Fig. 89: MAINSHAFT RACE
Courtesy of CHRYSLER LLC

5. Remove mainshaft bearing cup (2) with Remove 7794-A (1) and Slide Hammer C-637.

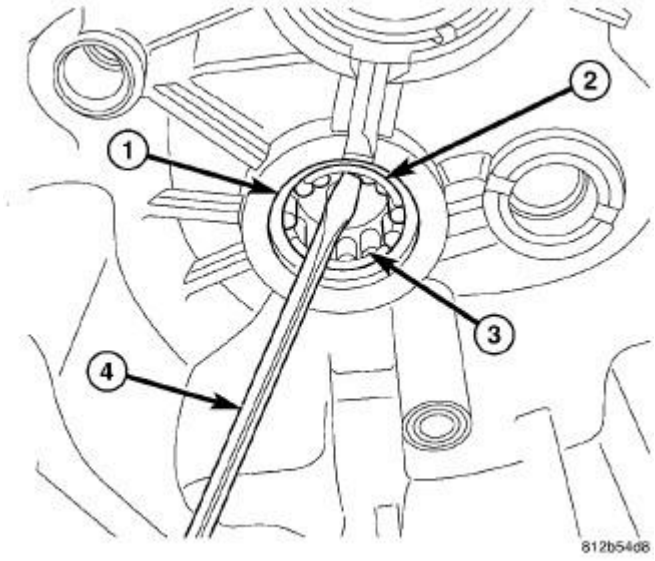

Fig. 90: BEARING CAGE
Courtesy of CHRYSLER LLC

6. Remove countershaft bearing snap ring (1).
7. Remove countershaft bearing plastic bearing cage (2) and remove roller bearings (3).

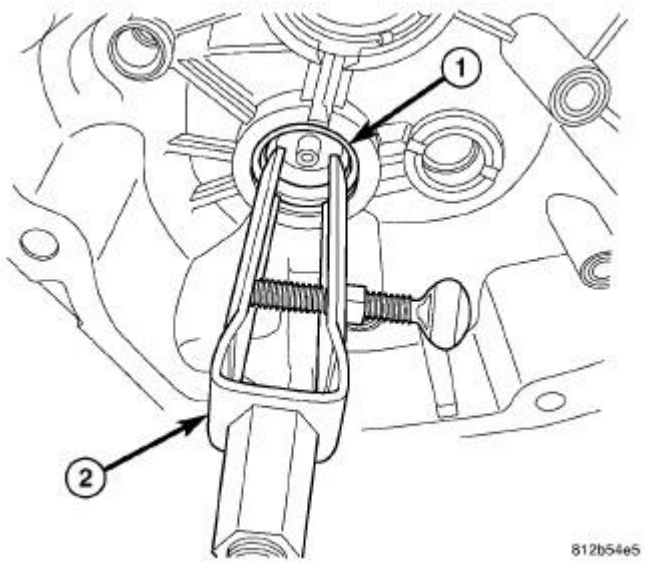

Fig. 91: COUNTERSHAFT BEARING RACE
Courtesy of CHRYSLER LLC

8. Remove countershaft bearing cup (1) with Remover 7794-A (2) and Slide Hammer C-637.

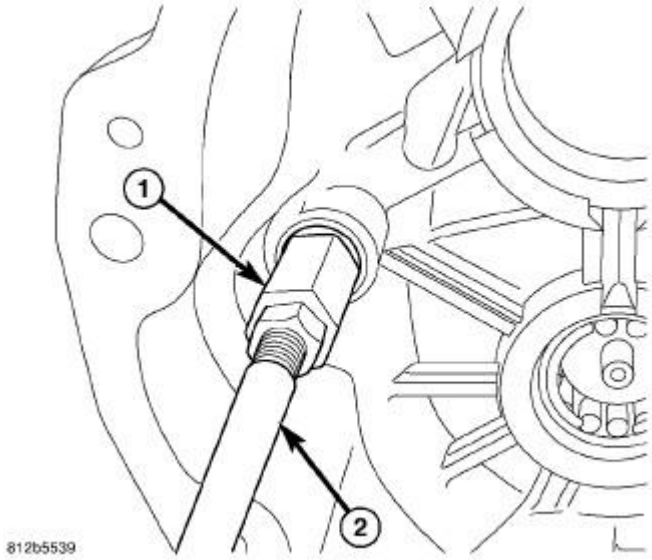

Fig. 92: SHIFT RAIL BUSHING
Courtesy of CHRYSLER LLC

9. Remove shift rail bushings with Remover 6786 (1) and Slide Hammer C-3752 (2).

TRANSMISSION CASE

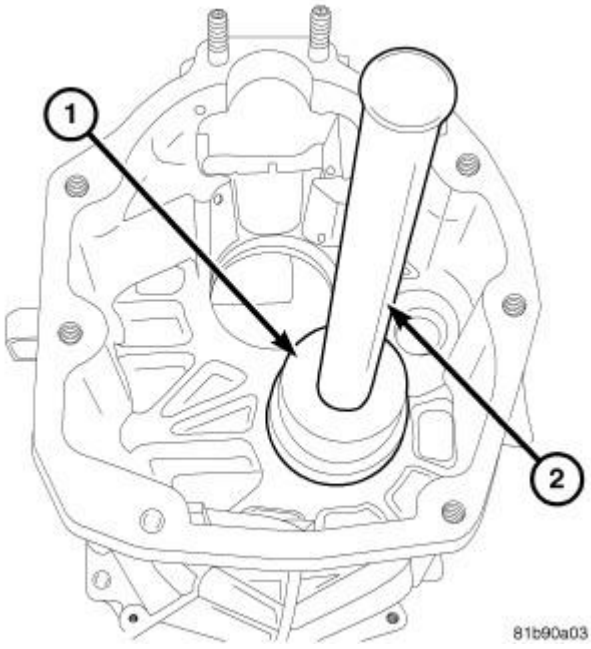

Fig. 93: COUNTERSHAFT BEARING CUP
Courtesy of CHRYSLER LLC

1. Remove countershaft bearing cups with Remover 9369 (1) and Handle C-4171 (2).

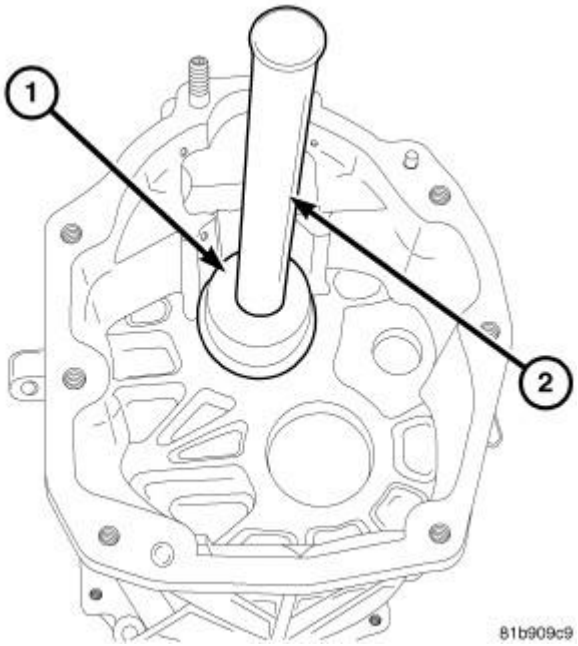

Fig. 94: MAINSHAFT BEARING CUP
Courtesy of CHRYSLER LLC

2. Remove mainshaft bearing cups with Remover 9369 (2) and Handle C-4171 (1).

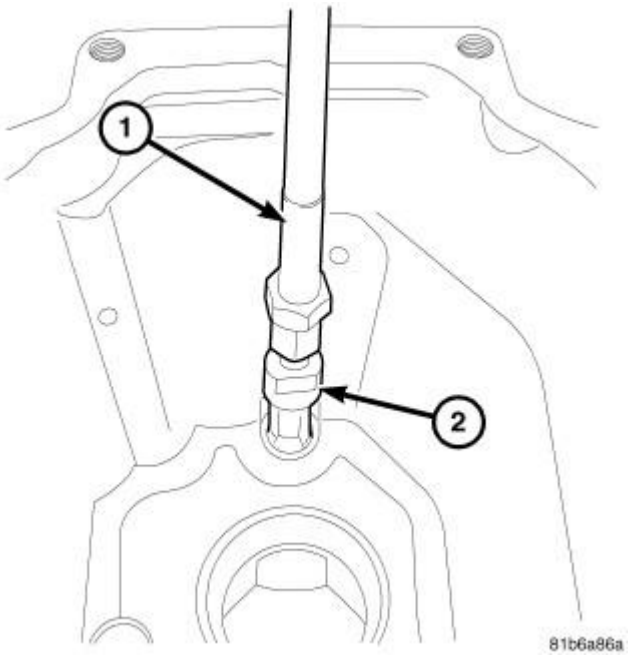

Fig. 95: CASE RAIL BEARING REMOVER
Courtesy of CHRYSLER LLC

3. Remove shift rail bearing with Slide Hammer C-637 (1) and Remover 9609 (2).

TRANSMISSION ADAPTER

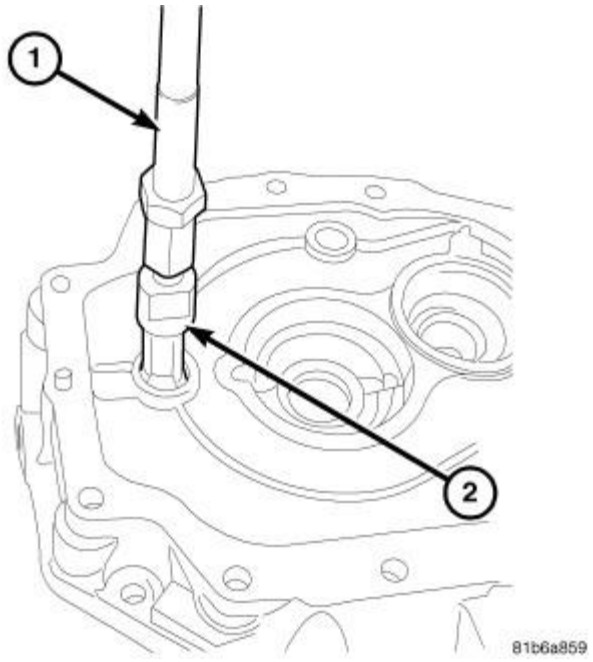

Fig. 96: ADAPTER BEARING REMOVER
Courtesy of CHRYSLER LLC

1. Remove shift rail bearing with Slide Hammer C-637 (1) and Remover 9609 (2).

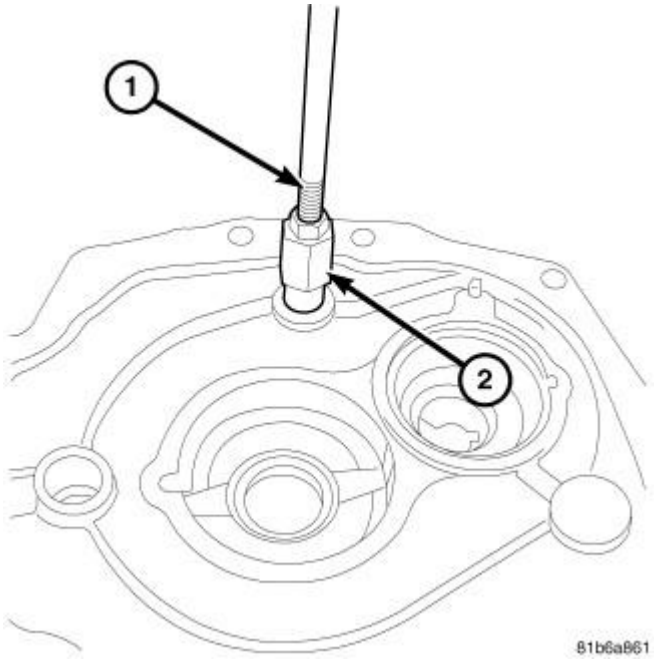

Fig. 97: ADAPTER BUSHING REMOVER
Courtesy of CHRYSLER LLC

2. Remove shift rail bushing with Slide Hammer C-3752 (1) and Remover 6786 (2).

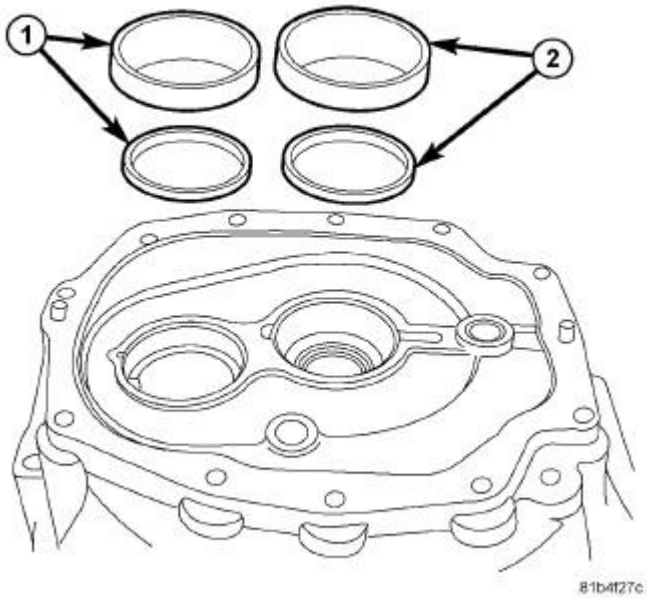

Fig. 98: SELECT SHIMS
Courtesy of CHRYSLER LLC

3. Remove countershaft bearing cup and select shim (1). Remove mainshaft bearing cup and

select shim (2).

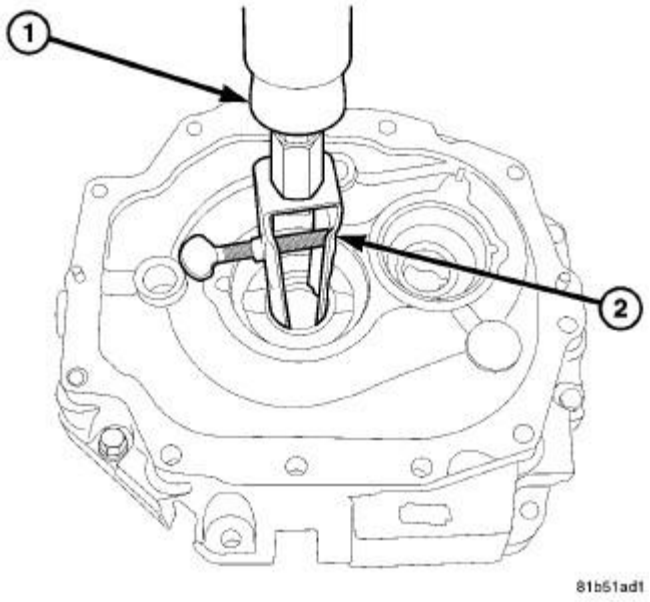

Fig. 99: INPUT SEAL PULLER
Courtesy of CHRYSLER LLC

4. Remove input shaft seal with Slide Hammer C-637 (1) and Puller 7794-A (2).

CLEANING

CLEANING

Clean the gears, bearings shafts, extension/adapter housing and gear case with solvent. Dry all parts except the bearings with compressed air. Allow the bearings to either air dry or wipe them dry with clean shop towels.

INSPECTION

INSPECTION

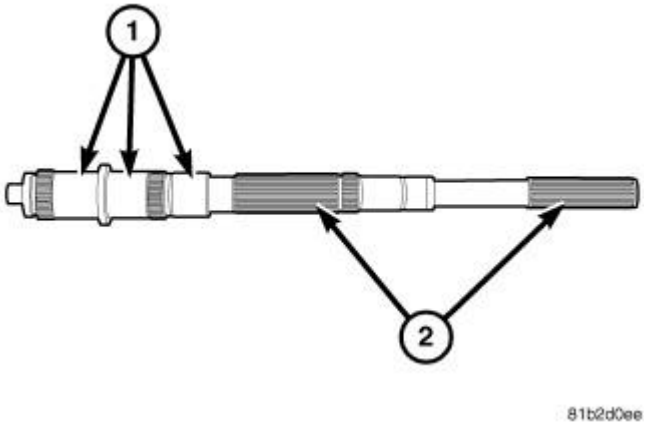

Fig. 100: MIANSHAFT
Courtesy of CHRYSLER LLC

NOTE: Minor corrosion, nicks, or pitting can be smoothed with 400 grit emery and polished out with crocus cloth.

Mainshaft: Inspect bearing surfaces (1) for wear or flat-spots. Inspect splines (2) and snap ring grooves for wear. Inspect output seal surface for wear.

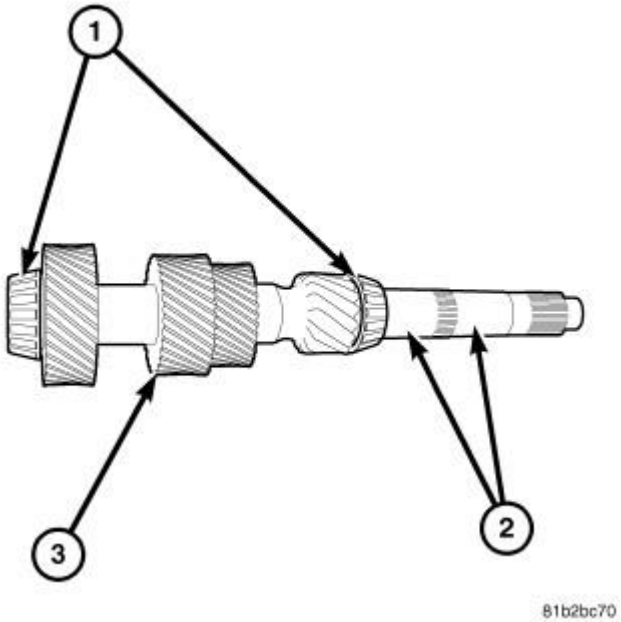

Fig. 101: COUNTERSHAFT
Courtesy of CHRYSLER LLC

Countershaft: Inspect roller bearings (1) for wear, peeling, pitting or flat-spots. Inspect bearing surfaces (2) for wear or flat-spots. Inspect gear teeth (3) for worn, chips or cracks. Inspect splines and snap ring grooves for wear.

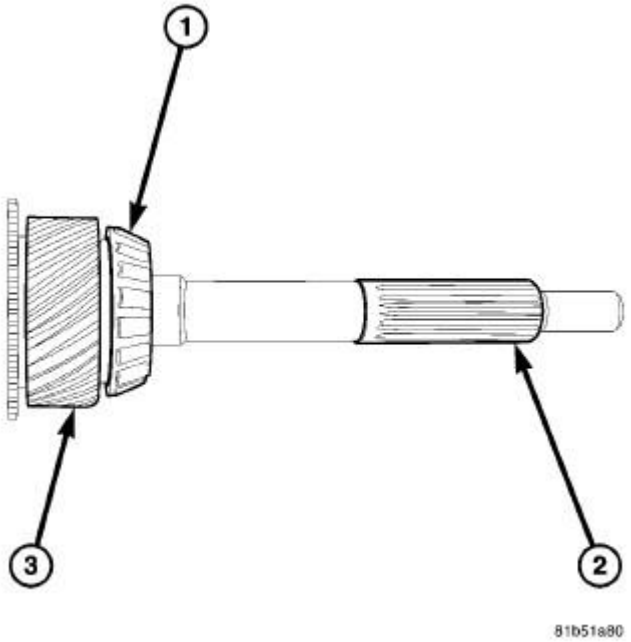

Fig. 102: INPUT SHAFT
Courtesy of CHRYSLER LLC

Input Shaft: Inspect input shaft bearing (1) for wear, peeling, pitting or flat-spots. Inspect input shaft splines (2) for wear. Inspect forth gear (3) for worn, chipped, or cracked teeth. Inspect input seal surface for wear.

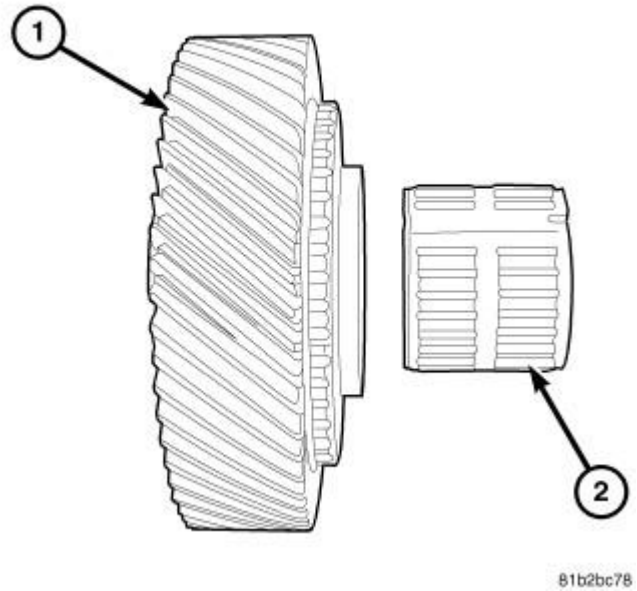

Fig. 103: GEAR AND BEARING
Courtesy of CHRYSLER LLC

Gears: Inspect gears (1) for worn, chips or cracked teeth and bearing surfaces for wear, peeling, pitting or flat-spots. Inspect gear bearings (2) for wear, peeling, pitting, flat-spots or damaged bearing cage.

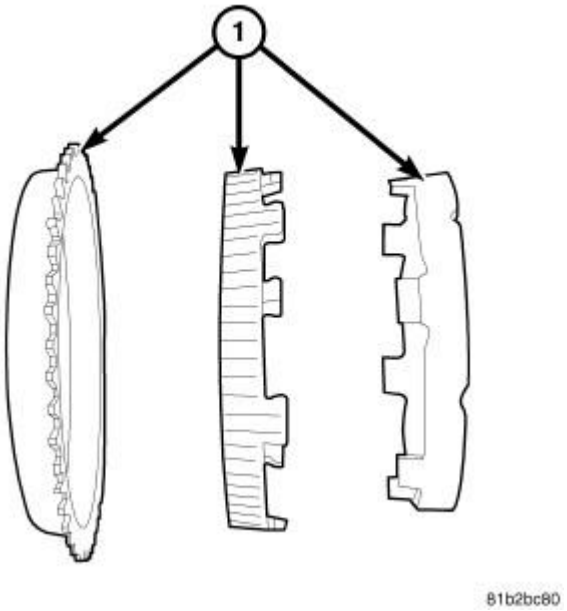

Fig. 104: SYNCRONIZER
Courtesy of CHRYSLER LLC

Synchronizer components: Inspect synchronizer rings (1) for worn, chips, or cracked teeth and burned or flaking friction material. Place blocker rings on gears. While applying pressure and rotating the blocker ring measure the clearance between the blocker ring and gear. If clearance is greater than 0.75 mm (0.030 in.) replace blocker ring.**Synchronizer rings (1) are serviced as an assembly.**

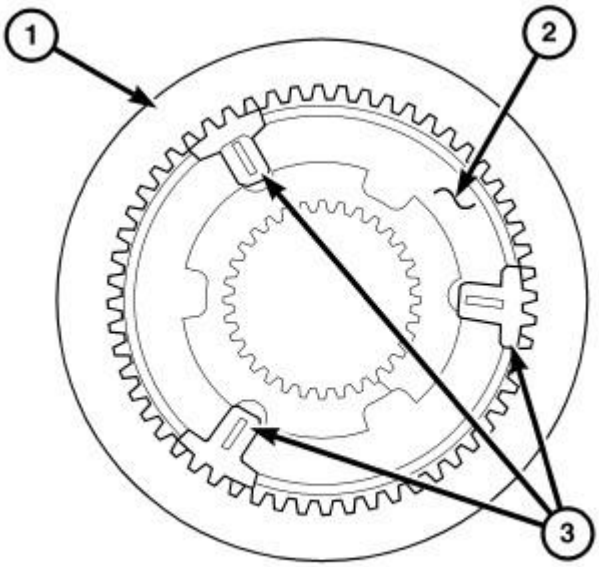

Fig. 105: SYNCHRONIZER SLEEVE
Courtesy of CHRYSLER LLC

Inspect synchronizer sleeve (1) and hub (2) for worn teeth. Inspect synchronizer detents (3) for broken springs, missing balls or cracked/damaged housings.

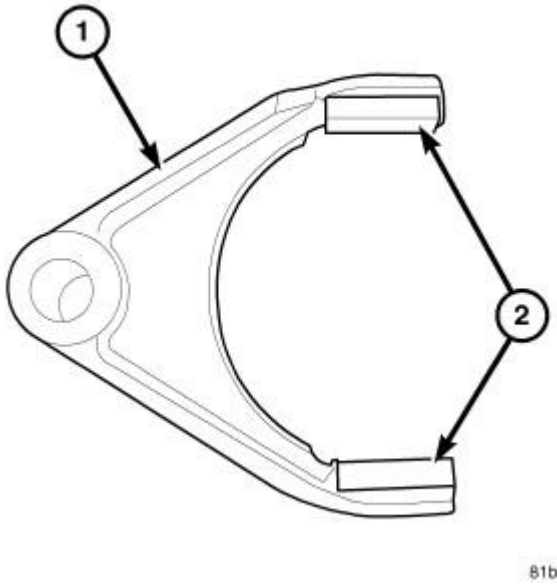

Fig. 106: SHIFT FORK
Courtesy of CHRYSLER LLC

Shift Forks/Shift Rails: Inspect shift forks (1) for distortion. Inspect fork shoes (2) for wear or cracks. Fit shoes in synchronizer sleeve to ensure parts fit and work smoothly. Inspect shift rails for wear.

Inspect shift rail bushings and bearings for wear.

ASSEMBLY

ASSEMBLY

TRANSMISSION ADAPTER

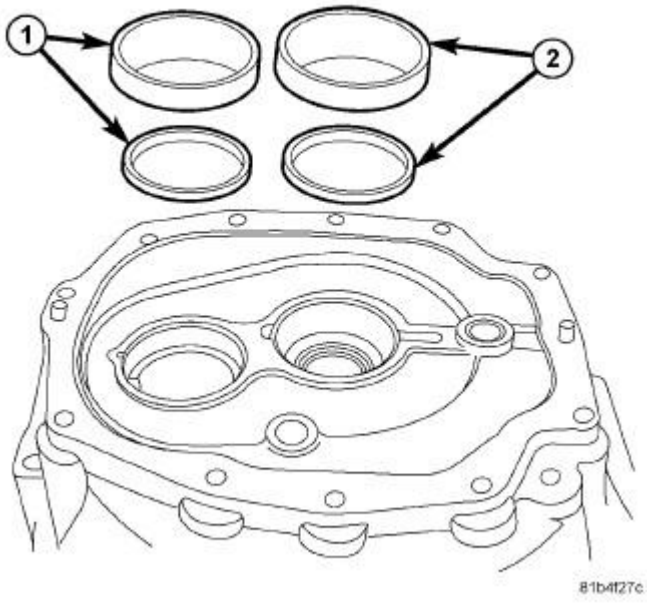

Fig. 107: SELECT SHIMS
Courtesy of CHRYSLER LLC

1. Install countershaft select shims and bearing cup (1) into adapter plate. Install mainshaft select shims and bearing cup (2) into adapter plate.

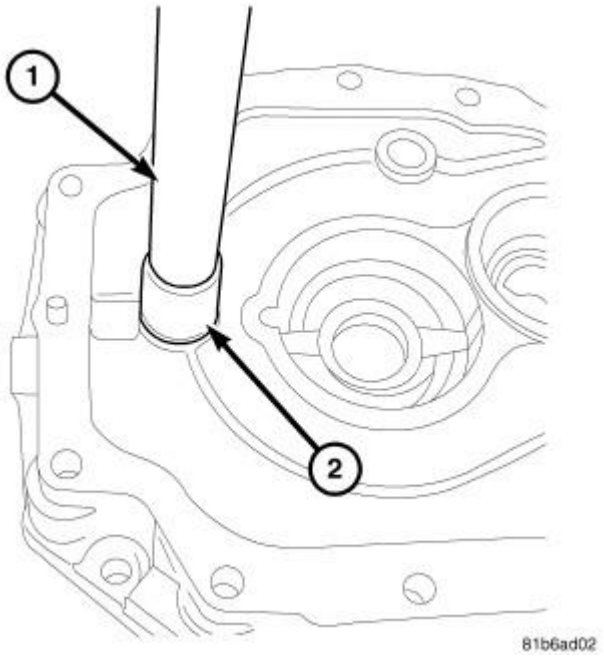

Fig. 108: ADAPTER BEARING INSTALLER
Courtesy of CHRYSLER LLC

2. Install shift rail bearing with Handle C-4171 (1) and Installer 10028 (2).

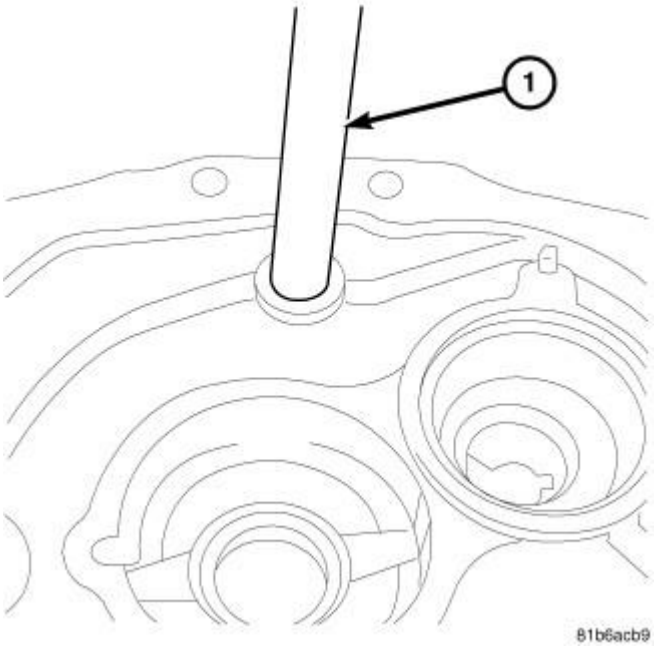

Fig. 109: ADAPTER BUSHING INSTALLER
Courtesy of CHRYSLER LLC

3. Install shift rail bushing with Installer 8475 (1).

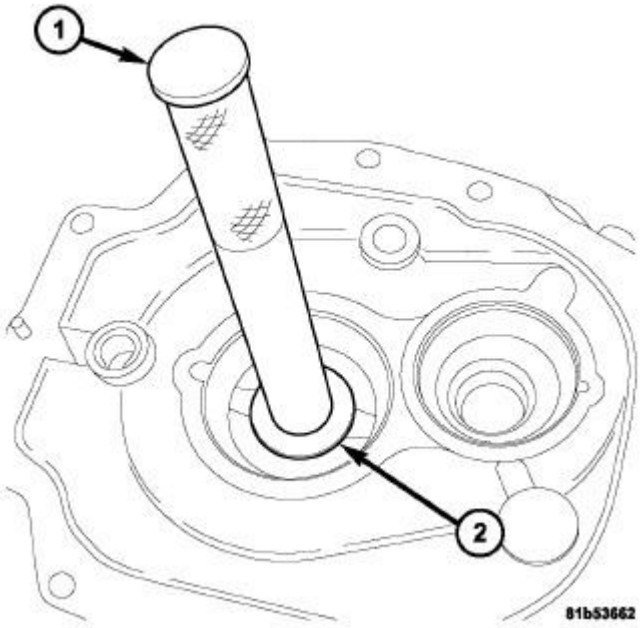

Fig. 110: INPUT SHAFT SEAL
Courtesy of CHRYSLER LLC

4. Install input shaft seal with Handle C-4171 (1) and Installer 9366 (2).

TRANSMISSION CASE

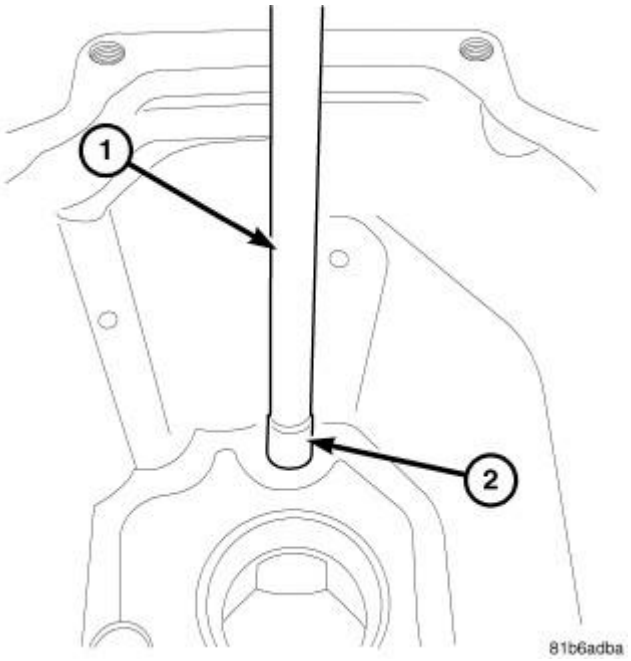

Fig. 111: CASE RAIL BEARING INSTALLER
Courtesy of CHRYSLER LLC

1. Install shift rail bearing with Handle C-4171 (1) and Installer 10028 (2).

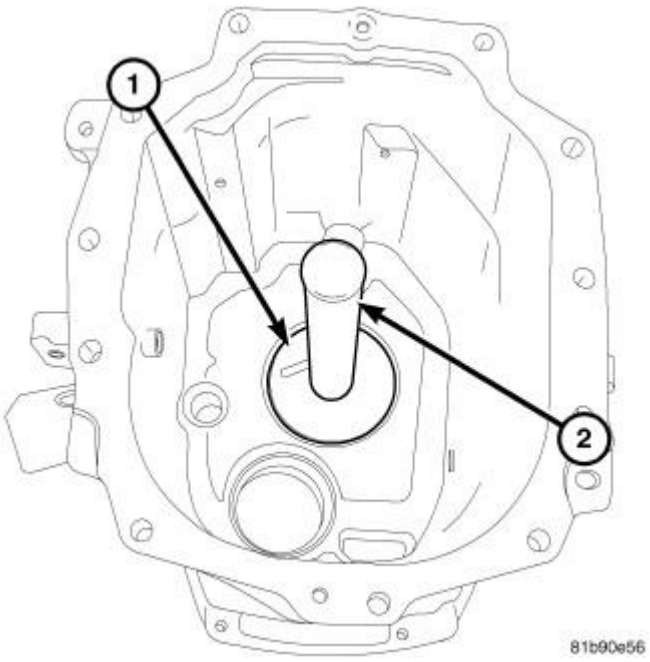

Fig. 112: MAINSHAFT BEARING CUP
Courtesy of CHRYSLER LLC

2. Install mainshaft bearing cup with Handle C-4171 (1) and Installer 9373 (2).

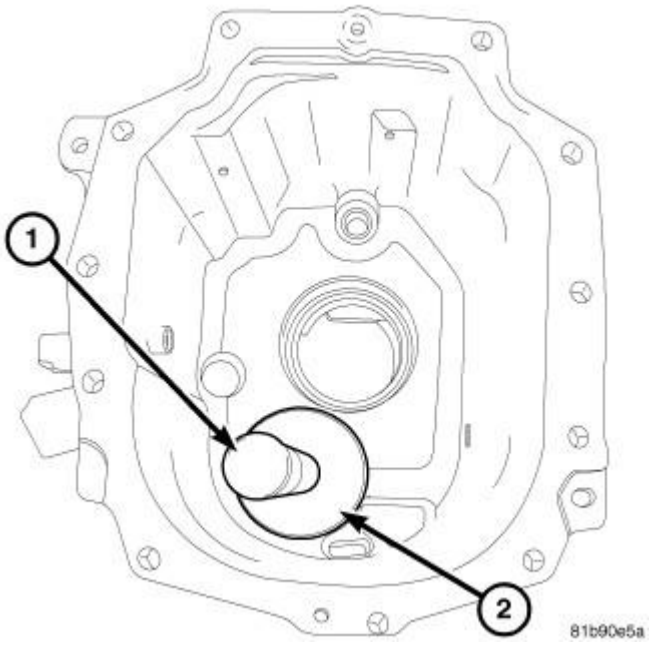

Fig. 113: COUNTERSHAFT BEARING CUP
Courtesy of CHRYSLER LLC

3. Install countershaft bearing cup with Handle C-4171 (1) and Installer 9373 (2).

EXTENSION HOUSING

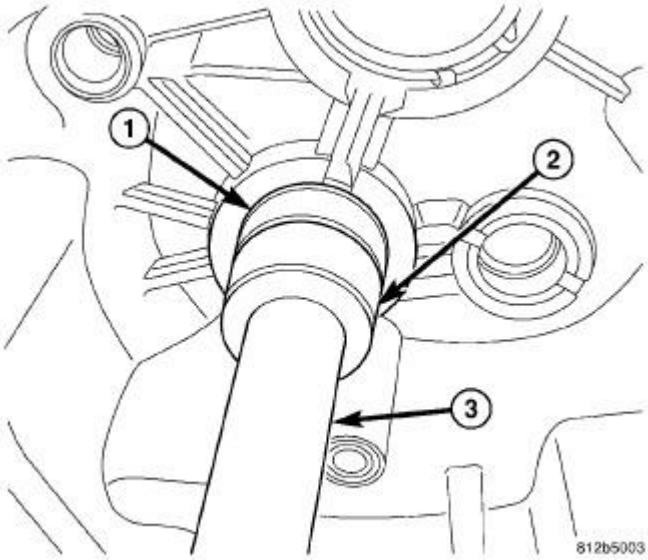

Fig. 114: EXTENSION HOUSING BEARING
Courtesy of CHRYSLER LLC

1. Install countershaft bearing (1) with Installer 9394 (2) and Handle C-4171 (3) then install snap ring.

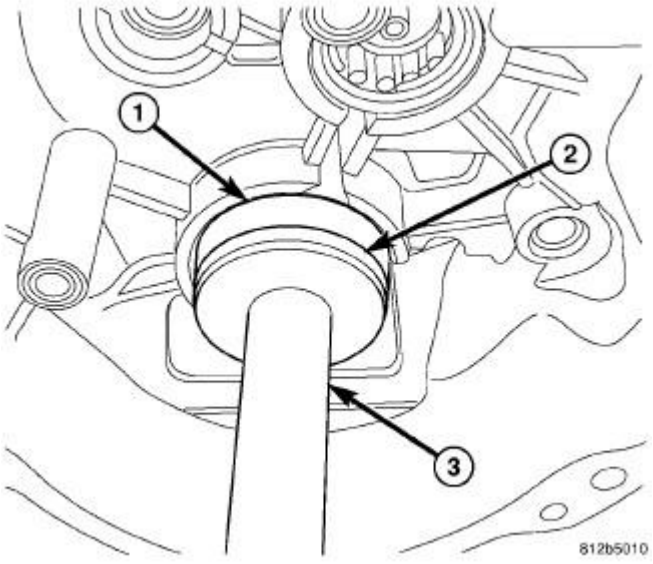

Fig. 115: MAINSHAFT BEARING RACE
Courtesy of CHRYSLER LLC

2. Install mainshaft bearing cup (1) with Installer 9392 (2) and Handle C-4171 (3).

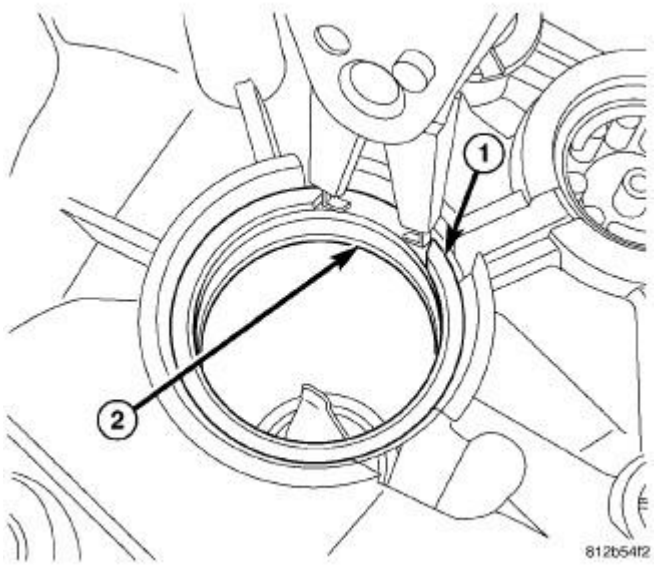

Fig. 116: MAINSHAFT RACE SNAP RING
Courtesy of CHRYSLER LLC

3. Install mainshaft bearing cup (2) snap ring (1).

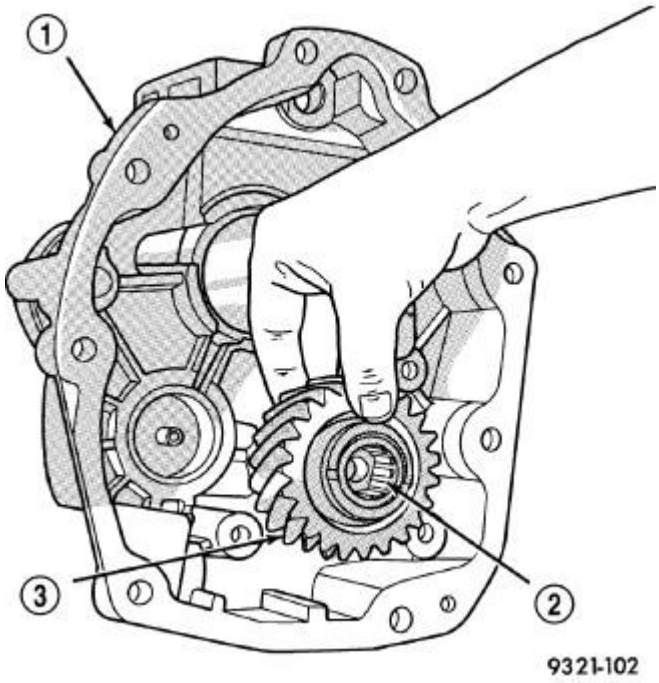

Fig. 117: Thrust Washer, Gear And Bearing
Courtesy of CHRYSLER LLC

4. Install reverse idler gear shaft in extension housing (1).
5. Install reverse idler gear bearing (2) and idler gear (3).

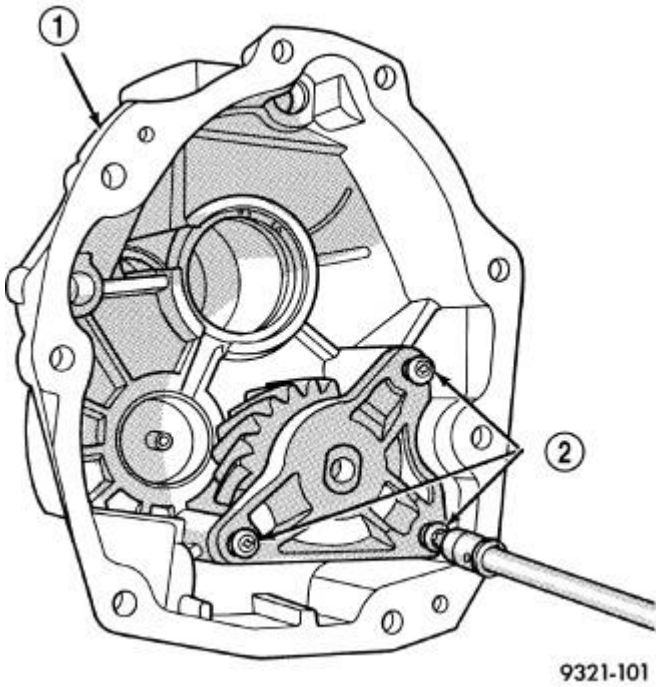

Fig. 118: Idler Gear Bracket Bolts
Courtesy of CHRYSLER LLC

6. Install idler gear bracket into the tail housing (1).
7. Apply Mopar® Lock AND Seal Adhesive or equivalent on idler gear bracket bolts (2). Install bolts (2) and tighten to 30 N.m (22 ft. lbs.).

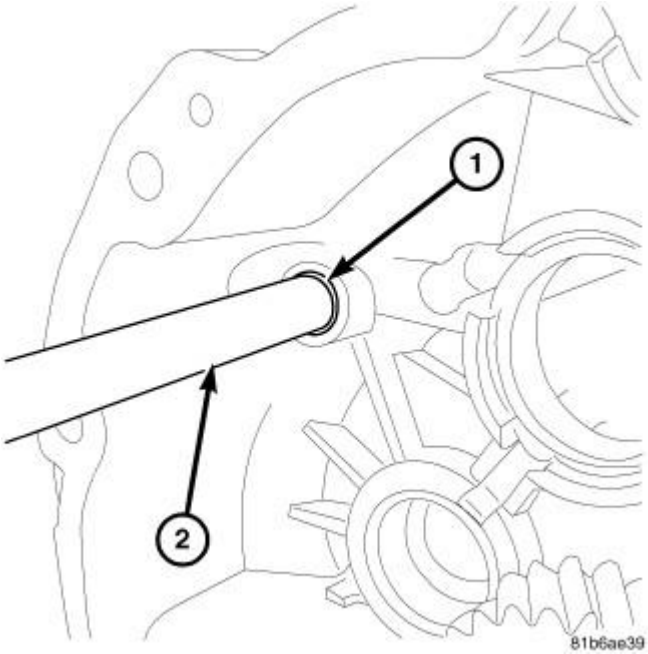

Fig. 119: RAIL BUSHING INSTALLER
Courtesy of CHRYSLER LLC

8. Install shift rail bushings (1) with Installer 8475 (2).

INPUT SHAFT

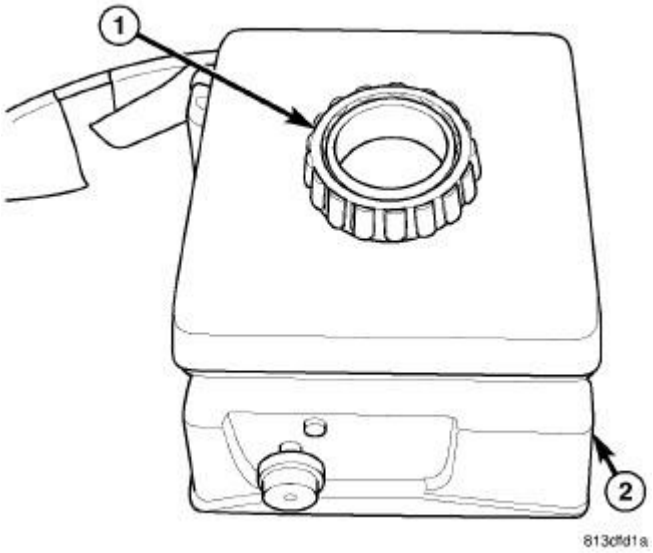

Fig. 120: BEARING HEATER
Courtesy of CHRYSLER LLC

WARNING: Use tongs or welding gloves when handling heated components. Failure to follow these instructions will result in personal injury.

CAUTION: Bearings (1) are installed using a Bearing Heater (2). Use only a bearing heater/hot plate and follow manufacture's instructions. Heat components to 100 - 149 Celsius (212° Min. - 300° Max Fahrenheit). Never use an open flame to heat components. Never leave components on heater for an extended amount of time. If component is discolored after heating, the component has been overheated and must not be used. Failure to follow these instructions will result in component damage.

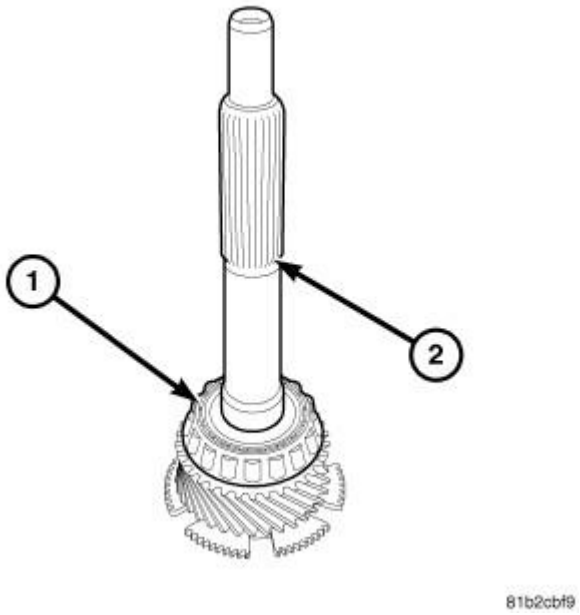

Fig. 121: INPUT SHAFT BEARING
Courtesy of CHRYSLER LLC

1. Heat input shaft bearing to 100 - 149 Celsius (212° Min. - 300° Max Fahrenheit) and install bearing (1) on input shaft (2) with tongs or welding gloves.

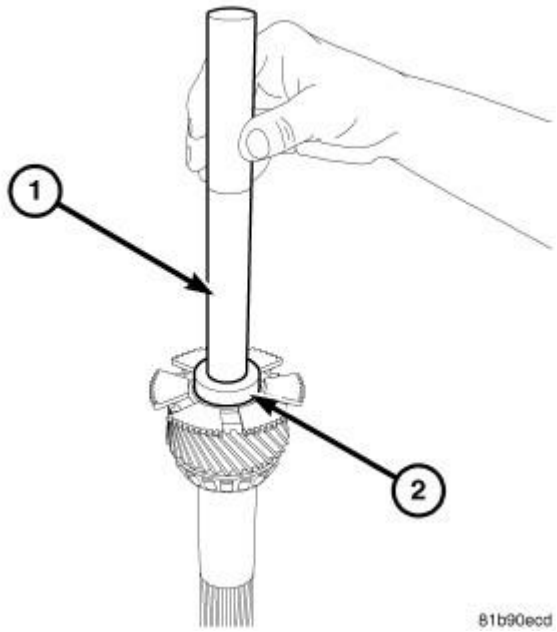

Fig. 122: INPUT SHAFT BEARING CUP
Courtesy of CHRYSLER LLC

2. Install input shaft bearing cup with Handle C-4171 (1) and Installer 9380 (2).

COUNTERSHAFT

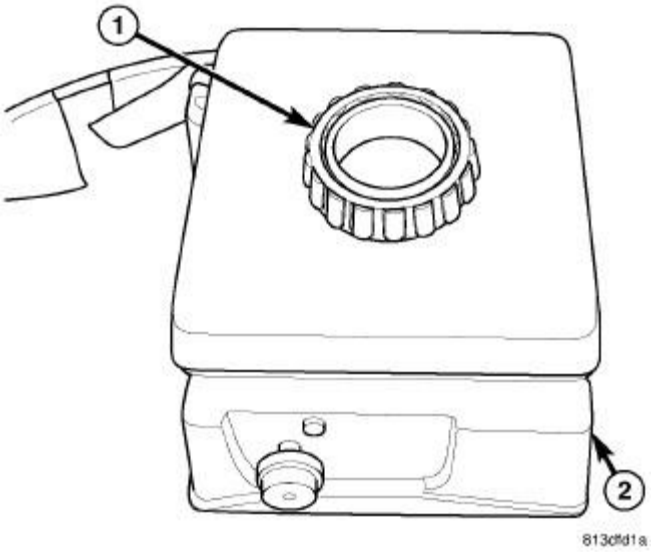

Fig. 123: BEARING HEATER
Courtesy of CHRYSLER LLC

WARNING: Use tongs or welding gloves when handling heated components. Failure to follow these instructions will result in personal injury.

CAUTION: Bearings (1) are installed using a Bearing Heater (2). Use only a bearing heater/hot plate and follow manufacture's instructions. Heat components to 100 - 149 Celsius (212° Min. - 300° Max Fahrenheit). Never use an open flame to heat components. Never leave components on heater for an extended amount of time. If component is discolored after heating, the component has been overheated and must not be used. Failure to follow these instructions will result in component damage.

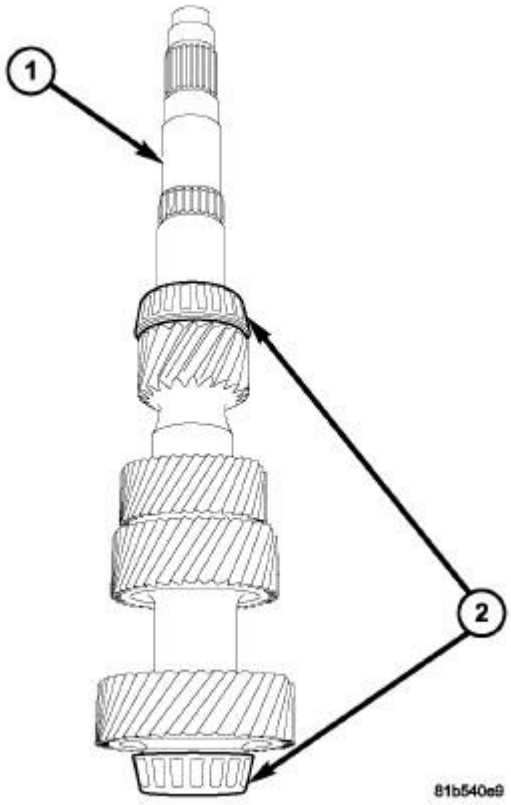

Fig. 124: COUNTERSHAFT BEARINGS
Courtesy of CHRYSLER LLC

1. Heat countershaft (1) bearings (2) to 100 - 149 Celsius (212° Min. - 300° Max Fahrenheit). Install countershaft (1) bearings (2) on shaft with tongs or welding gloves.

MAINSHAFT

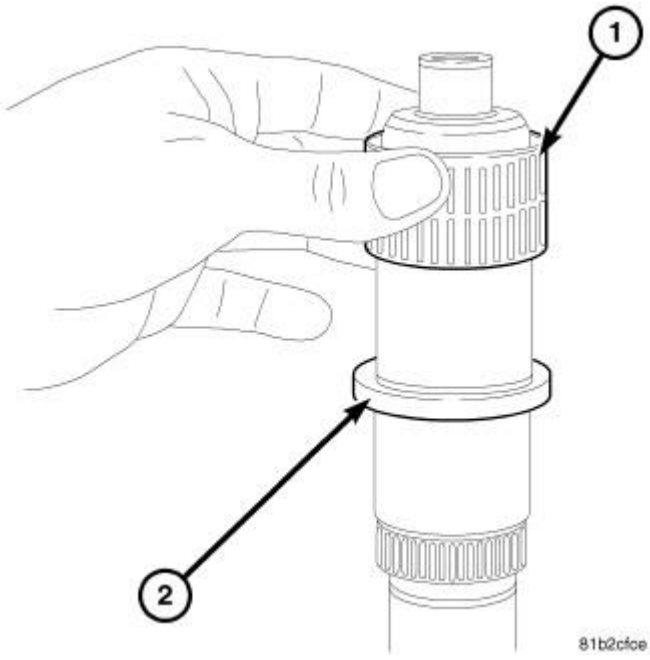

Fig. 125: 3RD GEAR BEARING
Courtesy of CHRYSLER LLC

1. Install third gear bearing (1) on mainshaft (2).

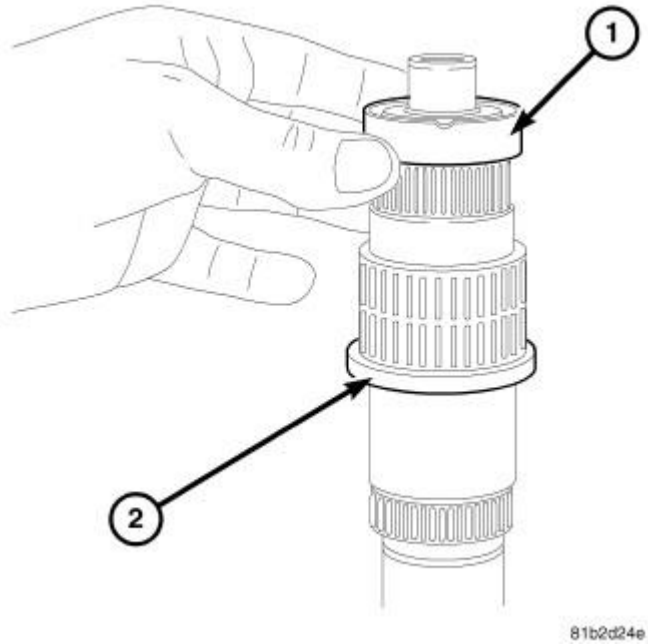

Fig. 126: 3RD GEAR BEARING SPACER
Courtesy of CHRYSLER LLC

2. Install third gear bearing spacer (1) on mainshaft (2).

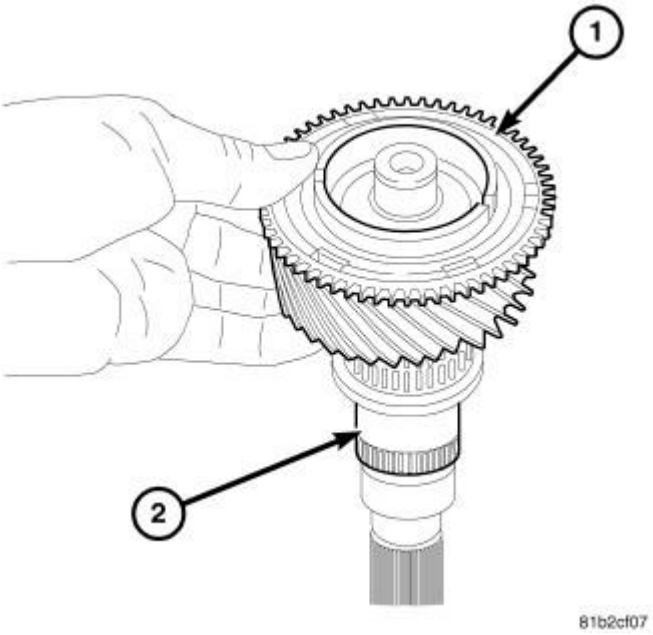

Fig. 127: 3RD GEAR
Courtesy of CHRYSLER LLC

3. Install third gear (1) on mainshaft (2).

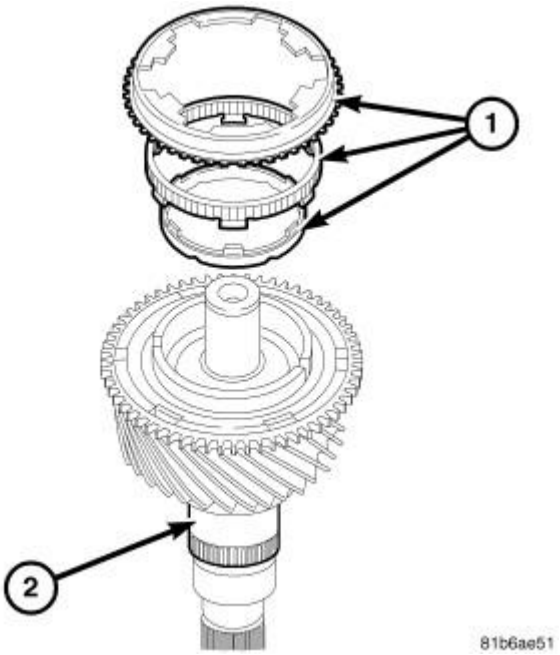

Fig. 128: 3RD GEAR SYNCHRO RINGS
Courtesy of CHRYSLER LLC

4. Install third gear synchronizer rings (1) on third gear (2).

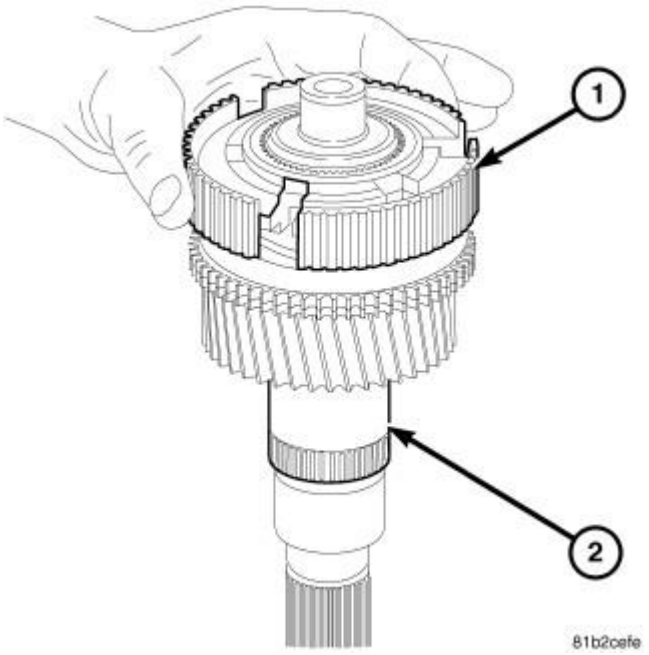

Fig. 129: 3-4 SYNCHRO HUB
Courtesy of CHRYSLER LLC

5. Install 3-4 synchronizer hub (1) on mainshaft (2).

CAUTION: Synchronizer rings must be aligned with synchronizer hub and third gear during installation. Failure to follow these instructions will result in damage to the synchronizer rings.

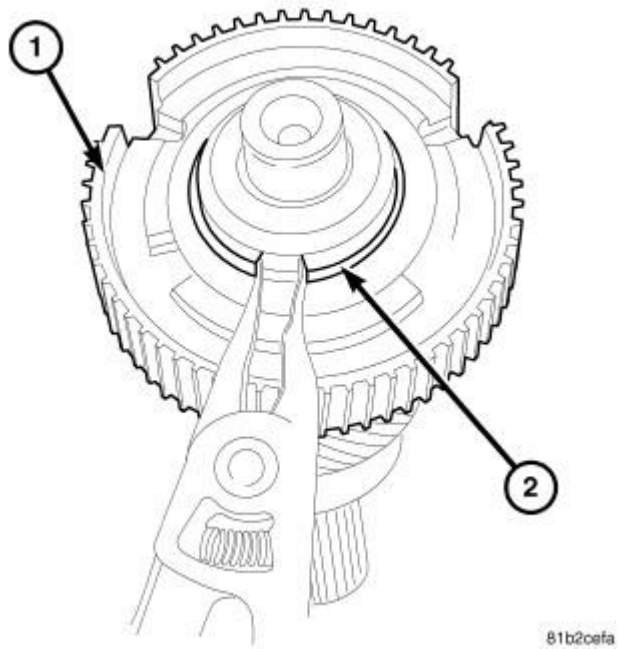

Fig. 130: 3-4 HUB SNAP RING

Courtesy of CHRYSLER LLC

6. Install 3-4 synchronizer hub (1) snap ring (2) on mainshaft.

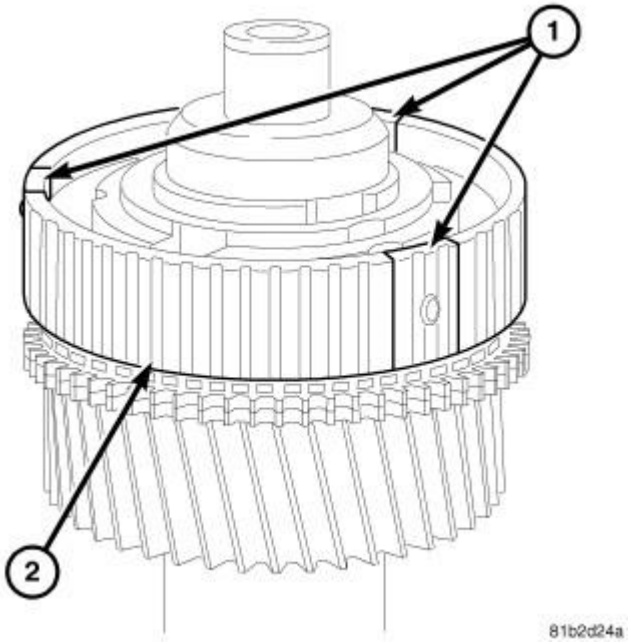

Fig. 131: 3-4 HUB DETENTS
Courtesy of CHRYSLER LLC

7. Install synchronizer detents (1) in 3-4 synchronizer hub (2).

NOTE: 1-2 and 3-4 synchronizer detents are the same.

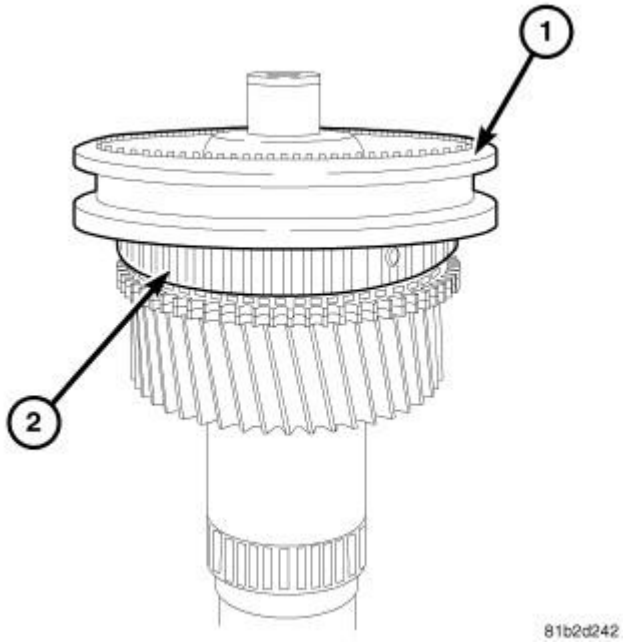

Fig. 132: 3-4 SYNCHRO SLEEVE
Courtesy of CHRYSLER LLC

8. Install 3-4 synchronizer sleeve (1) on 3-4 synchronizer hub (2).

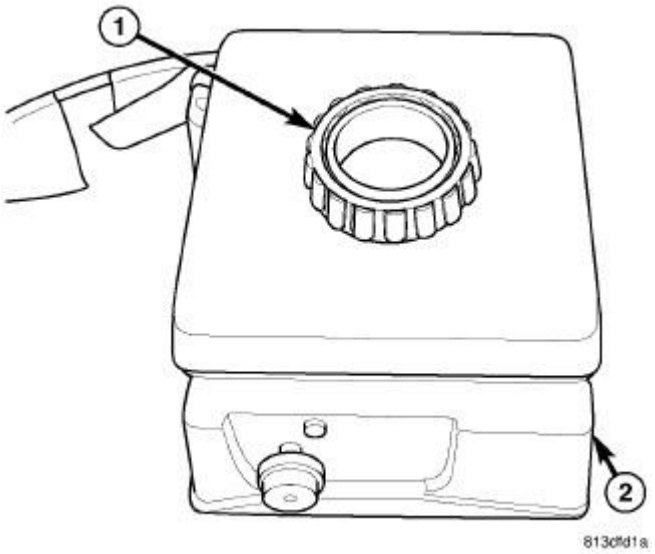

Fig. 133: BEARING HEATER
Courtesy of CHRYSLER LLC

WARNING: Use tongs or welding gloves when handling heated components. Failure to follow these instructions will result in personal injury.

CAUTION: Bearings (1) are installed using a Bearing Heater (2). Use only a bearing heater/hot plate and follow manufacture's instructions. Heat components to 100 - 149 Celsius (212° Min. - 300° Max Fahrenheit). Never use an open flame to heat components. Never leave components on heater for an extended amount of time. If component is discolored after heating, the component has been overheated and must not be used. Failure to follow these instructions will result in component damage.

9. Heat mainshaft transmission adapter bearing to 100 - 149 Celsius (212° Min. - 300° Max Fahrenheit) and install on mainshaft with tongs or welding gloves.

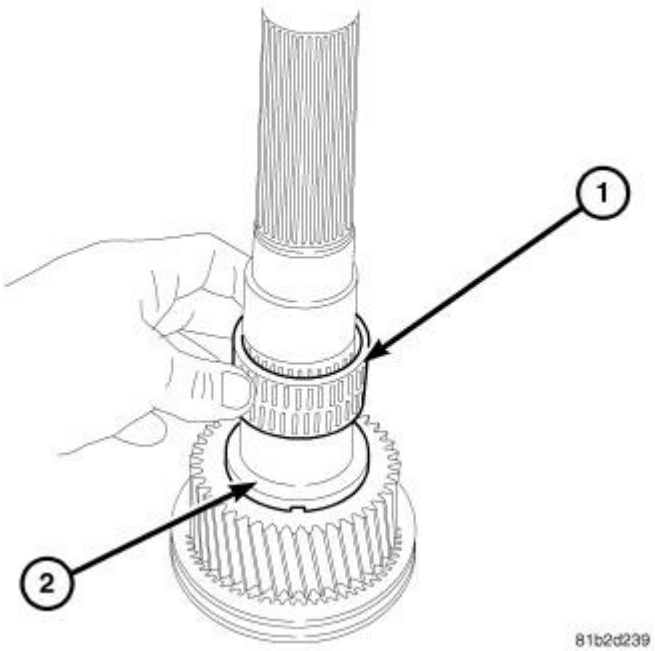

Fig. 134: 2ND GEAR BEARING
Courtesy of CHRYSLER LLC

10. Install second gear bearing (1) on mainshaft (2).

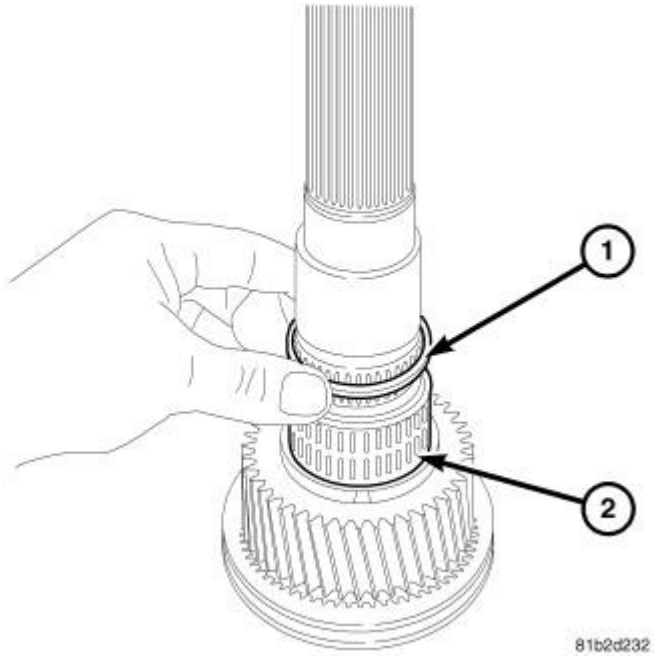

Fig. 135: 2ND BEARING SPACER
Courtesy of CHRYSLER LLC

11. Install second gear bearing spacer (1) on mainshaft (2).

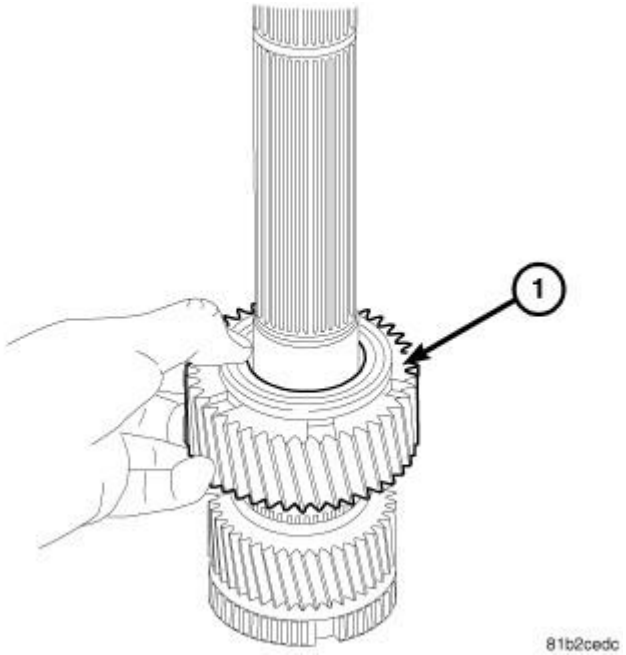

Fig. 136: 2ND GEAR
Courtesy of CHRYSLER LLC

12. Install second gear (1) on mainshaft (2).

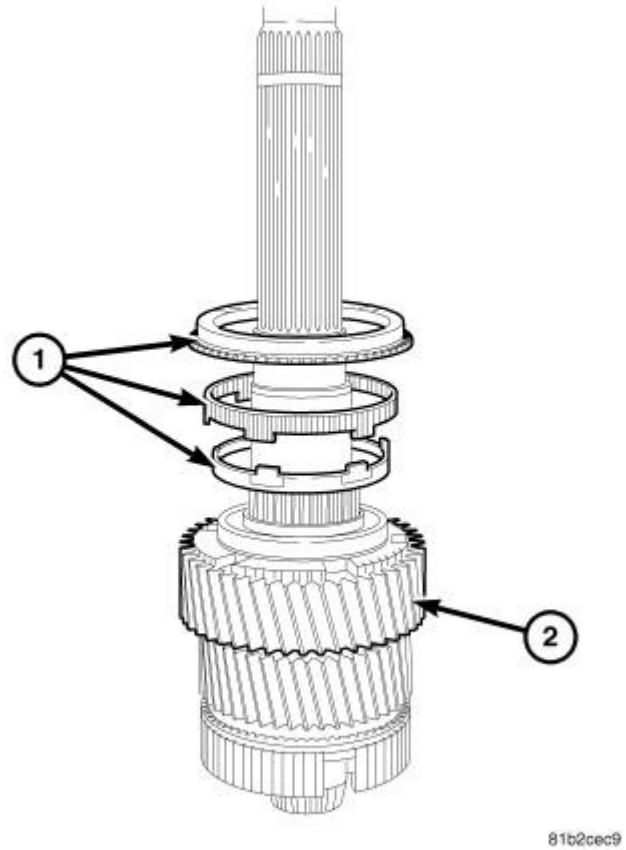

Fig. 137: 2ND GEAR SYNCHRO RINGS
Courtesy of CHRYSLER LLC

13. Install second gear synchronizer rings (1) on second gear (2).

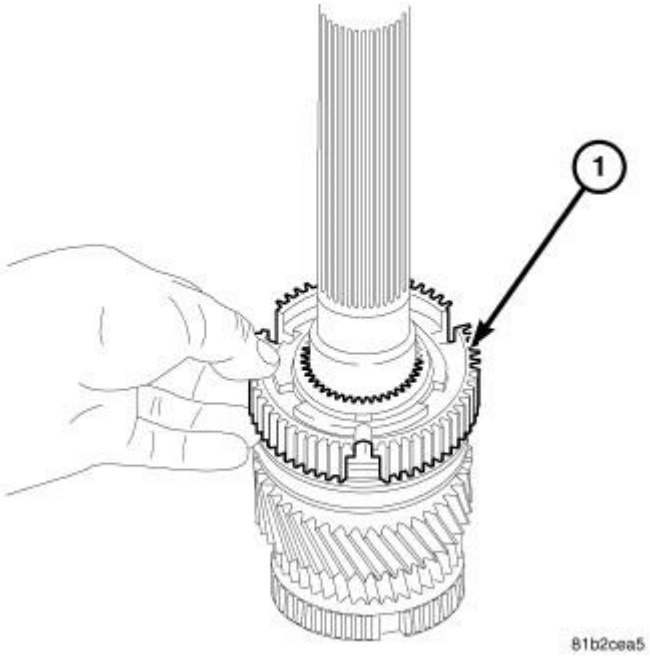

Fig. 138: 1-2 SYNCHRO HUB
Courtesy of CHRYSLER LLC

14. Install 1-2 synchronizer hub (1) on mainshaft (2).

CAUTION: Synchronizer rings must be aligned with synchronizer hub and second gear during installation. Failure to follow these instructions will result in damage to the synchronizer rings.

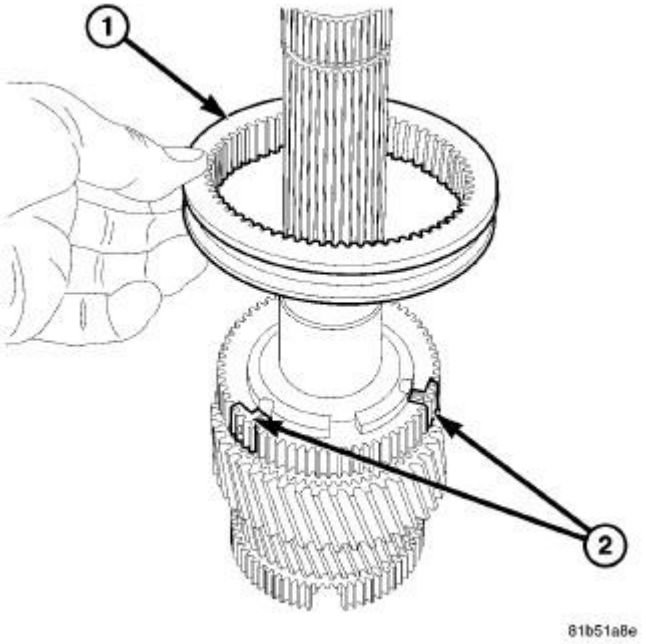

Fig. 139: 1-2 SYNCHRO SLEEVE
Courtesy of CHRYSLER LLC

15. Install 1-2 synchronizer hub sleeve (1) and detents (2).

NOTE: 1-2 and 3-4 synchronizer detents are the same.

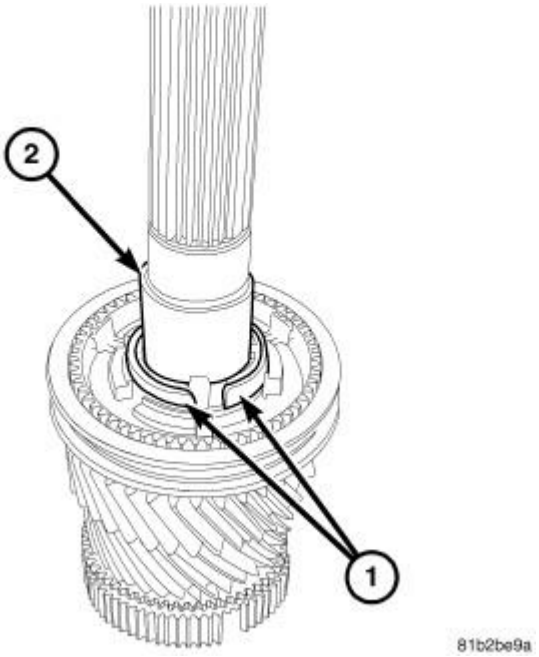

Fig. 140: 1ST SPLIT RINGS
Courtesy of CHRYSLER LLC

16. Install 1-2 synchronizer hub split rings (1) on mainshaft (2).

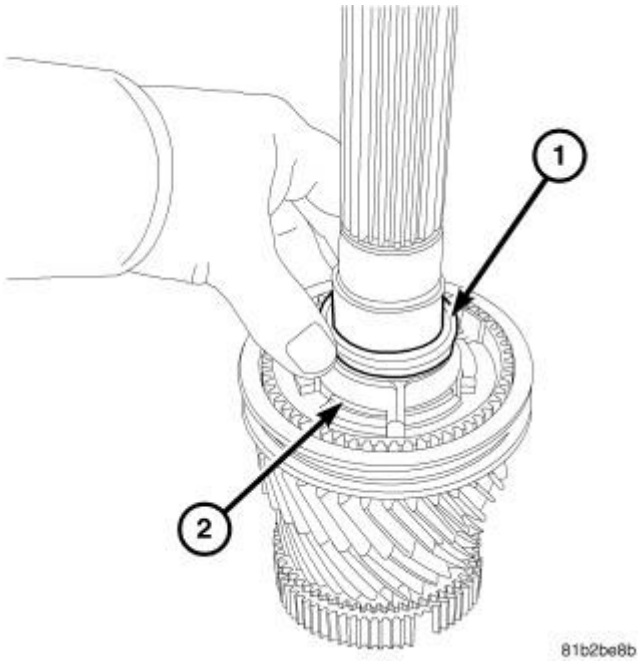

Fig. 141: 1ST SPLIT RING RETAINER
Courtesy of CHRYSLER LLC

17. Install 1-2 synchronizer hub split rings retainer (1) on split rings (2).

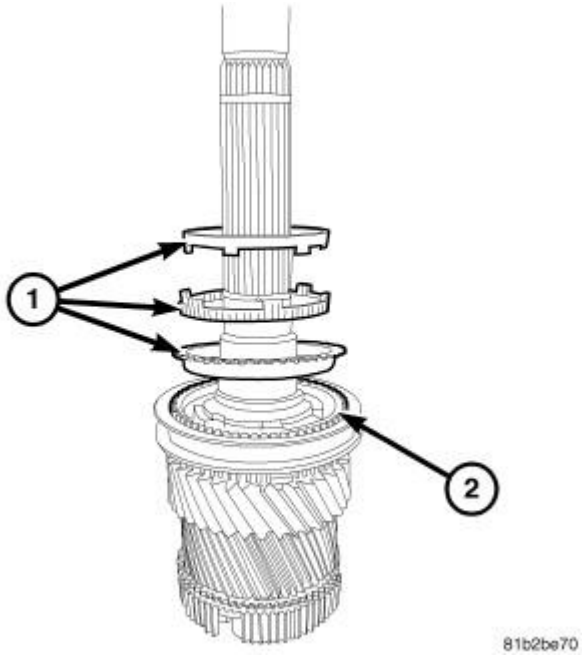

Fig. 142: 1ST GEAR SYNCHRO
Courtesy of CHRYSLER LLC

18. Install first gear synchronizer rings (1) on 1-2 synchronizer hub (2).

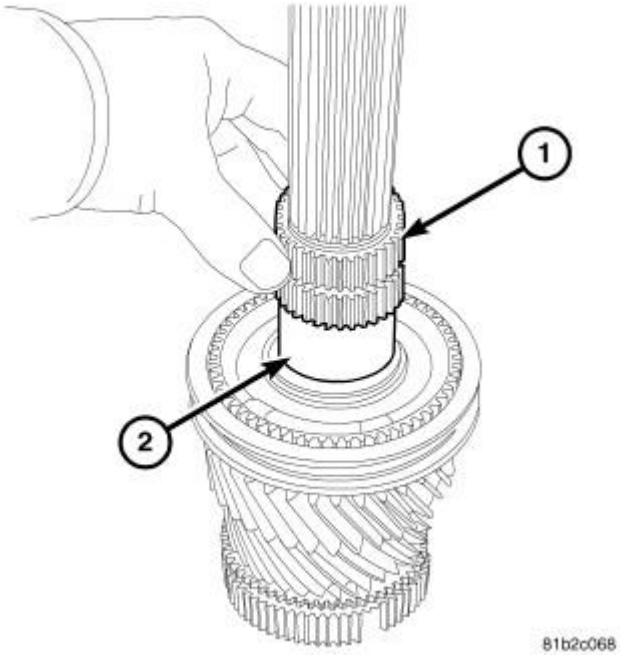

Fig. 143: 1ST GEAR BEARING
Courtesy of CHRYSLER LLC

19. Install first gear bearing (1) on mainshaft (2).

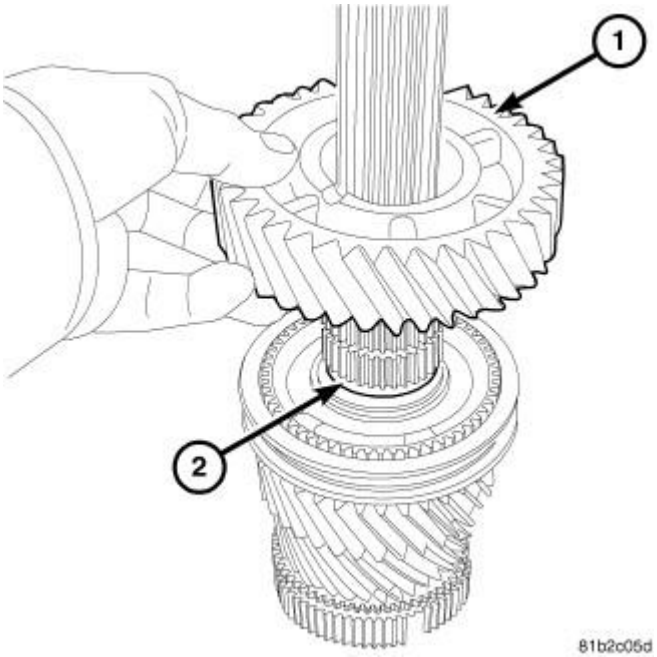

Fig. 144: 1ST GEAR
Courtesy of CHRYSLER LLC

20. Install first gear (1) on mainshaft (2).

CAUTION: Synchronizer rings must be aligned with synchronizer hub and first gear during installation. Failure to follow these instructions will result in damage to the synchronizer rings.

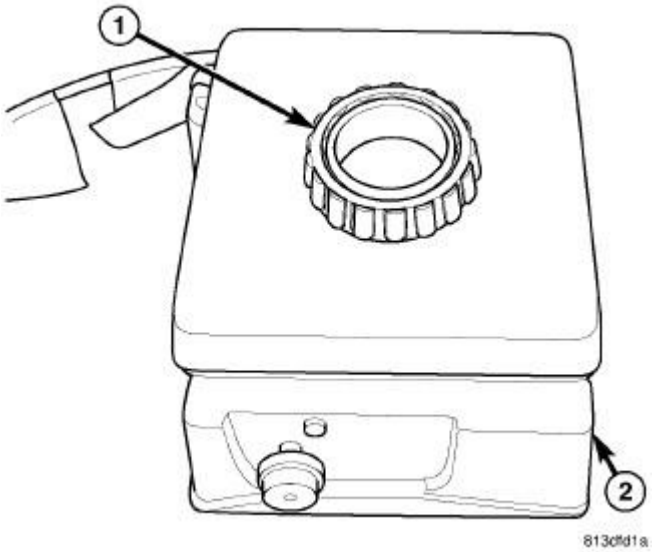

Fig. 145: BEARING HEATER
Courtesy of CHRYSLER LLC

WARNING: Use tongs or welding gloves when handling heated components. Failure to follow these instructions will result in personal injury.

CAUTION: Bearings (1) are installed using a Bearing Heater (2). Use only a bearing heater/hot plate and follow manufacture's instructions. Heat components to 100 - 149 Celsius (212° Min. - 300° Max Fahrenheit). Never use an open flame to heat components. Never leave components on heater for an extended amount of time. If component is discolored after heating, the component has been overheated and must not be used. Failure to follow these instructions will result in component damage.

21. Heat mainshaft case bearing to 100 - 149 Celsius (212° Min. - 300° Max Fahrenheit) and install on mainshaft with tongs or welding gloves.

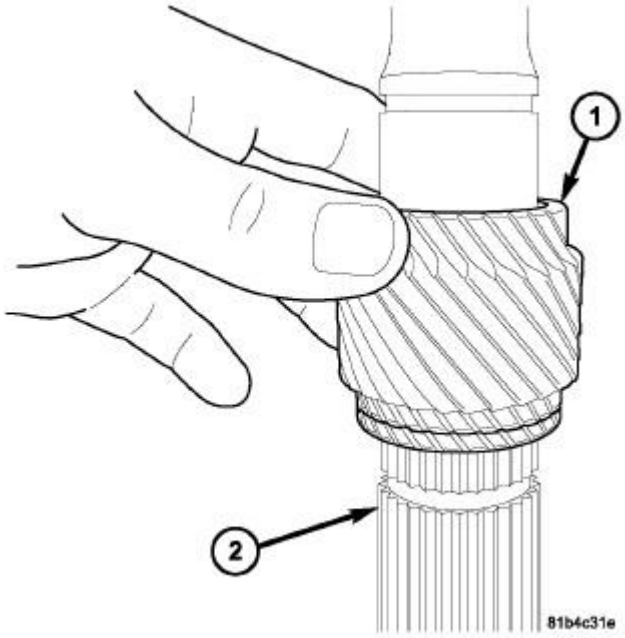

Fig. 146: MAIN 6TH GEAR
Courtesy of CHRYSLER LLC

22. Position sixth gear (1) on mainshaft (2).
23. Install sixth gear on mainshaft with Installer 9391.

TRANSMISSION HOUSING

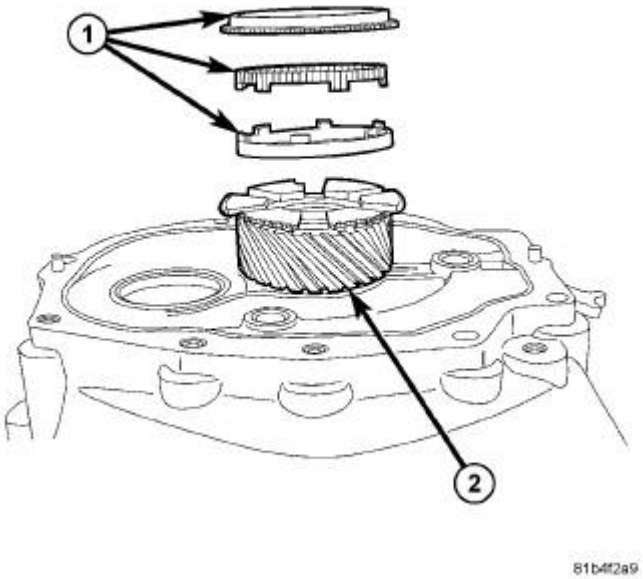

Fig. 147: INPUT SHAFT SYNCHRO RINGS
Courtesy of CHRYSLER LLC

1. Install input shaft (2) into transmission adapter plate. Install fourth gear synchronizer rings (1) onto fourth gear.

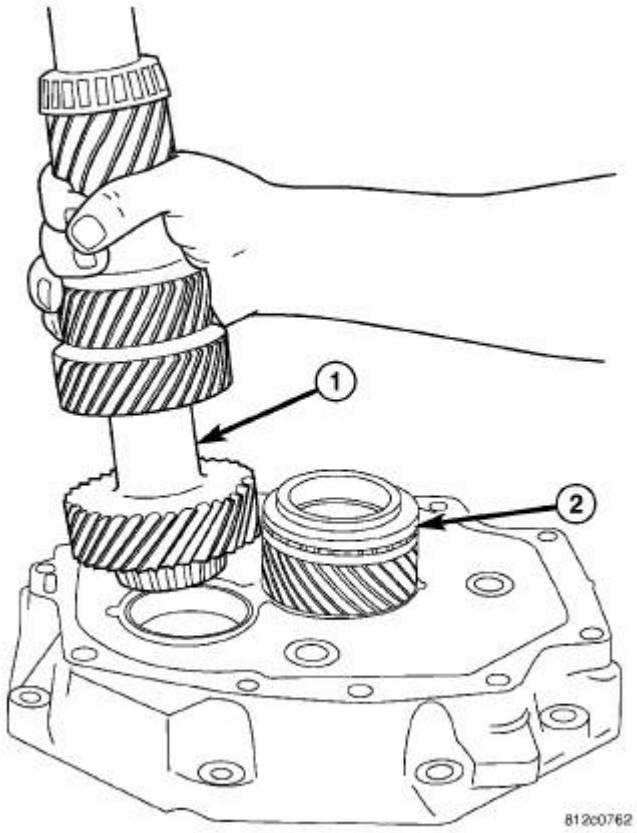

Fig. 148: COUNTERSHAFT
Courtesy of CHRYSLER LLC

2. Install countershaft (1) assembly into transmission adapter.

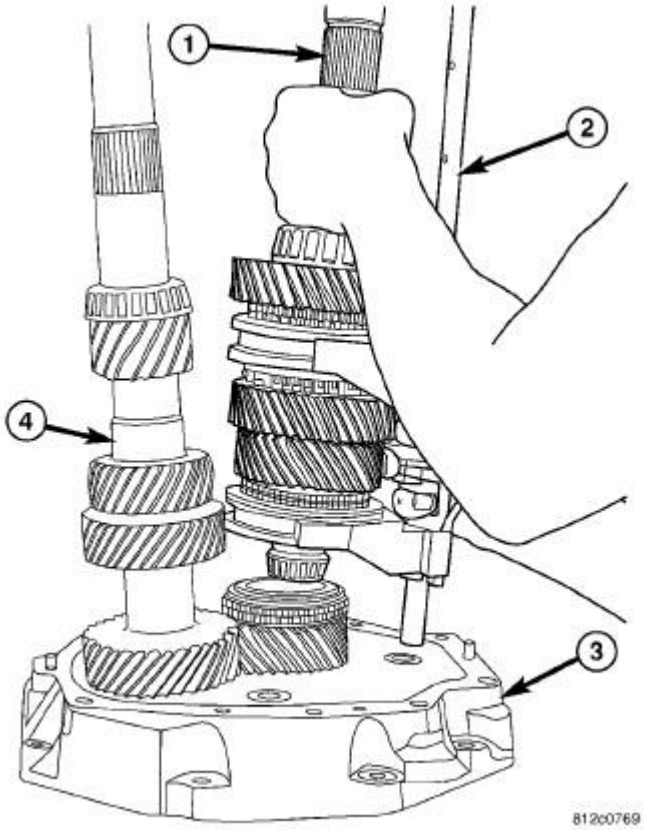

Fig. 149: MAINSHAFT AND SHIFT RAIL
Courtesy of CHRYSLER LLC

3. Tilt countershaft (4) sideways then install mainshaft (1) and shift rail (2) assemblies into transmission adapter (3).

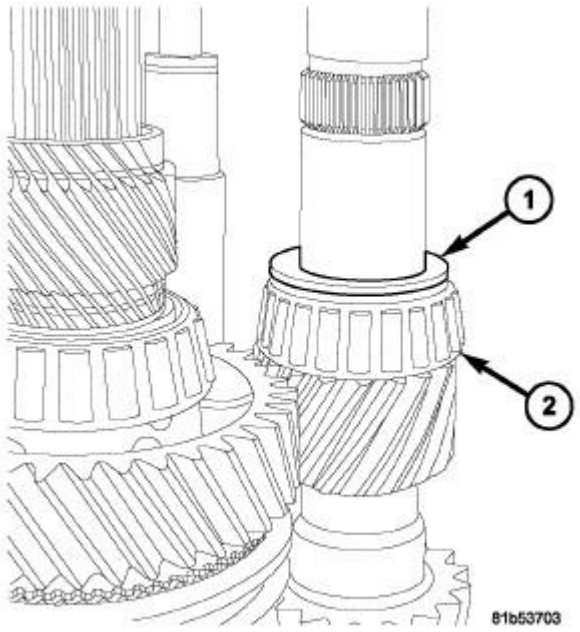

Fig. 150: COUNTERSHAFT WASHER
Courtesy of CHRYSLER LLC

4. Install countershaft thrust washer (1) on countershaft (2).

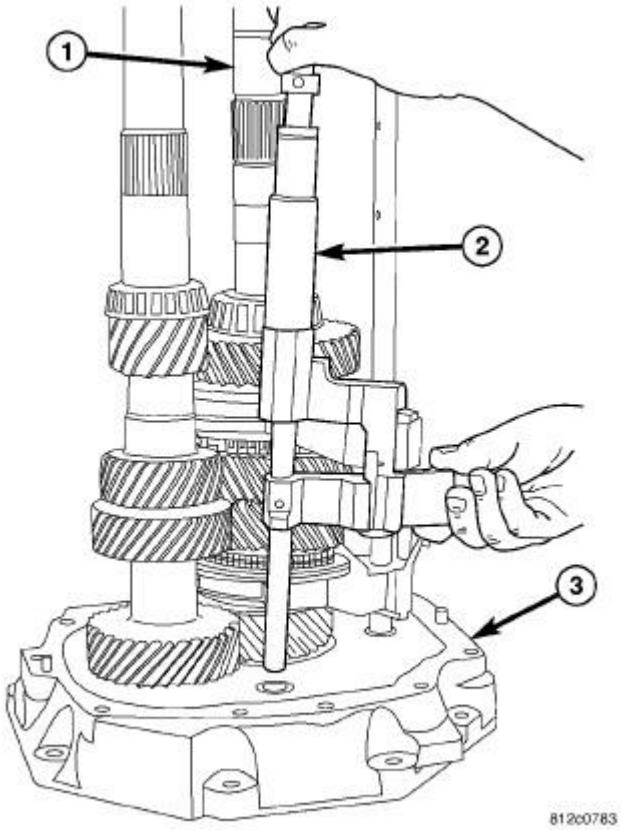

Fig. 151: REVERSE SHAFT RAIL ASSEMBLY
Courtesy of CHRYSLER LLC

5. Install reverse rail assembly (2) into transmission adapter (3).

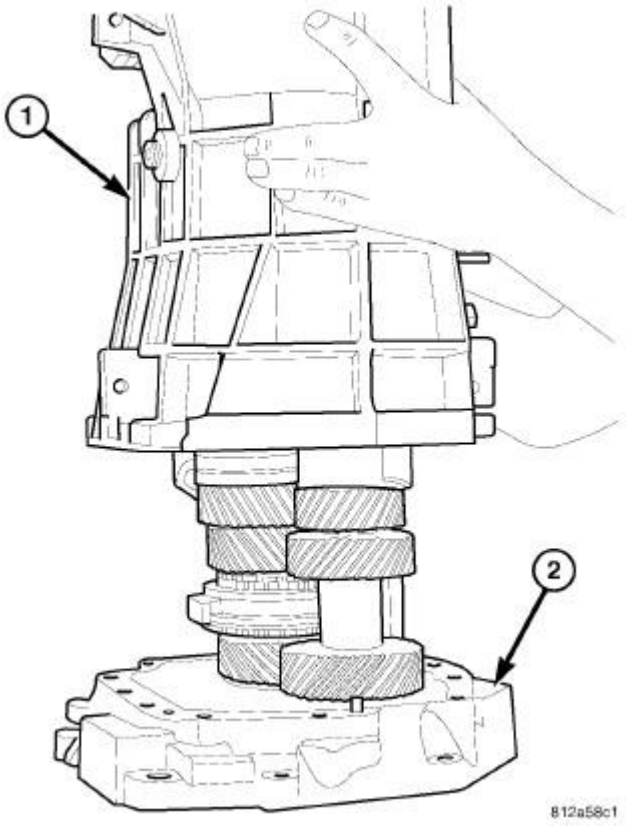

Fig. 152: TRANSMISSION CASE
Courtesy of CHRYSLER LLC

6. Apply Mopar ® ATF-RTV to transmission adapter (2) sealing surface.
7. Install transmission case (1) on gear set until shift rail passes through case bushing. Then install skip shift lever on shift rail and seat transmission case on adapter (2).

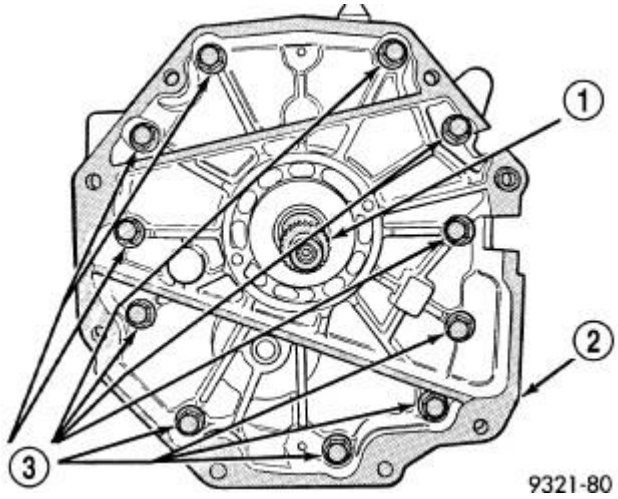

Fig. 153: Adapter Bolt Location

Courtesy of CHRYSLER LLC

8. Install transmission adapter (2) bolts (3) and tighten to 34 N.m (25 ft. lbs.).

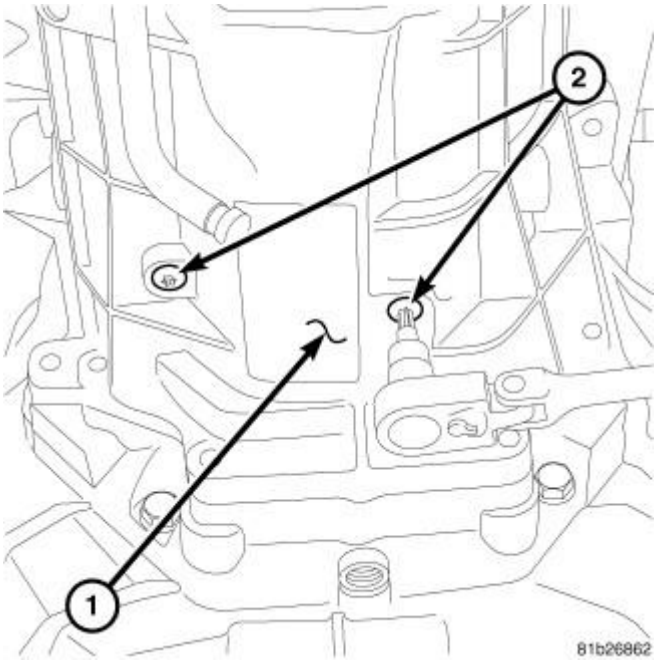

Fig. 154: TORX SCREWS
Courtesy of CHRYSLER LLC

9. Apply Mopar ® Lock AND Seal Adhesive to shift lever guide bolts. Install guide bolts (2) in transmission case (1) and tighten to 27 N.m (20 ft. lbs.).

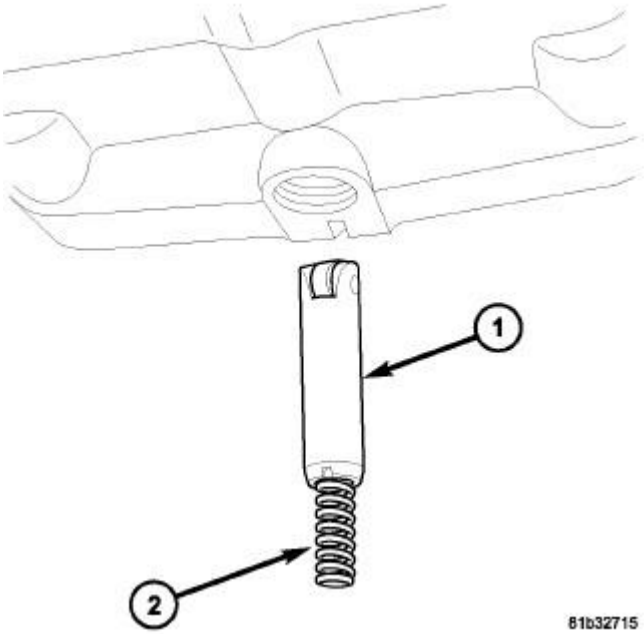

Fig. 155: DETENT AND SPRING
Courtesy of CHRYSLER LLC

10. Install roller detent (1) and spring (2) into transmission adapter.

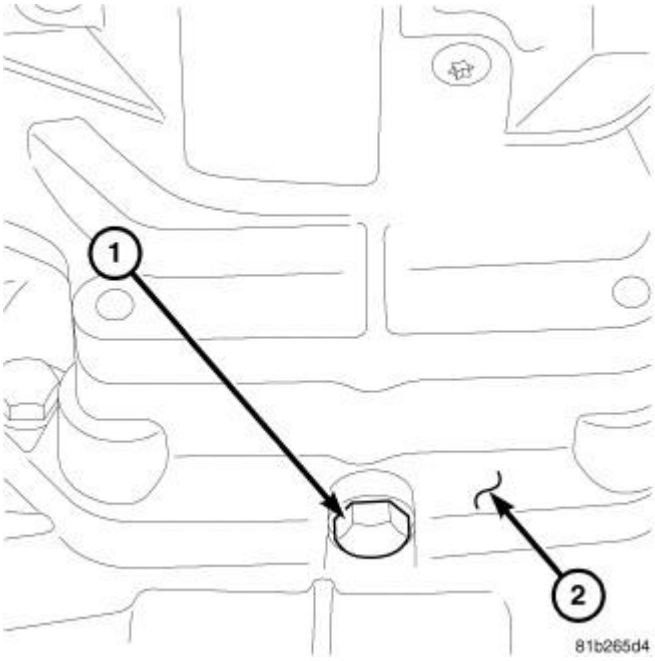

Fig. 156: TOP DETENT
Courtesy of CHRYSLER LLC

11. Apply Mopar® Lock AND Seal to roller detent bolt threads. Install bolt (1) into transmission adapter (2) and tighten to 40 N.m (30 ft. lbs.).

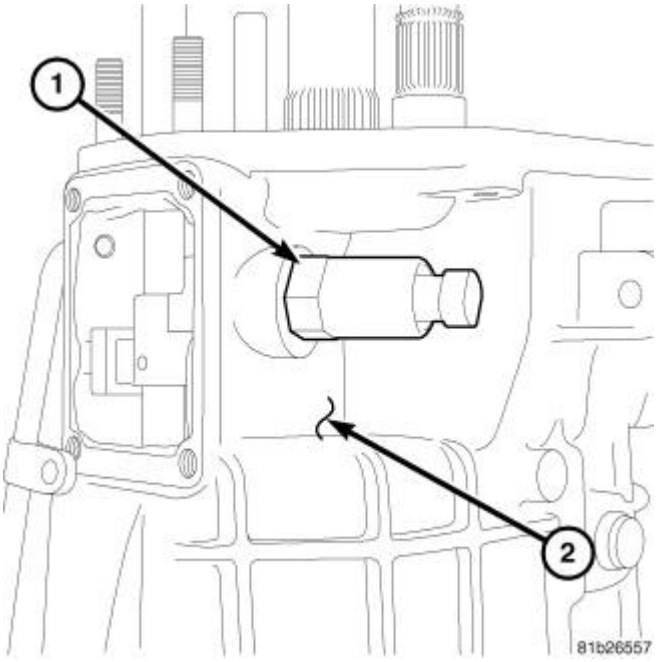

Fig. 157: SKIP SHIFT SOLENOID
Courtesy of CHRYSLER LLC

12. Install skip shift solenoid (1) into side of case (2) and tighten to 34 N.m (25 ft. lbs.).

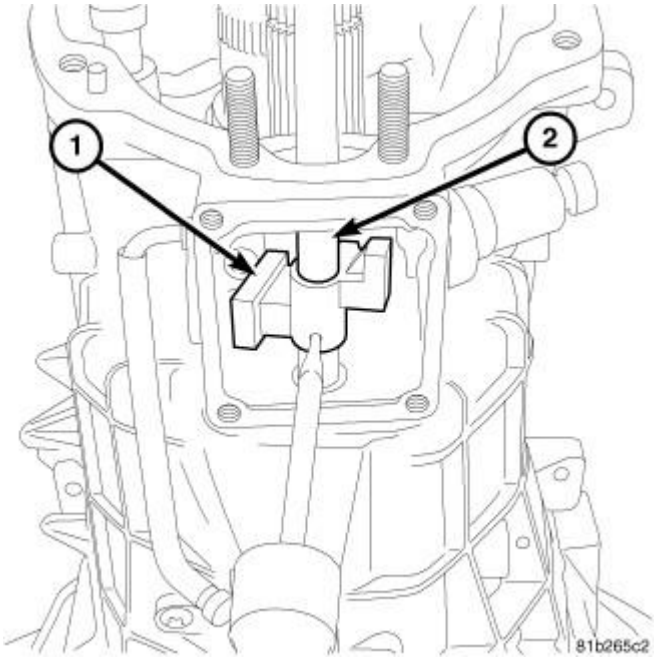

Fig. 158: SKIP SHIFT LEVER
Courtesy of CHRYSLER LLC

13. Install skip shift lever (1) roll pin (2) with a hammer and punch.

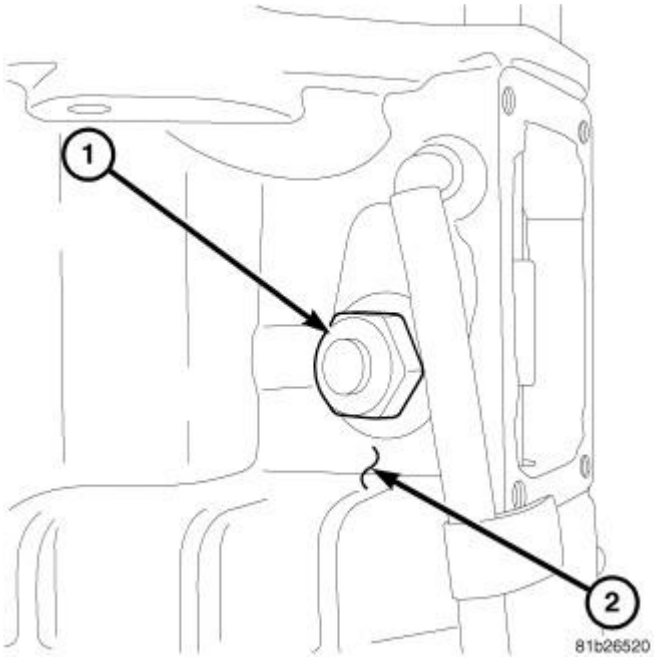

Fig. 159: SIDE DETENT

Courtesy of CHRYSLER LLC

14. Install side shift detent (1) into case (2) and tighten to 40 N.m (30 ft. lbs.).

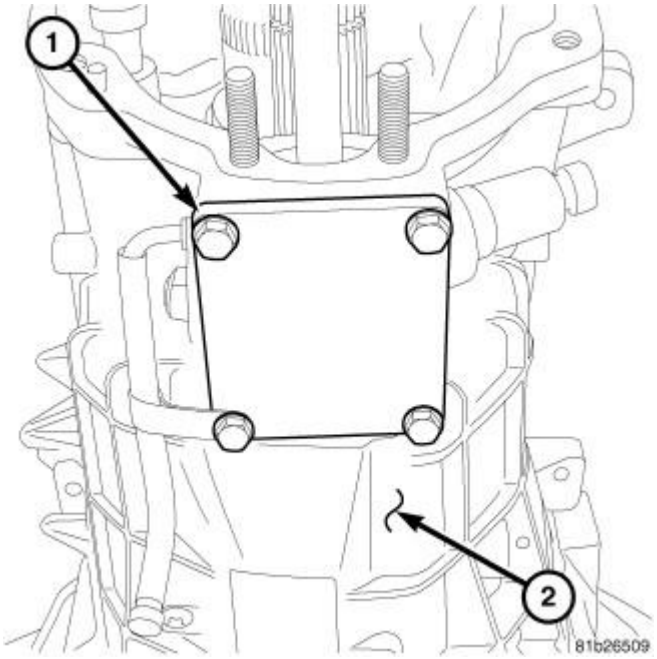

Fig. 160: TOP COVER
Courtesy of CHRYSLER LLC

15. Apply Mopar® ATF-RTV to top cover sealing surface.
16. Install top cover (1) on case (2) and tighten bolts to 20 N.m (15 ft. lbs.).

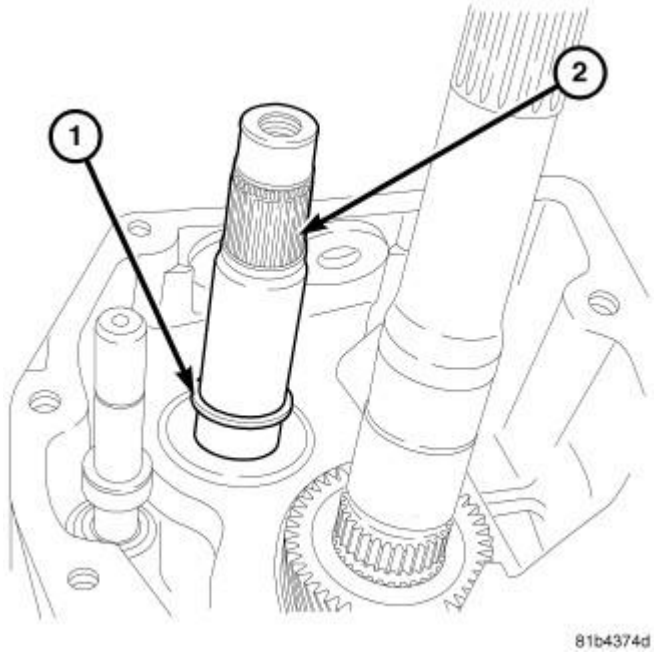

Fig. 161: 6TH BEARING SPACER
Courtesy of CHRYSLER LLC

17. Install sixth gear bearing spacer (1) on countershaft (2).

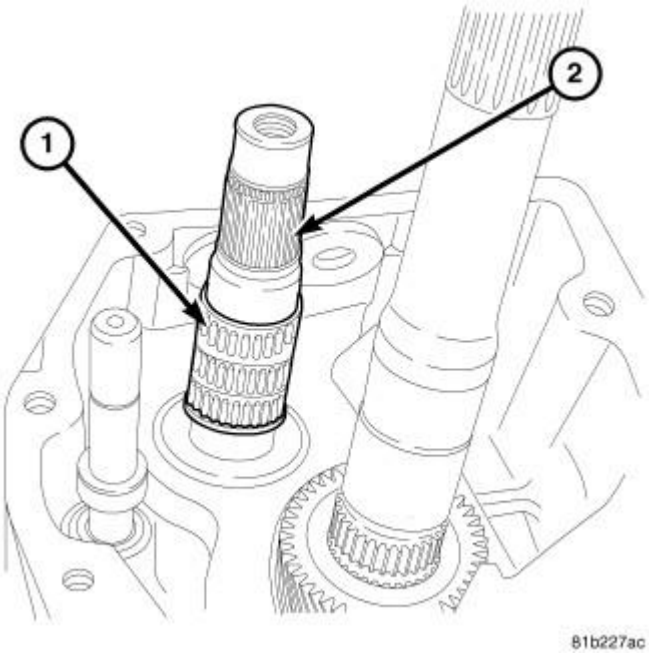

Fig. 162: 6TH GEAR BEARING
Courtesy of CHRYSLER LLC

18. Install sixth gear bearing (1) on countershaft (2).

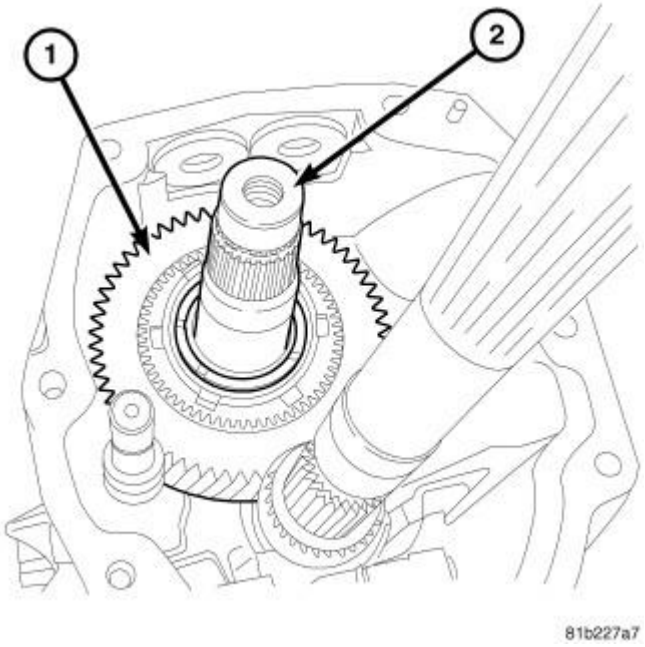

Fig. 163: 6TH GEAR

Courtesy of CHRYSLER LLC

19. Install sixth gear (1) on countershaft (2).

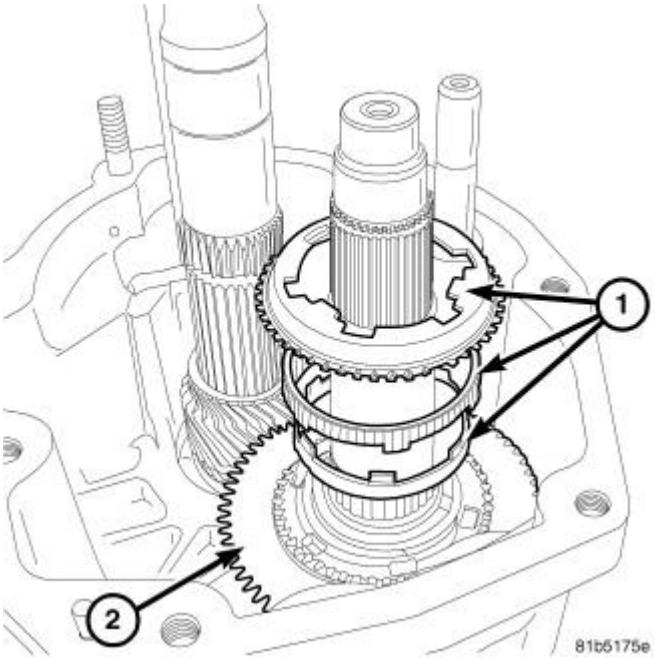

Fig. 164: 6TH SYNCHRO RINGS
Courtesy of CHRYSLER LLC

20. Install sixth gear synchronizer rings (1) on countershaft sixth gear (2).

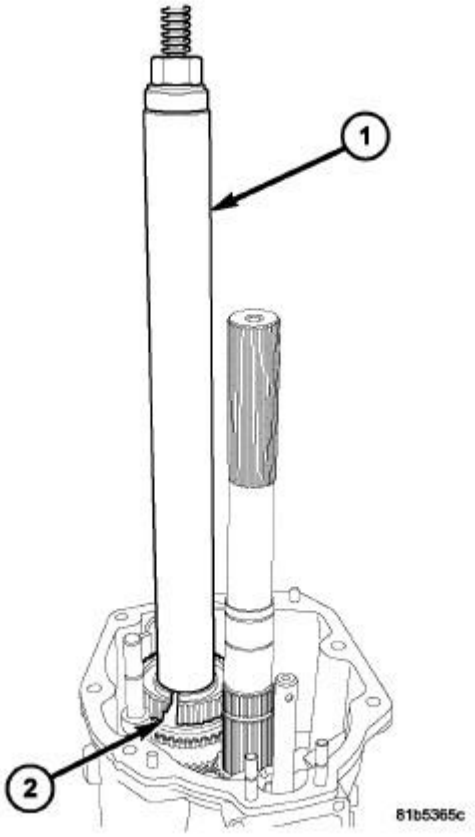

Fig. 165: 5-6 HUB INSTALLER
Courtesy of CHRYSLER LLC

21. Install 5-6 synchronizer hub (2) on countershaft with Installer 9391 (1).

CAUTION: Synchronizer rings must be aligned with synchronizer hub and sixth gear during installation. Failure to follow these instructions will result in damage to the synchronizer rings.

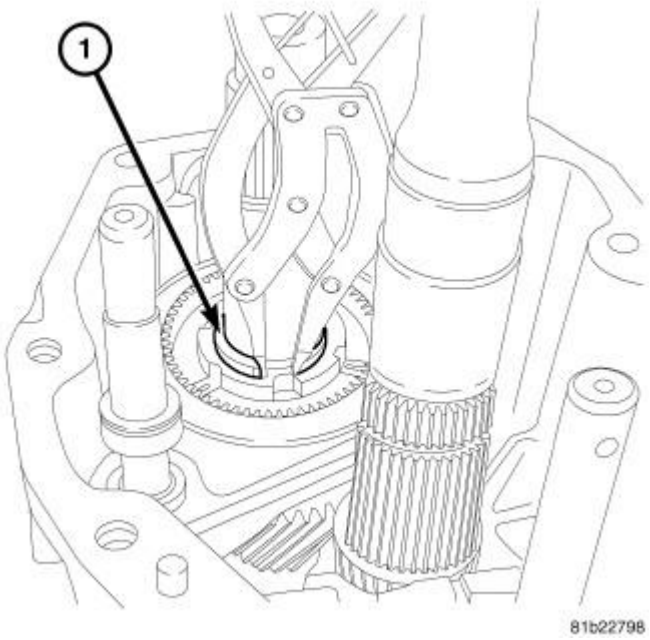

Fig. 166: 5-6 HUB SNAP RING
Courtesy of CHRYSLER LLC

22. Install 5-6 synchronizer hub (1) snap ring (2).

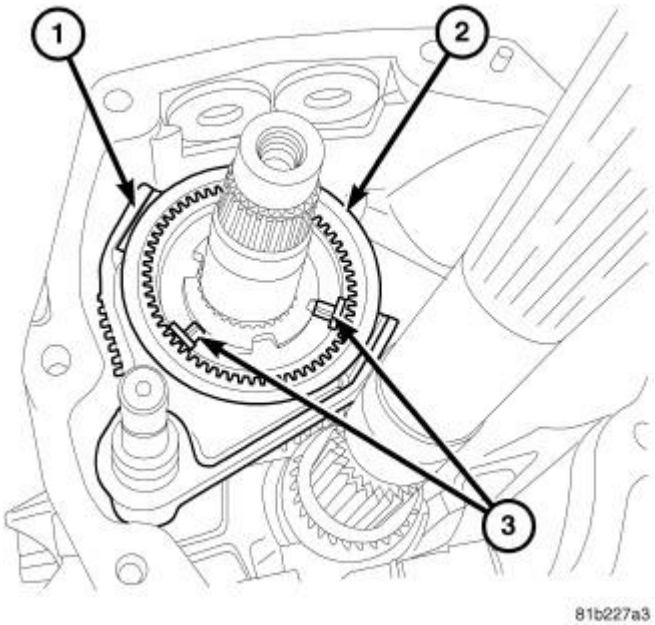

Fig. 167: 5-6 FORK AND SLEEVE
Courtesy of CHRYSLER LLC

23. Install 5-6 synchronizer shift fork (1) synchronizer sleeve (2) and hub detents (3).

NOTE: **5-6 and reverse synchronizer detents are the same.**

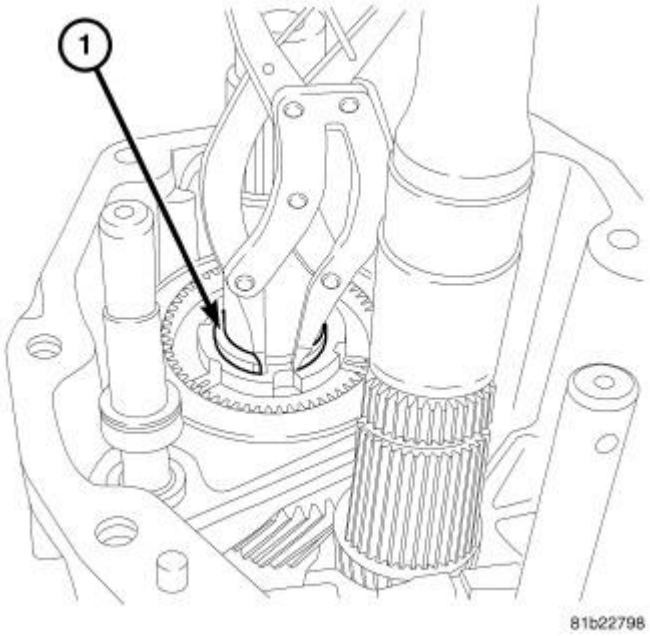

Fig. 168: 5-6 HUB SNAP RING
Courtesy of CHRYSLER LLC

24. Install 5-6 synchronizer hub snap ring (1).
25. Install **new** 5-6 gear shift fork snap ring.

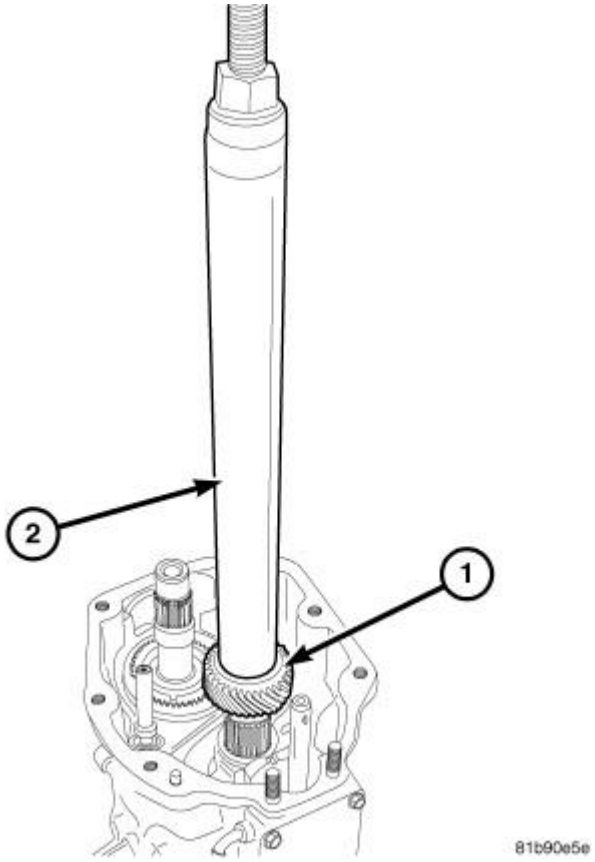

Fig. 169: 5TH GEAR MAINSHAFT
Courtesy of CHRYSLER LLC

26. Install fifth gear (1) on mainshaft with Installer 9391(2).

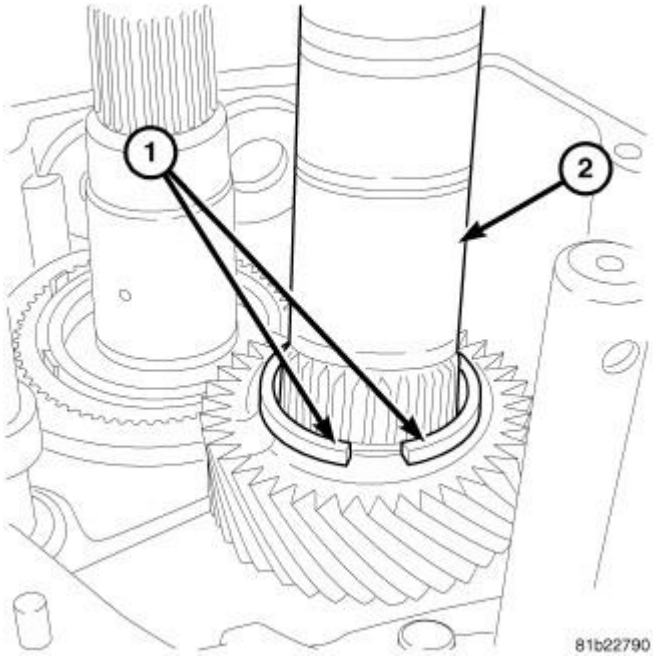

Fig. 170: SPLIT RINGS
Courtesy of CHRYSLER LLC

27. Install fifth gear split rings (1) on mainshaft (2).

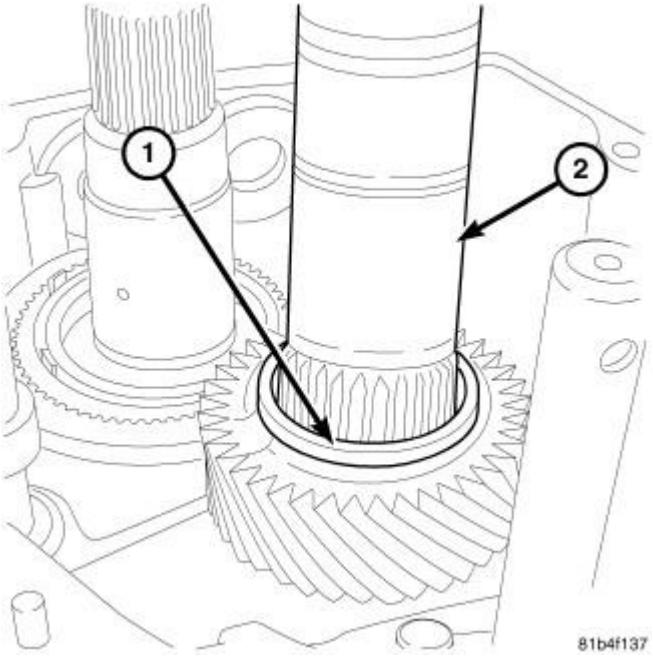

Fig. 171: 5TH RETAINER RING
Courtesy of CHRYSLER LLC

28. Install fifth gear split rings retainer (1) on mainshaft (2).

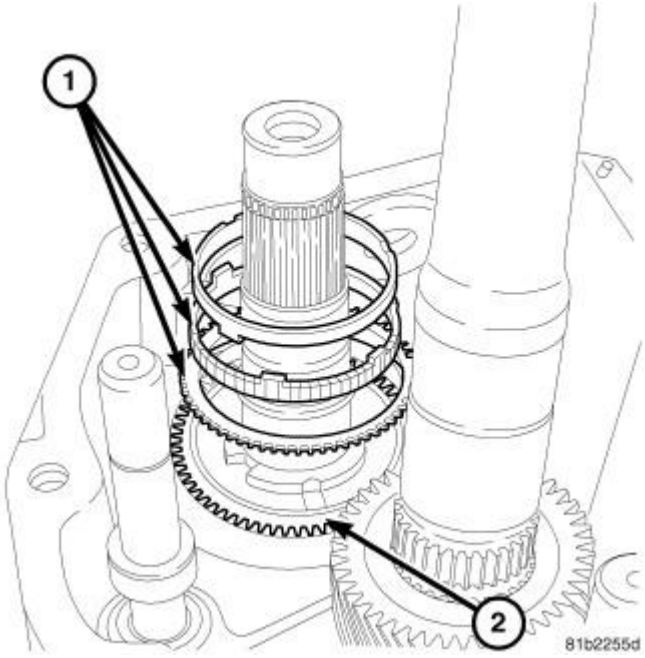

Fig. 172: 5TH GEAR SYNCHRO RINGS

Courtesy of CHRYSLER LLC

29. Install fifth gear synchronizer rings (1) on 5-6 synchronizer hub (2).

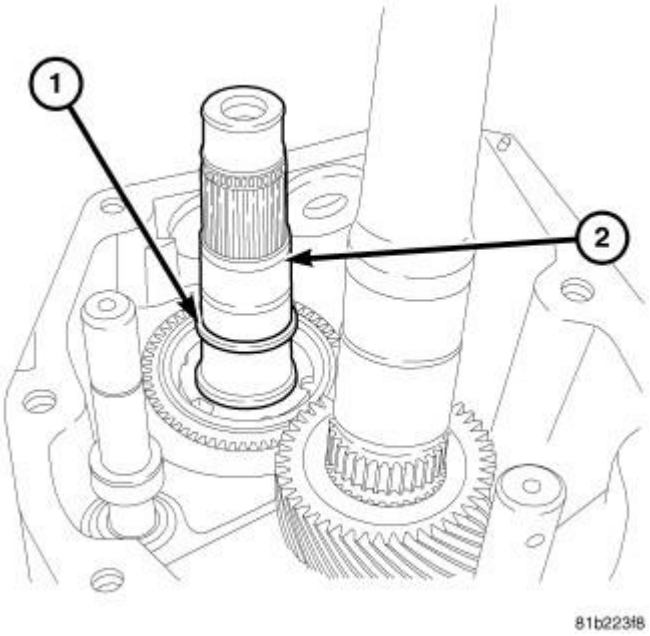

Fig. 173: 5TH GEAR BEARING SPACER
Courtesy of CHRYSLER LLC

30. Install fifth gear bearing spacer (1) on countershaft (2).

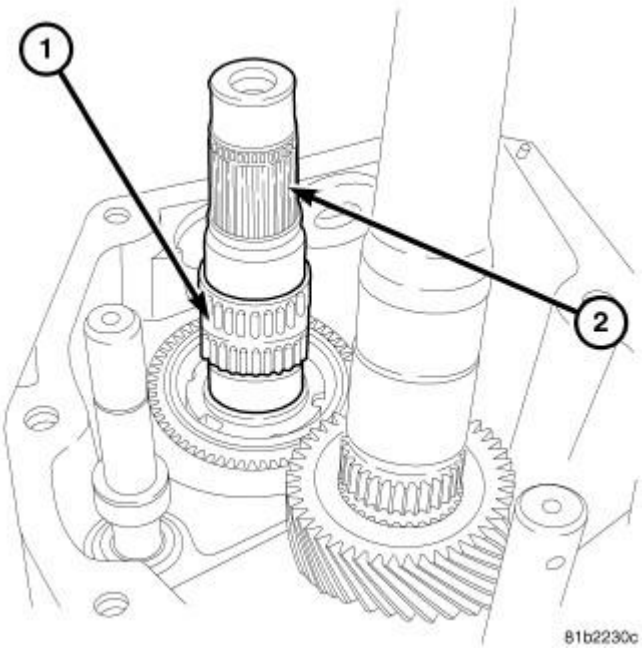

Fig. 174: 5TH GEAR BEARING
Courtesy of CHRYSLER LLC

31. Install fifth gear bearing (1) on countershaft (2).

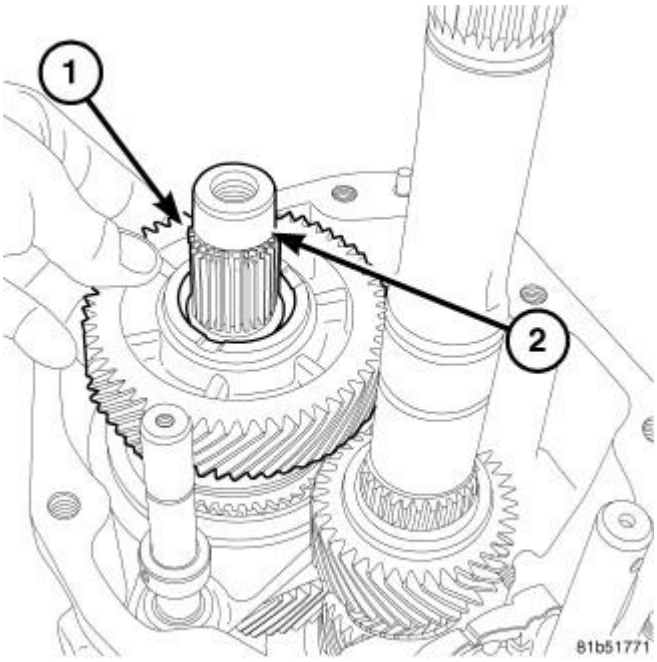

Fig. 175: 5TH GEAR
Courtesy of CHRYSLER LLC

32. Install fifth gear (1) on countershaft (2).

CAUTION: Synchronizer rings must be aligned with synchronizer hub and fifth gear during installation. Failure to follow these instructions will result in damage to the synchronizer rings.

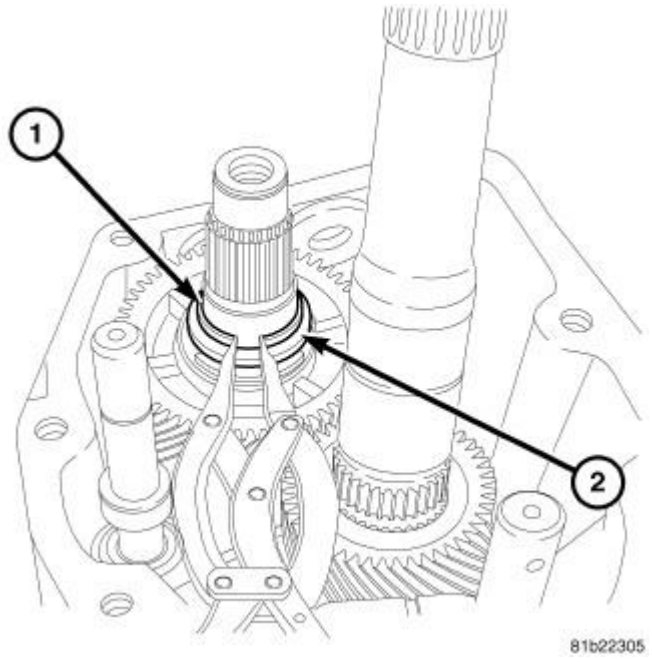

Fig. 176: 5TH GEAR SNAP RING
Courtesy of CHRYSLER LLC

33. Install fifth gear thrust washer (2) and snap ring (1) on countershaft.

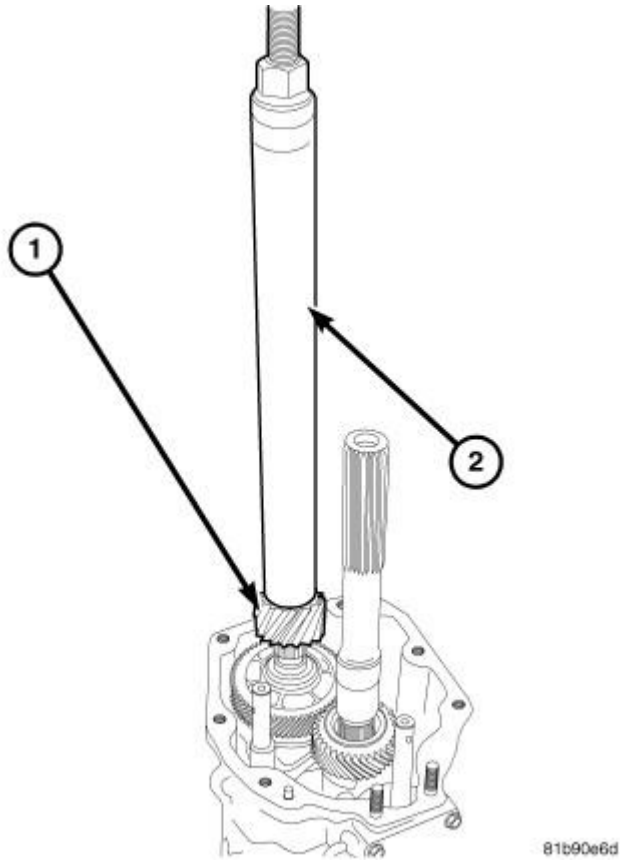

Fig. 177: REVERSE COUNTER SHAFT GEAR
Courtesy of CHRYSLER LLC

34. Install reverse gear (1) on countershaft with Installer 9391 (2).

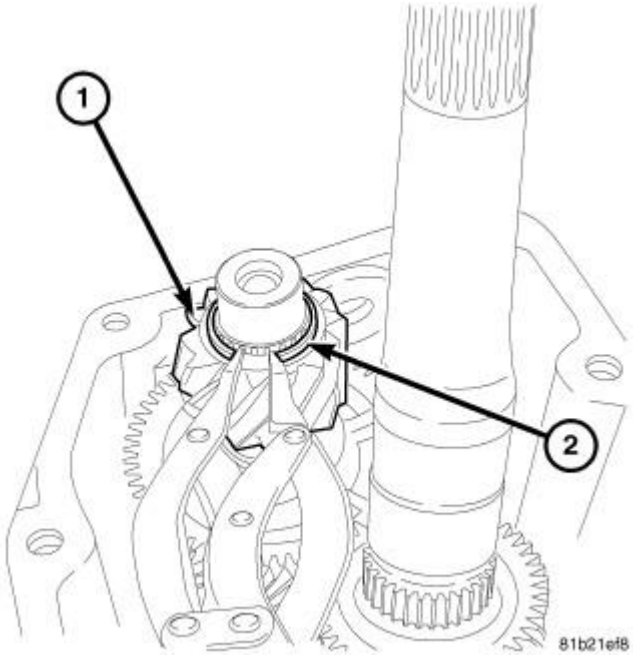

Fig. 178: REVERSE COUNTERSHAFT SNAP RING
Courtesy of CHRYSLER LLC

35. Install reverse gear (1) snap ring (2) on countershaft.

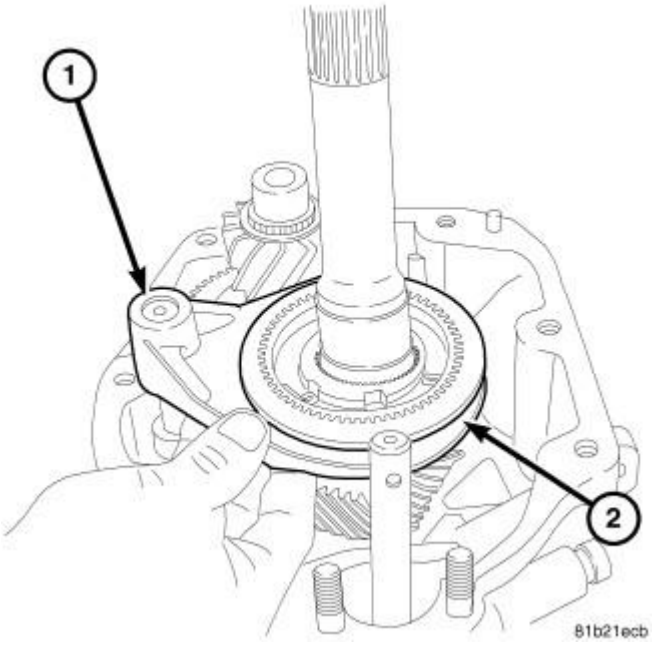

Fig. 179: REVERSE HUB AND FORK

Courtesy of CHRYSLER LLC

36. Install reverse shift fork (1) synchronizer hub with detents (2) and sleeve.

NOTE: 5-6 and reverse synchronizer detents are the same.

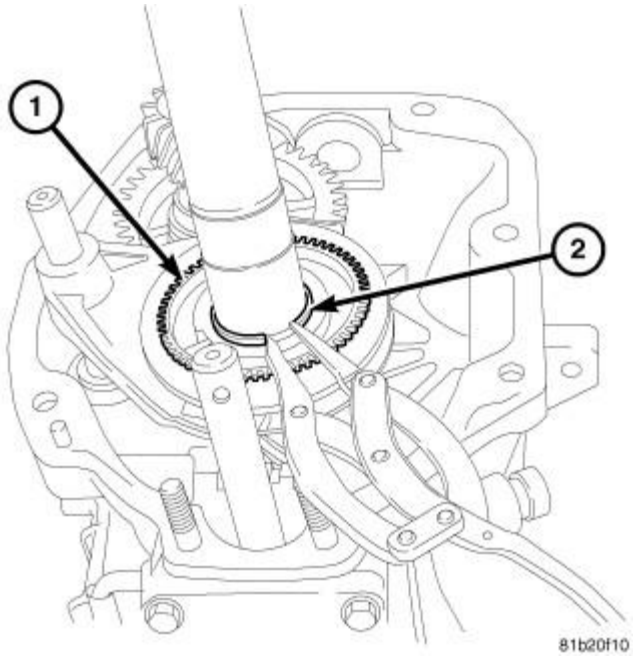

Fig. 180: REVERSE SYCHRO SNAP RING
Courtesy of CHRYSLER LLC

37. Install reverse synchronizer hub (1) snap ring (2).

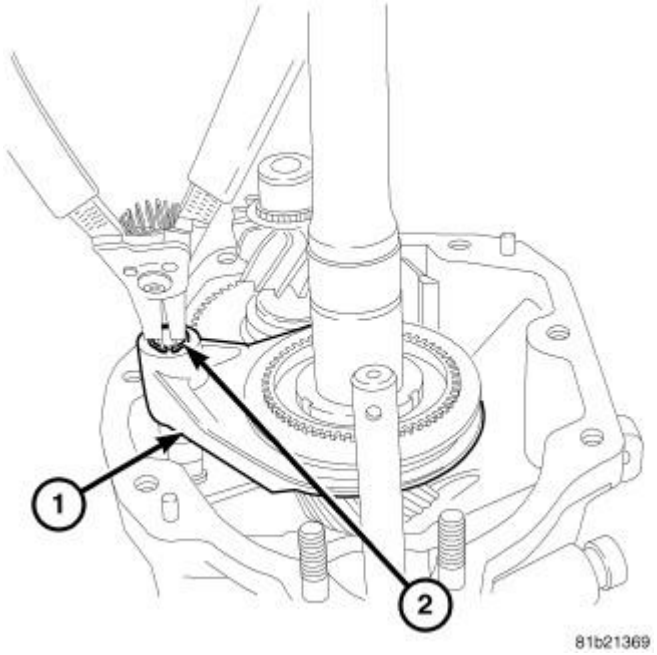

Fig. 181: REVERSE FORK SNAP RING
Courtesy of CHRYSLER LLC

38. Install **new** reverse shift fork (1) snap ring (2).

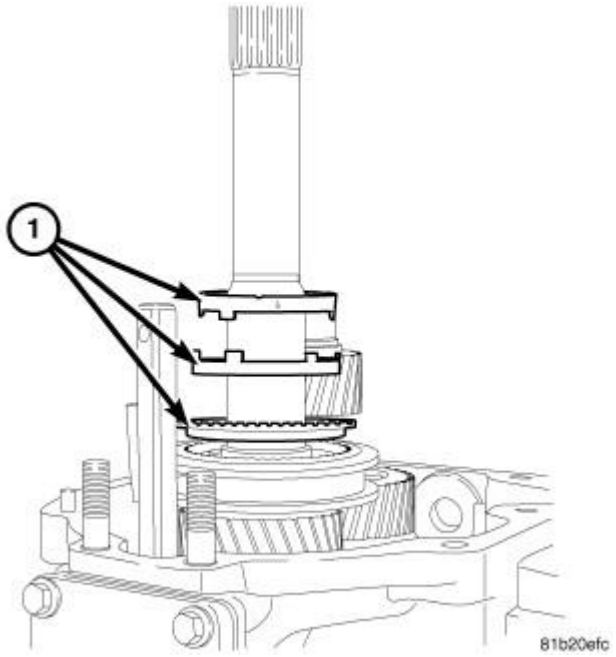

Fig. 182: REVERSE SYCHRO RINGS
Courtesy of CHRYSLER LLC

39. Install reverse synchronizer rings (1) on reverse synchronizer hub.

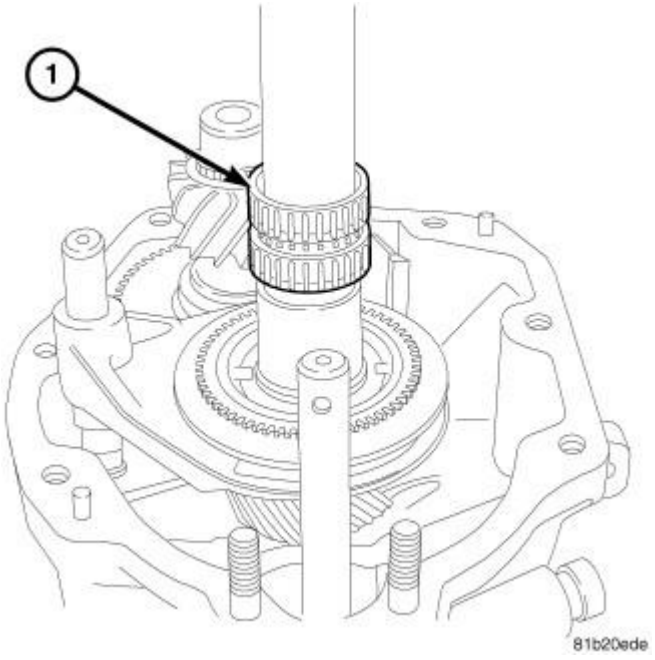

Fig. 183: REVERSE GEAR BEARING

Courtesy of CHRYSLER LLC

40. Install reverse gear bearing (1) on mainshaft.

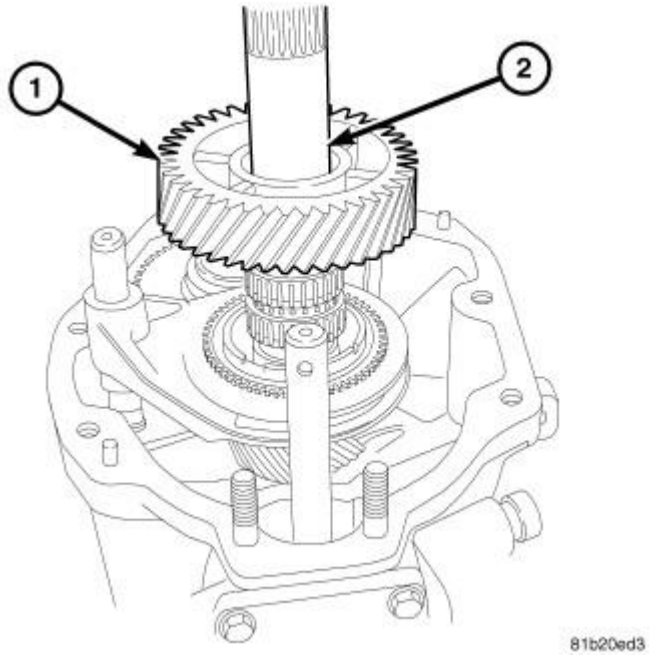

Fig. 184: REVERSE GEAR
Courtesy of CHRYSLER LLC

41. Install reverse gear (1) on mainshaft (2).

CAUTION: Synchronizer rings must be aligned with synchronizer hub and reverse gear during installation. Failure to follow these instructions will result in damage to the synchronizer rings.

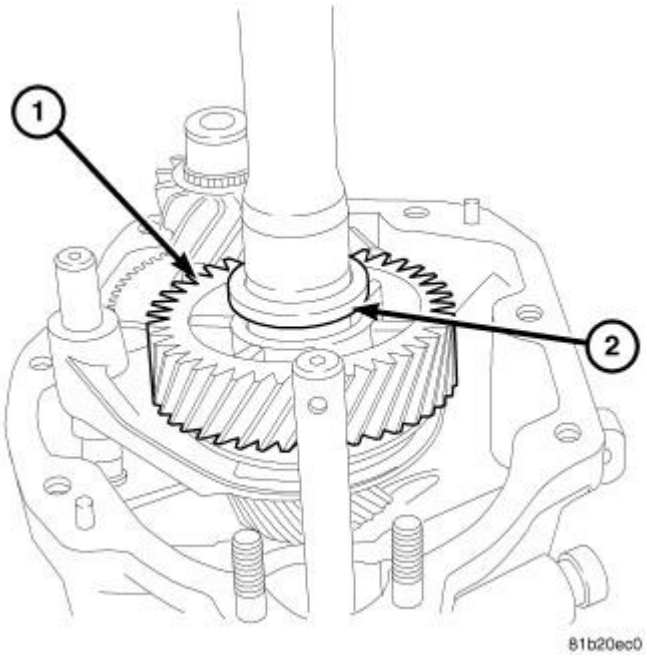

Fig. 185: REVERSE GEAR THRUST WASHER
Courtesy of CHRYSLER LLC

42. Install reverse gear (1) thrust washer (2) on mainshaft.

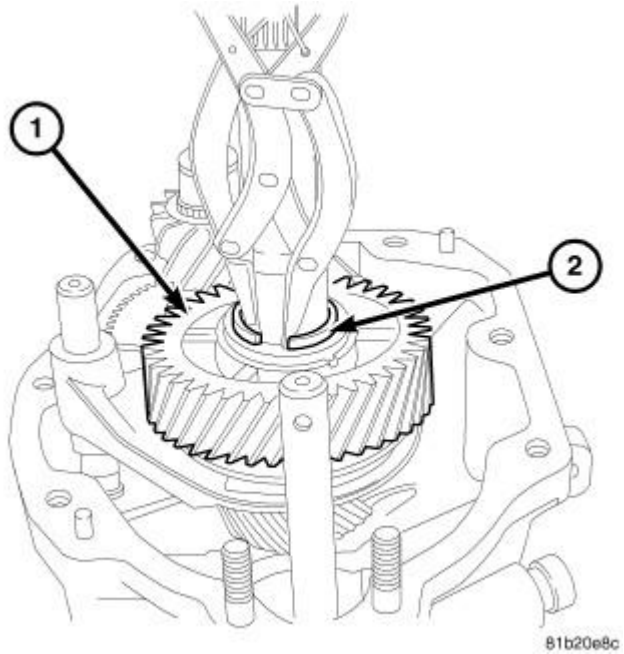

Fig. 186: REVERSE GEAR SNAP RING
Courtesy of CHRYSLER LLC

43. Install reverse gear (1) snap ring (2) on mainshaft.

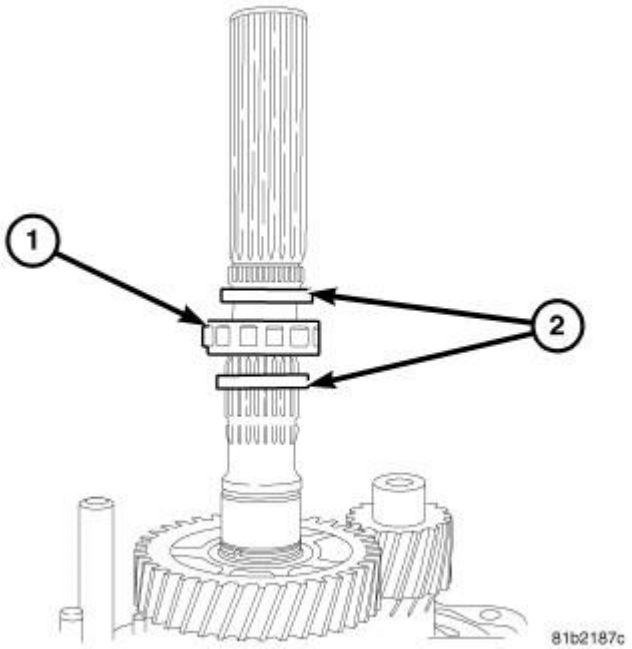

Fig. 187: ROLLER BEARING AND SPACERS
Courtesy of CHRYSLER LLC

44. Install mainshaft roller bearing (1) and spacers (2) on mainshaft.

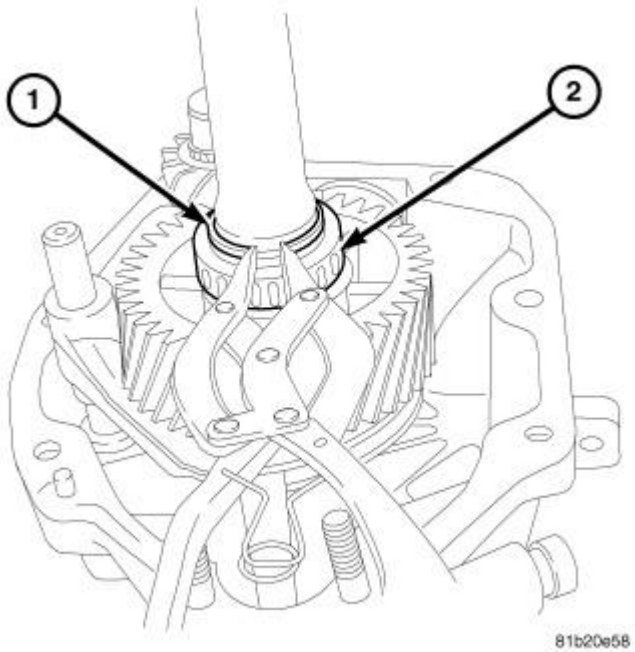

Fig. 188: ROLLER BEARING SNAP-RING
Courtesy of CHRYSLER LLC

45. Install mainshaft roller bearing (1) snap ring (2).

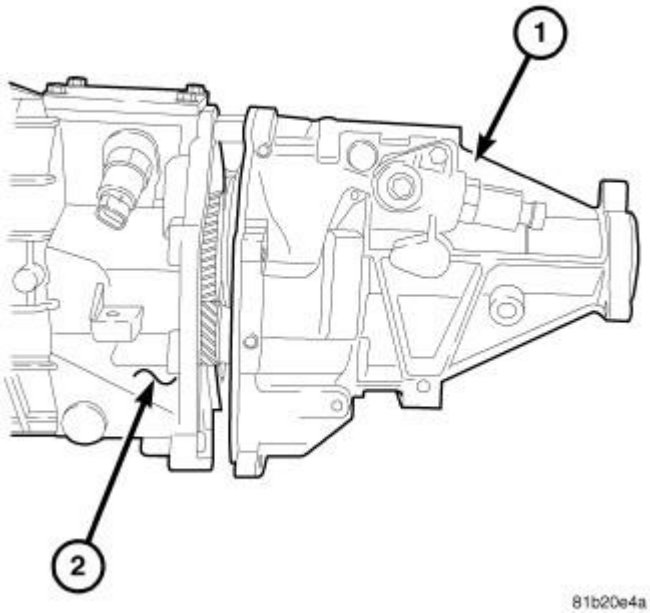

Fig. 189: EXTENSION HOUSING REMOVAL
Courtesy of CHRYSLER LLC

46. Apply Mopar® ATF-RTV to extension housing sealing surface.
47. Install extension housing (1) on transmission case (2).

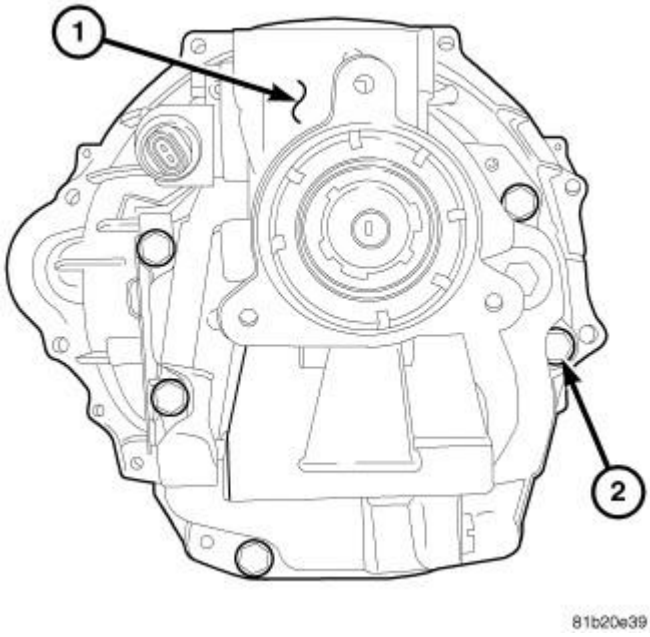

Fig. 190: EXTENSION HOUSING BOLTS
Courtesy of CHRYSLER LLC

48. Install extension housing (1) bolts (2) and tighten bolts to 48 N.m (35 ft. lbs.).

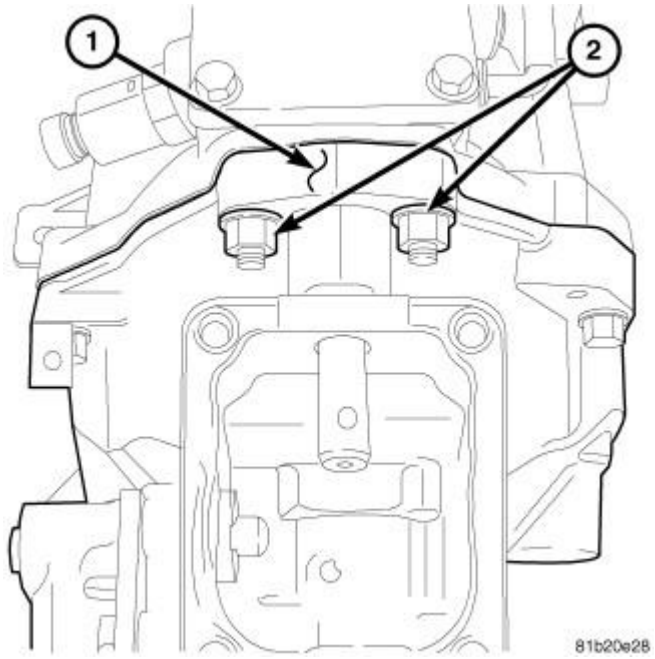

Fig. 191: EXTENSION HOUSING NUTS
Courtesy of CHRYSLER LLC

49. Install extension housing (1) nuts (2) and tighten bolts to 48 N.m (35 ft. lbs.).

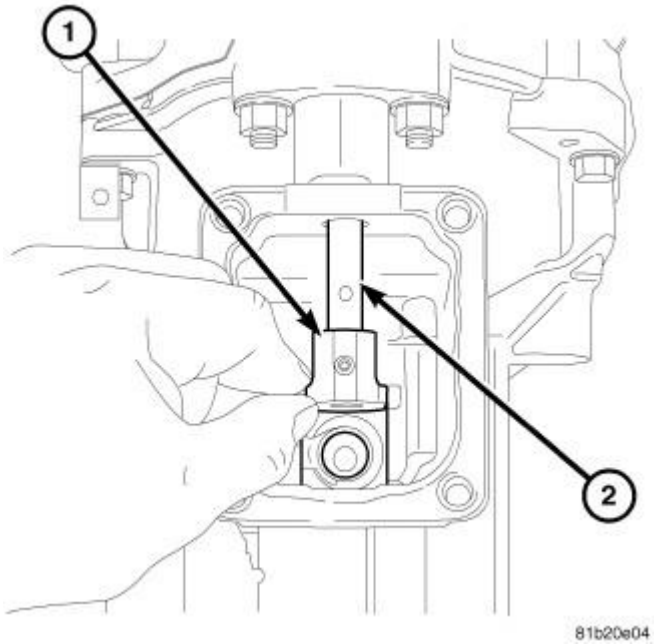

Fig. 192: OFFSET LEVER
Courtesy of CHRYSLER LLC

50. Install offset lever (1) on shift rail (2).

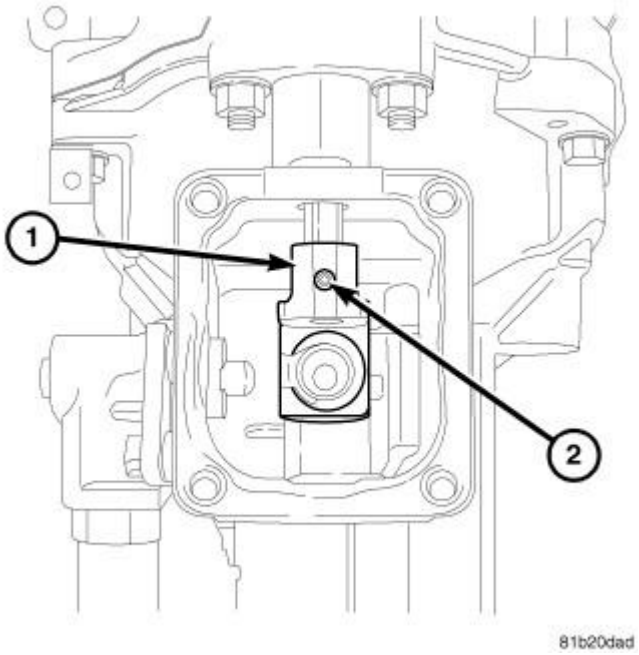

Fig. 193: OFFSET LEVER ROLL PIN
Courtesy of CHRYSLER LLC

51. Install offset lever (1) roll pin (2) with a hammer and punch.

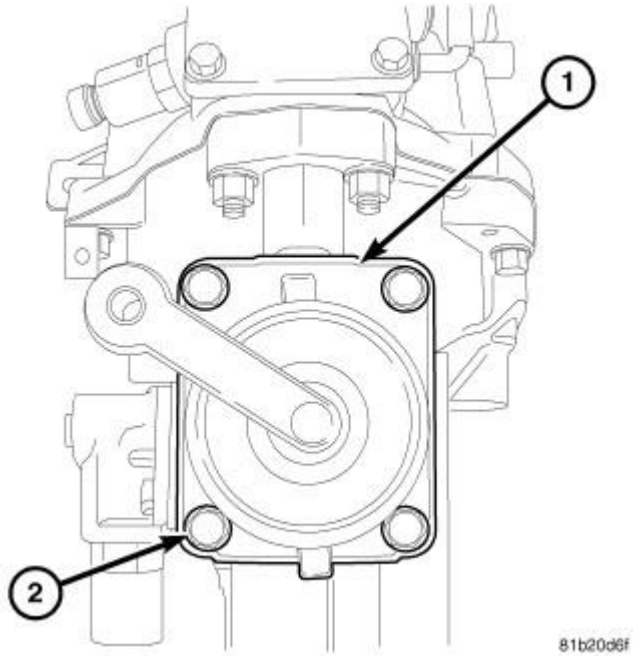

Fig. 194: SHIFT COVER BOLTS
Courtesy of CHRYSLER LLC

52. Install Mopar® ATF-RTV to the shift cover sealing surface.
53. Install shift cover (1) bolts (2) and tighten to 20 N.m (15 ft. lbs.).

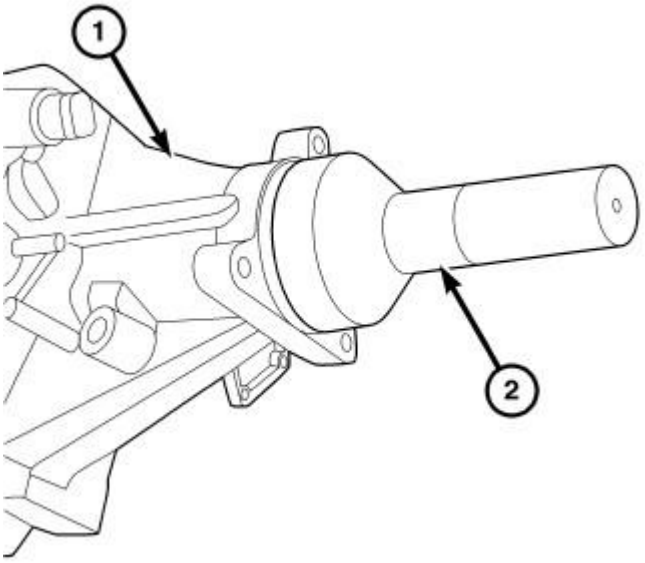

Fig. 195: OUTPUT SEAL INSTALLER
Courtesy of CHRYSLER LLC

54. Install output shaft seal in extension housing (1) with Installer 7884 (2).

INSTALLATION

INSTALLATION

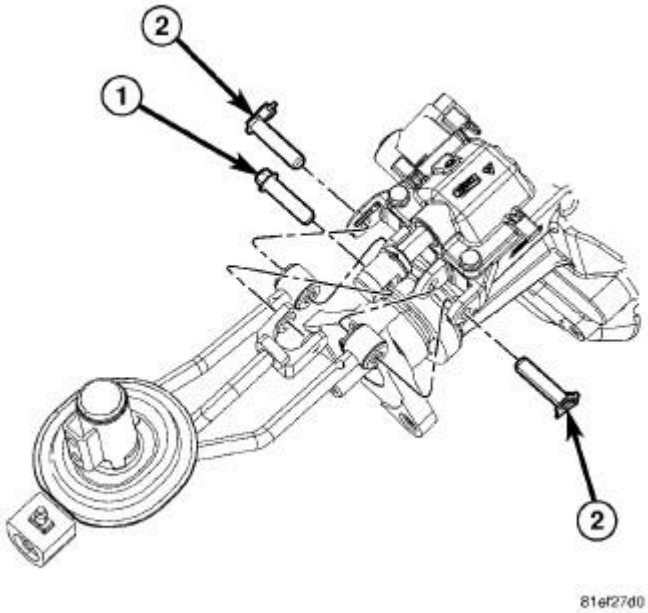

Fig. 196: Identifying Shift Linkage Bolt & Roll Pins
Courtesy of CHRYSLER LLC

1. If necessary install the shift linkage bolt (1) and the roll pins (2) and the shift linkage onto the transmission.

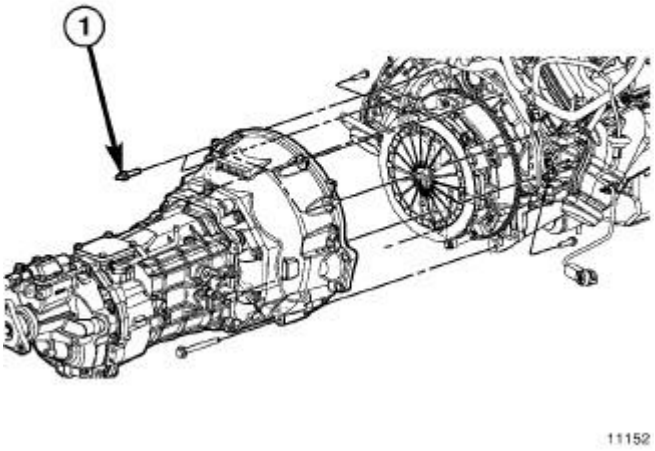

Fig. 197: Identifying Transmission Bolts
Courtesy of CHRYSLER LLC

2. Position the transmission into the clutch and seat against the bell housing.
3. Install transmission bolts (1) and tighten bolts to:
    - Top four bolts to engine - 41 N.m (30 ft. lbs.)
    - Bottom two bolts to engine - 68 N.m (50 ft. lbs.)
    - Bottom four bolts to oil pan - 30 N.m (22 ft. lbs.)

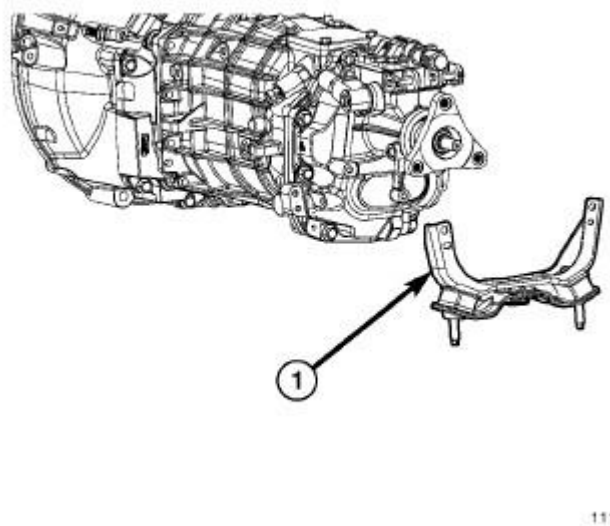

Fig. 198: Isolator
Courtesy of CHRYSLER LLC

4. Install any necessary electrical connectors.
5. Install the isolator (1) with the upper mounting bolts onto the transmission.

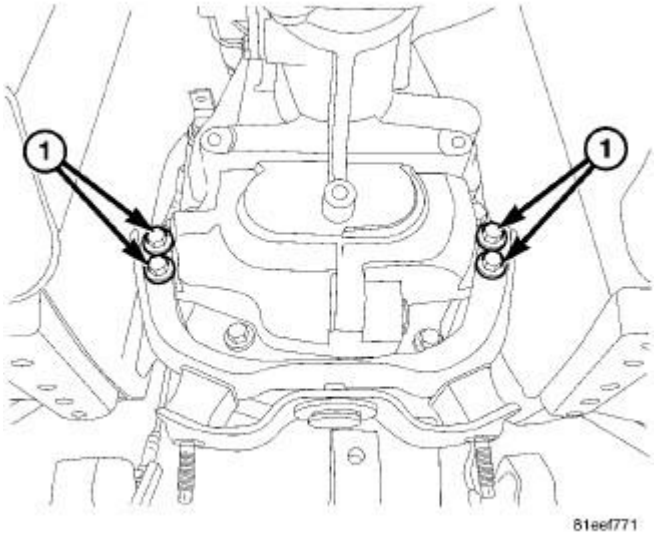

Fig. 199: Transmission Isolator Bracket Upper Bolts
Courtesy of CHRYSLER LLC

6. Tighten the upper isolator bolts (1) to 41 N.m (31 ft.lbs.).

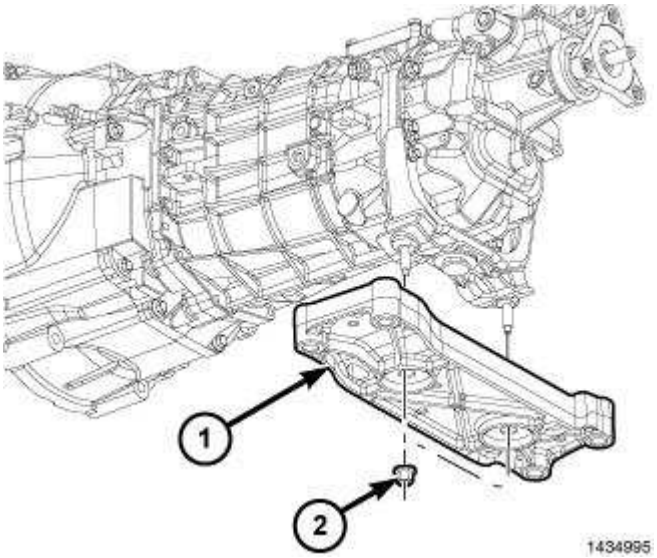

Fig. 200: Identifying Crossmember
Courtesy of CHRYSLER LLC

7. Install the crossmember (1) onto the transmission with the mounting nuts (2).

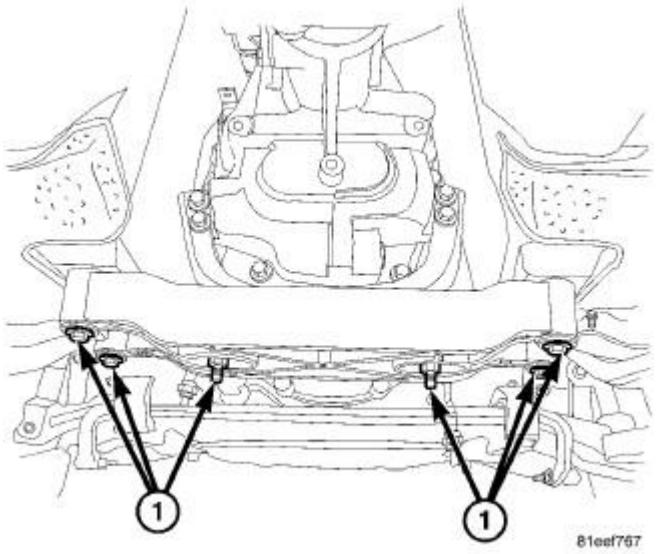

Fig. 201: Identifying Crossmember To Body Bolts
Courtesy of CHRYSLER LLC

8. Install the crossmember to body bolts. Tighten retainers to 61 N.m (45 ft. lbs.).

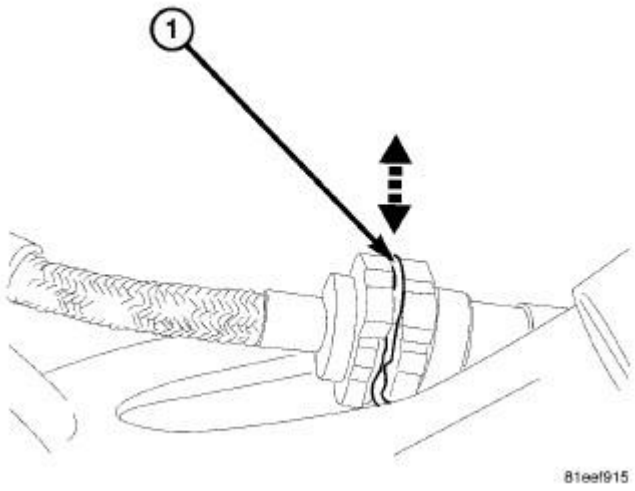

Fig. 202: Identifying Locking Tab
Courtesy of CHRYSLER LLC

9. Install hydraulic clutch hose to the transmission. Push in the locking tab (1), securely.

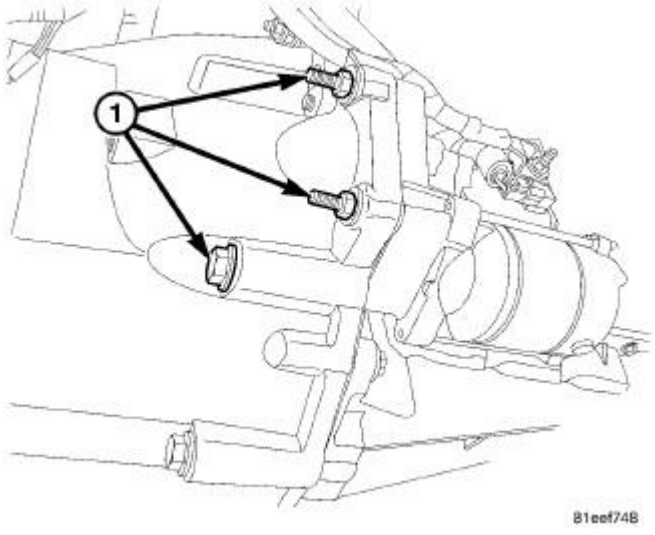

Fig. 203: STARTER BOLTS
Courtesy of CHRYSLER LLC

10. Install the starter motor and the mounting bolts (1). Tighten the bolts to 54 N.m (40 ft. lbs.).

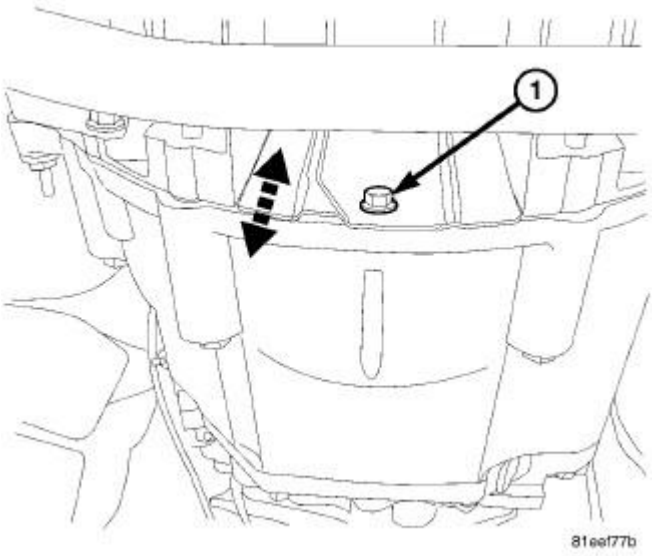

Fig. 204: INSPECTION COVER
Courtesy of CHRYSLER LLC

11. Install the inspection cover and mounting bolt (1). Tighten to 11 N.m (8 ft.lbs.).
12. Install the propeller shaft center bearing support mounting bolts. Tighten the bolts to 27 N.m (20 ft. lbs.).
13. Align the propeller shaft with the pre-scribed marks. Install the propeller shaft flange mounting bolts. Tighten the bolts to 58 N.m (43 ft. lbs.).
14. Install the exhaust system and necessary heat shields. See **EXHAUST SYSTEM** .
15. Lower the vehicle.

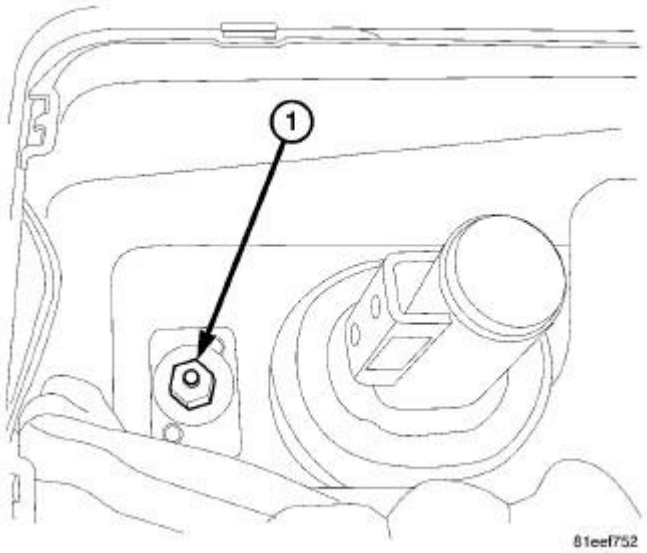

Fig. 205: SHIFTER NUT
Courtesy of CHRYSLER LLC

16. Install the nut (1) securing the shift linkage to the vehicle. Tighten the nut to 20 N.m (15 ft. lbs.).

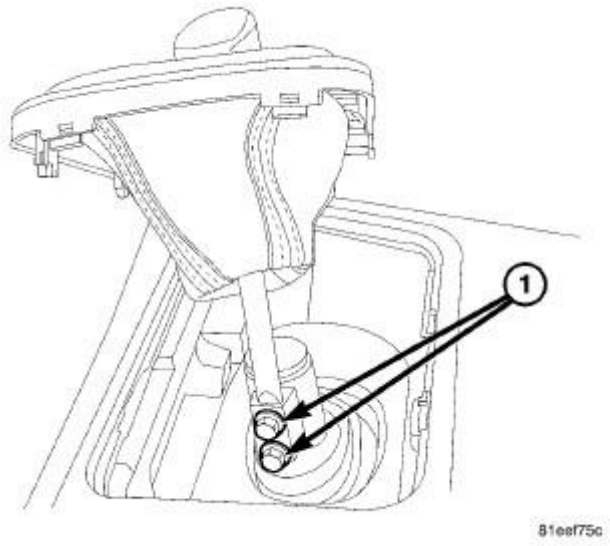

Fig. 206: SHIFTER BOLTS
Courtesy of CHRYSLER LLC

17. Disconnect battery power source.
18. Install the shift lever and the bolts (1). Tighten the bolts to 20 N.m (15 ft. lbs.).
19. Install the shift lever bezel.
20. Check and fill the brake fluid / clutch reservoir as necessary.

NOTE: While bleeding the hydraulic clutch system, be certain the clutch pedal returns to the most upright position. It may take as many as two hundred clutch strokes to bleed the system.

21. Check the operation of the clutch and bleed clutch hydraulic system as necessary.

ADJUSTMENTS

MAINSHAFT/COUNTERSHAFT - END-PLAY

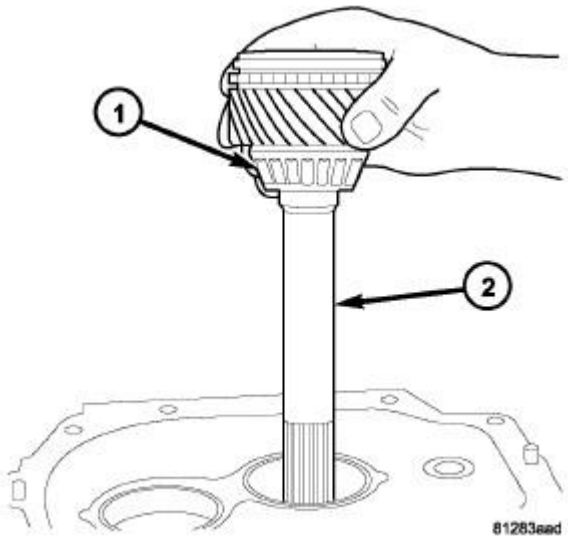

Fig. 207: INPUT SHAFT
Courtesy of CHRYSLER LLC

NOTE: The following procedure must be performed, when a shaft or tapered bearing has been replaced. The measurement is performed with all shims removed from the front adapter.

1. Install input shaft (2) into front adapter.

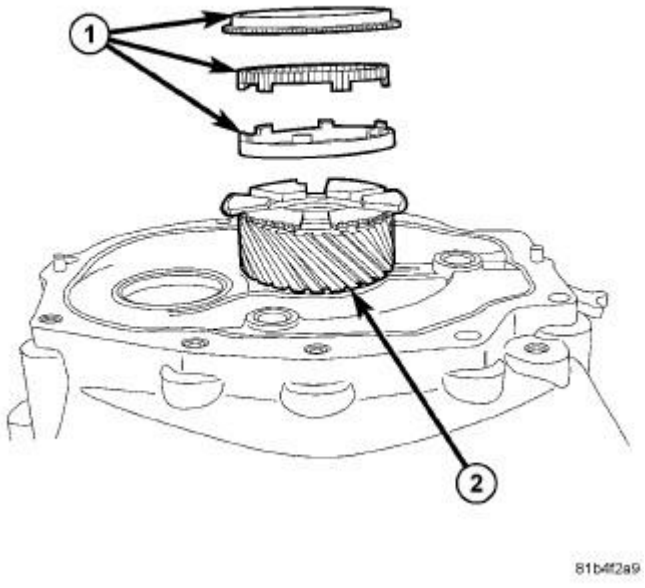

Fig. 208: INPUT SHAFT SYNCHRO RINGS
Courtesy of CHRYSLER LLC

2. Install fourth gear synchronizer rings (1) on input shaft (2).
3. Install mainshaft and countershaft.
4. Install the case and tighten the bolts to 34 N.m (25 ft. lbs).

MAINSHAFT BEARINGS END-PLAY

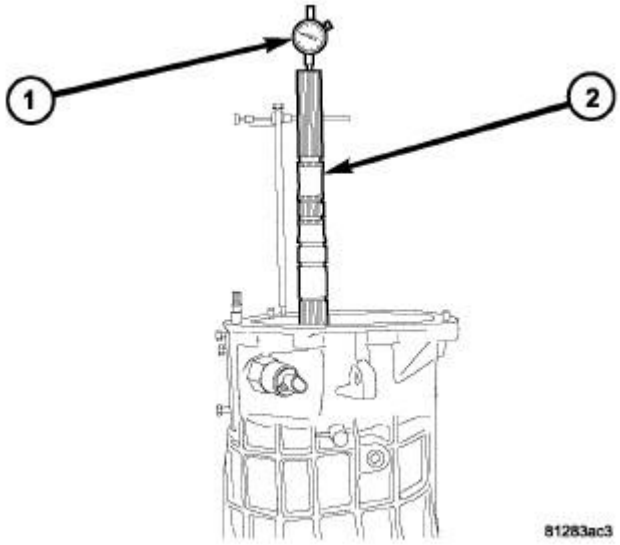

Fig. 209: MAINSHAFT
Courtesy of CHRYSLER LLC

1. Rotate input shaft/mainshaft several time to seat the bearings.
2. Screw dial indicator Stud 8161 into the case.
3. Attach a dial indicator (1) to the stud and set dial indicator (1) plunger on the end of the mainshaft (2).
4. Zero the dial indicator (1), then push up on the input shaft and record the dial indicator end-play measurement.
5. Subtract 0.0127 - 0.0889 mm (0.0005 - 0.0035 in.) from the recorded dial indicator end-play measurement. The remainder is the shim thickness needed behind the input shaft bearing cup in the front adapter.

COUNTERSHAFT BEARINGS END-PLAY

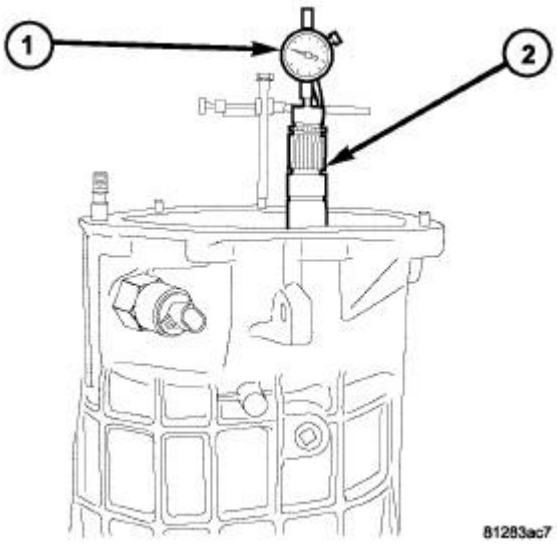

Fig. 210: COUNTERSHAFT
Courtesy of CHRYSLER LLC

1. Rotate countershaft several time to seat the bearings.
2. Screw Stud 8161 into the case.
3. Attach a dial indicator (1) to the stud and set dial indicator (1) plunger on the end of the countershaft (2).
4. Zero dial indicator, then pull up on the countershaft and record the dial indicator end-play measurement.
5. Subtract 0.0127 - 0.0889 mm (0.0005 - 0.0035 in.) from the recorded dial indicator end-play measurement. The remainder is the shim thickness needed behind the countershaft bearing cup in the front adapter.

SPECIFICATIONS

MANUAL TRANSMISSION - TR6060

TORQUE SPECIFICATIONS

DESCRIPTION	N.m	Ft. Lbs.	In. Lbs.
Drain Plug	27	20	-
Fill Plug	27	20	-
Clutch Housing Bolts	34	25	-
Clutch Release Bearing Bolts	12	9	-
Shifter Assembly	20	15	-
Top Cover Bolts	20	15	-
Extension Housing Nuts	48	35	-

Extension Housing Bolts	48	33	-
Adapter Bolts	34	25	-
* Side Shift Detent	40	30	-
* Roller Detent Bolt	40	30	-
Back Up Lamp Switch	34	25	-
Skip Shift Solenoid	34	25	-
Reverse Lockout Solenoid Bolt	18	13	-
Guide Plate Bolts	22	16	-
*Shift Lever Guide Bolts	27	20	-
* Reverse Idler Bracket Bolts	30	22	-
*Flywheel Bolts	74	55	-
Transmission Crossmember Bolts	61	45	-
Transmission Mount Bolts	41	30	-
Top Four Transmission To Engine Bolts	41	30	-
Bottom Two Transmission To Engine Bolts	68	50	-
Transmission To Oil Pan Bolts	30	22	200
Dust Shield Bolts	11	-	95
*U-joint Clamp Bolts	38	28	-
* Needs application of Mopar Lock AND Seal Adhesive or equivalent			

SHAFT END-PLAY

SHAFT	END-PLAY
MAINSHAFT	0.0127 - 0.0889 mm (0.0005 - 0.0035 in.)
COUNTERSHAFT	0.0127 - 0.0889 mm (0.0005 - 0.0035 in.)

GEAR RATIO

GEAR	RATIO
FIRST	2.97
SECOND	2.10
THIRD	1.46
FOURTH	1.00
FIFTH	0.74

SIXTH	0.50
REVERSE	2.90

SPECIAL TOOLS

MANUAL TRANSMISSION - TR6060

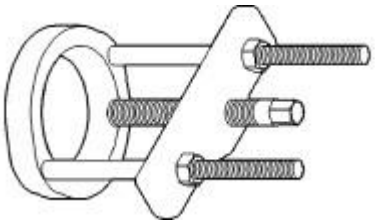

Fig. 211: PULLER C-293-PA
Courtesy of CHRYSLER LLC

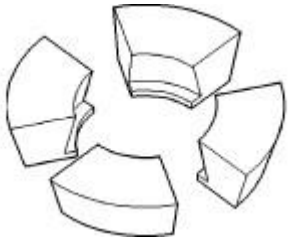

Fig. 212: ADAPTERS C-293-47
Courtesy of CHRYSLER LLC

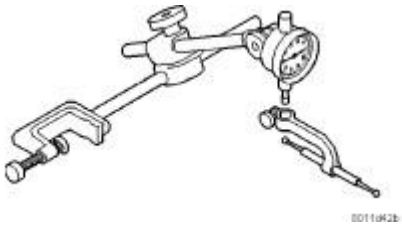

Fig. 213: DIAL INDICATOR C-3339
Courtesy of CHRYSLER LLC

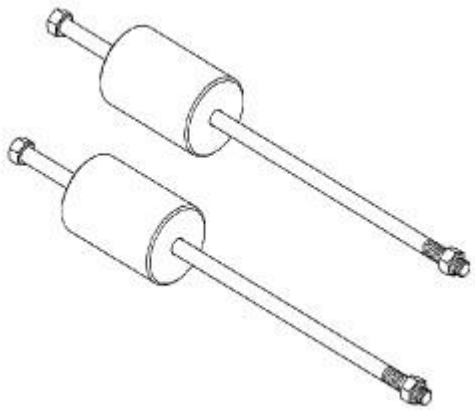

Fig. 214: SLIDE HAMMER C-3752
Courtesy of CHRYSLER LLC

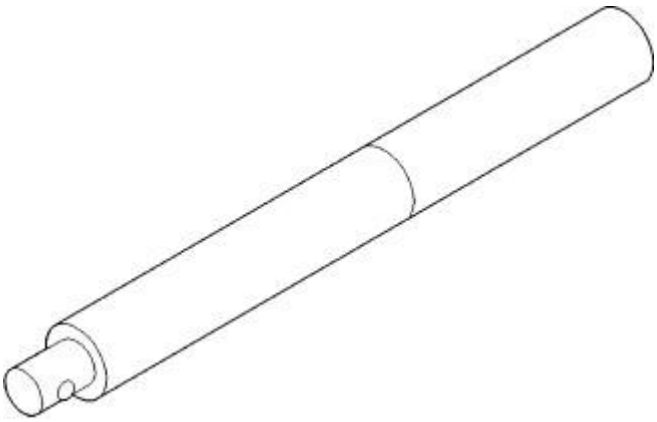

Fig. 215: HANDLE C-4171
Courtesy of CHRYSLER LLC

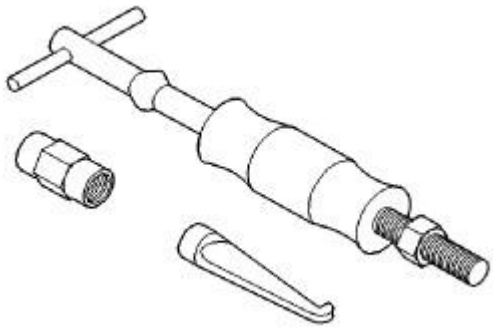

Fig. 216: SLIDE HAMMER C-637
Courtesy of CHRYSLER LLC

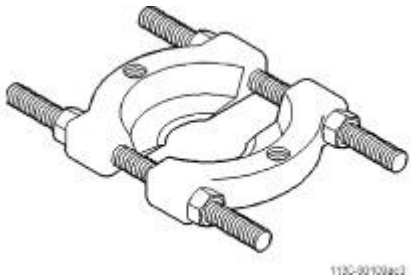

Fig. 217: SPLITTER P-334
Courtesy of CHRYSLER LLC

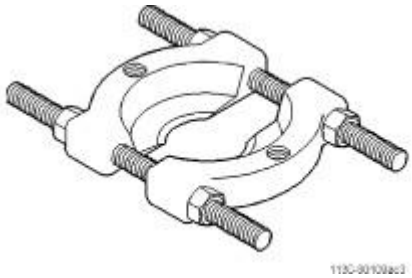

Fig. 218: SPLITTER 1130
Courtesy of CHRYSLER LLC

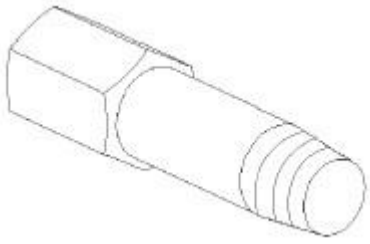

Fig. 219: BUSHING REMOVER 6786
Courtesy of CHRYSLER LLC

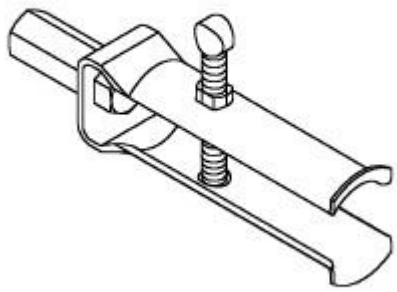

Fig. 220: REMOVER 7794-A
Courtesy of CHRYSLER LLC

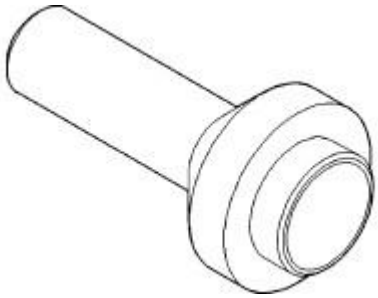

Fig. 221: INSTALLER 7884
Courtesy of CHRYSLER LLC



Fig. 222: STUD 8161
Courtesy of CHRYSLER LLC

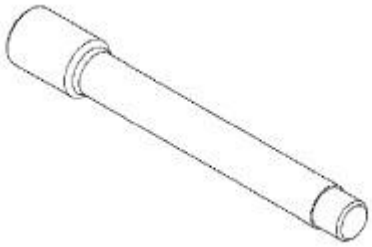

Fig. 223: BUSHING INSTALLER 8475
Courtesy of CHRYSLER LLC

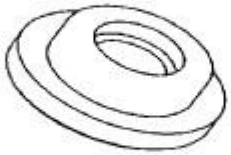

Fig. 224: INSTALLER 9366
Courtesy of CHRYSLER LLC

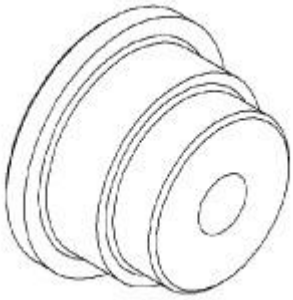

Fig. 225: INSTALLER 9373
Courtesy of CHRYSLER LLC



Fig. 226: ADAPTER 9377
Courtesy of CHRYSLER LLC

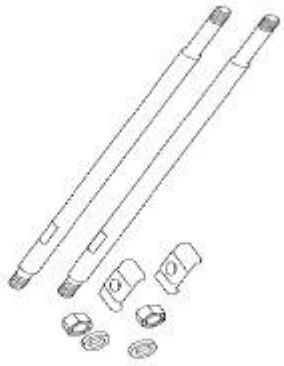

Fig. 227: BOLTS 9378
Courtesy of CHRYSLER LLC

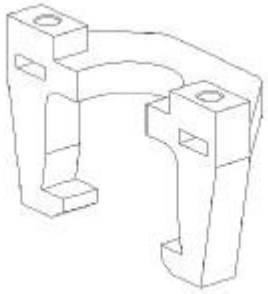

Fig. 228: REMOVER 9379
Courtesy of CHRYSLER LLC

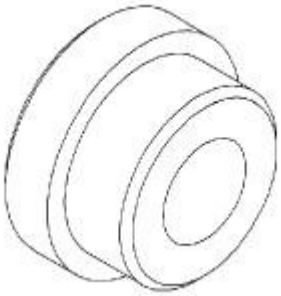

Fig. 229: INSTALLER 9380
Courtesy of CHRYSLER LLC

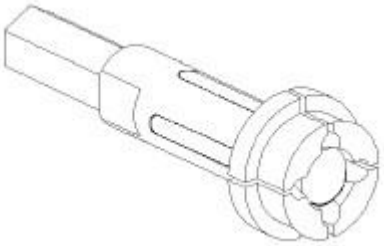

Fig. 230: REMOVER 9381
Courtesy of CHRYSLER LLC

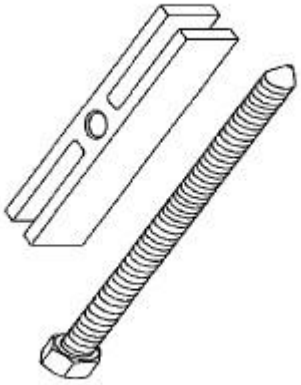

Fig. 231: BRIDGE 9382
Courtesy of CHRYSLER LLC

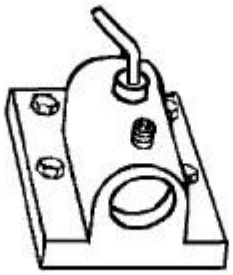

Fig. 232: BENCH FIXTURE 9385
Courtesy of CHRYSLER LLC

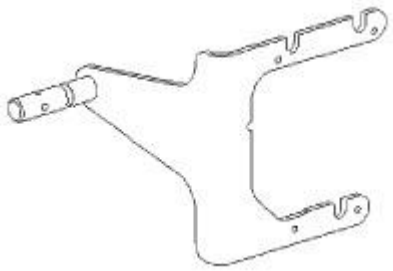

Fig. 233: TRANSMISSION FIXTURE 9387
Courtesy of CHRYSLER LLC



Fig. 234: INSTALLER 9391
Courtesy of CHRYSLER LLC

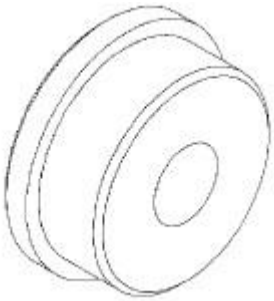

Fig. 235: INSTALLER 9392
Courtesy of CHRYSLER LLC

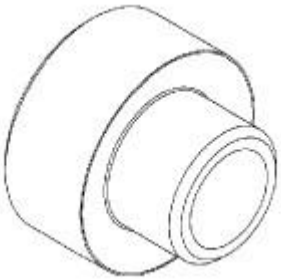

Fig. 236: INSTALLER 9394
Courtesy of CHRYSLER LLC

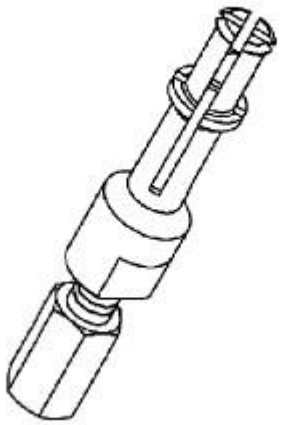

Fig. 237: REMOVER 9609
Courtesy of CHRYSLER LLC

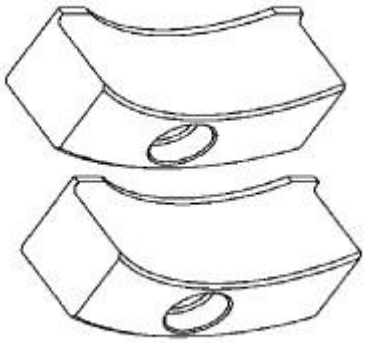

Fig. 238: PULLER 10026
Courtesy of CHRYSLER LLC



Fig. 239: BUTTON 10027
Courtesy of CHRYSLER LLC



Fig. 240: INSTALLER 10028
Courtesy of CHRYSLER LLC

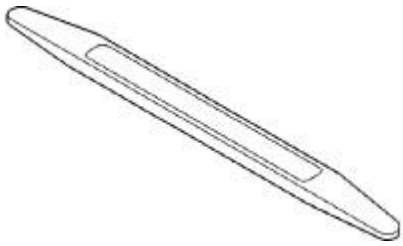

Fig. 241: Trim Stick C-4755
Courtesy of CHRYSLER LLC

INPUT SHAFT, TRANSMISSION

REMOVAL

REMOVAL

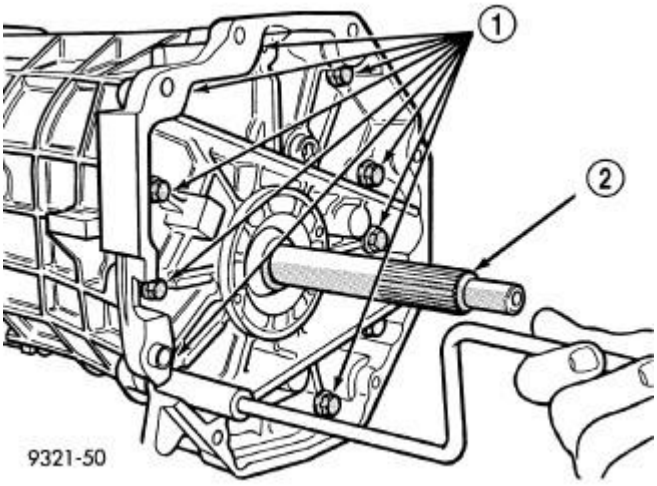

Fig. 242: Front Adapter Bolts
Courtesy of CHRYSLER LLC

NOTE: If input shaft is damaged behind the seal, the transmission must be disassembled and inspected.

1. Measure output shaft end play and record number.
2. Remove clutch slave cylinder from transmission adapter plate.
3. Remove front adapter plate bolts (1).

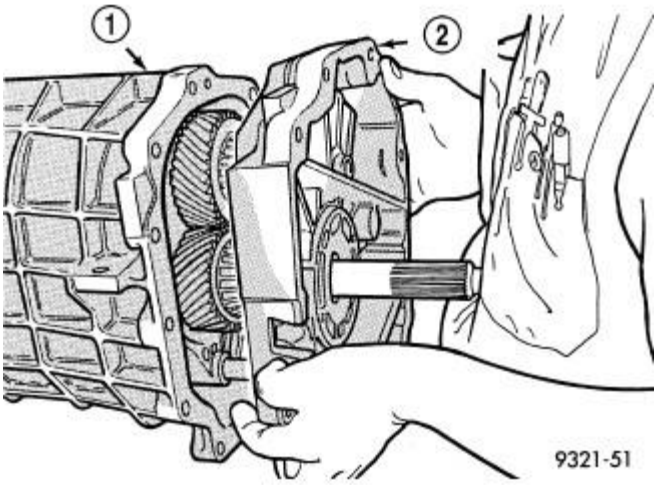

Fig. 243: Removing Adapter
Courtesy of CHRYSLER LLC

4. Pry front cover adapter loose.
5. Hold input shaft while removing adapter (2).
6. Remove input shaft seal from adapter with a seal puller.
7. Clean and inspect all sealing surfaces for wear or damage.

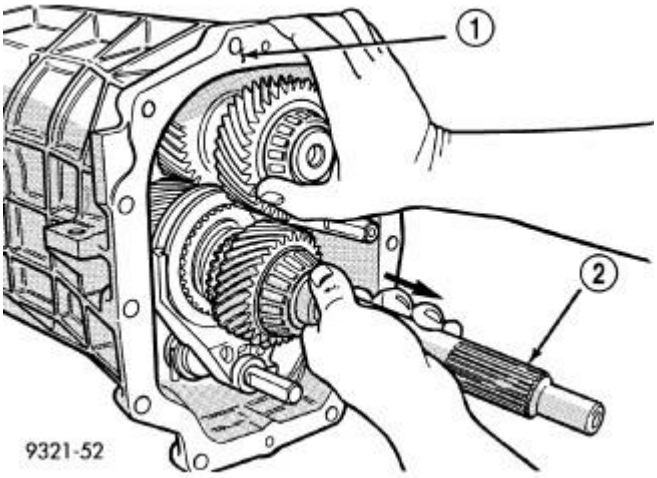

Fig. 244: Removing Input Shaft
Courtesy of CHRYSLER LLC

8. Lift countershaft slightly and remove input shaft (2) from transmission (1).

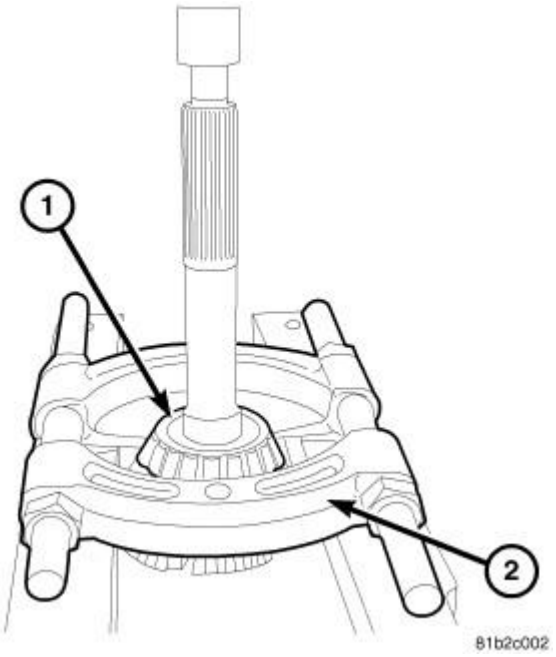

Fig. 245: INPUT SHAFT BEARING
Courtesy of CHRYSLER LLC

9. Remove input shaft bearing (1) with Splitter 1130 (2) and a press.

INSTALLATION

INSTALLATION

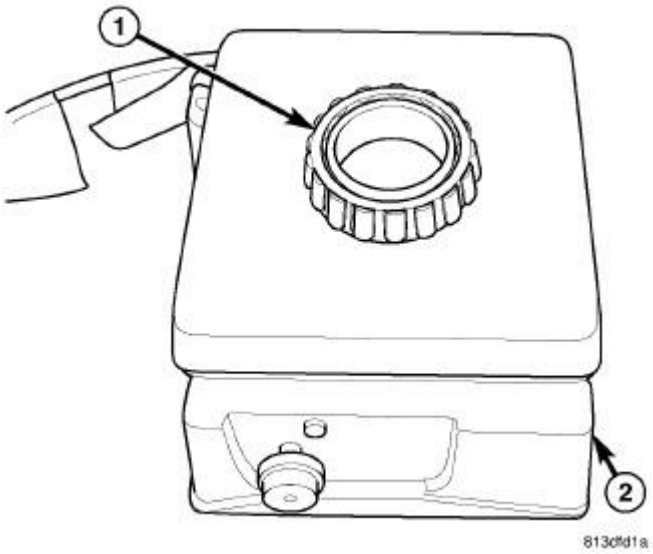

Fig. 246: BEARING HEATER
Courtesy of CHRYSLER LLC

WARNING: Use tongs or welding gloves when handling heated components. Failure to follow these instructions will result in personal injury.

CAUTION: Bearings (1) are installed using a Bearing Heater (2). Use only a bearing heater/hot plate and follow manufacture's instructions. Heat components to 100 - 149 Celsius (212° Min. - 300° Max Fahrenheit). Never use an open flame to heat components. Never leave components on heater for an extended amount of time. If component is discolored after heating, the component has been overheated and must not be used. Failure to follow these instructions will result in component damage.

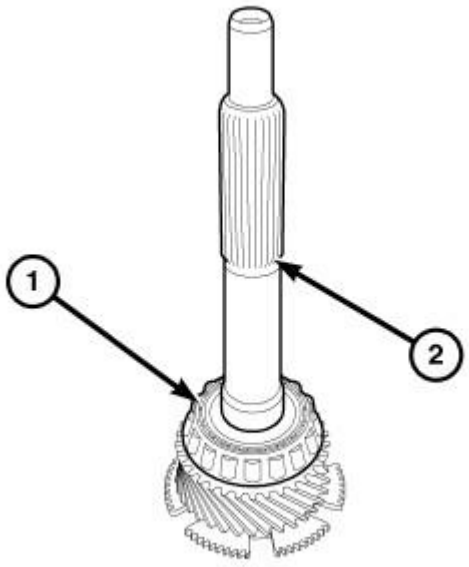

Fig. 247: INPUT SHAFT BEARING
Courtesy of CHRYSLER LLC

1. Heat input shaft bearing to 100 - 149 Celsius (212° Min. - 300° Max Fahrenheit). Install bearing (1) on input shaft (2) with tongs or welding gloves.
2. Install new bearing cup in front adapter with original shim behind cup.
3. Clean sealing surfaces of the transmission case and adapter plate.
4. Install input shaft and adapter plate.
5. Check output shaft end play and adjust shim to achieve the original reading.

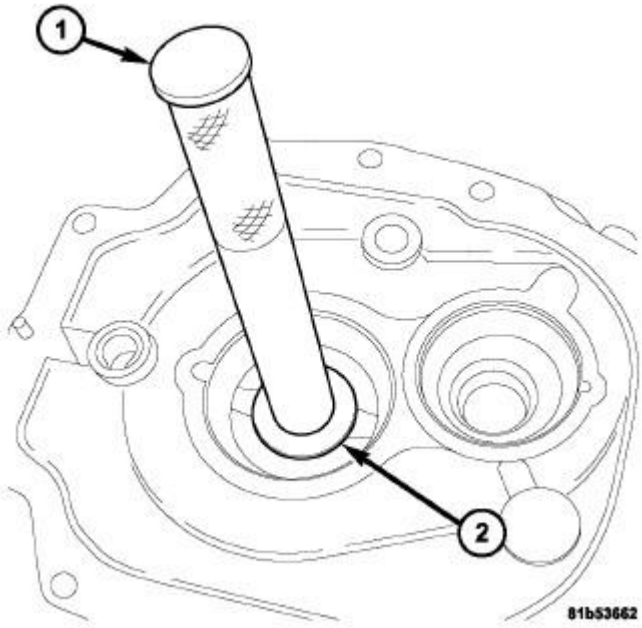

Fig. 248: INPUT SHAFT SEAL
Courtesy of CHRYSLER LLC

6. Remove adapter plate and install a new input shaft seal with Handle C-4171 and Installer 9366.
7. Apply Mopar® ATF-RTV to the cleaned sealing surfaces.
8. Install adapter and tighten bolts to 34 N.m (25 ft. lbs.).

LEVER, SHIFT

REMOVAL

REMOVAL

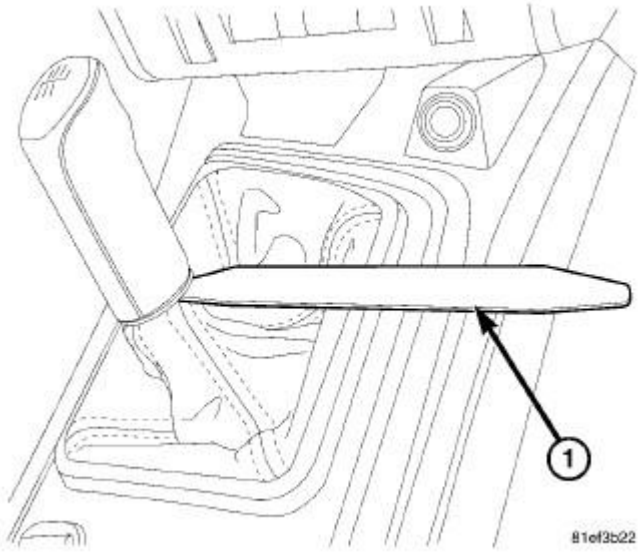

Fig. 249: Trim Stick C-4755
Courtesy of CHRYSLER LLC

1 - TRIM STICK C-4755

1. Using a trim stick C-4755, separate the shifter boot from the shift lever.

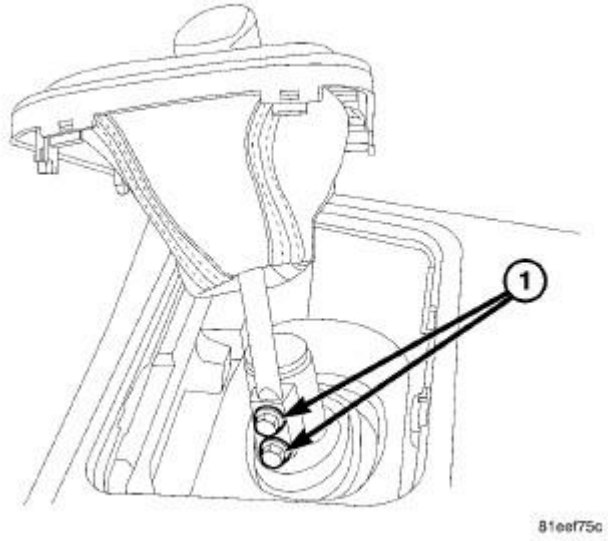

Fig. 250: SHIFT LEVER BOLTS
Courtesy of CHRYSLER LLC

2. Remove the shift lever bezel.
3. Remove the shift lever bolts (1) and the shift lever.

INSTALLATION

INSTALLATION

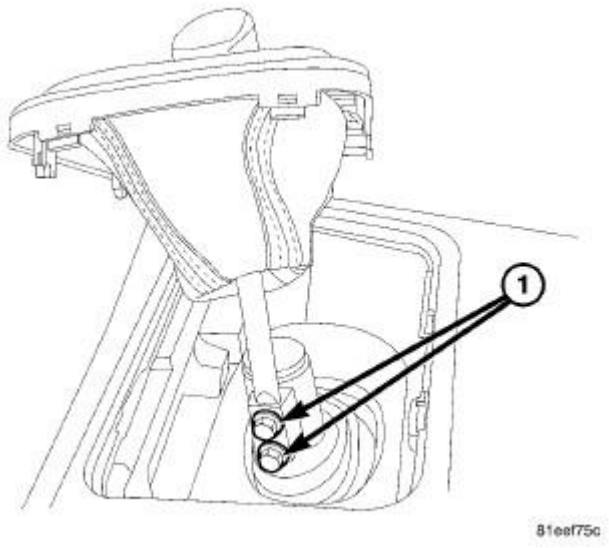

Fig. 251: SHIFT LEVER BOLTS
Courtesy of CHRYSLER LLC

1. Install shift lever boot onto shift lever.
2. Install shift lever into shifter assembly.
3. Install shift lever mounting bolts into shifter assembly. Tighten the bolts to 20 N.m (15 ft. lbs.)
4. Install the shift lever bezel.

MECHANISM, GEARSHIFT

REMOVAL

REMOVAL

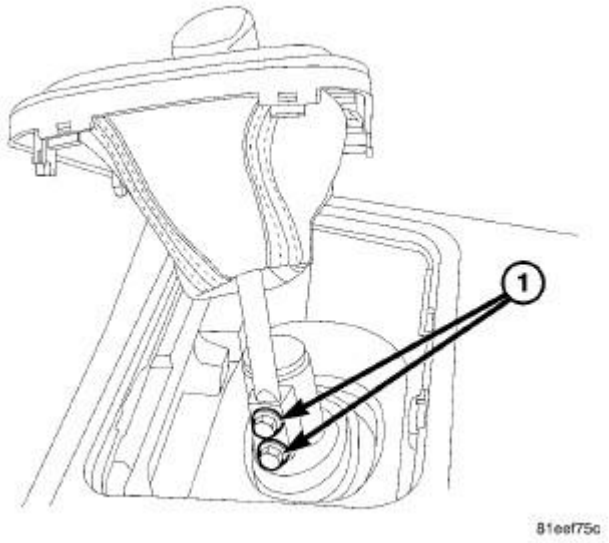

Fig. 252: SHIFT LEVER BOLTS
Courtesy of CHRYSLER LLC

1. Disconnect battery power source.
2. Place transmission in neutral. Using a trim stick, remove the shifter bezel to expose the shift lever mounting bolts. Remove the bolts (1).

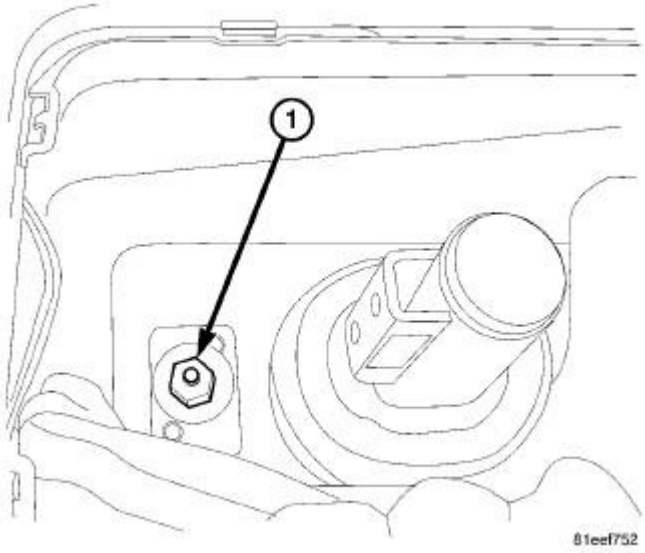

Fig. 253: SHIFTER NUT
Courtesy of CHRYSLER LLC

3. Remove the nut (1) securing the shift linkage to the vehicle.
4. Hoist and secure the vehicle.
5. Remove the exhaust system. Refer to **Exhaust System/MUFFLER, Exhaust - Removal**

6. Remove the propeller shaft center bearing heat shield. Refer to **Exhaust System/SHIELD, Heat - Removal**
7. Mark propeller shaft and the transmission flange for assembly alignment.
8. Remove the center bearing support mounting bolts.
9. Remove the propeller shaft.

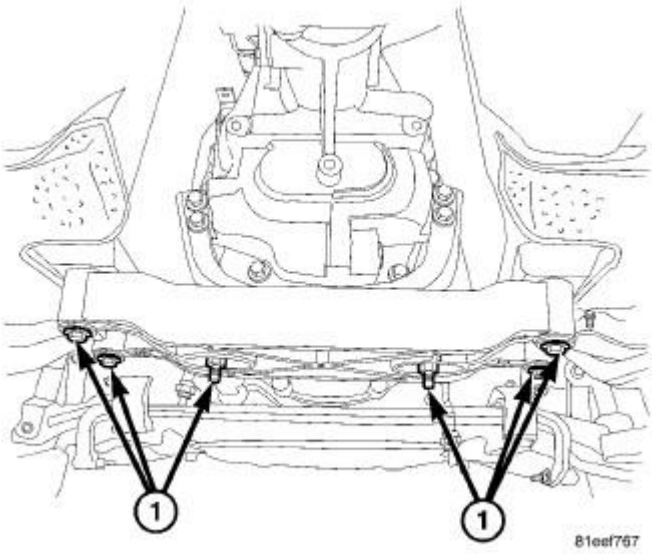

Fig. 254: Identifying Crossmember To Body Bolts
Courtesy of CHRYSLER LLC

10. Raise transmission slightly with service jack to relieve load on crossmember and supports.
11. Remove the crossmember and isolator mounting bolts (1). Remove the crossmember.
12. Lower the transmission enough to gain access to the shift linkage.

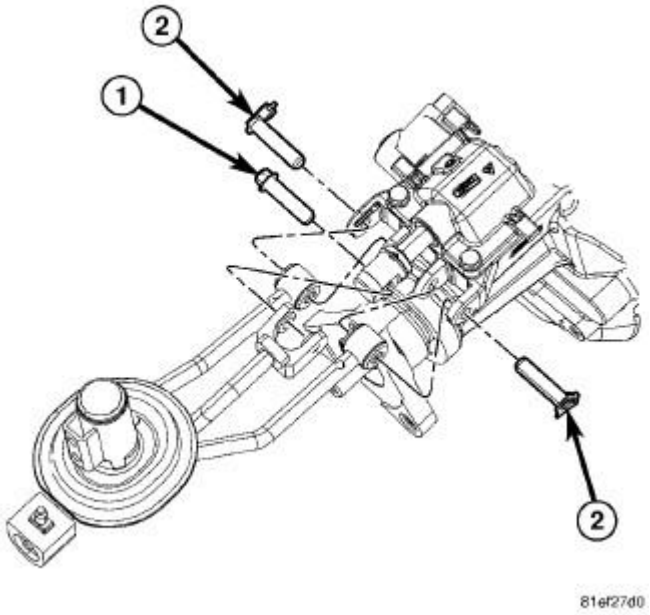

Fig. 255: Identifying Shift Linkage Bolt & Roll Pins
Courtesy of CHRYSLER LLC

1 - SHIFT LINKAGE MOUNTING BOLT
2 - SHIFT LINKAGE ROLL PINS

13. Remove the shifter linkage bolt (1).

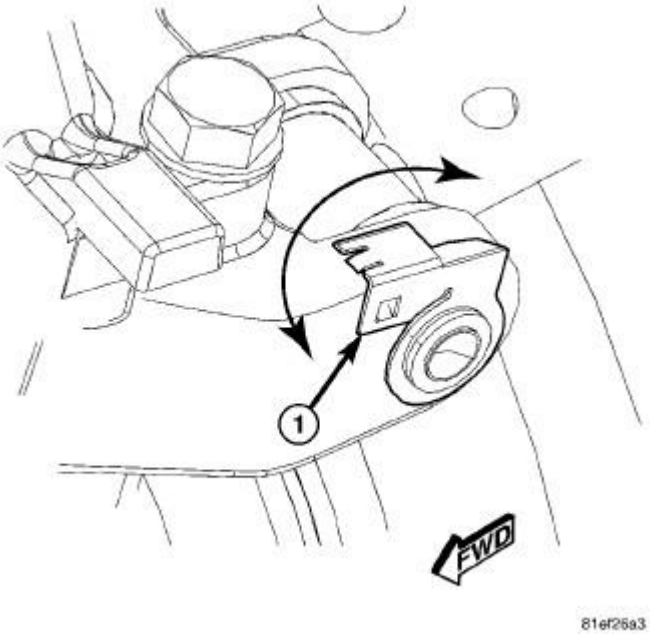

Fig. 256: SHIFTER ROLL PIN ROTATION
Courtesy of CHRYSLER LLC

14. Rotate each of the shift linkage roll pin locking tab (1).

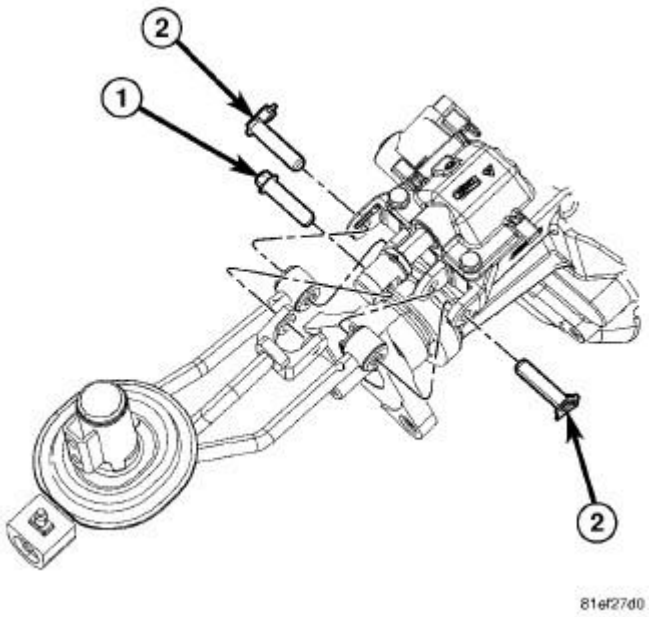

Fig. 257: Identifying Shift Linkage Bolt & Roll Pins
Courtesy of CHRYSLER LLC

1 - SHIFT LINKAGE MOUNTING BOLT
2 - SHIFT LINKAGE ROLL PINS

15. Remove the shifter roll pins (2) and the shift linkage assembly.

INSTALLATION

INSTALLATION

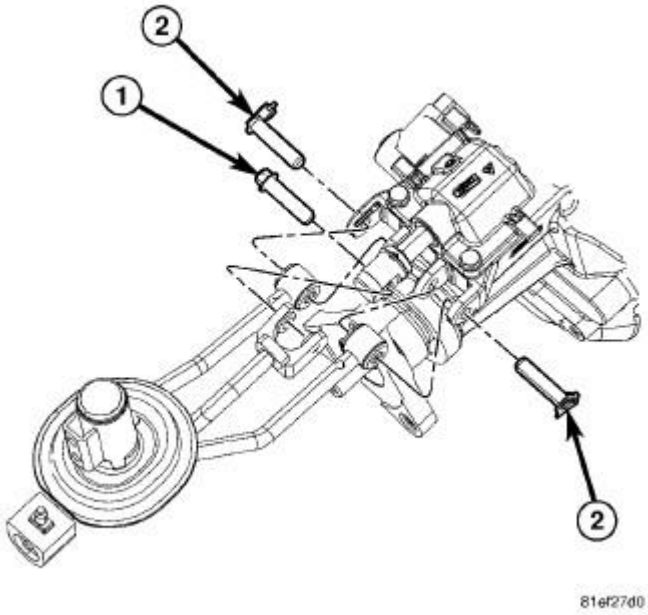

Fig. 258: Identifying Shift Linkage Bolt & Roll Pins
Courtesy of CHRYSLER LLC

1 - SHIFT LINKAGE MOUNTING BOLT 2 - SHIFT LINKAGE ROLL PINS

1. Install the shift linkage assembly onto the transmission. Install the shifter roll pins (2).

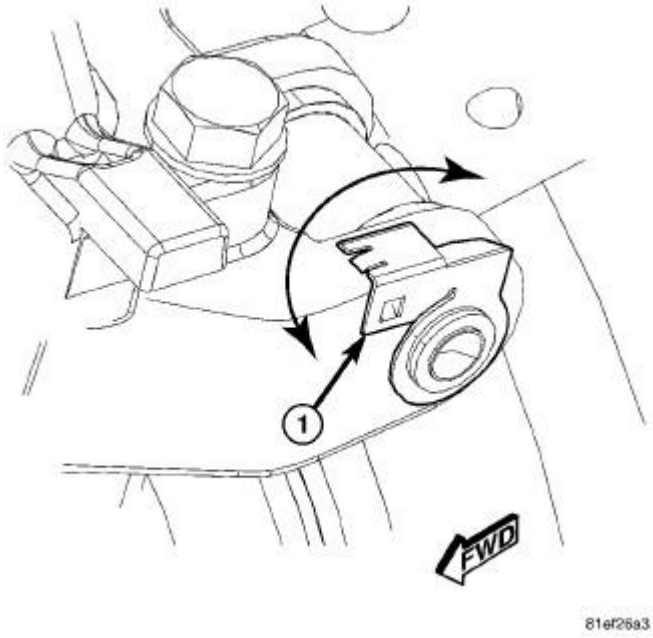

Fig. 259: SHIFTER ROLL PIN ROTATION
Courtesy of CHRYSLER LLC

2. Rotate each of the shift linkage roll pin locking tabs (1) into place.

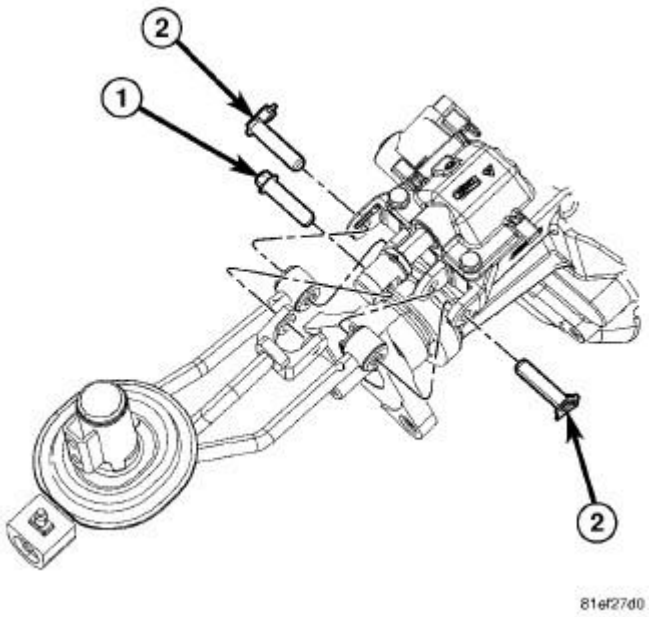

Fig. 260: Identifying Shift Linkage Bolt & Roll Pins
Courtesy of CHRYSLER LLC

1 - SHIFT LINKAGE MOUNTING BOLT
2 - SHIFT LINKAGE ROLL PINS

3. Install the shifter linkage bolt (1). Tighten the bolt to 20 N.m (15 ft. lbs.)

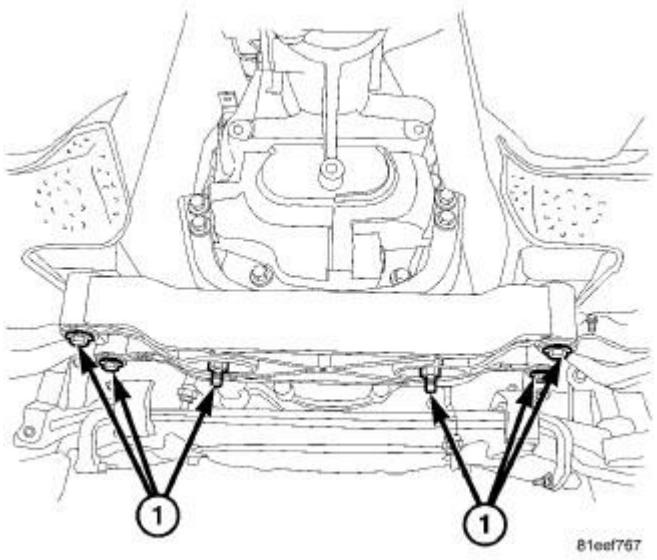

Fig. 261: Identifying Crossmember To Body Bolts
Courtesy of CHRYSLER LLC

4. Raise the transmission into place and install transmission crossmember. Tighten crossmember bolts (1) to 61 N.m (45 ft. lbs.).
5. Install the propeller shaft center bearing support mounting bolts. Tighten the bolts to 27 N.m (20 ft. lbs.).
6. Align the propeller shaft with the pre-scribed marks. Install the propeller shaft flange mounting bolts. Tighten the bolts to 58 N.m (43 ft. lbs.).
7. Install the propeller shaft center bearing heat shield. Refer to **Exhaust System/SHIELD, Heat - Installation**
8. Install the exhaust system. Refer to **Exhaust System/MUFFLER, Exhaust - Installation**
9. Lower the vehicle.

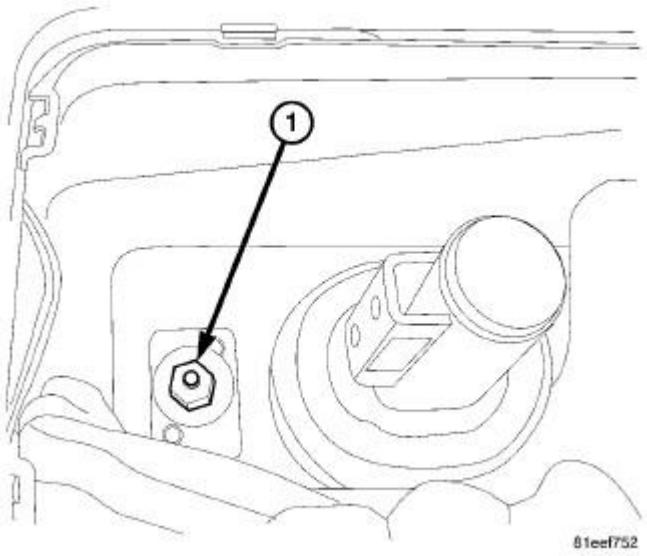

Fig. 262: SHIFTER NUT
Courtesy of CHRYSLER LLC

10. Install the nut (1) securing the shift linkage to the vehicle. Tighten the nut to 20 N.m (15 ft. lbs.).

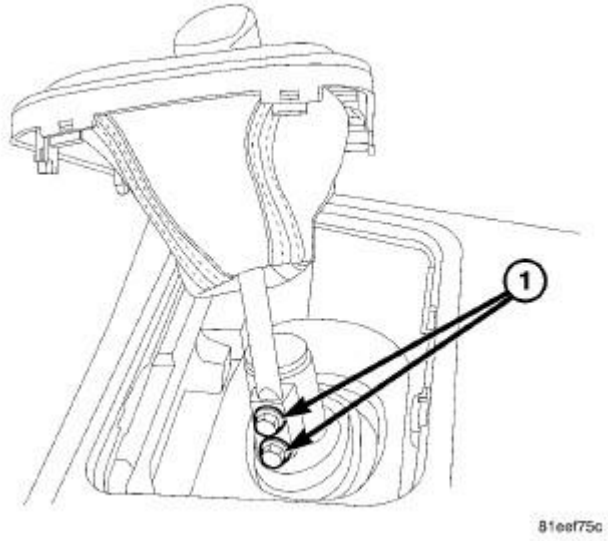

Fig. 263: SHIFTER BOLTS
Courtesy of CHRYSLER LLC

11. Install the shift lever and the bolts (1). Tighten the bolts to 20 N.m (15 ft. lbs.).
12. Install the shift lever bezel.

SEAL, EXTENSION HOUSING

REMOVAL

REMOVAL

1. Remove belly pan.
2. Remove propeller shaft.
3. Remove seal with seal puller.
4. Clean and inspect extension housing seal location.

INSTALLATION

INSTALLATION

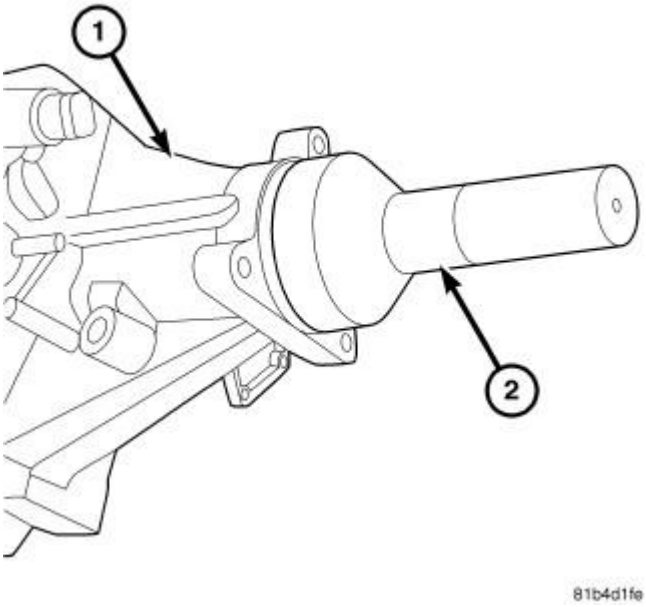

Fig. 264: OUTPUT SEAL INSTALLER
Courtesy of CHRYSLER LLC

1. Install output shaft seal into extension housing (1) with Installer 7884 (2).
2. Install propeller shaft.

CAUTION: The drive shaft strap bolts use a Loctite patch, the bolts must be replaced or cleaned and applied Mopar ® Lock AND Seal Adhesive or equivalent. Replace drive shaft joint straps whenever they are removed. The straps slightly deform when torqued in place. Reuse of the straps may result in reduced clamp load on the universal joint cap.

3. Check transmission fluid level.
4. Install belly pan.

SOLENOID, TRANSMISSION SKIP SHIFT

DESCRIPTION

DESCRIPTION

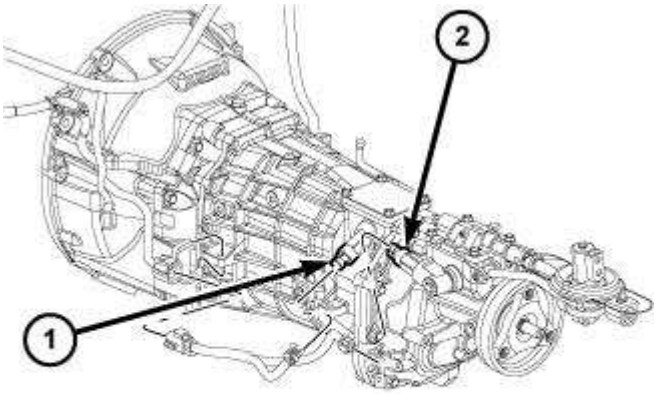

Fig. 265: Identifying Skip Shift Solenoid
Courtesy of CHRYSLER LLC

The skip shift solenoid (1) prevents the operator from shifting into second or third gear during part throttle operation. The solenoid is threaded into the left side of the transmission case.

OPERATION

OPERATION

The PCM controls the skip shift solenoid, locking out second and third gear when all of the following conditions are met:

- Engine coolant exceeds 41°C (106°F)
- Vehicle speed is between 12 and 20 MPH
- Engine operating above 1322 RPM
- The PCM verified first gear speed/RPM
- Throttle position sensor (TPS) signal is less than 0.68 volt above closed throttle (23 percent throttle opening)

The solenoid resets when vehicle speed drops below 3 MPH.

SOLENOID, TRANSMISSION, REVERSE LOCKOUT

DESCRIPTION

DESCRIPTION

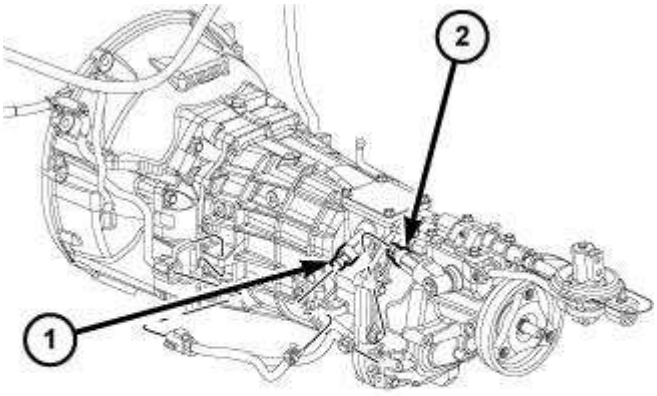

Fig. 266: Identifying Skip Shift Solenoid
Courtesy of CHRYSLER LLC

The reverse lockout solenoid (2) prevents the operator from shifting into reverse when the vehicle speed is greater than 3 mph. The solenoid is mounted to the left side of the transmission with a bolt.

OPERATION

OPERATION

If vehicle speed is less than 3 mph, the PCM sends a ground to energized the solenoid which allows shifting into reverse. If vehicle speed is greater than 3 mph, the solenoid is deactivated, preventing the transmission from being shifted into reverse.

ACCESSORIES AND EQUIPMENT

Message Center - Service Information - Challenger

CENTER, ELECTRONIC VEHICLE INFORMATION

DESCRIPTION

DESCRIPTION

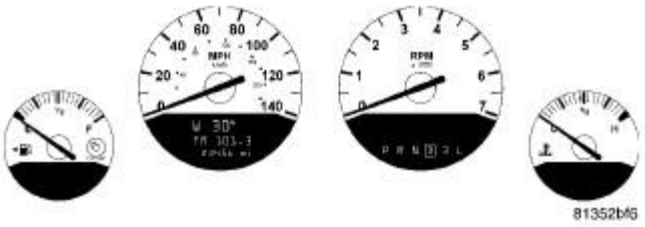

Fig. 1: Electronic Vehicle Information Center
Courtesy of CHRYSLER LLC

The Electronic Vehicle Information Center (EVIC) features a driver-interactive display. The display is located in the lower part of the speedometer. This system conveniently allows the driver to select a variety of useful information by pressing the switches mounted on the steering wheel. The EVIC displays information related to the following:

- System Status
- Vehicle information warning message displays
- Tire Pressure Monitor System - If Equipped
- Personal Settings (customer programmable features)
- Compass display
- Outside temperature display
- Trip computer functions
- UConnect™ hands-free communication system displays - If Equipped
- Navigation system screens - If Equipped
- Keyless Go system displays - If Equipped
- Audio mode display

The EVIC system is comprised of several different components. Those components are:

- Instrument Cluster
- Steering Wheel Switches
- Ambient Temperature Sensor
- Electronic Overhead Module

- Controller Area Network (CAN) Data Bus
- Local Interface Network (LIN) Data Bus

The EVIC display is part of the Instrument Cluster assembly and is not serviced as a separate component. If the display is inoperative, the complete Instrument Cluster assembly must be replaced. Refer to **Electrical - Instrument Cluster/Instrument Cluster - Removal** . If the steering wheel switches are inoperative and require replacement. Refer to **Electrical - Audio and Video/Audio and Video/SWITCH, Remote Radio - Removal** for the appropriate procedure. If the compass position sensor (Electronic Overhead Module) is inoperative and requires replacement. Refer to **Electrical - Message Systems/Universal Transmitter/TRANSMITTER, Universal - Removal** for the appropriate procedure.

OPERATION

OPERATION

The Electronic Vehicle Information Center (EVIC) uses both non-switched and ignition switched sources of battery current so that some of its features remain operational at any time, while others may only operate with the ignition switch in the On position. When the ignition switch is turned to the On position, the EVIC display will return to the last function being displayed before the ignition was turned to the Off position.

The EVIC system is comprised of several different components that communicate over the Controller Area Network (CAN) and Local Interface Network (LIN) Data Buses. If the system is inoperative a scan tool and the appropriate diagnostic information must be used to diagnose the system.

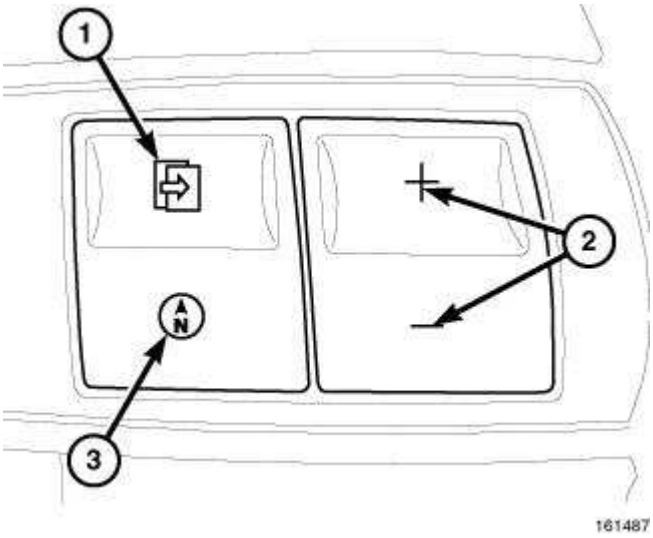

Fig. 2: MENU Button & Compass/Thermometer Button
Courtesy of CHRYSLER LLC

The steering wheel switches are used to operate the different functions of the EVIC system. Pressing and releasing the MENU button (1) will change the mode displayed between Trip Functions, Navigation (If Equipped), System Status, Personal Settings, and Telephone (If Equipped). Pressing

and releasing the compass/thermometer button (3) will cause the EVIC to return to the compass/thermometer/trip computer display mode from any other mode.

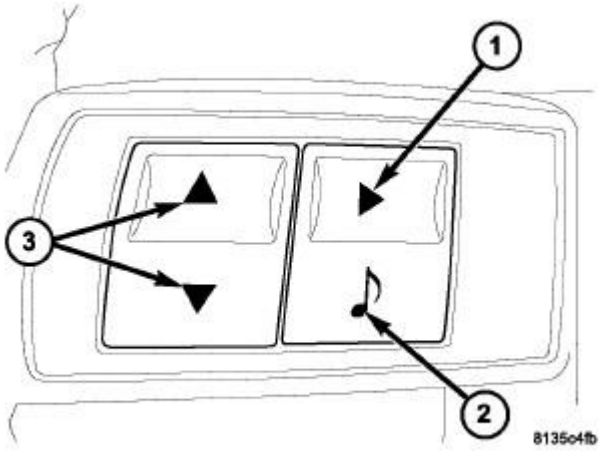

Fig. 3: SCROLL Buttons, FUNCTION SELECT Button, And AUDIO MODE SELECT Button
Courtesy of CHRYSLER LLC

The SCROLL buttons (3) are used to scroll through Trip Functions, Navigation (If Equipped), System Status Messages, and Personal Settings (Customer Programmable Features). Pressing and releasing the FUNCTION SELECT button (1) accepts a selected choice. The AUDIO MODE SELECT button (2) changes the mode of the radio from AM to FM to Tape to CD, or to Satellite (SAT) depending on which radio is in the vehicle. This button can also be used to return to a previous navigation menu selection.

EVIC DISPLAY MODES

SYSTEM STATUS MODE

Displays warnings and user interaction messages. Initial warnings will be displayed full-screen for three seconds, then override the odometer and show text warnings on the bottom line of the display. Critical text warnings will be displayed until the failure is corrected. Non-critical text warnings will be displayed for 60 seconds. The driver can scroll to view multiple messages by using the SCROLL buttons.

When the appropriate conditions exist, the EVIC displays the following messages:

- Turn Signal On (with a continuous warning chime)
- Left Front Turn Signal Lamp Out
- Left Rear Turn Signal Lamp Out
- Right Front Turn Signal Lamp Out
- Right Rear Turn Signal Lamp Out

- RKE Battery Low (with a single chime)
- Memory 1/2 Profile Set
- Memory 1/2 Profile Recall
- Memory System Disabled - Vehicle Not In Park (with a single chime)
- Memory System Disabled - Seat Belt Buckled (with a single chime)
- Personal Settings Not Available - Vehicle Not in Park
- Left/Right Front Door Ajar (one or more, with a single chime if speed is above 1 mph)
- Left/Right Rear Door Ajar (one or more, with a single chime if speed is above 1 mph)
- Door (S) Ajar (with a single chime if vehicle is in motion)
- Trunk Ajar (with a single chime)
- Low Washer Fluid (with a single chime)
- Adjustable Pedals Disabled - Cruise Engaged
- Adjustable Pedals Disabled - Vehicle In Reverse
- Channel 1, 2, OR 3 Transmit
- Channel 1, 2, OR 3 Training
- Channel 1, 2, OR 3 Trained
- Clearing Channels
- Channels Cleared
- Channels Defaulted
- Did Not Train
- Left Front Tire Low Pressure
- Left Rear Tire Low Pressure
- Right Front Tire Low Pressure
- Right Rear Tire Low Pressure
- Check Tire Pressure Monitoring (TPM) System

TRIP MODE

Provides a choice of units displayed in English or metric. The following information can be displayed at the top of the screen:

- Average Miles Per Gallon (MPG)
- Distance to empty (DTE)
- Trip A odometer
- Trip B odometer
- Elapsed time

The EVIC trip computer features several functions that can be reset. Pressing and releasing the FUNCTION SELECT button once will clear the resettable function currently being displayed. Reset will only occur if a resettable function is currently being displayed. To reset all resettable functions,

press and release the FUNCTION SELECT button a second time within 3 seconds of resetting the currently displayed function (>Reset ALL will be displayed during this 3 second window).

The odometer is displayed at the bottom of the screen. If warnings exist, they will replace the odometer in the display. The driver can scroll to view information in the EVIC by using the SCROLL buttons.

COMPASS, TEMPERATURE AND AUDIO MODE

Compass heading and outside temperature are displayed at the top of the screen. On the lower half of the screen the audio mode is displayed along with the odometer. Eight-point compass headings are displayed (N, S, E, W, NE, NW, SE, SW) and up to 15 compass variance settings can be set and recalled. Outside temperature is displayed in °C (degrees Celsius) or °F (degrees Fahrenheit). Audio mode can display any one of 12 radio station preset frequencies, CD disc number, CD track number, tape, and one of 200 Satellite Radio Channels - if equipped.

TELEPHONE MODE - IF EQUIPPED

Provides the following information and features for the optional hands-free communications system:

- Phone status: idle, voice mail, roaming, battery strength and signal strength in increments of 20 percent
- Call status: Incoming call, connecting, connected, air time in minutes and seconds, call ended, busy, call failed, roaming and no phone connection
- Caller ID phone number display

NAVIGATION MODE - IF EQUIPPED

When the Navigation System is On, the steering wheel buttons can be used to select the Map or Menu display on the Navigation Unit. When the Menu display is active, the SCROLL buttons can be used to scroll through the list, the FUNCTION SELECT button can be used to select an item, and the AUDIO MODE SELECT button can be used to return to the previous menu. When the Map display is active, pressing the FUNCTION SELECT button will change the Navigation Unit Display to the Menu.

If Turn by Turn Navigation is enabled through Personal Settings, the Navigation System will provide turn by turn directions to the programmed destination in the EVIC display. The name of the approaching road is displayed at the top of the screen, followed by an arrow to show the direction of the turn and the remaining distance to the turn counted down.

PERSONAL SETTINGS MODE (CUSTOMER PROGRAMMABLE FEATURES)

Allows the driver to set and recall features when the transmission is in Park by pressing and releasing the MENU button until Personal Settings is displayed in the EVIC. The following personal settings can be set and recalled:

- Language: English, Spanish, German, Italian or French
- Display units in English or Metric

- Lock doors automatically at 15 mph (24 Kph), On or Off
- Unlock door automatically on exit, On or Off
- Remote Keyless Entry unlock driver door on first press or unlock all doors on first press
- Recall Memory with Remote Keyless Entry Unlock, On or Off
- Sound horn with Remote Keyless Entry Lock, On or Off
- Delay turning headlamps off for 0, 30, 60 or 90 seconds
- Headlamps on with wipers, On or Off
- Rain Sensing Intermittent Wipers, On or Off
- Automatically move seat back on exit, On or Off
- Tilt mirrors down and in when transmission is shifted to Reverse, On or Off
- Delay Power off to accessories until exit off, 45-seconds maximum, 5-minute maximum, 10-minute maximum or 60-minute maximum
- Turn headlamps on with Remote Keyless Entry Lock, On or Off
- Turn headlamps on with Remote Keyless Entry Unlock, Off or 30 seconds
- Park Assist System, On or Off
- Confirmation of Voice Commands, On or Off
- Turn-by-Turn Navigation, On or Off

DIAGNOSIS AND TESTING

ELECTRONIC VEHICLE INFORMATION CENTER

The Electronic Vehicle Information Center (EVIC) data is obtained from several components on the Controller Area Network (CAN) Data Bus circuit. The EVIC will not function properly if the bus messages from any of these components is not received. If no EVIC data is displayed, check the CAN Data Bus circuit communications, the Instrument Cluster functions and the Front Control Module (FCM).

The use of a scan tool and the proper diagnostic procedures information are recommended for further testing of the EVIC and the CAN Data Bus circuit. Refer to **SYSTEM WIRING DIAGRAMS** for complete circuit schematic or connector pin-out information.

STANDARD PROCEDURE

COMPASS CALIBRATION

CAUTION: Do not place any external magnets, such as magnetic roof mount antennas, in the vicinity of the compass. Do not use magnetic tools when servicing the overhead console.

The electronic compass unit features a self-calibrating design, which simplifies the calibration procedure. This feature automatically updates the compass calibration while the vehicle is being driven. This allows the compass unit to compensate for small changes in the residual magnetism that

the vehicle may acquire during normal use. If the compass readings appear to be erratic or the Electronic Vehicle Information Center (EVIC) displays "CAL", perform the following calibration procedure. Also, any time EVIC service replacement components are installed, they must be calibrated using this procedure. Do not attempt to calibrate the compass near large metal objects such as other vehicles, large buildings, or bridges; or, near overhead or underground power lines.

Calibrate the compass manually as follows:

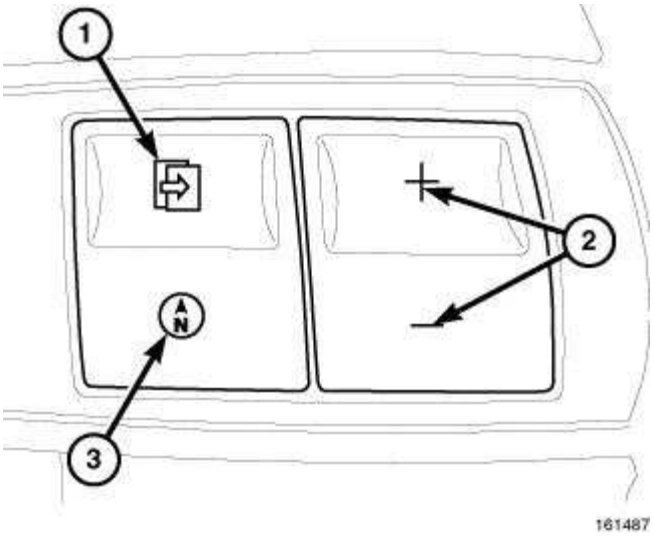

Fig. 4: MENU Button & Compass/Thermometer Button
Courtesy of CHRYSLER LLC

1. Turn the ignition switch to the On position.
2. Depress and hold the compass/thermometer button (3) for approximately two seconds.

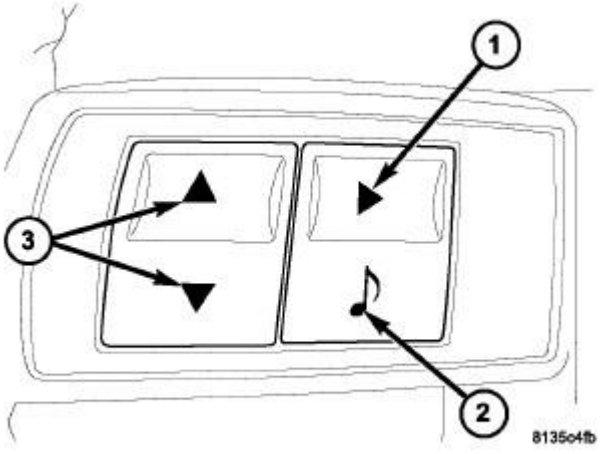

Fig. 5: SCROLL Buttons, FUNCTION SELECT Button, And AUDIO MODE SELECT Button

Courtesy of CHRYSLER LLC

3. Use the SCROLL buttons (3) until MANUAL COMPASS CALIBRATION is highlighted.
4. Press and release the FUNCTION SELECT button (1) to start the calibration. The message "CAL" will appear in the EVIC display.
5. Drive the vehicle on a level surface, away from large metal objects and power lines, through one or two **complete** circles in not less than 16 seconds. The "CAL" message will disappear from the display to indicate that the compass is now calibrated.

NOTE: A blank compass display indicates that vehicle degaussing (demagnetizing) is necessary.

NOTE: If the "CAL" message remains in the display, either there is excessive magnetism near the compass, or the unit is inoperative. Repeat the calibration procedure at least one more time.

NOTE: If the wrong direction is still indicated in the compass display, the area selected for calibration may be too close to a strong magnetic field. Repeat the calibration procedure in another location.

COMPASS DEMAGNETIZING

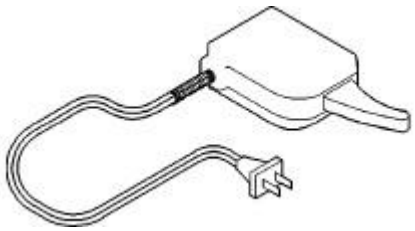

Fig. 6: Degaussing Tool #6029
Courtesy of CHRYSLER LLC

A degaussing tool (Special Tool 6029) is used to demagnetize, or degauss, the roof panel above the overhead console. Equivalent units must be rated as continuous duty for 110/115 volts and 60 Hz. They must also have a field strength of over 350 gauss at 7 millimeters (0.25 inch) beyond the tip of the probe.

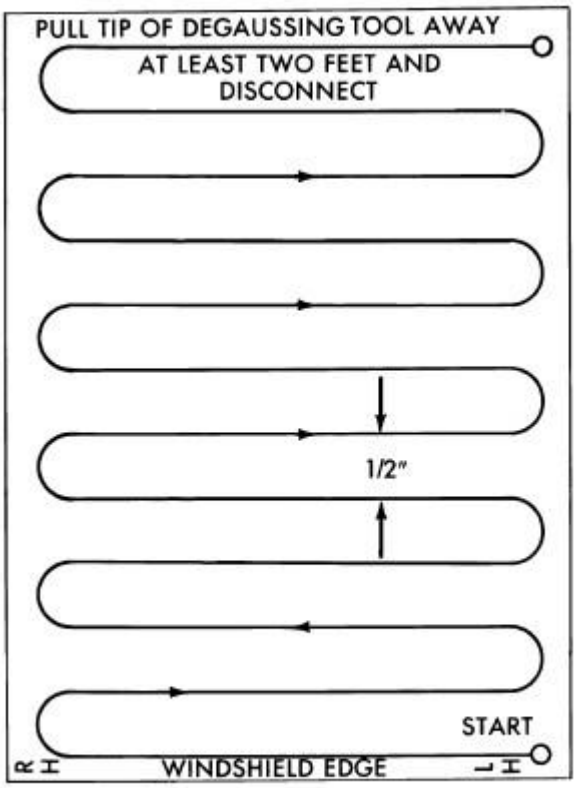

Fig. 7: Demagnetizing Procedure
Courtesy of CHRYSLER LLC

To demagnetize the roof panel proceed as follows:

1. Be certain that the ignition switch is in the Off position, before you begin the demagnetizing procedure.
2. Place a piece of paper approximately 22 by 28 centimeters (8.5 by 11 inches), oriented on the vehicle lengthwise from front to rear, on the center line of the roof at the windshield header. The purpose of the paper is to protect the roof panel from scratches, and to define the area to be demagnetized.
3. Connect the degaussing tool to an electrical outlet, while keeping the tool at least 61 centimeters (2 feet) away from the compass unit.
4. Slowly approach the center line of the roof panel at the windshield header, with the degaussing tool connected.
5. Contact the roof panel with the plastic coated tip of the degaussing tool. Be sure that the template is in place to avoid scratching the roof panel. Using a slow, back-and-forth sweeping motion, and allowing 13 millimeters (0.50 inch) between passes, move the tool at least 11 centimeters (4 inches) to each side of the roof center line, and 28 centimeters (11 inches) back from the windshield header.

6. With the degaussing tool still energized, slowly back it away from the roof panel. When the tip of the tool is at least 61 centimeters (2 feet) from the roof panel, disconnect the tool.
7. Calibrate the compass. See **Electrical - Message Systems/Message Center/CENTER, Electronic Vehicle Information - Standard Procedure** and adjust the compass variance.

COMPASS VARIATION ADJUSTMENT

Compass variance, also known as magnetic declination, is the difference in angle between magnetic north and true geographic north. In some geographic locations, the difference between magnetic and geographic north is great enough to cause the compass to give false readings. If this problem occurs, the compass variance setting may need to be changed.

To set the compass variance:

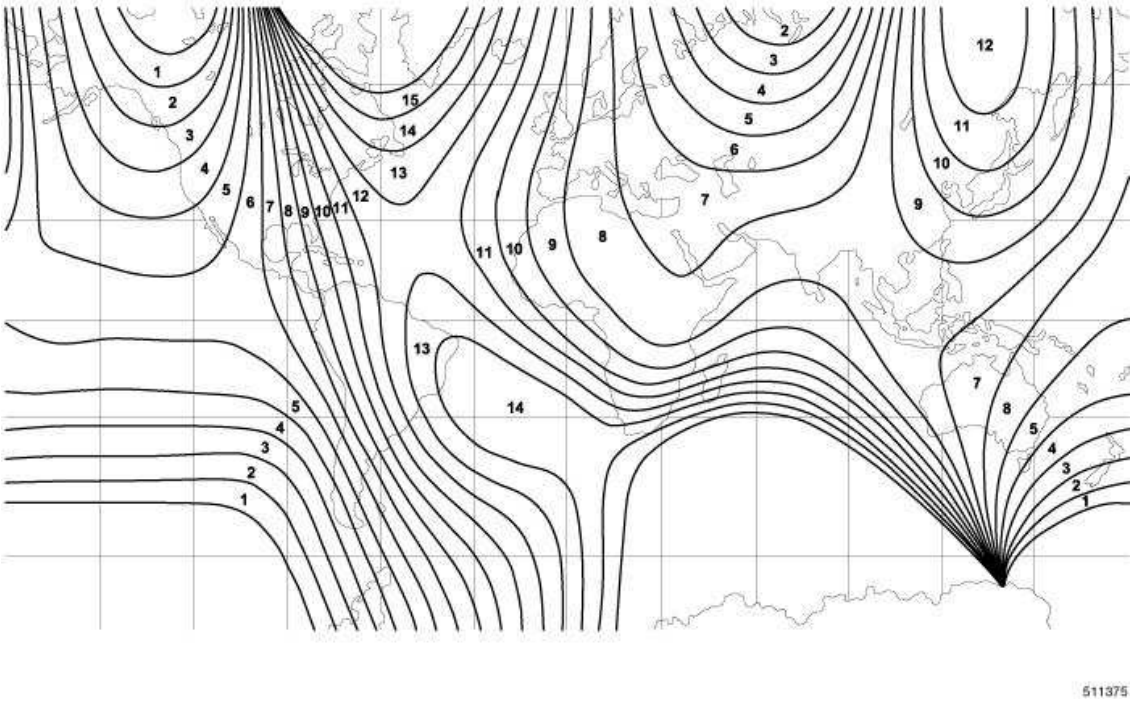

Fig. 8: Compass Variance Settings Map
Courtesy of CHRYSLER LLC

1. Using the Variance Settings map, find your geographic location and note the zone number.

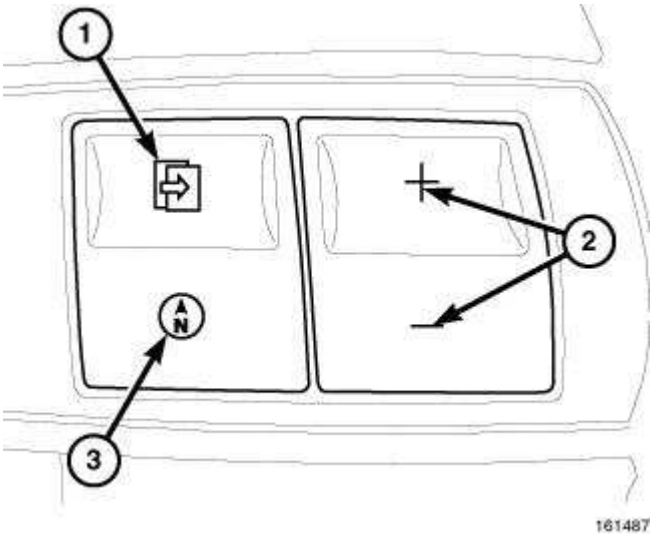

Fig. 9: MENU Button & Compass/Thermometer Button
Courtesy of CHRYSLER LLC

2. Turn the ignition switch to the On position.
3. Press and hold the compass/thermometer button (3) for approximately two seconds.

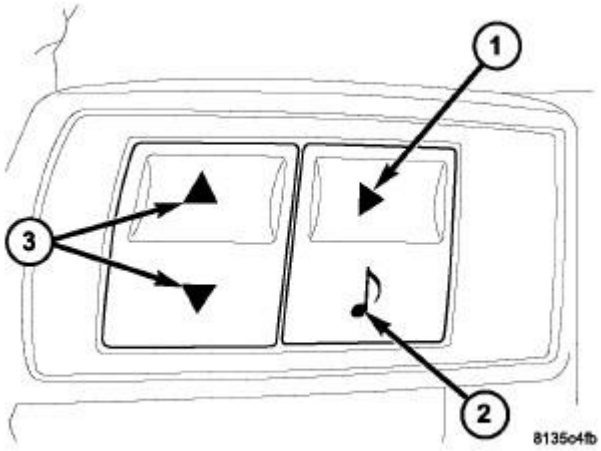

Fig. 10: SCROLL Buttons, FUNCTION SELECT Button, And AUDIO MODE SELECT Button
Courtesy of CHRYSLER LLC

4. Use the SCROLL buttons (3) until COMPASS VARIANCE is highlighted. The "COMPASS VARIANCE" message and the last variance zone number will be displayed.
5. Press and release the FUNCTION SELECT button (1) until the zone number for your geographic location appears in the display.

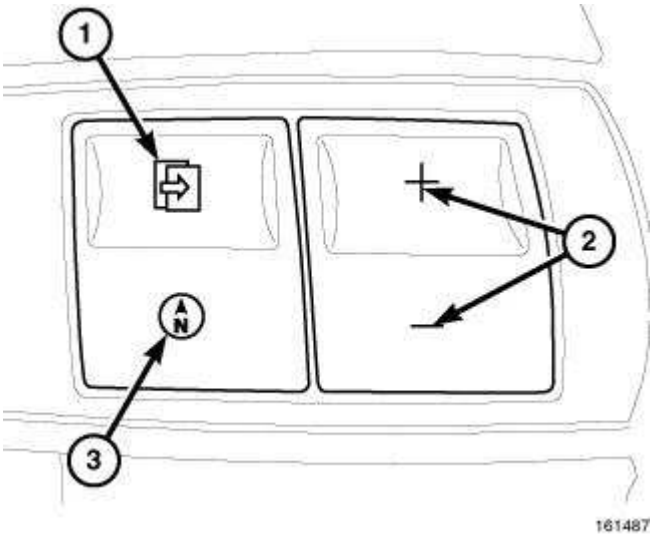

Fig. 11: MENU Button & Compass/Thermometer Button
Courtesy of CHRYSLER LLC

6. Press and release the compass/thermometer button (3) to exit.
7. Confirm that the correct directions are now indicated by the compass.

DRIVING CONVENIENCE

INSTRUCTION SHEET

REMOTE START

CHALLENGER

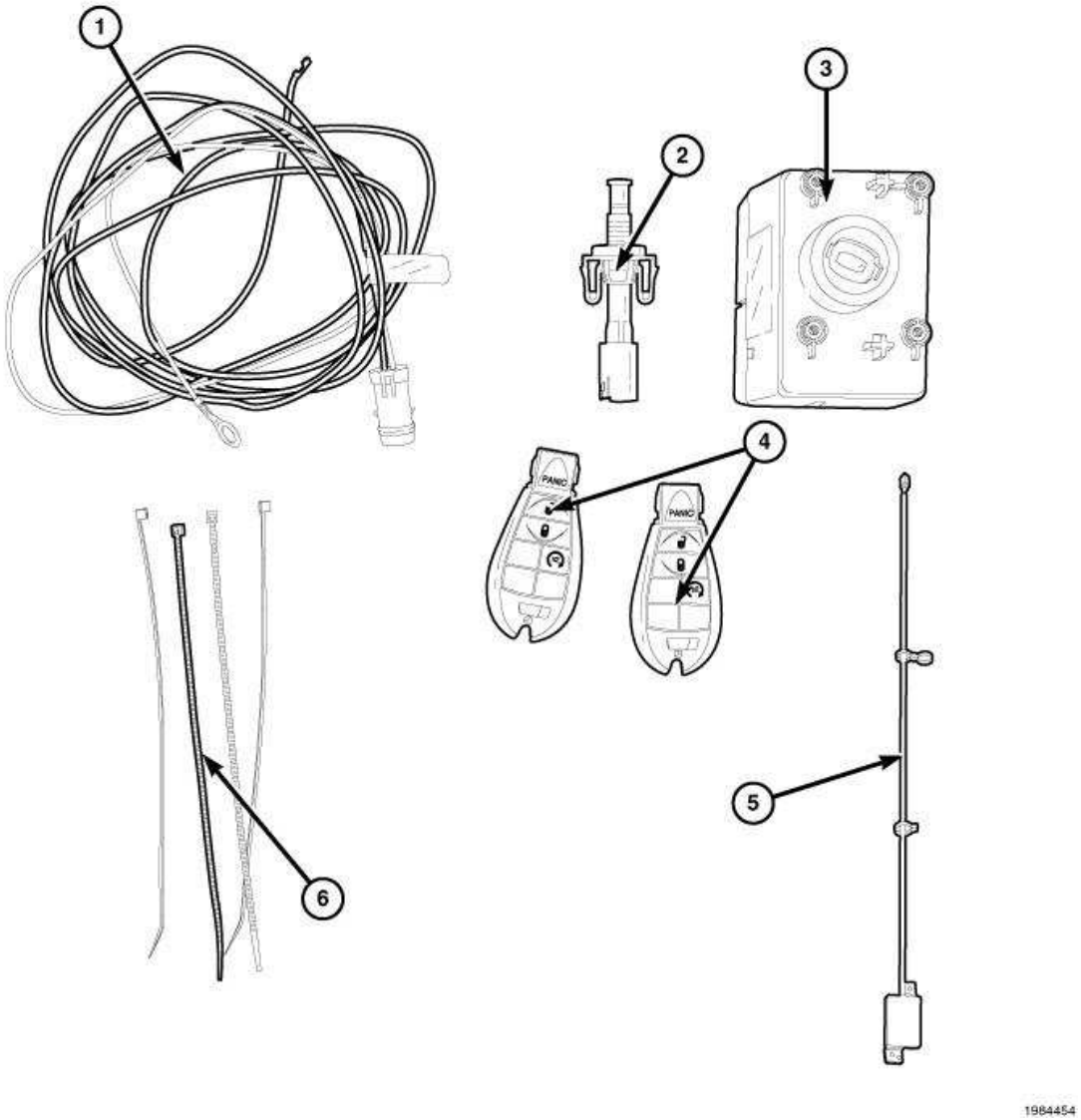

Fig. 1: Remote Start Components

Courtesy of CHRYSLER LLC

CALL OUT	DESCRIPTION	QUANTITY
1	Hood Switch Harness	1
2	Hood Switch	1
3	Wireless Ignition Node (WIN)	1
4	FOBIK	2
5	WIN Antenna	1
6	Zip Ties	10

CAUTION: XBM remote start can ONLY be installed on vehicles that have the following factory options: Automatic Transmission, Remote Keyless Entry and Immobilizer.

WinFobik based vehicles, the sales code must be added to the database and the Restore Vehicle Configuration (using a diagnostic scan tool) must be performed prior to installing the new WIN module. Failure to do so will render the WIN module's remote start function inoperative.
The technician should wait 1/2 hour between adding XBM sales code in DealerConnect before installing the WIN module & restoring vehicle configuration. In the interim, the technician can install all other components except the WIN module.

PROCEDURE STEPS:

UPDATE VEHICLE CONFIGURATION

1. VIN must be updated with the sales code of the added accessory in order to enable system functionality. Using the DealerCONNECT website and a diagnostic scan tool, complete the vehicle configuration.
2. Log on to https://dealerconnect.chrysler.com
3. In the "Vehicle Option" screen under the "Global Claims System" category in the "Service" tab, enter vehicle VIN and add sales code(s) noted below as a "Dealer Installed Option".

   XBM (REMOTE START)

4. Confirm that the new sales code has been successfully added to the VIN.
5. With the diagnostic scan tool connected to both the Internet (via Ethernet port or wireless connection) and the vehicle, perform the following steps from the Initial Start Up Screen:

- Select "VEHICLE PREPARATION"
- Select "RESTORE VEHICLE CONFIGURATION"
- Select "START"

- Select "NEXT"
- If necessary, select proper vehicle line and model year and select "NEXT"
- Confirm correct selection and select "NEXT"
- Enter vehicle VIN using On-Screen keyboard or confirm that auto-filled VIN plate and select "NEXT"
- Select "OK"
- Enter user ID, password and dealer code using On-Screen keyboard and Select "OK"
- Wait for vehicle configuration data to be downloaded and select "NEXT"
- Select "NEXT"
- Confirm that vehicle configuration has been programmed successfully
- Note On-Screen instructions and select "FINISH"

VALIDATION PROCESS

1. To validate that the remote start is activated in the system.
2. Select "ECU VIEW"
3. Select "TIPM/CGW"
4. Select "MORE OPTIONS"
5. Select "ECU DETAILS"
6. Select "CONFIG INFO"
7. Toggle down, verify:
    - Select "ECU VIEW"
    - Select "TIPM/CGW"
    - Select "MORE OPTIONS"
    - Select "ECU DETAILS"
    - Select "CONFIG INFO"
    - Toggle down, verify:

NAME	VALUE
REMOTE START PRESENT	SET

HOOD SWITCH INSTALLATION

1. Disconnect and isolate the negative battery cable.

NOTE: **There may be an unused factory installed hood switch harness taped back on the existing wiring harness near the hood switch mounting location. If present, route it through the switch mounting bracket and install the switch. If the factory hood switch harness is not preset, follow steps 2 through 14.**

NOTE: **Do not push the hood switch by hand, when the hood closes the switch will automatically adjust.**

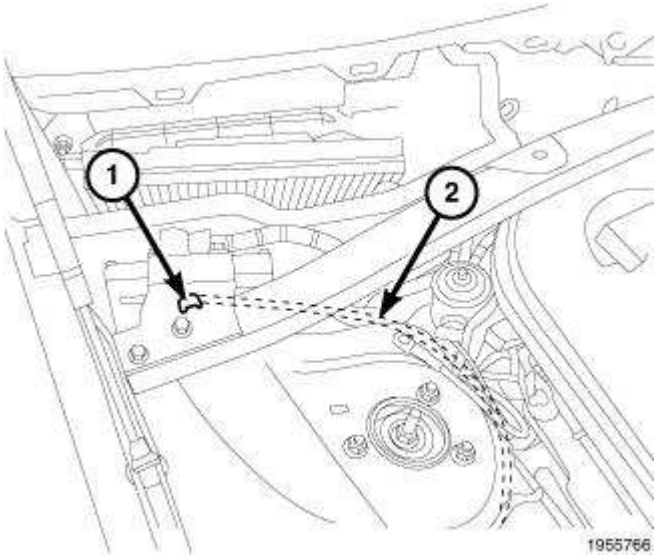

Fig. 2: PCM Location In Vehicle
Courtesy of CHRYSLER LLC

2. Route the hood switch harness (2) underneath the brace located at the rear of the engine compartment, through the opening designated for the hood switch (1), located near the rear of the passenger fender.
3. Connect the hood switch to the harness and insert it into the opening (1) until it is properly seated.
4. Route the hood switch harness (2) into the engine compartment and secure along the factory harness with tie wraps.
5. Install the hood switch harness ground terminal on the ground lug.

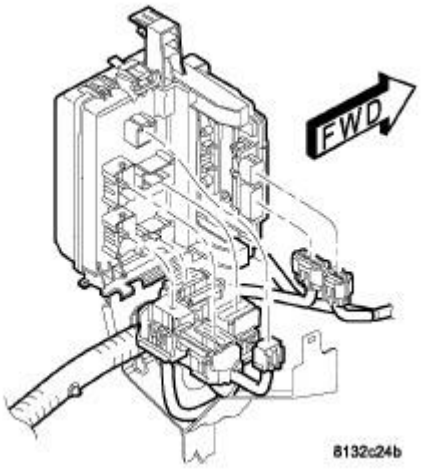

Fig. 3: Integrated Power Module
Courtesy of CHRYSLER LLC

6. Disengage the outboard retaining clip, and rotate the TIPM to access wire harness connectors.
7. Disengage the two inboard retaining clips.
8. Lift the TIPM up to gain access to the "B" connector.

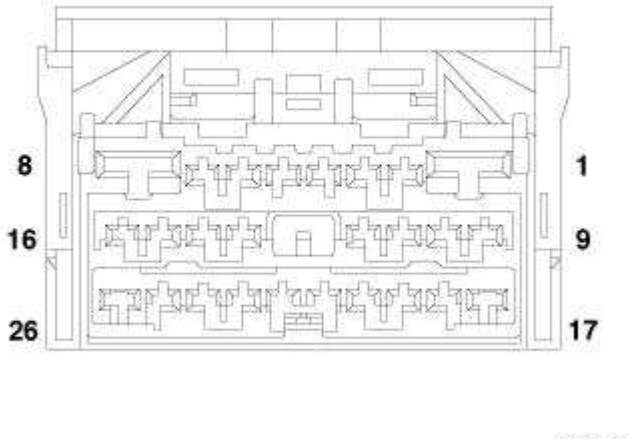

Fig. 4: Front View Of TIPM "B" Connector
Courtesy of CHRYSLER LLC

NOTE: This is the front view of the TIPM "B" connector.

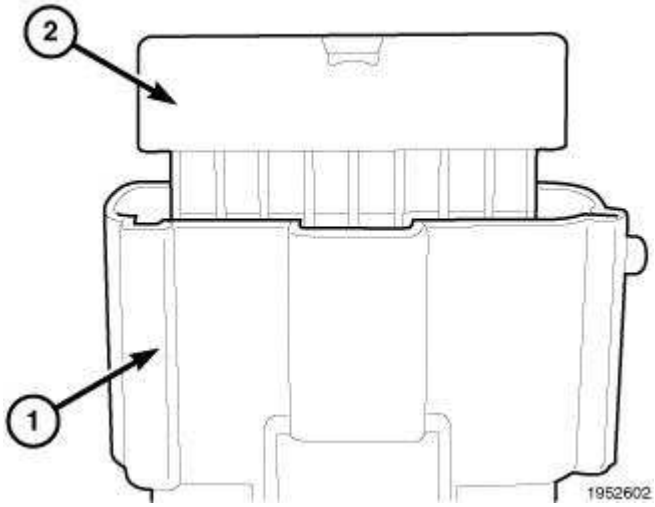

Fig. 5: Totally Integrated Power Module Connector
Courtesy of CHRYSLER LLC

9. Unplug the "B" connector (1) and release the "Secondary Lock" (2) from the front of the connector.

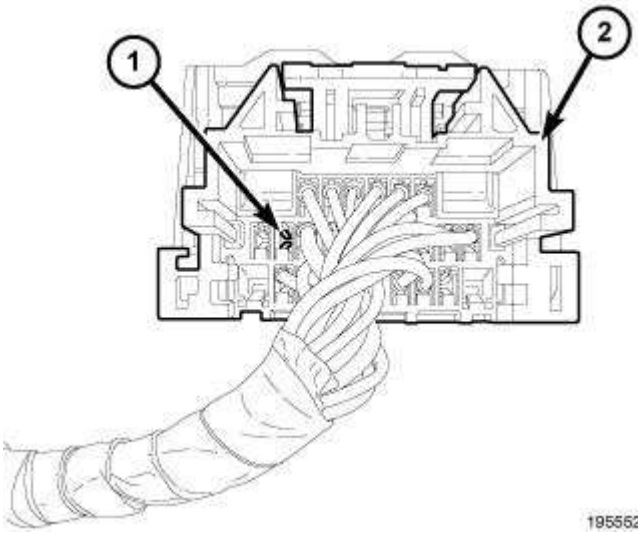

Fig. 6: Identifying TIPM "B" Connector Cavity 10
Courtesy of CHRYSLER LLC

10. Insert the Violet/Lt. Blue wire from the hood switch harness into the "B" connector (2), cavity 10 (1).
11. Install the ground wire from the hood switch harness to the grounding stud on the strut tower.
12. Reinstall the "Secondary Lock" into the front of the connector.
13. Reinstall the "B" connector back into the TIPM.
14. Reinstall the TIPM on the TIPM mounting bracket by engaging the retaining clips.

WIN MODULE REMOVAL

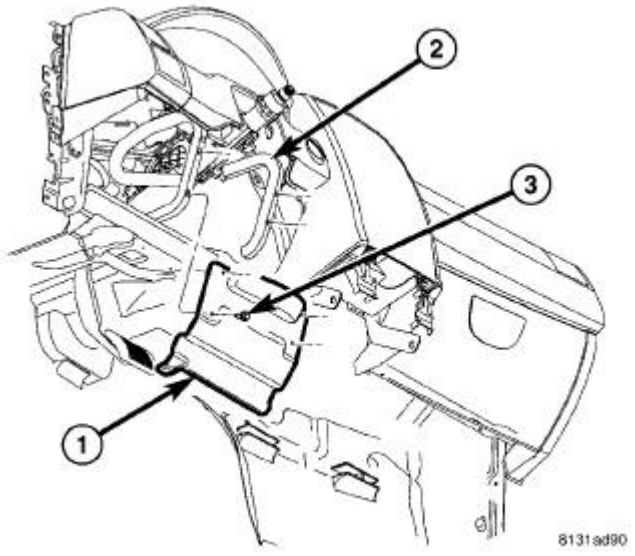

Fig. 7: Reinforcement I/P Steering Column
Courtesy of CHRYSLER LLC

1. Remove the screws that secure the steering column cover to the instrument panel.
2. Pull the steering column cover rearward at the top and right side of the cover to release the snap retainers from the instrument panel.
3. Disconnect the wire harness connector from the trunk release switch, if equipped.
4. If required, remove the four screws (3) that secures the instrument panel steering column cover reinforcement (1) to the bracket (2) and remove the reinforcement from the vehicle.

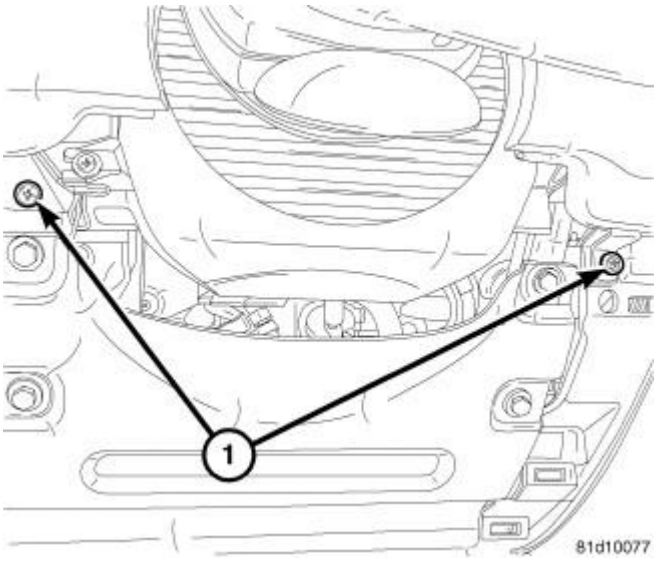

Fig. 8: Lower Instrument Cluster Trim Screws
Courtesy of CHRYSLER LLC

5. Remove the two screws (1) from the lower instrument cluster trim.

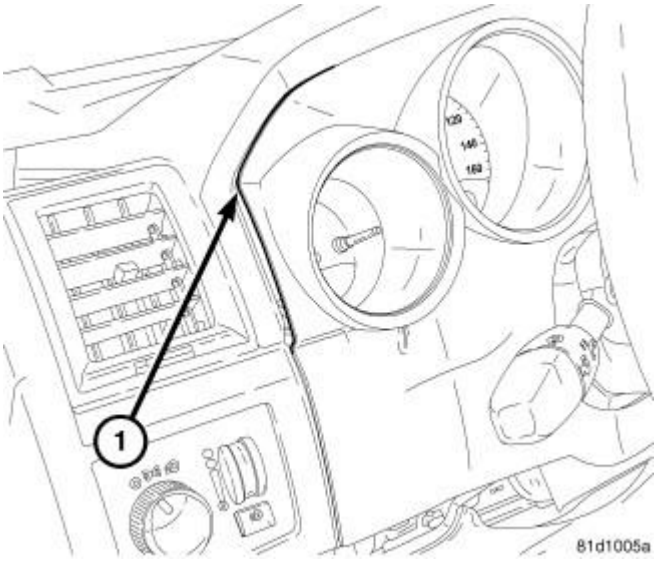

Fig. 9: Edge Of Instrument Cluster Trim
Courtesy of CHRYSLER LLC

6. Using a trim stick or equivalent, gently pry (1) along the edge of the trim to remove the instrument cluster trim.

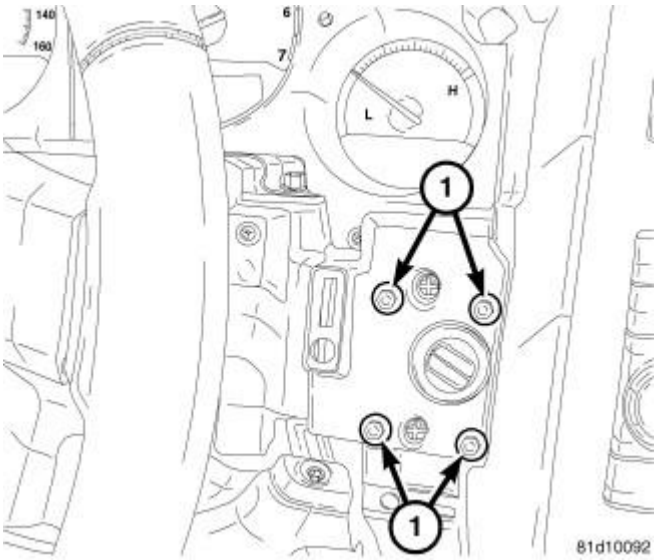

Fig. 10: Wireless Ignition Node Screws
Courtesy of CHRYSLER LLC

7. Remove the 4 screws from the WIN (1).

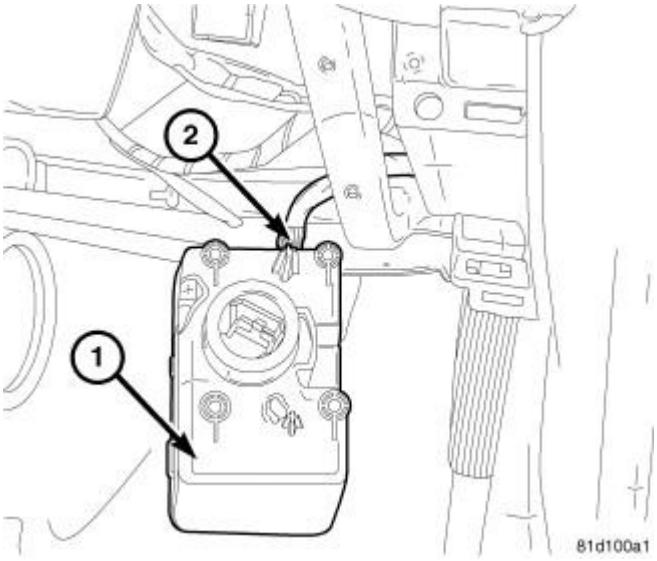

Fig. 11: Wireless Ignition Node
Courtesy of CHRYSLER LLC

8. Remove the WIN (1) from the rear if the instrument panel bringing it through the opening below the steering column and disconnect the electrical connector (2) from the WIN.

REMOTE START ANTENNA INSTALLATION

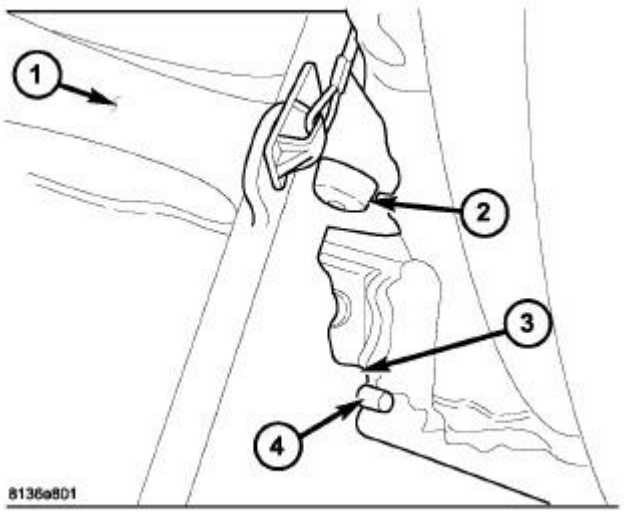

Fig. 12: Removing/Installing Glove Box Bin
Courtesy of CHRYSLER LLC

1. Open the glove box bin (1).
2. Push in on both sides of glove box bin to disengage the glove box stops (2) and lower the bin.
3. Pivot the glove box bin downward and disengage the glove box hinge hooks (3) from the instrument panel hinge brackets (4) located at each end of the bin.

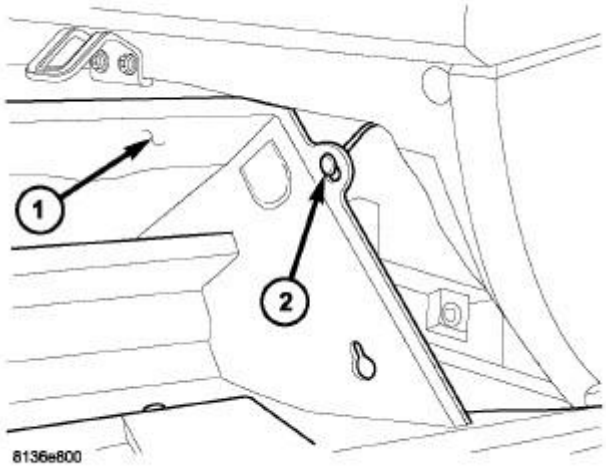

Fig. 13: Bin-Glove Box Support Strap
Courtesy of CHRYSLER LLC

4. Turn the glove box bin (1) sideways and remove the support strap and retainer assembly (2) from the outboard end of the bin.

5. Remove the glove box bin from the vehicle.

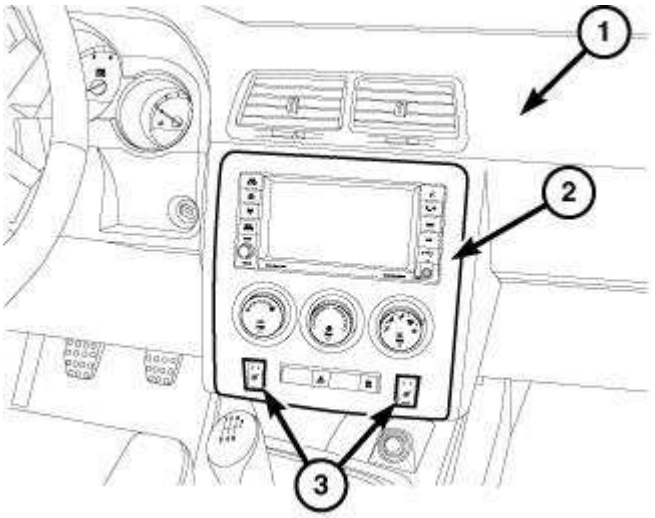

Fig. 14: Instrument Panel Cover & Center Bezel
Courtesy of CHRYSLER LLC

6. Using trim stick C-4755 or equivalent, remove the center bezel (2) from the instrument panel (1) by releasing the snap retainers from the instrument panel.
7. Disconnect the electrical connectors and remove the center bezel.

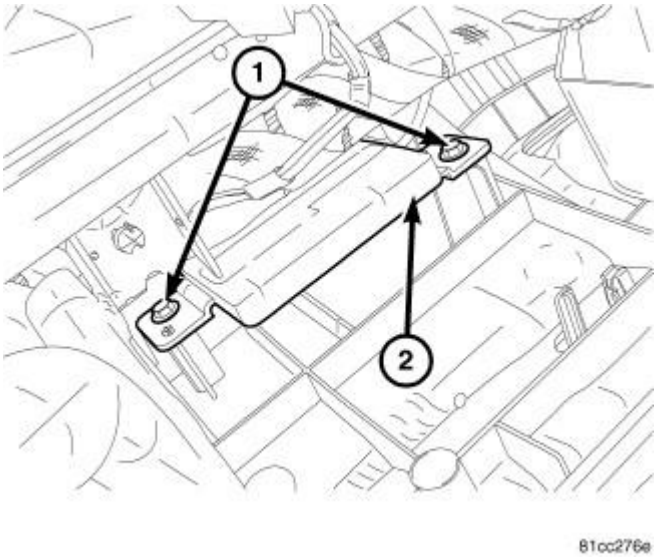

Fig. 15: RSA Module At Dash
Courtesy of CHRYSLER LLC

8. Install the remote start antenna module (2), and screws (1) to instrument panel assembly. Tighten screws to 2.5 N.m (22 in. lbs.).

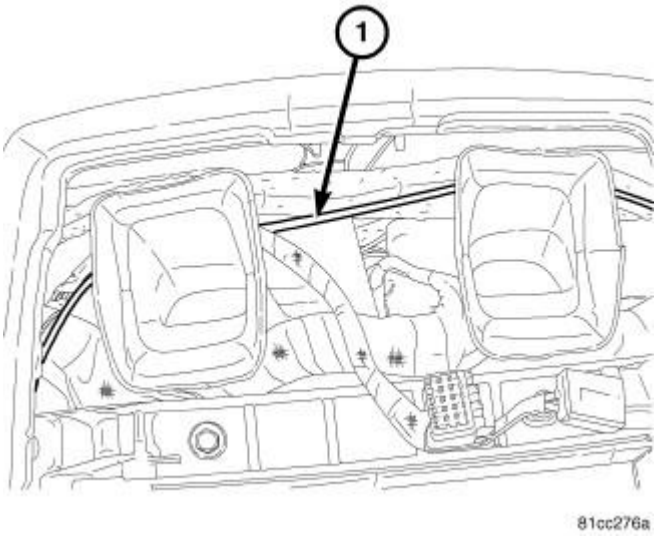

Fig. 16: RSA Routing
Courtesy of CHRYSLER LLC

9. Route the remote start coaxial cable (1) to the WIN module.
10. Install the remote start antenna coaxial cable to the mounting clips, if equipped.

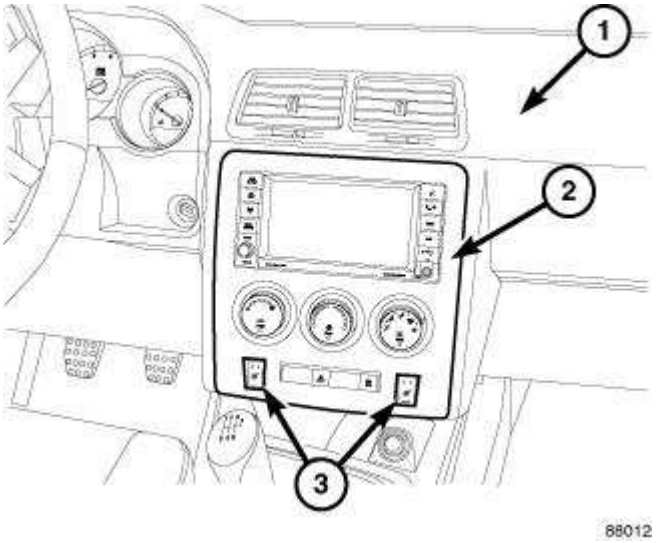

Fig. 17: Instrument Panel Cover & Center Bezel
Courtesy of CHRYSLER LLC

11. Position the center bezel (2) near the instrument panel (1) and connect the electrical connectors.
12. Install the center bezel onto the instrument panel and carefully push on the outside edges of the center bezel to fully seat the snap clip retainers.

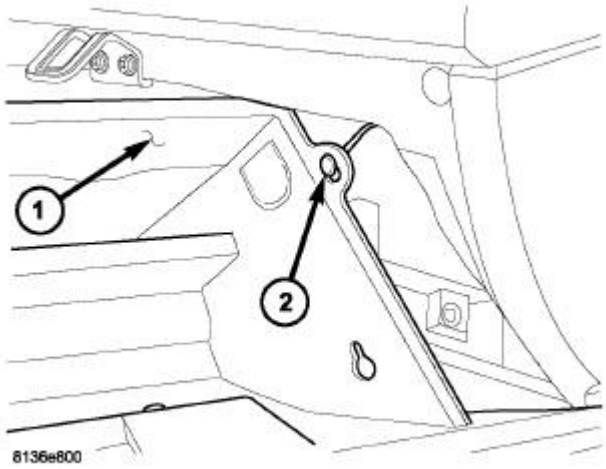

Fig. 18: Bin-Glove Box Support Strap
Courtesy of CHRYSLER LLC

13. Position the glove box bin (1) into the instrument panel.
14. Turn the glove box bin sideways and install the support strap and retainer assembly (2) onto the outboard end of the bin.

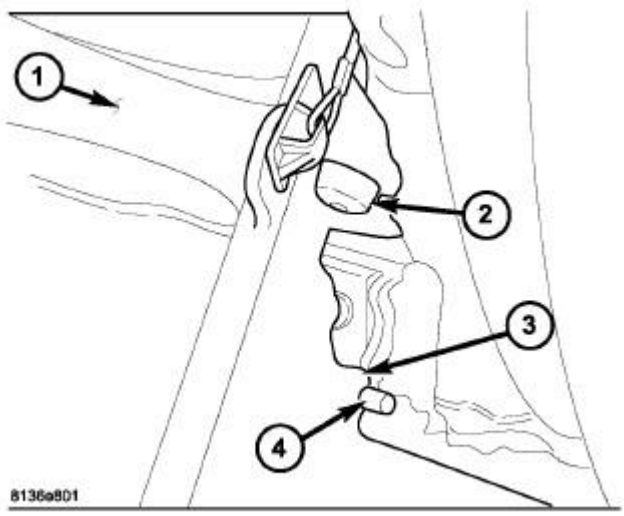

Fig. 19: Removing/Installing Glove Box Bin
Courtesy of CHRYSLER LLC

15. Engage the glove box bin hinge hooks (3) onto the instrument panel hinge brackets (4) located at each end of the glove box bin (1) and pivot the bin upward.
16. To engage the glove box stops (2), push inward on both sides of the glove box bin and pivot the

glove box into the instrument panel.

17. Close the glove box bin.

WIN MODULE INSTALLATION

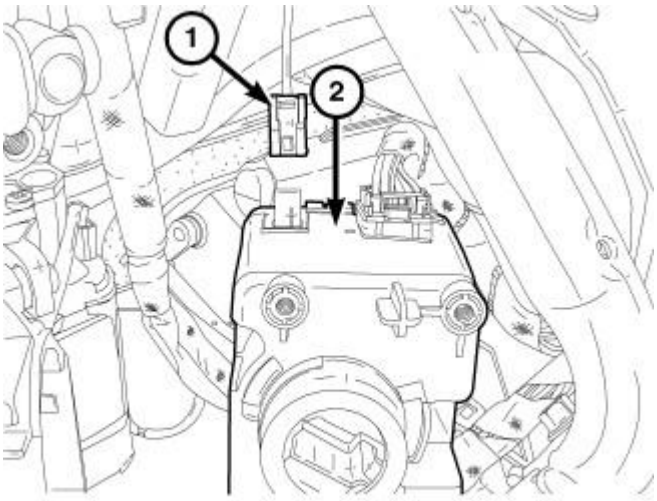

Fig. 20: RSA Electrical Connector
Courtesy of CHRYSLER LLC

1. Connect the remote start antenna coaxial cable connector (1) to the new wireless ignition node (WIN) (2).

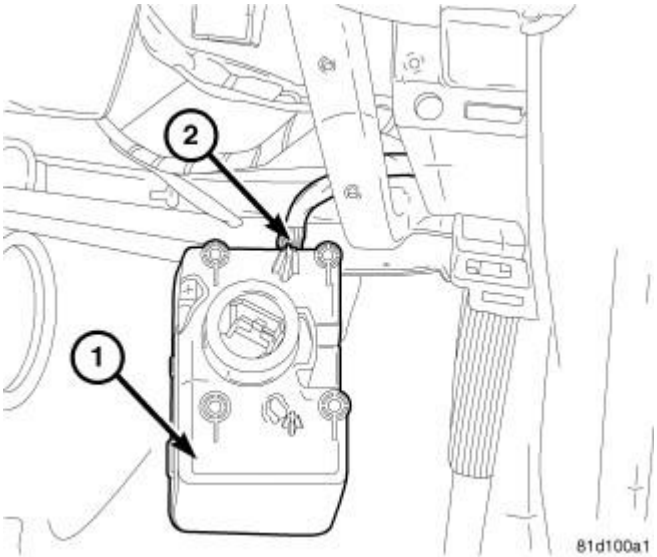

Fig. 21: Node - Wireless Ignition
Courtesy of CHRYSLER LLC

2. Connect the electrical connector (2) to the WIN (1) and position the WIN back into the instrument panel.

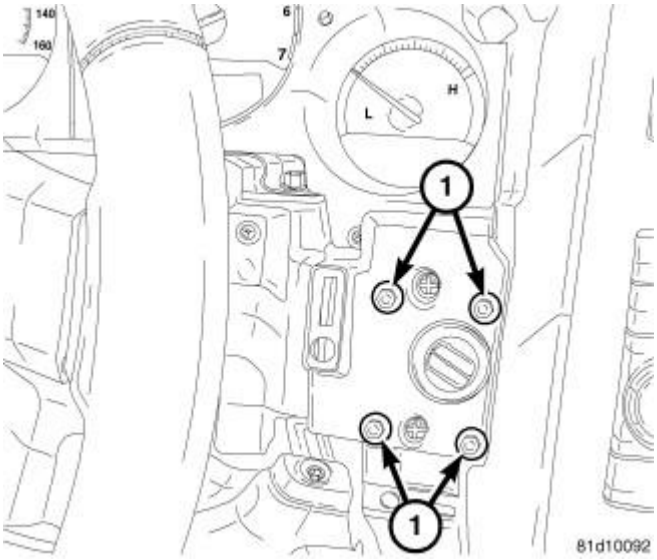

Fig. 22: Node - Wireless Ignition
Courtesy of CHRYSLER LLC

3. Install the four screws (1) through the instrument panel into the WIN.
4. Install the instrument panel trim cover. Make sure that the cover snaps into the securing clips.

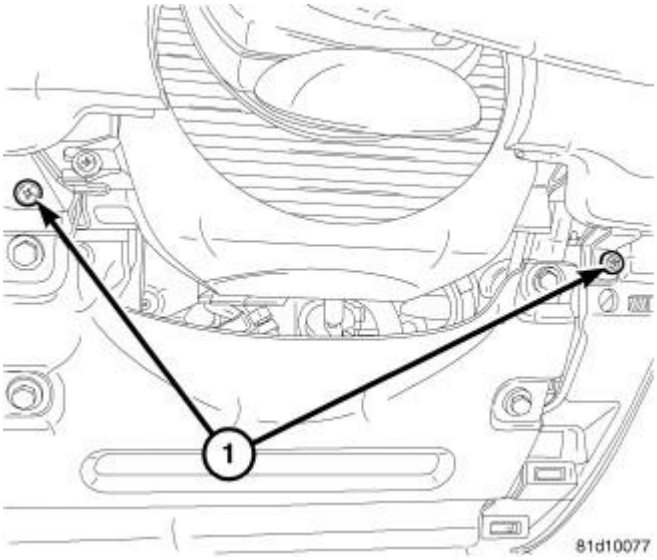

Fig. 23: I/P Lower Screws
Courtesy of CHRYSLER LLC

5. Install the two lower instrument panel screws (1).

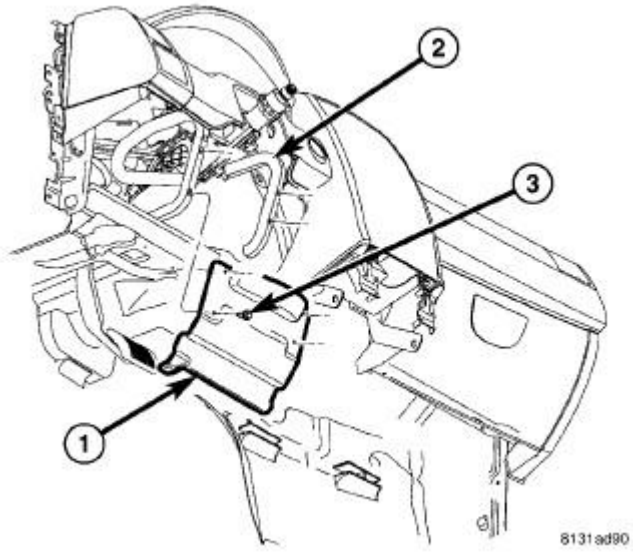

Fig. 24: Reinforcement I/P Steering Column
Courtesy of CHRYSLER LLC

6. If removed, position the instrument panel steering column cover reinforcement (1) onto the bracket (2).
7. Install the screws (3) that secure the instrument panel steering column cover reinforcement to the bracket. Tighten the screws securely.

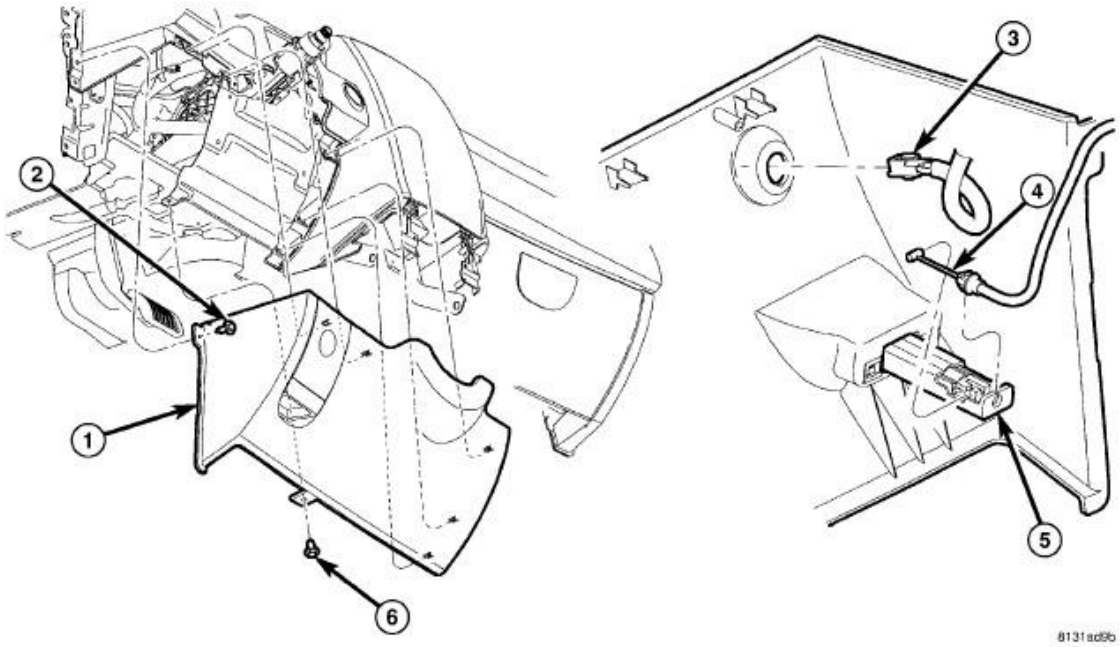

Fig. 25: Steering Column Cover
Courtesy of CHRYSLER LLC

8. Position the steering column cover (1) onto the instrument panel.
9. Connect the release cable (4) to the emergency brake release handle (5).
10. Connect the wire harness connector (3) to the trunk release switch, if equipped.
11. Install the steering column cover onto the instrument panel and carefully push on the top and right side of the cover to fully seat the snap clip retainers into the instrument panel.
12. Install the screws (2 and 6) that secure the steering column cover (1) to the instrument panel. Tighten the screws securely.
13. Connect the negative battery cable.

PROGRAMMING THE WIN

CAUTION: Read all notes and cautions for programming procedures.

1. Connect a battery charger to the vehicle.
2. Connect the scan tool.

NOTE: Have the vehicle PIN readily available before running the routine

CAUTION: If the PCM and WIN are replaced at the same time, the PCM MUST be programmed before the WIN.

3. Select "ECU View."
4. Select "WCM".
5. Select "Miscellaneous Functions."
6. Select "WIN Replaced".
7. Enter the PIN when prompted.
8. Cycle ignition key after the successful routine completion.

PROGRAMMING IGNITION KEYS TO THE WIN

CAUTION: Read all notes and cautions for programming procedures.

1. Connect a battery charger to the vehicle.
2. Connect the scan tool.
3. Have a unique vehicle PIN readily available before running the routine.
4. Ignition key should be in RUN position.
5. Select "ECU View".
6. Select "WIN".

7. Select "Miscellaneous Functions."
8. Select "Program Ignition Keys or Key FOBs", Start
9. Enter the PIN when prompted.
10. Verify the correct information.
11. Cycle ignition key after the successful routine completion.

NOTE: If the original keys do not successfully program to the new WIN after the proper procedures are followed correctly, programming new keys will be necessary.

NOTE: A maximum of eight keys can be learned by the WIN. Once a key is learned by a WIN, that key has acquired the Secret Key for that WIN and cannot be transferred to any other vehicle.

ECU RESET

With the diagnostic scan tool connected to the vehicle, perform the following steps from the Initial Start Up Screen:

1. Select "ECU VIEW"
2. Select "WIN"
3. Select "MISC FUNCTIONS"
4. Select "RESET ECU"
5. Select "START"
6. Select "NEXT"

UPDATE PRESSURE THRESHOLDS

NOTE: You must know the PIN to do the steps below.

1. Select "ECU VIEW"
2. Select "TIPMCGW"
3. Select "MISC FUNCTIONS"
4. Select "UPDATE PRESSURE THRESHOLDS"
5. Get tire pressure data from placecard on drivers side door jam.
6. Select "NEXT"
7. Select "NEXT"
8. From the drop down menu select the tire pressure from the placecard.
9. Select "NEXT"
10. Enter the four digit PIN
11. Select "NEXT"

12. Select "FINISHED"

NOTE: The vehicle must be driven before the TPMS light will turn off.

REMOTE START DISABLE OVERRIDE

With the diagnostic scan tool, perform the following steps.

1. Select "ECU VIEW"
2. Select "TIPMCGW"
3. Select "MISC FUNCTIONS"
4. Select "Temporary Remote Start Disable"
5. Select "START"
6. Select "NEXT"
7. Verify that "Current state: Disabled" is displayed. If not select "DISABLE"
8. Select "FINISH"

CLEAR ALL DTC'S

1. Use the diagnostic scan tool to clear all DTC's

ACTIVATE THE REMOTE START

To activate the remote start the vehicle must have been driven at least 35 MPH.

With the vehicle off, and the doors closed and locked, verify the remote start is functioning properly.

INTERIOR STORAGE

INSTRUCTION SHEET

CENTERSTACK AND SHIFTER BEZEL

CHALLENGER

PROCEDURE STEPS:

WARNING: Disable the airbag system before attempting any steering wheel, steering column, or instrument panel component diagnosis or service. Disconnect and isolate the negative battery (ground) cable, then wait two minutes for the airbag system capacitor to discharge before performing further diagnosis or service. This is the only sure way to disable the airbag system. Failure to take the proper precautions could result in accidental airbag deployment and possible serious or fatal injury.

1. Disconnect the negative battery cable.

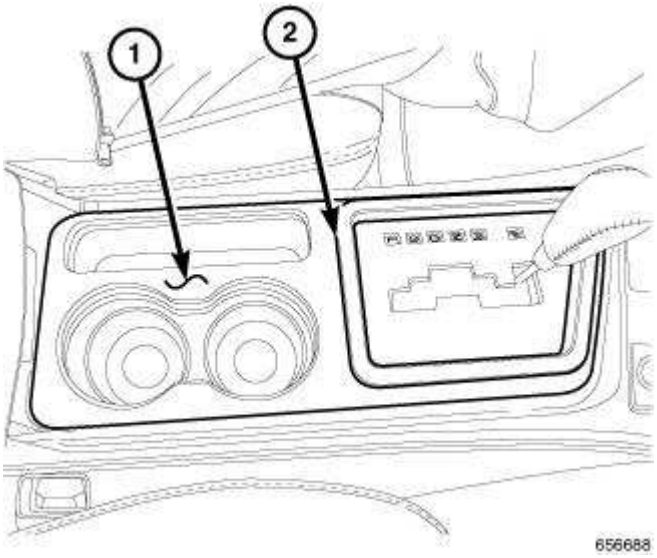

Fig. 26: Center Console Shifter Trim Ring & Console Trim Plate
Courtesy of CHRYSLER LLC

2. Using trim stick C-4755 or equivalent, remove the shifter trim ring (2) and console trim plate (1) by releasing the snap retainers from the console.
3. Install the new console trim plate (1) and shifter trim ring (2) by pressing the snap retainers into the console.

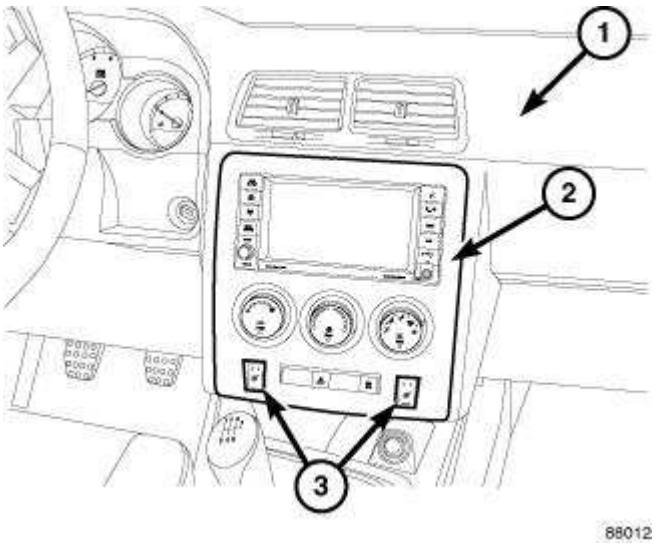

Fig. 27: Instrument Panel Cover & Center Bezel
Courtesy of CHRYSLER LLC

4. Using trim stick C-4755 or equivalent, remove the center bezel (2) from the instrument panel (1) by releasing the snap retainers from the instrument panel.
5. Disconnect the heated seat switch (3) electrical connectors, if equipped

6. Disconnect the A/C-heater control and hazard switch connectors.
7. Remove the center bezel from the vehicle.

NOTE: Take the proper precautions to protect the front face of the instrument panel center bezel from cosmetic damage during this service procedure.

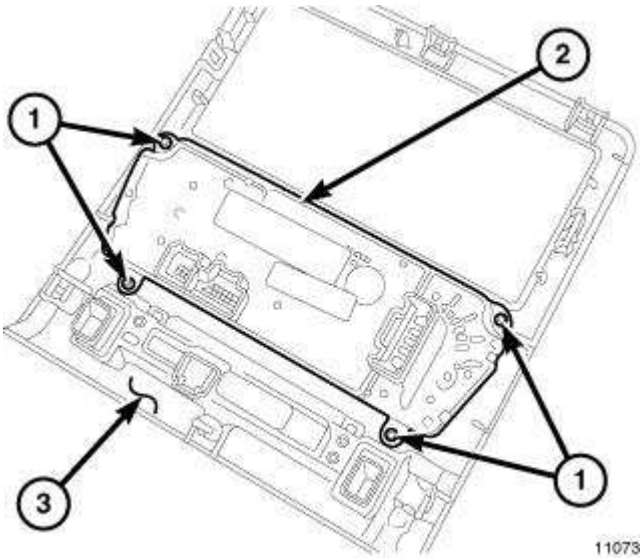

Fig. 28: Removing/Installing A/C-Heater Control At Rear Side Panel Center Bezel
Courtesy of CHRYSLER LLC

8. Remove the four screws (1) that are securing the A/C-heater control (2) to the instrument panel center bezel and remove the control.
9. Remove the two screws that are securing the hazard switch to the instrument panel center bezel and remove the switch.
10. From the back of the center bezel squeeze the two tabs at the top and bottom of the heated seat switch and push the heated seat switch through the opening of the center bezel.

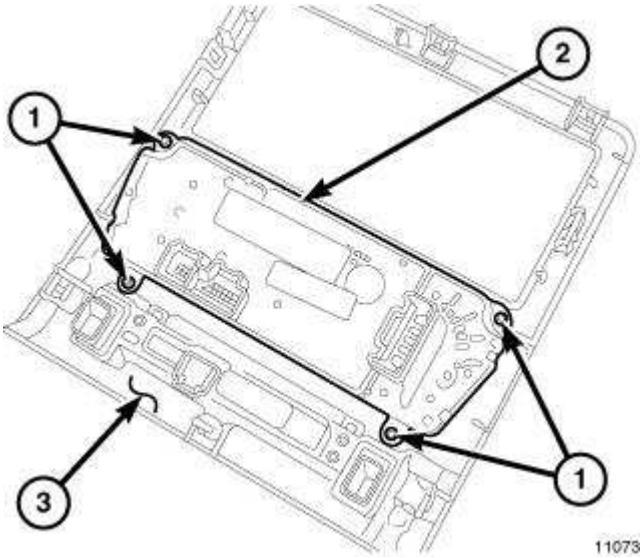

Fig. 29: Removing/Installing A/C-Heater Control At Rear Side Panel Center Bezel
Courtesy of CHRYSLER LLC

11. Transfer the A/C-heater control (2), heated seat switch, and the hazard switch to the new instrument panel center bezel (3).
12. Position the A/C-heater control (2) into the instrument panel center bezel (3).
13. Install the four screws (1) that secure--> the A/C-heater control to the instrument panel center bezel. Tighten the screws to 2 Nm (17 in.lbs.).
14. Install the two screws that secure the hazard switch to the instrument panel center bezel. Tighten the screws to 2 Nm (17 in.lbs).

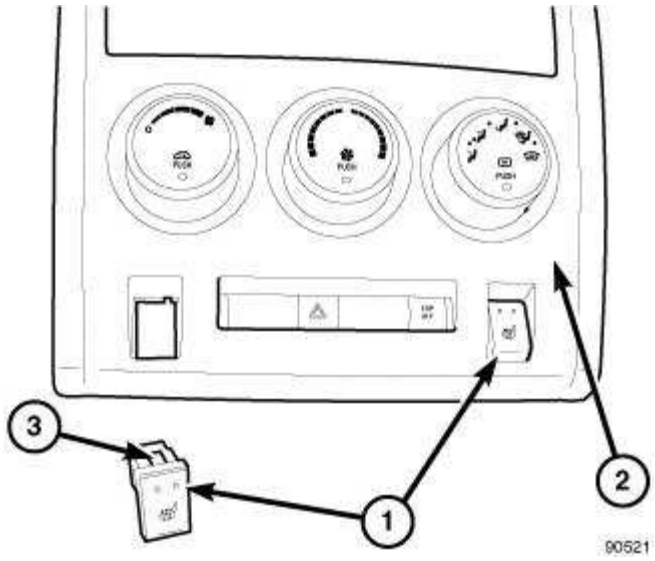

Fig. 30: Heated Seat Switch, Center Bezel & Tabs
Courtesy of CHRYSLER LLC

15. Install the heated seat switches. From the front of the center bezel (2), carefully push the heated seat switch (1) in through the front of the bezel until both tabs (3) lock into place.

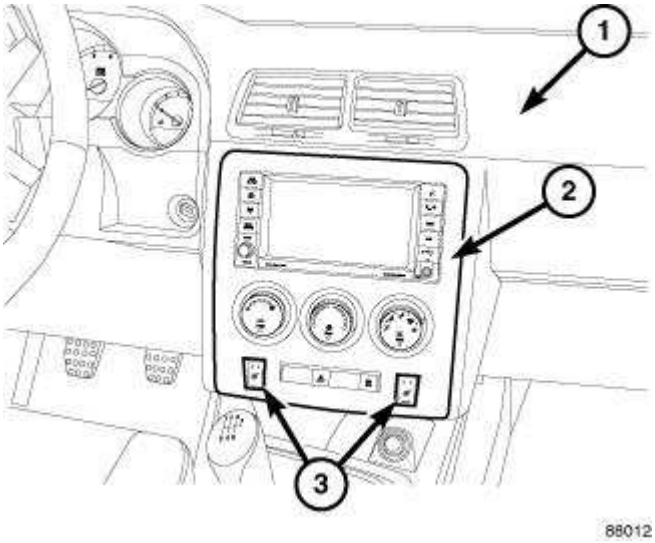

Fig. 31: Instrument Panel Cover & Center Bezel
Courtesy of CHRYSLER LLC

16. Position the center bezel (2) near the instrument panel (1).
17. Connect the electrical connectors for the A/C control, heated seat switches, if equipped, and the hazard switch.
18. Install the center bezel onto the instrument panel and carefully push on the outside edges of the center bezel to fully seat the snap clip retainers.
19. Connect the negative battery cable.

NOTE: The A/C-heater control automatically performs the Actuator Calibration function when the ignition is initially turned on when installing a new control or reinstalling the original control. However, the Actuator Calibration function must be manually initiated using a scan tool if the A/C-heater control has been previously installed in another vehicle.

20. If required, initiate the Actuator Calibration function using a scan tool.

EXTERIOR APPEARANCE

INSTRUCTION SHEET

TRAILER TOW HARNESS

CHALLENGER

PROCEDURE STEPS:

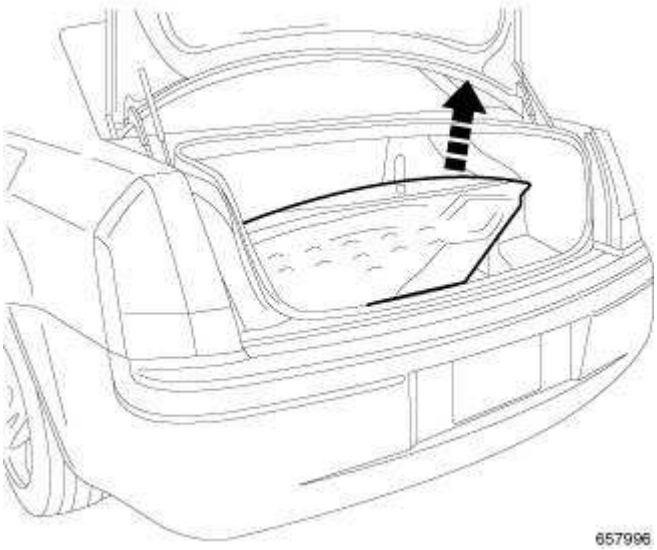

Fig. 32: Removing Spare Tire Cover
Courtesy of CHRYSLER LLC

1. Remove the spare tire cover.
2. Disconnect both the negative and positive battery cables.

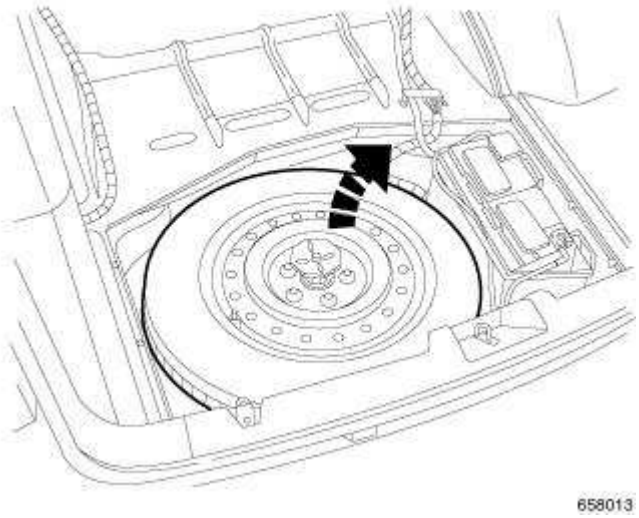

Fig. 33: Removing Spare Tire
Courtesy of CHRYSLER LLC

3. Remove the spare tire.

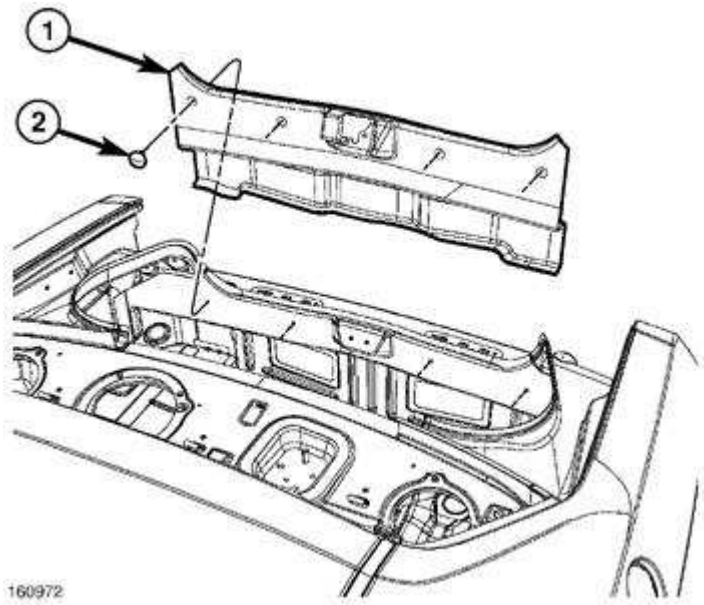

Fig. 34: Removing/Installing Trunk Rear Trim Panel
Courtesy of CHRYSLER LLC

4. Remove the rear trim panel from the trunk.
5. Remove the four push-pin fasteners (2) that secure the trunk rear trim panel (1) to the inside of the deck opening lower panel.
6. Remove the trim panel from the vehicle.

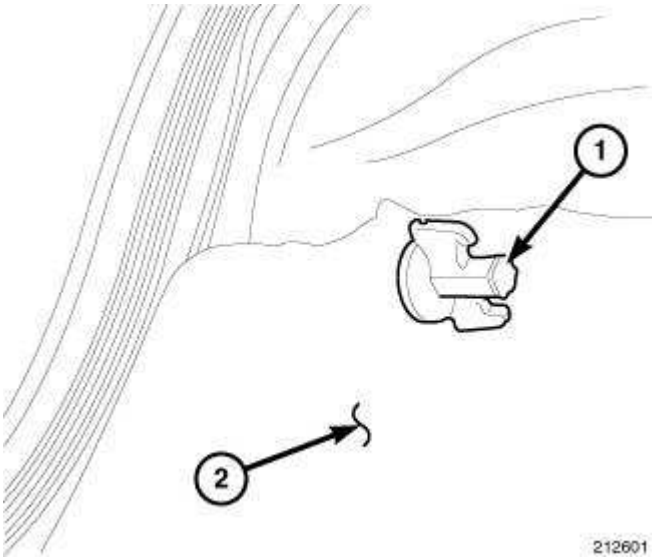

Fig. 35: Trunk Trim Fastener
Courtesy of CHRYSLER LLC

7. From inside the trunk, remove the wingnut (1) and peel back the trunk trim (2).

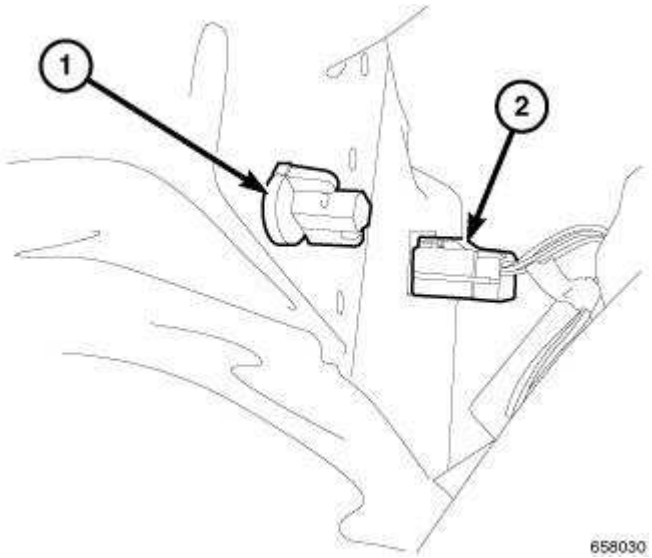

Fig. 36: Trunk Trim Fastener & Tail Lamp Connectors
Courtesy of CHRYSLER LLC

8. Disconnect the right and left tail lamp connectors.

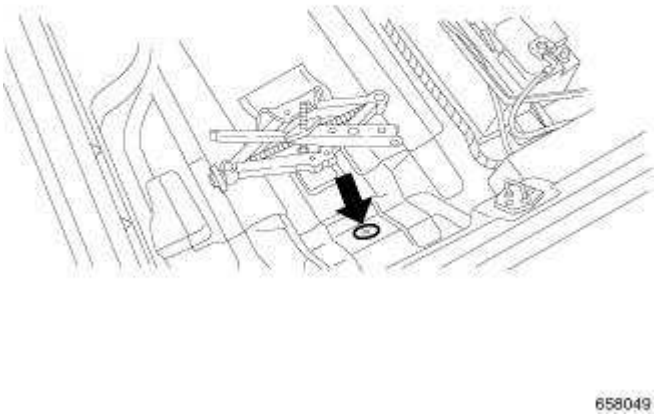

Fig. 37: Locating Center In Trunk Floor
Courtesy of CHRYSLER LLC

9. Locate the center and mark the location in the trunk floor.
10. Center punch the marked location.
11. Drill a 3 mm (1/8 in.) pilot hole at the center punched location.
12. Using a hole saw drill bit, drill a 44.5 mm (1 3/4 in.) hole in the marked location.
13. Debur the hole.
14. Apply Mopar® Corrosion Inhibitor, p/n 82300508, to the bare metal surface of the drilled hole.

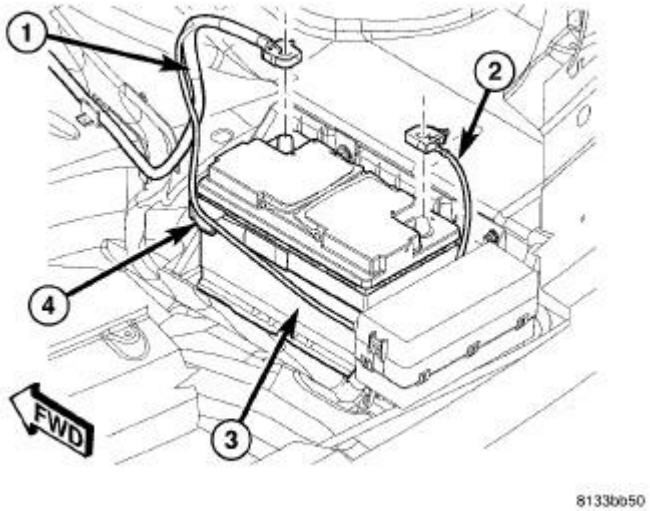

Fig. 38: Disconnecting/Connecting Battery Cables
Courtesy of CHRYSLER LLC

15. Connect the trailer tow RD/BK wire to the positive battery cable (1).
16. Connect the trailer tow WT wire to the negative battery cable (2).

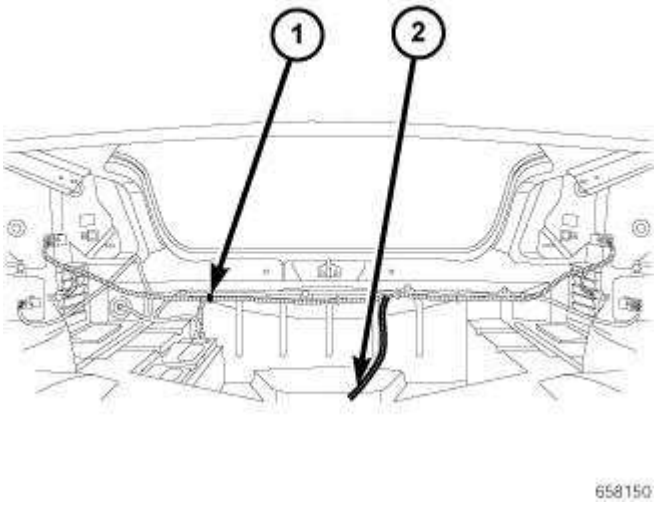

Fig. 39: Routing Trailer Tow Harness
Courtesy of CHRYSLER LLC

17. Connect the trailer tow tail lamp connectors to the tail lamps and tail lamp connectors.
18. Secure the trailer tow harness (1) along the back side of the trunk.
19. Route the 4-way trailer tow connector (2) through the drilled hole and seal the grommet with RTV silicon.

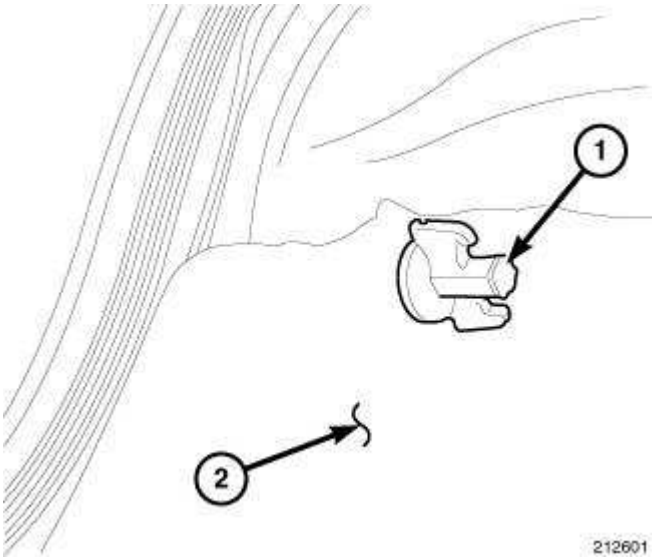

Fig. 40: Trunk Trim Fastener
Courtesy of CHRYSLER LLC

20. Replace the trunk trim (2) and install the second wing nut (1).

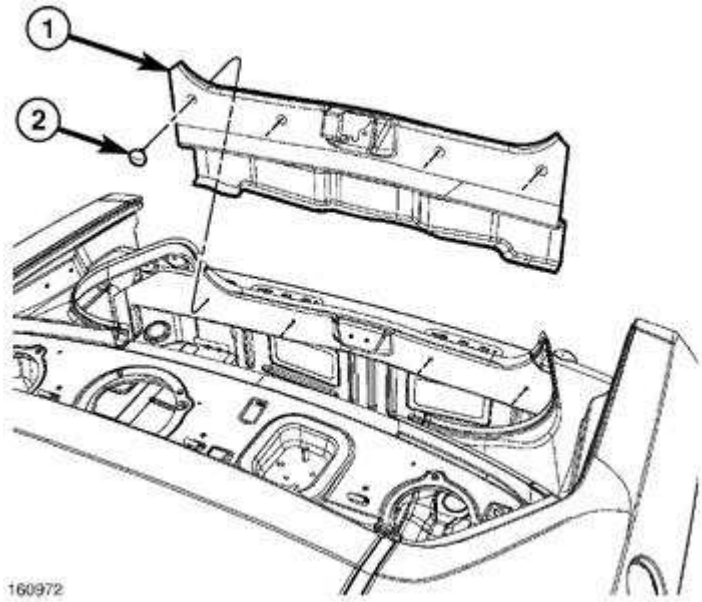

Fig. 41: Removing/Installing Trunk Rear Trim Panel
Courtesy of CHRYSLER LLC

21. Position the trunk rear trim panel (1) to the inside of the deck opening lower panel.
22. Install the four push-pin fasteners (2) that secure the trim panel to the deck opening lower panel.
23. Install the spare tire.
24. Connect the battery positive and negative cables.
25. Install the spare tire cover.

ACCESSORY HOOD

DODGE CHALLENGER

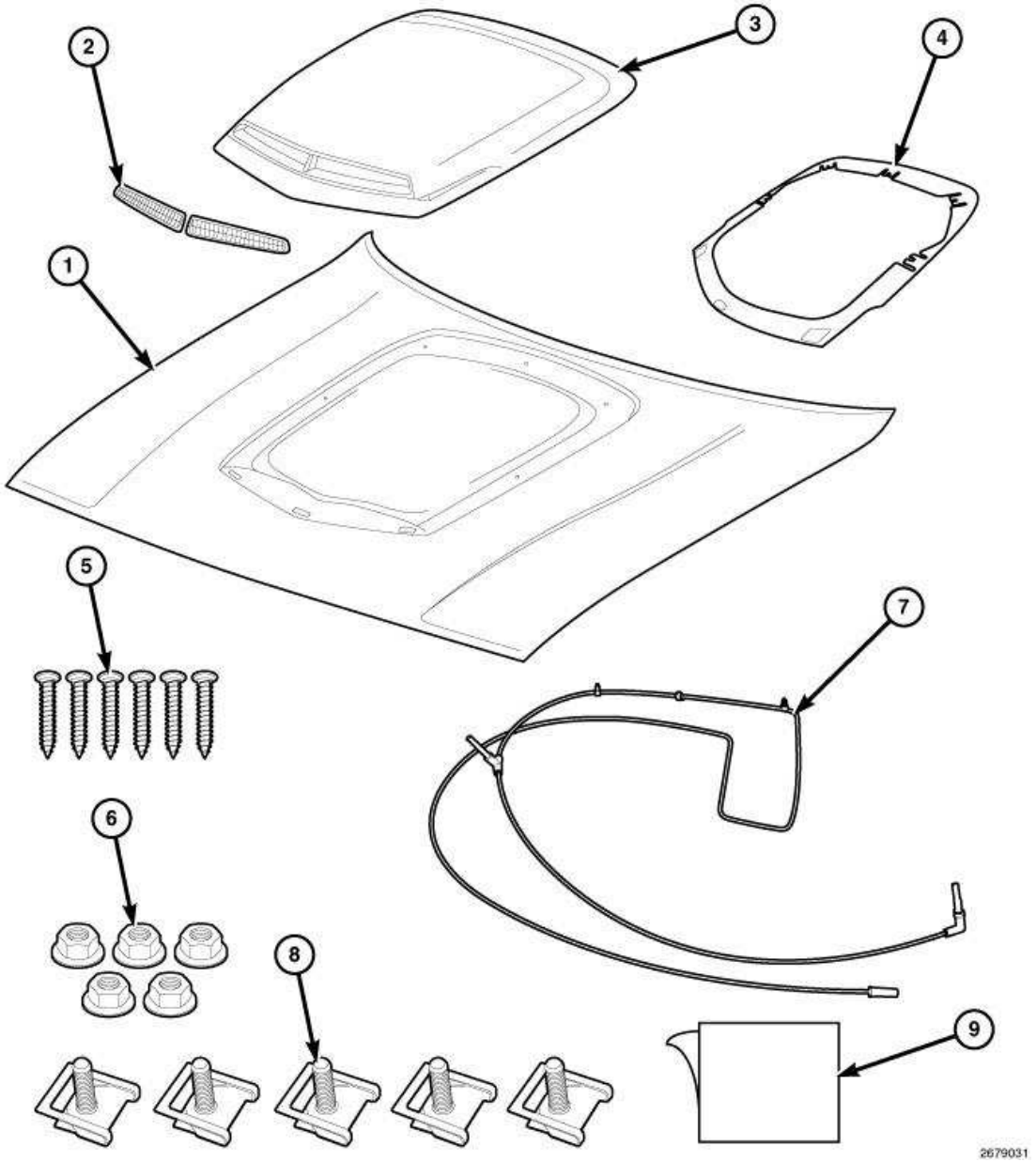

Fig. 42: Hood Accessory - Challenger
Courtesy of CHRYSLER LLC

Call Out	Description	Parts	Quantity
1	Hood	Supplied in kit	1
2	Hood Scoop Bezel	Supplied in kit	2
3	Hood Scoop	supplied in kit	1
4	Gasket	supplied in kit	1

5	Bezel Screws	supplied in kit	6
6	Hood Scoop Nuts	supplied in kit	5
7	Windshield Wiper Fluid Hose	supplied in kit	1
8	Hood Scoop J-clips	supplied in kit	5

PROCEDURE STEPS:

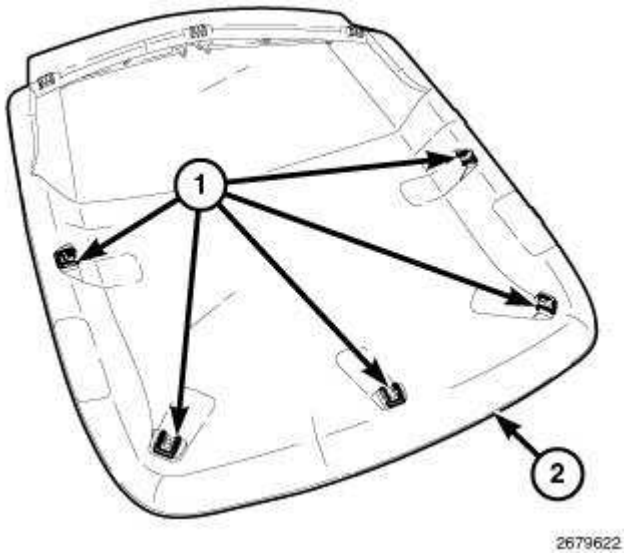

Fig. 43: Installing Hood Scoop J-Clips
Courtesy of CHRYSLER LLC

NOTE: For safety, ease of installation and to avoid damage to any parts, it is recommended to have an assistant aid in installing this kit.

1. Prior to installation, paint the hood and the hood scoop supplied in the kit to match the vehicle's body color or color as desired. Let paint dry thoroughly before proceeding with installation.
2. If desired, paint the hood scoop bezels supplied in the kit to match the vehicle's body color or color as desired. Let paint dry thoroughly before proceeding with installation.
3. Pre-assemble the hood scoop (2) by installing the five J-clips (1) to the rear underside of the scoop (2).

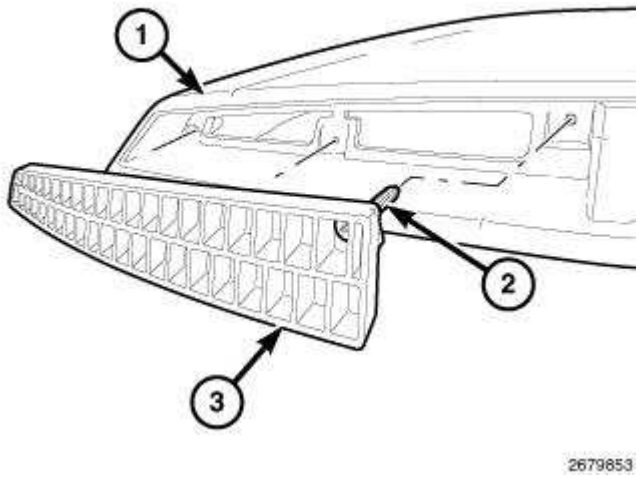

Fig. 44: Installing Hood Scoop Bezel
Courtesy of CHRYSLER LLC

CAUTION: To avoid damage to any of the parts, do not install the hood scoop bezels with power tools,

4. Using a phillips screwdriver, install the hood scoop bezel (3) to the hood scoop (1). Insert the screws (2) provided in the kit through the hood scoop bezel (3) and into the hood scoop (1). Tighten the screws (2) until tight. Repeat steps for opposite side of hood scoop (1).

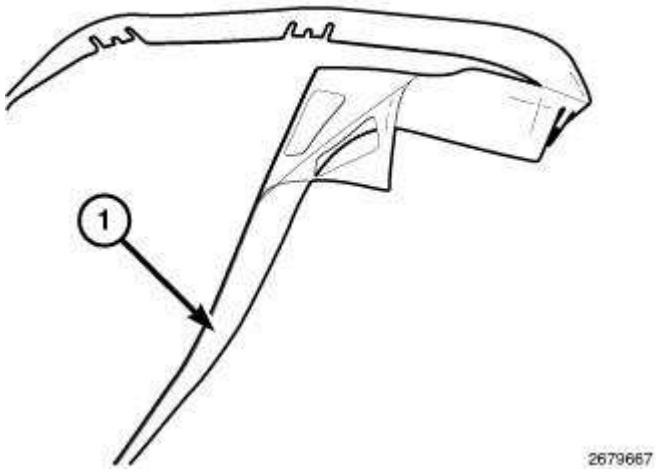

Fig. 45: Removing Tan Adhesive Backing From Gasket
Courtesy of CHRYSLER LLC

5. Wet the gasket installation area on the hood with a 50/50 mixture of isopropyl alcohol and water. This will prevent the gasket (1) from immediately sticking to the hood and allows you to easily adjust the gasket (1) it into position. The mixture will not interfere with the adhesion after it

has evaporated.

CAUTION: Take caution not to tear or rip any part of the gasket.

6. **Carefully** remove the tan adhesive backing from the gasket (1).

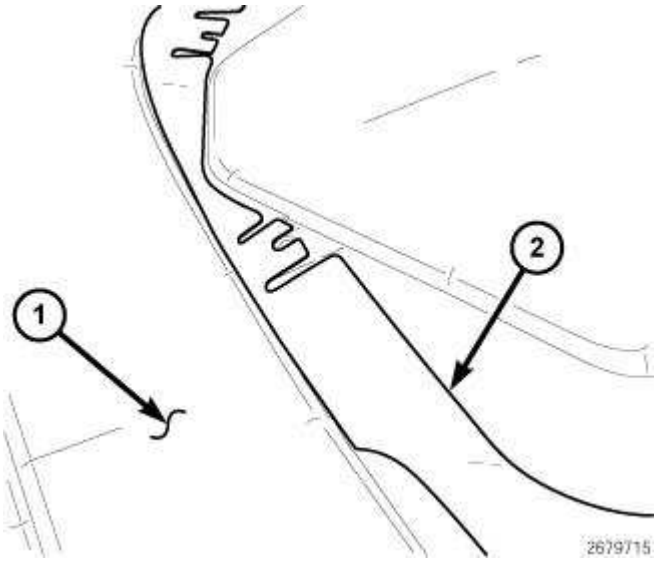

Fig. 46: Installing Gasket To Hood Scoop Channel
Courtesy of CHRYSLER LLC

7. Install the gasket (2) to the hood scoop channel. The rear portion of the gasket (2) must be lined up with the edge of scoop channel. Have an assistant hold the gasket in place while the other person aligns and promotes the adhesion of the gasket (2).

CAUTION: Take caution not to tear or rip any part of the gasket.

8. Once aligned, press down firmly on the gasket (2) for 30 seconds to allow for proper adhesion.**Let the 50/50 mixture of isopropyl alcohol and water dry completely before proceeding with the hood scoop installation portion.**

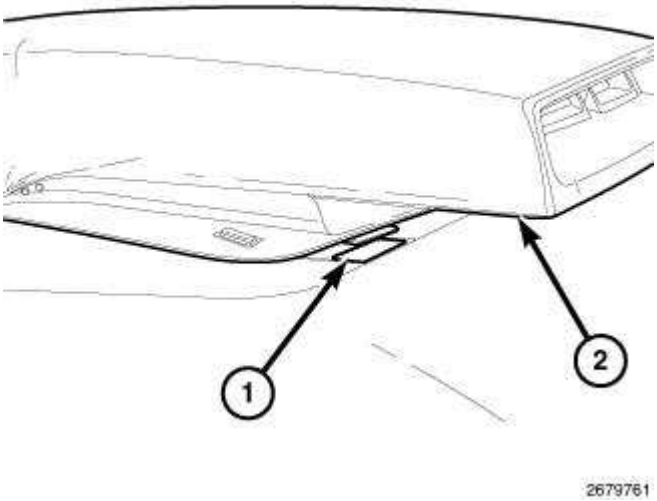

Fig. 47: Installing Scoop To Hood - Rear Side
Courtesy of CHRYSLER LLC

CAUTION: Take care not to damage the paint when installing the hood scoop to the hood.

NOTE: Install the scoop to the hood as shown in illustration. If the hood is not installed in the order depicted in steps 9-10, the scoop will not align to hood.

9. Install the scoop (2) by first tilting the rear portion of the hood scoop (2) up, insert the hooks located on the front underside of the scoop (2) into the front slots (1) of the hood and push the scoop (2) forward until the hooks are properly seated into the hood slots (1).

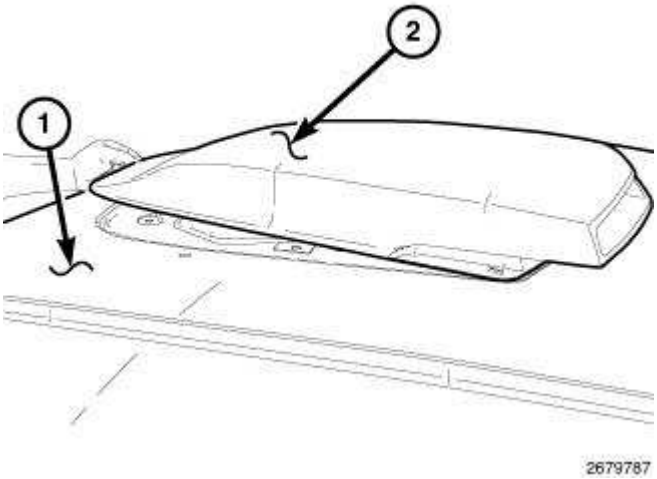

Fig. 48: Installing Scoop To Hood - Front Side

Courtesy of CHRYSLER LLC

10. Once the front portion of the hood scoop (2) is properly installed, press down on the rear portion of the scoop (2) to insert the hood scoop's (2) pre-installed J-clips into the slots located on the hood (1). The pre-installed J-clip studs should align with the five slots located at the rear of the hood scoop channel. If one or more of the J-clips studs do not align to the slots, use a non-scratching pusher stick (ie paint stick with a 'v' on the end) to push the stud(s) into the slot(s).

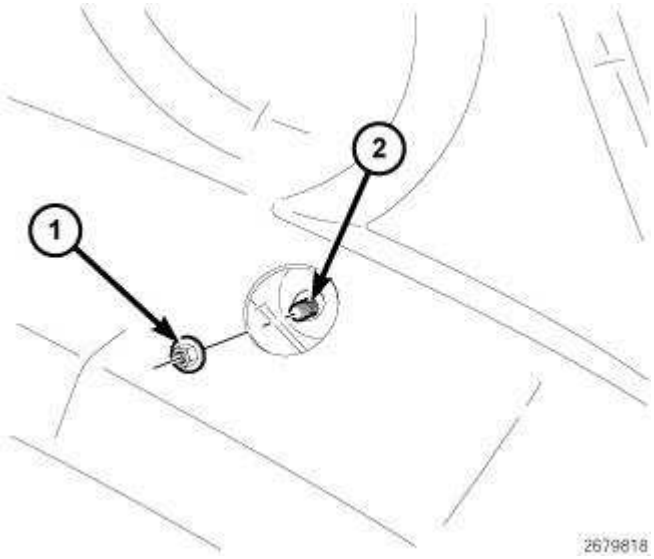

Fig. 49: Installing Hood Scoop Nut
Courtesy of CHRYSLER LLC

CAUTION: Be sure to not to damage the paint finish of the hood by placing the hood on non-abrasive surface.

11. With the help of an assistant, turn the hood upright or upside down while holding the hood scoop in place to locate the five access holes in the inner hood.
12. Install the hood scoop nut (1) included in the kit to the J-clip stud (1) through the inner hood access hole. Tighten the nuts to 20 +/- 2 lbs. in.
13. Tighten the 2 side nuts first and then tighten the middle rear nut. Finally tighten the 2 outer corner rear nuts. Tighten the nuts again in the same sequence after all are tightened the first time.

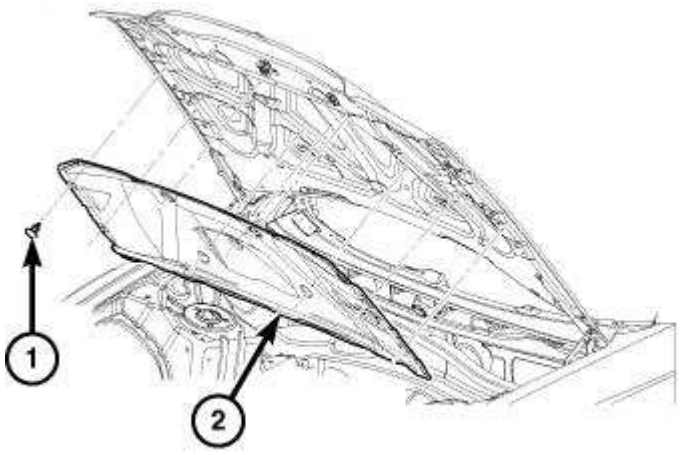

Fig. 50: Removing/Installing Vehicle Hood Silencer Pad
Courtesy of CHRYSLER LLC

14. Open the vehicle hood.

CAUTION: Take caution not damage the retaining clips when removing.

15. Remove the vehicle hood silencer pad (2) by removing the nine retaining clips (1). **Save the clips for re-installation.**

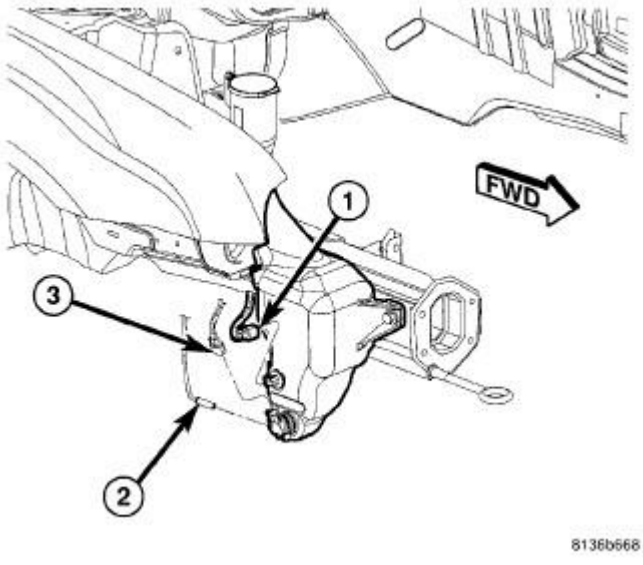

Fig. 51: Identifying Wiper Hose, Reservoir Pump & Washer Fliud Level Sensor
Courtesy of CHRYSLER LLC

16. Disconnect the wiper hose (2) from the reservoir and drain the washer fluid into suitable

container.

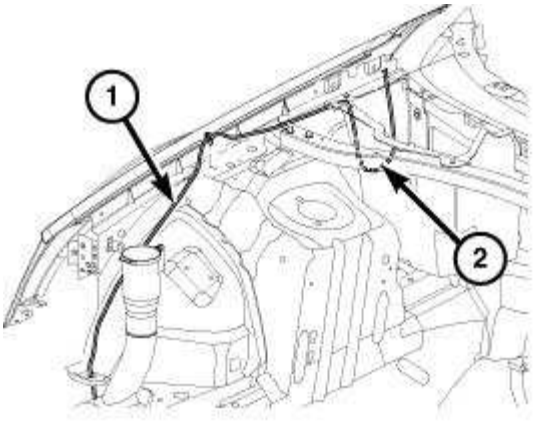

Fig. 52: Identifying Wiper Hose Routing
Courtesy of CHRYSLER LLC

17. Remove the wiper hose (1) from the engine compartment.

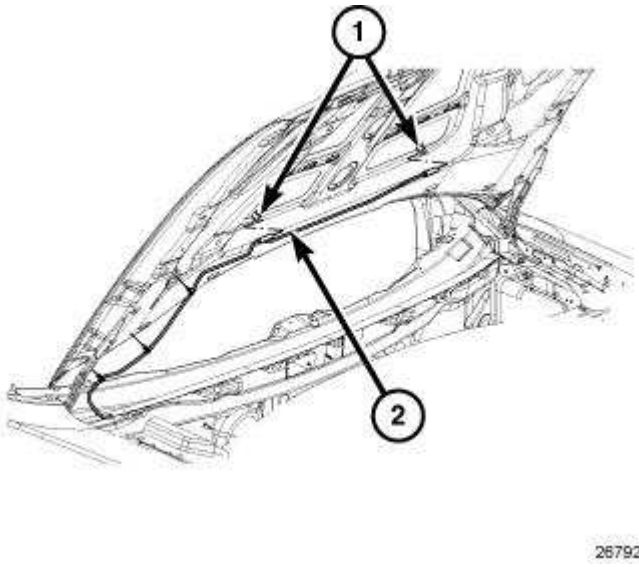

Fig. 53: Removing/Installing Hood Wiper Nozzle Hoses
Courtesy of CHRYSLER LLC

18. Disconnect the wiper hose (2) from the vehicle hood's windshield wiper nozzles (1).
19. Remove the wiper hose (2) and discard.

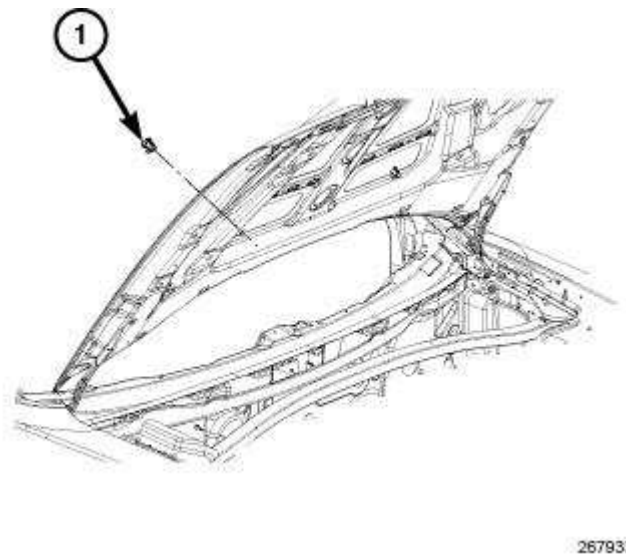

Fig. 54: Removing/Installing Hood Wiper Nozzles
Courtesy of CHRYSLER LLC

CAUTION: Take caution not to damage the wiper nozzles when removing.

20. Remove the vehicle hood's wiper nozzles (1).**Save the wiper nozzles for re-installation.**

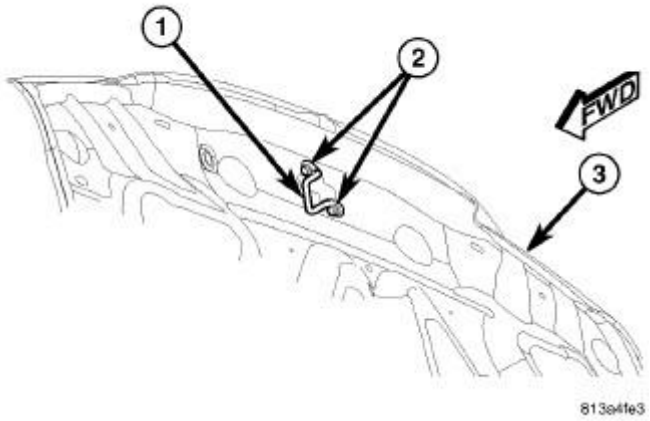

Fig. 55: Removing/Installing Hood Latch Striker
Courtesy of CHRYSLER LLC

21. Remove the hood latch striker (1) and mounting screws (2) from the vehicle hood (3).**Save the hood latch striker (1) and mounting screws (2) for re-installation.**

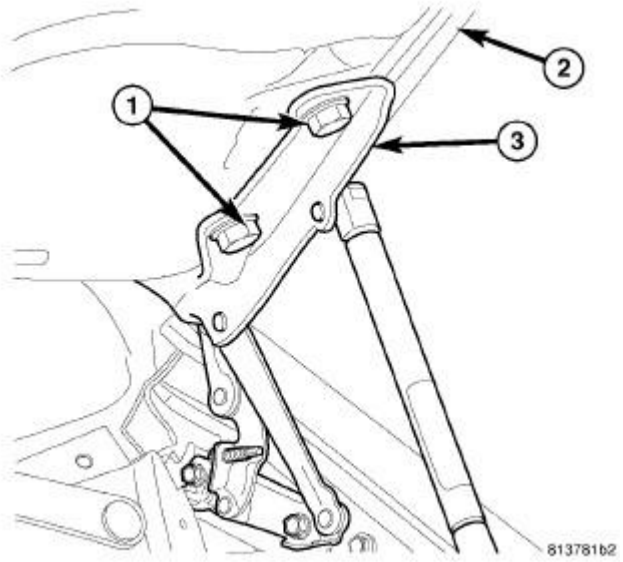

Fig. 56: Upper Hinge Bracket
Courtesy of CHRYSLER LLC

22. With the aid of an assistant, remove the two bolts (1) from the vehicle hood hinge (3). Repeat steps on opposite side. Remove and discard the vehicle hood (2).**Save the hood hinge bolts for re-installation.**

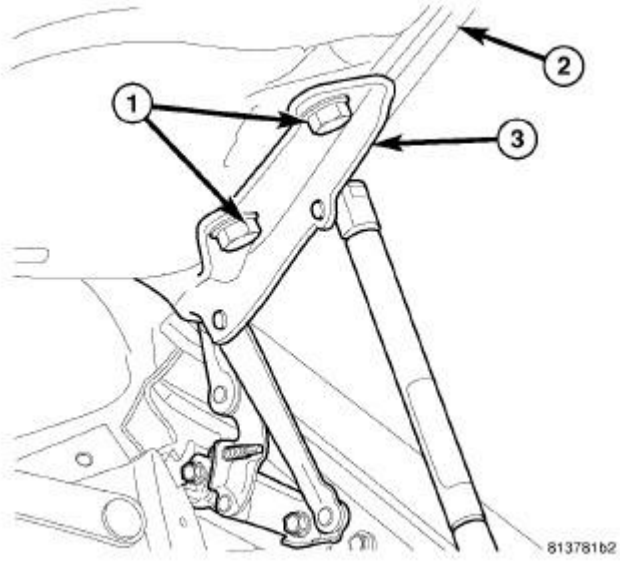

Fig. 57: Upper Hinge Bracket
Courtesy of CHRYSLER LLC

23. With the aid of an assistant, support and position the hood (2) included in the kit to the two upper hinge brackets (3) on the vehicle.
24. Install and hand tighten the hinge bolts (1). Repeat steps on opposite side.

25. Adjust the kit hood to the correct position, refer to the hood flushness chart. Once the hood is positioned properly, tighten the hood hinge bolts (1) to 28 N.m (21 ft. lbs.). Repeat steps on opposite side.

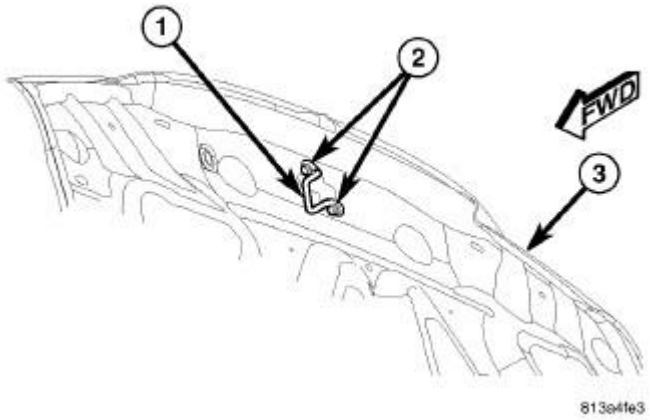

Fig. 58: Removing/Installing Hood Latch Striker
Courtesy of CHRYSLER LLC

26. Transfer and position the hood latch striker (1) and mounting screws (2) to the underside of the kit hood (3).
27. Install and tighten the two screws (2) that secure the striker to the hood inner reinforcement. Tighten the screws to 28 N.m (21 ft. lbs.).

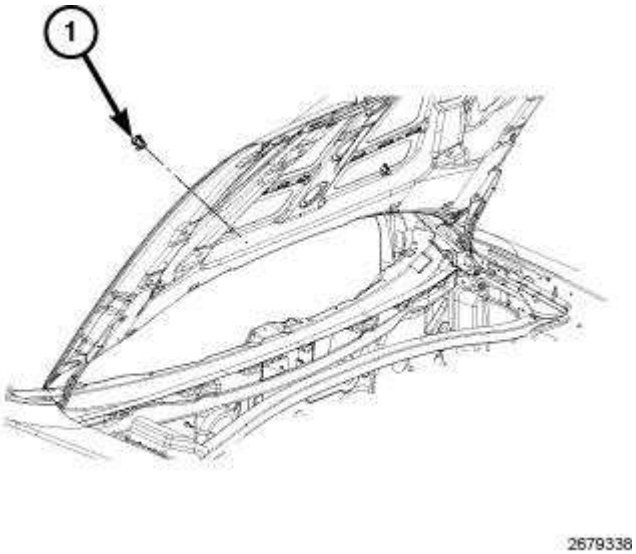

Fig. 59: Removing/Installing Hood Wiper Nozzles
Courtesy of CHRYSLER LLC

28. Transfer the wiper nozzles (1) into the kit hood.

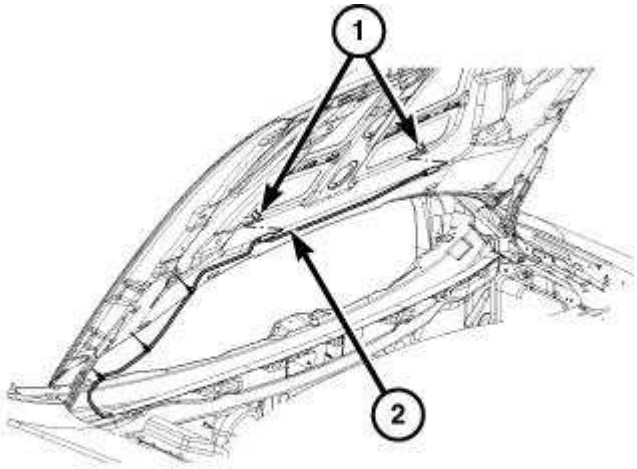

Fig. 60: Removing/Installing Hood Wiper Nozzle Hoses
Courtesy of CHRYSLER LLC

29. Connect the wiper hose (2) included in kit to the windshield wiper nozzles (1).
30. Install the wiper hose (2) included in kit to the formed flange of the hood.

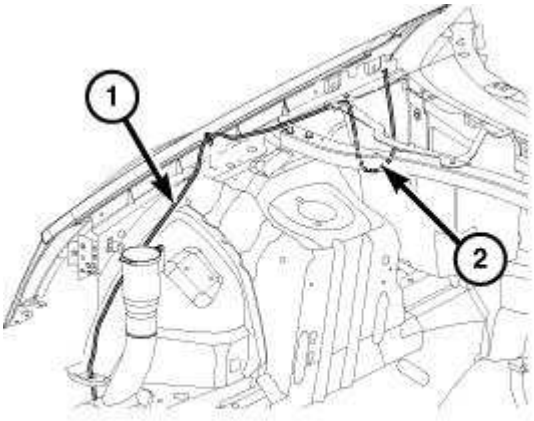

Fig. 61: Identifying Wiper Hose Routing
Courtesy of CHRYSLER LLC

CAUTION: To avoid pinching or cutting the washer hose (1), the washer hose (1) must be installed as shown in illustration with the rear portion of the washer hose (2) fed into the cavity in the shape of a "U".

31. Install the wiper hose (1, 2) to the engine compartment as shown in illustration.

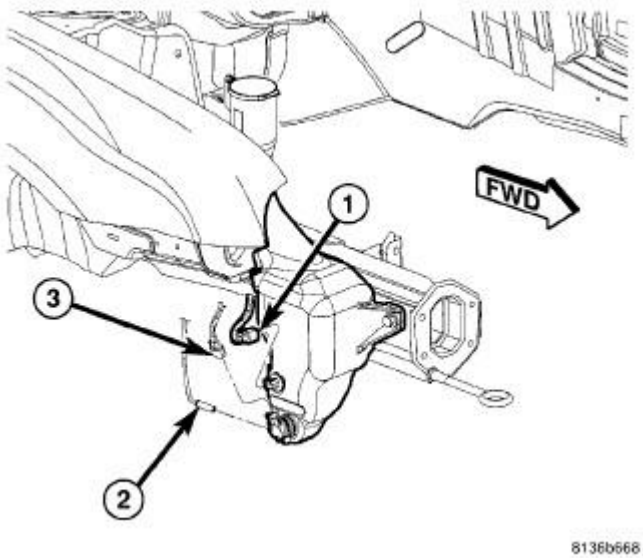

Fig. 62: Identifying Wiper Hose, Reservoir Pump & Washer Fliud Level Sensor
Courtesy of CHRYSLER LLC

32. Connect the wiper hose (2) to the reservoir and fill the reservoir with washer fluid. Run the washers and verify there are no leaks.

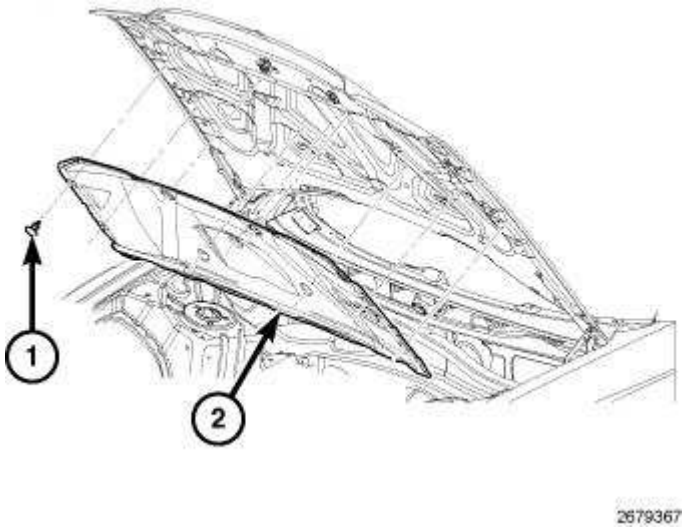

Fig. 63: Removing/Installing Vehicle Hood Silencer Pad
Courtesy of CHRYSLER LLC

33. Install the hood silencer pad (2) to the hood using the transferred nine retaining clips (1).
34. Close the hood.

HOOD FLUSHNESS CHART

NOTE:
All measurements are in millimeters.

O/F = Over Flush, U/D = Up/Down U/F = Under Flush, F/A = Fore/Aft		**- -**	
DIMENSION	**DESCRIPTION**	**GAP**	**FLUSH**
1	Hood to Fascia	3.5 +/- 1.5 parallel to 2.0	Fascia O/F 0.5 + 0.5/-1.0 consistent within 1.5
1	Hood to Fender	3.5 +/- 1.5 parallel to 1.0	Hood 1.0 U/F +/- 1.5

AUDIO AND ELECTRONICS

INSTRUCTION SHEET

WiFi ROUTER

300/Charger/CHALLENGER

PROCEDURE STEPS:

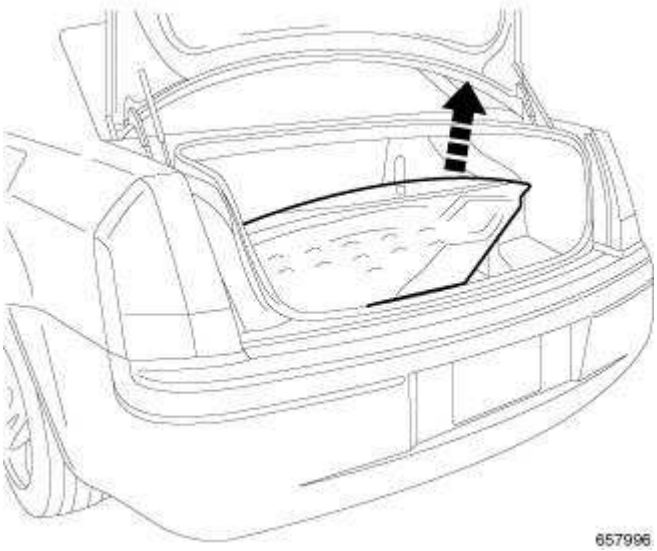

Fig. 64: Removing Spare Tire Cover
Courtesy of CHRYSLER LLC

1. Remove the spare tire cover.

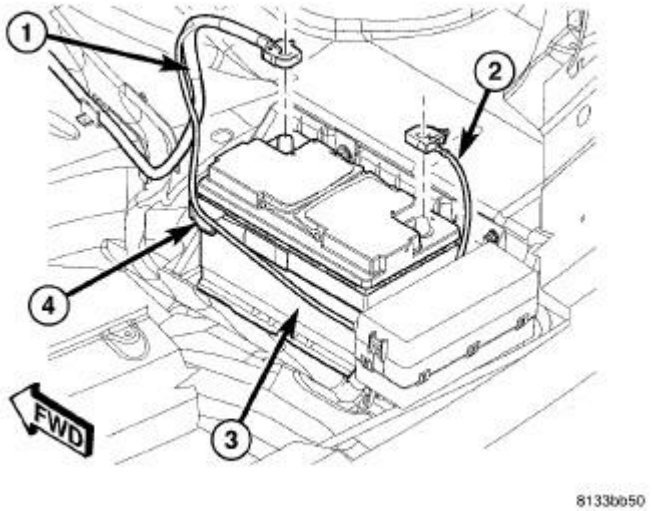

Fig. 65: Disconnecting/Connecting Battery Cables
Courtesy of CHRYSLER LLC

2. Disconnect the negative battery cable. (2)

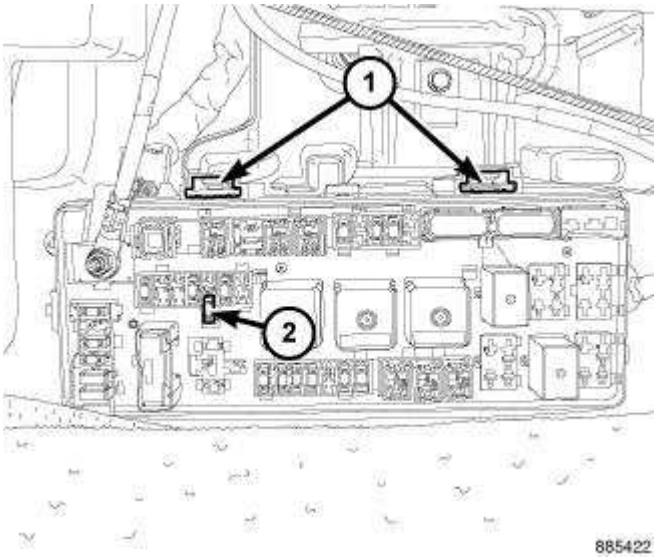

Fig. 66: Removing/Installing Power Distribution Center (PDC)
Courtesy of CHRYSLER LLC

3. Remove the Power Distribution Center (PDC) by pressing the releasing tabs (1) and pulling the PDC straight up.

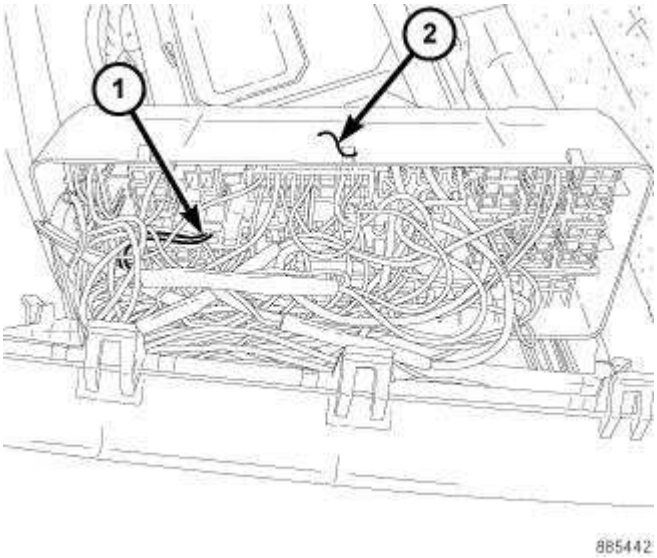

Fig. 67: Locating Circuit
Courtesy of CHRYSLER LLC

4. Remove the back cover of the PDC (2).
5. Locate the F981 (RD/BR) circuit (1) going to fuse 18. Refer to the wire schematic.
6. Measure the appropriate length of wire so that the wire harness will reach the router from the PDC.

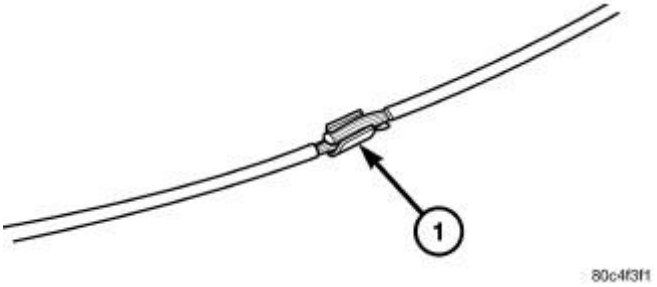

Fig. 68: Splice Band
Courtesy of CHRYSLER LLC

1 - SPLICE BAND

7. Remove one-half (1/2) inch of insulation from each wire that needs to be spliced.
8. Place a piece of adhesive lined heat shrink tubing on one side of the wire. Make sure the tubing will be long enough to cover and seal the entire repair area.
9. Place the strands of wire overlapping each other inside of the splice clip (1).

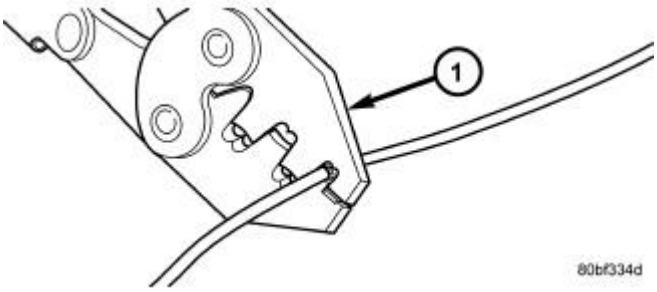

Fig. 69: Crimping Tool
Courtesy of CHRYSLER LLC

1 - CRIMPING TOOL

10. Using crimping tool (1), Mopar p/n 05019912AA, crimp the splice clip and wires together.

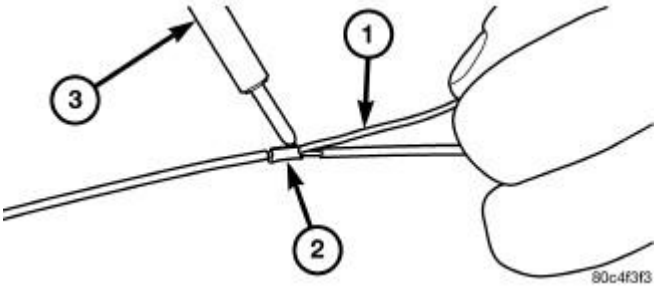

Fig. 70: Solder Splice
Courtesy of CHRYSLER LLC

1 - SOLDER 2 - SPLICE BAND 3 - SOLDERING IRON

11. Solder (3) the connection (2) together using rosin core type solder (1) only.

CAUTION: Do not use acid core solder.

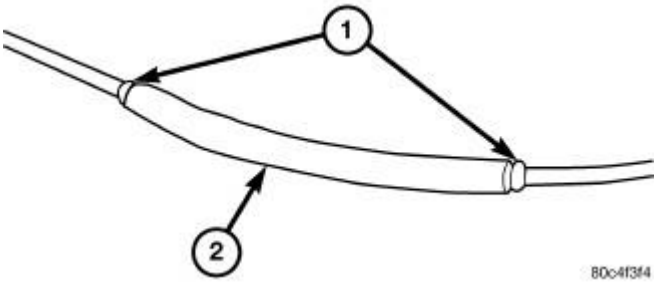

Fig. 71: Heat Shrink Tube

Courtesy of CHRYSLER LLC

1 - SEALANT 2 - HEAT SHRINK TUBE

12. Center the heat shrink tubing (2) over the joint and heat using a heat gun. Heat the joint until the tubing is tightly sealed and sealant (1) comes out of both ends of the tubing.
13. Attach the black wire to the negative battery terminal stud.
14. Install the PDC back cover, being careful not to pinch any wires between the PDC and the PDC cover.
15. Install the PDC.
16. Connect the negative battery cable.
17. Install the spare tire cover.

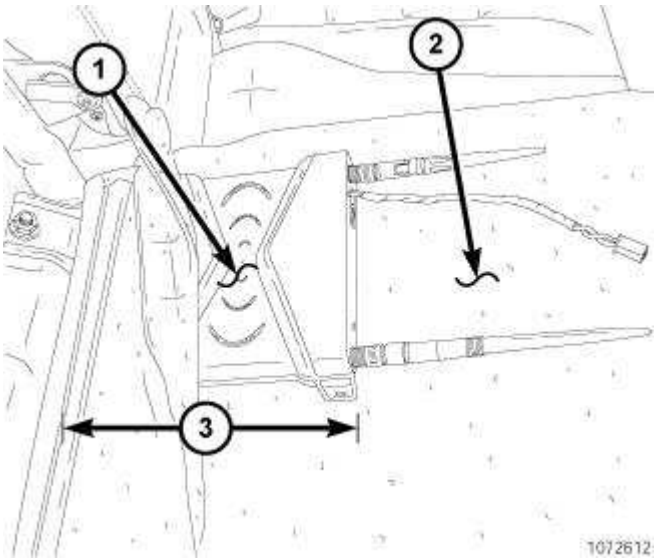

Fig. 72: Securing Wi-Fi Router
Courtesy of CHRYSLER LLC

18. Secure the Wi-Fi Router (1) with the supplied fasteners on the back of the passenger rear seat (2). Measure 230 mm (9.1 in.) from the bottom of the seat back (3) to the top of the Wi-Fi Router.

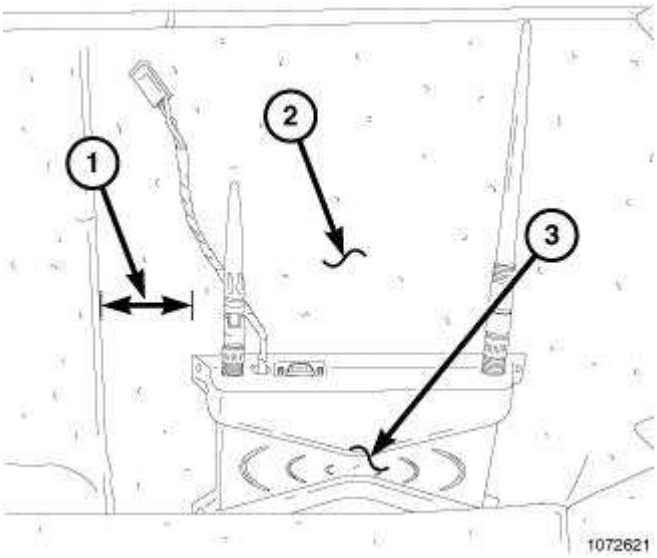

Fig. 73: Wi-Fi Router Position
Courtesy of CHRYSLER LLC

19. The Wi-Fi Router (3) should be 50 mm (2 in.) from the left edge (1) of the seat back (2).
20. Route and secure the twisted pair wire harness from the PDC to the Wi-Fi Router along the passenger side trunk.
21. Connect the twisted pair wire harness to the router.
22. Verify system operation.

SDARS ANTENNA

DODGE CHALLENGER

PROCEDURE STEPS:

NOTE: Verify that the radio is satellite compatible. Look for the SIRIUS® logo on the radio.

WARNING: Disable the airbag system before attempting any steering wheel, steering column, or instrument panel component diagnosis or service. Disconnect and isolate the negative battery (ground) cable. Wait two minutes for the airbag system capacitor to discharge before performing further diagnosis or service. This is the only sure way to disable the airbag system. Failure to follow these instructions may result in possible serious or fatal injury.

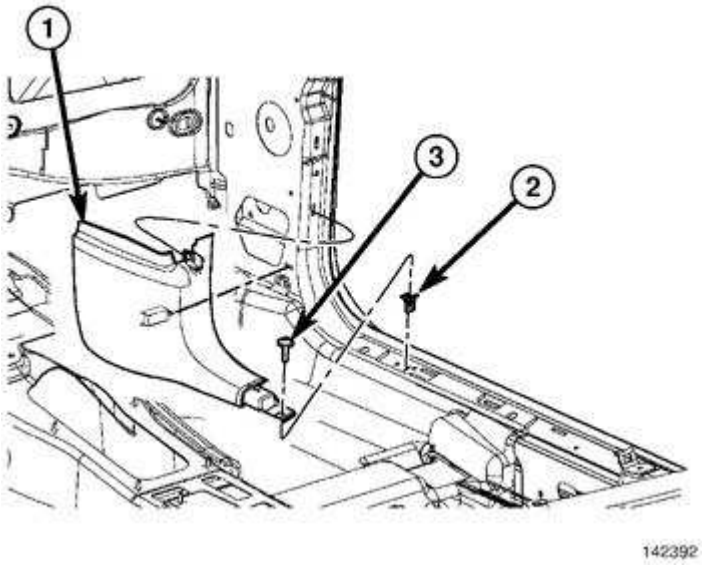

Fig. 74: Removing/Installing Lower Cowl Trim Panel
Courtesy of CHRYSLER LLC

1. Disconnect and isolate the battery negative cable.
2. Remove both door opening scuff plates.
3. Remove the A-pillar lower trim cover.
4. Remove the cowl side trim panel.
5. Remove the vehicle left side carpet retainers.

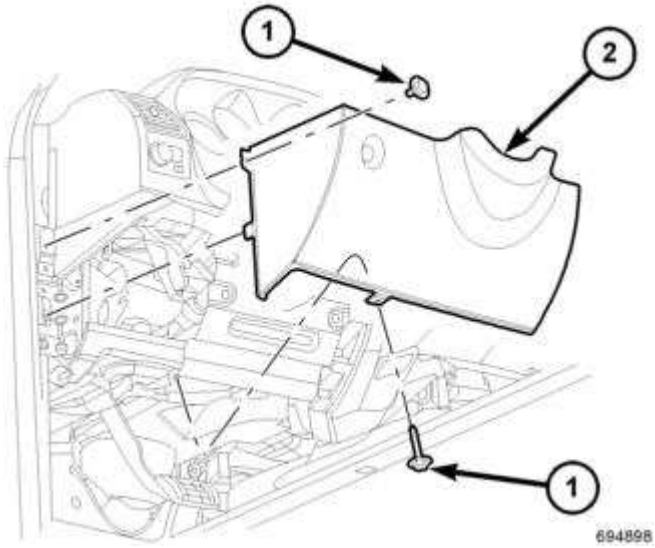

Fig. 75: Steering Column Cover
Courtesy of CHRYSLER LLC

6. Remove the steering column cover (1) and disconnect the electrical switch.
7. Remove the sound insulator.

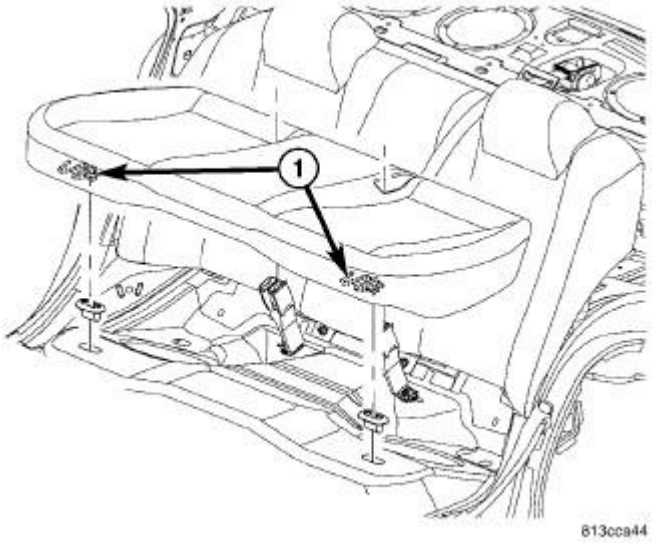

Fig. 76: Rear Seat Cushion
Courtesy of CHRYSLER LLC

8. Remove the rear seat cushion.
9. Remove the left side front and rear lower seatbelt anchor bolts.
10. Remove the left rear quarter trim panel.
11. Remove the left inside upper quarter trim panel.
12. Remove the right side front and rear lower seatbelt anchor bolts.

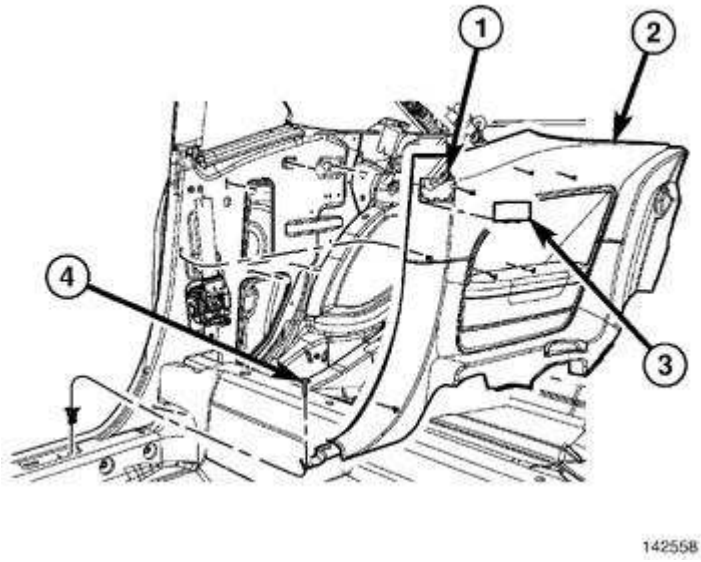

Fig. 77: Removing/Installing Lower Quarter Trim Panel
Courtesy of CHRYSLER LLC

13. Remove the right rear quarter trim panel (2).

14. Remove the right inside upper quarter trim panel.
15. Remove the rear corner interior trim panels.
16. Remove the coat hooks.

CAUTION: Pulling the antenna cable straight out of the radio without pulling on the locking antenna connector could damage the cable or radio.

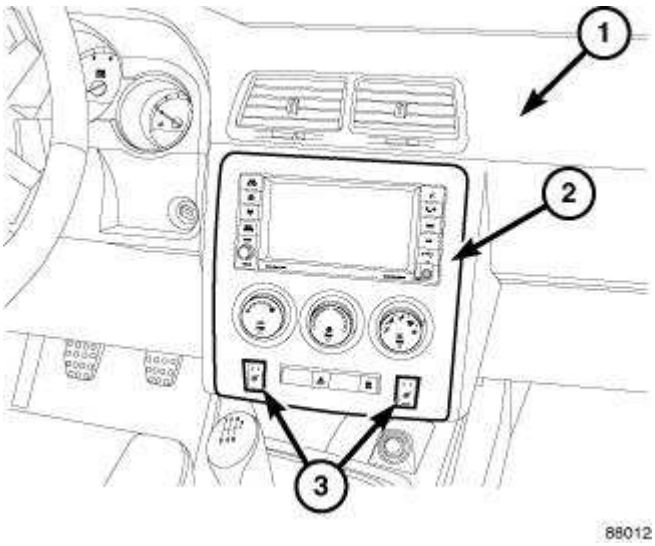

Fig. 78: Instrument Panel Cover & Center Bezel
Courtesy of CHRYSLER LLC

17. Remove the instrument panel center bezel (1) and disconnect electrical connectors.
18. Remove and disconnect the radio.

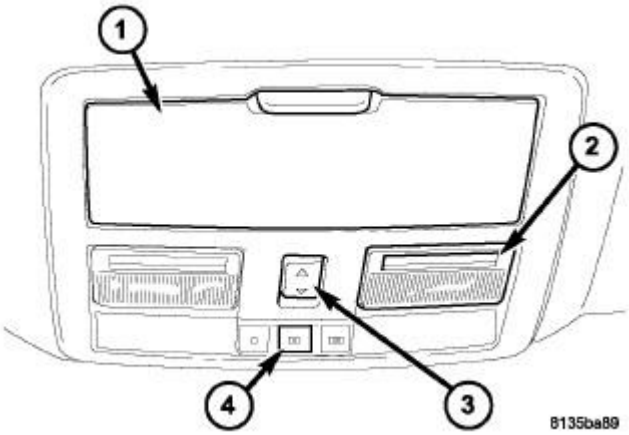

Fig. 79: Identifying Overhead Console Components
Courtesy of CHRYSLER LLC

19. Remove the overhead console assembly and disconnect the electrical connectors.
20. Remove the sun visor assemblies and disconnect the electrical connectors.
21. Remove the assist handle assembly.

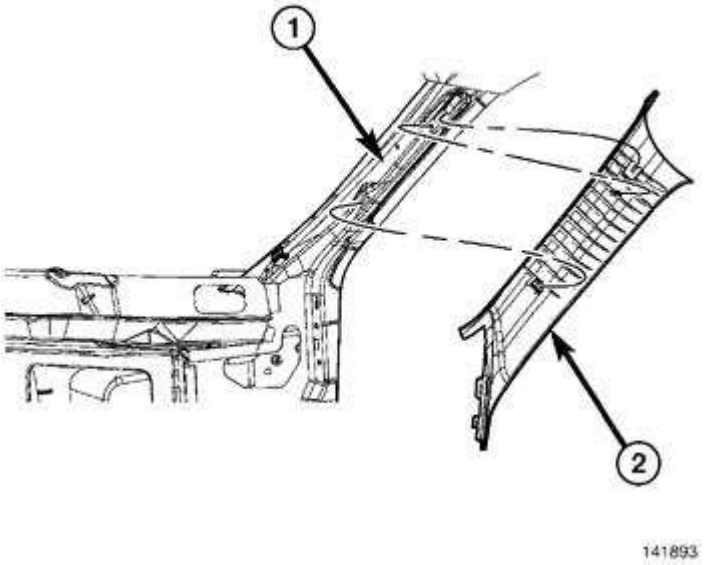

Fig. 80: Removing/Installing A-Pillar Trim Panel
Courtesy of CHRYSLER LLC

22. Remove the upper A-pillar trim panels (2).
23. Release clips and lower the headliner.
24. Locate center line of roof, cut out template as indicated, center template and tape in place.
25. Carefully center punch at the two locations for the antenna mounting holes. Remove and discard template.

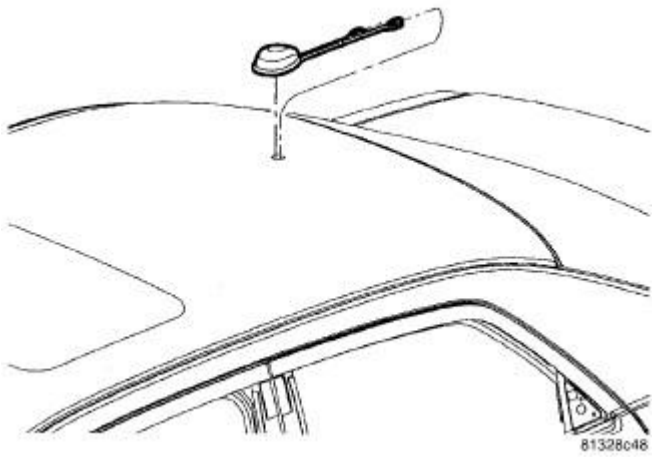

Fig. 81: Satellite Radio Antenna
Courtesy of CHRYSLER LLC

26. Drill a 3mm (1/8") pilot hole at the marked locations.
27. Drill a 5mm (13/64 in.) diameter hole at the mark closest to the vehicles rear glass.
28. Using a hole saw, drill a 19mm (3/4") hole at the mark forward of the previous hole drilled at the second mark.
29. Deburr holes and remove rough edges.
30. Clean and prepare bare metal surfaces.
31. Apply primer to bare metal surfaces.
32. Route harness and set antenna in place.
33. Install fastener and tighten to spec.
    - Tighten to 9Nm (80in.lbs.)
34. Connect hard-shell connector.

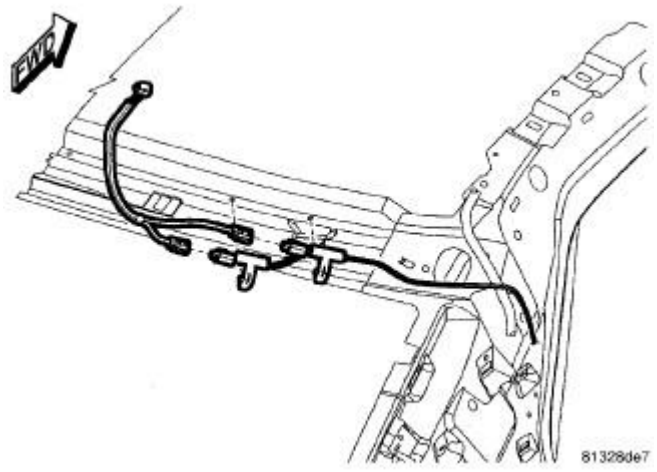

Fig. 82: Wire Harness Connectors
Courtesy of CHRYSLER LLC

35. Route the antenna cable down the left D-pillar, along the left inner apron along the lower instrument panel brace and up to the radio opening. Secure to the vehicles body electrical harness and lower instrument panel brace.
36. Raise headliner and secure clips.
37. Connect and install both sun visor assemblies.
38. Install the assist handle assembly.

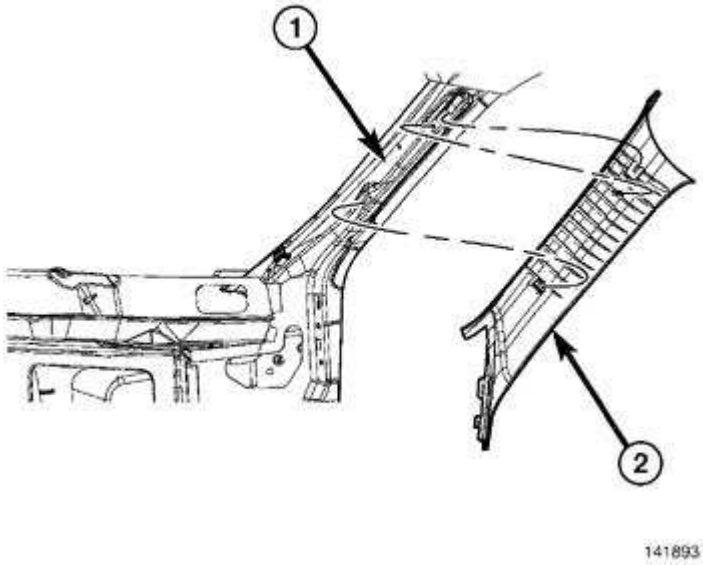

Fig. 83: Removing/Installing A-Pillar Trim Panel
Courtesy of CHRYSLER LLC

39. Install the upper A-pillar trim panels.
40. Connect electrical and install the overhead console.
41. Connect the antenna cable into the open antenna port on the radio.

NOTE: The antenna ports are keyed and color coded for there specific antenna connection.

NOTE: All SDARS antenna connections are Yellow.

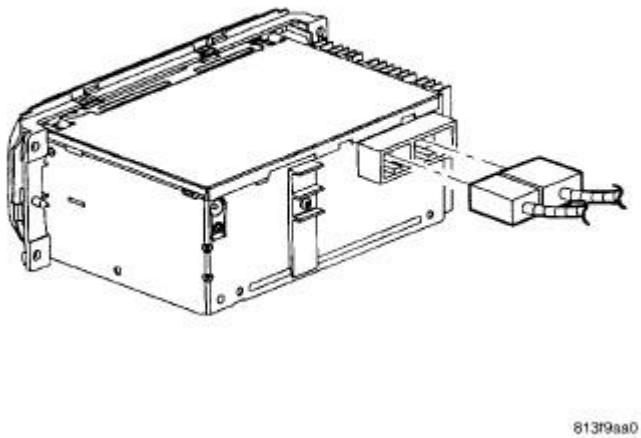

Fig. 84: Removing/Installing Radio Harness Connector
Courtesy of CHRYSLER LLC

42. Connect electrical and install the radio.
43. Connect electrical and install the center bezel assembly.

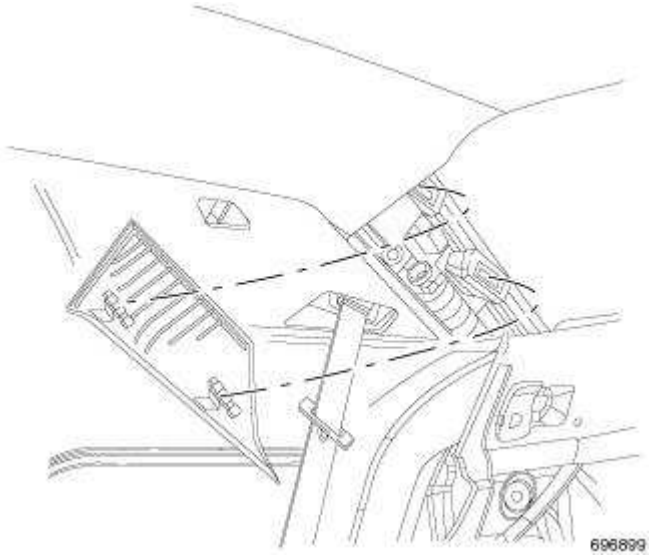

Fig. 85: Installing Trim Panels
Courtesy of CHRYSLER LLC

44. Install the coat hooks.
45. Install both rear corner interior trim panels.
46. Install the inside upper quarter trim panels.
47. Install the rear quarter trim panels.
48. Install the seatbelt lower anchor bolts.
    - Tighten to 32 Nm (24 ft.lbs.)

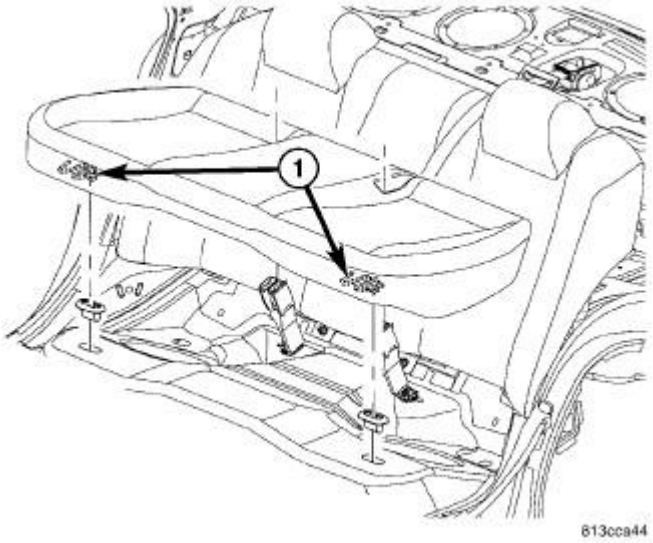

Fig. 86: Rear Seat Cushion
Courtesy of CHRYSLER LLC

49. Install rear seat cushion.

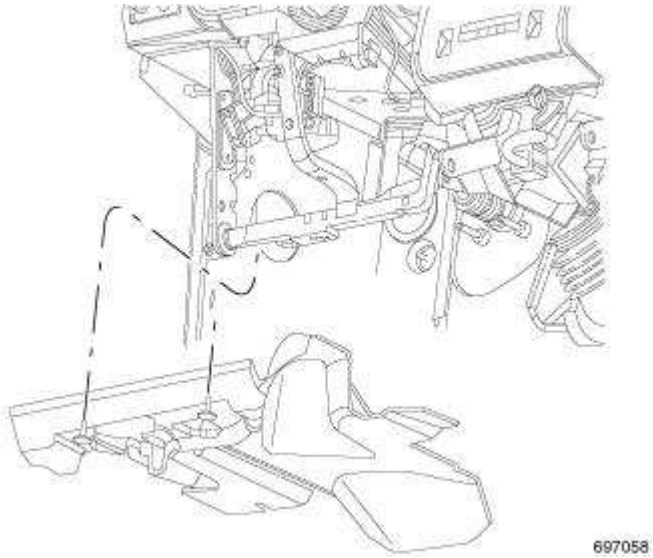

Fig. 87: Sound Insulator
Courtesy of CHRYSLER LLC

50. Install the sound insulator.
51. Connect electrical and install the steering column cover.
52. Install the cowl side trim panel.
53. Install the A-pillar lower trim covers.

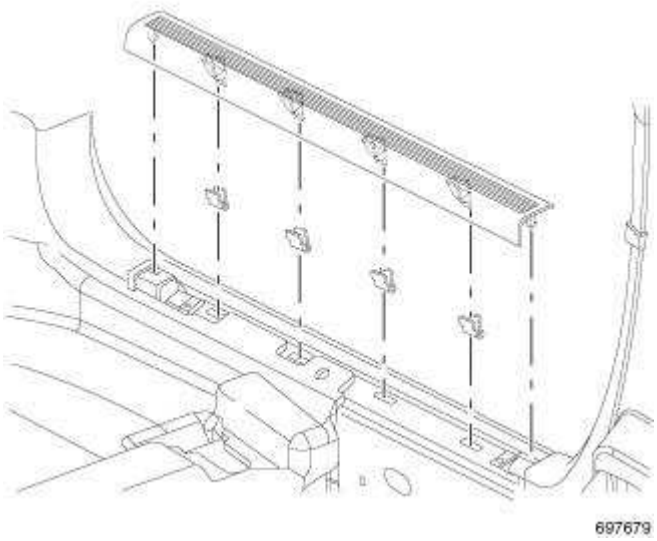

Fig. 88: Door Opening Scuff Plate
Courtesy of CHRYSLER LLC

54. Install the door opening scuff plates.
55. Connect the negative battery cable.

SDARS VEHICLE CONFIGURATION

Vehicle VIN must be updated with the sales code of the added accessory in order to enable system functionality.

Using the DealerCONNECT website and a scantool, complete the procedure below.

- Log on to Http://dealerconnect.chrysler.com.
- In the "Vehicle Options" screen under the "Global Claims System" category in the "Service tab, enter the vehicle VIN and add the sales code **RSC (SIRIUS SATELLITE RADIO)** as a "Dealer Installed option".
- Confirm the new sales code has been successfully added to the VIN.

With the ScanTool connected to both the internet (via Ethernet port or wireless connection) and the vehicle, follow the steps below:

- In the "Initial Start Up" screen select **VEHICLE PREPARATION**
- Toggle down and highlight **RESTORE VEHICLE CONFIGURATION**
- Press **START**
- Press **NEXT**
- If necessary, select proper vehicle line and model year and press **NEXT**
- Confirm correct selection and press **NEXT**
- Enter vehicle VIN using the on screen keyboard or confirm that the Auto Filled VIN plate is correct and press **NEXT**

- Press **OK**
- Enter the user ID, password and dealer code using the one screen keyboard and press **OK**

NOTE: At this point the ScanTool is downloading the vehicle configuration from the network.

- Confirm that the new vehicle configuration has been successfully programmed, follow the on screen instructions and press **FINISH**

VALIDATION PROCESS

from the "Initial Start up" screen on the ScanTool follow the steps below:

- Using a ScanTool follow the menu to **ECU VIEW** , select either **TPIMCGW CENTRAL GATEWAY** or **FCMCGW CENTRAL GATEWAY** depending on the vehicle.
- Select **MORE OPTIONS, ECU DETAILS,** and then **CONFIG INFO** .
- Verify **SDARV - - - - SET** is present.
- Drive the vehicle outside for a clear satellite signal to the antenna and verify system operation.

DESCRIPTION

DESCRIPTION

TELECOMMUNICATIONS

NOTE: The hands free module is contained with the radio, if equipped with the navigation radio (RER).

The hands-free cellular system uses Bluetooth™ technology to provide wireless communication between the operator's compatible cellular telephone and the vehicle's on-board receiver.

The system uses voice recognition technology to control operation. The incoming voice is broadcast through the vehicle's radio speakers, automatically overriding any other audio signals on the front speakers when the hands-free system is in use. A microphone in the rear view mirror receives the vehicle occupant's voices. If a call is in progress when the ignition is switched off, the hands-free system will continue to operate for up to 45 seconds as part of the Accessory Relay Delay function. Thereafter, the call can continue on the hand-held telephone.

The system will communicate with a telephone that is anywhere within the vehicle. However, covering the hand held phone or the hands-free phone module with a metal object may block the signal. The system will recognize up to seven telephones, each of which is given a spoken identification by the user during the setup process. The system includes Spanish and French voice recognition in addition to English.

Two buttons on the radio, identified with ISO icons, control the system: A "phone" button turns the system on and off; a "voice recognition" (or voice command) button prompts the hands-free system to listen for a voice command.

NAVIGATION

The navigation system offers several new customer features for expanded usability and convenience with hands-free voice-activated operation in addition to the touch screen buttons. The navigation system uses the Bluetooth microphone in the rear view mirror. Navigation routes can be based on a variety of formats including some of the following:

- Destination entry by street intersection, city, zip code, street name, street address and number, state/province/country and phone number
- Stop/change route
- Save current position
- Personal menu, including Guide Me Home (Go Home), Trip Itinerary, List of Saved Locations, Favorite Points of Interest (from a data base), Manage Personal User and Choose User

- Personal Interests including recent routes, address book, Where Am I Now, Emergency (police stations, Dodge dealerships, fire stations, hospitals and emergency care centers), Trail and geo- coordinates
- Route options include shortest, quickest, maximize freeways, minimize freeways, avoid toll roads and avoid ferries
- Navigation can be put into DEMO mode to enhance trip planning

This navigation system will support Traffic Messaging. Traffic Messaging displays voice and pop up warning messages for medium and high priority situations on the route such as road closures due to accidents/hazardous situations and it can even generate a traffic detour for a traffic event located on the route.

OPERATION

OPERATION

TELECOMMUNICATION

Two buttons on the radio, identified with ISO icons, control the system: A "phone" button turns the system on and off; a "voice recognition" (or voice command) button prompts the hands-free system to listen for a voice command. The system includes the following features:

- Phonebook - Stores telephone numbers for later recall by name or other verbal identification, called a voice tag, and memory location.
- Four memory locations - Home, Work, Cellular and Pager. A maximum of 32 unique names or voice tags may be stored at the same time, with a different number in each of the four memory locations.
- Voice tag dialing - Dials the number associated with a voice tag and memory location.
- Digit dialing - Dials the telephone number by recognizing the names of the digits as they are spoken.
- Receiving calls - A voice prompt notifies the user of an incoming call. A voice response accepts or rejects the call without manual intervention.
- Privacy Mode - Switches the call to the handheld telephone and the hands-free system and back again using the "voice recognition" (or "voice command") button and a voice command, if desired.

DIAGNOSIS AND TESTING

DIAGNOSIS AND TESTING - TELECOMMUNICATION

Any diagnosis of the Telecommunication system should begin with the use of scan tool. For information on the use of the scan tool, refer to the appropriate Diagnostic Service information.

For complete circuit diagrams, refer to SYSTEM WIRING DIAGRAMS .

WARNING: On vehicles equipped with airbags, refer to SERVICE INFORMATION before attempting any steering wheel, steering column, or instrument panel component diagnosis or service. Failure to take the proper precautions could result in accidental airbag deployment and possible personal injury.

TELECOMMUNICATION SYSTEM DIAGNOSIS

CONDITION	POSSIBLE CAUSE	CORRECTION
Phone Not Available	1. Bluetooth™ phone not paired to the system.	1. Ensure that phone(s) are paired to the system.
-	2. Bluetooth™ phone not present or turned OFF.	2. Make sure paired phone is present, turned ON and that the Bluetooth™ option is enabled on the phone.
-	3. Bluetooth™ phone has low battery.	3. At low battery levels, some phones will turn off Bluetooth™ functionality. Ensure cellular phone is charged to an adequate level.
Phone Pairing Failed	1. Phone does not support Hands Free Profile	1. The Telecommunication system requires the cellular phone to be Bluetooth™ enabled, as well as supporting the Hands Free Profile. The customer will have to upgrade their phone to one supporting Hands Free Profile. A list of suggested phones is available at: http://www.chrysler.com/uconnect.
-	2. Phone not Bluetooth™ enabled.	2. The Telecommunication system requires the cellular phone to be Bluetooth™ enabled. A list of suggested phones is available at: http://www.chrysler.com/uconnect.
-	3. PIN entered on the phone is not the same as PIN spoken to the system.	3. The PIN spoken to the system must be the same PIN entered into the phone.
-	4. Phone has reached maximum number of allowed devices paired.	4. Remove one of the previously paired devices from it's list.
Poor Voice Recognition	1. Microphone failure	1. Using a scan tool, check for microphone fault codes.
-	2. Customer not waiting for the beep before speaking.	2. Ensure customer is waiting for the system "beep" prior to beginning the speech to be recognized.
-	3. Customer not speaking in a smooth normal manner.	3. Verify that the customer is attempting to use the system with a smooth consistent voice. The system is designed to accept normal speech spoken at a normal tone, some people tend to speak to a computer loud and slow, which results in reduced

		performance.
-	4. Rear view mirror not properly attached to mounting.	4. Mirror must be firmly mounted to the mounting location. Ensure that mirror is tightened to the specified torque.
-	5. High levels of noise in vehicle compartment	5. System performance is increased when noise conditions in the vehicle are lowered. Ideal conditions include windows closed.
-	6. Object interfering with microphone input	6. Verify that there is no object, hanging from the mirror, that could be obstructing the microphone.
-	7. User not saying "send" after a pager dialing request	7. User must say "send" at the end of a Pager Dialing request.
-	8. Other passengers talking while customer is attempting to use the system	8. Although designed for primary use by the driver, the microphone will pick up passengers in any seat of the vehicle. System performance is increased in low noise environments.
Phonebook names not recognized consistently	1. Phonebook names recorded in high noise conditions	1. For increased system performance, it is recommended that the phone book entries are recorded in a low noise environment. That is, vehicle in park, with windows up.
-	2. Phonebook name (s) short	2. For increased performance it is recommended that the user use both first and last name as a phonebook entry. Example " James Johnson" as opposed to "James".
-	3. Phonebook names recorded by another user	3. It is recommended that each user of the system record their own phonebook entries. This will increase the recognition performance.
-	4. Similar names in phonebook	4. For increased system performance it is recommended that the user do not enter similar sounding names in the phonebook.
-	5. Object interfering with microphone input	5. Object interfering with microphone input.
Poor Phone audio quality.	1. Microphone failure	1. Use a scan tool, and check for Microphone faults.
-	2. Rear view mirror not properly fixed to mounting button	2. Mirror must be firmly mounted to the mounting location. Tighten mirror to the specified torque.
-	3. System being used in high noise conditions	3. System performance is increased when noise conditions in the vehicle are lowered. Ideal conditions include windows closed.
No Phone Audio	1. Phone setting	1. Route audio to "Hands free" device.

	cause phone audio to be routed to handset.	

ANTENNA, NAVIGATION

REMOVAL

REMOVAL

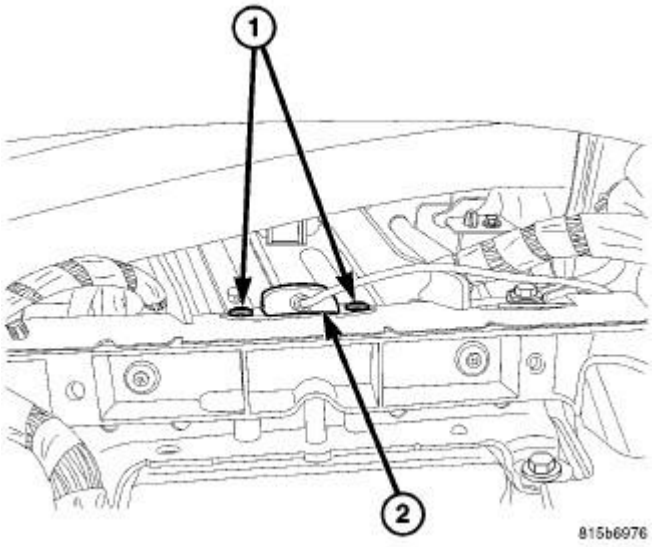

Fig. 1: Locating Navigation Antenna & Fasteners
Courtesy of CHRYSLER LLC

1. Remove the radio. Refer to **Electrical - Audio and Video/Audio and Video/RADIO - Removal** .
2. Remove the instrument cluster. Refer to **Electrical - Instrument Cluster/Instrument Cluster - Removal** .
3. Remove the navigation antenna fasteners (1).
4. Remove the navigation antenna (2) from the vehicle.

INSTALLATION

INSTALLATION

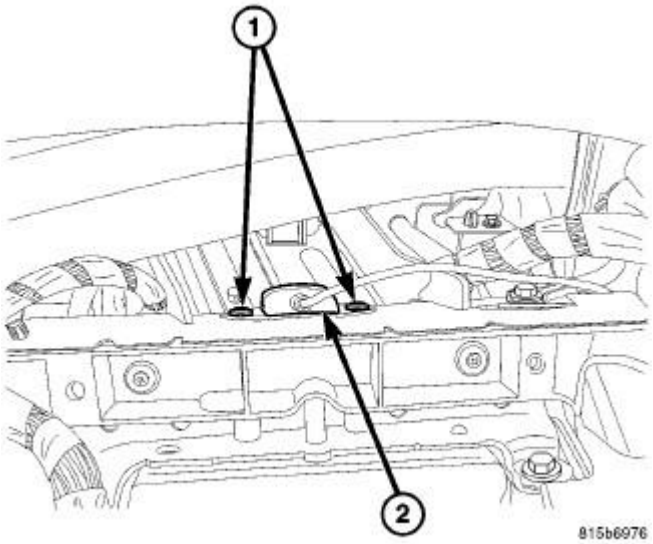

Fig. 2: Locating Navigation Antenna & Fasteners
Courtesy of CHRYSLER LLC

1. Install the navigation antenna (2) into the vehicle.
2. Install the navigation antenna fasteners (1).
3. Install the instrument cluster. Refer to **Electrical - Instrument Cluster/Instrument Cluster - Installation** .
4. Install the radio. Refer to **Electrical - Audio and Video/Audio and Video/RADIO - Installation** .

MODULE, HANDS FREE (HFM)

REMOVAL

REMOVAL

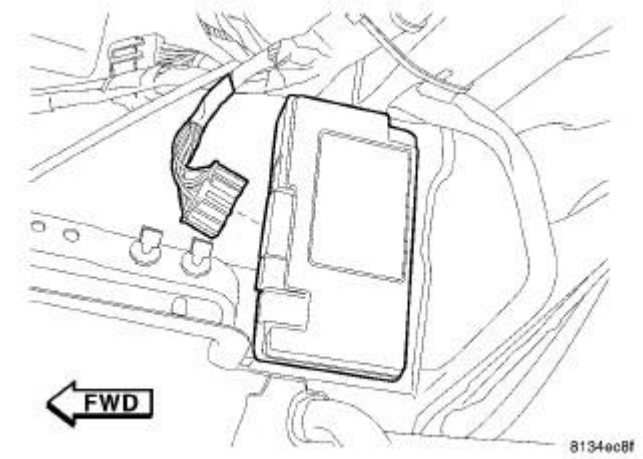

Fig. 3: Disconnecting/Connecting Hands Free Module Connector
Courtesy of CHRYSLER LLC

NOTE: **A battery reconnect procedure must be performed anytime the battery has been disconnected. Refer to Electrical - Engine Systems/Battery System - Standard Procedure .**

1. Disconnect and isolate the battery negative cable.
2. Remove the glove box.
3. Disconnect the electrical harness connector.

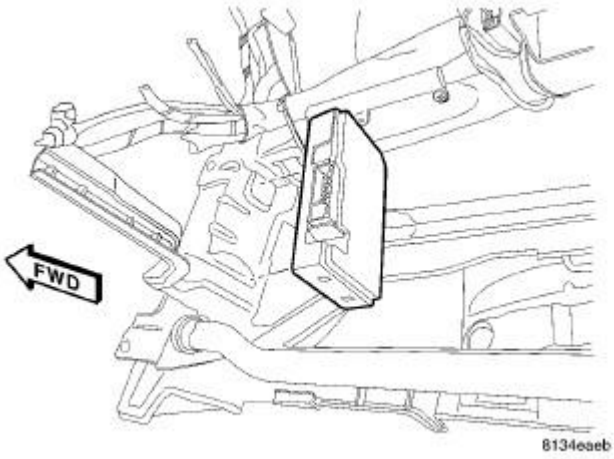

Fig. 4: Removing/Installing Hands Free Module
Courtesy of CHRYSLER LLC

4. Remove the mounting fasteners
5. Remove the hands free module.

INSTALLATION

INSTALLATION

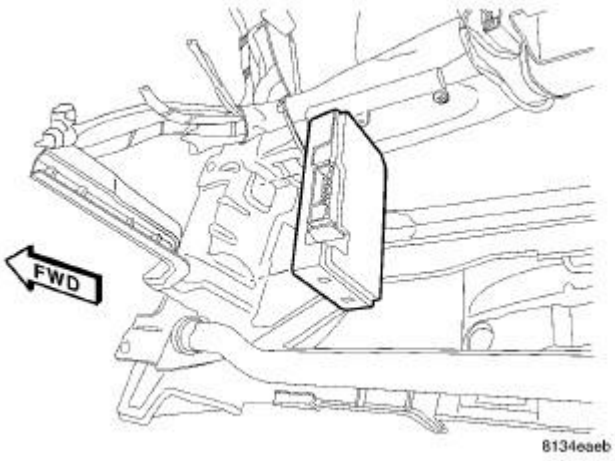

Fig. 5: Removing/Installing Hands Free Module
Courtesy of CHRYSLER LLC

NOTE: A battery reconnect procedure must be performed anytime the battery has been disconnected. Refer to Electrical - Engine Systems/Battery System - Standard Procedure .

1. Position hands free module. Install and tighten mounting fasteners.

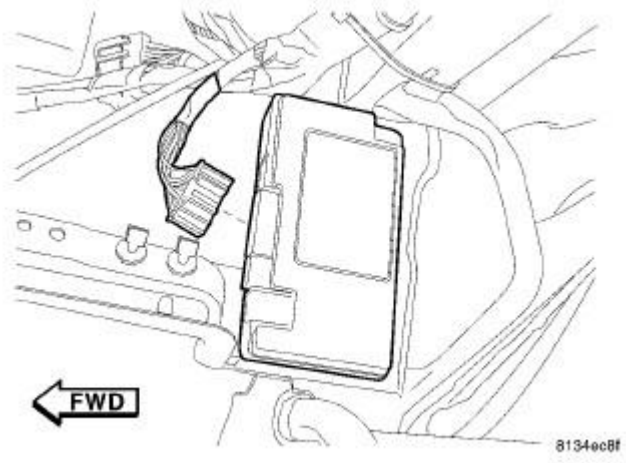

Fig. 6: Disconnecting/Connecting Hands Free Module Connector
Courtesy of CHRYSLER LLC

2. Connect wire harness connector.
3. Install glove box.
4. Connect battery negative cable.

ACCESSORIES AND EQUIPMENT

Overhead Console - Service Information - Challenger

DESCRIPTION

DESCRIPTION

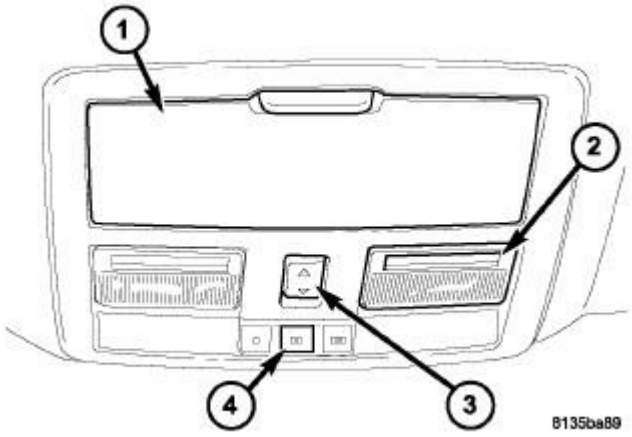

Fig. 1: Identifying Overhead Console Components
Courtesy of CHRYSLER LLC

An overhead console is standard on this vehicle and includes the following components:

- Overhead storage compartment (1)
- Front map/reading lamps (2)
- Power sunroof switch (3) - if equipped
- Universal transmitter (4)
- Electronic Overhead Module

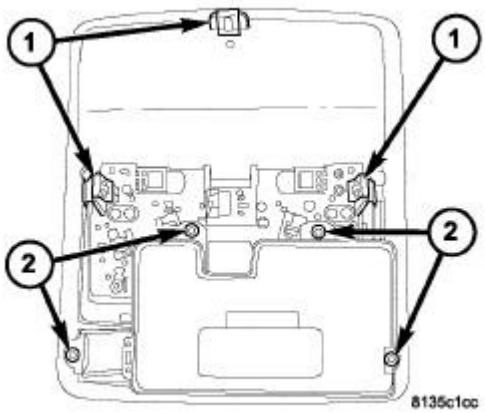

Fig. 2: Retaining Screws
Courtesy of CHRYSLER LLC

The overhead console assembly is mounted by three snap clips (1) securing it to a molded plastic retainer bracket located above the headliner. The Electronic Overhead Module is secured to the overhead console with screws (2).

REMOVAL

REMOVAL

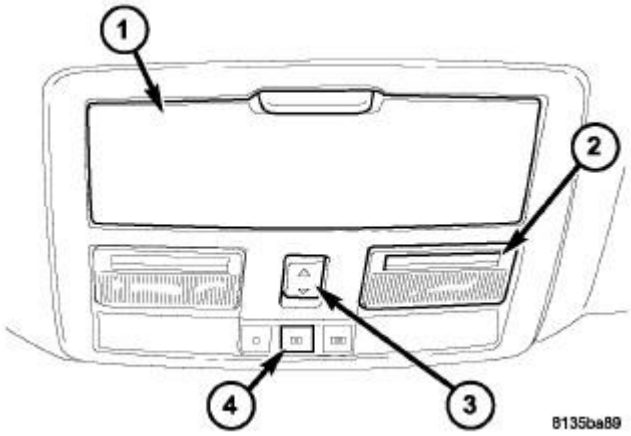

Fig. 3: Identifying Overhead Console Components
Courtesy of CHRYSLER LLC

1. Disconnect and isolate the battery negative cable.
2. Pull downward on the sides of the overhead console housing firmly and evenly to disengage the snap clips from the overhead console bracket.

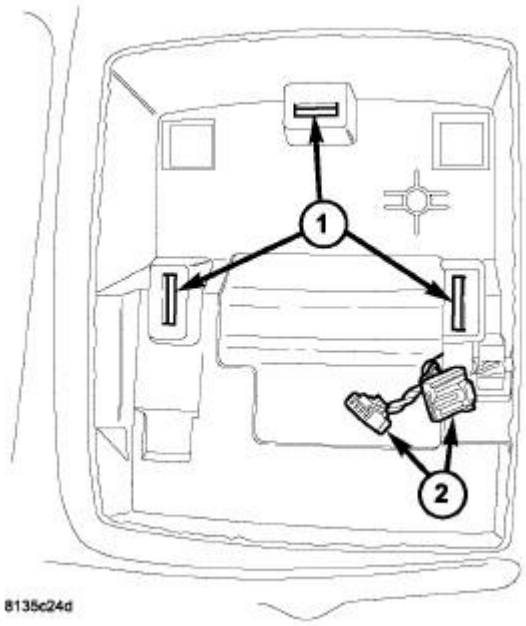

Fig. 4: Harness Connectors
Courtesy of CHRYSLER LLC

3. Lower the overhead console from the headliner far enough to access the wire harness connectors (2).
4. Disconnect the roof wire harness connectors (2) from the overhead console wire harness connector.
5. Remove the overhead console from the headliner.

INSTALLATION

INSTALLATION

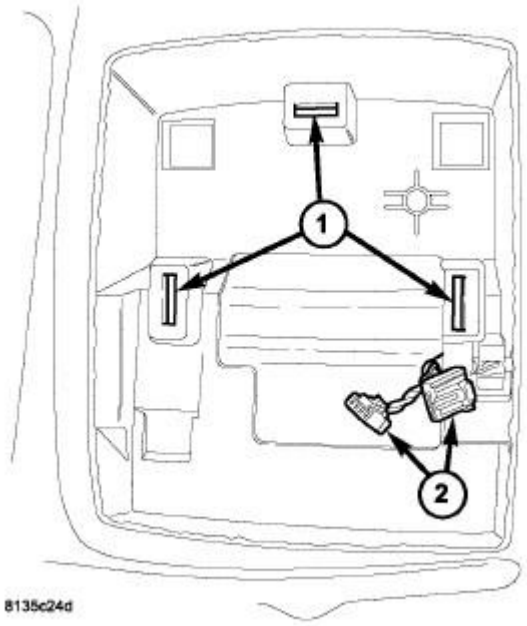

Fig. 5: Harness Connectors
Courtesy of CHRYSLER LLC

1. Position the overhead console near the mounting location on the headliner.
2. Reconnect the roof wire harness connectors (2) to the overhead console.
3. Align the snap clips on the overhead console housing with their receptacles (1) in the overhead console bracket.
4. Push upward firmly and evenly on the sides of the overhead console housing over the snap clip locations until the snap clip is fully engaged with its receptacle in the overhead console bracket.
5. Reconnect the battery negative cable.

SENSOR, AMBIENT TEMPERATURE

DESCRIPTION

DESCRIPTION

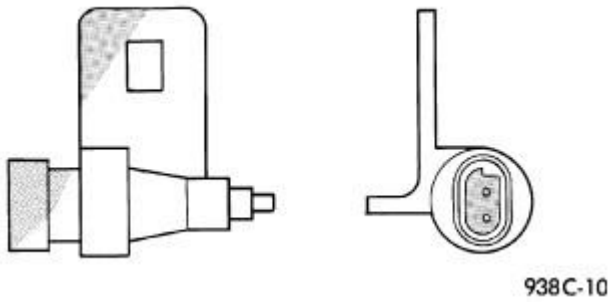

Fig. 6: Ambient Temperature Sensor
Courtesy of CHRYSLER LLC

The ambient temperature sensor is a variable resistor type sensor. it is mounted to the lower front fascia behind the radiator grille and in front of the engine compartment.

The ambient temperature sensor cannot be adjusted or repaired and, if inoperative or damaged, it must be replaced.

OPERATION

OPERATION

The ambient temperature sensor is a variable resistor that operates on a five-volt reference signal sent by the Totally Integrated Power Module (TIPM). The resistance in the sensor changes as temperature changes, changing the temperature sensor signal circuit voltage to the TIPM. Based upon the resistance in the sensor, the TIPM senses a specific voltage on the temperature sensor signal circuit. The TIPM then translates the voltage into a temperature reading that it sent over the Controller Area Network (CAN) data bus to other modules utilizing temperature information.

DIAGNOSIS AND TESTING

AMBIENT TEMPERATURE SENSOR

The temperature function is supported by the ambient temperature sensor, a wiring circuit, and the Front Control Module (FCM). If any portion of the ambient temperature sensor circuit fails or if the Controller Area Network (CAN) data bus information is missing, a (- -) will appear in the Electronic Vehicle Information Center (EVIC) display in place of the temperature. When the sensor is exposed to temperatures above 55°C (130°F), or if the sensor circuit is shorted, 55°C (130°F) will appear in the EVIC display in place of the temperature. When the sensor is exposed to temperatures below - 40°C (- 40°F) or if the sensor circuit is open, - 40°C (- 40°F) will appear in the EVIC display.

NOTE: **The system displays the last known temperature when starting the vehicle and may take some time/mileage to update to an accurate current reading, up to 5 minutes at a maintained speed above 40 mph (64.3 kph). Customers with very short commutes may not get an updated reading before the vehicle is turned off, or if the ignition does not remain in the OFF position for more than 255 minutes (4hrs. 15min.). This strategy was intended to eliminate wildly fluctuating readings and may cause some customer confusion leading to unnecessary diagnostics/parts replacements.**

The ambient temperature sensor circuit can be diagnosed using the following Sensor Test, and Sensor Circuit Test. If the temperature sensor and circuit are confirmed to be OK, but the temperature display is inoperative or incorrect, test the EVIC operation. Refer to **Electrical/Message Center/CENTER, Electronic Vehicle Information - Diagnosis and Testing** .

SENSOR TEST

1. Turn the ignition switch to the Off position. Disconnect and isolate the battery negative cable. Disconnect the ambient temperature sensor harness connector.
2. Measure the resistance of the ambient temperature sensor. At - 40° C (- 40° F), the sensor resistance is 336 kilohms. At 55° C (130° F), the sensor resistance is 2.488 kilohms. The sensor resistance should read between these two values. If OK, refer to **SENSOR CIRCUIT TEST** in this service information. If not OK, replace the inoperative ambient temperature sensor.

SENSOR CIRCUIT TEST

Refer to **SYSTEM WIRING DIAGRAMS** for complete circuit schematic or connector pin-out information.

1. Turn the ignition switch to the Off position. Disconnect and isolate the battery negative cable. Disconnect the wire harness connectors from the ambient temperature sensor and the FCM.
2. Connect a jumper wire between the two terminals in the body half of the ambient temperature sensor harness connector.
3. Check for continuity between the sensor return circuit and the ambient temperature sensor signal circuit cavities of the FCM harness connector. There should be continuity. If OK, go to 4. If not OK, repair the open sensor return circuit or ambient temperature sensor signal circuit to the ambient temperature sensor as required.
4. Check for continuity between the ambient temperature sensor signal circuit cavity of the FCM harness connector and a good ground. There should be no continuity. If OK, test the EVIC operation. Refer to **Electrical/Message Center/CENTER, Electronic Vehicle Information - Diagnosis and Testing** . If not OK, repair the shorted ambient temperature sensor signal circuit as required.

REMOVAL

REMOVAL

1. Disconnect and isolate the battery negative cable.
2. Remove the belly pan. Refer to **Body/Exterior/BELLY PAN - Removal** .

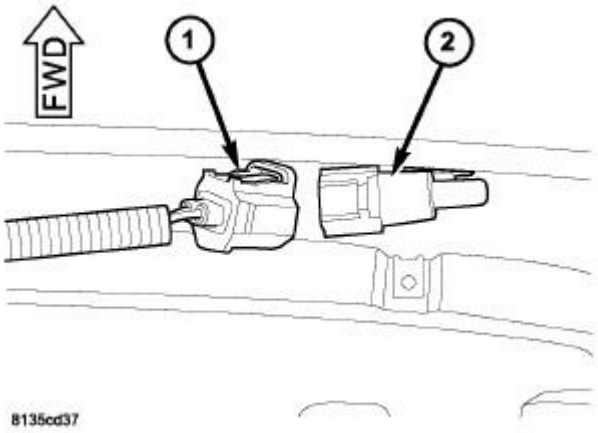

Fig. 7: Ambient Temperature Sensor Connector
Courtesy of CHRYSLER LLC

3. Disconnect the wire harness connector (1) from the ambient temperature sensor (2).

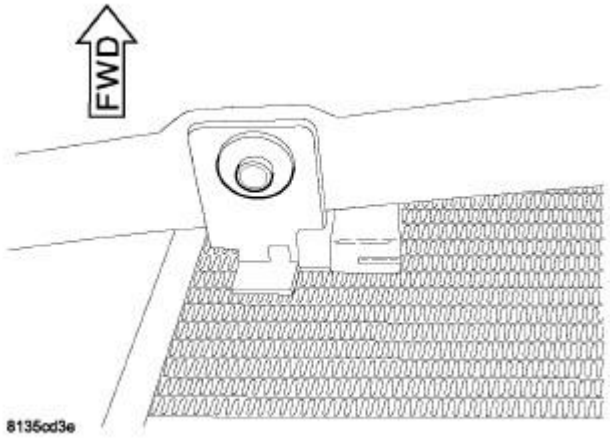

Fig. 8: Ambient Temperature Sensor Fastener
Courtesy of CHRYSLER LLC

4. Remove the fastener that secures the ambient temperature sensor bracket to the front fascia.
5. Remove the ambient temperature sensor from the vehicle.

INSTALLATION

INSTALLATION

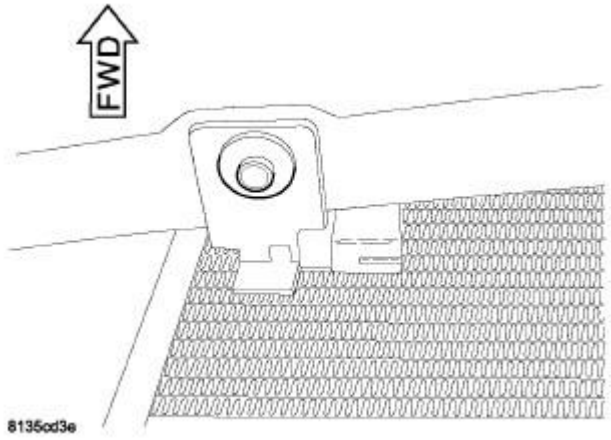

Fig. 9: Ambient Temperature Sensor Fastener
Courtesy of CHRYSLER LLC

1. Position the ambient temperature sensor in the vehicle.
2. Install the fastener that secures the ambient temperature sensor to the front fascia.

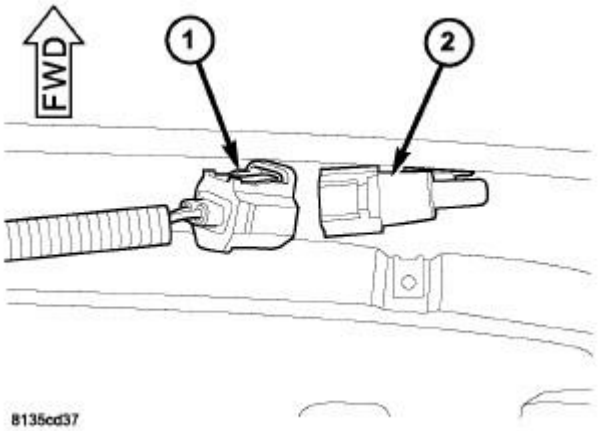

Fig. 10: Ambient Temperature Sensor Connector
Courtesy of CHRYSLER LLC

3. Connect the wire harness connector (1) to the ambient temperature sensor (2).
4. Install the belly pan. Refer to **Body/Exterior/BELLY PAN - Installation** .
5. Connect the battery negative cable.

ACCESSORIES AND EQUIPMENT

Power Distribution - Challenger

DESCRIPTION

DESCRIPTION

CAUTION: Within the power distribution system there are replaceable diodes that can be installed incorrectly. Ensure when replacing a diode that it is inserted in the correct orientation.

The power distribution system for this vehicle consists of the following components:

- Cigar Lighter Outlet
- Totally Integrated Power Module (TIPM) - located underhood
- Power Distribution Center (PDC) - located in trunk
- Power Outlets

Refer to the appropriate **SYSTEM WIRING DIAGRAMS** for complete circuit schematics.

The power distribution system also incorporates various types of circuit control and protection features, including:

- Automatic resetting circuit breakers
- Blade-type fuses
- Cartridge fuses
- Relays
- Mini fuses

OPERATION

OPERATION

The power distribution system for this vehicle is designed to provide safe, reliable, and centralized distribution points for the electrical current required to operate all of the many standard and optional factory-installed electrical and electronic powertrain, chassis, safety, security, comfort and convenience systems. At the same time, the power distribution system was designed to provide ready access to these electrical distribution points for the technician to use when conducting diagnosis and repair of inoperative circuits. The power distribution system can also prove useful for the sourcing of additional electrical circuits that may be required to provide the electrical current needed to operate many accessories that the vehicle owner may choose to have installed.

CENTER, POWER DISTRIBUTION (PDC)

DESCRIPTION

DESCRIPTION

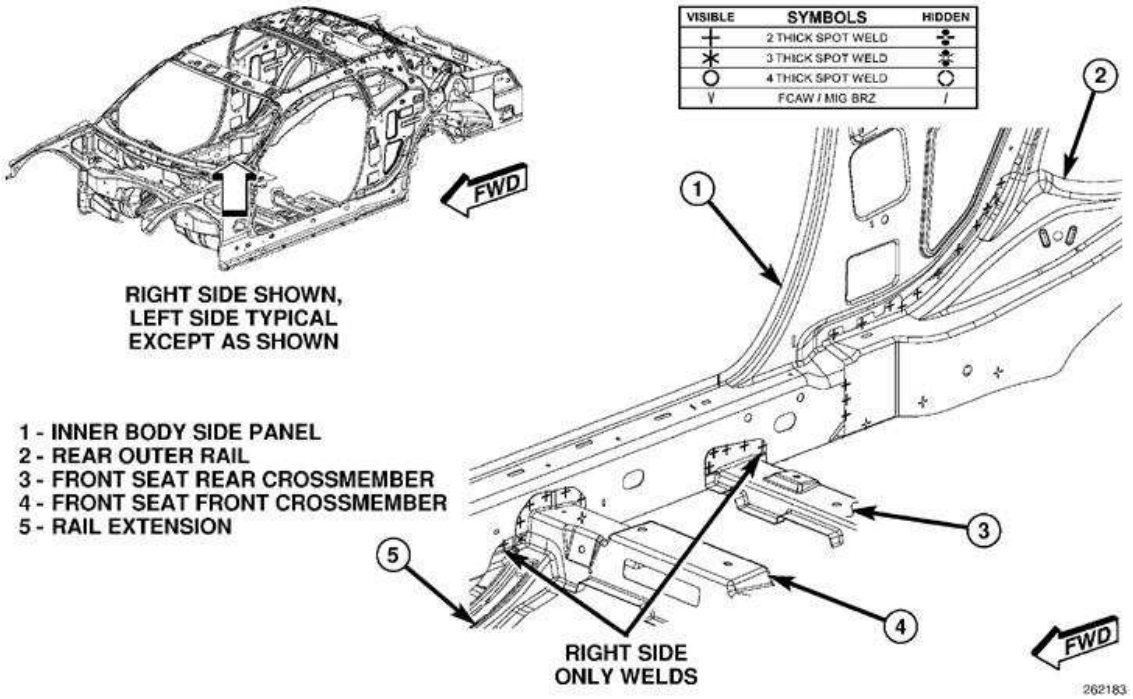

Fig. 1: Power Distribution Center
Courtesy of CHRYSLER LLC

The majority of electrical system fuses and relays are housed in the two Power Distribution Centers (PDC). One is located in the engine compartment, the Totally Integrated Power Module (TIPM). See **Electrical - Wiring/Power Distribution/MODULE, Totally Integrated Power (TIPM) - Description**. The PDC is located next to the battery in the rear of the vehicle. The PDC located next to the battery is replaced only as part of the body wiring harness.

For fuse description and layout. Refer to **Vehicle Quick Reference/Fuse Locations and Types - Specifications** .

MODULE, TOTALLY INTEGRATED POWER (TIPM)

DESCRIPTION

DESCRIPTION

The majority of electrical system fuses and relays are housed in the Totally Integrated Power Module (TIPM) located in the engine compartment and the rear Power Distribution Center (PDC) next to the battery in the trunk of the vehicle. For the rear PDC. See **Electrical - Wiring/Power Distribution/CENTER, Power Distribution (PDC) - Description**.

For fuse description and layout. Refer to **Vehicle Quick Reference/Fuse Locations and Types -**

Specifications .

STANDARD PROCEDURE

PROGRAMMING

1. Install a battery charger.
2. Verify that the charging rate provides approximately 13.5 volts.

NOTE: Do not allow the charger to time out during the reconfiguration process. Set the battery charger timer (if so equipped) to continuous charge.

3. Connect the CH9410 StarSCAN ethernet cable to the StarSCAN and the dealer's network drop.
4. Connect the CH9404 StarSCAN vehicle cable to the StarSCAN and the vehicle.
5. Place the Ignition in the "RUN" position, then Power "ON" the StarSCAN.
6. Select "ECU View".
7. Select "TIPMCGW" or "FCMCGW".
8. Select "MISC".
9. Select "Restore Vehicle Configuration".
10. Follow prompts on StarSCAN to complete the reconfigure procedure.
11. Once complete, Wait one minute and turn the ignition key to the "OFF" position.
12. Remove the StarSCAN unit, cable and charger from the vehicle.
13. Verify proper operation.

REMOVAL

REMOVAL

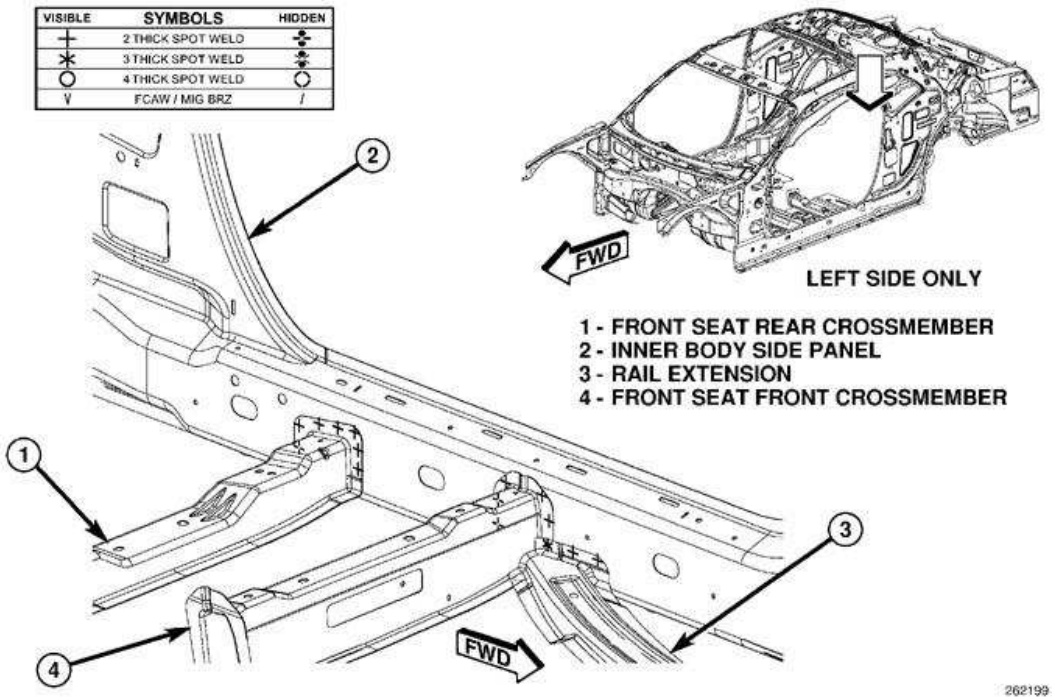

Fig. 2: Disconnecting/Connecting Battery Cables
Courtesy of CHRYSLER LLC

NOTE: **A battery reconnect procedure must be performed anytime the battery has been disconnected. Refer to Electrical - Engine Systems/Battery System - Standard Procedure .**

1. Disconnect and isolate the battery negative cable (2).

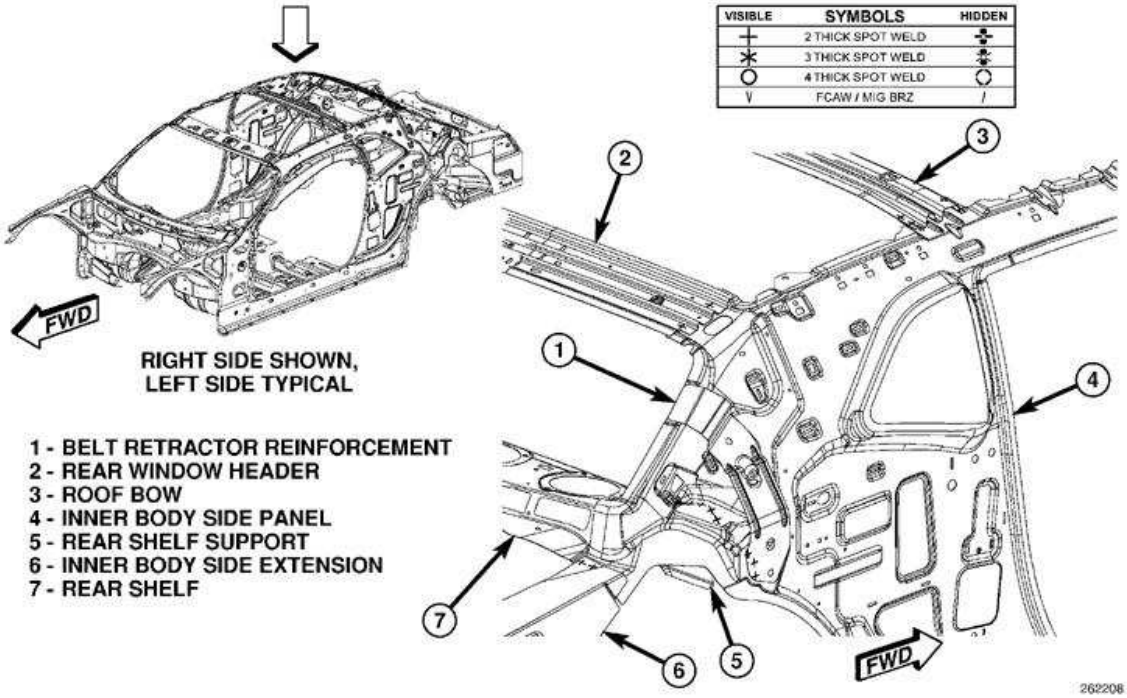

Fig. 3: Disconnecting/Connecting Negative Battery Cable
Courtesy of CHRYSLER LLC

2. Open the positive battery cable nut cover to expose nut.
3. Remove the battery cable nut and the battery cable from the Totally Integrated Power Module (TIPM).

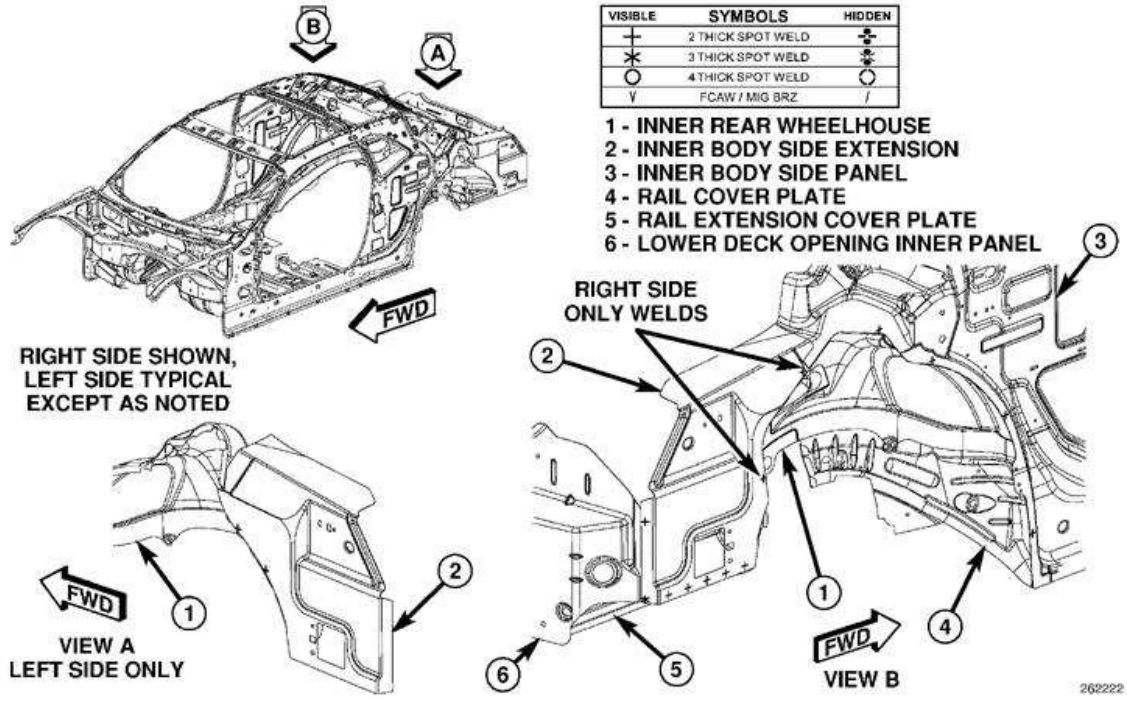

Fig. 4: Integrated Power Module

Courtesy of CHRYSLER LLC

4. Disengage the outboard retaining clip, and rotate the TIPM to access wire harness connectors.
5. Disconnect the wire harness connectors from TIPM.
6. Disengage the two inboard retaining clips.

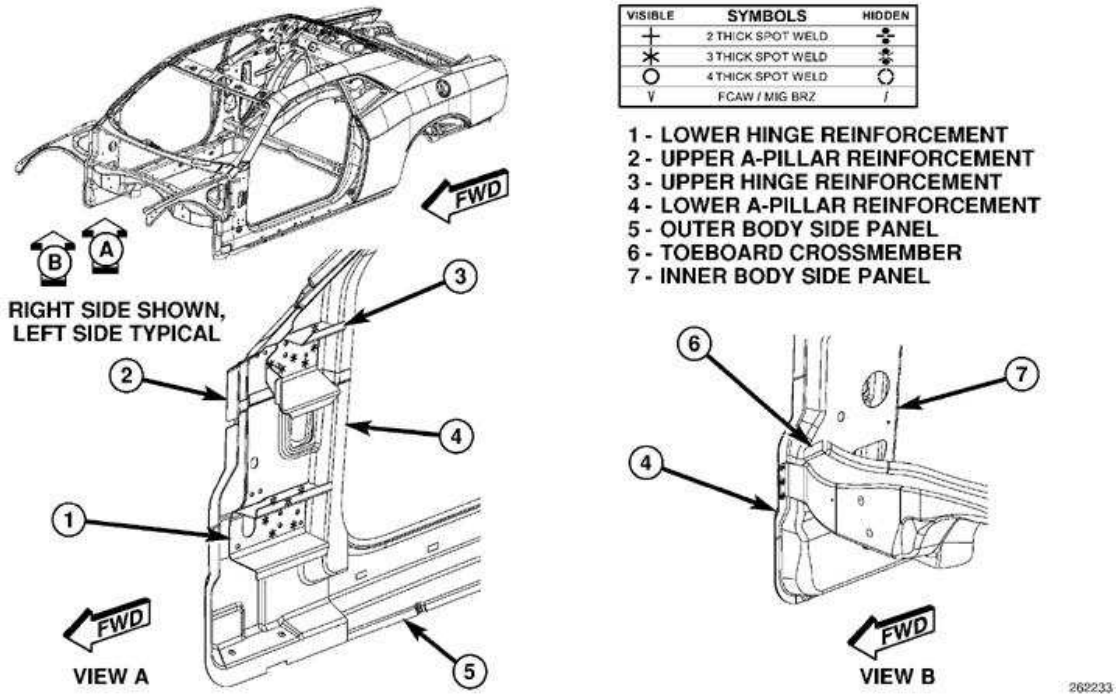

Fig. 5: Removing TIPM From Vehicle
Courtesy of CHRYSLER LLC

7. Remove the TIPM from vehicle.

INSTALLATION

INSTALLATION

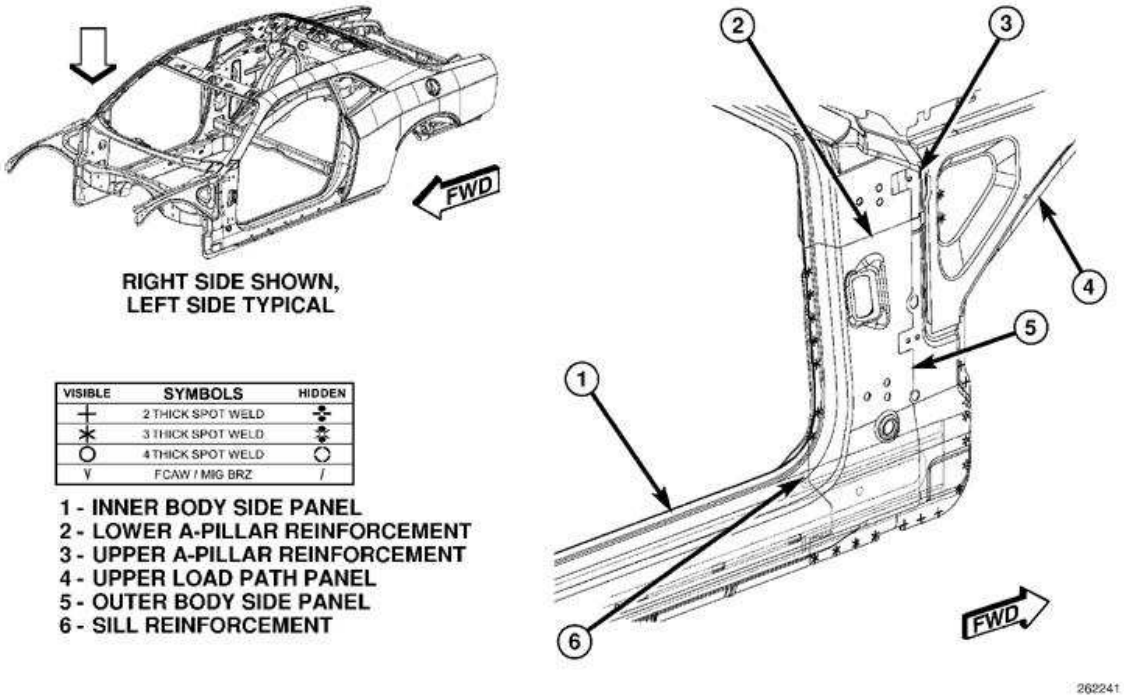

Fig. 6: Positioning TIPM Retaining Clips
Courtesy of CHRYSLER LLC

CAUTION: The original Cab Compartment Node (CCN) and Powertrain Control Module (PCM) must be installed and functioning properly prior to powering up the new Totally Integrated Power Module (TIPM). The TIPM receives vehicle configuration data from the CCN and Vehicle Identification Number information from the PCM. If configuration information becomes lost or corrupted, the data can be obtained from Dealer CONNECT

NOTE: A battery reconnect procedure must be performed anytime the battery has been disconnected. Refer to Electrical - Engine Systems/Battery System - Standard Procedure .

1. Position Totally Integrated Power Module (TIPM) to vehicle. Engage the three retaining clips.

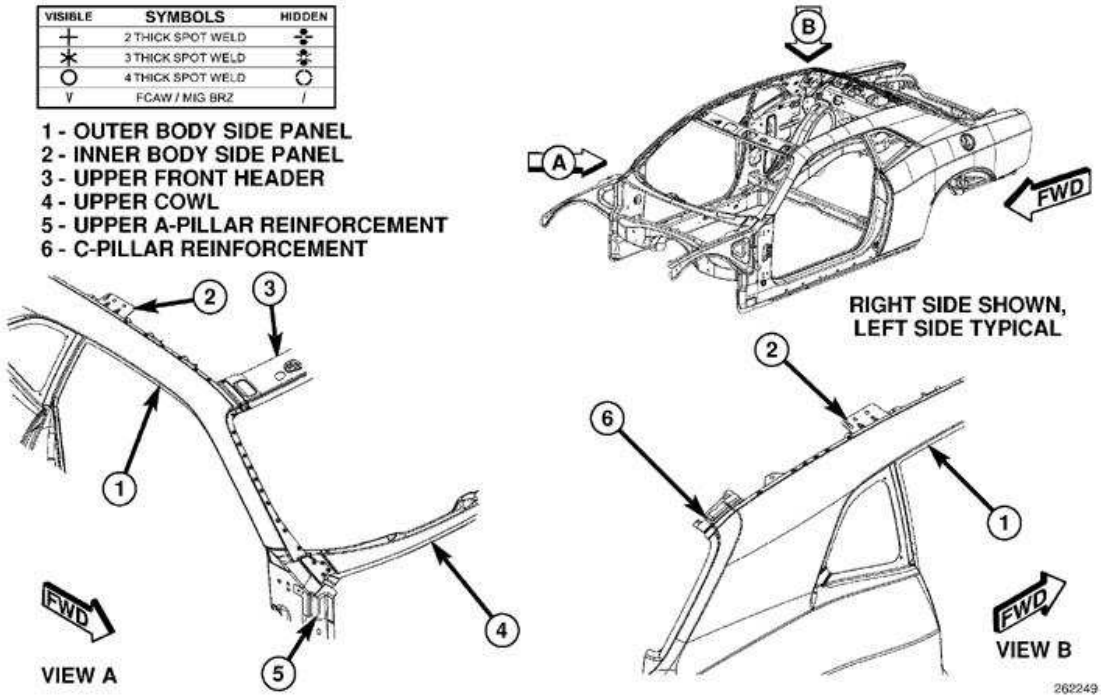

Fig. 7: Integrated Power Module
Courtesy of CHRYSLER LLC

2. Disengage the outboard retaining clip and rotate the TIPM to access wire harness connectors.
3. Connect electrical harness connectors to TIPM.

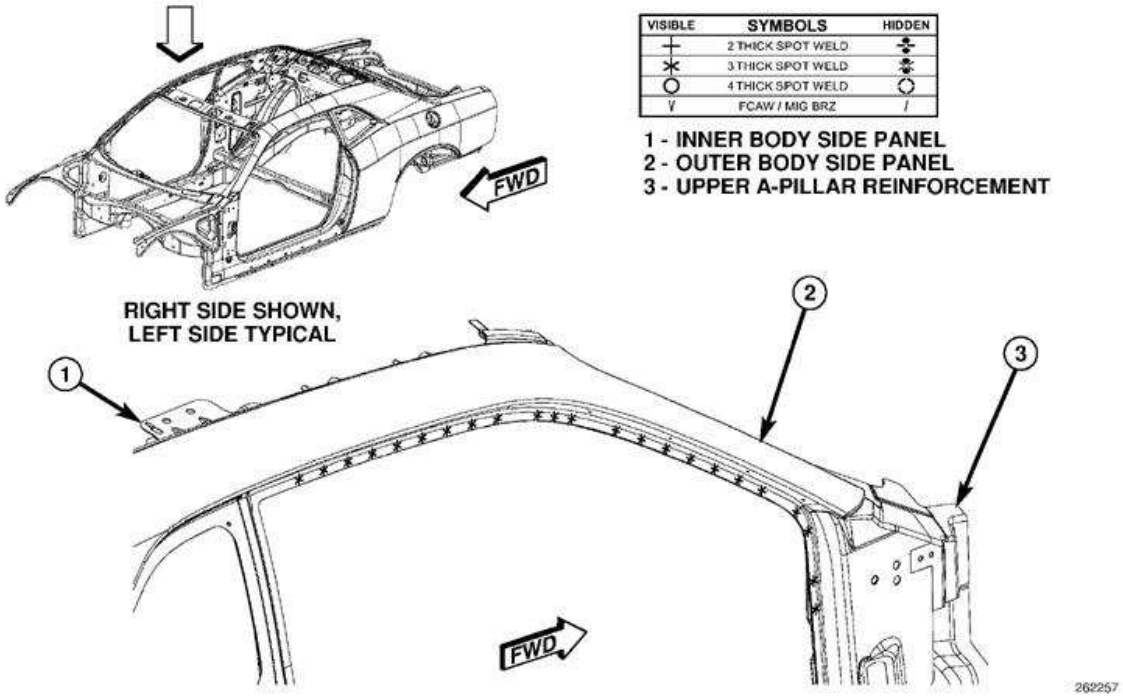

Fig. 8: Disconnecting/Connecting Negative Battery Cable
Courtesy of CHRYSLER LLC

4. Connect battery cable to TIPM. Tighten the nut to 20 - 28 N.m (15 - 21 ft. lbs.).
5. Close the battery cable nut cover.

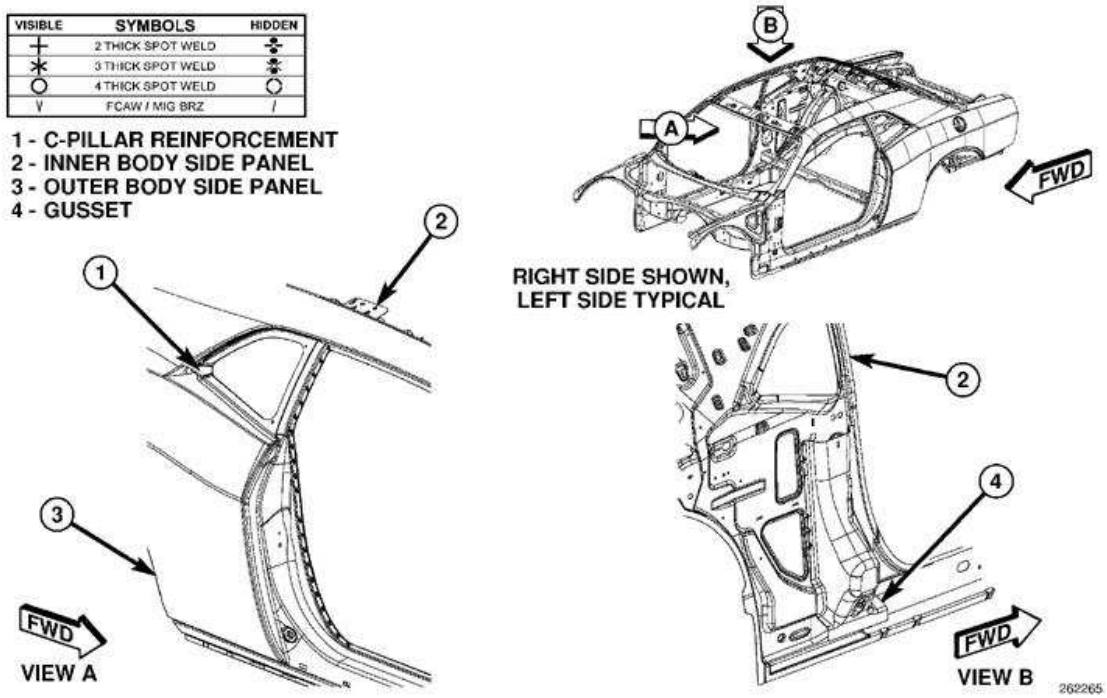

Fig. 9: Disconnecting/Connecting Battery Cables
Courtesy of CHRYSLER LLC

6. Connect negative battery cable (2).
7. Insert the ignition key and turn it to the RUN position and wait twenty seconds. The TIPM will collect the necessary vehicle configuration and VIN data from the CCN and PCM at this time. After twenty seconds turn the ignition key to the OFF position and then back to the ON position and verify proper vehicle systems operation.

OUTLET, POWER

DESCRIPTION

DESCRIPTION

Sedans are equipped with two 12-volt electrical outlets. Five-door models are equipped with three 12-volt electrical outlets. The outlets are located in the following locations:

- Cargo area right quarter trim panel (Five-door models only).
- Inside the center console.
- Next to the ash receiver in the center stack.

The outlets in the console and quarter trim panel have power at all times, and include tethered

covers. The outlet in the ash receiver tray is shipped with power available only when the ignition is in the ON position. This outlet can be changed to provide power at all times by moving a fuse in the fuse block.

REMOVAL

REMOVAL

NOTE: A battery reconnect procedure must be performed anytime the battery has been disconnected. Refer to Electrical - Engine Systems/Battery System - Standard Procedure .

1. Disconnect and isolate the battery negative cable.
2. Pull the cigar lighter knob and element out of the cigar lighter receptacle base, or unsnap the protective cap from the power outlet.
3. Look inside the cigar lighter or power outlet and note the position of the rectangular retaining bosses of the mount that secures the receptacle base.
4. Insert a pair of external snap ring pliers into the cigar lighter or power outlet receptacle base and engage the tips of the pliers with the retaining bosses of the mount.
5. Squeeze the pliers to disengage the mount retaining bosses from the receptacle base and, using a gentle rocking motion, pull the pliers and the receptacle base out of the mount.
6. Pull the receptacle base away far enough to access the wire harness connector.
7. Disconnect the wire harness connector from the cigar lighter or power outlet.
8. Remove the cigar lighter or power outlet.

INSTALLATION

INSTALLATION

NOTE: A battery reconnect procedure must be performed anytime the battery has been disconnected. Refer to Electrical - Engine Systems/Battery System - Standard Procedure .

1. Connect the wire harness connector to the cigar lighter or power outlet receptacle base connector receptacle.
2. Install the cigar lighter or power outlet mount into position.
3. Align the splines on the outside of the cigar lighter or power outlet receptacle base connector receptacle with the grooves on the inside of the mount.
4. Press firmly on the cigar lighter or power outlet receptacle base until the retaining bosses of the mount are fully engaged in their receptacles.
5. Install the cigar lighter knob and element into the cigar lighter receptacle base, or the protective cap into the power outlet receptacle base.
6. Connect the battery negative cable.

ACCESSORIES AND EQUIPMENT

Power Locks - Service Information - Challenger

DESCRIPTION

PASSIVE ENTRY SYSTEM

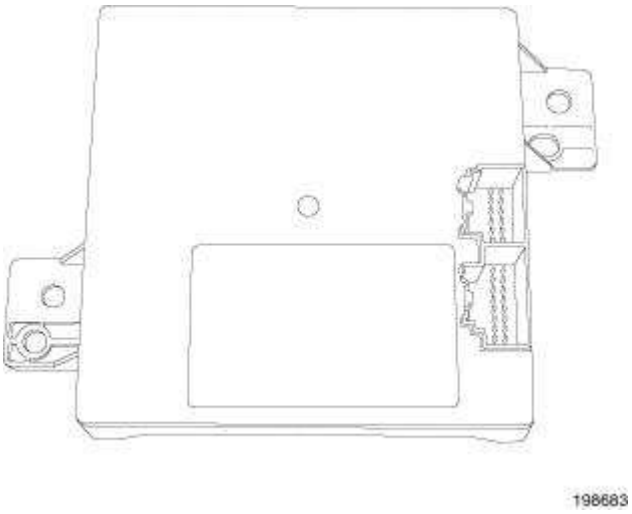

Fig. 1: Passive Entry Module (PEM)
Courtesy of CHRYSLER LLC

The Passive Entry Module (PEM) is located in the passenger compartment of the vehicle, secured to the back side of the instrument panel above the glove box. The PEM communicates between the FOB with Integrated Key (FOBIK) and other vehicle modules for specific system use.

POWER LOCKS

The power lock system allows all of the doors and liftgate to be locked or unlocked electrically by operating a switch on either front door trim panel. The power lock system receives a non-switched battery current through a fuse in the Junction Block (JB), so that the power locks remain operational, regardless of the ignition switch position.

The instrument cluster locks the doors automatically when the vehicle speed exceeds 25.7 Km/h (15 mph), all doors are closed and the accelerator pedal is pressed. The rolling door lock feature can be disabled through the EVIC.

This vehicle also offers several customer programmable features, which allows the selection of several optional electronic features to suit individual preferences.

The power lock system for this vehicle can also be operated remotely using the Remote Keyless Entry (RKE) transmitters.

CENTRAL LOCKING/UNLOCKING

The central locking system controls powered operation of the door,liftgate locks and the illuminated entry system. Central locking includes the following features:

- Automatic locking of the doors and liftgate when the vehicle speed exceeds approximately 25 km/h (15 mph).
- Locking prevention with a door lock switch or the RKE transmitter, if the key is in the ignition switch and the driver's door is open.
- Driver selectable unlocking mode: Unlocks only the driver's door or all doors and the liftgate, with one press of the RKE transmitter unlock button. The driver's door cylinder can also be used to unlock the door. One turn of the cylinder will unlocks the driver's door, two turns within five seconds unlocks all doors.
- Automatic illumination of the interior courtesy lamps when the vehicle is unlocked.
- Locking all doors and the liftgate by pressing the lock button on the RKE transmitter, or by pressing a lock switch on one of the front doors.

DOOR LOCK MOTORS

The lock mechanisms are actuated by a reversible electric motor mounted within each door. The power lock motors are integral to the door latch units.

The power lock motors cannot be adjusted or repaired. If inoperative or damaged, the door latch unit must be replaced.

REMOTE KEYLESS ENTRY

The Remote Keyless Entry (RKE) system locks and unlocks the doors and liftgate, turns on the interior lamps, and arms and disarms the Vehicle Theft Security System (if equipped). The RKE system operates on non-switched battery current through a fuse in the Integrated Power Module (IPM), so that the system remains operational regardless of the ignition switch position.

The RKE transmitters are also equipped with a Panic button. If the Panic button on the RKE transmitter is pressed, the horn will sounds and the exterior lights flashes on the vehicle for about three minutes or until the Panic button is pressed a second time. A vehicle speed of approximately 25.7 kilometers-per-hour (15 miles-per-hour) also cancels the panic event.

The RKE system can also perform other functions on this vehicle. If the vehicle is equipped with the optional Vehicle Theft Security System (VTSS), the RKE transmitter arms the VTSS when the Lock button is pressed and disarm the VTSS when the Unlock button is pressed.

The RKE system includes two transmitters when the vehicle is shipped from the factory, but the system can retain the vehicle access codes of up to a total of eight transmitters. The transmitter codes are retained in the RKE module memory, even if the battery disconnects. If an RKE transmitter is faulty or lost, new transmitter vehicle access codes can be programmed into the system using a scan tool.

This vehicle also offers several customer programmable features, which allows the selection of several optional electronic features to suit individual preferences. Customer programmable feature

options affecting the RKE system include:

- **Remote Unlock Sequence** - Allows the option of having only the driver side front door unlock when the RKE transmitter Unlock button is pressed the first time. The remaining doors unlock when the button is pressed a second time within five seconds of the first unlock press. Another option is having all doors and liftgate unlock upon the first pressing of the RKE transmitter Unlock button.
- **Sound Horn on Lock** - Allows the option of having the horn sound a short chirp as an audible verification that the RKE system received a valid Lock request from the RKE transmitter or having no audible verification.
- **Flash Lights with Lock and Unlock** - Allows the option of having the park lamps flash as an optical verification that the RKE system received a valid Lock request or Unlock request from the RKE transmitter or having no optical verification.
- **Programming Additional Transmitters** - Allows up to a total of eight transmitter vehicle access codes to be stored in the receiver memory.

Certain functions and features of the RKE system rely upon resources shared with other electronic modules in the vehicle over the CAN data bus network. For diagnosis of these electronic modules or of the data bus network, the use of a scan tool and the appropriate diagnostic service information are required.

OPERATION

PASSIVE ENTRY SYSTEM

The Passive Entry Module (PEM) transmits low frequency signals and receives very high frequency signals through the hardwired antennas. The low frequency and very high frequency signals are used to locate available authentic Fob with Integrated Key (FOBIK) (s) inside and outside the vehicle. Once an authentic FOBIK is found, the PEM communicates to other vehicle modules for specific system use.

POWER LOCKS

The instrument cluster locks or unlocks the doors when an actuation input signal from a door lock switch or Remote Keyless Entry (RKE) transmitter is received. The instrument cluster turns on the output drivers and provides a voltage level to the door lock motor for a specified time. All passenger doors locks or unlocks using a mechanical button mounted on the door trim panel. The drivers door locks or unlocks by using the key cylinder.

DOOR LOCK MOTORS

The door lock motors are controlled by the instrument cluster. A positive and negative battery connection to the two motor terminals, causes the motor to move in one direction. Reversing the current causes the motor to move in the opposite direction.

REMOTE KEYLESS ENTRY

- **LOCK** : Pressing the LOCK button locks all doors, sounds horn (chirp) once if enabled, flashes the park lamps once if enabled and arms the Vehicle Theft Security System (VTSS), if enabled. The chirp verifies that the instrument cluster has sent a message for door lock operation. If a door has not been closed before pressing the LOCK button, the vehicle may not be secured and the VTSS (if equipped) will not arm until the door closes.
- **UNLOCK** : Pressing the UNLOCK button once unlocks the driver's door first if enabled, flashes the park lamps twice if enabled, activates the illuminated entry system and disarms the Vehicle Theft Security System (VTSS), if equipped. Pressing the UNLOCK button twice within five seconds unlocks all doors, if driver's door first enables.
- **PANIC** : Pressing the PANIC button sounds the horns at half second intervals, flashes the exterior lamps and turns ON the interior lamps. The panic alarm remains on for three minutes or until either the PANIC button is actuated again or the vehicle speed exceeds 25.7 Km/h (15 mph) which cancels the panic event.

DIAGNOSIS AND TESTING

POWER LOCKS

The most reliable, efficient, and accurate means to diagnose the power lock system requires the use of a scan tool and the proper Diagnostic Procedures information.

Refer to SYSTEM WIRING DIAGRAMS .

Following are tests that will help to diagnose the hard wired components and circuits of the power lock system. However, these tests may not prove conclusive in the diagnosis of this system. In order to obtain conclusive testing of the power lock system, the CAN data bus network must be checked.

PRELIMINARY DIAGNOSIS

As a preliminary diagnosis for the power lock system, note the system operation while you actuate both the Lock and Unlock functions with the power lock switches and with the Remote Keyless Entry (RKE) transmitter. Then, proceed as follows:

- If the entire power lock system fails to function with either the power lock switches or the RKE transmitter, check the fuse in the Junction Block (JB).
- If the power lock system functions with both power lock switches, but not with the RKE transmitter, proceed to diagnosis of the Remote Keyless Entry (RKE) system.
- If the power lock system functions with the RKE transmitter, but not with one or both power lock switches, proceed to diagnosis of the door lock switches.
- If the driver side power lock switch operates only the driver side front door power lock motor, but all other power lock motors operate with the passenger side power lock switch or the RKE transmitter, use a scan tool and the appropriate diagnostic information to diagnose the CAN data bus.
- If only one power lock motor fails to operate with both power lock switches and the RKE transmitter, use a scan tool and the appropriate diagnostic information to diagnose the CAN

data bus.

ANTENNA, PASSIVE ENTRY

DESCRIPTION

DESCRIPTION

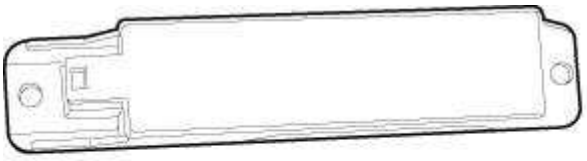

208479

Fig. 2: Passive Entry Antenna
Courtesy of CHRYSLER LLC

The passive entry antennas are identical in construction and calibration. The antennas are located throughout the passenger compartment. The location and number of antennas vary depending on the amount of coverage needed. On this vehicle there are two antennas used. One is located on the back side of the instrument panel under the radio, and the second antenna is located under the rear seat cushion.

OPERATION

OPERATION

The passive entry antennas communicate the identity of the FOB with Integrated Key (FOBIK) and its location for use with the Keyless Go (KG) and Passive Entry System (PES), if equipped. The passive entry antennas receive the wirelessly transmitted signals from the FOBIK and then transfer those signals to the Passive Entry Module (PEM).

REMOVAL

REMOVAL

ANTENNA - FRONT



Fig. 3: Radio
Courtesy of CHRYSLER LLC

1. Disconnect and Isolate the Negative Battery Cable
2. Remove the radio. Refer to **Electrical/Audio and Video/RADIO - Removal**

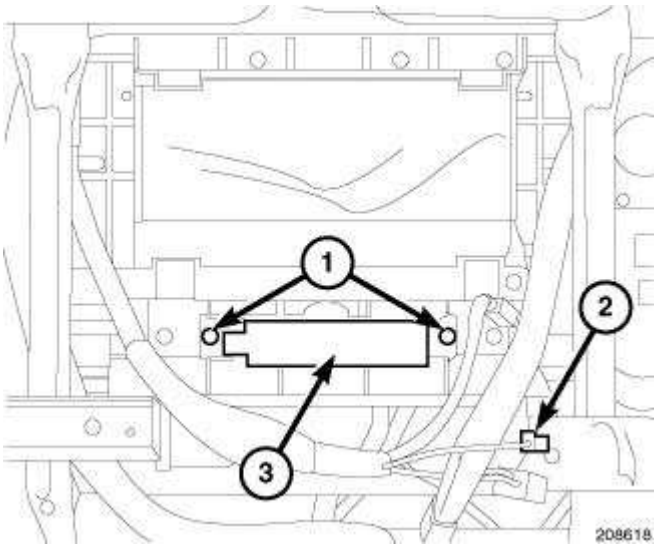

Fig. 4: Antenna Electrical Connector
Courtesy of CHRYSLER LLC

3. Disconnect the antenna electrical connector (2).
4. Remove the two antenna-to-instrument panel retaining screws (1)
5. Remove the antenna (3) from the instrument panel.

ANTENNA - REAR

1. Disconnect and Isolate the Negative Battery Cable.

2. Remove the rear seat cushion. Refer to **Body/Seats/COVER, Seat Cushion - Removal** .
3. Disconnect the antenna electrical connector.
4. Remove the two antenna-to-floor retainers.
5. Remove the antenna.

INSTALLATION

INSTALLATION

ANTENNA - FRONT

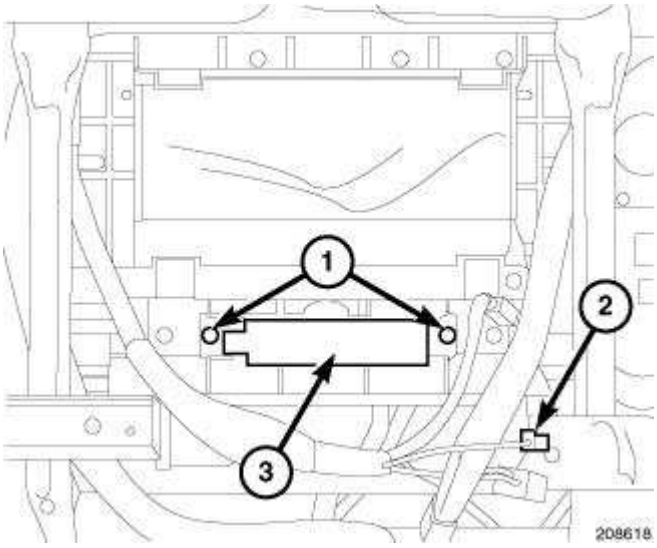

Fig. 5: Antenna Electrical Connector
Courtesy of CHRYSLER LLC

1. Install the antenna (3) to the instrument panel.
2. Install the two antenna-to-instrument panel retaining screws (1).
3. Connect the antenna electrical connector (2).



Fig. 6: Radio
Courtesy of CHRYSLER LLC

4. Install the radio. Refer to **Electrical/Audio and Video/RADIO - Installation**
5. Connect the Negative Battery Cable.

ANTENNA - REAR

1. Install the antenna.
2. Install the two antenna-to-floor retainers.
3. Connect the antenna electrical connector.
4. Install the rear seat cushion. Refer to **Body/Seats/COVER, Seat Cushion - Installation** .
5. Connect the Negative Battery Cable.

SWITCH, LOCK, WITH WINDOW SWITCHES

DESCRIPTION

DESCRIPTION

A window/lock switch located in each front door trim panel. The driver's side window/lock switch includes the following:

- **Power Lock Switch** - A two-way, momentary, resistor multiplexed switch to control the power lock system.
- **Power Window Lockout Switch** - A two-way, latching, push-button switch allows the vehicle operator to lock out the power window switches on each passenger door so that the passenger door power windows may be operated only from the master switches.
- **Power Window Switches** - A two-way, momentary power window switch for the driver side front door also has a second detent in the Down direction and internal circuitry to provide an

Auto-Down feature for the driver side front door power window. In addition to the power window switch for its own door, the window/lock switch houses individual master switches for each passenger door power window.

The passenger side window/lock switch includes the following:

- **Power Lock Switch** - A two-way, momentary, resistor multiplexed switch to control the power lock system.
- **Power Window Switch** - A two-way, momentary power window switch for the passenger side front door.

OPERATION

OPERATION

The driver side window/lock switch combines a power lock switch, a driver power window switch with an Auto-down feature, master switches for each passenger door power window, a power window lockout switch, a power mirror selector switch, and four power mirror adjustment switches in a single assembly. The switches in the window/lock switch can be diagnosed using conventional diagnostic tools and methods.

Power Lock Switch

The power lock switch circuitry is connected in series between ground and the driver door switch mux input of the instrument cluster (without memory). If equipped with the memory system, the circuitry is connected to the memory mirror module. Each power lock switch position (Lock, Unlock, and Neutral) provides a different resistance value to the instrument cluster or memory mirror input, which allows the instrument cluster or memory module to sense the switch position. Based upon the power lock switch input, the instrument cluster or memory module controls the battery and ground feed outputs to the individual power lock motors to lock or unlock the door latches. The Light-Emitting Diode (LED) in the power lock switch is connected to battery current through the power window circuit breaker in the Integrated Power Module (IPM) on a fused ignition switch output (run-acc) circuit so that the switch will be illuminated whenever the ignition switch is in the On or Accessory positions.

Power Window Switches

The power window switch circuitry is connected to battery current through a circuit breaker in the Integrated Power Module (IPM) on a fused ignition switch output (run-acc) circuit so that the power windows will operate whenever the ignition switch is in the On or Accessory positions. Each two-way, momentary master passenger power window switch in the window/lock switch provides battery current and ground to the individual power window switches on each passenger door so that the power window switch controls the battery current and ground feeds to its respective power window motor. The switch for the driver side front door power window includes an auto-down feature. When this switch is depressed to a second momentary detent position and released, the driver door power window is automatically operated through an internal circuit and relay to its fully lowered position. The Auto-down event is cancelled if the switch paddle is depressed a second time in either the Up or Down direction. When the two position window lockout switch in the window/lock switch is depressed and latched in the lockout position, the battery current feed to each of the individual passenger power

window switches is interrupted so that the passenger door power windows can only be operated from the switches in the window/lock switch. The window lockout switch also controls the battery current feed for the LED in each passenger power window switch so that the switch will not be illuminated when it is locked out.

REMOVAL

REMOVAL

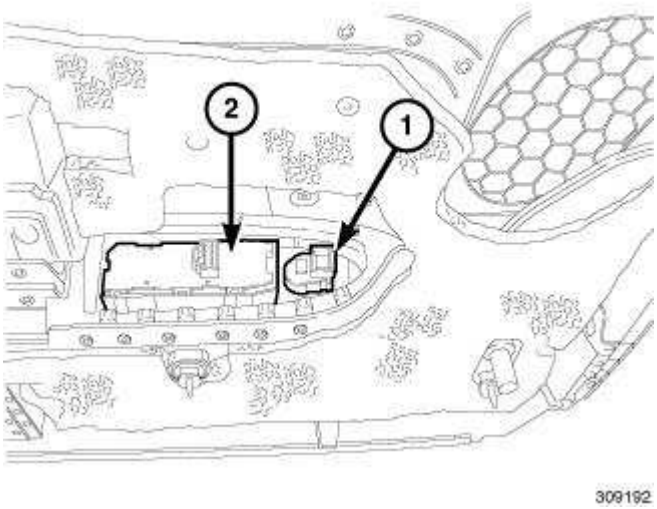

Fig. 7: Window/Lock Switch
Courtesy of CHRYSLER LLC

NOTE: A battery reconnect procedure must be performed anytime the battery has been disconnected. Refer to Electrical/Battery System - Standard Procedure .

1. Disconnect and isolate the negative battery cable.
2. Remove the door trim panel. Refer to **Body/Door - Front/PANEL, Door Trim - Removal** .
3. Using a flat-bladed tool, remove the window/lock switch (2) from the door trim panel.

INSTALLATION

INSTALLATION

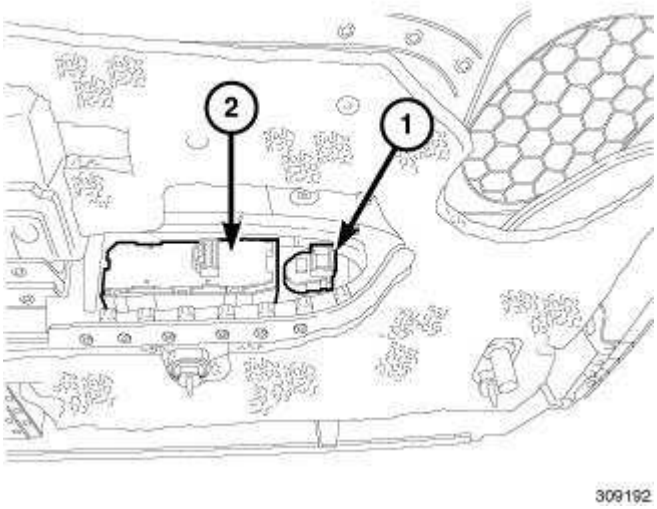

Fig. 8: Window/Lock Switch
Courtesy of CHRYSLER LLC

NOTE: A battery reconnect procedure must be performed anytime the battery has been disconnected. Refer to Electrical/Battery System - Standard Procedure .

1. Install window/lock switch (2) to door trim panel and snap into place.
2. Install door trim panel. Refer to **Body/Door - Front/PANEL, Door Trim - Installation** .
3. Connect negative battery cable.

TRANSMITTER, INTEGRATED KEY FOB

DIAGNOSIS AND TESTING

REMOTE KEYLESS ENTRY TRANSMITTER

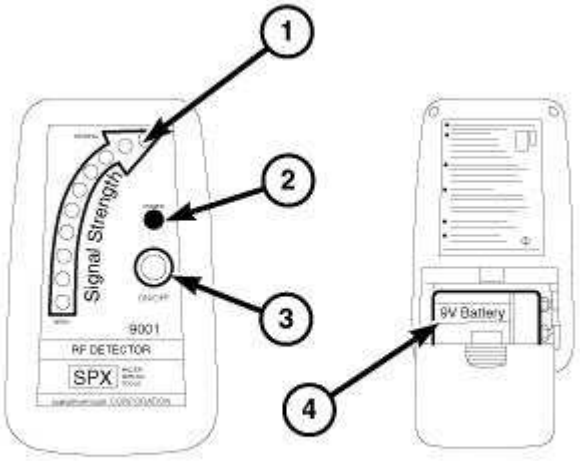

114508

Fig. 9: Radio Frequency Detector 9001
Courtesy of CHRYSLER LLC

Using special tool 9001, first test to ensure that the transmitter is functioning. Typical testing distance is 2.5 centimeters (1 inch) for Asian transmitters and 30.5 centimeters (12 inches) for all others. To test, position the transmitter as shown in illustration. Press any transmitter button, then test each button individually. The tool will beep if a radio signal strength that lights five or more LEDs is detected. Repeat this test three times. If transmitter fails any of the test refer to the proper Diagnostic Procedures information.

FOBIK TRAPPED IN WIN

The Fob with Integrated Key (FOBIK) cannot be rotated to the LOCK position, allowing it to be removed from the ignition switch also referred to as the Wireless Ignition Node/WIN. The automatic transmission or transaxle is shifted mechanically through a cable from the gearshift lever mechanism to the transmission or transaxle valve body. A gated park switch is physically located on and integral to the gearshift lever mechanism and is hard wired directly to the WIN. The gated park switch is a simple plunger-like actuated open or closed contact switch that could be considered redundant to the Transmission Range Sensor (TRS) except that it monitors the position selected with the gearshift lever, while the TRS monitors the position or gear of the transmission or transaxle that is actually engaged. A damaged or improperly adjusted gearshift cable could result in a different gear being engaged than that which is selected. The WIN uses the gated park switch input to control an internal key lock solenoid, which controls whether the FOBIK can be rotated to the LOCK position. When the gearshift lever is not in the PARK position, the gated park switch is a closed circuit, the key lock solenoid is energized and the FOBIK cannot be rotated to the LOCK position for removal.

CONDITION	POSSIBLE CAUSES	CORRECTION
	1. Damaged, binding or improperly adjusted	1. Inspect and replace or adjust gearshift

	gearshift cable.	cable, if required.
	2. Damaged or binding gearshift lever mechanism.	2. Inspect and replace or adjust gearshift lever mechanism.
CANNOT TURN FOBIK TO LOCK POSITION	3. No gated park switch input to WIN.	3. Use a diagnostic scan tool with software release version 8.05 or greater to read and confirm no gated park switch input to the WIN. Refer to the appropriate CONDITION that follows.
	4. Key lock solenoid (WIN) unresponsive to gated park switch input.	4. Use a diagnostic scan tool with software release version 8.05 or greater to read and confirm gated park switch input to the WIN. Refer to the appropriate CONDITION that follows.
NO GATED PARK SWITCH INPUT	1. Open TRS park signal circuit.	1. Repair the open TRS park signal circuit between the gated park switch (gearshift lever mechanism) and the WIN, if required
	2. Damaged or ineffective gated park switch.	2. Replace the damaged or ineffective gated park switch (gearshift lever mechanism), if required.
KEY LOCK SOLENOID UNRESPONSIVE TO GATED PARK SWITCH INPUT	1. Damaged or ineffective key lock solenoid.	1. Replace the damaged or ineffective key lock solenoid (WIN), if required.

STANDARD PROCEDURE

FOBIK TRANSMITTER BATTERY REPLACEMENT

FOBIK WITH BATTERY COVER

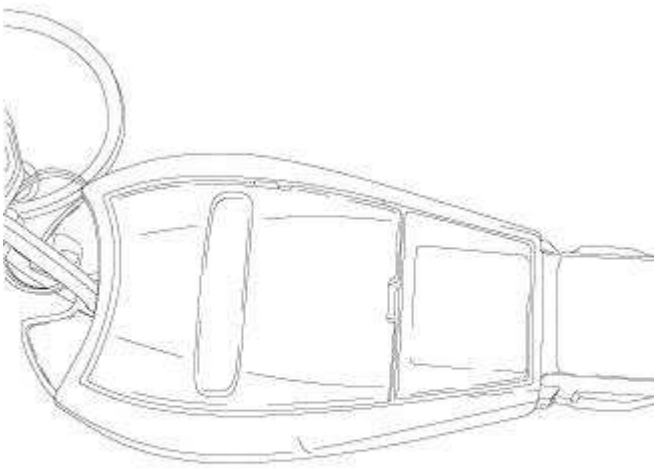

Fig. 10: FOBIK With Battery Cover
Courtesy of CHRYSLER LLC

NOTE: Do not disturb the metal terminal near the battery. Avoid touching the new battery. Skin oils may cause battery deterioration. If battery are touched, clean with rubbing alcohol.

To replace the FOBIK transmitter battery:

1. Using a small flat bladed tool, carefully remove the battery cover on the back of the FOBIK.

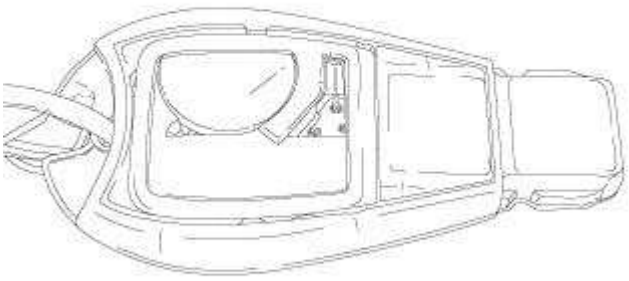

Fig. 11: FOBIK With Battery Cover Removed
Courtesy of CHRYSLER LLC

2. Remove the battery one at a time by slightly lifting up and sliding out from the FOBIK.
3. Replace the battery with the same type of battery cell.
4. Install the battery with the positive terminal up.
5. Install battery cover and snap into place.
6. Test FOBIK operation.

FOBIK WITHOUT BATTERY COVER



Fig. 12: FOBIK Without Battery Cover
Courtesy of CHRYSLER LLC

NOTE: Do not disturb the metal terminal near the battery. Avoid touching the new battery. Skin oils may cause battery deterioration. If battery are touched, clean with rubbing alcohol.

This design is a clam shell design whereby both halves are split apart.

1. Remove the valet/spare key from the FOBIK if present.
2. Using a trim stick C-4755 or equivalent, carefully separate the top half from the bottom half.

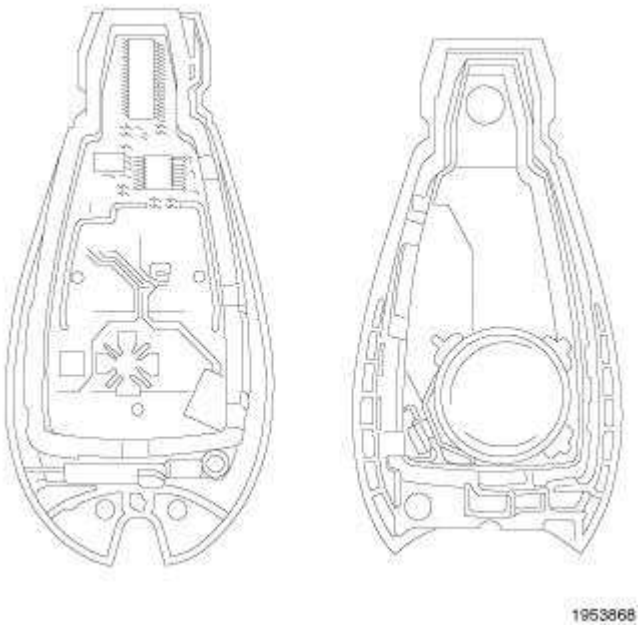

Fig. 13: FOBIK Without Battery Cover Separated
Courtesy of CHRYSLER LLC

3. Lift up on the battery to remove.
4. Replace battery with the same type of cell.
5. Install new battery negative side up.
6. Snap the top and bottom halves together.
7. Test FOBIK operation.

FOBIK PROGRAMING

Make sure instructions are followed in order, refer to **RECEIVER, WIRELESS IGNITION NODE** .

SPECIFICATIONS

SPECIFICATIONS

BATTERY

The transmitter has two 3 volt batteries, which can be removed and replaced without special tools. Insert a dime in the side slot of the transmitter case and twist. The halves should separate and the batteries are stacked on top of each other. The batteries are available at local retail stores. Recommended batteries are Duracell DL 2016 or equivalent. Typical battery life is about two years.

CAUTION: Do not handle the batteries any more than necessary. Hands must be clean and dry.

RANGE

Normal Remote Keyless Entry (RKE) transmitter operation range for vehicles manufactured for domestic markets is up to 20 meters (66 feet) away from the vehicle. On vehicles manufactured for export markets, normal RKE transmitter range is up to 10 meters (33 feet) away from the vehicle. If a domestic market vehicle is equipped with the optional factory-installed Remote Start System, the normal transmitter range is increased to up to 91 meters (300 feet). Please note that the actual RKE transmitter range values may be better or worse than specified above, depending upon many possible variables in the environment at the specific time and location that any RKE transmission is attempted.

ACCESSORIES AND EQUIPMENT

Power Mirrors - Service Information - Challenger

DESCRIPTION

DESCRIPTION

AUTOMATIC DAY/NIGHT MIRROR

The automatic day/night mirror system is able to automatically change the reflectance of the inside rear view and outside left mirror in order to reduce the glare of headlamps approaching the vehicle from the rear. The automatic day/night rear view mirror receives battery current through a fuse in the junction block only when the ignition switch is in the ON position.

OUTSIDE REAR VIEW MIRROR

The power operated rear view mirrors allow the driver to adjust both outside mirrors electrically from the driver side front seat position by operating a switch on the driver side front door trim panel. The power mirrors receive a non-switched battery feed through a fuse in the junction block so that the system will remain operational, regardless of the ignition switch position.

OPERATION

OPERATION

AUTOMATIC DAY/NIGHT MIRROR

A switch located on the bottom of the automatic day/night mirror housing allows the vehicle operator to select whether the automatic dimming feature is operational. When the automatic day/night mirror is turned on, the mirror switch is lighted by an integral Light-Emitting Diode (LED). The mirror will automatically disable its self-dimming feature whenever the vehicle is being driven in reverse. The day/night mirror is automatically turned ON each time the ignition is turned to the ON position, regardless if it was previously turned OFF.

DIAGNOSIS AND TESTING

POWER MIRRORS

Any diagnosis of the Power Mirror system should begin with the use of scan tool. For information on the use of the scan tool, refer to the appropriate Diagnostic Service information.

For complete circuit diagrams, refer to SYSTEM WIRING DIAGRAMS .

1. Check the fuses in the Power Distribution Center (PDC) and the junction block. If OK, go to 2. If not OK, repair the shorted circuit or component as required and replace the faulty fuse(s).

2. Check for battery voltage at the fuse in the junction block. If OK, go to 3. If not OK, repair the open circuit to the PDC as required.
3. Disconnect and isolate the battery negative cable. Remove the driver side power window switch and bezel assembly and unplug the wire harness connector from the power mirror switch. Connect the battery negative cable. Check for battery voltage at the fused B(+) circuit cavity in the door wire harness half of the power mirror switch wire harness connector. If OK, go to 4. If not OK, repair the open circuit to the junction block as required.
4. Disconnect and isolate the battery negative cable. Check for continuity between the ground circuit cavity in the door wire harness half of the power mirror switch wire harness connector and a good ground. There should be continuity. If not OK, repair open in the ground circuit.

MIRROR, INSIDE REARVIEW

DESCRIPTION

DESCRIPTION

The automatic day/night mirror uses a thin layer of electrochromic material between two pieces of conductive glass to form the face of the mirror. When the mirror switch is in the ON position, two photocell sensors are used by the mirror circuitry to monitor external light levels and adjust the reflectance of the mirror.

OPERATION

OPERATION

The ambient photocell sensor is located on the forward-facing (windshield side) of the rear view mirror housing, and detects the ambient light levels outside of the vehicle. The headlamp photocell sensor is located inside the rear view mirror housing behind the mirror glass and faces rearward, to detect the level of the light being received at the rear window side of the mirror. When the circuitry of the automatic day/night mirror detects that the difference between the two light levels is too great (the light level received at the rear of the mirror is much higher than that at the front of the mirror), it begins to darken the mirror.

The automatic day/night mirror circuitry also monitors the transmission using an input from the backup lamp circuit. The mirror circuitry is programmed to automatically disable its self-dimming feature whenever it senses that the transmission backup lamp circuit is energized.

The automatic day/night mirror is a completely self-contained unit and cannot be repaired. If faulty or damaged, the entire mirror assembly must be replaced.

DIAGNOSIS AND TESTING

AUTOMATIC DAY/NIGHT MIRROR

For complete circuit diagrams, refer to SYSTEM WIRING DIAGRAMS .

1. Check the fuse in the junction block. If OK, go to 2. If not OK, repair the shorted circuit or component as required and replace the faulty fuse.
2. Turn the ignition switch to the ON position. Check for battery voltage at the fuse in the junction block. If OK, go to 3. If not OK, repair the open circuit to the ignition switch as required.
3. Turn the ignition switch to the Off position. Disconnect and isolate the battery negative cable. Unplug the wire harness connector from the automatic day/night mirror. Connect the battery negative cable. Turn the ignition switch to the ON position. Check for battery voltage at the fused ignition switch output (run/start) circuit cavity of the automatic day/night mirror wire harness connector. If OK, go to 4. If not OK, repair the open circuit to the junction block as required.
4. Turn the ignition switch to the Off position. Disconnect and isolate the battery negative cable. Check for continuity between the ground circuit cavity of the automatic day/night mirror wire harness connector and a good ground. There should be continuity. If OK, go to 5. If not OK, repair the circuit to ground as required.
5. Connect the battery negative cable. Turn the ignition switch to the ON position. Apply the parking brake. Place the transmission gear selector lever in the Reverse position. Check for battery voltage at the backup lamp switch output circuit cavity of the automatic day/night mirror wire harness connector. If OK, go to 6. If not OK, repair the open circuit as required.
6. Turn the ignition switch to the Off position. Disconnect the battery negative cable. Plug in the automatic day/night mirror wire harness connector. Connect the battery negative cable. Cover the forward facing ambient photocell sensor to keep out any ambient light. Turn the ignition switch to the ON position. Place the transmission gear selector lever in the Neutral position. Place the mirror switch in the ON (the LED in the mirror switch is lighted) position. Cover the forward facing ambient photocell sensor to keep out any ambient light.

   NOTE: The ambient photocell sensor must be covered completely, so that no light reaches the sensor. Use a finger pressed tightly against the sensor, or cover the sensor completely with electrical tape.

7. Shine a light into the rearward facing headlamp photocell sensor. The mirror glass should darken. If OK, go to 8. If not OK, replace the faulty automatic day/night mirror unit.
8. With the mirror glass darkened, place the transmission gear selector lever in the Reverse position. The mirror should return to its normal reflectance. If not OK, replace the faulty automatic day/night mirror.

SWITCH, MIRROR

DESCRIPTION

DESCRIPTION

A power mirror switch is located on the driver's door trim panel, attached to the window/lock switch. The power mirror switch includes the following:

- **Power Mirror Selector Switch -** A three-position rotary joystick switch selects the right or left

power mirror for adjustment, or turns the power mirror system Off in the center position.

- **Power Mirror Adjustment Switch -** A momentary joystick directional switch allows the driver to adjust the selected power mirror in the Up, Down, Right or Left directions.

OPERATION

OPERATION

The power mirror switch circuitry is connected to battery current through a fuse in the IPM on a fused B(+) circuit so that the power mirrors remain operational regardless of the ignition switch position. A rotary joystick selector switch has three positions, one to select the right mirror, one to select the left mirror, and a center OFF position. After the right or left mirror is selected, the joystick is moved to adjust the selected mirror Up, Down, Right or Left.

In vehicles without Memory Mirrors the power mirror switch circuitry controls the battery current and ground feeds to each of the four (two in each mirror head) power mirror motors. In vehicles with Memory Mirrors the mirror switch connects to the driver power mirror module. The driver memory mirror module uses the mirror switch inputs to control the battery current and ground feeds to driver mirror motor and sends a CAN Bus message to the passenger mirror module. The passenger mirror module controls the battery current and ground feeds to passenger mirror motors based on the CAN bus message from the driver memory module.

In vehicles equipped with the exterior day/night mirror, the operation of the dimming feature is controlled by the interior day/night mirror. The exterior mirror is hard wired to the interior mirror.

DIAGNOSIS AND TESTING

POWER MIRROR SWITCH

1. Disconnect and isolate the battery negative cable.
2. Remove the power mirror switch. See **Electrical - Power Systems/Power Mirrors/SWITCH, Mirror - Removal**.
3. Disconnect the wire harness connector from the switch.
4. Test the switch continuity. Refer to the **POWER MIRROR SWITCH TEST** to determine if the continuity is correct for the switch in each switch position. If not OK, replace the inoperative switch as required.

POWER MIRROR SWITCH TEST

SWITCH POSITION	CONTINUITY BETWEEN PINS OF MIRROR SWITCH
LEFT MIRROR SELECTED	
UP	PINS 5 AND 7, PINS 4 AND 3
DOWN	PINS 4 AND 7, PINS 5 AND 3
RIGHT	PINS 4 AND 9, PINS 5 AND 3
LEFT	PINS 4 AND 3, PINS 5 AND 9

RIGHT MIRROR SELECTED	
UP	PINS 4 AND 3, PINS 5 AND 6
DOWN	PINS 4 AND 6, PINS 5 AND 3
RIGHT	PINS 4 AND 8, PINS 5 AND 3
LEFT	PINS 4 AND 3, PINS 5 AND 8

REMOVAL

REMOVAL

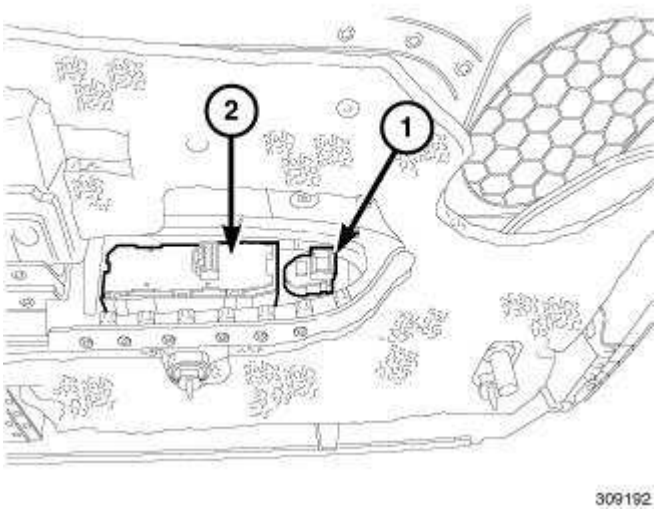

Fig. 1: Mirror Switch
Courtesy of CHRYSLER LLC

NOTE: A battery reconnect procedure must be performed anytime the battery has been disconnected. Refer to Electrical - Engine Systems/Battery System - Standard Procedure .

1. Disconnect and isolate the negative battery cable.
2. Remove the door trim panel. Refer to **Body/Door - Front/PANEL, Door Trim - Removal** .
3. Using a flat-bladed tool, remove the mirror switch and twist (1) from the door trim panel.

INSTALLATION

INSTALLATION

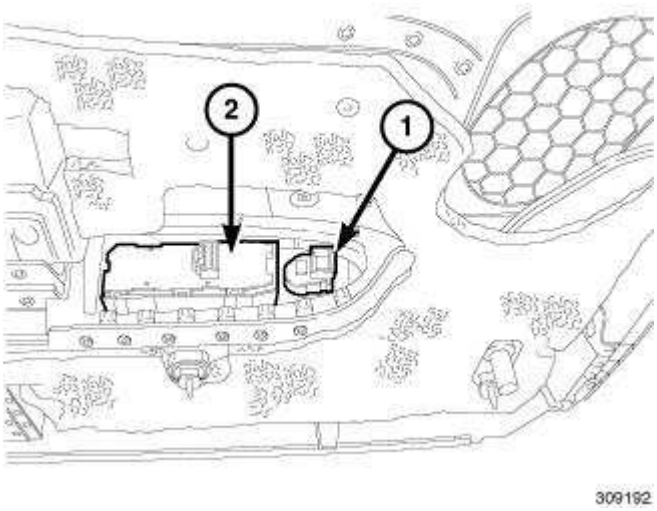

Fig. 2: Mirror Switch
Courtesy of CHRYSLER LLC

NOTE: **A battery reconnect procedure must be performed anytime the battery has been disconnected. Refer to Electrical - Engine Systems/Battery System - Standard Procedure .**

1. Install the mirror switch (1) to the door trim panel and snap into place.
2. Install the door trim panel. Refer to **Body/Door - Front/PANEL, Door Trim - Installation** .
3. Connect the negative battery cable.

ACCESSORIES AND EQUIPMENT

Power Seats - Service Information - Challenger

DESCRIPTION

DESCRIPTION

POWER SEAT SYSTEM

WARNING: The front passenger seat assembly contains critical components that affect the front passenger airbag deployment. Correctly functioning front passenger seat components are critical for the Occupant Classification System (OCS) to properly classify the front passenger and calculate the proper airbag deployment. Unapproved modifications or service procedures to the front passenger seat assembly, its related components, or trim cover may inadvertently change the airbag deployment in case of a frontal crash. This could result in death or serious injury to the front seat passenger if the vehicle is involved in an accident. The following requirements must be strictly adhered to:

- **Do not modify the front passenger seat assembly or components in any way.**
- **Do not modify the front seat center console or center position seat in any way.**
- **Do not use prior or future model year seat trim covers not designated for the specific model being repaired. Always use the correct seat trim cover specified for the vehicle.**
- **Do not replace the seat trim cover with an aftermarket trim cover.**
- **Do not add a secondary trim cover other than those approved by Chrysler LLC/Mopar®.**
- **At no time should any Supplemental Restraint System (SRS) component or SRS related component or fastener be modified or replaced with any part except those which are approved by Chrysler LLC/Mopar®.**

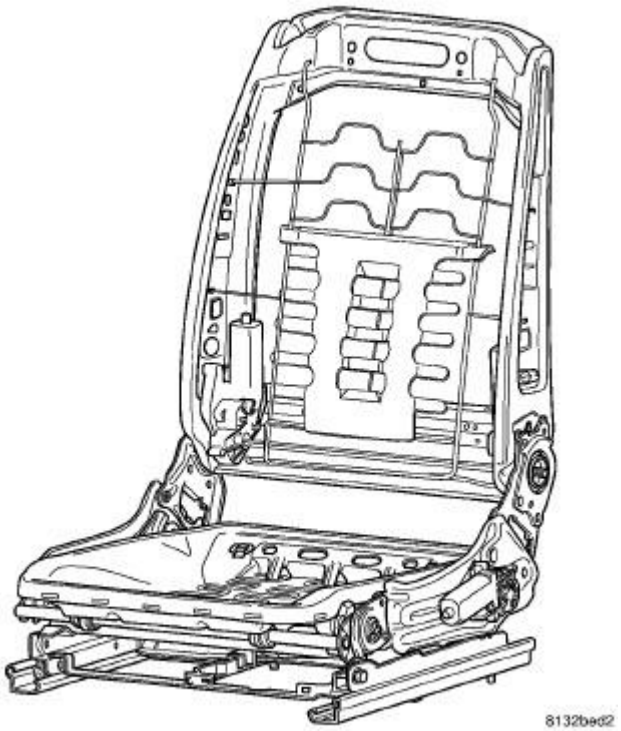

Fig. 1: Power Seat Frame
Courtesy of CHRYSLER LLC

The power seat system allows the driver and front seat passenger to electrically adjust their seating positions using the power seat switches located on the outboard seat cushion side shield of each front seat.

The eight-way power seat includes a six-way adjustable seat cushion track and a two-way power seat back. The power seat can be adjusted up, down, front up, front down, forward, rearward, recliner forward, and recliner rearward. The power seat system is also available with the heated seat option. Refer to **Electrical - Heated/Cooled Systems/Heated Seats - Description** .

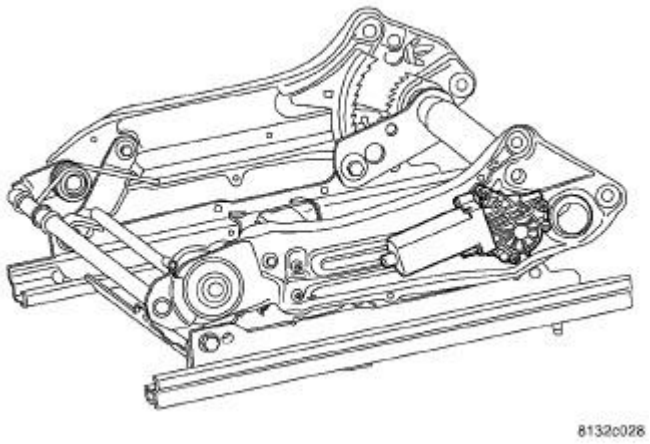

Fig. 2: Power Seat Adjuster
Courtesy of CHRYSLER LLC

The power seat system for this vehicle includes the following major components:

Power Seat Adjuster - The power seat adjuster is made up of the upper and lower power seat adjuster assemblies. The upper power seat adjuster contains two reversible motors that are connected to worm-drive gearboxes that move the seat adjuster through a combination of screw-type drive units. These motors are the height adjust motor and the front tilt motor. Each motor contains a self-resetting circuit breaker to protect it from overload. Consecutive or frequent resetting of the circuit breakers may damaged the motors.

The height adjust motor is located on the rear of the upper power seat adjuster assembly and controls the up and down movement of the entire seat. The height adjust motor can be serviced separately from the power seat adjuster assembly.

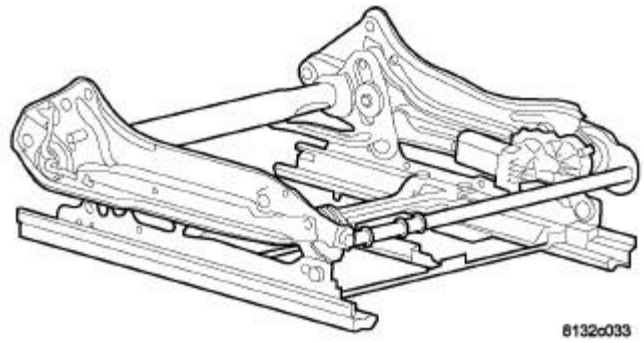

Fig. 3: Front Tilt Motor
Courtesy of CHRYSLER LLC

The front tilt motor is located on the front of the upper power seat adjuster assembly and controls the up and down movement of the seat front only. The front tilt motor can be serviced separately from the power seat adjuster assembly.

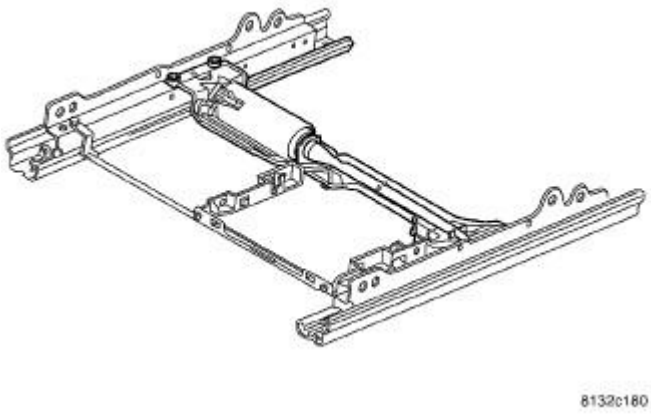

Fig. 4: Lower Power Seat Adjuster
Courtesy of CHRYSLER LLC

The lower power seat adjuster contains one reversible motor that is connected to a worm-drive gearbox that moves the seat adjuster through a screw-type drive unit. The motor contains a self-resetting circuit breaker to protect it from overload. The motor is part of the lower power seat track unit and must be replaced as an assembly. See **Electrical - Power Systems/Power Seats/MOTOR, Seat Adjuster - Removal**.

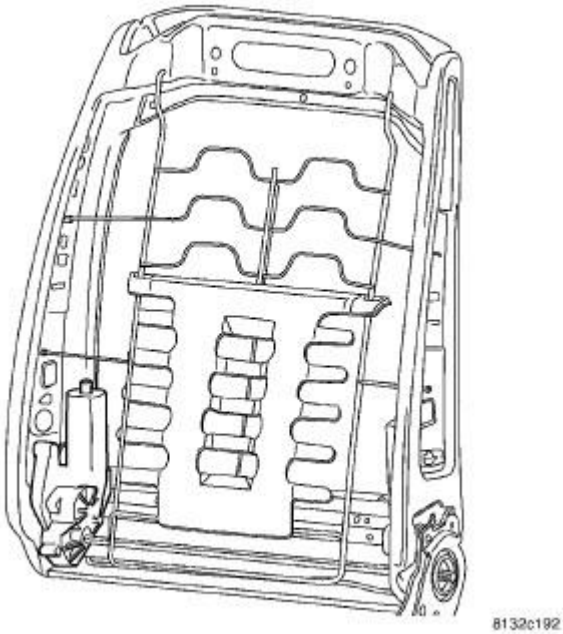

Fig. 5: Power Seat Recliner
Courtesy of CHRYSLER LLC

Power Seat Recliner - The power seat recliner replaces the manual seat recliner.

The power seat option includes an electrically operated power seat back recliner mechanism. The power seat recliner switch is integral to the power seat switch assembly, but is actuated with a separate switch knob.

The power seat recliner motor cannot be repaired. If the unit is inoperative or damaged, the seat back frame must be replaced. See **Electrical - Power Systems/Power Seats/MOTOR, Seat - Removal**.

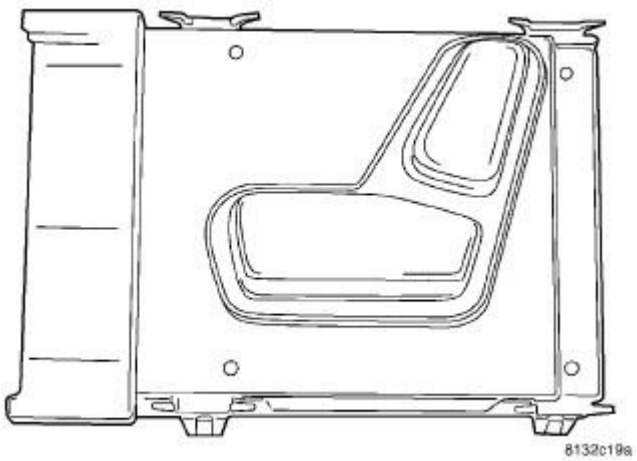

Fig. 6: Power Seat Switches
Courtesy of CHRYSLER LLC

Power Seat Switches - Vehicles may be equipped with driver only, or driver and passenger power seat switches. One seat switch is used for each front seat. The power seat switches are paddle-type levers mounted on the outboard seat side shields. Movement of the seat cushions and backs mimics the action of the switch paddles. See **Electrical - Power Systems/Power Seats/SWITCH, Seat - Description** for additional information.

OPERATION

OPERATION

POWER SEAT SYSTEM

The power seat system receives battery current through a 50 amp fuse in the Power Distribution Center (PDC) so that the power seats remain operational, regardless of the ignition switch position.

When a power seat switch is actuated, a battery feed and a ground path are applied through the power seat switch contacts to the appropriate motor or motors. The motor and drive unit operate to move the seat in the selected direction until the switch is released, or until the travel limit of the power seat track is reached. When the switch is moved in the opposite direction, the battery feed and ground path to the motor are reversed through the switch contacts. This causes the motor to run in the opposite direction.

DIAGNOSIS AND TESTING

POWER SEAT ADJUSTER

Operate the power seat switch and move the seat in all directions. The seat should move in each of the selected directions.

If the power seat adjuster fails to operate in more than one direction, proceed as follows:

1. Inspect the power seat adjuster motors to ensure the electrical connectors are fully seated to the motors. If OK, go to 2. If not OK, connect the electrical connector to the fully seated position.
2. Check the power seat fuse in the power distribution center. If OK, go to 3. If not OK, replace the inoperative fuse.
3. Remove the power seat switch from the seat cushion side panel. Check for battery voltage at the fused B(+) circuit cavity of the power seat switch wire harness connector. If OK, go to 4. If not OK, repair the open circuit to the power distribution center as required.
4. Check for continuity between the ground circuit cavity of the power seat switch wire harness connector and a good ground. There should be continuity. If OK, go to 5. If not OK, repair the open circuit to ground as required.
5. See **Electrical - Power Systems/Power Seats/SWITCH, Seat - Diagnosis and Testing**. If the switch tests OK, check the wire harness between the power seat switch and the motor. If the circuits check OK, replace the inoperative power seat adjuster assembly. If the circuits are not OK, repair the wire harness as required.

MOTOR, SEAT ADJUSTER

REMOVAL

REMOVAL

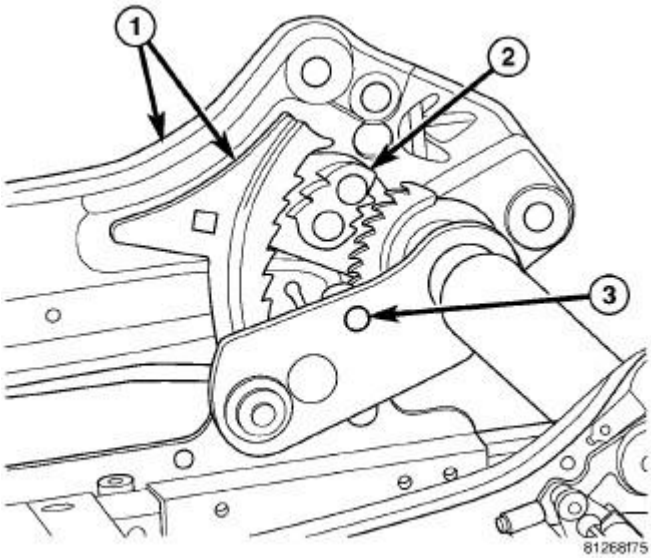

Fig. 7: Locking Pawl

Courtesy of CHRYSLER LLC

WARNING: A seat structure that has seen significant load may have the locking mechanism activated and may exhibit the following symptoms:

- **Locking pawl (2) loose**
- **Locking pawl (2) engaged into the seat frame sidemember (1)**
- **Height adjuster only works on outboard side**
- **Broken or missing shear pin (3)**

If any of above symptoms exist, replace the height adjuster assembly. Do not attempt any repairs. Failure to follow these instructions may result in possible serious or fatal injury.

If any one or more of these symptoms exist replace the height adjuster assembly. Do not attempt any repairs. Failure to follow these instructions may result in personal injury or death.

FRONT TILT MOTOR

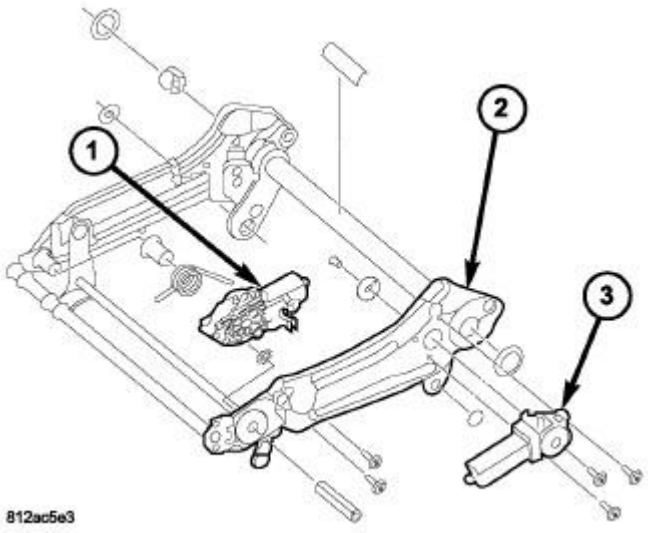

Fig. 8: Seat Adjuster Motor Components
Courtesy of CHRYSLER LLC

1. Disconnect and isolate the battery negative cable.
2. Remove the affected seat with the inoperative motor (1). Refer to **Body/Seats/SEAT - Removal** .
3. Remove the seat cushion and pan. Refer to **Body/Seats/COVER, Seat Cushion - Removal** .

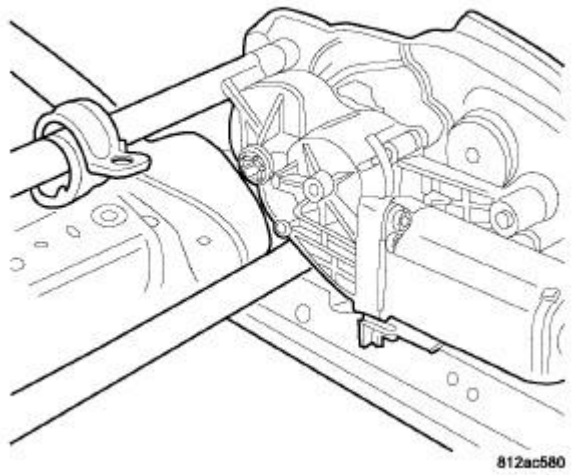

Fig. 9: Seat Adjuster Motor
Courtesy of CHRYSLER LLC

4. Disconnect the motor electrical connector.

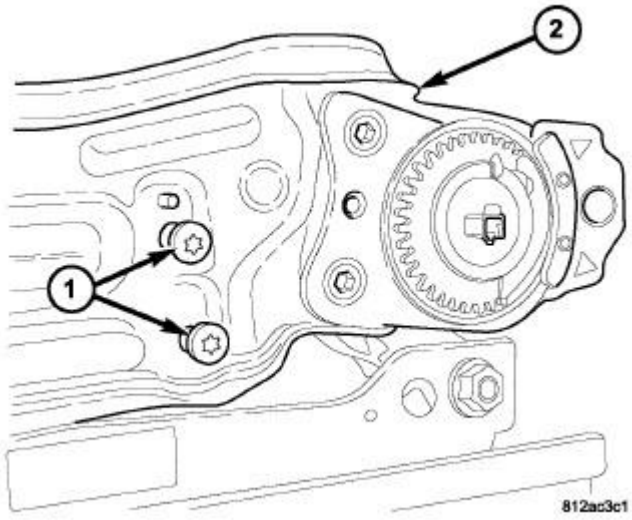

Fig. 10: Motor Fasteners
Courtesy of CHRYSLER LLC

5. Remove the fasteners holding the motor to the seat adjuster (1).
6. Remove motor from seat adjuster (2).

HEIGHT ADJUST MOTOR

WARNING: Use caution when removing the height adjust motor (3) if the motor is inoperative, and the power seat is not in the full up position. The seat adjuster assembly (2) is under load from the height adjust spring and may cause the motor to rotate under pressure when the fasteners are removed. The seat adjuster assembly also may spring upward when the motor is removed. If the height adjust motor is operative, move the power seat to the full up position prior to disconnecting the battery.

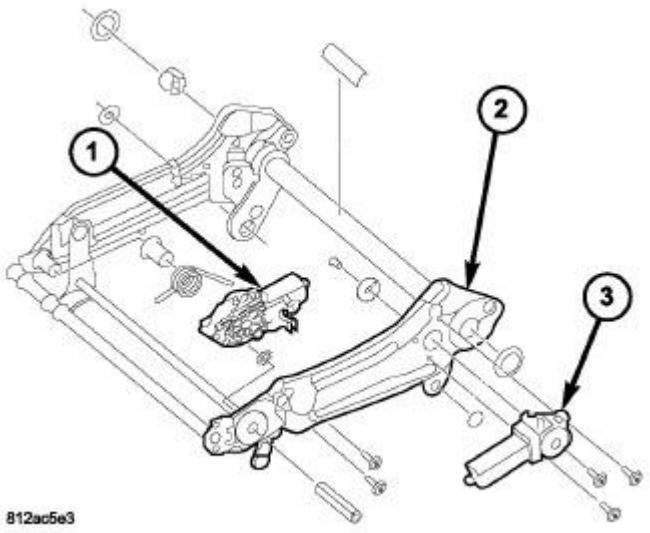

Fig. 11: Seat Adjuster Motor Components
Courtesy of CHRYSLER LLC

1. Disconnect and isolate the battery negative cable.
2. Remove the affected seat with the inoperative motor (3). Refer to **Body/Seats/SEAT - Removal** .
3. Remove the seat cushion and pan. Refer to **Body/Seats/COVER, Seat Cushion - Removal** .

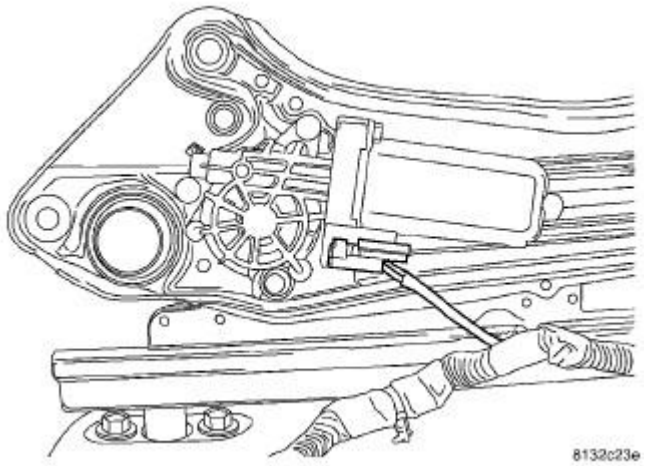

Fig. 12: Motor Electrical Connector
Courtesy of CHRYSLER LLC

4. Disconnect the motor electrical connector.

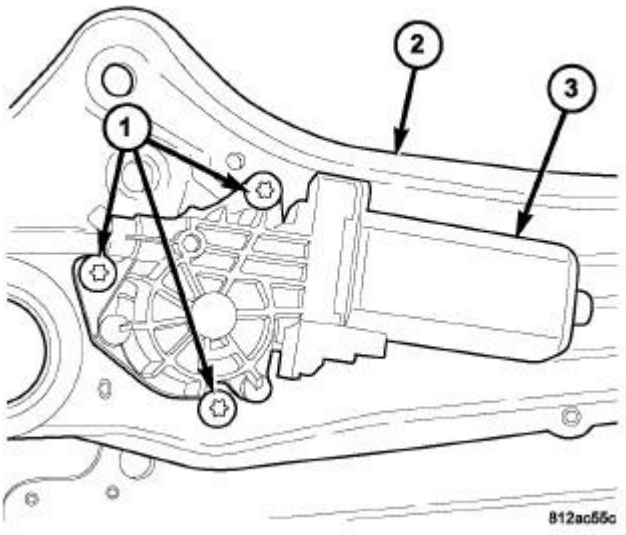

Fig. 13: Motor Electrical Connector
Courtesy of CHRYSLER LLC

5. Remove the fasteners (1) holding the motor (3) to the seat adjuster (2).
6. Remove screw and washer from the motor shaft.
7. Remove motor (3) from seat adjuster (2).

INSTALLATION

INSTALLATION

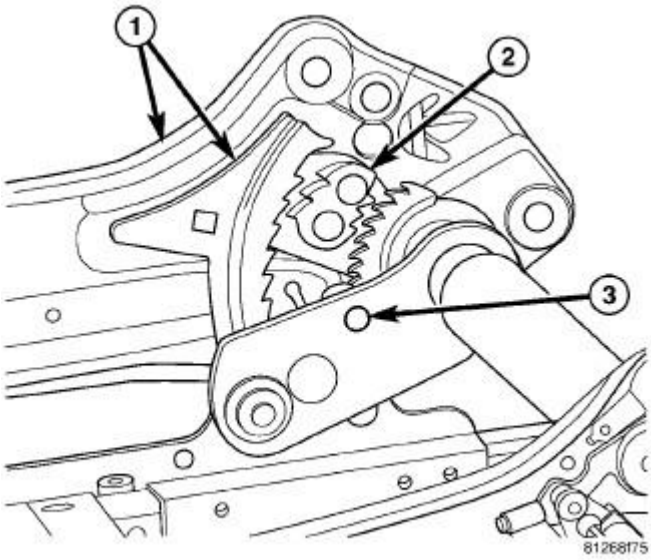

Fig. 14: Locking Pawl
Courtesy of CHRYSLER LLC

WARNING: A seat structure that has seen significant load may have the locking mechanism activated and may exhibit the following symptoms:

- **Locking pawl (2) loose**
- **Locking pawl (2) engaged into the seat frame sidemember (1)**
- **Height adjuster only works on outboard side**
- **Broken or missing shear pin (3)**

If any of above symptoms exist, replace the height adjuster assembly. Do not attempt any repairs. Failure to follow these instructions may result in possible serious or fatal injury.

If any one or more of these symptoms exist replace the height adjuster assembly. Do not attempt any repairs. Failure to follow these instructions may result in personal injury or death.

FRONT TILT MOTOR

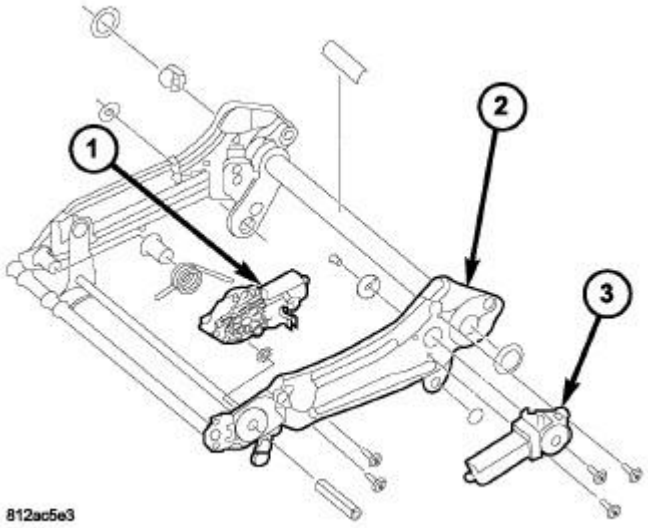

Fig. 15: Seat Adjuster Motor Components
Courtesy of CHRYSLER LLC

1. Position motor (1) on seat adjuster (2).

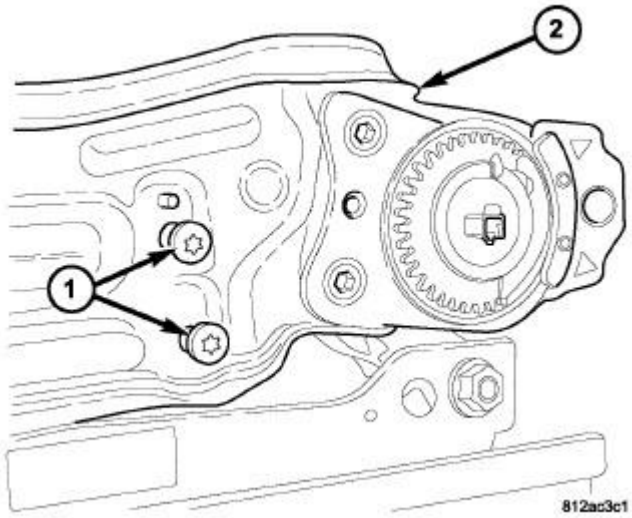

Fig. 16: Motor Fasteners
Courtesy of CHRYSLER LLC

2. Install the fasteners (1) holding the motor to the seat adjuster (2). Tighten the screws to 5 N.m (44 in. lbs.).

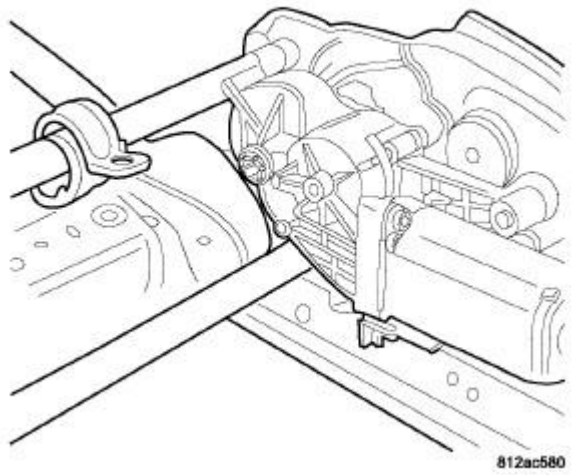

Fig. 17: Seat Adjuster Motor
Courtesy of CHRYSLER LLC

3. Connect the motor electrical connector.
4. Install the seat cushion. Refer to **Body/Seats/COVER, Seat Cushion - Installation** .
5. Clip the wire harness to cushion pan.
6. Install the seat assembly. Refer to **Body/Seats/SEAT - Installation** .
7. Connect the battery negative cable.
8. Verify normal operation of the power seat assembly.

HEIGHT ADJUST MOTOR

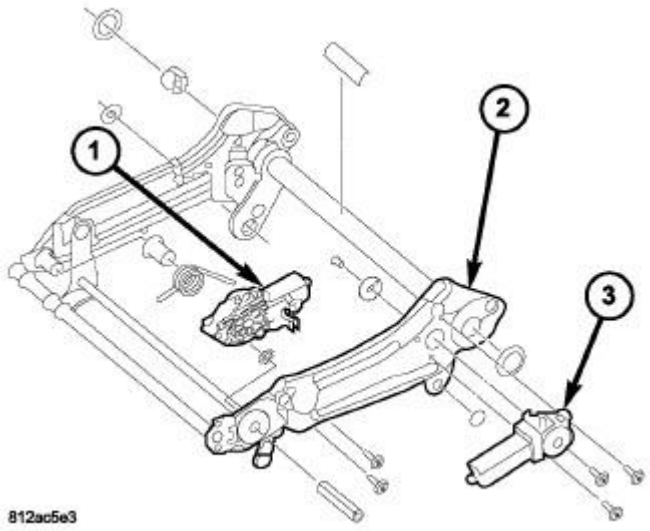

Fig. 18: Seat Adjuster Motor Components

Courtesy of CHRYSLER LLC

1. Ensure the seat adjuster (2) is in the full up position by pulling upward on the upper adjuster assembly.
2. Position motor (3) on seat adjuster (2).
3. Install the motor shaft screw and washer and tighten until snug. **Do not torque screw at this time.**

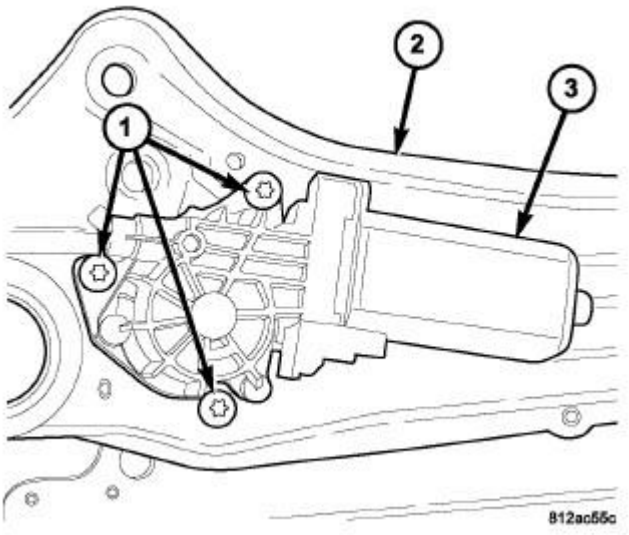

Fig. 19: Motor Electrical Connector
Courtesy of CHRYSLER LLC

4. Install the screws (1) holding the motor (3) to the seat adjuster (2). **It may be necessary to twist the motor slightly to align the fastener holes.**
5. Starting with the bottom screw, tighten the motor screws (1) to 9 N.m (80 in. lbs.).
6. Tighten the motor shaft screw and washer to 6.5 N.m (57.5 in. lbs.).

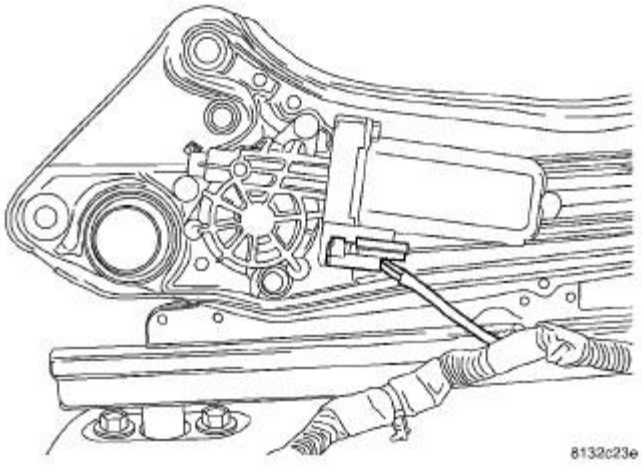

Fig. 20: Motor Electrical Connector
Courtesy of CHRYSLER LLC

7. Connect the motor electrical connector.
8. Install the seat cushion. Refer to **Body/Seats/COVER, Seat Cushion - Installation** .
9. Clip the wire harness to cushion pan.
10. Install the seat assembly. Refer to **Body/Seats/SEAT - Installation** .
11. Connect the battery negative cable.
12. Verify normal operation of the power seat assembly.

MOTOR, SEAT, FORE AFT

REMOVAL

REMOVAL

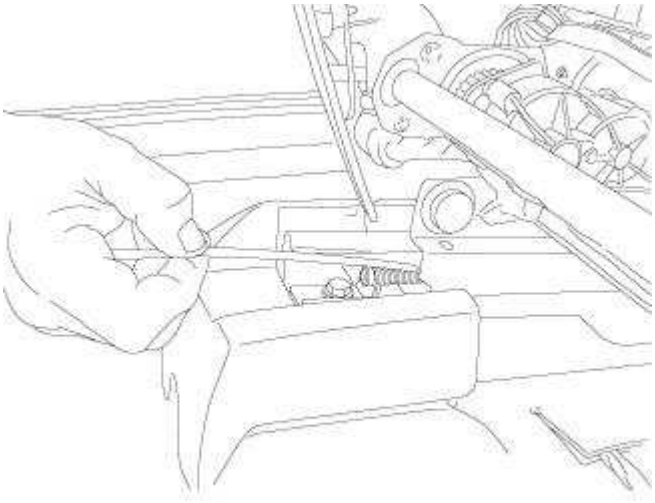

Fig. 21: Removing/Installing Fore/Aft Motor
Courtesy of CHRYSLER LLC

1. Remove the seat cover and cushion assembly. Refer to **Body/Seats/COVER, Seat Cushion - Removal** .
2. Cut the tie-straps holding the fore/aft motor, as necessary, and disconnect the electrical connector.
3. Remove the fore/aft motor and flex shafts from the bracket.

NOTE: **Do not remove the fore/aft motor bracket before any adjustment of the tracks.**

NOTE: **If motor bracket is to severely bent, or if the fore/aft motor is damaged to**

the point step 10 can't be performed, proceed to Step 11. Still read and follow Cautions and/or Notes between steps 4 and 10.

4. Measure from the front or rear track stop to the front or back of the adjuster track on each seat track.

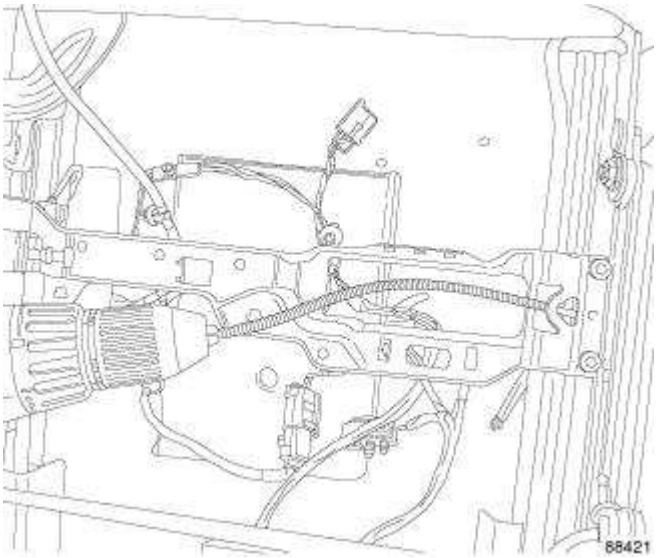

Fig. 22: Adjusting Seat Tracks
Courtesy of CHRYSLER LLC

5. Remove the long flex shaft from the motor and put it in a cordless drill. Insert other end in gear box on adjuster track. Adjust both seat tracks until they are within +/- 2mm of each other at a low speed.

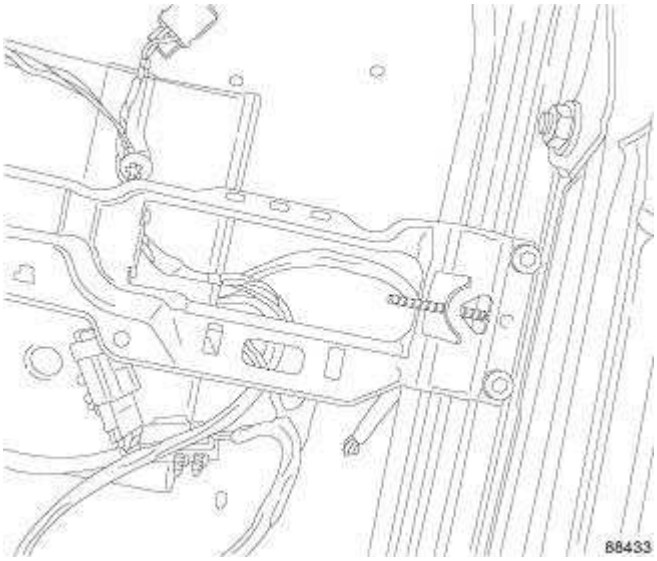

Fig. 23: Adjuster Track
Courtesy of CHRYSLER LLC

NOTE: **Do not drive the adjuster track more than 12mm (1/2 in) in any one direction at one time before driving the other side to minimize twist in the adjuster.**

6. Install the short flex shaft into the seat track gear box.

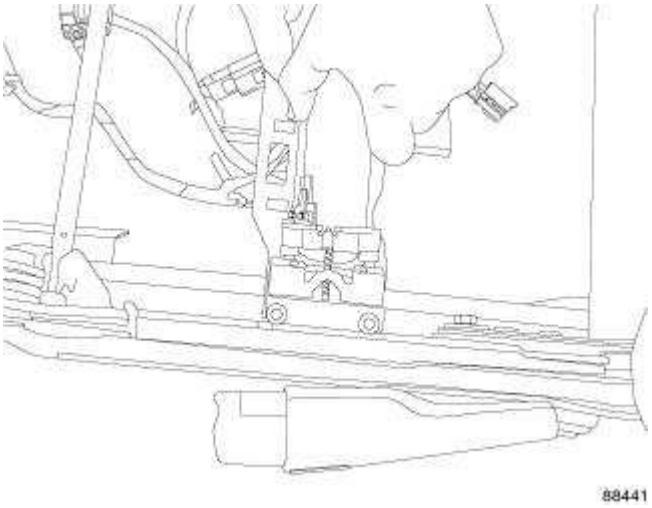

Fig. 24: Installing Long Flex Shaft Into Seat Track
Courtesy of CHRYSLER LLC

7. Install the fore/aft motor with grommets on the short flex shaft side first, then install the long flex shaft into outboard side track gear box first then slide flex shaft cover over long flex shaft and then insert in to motor.
8. Install the long flex shaft into the seat track and clip long flex shaft sheathing into the clips.

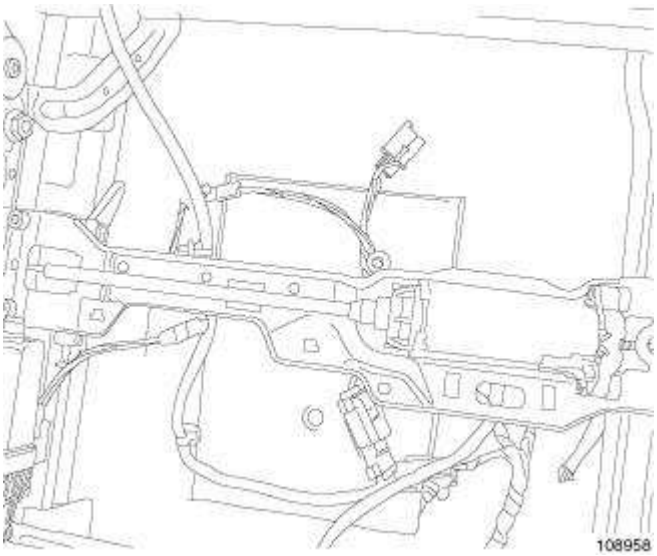

Fig. 25: Fore/Aft Motor
Courtesy of CHRYSLER LLC

9. Connect electrical connector to the fore/aft motor.
10. Connect the battery.

NOTE: Make sure front and rear rail end stops, rail ends, and drive screws are free of foreign material before fully drive seat to the full rear position.

11. Adjust the seat to the full rear position.
12. Disconnect the battery.
13. Remove the fore/aft motor and flex shafts from bracket.
14. Using cordless drill and flex shaft, verify that the tracks are all the way back and within +/- 1mm of each other.

NOTE: As you reach the end of the adjuster track travel slow down the speed so you do not over twist the flex shaft.

15. Remove fore/aft motor bracket bolts taking care to make sure no thread locker particles enter drive screws.
16. Inspect both ends of each drive screw for foreign material, and remove as necessary.

INSTALLATION

INSTALLATION

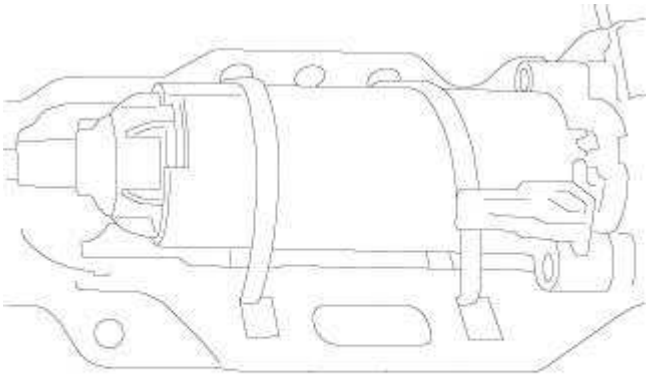

Fig. 26: Fore/Aft Motor Bracket
Courtesy of CHRYSLER LLC

1. Install new fore/aft motor bracket and bolts 26 +/- 2 Nm (19 +/- 1.5 ft lbf).
2. Install new short flex shaft into gear box.
3. Install fore/aft motor into fore/aft motor bracket and short flex shaft.
4. Install new long flex shaft into gear box.

5. Slide new long flex shaft cover over long flex shaft.
6. Install long flex shaft into fore/aft motor.
7. Seat fore/aft motor into fore/aft motor bracket.
8. Install tie straps as shown in illustration, making sure the tie strap goes under connector and cut off excess.
9. Install seat. Refer to **Body/Seats/SEAT - Installation** .
10. Install seat cover and cushion. Refer to **Body/Seats/COVER, Seat Cushion - Installation** .

NOTE: Make sure all electrical connectors are properly connected to seat pan.

11. Verify that the power seat is working correctly by running through the full travel, and that there is not excessive noise coming from the motor or track.

RECLINER

REMOVAL

REMOVAL

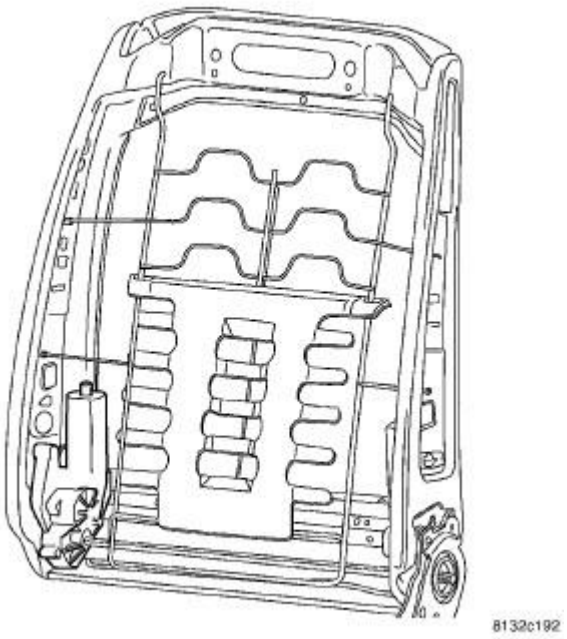

Fig. 27: Power Seat Recliner
Courtesy of CHRYSLER LLC

NOTE: The recliner motor is serviced as part of the seat back frame. Do not attempt to transfer the motor as the service part will come equipped with a new motor installed.

1. Remove the seat back frame assembly. Refer to **Body/Seats/SEAT BACK - Removal** .
2. Remove any parts that will need to be installed on new seat back frame assembly.

INSTALLATION

INSTALLATION

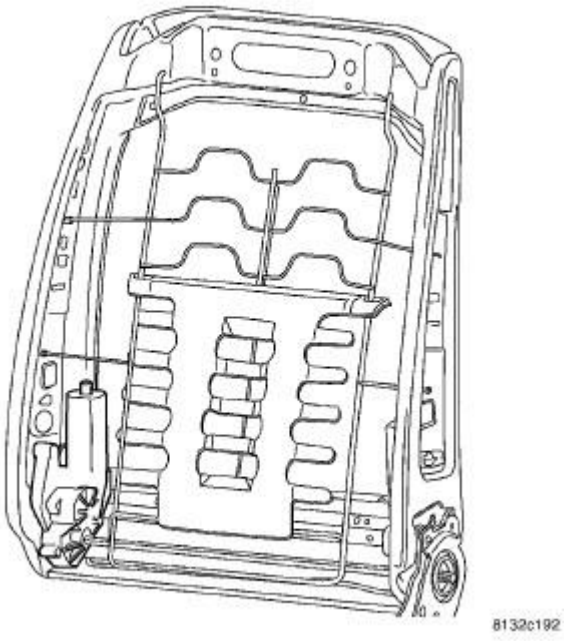

Fig. 28: Power Seat Recliner
Courtesy of CHRYSLER LLC

1. Install parts from old seat back assembly as necessary.
2. Install the seat back (1). Refer to **Body/Seats/SEAT BACK - Installation** .

SWITCH, SEAT

DESCRIPTION

DESCRIPTION

Both the driver and passenger power seats can be adjusted in eight different ways using the power seat switch. The power seat switch is located on the lower outboard side of the seat cushion on the seat cushion side shield on all models.

The individual switches in the power seat switch assembly cannot be repaired. If one switch is damaged or faulty, the entire power seat switch must be replaced.

OPERATION

OPERATION

When a power seat switch is actuated, a battery feed and a ground path are applied through the switch contacts to the power seat adjuster or recliner adjuster motor. The selected adjuster motor operates to move the seat or recliner through its drive unit in the selected direction until the switch is released, or until the travel limit of the adjuster is reached. When the switch is moved in the opposite direction, the battery feed and ground path to the motor are reversed through the switch contacts. This causes the adjuster motor to run in the opposite direction.

On vehicles equipped with memory system, a resistance signal is sent to the Memory Seat Module (MSM) via the Controller Area Network (CAN) bus circuit, when the driver memory seat switch control knob is actuated. The MSM is responsible for the 12v battery feed and ground path to the power seat adjuster motor. The adjuster motor operates to move the power seat adjuster mechanism through its drive unit in the selected direction until the switch is released, or until the travel limit of the adjuster is reached.

No power seat switch should be held applied in any direction after the adjuster has reached its travel limit. The power seat adjuster motors each contain a self-resetting circuit breaker to protect them from overload. However, consecutive or frequent resetting of the circuit breaker may result in motor damage.

DIAGNOSIS AND TESTING

POWER SEAT SWITCH

DRIVER

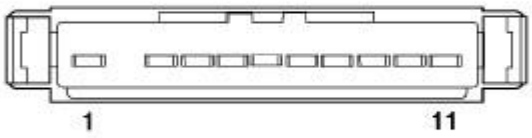

8132c253

Fig. 29: Power Seat Switch Terminals
Courtesy of CHRYSLER LLC

1. Disconnect and isolate the negative battery cable.
2. Remove the power seat switch from the seat. See **Electrical - Power Systems/Power Seats/SWITCH, Seat - Removal**.

3. Use an ohmmeter to test the continuity of the power seat switch. Refer to **DRIVER POWER SEAT SWITCH** table. If not OK, replace the inoperative power seat switch. If switch tests OK. See **Electrical - Power Systems/Power Seats - Diagnosis and Testing**.

DRIVER POWER SEAT SWITCH

SWITCH POSITION	CONTINUITY BETWEEN
OFF	7-1, 7-3, 7-4, 7-5, 7-8, 7-9, 7-10, 7-11
RECLINER UP	6-3, 7-1, 7-4, 7-5, 7-8, 7-9, 7-10, 7-11
RECLINER DOWN	6-1, 7-3, 7-4, 7-5, 7-8, 7-9, 7-10, 7-11
HORIZONTAL FORWARD	6-8, 7-1, 7-3, 7-4, 7-5, 7-9, 7-10, 7-11
HORIZONTAL REARWARD	6-4, 7-1, 7-3, 7-5, 7-8, 7-9, 7-10, 7-11
FRONT TILT DOWN	6-5, 7-1, 7-3, 7-4, 7-8, 7-9, 7-10, 7-11
FRONT TILT UP	6-9, 7-1, 7-3, 7-4, 7-5, 7-8, 7-10, 7-11
REAR TILT DOWN	6-10, 7-1, 7-3, 7-4, 7-5, 7-8, 7-9, 7-11
REAR TILT UP	6-11, 7-1, 7-3, 7-4, 7-5, 7-8, 7-9, 7-10

PASSENGER SEAT

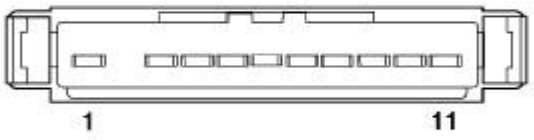

Fig. 30: Power Seat Switch Terminals
Courtesy of CHRYSLER LLC

1. Disconnect and isolate the negative battery cable.
2. Remove the power seat switch from the seat. See **Electrical - Power Systems/Power Seats/SWITCH, Seat - Removal**.
3. Use an ohmmeter to test the continuity of the power seat switch. Refer to **PASSENGER POWER SEAT SWITCH CONTINUITY** table. If not OK, replace the inoperative power seat switch. If switch tests OK. See **Electrical - Power Systems/Power Seats - Diagnosis and Testing**.

PASSENGER POWER SEAT SWITCH CONTINUITY

SWITCH POSITION	CONTINUITY BETWEEN

OFF	7-1, 7-3, 7-4, 7-5, 7-8, 7-9, 7-10, 7-11
RECLINER UP	6-3, 7-1, 7-4, 7-5, 7-8, 7-9, 7-10, 7-11
RECLINER DOWN	6-1, 7-3, 7-4, 7-5, 7-8, 7-9, 7-10, 7-11
HORIZONTAL FORWARD	6-8, 7-1, 7-3, 7-4, 7-5, 7-9, 7-10, 7-11
HORIZONTAL REARWARD	6-4, 7-1, 7-3, 7-5, 7-8, 7-9, 7-10, 7-11
FRONT TILT DOWN	6-5, 7-1, 7-3, 7-4, 7-8, 7-9, 7-10, 7-11
FRONT TILT UP	6-9, 7-1, 7-3, 7-4, 7-5, 7-8, 7-10, 7-11
REAR TILT DOWN	6-10, 7-1, 7-3, 7-4, 7-5, 7-8, 7-9, 7-11
REAR TILT UP	6-11, 7-1, 7-3, 7-4, 7-5, 7-8, 7-9, 7-10

REMOVAL

REMOVAL

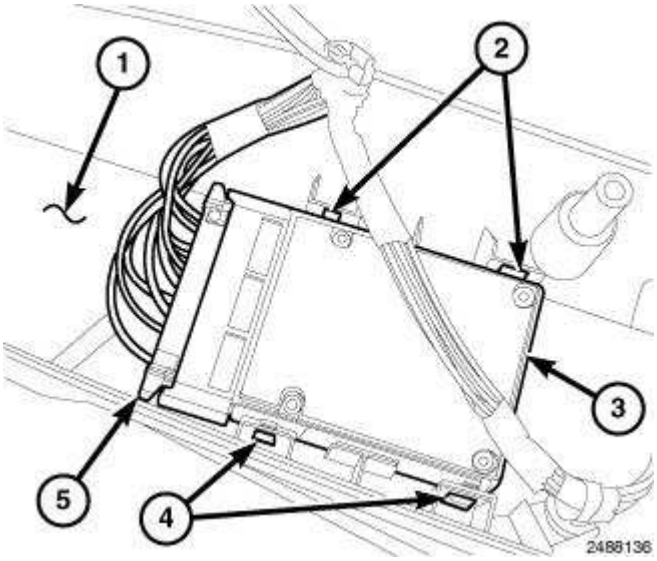

Fig. 31: Power Seat Switch
Courtesy of CHRYSLER LLC

NOTE: Left side shown in illustration. Right side similar.

1. Position the seat so the screws that secure seat cushion side trim panel (1) can be accessed.
2. Disconnect and isolate the negative battery cable.
3. Remove the three seat cushion side trim panel screws and position the trim panel to gain access to the back of the power seat switch (3).
4. Disconnect the electric connector (5) from the power seat switch.
5. Using a small flat bladed tool, carefully disengage the four tabs (2 and 4) that secure the power seat switch to the seat cushion side trim panel and remove the switch.

INSTALLATION

INSTALLATION

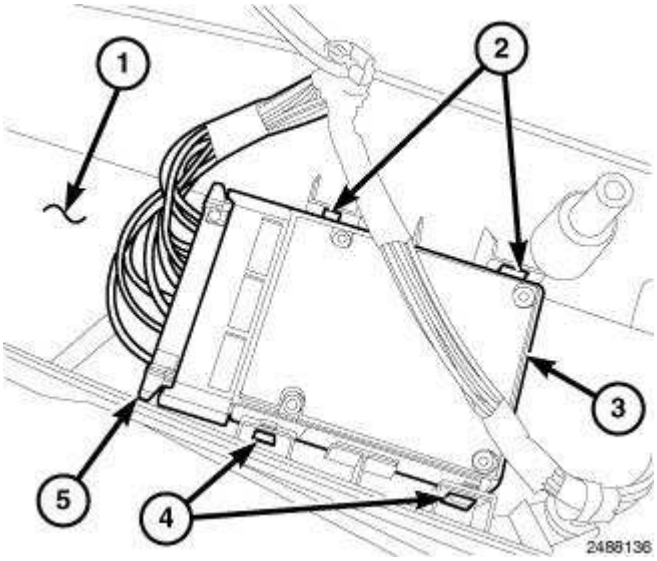

Fig. 32: Power Seat Switch
Courtesy of CHRYSLER LLC

NOTE: Left side shown in illustration. Right side similar.

1. Position the power seat switch (3) to the seat cushion side trim panel (1) and engage the four retaining tabs (2 and 4). Make sure the retaining tabs are fully engaged.
2. Connect the electrical connector (5) to the power seat switch.
3. Reposition the seat cushion side trim panel and install the three screws. Tighten the screws securely.
4. Reconnect the negative battery cable.

STEERING

Steering - Challenger

DESCRIPTION

STEERING SYSTEMS

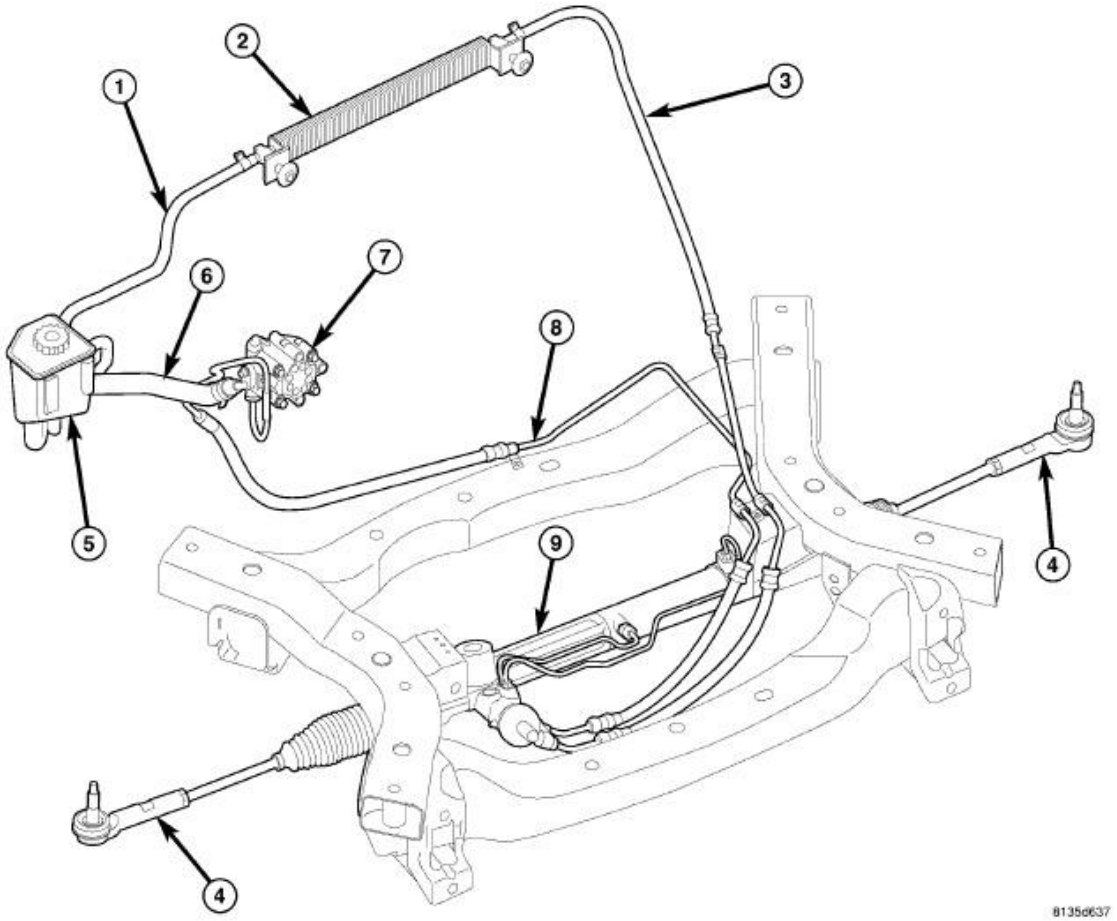

Fig. 1: RWD POWER STEERING SYSTEM
Courtesy of CHRYSLER LLC

Power steering systems consist of:

- Steering column
- Rack and pinion steering gear (9)
- Belt driven hydraulic steering pump (7)
- Pump pressure (8), return (1 and 3) and supply (6) hoses
- Oil Cooler (2)
- Remote Reservoir (5)

- Inner and Outer tie rod ends (4)

WARNING

WARNING

WARNING: Power steering fluid, engine parts and exhaust system may be extremely hot if engine has been running. Do not start engine with any loose or disconnected hoses. Do not allow hoses to touch hot exhaust manifold or catalyst.

WARNING: Fluid level should be checked with the engine off to prevent personal injury from moving parts.

CAUTION

CAUTION

CAUTION: Anytime the battery has been disconnected and is reconnected it is important that this be performed properly. The vehicle may be equipped with systems that require special calibration processes. Refer to Electrical/Battery System - Standard Procedure

CAUTION: When the power steering system is open, cap all open ends of the hoses, power steering pump fittings or power steering gear ports to prevent entry of foreign material into the components.

CAUTION: When servicing power steering components, do not pinch off power steering hoses in any way to stop fluid flow. Damage to hoses may result.

CAUTION: If the steering wheel is excessively off-center, outside of Chassis specifications, inadvertent ESP activations may occur on a vehicle so equipped.

DIAGNOSIS AND TESTING

HYDRAULIC FLOW AND PRESSURE TEST

The following procedure is used to test the operation of the power steering system on this vehicle. This test will provide the gallons per minute (GPM) or flow rate of the power steering pump along with the maximum relief pressure. Perform this test anytime a power steering system problem is present. This test will determine if the power steering pump or power steering gear is not functioning properly. The following test is performed using the Power Steering Analyzer Kit 6815 (with appropriate hoses)

and Adapters from Power Steering Analyzer Adapter Kit 6893A. See **Steering - Special Tools**

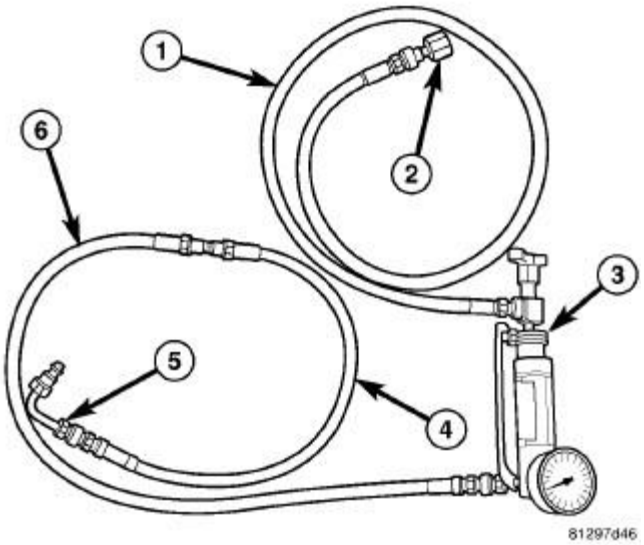

Fig. 2: Analyzer Setup To Test At Pump
Courtesy of CHRYSLER LLC

1. Check power steering belt to ensure it is in good condition and adjusted properly.
2. Assemble Power Steering Analyzer as follows:
    a. Gauge end (inlet) of Flow Meter And Gauge 6800 (3) - Hose 6905 (6), Hose 6713 (4), Adapter Tube 6844 (5)
    b. Valve end (outlet) of Flow Meter And Gauge 6800 (3) - Hose 6959 (1), Adapter Fitting 6826 (2)
3. Unthread pressure hose tube nut at power steering pump.
4. Connect Adapter Tube 6844 to pressure fitting on power steering pump. Tighten tube nut to specifications. See **Steering - Specifications**
5. Connect power steering pressure hose to Adapter Fitting 6826. Tighten tube nut to specifications. See **Steering - Specifications**
6. Open Analyzer test valve completely.
7. Start engine and allow to idle long enough to circulate power steering fluid through Analyzer flow meter and hoses.
8. Shut off engine and check fluid level; add fluid as necessary. Repeat 7 and 8 until air is bled from system.
9. Start engine and allow to idle.
10. Check Analyzer gauge (3) pressure. Initial pressure reading should be less than 1379 kPa (300 psi). If pressure is higher, inspect hoses for restrictions and repair as necessary.
11. Increase engine speed to 1,100 rpm (1,200 rpm for SRT8) and read Analyzer Flow Meter. The reading should be 8.2 LPM (2.2 GPM) minimum. If flow reading is below specification, replace power steering pump.

CAUTION: The following test procedure involves testing maximum pump pressure output and flow control valve operation. Do not leave valve closed for more than five seconds as the pump could be damaged.

12. Close valve fully three times and record highest pressure indicated each time. **All three readings must be above specifications and within 345 kPa (50 psi) of each other.**

CAUTION: Do not force the pump to operate against the stops for more than 2 to 4 seconds at a time because, pump damage will result.

- Power steering pump pressures above specifications but not within 345 kPa (50 psi) of each other, replace pump.
- Pressures within 345 kPa (50 psi) of each other but below specifications, replace pump.

13. Completely open the valve on the Power Steering Analyzer. Turn the steering wheel to the extreme left until the stop in the steering gear is met, then turn the steering wheel to the right until the right stop is met. Record the highest indicated pressure at each position. Compare the recorded readings to the specifications. If the highest recorded output pressure reading against one stop is not within 345 kPa (50 psi) of the highest recorded reading at the other stop, the steering gear is leaking internally and must be replaced.

PUMP SPECIFICATIONS

VEHICLE	RELIEF PRESSURE
Non-SRT Vehicles	10273 to 10963 kPa (1490 -1590 psi)
SRT Vehicles	11307 to 11997 kPa (1640-1740 psi)

STEERING DIAGNOSIS CHARTS

NOTE: There are three diagnosis charts following that cover NOISE, VIBRATION AND HARSHNESS (NVH) ISSUES, PERFORMANCE ISSUES, and FLUID ISSUES.

NOISE, VIBRATION AND HARSHNESS (NVH) ISSUES

CONDITION	POSSIBLE CAUSES	EVALUATION/CORRECTION
OBJECTIONABLE HISS OR WHISTLE WHILE TURNING STEERING WHEEL WHEN STATIONARY OR MOVING SLOWLY*	1. Damaged or mispositioned steering column shaft/coupling dash boot seal.	1. Check to ensure boot is properly installed and seals against sheet metal. Reposition or replace steering column shaft/coupling dash boot seal as necessary.
-	2. Mis-routed power steering hose.	2. Check routing of power steering hoses. Ensure hoses do not come in unwanted contact with other components and objects.
		3. Using an electronic listening tool,

-	3. Restriction in pressure or return hose.	determine if noise is coming from either pressure or return hose. Replace hose that noise is present within.
-	4. Noisy valve in power steering gear.	4. For evaluation and correction. See **Steering/Gear - Diagnosis and Testing**.
RATTLE OR EXCESSIVE CLUNK**	1. Power steering gear loose on engine cradle/crossmember.	1. Check fastener torque and tighten to specifications. Replace as necessary. Check steering wheel center following repair.
-	2. Loose strut assembly mounting fasteners at tower or knuckle.	2. Check fastener torque and tighten to specifications.
-	3. Excessive play in outer tie rod.	3. For evaluation and correction. See **Steering/Gear/TIE ROD, Steering - Diagnosis and Testing**.
-	4. Engine cradle/crossmember mounting fasteners loose at frame or bushings worn.	4. Check fastener torque and tighten to specifications. Inspect bushings and repair as necessary.
-	5. Wheel mounting (lug) nuts loose.	5. Inspect wheel mounting (lug) nuts and studs and repair as necessary. Tighten nuts to specifications.
-	6. Power steering hose touching the body or frame of vehicle.	6. For evaluation and correction. See **Steering/Pump - Diagnosis and Testing**.
-	7. Stabilizer bar link joints worn (occurs with steering input only when moving, not stationary).	7. At park, jounce only one side of vehicle front to exercise stabilizer bar. Replace stabilizer bar link.
-	8. Loose lower control arm or tension strut mounting bolts at engine cradle, frame or crossmember (occurs with steering input only when moving, not stationary).	8. Check control arm or tension strut mounting bolts and tighten to specified torque.
-	9. Loose intermediate shaft or column.	9. Rotate intermediate (steering) shaft in relationship to gear, checking for free-play. Check column fasteners and tighten to specifications as necessary.
-	10. Lower control arm pivot bushing worn (occurs with steering input only when moving, not stationary).	10. Inspect bushings for wear and replace lower control arm as necessary.
	11. Internal power steering	11. Drive vehicle on rough road, then

-	gear noise.	steer rapidly back and forth when stopped. Replace power steering gear as necessary.
-	12. Loose inner tie rod.	12. For evaluation and correction. See **Steering/Gear/TIE ROD, Steering - Diagnosis and Testing**.
-	13. Damaged engine cradle/crossmember.	13. Inspect the cradle/crossmember for cracks or other damage. Replace as necessary.
POPPING NOISE	1. Loose steering gear mounting fasteners.	1. Check fasteners for proper torque and retighten as necessary.
-	2. Loose outer tie rod mounting nut or jam nut.	2. Check fastener torque. Replace nuts as necessary and tighten to specifications.
-	3. Loose intermediate (steering) shaft coupling at gear input shaft.	3. Make sure coupling is fully seated on gear input shaft. Retighten or re-seat as necessary.
-	4. Worn tie rod (outer or inner).	4. For evaluation and correction. See **Steering/Gear/TIE ROD, Steering - Diagnosis and Testing**.
-	5. Worn axle half-shaft.	5. For evaluation and correction. Refer to **Differential and Driveline/Half Shaft - Diagnosis and Testing** .
CHIRP OR SQUEAL (POWER STEERING PUMP)	1. Loose power steering pump drive belt.	1. Inspect belt. Replace belt if worn or glazed. Tighten/adjust power steering pump drive belt if equipped with a manual tensioner.
-	2. Pulley alignment incorrect.	2. Realign accessory drives.
-	3. Malfunctioning belt auto-tensioner.	3. Verify belt tension. Replace belt auto-tensioner.
-	4. Power steering pump noisy (worn bearing/bushing noise).	4. Using an electronic listening tool, determine if noise is coming from pump. Replace power steering pump as required.
-	5. Generator or water pump noisy.	5. Using an electronic listening tool, determine if noise is coming from Generator or water pump. Replace faulty component.
WHINE, GROWL, MOAN OR GROAN (POWER STEERING PUMP)***	1. Low power steering fluid level.	1. Fill power steering fluid reservoir to proper level and check for leaks (make sure all air is bled from the system fluid).
	2. Air in power steering	2. Inspect for excessive air bubbles in fluid (fluid will appear foamy and lighter in color). Inspect hoses for leaks and

-	fluid.	replace as necessary. Bleed air from fluid. See **Steering - Standard Procedure**
-	3. Power steering hose touching body or frame of vehicle.	3. For evaluation and correction. See **Steering/Pump - Diagnosis and Testing**.
-	4. Wear of power steering pump internal components.	4. For evaluation and correction. See **Steering/Pump - Diagnosis and Testing**.
COLD START WHINE OR MOAN (POWER STEERING PUMP)***	1. Low power steering fluid level.	1. Fill power steering fluid reservoir to proper level and check for leaks (make sure all air is bled from the system fluid).
-	2. Extremely low ambient temperature (near -18 C°(0 F°) or below).	2. Some noise is expected as pump attempts to pull cold, thick fluid. Noise should go away as vehicle warms up. Acceptable levels of excessive noise are one second at -18 C°(0 F°) and 15 seconds at -29 C° (-20 F°). If noise is excessive, look for poor sealing on the return hose or a possible fluid leak.
SQUEAKING OR RUBBING SOUND	1. Steering column shroud or shaft rubbing.	1. While turning the steering wheel, listen down column to locate. Check interference between moving components. Move or realign shrouds or shaft as necessary. Replace components if this does not correct problem.
-	2. Clockspring inside steering column noisy.	2. Remove clockspring and reinstall steering wheel for testing. If noise is gone, replace clockspring.
-	3. Boot/dash seal lubrication inadequate.	3. Remove boot seal and recheck for noise. Lubricate seal as necessary.
-	4. Steering gear outer tie rod noisy.	4. While a helper turns the steering wheel, use an electronic listening tool to determine if noise is coming from either outer tie rod. Replace outer tie rods as necessary.
-	5. Steering gear internally noisy.	5. Remove dash seal boot, then exercise the steering wheel. If noise is still present at gear, replace steering gear.
SCRUBBING OR KNOCKING SOUND	1. Incorrect tire or wheel size.	1. Replace incorrect size tire or wheel with original equipment size.
-	2. Worn motor or transmission mount.	2. Drive vehicle, moving accelerator pedal rapidly up and down attempting to locate noise. Try in both forward and reverse. Replace mounts as necessary.

-	3. Tires contacting wheel well.	3. Make sure wheel house is properly positioned. If not, reposition as necessary. If steering wheel is properly centered, check steering gear travel left to right by rotating the steering wheel to each stop. Steering wheel should rotate the same amount in both directions from center. If not, replace steering gear.
-	4. Interference between moving steering components and other components.	4. Check for bent or misaligned components. Correct or replace as necessary.
-	5. Accessory drive pulley rubbing against another component.	5. Check pulleys for wear. Check for worn engine or transmission mount. Reposition components or replace mounts as necessary.

NOTE: *** There is some noise in all power steering systems. One of the most common is a hissing sound evident when turning the steering wheel when at a standstill or when parking and the steering wheel is at the end of its travel. Hiss is a very high frequency noise similar to that experienced while slowly closing a water tap. The noise is present in every valve and results when high velocity fluid passes valve orifice edges. There is no relationship between this noise and the performance of the steering system.**

NOTE: **** A light clunk may be felt or heard during steering wheel reversal while vehicle is stationary. This results from internal steering gear rack movement at the bushings and in no way affects the performance of the steering system. This movement may be felt in the steering components during steering wheel reversal.**

NOTE: ***** Power steering pump growl/moan/groan results from the development of high pressure fluid flow. Normally this noise level should not be high enough to be objectionable.**

PERFORMANCE ISSUES

CONDITION	POSSIBLE CAUSES	EVALUATION/CORRECTION
STEERING WHEEL OR COLUMN HAS FREE-PLAY/LASH/LOOSENESS (CLUNKING OR RATTLING)	1. Loose coupling pinch bolt at gear input shaft.	1. Check pinch bolt torque. Replace pinch bolt if equipped with thread locker patch and tighten to specifications.
-	2. Power steering gear loose on cradle/crossmember.	2. Inspect gear mounting bolts. Replace if necessary and tighten to specifications.
	3. Excessive free-play or	3. Replace steering column.

-	noise from steering column bearings.	
-	4. Excessive intermediate (steering) shaft coupling U-joint free-play.	4. Rotate steering wheel back-and-forth while watching coupling. Observe for free-play. Replace intermediate shaft as necessary.
-	5. Loose or worn outer tie rod.	5. For evaluation and correction. See **Steering/Gear/TIE ROD, Steering - Diagnosis and Testing**.
-	6. Lack of lubrication in lower ball joint or ball joint is damaged.	6. For evaluation. Refer to **Front Suspension/Front/BALL JOINT, Suspension - Diagnosis and Testing** . Lubricate ball joint if equipped with a zerk fitting and check for function. If not equipped with a zerk fitting, test and replace ball joint as necessary.
-	7. Excessive lash inside steering gear.	7. Disconnect intermediate shaft and turn steering gear input shaft. Observe for any movement without a corresponding tire movement. Replace steering gear as necessary.
STEERING WHEEL HAS FORE AND AFT LOOSENESS	1. Steering wheel retaining bolt loose.	1. Check steering wheel retaining bolt torque and tighten to specifications as necessary.
-	2. Loose steering column to instrument panel fasteners.	2. Check steering column to instrument panel fastener torque and tighten to specifications as necessary.
-	3. Steering column lower bearing spring retainer slipped on steering column shaft.	3. Pull steering wheel fore-and-aft while observing movement. Replace steering column as necessary.
STEERING WHEEL, DASH OR VEHICLE VIBRATES DURING STEERING MANEUVERS (ESPECIALLY AT LOW SPEED OR STANDSTILL)	1. Air in power steering fluid.	1. Inspect for excessive air bubbles in fluid (fluid will appear foamy and lighter in color). Inspect hoses for leaks and replace as necessary. Bleed air from fluid. See **Steering - Standard Procedure**
-	2. Tire(s) not properly inflated.	2. Check and inflate tires to the specified pressure.
-	3. Excessive engine vibration.	3. Ensure that the engine is tuned properly.
-	4. Loose tie rod end jam nut.	4. Check torque and tighten the inner to outer tie rod jam nut to specifications.

-	5. Overcharged air conditioning (A/C) system.	5. Turn A/C off and verify issue goes away. Repair A/C as necessary.
-	6. Grounded, damaged or loose engine mount.	6. Visually inspect for damaged or misaligned mounts. Check fastener torque. Replace, realign or retighten as necessary.
-	7. Loose or worn outer tie rod.	7. For evaluation and correction. See **Steering/Gear/TIE ROD, Steering - Diagnosis and Testing**.
-	8. Steering gear noisy.	8. During a parking event at 0 mph, verify there is vibration only with steering. Steer in both directions and verify that the noise follows the steering input. Check TSB's for any known issue. Replace steering gear as necessary.
STEERING CATCHES, SURGES OR STICKS IN CERTAIN POSITIONS OR IS DIFFICULT TO TURN	1. Low power steering fluid level.	1. Check fluid level and fill to proper level as necessary. Check for leaks. Make sure all air is bled from system.
-	2. Tire(s) not properly inflated.	2. Check and inflate tires to the specified pressure.
-	3. Loose or slipping power steering/accessory drive belt.	3. Verify belt tension. Replace belt auto-tensioner and belt as necessary.
-	4. Lack of lubrication in lower ball joint or ball joint is damaged.	4. For evaluation. Refer to **Front Suspension/Front/BALL JOINT, Suspension - Diagnosis and Testing** . Lubricate ball joint if equipped with a zerk fitting and check for function. If not equipped with a zerk fitting, test and replace ball joint as necessary.
-	5. Lack of lubrication in steering gear outer tie rod end(s).	5. For evaluation and correction. See **Steering/Gear/TIE ROD, Steering - Diagnosis and Testing**.
-	6. Faulty power steering pump.	6. Perform Power Steering Flow and Pressure Test. See **Steering - Diagnosis and Testing**. Look for low or erratic flow or pressure. Replace power steering pump as necessary.
	7. Excessive friction in intermediate	7. Disconnect intermediate shaft/coupler at steering gear and

-	shaft/coupler joint.	check joint for smooth operation in all directions. Replace intermediate shaft/coupler joint.
-	8. Excessive friction in steering column.	8. Disconnect intermediate shaft/coupler at steering gear. Turn steering wheel two revolutions in either direction from on center and check for smooth operation. DO NOT turn past two revolutions. Damage to the clockspring may occur. Replace steering column as necessary.
-	9. Worn or binding seat and bearing in front strut assembly.	9. Disconnect outer tie rod ends from knuckles, then turn tire and wheel assembly checking for smooth operation. Replace front strut assembly seat and bearing.
-	10. Faulty steering gear.	10. With vehicle on hoist, tires unsupported and engine off, steer gear throughout travel and check for smooth operation. Replace steering gear (only after all previous components have been checked).
STEERING WHEEL DOES NOT RETURN TO CENTER POSITION	1. Tire(s) not properly inflated.	1. Check and inflate tires to the specified pressure.
-	2. Improper front wheel alignment.	2. Check and adjust wheel alignment as necessary.
-	3. Lack of lubrication in lower ball joint or ball joint is damaged.	3. For evaluation. Refer to **Front Suspension/Front/BALL JOINT, Suspension - Diagnosis and Testing** . Lubricate ball joint if equipped with a zerk fitting and check for function. If not equipped with a zerk fitting, test and replace ball joint as necessary.
-	4. Excessive friction in intermediate shaft/coupler joint.	4. Disconnect intermediate shaft/coupler at steering gear and check joint for smooth operation in all directions. Replace intermediate shaft/coupler joint.
-	5. Excessive friction in steering column.	5. Disconnect intermediate shaft/coupler at steering gear. Turn steering wheel two revolutions in either direction from on center and check for smooth operation. DO NOT turn past two revolutions.

		Damage to the clockspring may occur. Replace steering column as necessary.
-	6. Worn or binding seat and bearing in front strut assembly.	6. Disconnect steering gear outer tie rod ends at knuckles, then turn tire and wheel assembly in and out checking for smooth operation. Replace seat and bearing as necessary.
-	7. Excessive friction in power steering gear.	7. With vehicle on hoist, tires unsupported and engine off, steer gear throughout travel and check for smooth operation. Replace steering gear (only after all previous components have been checked).
EXCESSIVE STEERING WHEEL KICKBACK FROM ROAD INPUTS	1. Air in power steering fluid.	1. Inspect for excessive air bubbles in fluid (fluid will appear foamy and lighter in color). Inspect hoses for leaks and replace as necessary. Bleed air from fluid. See **Steering - Standard Procedure**
-	2. Power steering gear loose on cradle/crossmember.	2. Inspect gear mounting bolts. Replace if necessary and tighten to specifications.
-	3. Steering column, coupling or intermediate shaft worn or loose.	3. Rotate steering wheel back-and-forth while inspecting intermediate shaft going into steering gear. Look for excessive free-play. Retighten if loose bolt is found. Replace steering column, coupling or intermediate shaft if necessary.
-	4. Power steering pump flow is too low.	4. Perform Power Steering Flow and Pressure Test. See **Steering - Diagnosis and Testing**. Look for low or erratic flow or pressure. Replace power steering pump as necessary.

FLUID ISSUES

CONDITION	POSSIBLE CAUSES	EVALUATION/CORRECTION
LOW FLUID LEVEL WITH VISIBLE LEAK	1. Loose power steering hose fittings or connections.	1. Check torque on all tube nuts (at gear and pump). Inspect clamps at all rubber hose connections for correct position, damage and tension. Tighten tube nuts as required. Reposition or replace clamps at hose connections. Clean

		joints and reinspect for leaks.
-	2. Damaged or missing O-ring at power steering hose tube nuts.	2. Remove tube nut and inspect O-ring. If damaged or missing, replace O-ring. Clean joints and reinspect for leaks.
-	3. Power steering line or hose failure.	3. Clean fluid from around suspect areas. Run vehicle and inspect for leaks. Look inside reservoir to see if air is being ingested. Replace hoses as necessary.
-	4. Power steering component leaking (reservoir, pump, gear).	4. Clean fluid from around suspect areas. Run vehicle and inspect for leaks. Look inside reservoir to see if air is being ingested. Replace power steering component as necessary.
AERATED FLUID*	1. Low power steering fluid level.	1. Check fluid level and fill to proper level as necessary. Check for leaks. Make sure all air is bled from system.
-	2. Air leak at power steering supply hose, reservoir or pump.	2. Inspect components. Place a hand vacuum pump with Adapter 9688 on reservoir and verify that system can sustain vacuum. System should not lose more than 1 psi (7 kPa) in 2 minutes (make sure vacuum pump is sealed well to the reservoir). Replace steering component as necessary.
RESERVOIR FLUID OVERFLOW OR FLUID THAT IS MILKY IN COLOR	1. Water contamination of power steering fluid.	1. Inspect fluid for milky appearance. Completely drain power steering fluid. Refill and bleed system. See **Steering - Standard Procedure**

NOTE: * Extremely cold temperatures may cause power steering fluid aeration. The air should work its way out of the system as the fluid warms.

STANDARD PROCEDURE

POWER STEERING SYSTEM BLEEDING

WARNING: The fluid level should be checked with engine off to prevent injury from moving components.

CAUTION: Mopar® Power Steering Fluid + 4 or Mopar® ATF+4 Automatic Transmission Fluid is to be used in the power steering system. Both Fluids have the same material standard specifications (MS-9602). No other power steering or automatic transmission fluid is to be used in the system. Damage may result to the power steering pump and system if another fluid is used. Do not overfill the system.

CAUTION: If the air is not purged from the power steering system correctly, pump failure could result.

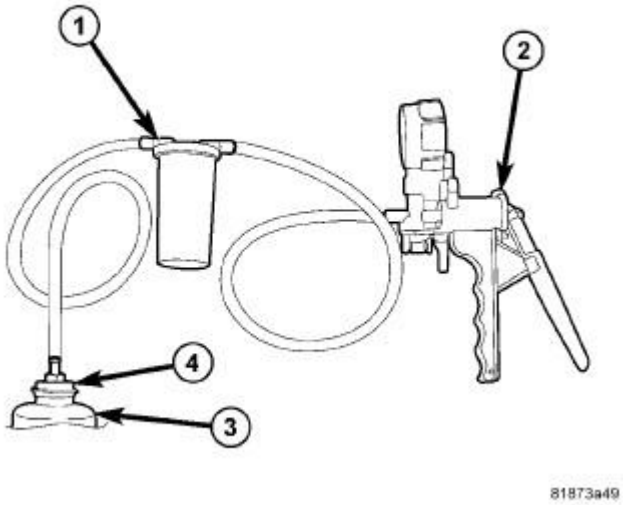

Fig. 3: HAND VACUUM PUMP ON RESERVOIR
Courtesy of CHRYSLER LLC

NOTE: Be sure the vacuum tool used in the following procedure is clean and free of any fluids.

1. Check the fluid level. As measured on the side of the reservoir, the level should indicate between ADD and FULL COLD when the fluid is at normal ambient temperature. Adjust the fluid level as necessary. See **Steering/Pump/FLUID - Standard Procedure**
2. Tightly insert Power Steering Cap Adapter (4), Special Tool 9688, into the mouth of the reservoir (3).

CAUTION: Failure to use a vacuum pump reservoir (1) may allow power steering fluid to be sucked into the hand vacuum pump.

3. Attach Hand Vacuum Pump (2), Special Tool C-4207 or equivalent, with reservoir (1) attached, to the Power Steering Cap Adapter (4).

CAUTION: Do not run the vehicle while vacuum is applied to the power steering system. Damage to the power steering pump can occur.

NOTE: When performing the following step make sure the vacuum level is maintained during the entire time period.

4. Using Hand Vacuum Pump (2), apply 68-85 kPa (20-25 in. Hg) of vacuum to the system for a minimum of three minutes.
5. Slowly release the vacuum and remove the special tools.
6. Adjust the fluid level as necessary. Refer to 1.
7. Repeat 1 through 6 until the fluid no longer drops when vacuum is applied.
8. Start the engine and cycle the steering wheel lock-to-lock three times.

NOTE: Do not hold the steering wheel at the stops.

9. Stop the engine and check for leaks at all connections.
10. Check for any signs of air in the reservoir and check the fluid level. If air is present, repeat the procedure as necessary.

SPECIFICATIONS

POWER STEERING FASTENER TORQUE

POWER STEERING FASTENER TORQUE SPECIFICATIONS

DESCRIPTION	N.m	Ft. Lbs.	In. Lbs.
DASH SEAL MOUNTING NUTS	7	-	62
GEAR MOUNTING BOLTS	95	70	-
HOSE TUBE NUTS	47	35	-
OUTER TIE ROD BALL JOINT NUT	85	63	-
PUMP MOUNTING BOLTS - 6.1L	28	21	-
STEERING COUPLING PINCH BOLT - AT GEAR	54	40	-
STEERING COUPLING PINCH BOLT - AT UPPER COUPLING/INTERMEDIATE SHAFT	31	23	-
TIE ROD JAM NUT	75	55	-

SPECIAL TOOLS

STEERING

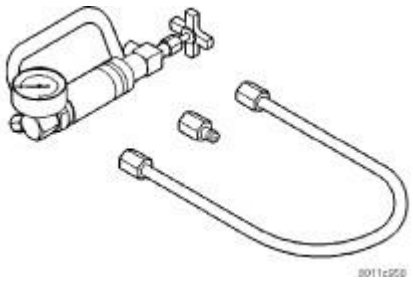

Fig. 4: Kit, Power Steering Analyzer 6815
Courtesy of CHRYSLER LLC



Fig. 5: Kit, Power Steering Analyzer Adapter 6893
Courtesy of CHRYSLER LLC

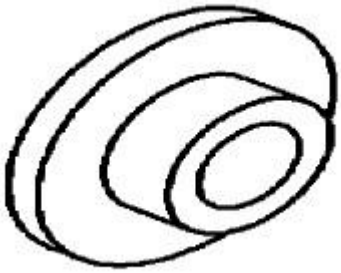

Fig. 6: Spacer 6936
Courtesy of CHRYSLER LLC



Fig. 7: Hose, Power Steering Analyzer 6959
Courtesy of CHRYSLER LLC

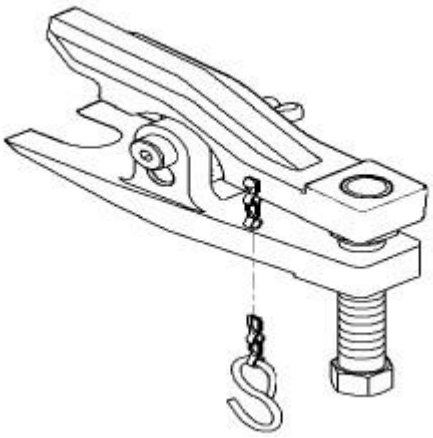

Fig. 8: Remover, Ball Stud 9360

Courtesy of CHRYSLER LLC



Fig. 9: Adapter, Power Steering Cap 9688
Courtesy of CHRYSLER LLC

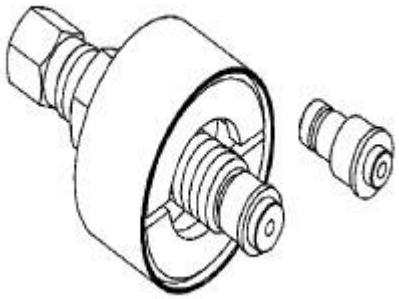

Fig. 10: Puller, Pulley 9962
Courtesy of CHRYSLER LLC

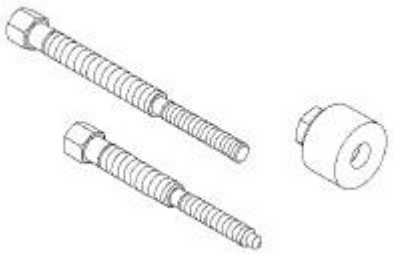

Fig. 11: Installer, Power Steering Pulley C-4063C
Courtesy of CHRYSLER LLC

COLUMN

DESCRIPTION

DESCRIPTION

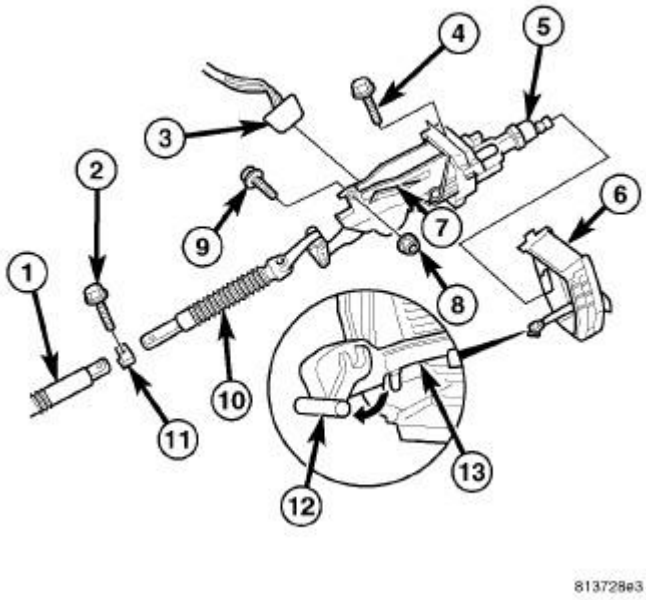

Fig. 12: STEERING COLUMN
Courtesy of CHRYSLER LLC

The tilt, telescoping and electronic telescoping steering column (5) is designed to be serviced as an assembly (including the intermediate shaft (10)); less wiring, switches, shroud, steering wheel, etc. Most steering column components can be serviced without removing the steering column from the vehicle.

When servicing any component of the steering column, refer to **SERVICE INFORMATION** and observe all WARNINGS and CAUTIONS. Refer to **Restraints - Warning** .

WARNING: The airbag system is a sensitive, complex electro-mechanical unit. Before attempting to diagnose, remove or install the airbag system components you must first disconnect and isolate the battery negative (ground) cable. Then wait two minutes for the system capacitor to discharge. Failure to do so could result in accidental deployment of the airbag and possible personal injury. The fasteners, screws, and bolts, originally used for the airbag components, have special coatings and are specifically designed for the airbag system. They must never be replaced with any substitutes. Anytime a new fastener is needed, replace with the correct fasteners provided in the service package or fasteners listed in the parts books.

CAUTION: Do not hammer on steering column shaft. This may cause damage to the column internally.

NOTE: When servicing the steering wheel after removing the old bolt, a NEW bolt must be used when installing.

NOTE: When servicing the steering coupler a NEW bolt must be used when installing.

DIAGNOSIS AND TESTING

STEERING COLUMN

If the vehicle is involved in a front end collision or the air bag has deployed or both, the steering column must be replaced.

REMOVAL

REMOVAL

WARNING: Before servicing the steering column the airbag system must be disarmed. Failure to do so may result in accidental deployment of the airbag and possible personal injury.

NOTE: If steering column being removed is an electric telescoping column and it is being reused, place column in mid-tilt position before removal to ease installation.

1. Position the front wheels straight ahead.
2. Fully extend or pull out adjustable steering column.
3. Disconnect the negative battery cable from the battery.

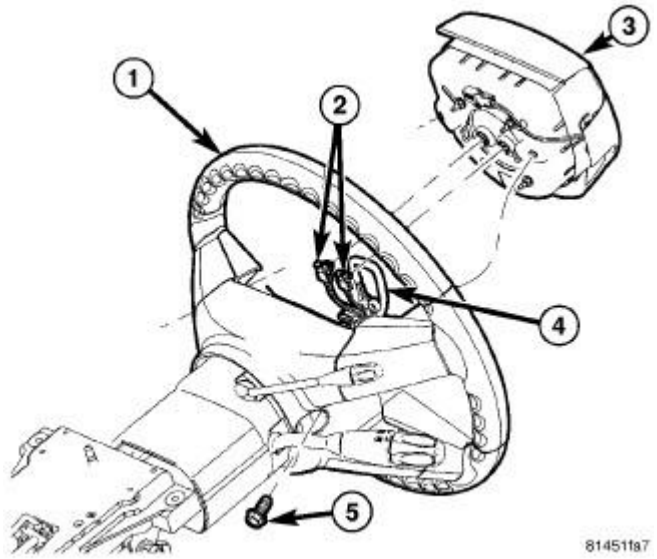

Fig. 13: DRIVER AIRBAG REMOVAL & INSTALLATION
Courtesy of CHRYSLER LLC

4. Remove the driver air bag (3). Refer to **Restraints/AIR BAG, Driver - Removal** .

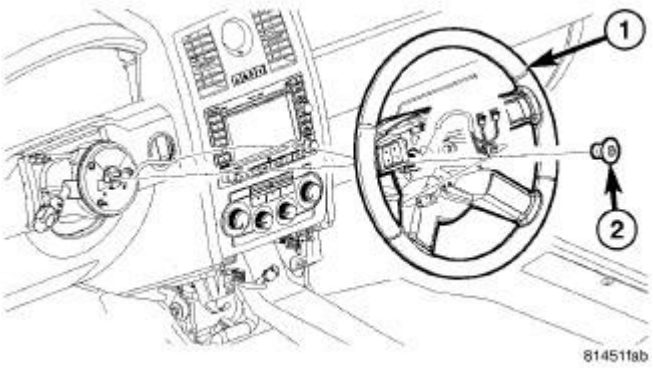

Fig. 14: STEERING WHEEL REMOVAL & INSTALLATION
Courtesy of CHRYSLER LLC

5. Remove the steering wheel retainer bolt (2), then slide the steering wheel (1) off the shaft.
6. Remove the steering column opening cover. Refer to **Body/Instrument Panel/COVER, Steering Column Opening - Removal** .

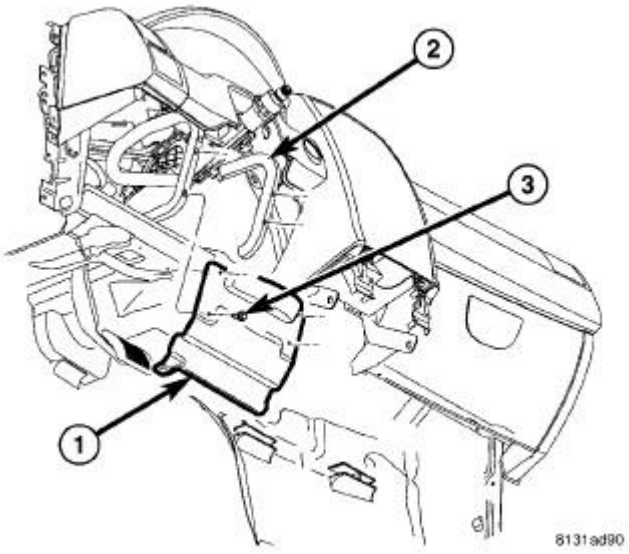

Fig. 15: REINFORCEMENT INSTRUMENTAL PANEL STEERING COLUMN
Courtesy of CHRYSLER LLC

7. Remove the steering column opening reinforcement (1).

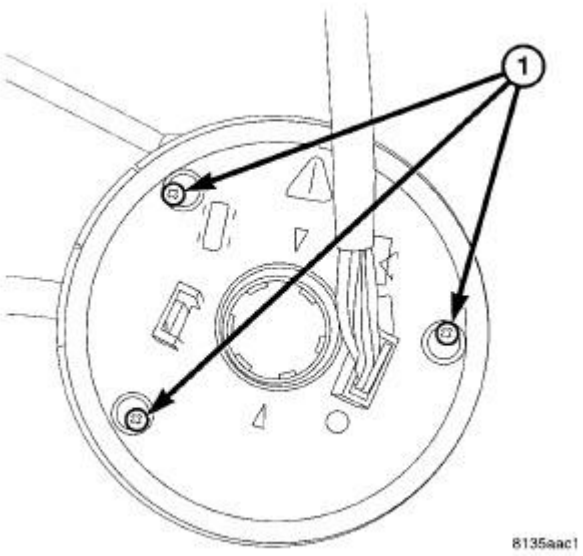

Fig. 16: Clockspring Screws
Courtesy of CHRYSLER LLC

8. Loosen at least one clockspring screw (1) to prevent the clockspring from unwinding.

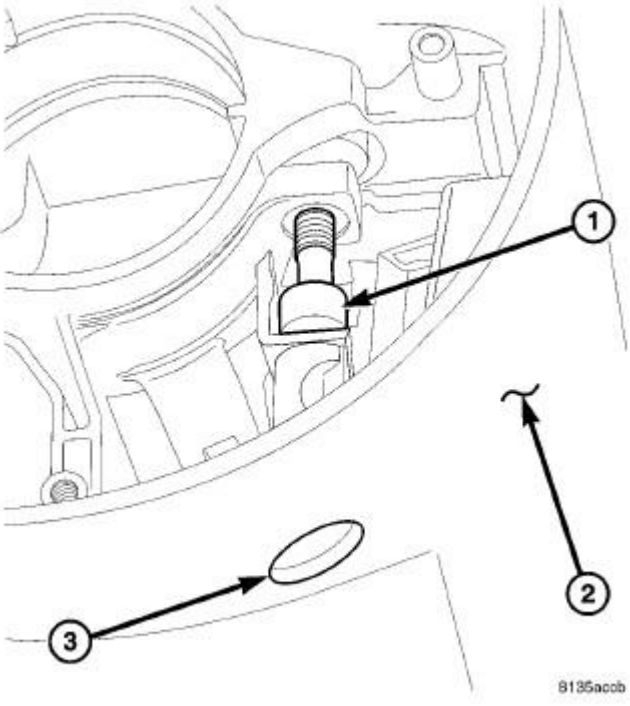

Fig. 17: STEERING COLUMN CONTROL MODULE SCREW
Courtesy of CHRYSLER LLC

9. Back out the set screw (1) through the access hole (3) in the Steering Column Control Module (SCCM) (2) securing the multi-function SCCM assembly.

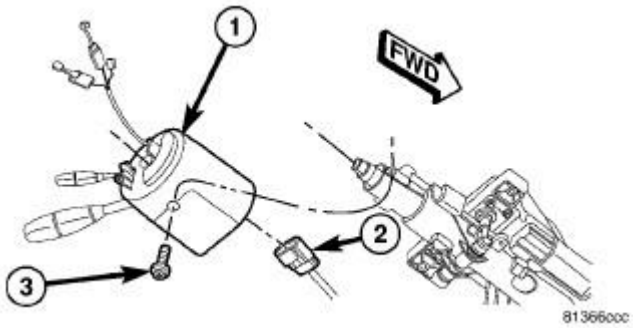

Fig. 18: STEERING COLUMN CONTROL MODULE REMOVAL & INSTALLATION
Courtesy of CHRYSLER LLC

10. Pull the SCCM assembly (1) off the steering column shaft.

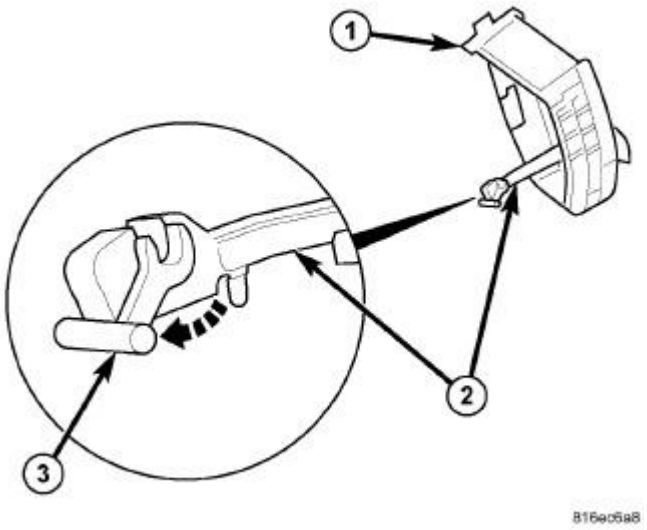

Fig. 19: UNLATCH TILT LEVER FROM COLUMN
Courtesy of CHRYSLER LLC

11. Manual tilt and telescoping columns - Unsnap and move the adjustment handle locking tab (3) forward as shown in illustration unlatching the handle (2) from the column.

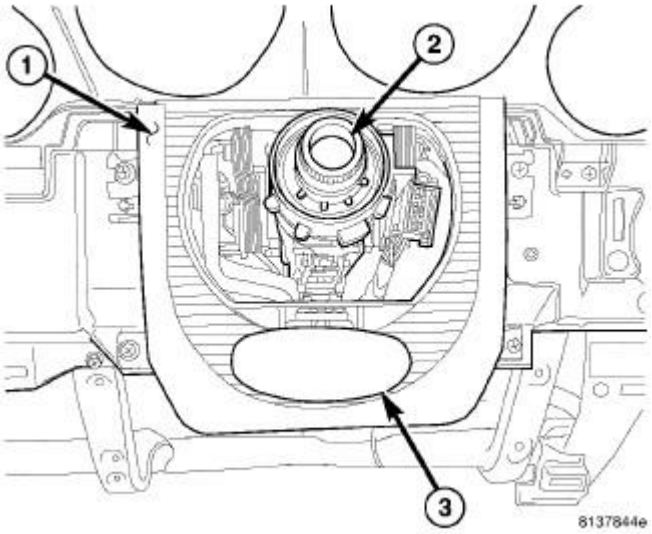

Fig. 20: ROLL TOP SHROUD
Courtesy of CHRYSLER LLC

12. Remove three roll top shroud mounting screws and remove roll top shroud (1) along with manual tilt/telescope handle (3) (if equipped).

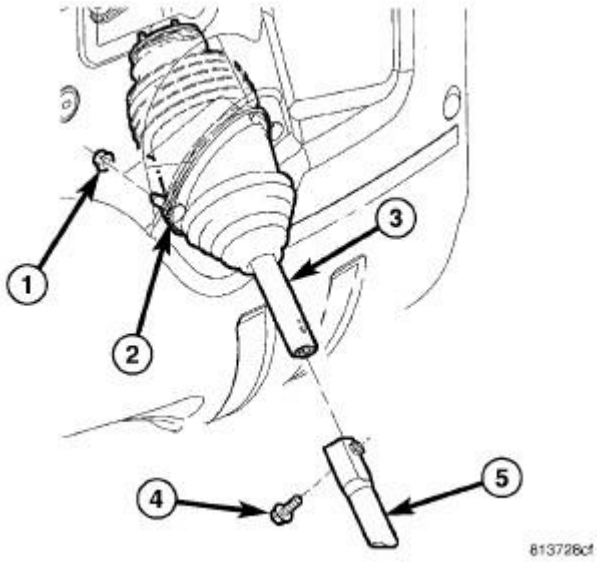

Fig. 21: RETAINING NUTS
Courtesy of CHRYSLER LLC

13. Remove the two retaining nuts (1) at the bulkhead (2) for the steering column.
14. Remove the instrument cluster assembly. Refer to **Electrical/Instrument Cluster - Removal** .

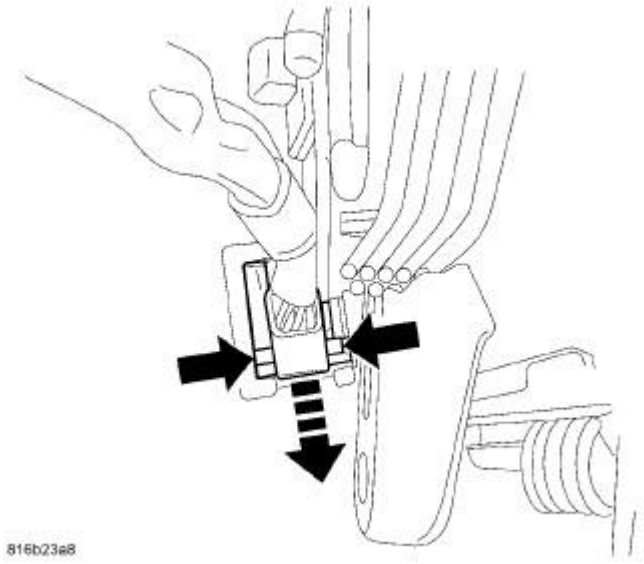

Fig. 22: REMOVING WIRING HARNESS CONNECTOR
Courtesy of CHRYSLER LLC

15. Depress the tabs on the rear of the column wiring harness connector and remove the connector from the steering column.
16. Raise and support vehicle. Refer to **Vehicle Quick Reference/Hoisting - Standard Procedure** .

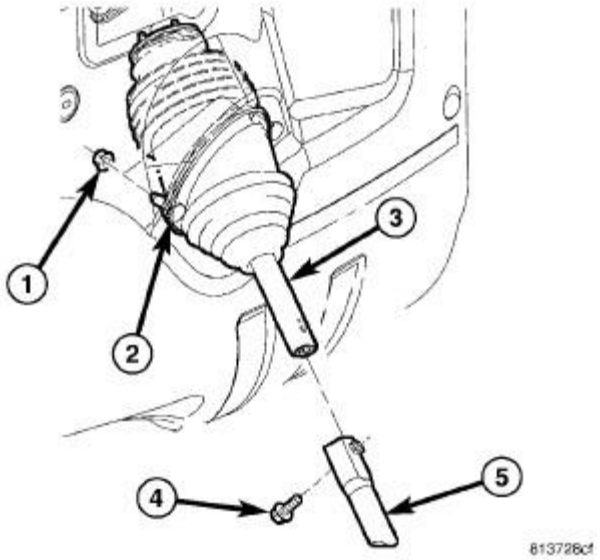

Fig. 23: RETAINING NUTS
Courtesy of CHRYSLER LLC

17. Remove the pinch bolt (4) at the lower coupling shaft (5).
18. Slide the steering shaft (3) out of the lower coupling shaft (5).

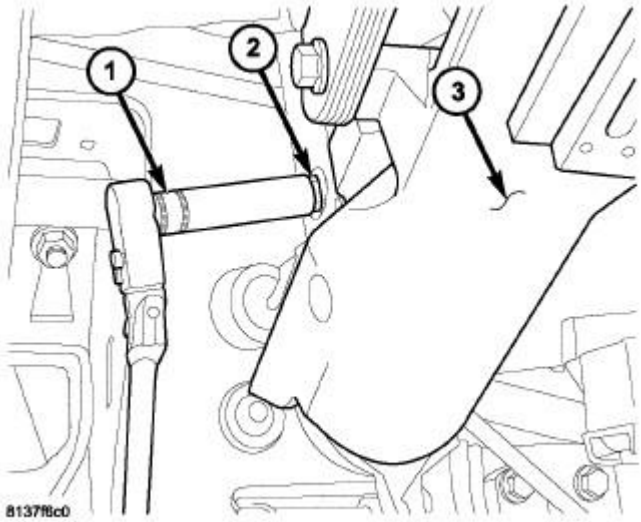

Fig. 24: BOLT AT LOWER PART OF COLUMN
Courtesy of CHRYSLER LLC

19. Remove the lower steering column mounting pivot bolt and nut (2).

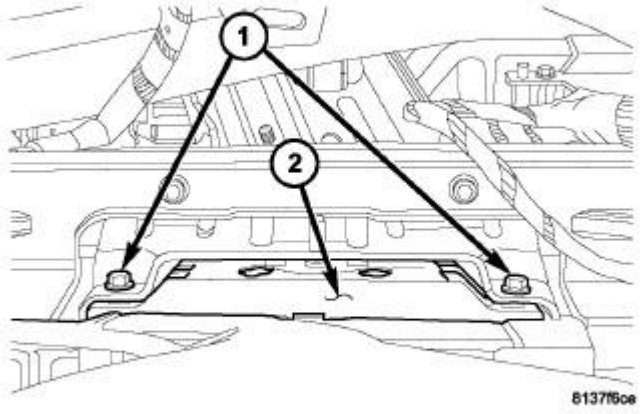

Fig. 25: UPPER COLUMN MOUNTING BOLTS
Courtesy of CHRYSLER LLC

CAUTION: When handling the steering column use care to avoid holding the column by any part of the tilt/telescope mechanism or by the shaft boot. The column should be held by its mounting bracket and the

shaft by the exposed portions.

20. Remove the two upper mounting screws (1) from the steering column (2).
21. Remove the steering column assembly from the vehicle.
22. Transfer remaining parts if necessary to the new column.

INSTALLATION

INSTALLATION

WARNING: Before servicing the steering column the airbag system must be disarmed. Failure to do so may result in accidental deployment of the airbag and possible personal injury.

CAUTION: When handling the steering column use care to avoid holding the column by any part of the tilt/telescope mechanism or by the shaft boot. The column should be held by its mounting bracket and the shaft by the exposed portions.

CAUTION: All fasteners must be torqued to specification to ensure proper operation of the steering column.

NOTE: New bolts must be used for installation.

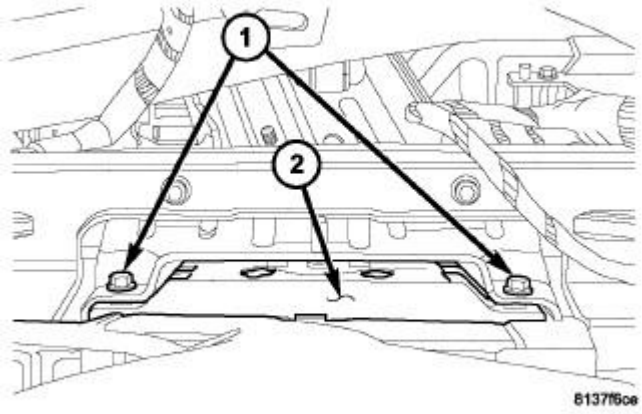

Fig. 26: UPPER COLUMN MOUNTING BOLTS

Courtesy of CHRYSLER LLC

1. Position the steering column (2) on the instrument panel and loosely install the upper mounting screws (1).

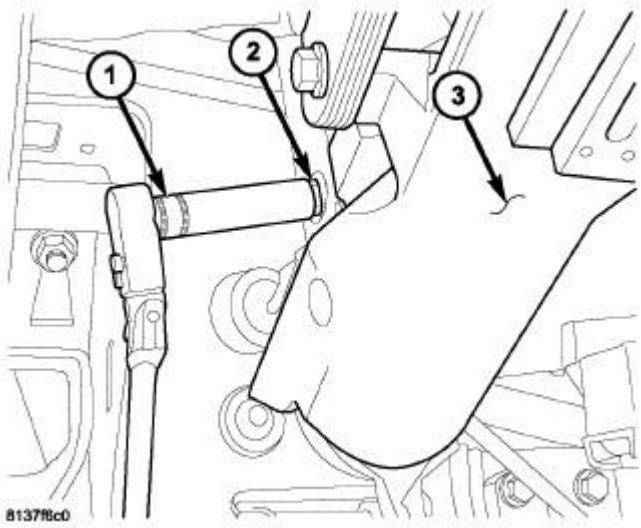

Fig. 27: BOLT AT LOWER PART OF COLUMN
Courtesy of CHRYSLER LLC

2. Firmly slide the steering column upward against the instrument panel and loosely install the pivot bolt and nut (2).

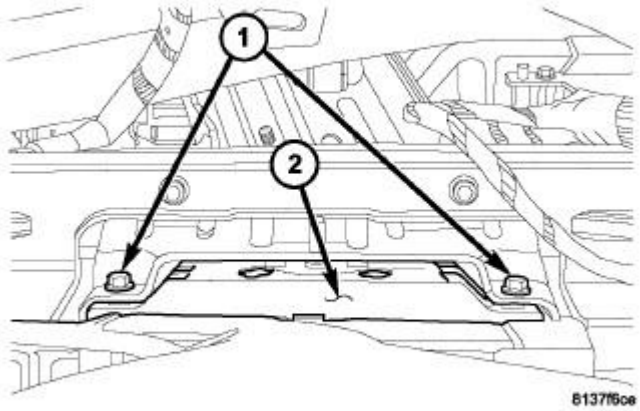

Fig. 28: UPPER COLUMN MOUNTING BOLTS
Courtesy of CHRYSLER LLC

3. Tighten the steering column upper mounting screws (1) to 30 N.m (22 ft. lbs.).

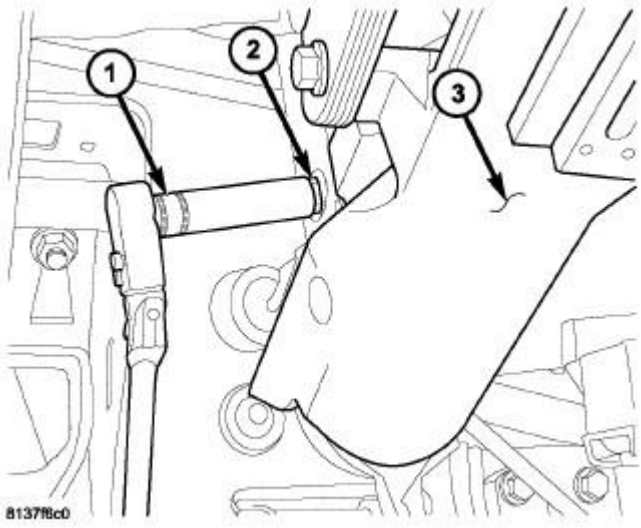

Fig. 29: BOLT AT LOWER PART OF COLUMN
Courtesy of CHRYSLER LLC

4. Tighten the pivot bolt (2) to 30 N.m (22 ft. lbs.).

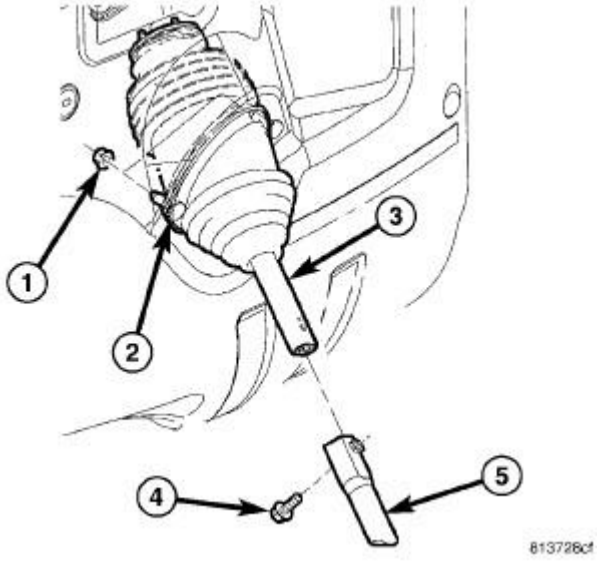

Fig. 30: RETAINING NUTS
Courtesy of CHRYSLER LLC

CAUTION: When handling the steering column, care must be taken not to squeeze the boot or distort the seal to the body.

5. Center the boot for the steering column at the bulkhead (2). Install and tighten the two mounting nuts (1) to 7 N.m (62 in. lbs.).
6. Raise and support vehicle.

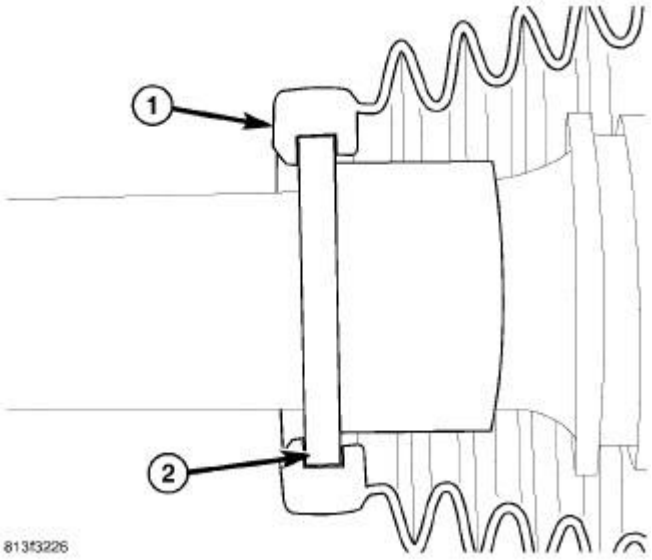

Fig. 31: BOOT INSTALLATION OVER SHAFT COLLAR
Courtesy of CHRYSLER LLC

7. Check and make sure plastic collar (2) on column shaft is engaged in groove within boot (1).

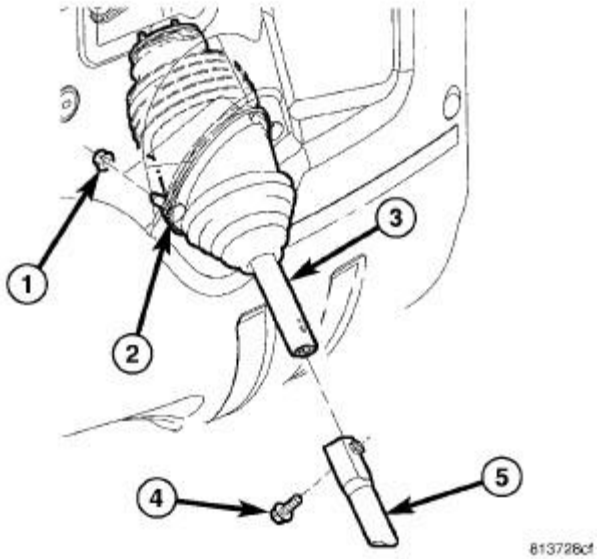

Fig. 32: RETAINING NUTS

Courtesy of CHRYSLER LLC

8. Align the pin on the steering shaft with the nut in the lower coupling shaft and slide the steering shaft (3) into the lower coupling (5).
9. Install a **NEW** pinch bolt (4). Tighten pinch bolt to 31 N.m (23 ft. lbs.).
10. Install the steering column wiring harness connector into the holder on the steering column. Make sure the connector is captured in the holder.
11. Install the instrument cluster. Refer to **Electrical/Instrument Cluster - Installation** .

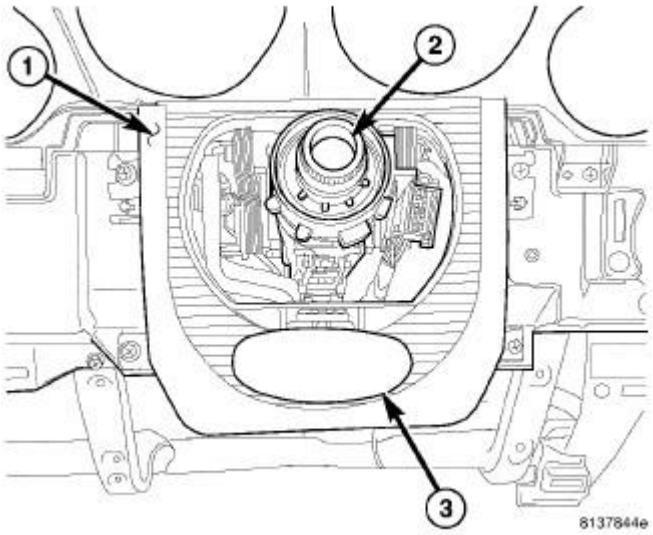

Fig. 33: ROLL TOP SHROUD
Courtesy of CHRYSLER LLC

12. Position the roll top shroud (1) and install the three mounting screws.

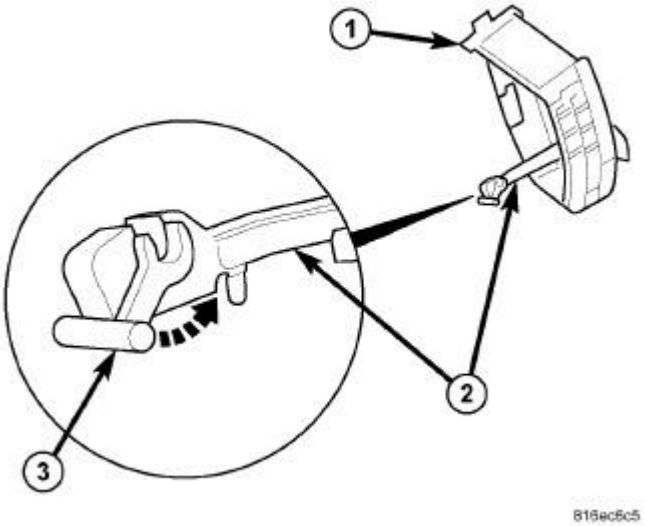

Fig. 34: LATCH TILT LEVER TO COLUMN
Courtesy of CHRYSLER LLC

13. Position the manual adjustment handle (2) over the column adjustment pin and rotate the locking tab (3) rearward as shown in illustration latching the handle to the column. Make sure the tab snaps into locked position.

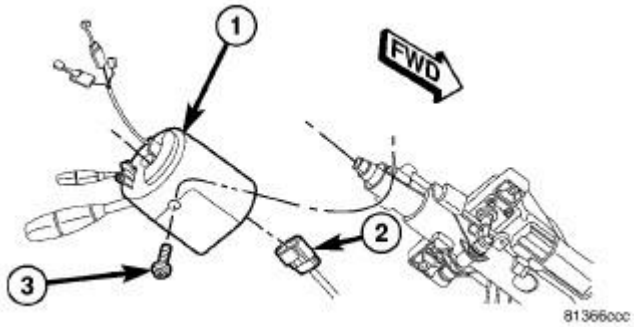

Fig. 35: STEERING COLUMN CONTROL MODULE REMOVAL & INSTALLATION
Courtesy of CHRYSLER LLC

14. Install the SCCM assembly (1) onto the steering column.

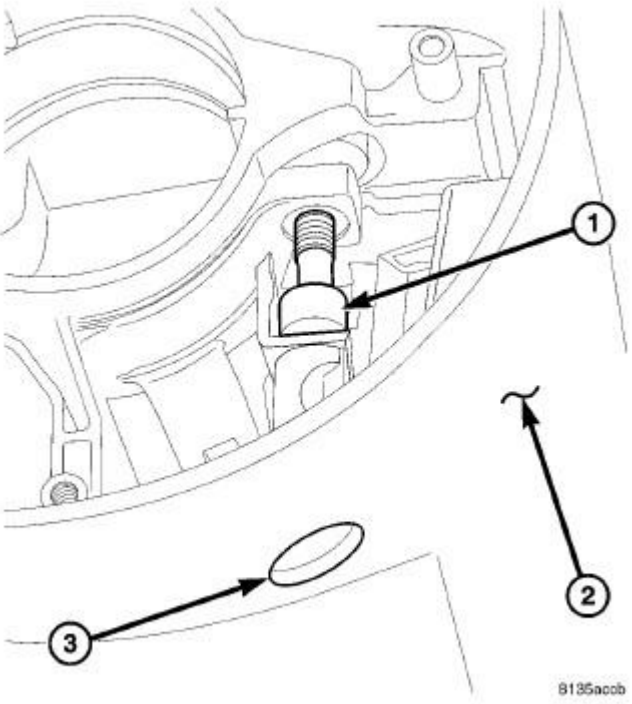

Fig. 36: STEERING COLUMN CONTROL MODULE SCREW
Courtesy of CHRYSLER LLC

15. Tighten the set screw (1) securing the SCCM assembly (2).

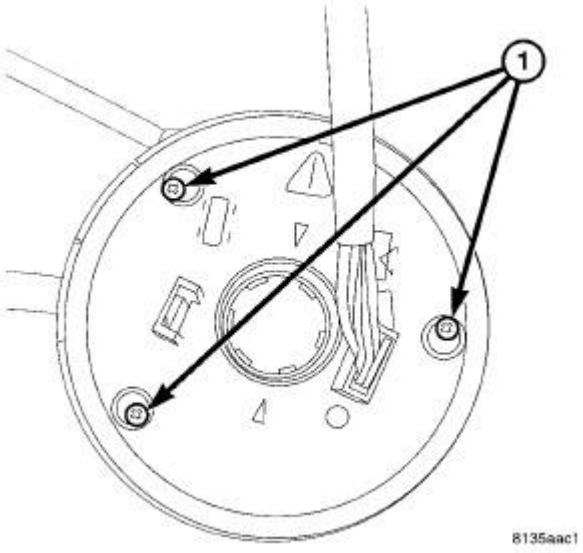

Fig. 37: Clockspring Screws
Courtesy of CHRYSLER LLC

16. Tighten clockspring screw(s) (1) that were backed out to keep the clockspring from unwinding.

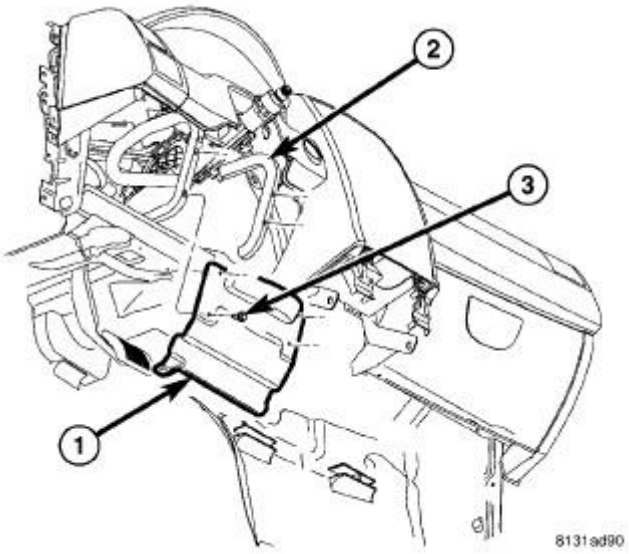

Fig. 38: REINFORCEMENT INSTRUMENTAL PANEL STEERING COLUMN
Courtesy of CHRYSLER LLC

17. Install the steering column opening reinforcement (1).
18. Install the steering column opening cover. Refer to **Body/Instrument Panel/COVER, Steering Column Opening - Installation** .

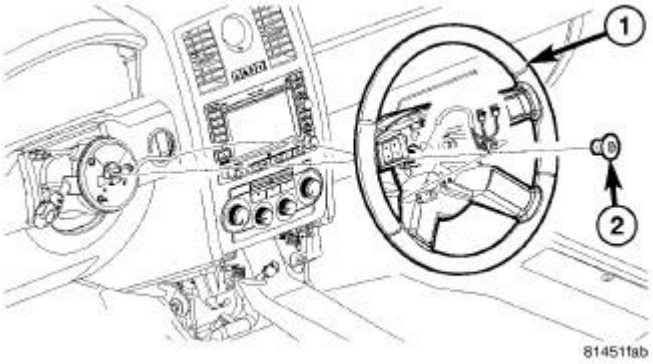

Fig. 39: STEERING WHEEL REMOVAL & INSTALLATION
Courtesy of CHRYSLER LLC

19. Align the spline on the steering wheel hub to shaft.
20. Install the steering wheel (1) and install a **NEW** retainer bolt (2). Tighten the bolt to 70 N.m (52 ft. lbs.).

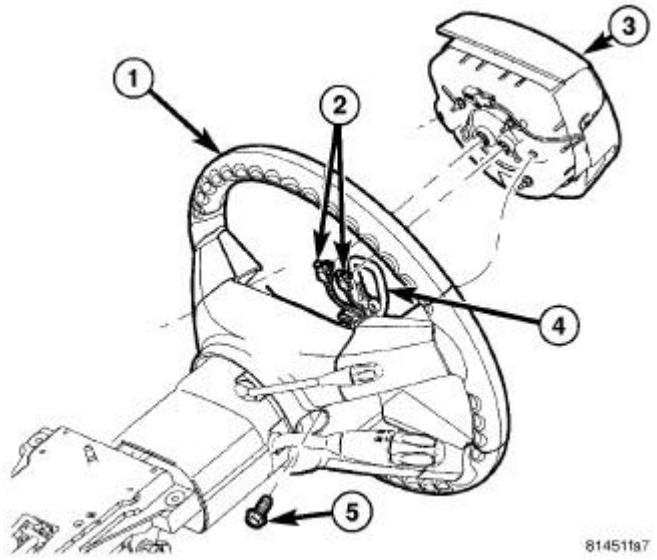

Fig. 40: DRIVER AIRBAG REMOVAL & INSTALLATION
Courtesy of CHRYSLER LLC

21. Install the driver air bag (3). Refer to **Restraints/AIR BAG, Driver - Installation** .
22. Install the negative battery terminal on the battery. It is important that this is performed properly (including calibration of steering angle sensor if equipped with ESP). Refer to **Electrical/Battery System - Standard Procedure**

    CAUTION: If the steering wheel is excessively off-center while driving, outside of Chassis specifications, inadvertent ESP activations may occur on a vehicle so equipped.

23. Test the operation of the horn, lights and any other functions that are steering-column operated.

SPECIFICATIONS

STEERING COLUMN FASTENER TORQUE

STEERING COLUMN FASTENER TORQUE SPECIFICATIONS

DESCRIPTION	N.m	Ft. Lbs.	In. Lbs.
DASH SEAL MOUNTING NUTS	7	-	62
STEERING COLUMN BRACE MOUNTING SCREW - AT COLUMN	29	21	255
STEERING COLUMN BRACE MOUNTING SCREW - AT SUPPORT BEAM	12	9	106
STEERING COLUMN LOWER PIVOT BOLT	30	22	265
STEERING COLUMN UPPER MOUNTING SCREWS	30	22	265
STEERING COUPLING PINCH BOLT - AT GEAR	54	40	-
STEERING COUPLING PINCH BOLT - AT UPPER			

COUPLING/INTERMEDIATE SHAFT	31	23	-
STEERING WHEEL RETAINER BOLT	70	52	-

COUPLING, STEERING COLUMN

Removal

REMOVAL

1. Fully extend or pull out adjustable steering column.
2. Center the steering wheel and lock the steering wheel with a steering wheel holder.
3. Raise and support vehicle. Refer to **Vehicle Quick Reference/Hoisting - Standard Procedure** .

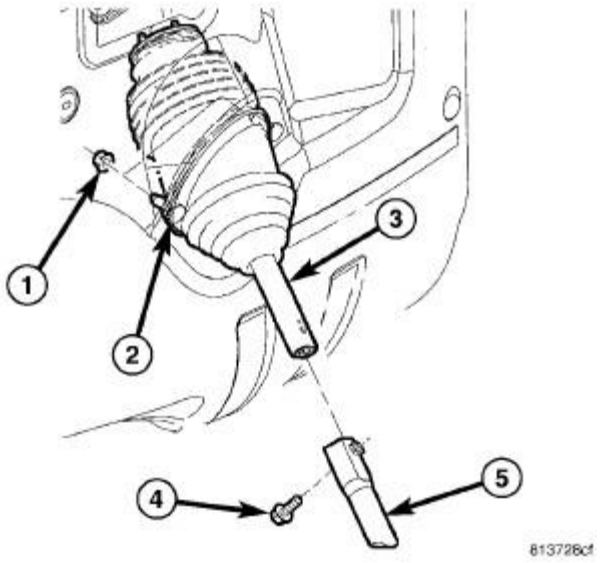

Fig. 41: RETAINING NUTS
Courtesy of CHRYSLER LLC

4. Remove the pinch bolt (4) connecting the steering shaft (3) to the lower steering coupling shaft (5).
5. Separate the lower coupling (5) from the steering shaft (3).

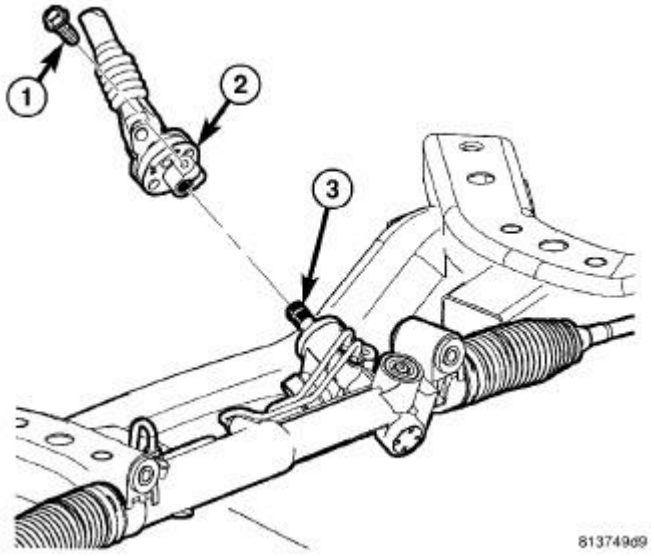

Fig. 42: STEERING COUPLING
Courtesy of CHRYSLER LLC

6. Remove the pinch bolt (1) from the steering coupling (2) at the steering gear (3).
7. Carefully slide the coupling (2) from the steering gear (3).
8. Remove the steering coupling (2) from the vehicle.

Installation

INSTALLATION

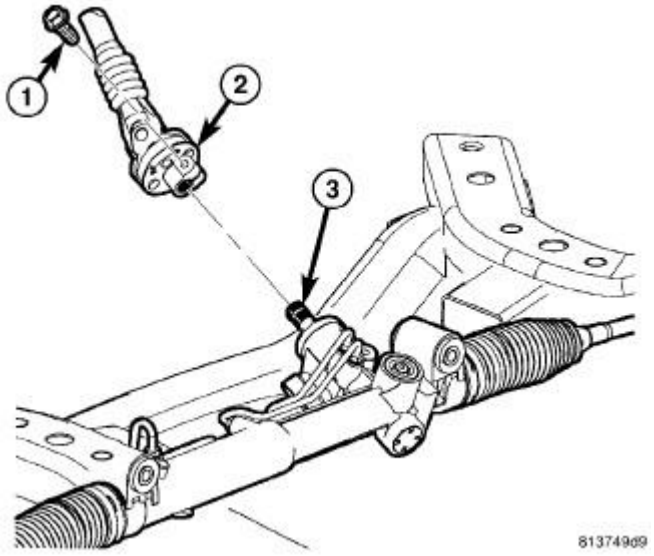

Fig. 43: STEERING COUPLING
Courtesy of CHRYSLER LLC

1. Align the lower coupling (2), then carefully slide it onto steering gear input shaft (3).
2. Install a **NEW** pinch bolt (1) to the steering coupling (2) at the steering gear (3). Tighten the pinch bolt to 54 N.m (40 ft. lbs).

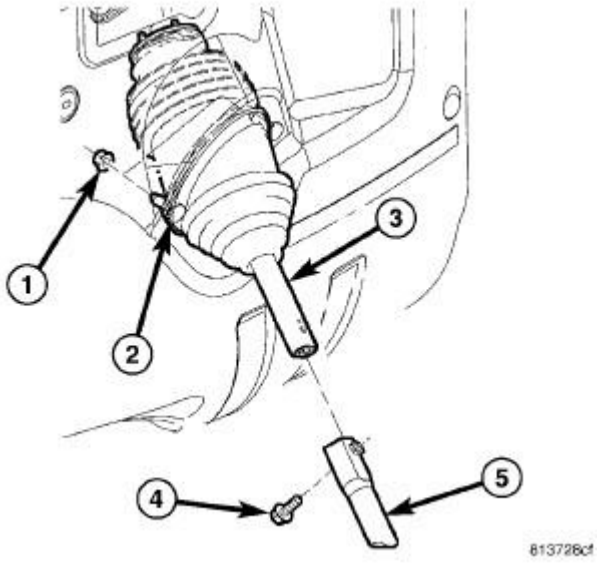

Fig. 44: RETAINING NUTS
Courtesy of CHRYSLER LLC

3. Align the pin on the steering shaft with the nut in the lower coupling shaft and slide the shaft (3) into the lower coupling (5).
4. Install a **NEW** steering coupling pinch bolt (4). Tighten the pinch bolt to 31 N.m (23 ft. lbs.).

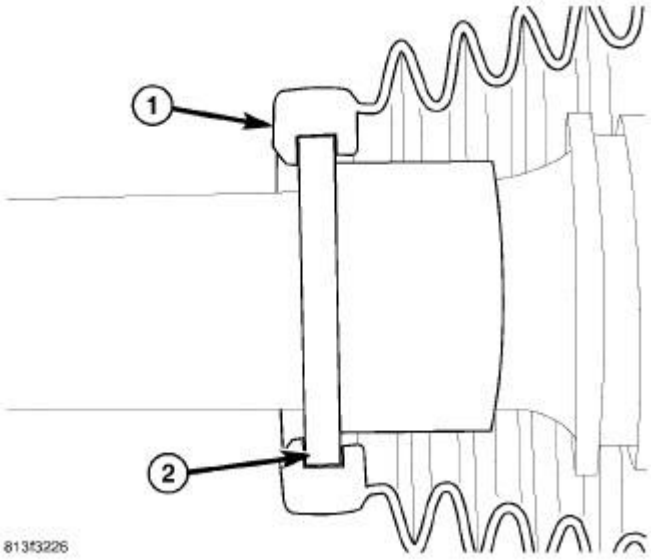

Fig. 45: BOOT INSTALLATION OVER SHAFT COLLAR
Courtesy of CHRYSLER LLC

5. Check and make sure the plastic collar (2) on the column shaft is engaged in the groove within the boot (1).
6. Lower the vehicle.
7. Remove the steering wheel holder.
8. Check the operation of the steering column for binding or noises.

COUPLING, STEERING COLUMN, POWER

Removal

REMOVAL

1. Remove the steering column from the vehicle. See **Steering/Column - Removal**

CAUTION: When handling the steering column, use care to avoid holding the column by any part of the tilt/telescope mechanism or by the shaft boot. The column should be held by its mounting bracket and the shaft by the exposed portions.

2. Place the steering column on a clean work bench.
3. Remove black and white wiring connectors from the connector bracket by lifting the pin located in the middle of the connectors and sliding the connectors backwards off the connector bracket.
4. Remove the black plastic connector support from the column mounting bracket and discard.

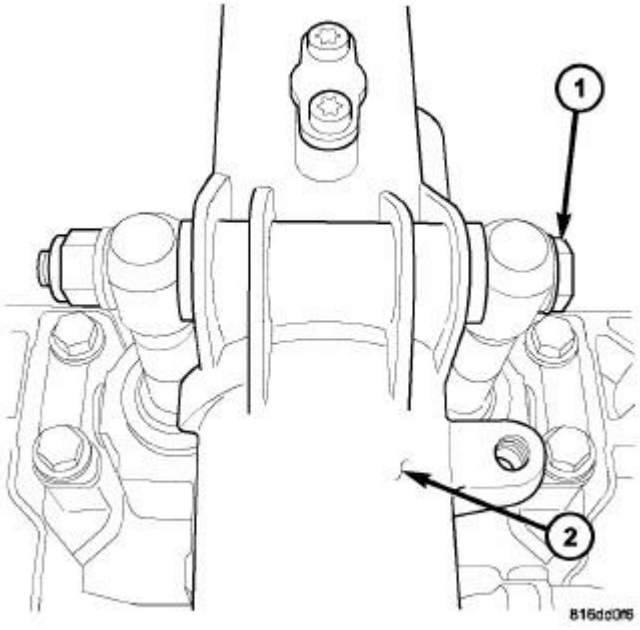

Fig. 46: JACKET BOLT REMOVAL
Courtesy of CHRYSLER LLC

1 - JACKET BOLT 2 - STEERING COLUMN JACKET

5. Remove the jacket bolt (1) from the upper tilt gear assembly.
6. Remove the bushings from the tilt gear.

CAUTION: Avoid turning the gear while disassembling the tilt gear assembly throughout this procedure.

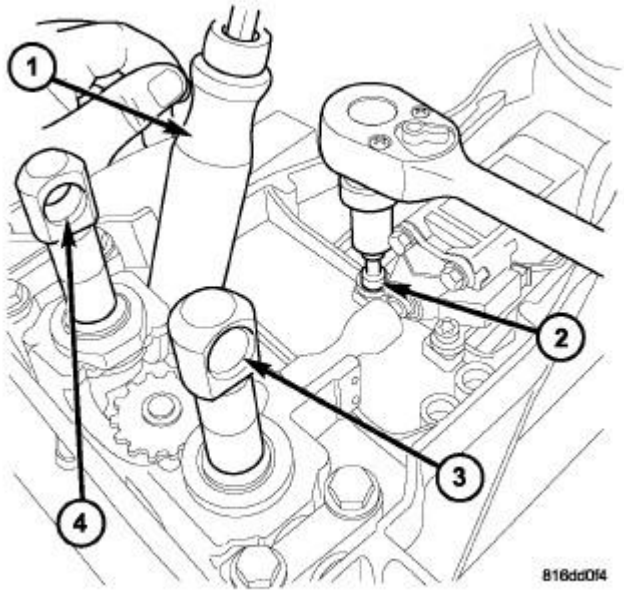

Fig. 47: TILT DRIVE MOTOR REMOVAL
Courtesy of CHRYSLER LLC

1 - SECURE JACKET FROM FALLING DOWN 2 - MOTOR ATTACHING BOLTS 3 - JACKET BOLT MOUNTING HOLES CHAMFER FACES OUTBOARD 4 - JACKET BOLT MOUNTING HOLES HAVE NO CHAMFER ON INBOARD SURFACE

7. Lift the column jacket. Secure column jacket from falling down (1) and remove the bolts (2) attaching the electric tilt gear drive motor.
8. Slide the motor toward the rear of the column and remove the motor.
9. Remove the coupling from tilt gear assembly.

Installation

INSTALLATION

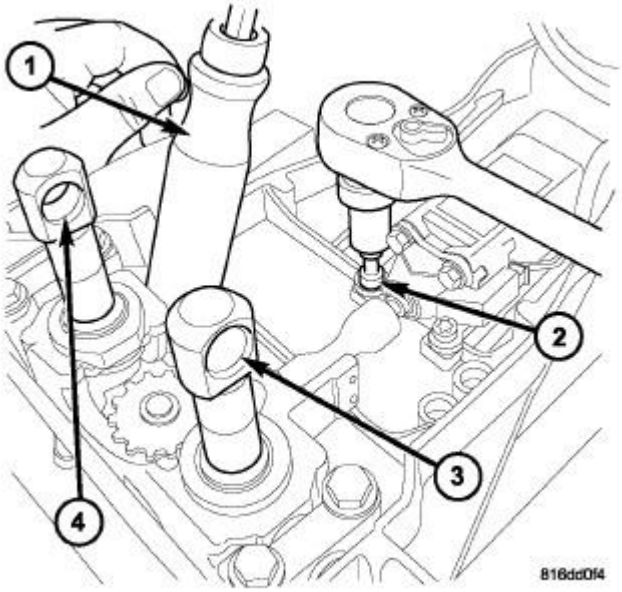

Fig. 48: TILT DRIVE MOTOR REMOVAL
Courtesy of CHRYSLER LLC

1 - SECURE JACKET FROM FALLING DOWN
2 - MOTOR ATTACHING BOLTS
3 - JACKET BOLT MOUNTING HOLES CHAMFER FACES OUTBOARD
4 - JACKET BOLT MOUNTING HOLES HAVE NO CHAMFER ON INBOARD SURFACE

1. Install the coupling on the tilt gear assembly.
2. Install the tilt drive motor. Install and Tighten the bolts (2) to 4 Nm (36 in. lbs.).

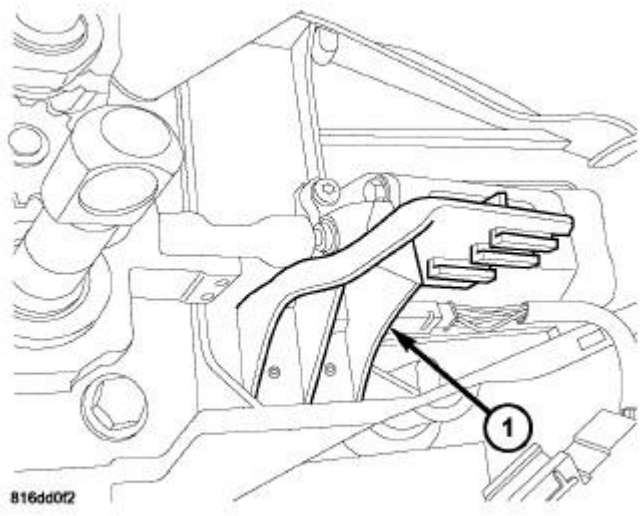

Fig. 49: CONNECTOR SUPPORT ORIENTATION
Courtesy of CHRYSLER LLC

1 - CONNECTOR SUPPORT

3. Install the connector support (1).
4. Install black wiring connector in the upper support position. Install white connector in the lower support position. Ensure retaining connector clips are engaged.
5. Ensure the chamber in the mounting holes in the tilt gear assembly for the jacket bolt face (outboard) away from the column jacket prior to column jacket installation.
6. Lower the steering column jacket into the installed position.
7. Install two NEW bushings in the tilt gear assembly.

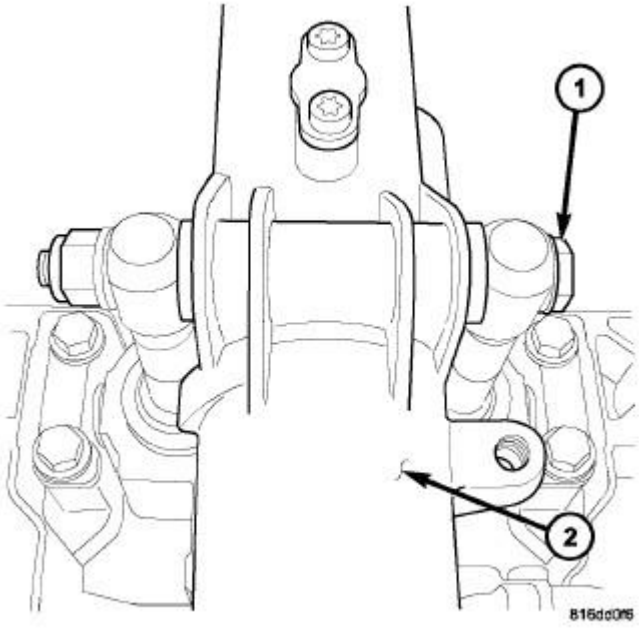

Fig. 50: JACKET BOLT REMOVAL
Courtesy of CHRYSLER LLC

1 - JACKET BOLT 2 - STEERING COLUMN JACKET

CAUTION: Do not allow the jacket bolt to rotate while tightening the nut.

8. Install a NEW jacket bolt (1) and NEW jacket bolt nut so that the nut is on the left side of the column when the column is installed in the vehicle. Ensure the bushings are seated properly. While holding the jacket bolt stationary, tighten the nut to 8 Nm (71 in. lbs.). Loosen the nut 180 degrees, then tighten the nut to a final torque of 4 Nm (36 in. lbs.).
9. Install the steering column. See **Steering/Column - Installation**
10. Verify column is functional in tilt and telescope. No binding or noise must be present. If full travel is not achieved, use the scan tool to run the column to the full up position. The column should then achieve full travel.

MODULE, STEERING COLUMN CONTROL

Description

DESCRIPTION

WARNING: To service any component of the SCCM, the entire assembly must be removed from the column. This must be done due to the clockspring

passing through the assembly and into the self docking connector. Failure to remove the assembly could damage the pins of the clockspring and prevent the airbag system from operating properly.

Tilt and telescope steering columns are standard on all models.

A lever on the left side of the column controls powered adjustment. Fore and aft motion of the lever operates the telescoping mechanism. Up and down motion operates the tilt mechanism. Two electric motors turning threaded actuators move the column. The mechanisms lock in place when movement stops.

The Steering Column Control Module (SCCM) is mounted on the steering column and is removed as a complete unit. The components of the unit are:

- **Clockspring** - is attached to the top of the SCCM with three screws. The clockspring connector passes through the body of the SCCM and its terminals slide into the male side of the self docking connector within the Steering Column Module (SCM). Refer to **Electrical/Electronic Control Modules/MODULE, Steering Column - Description** .
- **Multi-Function Switch** - is the middle left lever, and is plugged into, and mounting pins pass through, the SCM secured to the SCCM housing by three screws. Refer to **Electrical/Lamps/Lighting - Exterior/SWITCH, Multifunction - Description** .
- **Steering Angle Sensor (if equipped with Electronic Stability Program (ESP)** - is mounted on the right side of the SCCM, below the clockspring and is responsible for informing the ESP of steering angle.
- **Steering Control Module (SCM)** - is the module located in the bottom of the SCCM, retained by three screws, and is the mating point for all the switches and clockspring located in the SCCM.
- **Shroud** - is the outer housing or shell of the SCCM.

The SCCM communicates via the Local Interconnect Network (LIN) serial data bus. This is an ultra-low voltage serial data bus that allows the following components to communicate with the Controller Area Network (CAN) B and C data buses.

- Steering Wheel Switches
- Horn
- Speed Control Switch
- Multi-function Switch
- Steering Angle Sensor (if equipped with Electronic Stability Program (ESP))
- Steering Control Module (SCM)

Removal

REMOVAL

WARNING: To service any component of the SCCM, the entire assembly must be

removed from the column. This must be done due to the clockspring passing through the assembly and into the self docking connector. Failure to remove the assembly could damage the pins of the clockspring and prevent the airbag system from operating properly.

WARNING: Before servicing the steering column the airbag system must be disarmed. Failure to do so may result in accidental deployment of the airbag and possible personal injury or death.

CAUTION: All fasteners must be torqued to specification to ensure proper operation of the steering column.

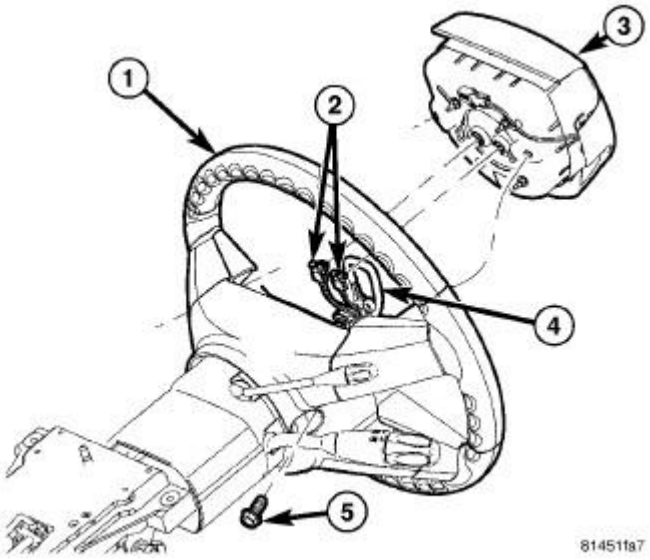

Fig. 51: DRIVER AIRBAG REMOVAL & INSTALLATION
Courtesy of CHRYSLER LLC

1. Position the front wheels **straight-ahead** .
2. Fully extend or pull out adjustable steering column.
3. Disconnect the negative (ground) cable from the battery.
4. Remove the driver airbag (3). Refer to **Restraints/AIR BAG, Driver - Removal**

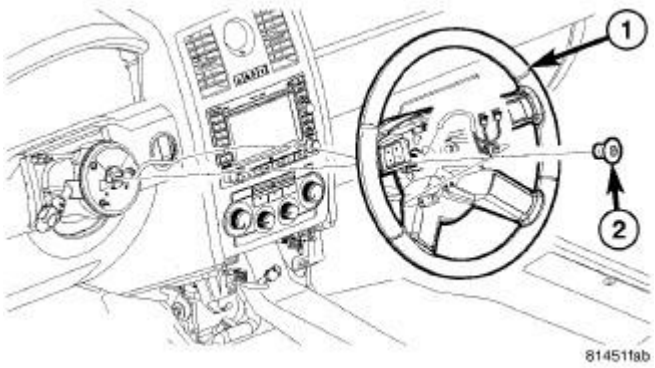

Fig. 52: STEERING WHEEL REMOVAL & INSTALLATION
Courtesy of CHRYSLER LLC

5. Remove the steering wheel retaining bolt (2), then slide the steering wheel (1) off the shaft.

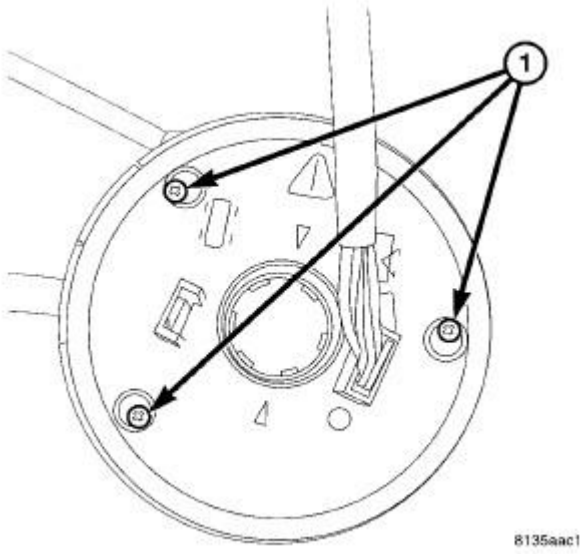

Fig. 53: Clockspring Screws
Courtesy of CHRYSLER LLC

6. Unscrew at least one clockspring screw (1) but don't take it all the way out, This will help keep the clockspring from uncentering itself.

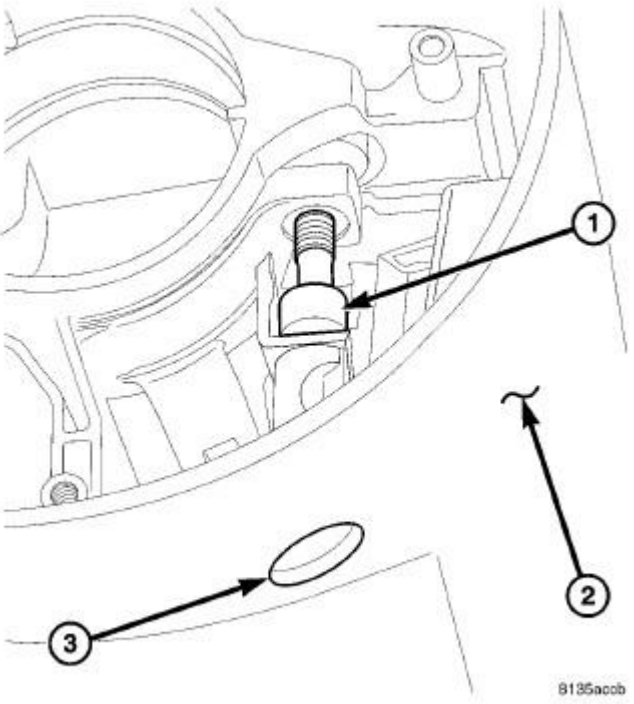

Fig. 54: STEERING COLUMN CONTROL MODULE SCREW
Courtesy of CHRYSLER LLC

7. Back out the set screw (1) through the access hole (3) in the bottom of the Steering Column Control Module (SCCM) (2).

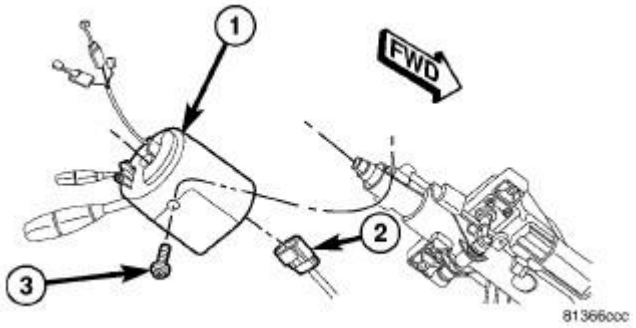

Fig. 55: STEERING COLUMN CONTROL MODULE REMOVAL & INSTALLATION
Courtesy of CHRYSLER LLC

8. Pull the SCCM (1) off the steering column shaft.
9. To service the individual components contained within the SCCM. See **Steering/Column/MODULE, Steering Column Control - Disassembly**.

Disassembly

DISASSEMBLY

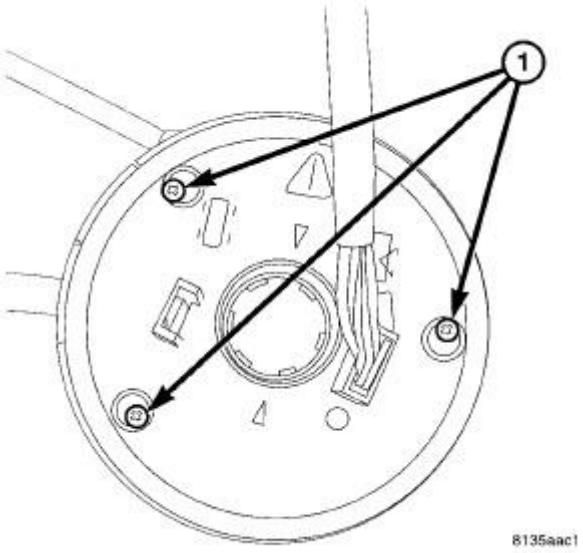

Fig. 56: Clockspring Screws
Courtesy of CHRYSLER LLC

WARNING: To service any component of the SCCM, the entire assembly must be removed from the column. This must be done due to the clockspring passing through the assembly and into the self docking connector. Failure to remove the assembly could damage the pins of the clockspring and prevent the airbag system from operating properly. Failure to follow these instructions may result in serious or fatal injury.

1. Loosen the three clockspring screws (1) just far enough to release the clockspring from the SCCM. Leave them in the clockspring so it won't unwind.

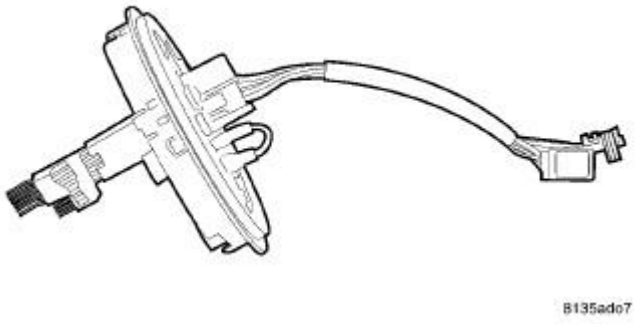

Fig. 57: Clockspring
Courtesy of CHRYSLER LLC

2. Carefully pull straight up on clockspring to remove.

NOTE: **After the clockspring is removed, there is only one more screw on the top side of the SCCM that needs to be removed and is located at approximately the six o'clock position on the SCCM. It holds the lower side of the steering angle sensor, the lower side of the electric tilt lever assembly, or the strengthening strut if not equipped with electric tilt.**

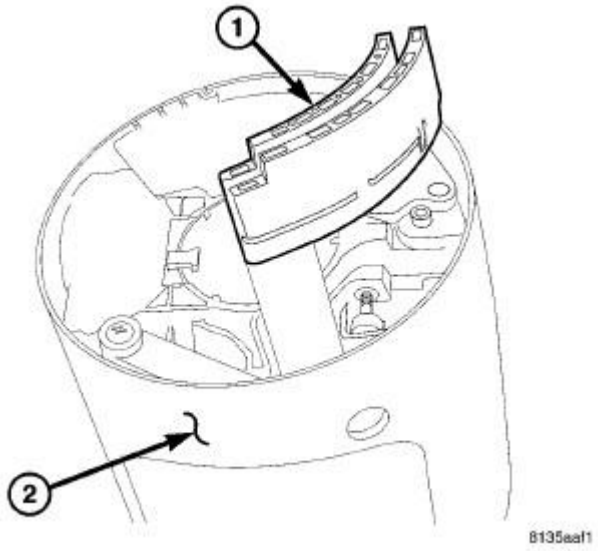

Fig. 58: STEERING ANGLE SENSOR
Courtesy of CHRYSLER LLC

3. Remove the steering angle sensor screw located at the six o'clock position on the SCCM and remove the steering angle sensor (1) from the SCCM (2).

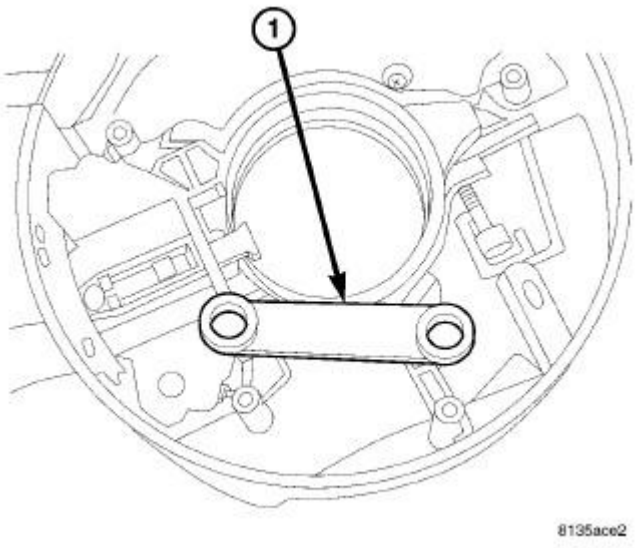

Fig. 59: STRUT UNDER ESP

Courtesy of CHRYSLER LLC

4. Remove the strut screw, located at the six o'clock position, and strut (1).

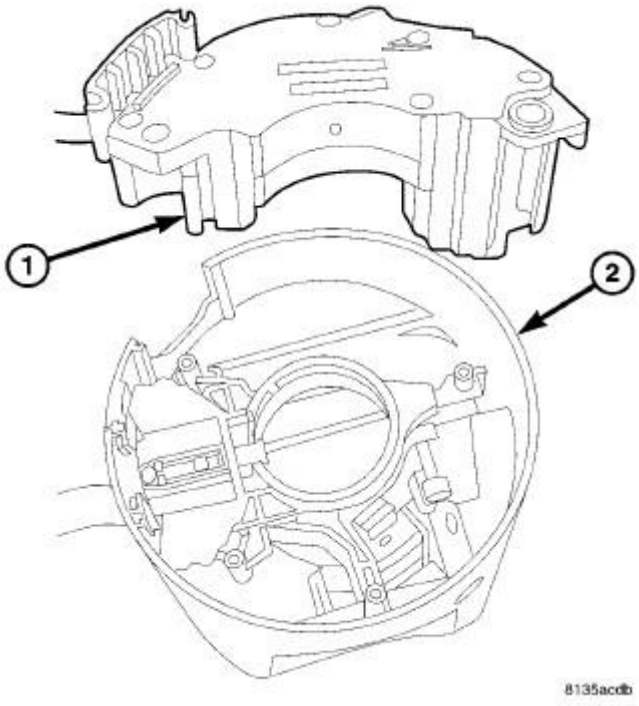

Fig. 60: Speed Control From SCCM
Courtesy of CHRYSLER LLC

5. Remove the speed control switch (1).

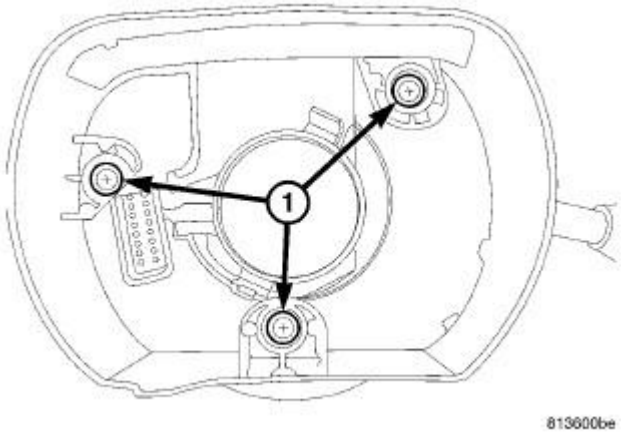

Fig. 61: MULTIFUNCTION REAR
Courtesy of CHRYSLER LLC

6. Remove the three screws (1) at the bottom of the SCCM shroud for the multi-function switch and Steering Control Module (SCM).

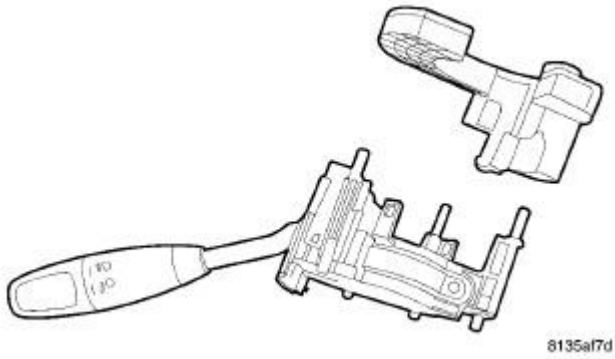

Fig. 62: Multi-Function Switch & Circuit Board
Courtesy of CHRYSLER LLC

7. Separate the multi-function switch from the SCM.

Assembly

ASSEMBLY

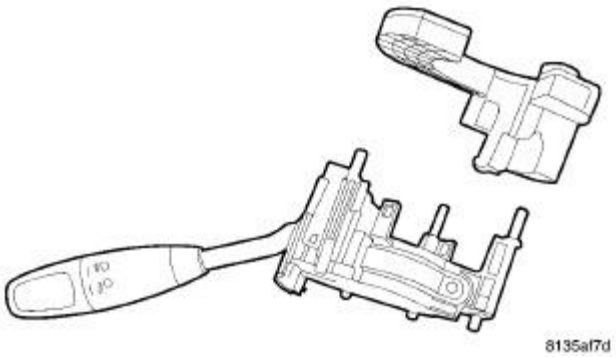

Fig. 63: Multi-Function Switch & Circuit Board
Courtesy of CHRYSLER LLC

WARNING: To service any component of the SCCM, the entire assembly must be removed from the column. This must be done due to the clockspring passing through the assembly and into the self docking connector. Failure to remove the assembly could damage the pins of the clockspring and prevent the airbag system from operating properly.

1. Position the Steering Control Module (SCM) onto the multi-function switch.

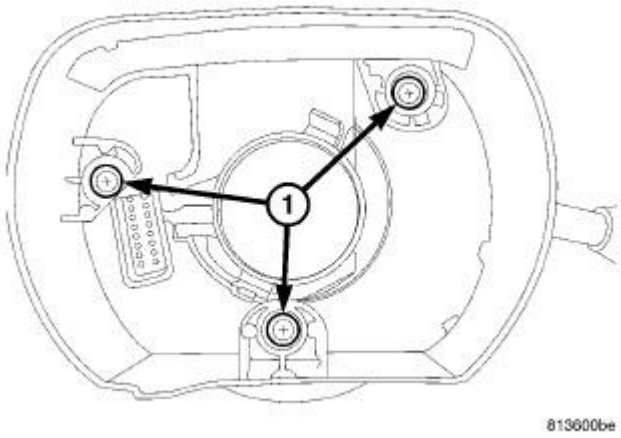

Fig. 64: MULTIFUNCTION REAR
Courtesy of CHRYSLER LLC

2. Install the multi-function switch and SCM in the SCCM shroud and tighten the three screws (1) from the bottom.

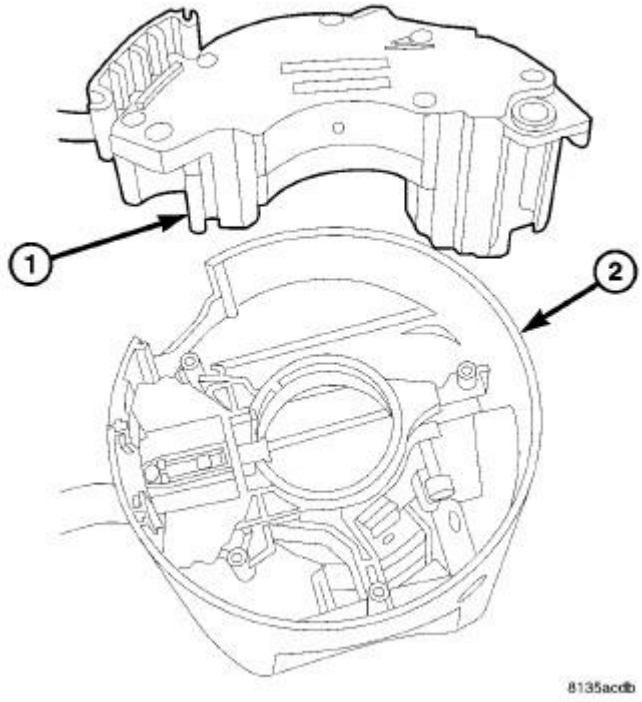

Fig. 65: Speed Control From SCCM
Courtesy of CHRYSLER LLC

3. Install the speed control switch (1).

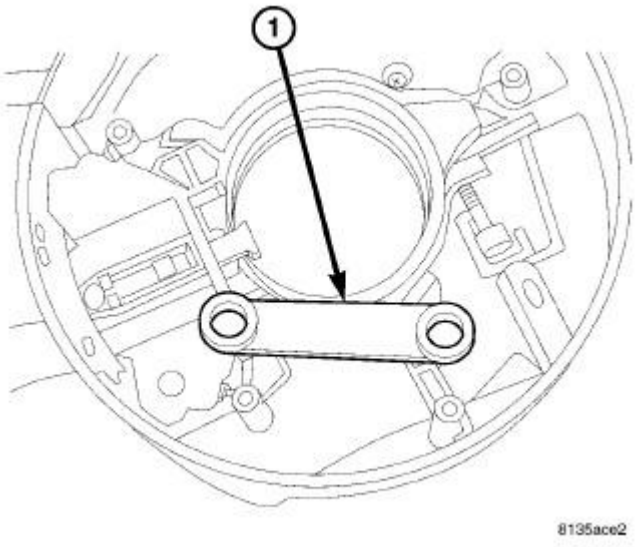

Fig. 66: STRUT UNDER ESP
Courtesy of CHRYSLER LLC

4. Iinstall the strut (1).

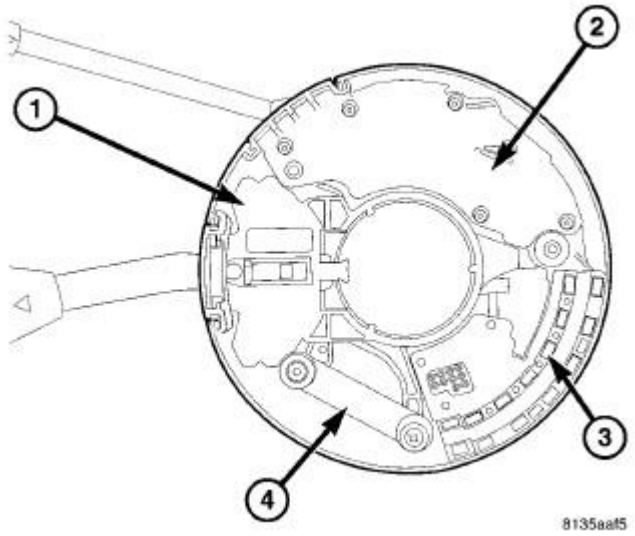

Fig. 67: STEERING ANGLE SENSOR SCREW
Courtesy of CHRYSLER LLC

5. Install the steering angle sensor (3) and screw located at the six o'clock position.

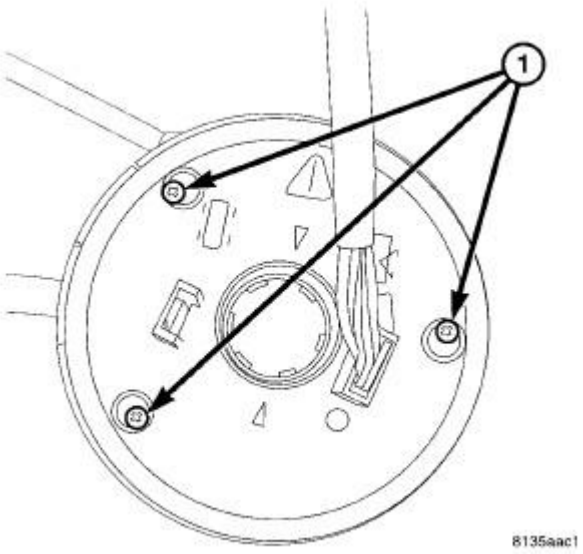

Fig. 68: Clockspring Screws
Courtesy of CHRYSLER LLC

6. Install the clockspring and screws (1) leaving one out so it will not unwind.
7. Install the SCCM on the steering column. See **Steering/Column/MODULE, Steering Column Control - Installation** and tighten the one clockspring screw (1) that was left loose.

Installation

INSTALLATION

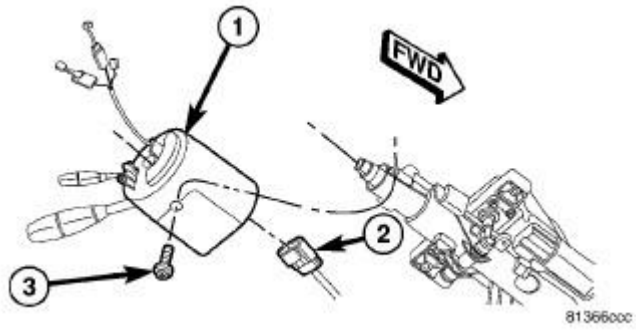

Fig. 69: STEERING COLUMN CONTROL MODULE REMOVAL & INSTALLATION
Courtesy of CHRYSLER LLC

WARNING: To service any component of the SCCM, the entire assembly must be removed from the column. This must be done due to the clockspring passing through the assembly and into the self docking connector. Failure to remove the assembly could damage the pins of the clockspring and prevent the airbag system from operating properly. Failure to follow these instructions may result in serious or fatal injury.

1. Install the SCCM (1) onto the steering column.

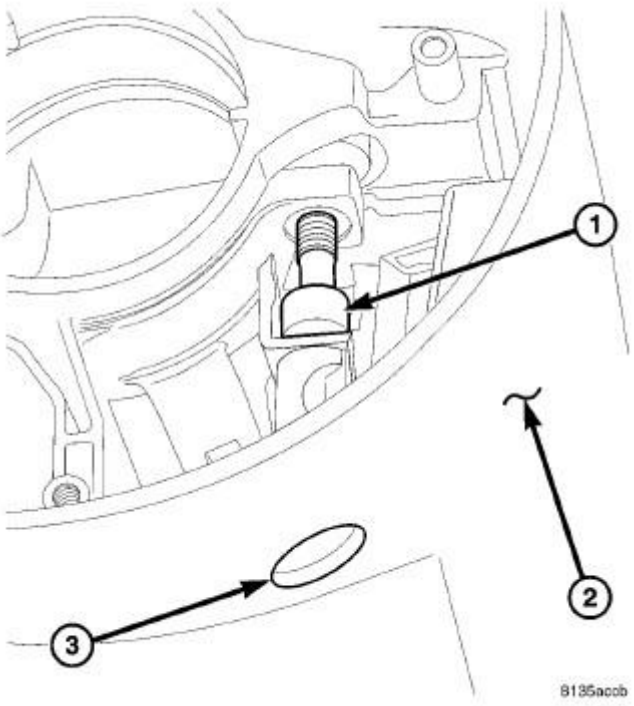

Fig. 70: STEERING COLUMN CONTROL MODULE SCREW
Courtesy of CHRYSLER LLC

2. Tighten the set screw (1) securing the SCCM (2).

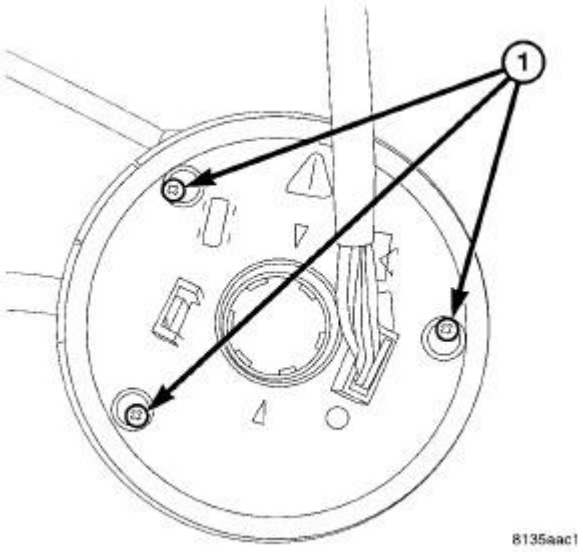

Fig. 71: Clockspring Screws

Courtesy of CHRYSLER LLC

3. Tighten clockspring screw(s) (1) that were backed out to keep the clockspring from unwinding.

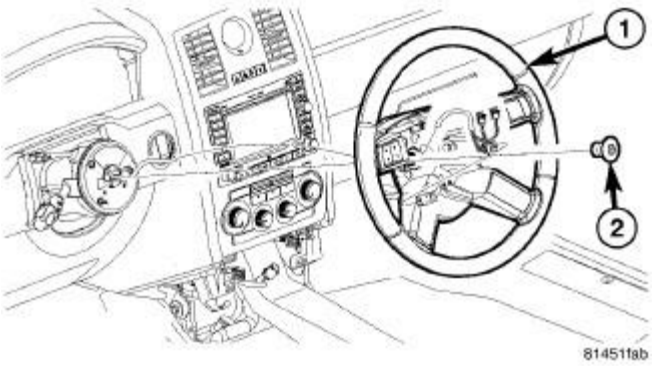

Fig. 72: STEERING WHEEL REMOVAL & INSTALLATION
Courtesy of CHRYSLER LLC

4. Align the spline on the steering wheel hub to shaft and install the steering wheel (1).
5. Install a **NEW** retaining bolt (2). Tighten the bolt to 70 N.m (52 ft. lbs.).

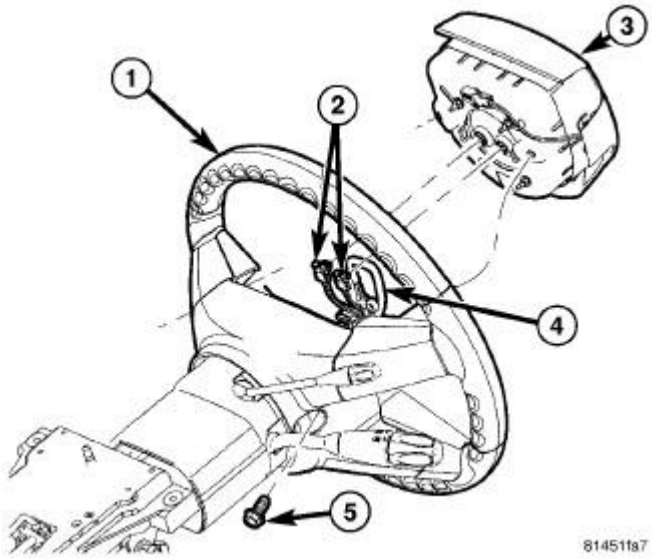

Fig. 73: DRIVER AIRBAG REMOVAL & INSTALLATION
Courtesy of CHRYSLER LLC

6. Install the driver airbag (3). Refer to **Restraints/AIR BAG, Driver - Installation** .
7. Connect the battery negative cable. If equipped with Electronic Stability Program (ESP), the steering angle sensor must be calibrated. Refer to **Electrical/Battery System - Standard Procedure** .

SHROUD, STEERING COLUMN

Removal

REMOVAL

The steering column shroud is part of the Steering Column Control Module (SCCM). Remove and disassemble the SCCM. See **Steering/Column/MODULE, Steering Column Control - Removal**. See **Steering/Column/MODULE, Steering Column Control - Disassembly**

Installation

INSTALLATION

The steering column shroud is part of the steering column control module (SCCM). See **Steering/Column/MODULE, Steering Column Control - Assembly**

SHROUD, STEERING COLUMN, ROLL TOP

Removal

REMOVAL

WARNING: Before servicing the steering column the airbag system must be disarmed. Failure to do so may result in accidental deployment of the airbag and possible personal injury or death.

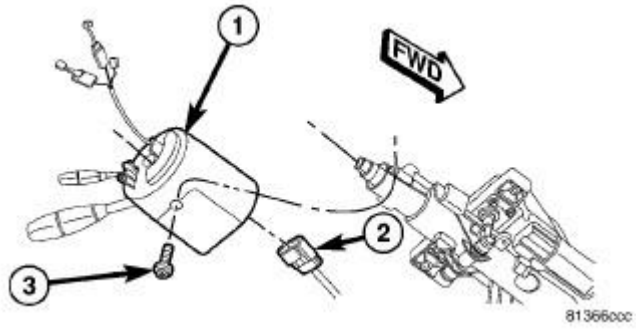

Fig. 74: STEERING COLUMN CONTROL MODULE REMOVAL & INSTALLATION
Courtesy of CHRYSLER LLC

1. Access and remove the steering column control module (SCCM) (1) from the column. See **Steering/Column/MODULE, Steering Column Control - Removal**.
2. Remove the steering column opening cover (1). Refer to **Body/Instrument Panel/COVER, Steering Column Opening - Removal** .

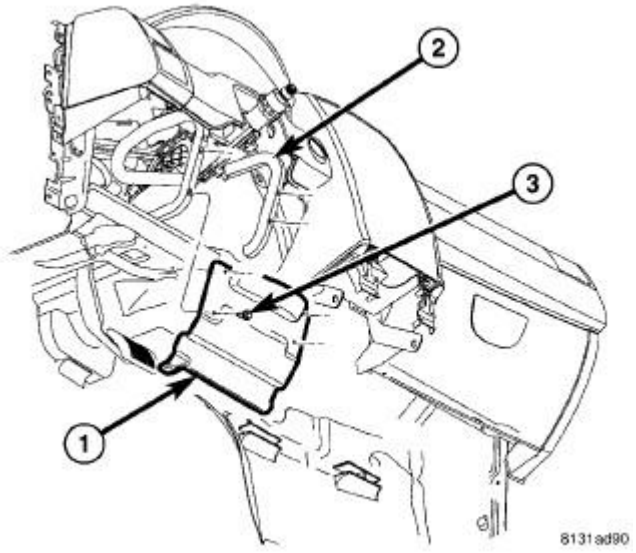

Fig. 75: REINFORCEMENT INSTRUMENTAL PANEL STEERING COLUMN
Courtesy of CHRYSLER LLC

3. Remove the steering column opening reinforcement (1).
4. Remove the cluster bezel. Refer to **Body/Instrument Panel/BEZEL, Instrument Cluster - Removal**

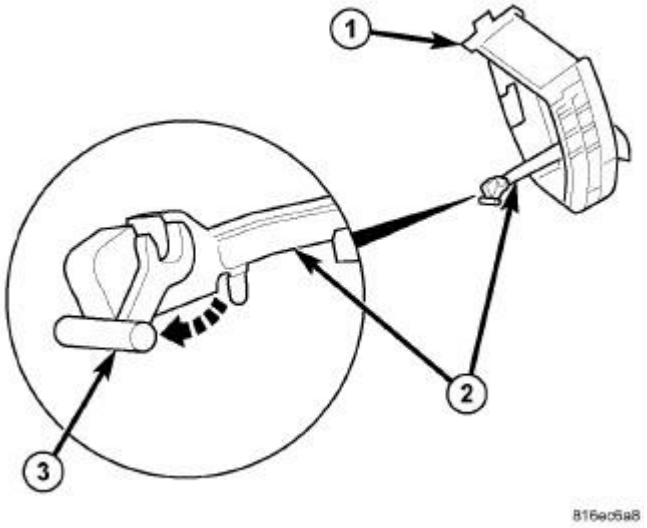

Fig. 76: UNLATCH TILT LEVER FROM COLUMN
Courtesy of CHRYSLER LLC

5. Unsnap and move the adjustment handle locking tab (3) forward as shown in illustration unlatching the handle (2) from the column.

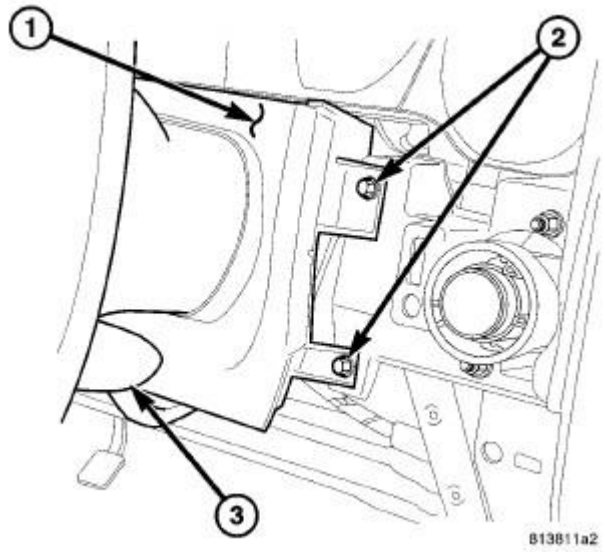

Fig. 77: SHROUD SCREWS
Courtesy of CHRYSLER LLC

6. Remove the three shroud mounting screws (2).

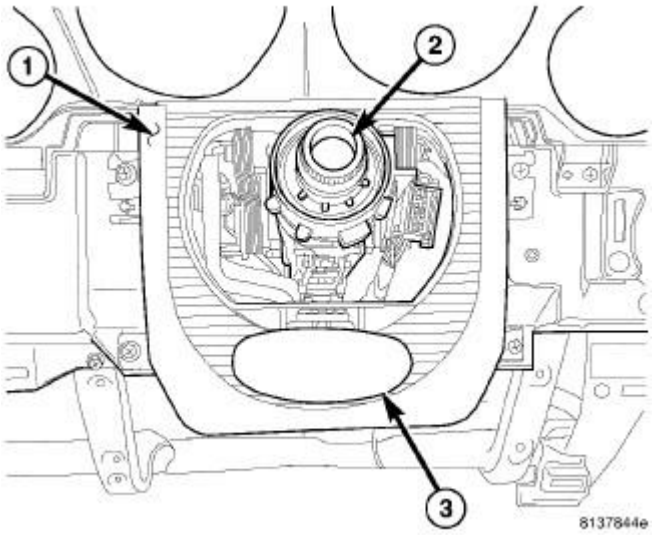

Fig. 78: ROLL TOP SHROUD
Courtesy of CHRYSLER LLC

7. Remove the roll top shroud (1) along with manual tilt/telescope handle (3) (if equipped).

Installation

INSTALLATION

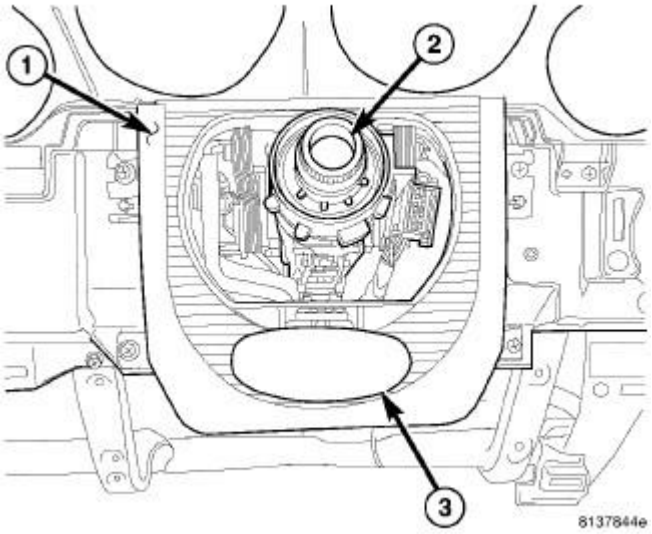

Fig. 79: ROLL TOP SHROUD
Courtesy of CHRYSLER LLC

1. Install the roll top shroud (1) over the steering column (2).

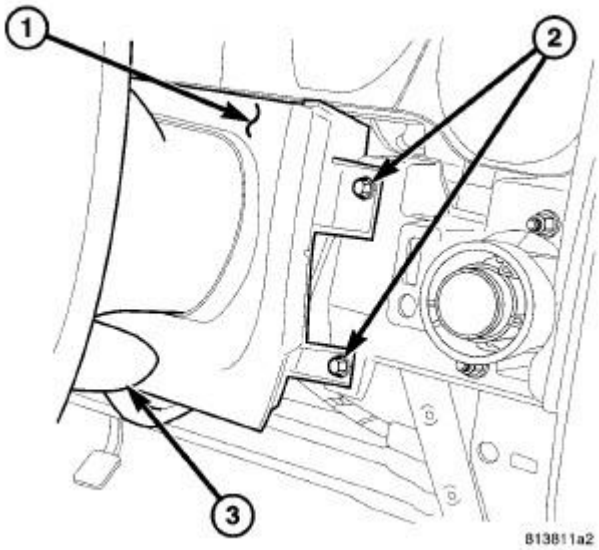

Fig. 80: SHROUD SCREWS
Courtesy of CHRYSLER LLC

2. Install the three shroud mounting screws (2).

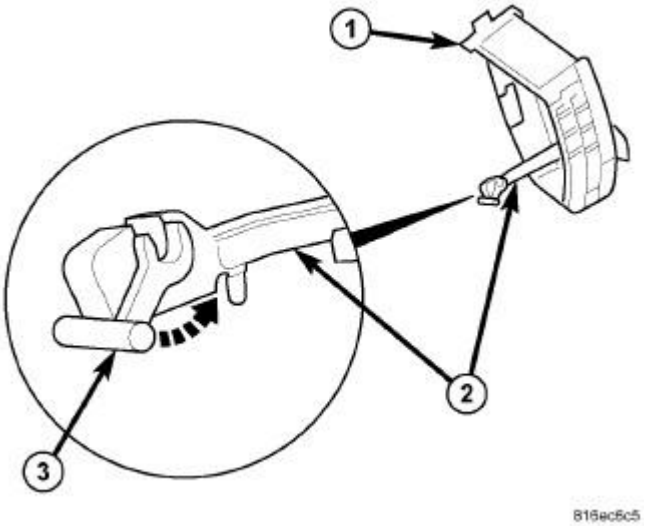

Fig. 81: LATCH TILT LEVER TO COLUMN
Courtesy of CHRYSLER LLC

3. Position the manual adjustment handle (2) over the column adjustment pin and rotate the locking tab (3) rearward as shown in illustration latching the handle to the column. Make sure the tab snaps into locked position.
4. Install the cluster bezel (3). Refer to **Body/Instrument Panel/BEZEL, Instrument Cluster - Installation** .

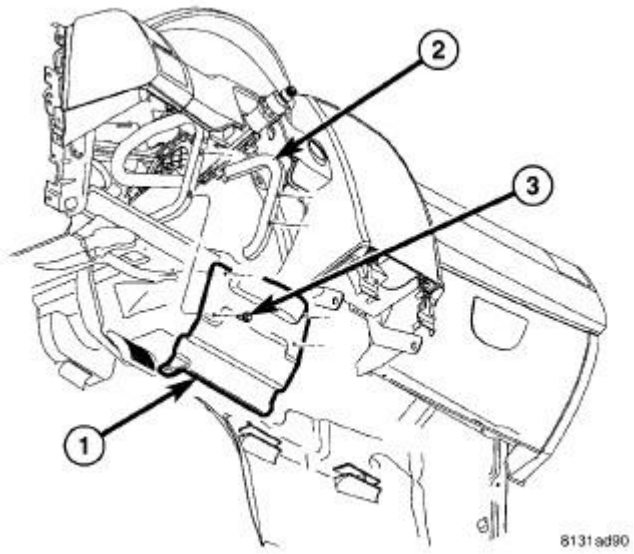

Fig. 82: REINFORCEMENT INSTRUMENTAL PANEL STEERING COLUMN
Courtesy of CHRYSLER LLC

5. Install the steering column opening reinforcement (1).

6. Install the steering column opening cover (1).

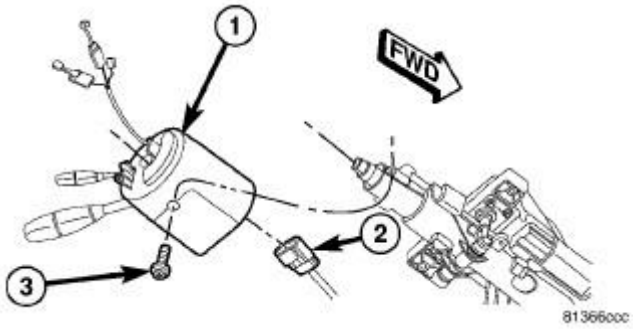

Fig. 83: STEERING COLUMN CONTROL MODULE REMOVAL & INSTALLATION
Courtesy of CHRYSLER LLC

7. Install the steering column control module (SCCM) (1) and all components removed to access it. See **Steering/Column/MODULE, Steering Column Control - Installation**
8. Install the negative battery cable on the battery. It is important that this is performed properly (including calibration of steering angle sensor if equipped with ESP). Refer to **Electrical/Battery System - Standard Procedure** .
9. Test the operation of the horn, lights and any other functions that are steering-column operated.

SLIDER, STEERING COLUMN

Removal

REMOVAL

1. Remove the steering column opening cover. Refer to **Body/Instrument Panel/COVER, Steering Column Opening - Removal**

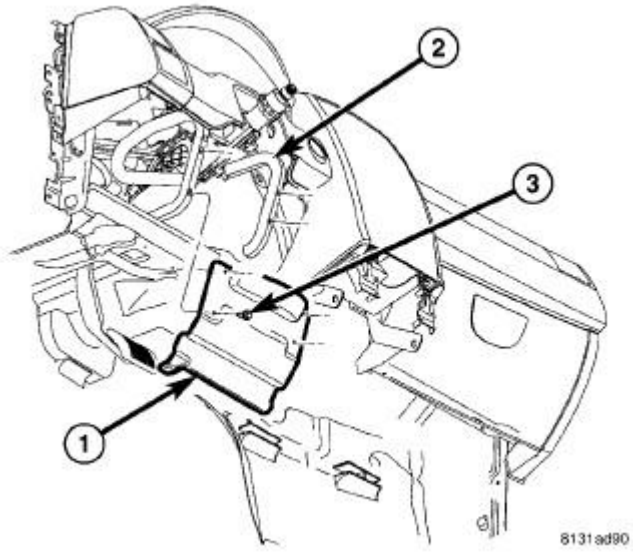

Fig. 84: REINFORCEMENT INSTRUMENTAL PANEL STEERING COLUMN
Courtesy of CHRYSLER LLC

2. Remove the steering column opening reinforcement (1).
3. Unlock the manual column tilt and telescoping adjustment handle, then telescope the column full forward.

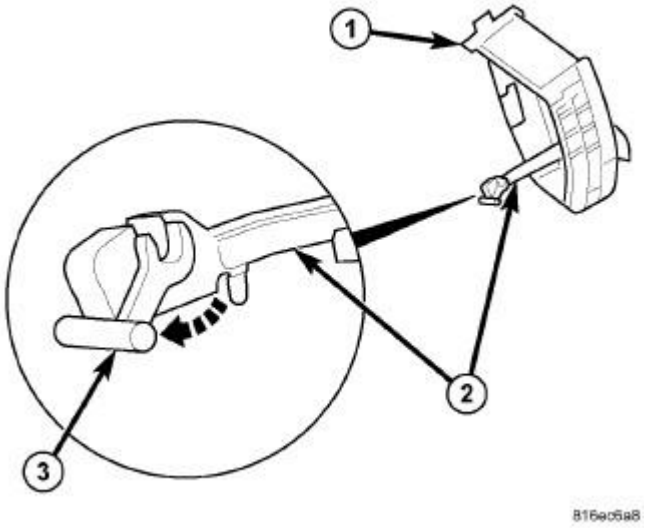

Fig. 85: UNLATCH TILT LEVER FROM COLUMN
Courtesy of CHRYSLER LLC

4. Unsnap and move the adjustment handle locking tab (3) forward as shown in illustration unlatching the handle (2) from the column.

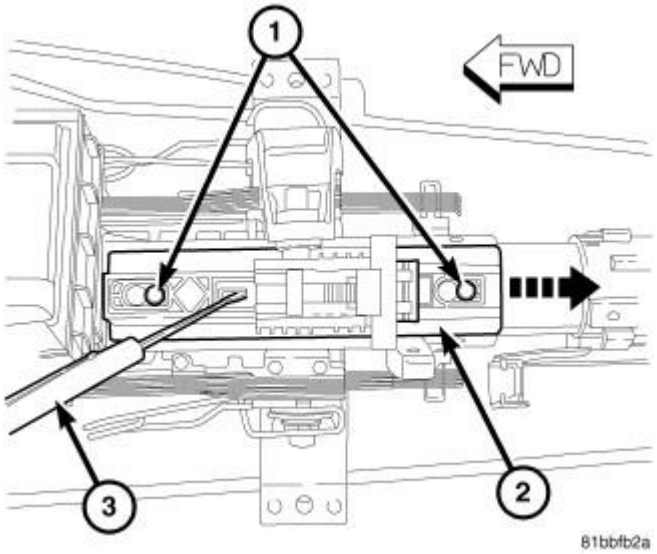

Fig. 86: RETAINER PINS - SLIDER REMOVAL
Courtesy of CHRYSLER LLC

5. Using a small screwdriver (3) through the access hole, lift the retaining tab, then move the slider bar (2) toward the steering wheel until the large holes in the slots align with the casting pins (1) on the column.

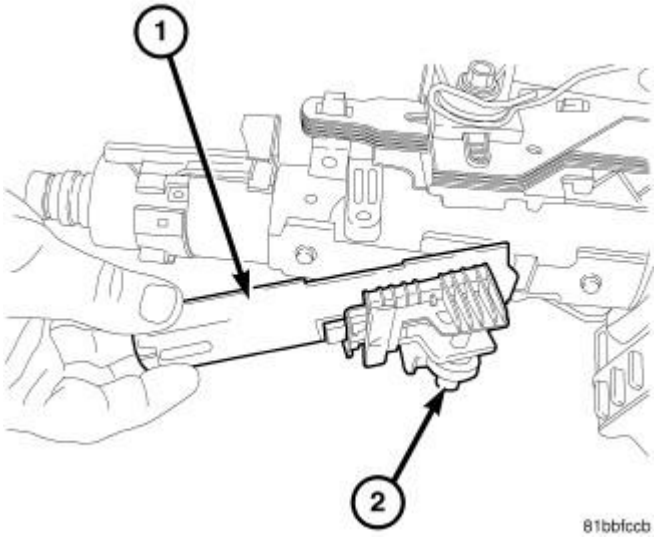

Fig. 87: SLIDER BAR REMOVAL/INSTALLATION
Courtesy of CHRYSLER LLC

6. Move the slider bar (1) off the casting pins, then tip it down at the steering wheel end and slide it off the slider sled (2).

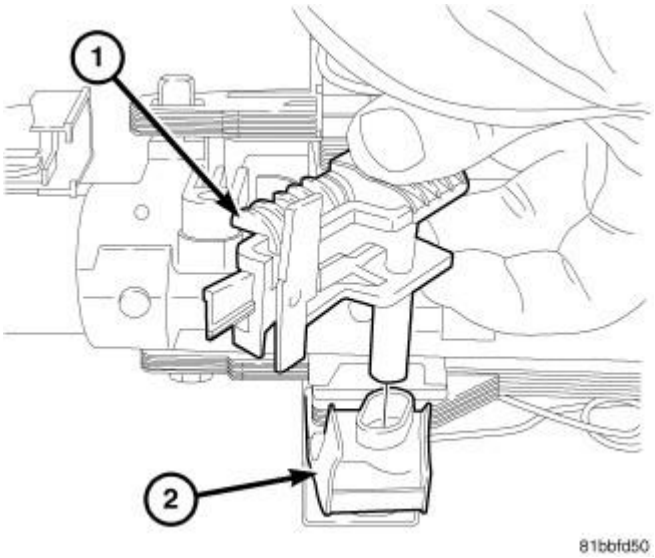

Fig. 88: SLIDER SLED REMOVAL/INSTALLATION
Courtesy of CHRYSLER LLC

7. Rotate the slider sled (1) as shown in illustration and remove it from the lever arm (2).

Installation

INSTALLATION

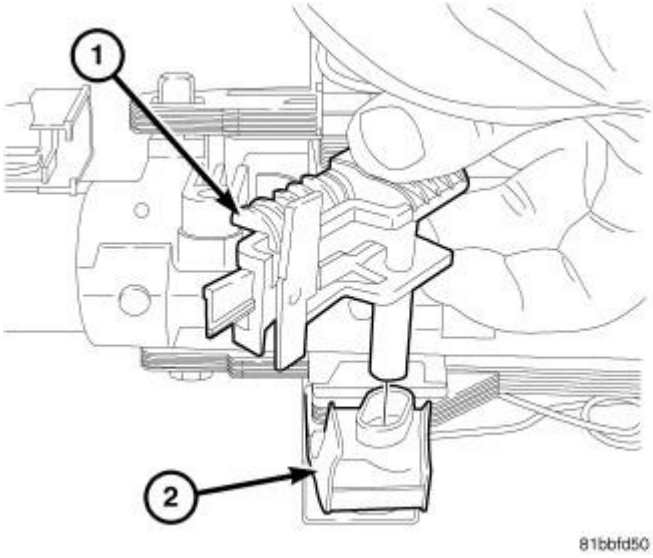

Fig. 89: SLIDER SLED REMOVAL/INSTALLATION
Courtesy of CHRYSLER LLC

1. Position the slider sled (1) as shown in illustration and insert it into the lever arm (2).

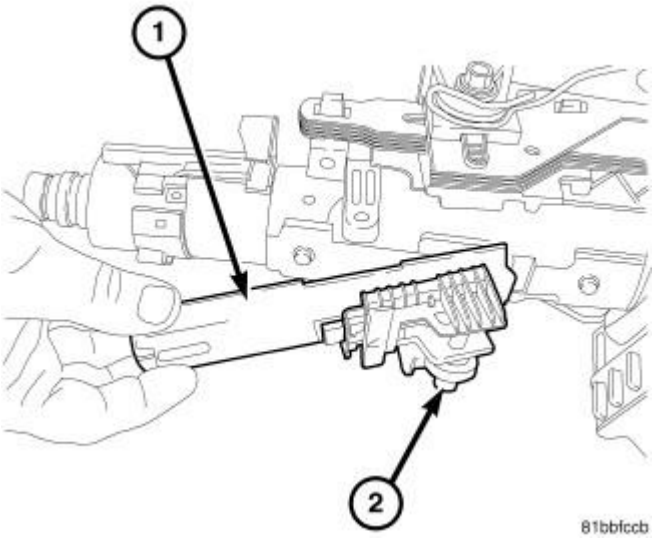

Fig. 90: SLIDER BAR REMOVAL/INSTALLATION
Courtesy of CHRYSLER LLC

2. Insert the slider bar (1) through the slider sled (2) as shown in illustration.

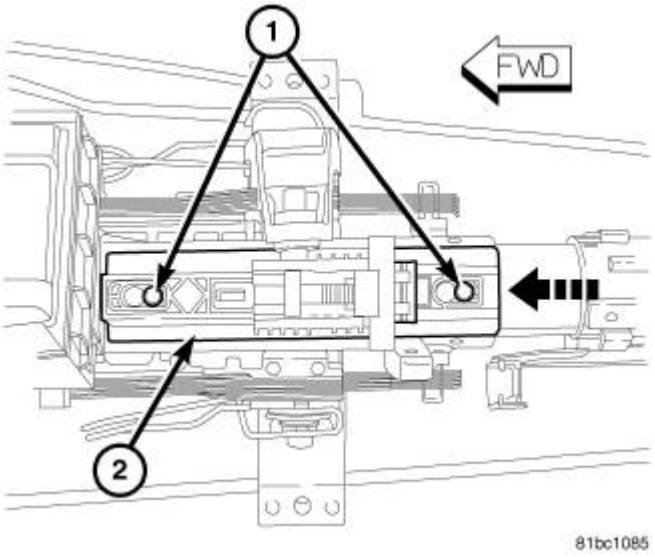

Fig. 91: RETAINER PINS - SLIDER INSTALLATION
Courtesy of CHRYSLER LLC

3. Place the slider bar onto the column by aligning the large holes in the mounting slots with the casting pins (1) on the column, then slide the slider bar (2) into mounted position.

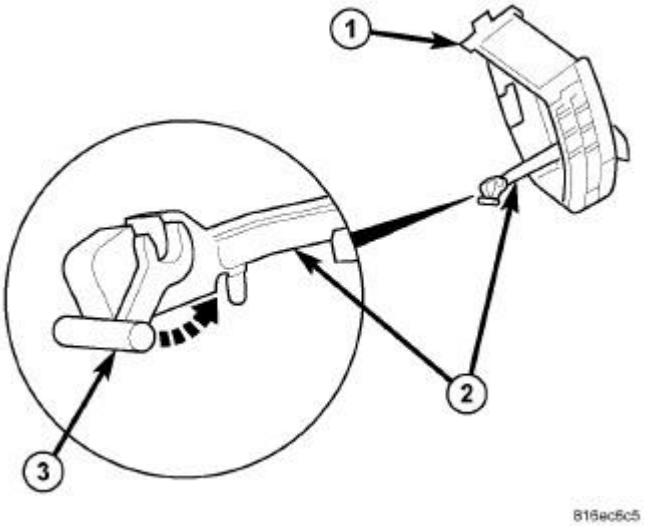

Fig. 92: LATCH TILT LEVER TO COLUMN
Courtesy of CHRYSLER LLC

4. Position the tilt and telescoping adjustment handle (2) over the column adjustment pin (on slider sled) and rotate the locking tab (3) rearward as shown in illustration latching the handle to the column. Make sure the tab snaps into locked position.

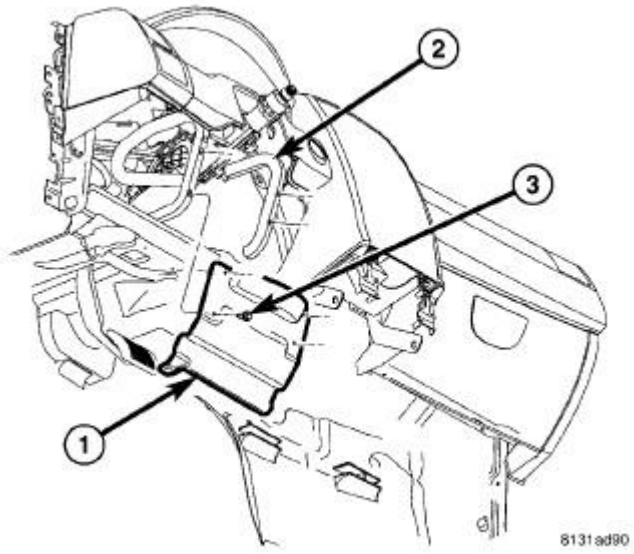

Fig. 93: REINFORCEMENT INSTRUMENTAL PANEL STEERING COLUMN
Courtesy of CHRYSLER LLC

5. Install the steering column opening reinforcement (1).
6. Install the steering column opening cover. Refer to **Body/Instrument Panel/COVER, Steering Column Opening - Installation**

7. Test the steering column tilt and telescoping operation.

WHEEL, STEERING

Removal

REMOVAL

WARNING: Before servicing the steering column the airbag system must be disarmed. Failure to do so may result in accidental deployment of the airbag and possible personal injury.

CAUTION: All fasteners must be torqued to specification to ensure proper operation of the steering column.

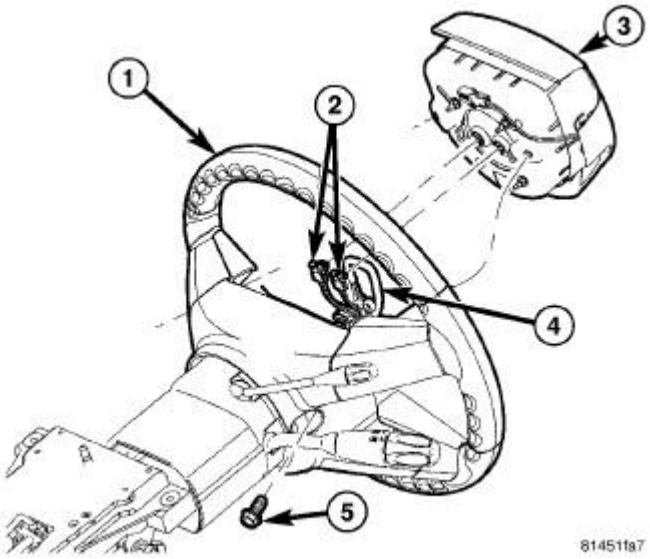

Fig. 94: DRIVER AIRBAG REMOVAL & INSTALLATION
Courtesy of CHRYSLER LLC

1. Position the front wheels **straight-ahead** .
2. Fully extend or pull out adjustable steering column.
3. Disconnect the negative (ground) cable from the battery.
4. Remove the driver airbag (3). Refer to **Restraints/AIR BAG, Driver - Removal** .

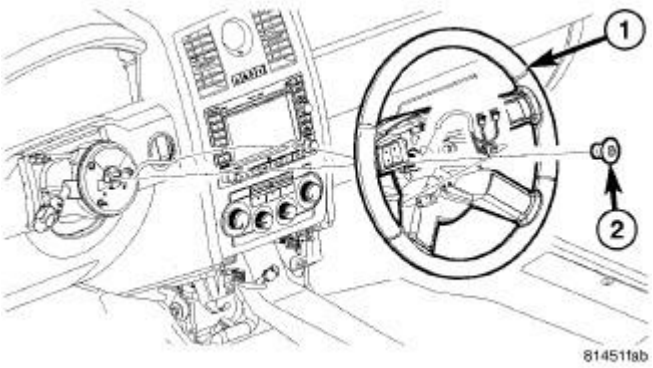

Fig. 95: STEERING WHEEL REMOVAL & INSTALLATION
Courtesy of CHRYSLER LLC

5. Remove the steering wheel retainer bolt (2), then slide the steering wheel (1) off the shaft.
6. If wheel is being replaced, transfer attached components as necessary.

Installation

INSTALLATION

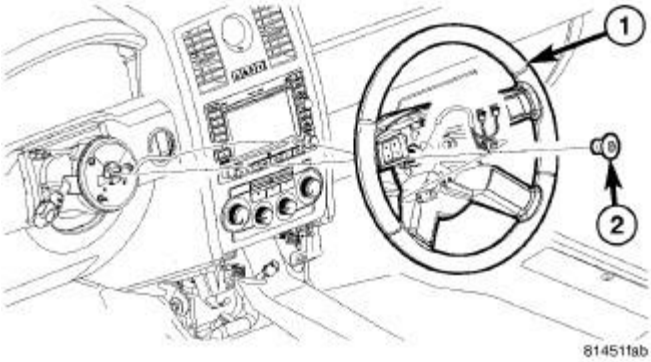

Fig. 96: STEERING WHEEL REMOVAL & INSTALLATION
Courtesy of CHRYSLER LLC

1. Align the spline on the steering wheel hub to the column shaft, then install the steering wheel (1).
2. Install a **NEW** retainer bolt (2). Tighten the bolt to 70 N.m (52 ft. lbs.).

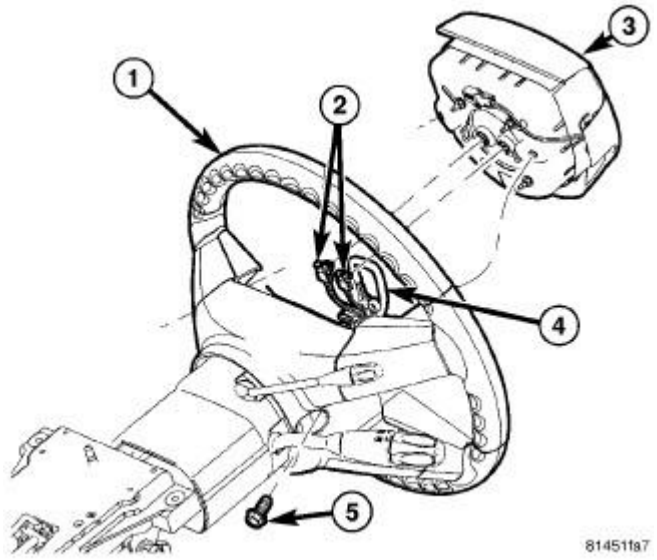

Fig. 97: DRIVER AIRBAG REMOVAL & INSTALLATION
Courtesy of CHRYSLER LLC

3. Install the driver airbag (3). Refer to **Restraints/AIR BAG, Driver - Installation**
4. Install the negative battery terminal on the battery. It is important that this is performed properly (including calibration of steering angle sensor if equipped with ESP). Refer to **Electrical/Battery System - Standard Procedure**

CAUTION: If the steering wheel is excessively off-center while driving, outside of Chassis specifications, inadvertent ESP activations may occur on a vehicle so equipped.

5. Test the operation of the horn, lights and any other functions that are steering column operated.

GEAR

DESCRIPTION

DESCRIPTION

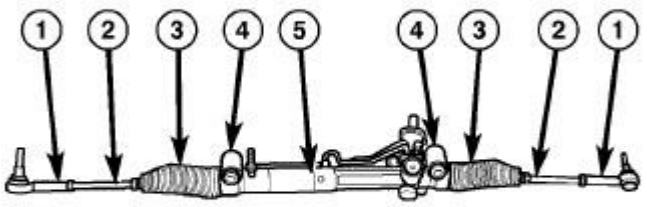

Fig. 98: RWD POWER STEERING GEAR
Courtesy of CHRYSLER LLC

A power rack and pinion steering gear is used on this vehicle. Components of the power steering gear are as follows:

- (1) Outer tie rods
- (2) Inner tie rods
- (3) Bellows
- (4) Mount Bushings
- (5) Housing

The gear cannot be adjusted or internally serviced. If a malfunction or a fluid leak occurs, the gear must be replaced as an assembly. The only serviceable component on the steering gear is the outer tie rod (1).

DIAGNOSIS AND TESTING

POWER STEERING GEAR

NOTE: This information is designed to be used in conjunction with the diagnostic charts . See STEERING DIAGNOSIS CHARTS

OBJECTIONABLE HISS OR WHISTLE POSSIBLY CAUSED BY A NOISY STEERING GEAR

1. Check and adjust power steering fluid level in the reservoir as necessary. See **Steering/Pump/FLUID - Standard Procedure**
2. Start the vehicle and heat system by steering lock-to-lock 5 times with the engine running at 3000 rpm. Do not hold the gear against the stops for more than 15 seconds at a time.

3. Return the engine to idle speed.
4. Listen for the noise when turning the wheel slowly off center during a dry park maneuver.
5. Replace power steering gear if the hiss or whistle is present. See **Steering/Gear - Removal**

REMOVAL

REMOVAL

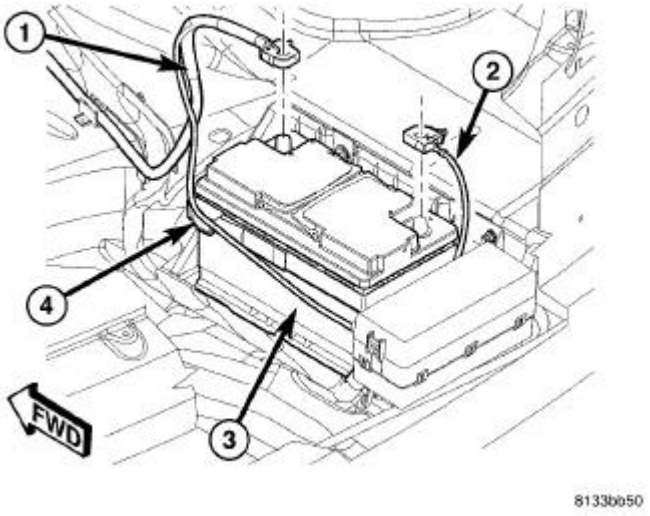

Fig. 99: BATTERY AND CABLES
Courtesy of CHRYSLER LLC

1. Disconnect and isolate negative battery cable (2) from battery post.
2. Siphon power steering fluid from pump reservoir.
3. Raise and support vehicle. Refer to **Vehicle Quick Reference/Hoisting - Standard Procedure** .

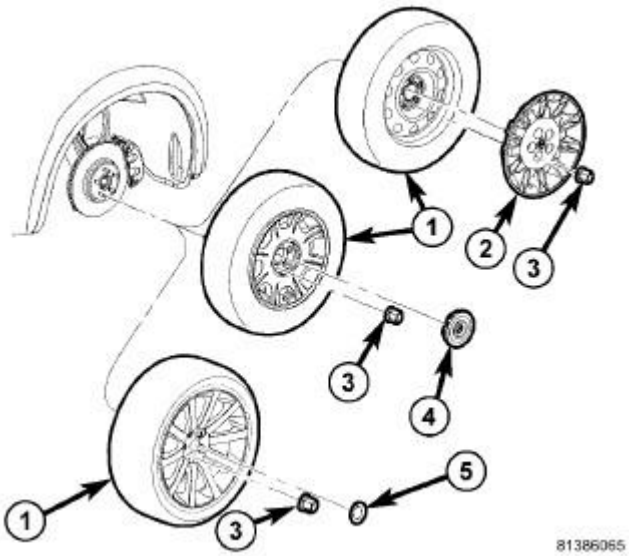

Fig. 100: TIRE AND WHEEL MOUNTING
Courtesy of CHRYSLER LLC

4. Remove wheel mounting nuts (3), then both front tire and wheel assemblies (1).

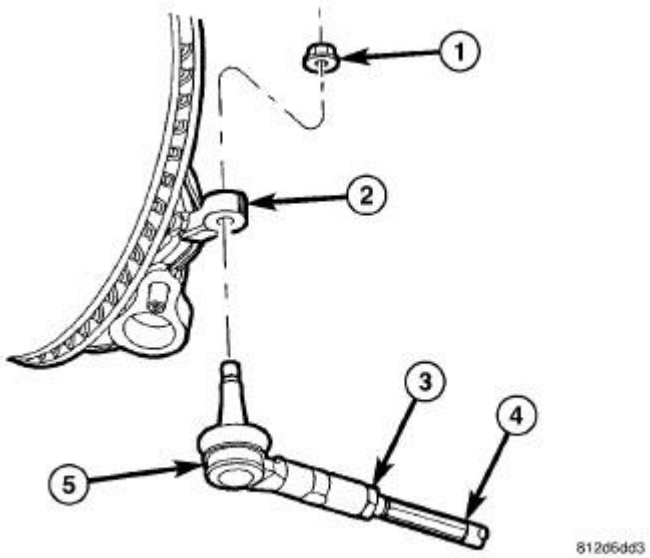

Fig. 101: FRONT OUTER TIE ROD
Courtesy of CHRYSLER LLC

CAUTION: When loosening jam nut and rotating inner tie rod, use care not to twist bellows at inner tie rod. Remove clamp at inner tie rod and make sure bellows moves freely before rotating inner tie rod.

5. Loosen tie rod jam nut (3) at each outer tie rod (5).

6. Remove outer tie rod nut (1) at each knuckle (2).

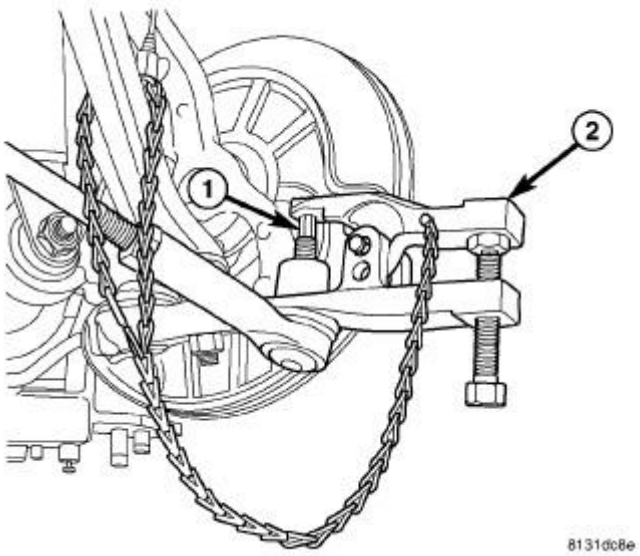

Fig. 102: USING PULLER ON OUTER TIE ROD
Courtesy of CHRYSLER LLC

7. Using Remover 9360 (2), separate outer tie rod (1) from each knuckle.

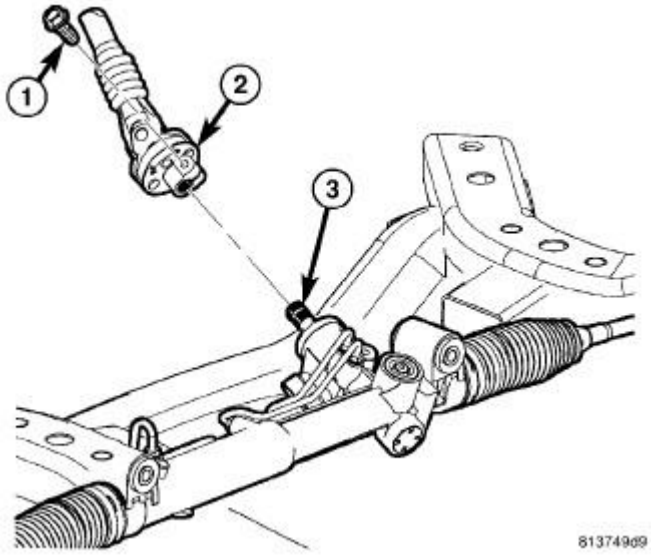

Fig. 103: STEERING COUPLING
Courtesy of CHRYSLER LLC

8. Remove steering coupling (2) pinch bolt (1) at steering gear (3). See **Steering/Column/COUPLING, Steering Column - Removal**.

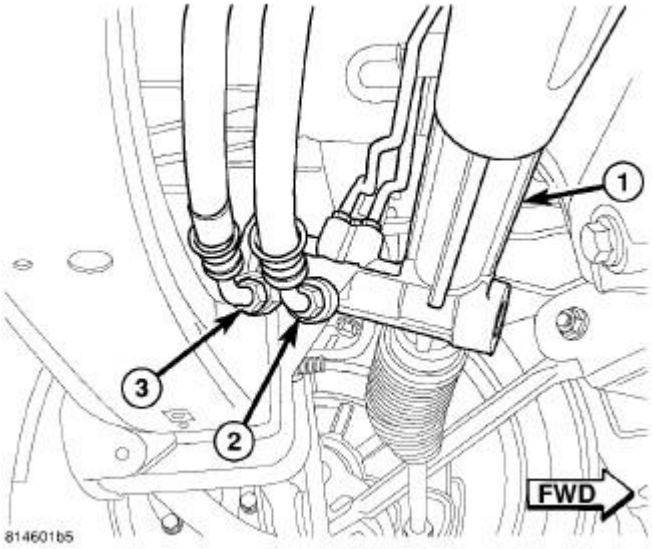

Fig. 104: HOSES AT RWD STEERING GEAR
Courtesy of CHRYSLER LLC

9. Unthread pressure hose tube nut (2) from steering gear (1). Remove pressure hose from steering gear.
10. Unthread return hose tube nut (3) from steering gear (1). Remove return hose from steering gear.

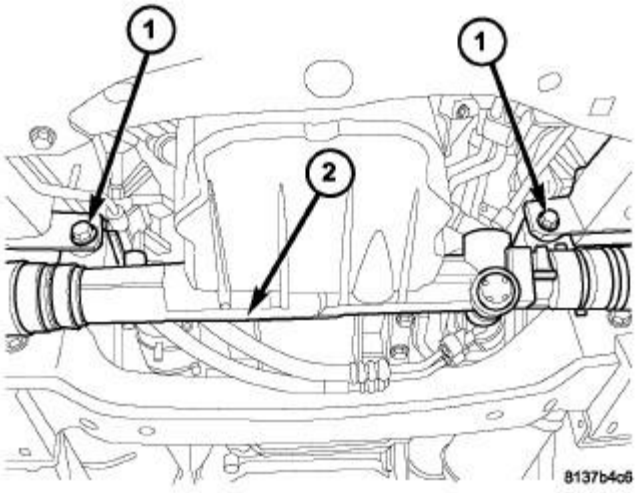

Fig. 105: GEAR MOUNTING BOLTS
Courtesy of CHRYSLER LLC

11. Remove steering gear mounting bolts (1).
12. If necessary, remove outer tie rods from gear. Count number of revolutions off for each tie rod

for reference upon installation to replacement gear.

INSTALLATION

INSTALLATION

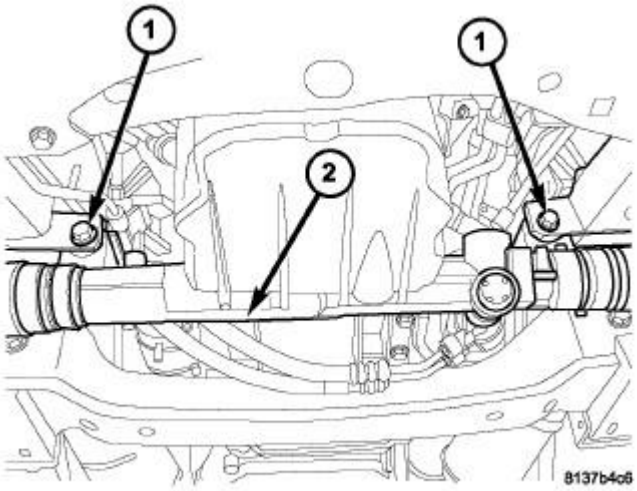

Fig. 106: GEAR MOUNTING BOLTS
Courtesy of CHRYSLER LLC

1. If necessary, install outer tie rods from original gear to replacement inner tie rods. Install each outer tie rod same amount of threads as it was installed on original gear. This will get toe setting close, saving some time when toe is set later in this procedure.
2. Lift steering gear (2) into mounted position and install steering gear mounting bolts (1). Tighten bolts to 95 N.m (70 ft. lbs.).

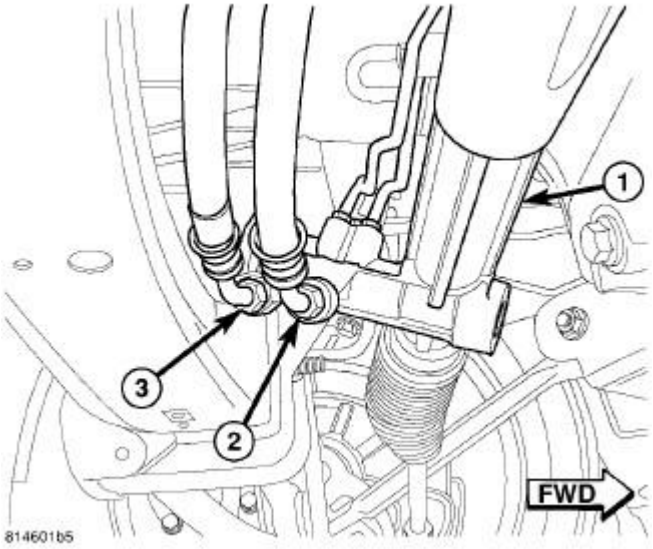

Fig. 107: HOSES AT RWD STEERING GEAR
Courtesy of CHRYSLER LLC

NOTE: Always use a NEW O-ring on the ends of the steering hoses.

3. Lubricate new O-ring on end of return hose with clean power steering fluid.
4. Install return hose (3) to steering gear (1). Tighten tube nut to 47 N.m (35 ft. lbs.).
5. Lubricate new O-ring on end of pressure hose with clean power steering fluid.
6. Install pressure hose (2) to steering gear (1). Tighten tube nut to 47 N.m (35 ft. lbs.).

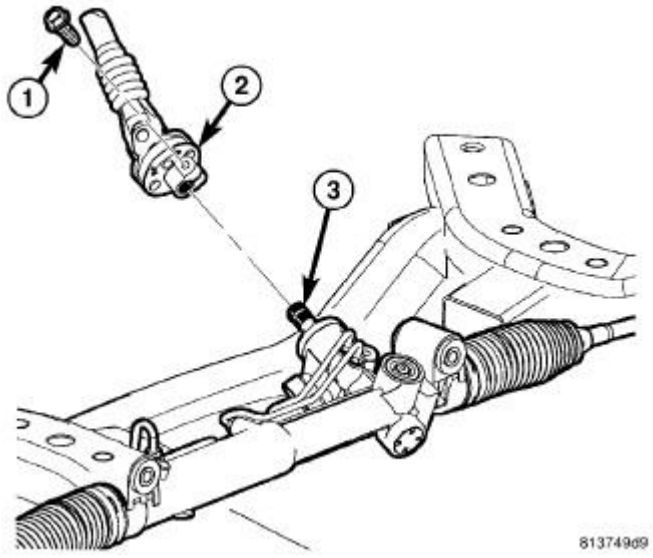

Fig. 108: STEERING COUPLING
Courtesy of CHRYSLER LLC

CAUTION: Prior to coupling installation, make sure gear is centered in its travel to match clockspring centering in steering column.

7. Align coupling (2) with input shaft (3) and install steering coupling. Install new pinch bolt. Tighten bolt to 54 N.m (40 ft. lbs.).

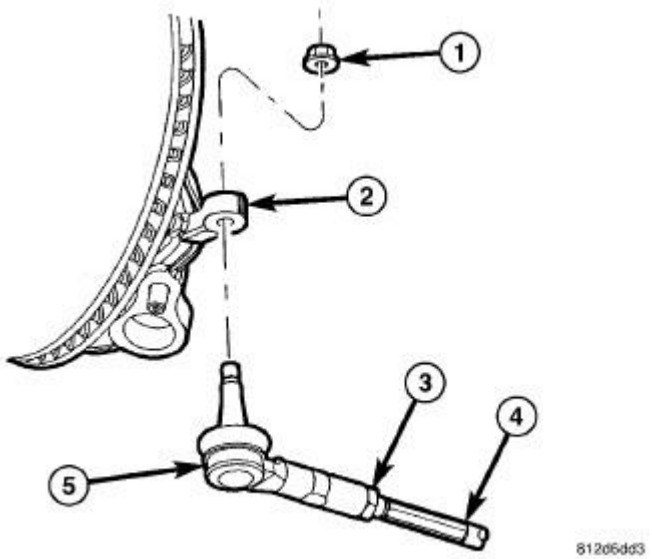

Fig. 109: FRONT OUTER TIE ROD
Courtesy of CHRYSLER LLC

8. Install each outer tie rod end (5) to its knuckle (2). Install nuts (1) and tighten to 85 N.m (63 ft. lbs.).

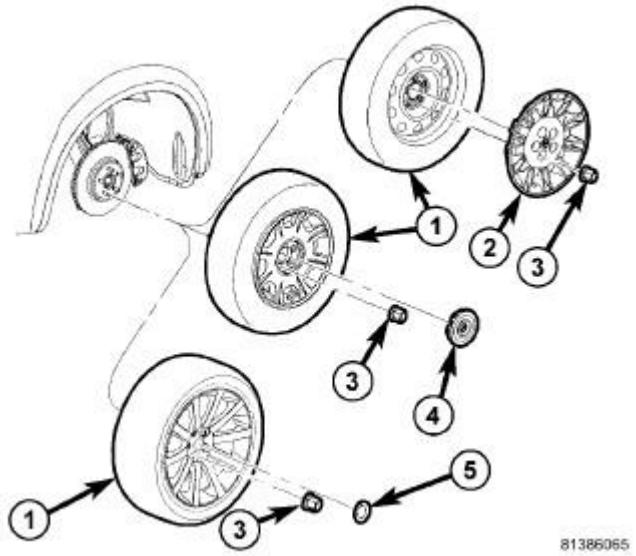

Fig. 110: TIRE AND WHEEL MOUNTING

Courtesy of CHRYSLER LLC

9. Install tire and wheel assemblies (1). Tighten wheel mounting nuts (3) to 150 N.m (110 ft. lbs.) (Police - 190 N.m (140 ft. lbs.)). Refer to **Tires and Wheels - Installation**
10. Lower vehicle.

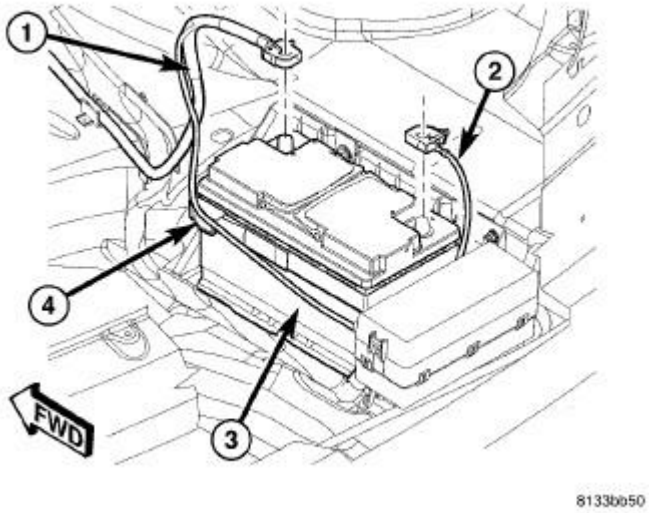

Fig. 111: BATTERY AND CABLES
Courtesy of CHRYSLER LLC

11. Connect negative battery cable (2) to battery post. It is important that this is performed properly. Refer to **Electrical/Battery System - Standard Procedure**
12. Fill and bleed power steering system. See **Steering - Standard Procedure**
13. Perform wheel alignment setting toe to specifications. Refer to **Front Suspension/Wheel Alignment - Standard Procedure** .

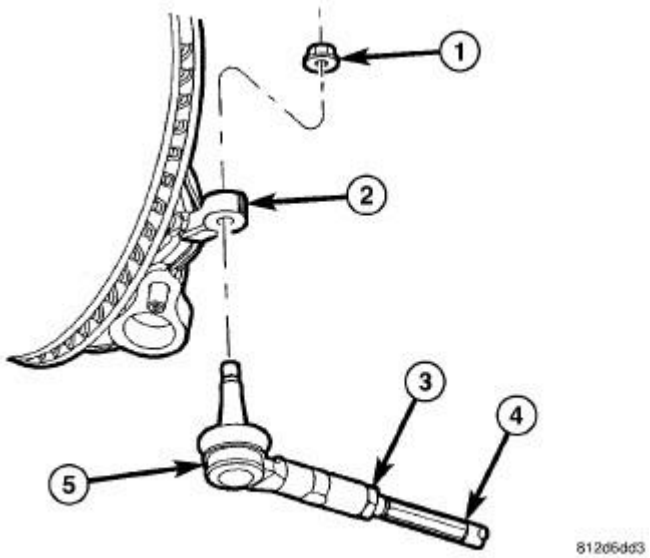

Fig. 112: FRONT OUTER TIE ROD
Courtesy of CHRYSLER LLC

14. Tighten both tie rod jam nuts (3) to 75 N.m (55 ft. lbs.).

TIE ROD, STEERING

Diagnosis and Testing

TIE ROD

Tie rod free-play can be measured using the following methods:

OUTER TIE ROD

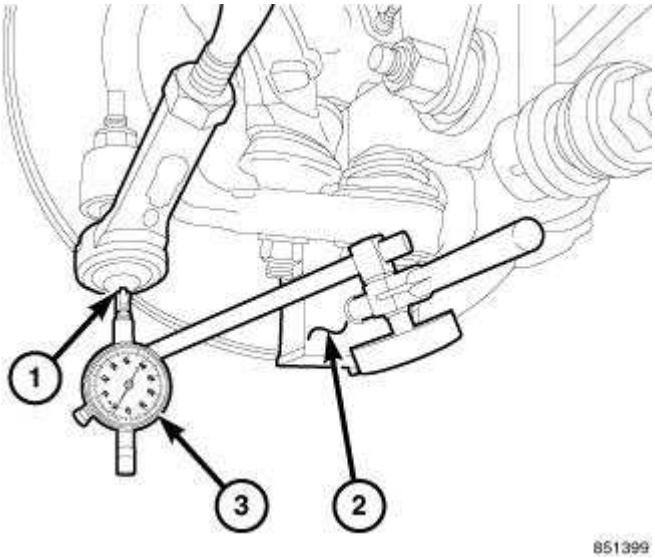

Fig. 113: Attaching Magnetic Dial Indicator To Inside Or Outside Of Brake Rotor
Courtesy of CHRYSLER LLC

1. Raise and support the vehicle. Refer to **Vehicle Quick Reference/Hoisting - Standard Procedure** .
2. Remove the front wheels. Refer to **Tires and Wheels - Removal** .
3. Install two standard wheel mounting nuts, flat side to rotor, diagonally opposite to each on the rotor.
4. Attach a magnetic dial indicator (2) to the inside of the brake rotor, then align dial indicator's contact pointer (1) with direction of stud axis and touch outer tie rod.
5. Zero dial indicator (3).

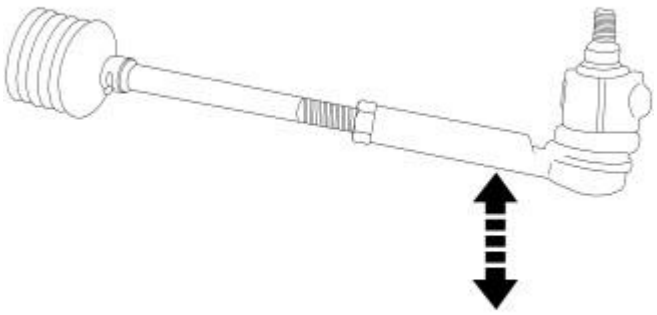

81d2625b

Fig. 114: Checking Outer Tie Rod Free-Play
Courtesy of CHRYSLER LLC

NOTE: When checking free-play, DO NOT rotate the tie rod. Just because a tie rod rotates easily does not mean that it is necessarily faulty. Using more than light hand pressure will result in a false reading.

6. Grasp the outer tie rod near the ball stud and attempt to move the tie rod straight up and down using light hand pressure. (Less than 10 lbs. of force.)
7. Measure and record any tie rod free-play movement.
8. Remove the magnetic dial indicator.
9. Remove the standard wheel mounting nuts from the two studs.
10. If the free-play in the tie rod exceeds 0.05 mm (.002 in.), replace the outer tie rod. See **Steering/Gear/TIE ROD, Steering - Removal**. If the free-play is less than 0.05 mm (.002 in.) at the outer tie rod, check the inner tie rod for free-play. See the following procedure.

INNER TIE ROD

NOTE: **Always check and repair (if necessary) outer tie rod free-play before checking inner tie rod free-play. False results can otherwise be obtained.**

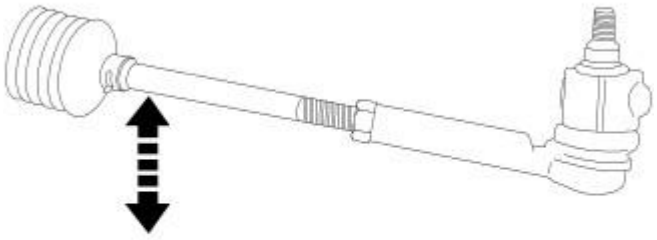

Fig. 115: Checking Inner Tie Rod Free-Play
Courtesy of CHRYSLER LLC

1. Grasp the inner tie rod near the steering gear bellows and attempt to move the tie rod straight up and down. If any free-play is felt, replace the inner tie rod. See **Steering/Gear/TIE ROD, Steering - Removal**.
2. If no free-play is felt, install the front wheels. Refer to **Tires and Wheels - Installation** .
3. Remove support and lower the vehicle.

Removal

OUTER TIE ROD

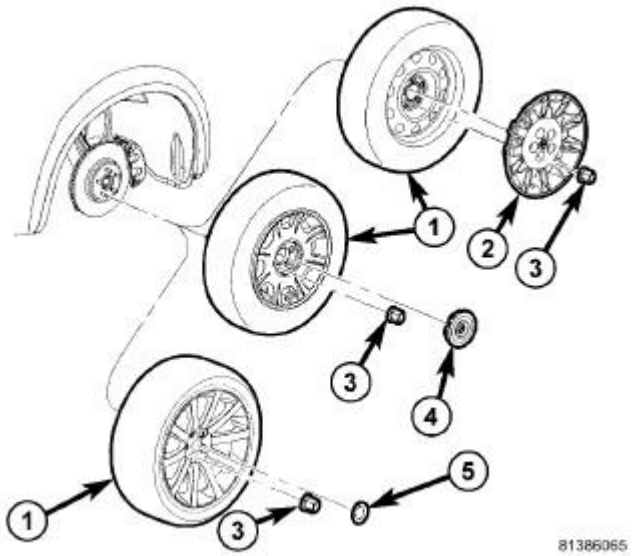

Fig. 116: TIRE AND WHEEL MOUNTING
Courtesy of CHRYSLER LLC

1. Raise and support vehicle. Refer to **Vehicle Quick Reference/Hoisting - Standard Procedure** .
2. Remove wheel mounting nuts (3), then front tire and wheel assembly (1).

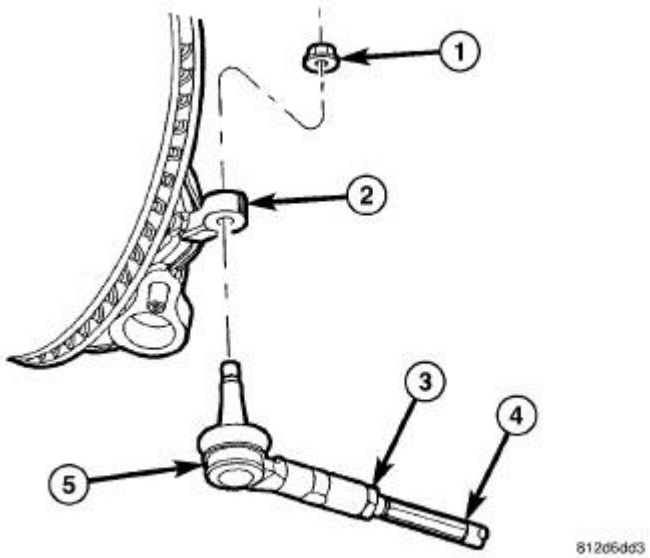

Fig. 117: FRONT OUTER TIE ROD
Courtesy of CHRYSLER LLC

CAUTION: When loosening jam nut and rotating inner tie rod, use care not to twist bellows at inner tie rod. Remove clamp at inner tie rod and make sure bellows moves freely before rotating inner tie rod.

3. Loosen tie rod jam nut (3) at outer tie rod (5).
4. Remove outer tie rod end nut (1) at knuckle (2).

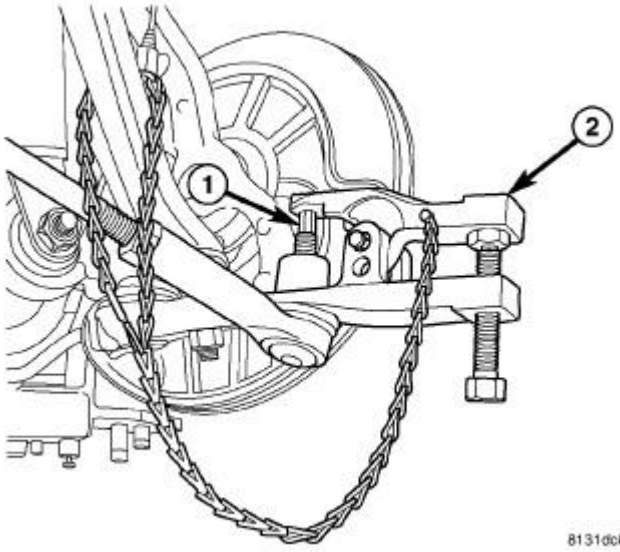

Fig. 118: USING PULLER ON OUTER TIE ROD
Courtesy of CHRYSLER LLC

5. Using Remover 9360 (2), separate outer tie rod end (1) from knuckle.
6. Unthread outer tie rod from inner tie rod. **Count number of turns when removing outer tie rod. This will give a good starting point when reassembling and when setting toe.**

INNER TIE ROD

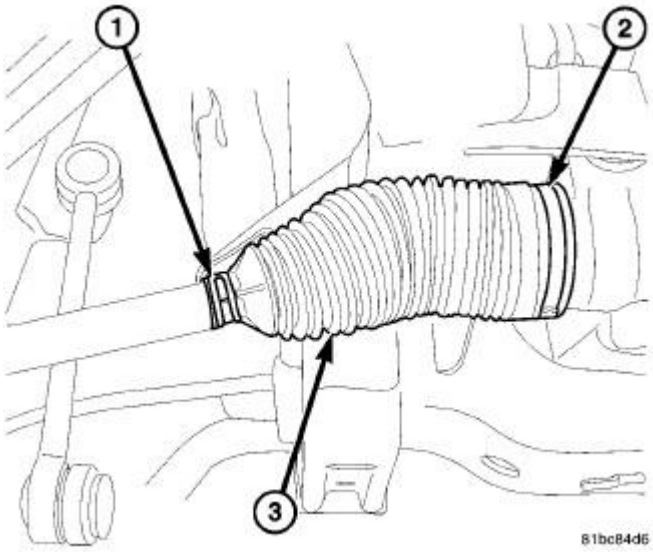

Fig. 119: BELLOWS CLAMPS

Courtesy of CHRYSLER LLC

1. Remove outer tie rod. See **Steering/Gear/TIE ROD, Steering - Removal**.
2. Remove tie rod jam nut from inner tie rod.
3. Remove clamp (1) securing bellows (3) to inner tie rod.
4. Remove clamp (2) securing bellows (3) to steering gear body.
5. Remove bellows (3).

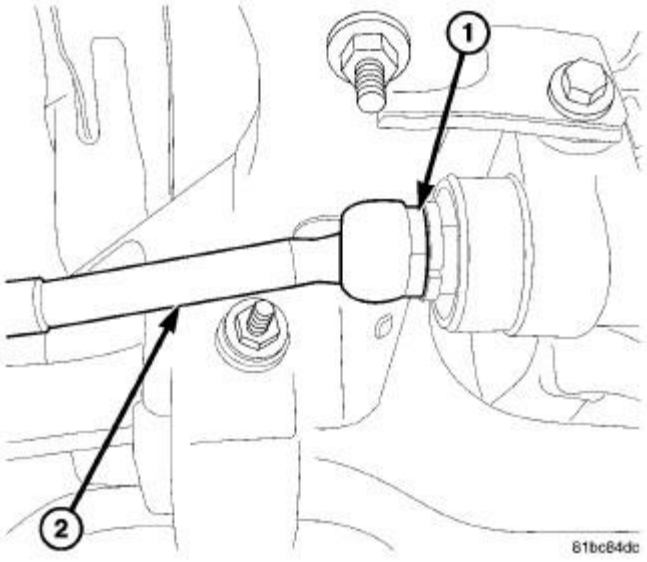

Fig. 120: INNER TIE ROD HEX
Courtesy of CHRYSLER LLC

6. Install appropriate inner tie rod removal tool on inner tie rod hex (1).

CAUTION: If inner tie rod cannot be removed using specified tools, do not use a hammer or heat to loosen. Damage to steering gear will occur. Replace entire steering gear.

7. Unthread and remove inner tie rod (2).

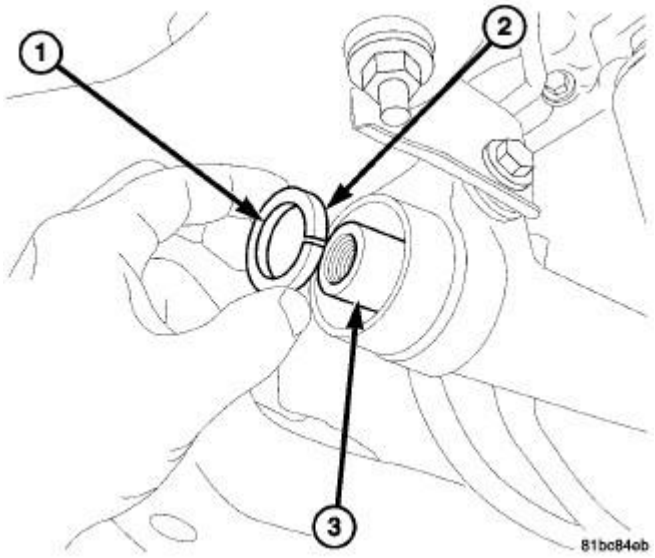

Fig. 121: RESTRICTOR REMOVAL/INSTALLATION
Courtesy of CHRYSLER LLC

8. Remove travel restrictor (2) from rack gear (3).

Installation

OUTER TIE ROD

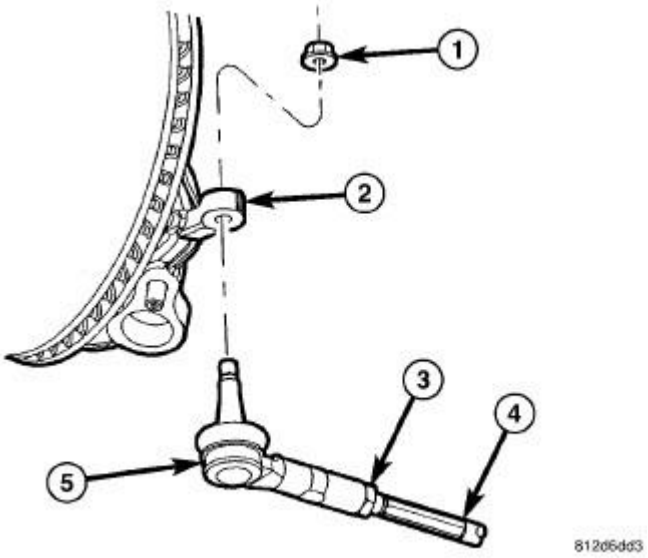

Fig. 122: FRONT OUTER TIE ROD
Courtesy of CHRYSLER LLC

CAUTION: When rotating inner tie rod, use care not to twist bellows at inner tie rod. Remove clamp at inner tie rod and make sure bellows moves freely before

rotating inner tie rod.

1. Thread outer tie rod (5) onto inner tie rod (4). Install outer tie rod using same number of turns as when removed.
2. Install outer tie rod end (5) into steering knuckle (2). Install and tighten nut (1) to 85 N.m (63 ft. lbs.).

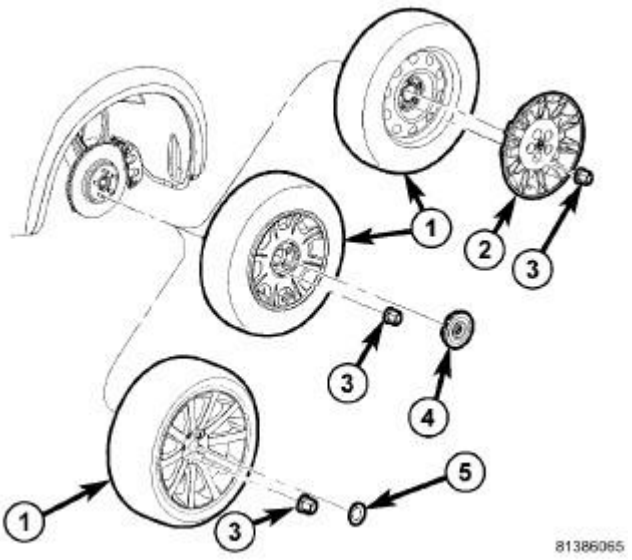

Fig. 123: TIRE AND WHEEL MOUNTING
Courtesy of CHRYSLER LLC

3. Install tire and wheel assemblies (1). Tighten wheel mounting nuts (3) to 150 N.m (110 ft. lbs.) (Police - 190 N.m (140 ft. lbs.)). Refer to **Tires and Wheels - Installation** .
4. Lower vehicle.
5. Perform wheel alignment setting toe to specifications. Refer to **Front Suspension/Wheel Alignment - Standard Procedure** .

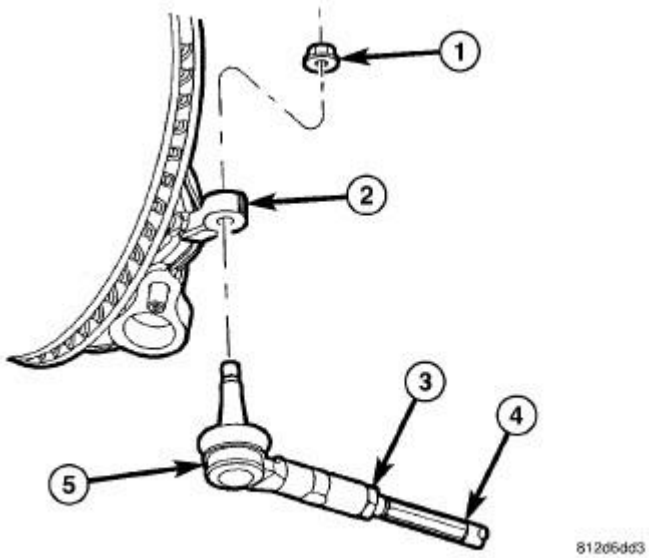

Fig. 124: FRONT OUTER TIE ROD
Courtesy of CHRYSLER LLC

6. Tighten tie rod jam nut (3) to 75 N.m (55 ft. lbs.).

INNER TIE ROD

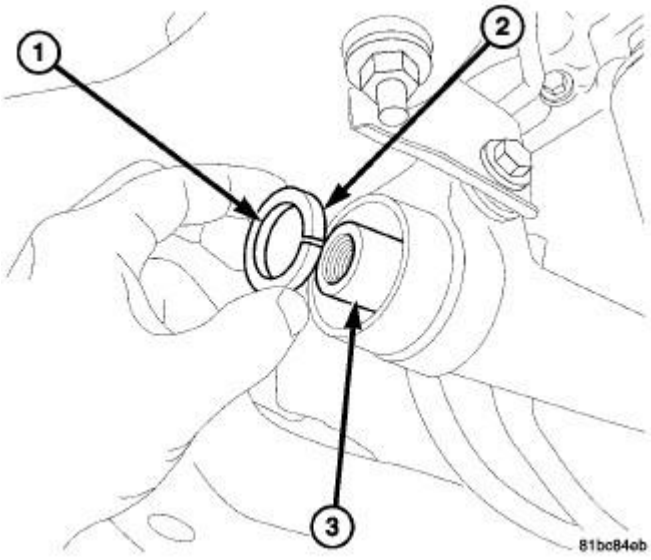

Fig. 125: RESTRICTOR REMOVAL/INSTALLATION
Courtesy of CHRYSLER LLC

NOTE: The travel restrictor (2) has a beveled lip (1) on one end of its inside diameter to keep the restrictor from being install too far onto the rack gear. Install the restrictor with the beveled lip side outward (away from gear) to avoid misinstallation and restrictor damage.

1. Install travel restrictor (2), beveled lip (1) side outward, on end of rack gear (3). Once installed, restrictor will be flush with end of rack gear.
2. Apply Mopar® Lock and Seal Adhesive or equivalent medium thread locker adhesive to inboard end threads of inner tie rod.

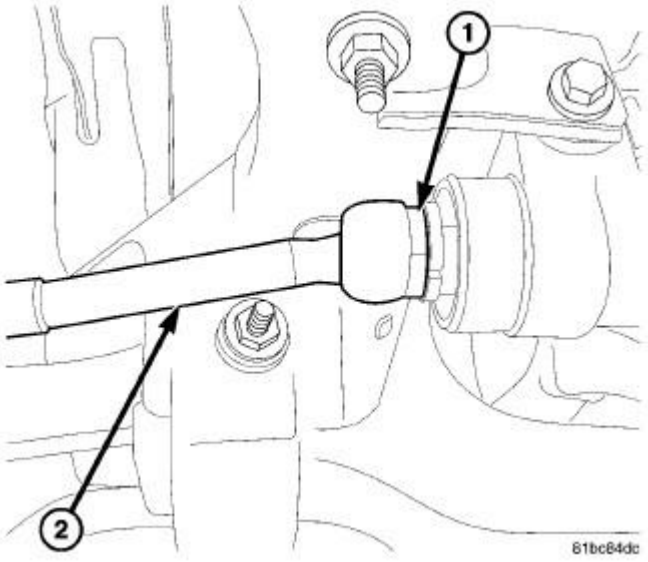

Fig. 126: INNER TIE ROD HEX
Courtesy of CHRYSLER LLC

3. Install inner tie rod (2) onto gear using appropriate inner tie rod installer tool or crows foot wrench on hex (1). Tighten inner tie rod to 115 N.m, (85 ft. lbs.).
4. Loosely place new clamp over large end of bellows.
5. Slide new bellows with clamp over end of inner tie rod and onto gear body.

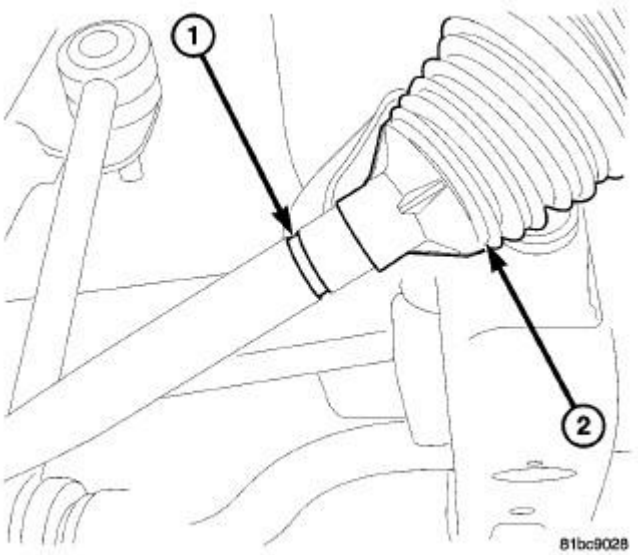

Fig. 127: GROOVE IN INNER TIE ROD
Courtesy of CHRYSLER LLC

6. Push small end of bellows (2) past groove (1) machined into inner tie rod.
7. Apply a small amount of Mopar® Lubriplate or equivalent uniformly to groove (1) in inner tie rod shaft. This allows for toe adjustment without twisting bellows.
8. Pull small end of bellows outward until ridge inside bellows engages groove.

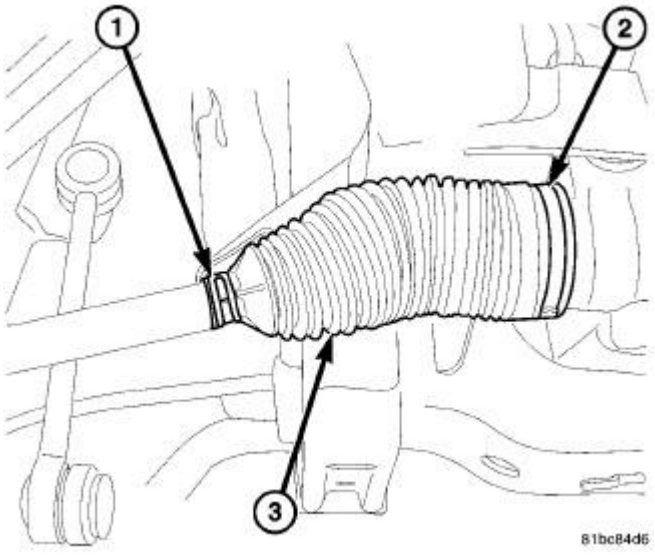

Fig. 128: BELLOWS CLAMPS
Courtesy of CHRYSLER LLC

9. Install new clamp (1) over small end of bellows (3).

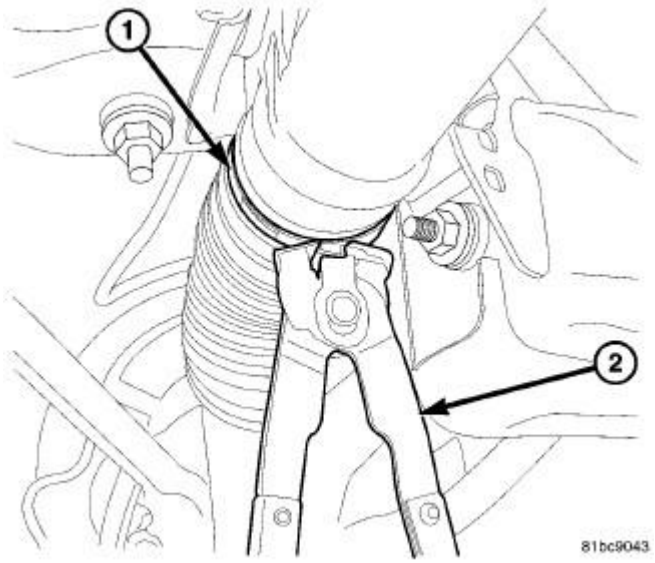

Fig. 129: CRIMPING BELLOWS CLAMP
Courtesy of CHRYSLER LLC

10. Using crimping pliers (2), crimp bellows clamp (1) at gear body.
11. Thread tie rod jam nut onto inner tie rod far enough to install outer tie rod.
12. Install outer tie rod. See **Steering/Gear/TIE ROD, Steering - Installation**.

PUMP

DESCRIPTION

DESCRIPTION

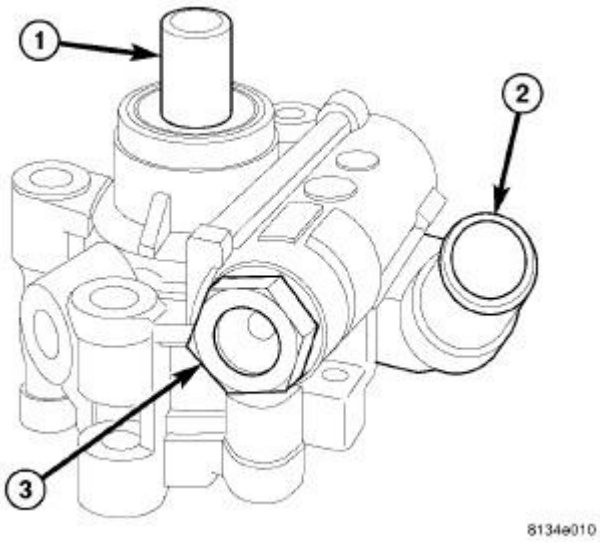

Fig. 130: POWER STEERING PUMP
Courtesy of CHRYSLER LLC

1 - SHAFT
2 - SUPPLY INLET
3 - PRESSURE OUTLET

Hydraulic pressure for operation of the power steering gear is provided by a belt-driven all-aluminum power steering pump. Most vehicles use a common droop flow rate and constant displacement type pump that is mounted in a common location (left front of engine). The SRT8 power steering pump is a constant-flow type, but appears the same externally and is mounted in the same location as others.

DIAGNOSIS AND TESTING

POWER STEERING PUMP AND HOSES

NOTE: **This information is designed to be used in conjunction with the diagnostic charts . See STEERING DIAGNOSIS CHARTS**

CHECKING FOR WEAR OF POWER STEERING PUMP INTERNAL COMPONENTS

1. Place gear selector in PARK (or NEUTRAL) with wheels chalked.
2. With the engine idling, have a helper turn the steering wheel.
3. Using an electronic listening tool, determine if noise is coming from the pump.
4. Increase the engine speed and have a helper turn the steering wheel. Does the noise change with load?
5. Replace the power steering pump if excessive noise is present. See **Steering/Pump - Removal**

CHECKING FOR POWER STEERING HOSES TOUCHING BODY OR FRAME OF VEHICLE

Check hoses and hose tubes as following:

- Inspect hoses and hose tubes for witness marks. If witness marks are present, adjust hose(s) to the proper position by loosening, repositioning and tightening attachments to the specified torque. See **Steering - Specifications**. **Do not bend tubing to adjust.** Replace the hose assembly if damaged.
- Check fastener torque of hose mounting brackets and tube nuts. See **Steering - Specifications**
- Have a helper bump the steering gear off of the stops to induce pressure fluctuations which may move the hose. If hose contact is made, adjust hose(s) to the proper position by loosening, repositioning and tightening attachments to the specified torque. See **Steering - Specifications**. **Do not bend tubing to adjust.** Replace the hose assembly if damaged.

PUMP LEAKAGE

The pump is serviced as an assembly and should not be disassembled.

Check for leaks in the following areas:

- Pump shaft seal behind the pulley
- Pressure and return lines
- Flow control valve fitting

REMOVAL

3.5L

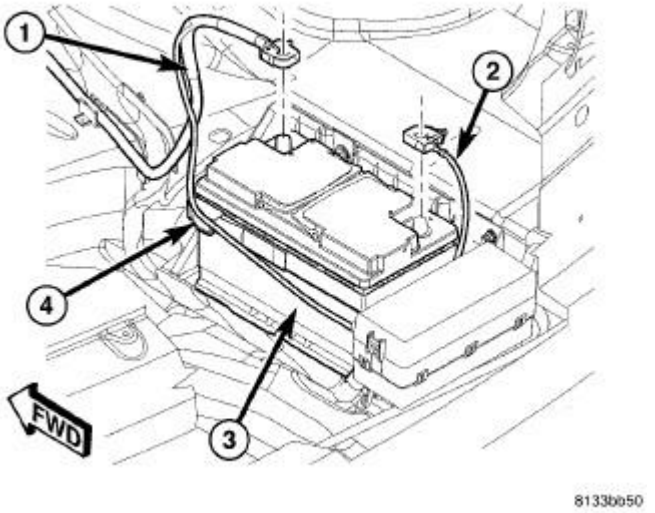

Fig. 131: BATTERY AND CABLES
Courtesy of CHRYSLER LLC

1. Disconnect and isolate battery negative cable (2) from battery post.
2. Siphon power steering fluid from pump reservoir.
3. Remove air cleaner housing and inlet tube to throttle body. Refer to **Engine/Air Intake System/BODY, Air Cleaner - Removal**
4. Remove serpentine drive belt. Refer to **Cooling/Accessory Drive/BELT, Serpentine - Removal**

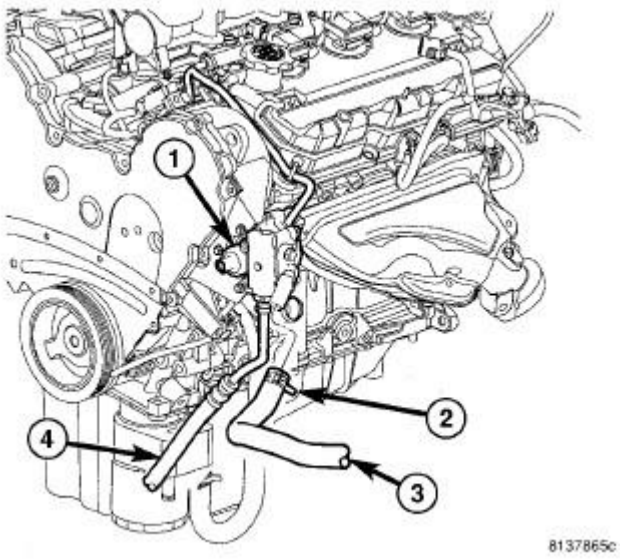

Fig. 132: SUPPLY HOSE 3.5L
Courtesy of CHRYSLER LLC

5. Remove hose clamp (2), then supply hose (3) from pump (1).

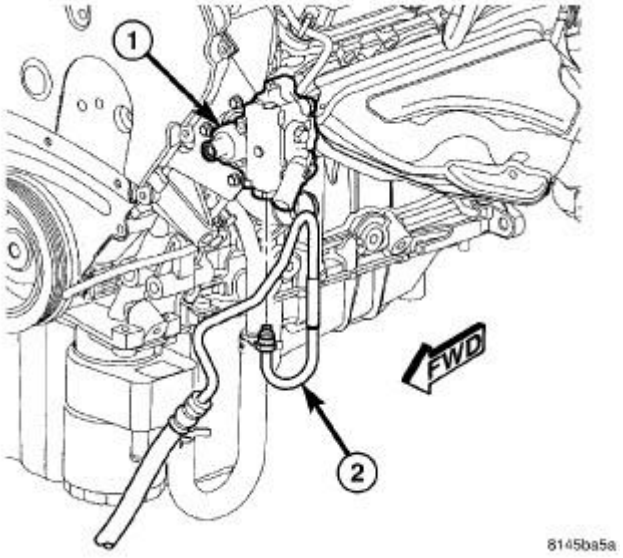

Fig. 133: PRESSURE HOSE AT PUMP - 3.5L
Courtesy of CHRYSLER LLC

6. Unthread tube nut, then remove pressure hose (2) from pump (1).

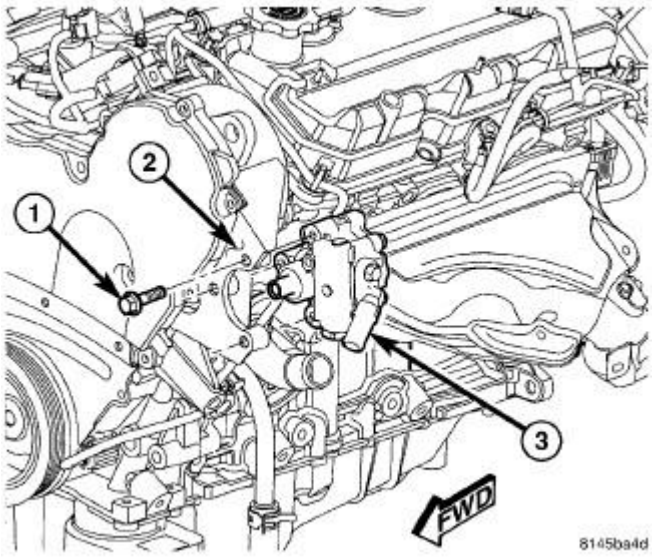

Fig. 134: POWER STEERING PUMP - 3.5L
Courtesy of CHRYSLER LLC

7. Remove three pump mounting bolts (1) through access holes in pulley.
8. Remove pump (3) from engine bracket (2).
9. If pulley needs removal. See **Steering/Pump/PULLEY, Power Steering Pump - Removal**.

REMOVAL (5.7L/6.1L)

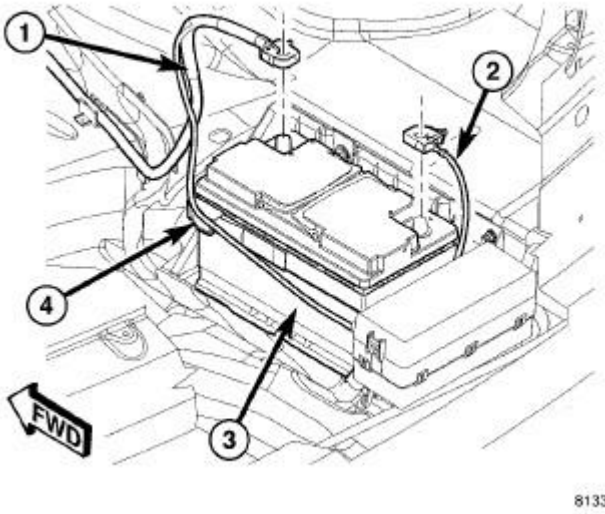

Fig. 135: BATTERY AND CABLES
Courtesy of CHRYSLER LLC

1. Disconnect and isolate the negative battery cable (2).

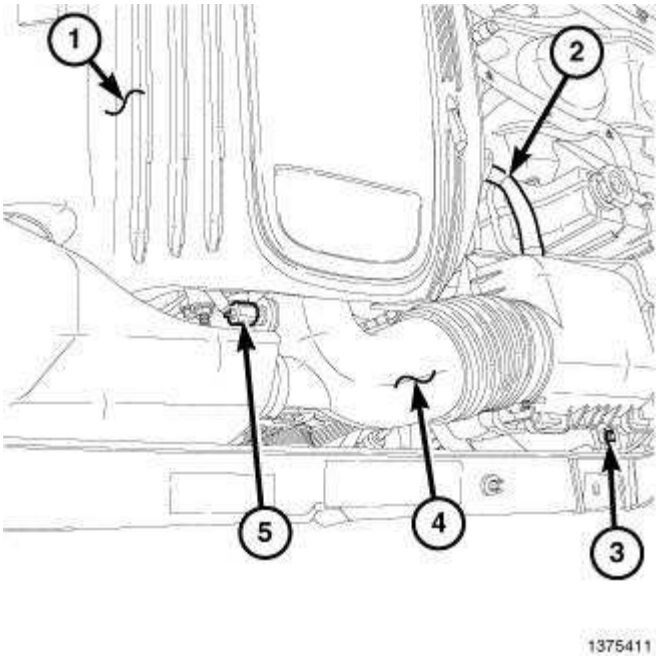

Fig. 136: Air Filter Assembly
Courtesy of CHRYSLER LLC

2. Remove the engine cover (1).
3. Disconnect the intake air temperature (IAT) sensor (5) connector.

4. Loosen the clamps at the throttle body and the air filter assembly and remove the clean air tube (4).
5. Remove the make up air hose (MUA) (2).
6. Remove the air filter assembly retaining bolt (3).
7. Lift the air filter assembly out of the vehicle.

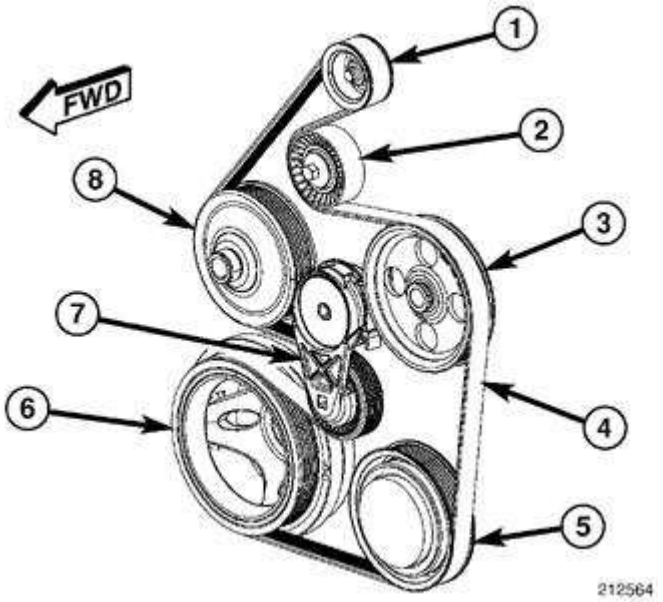

Fig. 137: Identifying Accessory Drive Belt Routing - 5.7L
Courtesy of CHRYSLER LLC

CAUTION: Do not let the tensioner arm snap back to the freearm position, sever damage may occur to the tensioner.

8. Rotate the accessory drive belt tensioner (7) counterclockwise until it contacts it's stop and remove the accessory drive belt (4), then slowly rotate the tensioner to the freearm position.

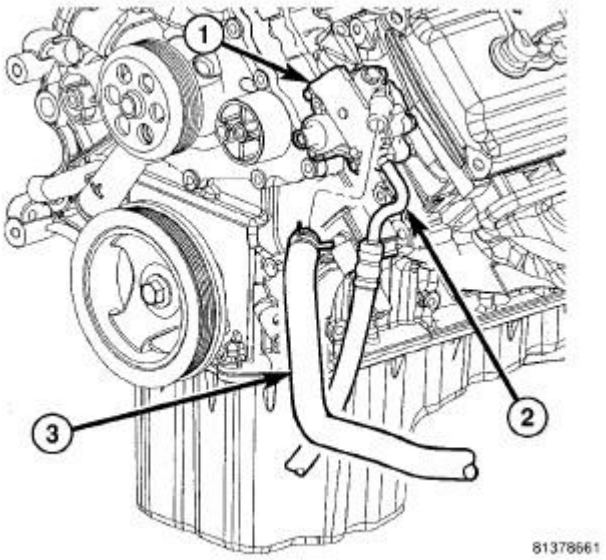

Fig. 138: SUPPLY HOSE - 5.7L
Courtesy of CHRYSLER LLC

9. Siphon the power steering fluid from the power steering pump reservoir.
10. Remove the hose clamp and the supply hose (3) from the power steering pump (1).

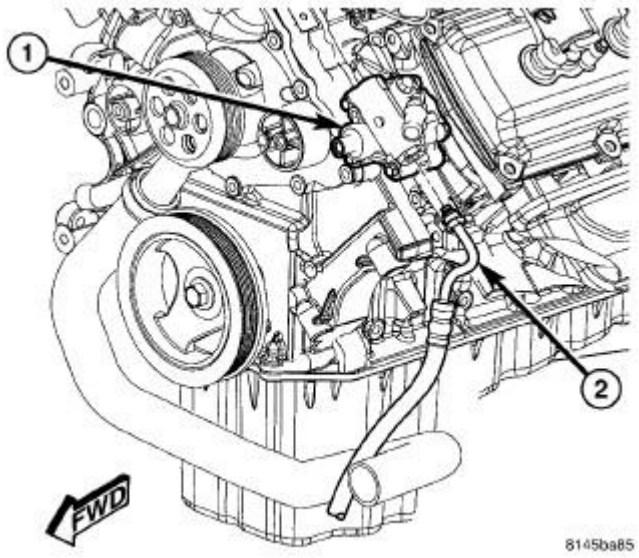

Fig. 139: PRESSURE HOSE AT PUMP - 5.7L
Courtesy of CHRYSLER LLC

11. Remove the pressure hose (2) from the power steering pump (1).

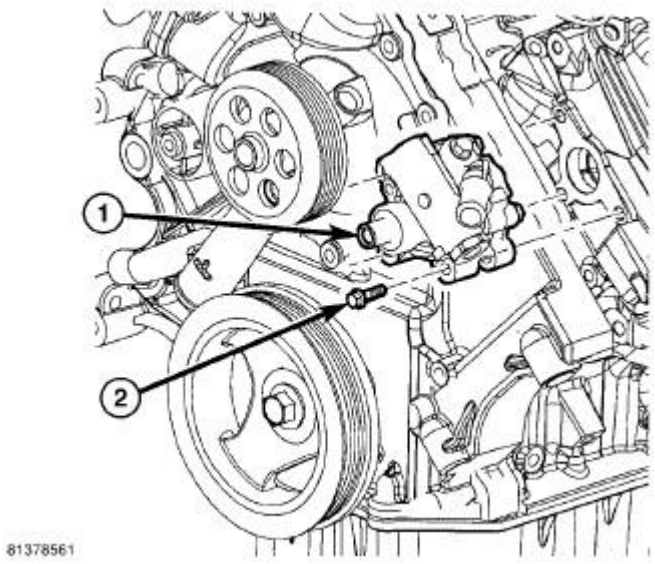

Fig. 140: POWER STEERING PUMP - 5.7L
Courtesy of CHRYSLER LLC

12. Remove the three power steering pump mounting bolts (2) through the access holes in the power steering pump pulley.
13. Remove the power steering pump (1) from the engine.
14. If the power steering pump pulley needs removal. See **Steering/Pump/PULLEY, Power Steering Pump - Removal**

INSTALLATION

3.5L

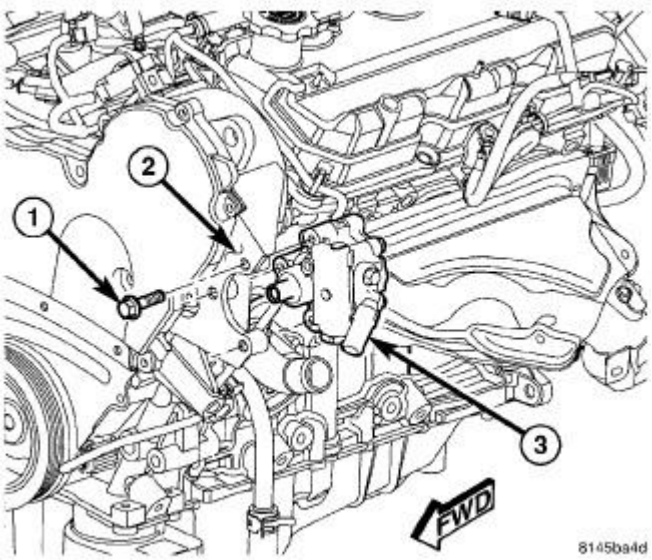

Fig. 141: POWER STEERING PUMP - 3.5L
Courtesy of CHRYSLER LLC

1. Align pump (3) with mounting holes on engine bracket (2).
2. Install three pump mounting bolts (1) through access holes in pulley and engine bracket. Tighten bolts to 28 N.m (21 ft. lbs.) torque.

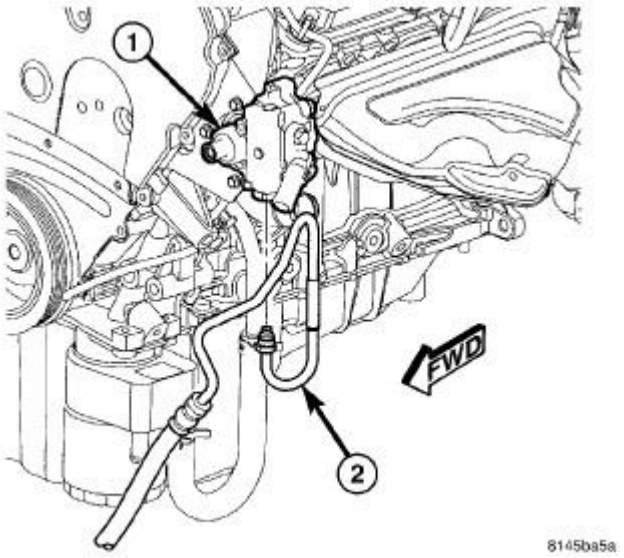

Fig. 142: PRESSURE HOSE AT PUMP - 3.5L
Courtesy of CHRYSLER LLC

NOTE: Always use a NEW O-ring on the end of the pressure hose.

3. Lubricate NEW O-ring on end of pressure hose with clean power steering fluid.
4. Install pressure hose (2) to pump (1). Tighten pressure hose tube nut to 47 N.m (35 ft. lbs.) torque.

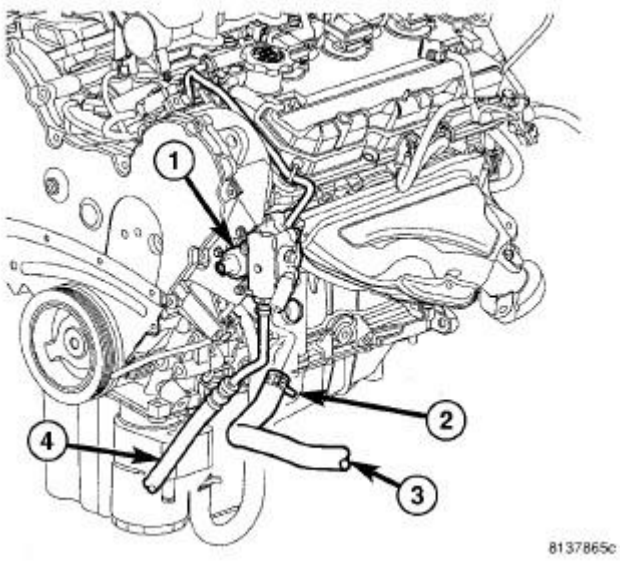

Fig. 143: SUPPLY HOSE - 3.5L
Courtesy of CHRYSLER LLC

5. Install supply hose (3) on pump. Install clamp (2) securing hose in place.
6. Install serpentine drive belt. Refer to **Cooling/Accessory Drive/BELT, Serpentine - Installation**
7. Install air cleaner housing and inlet tube. Refer to **Engine/Air Intake System/BODY, Air Cleaner - Installation**

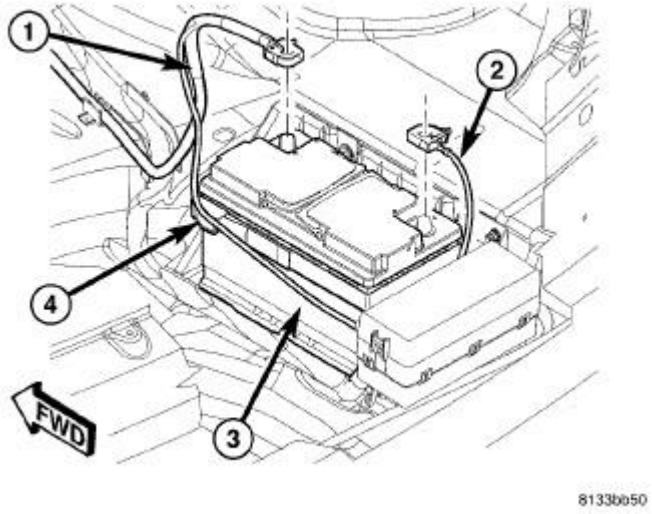

Fig. 144: BATTERY AND CABLES
Courtesy of CHRYSLER LLC

8. Connect battery negative cable (2) to battery post. It is important that this is performed properly.

Refer to **Electrical/Battery System - Standard Procedure**

9. Fill and bleed power steering system. See **Steering - Standard Procedure**

INSTALLATION (5.7L/6.1L)

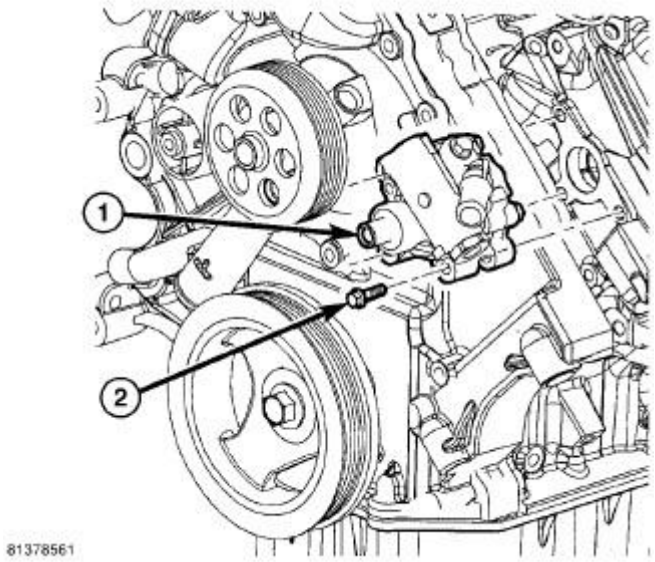

Fig. 145: POWER STEERING PUMP - 5.7
Courtesy of CHRYSLER LLC

1. Align the power steering pump (1) with the mounting holes on the engine.
2. Install the three power steering pump mounting bolts (2) through the access holes in the pulley and tighten the bolts to 28 N.m (21 ft. lbs.).

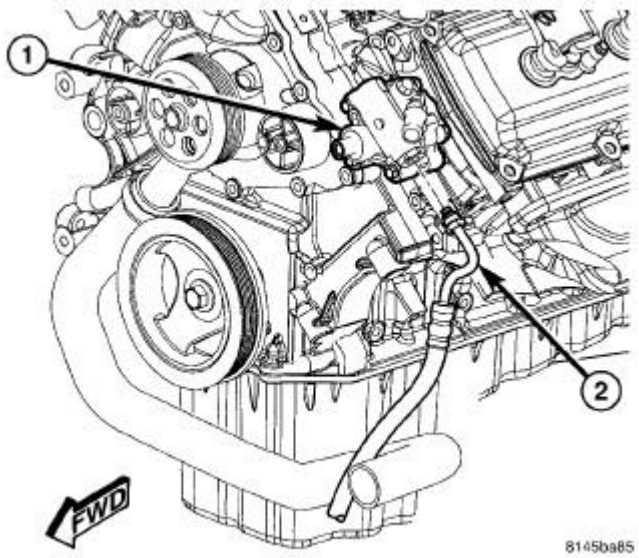

Fig. 146: PRESSURE HOSE AT PUMP - 5.7L

Courtesy of CHRYSLER LLC

NOTE: Always use a new O-ring on the end of the pressure hose.

3. Lubricate the new O-ring on the end of the pressure hose with clean power steering fluid.
4. Install the pressure hose (2) to the power steering pump (1) and tighten the pressure hose tube nut to 47 N.m (35 ft. lbs.).

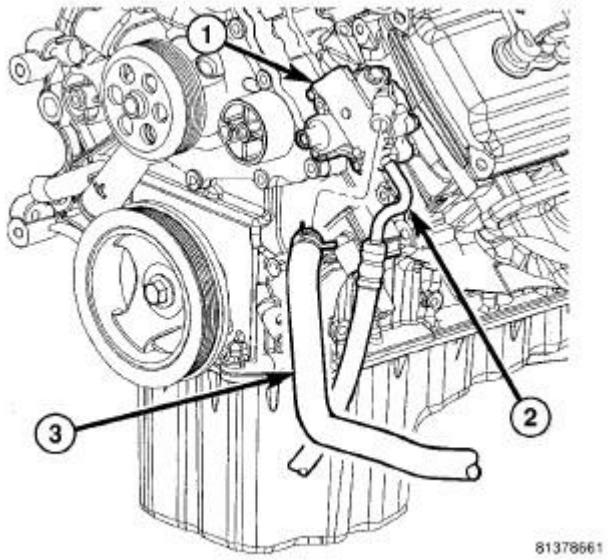

Fig. 147: SUPPLY HOSE - 5.7L
Courtesy of CHRYSLER LLC

5. Install the supply hose (3) on the power steering pump (1) and securely tighten the hose clamp.

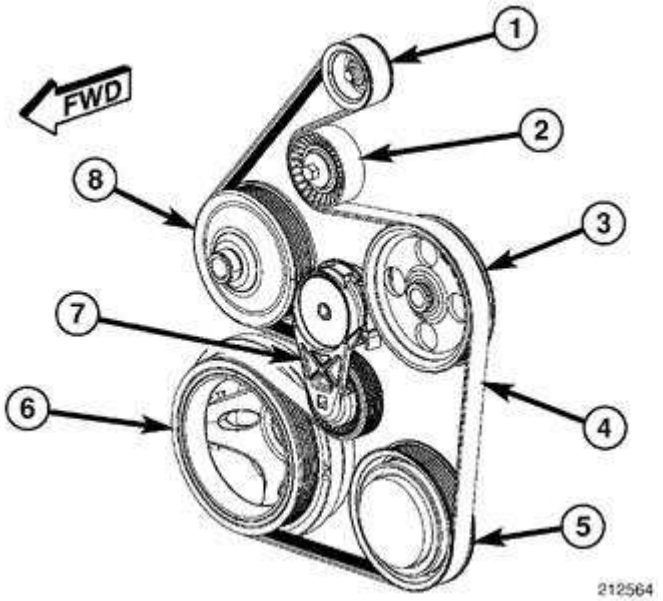

Fig. 148: Identifying Accessory Drive Belt Routing - 5.7L
Courtesy of CHRYSLER LLC

CAUTION: Do not let the tensioner arm snap back to the freearm position, sever damage may occur to the tensioner.

6. Rotate the accessory drive belt tensioner (7) counterclockwise until it contacts it's stop and position the accessory drive belt (4), onto the pulleys.

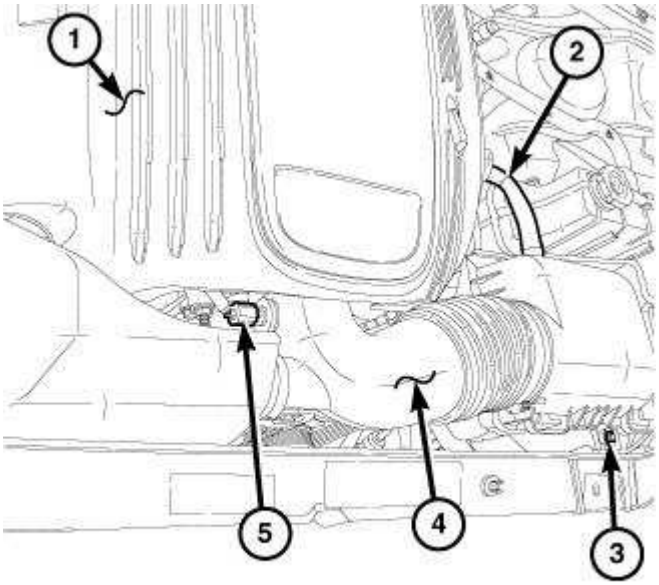

Fig. 149: Air Filter Assembly
Courtesy of CHRYSLER LLC

7. Position the air filter assembly into the vehicle.
8. Install the air filter assembly retaining bolt (3) and securely tighten.
9. Connect the make up air hose (2).
10. Install the clean air tube (4) to the throttle body and the air filter assembly and securely tighten the clamps.
11. Connect the intake air temperature (IAT) sensor (5) connector.
12. Install the engine cover (1).

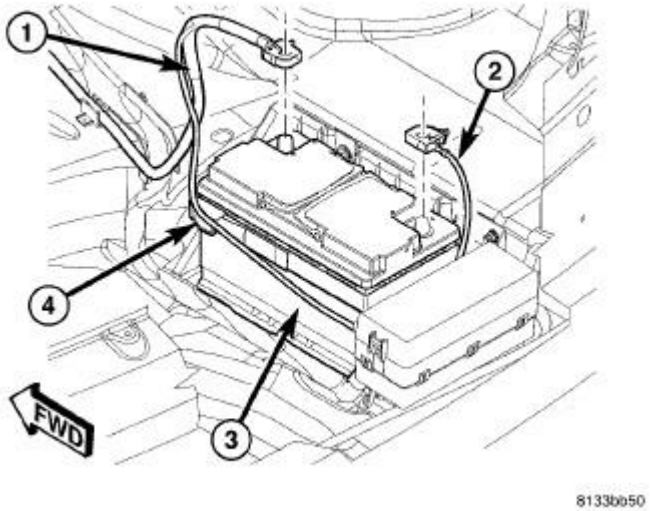

Fig. 150: BATTERY AND CABLES
Courtesy of CHRYSLER LLC

13. Connect the negative battery cable (2).
14. Fill and bleed the power steering system. See **Steering - Standard Procedure**

COOLER, POWER STEERING

Description

DESCRIPTION

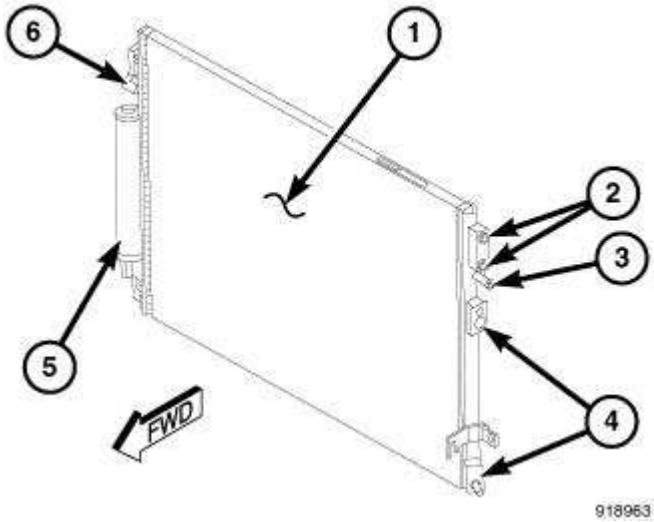

Fig. 151: Power Steering Cooler
Courtesy of CHRYSLER LLC

The power steering cooler is integrated into the A/C condenser (1).

The A/C condenser is equipped with two fittings (2) for the integral automatic transmission cooler (when equipped with an automatic transmission), fittings for the integral power steering cooler (3), tapping blocks for the A/C refrigerant lines (4), a tapping block for the receiver/drier (5) and integral mounting brackets (6).

Removal

REMOVAL

The power steering cooler is integrated into the A/C condenser and is serviced as an assembly. Refer to **Heating and Air Conditioning/Plumbing/CONDENSER, A/C - Removal**

Installation

INSTALLATION

The power steering cooler is integrated into the A/C condenser and is serviced as an assembly. Refer to **Heating and Air Conditioning/Plumbing/CONDENSER, A/C - Installation**

FLUID

Description

DESCRIPTION

The recommended fluid for the power steering system is Mopar® Power Steering fluid + 4 or Mopar® ATF+4 Automatic Transmission Fluid. Both fluids have the same material standard specifications (MS-9602).

Mopar® ATF+4 (and Mopar® Power Steering fluid + 4), when new, is red in color. ATF+4 is dyed red so it can be identified from other fluids used in the vehicle such as engine oil or antifreeze. The red color is not permanent and is not an indicator of fluid condition. As the vehicle is driven, ATF+4 will begin to look darker in color and may eventually become brown. **THIS IS NORMAL.** ATF+4 also has a unique odor that may change with age. Consequently, odor and color cannot be used to indicate the fluid condition or the need for a fluid change.

Standard Procedure

POWER STEERING FLUID LEVEL CHECKING

WARNING: Fluid level should be checked with the engine OFF to prevent personal injury from moving parts and to assure an accurate fluid level reading.

CAUTION: Mopar® Power Steering Fluid + 4 or Mopar® ATF+4 Automatic Transmission Fluid is to be used in the power steering system. Both

Fluids have the same material standard specifications (MS-9602). No other power steering or automatic transmission fluid is to be used in the system. Damage may result to the power steering pump and system if another fluid is used. Do not overfill the system.

NOTE: Although not required at specific intervals, the fluid level may be checked periodically. Check the fluid level anytime there is a system noise or fluid leak suspected.

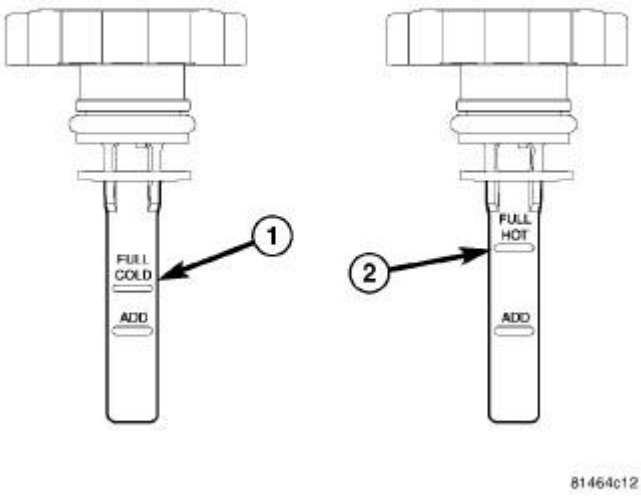

Fig. 152: COLD AND HOT SIDES OF DIPSTICK
Courtesy of CHRYSLER LLC

The power steering fluid level can be viewed on the dipstick attached to the filler cap. There are two sides to the dipstick, one is for checking the fluid when it is cold, the other is for checking the fluid when it is hot. Before opening the power steering system, wipe the reservoir filler cap free of dirt and debris. Remove the cap and check the fluid level on its dipstick.

Use the COLD side of the dipstick (1) to measure when the fluid is at normal ambient temperature, approximately 21°C to 27°C (70°F to 80°F). The fluid level should read between the ADD and FULL COLD lines.

Use the HOT side of the dipstick (2) to measure when the vehicle has been running and the fluid is hot. When the fluid is hot, the fluid level is allowed to read up to the FULL HOT line. **Only add fluid to the system when the vehicle is cold.**

Use only Mopar® Power Steering Fluid + 4 or Mopar® ATF+4 Automatic Transmission Fluid in the power steering system. Do not overfill the power steering system.

HOSE, POWER STEERING, PRESSURE

Removal

REMOVAL

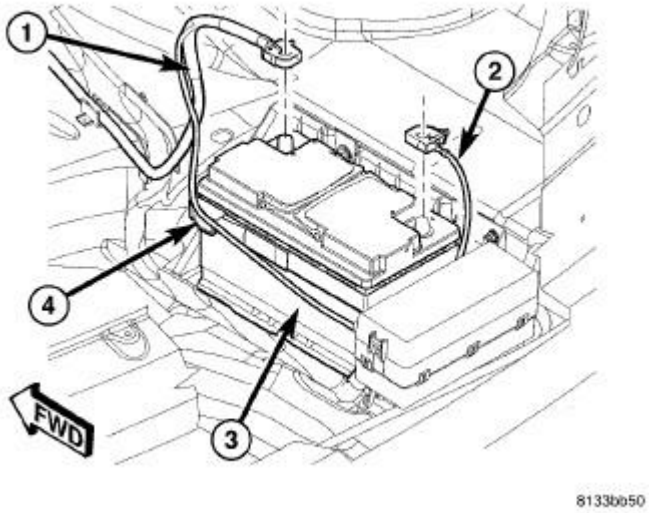

Fig. 153: BATTERY AND CABLES
Courtesy of CHRYSLER LLC

1. Disconnect and isolate negative battery cable (2) from battery post.
2. Siphon power steering fluid from pump reservoir.
3. Remove air cleaner housing and inlet tube to throttle body. Refer to **Engine/Air Intake System/BODY, Air Cleaner - Removal** .

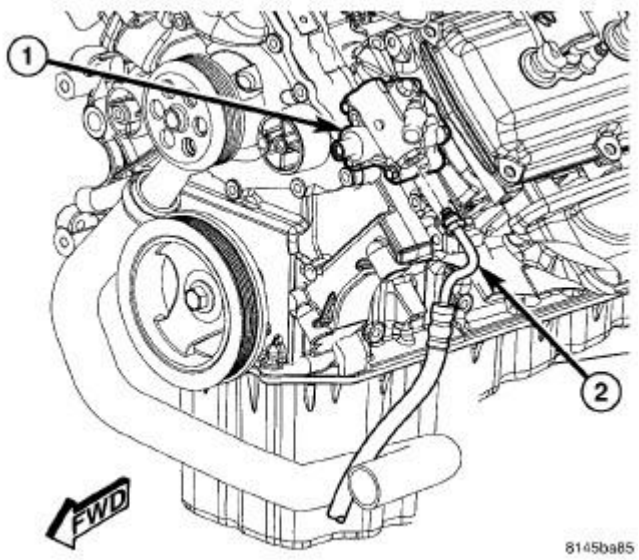

Fig. 154: PRESSURE HOSE AT PUMP - 5.7L
Courtesy of CHRYSLER LLC

4. Unthread tube nut, then remove pressure hose (2) from pump (1).
5. Raise and support vehicle. Refer to **Vehicle Quick Reference/Maintenance Schedules - Description**
6. Remove belly pan. Refer to **Body/Exterior/BELLY PAN - Removal**

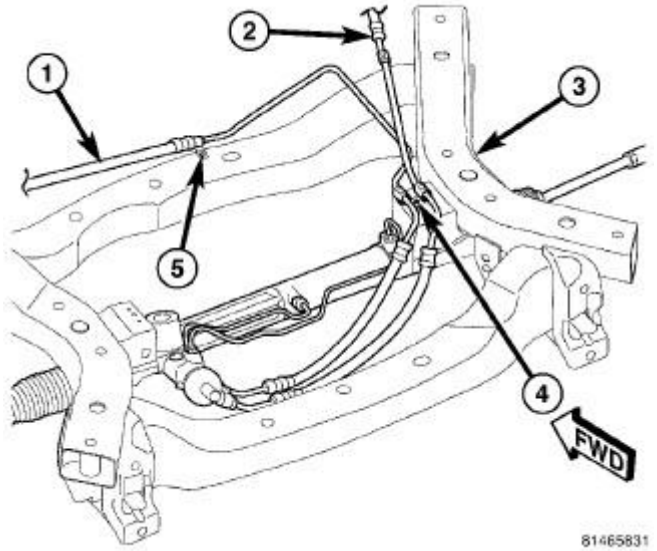

Fig. 155: HOSE ROUTING ALONG ENGINE CRADLE
Courtesy of CHRYSLER LLC

7. Remove screw (5) securing pressure hose (1) routing clamp to front of engine cradle (3).
8. Remove screw (4) fastening routing clamps securing pressure (1) and return (2) hoses to right side of engine cradle (3).

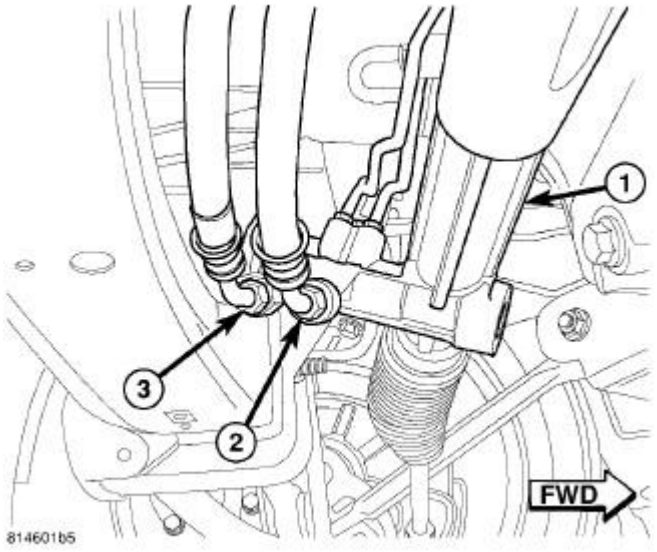

Fig. 156: HOSES AT RWD STEERING GEAR

Courtesy of CHRYSLER LLC

9. Unthread pressure hose tube nut (2) from steering gear (1).
10. Remove pressure hose from vehicle.

Installation

INSTALLATION

1. Install pressure hose in engine compartment from underneath.

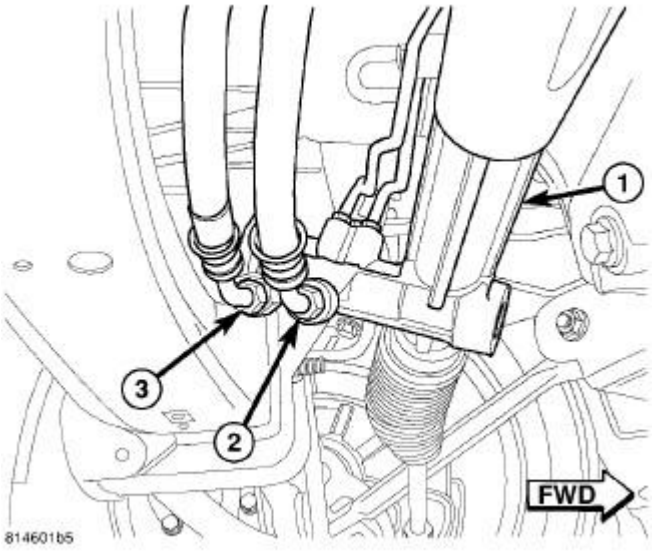

Fig. 157: HOSES AT RWD STEERING GEAR
Courtesy of CHRYSLER LLC

NOTE: Always use a NEW O-ring on the end of the pressure hose.

2. Lubricate new O-ring on steering gear end of pressure hose with clean power steering fluid.
3. Install pressure hose (2) to steering gear (1). **Do not tighten tube nut at this time.**

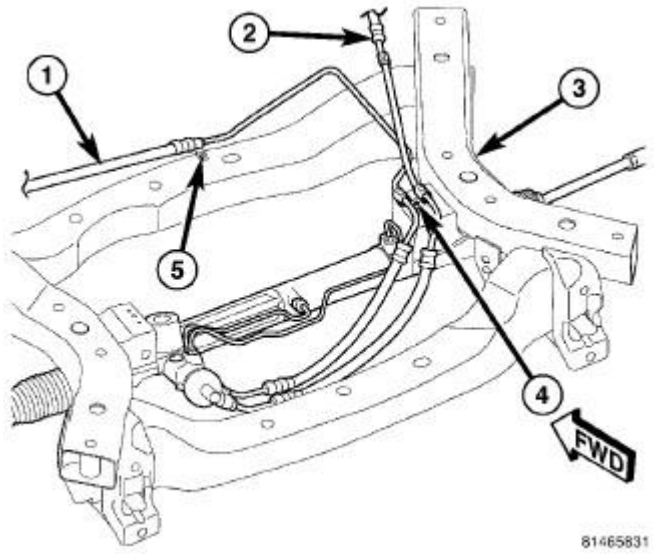

Fig. 158: HOSE ROUTING ALONG ENGINE CRADLE
Courtesy of CHRYSLER LLC

4. Route pressure hose along right side of engine cradle. Position pressure hose (1) routing clamp over return hose (2) routing clamp, then install screw (4) securing hoses to right side of engine cradle (3).
5. Route pressure hose along front of engine cradle. Install screw (5) through routing clamp securing hose to front of engine cradle (3).

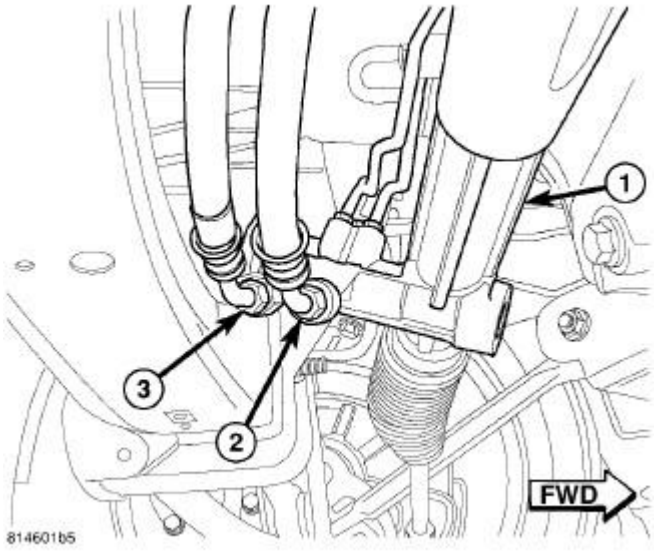

Fig. 159: HOSES AT RWD STEERING GEAR
Courtesy of CHRYSLER LLC

6. Tighten pressure hose tube nut at steering gear to 47 N.m (35 ft. lbs.).

7. Install belly pan. Refer to **Body/Exterior/BELLY PAN - Installation** .
8. Lower vehicle.

NOTE: Always use a NEW O-ring on the end of the pressure hose.

9. Lubricate new O-ring on power steering pump end of pressure hose with clean power steering fluid.

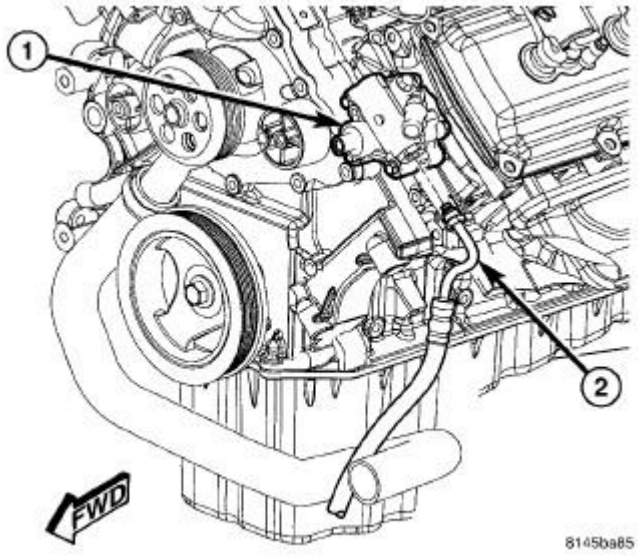

Fig. 160: PRESSURE HOSE AT PUMP - 5.7L
Courtesy of CHRYSLER LLC

10. Install pressure hose (2) to pump (1). Tighten pressure hose tube nut to 47 N.m (35 ft. lbs.).
11. Install air cleaner housing and inlet tube. Refer to **Engine/Air Intake System/BODY, Air Cleaner - Installation**

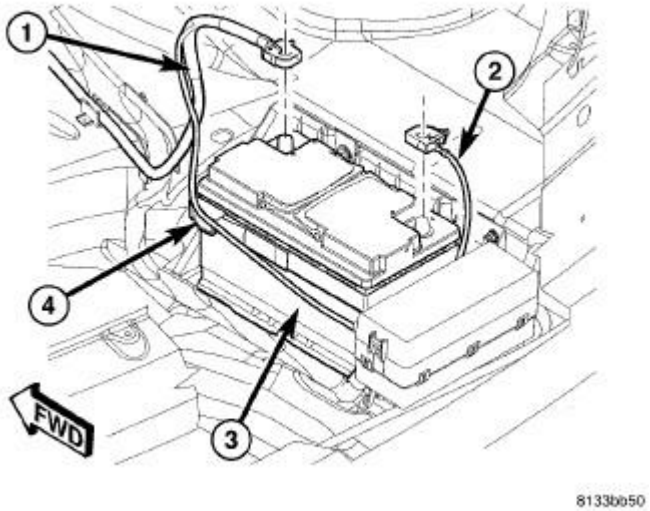

Fig. 161: BATTERY AND CABLES
Courtesy of CHRYSLER LLC

12. Connect negative battery cable (2) to battery post. It is important that this is performed properly. Refer to **Electrical/Battery System - Standard Procedure**
13. Fill and bleed power steering system. See **Steering - Standard Procedure**

HOSE, POWER STEERING, RETURN

Removal

COOLER TO RESERVOIR

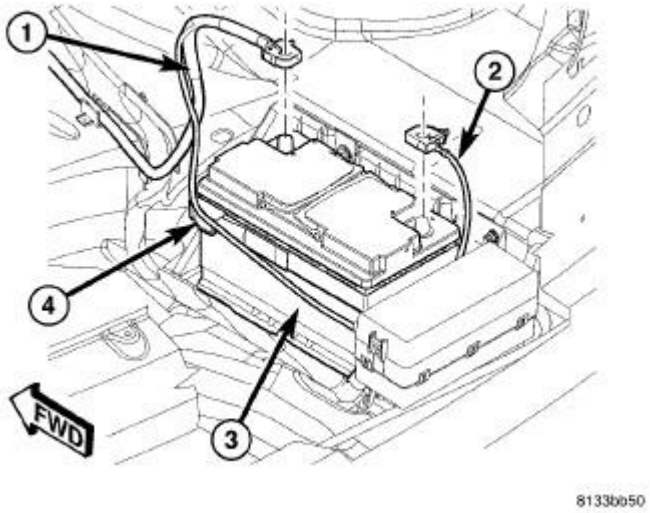

Fig. 162: BATTERY AND CABLES

Courtesy of CHRYSLER LLC

1. Disconnect and isolate battery negative cable (2) from battery post.
2. Siphon power steering fluid from pump reservoir.
3. Remove air cleaner housing and inlet tube to throttle body. Refer to **Engine/Air Intake System/BODY, Air Cleaner - Removal**

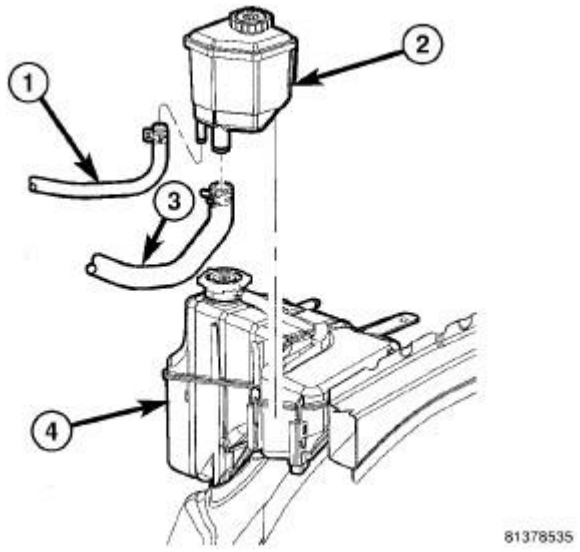

Fig. 163: REMOTE RESERVOIR
Courtesy of CHRYSLER LLC

4. Remove hose clamp, then return hose (1) at reservoir (2).
5. Remove upper radiator closer panels.

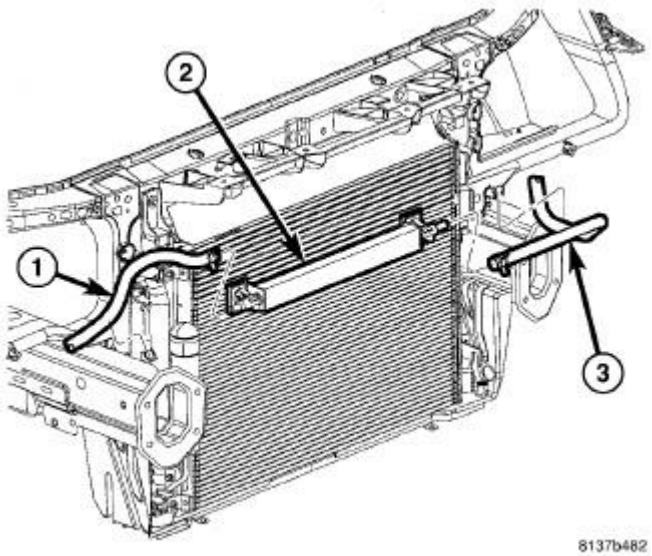

Fig. 164: FLUID COOLER AND HOSES
Courtesy of CHRYSLER LLC

6. Remove hose clamp, then cooler end of return hose (1) at cooler (2).

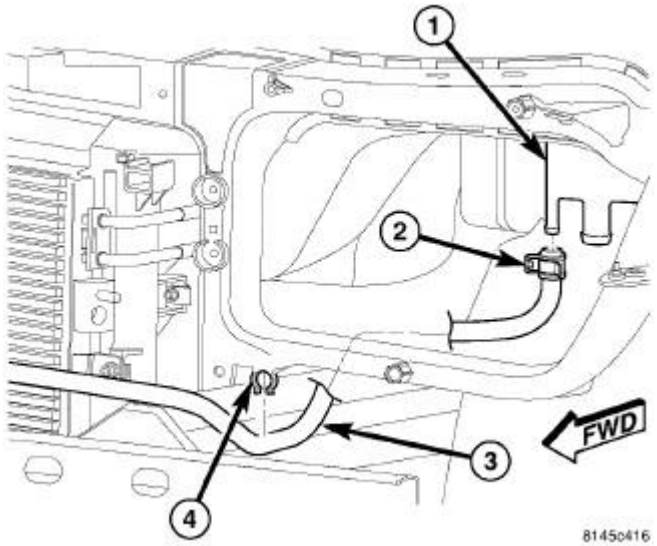

Fig. 165: RETURN HOSE ROUTING TO RESERVOIR
Courtesy of CHRYSLER LLC

7. Remove return hose from routing clip (4) on headlamp mounting crossmember.
8. Pull cooler end of return hose into engine compartment and remove hose from vehicle.

GEAR TO COOLER

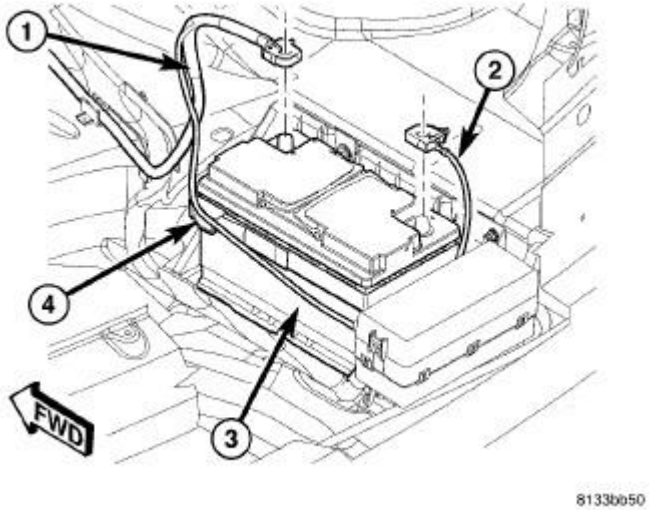

Fig. 166: BATTERY AND CABLES

Courtesy of CHRYSLER LLC

1. Disconnect and isolate negative battery cable (2) from battery post.
2. Siphon power steering fluid from pump reservoir.
3. Raise and support vehicle. Refer to **Vehicle Quick Reference/Hoisting - Standard Procedure** .
4. Remove belly pan. Refer to **Body/Exterior/BELLY PAN - Removal**

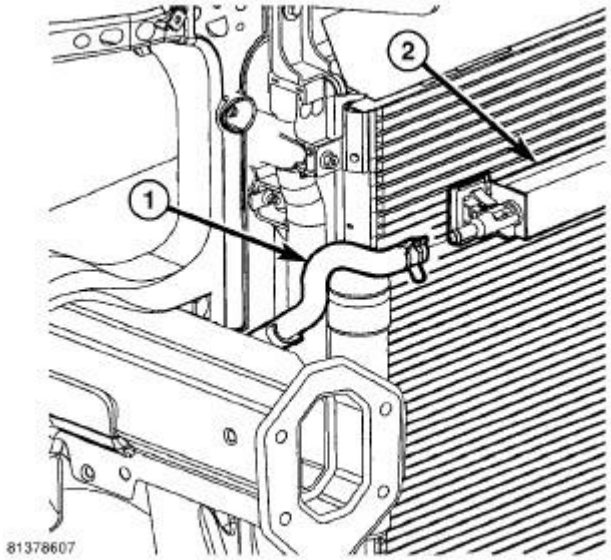

Fig. 167: RETURN HOSE RESERVOIR TO COOLER
Courtesy of CHRYSLER LLC

5. Remove hose clamp, then return hose (1) at cooler (2).

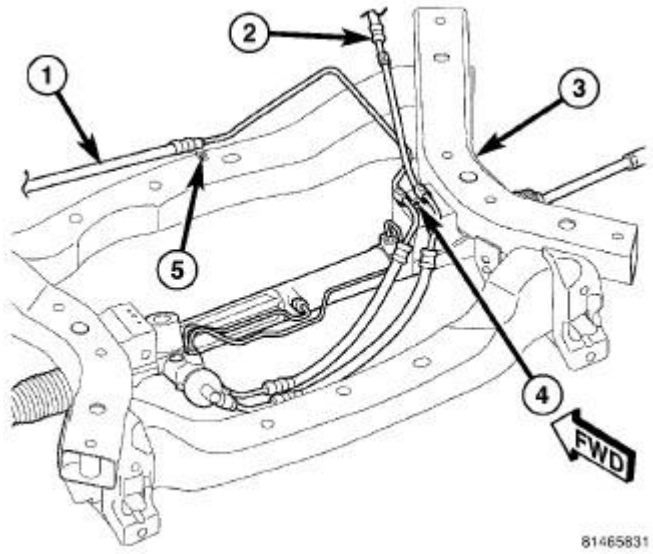

Fig. 168: HOSE ROUTING ALONG ENGINE CRADLE
Courtesy of CHRYSLER LLC

6. Remove screw (4) fastening routing clamps securing pressure (1) and return (2) hoses to right side of engine cradle (3).

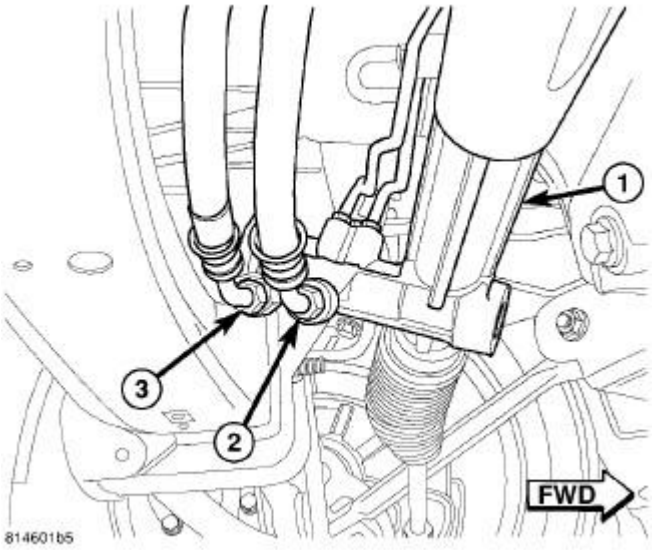

Fig. 169: HOSES AT RWD STEERING GEAR
Courtesy of CHRYSLER LLC

7. Unthread return hose tube nut (3) from steering gear (1).

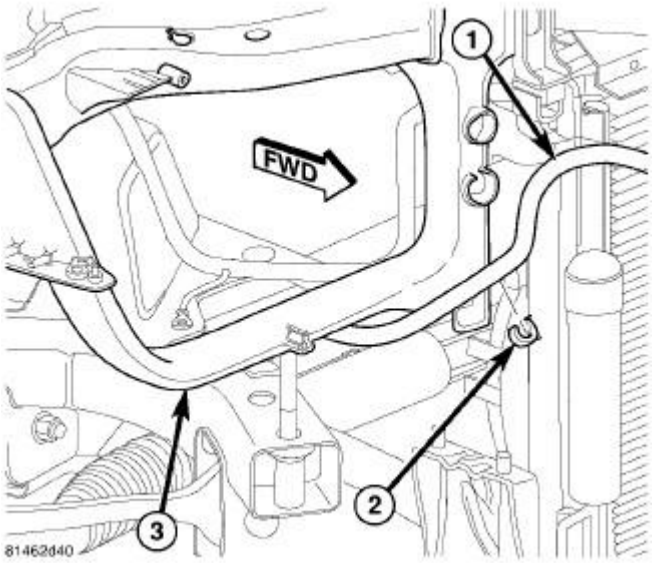

Fig. 170: RETURN HOSE ROUTING - RIGHT SIDE RADIATOR
Courtesy of CHRYSLER LLC

8. Remove return hose (1) from routing clip (2) on cooling module.
9. Remove return hose from vehicle.

Installation

COOLER TO RESERVOIR

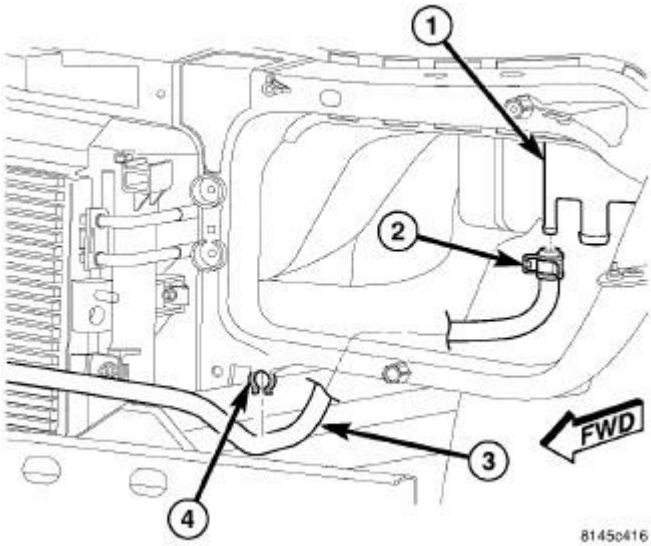

Fig. 171: RETURN HOSE ROUTING TO RESERVOIR
Courtesy of CHRYSLER LLC

1. Install cooler end of return hose (3) from engine compartment side, under headlamp mounting crossmember as shown in illustration.
2. Place hose in routing clip (4) on headlamp mounting crossmember.

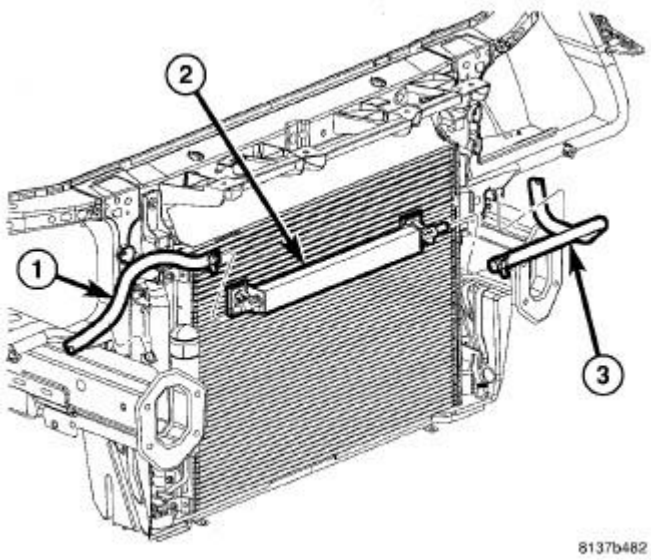

Fig. 172: FLUID COOLER AND HOSES
Courtesy of CHRYSLER LLC

NOTE: If a lengthwise paint stripe appears on the return hose (3) near the end, position that paint stripe at the top (12 O'clock position) when installed on the cooler. This positioning must be done to ensure proper hose routing.

3. Slide return hose (3) onto end of cooler (1). Install clamp securing hose in place.

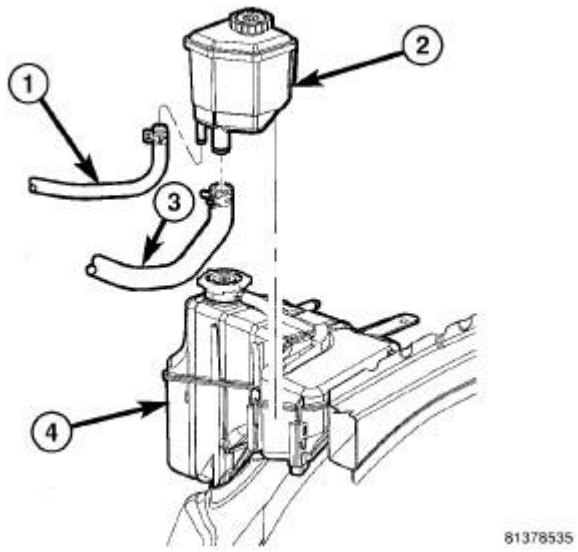

Fig. 173: REMOTE RESERVOIR
Courtesy of CHRYSLER LLC

4. Slide return hose (1) onto reservoir (2). Install clamp securing hose in place.

5. Install upper radiator closure panels.
6. Install air cleaner housing and inlet tube. Refer to **Engine/Air Intake System/BODY, Air Cleaner - Installation**

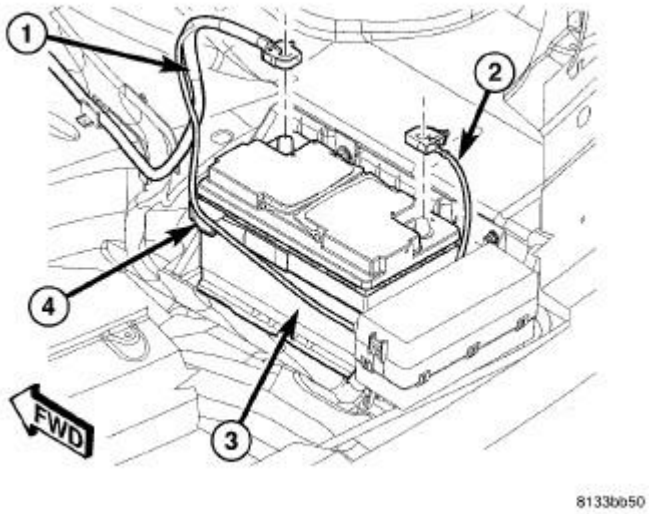

Fig. 174: BATTERY AND CABLES
Courtesy of CHRYSLER LLC

7. Connect battery negative cable (2) to battery post. It is important that this is performed properly. Refer to **Electrical/Battery System - Standard Procedure**
8. Fill and bleed power steering system. See **Steering - Standard Procedure**

GEAR TO COOLER

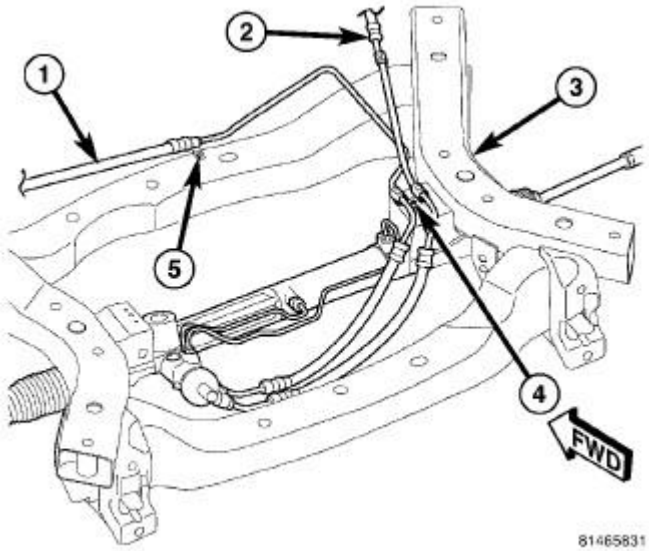

Fig. 175: HOSE ROUTING ALONG ENGINE CRADLE
Courtesy of CHRYSLER LLC

1. Route cooler end of return hose (2) over steering gear from rear by reversing the steps used in removal.

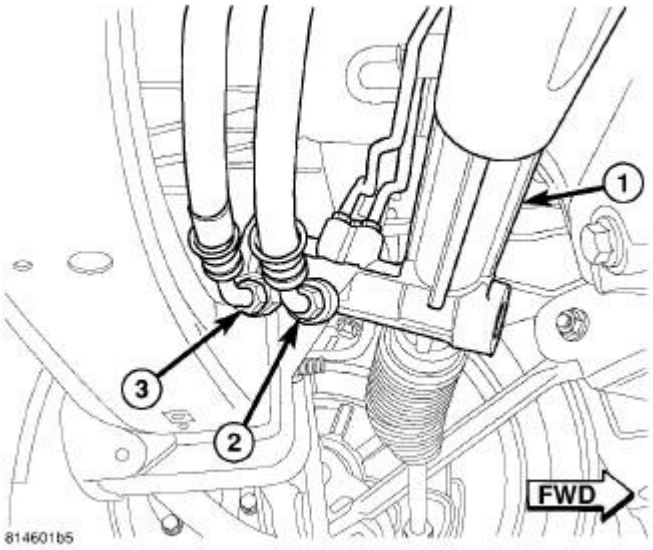

Fig. 176: HOSES AT RWD STEERING GEAR
Courtesy of CHRYSLER LLC

NOTE: Always use a NEW O-ring on the end of the return hose at the steering gear.

2. Lubricate new O-ring on steering gear end of return hose with clean power steering fluid.
3. Lift gear end of return hose to return port on steering gear. Install return hose (2) to steering gear (1). **Do not tighten tube nut at this time.**

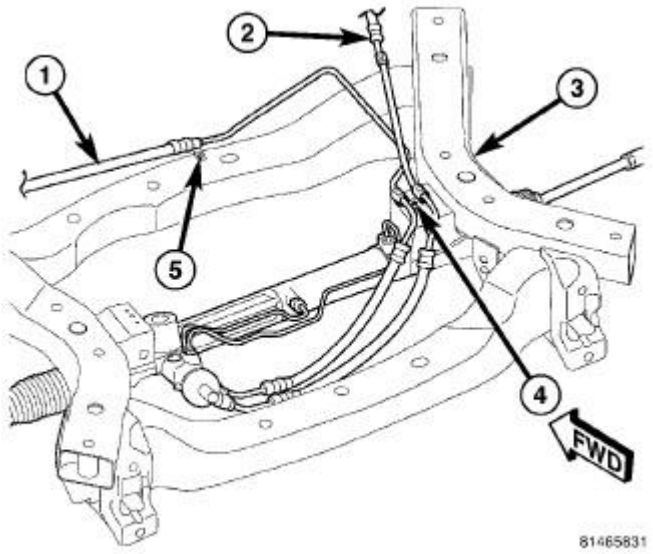

Fig. 177: HOSE ROUTING ALONG ENGINE CRADLE
Courtesy of CHRYSLER LLC

4. Route return hose along right side of engine cradle as shown in illustration. Position pressure hose (1) routing clamp over return hose (2) routing clamp, then install screw (4) securing hoses to right side of engine cradle (3).

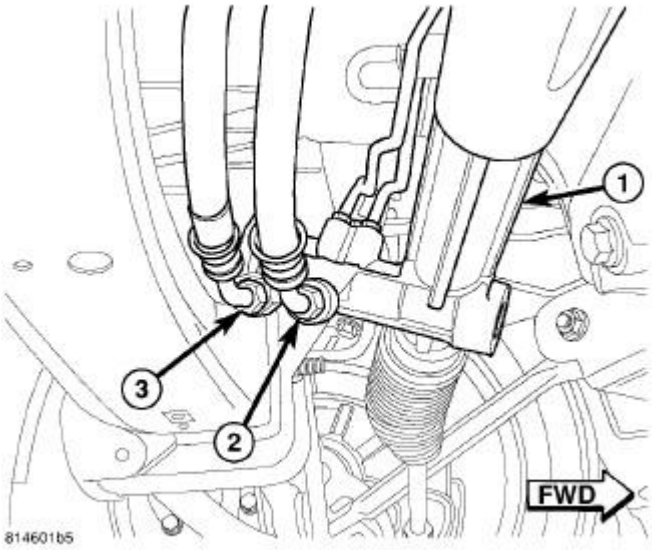

Fig. 178: HOSES AT RWD STEERING GEAR
Courtesy of CHRYSLER LLC

5. Tighten return hose tube nut at steering gear to 47 N.m (35 ft. lbs.).

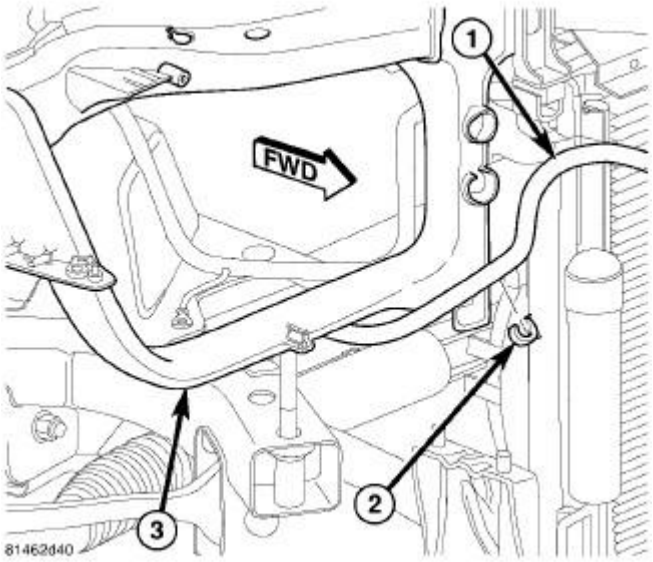

Fig. 179: RETURN HOSE ROUTING - RIGHT SIDE RADIATOR
Courtesy of CHRYSLER LLC

6. Route cooler end of return hose (1) under headlamp mounting crossmember (3) as shown in illustration.
7. Place hose in routing clip (2) on cooling module.

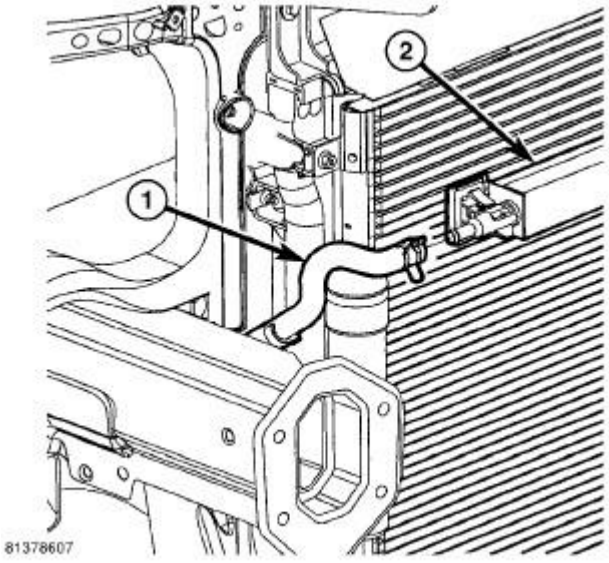

Fig. 180: RETURN HOSE GEAR TO COOLER
Courtesy of CHRYSLER LLC

8. Slide return hose (1) onto end of cooler (2). Install clamp securing hose in place.
9. Install belly pan. Refer to **Body/Exterior/BELLY PAN - Installation** .
10. Lower vehicle.

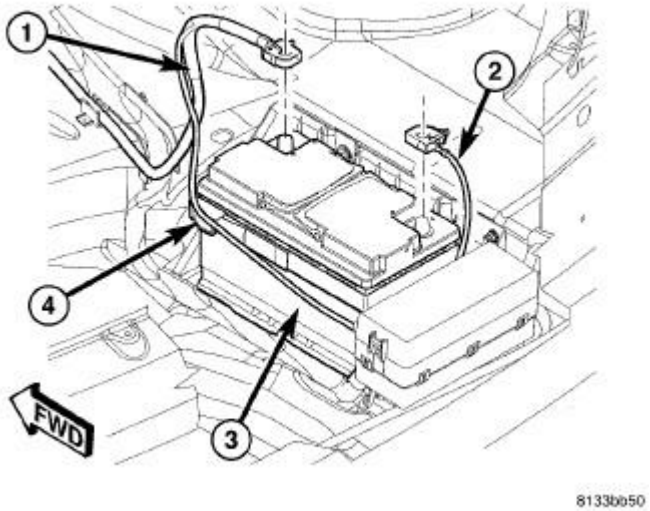

Fig. 181: BATTERY AND CABLES
Courtesy of CHRYSLER LLC

11. Connect negative battery cable (2) to battery post. It is important that this is performed properly. Refer to **Electrical/Battery System - Standard Procedure**
12. Fill and bleed power steering system. See **Steering - Standard Procedure**

HOSE, POWER STEERING, SUPPLY

Removal

REMOVAL

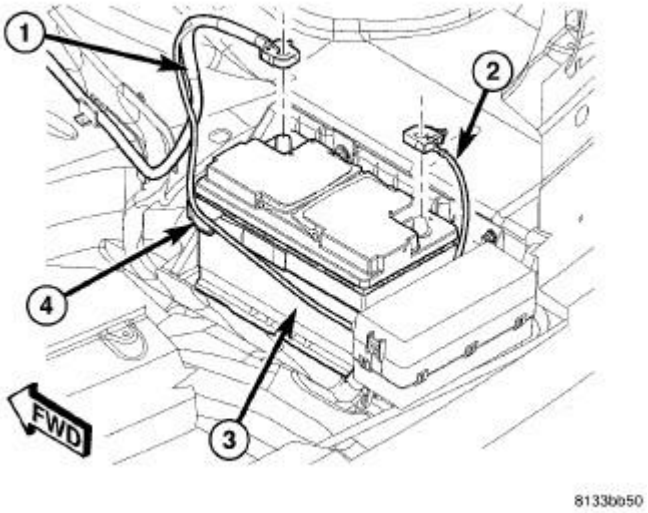

Fig. 182: BATTERY AND CABLES

Courtesy of CHRYSLER LLC

1. Disconnect and isolate negative battery cable (2) from battery post.
2. Siphon power steering fluid from pump reservoir.
3. Remove air cleaner housing and inlet tube to throttle body. Refer to **Engine/Air Intake System/BODY, Air Cleaner - Removal** .

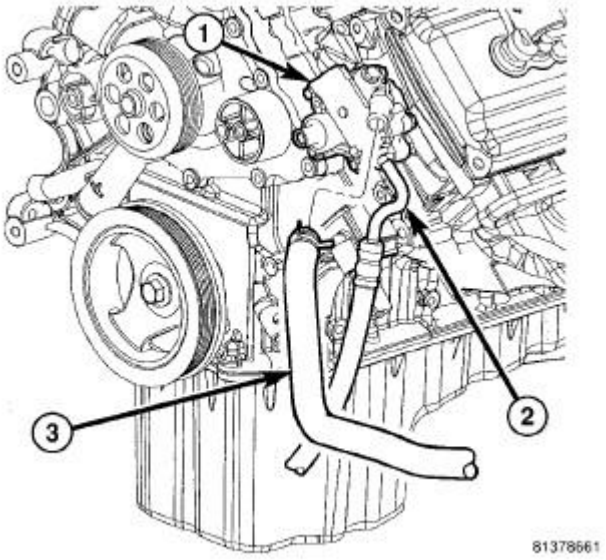

Fig. 183: SUPPLY HOSE - 5.7L
Courtesy of CHRYSLER LLC

4. 6.1L Engines - Remove hose clamp, then supply hose (3) from pump (1).

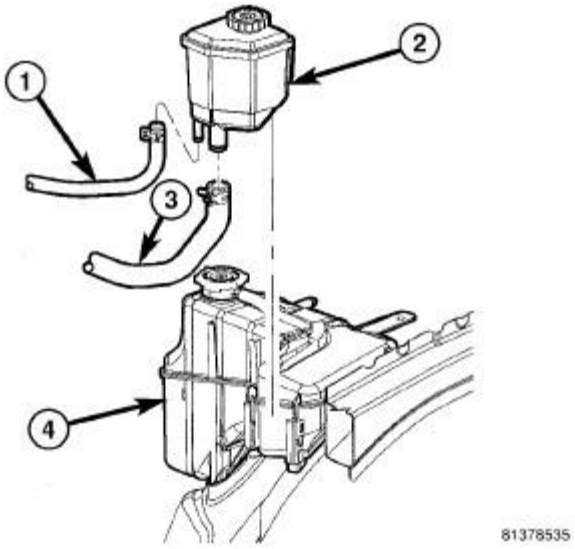

Fig. 184: REMOTE RESERVOIR

Courtesy of CHRYSLER LLC

5. Remove hose clamp, then supply hose (3) at reservoir (2).
6. Remove supply hose from vehicle.

Installation

INSTALLATION

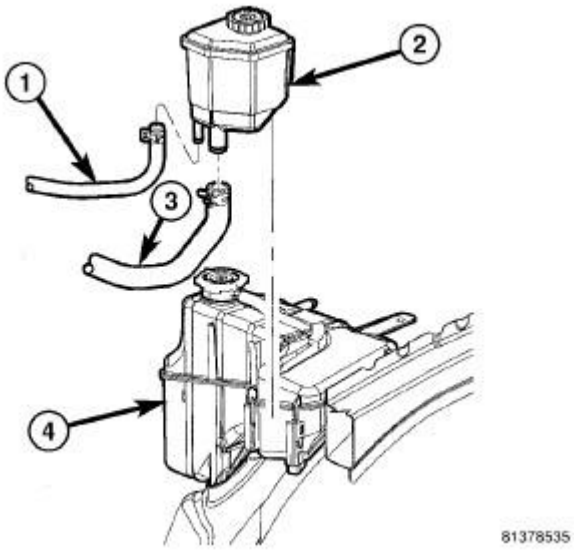

Fig. 185: REMOTE RESERVOIR
Courtesy of CHRYSLER LLC

1. Install reservoir end of supply hose (3) on reservoir hose fitting. Install clamp securing hose in place.

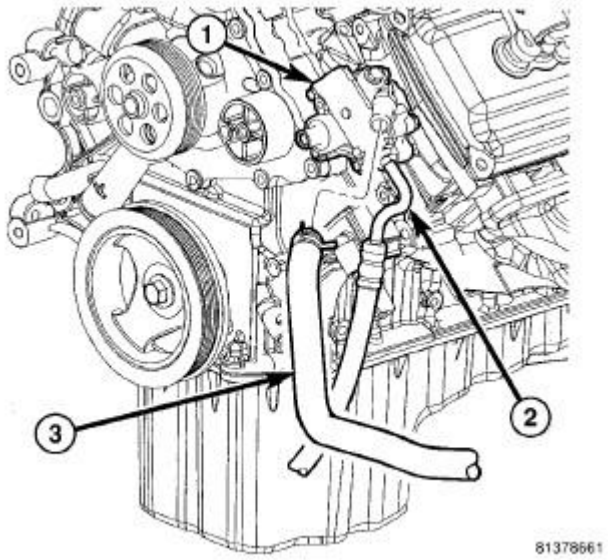

Fig. 186: SUPPLY HOSE - 5.7L
Courtesy of CHRYSLER LLC

2. Install supply hose (3) on pump (1). Install clamp securing hose in place.
3. Install air cleaner housing and inlet tube. Refer to **Engine/Air Intake System/BODY, Air Cleaner - Installation** .

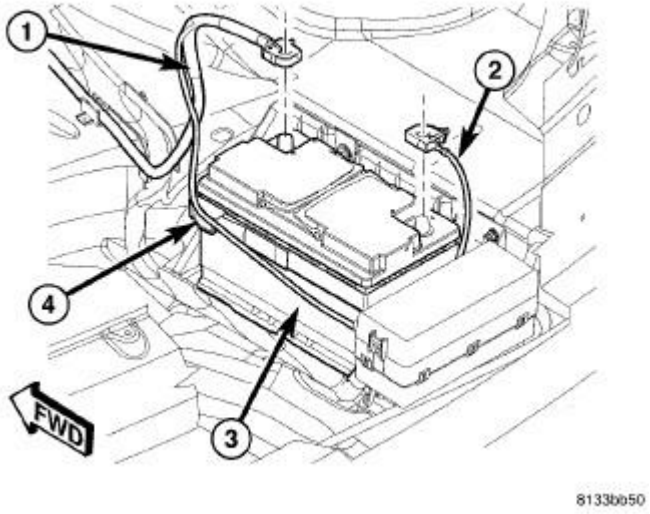

Fig. 187: BATTERY AND CABLES
Courtesy of CHRYSLER LLC

4. Connect negative battery cable (2) to battery post. It is important that this is performed properly. Refer to **Electrical/Battery System - Standard Procedure**
5. Fill and bleed power steering system. See **Steering - Standard Procedure**

PULLEY, POWER STEERING PUMP

Removal

REMOVAL

1. Remove power steering pump from engine. See **Steering/Pump - Removal**.

CAUTION: Do not hammer on power steering pump pulley or shaft to remove power steering pump pulley. Damage to pulley and power steering pump will occur.

CAUTION: It is very important to use Puller 9962, to remove pulley from power steering pump shaft. Use of other pullers can damage or break pulley and pump shaft.

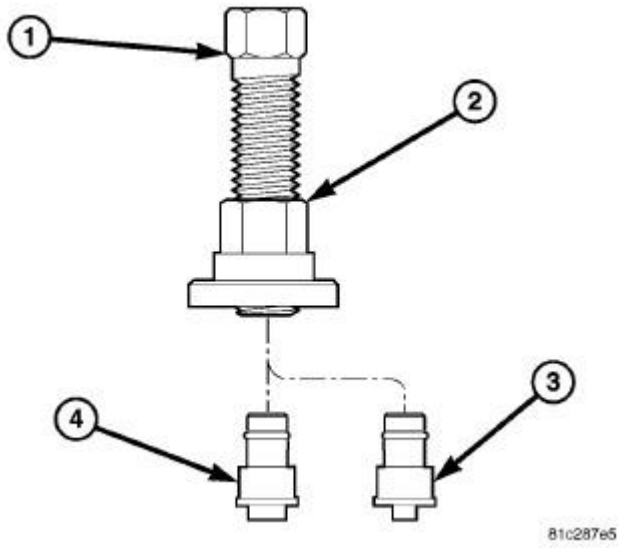

Fig. 188: BUTTON INSTALLATION ON TOOL
Courtesy of CHRYSLER LLC

2. Coat Screw-Drive (1) with lubricant and thread into Puller Body (2).

NOTE: Two Buttons come with Puller kit (9962-3 and 9962-4). Be sure to use Button that best fits end of pump shaft to avoid damage to Button or pump shaft.

3. Insert Button (4) 9962-4, into end of Screw-Drive. Be sure not to misplace ball bearing that resides behind Button.

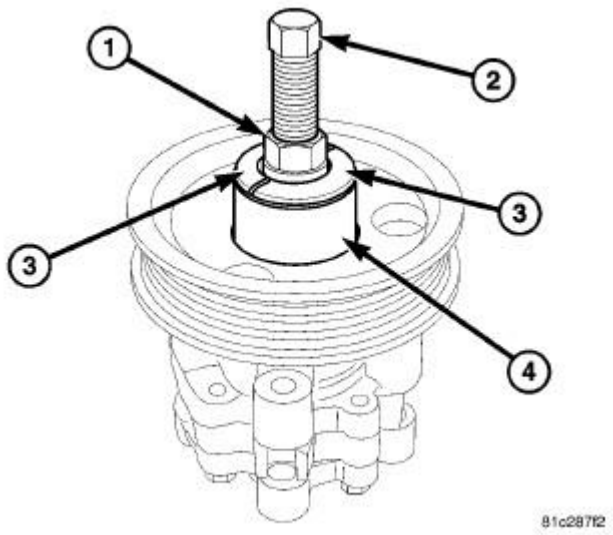

Fig. 189: TOOL 9962 INSTALLED ON PULLEY
Courtesy of CHRYSLER LLC

4. Assemble Puller 9962, over end of pump shaft and pulley hub.
   a. Place Button on end of Screw-Drive against pump shaft.
   b. Assemble Collets (3) 9962-2, surrounding Puller Body (1) and pulley hub flange, then slide the Collet Sleeve over the Collets.
   c. Hand tighten Screw-Drive (2) taking up any slack in Puller.
5. Hold Puller Body stationary while turning Screw-Drive until pulley is removed from power steering pump shaft.

NOTE: Inspect pulley. Replace if pulley is bent, cracked, or loose.

Installation

INSTALLATION

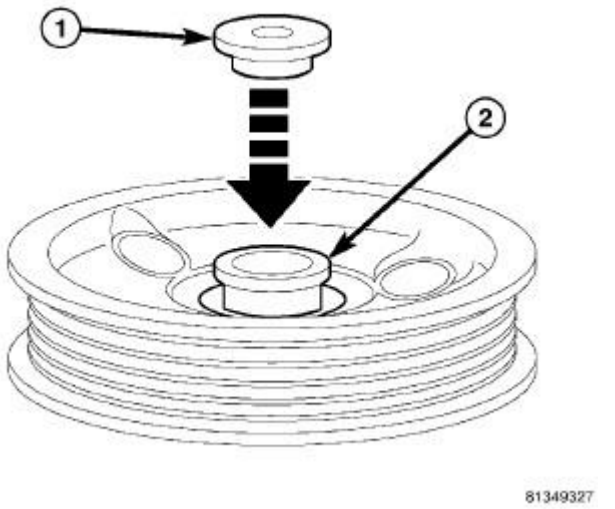

Fig. 190: INSTALLING SPACER 6936 ON PULLEY
Courtesy of CHRYSLER LLC

CAUTION: Do not hammer on power steering pump pulley (2) or pump shaft to install pulley. This action will damage pulley and power steering pump.

1. Place power steering pump pulley (2) squarely on end of power steering pump shaft.
2. Place Installation Spacer (1) 6936, on top of pump pulley (2).

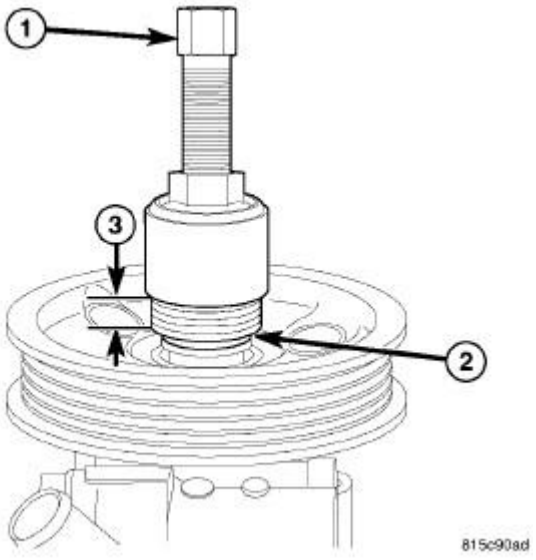

Fig. 191: INSTALL PULLEY USING C-4063C, 6936, AND WASHERS
Courtesy of CHRYSLER LLC

NOTE: **Later build pumps feature a shaft with internal threads that are not as deep as earlier production, thus requiring a stack of washers, approximately 13 mm (0.5 in.) thickness (3), placed over Spacer 6936 (2), before mounting Installer C-4063C (1) on the pump. To know if a replacement pump requires the stack of washers, measure the depth of the shaft hole. A later build pump will have a depth of 20 mm (0.78 in.) while an earlier build pump will have a depth of 32 mm (1.25 in.).**

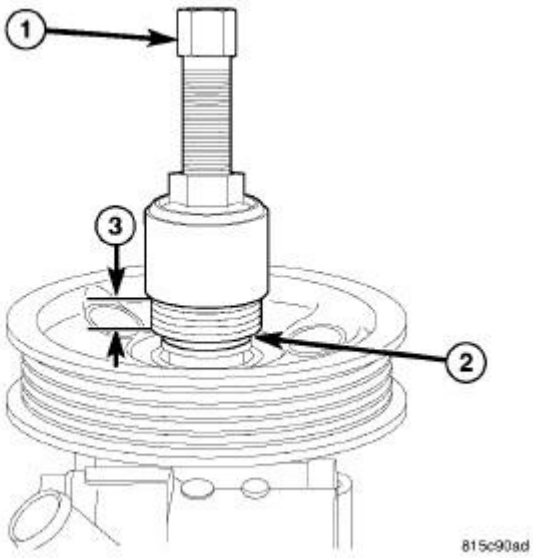

Fig. 192: INSTALL PULLEY USING C-4063C, 6936, AND WASHERS
Courtesy of CHRYSLER LLC

3. As necessary (see above note), place a stack of washers approximately 13 mm (0.5 in.) thickness (3) over Spacer 6936 (2).

NOTE: **Installer C-4063C, is a combination of Installer C-4063C, and Forcing Screw C-4063-2. It is important to use Forcing Screw C-4063-2 when performing this procedure.**

4. Thread Installer (1) C-4063C, completely into internal threads of power steering pump shaft, then rotate Installer Nut down against washers (as necessary) and Spacer (2) on pump pulley.
5. Ensuring that special tools and pulley remain aligned with pump shaft, tighten Installer Nut, forcing pulley onto power steering pump shaft until Spacer (2) comes in contact with end of pump shaft. **When Spacer (2) is against shaft of power steering pump, Installer (1) Nut will no longer rotate.**
6. Install power steering pump on engine. See **Steering/Pump - Installation**.

RESERVOIR, POWER STEERING PUMP

Removal

REMOVAL

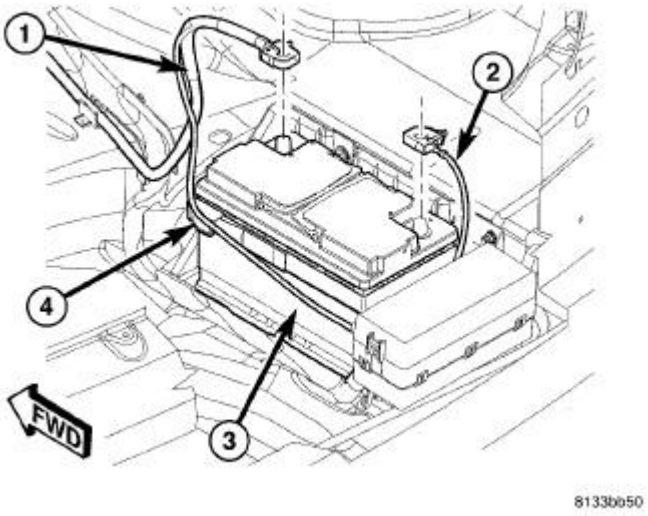

Fig. 193: BATTERY AND CABLES
Courtesy of CHRYSLER LLC

1. Disconnect and isolate the negative battery cable (2).
2. Siphon the power steering fluid from pump reservoir.
3. Remove the air filter housing and clean air tube to throttle body. Refer to **Engine/Air Intake System/BODY, Air Cleaner - Removal**

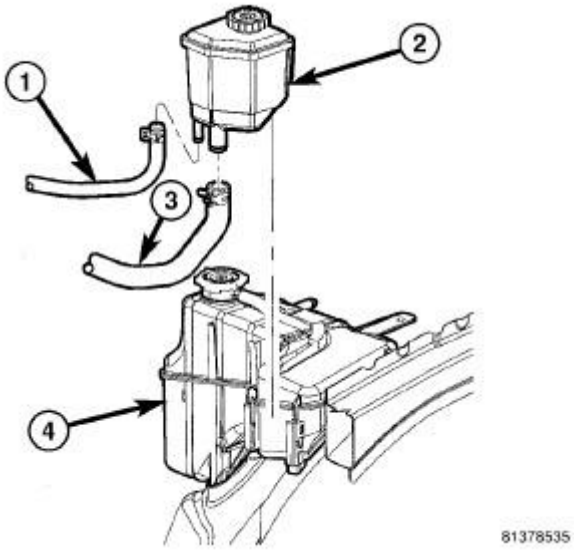

Fig. 194: REMOTE RESERVOIR
Courtesy of CHRYSLER LLC

4. Remove the supply hose (3) retaining clamp at reservoir (2) and disconnect the hose.
5. Remove the return hose (1) retaining clamp at reservoir (2) and disconnect the hose.
6. Remove the reservoir (2) from the coolant bottle (4) by sliding it up and out of the guide.

Installation

INSTALLATION

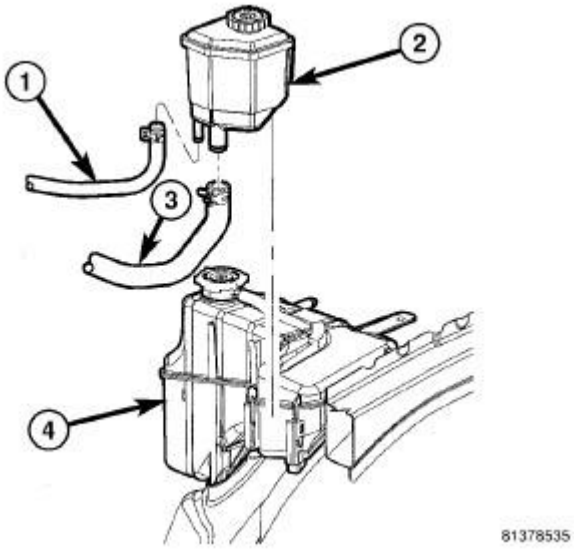

Fig. 195: REMOTE RESERVOIR
Courtesy of CHRYSLER LLC

1. Install the reservoir (2) onto the coolant bottle (4) by sliding it into the guide and lock in place.
2. Install the return hose (1) on the reservoir hose fitting and securely tighten clamp.
3. Install the supply hose (3) on reservoir hose fitting and securely tighten clamp.
4. Install the air filter assembly and clean air tube. Refer to **Engine/Air Intake System/BODY, Air Cleaner - Installation**

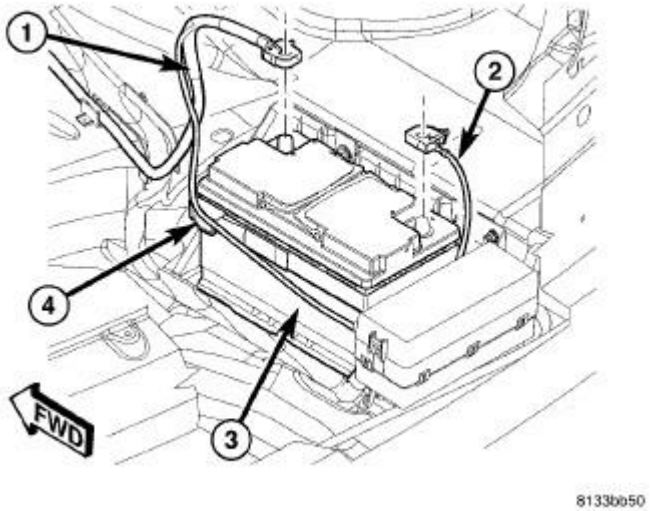

Fig. 196: BATTERY AND CABLES
Courtesy of CHRYSLER LLC

5. Connect the negative battery cable (2).
6. Fill and bleed the power steering system. See **Steering - Standard Procedure**

ACCESSORIES AND EQUIPMENT

Power Top - Service Information - Challenger

DESCRIPTION

DESCRIPTION

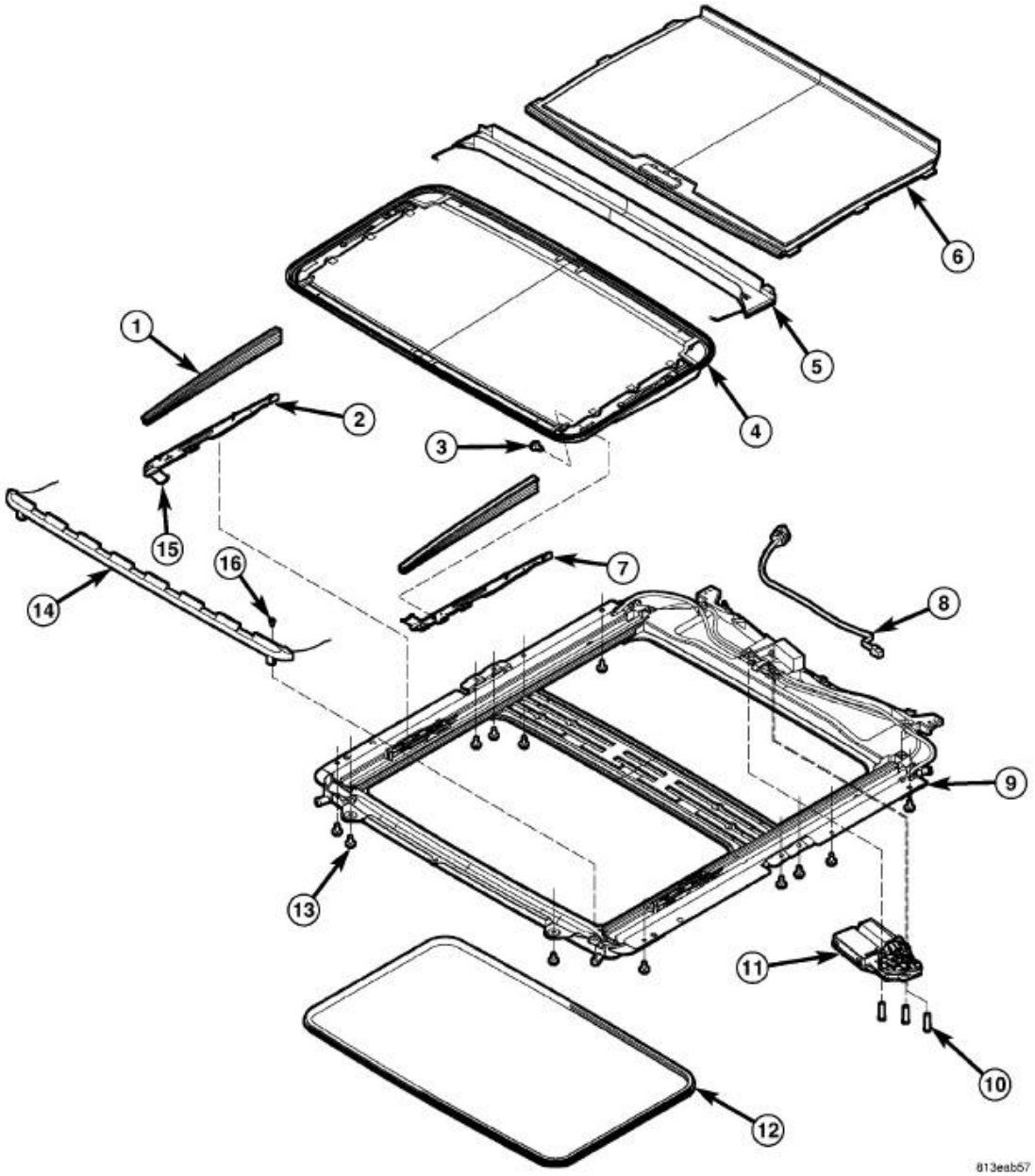

Fig. 1: Exploded View Of Power Sunroof System
Courtesy of CHRYSLER LLC

The power sunroof system allows the sunroof to be opened, closed or placed in the vent position

electrically by actuating a switch in the overhead console. The sunroof system receives battery feed through a fuse in the Power Distribution Center (PDC). The sunroof will operate normally with the key in any position while the Accessory Delay system is active.

The sunroof glass panel tilts upward at the rear for ventilation and slides rearward under the roof when open. The panel seals flush with the roof in the closed position to eliminate wind noise. The sunroof includes a manual-sliding sunshade to cover the deep-tinted glass panel.

In addition to the standard power sunroof operation, this vehicle offers several additional features. There is an express (one-touch) opening and closing feature as well as Excessive Force Limitation (EFL). The EFL function detects obstacles trapped between the glass and the vehicle roof during a closing motion. Upon sensing an obstacle the EFL function will reverse direction of the glass to allow removal of the obstacle.

The main components of the power sunroof system are:

- The motor/module assembly
- The power sunroof glass and frame assembly
- The power sunroof switch
- The manual-sliding sunshade

OPERATION

OPERATION

This vehicle has a vent, tilt and slide power sunroof system with express (one-touch) open and closing feature. The sunroof system receives constant battery feed through a fuse in the Power Distribution Center (PDC). The sunroof will operate normally with the key in any position while the Accessory Delay system is active. If the sunroof is moving when the key is turned to the START position (crank engine), all motions stop until the key is released, then the previously requested sunroof motion will resume. The sunroof will also complete a requested motion if the Accessory Delay system goes inactive while the motion is in progress.

A combination push-button and rocker switch module mounted in the overhead console controls sunroof operation. The sunroof switch is a rocker design with a push button in the center of the two halves of the rocker. Pressing the rocker towards the front of the car commands the sunroof closed. Pressing the rocker towards the rear of the car commands the sunroof open. Pressing the center push button commands the sunroof up into the vent position (Rear of sunroof glass raises above the vehicle roof with glass still covering the sunroof opening). All switch commands operate with the glass starting in any position. See **Electrical - Power Systems/Power Top/SWITCH, Sunroof - Operation** for additional information.

An electronic control system, integral to the motor/module assembly, provides the express open and close functions. Pressing the "open" or "close" end of the rocker switch moves the sunroof glass panel to the full open or full closed position, respectively. During express closing, anytime an obstacle is detected in the way of the glass, the motor will stop and reverse travel to avoid pinching an

occupant's finger, ice in the track, etc. This function is called Excessive Force Limitation (EFL). There are two methods of overriding the EFL function.

1. When three EFL events occur without the glass being allowed to fully close, the next close attempt will only move while the close switch is continuously actuated. This allows the sunroof to be forced closed if multiple close attempts fail.
2. If the sunroof close switch is continuously actuated during an EFL event, through the reversal, and during a two second wait time, then continuing to hold the close switch will cause the roof to move towards close with the EFL protection disabled. This allows the sunroof to be forced closed if it is known that a reversal will occur.

While in EFL override, the closing motion will cease if the sunroof switch is released at any time.

The motor/module is programmed to learn the speed required to drive the panel based on position and recalibrates itself as needed. If the sunroof becomes uncalibrated, it will only respond to the vent switch. If the vent switch is pressed, the glass will move toward vent; if the switch is released, all motion stops. In the event that the sunroof system becomes uncalibrated perform the sunroof position calibration procedure. See **Electrical - Power Systems/Power Top/MOTOR, Sunroof - Standard Procedure**.

DIAGNOSIS AND TESTING

POWER TOP - SUNROOF

Any diagnosis of the power sunroof system should begin with the use of a scan tool and the proper Diagnostic Procedures Information. The scan tool can provide confirmation that the Controller Area Network (CAN) Data Bus is functional, that all of the electronic modules are sending and receiving the proper messages on the CAN Data Bus, and that the power sunroof motor is being sent the proper hard wired output by the sunroof switch.

For complete circuit diagrams, refer to **SYSTEM WIRING DIAGRAMS** . The wiring information includes wiring diagrams, proper wire and connector repair procedures, details of wire harness routing and retention, connector pin-out information and location views for the various wire harness connectors, splices and grounds.

Refer to the appropriate diagnostic service information.

MOTOR, SUNROOF

DIAGNOSIS AND TESTING

MOTOR/MODULE - SUNROOF

Any diagnosis of the power sunroof system should begin with the use of a scan tool and the proper Diagnostic Procedures Information. The scan tool can provide confirmation that the Controller Area Network (CAN) Data Bus is functional, that all of the electronic modules are sending and receiving the proper messages on the CAN Data Bus, and that the power sunroof motor is being sent the proper

hard wired output by the sunroof switch.

For complete circuit diagrams, refer to **SYSTEM WIRING DIAGRAMS** . The wiring information includes wiring diagrams, proper wire and connector repair procedures, details of wire harness routing and retention, connector pin-out information and location views for the various wire harness connectors, splices and grounds.

Refer to the appropriate diagnostic service information.

STANDARD PROCEDURE

SUNROOF POSITION CALIBRATION

Press the power sunroof switch (Open, Closed, and Vent). If no movement occurs when either the open switch or closed switch is pressed, but the system does move when the vent button is pressed and held, the system is not calibrated. Perform the following procedure to position calibrate the power sunroof system.

1. Turn the ignition to the RUN position.
2. Press the vent button on the power sunroof switch and hold until the sunroof glass panel has moved to the full vent position and the motor movement has stopped for at least 1 second.
3. Press the close switch on the power sunroof switch and hold for a moment (at least 100ms) and release. The sunroof glass panel should continue travel to the full close position. If the sunroof glass panel does not return to the full close position, refer to the appropriate diagnostic service information for full system diagnosis.
4. Verify proper system operation.

EXCESSIVE FORCE LIMITATION (EFL) CALIBRATION

NOTE: Verify the battery is in good condition prior to performing this procedure. Do not leave the vehicle on a battery charger while performing this procedure. If the voltage at the sunroof motor/module drops below 11 volts or exceeds 15 volts at anytime while this procedure is being performed, the Excessive Force Limitation (EFL) function will not be properly calibrated.

1. Turn the ignition to the RUN position.
2. Press the vent button on the power sunroof switch and hold until the sunroof glass panel has moved to the full vent position and the motor movement has stopped for at least 1 second.
3. Press the close position on the power sunroof switch and release. The sunroof glass panel should continue travel to the full closed position. **This will be considered the first sunroof closed position in a series of four sunroof closes.**
4. Press the vent button on the power sunroof switch and release. The sunroof glass panel should move to the full vent position. After the sunroof motor/module has stopped, press the close position on the power sunroof switch and release. The sunroof glass panel should continue travel to the full closed position. **This will be considered the second sunroof closed position in a series of four sunroof closes.**

5. Continue to move the sunroof glass to the "vent" then "closed" positions two more times so that the sunroof glass has moved to the closed position a total of four times starting with the first sunroof close in step 3.
6. Press the open position on the power sunroof switch and release. The sunroof glass panel should continue travel to the full open position.
7. Press the close position on the power sunroof switch and release. The sunroof glass panel should continue travel to the full closed position. **This will be considered the first sunroof closed position in a series of five sunroof closes.**
8. Press the open position on the power sunroof switch and release. The sunroof glass panel should move to the full open position. After the sunroof motor/module has stopped, press the close position on the power sunroof switch and release. The sunroof glass panel should continue travel to the full closed position. **Continue to move the sunroof glass to the "open" then "closed" position four more times so that the sunroof glass has moved to the closed position a total of five times starting with the first sunroof close in step 7.**

Verify proper EFL calibration by placing a standard pencil at the front of the sunroof and then moving the sunroof to the full closed position. The sunroof should reverse direction upon contact without damage to the pencil.

REMOVAL

REMOVAL

1. Disconnect the battery negative cable.
2. Remove the vehicle headliner. Refer to **Body/Interior/HEADLINER - Removal** .

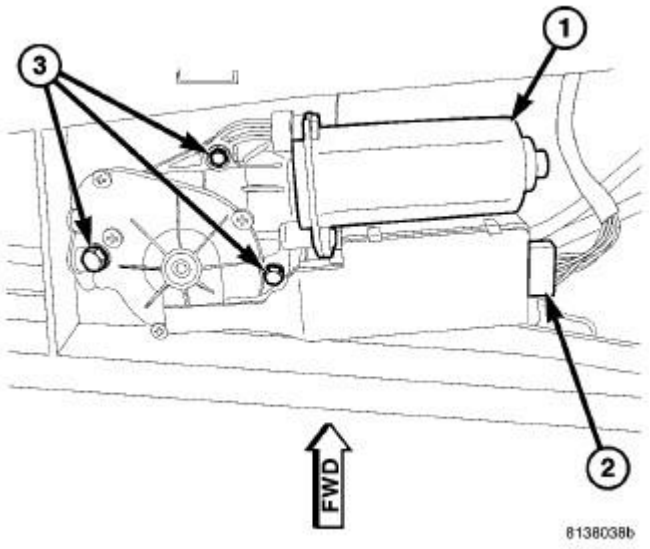

Fig. 2: Locating Sunroof Motor/Module
Courtesy of CHRYSLER LLC

3. Remove the power sunroof motor/module electrical connector (2).
4. Remove the retaining screws (3) and remove the motor/module (1) from the vehicle.

INSTALLATION

INSTALLATION

WARNING: The Excessive Force Limitation (EFL) feature must be calibrated any time a sunroof motor/module is replaced with a new component. Failure to perform this procedure could result in vehicle damage and/or personal injury. See Electrical - Power Systems/Power Top/MOTOR, Sunroof - Standard Procedure for CALIBRATION) for the appropriate procedure.

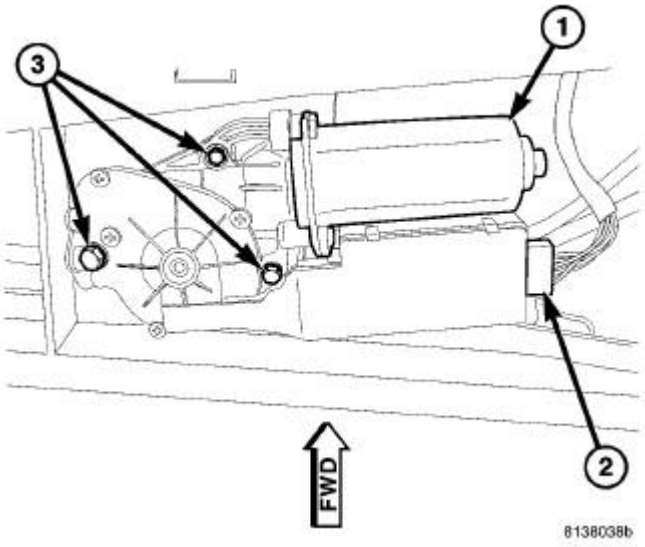

Fig. 3: Locating Sunroof Motor/Module
Courtesy of CHRYSLER LLC

1. Position the power sunroof motor/module (1) in the vehicle.
2. Install the motor/module retaining screws (3). Tighten the screws to 4 N.m (35 in. lbs.).
3. Connect the motor/module electrical connector (2).
4. Connect the battery negative cable and move the sunroof through one open and close cycle to confirm proper system operation.
5. Install the vehicle headliner. Refer to **Body/Interior/HEADLINER - Installation** .
6. Perform the sunroof position calibration. See **Electrical - Power Systems/Power Top/MOTOR, Sunroof - Standard Procedure**.
7. Perform the Excessive Force Limitation (EFL) calibration. See **Electrical - Power Systems/Power Top/MOTOR, Sunroof - Standard Procedure** for CALIBRATION).
8. Verify proper operation of the power sunroof system.

SWITCH, SUNROOF

DESCRIPTION

DESCRIPTION

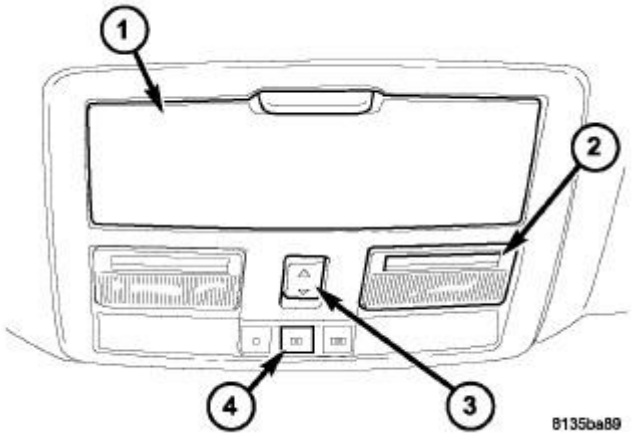

Fig. 4: Identifying Overhead Console Components
Courtesy of CHRYSLER LLC

The power sunroof switch (3) is a combination push-button and rocker switch module mounted in the overhead console. The sunroof switch is a direct contact unit that is directly wired to the sunroof motor/module assembly. The sunroof switch performs the following functions:

- Power sunroof open (back of switch pushed)
- Power sunroof closed (front of switch pushed)
- Power sunroof vent (switch center button pushed)

The power sunroof switch is part of the overhead console assembly and cannot be replaced separately. If the switch is damaged or inoperative the overhead console must be replaced. Refer to Electrical - Message Systems/Overhead Console - Removal .

OPERATION

OPERATION

The power sunroof switch is hard wired to the sunroof motor/module assembly. The switch receives battery current from the motor/module when the ignition switch is in the RUN and ACCESSORY positions or the vehicle Accessory Delay System is active. When one of the switch positions is pressed it sends battery current back to the motor/module, signaling it to move the power sunroof to the appropriate position. The motor/module will perform one of the following functions:

- Power sunroof open (back of switch pushed)

- Power sunroof closed (front of switch pushed)
- Power sunroof vent (switch center button pushed)

DIAGNOSIS AND TESTING

SWITCH - POWER SUNROOF

Any diagnosis of the power sunroof system begins with the use of a scan tool and the proper Diagnostic Procedures Information. The scan tool provides confirmation that the Controller Area Network (CAN) data bus circuit is functional, that all of the electronic modules are sending and receiving the proper messages on the CAN data bus, and that the sunroof switch is sending the proper hardwired output to the power sunroof motor/module assembly.

For complete circuit diagrams, refer to **SYSTEM WIRING DIAGRAMS** . The wiring information includes wiring diagrams, proper wire and connector repair procedures, details of wire harness routing and retention, connector pin-out information and location views for the various wire harness connectors, splices and grounds. If completing the appropriate diagnostic information results in the sunroof switch being inoperative, perform the following test prior to switch replacement.

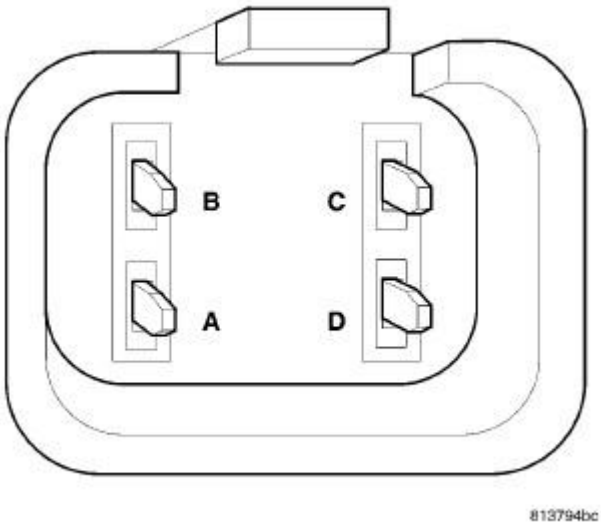

Fig. 5: Power Sunroof Switch Wire Harness Connector
Courtesy of CHRYSLER LLC

1. Disconnect and isolate the battery negative cable.
2. Remove the overhead console. Refer to **Electrical - Message Systems/Overhead Console - Removal** .
3. Disconnect the power sunroof switch wire harness connector.
4. Using an ohmmeter, test the continuity of the power sunroof switch in each switch position. Refer to the **POWER SUNROOF SWITCH CONTINUITY TABLE**. If OK, inspect the wiring harness and connectors for damage. Use a scan tool and the proper Diagnostic Procedures

Information to complete diagnosis of the power sunroof system. If not OK, replace the overhead console.

POWER SUNROOF SWITCH CONTINUITY TABLE

SWITCH POSITION	CONTINUITY BETWEEN PINS
OFF	NO CONTINUITY
SUNROOF OPEN	B AND D
SUNROOF CLOSED	B AND C
SUNROOF VENT	B AND A

RESTRAINTS

Service Information - Challenger

DESCRIPTION

DESCRIPTION

The Occupant Restraint System include both active and passive types. Active restraints require the occupants to take some action to employ, such as fastening a seat belt; while passive restraints require no action by the occupants.

ACTIVE RESTRAINTS

The active restraints include:

- **Front Seat Belts** - Both front seats are equipped with three-point seat belt systems using lower B-pillar mounted inertia latch-type emergency locking retractors, height-adjustable upper B-pillar mounted turning loops, a traveling lower seat belt anchor secured to the outboard side of the seat frame, and a traveling end-release seat belt buckle secured to the inboard side of the seat frame. The driver side front seat belt retractor includes an integral seat belt switch that detects whether the driver side front seat belt has been fastened.
- **Second Row Seat Belts** - All three second row seats are equipped with three-point seat belt systems. The outboard seat belts use lower C-pillar mounted inertia latch-type emergency locking retractors, self-cinching latch plates for compatibility with child seats, and fixed lower seat belt anchors secured to the floor panel. The center position retractor is secured within the center rear seat back panel. The fixed lower seat belt anchor and the fixed end-release buckle are both secured to the floor panel.
- **Child Restraint Anchors** - All vehicles are equipped with three, fixed-position, child seat upper tether anchors for the second row seating. These upper anchors are integral to the rear shelf panel. Two lower anchors are also provided for each second row seat. These lower anchors are accessed from the front of the rear seat where the seat back meets the seat cushion.

PASSIVE RESTRAINTS

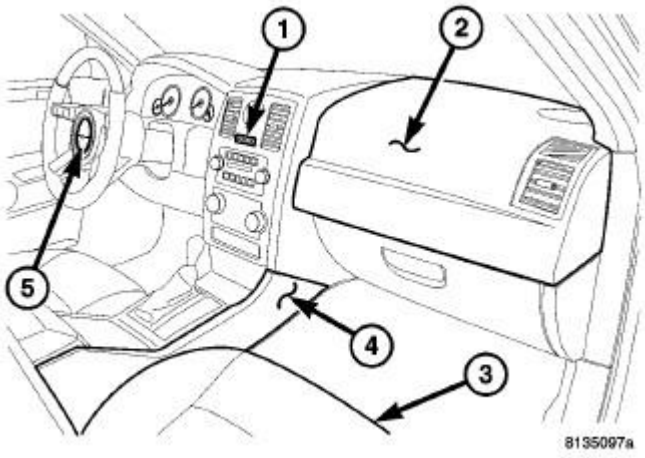

Fig. 1: Passive Restraints
Courtesy of CHRYSLER LLC

The passive restraints include the following:

- **Dual Front Airbags** - Multi-stage driver and front passenger airbags are standard in this model. This airbag system is a passive, inflatable, Supplemental Restraint System (SRS) and vehicles with this equipment can be readily identified by the "SRS - AIRBAG" logo molded into the driver airbag trim cover in the center of the steering wheel and also into the passenger airbag door on the top of the instrument panel above the glove box. Vehicles with the airbag system can also be identified by the airbag indicator, which illuminates in the Electro-Mechanical Instrument Cluster (EMIC) for about seven seconds as a bulb test each time the ignition switch is turned to the ON position.A pyrotechnic-type seat belt tensioner is also integral to the driver and passenger front seat belt retractors to work in conjunction with the dual front airbags.
- **Curtain Airbags** - Curtain airbags are available when the vehicle is equipped with dual front airbags. This airbag system is a passive, inflatable, SRS and can be readily identified by a molded identification trim button with the "SRS - AIRBAG" logo located on the headliner above each B-pillar.



8098029e

Fig. 2: Identifying SRS Airbag Label
Courtesy of CHRYSLER LLC

The SRS includes the following major components, which are described in further detail elsewhere in this service information:

- **Airbag Indicator** - The airbag indicator (1) is integral to the EMIC, which is located on the instrument panel in front of the driver.
- **Clockspring** - The clockspring is located near the top of the steering column, directly beneath the steering wheel.
- **Curtain Airbag** - In vehicles equipped with this option, a curtain airbag is secured to each inside roof side rail, and extends from the A-pillar to the C-pillar. The curtain airbags are concealed above the headliner trim.
- **Driver Airbag** - The driver airbag (5) is located in the center of the steering wheel, beneath the driver airbag trim cover.
- **Driver Knee Blocker** - The driver knee blocker is a structural unit secured to the rear of, and integral to, the instrument panel steering column opening cover.
- **Front Impact Sensor** - Two front impact sensors are used on vehicles equipped with dual front airbags, one left side and one right side. One sensor is located on the rear of each vertical member of the radiator support.
- **Occupant Restraint Controller** - The Occupant Restraint Controller (ORC) (4) is mounted on the floor panel transmission tunnel in front of the transmission gear selector, and is concealed below the instrument panel.
- **Passenger Airbag** - The passenger airbag (2) is located in the instrument panel, beneath the passenger airbag door on top of the instrument panel above the glove box on the passenger side of the vehicle.
- **Passenger Knee Blocker** - The passenger knee blocker is a structural reinforcement that is integral to, and concealed within, the glove box door.
- **Seat Airbags** - Seat integrated side airbags are standard equipment in all export market vehicles except Mexico. This airbag system consists of passive, inflatable, SRS components. Vehicles with this equipment can be readily identified by a sewn tag with the **SRS - AIRBAG** logo located on the outboard side of the front seat back trim cover.
- **Seat Belt Tensioner** - A seat belt tensioner is integral to both front seat belt retractor units on vehicles equipped with dual front airbags. The seat belt retractor and tensioner units are secured to the right and left inner B-pillars and concealed beneath the lower quarter trim panel.
- **Seat Track Position Sensor** - The OCS includes two seat track position sensors. One sensor is located on the inboard side of the outboard seat adjuster track on both the driver and the passenger front seats.
- **Side Impact Sensor** - Four side impact sensors are used on vehicles equipped with the curtain airbags, two on each side of the vehicle. One sensor is located near each right and left side B-pillar and C-pillar, concealed behind the interior trim.

The ORC, and the EMIC each contain a microprocessor and programming that allow them to communicate with each other using the Controller Area Network (CAN) data bus. This method of

communication is used by the ORC for control of the airbag indicator in the EMIC. Refer to **Electrical - Electronic Control Modules/Electronic Control Modules/COMMUNICATION - Description** .

OPERATION

OPERATION

ACTIVE RESTRAINTS

The primary passenger restraints in this or any other vehicle are the seat belts and child restraint anchors. Seat belts and child restraint anchors are referred to as active restraint because the vehicle occupants are required to physically fasten and properly adjust these restraints in order to benefit from them. See the Owner's Manual in the vehicle glove box for more information on the features, use and operation of all factory-installed active restraints.

PASSIVE RESTRAINTS

The passive restraints are referred to as a Supplemental Restraint System (SRS) because they are designed and intended to enhance the protection for the occupants of the vehicle **only** when used in conjunction with the seat belts. They are referred to as passive restraints because the vehicle occupants are not required to do anything to make them operate; however, the vehicle occupants must be wearing their seat belts in order to obtain the maximum safety benefit from the factory-installed supplemental restraint system.

The supplemental restraint system electrical circuits are continuously monitored and controlled by a microprocessor and software contained within the Occupant Restraint Controller (ORC). An airbag indicator in the ElectroMechanical Instrument Cluster (EMIC) illuminates for about seven seconds as a bulb test each time the ignition switch is turned to the ON or START positions. Following the bulb test, the airbag indicator is turned on or off by the ORC to indicate the status of the SRS. If the airbag indicator comes on at any time other than during the bulb test, it indicates that there is a problem in the SRS electrical circuits. Such a problem may cause airbags not to deploy when required, or to deploy when not required.

Deployment of the supplemental restraints depends upon the angle and severity of an impact. Deployment is not based upon vehicle speed; but, upon the rate of deceleration as measured by the forces of gravity (G force) upon the impact sensors. When an impact is severe enough, the microprocessor in the ORC signals the inflator of the appropriate airbags to deploy their cushions. The front seat belt tensioners are provided with a deployment signal by the ORC in conjunction with the front airbags.

During a frontal vehicle impact, the knee blockers work simultaneously with properly fastened and adjusted seat belts to restrain both the driver and the front seat passenger in the proper position for an airbag deployment. The knee blockers also absorb and distribute the crash energy from the driver and the front seat passenger to the structure of the instrument panel. The seat belt tensioners remove the slack from the front seat belts to provide further assurance the driver and front seat passenger are properly positioned and restrained for an airbag deployment.

The airbag deployment and deflation occur very rapidly. In a typical 48 km/h (30 mp/h)barrier impact, from the moment of impact until the airbags are fully inflated, takes about 40 milliseconds. Within one to two seconds from the moment of impact, the airbags are almost entirely deflated. The times cited for these events are approximations, which apply only to a barrier impact at the given speed. Actual times vary depending upon the vehicle speed, impact angle, severity of the impact, and the type of collision.

When the ORC monitors a problem in any of the dual front airbag system circuits or components, including the seat belt tensioners, it stores a fault code or Diagnostic Trouble Code (DTC) in its memory circuit and sends an electronic message to the EMIC to illuminate the airbag indicator. Proper testing of the SRS components, the Controller Area Network (CAN) data bus, the electronic message inputs to and outputs from the EMIC or the ORC, as well as the retrieval or erasure of a DTC from the ORC or the EMIC, requires the use of a diagnostic scan tool and the appropriate diagnostic information.

See the Owner's Manual in the vehicle glove box for more information on the features, use and operation of all of the passive restraints.

WARNING

WARNINGS

WARNING: To avoid serious or fatal injury on vehicles equipped with the Supplemental Restraint System (SRS), never attempt to repair the electrically conductive circuits or wiring components related to the SRS. Such repairs can compromise the conductivity and current carrying capacity of those critical electrical circuits, which may cause SRS components not to deploy when required, or to deploy when not required. Any wire harness containing broken, cut, burned or otherwise damaged electrically conductive SRS wiring, terminals or connector components must be removed and replaced with an entire new wire harness. Only minor cuts or abrasions of wire and terminal insulation where the conductive material has not been damaged, or connector insulators where the integrity of the latching and locking mechanisms have not been compromised may be repaired using appropriate methods. Disconnect and isolate the battery negative (ground) cable, then wait two minutes for the system capacitor to discharge before performing further diagnosis or service. This is the only sure way to disable the SRS. Failure to take the proper precautions could result in accidental airbag deployment.

WARNING: To avoid serious or fatal injury during and following any seat belt or child restraint anchor service, carefully inspect all seat belts, buckles, mounting hardware, retractors, tether straps, and anchors for proper installation, operation, or damage. Replace any belt that is cut, frayed, or torn. Straighten any belt that is twisted. Tighten any loose fasteners. Replace any belt that has a damaged or ineffective buckle or retractor. Replace any belt that has a bent or damaged latch plate or anchor plate.

Replace any child restraint anchor or the unit to which the anchor is integral that has been bent or damaged. Never attempt to repair a seat belt or child restraint component. Always replace damaged or ineffective seat belt and child restraint components with the correct, new and unused replacement parts listed in the Chrysler Mopar® Parts Catalog. Failure to follow these instructions may result in possible serious or fatal injury.

WARNING: To avoid serious or fatal injury on vehicles equipped with side curtain or seat (thorax) airbags, disable the Supplemental Restraint System (SRS) before attempting any Occupant Restraint Controller (ORC) diagnosis or service. The ORC contains a rollover sensor, which enables the system to deploy the side curtains or seat airbags in the event of a vehicle rollover event. If an ORC is accidentally rolled during service while still connected to battery power, the side curtain and seat airbags will deploy. Disconnect and isolate the battery negative (ground) cable, then wait two minutes for the system capacitor to discharge before performing further diagnosis or service. This is the only sure way to disable the SRS. Failure to take the proper precautions could result in accidental airbag deployment.

WARNING: To avoid serious or fatal injury on vehicles equipped with airbags, disable the Supplemental Restraint System (SRS) before attempting any steering wheel, steering column, airbag, seat belt tensioner, impact sensor, or instrument panel component diagnosis or service. Disconnect and isolate the battery negative (ground) cable, then wait two minutes for the system capacitor to discharge before performing further diagnosis or service. This is the only sure way to disable the SRS. Failure to take the proper precautions could result in accidental airbag deployment.

WARNING: To avoid potential physical injury or damage to sensitive electronic circuits and systems, always disconnect and isolate the battery negative (ground) cable and the positive cable, then ground the positive cable to discharge the Occupant Restraint Controller (ORC) capacitor before performing any welding operations on the vehicle. Failure to take the proper precautions could result in accidental airbag deployment, possible damage to the Supplemental Restraint System (SRS) circuits and components, and possible damage to other electronic circuits and components. Whenever a welding process is being performed within 12 inches (30 centimeters) of an electronic module or wiring harness, then that module or harness should be relocated out of the way, or disconnected. Always protect against component or vehicle damage from weld spatter by using weld blankets and screens.

WARNING: To avoid serious or fatal injury, do not attempt to dismantle an airbag unit or tamper with its inflator. Do not puncture, incinerate or bring into contact with electricity. Do not store at temperatures exceeding 93°C

(200°F). An airbag inflator unit may contain sodium azide and potassium nitrate. These materials are poisonous and extremely flammable. Contact with acid, water, or heavy metals may produce harmful and irritating gases (sodium hydroxide is formed in the presence of moisture) or combustible compounds. An airbag inflator unit may also contain a gas canister pressurized to over 17.24 kPa (2500 psi). Failure to follow these instructions may result in possible serious or fatal injury.

WARNING: To avoid serious or fatal injury when handling a seat belt tensioner retractor or buckle, proper care should be exercised to keep fingers out from under the retractor or buckle cover and away from the seat belt webbing or cable where it exits from the retractor or buckle cover.

WARNING: To avoid serious or fatal injury, replace all Supplemental Restraint System (SRS) components only with parts specified in the Chrysler Mopar® Parts Catalog. Substitute parts may appear interchangeable, but internal differences may result in inferior occupant protection. Failure to follow these instructions may result in possible serious or fatal injury.

WARNING: To avoid serious or fatal injury, the fasteners, screws, and bolts originally used for the Supplemental Restraint System (SRS) components must never be replaced with any substitutes. These fasteners have special coatings and are specifically designed for the SRS. Anytime a new fastener is needed, replace it with the correct fasteners provided in the service package or specified in the Chrysler Mopar® Parts Catalog. Failure to follow these instructions may result in possible serious or fatal injury.

WARNING: To avoid serious or fatal injury when a steering column has an airbag unit attached, never place the column on the floor or any other surface with the steering wheel or airbag unit face down. Failure to follow these instructions may result in possible serious or fatal injury.

DIAGNOSIS AND TESTING

AIRBAG SYSTEM

1. With the battery negative cable disconnected, connect the scan tool to the Data Link Connector (DLC).
2. Turn the ignition key to the ON position, then exit vehicle with the scan tool.
3. After checking that no one is inside the vehicle, connect the battery negative remote terminal.
4. Read and record the **ACTIVE** Diagnostic Trouble Code (DTC) data.
5. Read and record any **STORED** DTC's.
6. Refer to the proper diagnostic information if any DTC's are found in 4 and 5.

7. If the airbag warning lamp either fails to light, or goes ON and stays ON, there is a system malfunction. To test the airbag warning lamp (bulb) operation in the cluster. Refer to **Electrical - Instrument Cluster/Instrument Cluster - Diagnosis and Testing** . Refer to the appropriate diagnostic information for any other system problems.

STANDARD PROCEDURE

HANDLING NON-DEPLOYED SUPPLEMENTAL RESTRAINTS

At no time should any source of electricity be permitted near the inflator on the back of a non-deployed airbag or seat belt tensioner. When carrying a non-deployed airbag, the trim cover or airbag cushion side of the unit should be pointed away from the body to minimize injury in the event of an accidental deployment. If the airbag unit is placed on a bench or any other surface, the trim cover or airbag cushion side of the unit should be face up to minimize movement in the event of an accidental deployment.

When handling a non-deployed seat belt tensioner, take proper care to keep fingers out from under the retractor cover and away from the seat belt webbing where it exits from the retractor cover. In addition, the Supplemental Restraint System (SRS) should be disarmed whenever any steering wheel, steering column, seat belt tensioner, airbag, impact sensor, or instrument panel components require diagnosis or service. Failure to observe this warning could result in accidental airbag deployment and possible personal injury.

All damaged, ineffective or non-deployed airbags and seat belt tensioners which are replaced on vehicles are to be handled and disposed of properly. If an airbag or seat belt tensioner unit is ineffective or damaged and non-deployed, refer to the Hazardous Substance Control System for information regarding the potentially hazardous properties of the subject component and the proper safe handling procedures. Then dispose of all non-deployed and deployed airbags and seat belt tensioners in a manner consistent with state, provincial, local and federal regulations.

SUPPLEMENTAL RESTRAINT STORAGE

Airbags and seat belt tensioners must be stored in their original, special container until they are used for service. Also, they must be stored in a clean, dry environment; away from sources of extreme heat, sparks, and high electrical energy. Always place or store any airbag on a surface with its trim cover or airbag cushion side facing up, to minimize movement in case of an accidental deployment.

SERVICE AFTER A SUPPLEMENTAL RESTRAINT DEPLOYMENT

Any vehicle which is to be returned to use following a Supplemental Restraint System (SRS) component deployment must have the deployed restraints replaced. In addition, if the driver airbag has been deployed, the clockspring, the steering wheel and the complete steering column with lower steering column coupler must be replaced. If the passenger airbag is deployed, the instrument panel trim cover must be replaced.

The seat belt tensioners are deployed by the same signal that deploys the driver and passenger airbags and must also be replaced if either front airbag has been deployed. If a seat (thorax) airbag is

deployed, the seat back frame, the seat back foam and the seat back trim cover on the same side of the vehicle as the deployed airbag must also be replaced.

If a side curtain airbag has been deployed, the headliner as well as the upper A, B, and C-pillar trim on the same side of the vehicle as the deployed airbag must be replaced. These components are not intended for reuse and will be damaged or weakened as a result of a SRS component deployment, which may or may not be obvious during a visual inspection. On vehicles with an optional sunroof, the sunroof drain tubes and hoses must be closely inspected following a side curtain airbag deployment.

It is also critical that the mounting surfaces and mounting brackets for the Occupant Restraint Controller (ORC), side impact sensors, and front impact sensors be closely inspected and restored to their original conditions following any vehicle impact damage. Because the ORC and each impact sensor are used by the SRS to monitor or confirm the direction and severity of a vehicle impact, improper orientation or insecure fastening of these components may cause airbags not to deploy when required, or to deploy when not required.

There are two methods by which an airbag or seat belt tensioner may be connected to the vehicle electrical system. The first method involves a short pigtail harness and connector insulator that are integral to the airbag or tensioner unit and are replaced as a unit with the service replacement airbag or seat belt tensioner unit. The second method involves a wire harness takeout and connector insulator (squib circuits) that are connected directly to the air bag or tensioner initiator. The heat created by the initiator during an airbag or tensioner deployment will cause collateral damage to a directly connected wire harness take out and connector insulator. Therefore, these direct-connect type take outs and connector insulators must be repaired following an airbag or seat belt tensioner deployment. See **Restraints - Standard Procedure**.

All other vehicle components should be closely inspected following any SRS component deployment, but are to be replaced only as required by the extent of the visible damage incurred.

AIRBAG SQUIB STATUS

Multistage airbags with multiple initiators (squibs) must be checked to determine that all squibs were used during the deployment event. The driver and passenger airbags in this vehicle are deployed by electrical signals generated by the Occupant Restraint Controller (ORC) through the driver or passenger squib 1 and squib 2 circuits to the two initiators in the airbag inflators. Typically, both initiators are used and all potentially hazardous chemicals are burned during an airbag deployment event. However, it is possible for only one initiator to be used; therefore, it is always necessary to confirm that both initiators have been used in order to avoid the improper handling or disposal of potentially live pyrotechnic or hazardous materials. The following procedure should be performed using a diagnostic scan tool to verify the status of both airbag squibs before either deployed airbag is removed from the vehicle for disposal.

CAUTION: Deployed front airbags having two initiators (squibs) in the airbag inflator may or may not have live pyrotechnic material within the inflator. Do not dispose of these airbags unless you are certain of complete deployment. Refer to the Hazardous Substance Control System for information regarding the potentially hazardous properties of the subject component

and the proper safe handling procedures. Then dispose of all non-deployed and deployed airbags and seat belt tensioners in a manner consistent with state, provincial, local and federal regulations.

1. Be certain that the diagnostic scan tool contains the latest version of the proper diagnostic software. Connect the scan tool to the 16-way Data Link Connector (DLC). The DLC is located on the driver side lower edge of the instrument panel, outboard of the steering column.
2. Turn the ignition switch to the ON position.
3. Using the scan tool, read and record the active (current) Diagnostic Trouble Code (DTC) data.

Using the active DTC information, refer to the **AIRBAG SQUIB STATUS** chart to determine the status of both driver and passenger airbag squibs.

AIRBAG SQUIB STATUS		
IF THE ACTIVE DTC IS:	**CONDITIONS**	**SQUIB STATUS**
Driver or Passenger Squib 1 open	**AND** the stored DTC minutes for both Driver or Passenger squibs are within 15 minutes of each other	Both Squib 1 and 2 were used.
Driver or Passenger Squib 2 open		
Driver or Passenger Squib 1 open	**AND** the stored DTC minutes for Driver or Passenger Squib 2 open is GREATER than the stored DTC minutes for Driver or Passenger Squib 1 by 15 minutes or more	Squib 1 was used; Squib 2 is live.
Driver or Passenger Squib 2 open		
Driver or Passenger Squib 1 open	**AND** the stored DTC minutes for Driver or Passenger Squib 1 open is GREATER than the stored DTC minutes for Driver or Passenger Squib 2 by 15 minutes or more	Squib 1 is live; Squib 2 was used.
Driver or Passenger Squib 2 open		
Driver or Passenger Squib 1 open	**AND** Driver or Passenger Squib 2 open is NOT an active code	Squib 1 was used; Squib 2 is live.
Driver or Passenger Squib 2 open	**AND** Driver or Passenger Squib 1 open is NOT an active code	Squib 1 is live; Squib 2 was used.

CLEANUP PROCEDURE

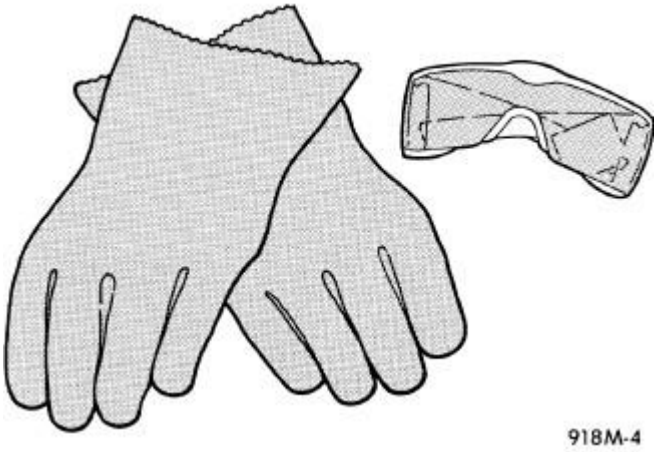

Fig. 3: Clean Up Safety Equipment
Courtesy of CHRYSLER LLC

Following a Supplemental Restraint System (SRS) component deployment, the vehicle interior will contain a powdery residue. This residue consists primarily of harmless particulate by-products of the small pyrotechnic charge that initiates the propellant used to deploy a SRS component. However, this residue may also contain traces of sodium hydroxide powder, a chemical by-product of the propellant material that is used to generate the inert gas that inflates the airbag. Since sodium hydroxide powder can irritate the skin, eyes, nose, or throat, be certain to wear safety glasses, rubber gloves, and a long-sleeved shirt during cleanup.

WARNING: To avoid serious or fatal injury, if you experience skin irritation during cleanup, run cool water over the affected area. Also, if you experience irritation of the nose or throat, exit the vehicle for fresh air until the irritation ceases. If irritation continues, see a physician.

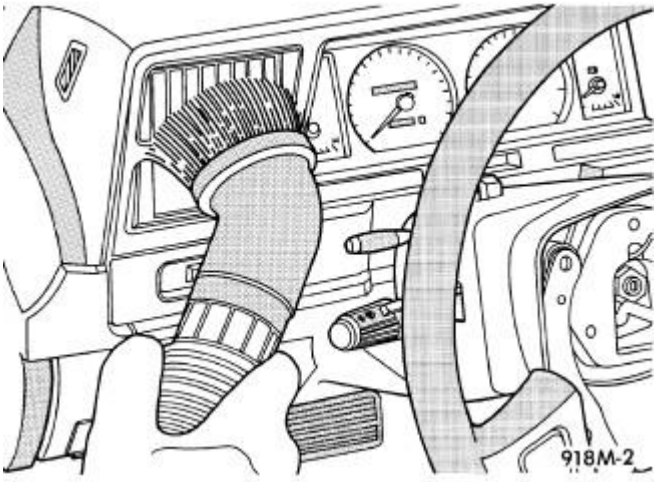

Fig. 4: Vacuuming Residual Powder
Courtesy of CHRYSLER LLC

1. Begin the cleanup by using a vacuum cleaner to remove any residual powder from the vehicle interior. Clean from outside the vehicle and work your way inside, so that you avoid kneeling or sitting on a non-cleaned area.
2. Be certain to vacuum the heater and air conditioning outlets as well. Run the heater and air conditioner blower on the lowest speed setting and vacuum any powder expelled from the outlets.

CAUTION: Deployed front airbags having two initiators (squibs) in the airbag inflator may or may not have live pyrotechnic material within the inflator. Do not dispose of these airbags unless you are certain of complete deployment. Refer to the AIRBAG SQUIB STATUS . All damaged, ineffective, or non-deployed Supplemental Restraint System (SRS) components which are replaced on vehicles are to be handled and disposed of properly. If an airbag or seat belt tensioner unit is ineffective or damaged and non-deployed, refer to the Hazardous Substance Control System for information regarding the potentially hazardous properties of the subject component and the proper safe handling procedures. Then dispose of all non-deployed and deployed airbags and seat belt tensioners in a manner consistent with state, provincial, local and federal regulations.

3. Next, remove the deployed SRS components from the vehicle. Refer to the appropriate service removal procedures.
4. You may need to vacuum the interior of the vehicle a second time to recover all of the powder.

SUPPLEMENTAL RESTRAINT SYSTEM WIRING REPAIRS

It is important when repairing any Supplemental Restraint System (SRS) electrical circuits to use the recommended splicing kit and procedure. For applicable and available MOPAR wiring repair kits, please visit the MOPAR Connector Web Site at the following address on the internet: (http://dto.vftis.com/mopar/disclaimer.asp).

This recommended procedure involves crimping the wires together with a splice band, soldering the crimped connection and, finally, sealing and protecting the repair. The crimp and solder ensure a strong mechanical bond that will always pass a pull test while also maintaining the conductivity and current carrying capacity of the circuit. The adhesive sealant and heat shrink tubing ensures the splice repair will perform as well or better than the original wire and be safe from potential corrosion or short circuits.

There is no limit to the number of splice repairs that can be made in one harness using this procedure. However, as has been past practice, multiple adjacent splices should be offset from each other. This wiring splice repair procedure is approved for harness side repairs only. Repairs and splices to pigtail wires on SRS components such as airbag units, seat belt tensioner units or clocksprings are not approved or recommended.

REPAIR PROCEDURE

CAUTION: If additional wire is needed when making a splice repair to any wire, it is important that the same or next larger size wire gauge be used. Refer to SYSTEM WIRING DIAGRAMS for the original wire gauge size.

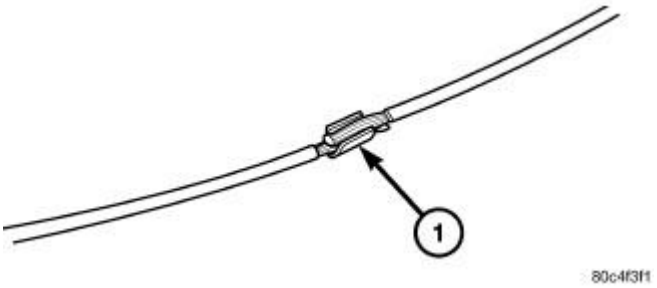

Fig. 5: Splice Band
Courtesy of CHRYSLER LLC

1. Remove 13 millimeters (0.50 inch) of insulation from each wire that needs to be spliced.
2. Place a piece of adhesive sealant-lined heat shrink tubing (Part Number 04778570 or equivalent) over the wire on one side of the splice. Be certain the length of tubing will be sufficient to cover and seal the entire repair area.
3. Place the strands of the wires being spliced so that they are overlapping each other within the splice band (1).

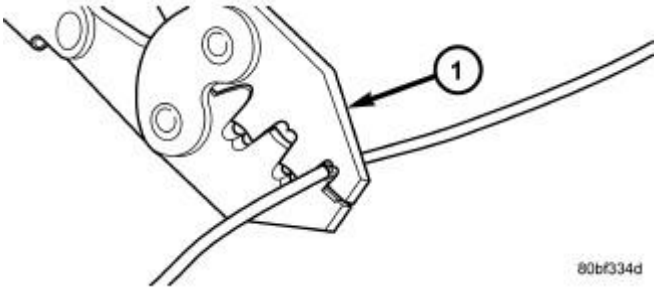

Fig. 6: Crimping Tool
Courtesy of CHRYSLER LLC

4. Using a crimping tool (1) (MOPAR Part Number 05019912AA, Miller Special Tool Number 10042 or equivalent) crimp the splice band and wires together securely.

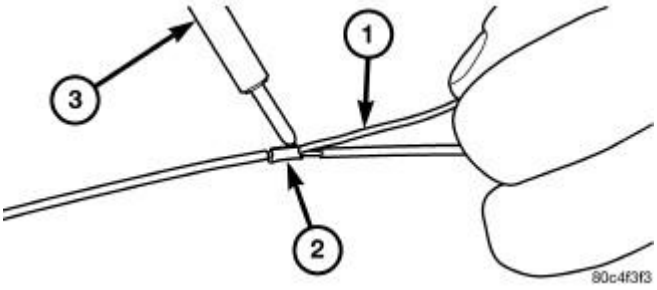

Fig. 7: Solder Splice

Courtesy of CHRYSLER LLC

CAUTION: Never use acid core solder for electrical wiring repairs.

5. Using rosin core type solder (1) only and a suitable soldering iron (3), solder the wire and splice band connection (2) together.

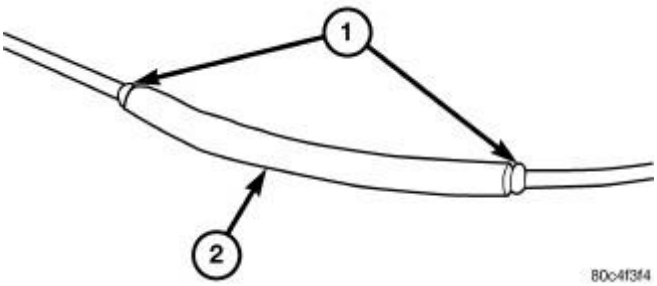

Fig. 8: Heat Shrink Tube
Courtesy of CHRYSLER LLC

6. Center the heat shrink tubing (2) over the splice joint repair and heat using a suitable heat gun. Heat the joint until the tubing is tightly sealed and sealant (1) begins to ooze out of both ends of the tubing.

SUPPLEMENTAL RESTRAINTS VERIFICATION TEST

NOTE: The following procedure should be performed using a diagnostic scan tool to verify proper Supplemental Restraint System (SRS) operation following the service or replacement of any SRS component. Refer to the appropriate diagnostic procedures.

WARNING: To avoid serious or fatal injury on vehicles equipped with airbags, disable the Supplemental Restraint System (SRS) before attempting any steering wheel, steering column, airbag, seat belt tensioner, impact sensor, or instrument panel component diagnosis or service. Disconnect and isolate the battery negative (ground) cable, then wait two minutes for the system capacitor to discharge before performing further diagnosis or service. This is the only sure way to disable the SRS. Failure to take the proper precautions could result in accidental airbag deployment.

1. During the following test, the battery negative cable remains disconnected and isolated, as it was during the Supplemental Restraint System (SRS) component removal and installation procedures.
2. Be certain that the diagnostic scan tool contains the latest version of the proper diagnostic software. Connect the scan tool to the 16-way Data Link Connector (DLC). The DLC is located on the driver side lower edge of the instrument panel, near the steering column opening cover

and outboard of the steering column.

3. Turn the ignition switch to the ON position and exit the vehicle with the scan tool.
4. Check to be certain that nobody is in the vehicle, then reconnect the battery negative cable.
5. Using the scan tool, read and record the active (current) Diagnostic Trouble Code (DTC) data.
6. Next, use the scan tool to read and record any stored (historical) DTC data.
7. If any DTC is found in 5 or 6, refer to the appropriate diagnostic information.
8. Use the scan tool to erase the stored DTC data. If any problems remain, the stored DTC data will not erase. Refer to the appropriate diagnostic information to diagnose any stored DTC that will not erase. If the stored DTC information is successfully erased, go to 9.
9. Turn the ignition switch to the OFF position for about 15 seconds, and then back to the ON position. Observe the airbag indicator in the instrument cluster. It should light from four to six seconds, and then go out. This indicates that the SRS is functioning normally and that the repairs are complete. If the airbag indicator fails to light, or lights and stays ON, there is still an active SRS fault or malfunction. Refer to the appropriate diagnostic information to diagnose the problem.

SPECIFICATIONS

TORQUE

TORQUE SPECIFICATIONS

DESCRIPTION	N-m	Ft. Lbs.	In. Lbs.
Curtain airbag inflator to C/D-pillar bolt	11	8	97
Curtain airbag roof side rail retaining screws	5	4	44
Driver airbag retaining bolts	10	7	89
Front seat belt anchor nut	37	27.5	328
Front seat belt buckle retaining nut	43	31.5	381
Front seat belt guide retaining screw	3	2	27
Front seat belt height adjuster retaining bolts	32	23.5	283
Front seat belt retractor retaining bolt	32	23.5	283
Front seat belt turning loop retaining bolt	40	30	354
Impact sensor retaining screws	7	5	62
Left and right side passenger airbag mounting screws	3	2	27
Occupant classification module retaining screws	2	1	18
Occupant restraint controller retaining screws	11	8	97
Passenger airbag mounting bolts	12	9	106
Rear center seat belt retractor anchor nut	34	25	301
Rear seat belt anchor bolt	32	23.5	283
Rear seat belt buckle retaining nut	34	25	301
Rear seat belt turning loop retaining bolt	40	29.5	354
Seat weight sensor - adjuster to riser center	45	33	398

retaining nut			
Seat weight sensor to seat riser nuts	40	29.5	354
Rear center seat belt retractor retaining nut	34	25	301
Rear seat belt retractor retaining bolt	32	23	283

SPECIAL TOOLS

SUPPLEMENTAL RESTRAINT SYSTEM

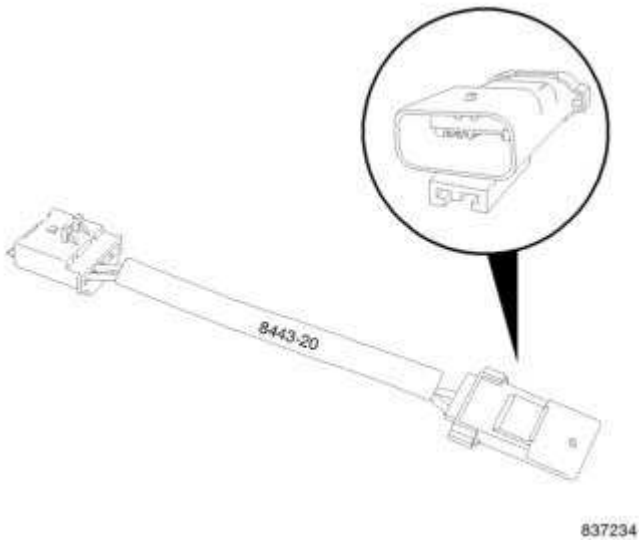

Fig. 9: Special Tool 8443-20
Courtesy of CHRYSLER LLC

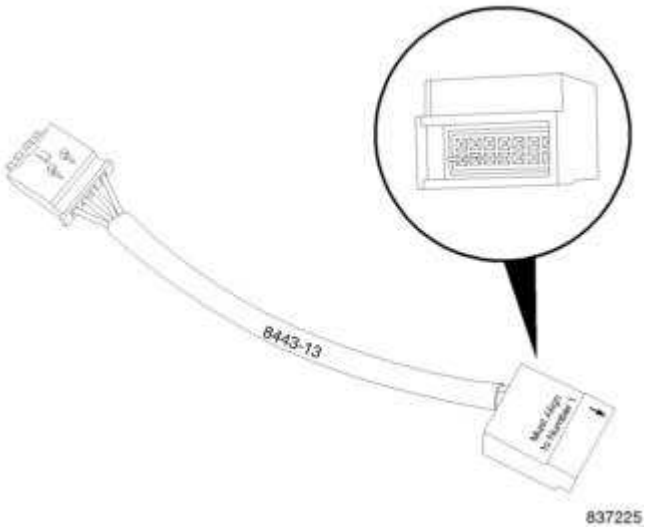

Fig. 10: Special Tool 8443-13
Courtesy of CHRYSLER LLC

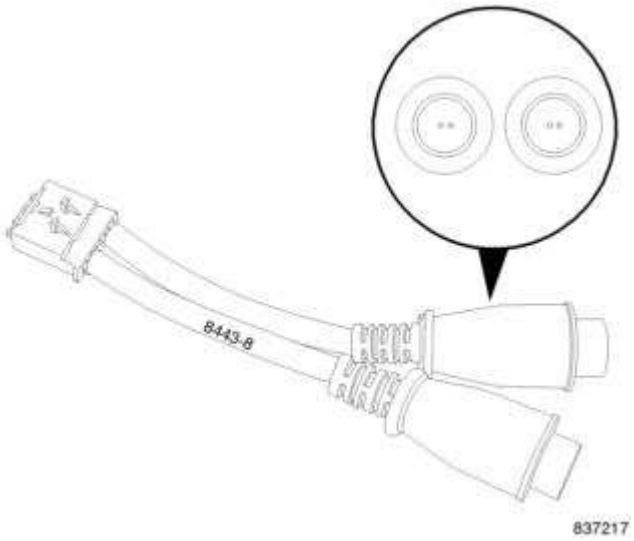

Fig. 11: Special Tool 8443-8
Courtesy of CHRYSLER LLC

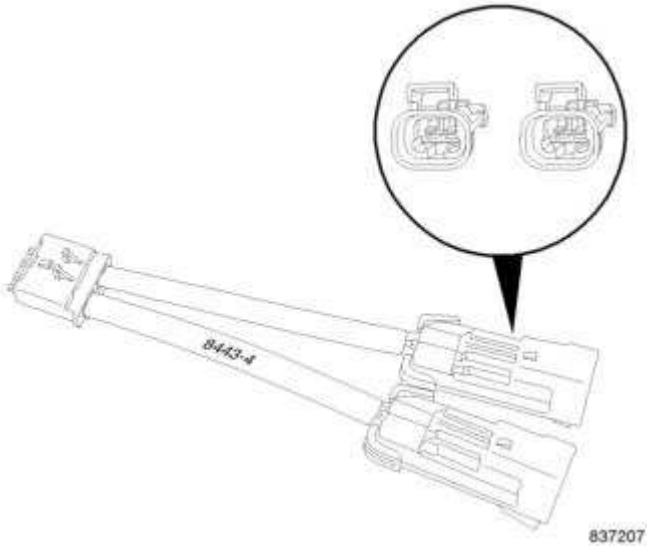

Fig. 12: Special Tool 8443-4
Courtesy of CHRYSLER LLC

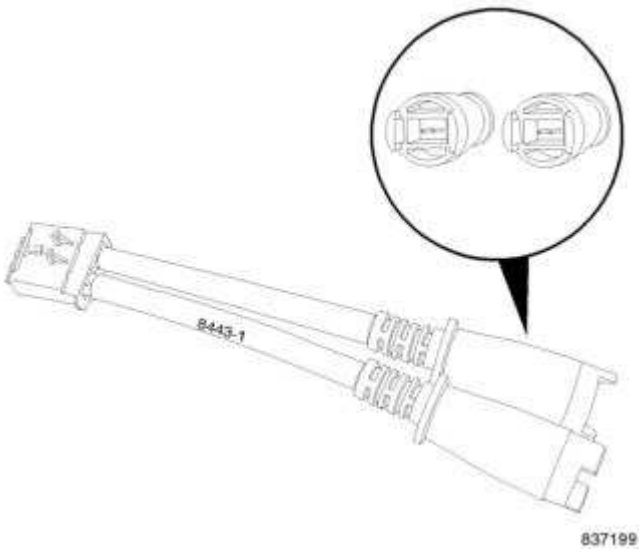

Fig. 13: Special Tool 8443-1
Courtesy of CHRYSLER LLC



Fig. 14: Special Tool 8443-24
Courtesy of CHRYSLER LLC

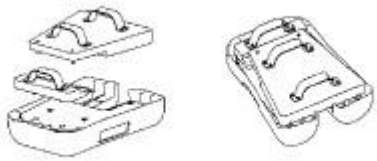

Fig. 15: OCS Seat Weight Tool 9077
Courtesy of CHRYSLER LLC



Fig. 16: SRS Load Tool 8443 or 8443A
Courtesy of CHRYSLER LLC

AIR BAG, DRIVER

DESCRIPTION

DESCRIPTION

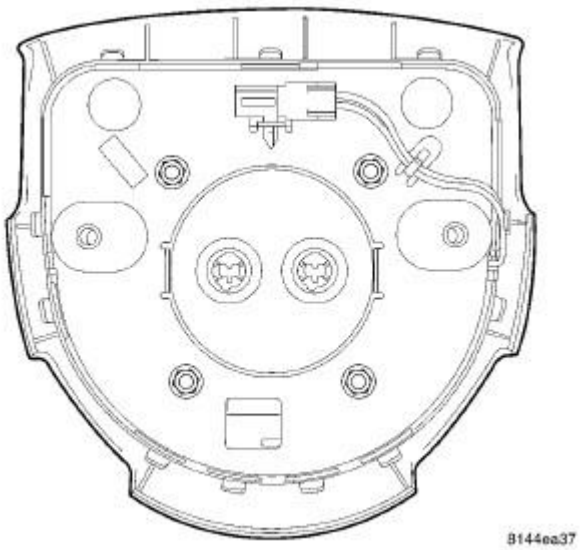

Fig. 17: Driver Airbag
Courtesy of CHRYSLER LLC

The driver airbag used in this model is a multistage, Next Generation-type that complies with revised federal airbag standards to deploy with less force than those used in some prior models. A radial

deploying fabric cushion with internal tethers is used. The airbag inflator is a dual-initiator, non-azide, pyrotechnic-type unit with four mounting studs and is secured to the stamped metal airbag housing by four flanged hex nuts. Two keyed and color-coded connector receptacles on the driver airbag inflator connect the two inflator initiators to the vehicle electrical system through two yellow-jacketed, two-wire pigtail harnesses of the clockspring.

The driver airbag unit cannot be repaired, and must be replaced if deployed or in any way damaged. The driver airbag trim cover and horn switch unit may be disassembled from the driver airbag unit, and is available for separate service replacement.

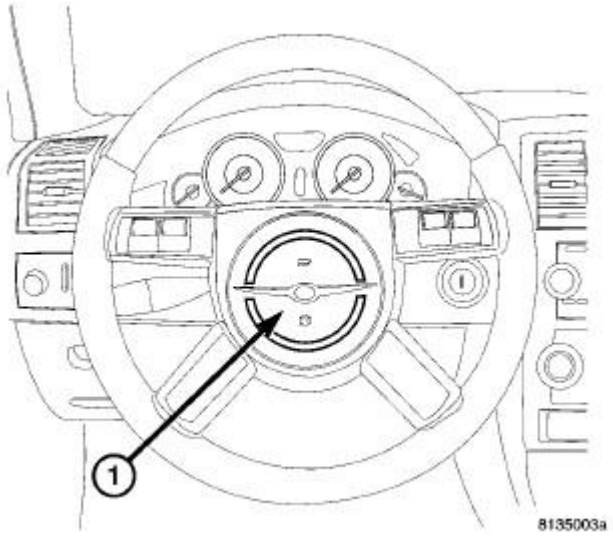

Fig. 18: Driver Airbag Protective Trim Cover
Courtesy of CHRYSLER LLC

The driver airbag protective trim cover (1) is the most visible part of the driver airbag. The driver airbag is located in the center of the steering wheel (1), where it is secured with two screws to the armature of the four-spoke steering wheel. Concealed beneath the driver airbag trim cover are the horn switch, the folded airbag cushion, the airbag cushion retainer, the airbag housing, the airbag inflator, and the retainers that secure the inflator to the airbag housing.

The airbag cushion, housing, and inflator are secured within the trim cover.

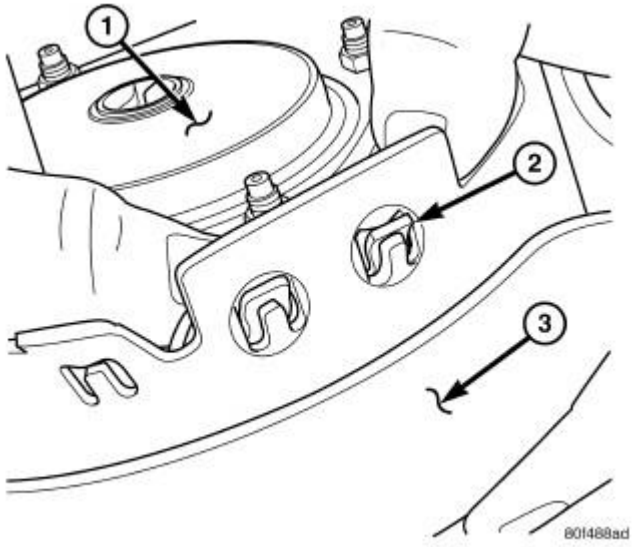

Fig. 19: Driver Airbag Cover
Courtesy of CHRYSLER LLC

The vertical walls of this trim cover have small windows with blocking tabs that are engaged by hook formations around the perimeter of the airbag housing. Each hook is inserted through one of the windows and the blocking tab in each window keeps the hook properly engaged with the trim cover, locking the trim cover securely into place on the airbag housing.

The resistive membrane-type horn switch is secured with heat stakes to the inside surface of the driver airbag trim cover, between the trim cover and the folded airbag cushion.

OPERATION

OPERATION

The multistage driver airbag is deployed by electrical signals generated by the Occupant Restraint Controller (ORC) through the driver airbag squib 1 and squib 2 circuits to the two initiators in the airbag inflator. By using two initiators, the airbag can be deployed at multiple levels of force. The force level is controlled by the ORC to suit the monitored impact conditions by providing one of three delay intervals between the electrical signals provided to the two initiators. The longer the delay between these signals, the less forcefully the airbag will deploy.

When the ORC sends the proper electrical signals to each initiator, the electrical energy generates enough heat to initiate a small pyrotechnic charge which, in turn ignites chemical pellets within the inflator. Once ignited, these chemical pellets burn rapidly and produce a large quantity of inert gas. The inflator is sealed to the back of the airbag housing and a diffuser in the inflator directs all of the inert gas into the airbag cushion, causing the cushion to inflate. As the cushion inflates, the driver airbag trim cover will split at predetermined breakout lines, then fold back out of the way along with the horn switch unit. Following an airbag deployment, the airbag cushion quickly deflates by venting the inert gas towards the instrument panel through vent holes within the fabric used to construct the back (steering wheel side) panel of the airbag cushion.

Some of the chemicals used to create the inert gas may be considered hazardous while in their solid state before they are burned, but they are securely sealed within the airbag inflator. Typically, both initiators are used and all potentially hazardous chemicals are burned during an airbag deployment event.

The inert gas that is produced when the chemicals are burned is harmless. However, a small amount of residue from the burned chemicals may cause some temporary discomfort if it contacts the skin, eyes, or breathing passages. If skin or eye irritation is noted, rinse the affected area with plenty of cool, clean water. If breathing passages are irritated, move to another area where there is plenty of clean, fresh air to breath. If the irritation is not alleviated by these actions, contact a physician.

REMOVAL

REMOVAL

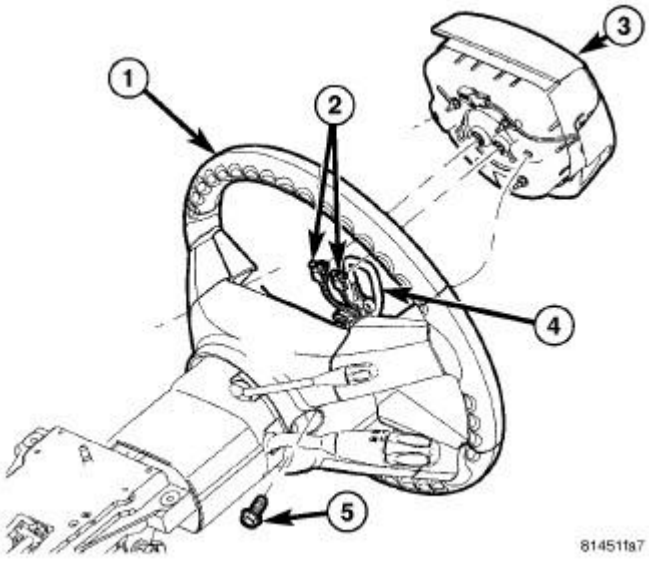

Fig. 20: DRIVER AIRBAG REMOVAL & INSTALLATION
Courtesy of CHRYSLER LLC

1. Disconnect and isolate the battery negative cable.

   WARNING: Wait two minutes for the airbag system reserve capacitor to discharge before beginning any airbag system or component service. Failure to do so may result in accidental airbag deployment, which may result in serious or fatal injury.

2. From behind the steering wheel (1), remove the two screw covers and screws (5) to the driver airbag (3).

   CAUTION: Do not pull on the horn switch feed pigtail wire to disengage the connector from the driver airbag or to disconnect the horn switch to

steering wheel wire harness connection. Improper pulling on this pigtail wire or connection can result in damage to the horn switch membrane or feed circuit.

3. Carefully pull airbag rearward just far enough to disconnect the two airbag squib connectors (2) and the horn connector (4).
4. Separate driver airbag from steering column.

NOTE: The driver airbag trim cover is available for service separately. If the horn switch is faulty or the trim cover is damaged, the airbag cushion assembly may be transferred to a new trim cover. If the airbag is defective, the entire driver airbag and driver airbag trim cover must be replaced as an assembly.

INSTALLATION

INSTALLATION

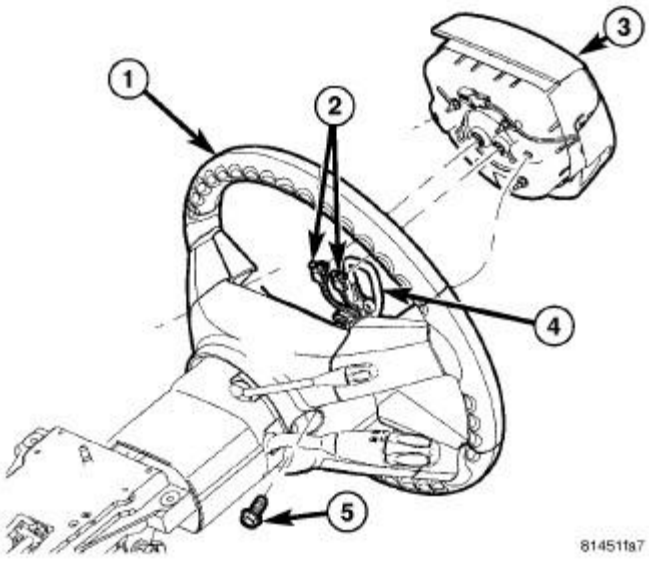

Fig. 21: DRIVER AIRBAG REMOVAL & INSTALLATION
Courtesy of CHRYSLER LLC

NOTE: The driver airbag trim cover is available for service separately. If the horn switch is faulty or the trim cover is damaged, the airbag cushion assembly may be transferred to a new trim cover. If the airbag is defective, the entire driver airbag and driver airbag trim cover must be replaced as an assembly.

1. Position driver airbag (3) in steering wheel (1) near mounting location.
2. Connect the two airbag squib connectors (2) and the horn connector (4).
3. Position the driver airbag mounting screws (2) into the driver airbag. From behind the steering

wheel (1) install the two screws (5) to the driver airbag. Torque the two screws (5) to 10 N.m (89 in. lbs.).

WARNING: Do not connect the battery negative cable. See Restraints - Diagnosis and Testing. If the system test is not performed first it may result in serious or fatal injury.

AIR BAG, PASSENGER

DESCRIPTION

DESCRIPTION

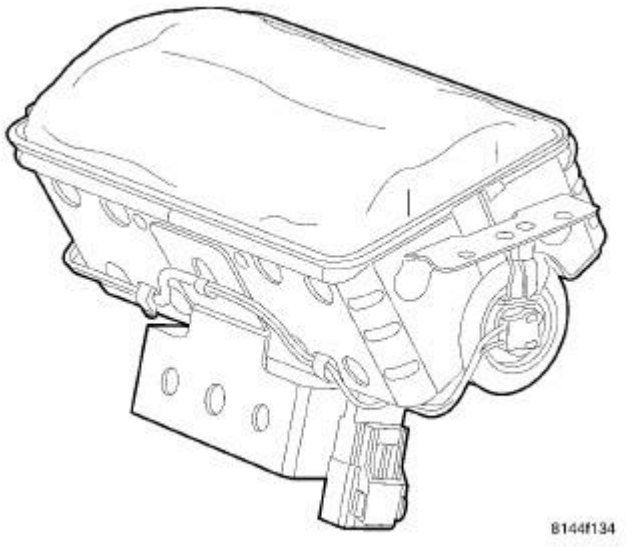

Fig. 22: Passenger Airbag
Courtesy of CHRYSLER LLC

The passenger airbag used in this model is a multistage, Next Generation-type that complies with revised federal airbag standards to deploy with less force than those used in some prior models. The passenger airbag consists of a stamped and welded metal housing, the airbag cushion, the airbag inflator, and a stamped metal airbag cushion retainer plate that is secured to the airbag housing. The airbag housing contains the airbag inflator and the folded airbag cushion. A rectangular fabric cushion is used.

The airbag inflator is a non-azide, pyrotechnic-type unit that is secured to and sealed within the airbag housing. A short four-wire pigtail harness with a keyed, yellow connector insulator connects the two inflator initiators to the vehicle electrical system through the instrument panel wire harness.

This passenger airbag cannot be repaired, and must be replaced if deployed, faulty, or in any way damaged.

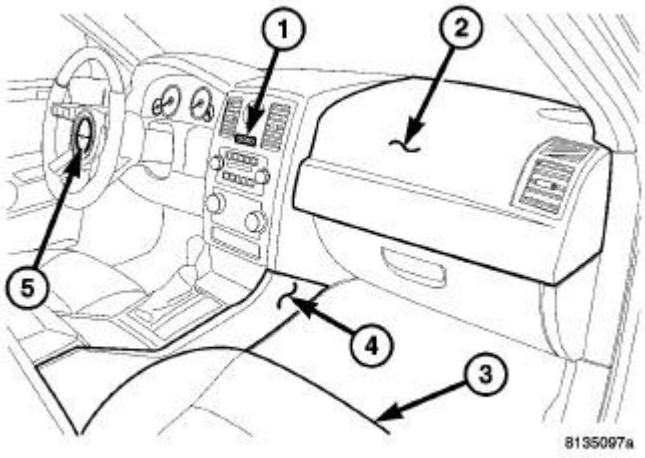

Fig. 23: Passive Restraints
Courtesy of CHRYSLER LLC

The horizontal surface of the injection molded, thermoplastic passenger airbag door (2) is the most visible part of the passenger airbag. The passenger airbag door is located above the glove box opening on the top of the instrument panel, in front of the front seat passenger seating position.

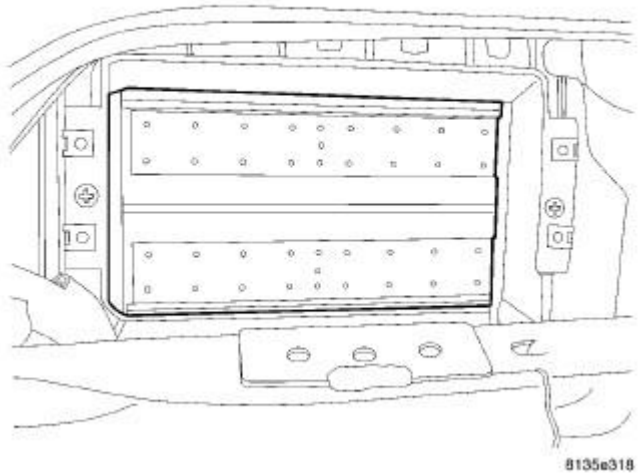

Fig. 24: Passenger Airbag Location
Courtesy of CHRYSLER LLC

Located below the passenger airbag door within the instrument panel is the passenger airbag. The passenger airbag housing fits into a molded receptacle on the back of the airbag door, where twelve stamped hook formations on the forward and rearward edges of the airbag housing are engaged in mating small window openings on the forward and rearward flanges of the receptacle to secure the airbag door to the airbag housing. These airbag door fasteners and mounting provisions are all concealed beneath the instrument panel base trim.

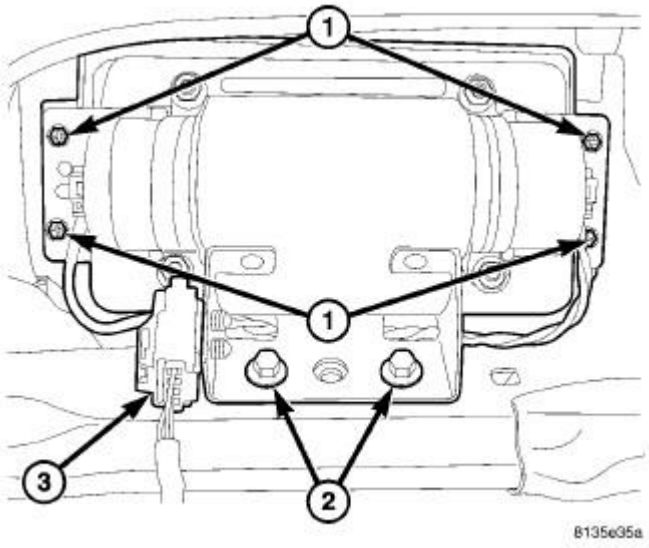

Fig. 25: Passenger Airbag Fasteners
Courtesy of CHRYSLER LLC

The passenger airbag is secured by four screws (1) through a stamped mounting bracket to the instrument panel cover/pad and two bolts (2) to the instrument panel structural support.

OPERATION

OPERATION

The multistage passenger airbag is deployed by electrical signals generated by the Occupant Restraint Controller (ORC) through the passenger airbag squib 1 and squib 2 circuits to the two initiators in the airbag inflator. By using two initiators, the airbag can be deployed at multiple levels of force. The force level is controlled by the ORC to suit the monitored impact conditions by providing one of three delay intervals between the electrical signals provided to the two initiators. The longer the delay between these signals, the less forcefully the airbag will deploy.

When the ORC sends the proper electrical signals to each initiator, the electrical energy generates enough heat to initiate a small pyrotechnic charge which, in turn ignites chemical pellets within the inflator. Once ignited, these chemical pellets burn rapidly and produce a large quantity of inert gas. The inflator is sealed to the airbag cushion and a diffuser in the inflator directs all of the inert gas into the airbag cushion, causing the cushion to inflate. As the cushion inflates, the passenger airbag door will split at predetermined tear seam lines concealed on the inside surface of the door, then the door will pivot up over the top of the instrument panel and out of the way. Following an airbag deployment, the airbag cushion quickly deflates by venting the inert gas through vent holes within the fabric used to construct the back (windshield side) of the airbag cushion. Typically, both initiators are used during an airbag deployment event.

REMOVAL

REMOVAL

DEPLOYED PASSENGER AIRBAG

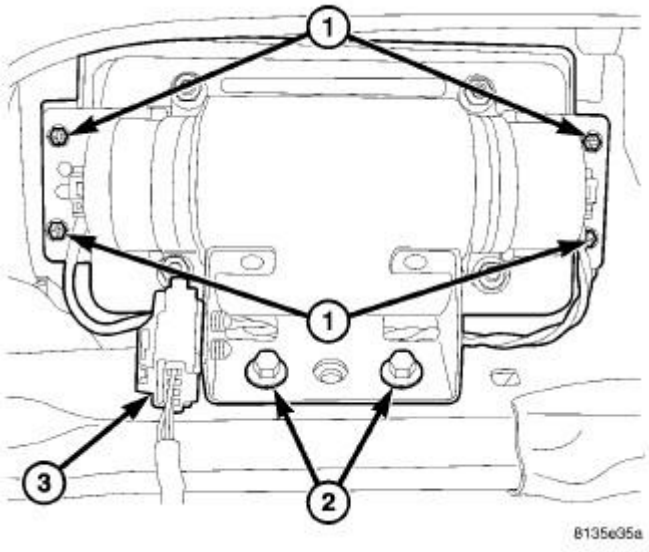

Fig. 26: Passenger Airbag Fasteners
Courtesy of CHRYSLER LLC

For deployed passenger airbags, the instrument panel top pad must be replaced.

1. Open hood.
2. Disconnect and isolate the battery negative cable.

> **WARNING: Wait two minutes for the airbag system reserve capacitor to discharge before beginning any airbag system or component service. Failure to do so may result in accidental airbag deployment, and serious or fatal injury.**

3. Remove instrument panel. Refer to **Body/Instrument Panel/PANEL, Instrument - Removal** .
4. Disconnect the passenger airbag electrical connector (3).
5. Remove the four left and right passenger airbag mounting screws (1).
6. Remove the two lower passenger airbag mounting bolts (2).
7. Separate passenger airbag from instrument panel.
8. Remove and inspect all reusable components from the instrument panel and transfer to the new instrument panel top pad.
9. Clean powder residue from interior of vehicle. See **Restraints - Standard Procedure**.

NONDEPLOYED PASSENGER AIRBAG

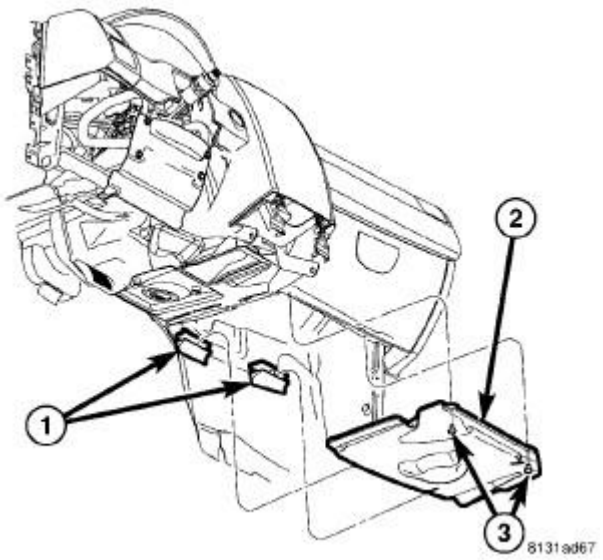

Fig. 27: Right Instrument Panel Closeout Panel
Courtesy of CHRYSLER LLC

1. Disconnect and isolate the battery negative cable.

   WARNING: Wait two minutes for the airbag system reserve capacitor to discharge before beginning any airbag system or component service. Failure to do so may result in accidental airbag deployment, which may result in serious or fatal injury.

2. Remove the right side silencer pad. Refer to **Body/Instrument Panel/PANEL, Silencer - Removal** .

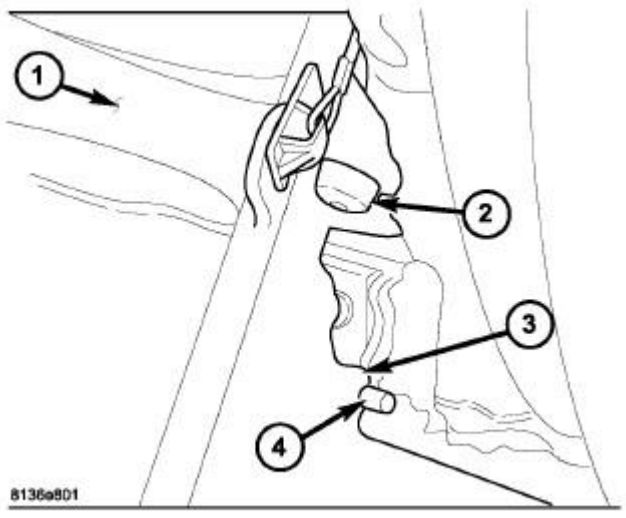

Fig. 28: Removing/Installing Glove Box Bin
Courtesy of CHRYSLER LLC

3. Remove the glove box assembly. Refer to **Body/Instrument Panel/GLOVE BOX, Instrument Panel - Removal** .

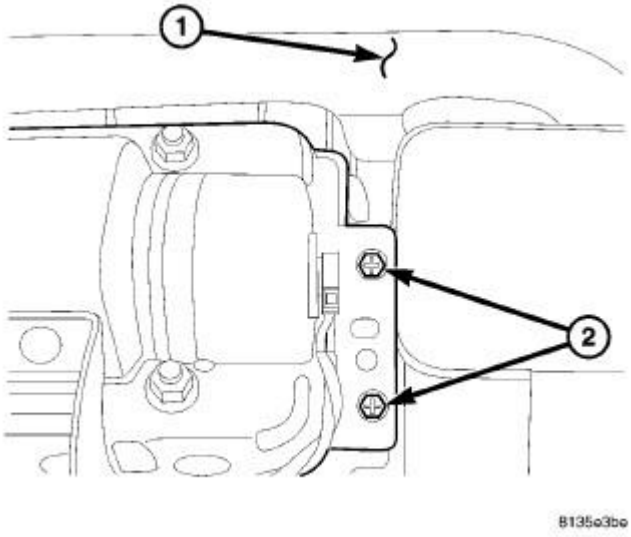

Fig. 29: Inboard Mounting Screws
Courtesy of CHRYSLER LLC

4. Remove the two inboard mounting screws (2) to the passenger airbag just below the distribution duct (1) and to the left of the distribution housing.

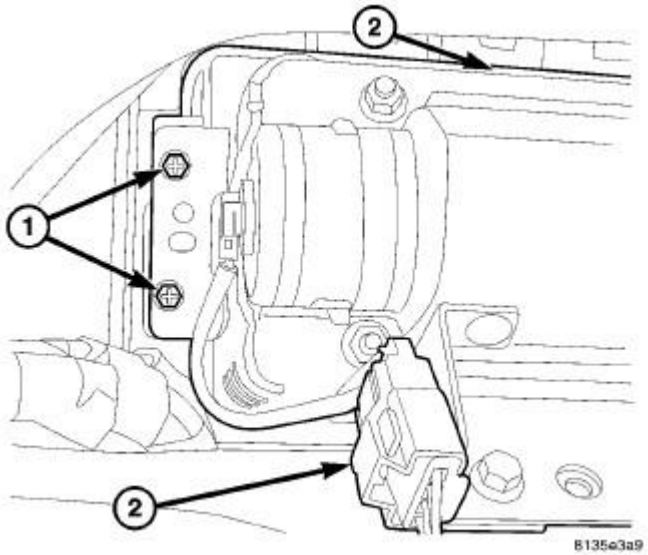

Fig. 30: Outboard Mounting Screws
Courtesy of CHRYSLER LLC

5. Remove the two outboard mounting screws (1) to the passenger airbag just below the distribution duct.

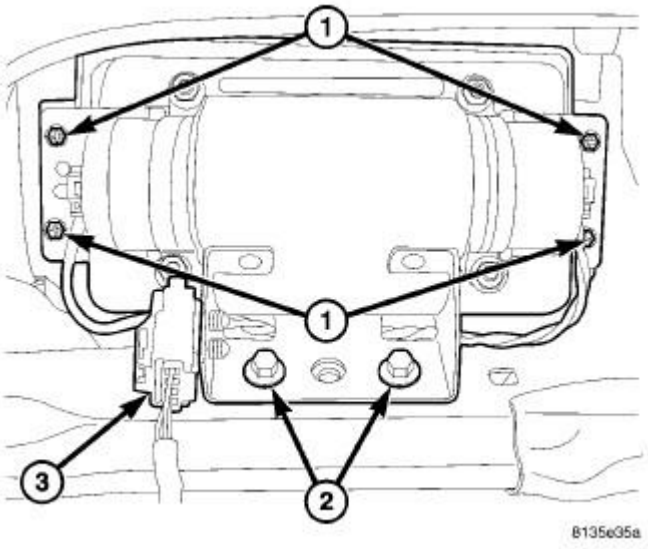

Fig. 31: Passenger Airbag Fasteners
Courtesy of CHRYSLER LLC

6. Remove the two passenger airbag mounting bolts (2) to the crosscar beam.
7. Disconnect the passenger airbag electrical connector (3).

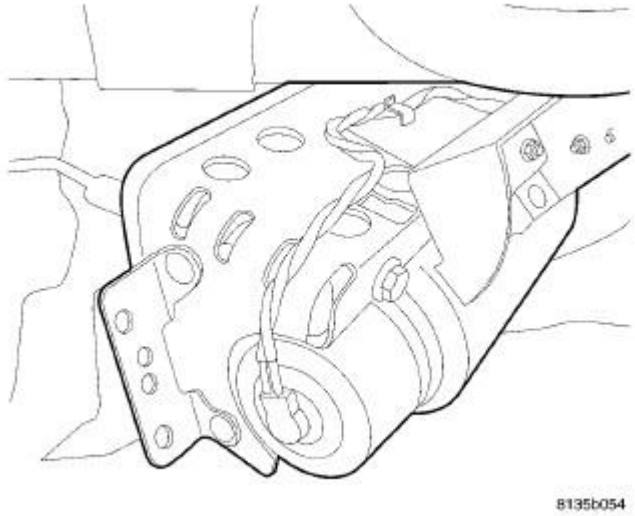

Fig. 32: Passenger Airbag
Courtesy of CHRYSLER LLC

8. Maneuver the passenger airbag down in a way to clear any obstacles that may impede the

removal of the airbag.

INSTALLATION

INSTALLATION

DEPLOYED PASSENGER AIRBAG

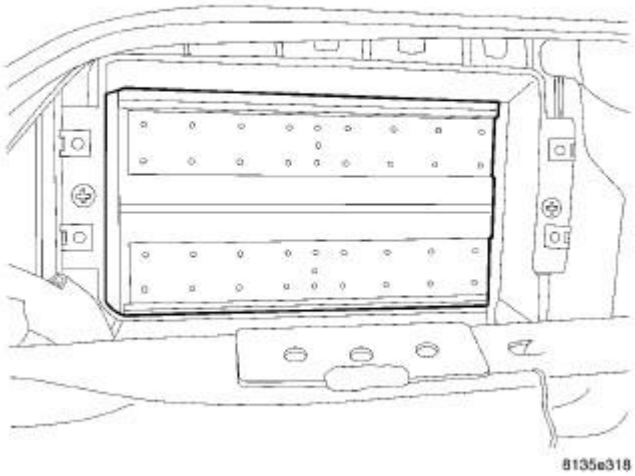

Fig. 33: Passenger Airbag Location
Courtesy of CHRYSLER LLC

NOTE: For deployed passenger airbags, the instrument panel top pad must be replaced.

1. Clean powder residue from interior of vehicle. See **Restraints - Standard Procedure**.
2. Inspect and transfer all reusable components from the old instrument panel top pad to the new instrument panel top pad.
3. Position new passenger airbag into instrument panel cavity.

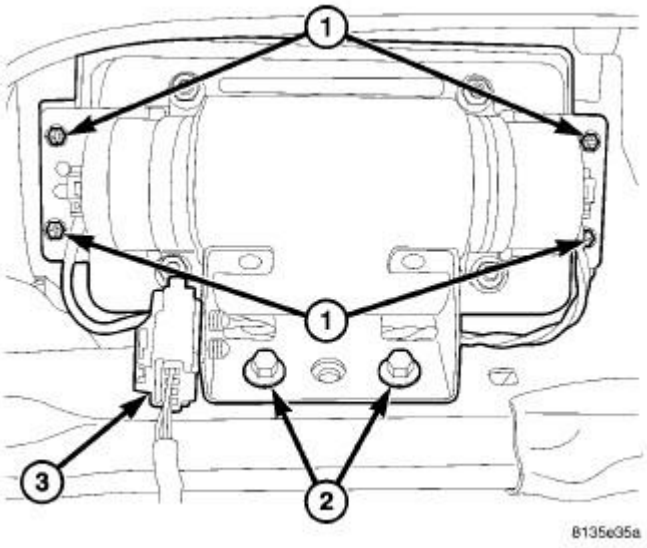

Fig. 34: Passenger Airbag Fasteners
Courtesy of CHRYSLER LLC

4. Install the two lower passenger airbag mounting bolts (2). Torque bolts to 11.6 N.m (103 in. lbs.).
5. Install the four left and right passenger airbag mounting screws (1). Torque screws to 2.8 N.m (25 in. lbs.).
6. Connect the passenger airbag electrical connector (3).
7. Install new instrument panel assembly. Refer to **Body/Instrument Panel/PANEL, Instrument - Installation** .

WARNING: Do not connect the battery negative cable. See Restraints - Diagnosis and Testing. If the system test is not performed first it may result in serious or fatal injury.

NONDEPLOYED PASSENGER AIRBAG

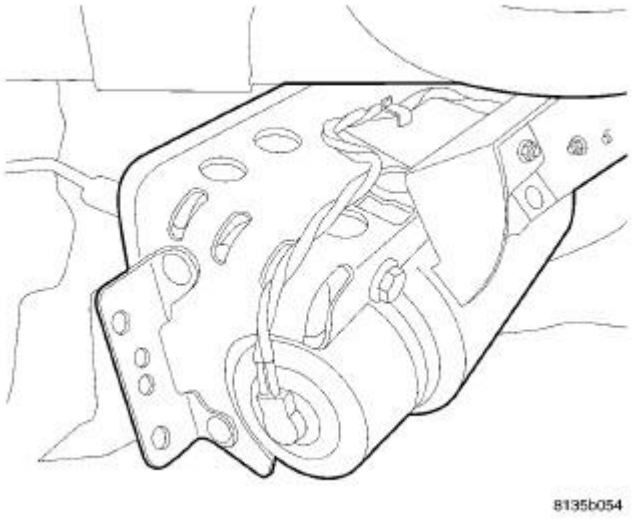

Fig. 35: Passenger Airbag
Courtesy of CHRYSLER LLC

1. Maneuver the passenger airbag up into the instrument panel in a way to clear any obstacles that may impede the installation of the airbag.

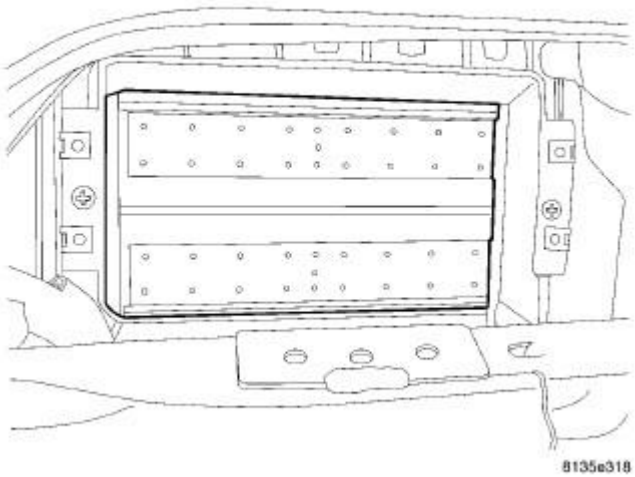

Fig. 36: Passenger Airbag Location
Courtesy of CHRYSLER LLC

2. Place the passenger into the cavity of the passenger airbag door.

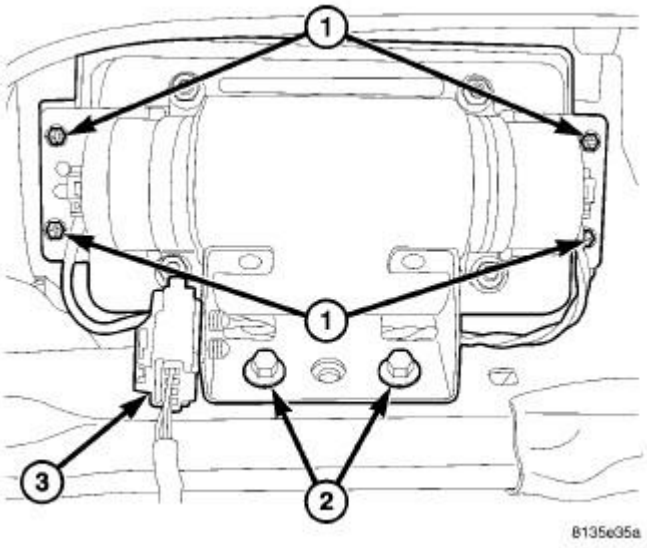

Fig. 37: Passenger Airbag Fasteners
Courtesy of CHRYSLER LLC

3. Install the two passenger airbag mounting bolts (2) to the crosscar beam. Torque bolts to 11.6 N.m (103 in. lbs.).
4. Connect the passenger airbag electrical connector (3).

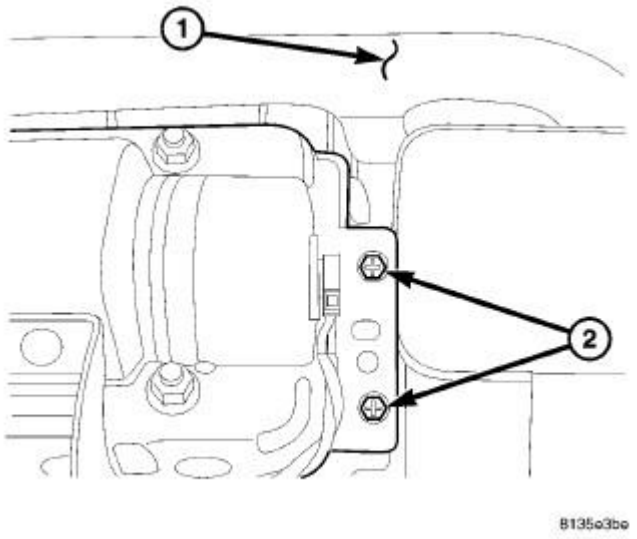

Fig. 38: Inboard Mounting Screws
Courtesy of CHRYSLER LLC

5. Install the two inboard mounting screws (2) to the passenger airbag just below the distribution duct (1) and to the left of the distribution housing. Torque screws to 2.8 N.m (25 in. lbs.).

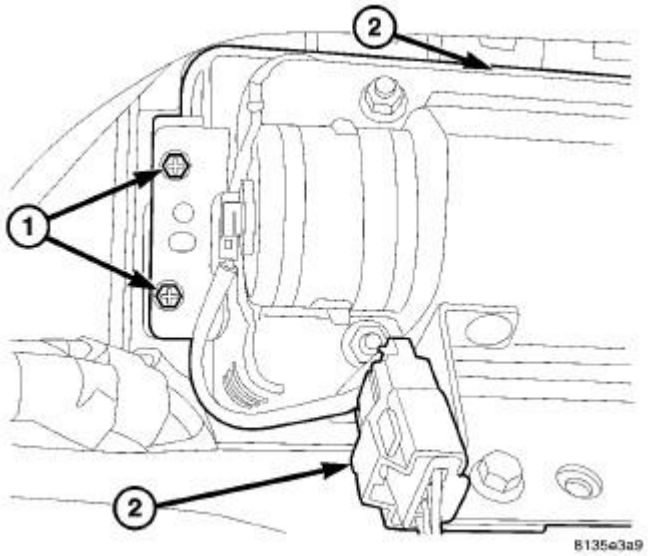

Fig. 39: Outboard Mounting Screws
Courtesy of CHRYSLER LLC

6. Install the two outboard mounting screws (1) to the passenger airbag just below the distribution duct. Torque screws to 2.8 N.m (25 in. lbs.).

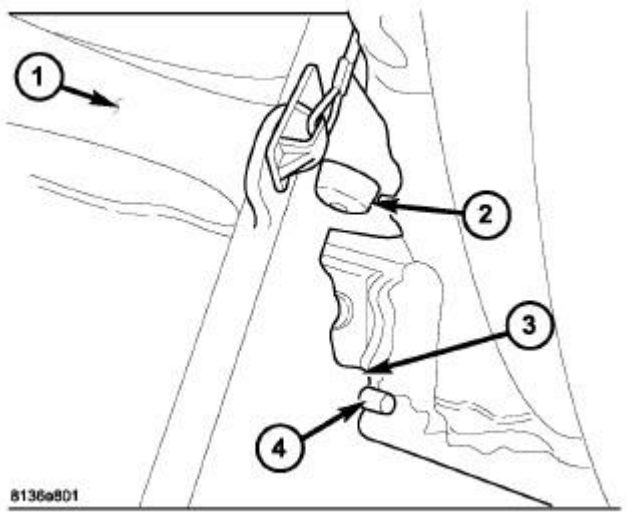

Fig. 40: Removing/Installing Glove Box Bin
Courtesy of CHRYSLER LLC

7. Install the glove box assembly. Refer to **Body/Instrument Panel/GLOVE BOX, Instrument Panel - Installation** .

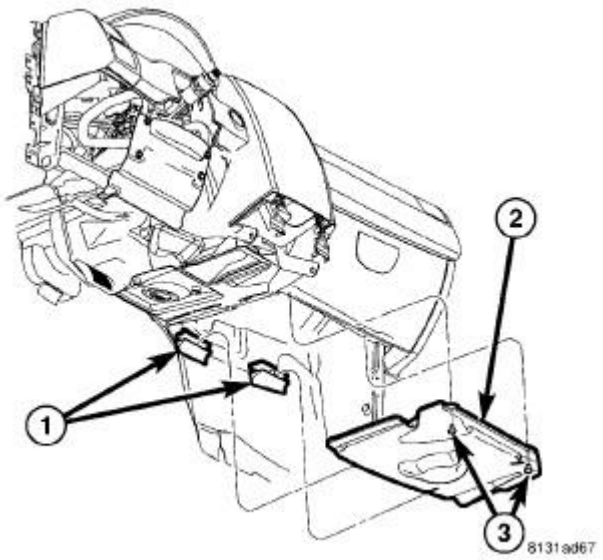

Fig. 41: Right Instrument Panel Closeout Panel
Courtesy of CHRYSLER LLC

8. Install the right side silencer pad. Refer to **Body/Instrument Panel/PANEL, Silencer - Installation** .

WARNING: Do not connect the battery negative cable. See Restraints - Diagnosis and Testing. If the system test is not performed first it may result in serious or fatal injury.

AIR BAG, SIDE CURTAIN

DESCRIPTION

DESCRIPTION



8098029e

Fig. 42: Identifying SRS Airbag Label
Courtesy of CHRYSLER LLC

Curtain airbags are available when the vehicle is equipped with dual front airbags. These airbags are passive, inflatable, Supplemental Restraint System (SRS) components, and are readily identified by a molded identification trim button with the SRS - AIRBAG logo located near the top of each upper B-pillar trim panel. This system is designed to reduce injuries to the vehicle occupants in the event of a side impact collision.

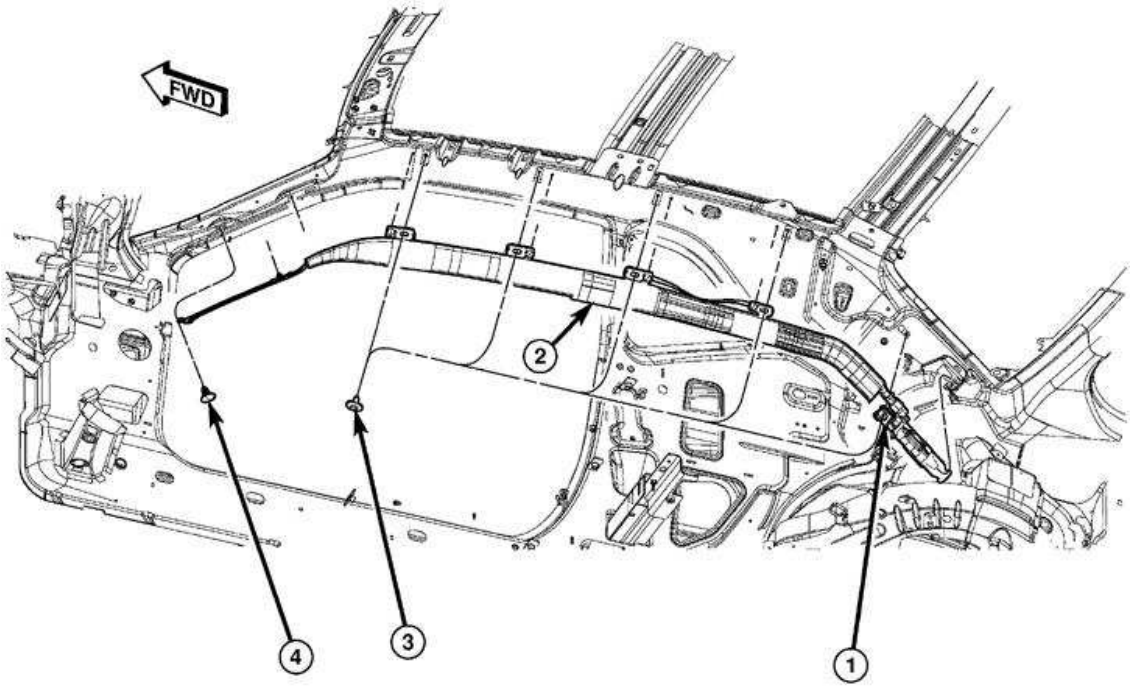

Fig. 43: Curtain Airbag Components
Courtesy of CHRYSLER LLC

Curtain airbags have two individually controlled airbags. These airbags are concealed and mounted above the headliner where they are secured to one of the roof side rails. Each folded airbag cushion extends along the roof rail from the A-pillar at the front of the vehicle to the C-pillar at the rear of the vehicle. The airbag cushion is secured during installation with plastic pushpins to the roof rail.



Fig. 44: Curtain Airbag

Courtesy of CHRYSLER LLC

A long tether extends down the A-pillar from the front of the airbag cushion. A short tether is secured near the top of the C-pillar.

The hybrid-type inflator for each airbag is secured to the roof rail at the rear of airbag, back by the C-pillar. The entire assembly is secured to the inside of the roof rail with screws.

An airbag squib harness connector is routed to the rear of the airbag inflator. The body harness then connects the curtain airbag to the Occupant Restraint Controller (ORC).

The curtain airbag cannot be adjusted or repaired and must be replaced if deployed, faulty, or in any way damaged. Once a curtain airbag has been deployed, the complete airbag, headliner, upper A, B, and C-pillar trim, and all other visibly damaged components must be replaced.

OPERATION

OPERATION

Each curtain airbag is deployed individually by an electrical signal generated by the Occupant Restraint Controller (ORC) to which it is connected through squib circuits. The hybrid-type inflator assembly for each airbag contains a small canister of highly compressed inert gas. When the ORC sends the proper electrical signal to the airbag inflator, the electrical energy creates enough heat to ignite chemical pellets within the inflator.

Once ignited, these chemicals burn rapidly and produce the pressure necessary to rupture a containment disk in the inert gas canister. The inflator and inert gas canister are sealed and connected to a tubular manifold so that all of the released gas is directed into the folded curtain airbag cushion, causing the cushion to inflate. As the airbag cushion inflates it will drop down from the roof rail between the edge of the headliner and the side glass/body pillars to form a curtain-like cushion to protect the vehicle occupants during a side impact collision.

The front and rear tethers keep the airbag cushion taut to the side of the vehicle, thus ensuring that the bag will deploy in the proper position. Following the airbag deployment, the airbag cushion quickly deflates by venting the inert gas through the loose weave of the cushion fabric, and the deflated cushion hangs down loosely from the roof rail.

REMOVAL

REMOVAL

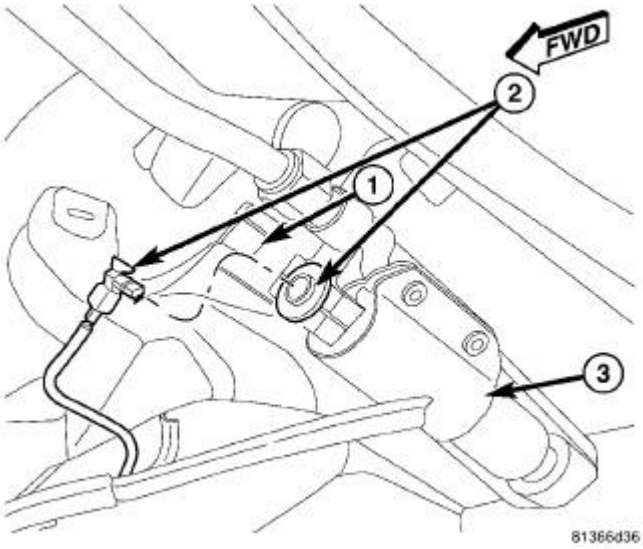

Fig. 45: Airbag Squib Connector & Inflator
Courtesy of CHRYSLER LLC

1. Disconnect and isolate the battery negative cable.

   WARNING: Wait two minutes for the airbag system reserve capacitor to discharge before beginning any airbag system or component service. Failure to do so may result in accidental airbag deployment, which may result in serious or fatal injury.

2. Remove the headliner from the vehicle. Refer to **Body/Interior/HEADLINER - Removal** .
3. Disconnect the curtain airbag squib electrical connector (2) from the inflator (3).

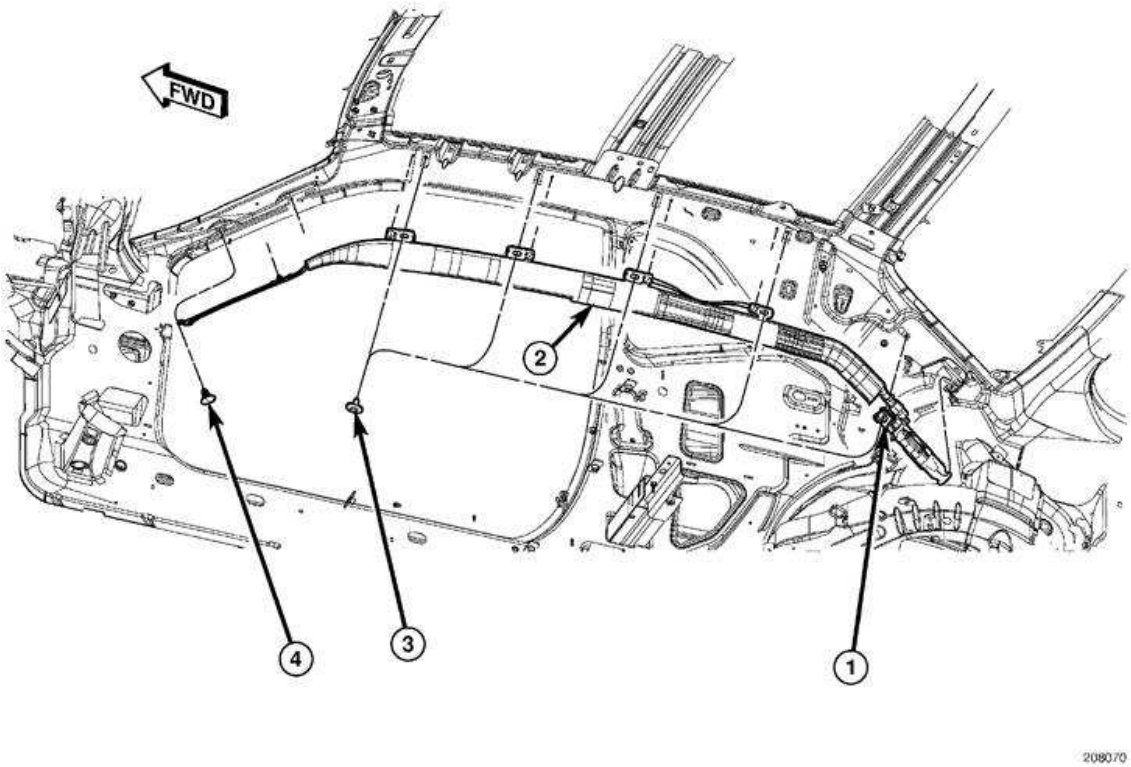

Fig. 46: Curtain Airbag Components
Courtesy of CHRYSLER LLC

4. Remove the four screws (3) that secure the curtain airbag to the spring nuts in the roof side rail.

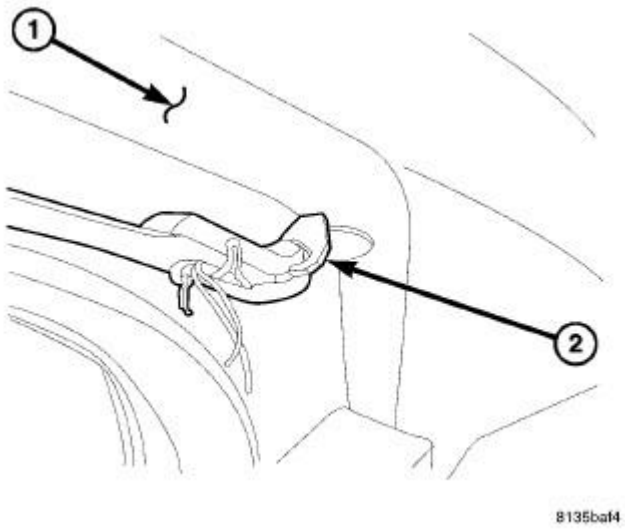

Fig. 47: Front Tether
Courtesy of CHRYSLER LLC

5. Remove and discard the pushpin and unclip the front tether (2) from the A-pillar (1).

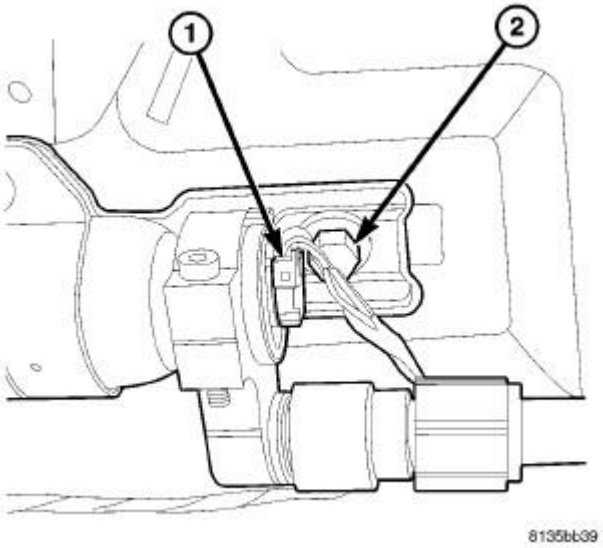

Fig. 48: Inflator Bolt
Courtesy of CHRYSLER LLC

6. Remove the bolt (2) securing the inflator to the C/D-pillar.

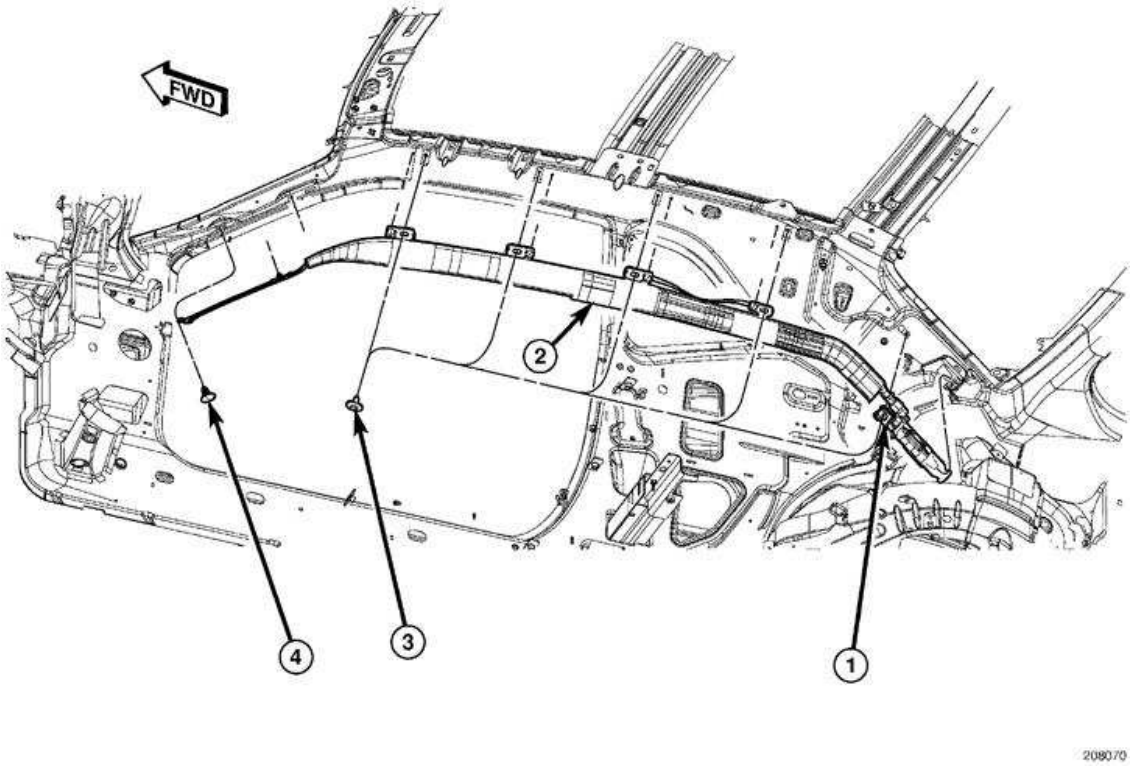

Fig. 49: Curtain Airbag Components
Courtesy of CHRYSLER LLC

7. Remove and discard the pushpins (4) and remove the curtain air bag from vehicle.

INSTALLATION

INSTALLATION

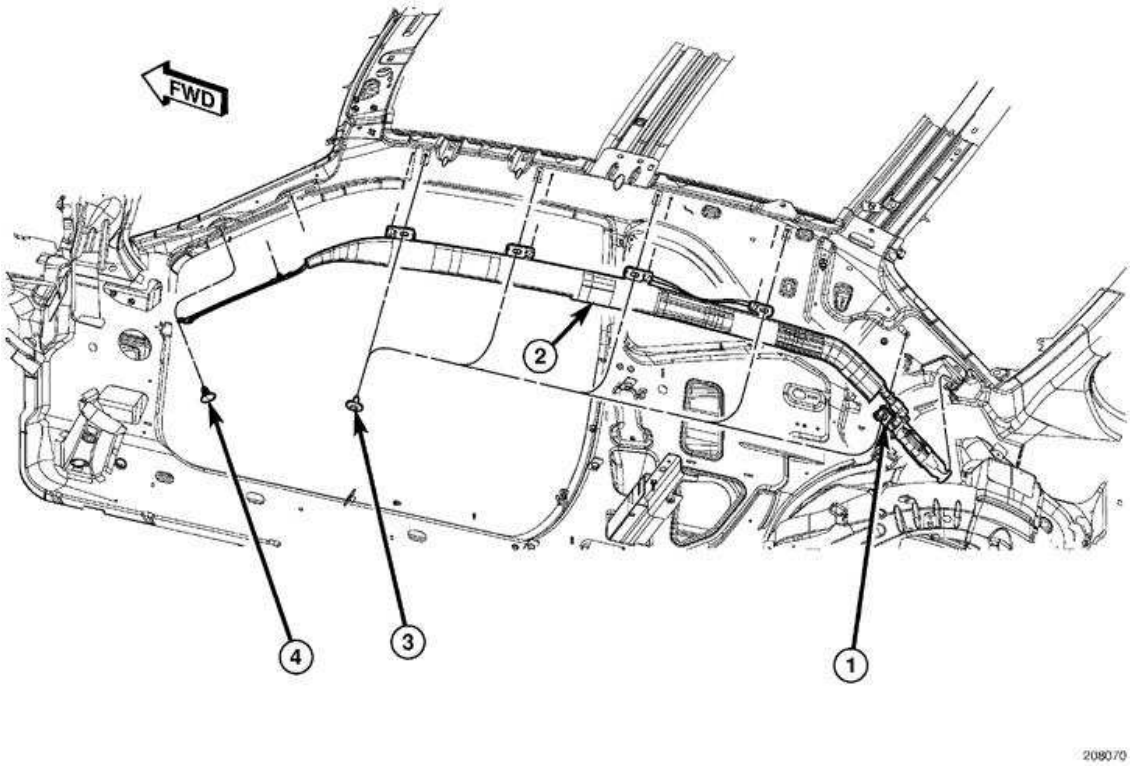

Fig. 50: Curtain Airbag Components
Courtesy of CHRYSLER LLC

1. Position the curtain airbag (2) in vehicle along the roof side rail and secure with pushpins (4).

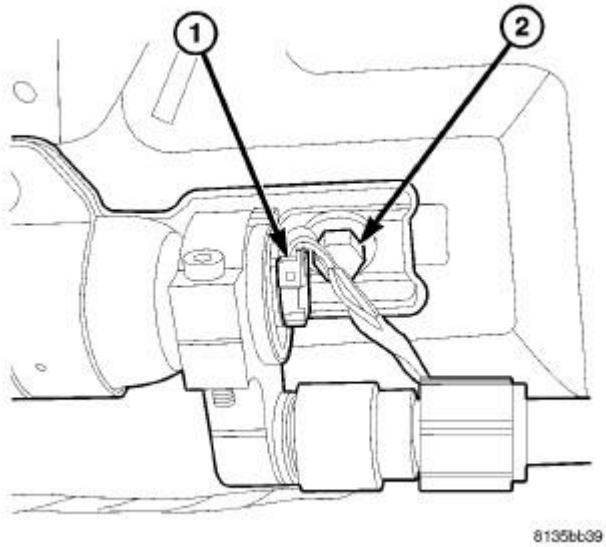

Fig. 51: Inflator Bolt
Courtesy of CHRYSLER LLC

2. Install the bolt (2) securing the inflator to the C/D-pillar. Tighten bolt to 11 N.m (8 ft. lbs.).

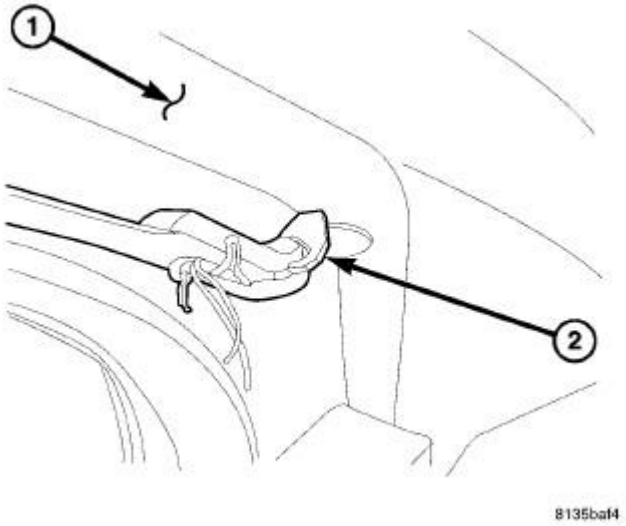

Fig. 52: Front Tether
Courtesy of CHRYSLER LLC

3. Clip the front tether (2) to the A-pillar (1) and install a new push pin (4).

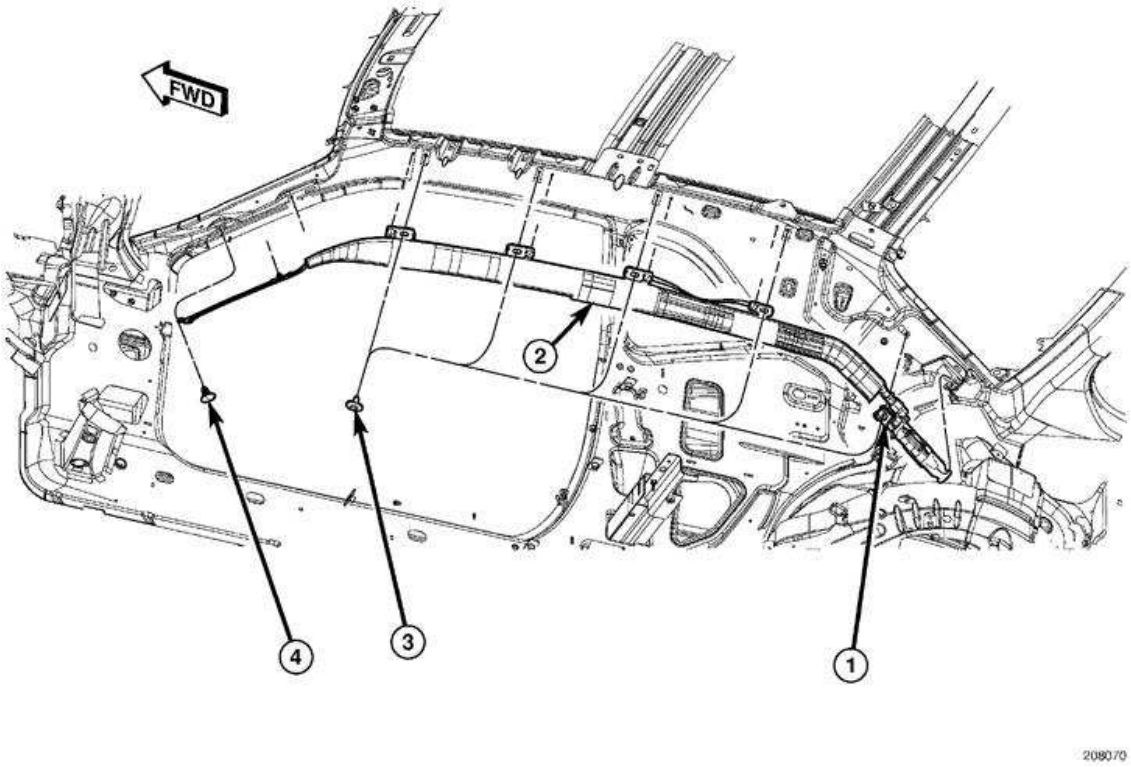

Fig. 53: Curtain Airbag Components
Courtesy of CHRYSLER LLC

4. Install the screws (3) that securing the curtain airbag (2) to the spring nuts in the roof side rail. Tighten screws to 5 N.m (44 in. lbs.).

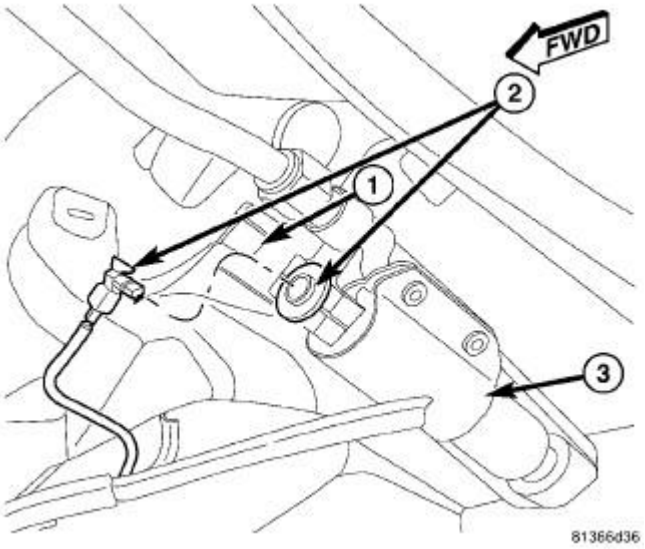

Fig. 54: Airbag Squib Connector & Inflator
Courtesy of CHRYSLER LLC

5. Connect the curtain airbag squib electrical connector (2) to the inflator (3).
6. Install the headliner into the vehicle. Refer to **Body/Interior/HEADLINER - Installation** .

WARNING: Do not connect the battery negative cable. See Restraints - Diagnosis and Testing. If the system test is not performed first it may result in serious or fatal injury.

ANCHOR, CHILD SEAT

DESCRIPTION

DESCRIPTION

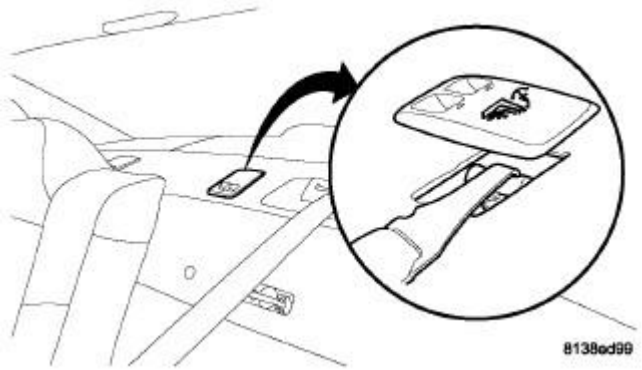

Fig. 55: Lower Anchor & Tether
Courtesy of CHRYSLER LLC

The Lower Anchors and Tether for Children, or LATCH child restraint anchorage system provides for the installation of suitable child restraints in certain seating positions without using the seat belt provided for that seating position. The second row seats are equipped with a fixed-position child restraint upper tether anchor for both the center and the two outboard seating positions, and child restraint lower anchors for all three seating positions.

The three upper tether anchors are integral to the rear shelf panel. These anchors are each constructed from a heavy-gauge steel wire loop. The child restraint upper tether anchors cannot be adjusted or repaired and, if faulty or damaged, they must be replaced.

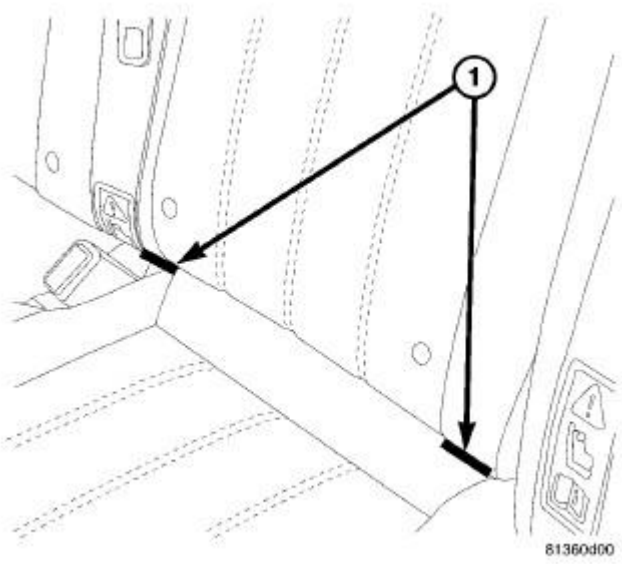

Fig. 56: Lower Anchors
Courtesy of CHRYSLER LLC

The lower anchors (1) are permanently mounted to the rear floor pan beneath the seat. These anchors are also constructed from a heavy-gauge steel wire loop welded to the floor pan. They are each accessed from the front of their respective seats, at each side where the seat back meets the seat cushion. These lower anchors cannot be adjusted or repaired and, if faulty or damaged, they must be replaced as a unit.

OPERATION

OPERATION

See the owner's manual in the vehicle glove box for more information on the proper use of all of the factory-installed child restraint anchors.

BUCKLE, SEAT BELT

REMOVAL

REMOVAL

FRONT SEAT BELT BUCKLE

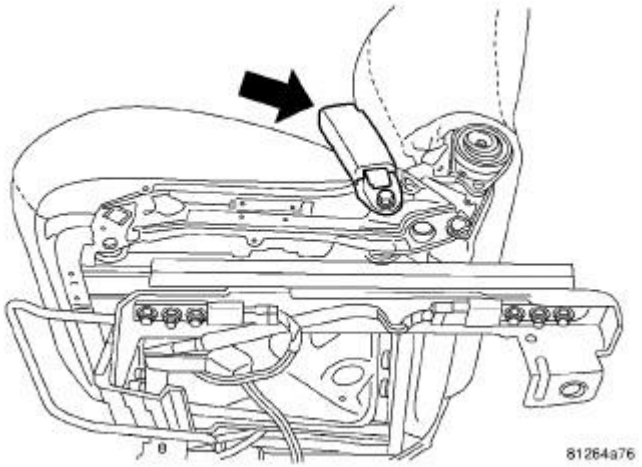

Fig. 57: Seat Belt Buckle
Courtesy of CHRYSLER LLC

1. Disconnect and isolate the battery negative cable.

> **WARNING: Wait two minutes for the airbag system reserve capacitor to discharge before beginning any airbag system or component service. Failure to do so may result in accidental airbag deployment, which may result in serious or fatal injury.**

2. Remove center console from vehicle. Refer to **Body/Interior/CONSOLE, Floor - Removal** .
3. Remove the inner side shield from the front seat cushion.
4. Disconnect the one electrical connector.
5. Remove the one nut to the buckle assembly.

REAR SEAT BELT BUCKLE

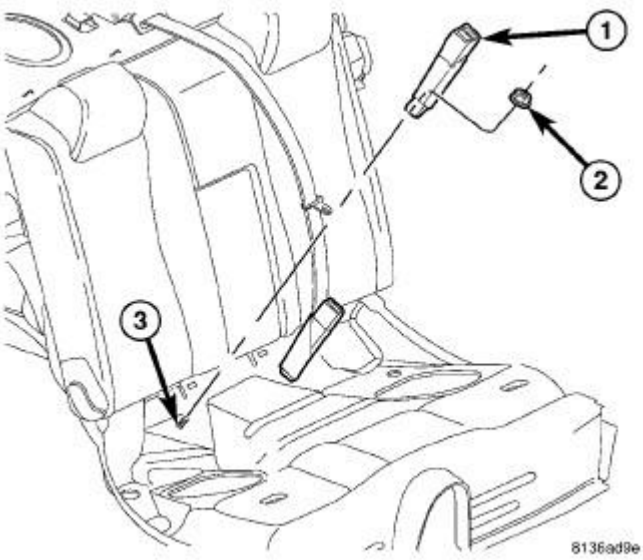

Fig. 58: Rear Seat Belt Buckle
Courtesy of CHRYSLER LLC

1. Remove the rear seat cushion. Refer to **Body/Seats/COVER, Seat Cushion - Removal** .
2. Remove the one nut (2) to the seat belt buckle.

INSTALLATION

INSTALLATION

FRONT SEAT BELT BUCKLE

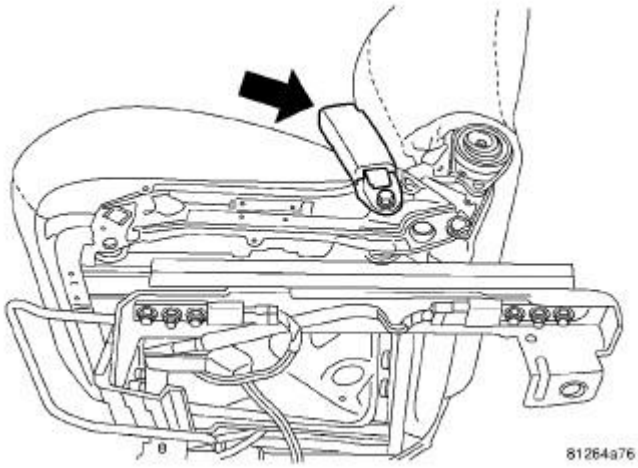

Fig. 59: Seat Belt Buckle
Courtesy of CHRYSLER LLC

1. Position the front seat belt buckle onto the stud near the rear of the inboard seat cushion frame.

2. Install the retaining nut onto seat cushion frame. Tighten the nut to 43 N.m (32 ft. lbs.)
3. Connect the seat belt buckle electrical connector.
4. Install the seat cushion side shield.
5. Install floor console. Refer to **Body/Interior/CONSOLE, Floor - Installation** .

WARNING: Do not connect the battery negative cable. See Restraints - Diagnosis and Testing. If the system test is not performed first it may result in serious or fatal injury.

WARNING: Following successful completion of the Airbag System test procedure, the Occupant Classification System Verification Test must be done using a scan tool and the appropriate diagnostic information.

REAR SEAT BELT BUCKLE

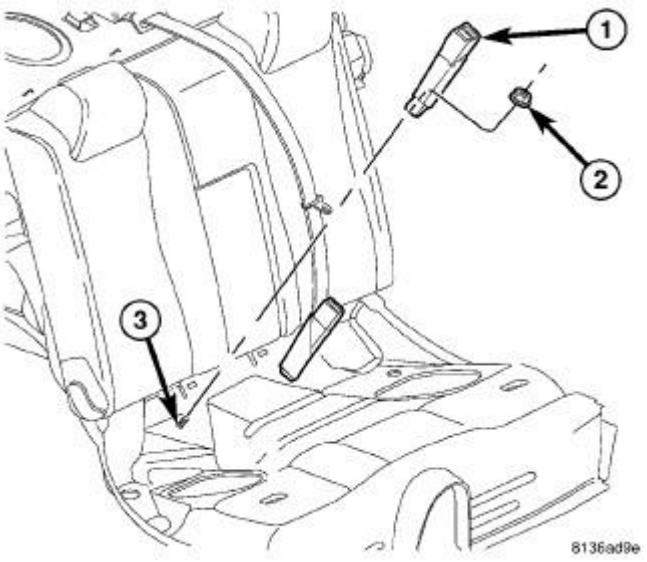

Fig. 60: Rear Seat Belt Buckle
Courtesy of CHRYSLER LLC

1. Position the rear seat belt buckle onto mounting studs (3).
2. Install retaining nut. Torque nut to 34 N.m (25 ft. lbs.).
3. Install rear seat cushion. Refer to **Body/Seats/COVER, Seat Cushion - Installation** .

CLOCKSPRING

DESCRIPTION

DESCRIPTION

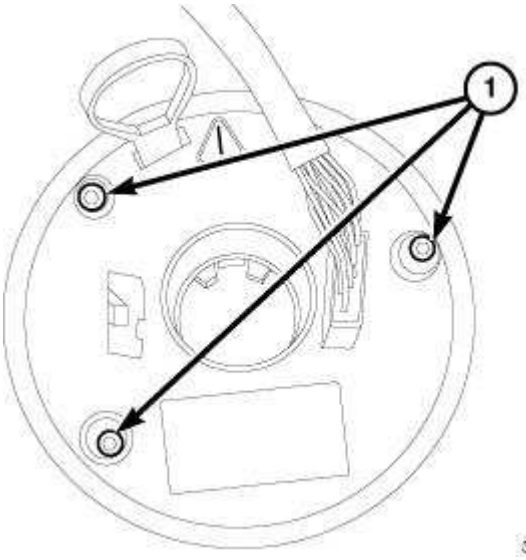

Fig. 61: Identifying Clockspring Assembly Screws
Courtesy of CHRYSLER LLC

WARNING: To service any component of the Steering Column Control Module (SCCM), the entire assembly must be removed from the column. This must be done due to the clockspring passing through the assembly and into the self docking connector. Failure to remove the assembly could damage the pins of the clockspring and prevent the airbag system from operating properly Failure to follow these instructions may result in possible serious or fatal injury.

The clockspring assembly is secured with three screws (1) onto the top of the Steering Column Control Module (SCCM). Refer to **Steering/Column/MODULE, Steering Column Control - Description** near the top of the steering column behind the steering wheel.

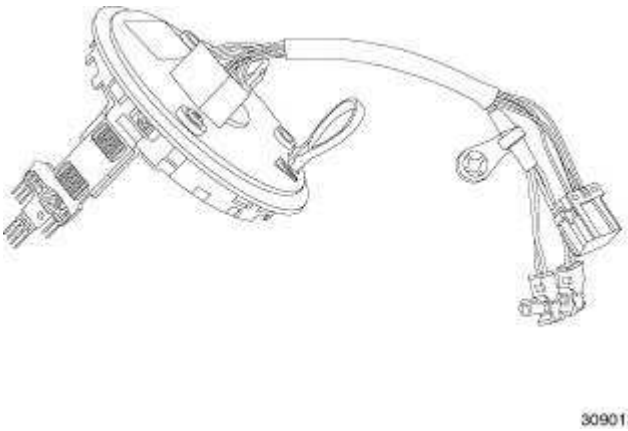

Fig. 62: Clockspring
Courtesy of CHRYSLER LLC

The clockspring consists of a flat, round molded plastic case. Within the plastic case is a spool-like molded plastic rotor with a hub. The surface of the rotor hub has a large center hole. Within the

plastic case, and wound around the rotor spool, is a long ribbon-like tape that consists of several thin copper wire leads sandwiched between two thin plastic membranes. The outer end of the tape terminates at the connector terminals that align themselves into the SCCM self-docking connector that faces the instrument panel, while the inner end of the tape terminates at the pigtail wires and connector receptacles on the hub of the clockspring rotor that face the steering wheel.

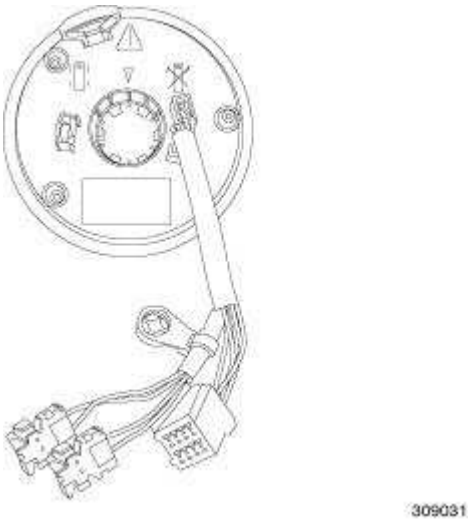

Fig. 63: Clockspring
Courtesy of CHRYSLER LLC

Service replacement clocksprings are shipped pre-centered with the screws backed out and a grenade pin holding the clockspring into place. If reusing a clockspring or installing a new one that you are unsure if it is centered or not. See **Restraints/CLOCKSPRING - Standard Procedure**.

The clockspring cannot be repaired. If the clockspring is faulty, damaged, or if the driver airbag has been deployed, the clockspring must be replaced.

OPERATION

OPERATION

WARNING: To service any component of the Steering Column Control Module (SCCM), the entire assembly must be removed from the column. This must be done due to the clockspring passing through the assembly and into the self docking connector. Failure to remove the assembly could damage the pins of the clockspring and prevent the airbag system from operating properly Failure to follow these instructions may result in possible serious or fatal injury.

The clockspring is a mechanical electrical circuit component used to provide continuous electrical continuity between the fixed instrument panel wire harness and the electrical components mounted on or in the rotating steering wheel. On this model the rotating electrical components include the:

- Driver Airbag

- Horn Switch
- Steering Wheel Switches (if the vehicle is equipped)
- Cruise Control Switch

The clockspring case is positioned and secured to Steering Column Control Module (SCCM) housing near the top of the steering column. The connector terminals on the tail of the fixed clockspring case connect the clockspring to the vehicle electrical system through the self-docking connector in the instrument panel wire harness.

The clockspring rotor is movable and is keyed to the steering column shaft molded onto the rotor hub. The lobe on the turn signal cancel cam on the lower surface of the clockspring rotor hub contacts a turn signal cancel actuator of the multifunction switch, to provide automatic turn signal cancellation.

The clockspring has one short, black-sleeved pigtail with black ring wire routing clip. The routing clip slips over the lower left most (of four) airbag studs. The wires on the upper surface of the clockspring rotor connect the clockspring to the multistage driver airbag. The steering wheel wire harness connects the two connector receptacles on the upper surface of the clockspring rotor to the horn switch feed pigtail wire connector and if the vehicle is equipped, to the optional steering wheel switches on the steering wheel.

Like the clockspring in a timepiece, the clockspring tape has travel limits and can be damaged by being wound too tightly during full stop-to-stop steering wheel rotation. To prevent this from occurring, the clockspring is centered when it is installed on the steering column. Centering the clockspring indexes the clockspring tape to the movable steering components so that the tape can operate within its designed travel limits. However, if the clockspring is removed from the steering column or if the steering shaft is disconnected from the steering gear, the clockspring spool can change position relative to the movable steering components. The clockspring must be re-centered following completion of this service or the tape may be damaged.

Service replacement clocksprings are shipped pre-centered. The screws that retain the clockspring to the SCCM should not be removed until the clockspring has been installed on the SCCM. If the screws have been removed before the clockspring is installed on the SCCM, the clockspring centering procedure must be performed. See **Restraints/CLOCKSPRING - Standard Procedure**.

The clockspring is located within the SCCM. If the clockspring has to be replaced. Refer to **Steering/Column/MODULE, Steering Column Control - Disassembly** .

STANDARD PROCEDURE

CLOCKSPRING CENTERING

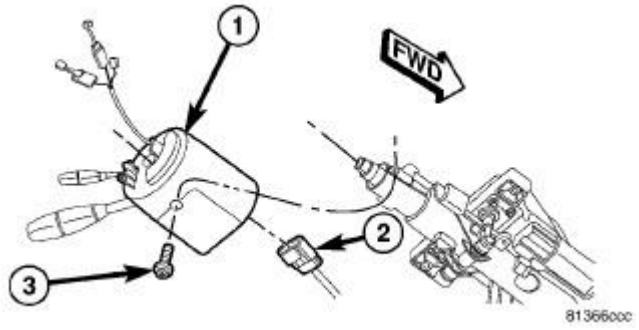

Fig. 64: Remove/Install SCCM
Courtesy of CHRYSLER LLC

WARNING: To service any component of the Steering Column Control Module (SCCM), the entire assembly must be removed from the column. This must be done due to the clockspring passing through the assembly and into the self docking connector. Failure to remove the assembly could damage the pins of the clockspring and prevent the airbag system from operating properly Failure to follow these instructions may result in possible serious or fatal injury.

If the rotating tape (wire coil) in the clockspring is not positioned properly with the steering wheel and the front wheels, the clockspring may fail. The following procedure **must be used** to center the clockspring if it is not known to be properly positioned, or if the front wheels were moved from the straight ahead position.

NOTE: Before starting this procedure, be certain to turn the steering wheel until the front wheels are in the straight ahead position.

1. Position the steering wheel and front wheels straight ahead.
2. Remove the Steering Column Control Module (SCCM). Refer to **Steering/Column/MODULE, Steering Column Control - Removal** .

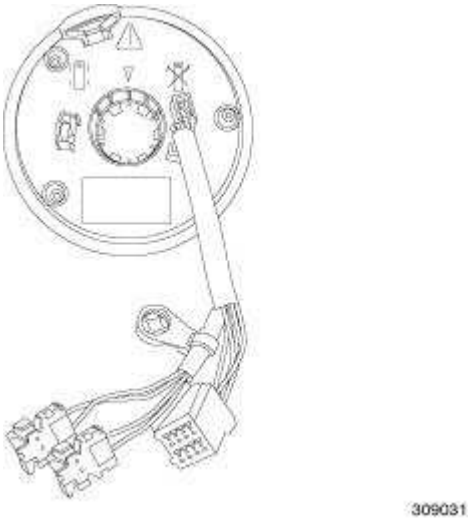

Fig. 65: Clockspring
Courtesy of CHRYSLER LLC

3. Remove the clockspring. Refer to **Steering/Column/MODULE, Steering Column Control - Disassembly** .
4. The clockspring can rotate approximately 5 3/4 turns from lock-to-lock. To be properly centered, rotate the clockspring rotor clockwise until the rotor stops. Do not apply excessive force.
5. From the end of travel, slowly rotate the rotor counterclockwise until the arrow points to the 12 o'clock position. Then continue two rotations returning to the 12 o'clock position. Temporarily secure the rotor to prevent inadvertent rotation, until the SCCM assembly is reinstalled in the vehicle.

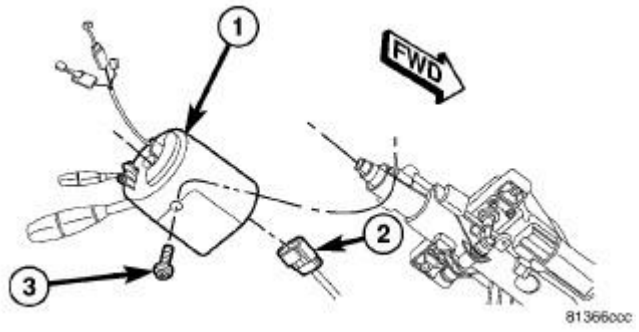

Fig. 66: Remove/Install SCCM
Courtesy of CHRYSLER LLC

6. Install the SCCM. Refer to **Steering/Column/MODULE, Steering Column Control - Installation** .
7. Install the wire pigtail routing clip over the lower left airbag stud, and remove temporary aid used to secure clockspring.

WARNING: Do not connect the battery negative cable. See Restraints - Diagnosis and Testing. If the system test is not performed first it

may result in serious or fatal injury.

COVER, DRIVER AIR BAG

REMOVAL

REMOVAL

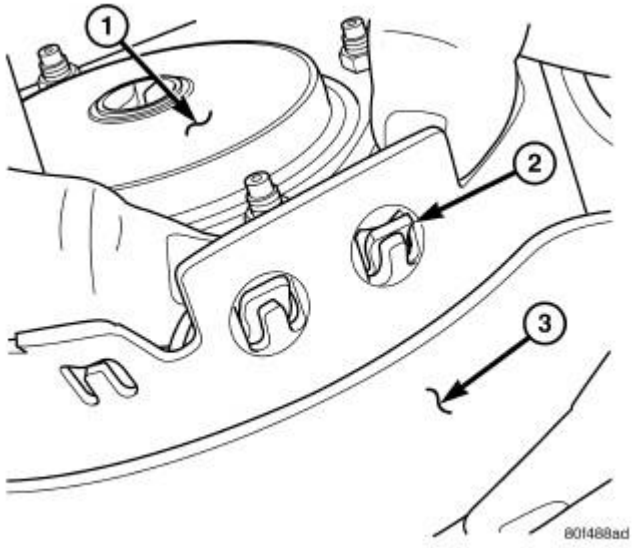

Fig. 67: Driver Airbag Cover
Courtesy of CHRYSLER LLC

1. Disconnect and isolate the battery negative cable.

   WARNING: Wait two minutes for the airbag system reserve capacitor to discharge before beginning any airbag system or component service. Failure to do so may result in accidental airbag deployment, and serious or fatal injury.

   CAUTION: Do not pull on the horn switch feed pigtail wire to disengage the connector from the driver airbag or to disconnect the horn switch to steering wheel wire harness connection. Improper pulling on this pigtail wire or connection can result in damage to the horn switch membrane or feed circuit.

2. Remove the driver airbag (2). See **Restraints/AIR BAG, Driver - Removal**.
3. With driver airbag removed, pick a corner and push down on the inflator (1) or latch hook mounting plate until the latch hooks (2) push out of the driver airbag cover (3).
4. Remove driver airbag from driver airbag cover.
5. The membrane type horn switch is integral to the driver airbag trim cover. If inoperative, the

entire trim cover must be replaced.

INSTALLATION

INSTALLATION

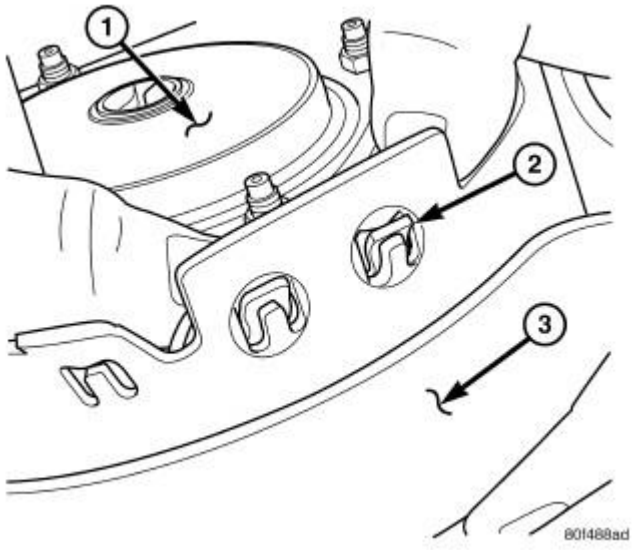

Fig. 68: Driver Airbag Cover
Courtesy of CHRYSLER LLC

1. Place the driver airbag into new driver airbag trim cover. Be careful not to pinch the airbag cushion between the latch hook mounting plate and the trim cover.

   NOTE: Make sure that the horn switch wire harness is routed through the cut-out on the side of the trim cover and positioned in the hook on the back of the housing. Attach connector to the housing.

2. Push down on the latch hook mounting plate and guide the latch hooks into the slots on the driver airbag cover.

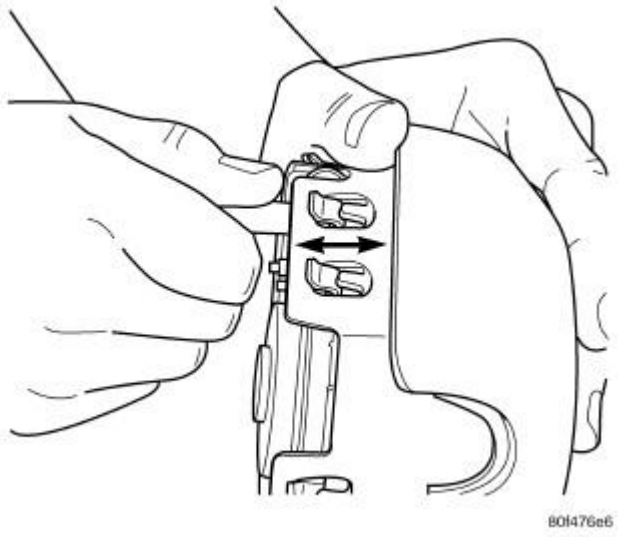

Fig. 69: Secure Driver Airbag Cover Latch Hooks
Courtesy of CHRYSLER LLC

3. Once all the latch hooks have been started, pull the driver airbag cover away from the driver airbag to fully seat the latch hooks.
4. Install the driver airbag (2). See **Restraints/AIR BAG, Driver - Installation**. Torque the two screws (1) to 10 N.m (89 in. lbs.).

WARNING: Do not connect the battery negative cable. See Restraints - Diagnosis and Testing. If the system test is not performed first it may result in serious or fatal injury.

MODULE, OCCUPANT RESTRAINT CONTROLLER

DESCRIPTION

DESCRIPTION

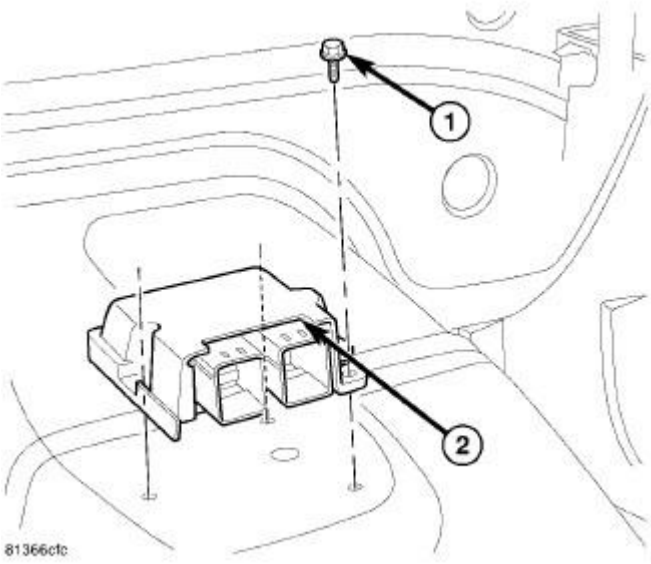

Fig. 70: Occupant Restraint Controller
Courtesy of CHRYSLER LLC

The Occupant Restraint Controller (ORC) (2), sometimes referred to as the Airbag Control Module (ACM), is secured with three screws to a stamped steel mounting bracket welded onto the top of the floor panel transmission tunnel underneath the instrument panel center stack, beneath the center floor console in the passenger compartment of the vehicle. Concealed within a hollow in the center of the die cast aluminum ORC housing is the electronic circuitry of the ORC which includes a microprocessor, an electronic impact sensor, an electronic safing sensor, and an energy storage capacitor. A stamped metal cover plate is secured to the bottom of the ORC housing with four screws to enclose and protect the internal electronic circuitry and components.

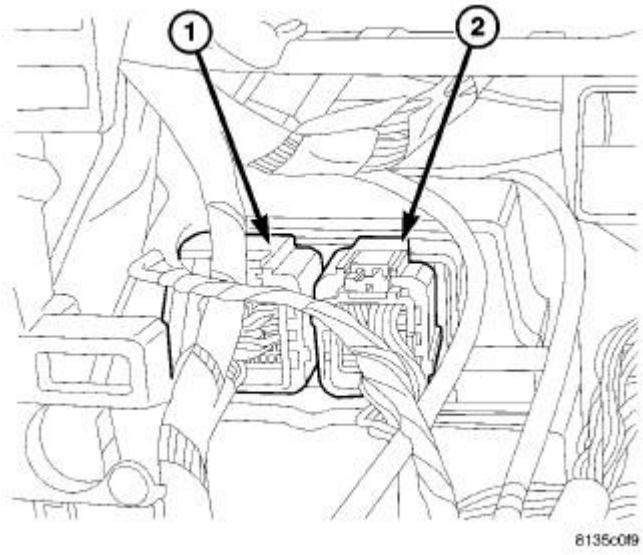

Fig. 71: Locating Electrical Connectors
Courtesy of CHRYSLER LLC

The ORC housing has integral mounting flanges in three locations. Two molded plastic electrical connectors (1 and 2, referred to as C1 and C2 in the appropriate diagnostic and wiring information) exit the rearward facing side of the ORC housing. These terminal pins connect the ORC to the vehicle electrical system through two connectors.

The impact sensor and safing sensor internal to the ORC are calibrated for the specific vehicle, and are only serviced as a unit with the ORC. The ORC cannot be repaired or adjusted and, if damaged or faulty, it must be replaced.

OPERATION

OPERATION

The microprocessor in the Occupant Restraint Controller (ORC) contains the supplemental restraint system logic circuits and controls all of the Supplemental Restraint System (SRS) components. The ORC uses On-Board Diagnostics (OBD) and communicates with other electronic modules in the vehicle as well as with the diagnostic scan tool using the Controller Area Network (CAN) data bus. This method of communication is used for control of the airbag indicator in the ElectroMechanical Instrument Cluster (EMIC) and for SRS diagnosis and testing through the 16-way data link connector located on the driver side lower edge of the instrument panel.

The ORC microprocessor continuously monitors all of the SRS electrical circuits to determine the system readiness. If the ORC detects a monitored system fault, it sets an active and stored Diagnostic Trouble Code (DTC) and sends electronic messages to the EMIC over the CAN data bus to illuminate the airbag indicator. An active fault only remains for the duration of the fault, or in some cases for the duration of the current ignition switch cycle, while a stored fault causes a DTC to be stored in memory by the ORC. For some DTCs, if a fault does not recur for a number of ignition cycles, the ORC automatically erases the stored DTC. For other internal faults, the stored DTC is latched forever.

The ORC receives battery current through two circuits: a fused ignition switch output (run) circuit and a fused ignition switch output (run-start) circuit. The ORC receives ground through a ground circuit of the instrument panel wire harness. These connections allow the ORC to be operational whenever the ignition switch is in the START or ON positions.

The ORC also contains an energy-storage capacitor. When the ignition switch is in the START or ON positions, this capacitor is continually being charged with enough electrical energy to deploy the front supplemental restraint components for up to one second following a battery disconnect or failure. The purpose of the capacitor is to provide backup SRS protection in case there is a loss of battery current supply to the ORC during an impact.

Two sensors are contained within the ORC, an electronic impact sensor and a safing sensor. The ORC also monitors inputs from two remote front impact sensors located on the back of the right and left vertical members of the radiator support near the front of the vehicle. The electronic impact sensors are accelerometers that sense the rate of vehicle deceleration, which provides verification of the direction and severity of an impact. On vehicles equipped with curtain airbags, the ORC also monitors inputs from four additional remote impact sensors to control deployment of the curtain airbags. Two are located on the left and right between the B and C-pillars, and two are located on the

left and right doors, underneath the door interior trim panels.

The safing sensor is an electronic accelerometer sensor within the ORC that provides an additional logic input to the ORC microprocessor. The safing sensor verifies the need for a supplemental restraint deployment by detecting impact energy of a lesser magnitude than that of the primary electronic impact sensors, and must exceed a safing threshold in order for the airbags to deploy. Vehicles equipped with curtain airbags, feature a second safing sensor within the ORC to provide confirmation to the ORC microprocessor of side impact forces. This second safing sensor is a bi-directional unit that detects impact forces from either side of the vehicle.

Pre-programmed decision algorithms in the ORC microprocessor determine when the deceleration rate as signaled by the impact sensors and the safing sensors indicate an impact that is severe enough to require SRS protection and, based upon the severity of the monitored impact, determines the level of front airbag deployment force required for each front seating position. When the programmed conditions are met, the ORC sends the proper electrical signals to deploy the dual multistage front airbags at the programmed force levels, the front seat belt tensioners and, if either curtain airbag. For vehicles equipped with the Occupant Classification System (OCS), the passenger airbag and seat belt tensioner will be deployed by the ORC only if enabled by the Occupant Classification Module (OCM) messages (passenger airbag disabled indicator off at the time of the impact.

The most reliable, efficient, and accurate ways to diagnose the ORC, the CAN data bus, and the electronic message inputs to and outputs from the ORC requires the use of a diagnostic scan tool and the appropriate diagnostic information.

REMOVAL

REMOVAL

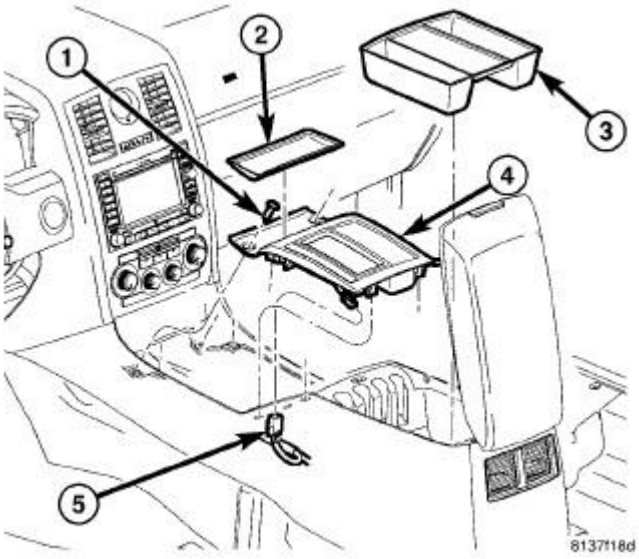

Fig. 72: Identifying Front Console Components
Courtesy of CHRYSLER LLC

1. Disconnect and isolate the battery negative cable.

   WARNING: Wait two minutes for the airbag system reserve capacitor to discharge before beginning any airbag system or component service. Failure to do so may result in accidental airbag deployment, and serious or fatal injury.

2. Remove the center floor console. Refer to **Body/Interior/CONSOLE, Floor - Removal** .

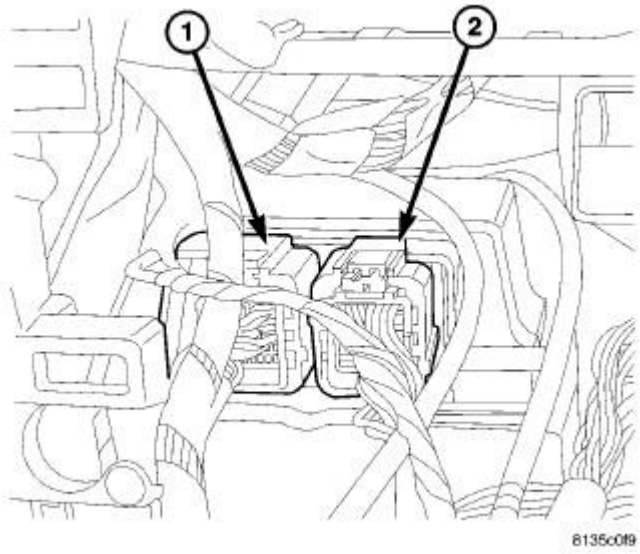

Fig. 73: Locating Electrical Connectors
Courtesy of CHRYSLER LLC

3. Disconnect the two Occupant Restraint Controller (ORC) electrical connectors (1 and 2).

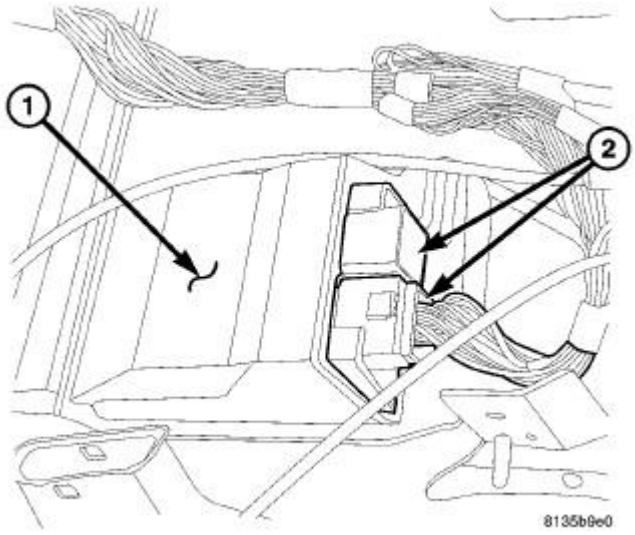

Fig. 74: Sound Deadening Material And ORC Fasteners
Courtesy of CHRYSLER LLC

4. Move the sound deadening material (1) to access the ORC mounting screws.

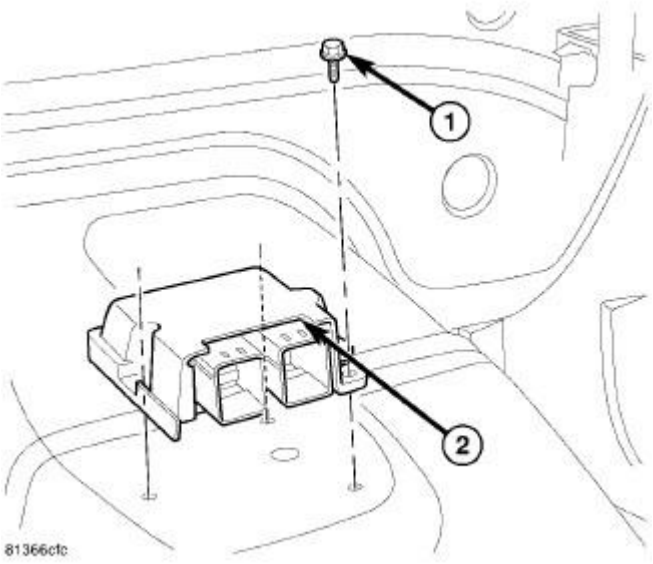

Fig. 75: Occupant Restraint Controller
Courtesy of CHRYSLER LLC

5. Remove the three mounting screws (1) to the ORC (2) from the vehicle.

INSTALLATION

INSTALLATION

WARNING: Do not install ORC if mounting location is deformed or damaged. This will cause the ORC to be improperly located. Failure to follow these instructions may result in possible serious or fatal injury.

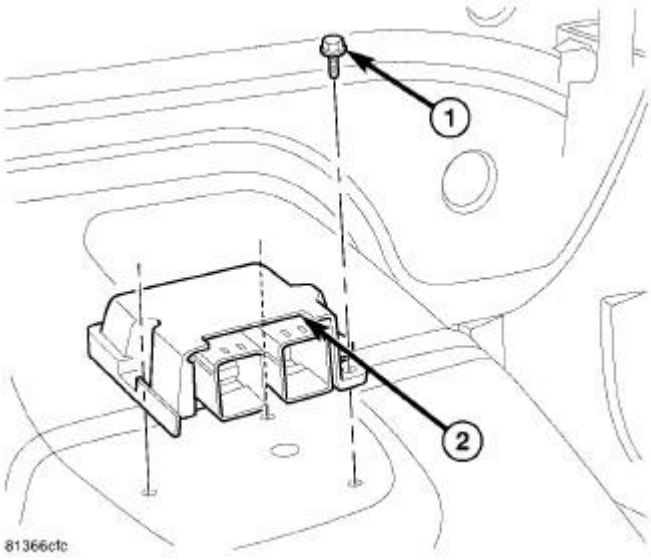

Fig. 76: Occupant Restraint Controller
Courtesy of CHRYSLER LLC

1. Position the Occupant Restraint Controller (ORC) (2) into the vehicle and install the three mounting screws (1). Tighten the screws to 11 N.m (8 ft. lbs.).

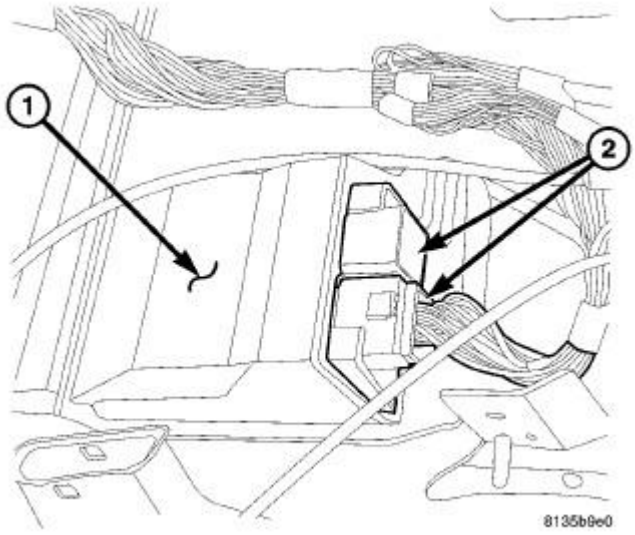

Fig. 77: Sound Deadening Material And ORC Fasteners
Courtesy of CHRYSLER LLC

2. Reposition the sound deadening material (1) around the ORC.

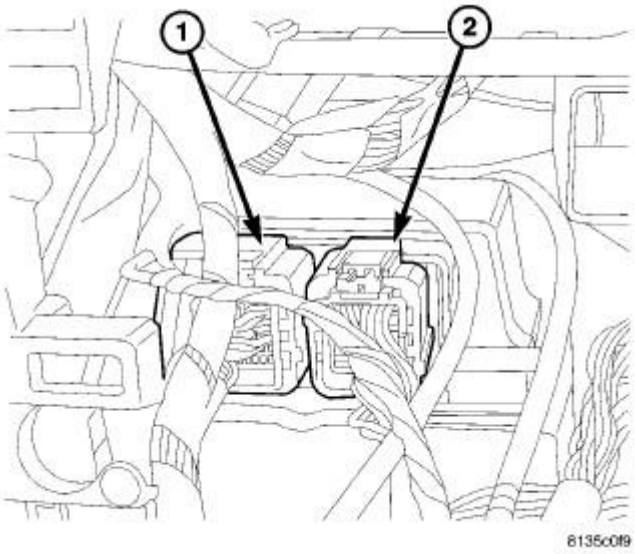

Fig. 78: Locating Electrical Connectors
Courtesy of CHRYSLER LLC

3. Connect the two ORC electrical connectors (1 and 2).

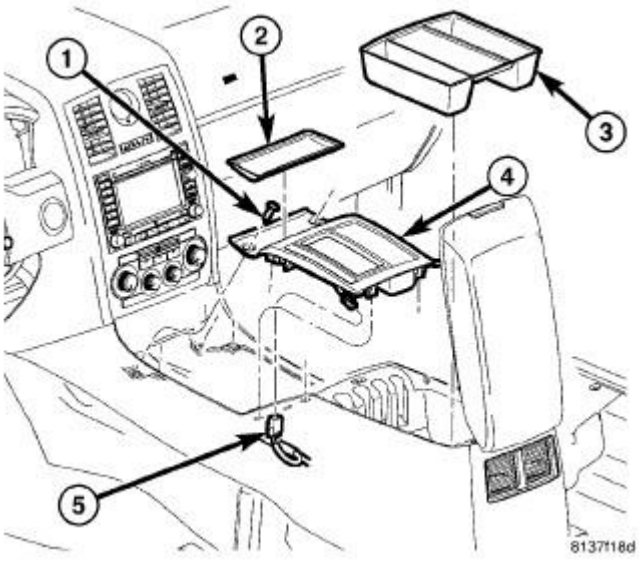

Fig. 79: Identifying Front Console Components
Courtesy of CHRYSLER LLC

4. Install the center floor console. Refer to **Body/Interior/CONSOLE, Floor - Installation** .

WARNING: Do not connect the battery negative cable. See Restraints -

Diagnosis and Testing. If the system test is not performed first it may result in serious or fatal injury.

RETRACTOR, SEAT BELT

STANDARD PROCEDURE

WEB STOP BUTTON REPLACEMENT

The webbing of each of the tip half seat belts in this vehicle is equipped with a molded plastic web stop button, which holds the latch plate of the seat belt tip half in a readily accessible stored position and prevents it from falling to the lower belt anchor while the belt is not in use. If this button becomes damaged or separated from the belt webbing, it may be successfully replaced using the following procedure without the need for removing or replacing the entire seat belt assembly.

The web stop button replacement kit includes two molded plastic replacement button halves: a male button half with a pointed spike in its center, and a female button half with a hole in its center. The button halves are not available separately. In addition to the button replacement kit, a pair of wheel weight pliers (such as KD Tools® #3358, Snap-on® #WWPR13A or equivalent) and a gel-type super adhesive glue (such as Mopar® Bond-All Gel #04467709 or equivalent) are required.

NOTE: Avoid using heavy-duty, truck-style wheel weight pliers as the jaws may not close far enough to successfully complete web stop button replacement.

WARNING: Carefully inspect all seat belts, buckles, mounting hardware, retractors, tether straps, and anchors for proper installation, operation, or damage. Replace any belt that is cut, frayed, or torn. Straighten any belt that is twisted. Tighten any loose fasteners. Replace any belt that has a damaged or ineffective buckle or retractor. Replace any belt that has a bent or damaged latch plate or anchor plate. Replace any child restraint anchor or the unit to which the anchor is integral that has been bent or damaged. Never attempt to repair a seat belt or child restraint component. Always replace damaged or ineffective seat belt and child restraint components with the correct, new and unused replacement parts listed in the Chrysler Mopar® Parts Catalog. Failure to follow these instructions may result in possible serious or fatal injury.

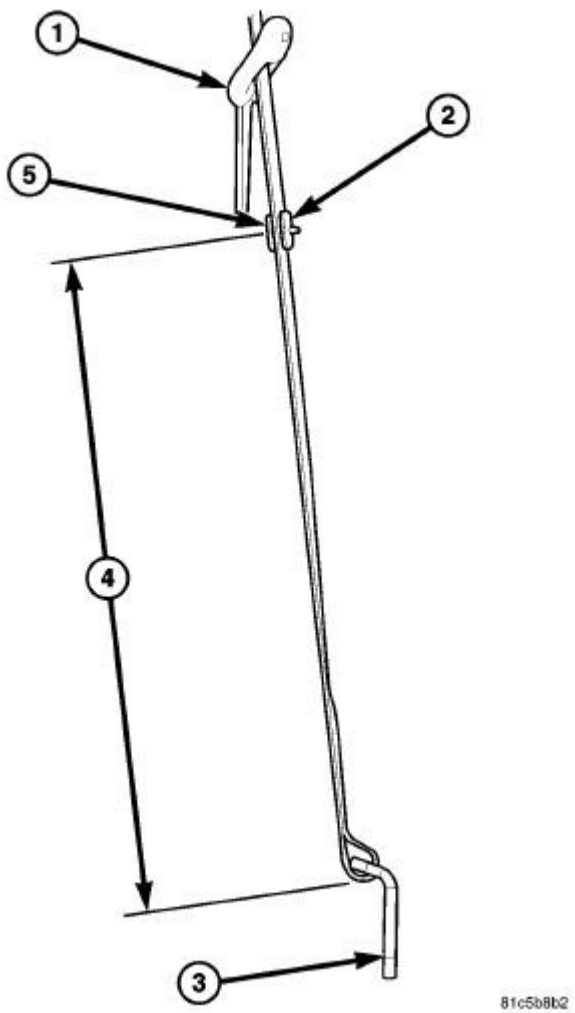

Fig. 80: Locating Web Stop Button
Courtesy of CHRYSLER LLC

1. Carefully inspect the seat belt webbing to identify the hole or witness mark where the original web stop button halves (2 and 5) were installed. If no distinct evidence of the prior button location is found, go to Step 2. If the original button location is clearly evident, go to Step 3.
2. Find the appropriate dimension in the WEB STOP BUTTON LOCATION chart. Measure and mark that distance (4) in the center of the belt webbing from the point where the webbing is secured to the seat belt lower anchor plate (3).

WEB STOP BUTTON LOCATION	
SEATING POSITION	**DIMENSION**
FRONT	360 +/- 10 millimeters (14.17 +/-0.39 inches)
REAR	400 +/- 10 millimeters (15.75 +/-0.39 inches)
REAR CENTER	400 +/- 10 millimeters (15.75 +/-0.39 inches)

3. Working from the side of the seat belt webbing that faces the interior of the vehicle, pierce the webbing with the spike in the center of the male button half. The male button head should face the interior of the vehicle.

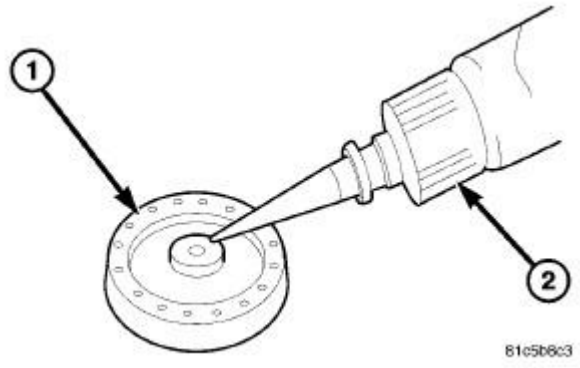

Fig. 81: Applying Small Dot Of Gel-Type Super Adhesive Glue Around Center Hole On Back Side Of Female Button Half
Courtesy of CHRYSLER LLC

4. Apply a small dot of gel-type super adhesive glue (2) around the center hole on the back side of the female button half (1).
5. Press the female button half over the spike of the male button half protruding through the side of the belt webbing that faces away from the interior of the vehicle.

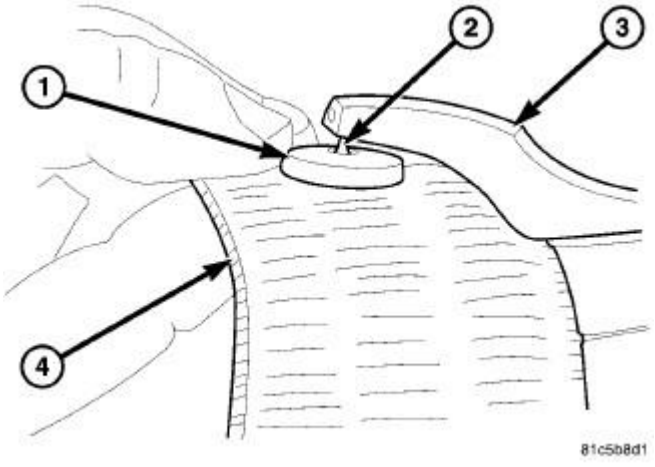

Fig. 82: Flattening Button Half
Courtesy of CHRYSLER LLC

6. Use the flat anvil-like jaw (3) of the wheel weight pliers to flatten the sharp spike (2) of the male button half protruding through the female button half (1) on the back side of the belt webbing (4).

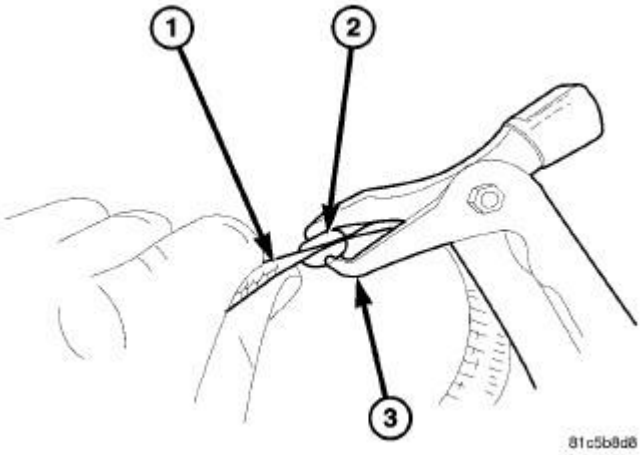

Fig. 83: Forming Button Half
Courtesy of CHRYSLER LLC

7. Carefully use the curved jaw (3) of the wheel weight pliers to compress and form the flattened spike of the male button half (2) on the back side of the seat belt webbing (1) until it is concave and entirely below the outer convex surface of the female button half.
8. Check to be certain the web stop button is secure.

REMOVAL

REMOVAL

FRONT

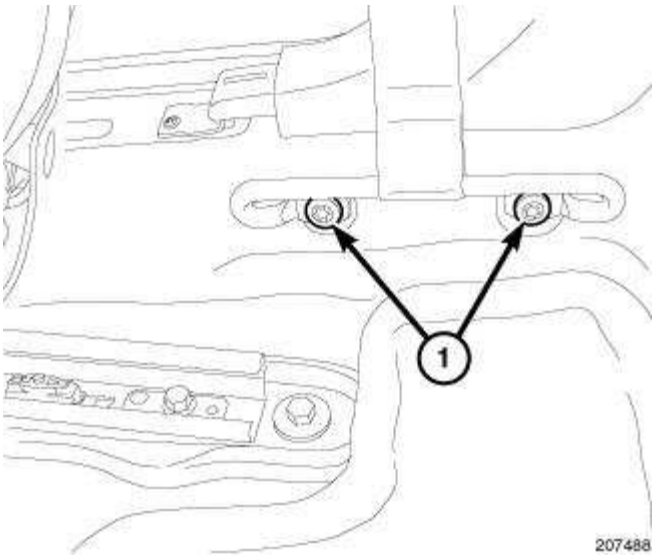

Fig. 84: Identifying Lower Seat Belt Anchor Bolts
Courtesy of CHRYSLER LLC

1. Disconnect and isolate the battery negative cable.

WARNING: Wait two minutes for the airbag system reserve capacitor to discharge before beginning any airbag system or component service. Failure to do so may result in accidental airbag deployment, and serious or fatal injury.

2. Remove the two lower seat belt anchor bolts (1).

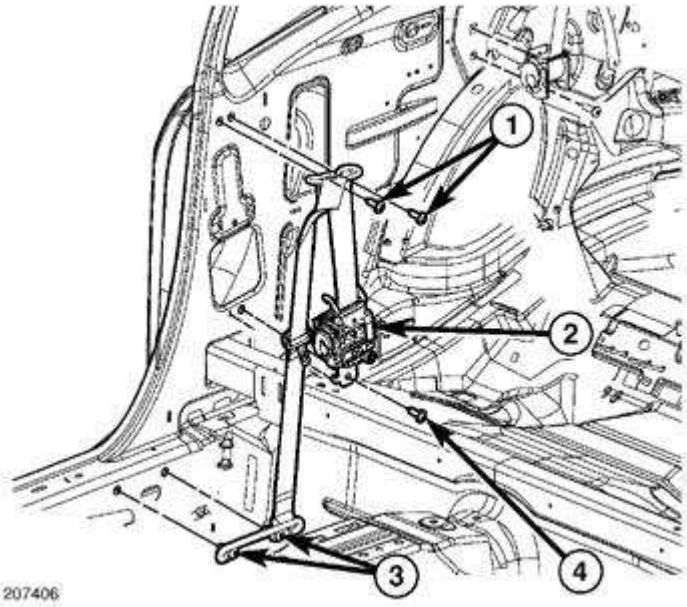

Fig. 85: Identifying Seatbelt Components
Courtesy of CHRYSLER LLC

3. Remove the lower quarter trim panel. Refer to **Body/Interior/PANEL, Quarter Trim - Removal**
4. Remove the two upper turning loop retaining bolts (1).

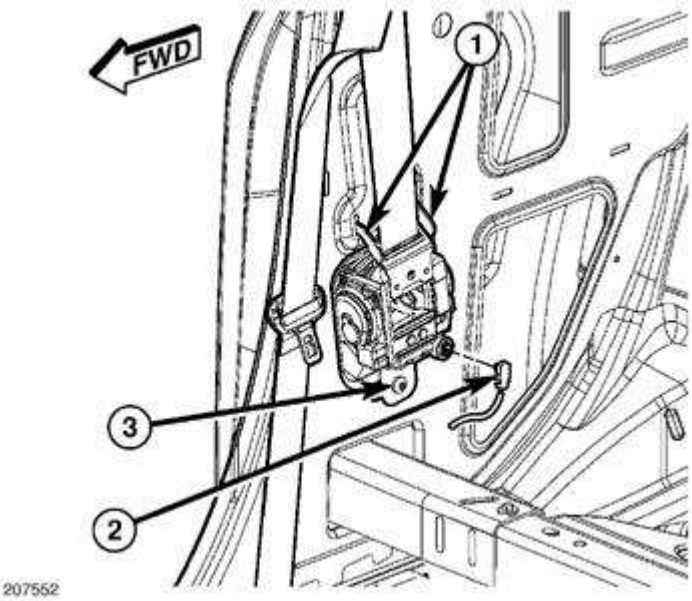

Fig. 86: Identifying Indexing Tabs, Squib Connector & Retaining Bolt
Courtesy of CHRYSLER LLC

5. Disconnect the tensioner electrical squib connector (2).
6. Remove the front seat belt retractor retaining bolt (3).
7. Remove the retractor by pulling inboard then upward releasing the indexing tabs (1).

REAR

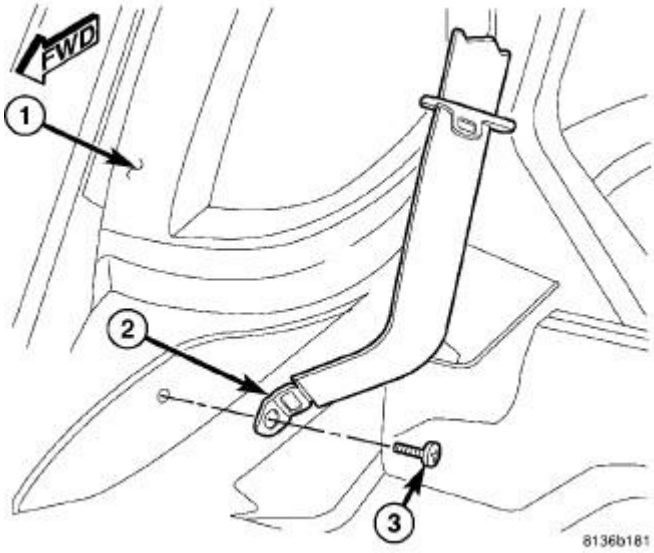

Fig. 87: Rear Seat Belt Anchor
Courtesy of CHRYSLER LLC

1. Remove the upper quarter trim panel. Refer to **Body/Interior/PANEL, Quarter Trim - Removal** .
2. Remove the lower seat belt anchor bolt (3).

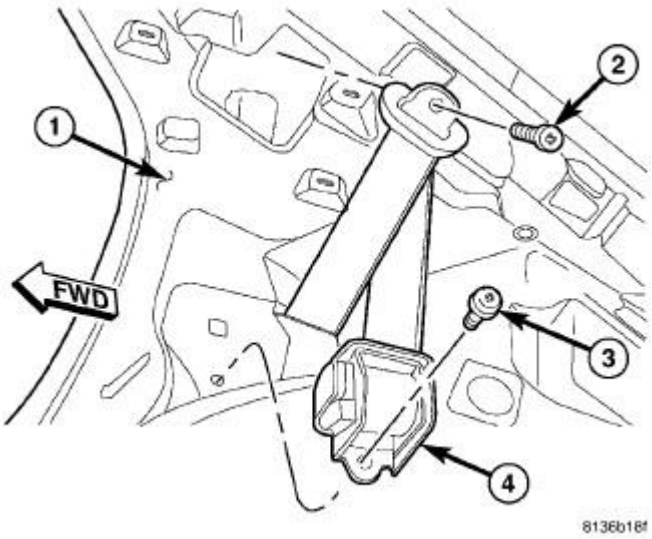

Fig. 88: Rear Seat Belt Anchor
Courtesy of CHRYSLER LLC

3. Remove the upper turning loop retaining bolt (2).

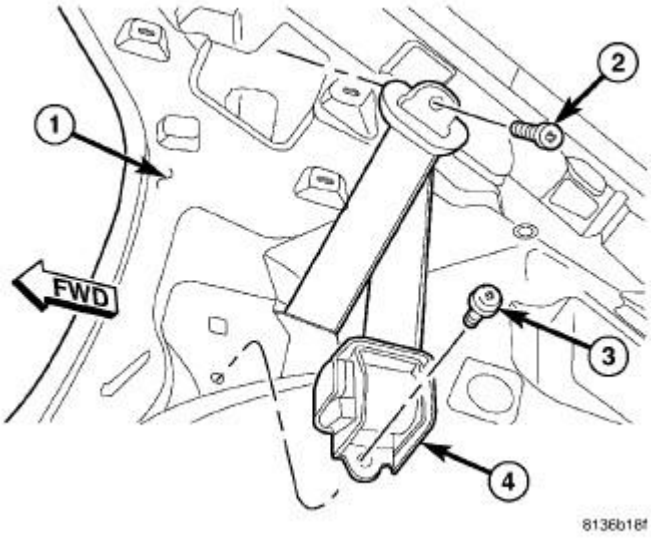

Fig. 89: Rear Seat Belt Anchor
Courtesy of CHRYSLER LLC

4. Remove the seat belt retractor mounting bolt (3).
5. Remove the retractor by pulling inboard and down to release tabs from slots.

REAR CENTER

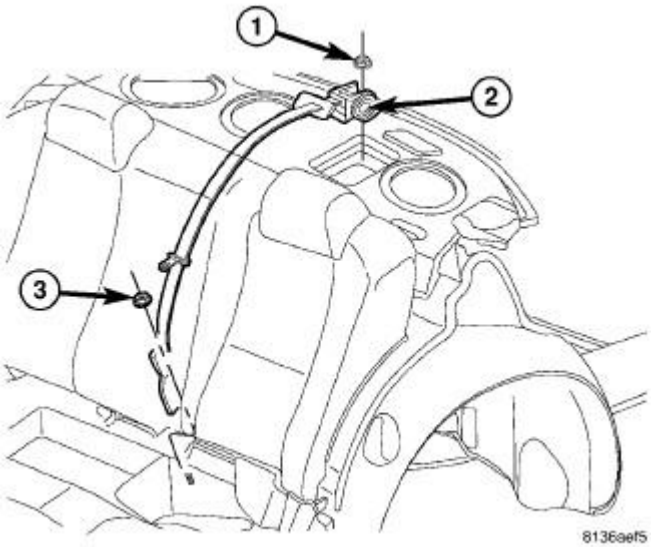

Fig. 90: Rear Center Seat Belt
Courtesy of CHRYSLER LLC

1. Remove the rear seat cushion. Refer to **Body/Seats/COVER, Seat Cushion - Removal** .
2. Remove the seat belt lower anchor nut (3).

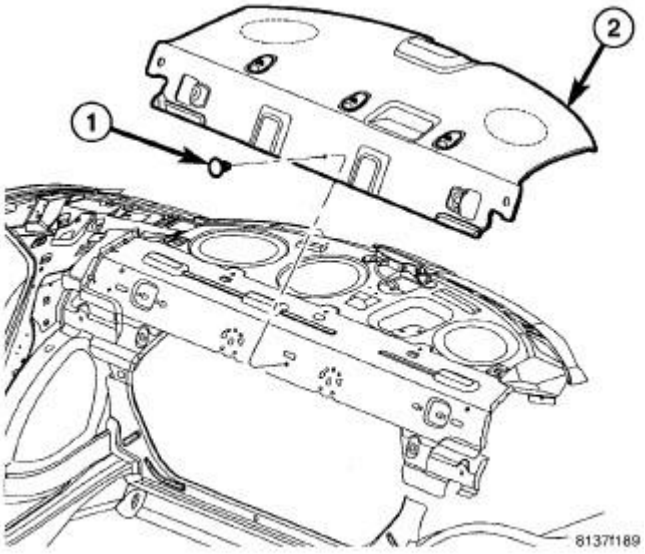

Fig. 91: Removing/Installing Rear Shelf Trim Panel
Courtesy of CHRYSLER LLC

3. Remove the rear shelf trim panel. Refer to **Body/Interior/PANEL, Rear Shelf - Removal** .

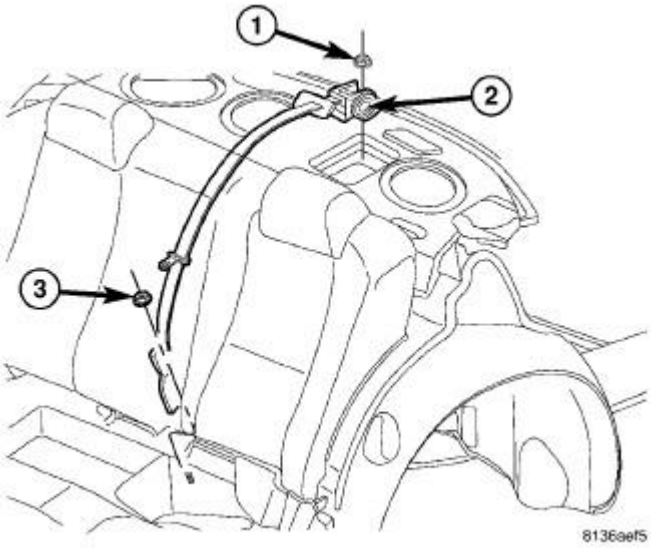

Fig. 92: Rear Center Seat Belt
Courtesy of CHRYSLER LLC

4. Remove the rear center seat belt retractor nut (1).
5. Remove the rear center retractor (2).

INSTALLATION

INSTALLATION

FRONT

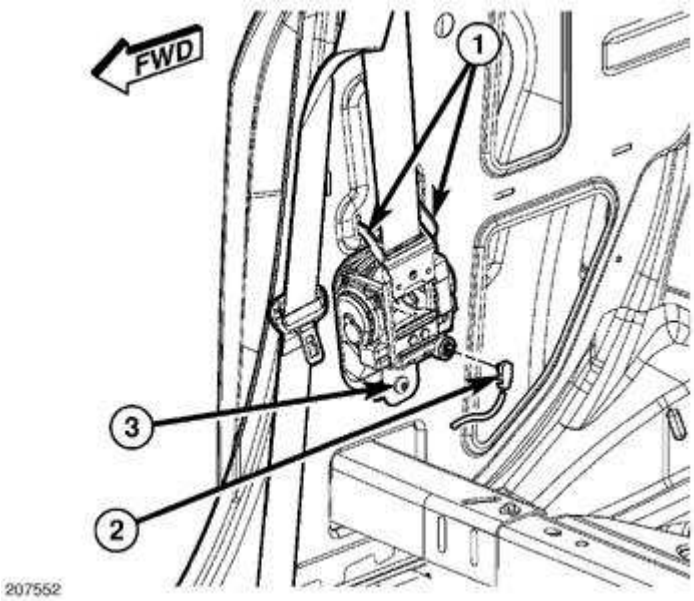

Fig. 93: Identifying Indexing Tabs, Squib Connector & Retaining Bolt
Courtesy of CHRYSLER LLC

1. Position the retractor into the vehicle, inserting the indexing tabs (1) into the slots on the body.
2. Install the front seat belt retractor retaining bolt (3). Tighten bolt to 32 N.m (24 ft. lbs.).
3. Connect the tensioner electrical squib connector (2).

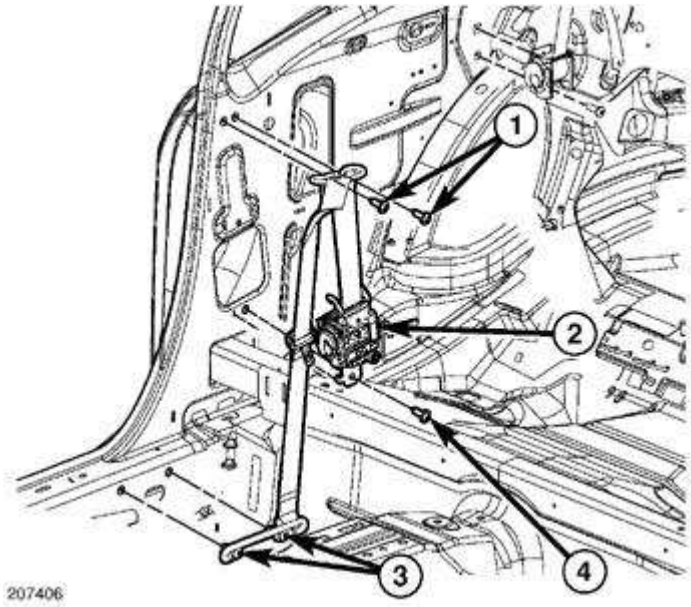

Fig. 94: Identifying Seatbelt Components
Courtesy of CHRYSLER LLC

4. Position the upper turning loop and install the two retaining bolts (1). Tighten bolt to 40 N.m (30 ft. lbs.).
5. Install the lower quarter trim panel. Refer to **Body/Interior/PANEL, Quarter Trim - Installation** .

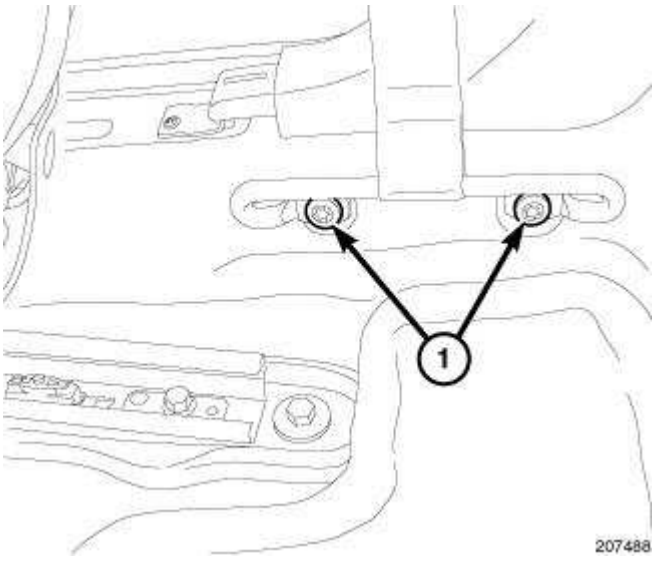

Fig. 95: Identifying Lower Seat Belt Anchor Bolts
Courtesy of CHRYSLER LLC

6. Install the two lower seat belt anchor bolts (1).

WARNING: Do not connect the battery negative cable. See Restraints - Diagnosis and Testing. If the system test is not performed first it may result in serious or fatal injury.

REAR

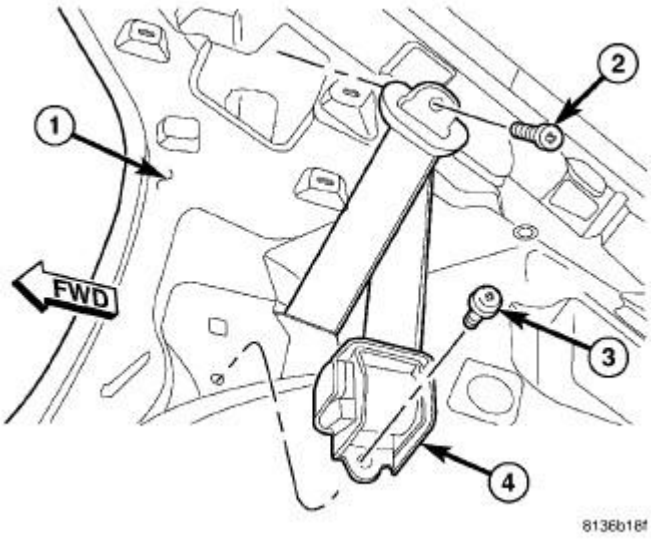

Fig. 96: Rear Seat Belt Anchor
Courtesy of CHRYSLER LLC

1. Position the retractor (4) into the vehicle by inserting the indexing tab up into the body.
2. Install the retractor mounting bolt (3). Tighten bolt to 32 N.m (24 ft. lbs.).

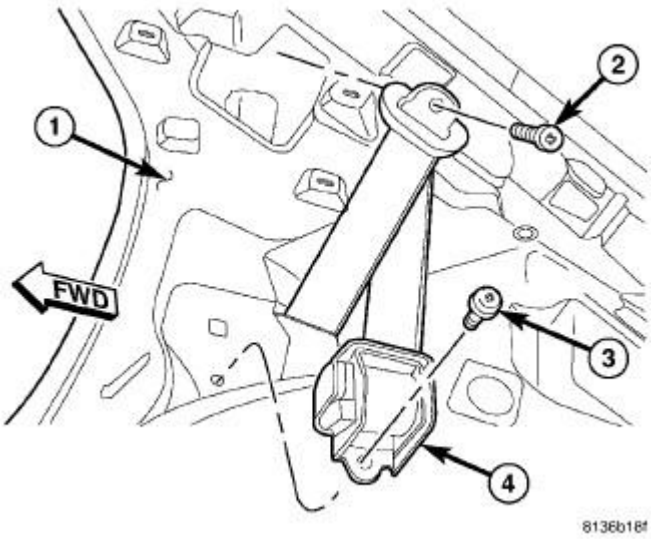

Fig. 97: Rear Seat Belt Anchor
Courtesy of CHRYSLER LLC

3. Install the upper turning loop retaining bolt (2). Tighten bolt to 40 N.m (30 ft. lbs.).

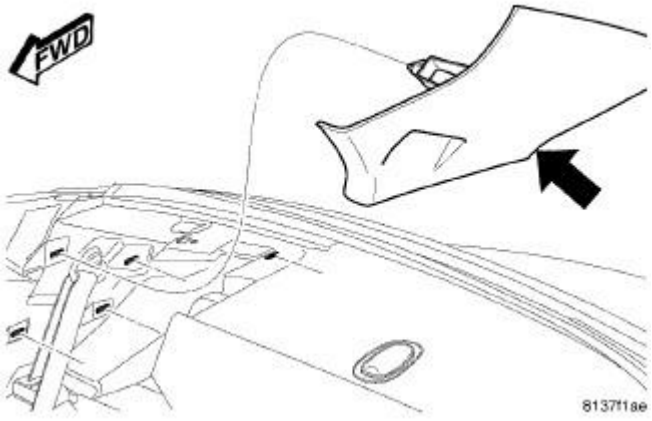

Fig. 98: Removing/Installing Upper C-Pillar Trim Panel
Courtesy of CHRYSLER LLC

4. Install the upper quarter trim panel. Refer to **Body/Interior/PANEL, Quarter Trim - Installation** .

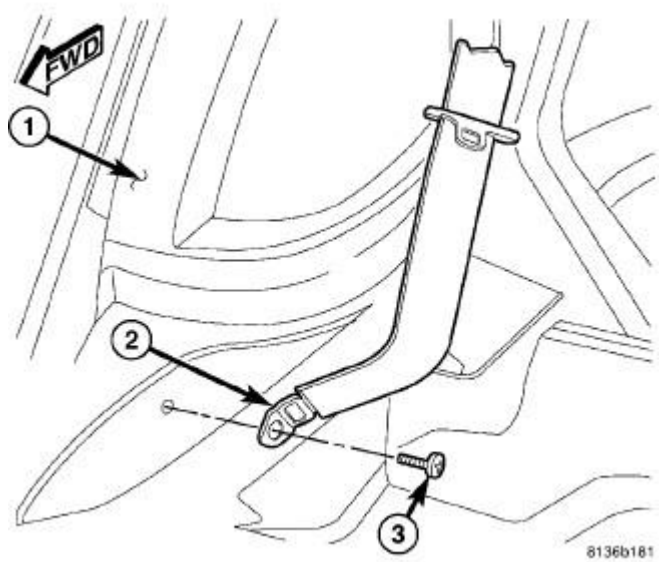

Fig. 99: Rear Seat Belt Anchor
Courtesy of CHRYSLER LLC

5. Install the lower seat belt anchor (2) bolt (3). Tighten bolt to 32 N.m (24 ft. lbs.).

REAR CENTER

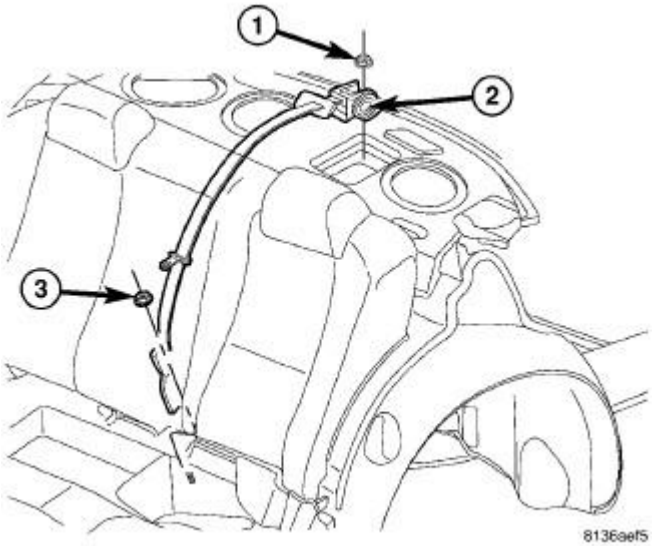

Fig. 100: Rear Center Seat Belt
Courtesy of CHRYSLER LLC

1. Place the rear center retractor (2) into position and install the retaining nut (1). Tighten nut to 34 N.m (25 ft. lbs.).

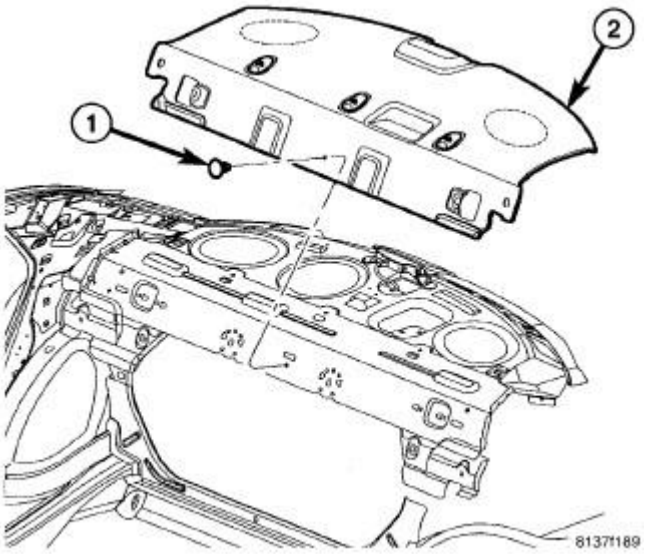

Fig. 101: Removing/Installing Rear Shelf Trim Panel
Courtesy of CHRYSLER LLC

2. Install the rear shelf trim panel. Refer to **Body/Interior/PANEL, Rear Shelf - Installation** .

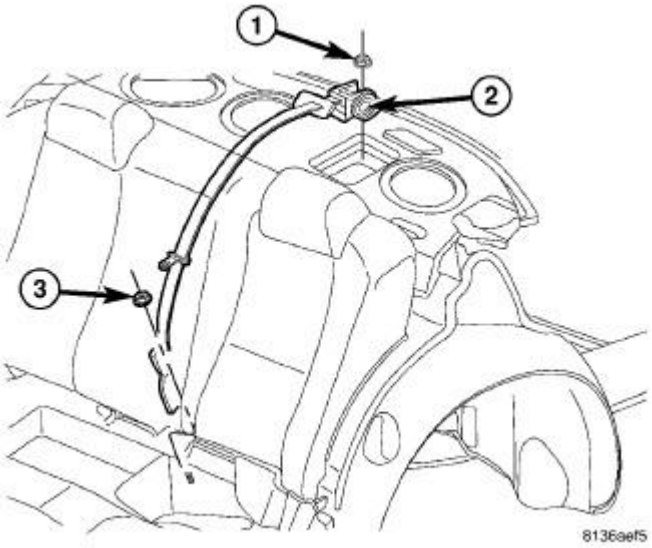

Fig. 102: Rear Center Seat Belt
Courtesy of CHRYSLER LLC

3. Install the nut (3) to the seat belt lower anchor. Tighten nut to 34 N.m (25 ft. lbs.).
4. Install the rear seat cushion. Refer to **Body/Seats/COVER, Seat Cushion - Installation** .

SENSOR, IMPACT

DESCRIPTION

DESCRIPTION

FRONT IMPACT SENSORS

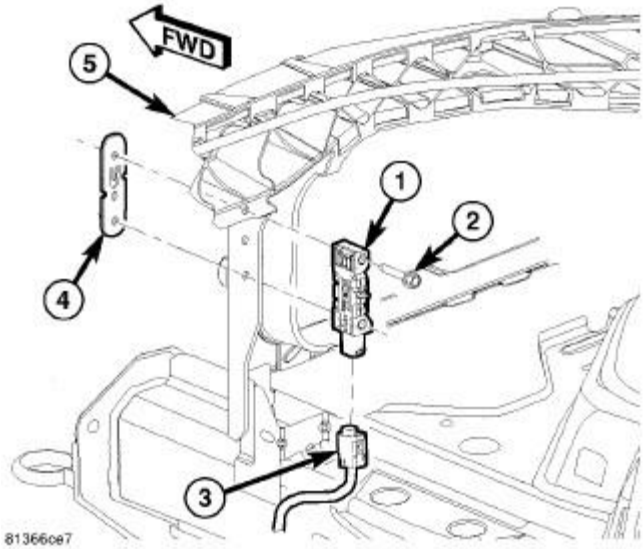

Fig. 103: Front Impact Sensor Location
Courtesy of CHRYSLER LLC

Two front impact sensors (1) are used on this vehicle, one each for the left and right sides of the vehicle. These sensors are mounted remotely from the impact sensor that is internal to the Occupant Restraint Controller (ORC). Each front sensor is secured with two screws (2) to the backs of the right and left vertical members of the radiator support within the engine compartment.

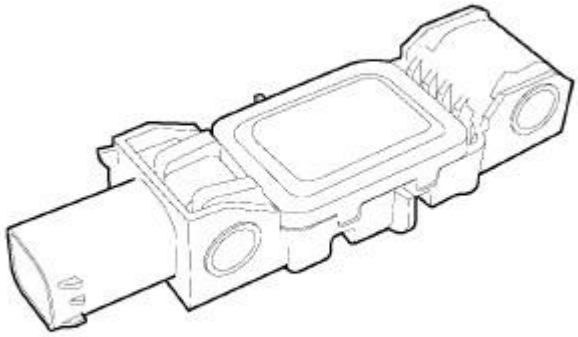

Fig. 104: Side Impact Sensor
Courtesy of CHRYSLER LLC

The right and left front impact sensors are identical in construction and calibration. A cavity in the center of the molded black plastic impact sensor housing contains the electronic circuitry of the sensor which includes an electronic communication chip and an electronic impact sensor. Potting material fills the cavity to seal and protect the internal electronic circuitry and components.

The impact sensors cannot be repaired or adjusted and, if damaged or faulty, they must be replaced.

SIDE IMPACT SENSORS

Four side impact sensors are used on this vehicle if it is equipped with the curtain airbags, two each for the left and right sides of the vehicle. These sensors are mounted remotely from the impact sensor that is internal to the Occupant Restraint Controller (ORC). Each side sensor is secured with two screws to the inner right or left door and the inner rear quarter within the passenger compartment.

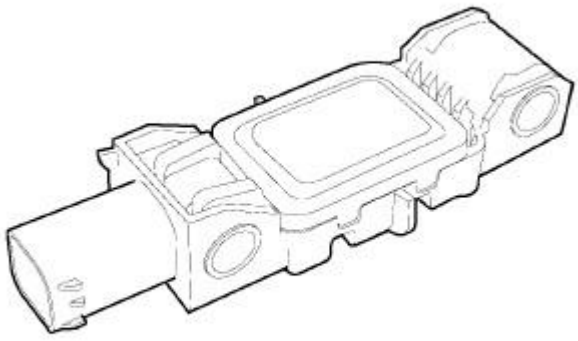

813176b5

Fig. 105: Side Impact Sensor
Courtesy of CHRYSLER LLC

The right and left side impact sensors are simlar in construction and identical in calibration. A cavity in the center of the molded black plastic impact sensor housing contains the electronic circuitry of the sensor which includes an electronic communication chip and an electronic impact sensor. Potting material fills the cavity to seal and protect the internal electronic circuitry and components.

The impact sensors cannot be repaired or adjusted and, if damaged or faulty, they must be replaced.

OPERATION

OPERATION

FRONT IMPACT SENSORS

The front impact sensors are electronic accelerometers that sense the rate of vehicle deceleration, which provides verification of the direction and severity of an impact. Each sensor also contains an electronic communication chip that allows the unit to communicate the sensor status as well as sensor fault information to the microprocessor in the Occupant Restraint Controller (ORC).

The ORC microprocessor continuously monitors all of the passive restraint system electrical circuits to determine the system readiness. If the ORC detects a monitored system fault, it sets a Diagnostic Trouble Code (DTC) and controls the airbag indicator operation accordingly. The impact sensors each receive battery current and ground through dedicated left and right sensor plus and minus circuits from the ORC. The impact sensors and the ORC communicate by modulating the voltage in the sensor plus circuit.

The most reliable, efficient, and accurate means to diagnose the impact sensors, the ORC, and the electronic message communication between the sensors and the ORC requires the use of a scan tool and the appropriate diagnostic information.

SIDE IMPACT SENSORS

The side impact sensors are electronic accelerometers that sense the rate of vehicle deceleration, which provides verification of the direction and severity of an impact. Each sensor also contains an electronic communication chip that allows the unit to communicate the sensor status as well as sensor fault information to the microprocessor in the Occupant Restraint Controller (ORC).

The ORC microprocessor continuously monitors all of the side passive restraint system electrical circuits to determine the system readiness. If the ORC detects a monitored system fault, it sets a Diagnostic Trouble Code (DTC) and controls the airbag indicator operation accordingly. The impact sensors each receive battery current and ground through the same left or right sensor plus and minus circuits in a series arrangement from the ORC. The impact sensors and the ORC communicate by modulating the voltage in the sensor plus circuit.

The most reliable, efficient, and accurate means to diagnose the impact sensors, the ORC, and the electronic message communication between the sensors and the ORC requires the use of a scan tool and the appropriate diagnostic information.

REMOVAL

REMOVAL

FRONT IMPACT SENSOR

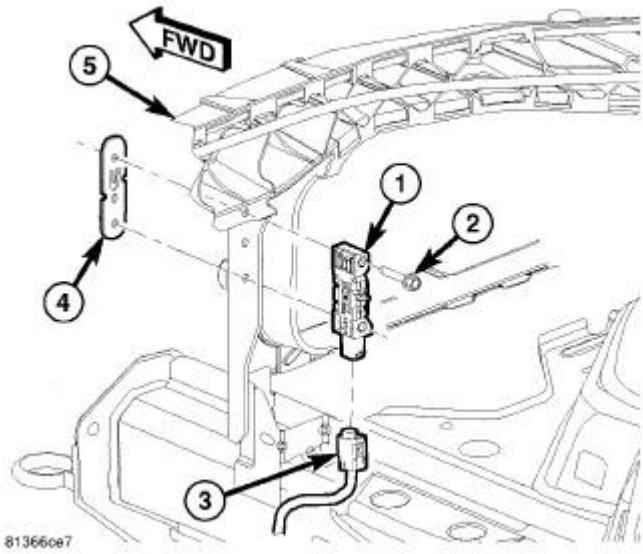

Fig. 106: Front Impact Sensor Location
Courtesy of CHRYSLER LLC

1. Disconnect and isolate the battery negative cable.

WARNING: Wait two minutes for the airbag system reserve capacitor to discharge before beginning any airbag system or component service. Failure to do so may result in accidental airbag deployment, which may result in serious or fatal injury.

NOTE: If replacing the left front impact sensor, the air intake system needs to be removed.

2. Disconnect the front impact sensor electrical connector (3).
3. Remove the two front impact sensor retaining screws (2).
4. Remove the impact sensor.

SIDE IMPACT SENSOR

DOOR MOUNTED SIDE IMPACT SENSOR

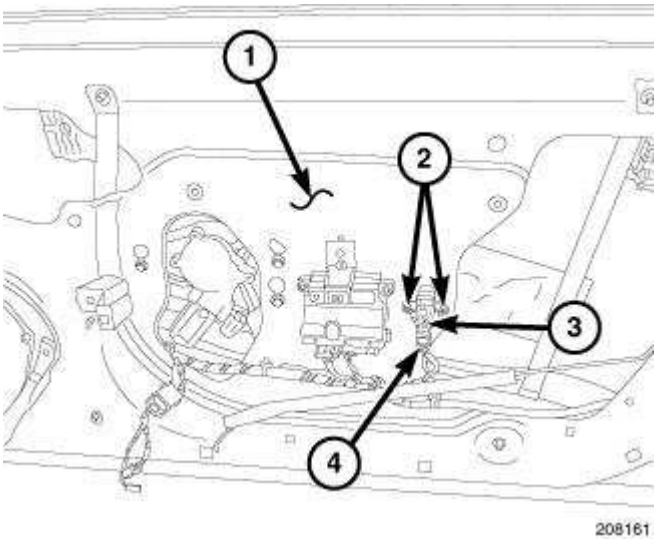

Fig. 107: Identifying Door, Retaining Screws, Side Impact Sensor & Electrical Connector
Courtesy of CHRYSLER LLC

1. Disconnect and isolate the battery negative cable.

> **WARNING: Wait two minutes for the airbag system reserve capacitor to discharge before beginning any airbag system or component service. Failure to do so may result in accidental airbag deployment, which may result in serious or fatal injury.**

2. Remove the door trim panel. Refer to **Body/Door - Front/PANEL, Door Trim - Removal** .
3. Disconnect the side impact sensor electrical connector (4).
4. Remove the two retaining screws (2).
5. Remove the side impact sensor (3) from the door (1).

QUARTER PANEL MOUNTED SIDE IMPACT SENSOR

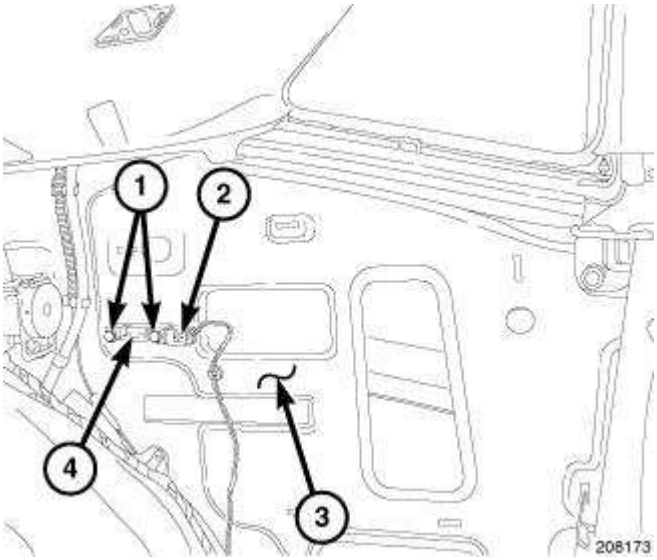

Fig. 108: Identifying Retaining Screws, Side Impact Sensorelectrical Connector & Side Impact Sensor
Courtesy of CHRYSLER LLC

1. Disconnect and isolate the battery negative cable.

   WARNING: Wait two minutes for the airbag system reserve capacitor to discharge before beginning any airbag system or component service. Failure to do so may result in accidental airbag deployment, which may result in serious or fatal injury.

2. Remove the lower quarter trim panel. Refer to **Body/Interior/PANEL, Quarter Trim - Removal** .
3. Disconnect the quarter panel mounted side impact sensorelectrical connector (2).
4. Remove the two retaining screws (1).
5. Remove the quarter panel mounted side impact sensor (4).

INSTALLATION

INSTALLATION

FRONT IMPACT SENSOR

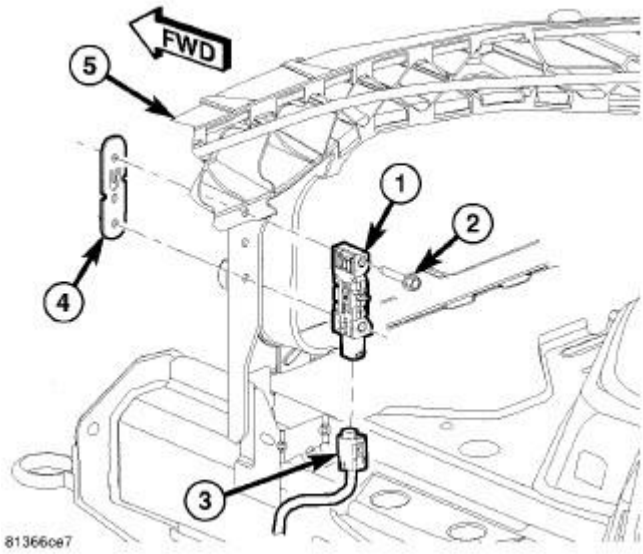

Fig. 109: Front Impact Sensor Location
Courtesy of CHRYSLER LLC

1. Position the front impact sensor in the correct location and install the two retaining screws (2). Tighten screws (2) to 7 N.m (62 in. lbs.).
2. Connect the front impact sensor electrical connector (3).

NOTE: If replacing the left front impact sensor, the air intake system needs to be installed.

WARNING: Do not connect the battery negative cable. See Restraints - Diagnosis and Testing. If the system test is not performed first it may result in serious or fatal injury.

SIDE IMPACT SENSOR

DOOR MOUNTED SIDE IMPACT SENSOR

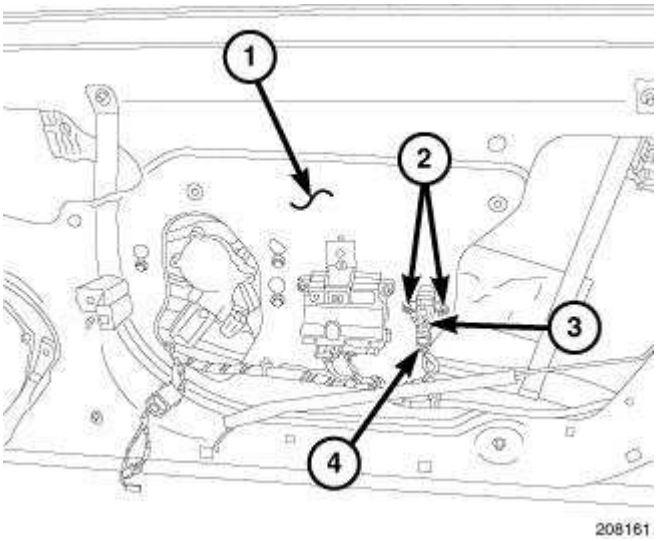

Fig. 110: Identifying Door, Retaining Screws, Side Impact Sensor & Electrical Connector
Courtesy of CHRYSLER LLC

1. Position the door mounted impact sensor (3) in the correct location and install the two retaining screws (2). Tighten screws (2) to 7 N.m (62 in. lbs.).
2. Connect the door mounted side impact sensor electrical connector (4).
3. Install the door trim panel. Refer to **Body/Door - Front/PANEL, Door Trim - Installation** .

WARNING: Do not connect the battery negative cable. See Restraints - Diagnosis and Testing. If the system test is not performed first it may result in serious or fatal injury.

QUARTER PANEL MOUNTED SIDE IMPACT SENSOR

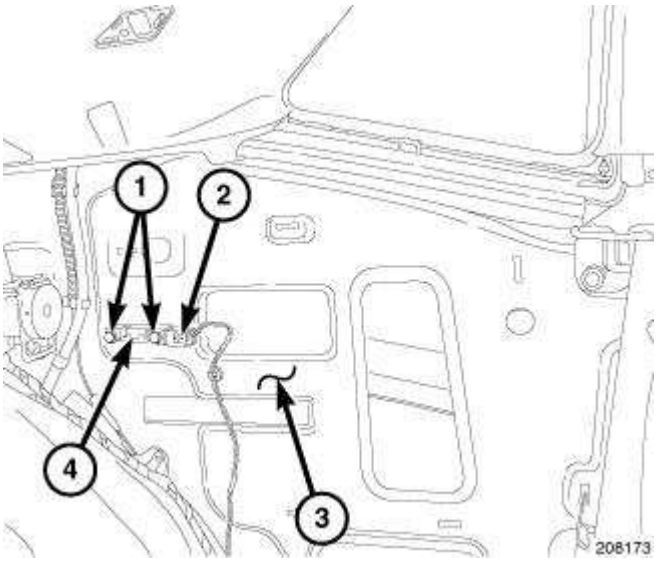

Fig. 111: Identifying Retaining Screws, Side Impact Sensorelectrical Connector & Side Impact Sensor

Courtesy of CHRYSLER LLC

1. Position the quarter panel mounted side impact sensor (4) in the correct location and install the two retaining screws (1). Tighten screws (2) to 7 N.m (62 in. lbs.).
2. Connect the quarter panel mounted side impact sensorelectrical connector (2).
3. Install the lower quarter trim panel. Refer to **Body/Interior/PANEL, Quarter Trim - Installation** .

WARNING: Do not connect the battery negative cable. See Restraints - Diagnosis and Testing. If the system test is not performed first it may result in serious or fatal injury.

SENSOR, SEAT TRACK POSITION

DESCRIPTION

DESCRIPTION

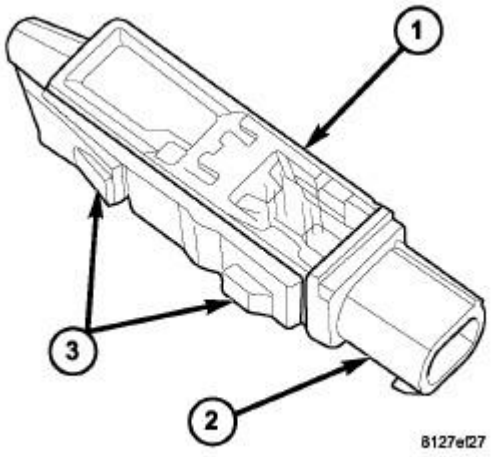

Fig. 112: Seat Track Position Sensor
Courtesy of CHRYSLER LLC

The seat track position sensor (1) is a Hall Effect-type sensor. This sensor consists of a Hall Effect Integrated Circuit (IC) chip encased in potting material within a cavity of the molded plastic sensor housing.

The sensor housing has two integral snap features (3) and snaps into a stamped metal bracket located on the inboard side of one of the seat adjuster tracks on the front seat of vehicles so equipped. A molded connector receptacle (2) integral to the sensor housing is connected to the vehicle electrical system through a connector and take out of the seat wire harness beneath the front seat cushion frame.

The seat track position sensor cannot be adjusted or repaired and, if ineffective or damaged, the entire sensor must be replaced.

OPERATION

OPERATION

The seat track position sensor is designed to provide a seat position data input to the Occupant Restraint Controller (ORC) indicating whether the front seat is in a full forward or a not full forward position. The ORC uses this data as an additional logic input for use in determining the appropriate deployment force to be used when deploying the multistage front airbag.

The seat track position sensor receives a nominal five volt supply from the ORC. The sensor communicates the seat position by modulating the voltage returned to the ORC on a sensor data circuit. The ORC also monitors the condition of the sensor circuits and will store a Diagnostic Trouble Code (DTC) for any fault that is detected. The ORC then sends messages over the Controller Area Network (CAN) data bus to control the illumination of the airbag indicator in the ElectroMechanical Instrument Cluster (EMIC) (also known as the Cab Compartment Node/CCN).

The hard wired circuits between the seat track position sensor and the ORC may be diagnosed using conventional diagnostic tools and procedures. Refer to **SYSTEM WIRING DIAGRAMS** . However, conventional diagnostic methods will not prove conclusive in the diagnosis of the seat track position sensor or the electronic controls and communication between other modules and devices that provide features of the Supplemental Restraint System (SRS). The most reliable, efficient, and accurate means to diagnose the seat track position sensor or the electronic controls and communication related to seat track position sensor operation requires the use of a diagnostic scan tool. Refer to the appropriate diagnostic information.

REMOVAL

REMOVAL

WARNING: To avoid serious or fatal injury on vehicles equipped with airbags, disable the Supplemental Restraint System (SRS) before attempting any steering wheel, steering column, airbag, seat belt tensioner, impact sensor, or instrument panel component diagnosis or service. Disconnect and isolate the battery negative (ground) cable, then wait two minutes for the system capacitor to discharge before performing further diagnosis or service. This is the only sure way to disable the SRS. Failure to take the proper precautions could result in accidental airbag deployment.

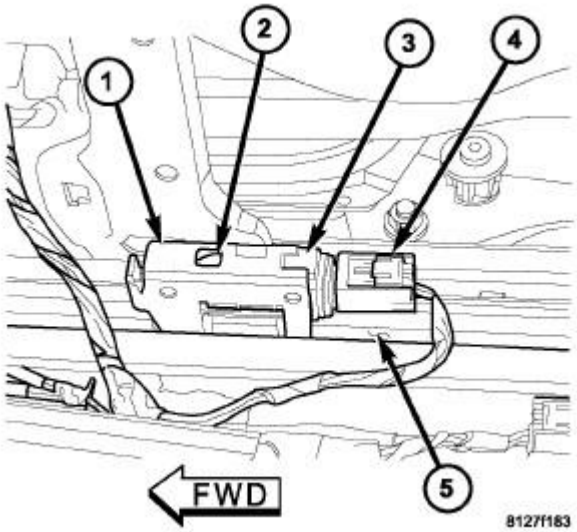

Fig. 113: Seat Track Position Sensor
Courtesy of CHRYSLER LLC

1. Disconnect and isolate the battery negative cable. Wait two minutes for the system capacitor to discharge before further service.
2. Reach under the front edge of the front seat cushion to access the seat track position sensor (3) in a bracket (1) located on the inboard side of the lower outboard seat track (5).
3. Disconnect the seat wire harness connector (4) from the sensor connector receptacle located on the end of the sensor.
4. Using a small screwdriver, depress the snap feature (2) and pull the connector end of the sensor out of the bracket.
5. Remove the sensor from under the front seat.

INSTALLATION

INSTALLATION

WARNING: To avoid serious or fatal injury on vehicles equipped with airbags, disable the Supplemental Restraint System (SRS) before attempting any steering wheel, steering column, airbag, seat belt tensioner, impact sensor, or instrument panel component diagnosis or service. Disconnect and isolate the battery negative (ground) cable, then wait two minutes for the system capacitor to discharge before performing further diagnosis or service. This is the only sure way to disable the SRS. Failure to take the proper precautions could result in accidental airbag deployment.

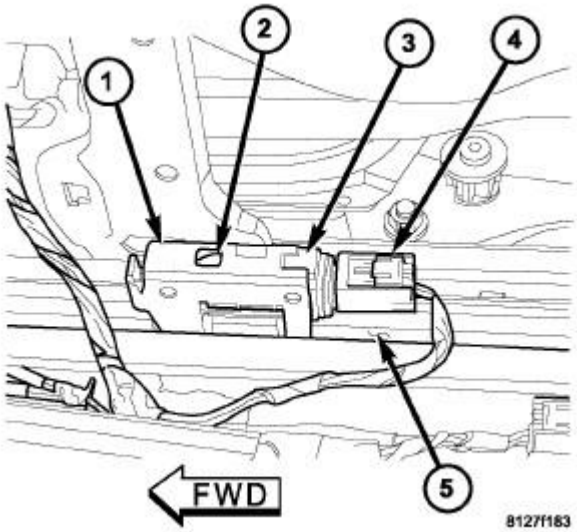

Fig. 114: Seat Track Position Sensor
Courtesy of CHRYSLER LLC

1. Reach under the front seat cushion to position the seat track position sensor (3) to the open end of the bracket (1) located on the inboard side of the lower outboard seat track (5).
2. Push the sensor firmly into the bracket until the snap feature (2) locks into place.
3. Reconnect the seat wire harness connector (4) to the sensor connector receptacle located on the end of the sensor. Be certain that the latch on the connector is fully engaged.
4. Do not reconnect the battery negative cable at this time. The Supplemental Restraint System (SRS) verification test procedure should be performed following service of any SRS component. See **Restraints - Standard Procedure**.

TENSIONER, SEAT BELT

DESCRIPTION

DESCRIPTION

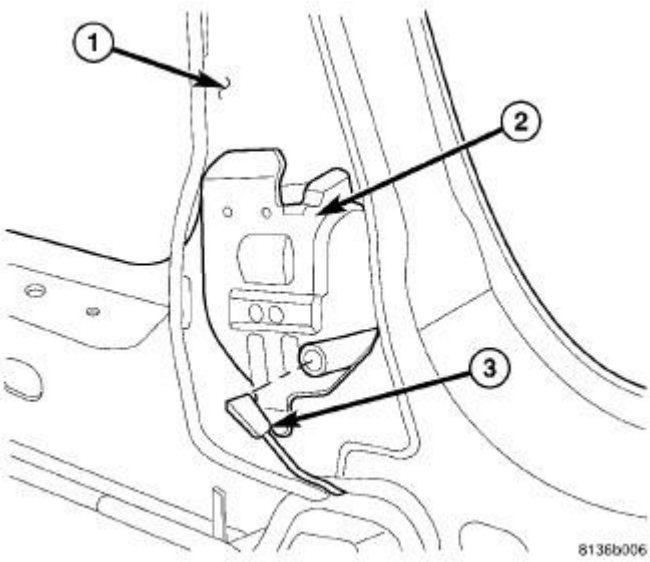

Fig. 115: Seat Belt Tensioner
Courtesy of CHRYSLER LLC

The seat belt tensioners supplement the dual front airbags. The seat belt tensioners are integral to the front seat belt retractors (2), which are secured to the inner quarter panel(1) on the right and left sides of the vehicle. The retractor is concealed beneath the lower quarter trim panel. The seat belt tensioner consists of a sprocket/pinion, a steel tube, a cast metal housing, numerous steel balls, a stamped metal ball trap, a torsion bar, a small pyrotechnically activated gas generator, and a short pigtail wire. All of these components are located on one side of the retractor spool on the outside of the retractor housing except for the torsion bar, which serves as the spindle upon which the retractor spool rides. The seat belt tensioners are controlled by the Occupant Restraint Controller (ORC) and are connected to the vehicle electrical system through the body wire harness (3).

The seat belt tensioners cannot be repaired and, if faulty or damaged, the entire front seat belt and retractor unit must be replaced. If the front airbags have deployed, the seat belt tensioners have also deployed. The seat belt tensioners are not intended for reuse and must be replaced following any front airbag deployment. A growling or grinding sound while attempting to operate the seat belt retractor is a sure indication the seat belt tensioner has been deployed and requires replacement. Refer to **BODY** for diagnosis and testing.

OPERATION

OPERATION

The seat belt tensioners are deployed in conjunction with the front airbags by a signal generated by the Occupant Restraint Controller (ORC) through the driver or passenger seat belt tensioner line 1 and line 2 (or squib) circuits. When the ORC sends the proper electrical signal to the tensioners, the electrical energy generates enough heat to initiate a small pyrotechnic gas generator. The gas generator is installed in one end of a steel tube that contains numerous steel balls. As the gas expands, it pushes the steel balls through the tube into a cast metal housing, where a ball guide directs the balls into engagement with the teeth of a sprocket that is geared to one end of the

retractor spool. As the balls drive past the sprocket, the sprocket turns and drives the seat belt retractor spool causing the slack to be removed from the front seat belts. The ball trap captures the balls as they leave the sprocket and are expelled from the housing.

Removing excess slack from the front seat belts not only keeps the occupants properly positioned for an airbag deployment following a frontal impact of the vehicle, but also helps to reduce injuries that the occupant might experience in these situations as a result of harmful contact with the steering wheel, steering column, instrument panel and/or windshield. Also, the seat belt tensioner torsion bar that the retractor spool rides upon is designed to deform in order to control the loading being applied to the occupants by the seat belts during a frontal impact, further reducing the potential for occupant injuries.

The ORC monitors the condition of the seat belt tensioners through circuit resistance, and will illuminate the airbag indicator in the instrument cluster and store a Diagnostic Trouble Code (DTC) for any fault that is detected. For proper diagnosis of the seat belt tensioners, a scan tool is required and the appropriate body diagnostic information.

SPECIFICATIONS INDEX

CHALLENGER

System	Specification/Procedure
Air Conditioning	
Service	**A/C SYSTEM**
Torque	**TORQUE**
Axle Nut/Hub Nut	157 Ft. Lbs. (213 N.m)
Battery	**BATTERY**
Brakes	
Bleeding Sequence	
With ABS	**ANTILOCK BRAKE SYSTEM BLEEDING**
Without ABS	**STANDARD PROCEDURE**
Disc Brakes	**SPECIFICATIONS**
Torque	**BRAKE FASTENER TORQUE**
Charging	
Generator	**GENERATOR**
Torque	**TORQUE**
Drive Belts	
Adjustment	N/A
Belt Routing	
3.5L	**3.5L**
5.7L	**5.7L**
6.1L	**6.1L**
Engine Cooling	
General Service Specifications	**SPECIFICATIONS**
Radiator Cap Pressure	16-20 psi
Thermostat R & I	**THERMOSTAT**
Water Pump R & I	**PUMP, WATER**
Engine Mechanical	
3.5L	
Compression	**CYLINDER COMPRESSION PRESSURE TEST**
Oil Pressure	5 psi at idle, 45-105 psi at 3000 RPM
Overhaul	**3.5L ENGINE**
Torque	**TORQUE - 3.5L**
5.7L	
Compression	**CYLINDER COMPRESSION PRESSURE**

	LEAKAGE
Oil Pressure	4 psi at idle, 25-110 psi at 3000 RPM
Overhaul	**SPECIFICATIONS**
Torque	**TORQUE**
6.1L	
Compression	**CYLINDER COMPRESSION PRESSURE LEAKAGE**
Oil Pressure	4 psi at idle, 25-110 psi at 3000 RPM
Overhaul	**SPECIFICATIONS**
Torque	**TORQUE**
Fluid Specifications	See FLUIDS under MAINTENANCE tab. From within Manager or Service Writer, click the "30/60/90 Interval" or "Maint." button.
Flywheel/Drive Plate/Flex Plate Torque	
3.5L	70 Ft. Lbs. (95 N.m)
5.7 & 6.1L	
Flex Plate	70 Ft. Lbs. (95 N.m)
Flywheel	55 Ft. Lbs. (75 N.m)
Fuel System	
Fuel Filter Location	**MODULE, FUEL PUMP**
Pressure Specification	58 psi ± 5 psi
Fuel Pressure Test Procedure	**CHECKING THE FUEL DELIVERY SYSTEM**
Fuel Pressure Release Procedure	**FUEL SYSTEM PRESSURE RELEASE**
Ignition	
Firing Order	
3.5L	**FIRING ORDER**
5.7L & 6.1L	**6.1L**
Spark Plugs	**SPARK PLUGS**
Starting	
Starter	**STARTER MOTOR** N/A
Torque	**TORQUE**
Wheel Alignment	
Adjustment Specifications	**WHEEL ALIGNMENT**
Torque	Front - **TORQUE** Rear - **TORQUE**
Wheel & Tire	
Lug Nut Torque	110 Ft. Lbs. (150 N.m)

ACCESSORIES AND EQUIPMENT

Speed Control - Service Information - Challenger

DESCRIPTION

DESCRIPTION

The speed control system is fully and electronically controlled by the Powertrain Control Module (PCM). **A cable and a vacuum controlled servo are not used. This is a servo-less system.** The switch is labeled: ON/OFF, RES/ACCEL, SET, COAST, and CANCEL.

OPERATION

OPERATION

When speed control is selected by pressing the ON switch, the Powertrain Control Module (PCM) allows a set speed to be stored in its Random Access Memory (RAM) for speed control. To store a set speed, press the SET switch while the vehicle is moving at a speed between 25 - 100 mph (40 - 160 km/h). In order for the speed control to engage, the brakes cannot be applied, and the transmission cannot be in park, neutral or low.

The speed control can be disengaged manually by:

- Pressing the brake pedal
- Pressing the ON/OFF button
- Actuating the cancel function on the lever stalk

NOTE: Pressing the OFF switch or turning off the ignition switch erases the set speed stored in the PCM (Electronic Control Module (ECM) with a diesel engine).

For added safety, the speed control system is programmed to disengage for any of the following conditions:

- An indication of park or neutral
- A rapid increase rpm (indicates the clutch has been disengaged)
- Excessive engine rpm (indicates the transmission may be in a low gear)
- The speed signal increases at a rate of 10 mph (16 km/h) per second (indicates the coefficient of friction between the road surface and tires is extremely low)
- The speed signal decreases at a rate of 10 mph (16 km/h) per second (indicates the vehicle may have decelerated at an extremely high rate)

Once the speed control has been disengaged, actuate the lever stalk up to RES/ACCEL (when the speed is greater than 20 mph (32 km/h) restores the vehicle to the target speed stored in the PCM (ECM with a diesel engine).

While the speed control is engaged, the driver can increase the vehicle speed by pressing the RES/ACCEL switch. The new target speed is stored in the PCM (ECM with a diesel engine) when the RES/ACCEL is released. The PCM (ECM with a diesel engine) also has a tap-up feature in which the vehicle speed increases at a rate of approximately 1 mph (1.6 km/h) for each momentary switch activation of the RES/ACCEL switch.

A tap-down feature is used to decelerate without disengaging the speed control system. To decelerate from an existing recorded target speed, momentarily actuate the lever stalk down when in SET/DECEL. For each switch activation, the speed is lowered approximately 1 mph (1.6 km/h).

SPECIFICATIONS

TORQUE

TORQUE SRECIFICATIONS

DESCRIPTION	N.m	ft. lbs.	in. lbs.
Clockspring torx screw	0.7	-	6
Negative battery cable	5.0	-	44
Plastic insert screw	0.7	-	6
Steering angle sensor screw	0.7	-	6
Steering column control module set screw	4.0	-	35
Steering wheel bolt	75	55	-

SWITCH, SPEED CONTROL

DESCRIPTION

DESCRIPTION

The standard passenger style speed control switch is the only style of speed control switch available in this vehicle

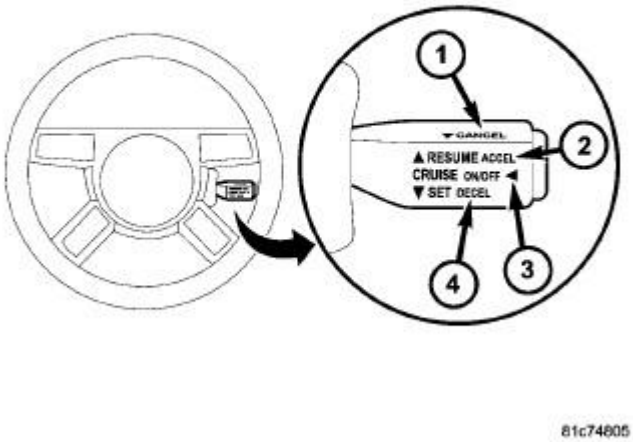

Fig. 1: Speed Control Switch
Courtesy of CHRYSLER LLC

The standard passenger style speed control switch shown in illustration has the following functions:

- CANCEL (1)
- RESUME/ACCEL (2)
- CRUISE ON/OFF (3)
- SET/DECEL (4)

REMOVAL

REMOVAL

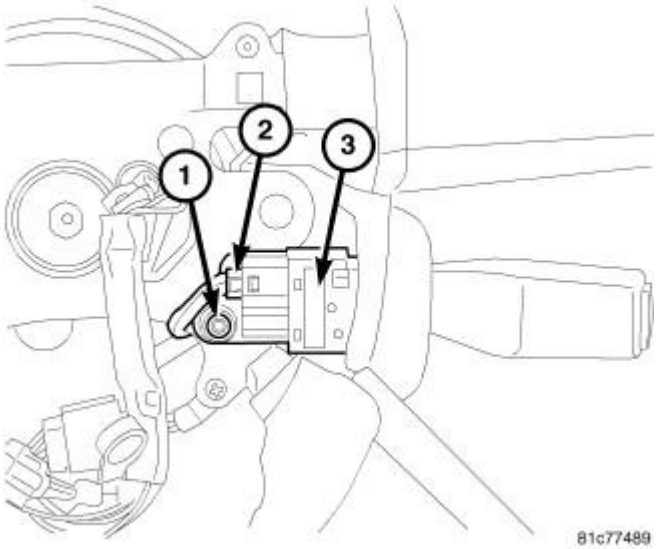

Fig. 2: Speed Control Switch
Courtesy of CHRYSLER LLC

WARNING: Before servicing the steering column the airbag system must be disarmed. Failure to do so may result in accidental deployment of the airbag and possible serious personal and/or fatal injury may result.

NOTE: Position the front wheels straightahead.

1. Disconnect and isolate the negative battery cable before beginning steering wheel removal. Allow the front airbag system capacitor to discharge for two minutes before removing the steering wheel or any front airbag system component.
2. Remove the driver airbag (3). Refer to **Restraints/AIR BAG, Driver - Removal** .
3. Disconnect the speed control switch electrical connector (2).
4. Remove the screw (1) from the front of the speed control switch (3).

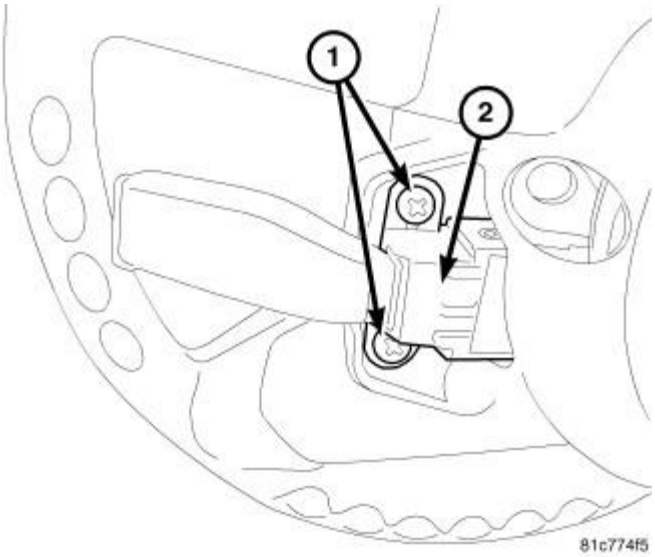

Fig. 3: Speed Control Switch (Rear)
Courtesy of CHRYSLER LLC

5. Remove the screws (1) from the rear of the speed control switch (2).
6. Remove the speed control switch (2) from the steering wheel.

INSTALLATION

INSTALLATION

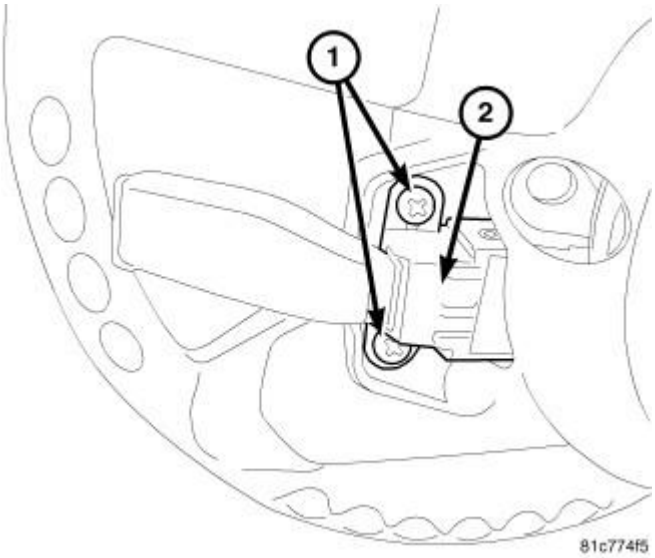

Fig. 4: Speed Control Switch (Rear)
Courtesy of CHRYSLER LLC

1. Install the speed control switch (2) to the steering wheel.
2. Install the two screws (1) to the rear of the speed control switch (2) and tighten to 1 N.m (9 in. lbs.).

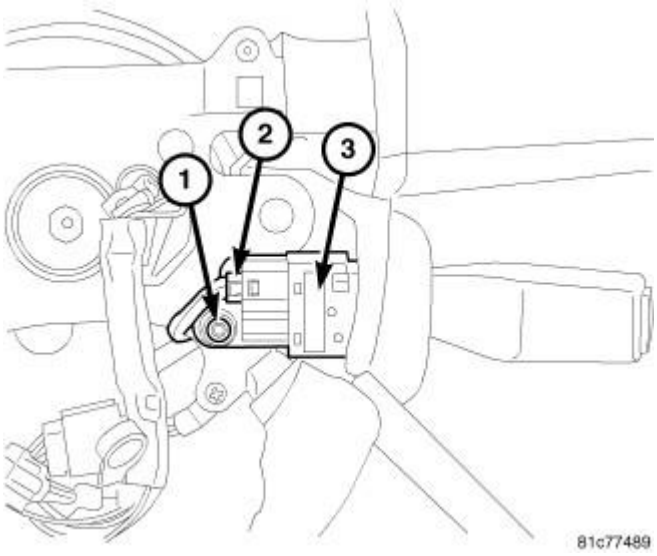

Fig. 5: Speed Control Switch
Courtesy of CHRYSLER LLC

3. Install the screw (1) to the front of the speed control switch (3) and tighten to 3.5 N.m (31 in. lbs.).
4. Connect the speed control switch electrical connector (2).
5. Install drivers airbag. Refer to **Restraints/AIR BAG, Driver - Installation** .
6. Verify system operation.

7. Connect the negative battery cable.

ENGINE

Starting - Service Information - Challenger

DESCRIPTION

REMOTE START SYSTEM

NOTE: Available on automatic transmission equipped vehicles only.

Remote start conveniently starts the engine from outside the vehicle by using the Remote Keyless Entry (RKE) key fob while maintaining security. The system has a targeted range of 300 ft. (91.4 m). The vehicle must be locked, the deck lid and hood closed and the transmission in Park in order to start the engine using the Remote Start button on the key fob.

STANDARD STARTING SYSTEM

The starting system consists of:

- Starter relay
- Starter motor (including an integral starter solenoid)

Other components to be considered as part of starting system are:

- Battery
- Battery cables
- Ignition switch and key lock cylinder
- Clutch pedal position switch (manual transmission)
- Park/neutral position switch (automatic transmission)
- Wire harnesses and connections.

The Battery, Starting, and Charging systems operate in conjunction with one another, and must be tested as a complete system. For correct operation of starting/charging systems, all components used in these 3 systems must perform within specifications. When attempting to diagnose any of these systems, it is important that you keep their interdependency in mind.

The diagnostic procedures used in each of these sections include the most basic conventional diagnostic methods, to the more sophisticated On-Board Diagnostics (OBD) built into the Powertrain Control Module (PCM). Use of an induction-type milliampere ammeter, volt/ohmmeter, battery charger, carbon pile rheostat (load tester), and 12-volt test lamp may be required.

OPERATION

REMOTE START SYSTEM

Remote Start Operating Conditions

In order to operate remote start, the following conditions must be met:

- Key fob sequence must be operated within a 100 meter range of the vehicle.
- The vehicle must be in Park.
- Key is not in the ignition.
- The hazard switch off.
- Vehicle Theft Alarm or Panic is not alarming.
- Doors and hood must be closed.
- The battery voltage is normal (11 to 15 volts).

Remote Start Shut Down/Deactivate Conditions

Engine will NOT start or will shut down/deactivate during any of the following conditions:

- Key in Ignition.
- Doors or hood are opened before remote unlock.
- Hazard Switch depressed.
- Panic or theft alarm active.
- Brake applied.
- A prior remote start cranked the engine , but failed to start the engine.
- Battery voltage NOT in the normal range.
- High (run away) or Low Idle (stall) RPM.
- MIL Active.
- High Engine Coolant Temperature.
- Low Engine Oil Pressure.

Initiate Remote Start

To Remote Start the vehicle:

1. Press remote button on the Key Fob twice within 5 seconds.

   NOTE: Engine will run for 15 minutes after a remote start is initiated. After 15 minutes, the engine will shut off. The system allows for only two sequential remote starts without a key ignition cycle.

2. Unlock vehicle with Key Fob to enter the vehicle.
3. Put key in ignition, turn key to run position to exit remote start and enter a normal start without engine shut off.

Identification that Remote Start is Activated

To identify that Remote Start has been activated the following will occur:

- Horn will sound and lights will flash to acknowledge a start command was received.
- Park Lamps will turn on to indicate that the engine is running in remote start mode.

Terminate Remote Start

To terminate Remote Start, press Remote Start button on the Key Fob once.

NOTE: **In order to avoid inadvertent shut downs, the one-time press to shut down the vehicle will be disabled for two seconds after receipt of a valid remote start request.**

STANDARD STARTING SYSTEM

These components form two separate circuits. A high amperage circuit that feeds the starter motor up to 300+ amps, and a control circuit that operates on less than 30 amps.

The PCM controls a double start over-ride safety that does not allow the starter to be engaged if the engine is already running.

DIAGNOSIS AND TESTING

REMOTE START SYSTEM

For diagnostic and testing information. Refer to **Non-DTC Diagnostics/Starting - Diagnosis and Testing** .

STANDARD STARTING SYSTEM

The battery, starting, and charging systems operate in conjunction with one another, and must be tested as a complete system. For correct starting/charging system operation, all of the components involved in these three systems must perform within specifications.

Starting System Diagnosis		
CONDITION	**POSSIBLE CAUSE**	**CORRECTION**
STARTER FAILS TO OPERATE	1. Battery discharged or faulty.	1. Refer to **BATTERY SYSTEM** . CHARGE or REPLACE the battery if required.
-	2. Starting circuit wiring faulty.	2. Refer to **SYSTEM WIRING DIAGRAMS** . Test and repair the starter feed and/or control circuits, if required.
-	3. Starter relay faulty.	3. The starter relay is located within the Totally Integrated Power Module (TIPM). Refer to **Vehicle Quick Reference/Fuse Locations and Types - Specifications** .

-	4. WIN faulty.	4. Replace the WIN module if required. Refer to **Electrical/Electronic Control Modules/RECEIVER, Wireless Ignition Node - Removal** .
-	6. Park/Neutral position switch faulty or misadjusted.	6. Refer to **42RLE - SERVICE INFORMATION** to REPLACE the park/neutral position switch if required.
-	7. Clutch Interlock Switch	Test the operation of the clutch interlock switch. Refer to **Non-DTC Diagnostics/Drivability - Gas - Diagnosis and Testing**
-	8. Starter solenoid faulty.	8. See **Electrical/Starting/STARTER - Removal**. REPLACE the starter motor assembly if required.
-	9. Starter motor faulty.	9. If all other starting system components and circuits test OK. See **Electrical/Starting/STARTER - Removal** to REPLACE the starter motor.
STARTER ENGAGES, FAILS TO TURN ENGINE	1. Battery discharged or faulty.	1. Refer to **Electrical/Battery System/BATTERY - Standard Procedure** or refer to **Electrical/Battery System/BATTERY - Removal** if replacement of the battery is required.
	2. Starting circuit wiring faulty.	2. Refer to **SYSTEM WIRING DIAGRAMS** . Test and repair the starter feed and/or control circuits if required.
	3. Starter motor faulty.	3. If all other starting system components and circuits test OK. See **Electrical/Starting/STARTER - Removal** to REPLACE the starter motor assembly.
	4. Engine seized.	4. Refer to the appropriate Engine Diagnosis service information.
STARTER ENGAGES, SPINS OUT BEFORE ENGINE STARTS	1. Starter ring gear faulty.	1. See **Electrical/Starting/STARTER - Removal**. Remove the starter motor to inspect the starter ring gear. REPLACE the starter ring gear if required.
	2. Starter motor faulty.	2. If all other starting system components and circuits test OK, replace the starter motor assembly. See **Electrical/Starting/STARTER - Removal**.
STARTER DOES NOT DISENGAGE	1. Starter motor improperly installed.	1. See **Electrical/Starting - Specifications**. Tighten the starter mounting hardware to correct torque specifications.
	2. Starter relay faulty.	2. The starter relay is located within the Totally Integrated Power Module (TIPM). Refer to **Vehicle Quick Reference/Fuse Locations and Types - Specifications** .
	3. WIN faulty.	3. Replace the WIN module if required. Refer to

		Electrical/Electronic Control Modules/RECEIVER, Wireless Ignition Node - Removal .
	4. Starter motor faulty.	4. If all other starting system components and circuits test OK, replace the starter motor assembly. See **Electrical/Starting/STARTER - Removal**.

INSPECTION

For complete starter wiring circuit diagrams, Refer to **SYSTEM WIRING DIAGRAMS** . Before removing any unit from the starting system for repair or diagnosis, perform the following inspections:

WARNING: On vehicles equipped with airbags, refer to SERVICE INFORMATION , before attempting any steering wheel, steering column, or instrument panel component diagnosis or service. Failure to follow these instructions may result in possible serious or fatal injury.

- **Battery** - Visually inspect the battery for indications of physical damage and loose or corroded cable connections. Determine state-of-charge and cranking capacity of battery. Charge or replace battery if required. Refer to **BATTERY SYSTEM** . **Note: If equipped with adiesel engine, a dual battery system may be used, and both batteries must be inspected.**
- **Ignition Switch** - Visually inspect the ignition switch for indications of physical damage and loose or corroded wire harness connections. Refer to **Ignition Switch and Key Lock Cylinder.**
- **Park/Neutral Position Switch** - If equipped with an automatic transmission, visually inspect the park/neutral position switch for indications of physical damage and loose or corroded wire harness connections. Refer to **SENSOR, TRANSMISSION RANGE** .
- **Starter Relay** - The starter relay is located within the Totally Integrated Power Module (TIPM). Refer to **Vehicle Quick Reference/Fuse Locations and Types - Specifications** .
- **Starter Motor** - Visually inspect starter motor for indications of physical damage and loose or corroded wire harness connections.
- **Starter Solenoid** - Visually inspect starter solenoid for indications of physical damage and loose or corroded wire harness connections.
- **Wiring** - Visually inspect wire harnesses for damage. Repair or replace any faulty wiring, as required. Refer to **SYSTEM WIRING DIAGRAMS** .

TESTING

COLD CRANKING TEST

NOTE: For complete starter wiring circuit diagrams, Refer to SYSTEM WIRING DIAGRAMS . The battery must be fully-charged and load-tested before proceeding. Refer to BATTERY SYSTEM .

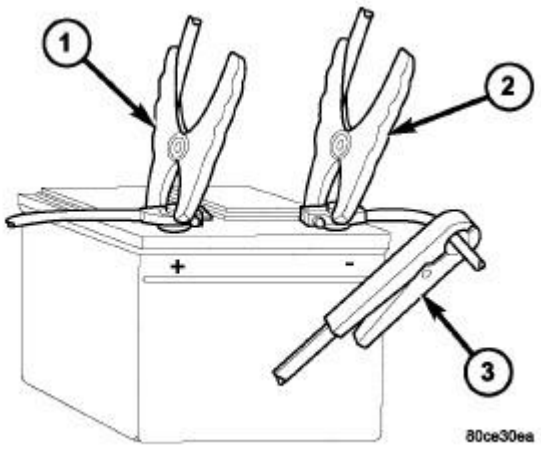

Fig. 1: VOLTS-AMPS TESTER CONNECTIONS - TYPICAL
Courtesy of CHRYSLER LLC

1 - POSITIVE CLAMP 2 - NEGATIVE CLAMP 3 - INDUCTION AMMETER CLAMP

1. Connect volt-ampere tester (1) and (2) to battery terminals . See instructions provided by manufacturer of volt-ampere tester being used.
2. Fully engage the parking brake.
3. Automatic transmissions, place gearshift selector lever in the Park (P) position.
4. Verify all lamps and accessories are turned off.
5. To prevent a gasoline engine from starting, remove the Automatic ShutDown (ASD) relay. The relay is located in Totally Intraged Power Module (TIPM). Refer to label on the TIPM cover for relay location.

   NOTE: Attempt to start engine a few times before proceeding with following step.

   NOTE: A cold engine will increase the starter current (amperage) draw reading, and reduce the battery voltage reading.

6. Rotate and hold the ignition switch in START position. Note the cranking voltage and current (amperage) draw readings shown in illustration on volt-ampere tester.
   a. If the voltage reads below 7.2 volts, refer to **STARTER MOTOR** . If the starter motor is OK, refer to appropriate Engine Diagnosis service information for further testing of the engine. If the starter motor is not OK, replace the faulty starter motor.
   b. If the voltage reads above 7.2 volts and current (amperage) draw reads below specifications, refer to **FEED CIRCUIT TEST** .
   c. If the voltage reads 12.5 volts or greater and the starter motor does not turn, refer to **CONTROL CIRCUIT TESTING**.

d. If the voltage reads 12.5 volts or greater and the starter motor turns very slowly, refer to **FEED CIRCUIT TEST**.

FEED CIRCUIT TEST

The starter feed circuit test (voltage drop method) will determine if there is excessive resistance in the high-amperage feed circuit. For complete starter wiring circuit diagrams, refer to **SYSTEM WIRING DIAGRAMS** .

When performing these tests, it is important to remember that voltage drop is giving an indication of resistance between two points at which the voltmeter probes are attached.

Example: When testing the resistance of positive battery cable, touch the voltmeter leads to the positive battery cable clamp and the cable connector at the starter solenoid. If you probe the positive battery terminal post and the cable connector at the starter solenoid, you are reading the combined voltage drop in the positive battery cable clamp-to-terminal post connection and positive battery cable.

The following operation requires a voltmeter accurate to 1/10 (0.10) volt. Before performing these tests, make sure the following procedures are accomplished:

- Battery is fully-charged and load-tested. Refer to **BATTERY SYSTEM** .
- Fullyengage parking brake.
- Place gearshift selector lever in Park (P) position.
- Verify all lamps and accessories are turned off.
- To prevent a gasoline engine from starting, remove the Automatic ShutDown (ASD) relay. The relay is located in Totally Intraged Power Module (TIPM). Refer to label on the TIPM cover for relay location.

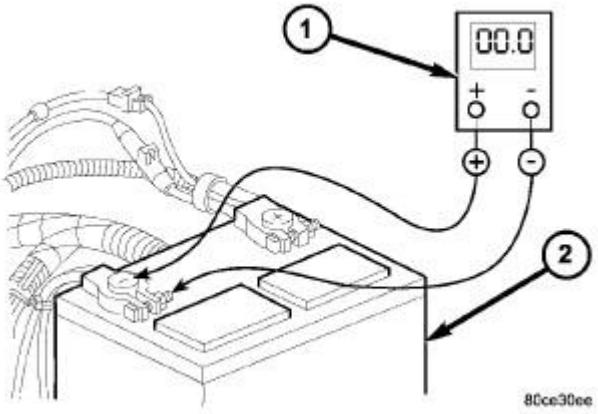

Fig. 2: TEST BATTERY NEGATIVE CONNECTION RESISTANCE - TYPICAL
Courtesy of CHRYSLER LLC

1 - VOLTMETER
2 - BATTERY

1. Connect the positive lead of voltmeter (1) to negative battery cable terminal post. Connect the negative lead of voltmeter to the negative battery cable clamp . Rotate and hold the ignition switch in START position. Observe the voltmeter. If voltage is detected, correct the poor contact between the cable clamp and the terminal post.

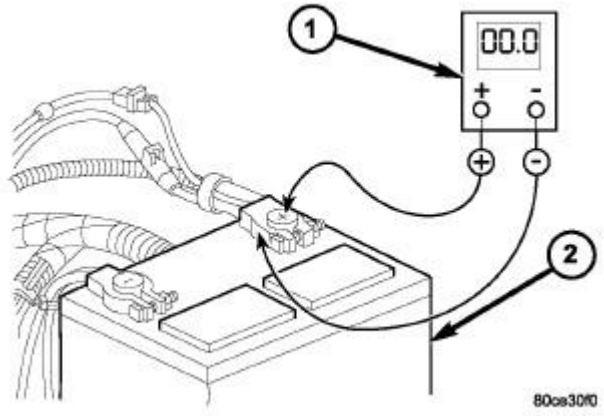

Fig. 3: TEST BATTERY POSITIVE CONNECTION RESISTANCE - TYPICAL
Courtesy of CHRYSLER LLC

1 - VOLTMETER
2 - BATTERY

2. Connect the positive lead of voltmeter to the positive batteryterminal post. Connect the negative lead of voltmeter to the battery positive cable clamp . Rotate and hold the ignition switch in START position. Observe the voltmeter. If voltage is detected, correct the poor contact between the cable clamp and the terminal post.

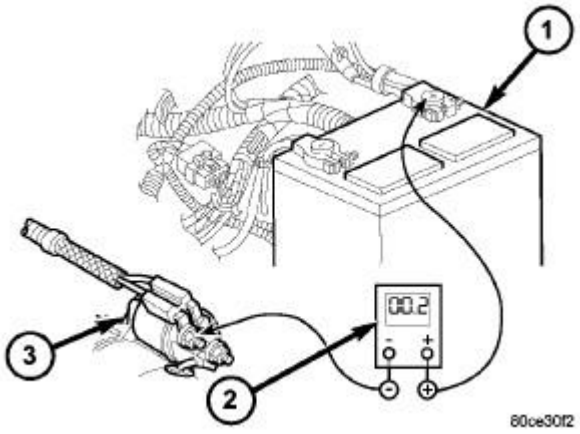

Fig. 4: TEST BATTERY POSITIVE CABLE RESISTANCE - TYPICAL
Courtesy of CHRYSLER LLC

1 - BATTERY 2 - VOLTMETER 3 - STARTER MOTOR

3. Connect the voltmeter to measure between the battery positive terminal post and the starter solenoid battery terminal stud . Rotate and hold the ignition switch in START position. Observe the voltmeter. If the reading is above 0.2 volt, clean and tighten the battery cable connection at the solenoid. Repeat the test. If the reading is still above 0.2 volt, replace the faulty positive battery cable.

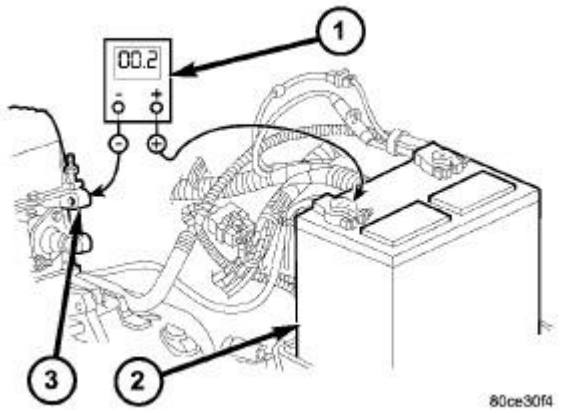

Fig. 5: TEST GROUND CIRCUIT RESISTANCE - TYPICAL
Courtesy of CHRYSLER LLC

1 - VOLTMETER 2 - BATTERY 3 - ENGINE GROUND

4. Connect the voltmeter to measure between negative battery terminal post and a good clean ground on the engine block . Rotate and hold the ignition switch in START position. Observe the voltmeter. If the reading is above 0.2 volt, clean and tighten the negative battery cable attachment on the engine block. Repeat the test. If the reading is still above 0.2 volt, replace the faulty negative battery cable.

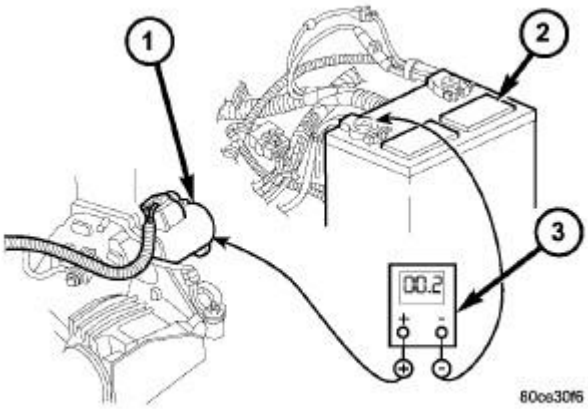

Fig. 6: TEST STARTER GROUND - TYPICAL
Courtesy of CHRYSLER LLC

1 - STARTER MOTOR
2 - BATTERY
3 - VOLTMETER

5. Connect the positive lead of the voltmeter to the starter housing. Connect the negative lead of the voltmeter to the negative battery terminal post . Rotate and hold the ignition switch in START position. Observe the voltmeter. If the reading is above 0.2 volt, correct the poor starter to engine block ground contact.
6. If equipped with a dual battery system (certain diesel equipped models), connect the positive lead of voltmeter to the positive battery cable clamp on the battery located on the left side of vehicle. Connect the negative lead of voltmeter to the positive battery terminal post on the battery located on the right side of vehicle. Rotate and hold the ignition switch in START position. Observe the voltmeter. If the reading is above 0.2 volt, clean and tighten the battery cables at both batteries. Repeat the test. If the reading is still above 0.2 volt, replace the faulty positive battery cable.

If the resistance tests detect no feed circuit problems. See **Electrical/Starting - Diagnosis and Testing**.

CONTROL CIRCUIT TESTING

The starter control circuit components should be tested in the order in which they are listed, as follows:

- Starter Relay - The starter relay is located within the Totally Integrated Power Module (TIPM). Refer to **Vehicle Quick Reference/Fuse Locations and Types - Specifications** .
- Starter Solenoid -. See **Electrical/Starting - Diagnosis and Testing**.
- Ignition Switch - Refer to **SWITCH, IGNITION** and Key Lock Cylinder
- Park/Neutral Position Switch - If equipped with an automatic transmission, refer to **SENSOR,**

TRANSMISSION RANGE .

- Clutch Interlock Switch -. Refer to **Non-DTC Diagnostics/Drivability - Gas - Diagnosis and Testing** .
- Wire harnesses and connections - Refer to **SYSTEM WIRING DIAGRAMS** .

SPECIFICATIONS

STARTER MOTOR

STARTER MOTOR

Engine Application	Power Rating	Cranking Amperage Draw Test
6.1L	1.4 Kilowatt / 1.87 Horsepower	100 - 300 Amperes
* Test at operating temperature.A cold engine, tight (new) engine, or heavy oil increases starter amperage draw. Starters are equipped with permanent magnets. Never strike the starter case in an attempt to loosen a sticking/stuck armature as the permanent magnets may crack or break.		

TORQUE

TORQUE SPECIFICATIONS

DESCRIPTION	N.m	Ft. Lbs.	In. Lbs.
Battery Cable Nut	5	-	44
Intermediate Shaft Pinch Bolt	43	32	-
Starter B+ Nut	11	8	-
Starter Mounting Bolts - 6.1L	54	40	-

ANTENNA, REMOTE START

DESCRIPTION

DESCRIPTION

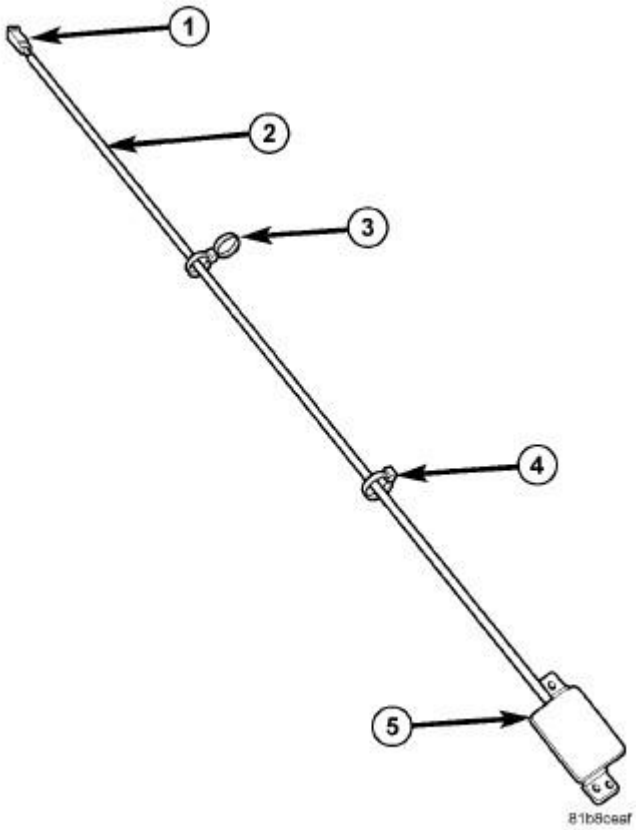

Fig. 7: REMOTE START ANTENNA MODULE ASSEMBLY
Courtesy of CHRYSLER LLC

The Remote Start Antenna Module Assembly consists of an electrical connection to the WIN (1), a length of coaxial cable (2), two mounting clips (3) and (4), and a control module/antenna (5).

OPERATION

OPERATION

The remote start antenna is located on the passenger side above and to the left of glove box. The antenna interfaces with the Wireless Ignition Module (WIN) through a coaxial electrical cable and electrical connector. The antenna helps to amplify the signal for the Remote Keyless Entry (RKE) key fob.

REMOVAL

REMOVAL

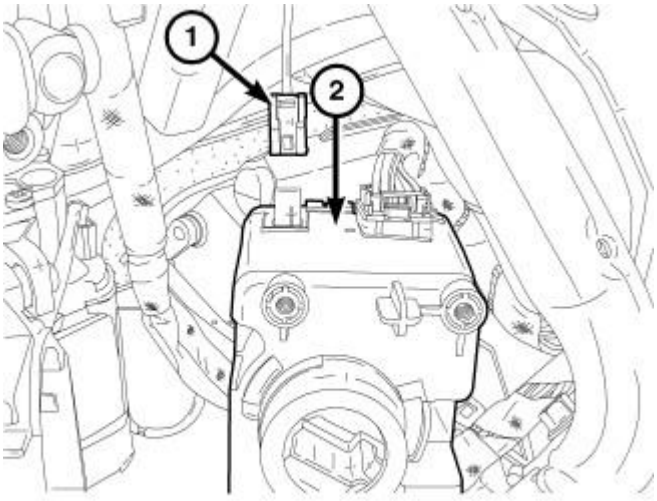

Fig. 8: RSA ELECTRICAL CONNECTOR
Courtesy of CHRYSLER LLC

WARNING: Wait two minutes for the system reserve capacitor to discharge before servicing any airbag components. Failure to do this may result in serious or fatal injury.

The remote start antenna is located on the passenger side above and to the left of glove box.

1. Disconnect and isolate the battery negative cable.
2. Remove screws from Wireless Ignition Node (WIN). Refer to **Electrical/Electronic Control Modules/RECEIVER, Wireless Ignition Node - Removal** .
3. Remove the coaxial electrical cable connector (1) from WIN (2).

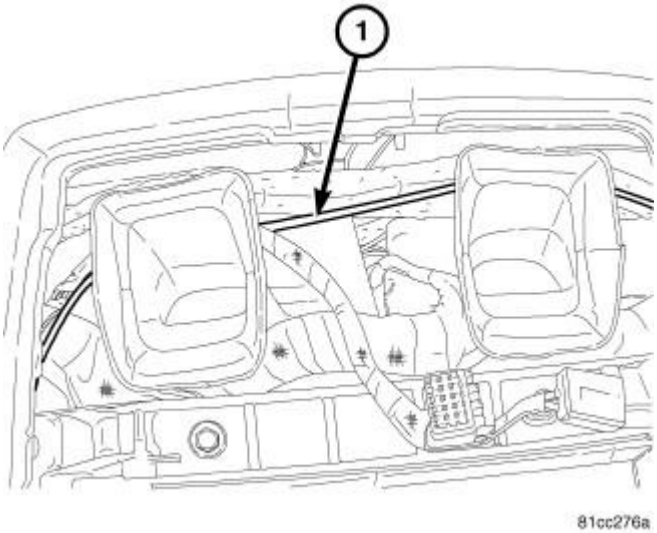

Fig. 9: RSA ROUTING

Courtesy of CHRYSLER LLC

4. Remove center bezel, refer to **Body/Instrument Panel/BEZEL, Instrument Panel - Removal** .

   NOTE: During removal of the remote start antenna note the routing location of the coaxial cable.

5. Remove the remote start antenna coaxial cable from mounting clips, if equipped.

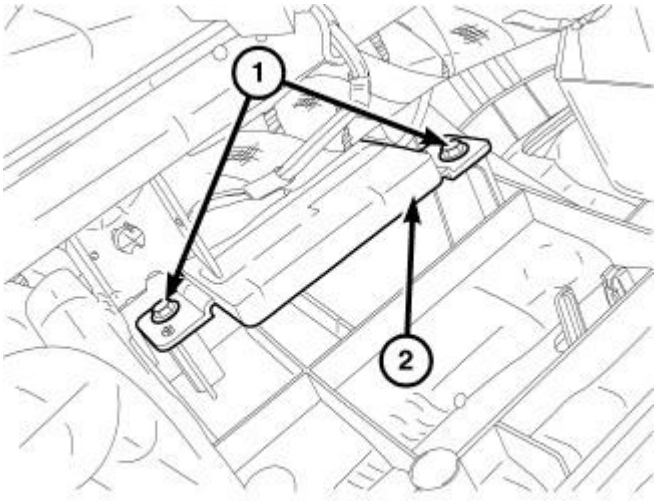

Fig. 10: RSA MODULE AT DASH
Courtesy of CHRYSLER LLC

6. Remove glove box. Refer to **Body/Instrument Panel/GLOVE BOX, Instrument Panel - Removal** .
7. Remove the screws (1) from remote start antenna module (2) and remove from instrument panel assembly.

INSTALLATION

INSTALLATION

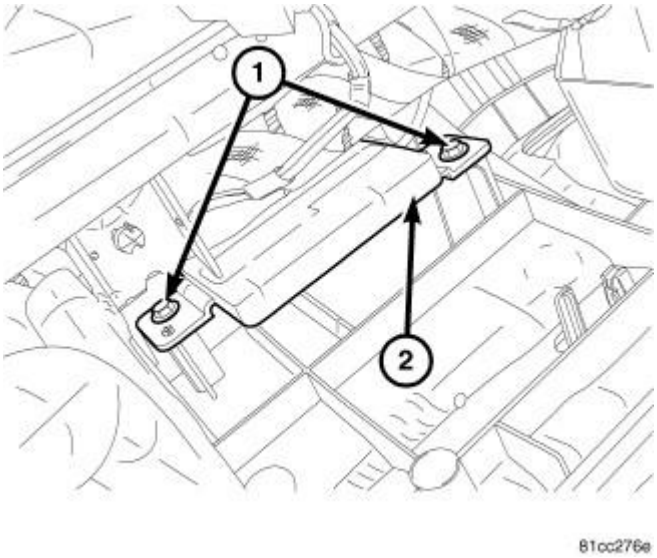

Fig. 11: RSA MODULE AT DASH
Courtesy of CHRYSLER LLC

NOTE: Make sure the remote start antenna is positioned the same way noted during the removal procedure.

1. Install the remote start antenna module (2), and screws (1) to instrument panel assembly. Tighten screws to 2.5 N.m (22 in. lbs.).
2. Install the glove box. Refer to **Body/Instrument Panel/GLOVE BOX, Instrument Panel - Installation** .

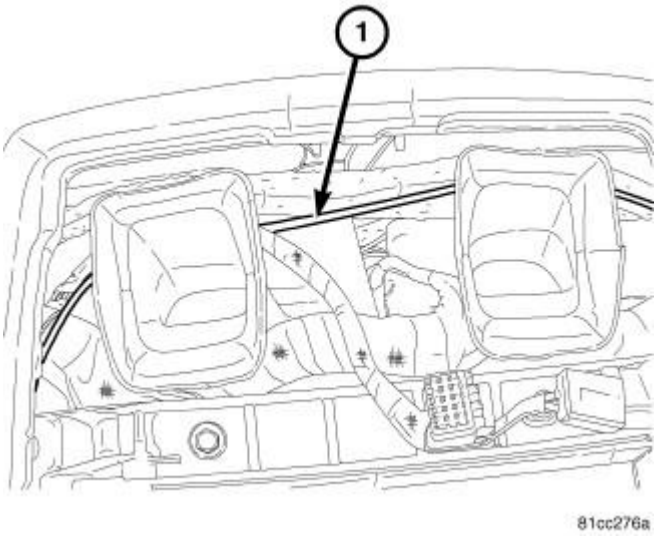

Fig. 12: RSA ROUTING
Courtesy of CHRYSLER LLC

3. Route the remote start coaxial cable (1) in the position noted during the removal procedure.

4. Install the remote start antenna coaxial cable to mounting clips, if equipped.

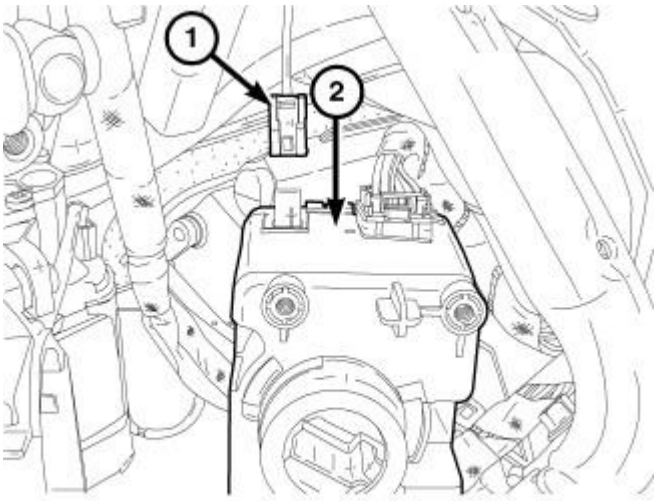

Fig. 13: RSA ELECTRICAL CONNECTOR
Courtesy of CHRYSLER LLC

5. Connect remote start antenna coaxial cable connector (1) to wireless ignition node (WIN) (2).
6. Install WIN to instrument panel bracket. Refer to **Electrical/Electronic Control Modules/RECEIVER, Wireless Ignition Node - Installation** .

BUTTON, START/STOP

DESCRIPTION

DESCRIPTION

START/STOP BUTTON



Fig. 14: START/STOP Button
Courtesy of CHRYSLER LLC

The START/STOP button is located on the instrument panel, inserted into the Wireless Ignition Node (WIN) next to the steering column. The START/STOP button is the momentary push button used to change the vehicle's ignition states, instead of the conventional key and lock cylinder. The START/STOP button can be removed and the FOB with Integrated Key (FOBIK) can be used in its place, in a similar manner to a conventional key.

OPERATION

OPERATION

START/STOP BUTTON

Each time the START/STOP button is pressed, a signal is transmitted from the Wireless Ignition Node (WIN) over the Controlled Area Network (CAN) data bus to the Passive Entry Module (PEM), where the signal is then wirelessly transmitted to the FOB with Integrated Key (FOBIK). The signal is then sent back through the PEM over the CAN data bus and back to the WIN for authentication and location. After a valid FOBIK is detected inside the vehicle the ignition state can be changed.

The ignition system for the Keyless Go (KG)feature has three states, similar to a conventional ignition system. These ignition states are OFF, ACCESSORY, and ON. Each time the START/STOP button is pressed and released the ignition state changes to the next ignition state as follows, from OFF to ACCESSORY, from ACCESSORY to ON, and from ON back to OFF.

To start the engine, the transmission must be in park or neutral. From any ignition state, press the brake pedal and press and release the START/STOP button and the engine attempts to start. The starter will continues to crank until the engine starts. If the engine fails to start, the starter will disengages automatically in 10 seconds. If you wish to stop the cranking of the engine before the engine starts, press and release the START/STOP button again.

To shut off the engine while the transmission is in PARK press and release the START/STOP button and the engine shuts off. To shut off the engine while the transmission is out of PARK you must press and hold the START STOP button. The ignition state will be changes to the ACCESSORY state if the transmission is not in PARK and to the OFF state if the transmission is in PARK motion.

For information regarding an inoperative START/STOP button. See **Electrical/Starting/BUTTON, Start/Stop - Diagnosis and Testing**

DIAGNOSIS AND TESTING

DIAGNOSIS AND TESTING

If the START/STOP button is inoperative, it may be caused by an invalid FOB with Integrated Key (FOBIK), or a FOBIK with a dead battery. To determine the cause of the problem. See **Electrical/Starting/BUTTON, Start/Stop - Standard Procedure**

REMOVAL

REMOVAL

NOTE: The START/STOP button should only be removed or installed with the ignition off.

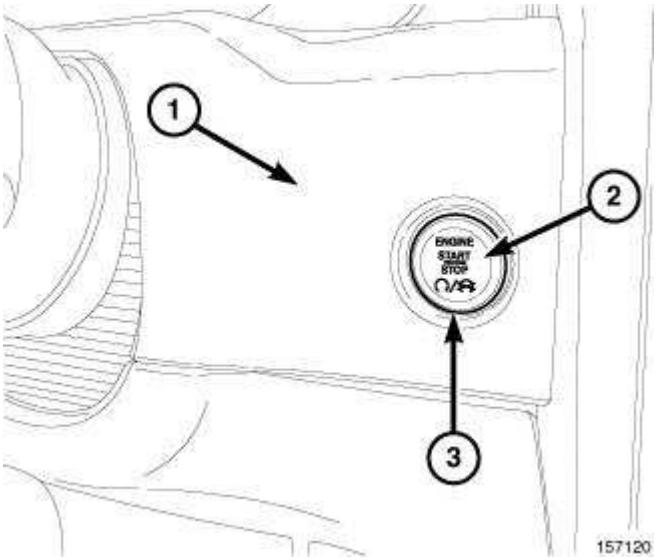

Fig. 15: Identifying Instrument Panel, Button & Chrome Bezel Ring
Courtesy of CHRYSLER LLC

1. Insert a small screwdriver or trim tool under the chrome bezel ring (3) at the bottom of the button (2), and gently pry the button (2) loose.
2. Remove the button (2) from the receptacle on the instrument panel (1).

INSTALLATION

INSTALLATION

NOTE: The START/STOP button should only be removed or installed with the ignition off.

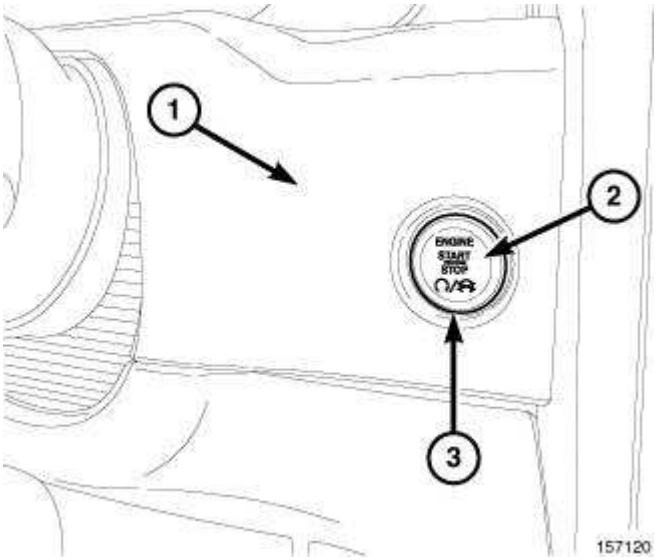

Fig. 16: Identifying Instrument Panel, Button & Chrome Bezel Ring
Courtesy of CHRYSLER LLC

1. Position the START/STOP button (2) with the lettering in the horizontal position.
2. Insert the button into the receptacle on the instrument panel (1) and gently press on the chrome bezel ring (3) to seat the button in the receptacle.

STANDARD PROCEDURE

STANDARD PROCEDURE

If the START/STOP button is inoperative remove the Engine START/STOP Button. See **Electrical/Starting/BUTTON, Start/Stop - Removal**and insert the FOB with Integrated Key (FOBIK) in the receptacle. If the FOBIK is not valid the message center displays WRONG KEY. If no message is displayed, it should still be possible to operate the vehicle by turning the FOBIK to the desired ignition position. The FOBIK battery needs to be replaced for the Keyless GO (KG) to operate. For further information regarding KG functionality, refer to the appropriate diagnostic service information.

KEYLESS GO

DESCRIPTION

DESCRIPTION

KEYLESS GO SYSTEM

The Keyless Go (KG) system changes the state of the vehicle's ignition between the OFF, ACCESSORY, RUN, and START states using a momentary button rather than a conventional key.

The KG system includes the following major components, which are described in further detail elsewhere in this service information:

- **FOB with Integrated Key (FOBIK)** -. Refer to **Electrical/Vehicle Theft Security/KEY, Transponder - Description**
- **Passive Entry Antenna** - Multiple Low Frequency (LF) antennas are located throughout the passenger compartment. Refer to **Electrical/Power Locks/ANTENNA, Passive Entry - Description**
- **Passive Entry Module (PEM)** - The module is located in the passenger compartment. Refer to **Electrical/Power Locks - Description**
- **START/STOP button** - Located on the instrument panel, inserted into the Wireless Ignition Node (WIN). See **Electrical/Starting/BUTTON, Start/Stop - Description**
- **Wireless Ignition Node (WIN)** - Located to the right of the steering column and is partially concealed beneath the instrument panel. Refer to **Electrical/Electronic Control Modules/RECEIVER, Wireless Ignition Node - Description**

OPERATION

OPERATION

The Keyless GO (KG) system replaces the conventional key and ignition switch with a momentary START/STOP button and a FOB with Integrated Key (FOBIK). When the operator presses the START/STOP button, the FOBIK is checked for authenticity through the Passive Entry Module (PEM). If recognized, the KG system, allows the ignition state to be changed by the operator between the OFF, ACCESSORY, RUN, and START states. This causes changes in the ignition status signals on the vehicle's Controller Area Network (CAN) data buses and hardwired outputs.

DIAGNOSIS AND TESTING

DIAGNOSIS AND TESTING

If the Keyless Go (KG) feature is inoperative, it may be caused by an invalid FOB with Integrated Key (FOBIK), or a FOBIK with a dead battery. Additionally if the Remote Keyless Entry (RKE) is inoperative, the KG will also be inoperative.

The message center dislplays the following messages when certain conditions are met.

- **Key FOB Battery Low** - Displayed when the battery in the FOBIK is low. At this point the Keyless Go function should still operate, but the battery should be replaced soon.
- **Key FOB Not Detected** - Displayed when a valid FOBIK could not be detected inside the vehicle
- **Push Pedal + Button to Start** - Displayed when one enters the vehicle.
- **Service Keyless System** - Displayed when there is a problem with the KGsystem.
- **Vehicle Not in Park** - Displayed when shutting off the vehicle while the transmission is not in the PARK position.

For further information, refer to the proper diagnostic service information.

STARTER

REMOVAL

3.5L

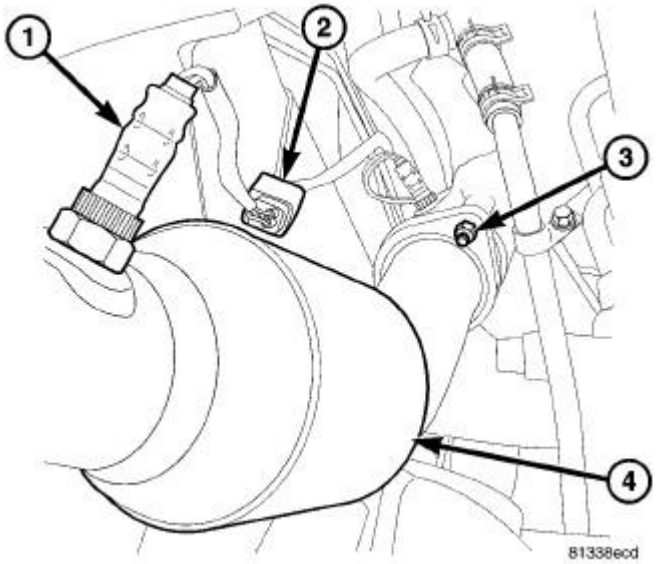

Fig. 17: LH CATALYTIC CONVERTER
Courtesy of CHRYSLER LLC

1 - OXYGEN SENSOR
2 - OXYGEN SENSOR CONNECTOR
3 - BALL FLANGE NUT
4 - LH CATALYTIC CONVERTER

NOTE: All Wheel Drive procedure shown in illustration. Rear Wheel Drive Similar.

1. Disconnect and isolate negative battery cable at battery.
2. Remove the left side catalytic converter (4). Refer to **Exhaust System/CONVERTER, Catalytic - Removal** .

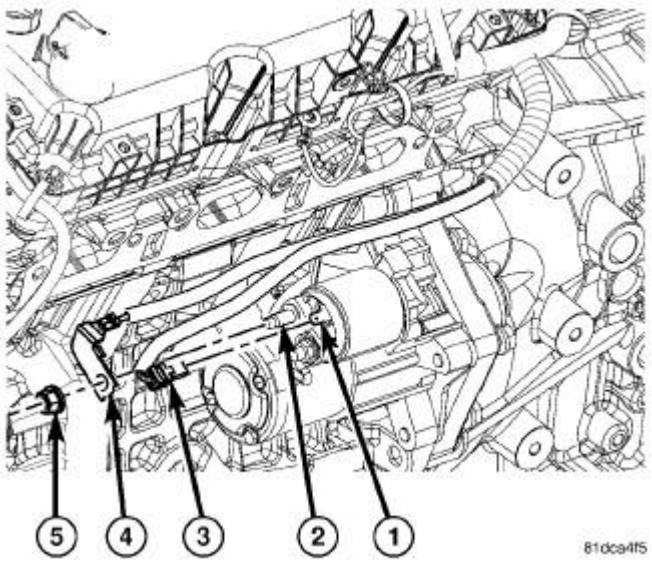

Fig. 18: 3.5L STARTER ELECTRICAL CONNECTION
Courtesy of CHRYSLER LLC

3. Remove battery cable nut (5) and battery cable (4) from solenoid stud (2).
4. Disconnect electrical connector (3) from starter solenoid terminal (1).

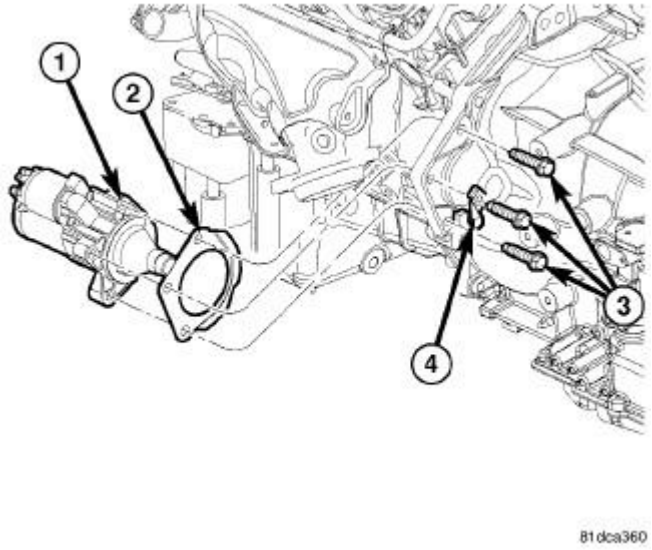

Fig. 19: 3.5L AWD RWD STARTER R AND I
Courtesy of CHRYSLER LLC

5. Remove starter mounting bolts (3), the electrical harness mounting bracket (4) should remain in position.
6. Rotate and remove starter assembly (1) from transmission.
7. Remove starter motor dust shield (2).

5.7L

REAR WHEEL DRIVE (RWD)

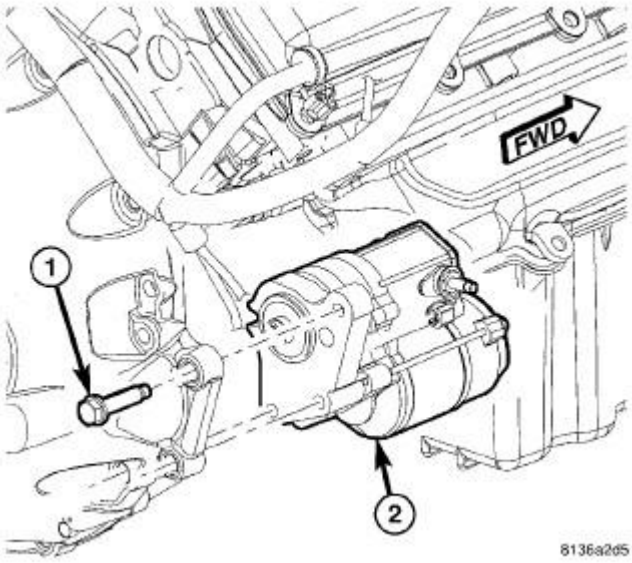

Fig. 20: STARTER-5.7L-RWD
Courtesy of CHRYSLER LLC

1. Disconnect and isolate negative battery cable.
2. Raise and support vehicle.
3. Remove three starter mounting bolts (1).
4. Move starter motor (2) towards front of vehicle far enough for nose of starter to clear. Always support starter motor (2) during this process. Do not let starter motor hang from wire harness.
5. Remove battery cable-to-solenoid nut.
6. Remove solenoid wire from solenoid stud.
7. Remove starter motor.

ALL WHEEL DRIVE (AWD)

1. Disconnect and isolate negative battery cable.
2. Raise and support vehicle.

   The steering gear assembly must be partially lowered to gain access to starter. Do not disconnect any hydraulic hoses or remove any steering linkage. Proceed.

3. Remove coupling bolt (pinch bolt) securing steering gear to steering column.
4. Remove three steering gear mounting bolts and slightly lower gear. Temporarily support the steering gear.
5. Remove steering gear heat-shield.

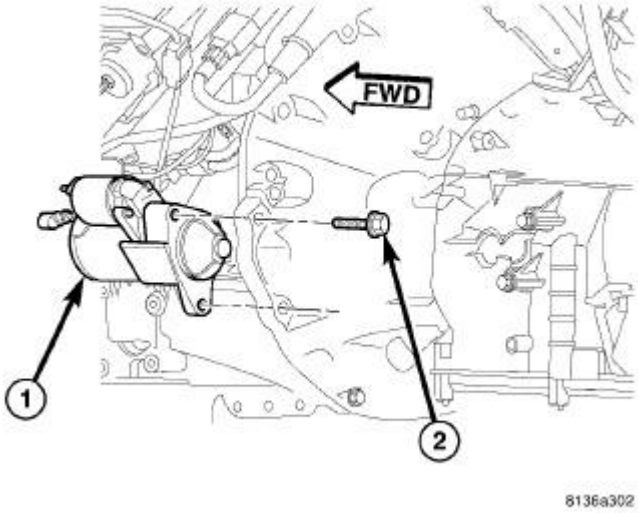

Fig. 21: STARTER-5.7L-AWD
Courtesy of CHRYSLER LLC

6. Remove two starter mounting bolts (2).
7. Move starter motor (1) towards front of vehicle far enough for nose of starter to clear. Always support starter motor (1) during this process. Do not let starter motor hang from wire harness.
8. Remove battery cable-to-solenoid nut.
9. Remove solenoid wire from solenoid stud.
10. Remove starter motor.

6.1L

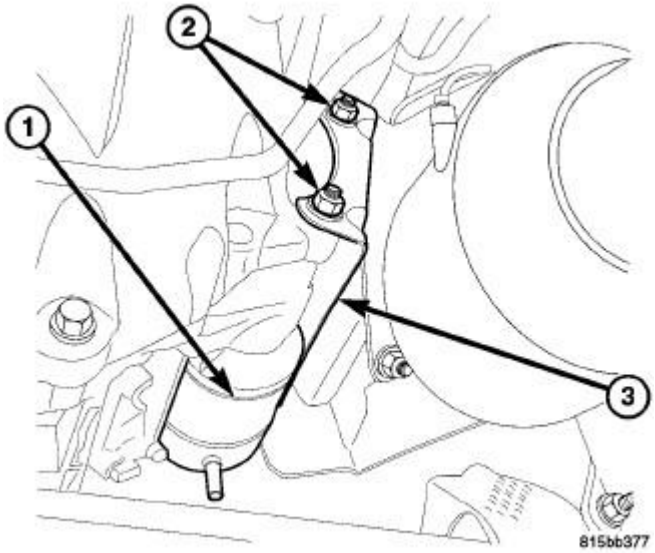

Fig. 22: Removing/Installing Heat Shield

Courtesy of CHRYSLER LLC

1. Disconnect and isolate the negative battery cable.
2. Raise and support the vehicle.
3. Remove the two heat shield nuts (2) and remove the heat shield (3).

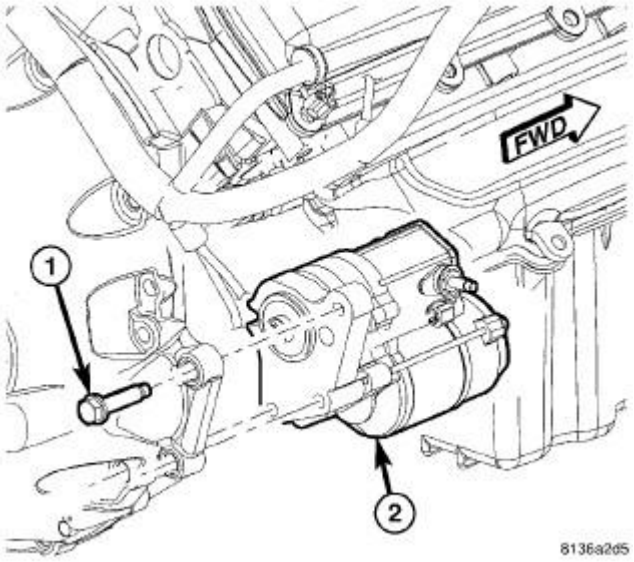

Fig. 23: Starter - 5.7L - RWD
Courtesy of CHRYSLER LLC

4. Remove the three starter mounting bolts (1).
5. Move the starter motor (2) towards the front of vehicle far enough for the nose of starter to clear. Always support the starter motor (2) during this process. Do not let the starter motor hang from the wire harness.
6. Remove the battery cable-to-solenoid nut.
7. Remove the solenoid wire from the solenoid stud.
8. Remove the starter motor.

INSTALLATION

3.5L

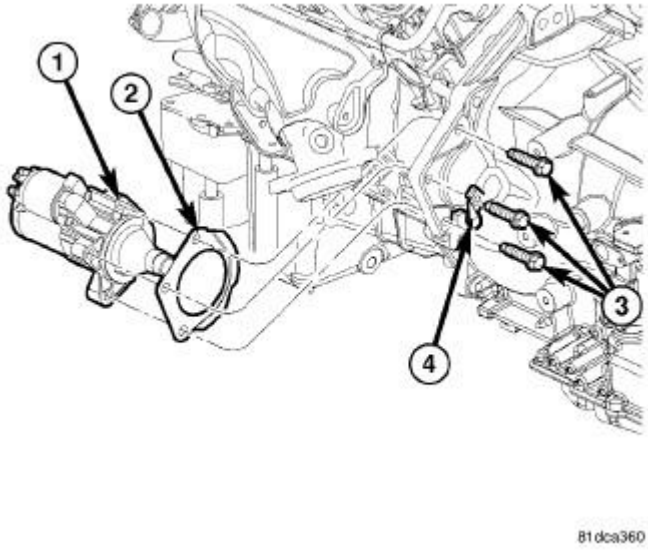

Fig. 24: 3.5L AWD RWD STARTER R AND I
Courtesy of CHRYSLER LLC

NOTE: All Wheel Drive procedure shown in illustration. Rear Wheel Drive Similar.

1. Install starter motor dust shield (2).
2. Rotate and install starter assembly (1) to transmission.
3. Install starter mounting bolts (3), and electrical harness mounting bracket (4). Tighten bolts to 54 N.m (40 ft. lbs.).

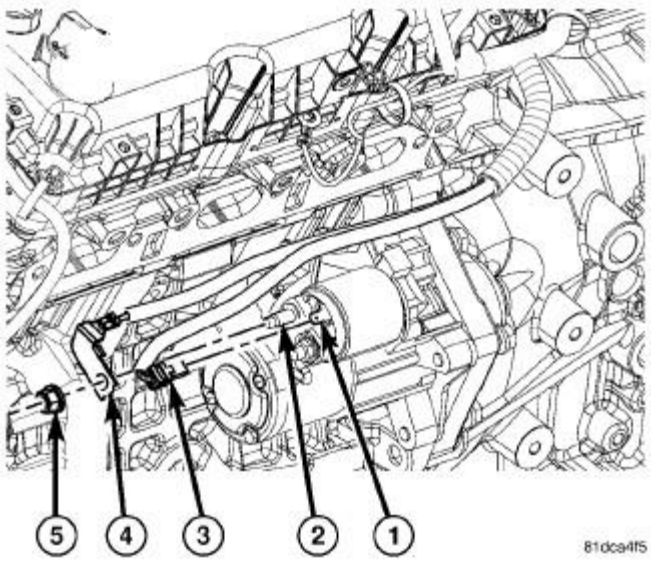

Fig. 25: 3.5L STARTER ELECTRICAL CONNECTION
Courtesy of CHRYSLER LLC

4. Connect electrical connector (3) to starter solenoid terminal (1).
5. Install battery cable (4) and nut (5) to solenoid stud (2). Tighten nut to 11 N.m (97 in. lbs.).

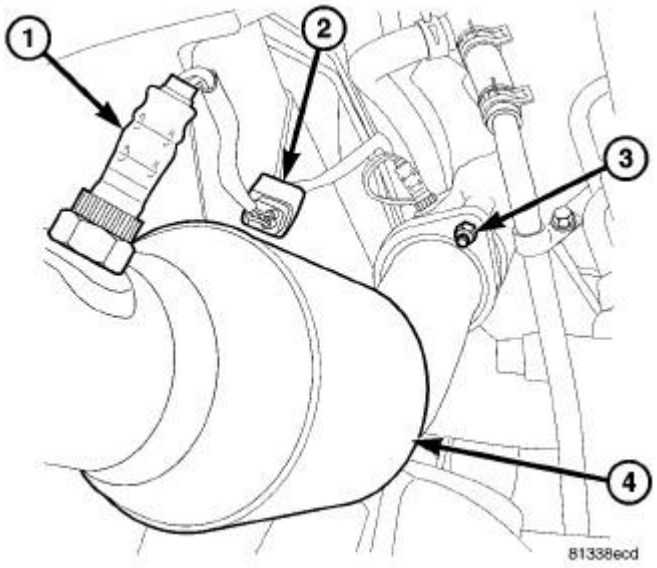

Fig. 26: LH CATALYTIC CONVERTER
Courtesy of CHRYSLER LLC

1 - OXYGEN SENSOR
2 - OXYGEN SENSOR CONNECTOR
3 - BALL FLANGE NUT
4 - LH CATALYTIC CONVERTER

6. Install left side catalytic converter (4). Refer to **Exhaust System/CONVERTER, Catalytic - Installation** .
7. Connect negative battery cable, tighten nut to 5 N.m (45 in. lbs.).

5.7L

REAR WHEEL DRIVE (RWD)

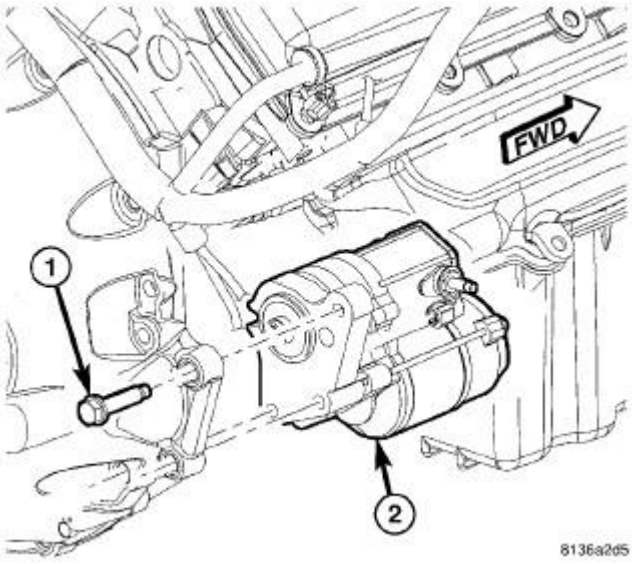

Fig. 27: STARTER-5.7L-RWD
Courtesy of CHRYSLER LLC

1. Position starter (2) into transmission but do not install bolts.
2. Connect solenoid wire to starter motor (snaps on).
3. Position battery cable to solenoid stud. Install and tighten battery cable eyelet nut. Refer to **Electrical/Battery System - Specifications** . Do not allow starter motor to hang from wire harness.
4. Install and tighten three mounting bolts (1).
5. Lower vehicle.
6. Connect negative battery cable.

ALL WHEEL DRIVE (AWD)

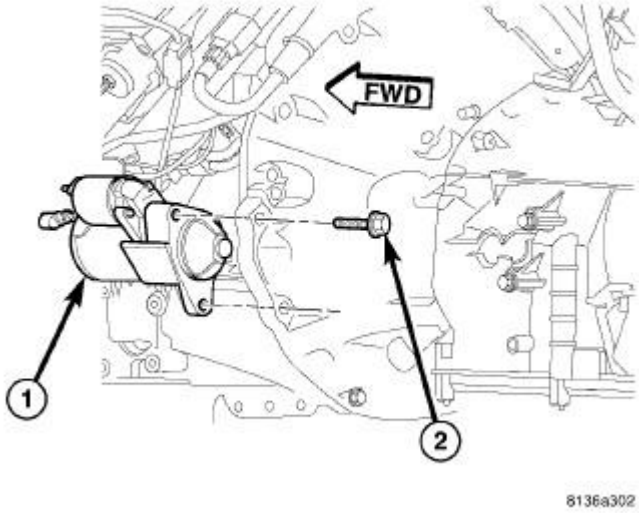

Fig. 28: STARTER-5.7L-AWD
Courtesy of CHRYSLER LLC

1. Position starter (1) into transmission but do not install bolts.
2. Connect solenoid wire to starter motor (snaps on).
3. Position battery cable to solenoid stud. Install and tighten battery cable eyelet nut. Do not allow starter motor to hang from wire harness.
4. Install and tighten both mounting bolts (2).
5. Install steering gear assembly and mounting bolts. Install steering column coupling bolt (pinch bolt). Refer to **STEERING** for torque specifications.
6. Install steering gear heat-shield.
7. Lower vehicle.
8. Connect negative battery cable.

6.1L

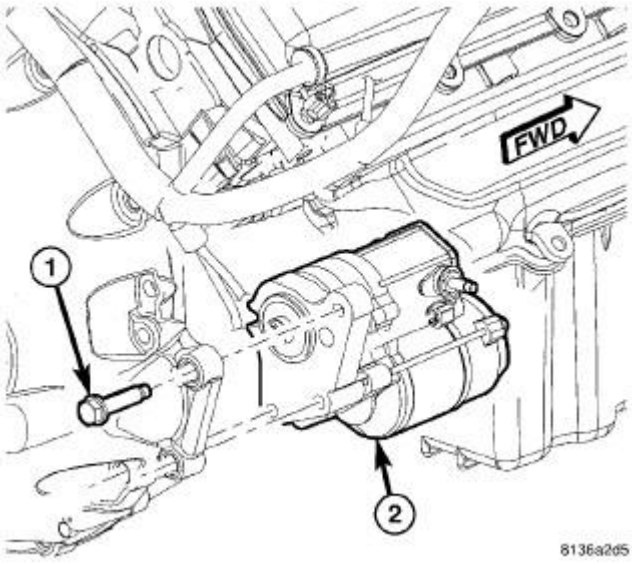

Fig. 29: STARTER-5.7L/6.1L-RWD
Courtesy of CHRYSLER LLC

1. Position the starter (2) into the transmission but do not install bolts.
2. Connect the solenoid wire to the starter motor (snaps on).
3. Position the battery cable to the solenoid stud. Install the battery cable eyelet nut.

   Tighten to 11 N.m (8 Ft. Lbs.).

4. Install the three mounting bolts (1).

   Tighten to 54 N.m (40 Ft. Lbs.).

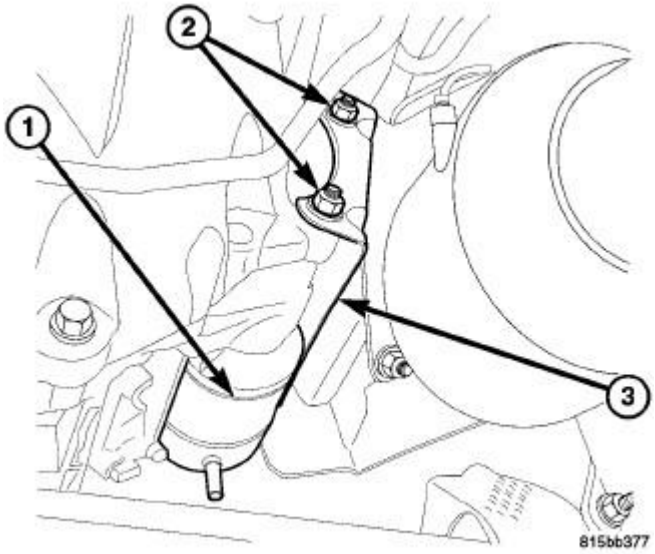

Fig. 30: Removing/Installing Heat Shield
Courtesy of CHRYSLER LLC

5. Position the heat shield (3) and install the two shield mounting nuts (2).
6. Lower the vehicle.
7. Connect the negative battery cable.

SUSPENSION

Tire Pressure Module (TPM) - Electrical Diagnostics - Challenger

DIAGNOSTIC CODE INDEX

TIRE PRESSURE MODULE (TPM) - DIAGNOSTIC CODE INDEX

DTC	Description
B2199-16	BATTERY VOLTAGE - CIRCUIT VOLTAGE BELOW THRESHOLD
B2199-17	BATTERY VOLTAGE - CIRCUIT VOLTAGE ABOVE THRESHOLD
B21DD-84	SYSTEM VOLTAGE - SIGNAL VOLTAGE BELOW ALLOWABLE RANGE
B21DD-85	SYSTEM VOLTAGE - SIGNAL ABOVE ALLOWABLE RANGE
C0077-00	LOW TIRE PRESSURE
C1501-96	TIRE PRESSURE SENSOR 1 - INTERNAL COMPONENT FAILURE
C1502-96	TIRE PRESSURE SENSOR 2 - INTERNAL COMPONENT FAILURE
C1503-96	TIRE PRESSURE SENSOR 3 - INTERNAL COMPONENT FAILURE
C1504-96	TIRE PRESSURE SENSOR 4 - INTERNAL COMPONENT FAILURE
C151C-00	TIRE PRESSURE SENSORS MISSING
C151D-00	TIRE PRESSURE SENSOR LOCATION UNDETERMINED
C1580-00	LEFT/RIGHT SIDE TIRE PRESSURE SENSOR LOCATION UNDETERMINED
C1581-00	FRONT/REAR TIRE PRESSURE SENSOR LOCATION UNDETERMINED
C2209-00	TIRE PRESSURE MONITOR INTERNAL
U0001-00	CAN C BUS
U0002-00	CAN C BUS OFF PERFORMANCE
U0100-00	LOST COMMUNICATION WITH ECM/PCM
U0121-00	LOST COMMUNICATION WITH ANTI-LOCK BRAKE MODULE
U0141-00	LOST COMMUNICATION WITH IPM (FCM/TIPM)
U0168-00	LOST COMMUNICATION WITH VEHICLE SECURITY CONTROL MODULE (WIN/WCM)

DIAGNOSIS AND TESTING

B2199-16-BATTERY VOLTAGE - CIRCUIT VOLTAGE BELOW THRESHOLD

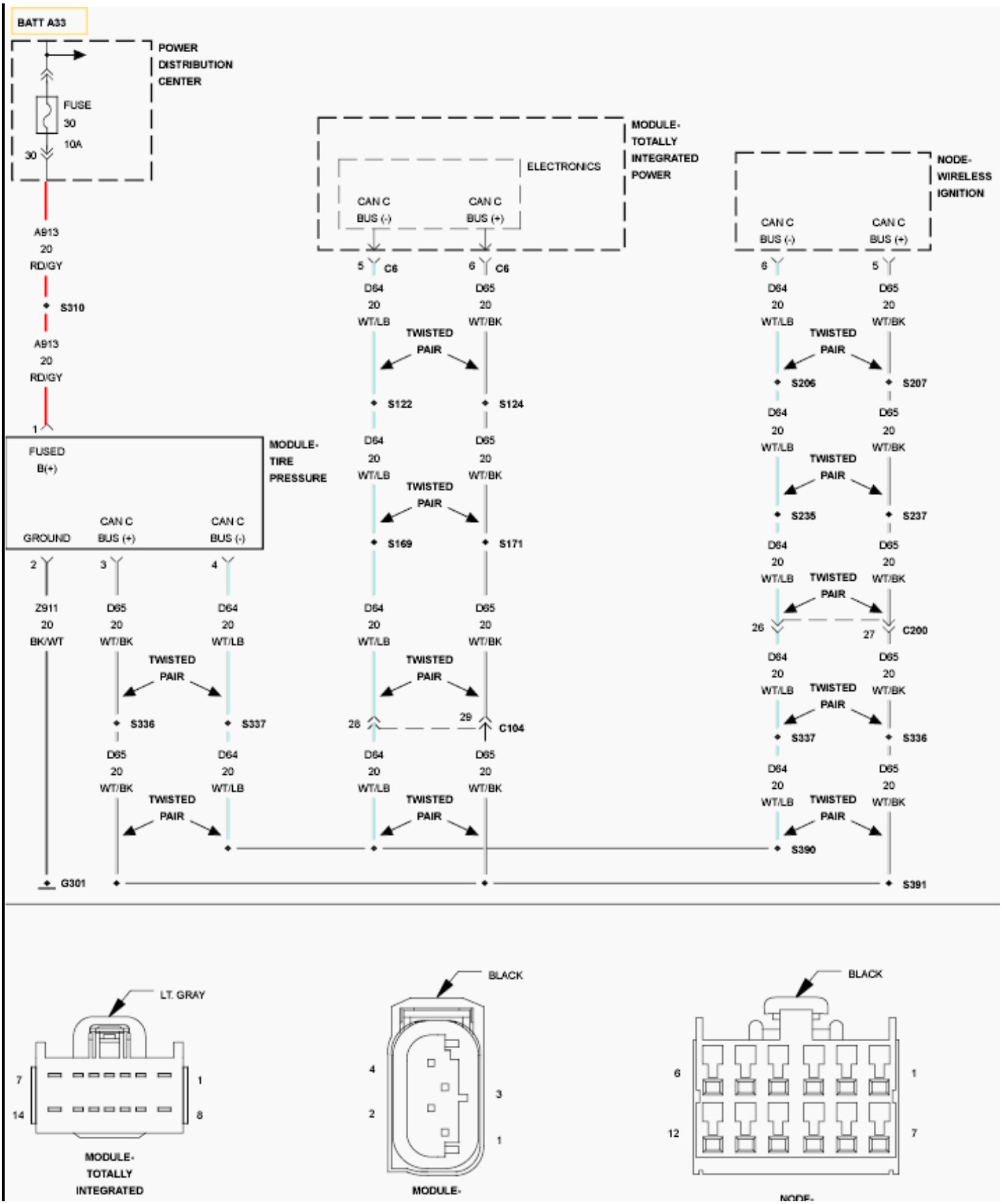
BATT A33
POWER DISTRIBUTION CENTER
FUSE 30 10A
30
A913 20 RD/GY
S310
A913 20 RD/GY
1
FUSED B(+)
GROUND
CAN C BUS (+)
CAN C BUS (-)
MODULE- TIRE PRESSURE
2
3
4
Z911 20 BK/WT
D65 20 WT/BK
D64 20 WT/LB
TWISTED PAIR
S336
S337
G301
MODULE- TOTALLY INTEGRATED POWER
ELECTRONICS
CAN C BUS (-)
CAN C BUS (+)
5 C6
6 C6
D64 20 WT/LB
D65 20 WT/BK
S122
S124
S169
S171
28
29
C104
NODE- WIRELESS IGNITION
6
5
S206
S207
S235
S237
26
27
C200
S337
S336
S390
S391
LT. GRAY
7
14
1
8
MODULE- TOTALLY INTEGRATED
BLACK
4
2
3
1
MODULE-
BLACK
6
12
1
7
NODE-

Additional Wiring

For complete wiring diagrams refer to **SYSTEM WIRING DIAGRAMS** .

Monitor Conditions

- **When Monitored:**

  Continuously.

Set Conditions

- **Set Condition:**

  Any time the Tire Pressure Monitoring (TPM) Module senses voltage input below 8.0 volts for over 20 ms, this code will set.

Possible Causes

Possible CauseS
LOW VOLTAGE ENGINE DTC
(A913) FUSED B(+) CIRCUIT HIGH RESISTANCE
(Z911) GROUND CIRCUIT HIGH RESISTANCE
TIRE PRESSURE MONITORING (TPM) MODULE

Diagnostic Test

1. **CHECK POWERTRAIN CONTROL MODULE (PCM) DTCs**

   NOTE: Make sure the battery is fully charged before proceeding.

   1. Ignition on, engine not running.
   2. With the scan tool, read ENGINE DTCs

      Are there any batter or charging systems DTCs?

      Yes

      - Refer to **DTC-Based Diagnostics/MODULE, Powertrain Control (PCM) - Diagnosis and Testing** and perform the appropriate diagnostic procedure.

      No

      - Go to step 2
2. **TEST FOR INTERMITTENT CONDITION**
   1. With the scan tool, record and erase DTCs.

2. Start the engine and run for two minutes.
3. With the scan tool, read DTCs.

   Does the scan tool display: B219916-BATTERY VOLTAGE - CIRCUIT VOLTAGE BELOW THRESHOLD?

   Yes

   - Go to step 3

   No

   - The conditions that caused this code to set are not present at this time. Using the wiring diagram/schematic as a guide, inspect the wiring and connectors.
   - Perform the TPM VERIFICATION TEST. See **DTC-Based Diagnostics/MODULE, Tire Pressure (TPM) - Standard Procedure**.

3. **(A913) FUSED B(+) CIRCUIT OPEN OR HIGH RESISTANCE**



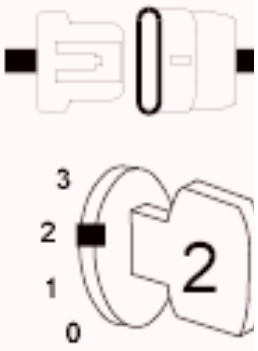

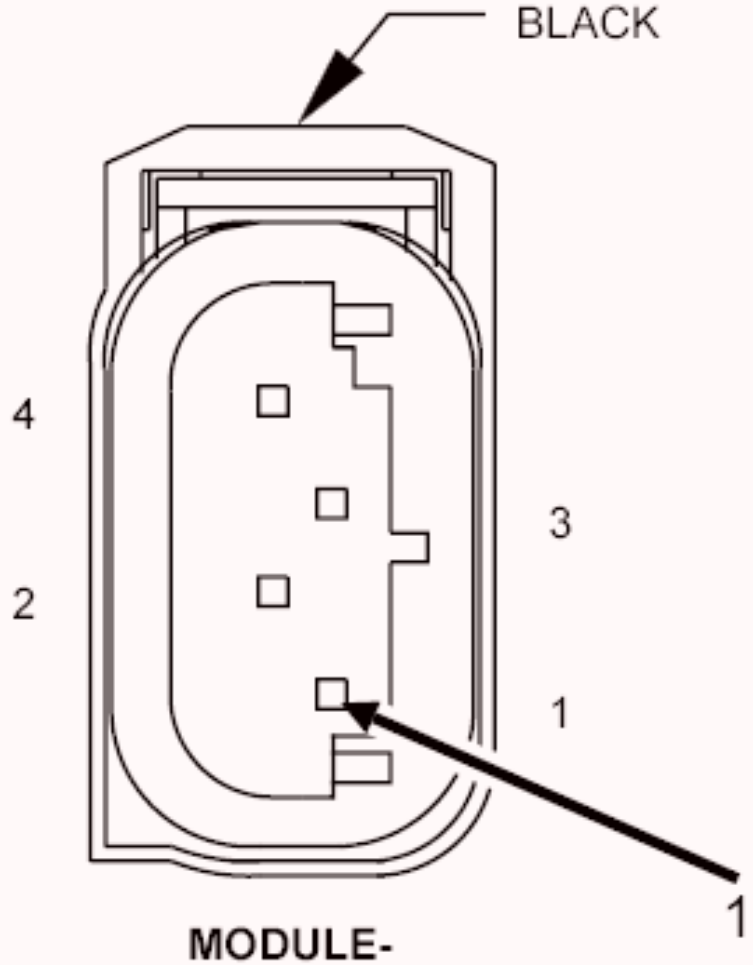

MODULE-
TIRE
PRESSURE

21219

1. Turn the ignition off to the lock position
2. Disconnect the TPM Module harness connector.
3. Ignition on, engine not running.
4. Using a 12-volt test light connected to ground, check (A913) Fused B(+) circuit in the TPM Module harness connector.

NOTE: **The test light must illuminate brightly. Compare the brightness to that of a direct connection to the battery.**

Does the test light illuminate brightly?

Yes

- Go to step 4

No

- Repair the (A913) Fused B(+) circuit for high resistance.
- Perform the TPM VERIFICATION TEST. See **DTC-Based Diagnostics/MODULE, Tire Pressure (TPM) - Standard Procedure**.

4. **(Z911) GROUND CIRCUIT OPEN OR HIGH RESISTANCE**

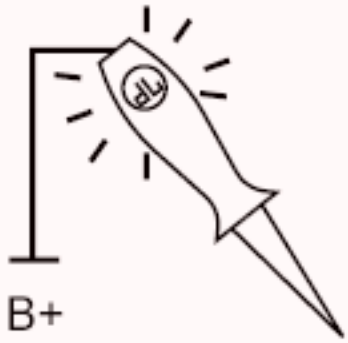

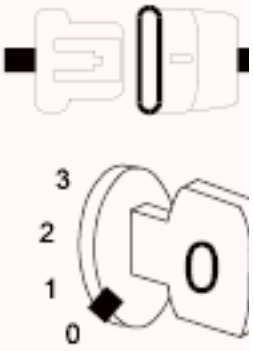

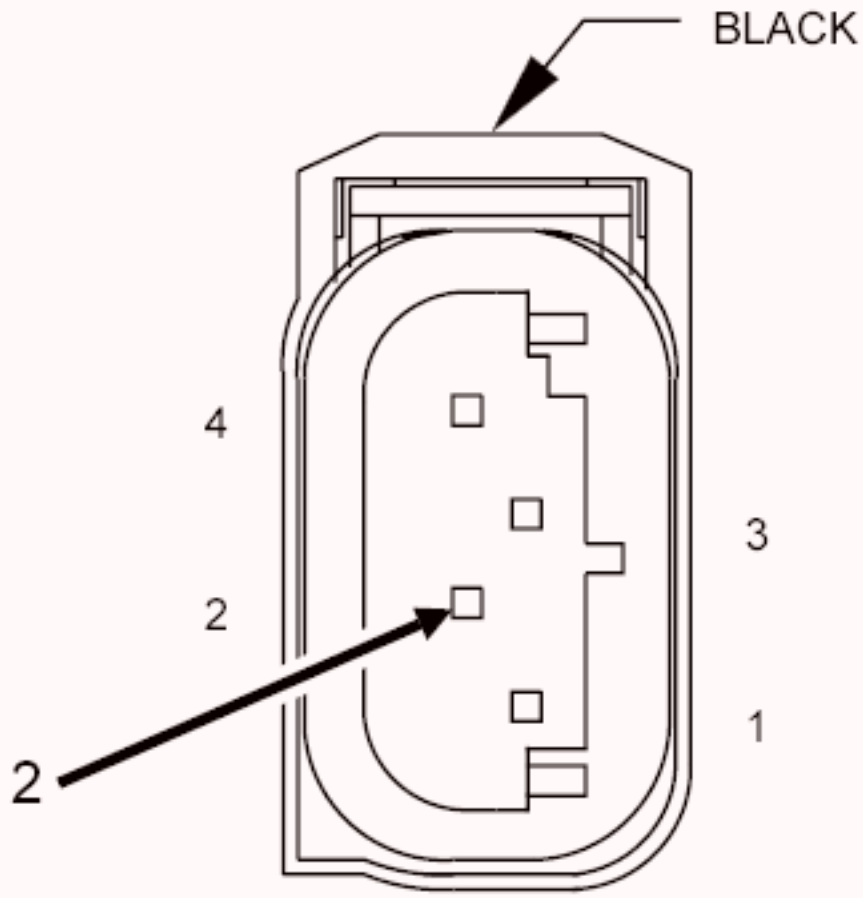

MODULE-

TIRE

PRESSURE

2122

1. Turn the ignition off to the lock position
2. Using a 12-volt test light connected to 12-volts, check the (Z911) Ground circuit in the TPM Module harness connector.

NOTE: The test light must illuminate brightly. Compare the brightness to that of a direct connection to the battery.

Does the test light illuminate brightly?

Yes

- Replace the Tire Pressure Monitoring (TPM) Module in accordance with Service Information.
- Perform the TPM VERIFICATION TEST. See **DTC-Based Diagnostics/MODULE, Tire Pressure (TPM) - Standard Procedure**.

No

- Repair the (Z911) Ground circuit for high resistance.
- Perform the TPM VERIFICATION TEST. See **DTC-Based Diagnostics/MODULE, Tire Pressure (TPM) - Standard Procedure**.

B2199-17-BATTERY VOLTAGE - CIRCUIT VOLTAGE ABOVE THRESHOLD

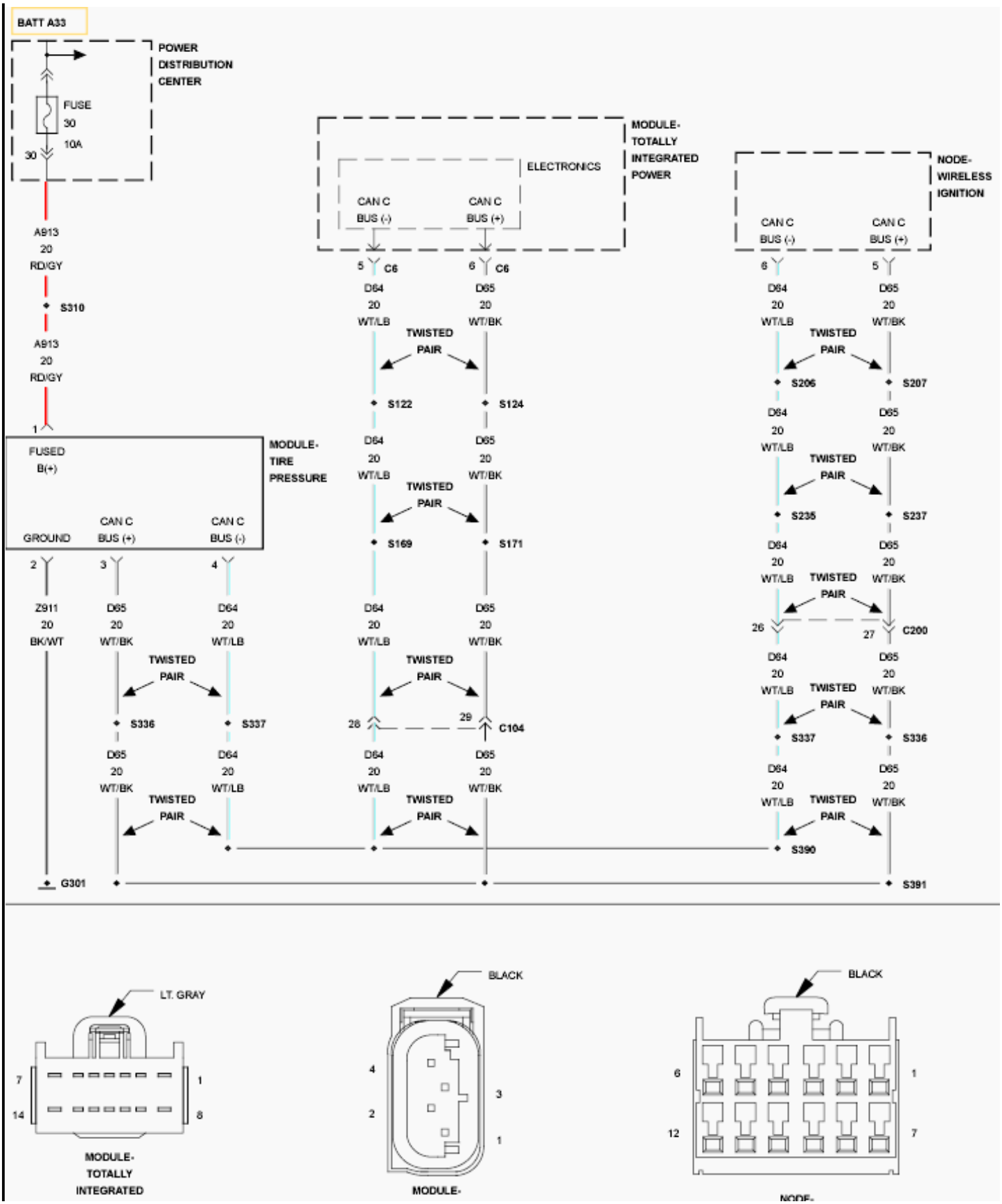
BATT A33
POWER DISTRIBUTION CENTER
FUSE 30 10A
30
A913 20 RD/GY
S310
A913 20 RD/GY
1
FUSED B(+)
GROUND
CAN C BUS (+)
CAN C BUS (-)
MODULE- TIRE PRESSURE
2
3
4
Z911 20 BK/WT
D65 20 WT/BK
D64 20 WT/LB
TWISTED PAIR
S336
S337
G301
MODULE- TOTALLY INTEGRATED POWER
ELECTRONICS
CAN C BUS (-)
CAN C BUS (+)
5 C6
6 C6
D64 20 WT/LB
D65 20 WT/BK
S122
S124
S169
S171
28
29
C104
NODE- WIRELESS IGNITION
6
5
S206
S207
S235
S237
26
27
C200
S337
S336
S390
S391
LT. GRAY
7
14
1
8
MODULE- TOTALLY INTEGRATED
BLACK
4
2
3
1
MODULE-
BLACK
6
12
1
7
NODE-

Additional Wiring

For complete wiring diagrams refer to **SYSTEM WIRING DIAGRAMS** .

Monitor Conditions

- **When Monitored:**

  Continuously.

Set Conditions

- **Set Condition:**

  Any time the Tire Pressure Monitoring (TPM) Module senses voltage input above 16.0 volts for over 20ms, this code will set.

Possible Causes

Possible CauseS
HIGH VOLTAGE ENGINE DTC TIRE PRESSURE MODULE (TPM)

Diagnostic Test

1. **CHECK POWERTRAIN CONTROL MODULE (PCM) DTCs**
   1. With the scan tool, read PCM DTCs.

      Are there any ENGINE DTCs present?

      Yes

      - Refer to **DTC-Based Diagnostics/MODULE, Powertrain Control (PCM) - Diagnosis and Testing** and perform the appropriate diagnostic procedure.

      No

      - Go to step 2
2. **TEST FOR INTERMITTENT CONDITION**
   1. With the scan tool, record and erase DTCs.
   2. Start the engine and run for two minutes.
   3. With the scan tool, read DTCs.

      Does the scan tool display: B219917-BATTERY VOLTAGE - CIRCUIT VOLTAGE ABOVE THRESHOLD?

Yes

- Replace the Tire Pressure Monitoring (TPM) Module in accordance with service information.
- Perform the TPM VERIFICATION TEST. See **DTC-Based Diagnostics/MODULE, Tire Pressure (TPM) - Standard Procedure**.

No

- The conditions that caused this code to set are not present at this time. Using the wiring diagram/schematic as a guide, inspect the wiring and connectors.
- Perform the TPM VERIFICATION TEST. See **DTC-Based Diagnostics/MODULE, Tire Pressure (TPM) - Standard Procedure**.

B21DD-84-SYSTEM VOLTAGE - SIGNAL VOLTAGE BELOW ALLOWABLE RANGE

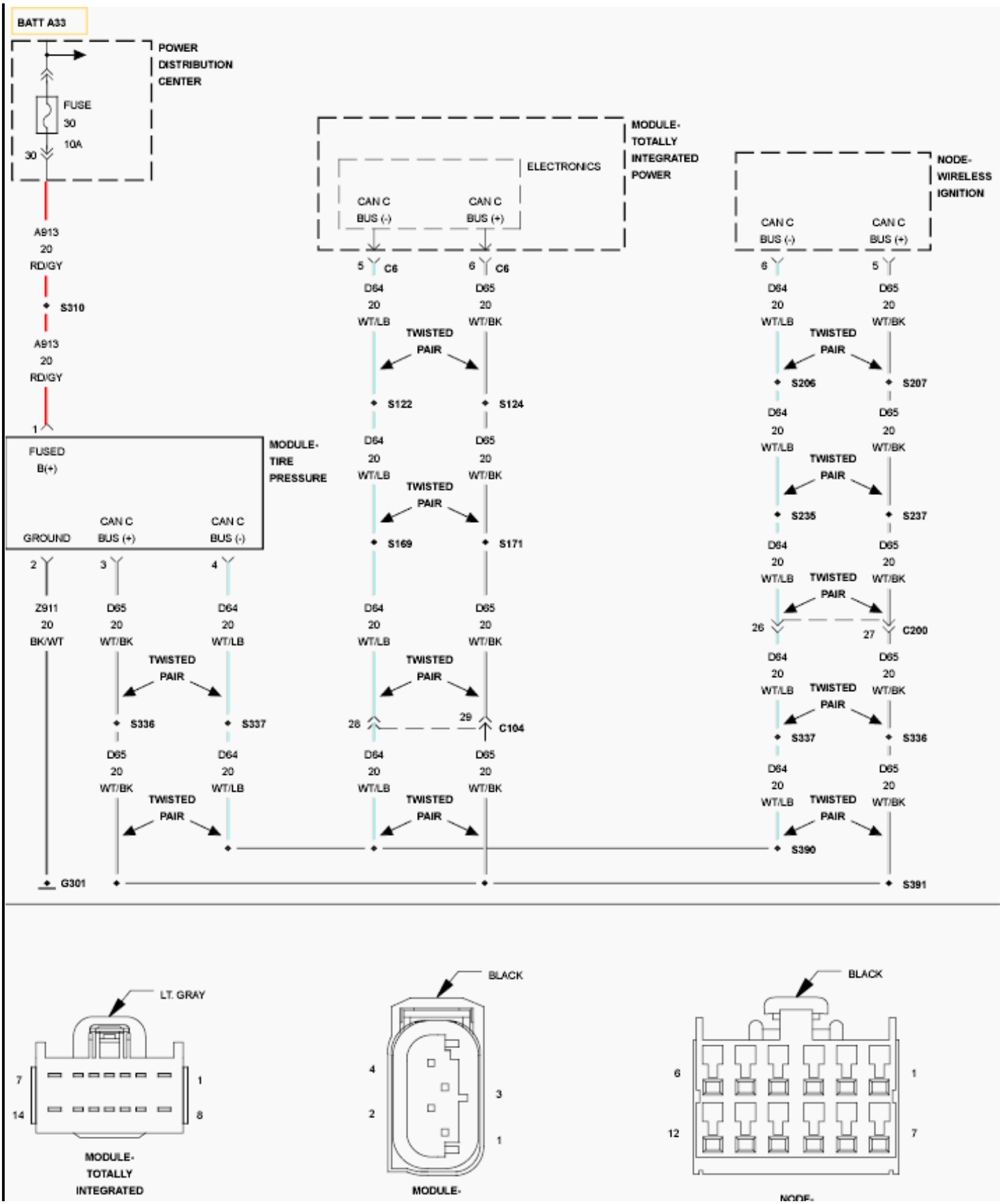
BATT A33
POWER DISTRIBUTION CENTER
FUSE 30 10A
30
A913 20 RD/GY
S310
A913 20 RD/GY
1
FUSED B(+)
GROUND
CAN C BUS (+)
CAN C BUS (-)
MODULE- TIRE PRESSURE
2
3
4
Z911 20 BK/WT
D65 20 WT/BK
D64 20 WT/LB
TWISTED PAIR
S336
S337
G301
MODULE- TOTALLY INTEGRATED POWER
ELECTRONICS
CAN C BUS (-)
CAN C BUS (+)
5 C6
6 C6
D64 20 WT/LB
D65 20 WT/BK
S122
S124
S169
S171
28
29
C104
NODE- WIRELESS IGNITION
6
5
S206
S207
S235
S237
26
27
C200
S337
S336
S390
S391
LT. GRAY
7
14
1
8
MODULE- TOTALLY INTEGRATED
BLACK
4
2
3
1
MODULE-
BLACK
6
12
1
7
NODE-

Additional Wiring

For complete wiring diagrams refer to **SYSTEM WIRING DIAGRAMS** .

Monitor Conditions

- **When Monitored:**

  Continuously.

Set Conditions

- **Set Condition:**

  Anytime the Tire Pressure Monitoring (TPM) Module senses voltage input below 8.0 volts for over 20 ms, this code will set.

Possible Causes

Possible CauseS
LOW VOLTAGE ENGINE DTC
(A913) FUSED B(+) CIRCUIT HIGH RESISTANCE
(Z911) GROUND CIRCUIT HIGH RESISTANCE
TIRE PRESSURE MONITORING (TPM) MODULE

Diagnostic Test

1. **CHECK POWERTRAIN CONTROL MODULE (PCM) DTCs**

   NOTE: Make sure the battery is fully charged before proceeding.

   1. Ignition on, engine not running.
   2. With the scan tool, read PCM DTCs.

      Are there any battery or charging system DTCs?

      No

      - Go to step 2

      Yes

      - Refer to **DTC-Based Diagnostics/MODULE, Powertrain Control (PCM) - Diagnosis and Testing** and perform the appropriate diagnostic procedure.
2. **TEST FOR INTERMITTENT CONDITION**
   1. With the scan tool, record and erase DTCs.

2. Start the engine and run for two minutes.
3. With the scan tool, read DTCs.

   Does the scan tool display: B21DD84-BATTERY VOLTAGE - CIRCUIT VOLTAGE BELOW THRESHOLD?

   Yes

   - Go to step 3

   No

   - The conditions that caused this code to set are not present at this time. Using the wiring diagram/schematic as a guide, inspect the wiring and connectors.
   - Perform the TPM VERIFICATION TEST. See **DTC-Based Diagnostics/MODULE, Tire Pressure (TPM) - Standard Procedure**.

3. **(A913) FUSED B(+) CIRCUIT OPEN OR HIGH RESISTANCE**



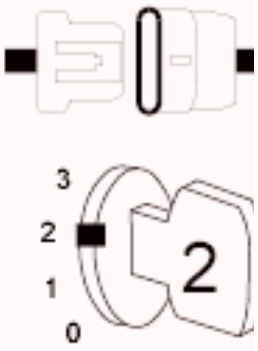

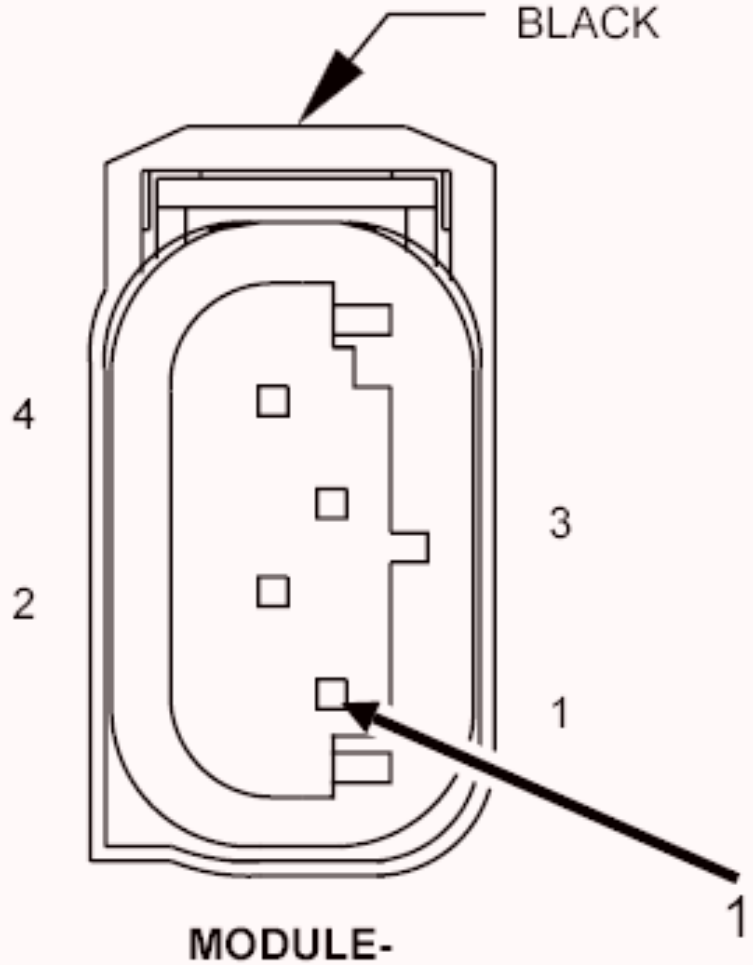

MODULE-
TIRE
PRESSURE

21219

1. Turn the ignition off to the lock position.
2. Disconnect the TPM harness connector.
3. Ignition on, engine not running.
4. Using a 12-volt test light connected to ground, check (A913) Fused B(+) circuit in the Tire Pressure Module harness connector.

NOTE: The test light must illuminate brightly. Compare the brightness to that of a direct connection to the battery.

Does the test light illuminate brightly?

Yes

- Go to step 4

No

- Repair the (A913) Fused B(+) circuit for high resistance.
- Perform the TPM VERIFICATION TEST. See **DTC-Based Diagnostics/MODULE, Tire Pressure (TPM) - Standard Procedure**.

4. **(Z911) GROUND CIRCUIT OPEN OR HIGH RESISTANCE**

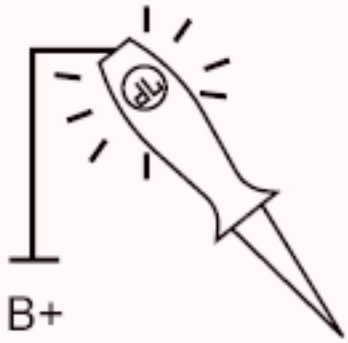

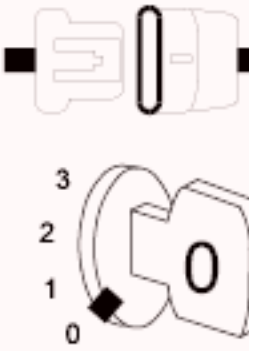

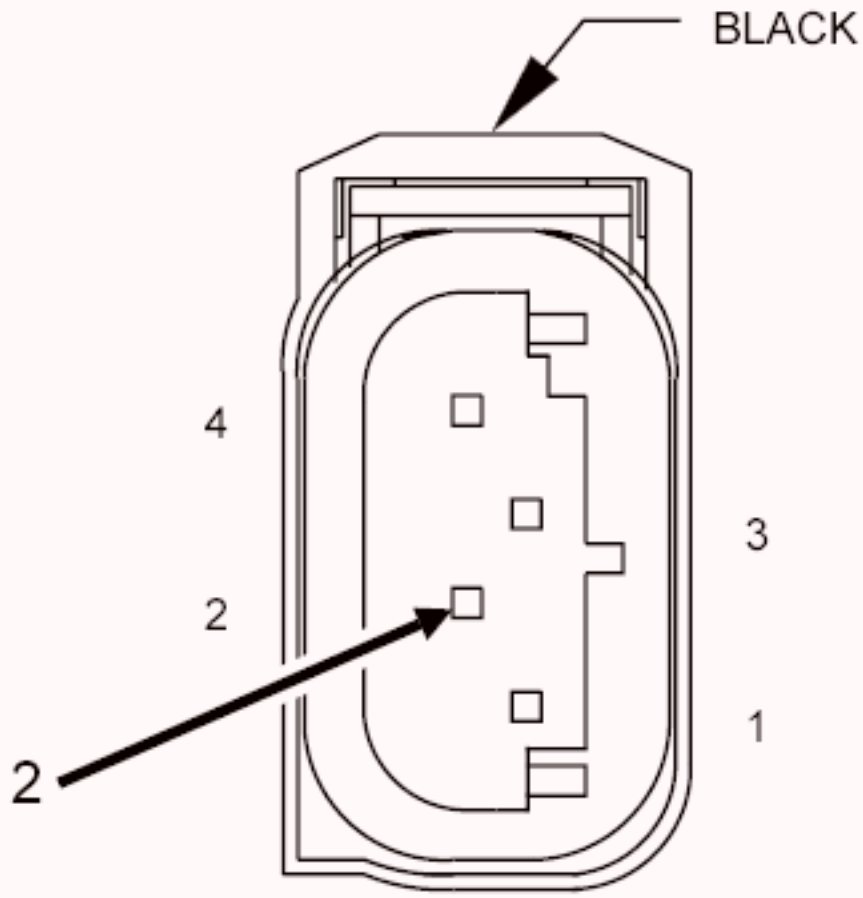

MODULE-

TIRE

PRESSURE

2122

1. Turn the ignition off to the lock position
2. Using a 12-volt test light connected to 12-volts, check the (Z911) Ground circuit in the Tire Pressure Module harness connector.

   NOTE: The test light must illuminate brightly. Compare the brightness to that of a direct connection to the battery.

   Does the test light illuminate brightly?

   Yes

   - Replace the Tire Pressure Module (TPM) in accordance with Service Information.
   - Perform the TPM VERIFICATION TEST. See **DTC-Based Diagnostics/MODULE, Tire Pressure (TPM) - Standard Procedure**.

   No

   - Repair the (Z911) Ground circuit for high resistance.
   - Perform the TPM VERIFICATION TEST. See **DTC-Based Diagnostics/MODULE, Tire Pressure (TPM) - Standard Procedure**.

B21DD-85-SYSTEM VOLTAGE - SIGNAL ABOVE ALLOWABLE RANGE

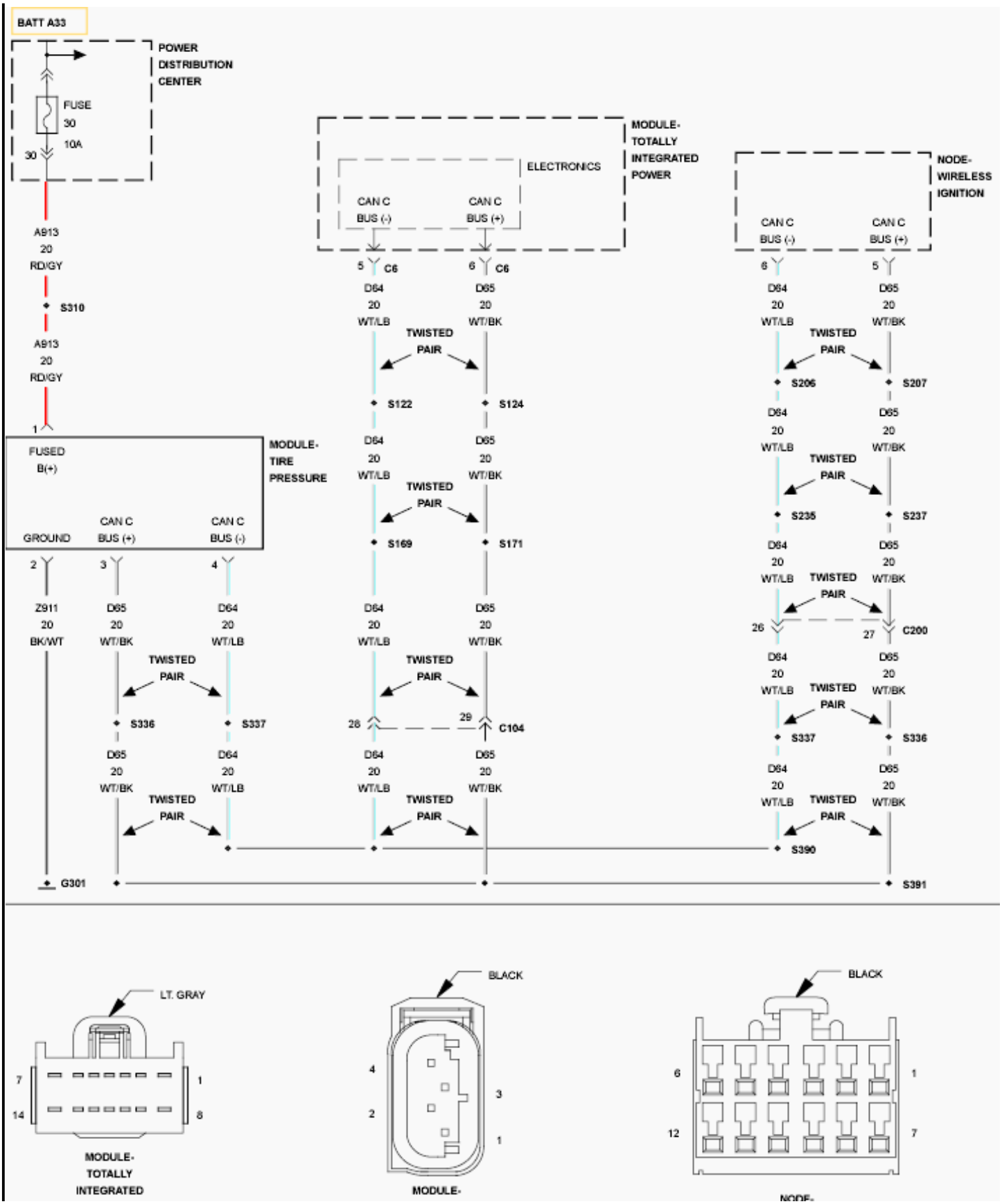
BATT A33
POWER DISTRIBUTION CENTER
FUSE 30 10A
30
A913 20 RD/GY
S310
A913 20 RD/GY
1
FUSED B(+)
GROUND
CAN C BUS (+)
CAN C BUS (-)
MODULE- TIRE PRESSURE
2
3
4
Z911 20 BK/WT
D65 20 WT/BK
D64 20 WT/LB
TWISTED PAIR
S336
S337
G301
MODULE- TOTALLY INTEGRATED POWER
ELECTRONICS
CAN C BUS (-)
CAN C BUS (+)
5 C6
6 C6
D64 20 WT/LB
D65 20 WT/BK
S122
S124
S169
S171
28
29
C104
NODE- WIRELESS IGNITION
6
5
S206
S207
S235
S237
26
27
C200
S337
S336
S390
S391
LT. GRAY
7
14
1
8
MODULE- TOTALLY INTEGRATED
BLACK
4
2
3
1
MODULE-
BLACK
6
12
1
7
NODE-

Additional Wiring

For complete wiring diagrams refer to **SYSTEM WIRING DIAGRAMS** .

Monitor Conditions

- **When Monitored:**

  Continuously.

Set Conditions

- **Set Condition:**

  Any time the Tire Pressure Monitoring (TPM) Module senses voltage input above 16.0 volts for over 20ms, this code will set.

Possible Causes

Possible CauseS
HIGH VOLTAGE ENGINE DTC TIRE PRESSURE MONITORING (TPM) MODULE

Diagnostic Test

1. **CHECK POWERTRAIN CONTROL MODULE (PCM) DTCs**
   1. With the scan tool, read PCM DTCs

      Are there any battery or charging system DTCs present?

      Yes

      - Refer to **DTC-Based Diagnostics/MODULE, Powertrain Control (PCM) - Diagnosis and Testing** and perform the appropriate diagnostic procedure.

      No

      - Go to step 2
2. **TEST FOR INTERMITTENT CONDITION**
   1. With the scan tool, record and erase DTCs.
   2. Start the engine and run for two minutes.
   3. With the scan tool, read DTCs.

      Does the scan tool display: B2199-BATTERY VOLTAGE - CIRCUIT VOLTAGE ABOVE THRESHOLD?

Yes

- Replace the Tire Pressure Module (TPM) in accordance with service information.
- Perform the TPM VERIFICATION TEST. See **DTC-Based Diagnostics/MODULE, Tire Pressure (TPM) - Standard Procedure**.

No

- The conditions that caused this code to set are not present at this time. Using the wiring diagram/schematic as a guide, inspect the wiring and connectors.
- Perform the TPM VERIFICATION TEST. See **DTC-Based Diagnostics/MODULE, Tire Pressure (TPM) - Standard Procedure**.

C0077-00-LOW TIRE PRESSURE

Additional Wiring

For complete wiring diagrams refer to **SYSTEM WIRING DIAGRAMS** .

Monitor Conditions

- **When Monitored:**

  Continuously while driving.

Set Conditions

- **Set Condition:**

  A low pressure condition will exist when the tire pressure falls below or is equal to the low pressure threshold value as specified for the vehicle.

Possible Causes

Possible Causes
INCORRECT TIRE PRESSURE
INCORRECT PLACARD VALUES
TIRE PRESSURE MONITORING (TPM) SENSOR
TIRE PRESSURE MONITORING (TPM) MODULE

Diagnostic Test

1. **VERIFY DTC IS ACTIVE**

   Note if any the following conditions are present:

- Low Tire Pressure DTCs.
- TPM Sensor Internal fault.
- Spare tire is not equipped with a TPM Sensor and is currently on the vehicle. Repair the tire and install it back on the vehicle.

NOTE: **Before beginning diagnostic procedure, verify that tire pressures are correct.**

1. Turn the ignition on.
2. With the scan tool, read and record TPM Module DTCs.
3. With the scan tool, erase TPM Module DTCs.
4. Test drive the vehicle at a speed greater than 24 km/h (15 mph) up to 20 minutes in order to receive TPM Sensor data and allow for the system to update.
5. With the scan tool, select View DTCs in the TPM Module.

   Is the DTC status Active at this time?

   Yes

   - Go to step 2

   No

   - Go to step 7

2. **LOW TIRE PRESSURE**

NOTE: **Some vehicles will not receive TPM Sensor data when the vehicle is stationary. The vehicle will need to be driven at speeds greater than 24 km/h (15 mph) for about a minute in order to receive TPM Sensor data.**

1. Verify that all tire pressures are to the recommended cold inflation tire pressure specifications.
2. With the scan tool, clear DTCs in the TPM Module.
3. With the scan tool, select View DTCs in the TPM Module.

   Does the DTC reset or is the status Active for this DTC?

   Yes

   - Go to step 3

   No

   - Test Complete.

- Perform the TPM VERIFICATION TEST. See **DTC-Based Diagnostics/MODULE, Tire Pressure (TPM) - Standard Procedure**.

3. **TIRE PRESSURE SENSOR**

NOTE: **Before continuing with any TPM diagnostic test, use the scan tool and read the "Tire Placard Pressure - Front" and "Tire Placard Pressure - Rear" under "Data Display" in the TPM. Confirm that the values match the Tire Inflation Pressure (Placard) label located on the driver's side B-Pillar. If the incorrect Placard Values have been programmed in the TPM, use the scan tool and read the "Tire Placard Pressure - Front" and "Tire Placard Pressure - Rear" under "Data Display" in the Totally Integrated Power Module (TIPM). If the Placard values are incorrect in the TIPM, select the TIPM, then under "Miscellaneous Functions", select "Update Pressure Threshold" and follow the procedure in the scan tool. Enter the placard pressure value as seen on the Tire Inflation Pressure (Placard) label. Repeat step #2.**

NOTE: **The following tests are used to locate the TPM Sensor that is setting the low pressure fault. If the tires have been rotated, the TPM Sensor is no longer in sequence from the factory. Faults are linked to the TPM Sensor IDs. You MUST locate the TPM Sensor that set the fault before continuing.**

1. With the scan tool, select View Data Display in the TPM Module and find the compensated tire pressure values located under each of the TPM Sensor Identification locations.

   Are any of the compensated tire pressure values below the Placard Value?

   Yes

   - Go to step 4

   No

   - Test complete.
   - Perform the TPM VERIFICATION TEST. See **DTC-Based Diagnostics/MODULE, Tire Pressure (TPM) - Standard Procedure**.

4. **TPM-RKE ANALYZER**

Is there a TPM-RKE Analyzer (9936) available?

Yes

- Go to step 5

No

- Go to step 6

5. **TIRE PRESSURE SENSOR INTERNAL FAULT SET USING TPM-RKE ANALYZER**

NOTE: **The following procedure is used to locate the TPM Sensor that is setting the sensor internal fault. If the tires have been rotated, the TPM Sensor is no longer in sequence from the factory. Faults are linked to the TPM Sensor IDs. You MUST locate the correct TPM Sensor that set the fault before continuing. Use the following method below at every tire location.**

NOTE: **If the TPM sensor IDs do not match, it may be necessary to move the vehicle to a location away from other TPM sensors and repeat this step.**

NOTE: **Always be certain to select proper vehicle line and model year when using this tool, as the tool will automatically use the correct protocol to attempt to read the TPM sensor. If the incorrect vehicle line and/or model year is selected, the TPM sensor will not respond to the tool.**

1. Use a TPM-RKE Analyzer to scan each TPM sensor for a response, and store in the proper location in the TPM-RKE Analyzer. If you receive no response from any of the TPM sensors, check to make sure that the TPM-RKE Analyzer is set correctly, and repeat the process on each non-responsive wheel.
2. Replace the TPM sensor if the results show a "Damaged Accel", "Damaged Temp", "Damaged Press", "H/W fail", "S/W fail" or the Tire Pressure Sensor does not respond after repeated attempts. Install the correct Tire Pressure Monitoring (TPM) Sensor in accordance with the Service Information. Perform the TPM VERIFICATION TEST. See **DTC-Based Diagnostics/MODULE, Tire Pressure (TPM) - Standard Procedure**.
3. With the scan tool, select Data Display for the TPM.
4. Check to see if the Sensor IDs match what is programmed into the TPM.

   Has the Tire Pressure Sensor been located?

   Yes

   - Install the Tire Pressure Monitoring (TPM) in accordance with the Service Information.

     Perform the TPM VERIFICATION TEST. See **DTC-Based Diagnostics/MODULE, Tire Pressure (TPM) - Standard Procedure**.

   No

   - Replace the TPM Module in accordance with the Service Information.

     Perform the TPM VERIFICATION TEST. See **DTC-Based Diagnostics/MODULE, Tire Pressure (TPM) - Standard Procedure**.

6. **TPM SENSOR INTERNAL FAULT SET**

NOTE: Some vehicles will not receive TPM Sensor data when the vehicle is stationary. The vehicle may need to be driven at speeds greater than 24 km/h (15 mph) for about a minute in order to receive TPM Sensor data.

1. Starting with the left front wheel, deflate the tire to 20 PSI, wait Two minutes, and check the scan tool for changes to any compensated tire pressure values.
2. Look for a tire location with a non-responsive TPM Sensor ID.
3. Repeat this test on each wheel on the vehicle until the sensor in question has been identified

Has the TPM Sensor been located?

Yes

- Install the TPM Sensor(s) in accordance with the Service Information.

Perform the TPM VERIFICATION TEST. See **DTC-Based Diagnostics/MODULE, Tire Pressure (TPM) - Standard Procedure**.

No

- Replace the TPM Module in accordance with the Service Information.

Perform the TPM VERIFICATION TEST. See **DTC-Based Diagnostics/MODULE, Tire Pressure (TPM) - Standard Procedure**.

7. **INTERMITTENT TIRE PRESSURE SENSOR DTC**
1. The conditions necessary to set this DTC are not present at this time.
2. Perform any Technical Service Bulletins that may apply to this condition.
3. With the scan tool, clear DTCs in the TPM.
4. Test drive the vehicle for a minimum of 20 minutes with vehicle speed greater than 24 km/h (15 mph).
5. With the scan tool, select View DTCs in the TPM.

Does the DTC reset or is the status Active for this DTC?

Yes

- Repair as necessary.
- Perform the TPM VERIFICATION TEST. See **DTC-Based Diagnostics/MODULE, Tire Pressure (TPM) - Standard Procedure**.

No

- Test complete.
- Perform the TPM VERIFICATION TEST. See **DTC-Based Diagnostics/MODULE, Tire Pressure (TPM) - Standard Procedure**.

C1501-96-TIRE PRESSURE SENSOR 1 - INTERNAL COMPONENT FAILURE

Additional Wiring

For complete wiring diagrams refer to **SYSTEM WIRING DIAGRAMS** .

Theory Of Operation

The Tire Pressure Monitoring (TPM) Sensor actively monitors the air pressure, air temperature inside the tire, the direction of the tire rotation and the internal battery status. Each sensor has a unique ID code. The TPM Sensor transmits the data at regular intervals via an encoded signal to a receiver circuit located in the Tire Pressure Monitoring (TPM) Module.

Monitor Conditions

- **When Monitored:**

  With vehicle speed greater than 24 km/h (15 mph).

Set Conditions

- **Set Condition:**

  The TPM Module will monitor the signals from the four active road tire TPM Sensors. A loss of signal error is detected if data is not received or cannot be accurately decoded over 16 consecutive blocks or maximum of 20 minutes when the vehicle speed is above 24 km/h (15 mph). An internal sensor hardware error condition will be set when an error in the shock sensor, pressure sensor, or temperature sensor is detected. The Tire Pressure Monitoring Telltale Lamp will flash on and off for 75 seconds then remain on solid when a system fault is detected.

Possible Causes

Possible Causes
AFTERMARKET TIRES/WHEELS
INTERMITTENT TIRE PRESSURE MONITORING (TPM) SENSOR INTERNAL DTC
TIRE PRESSURE MONITORING (TPM) SENSOR
TIRE PRESSURE MONITORING (TPM) MODULE

Diagnostic Test

1. **DTC STATUS IS ACTIVE**

NOTE: **Before beginning diagnostic procedure, verify that the tire pressures are correct.**

1. Turn the ignition on.
2. With the scan tool, read and record TPM Module DTCs.
3. Test drive the vehicle at a speed greater than 24 km/h (15 mph) up to 20 minutes in order to receive TPM Sensor data and allow for the system to update.
4. With the scan tool, erase TPM Module DTCs.
5. With the scan tool, select View DTCs in the TPM Module.

   Is the DTC status Active at this time?

   Yes

   - Go to step 2

   No

   - Go to step 8

2. **TIRE PRESSURE MONITORING (TPM) SENSOR INTERNAL FAULT ACTIVE**
   1. Turn the ignition on.
   2. With the scan tool, select Data Display for the TPM Module and locate the following:
      - Tire 1 Pressure Sensor HW Fault
      - Tire 1 Pressure Sensor Missing ID
      - Tire 1 Temperature Sensor HW Fault
      - Tire 1 Temperature Sensor SW O/U
      - Tire 1 Acceleration Sensor HW Fault
      - Tire 1 Loss of Signal from Pressure Sensor

   Do any of the above faults read "Set"?

   Yes

   - Go to step 3

   No

   - Go to step 7

3. **TPM-RKE ANALYZER (9936)**

   Is there a TPM-RKE Analyzer available?

   Yes

- Go to step 4

No

- Go to step 7

4. **TIRE PRESSURE MONITORING (TPM) SENSOR INTERNAL DTC**

   NOTE: This fault can be set if the incorrect or no TPM Sensor is installed on the vehicle. If the spare tire is currently installed on the vehicle, and it is not equipped with a TPM Sensor, this DTC can be set. Replace the spare with a TPM Sensor equipped wheel and tire assembly. Test drive the vehicle. If the DTC resets, continue with the diagnostic procedure.

   1. Perform a visual inspection to verify that all road wheels are equipped with a TPM Sensor.
   2. With the TPM-RKE Analyzer Tool verify the correct TPM Sensor is on the vehicle.

      Is the correct TPM Sensor installed on the vehicle?

      Yes

      - Go to step 5

      No

      - Install the correct Tire Pressure Monitoring (TPM) Sensor in accordance with the Service Information.
      - Perform the TPM VERIFICATION TEST. See **DTC-Based Diagnostics/MODULE, Tire Pressure (TPM) - Standard Procedure**.

5. **TIRE PRESSURE MONITORING (TPM) SENSOR INTERNAL FAULT SET USING TPM-RKE ANALYZER**

   NOTE: The following procedure is used to locate the TPM Sensor that is setting the internal fault. If the tires have been rotated, the TPM Sensor is no longer in sequence from the factory. Faults are linked to the TPM Sensor IDs. You MUST locate the TPM Sensor that set the fault before continuing. Use the following method below at every tire location.

   NOTE: If the TPM Sensor IDs do not match, it may be necessary to move the vehicle to a location away from other TPM Sensors and repeat this step.

   NOTE: Always be certain to select the proper vehicle line and model year when using this tool, as the tool will automatically use the correct protocol to attempt to read the TPM Sensor. If the incorrect vehicle line and/or model year is selected, the TPM Sensor will not respond to the tool.

1. Use a TPM-RKE Analyzer tool to scan each TPM Sensor for a response, and store in the proper location in the TPM-RKE Analyzer tool. If you receive no response from any of the TPM Sensors, check to make sure that the TPM-RKE Analyzer is set correctly and repeat the process on each non-responsive wheel.
2. Replace the TPM Sensor if the results show a "Damaged Accel", "Damaged Temp", "Damaged Press", "H/W fail", "S/W fail" or the TPM Sensor does not respond after repeated attempts. Install the correct Tire Pressure Monitoring (TPM) Sensor in accordance with the Service Information. Perform TPM VERIFICATION TEST. See **DTC-Based Diagnostics/MODULE, Tire Pressure (TPM) - Standard Procedure**.
3. With the scan tool, select Data Display for the TPM Module.
4. Check to see if the Sensor IDs match what is programmed into the TPM Module.

   Has the TPM Sensor been located?

   Yes

   - Install the Tire Pressure Monitoring (TPM) Sensor in accordance with the Service Information.
   - Perform the TPM VERIFICATION TEST. See **DTC-Based Diagnostics/MODULE, Tire Pressure (TPM) - Standard Procedure**.

   No

   - Go to step 6

6. **TIRE PRESSURE MONITORING (TPM) SENSOR INTERNAL FAULT - MISMATCHED ID**

   NOTE: If the TPM Sensor IDs do not match, it may be necessary to move the vehicle to a location away from other TPM Sensors and repeat this step.

   1. Use a TPM-RKE Analyzer Tool to verify the TPM Sensor IDs match what is programmed into the TPM Module. The TPM Sensor Identifications are located under "Data Display" for the TPM Module.

      Do the TPM Sensor IDs match what is stored in the TPM Module?

      Yes

      - Replace the Tire Pressure Monitoring (TPM) Module in accordance with the Service Information.
      - Perform the TPM VERIFICATION TEST. See **DTC-Based Diagnostics/MODULE, Tire Pressure (TPM) - Standard Procedure**.

      No

      - Test complete.

- Perform the TPM VERIFICATION TEST. See **DTC-Based Diagnostics/MODULE, Tire Pressure (TPM) - Standard Procedure**.

7. **TIRE PRESSURE MONITORING (TPM) SENSOR INTERNAL FAULT SET**

   NOTE: Some vehicles will not receive the TPM Sensor data when the vehicle is stationary. The vehicle may need to be driven at speeds greater than 24 km/h (15 mph) for about a minute in order to receive TPM Sensor data.

   1. Starting with the left front wheel, deflate the tire to 20 PSI, wait two minutes, and check the scan tool for changes to any compensated tire pressure values.
   2. Look for a tire location with a non-responsive TPM Sensor ID.
   3. Repeat this test on each wheel on the vehicle until the TPM Sensor in question has been identified.

   Has the TPM Sensor been located?

   Yes

   - Install the Tire Pressure Monitoring (TPM) Sensor in accordance with the Service Information.
   - Perform the TPM VERIFICATION TEST. See **DTC-Based Diagnostics/MODULE, Tire Pressure (TPM) - Standard Procedure**.

   No

   - Test complete.
   - Perform the TPM VERIFICATION TEST. See **DTC-Based Diagnostics/MODULE, Tire Pressure (TPM) - Standard Procedure**.

8. **INTERMITTENT TIRE PRESSURE MONITORING (TPM) SENSOR DTC**
   1. The conditions necessary to set this DTC are not present at this time.
   2. Perform any Technical Service Bulletins that may apply to this condition.
   3. With the scan tool, clear DTCs in the Tire Pressure Monitoring (TPM) Module.
   4. Test drive the vehicle for a minimum of 20 minutes with vehicle speed greater than 24 km/h (15 mph).
   5. With the scan tool, select View DTCs in the Tire Pressure Monitoring (TPM) Module.

   Does the DTC reset or is the status Active for this DTC?

   Yes

   - Return to the beginning of this test and perform the diagnostic procedure as necessary.

   No

- Test complete.
- Perform the TPM VERIFICATION TEST. See **DTC-Based Diagnostics/MODULE, Tire Pressure (TPM) - Standard Procedure**.

C1502-96-TIRE PRESSURE SENSOR 2 - INTERNAL COMPONENT FAILURE

Additional Wiring

For complete wiring diagrams refer to **SYSTEM WIRING DIAGRAMS** .

Theory Of Operation

The Tire Pressure Monitoring (TPM) Sensor actively monitors the air pressure, air temperature inside the tire, the direction of the tire rotation and the internal battery status. Each sensor has a unique ID code. The TPM Sensor transmits the data at regular intervals via an encoded signal to a receiver circuit located in the Tire Pressure Monitoring (TPM) Module.

Monitor Conditions

- **When Monitored:**

  With vehicle speed greater than 24 km/h (15 mph).

Set Conditions

- **Set Condition:**

  The TPM Module will monitor the signals from the four active road tire TPM Sensors. A loss of signal error is detected if data is not received or cannot be accurately decoded over 16 consecutive blocks or maximum of 20 minutes when the vehicle speed is above 24 km/h (15 mph). An internal sensor hardware error condition will be set when an error in the shock sensor, pressure sensor, or temperature sensor is detected. The Tire Pressure Monitoring Telltale Lamp will flash on and off for 75 seconds then remain on solid when a system fault is detected.

Possible Causes

Possible Causes
AFTERMARKET TIRES/WHEELS
INTERMITTENT TIRE PRESSURE MONITORING (TPM) SENSOR INTERNAL DTC
TIRE PRESSURE MONITORING (TPM) SENSOR
TIRE PRESSURE MONITORING (TPM) MODULE

Diagnostic Test

1. **DTC STATUS IS ACTIVE**

NOTE: **Before beginning diagnostic procedure, verify that the tire pressures are correct.**

1. Turn the ignition on.
2. With the scan tool, read and record TPM Module DTCs.
3. Test drive the vehicle at a speed greater than 24 km/h (15 mph) up to 20 minutes in order to receive TPM Sensor data and allow for the system to update.
4. With the scan tool, erase TPM Module DTCs.
5. With the scan tool, select View DTCs in the TPM Module.

   Is the DTC status Active at this time?

   Yes

   - Go to step 2

   No

   - Go to step 8

2. **TIRE PRESSURE MONITORING (TPM) SENSOR INTERNAL FAULT ACTIVE**
   1. Turn the ignition on.
   2. With the scan tool, select Data Display for the TPM Module and locate the following:
      - Tire 2 Pressure Sensor HW Fault
      - Tire 2 Pressure Sensor Missing ID
      - Tire 2 Temperature Sensor HW Fault
      - Tire 2 Temperature Sensor SW O/U
      - Tire 2 Acceleration Sensor HW Fault
      - Tire 2 Loss of Signal from Pressure Sensor

   Do any of the above faults read "Set"?

   Yes

   - Go to step 3

   No

   - Go to step 7

3. **TPM-RKE ANALYZER 9936**

   Is there a TPM-RKE Analyzer 9936 available?

   Yes

- Go to step 4

No

- Go to step 7

4. **TIRE PRESSURE MONITORING (TPM) SENSOR INTERNAL DTC**

   NOTE: This fault can be set if the incorrect or no TPM Sensor is installed on the vehicle. If the spare tire is currently installed on the vehicle, and it is not equipped with a TPM Sensor, this DTC can be set. Replace the spare with a TPM Sensor equipped wheel and tire assembly. Test drive the vehicle. If the DTC resets, continue with the diagnostic procedure.

   1. Perform a visual inspection to verify that all road wheels are equipped with a TPM Sensor.
   2. With the TPM-RKE Analyzer 9936 verify the correct TPM Sensor is on the vehicle.

      Is the correct TPM Sensor installed on the vehicle?

      Yes

      - Go to step 5

      No

      - Install the correct Tire Pressure Monitoring (TPM) Sensor in accordance with the Service Information.
      - Perform the TPM VERIFICATION TEST. See **DTC-Based Diagnostics/MODULE, Tire Pressure (TPM) - Standard Procedure**.

5. **TIRE PRESSURE MONITORING (TPM) SENSOR INTERNAL FAULT SET USING TPM-RKE ANALYZER**

   NOTE: The following procedure is used to locate the TPM Sensor that is setting the internal fault. If the tires have been rotated, the TPM Sensor is no longer in sequence from the factory. Faults are linked to the TPM Sensor IDs. You MUST locate the TPM Sensor that set the fault before continuing. Use the following method below at every tire location.

   NOTE: If the TPM Sensor IDs do not match, it may be necessary to move the vehicle to a location away from other TPM Sensors and repeat this step.

   NOTE: Always be certain to select the proper vehicle line and model year when using this tool, as the tool will automatically use the correct protocol to attempt to read the TPM Sensor. If the incorrect vehicle line and/or model year is selected, the TPM Sensor will not respond to the tool.

1. Use a TPM-RKE Analyzer to scan each TPM Sensor for a response, and store in the proper location in the TPM-RKE Analyzer. If you receive no response from any of the TPM Sensors, check to make sure that the TPM-RKE Analyzer is set correctly and repeat the process on each non-responsive wheel.
2. Replace the TPM Sensor if the results show a "Damaged Accel", "Damaged Temp", "Damaged Press", "H/W fail", "S/W fail" or the TPM Sensor does not respond after repeated attempts. Install the correct TPM Sensor in accordance with the Service Information. Perform the TPM VERIFICATION TEST. See **DTC-Based Diagnostics/MODULE, Tire Pressure (TPM) - Standard Procedure**.
3. With the scan tool, select Data Display for the TPM Module.
4. Check to see if the TPM Sensor IDs match what is programmed into the TPM Module.

   Has the TPM Sensor been located?

   Yes

   - Install the Tire Pressure Monitoring (TPM) Sensor in accordance with the Service Information.
   - Perform the TPM VERIFICATION TEST. See **DTC-Based Diagnostics/MODULE, Tire Pressure (TPM) - Standard Procedure**.

   No

   - Go to step 6

6. **TIRE PRESSURE MONITORING (TPM) SENSOR INTERNAL FAULT - MISMATCHED ID**

   NOTE: If the sensor IDs do not match, it may be necessary to move the vehicle to a location away from other TPM Sensors and repeat this step.

   1. Use a TPM-RKE Analyzer to verify the TPM Sensor IDs match what is programmed into the TPM Module. The TPM Sensor Identifications are located under "Data Display" for the TPM Module.

      Do the TPM Sensor IDs match what is stored in the TPM Module?

      Yes

      - Replace the Tire Pressure Monitoring (TPM) Module in accordance with the Service Information.
      - Perform the TPM VERIFICATION TEST. See **DTC-Based Diagnostics/MODULE, Tire Pressure (TPM) - Standard Procedure**.

      No

      - Test complete.

- Perform the TPM VERIFICATION TEST. See **DTC-Based Diagnostics/MODULE, Tire Pressure (TPM) - Standard Procedure**.

7. **TIRE PRESSURE MONITORING (TPM) SENSOR INTERNAL FAULT SET**

   NOTE: Some vehicles will not receive TPM Sensor data when the vehicle is stationary. The vehicle may need to be driven at speeds greater than 24 km/h (15 mph) for about a minute in order to receive TPM Sensor data.

   1. Starting with the left front wheel, deflate the tire to 20 PSI, wait two minutes, and check the scan tool for changes to any compensated tire pressure values.
   2. Look for a tire location with a non-responsive TPM Sensor ID.
   3. Repeat this test on each wheel on the vehicle until the TPM Sensor in question has been identified.

   Has the TPM Sensor been located?

   Yes

   - Install the Tire Pressure Monitoring (TPM) Sensor in accordance with the Service Information.
   - Perform the TPM VERIFICATION TEST. See **DTC-Based Diagnostics/MODULE, Tire Pressure (TPM) - Standard Procedure**.

   No

   - Test complete.
   - Perform the TPM VERIFICATION TEST. See **DTC-Based Diagnostics/MODULE, Tire Pressure (TPM) - Standard Procedure**.

8. **INTERMITTENT TIRE PRESSURE MONITORING (TPM) SENSOR DTC**
   1. The conditions necessary to set this DTC are not present at this time.
   2. Perform any Technical Service Bulletins that may apply to this condition.
   3. With the scan tool, clear DTCs in the Tire Pressure Monitoring (TPM) Module.
   4. Test drive the vehicle for a minimum of 20 minutes with vehicle speed greater than 24 km/h (15 mph).
   5. With the scan tool, select View DTCs in the Tire Pressure Monitoring (TPM) Module.

   Does the DTC reset or is the status Active for this DTC?

   Yes

   - Return to the beginning of this test and perform the diagnostic procedure as necessary.

   No

- Test complete.
- Perform the TPM VERIFICATION TEST. See **DTC-Based Diagnostics/MODULE, Tire Pressure (TPM) - Standard Procedure**.

C1503-96-TIRE PRESSURE SENSOR 3 - INTERNAL COMPONENT FAILURE

Additional Wiring

For complete wiring diagrams refer to **SYSTEM WIRING DIAGRAMS** .

Theory Of Operation

The Tire Pressure Monitoring (TPM) Sensor actively monitors the air pressure, air temperature inside the tire, the direction of the tire rotation and the internal battery status. Each sensor has a unique ID code. The TPM Sensor transmits the data at regular intervals via an encoded signal to a receiver circuit located in the Tire Pressure Monitoring (TPM) Module.

Monitor Conditions

- **When Monitored:**

  With vehicle speed greater than 24 km/h (15 mph).

Set Conditions

- **Set Condition:**

  The TPM Module will monitor the signals from the four active road tire TPM Sensors. A loss of signal error is detected if data is not received or cannot be accurately decoded over 16 consecutive blocks or maximum of 20 minutes when the vehicle speed is above 24 km/h (15 mph). An internal sensor hardware error condition will be set when an error in the shock sensor, pressure sensor, or temperature sensor is detected. The Tire Pressure Monitoring Telltale Lamp will flash on and off for 75 seconds then remain on solid when a system fault is detected.

Possible Causes

Possible Causes
AFTERMARKET TIRES/WHEELS
INTERMITTENT TIRE PRESSURE MONITORING (TPM) SENSOR INTERNAL DTC
TIRE PRESSURE MONITORING (TPM) SENSOR
TIRE PRESSURE MONITORING (TPM) MODULE

Diagnostic Test

1. **DTC STATUS IS ACTIVE**

NOTE: **Before beginning diagnostic procedure, verify that tire pressures are correct.**

1. Turn the ignition on.
2. With the scan tool, read and record TPM Module DTCs.
3. Test drive the vehicle at a speed greater than 24 km/h (15 mph) up to 20 minutes in order to receive TPM Sensor data and allow for the system to update.
4. With the scan tool, erase TPM Module DTCs.
5. With the scan tool, select View DTCs in the TPM Module.

   Is the DTC status Active at this time?

   Yes

   - Go to step 2

   No

   - Go to step 8

2. **TIRE PRESSURE MONITORING (TPM) SENSOR INTERNAL FAULT ACTIVE**
   1. Turn the ignition on.
   2. With the scan tool, select Data Display for the TPM and locate the following:
      - Tire 3 Pressure Sensor HW Fault
      - Tire 3 Pressure Sensor Missing ID
      - Tire 3 Temperature Sensor HW Fault
      - Tire 3 Temperature Sensor SW O/U
      - Tire 3 Acceleration Sensor HW Fault
      - Tire 3 Loss of Signal from Pressure Sensor

   Do any of the above faults read "Set"?

   Yes

   - Go to step 3

   No

   - Go to step 7

3. **TPM/RKE ANALYZER 9936**

   Is there a TPM-RKE Analyzer 9936 available?

   Yes

- Go to step 4

No

- Go to step 7

4. **TIRE PRESSURE MONITORING (TPM) SENSOR INTERNAL DTC**

   NOTE: This fault can be set if the incorrect or no TPM Sensor is installed on the vehicle. If the spare tire is currently installed on the vehicle, and it is not equipped with a TPM Sensor, this DTC can be set. Replace the spare with a TPM Sensor equipped wheel and tire assembly. Test drive the vehicle. If the DTC resets, continue with the diagnostic procedure.

   1. Perform a visual inspection to verify that all road wheels are equipped with a TPM Sensor.
   2. With the TPM-RKE Analyzer 9936 verify the correct TPM Sensor is on the vehicle.

      Are the correct TPM sensors installed on the vehicle?

      Yes

      - Go to step 5

      No

      - Install the correct Tire Pressure Monitoring (TPM) Sensor in accordance with the Service Information.
      - Perform the TPM VERIFICATION TEST. See **DTC-Based Diagnostics/MODULE, Tire Pressure (TPM) - Standard Procedure**.

5. **TIRE PRESSURE MONITORING (TPM) SENSOR INTERNAL FAULT SET USING TPM/RKE ANALYZER**

   NOTE: The following procedure is used to locate the TPM Sensor that is setting the internal fault. If the tires have been rotated, the TPM Sensor is no longer in sequence from the factory. Faults are linked to the TPM Sensor IDs. You MUST locate the TPM Sensor that set the fault before continuing. Use the following method below at every tire location.

   NOTE: If the TPM Sensor IDs do not match, it may be necessary to move the vehicle to a location away from other TPM Sensors and repeat this step.

   NOTE: Always be certain to select the proper vehicle line and model year when using this tool, as the tool will automatically use the correct protocol to attempt to read the TPM Sensor. If the incorrect vehicle line and/or model year is selected, the TPM Sensor will not respond to the tool.

1. Use a TPM-RKE Analyzer to scan each TPM Sensor for a response, and store in the proper location in the TPM-RKE Analyzer. If you receive no response from any of the TPM Sensors, check to make sure that the TPM-RKE Analyzer is set correctly and repeat the process on each non-responsive wheel.
2. Replace the TPM Sensor if the results show a "Damaged Accel", "Damaged Temp", "Damaged Press", "H/W fail", "S/W fail" or the TPM Sensor does not respond after repeated attempts. Install the correct Tire Pressure Monitoring (TPM) Sensor in accordance with the Service Information. Perform the TPM VERIFICATION TEST. See **DTC-Based Diagnostics/MODULE, Tire Pressure (TPM) - Standard Procedure**.
3. With the scan tool, select Data Display for the TPM Module.
4. Check to see if the Sensor IDs match what is programmed into the TPM Module.

   Has the TPM Sensor been located?

   Yes

   - Install the Tire Pressure Monitoring (TPM) Sensor in accordance with the Service Information.
   - Perform the TPM VERIFICATION TEST. See **DTC-Based Diagnostics/MODULE, Tire Pressure (TPM) - Standard Procedure**.

   No

   - Go to step 6

6. **TIRE PRESSURE MONITORING (TPM) SENSOR INTERNAL FAULT - MISMATCHED ID**

   NOTE: If the TPM Sensor IDs do not match, it may be necessary to move the vehicle to a location away from other TPM Sensors and repeat this step.

   1. Use a TPM-RKE Analyzer to verify the TPM Sensor IDs match what is programmed into the TPM Module. The TPM Sensor Identifications are located under "Data Display" for the TPM Module.

      Do the TPM Sensor IDs match what is stored in the TPM Module?

      Yes

      - Replace the Tire Pressure Monitoring (TPM) Module in accordance with the Service Information.
      - Perform the TPM VERIFICATION TEST. See **DTC-Based Diagnostics/MODULE, Tire Pressure (TPM) - Standard Procedure**.

      No

      - Test complete.

- Perform the TPM VERIFICATION TEST. See **DTC-Based Diagnostics/MODULE, Tire Pressure (TPM) - Standard Procedure**.

7. **TIRE PRESSURE MONITORING (TPM) SENSOR INTERNAL FAULT SET**

   NOTE: Some vehicles will not receive the TPM Sensor data when the vehicle is stationary. The vehicle may need to be driven at speeds greater than 24 km/h (15 mph) for about a minute in order to receive TPM Sensor data.

   1. Starting with the left front wheel, deflate the tire to 20 PSI, wait two minutes, and check the scan tool for changes to any compensated tire pressure values.
   2. Look for a tire location with a non-responsive TPM Sensor ID.
   3. Repeat this test on each wheel on the vehicle until the TPM Sensor in question has been identified.

   Has the TPM Sensor been located?

   Yes

   - Install the Tire Pressure Monitoring (TPM) Sensor in accordance with the Service Information.
   - Perform the TPM VERIFICATION TEST. See **DTC-Based Diagnostics/MODULE, Tire Pressure (TPM) - Standard Procedure**.

   No

   - Test complete.
   - Perform the TPM VERIFICATION TEST. See **DTC-Based Diagnostics/MODULE, Tire Pressure (TPM) - Standard Procedure**.

8. **INTERMITTENT TIRE PRESSURE MONITORING (TPM) SENSOR DTC**
   1. The conditions necessary to set this DTC are not present at this time.
   2. Perform any Technical Service Bulletins that may apply to this condition.
   3. With the scan tool, clear DTCs in the Tire Pressure Monitoring (TPM) Module.
   4. Test drive the vehicle for a minimum of 20 minutes with vehicle speed greater than 24 km/h (15 mph).
   5. With the scan tool, select View DTCs in the Tire Pressure Monitoring (TPM) Module.

   Does the DTC reset or is the status Active for this DTC?

   Yes

   - Return to the beginning of this test and perform the diagnostic procedure as necessary.

   No

- Test complete.
- Perform the TPM VERIFICATION TEST. See **DTC-Based Diagnostics/MODULE, Tire Pressure (TPM) - Standard Procedure**.

C1504-96-TIRE PRESSURE SENSOR 4 - INTERNAL COMPONENT FAILURE

Additional Wiring

For complete wiring diagrams refer to **SYSTEM WIRING DIAGRAMS** .

Theory Of Operation

The Tire Pressure Monitoring (TPM) Sensor actively monitors the air pressure, air temperature inside the tire, the direction of the tire rotation and the internal battery status. Each sensor has a unique ID code. The TPM Sensor transmits the data at regular intervals via an encoded signal to a receiver circuit located in the Tire Pressure Monitoring (TPM) Module.

Monitor Conditions

- **When Monitored:**

  With vehicle speed greater than 24 km/h (15 mph).

Set Conditions

- **Set Condition:**

  The TPM Module will monitor the signals from the four active road tire TPM Sensors. A loss of signal error is detected if data is not received or cannot be accurately decoded over 16 consecutive blocks or maximum of 20 minutes when the vehicle speed is above 24 km/h (15 mph). An internal sensor hardware error condition will be set when an error in the shock sensor, pressure sensor, or temperature sensor is detected. The Tire Pressure Monitoring Telltale Lamp will flash on and off for 75 seconds then remain on solid when a system fault is detected.

Possible Causes

Possible Causes
AFTERMARKET TIRES/WHEELS
INTERMITTENT TIRE PRESSURE MONITORING (TPM) SENSOR INTERNAL DTC
TIRE PRESSURE MONITORING (TPM) SENSOR
TIRE PRESSURE MONITORING (TPM) MODULE

Diagnostic Test

1. **DTC STATUS IS ACTIVE**

NOTE: **Before beginning diagnostic procedure, verify that tire pressures are correct.**

1. Turn the ignition on.
2. With the scan tool, read and record TPM Module DTCs.
3. Test drive the vehicle at a speed greater than 24 km/h (15 mph) up to 20 minutes in order to receive TPM Sensor data and allow for the system to update.
4. With the scan tool, erase TPM Module DTCs.
5. With the scan tool, select View DTCs in the TPM Module.

   Is the DTC status Active at this time?

   Yes

   - Go to step 2

   No

   - Go to step 8

2. **TIRE PRESSURE MONITORING (TPM) SENSOR INTERNAL FAULT ACTIVE**
   1. Turn the ignition on.
   2. With the scan tool, select Data Display for the TPM Module and locate the following:
      - Tire 4 Pressure Sensor HW Fault
      - Tire 4 Pressure Sensor Missing ID
      - Tire 4 Temperature Sensor HW Fault
      - Tire 4 Temperature Sensor SW O/U
      - Tire 4 Acceleration Sensor HW Fault
      - Tire 4 Loss of Signal from Pressure Sensor

   Do any of the above faults read "Set"?

   Yes

   - Go to step 3

   No

   - Go to step 7

3. **TPM/RKE ANALYZER 9936**

   Is there a TPM-RKE Analyzer 9936 available?

   Yes

- Go to step 4

No

- Go to step 7

4. **TIRE PRESSURE MONITORING (TPM) SENSOR INTERNAL DTC**

   NOTE: This fault can be set if the incorrect or no TPM Sensor is installed on the vehicle. If the spare tire is currently installed on the vehicle, and it is not equipped with a TPM Sensor, this DTC can be set. Replace the spare with a TPM Sensor equipped wheel and tire assembly. Test drive the vehicle. If the DTC resets, continue with the diagnostic procedure.

   1. Perform a visual inspection to verify that all road wheels are equipped with a TPM Sensor.
   2. With the TPM-RKE Analyzer 9936 verify the correct TPM Sensor is on the vehicle.

      Is the correct TPM Sensor installed on the vehicle?

      Yes

      - Go to step 5

      No

      - Install the correct Tire Pressure Monitoring (TPM) Sensor in accordance with the Service Information.
      - Perform the TPM VERIFICATION TEST. See **DTC-Based Diagnostics/MODULE, Tire Pressure (TPM) - Standard Procedure**.

5. **TIRE PRESSURE MONITORING (TPM) SENSOR INTERNAL FAULT SET USING TPM-RKE ANALYZER**

   NOTE: The following procedure is used to locate the TPM Sensor that is setting the internal fault. If the tires have been rotated, the TPM Sensor is no longer in sequence from the factory. Faults are linked to the TPM Sensor IDs. You MUST locate the TPM Sensor that set the fault before continuing. Use the following method below at every tire location.

   NOTE: If the TPM Sensor IDs do not match, it may be necessary to move the vehicle to a location away from other TPM Sensors and repeat this step.

   NOTE: Always be certain to select the proper vehicle line and model year when using this tool, as the tool will automatically use the correct protocol to attempt to read the TPM Sensor. If the incorrect vehicle line and/or model year is selected, the TPM Sensor will not respond to the tool.

1. Use a TPM-RKE Analyzer to scan each TPM Sensor for a response, and store in the proper location in the TPM-RKE Analyzer. If you receive no response from any of the TPM Sensors, check to make sure that the TPM-RKE Analyzer is set correctly and repeat the process on each non-responsive wheel.
2. Replace the TPM Sensor if the results show a "Damaged Accel", "Damaged Temp", "Damaged Press", "H/W fail", "S/W fail" or the TPM Sensor does not respond after repeated attempts. Install the correct Tire Pressure Monitoring (TPM) Sensor in accordance with the Service Information. Perform the TPM VERIFICATION TEST. See **DTC-Based Diagnostics/MODULE, Tire Pressure (TPM) - Standard Procedure**.
3. With the scan tool, select Data Display for the TPM Module.
4. Check to see if the Sensor IDs match what is programmed into the TPM Module.

   Has the TPM Sensor been located?

   Yes

   - Install the Tire Pressure Monitoring (TPM) Sensor in accordance with the Service Information.
   - Perform the TPM VERIFICATION TEST. See **DTC-Based Diagnostics/MODULE, Tire Pressure (TPM) - Standard Procedure**.

   No

   - Go to step 6

6. **TIRE PRESSURE MONITORING (TPM) SENSOR INTERNAL FAULT - MISMATCHED ID**

   NOTE: If the TPM Sensor IDs do not match, it may be necessary to move the vehicle to a location away from other TPM Sensors and repeat this step.

   1. Use a TPM-RKE Analyzer to verify the TPM Sensor IDs match what is programmed into the TPM Module. The TPM Sensor Identifications are located under "Data Display" for the TPM Module.

      Do the TPM Sensor IDs match what is stored in the TPM Module?

      Yes

      - Replace the Tire Pressure Monitoring (TPM) Module in accordance with the Service Information.
      - Perform the TPM VERIFICATION TEST. See **DTC-Based Diagnostics/MODULE, Tire Pressure (TPM) - Standard Procedure**.

      No

      - Test complete.

- Perform the TPM VERIFICATION TEST. See **DTC-Based Diagnostics/MODULE, Tire Pressure (TPM) - Standard Procedure**.

7. **TIRE PRESSURE MONITORING (TPM) SENSOR INTERNAL FAULT SET**

   NOTE: Some vehicles will not receive the TPM Sensor data when the vehicle is stationary. The vehicle may need to be driven at speeds greater than 24 km/h (15 mph) for about a minute in order to receive TPM Sensor data.

   1. Starting with the left front wheel, deflate the tire to 20 PSI, wait two minutes, and check the scan tool for changes to any compensated tire pressure values.
   2. Look for a tire location with a non-responsive TPM Sensor ID.
   3. Repeat this test on each wheel on the vehicle until the TPM Sensor in question has been identified.

   Has the TPM Sensor been located?

   Yes

   - Install the Tire Pressure Monitoring (TPM) Sensor in accordance with the Service Information.
   - Perform the TPM VERIFICATION TEST. See **DTC-Based Diagnostics/MODULE, Tire Pressure (TPM) - Standard Procedure**.

   No

   - Test complete.
   - Perform the TPM VERIFICATION TEST. See **DTC-Based Diagnostics/MODULE, Tire Pressure (TPM) - Standard Procedure**.

8. **INTERMITTENT TIRE PRESSURE MONITORING (TPM) SENSOR DTC**
   1. The conditions necessary to set this DTC are not present at this time.
   2. Perform any Technical Service Bulletins that may apply to this condition.
   3. With the scan tool, clear DTCs in the Tire Pressure Monitoring (TPM) Module.
   4. Test drive the vehicle for a minimum of 20 minutes with vehicle speed greater than 24 km/h (15 mph).
   5. With the scan tool, select View DTCs in the Tire Pressure Monitoring (TPM) Module.

   Does the DTC reset or is the status Active for this DTC?

   Yes

   - Return to the beginning of this test and perform the diagnostic procedure as necessary.

   No

- Test complete.
- Perform the TPM VERIFICATION TEST. See **DTC-Based Diagnostics/MODULE, Tire Pressure (TPM) - Standard Procedure**.

C151C-00-TIRE PRESSURE SENSORS MISSING

Additional Wiring

For complete wiring diagrams refer to **SYSTEM WIRING DIAGRAMS** .

Theory Of Operation

When installing a new Tire Pressure Monitoring (TPM) Module, the module is programed with universal IDs for the Tire Pressure Monitoring (TPM) Sensors. The TPM Module must be programmed with the correct TPM Sensor ID's.

Monitor Conditions

- **When Monitored:**

  During vehicle TPM Sensor ID locate process.

Set Conditions

- **Set Condition:**

  When installing a new Tire Pressure Monitoring (TPM) Module.

Possible Causes

Possible Causes
INCORRECT TIRE PRESSURE MONITORING (TPM) SENSOR ID(S)
TIRE PRESSURE MONITORING (TPM) SENSOR
TIRE PRESSURE MONITORING (TPM) MODULE

Diagnostic Test

1. **VERIFY DTC IS ACTIVE**

   NOTE: Before beginning diagnostic procedure, verify that tire pressures are correct.

   1. Turn the ignition on.
   2. With the scan tool, read and record TPM Module DTCs.
   3. Test drive the vehicle at a speed greater than 24 km/h (15 mph) for 20 minutes in order to receive TPM data and allow for the system to update.

4. With the scan tool, erase TPM Module DTCs.
5. With the scan tool, select View DTCs in the Tire Pressure Module (TPM).

   Is the DTC status Active at this time?

   Yes

   - Go to step 2

   No

   - Test complete.
   - Perform the TPM VERIFICATION TEST. See **DTC-Based Diagnostics/MODULE, Tire Pressure (TPM) - Standard Procedure**.

2. **TPM-RKE ANALYZER (9936)**

   Is there a TPM-RKE Analyzer available?

   Yes

   - Go to step 3

   No

   - Go to step 4

3. **WITH TPM-RKE TOOL CHECK TIRE PRESSURE MONITORING (TPM) SENSOR ID(S)**

   NOTE: Always be certain to select the proper vehicle line and model year when using this tool, as the tool will automatically use the correct protocol to attempt to read the Sensor. If the incorrect vehicle line and/or model year is selected, the Sensor will not respond to the tool.

   NOTE: If you receive no response from any of the tire pressure sensors, check to make sure that the TPM-RKE Analyzer is set correctly, and repeat the process on each of the non-responsive wheel(s)

   1. Use a TPM-RKE Analyzer to scan each TPM Sensor for an ID, store in the proper location in the TPM-RKE Analyzer.
   2. Use a TPM-RKE Analyzer to upload the correct IDs and proper locations in the scan tool.
   3. With the scan tool, select the TIPM Module under "Miscellaneous Functions", follow the procedure for uploading TPM Sensor IDs.
   4. With the scan tool, erase TPM Module DTCs.
   5. Test drive the vehicle at a speed greater than 24 km/h (15 mph) for 20 minutes in order to receive TPM data and allow for the system to update.

6. With the scan tool, check to see if the TPM Module IDs match what is programmed into the TIPM Module.

   Do the TPM IDs match?

   Yes

   - Test complete.
   - Perform the TPM VERIFICATION TEST. See **DTC-Based Diagnostics/MODULE, Tire Pressure (TPM) - Standard Procedure**.

   No

   - Install a new Tire Pressure Monitoring (TPM) Module in accordance with the Service Information.

     Perform the TPM VERIFICATION TEST. See **DTC-Based Diagnostics/MODULE, Tire Pressure (TPM) - Standard Procedure**.

4. **WITHOUT TPM-RKE TOOL CHECK TIRE PRESSURE MONITORING (TPM) SENSOR ID(S)**
   1. Starting with the left front wheel, deflate the tire to 20 PSI, wait two minutes, and check the scan tool for changes to any compensated tire pressure values.
   2. Repeat the above step on each wheel of the vehicle.
   3. With the scan tool, erase TPM Module DTCs.
   4. Test drive the vehicle at a speed greater than 24 km/h (15 mph) for 20 minutes in order to receive TPM data and allow for the system to update.
   5. With the scan tool, check to see if the TPM IDs are programmed into the TPM Module.

      Are the TPM Sensor IDs in the TPM Module?

      Yes

      - Test complete.
      - Perform the TPM VERIFICATION TEST. See **DTC-Based Diagnostics/MODULE, Tire Pressure (TPM) - Standard Procedure**.

      No

      - Install a new Tire Pressure Monitoring (TPM) Module in accordance with the Service Information.

        Perform the TPM VERIFICATION TEST. See **DTC-Based Diagnostics/MODULE, Tire Pressure (TPM) - Standard Procedure**.

C151D-00-TIRE PRESSURE SENSOR LOCATION UNDETERMINED

Additional Wiring

For complete wiring diagrams refer to **SYSTEM WIRING DIAGRAMS** .

Theory Of Operation

The vehicle Tire Pressure Monitoring (TPM) Sensor locate process occurs after the vehicle is stationary for more than 20 min. The TPM system will determine the sensor positions while driving at speeds above 24 km/h (15 mph). This process can take up to 20 min to determine TPM Sensor positions.

Monitor Conditions

- **When Monitored:**

  During vehicle TPM Sensor locate process.

Set Conditions

- **Set Condition:**

  Must fail multiple vehicle TPM Sensor locate processes if localization fails due to Left/Right fail or Front/Rear fail or if the TPM Module is new and has never attempted localization. If missing TPM Sensors are present on first drive, C151D will set to show that the TPM Sensor location cannot be determined/guaranteed (cannot revert to last known good locations).

Possible Causes

Possible Causes
TIRE PRESSURE MONITORING (TPM) MODULE

Diagnostic Test

1. **VERIFY DTC IS ACTIVE**

   NOTE: The DTC C151D should not exist on its own. If any other DTCs are present, refer to the appropriate diagnostic procedure in this information first before continuing.

   NOTE: If a new TPM Module was installed, the vehicle must remain stationary for 20 minutes before proceeding with this diagnostic procedure.

   1. Turn the ignition on.
   2. With the scan tool, read and record TPM Module DTCs.
   3. Test drive the vehicle at a speed greater than 24 km/h (15 mph) for 20 minutes in order to receive TPM Sensor data and allow for the system to update.

4. With the scan tool, erase TPM Module DTCs.
5. With the scan tool, select View DTCs in the TPM Module.

   Is DTC C151D Active on its own at this time?

   Yes

   - Install a new TPM Module in accordance with the Service Information.

     Perform the TPM VERIFICATION TEST. See **DTC-Based Diagnostics/MODULE, Tire Pressure (TPM) - Standard Procedure**.

   No

   - Test complete.
   - Perform the TPM VERIFICATION TEST. See **DTC-Based Diagnostics/MODULE, Tire Pressure (TPM) - Standard Procedure**.

C1580-00-LEFT/RIGHT SIDE TIRE PRESSURE SENSOR LOCATION UNDETERMINED

Additional Wiring

For complete wiring diagrams refer to **SYSTEM WIRING DIAGRAMS** .

Theory Of Operation

The vehicle Tire Pressure Monitoring (TPM) Sensor locate process occurs after the vehicle remains stationary for 20 minutes. The Tire Pressure Monitoring (TPM) Module will determine the TPM Sensor positions. The TPM Sensors themselves determine which side of the vehicle they are located on.

Monitor Conditions

- **When Monitored:**

  During vehicle TPM Sensor locate process.

Set Conditions

- **Set Condition:**

  Must fail multiple vehicle TPM sensor locate processes if localization fails due to Left/Right fail or if the TPM module is new and has never attempted localization.

Possible Causes

Possible Causes

TIRE PRESSURE MONITORING (TPM) SENSOR
TIRE PRESSURE MONITORING (TPM) MODULE

Diagnostic Test

1. **DTC STATUS IS ACTIVE**

   NOTE: The vehicle must remain stationary for 20 minutes before proceeding with this diagnostic procedure.

   1. Turn the ignition on.
   2. With the scan tool, read and record TPM Module DTCs.
   3. With the scan tool, erase TPM Module DTCs.
   4. Test drive the vehicle at a speed greater than 24 km/h (15 mph) for 20 minutes in order to receive TPM Sensor data and allow for the system to update.
   5. With the scan tool, select View DTCs in the TPM Module.

      Is the DTC status Active at this time?

      Yes

      - Go to step 2

      No

      - Go to step 3
2. **TIRE PRESSURE MONITORING (TPM) SENSOR INTERNAL FAULT ACTIVE**
   1. Turn the ignition on.
   2. With the scan tool, select Data Display for the TPM Module and locate the following for each TPM Sensor:
   - Tire Pressure Sensor HW Fault
   - Tire Temperature Sensor HW Fault
   - Tire Acceleration Sensor HW Fault
3. **INTERMITTENT TIRE PRESSURE MONITORING (TPM) SENSOR DTC**
   1. The conditions necessary to set this DTC are not present at this time.
   2. Perform any Technical Service Bulletins that may apply to this condition.
   3. With the scan tool, clear DTCs in the Tire Pressure Monitoring (TPM) Module.
   4. Have the vehicle remain stationary for 20 minutes.
   5. With the scan tool, select View DTCs in the Tire Pressure Monitoring (TPM) Module.

      Does the DTC reset or is the status Active for this DTC?

Yes

- Install a new Tire Pressure Monitoring (TPM) Module in accordance with the Service Information.
- Perform the TPM VERIFICATION TEST. See **DTC-Based Diagnostics/MODULE, Tire Pressure (TPM) - Standard Procedure**.

No

- Test complete.
- Perform the TPM VERIFICATION TEST. See **DTC-Based Diagnostics/MODULE, Tire Pressure (TPM) - Standard Procedure**.

C1581-00-FRONT/REAR TIRE PRESSURE SENSOR LOCATION UNDETERMINED

Additional Wiring

For complete wiring diagrams refer to **SYSTEM WIRING DIAGRAMS** .

Theory Of Operation

The vehicle Tire Pressure Monitoring (TPM) Sensor locate process occurs after the vehicle remains stationary for 20 minutes. The Tire Pressure Monitoring (TPM) Module will determine the Tire Pressure Monitoring (TPM) Sensor positions. The TPM Module measures the signal strength of each TPM sensor and determines if the are in the front or rear.

Monitor Conditions

- **When Monitored:**

  During vehicle TPM Sensor locate process.

Set Conditions

- **Set Condition:**

  Must fail multiple vehicle TPM sensor locate processes if localization fails due to Front/Rear fail or if the TPM module is new and has never attempted localization.

Possible Causes

Possible Causes
TIRE PRESSURE MONITORING (TPM) MODULE HARNESS
INCORRECT TIRE PRESSURE MONITORING (TPM) MODULE INSTALLATION
TIRE PRESSURE MONITORING (TPM) MODULE

Diagnostic Test

1. **DTC STATUS IS ACTIVE**

   NOTE: The vehicle must remain stationary for 20 minutes before proceeding with this diagnostic procedure.

   1. Turn the ignition on.
   2. With the scan tool, read and record TPM Module DTCs.
   3. Test drive the vehicle at a speed greater than 24 km/h (15 mph) for 10 minutes in order to receive TPM Sensor data and allow for the system to update.
   4. With the scan tool, erase TPM Module DTCs.
   5. With the scan tool, select View DTCs in the TPM Module.

      Is the DTC status Active at this time?

      Yes

      - Go To 2

      No

      - Go To 3
2. **TIRE PRESSURE MONITORING (TPM) MODULE INTERFERENCE**

   NOTE: Interference may occur if the TPM Module is installed incorrectly or the TPM harness is not fastened properly to the body.

   1. Turn the ignition off.

   Verify the following:

   - Aftermarket devices are installed or in the vehicle.
   - The TPM Module harness is damaged or is routed incorrectly.
   - The TPM Module is installed incorrectly.
3. **INTERMITTENT TIRE PRESSURE MONITORING (TPM) SENSOR DTC**
   1. The conditions necessary to set this DTC are not present at this time.
   2. Perform any Technical Service Bulletins that may apply to this condition.
   3. With the scan tool, clear DTCs in the Tire Pressure Monitoring (TPM) Module.
   4. Test drive the vehicle for a minimum of 20 minutes with vehicle speed greater than 24 km/h (15 mph).
   5. With the scan tool, select View DTCs in the Tire Pressure Monitoring (TPM) Module.

      Does the DTC reset or is the status Active for this DTC?

Yes

- Install a new Tire Pressure Monitoring (TPM) Module in accordance with the Service Information.
- Perform the TPM VERIFICATION TEST. See **DTC-Based Diagnostics/MODULE, Tire Pressure (TPM) - Standard Procedure**.

No

- Test complete.
- Perform the TPM VERIFICATION TEST. See **DTC-Based Diagnostics/MODULE, Tire Pressure (TPM) - Standard Procedure**.

C2209-00-TIRE PRESSURE MONITOR INTERNAL

Monitor Conditions

- **When Monitored:**

  Ignition on. The Tire Pressure Monitoring (TPM) Module monitors its internal microprocessors for correct operation.

Set Conditions

- **Set Condition:**

  If the Tire Pressure Module detects an internal fault, the DTC is set.

Possible Causes

Possible Causes
TIRE PRESSURE MONITORING (TPM) MODULE - INTERNAL FAULT

Diagnostic Test

1. **TPM INTERNAL FAILURE DTC PRESENT**
   1. Turn the ignition on.
   2. With the scan tool, read DTCs.
   3. With the scan tool, erase DTCs.
   4. Turn the ignition off.
   5. Turn the ignition on.
   6. With the scan tool, read DTCs.

   Does the scan tool display TIRE PRESSURE MODULE INTERNAL FAILURE?

Yes

- Replace the Tire Pressure Monitoring (TPM) Module in accordance with the Service Information.
- Perform the TPM VERIFICATION TEST. See **DTC-Based Diagnostics/MODULE, Tire Pressure (TPM) - Standard Procedure**.

No

- The conditions that caused this code to set are not present at this time. Using the wiring diagram/schematic as a guide, inspect the wiring and connectors.
- Perform the TPM VERIFICATION TEST. See **DTC-Based Diagnostics/MODULE, Tire Pressure (TPM) - Standard Procedure**.

U0001-00-CAN C BUS

Additional Wiring

For complete wiring diagrams refer to **SYSTEM WIRING DIAGRAMS** .

Monitor Conditions

- **When Monitored:**

  With the ignition on, battery voltage between 9 and 16 volts, and engine run time greater than Three seconds.

Set Conditions

- **Set Condition:**

  The Tire Pressure Monitoring (TPM) Module does not receive any Can C bus messages for a specific amount of time. One trip fault.

Possible Causes

Possible Causes
CAN C BUS OPEN OR SHORTED CONDITION
TIRE PRESSURE MONITORING (TPM) MODULE

Diagnostic Test

1. **ACTIVE DTC**

   NOTE: For vehicle communication problems, use the scan tool to refer to the Network Review Screen. The screen depicts a high level view of the

vehicle network. Fault and problem areas appear in red. Selecting any of the network components allows access to the source of the problem.

1. Turn the ignition on.
2. With a scan tool, select View DTCs.

   Is the status Active for this DTC?

   Yes

   - **Refer to DTC-Based Diagnostics/MODULE, Totally Integrated Power (TIPM) - Diagnosis and Testing** and perform the U0001-Can C Bus circuit diagnostic procedure.

   No

   - **Refer to Non-DTC Diagnostics/Communication - Diagnosis and Testing** and perform the Stored Lost Communication DTCs diagnostic procedure.

U0002-00-CAN C BUS OFF PERFORMANCE

Additional Wiring

For complete wiring diagrams refer to **SYSTEM WIRING DIAGRAMS** .

Monitor Conditions

- **When Monitored:**

  Ignition run time is greater than one second. Battery voltage between 9 and 16 volts. Engine run time greater than three seconds.

Set Conditions

- **Set Condition:**

  Bus messages not received from the Totally Integrated Power Module (TIPM) for approximately two to five seconds.

Possible Causes

Possible Causes
CAN BUS CIRCUITS OPEN OR SHORTED
DTCS RELATED TO BATTERY VOLTAGE, IGNITION, OR VIN MESSAGES
TOTALLY INTEGRATED POWER MODULE POWER AND GROUND
TIPM NOT CONFIGURED CORRECTLY

TOTALLY INTEGRATED POWER MODULE (TIPM)
MODULE THAT SET THIS DTC

Diagnostic Test

1. **ACTIVE DTC**

   NOTE: For vehicle communication problems, use the scan tool to refer to the Network Review Screen. The screen depicts a high level view of the vehicle network. Fault and problem areas appear in red. Selecting any of the network components allows access to the source of the problem.

   1. Turn the ignition on.
   2. With a scan tool, read DTCs.

      Is the status Active for this DTC?

      Yes

      - **Diagnose the U0002-00 CAN C BUS OFF PERFORMANCE as the U0001 CAN C BUS CIRCUIT test.** . Refer to **DTC-Based Diagnostics/MODULE, Totally Integrated Power (TIPM) - Diagnosis and Testing** and perform the U0001-Can C Bus diagnostic procedure.

      No

      - **Refer to Non-DTC Diagnostics/Communication - Diagnosis and Testing** and perform the Stored Lost Communication DTCs diagnostic procedure.

U0100-00-LOST COMMUNICATION WITH ECM/PCM

Additional Wiring

For complete wiring diagrams refer to **SYSTEM WIRING DIAGRAMS** .

Monitor Conditions

- **When Monitored:**

  Ignition run time is greater than one second. Battery voltage between 9 and 16 volts. Engine run time greater than three seconds.

Set Conditions

- **Set Condition:**

  Bus messages not received from the Totally Integrated Power Module (TIPM) for approximately

two to five seconds.

Possible Causes

Possible Causes
CAN BUS CIRCUITS OPEN OR SHORTED
DTCS RELATED TO BATTERY VOLTAGE, IGNITION, OR VIN MESSAGES
TOTALLY INTEGRATED POWER MODULE POWER AND GROUND
TIPM NOT CONFIGURED CORRECTLY
TOTALLY INTEGRATED POWER MODULE (TIPM)
MODULE THAT SET THIS DTC

Diagnostic Test

1. **VERIFY DTC IS ACTIVE**

   NOTE: Make sure the IOD fuse is installed and the battery is fully charged before proceeding.

   1. Turn the ignition on.
   2. With the scan tool, read active DTCs.

      Is this DTC active?

      Yes

      - **Refer to DTC-Based Diagnostics/MODULE, Totally Integrated Power (TIPM) - Diagnosis and Testing** and perform the U0100-Lost Communication with ECM/PCM diagnostic procedure.

      No

      - **Refer to Non-DTC Diagnostics/Communication - Diagnosis and Testing** and perform the Stored Lost Communication DTCs diagnostic procedure.

U0121-00-LOST COMMUNICATION WITH ANTI-LOCK BRAKE MODULE

Additional Wiring

For complete wiring diagrams refer to **SYSTEM WIRING DIAGRAMS** .

Monitor Conditions

- **When Monitored:**

  Continuously when the ignition is on.

The battery voltage between 10 and 16 volts.

Ignition Off Draw (IOD) fuse installed.

Totally Integrated Power Module (TIPM) is configured correctly.

Set Conditions

- **Set Condition:**

  Bus messages not received from the Anti-lock Brake System (ABS) Module for approximately two to five seconds.

Possible Causes

Possible Causes
CAN BUS CIRCUITS OPEN OR SHORTED
DTCS RELATED TO BATTERY VOLTAGE, IGNITION, OR VIN MESSAGES
TOTALLY INTEGRATED POWER MODULE POWER AND GROUND
TIPM NOT CONFIGURED CORRECTLY
TOTALLY INTEGRATED POWER MODULE (TIPM)
MODULE THAT SET THIS DTC

Diagnostic Test

1. **VERIFY DTC IS ACTIVE**

   NOTE: Make sure the IOD fuse is installed and the battery is fully charged before proceeding.

   1. Turn the ignition on.
   2. With the scan tool, read active DTCs.

      Is this DTC active?

      Yes

      - **Refer to DTC-Based Diagnostics/MODULE, Totally Integrated Power (TIPM) - Diagnosis and Testing** and perform the U0121-Lost Communication with Anti-lock Brake Module diagnostic procedure.

      No

      - **Refer to Non-DTC Diagnostics/Communication - Diagnosis and Testing** and perform the Stored Lost Communication DTCs diagnostic procedure.

U0141-00-LOST COMMUNICATION WITH IPM (FCM/TIPM)

Additional Wiring

For complete wiring diagrams refer to **SYSTEM WIRING DIAGRAMS** .

Monitor Conditions

- **When Monitored:**

  Continuously when the ignition is on.

  The battery voltage between 10 and 16 volts.

  Ignition Off Draw (IOD) fuse installed.

  Totally Integrated Power Module (TIPM) is configured correctly.

Set Conditions

- **Set Condition:**

  Bus messages not received from the Totally Integrated Power Module (TIPM) for approximately two to five seconds.

Possible Causes

Possible Causes
CAN BUS CIRCUITS OPEN OR SHORTED
DTCS RELATED TO BATTERY VOLTAGE, IGNITION, OR VIN MESSAGES
TOTALLY INTEGRATED POWER MODULE POWER AND GROUND
TIPM NOT CONFIGURED CORRECTLY
TOTALLY INTEGRATED POWER MODULE (TIPM)
MODULE THAT SET THIS DTC

Diagnostic Test

1. **VERIFY DTC IS ACTIVE**

   NOTE: Make sure the IOD fuse is installed and the battery is fully charged before proceeding.

   1. Turn the ignition on.
   2. With the scan tool, read active DTCs.

      Is this DTC active?

Yes

- **Refer to DTC-Based Diagnostics/MODULE, Totally Integrated Power (TIPM) - Diagnosis and Testing** and perform the U0141-Lost Communication with IPM (FCM/TIPM) diagnostic procedure.

No

- **Refer to Non-DTC Diagnostics/Communication - Diagnosis and Testing** and perform the Stored Lost Communication DTCs diagnostic procedure.

U0168-00-LOST COMMUNICATION WITH VEHICLE SECURITY CONTROL MODULE (WIN/WCM)

Additional Wiring

For complete wiring diagrams refer to **SYSTEM WIRING DIAGRAMS** .

Monitor Conditions

- **When Monitored:**

  Continuously when the ignition is on.

  The battery voltage between 10 and 16 volts.

  Ignition Off Draw (IOD) fuse installed.

  Totally Integrated Power Module (TIPM) is configured correctly.

Set Conditions

- **Set Condition:**

  Bus messages not received from the Vehicle Security Control Module (WIN) for approximately two to five seconds.

Possible Causes

Possible Causes
CAN BUS CIRCUITS OPEN OR SHORTED
DTCS RELATED TO BATTERY VOLTAGE, IGNITION, OR VIN MESSAGES
TOTALLY INTEGRATED POWER MODULE POWER AND GROUND
TIPM NOT CONFIGURED CORRECTLY
TOTALLY INTEGRATED POWER MODULE (TIPM)
MODULE THAT SET THIS DTC

Diagnostic Test

1. **VERIFY DTC IS ACTIVE**

   NOTE: Make sure the IOD fuse is installed and the battery is fully charged before proceeding.

   1. Turn the ignition on.
   2. With the scan tool, read active DTCs.

      Is this DTC active?

      Yes

      - **Refer to DTC-Based Diagnostics/MODULE, Totally Integrated Power (TIPM) - Diagnosis and Testing** and perform the U0168-Lost Communication with Vehicle Security Control Module (WIN) diagnostic procedure.

      No

      - **Refer to Non-DTC Diagnostics/Communication - Diagnosis and Testing** and perform the Stored Lost Communication DTCs diagnostic procedure.

STANDARD PROCEDURE

TPM VERIFICATION

Additional Wiring

For complete wiring diagrams refer to **SYSTEM WIRING DIAGRAMS** .

Diagnostic Test

1. **TIRE PRESSURE MONITORING (TPM) MODULE**

   Was the TPM Module replaced during the test procedure?

   Yes

   - Go to step 2

   No

   - Go to step 3
2. **PLACARD PRESSURE VALUES**
   1. Reconnect the previously removed and/or disconnected components and connectors.

2. With the scan tool, select "Miscellaneous Functions" in the Totally Integrated Power Module (TIPM). Then select the desired procedure and follow the display on the scan tool.
3. Program the Placard Pressure Values into the Totally Integrated Power Module (TIPM).
4. Go To "Tire Pressure Module (TPM)", select "Data Display", read "Tire Placard Pressure - Front" and "Tire Placard Pressure - Rear" and confirm the values match the Tire Inflation Pressure (Placard) label. Also, go into the Totally Integrated Power Module (TIPM), select Data Display and read "Tire Placard Pressure - Front" and "Tire Placard Pressure - Rear" to confirm the values were programmed correctly. If the Placard values are incorrect in the TIPM or TPM Module, select the Totally Integrated Power Module (TIPM) then under "Miscellaneous Functions", select "Update Pressure Threshold" and enter the placard pressure value as seen on the Tire Inflation Pressure (Placard) label.
5. With the scan tool, erase all DTCs. Perform five ignition key cycles, leaving the key on for at least 90 seconds per cycle.
6. With the scan tool, read TPM Module DTCs.

Are there any DTCs present?

Yes

- Repair not complete, perform the appropriate diagnostic procedure.

No

- Go to step 3

3. **TPM SENSOR REPLACEMENT**

NOTE: If a TPM-RKE Tool is not available, let the vehicle sit stationary for more then 20 minutes, and then proceed to step #4 below.

1. Using an updated TPM-RKE Analyzer Tool, select TPM Functions, then enter the Model Year and the Body Style of the vehicle, and for the Trigger Selection select PARK SENSOR.
2. Scan each TPM Sensor at each road wheel, and store each TPM Sensor ID in the correct location. (LEFT FRONT, LEFT REAR, RIGHT FRONT, RIGHT REAR, and SPARE TIRE (if equipped)).
3. Connect the TPM-RKE Analyzer Tool to the scan tool, and then follow the programming steps outlined in the diagnostic scan tool for "Program Tire Pressure Sensor ID w/ TPM Tool" under "MISC" for the TPM.
4. Drive the vehicle for a minimum of 20 minutes while maintaining a continuous speed above 24 km/h (15 mph).
5. With the scan tool, read TPM DTCs.

Are there any TPM DTCs present?

Yes

- Perform the appropriate diagnostic procedure. See **DTC-Based Diagnostics/MODULE, Tire Pressure (TPM) - Diagnosis and Testing**.

No

- Repair complete.

CAPACITIES AND RECOMMENDED FLUIDS

DESCRIPTION

LUBRICANT RECOMMENDATIONS

SPECIALIZED LUBRICANTS AND OILS

Some maintenance or repair procedures may require the use of specialized lubricants or oils. Consult the appropriate sections in this manual for the correct application of these lubricants.

Chassis

Component	Fluid, Lubricant, or Genuine Part
Steering Gear AND Linkage, Ball Joints, Prop Shafts AND Yokes, Wheel Bearings	Mopar® Multi-Purpose Lubricant NLGI Grade 2 EP, GC-LB

Body

Component	Fluid, Lubricant, and Genuine Part
Hinges: Door AND Hood	Mopar® Engine Oil
Latches: Door, Hood/Safety Catch	Mopar® Multi-Purpose Lube NLGI Grade 2 EP, GC-LB
Seat Regulator AND Track	Mopar® Multi-Purpose Lube NLGI Grade 2 EP, GC-LB
Lock Cylinders	Mopar® Lock Cylinder Lube

FLUID TYPES

When service is required, Chrysler recommends that only Mopar® brand parts, lubricants and chemicals be used. Mopar® provides the best engineered products for servicing Chrysler vehicles.

Only lubricants bearing designations defined by the following organization should be used to service a Chrysler vehicle:

- Society of Automotive Engineers (SAE)
- American Petroleum Institute (API)
- National Lubricating Grease Institute (NLGI)
- European Automobile Manufacturers Association (ACEA)

API QUALITY CLASSIFICATION



9400-9

Fig. 1: API Symbol
Courtesy of CHRYSLER LLC

This symbol on the front of an oil container means that the oil has been certified by the American Petroleum Institute (API) to meet all the lubrication requirements specified by Chrysler.

GEAR LUBRICANTS

SAE ratings also apply to multigrade gear lubricants. In addition, API classification defines the lubricant's usage, such as API GL-5 and SAE 75W-90.

AUTOMATIC TRANSMISSION FLUID

NOTE: Refer to Service Procedures in this group for fluid level checking procedures.

Mopar® ATF +4, Automatic Transmission Fluid is the recommended fluid for Chrysler automatic transmissions.

Dexron II fluid IS NOT recommended. Clutch chatter can result from the use of improper fluid.

Mopar® ATF +4, Automatic Transmission Fluid when new is red in color. The ATF is dyed red so it can be identified from other fluids used in the vehicle such as engine oil or antifreeze. The red color is not permanent and is not an indicator of fluid condition. As the vehicle is driven, the ATF will begin to look darker in color and may eventually become brown. **This is normal.** ATF+4 also has a unique odor that may change with age. Consequently, odor and color cannot be used to indicate the fluid condition or the need for a fluid change.

FLUID ADDITIVES

Chrysler strongly recommends against the addition of any fluids to the transmission, other than those automatic transmission fluids listed above. Exceptions to this policy are the use of special dyes to aid

in detecting fluid leaks.

Various "special" additives and supplements exist that claim to improve shift feel and/or quality. These additives and others also claim to improve converter clutch operation and inhibit overheating, oxidation, varnish, and sludge. These claims have not been supported to the satisfaction of Chrysler and these additives **must not be used.** The use of transmission "sealers" should also be avoided, since they may adversely affect the integrity of transmission seals.

TRANSFER CASE

Recommended lubricant for the MS140 transfer case is Mopar® Transfer Case Lubricant - LX.

ENGINE OIL

WARNING: New or used engine oil can be irritating to the skin. Avoid prolonged or repeated skin contact with engine oil. Contaminants in used engine oil, caused by internal combustion, can be hazardous to your health. Thoroughly wash exposed skin with soap and water. Do not wash skin with gasoline, diesel fuel, thinner, or solvents, health problems can result. Do not pollute, dispose of used engine oil properly. Contact your dealer or government agency for location of collection center in your area.

When service is required, Chrysler recommends that only Mopar® brand parts, lubricants and chemicals be used. Mopar® provides the best engineered products for servicing Chrysler vehicles.

Only lubricants bearing designations defined by the following organization should be used.

- Society of Automotive Engineers (SAE)
- American Petroleum Institute (API)
- National Lubricating Grease Institute (NLGI)
- Association des Constructeurs Europeens d' Automobiles (European Automobile Manufacturers Association) (ACEA)

API SERVICE GRADE CERTIFIED



9400-9

Fig. 2: API Symbol
Courtesy of CHRYSLER LLC

Use an engine oil that is API Certified. Mopar® provides engine oils, meeting Material Standard MS-6395, that meet or exceed this requirement.

SAE VISCOSITY

Vehicles with 5.7L engines equipped with Multiple Displacement System (MDS) must use SAE 5W-20 oil. Failure to do so may result in improper operation of the Multiple Displacement System (MDS). Refer to Multi Displacement System under Starting and Operating for details. Refer to the engine oil filler cap for the recommened engine oil viscosity for each vehicle. An SAE viscosity grade is used to specify the viscosity of engine oil. Use only engine oils with multiple viscosities such as 5W-20 or 5W-30. These are specified with a dual SAE viscosity grade which indicates the cold-to-hot temperature viscosity range.

NOTE: For 6.1L only Use API rated SL/CF full synthetic engine oil, such as Mobil 1® is recommended. Use the correct SAE grade meeting Chrysler Material Standard MS-10725.

ACEA Categories

For countries that use the ACEA European Oil Categories for Service Fill Oils, use engine oils that meet the requirements of ACEA A1/B1, A2/B2, or A3/B3.

ENERGY CONSERVING OIL

An Energy Conserving type oil is recommended for gasoline engines. The designation of ENERGY CONSERVING is located on the label of an engine oil container.

CONTAINER IDENTIFICATION



9400-9

Fig. 3: API Symbol
Courtesy of CHRYSLER LLC

Standard engine oil identification notations have been adopted to aid in the proper selection of engine oil. The identifying notations are located on the front label of engine oil plastic bottles and the top of engine oil cans.

This symbol means that the oil has been certified by the American Petroleum Institute (API). Chrysler only recommend API Certified engine oils that meet the requirements of Material Standard MS-6395. Use Mopar® or an equivalent oil meeting the specification MS-6395.

SYNTHETIC ENGINE OILS



9400-9

Fig. 4: API Symbol

Courtesy of CHRYSLER LLC

There are a number of engine oils being promoted as either synthetic or semi-synthetic. If you chose to use such a product, use **only** those oils that meet the American Petroleum Institute (API) and SAE viscosity standard. Follow the service schedule that describes your driving type.

ENGINE OIL ADDITIVES/SUPPLEMENTS

The manufacturer **does not recommend** the addition of any engine oil additives/supplements to the specified engine oil. Engine oil additives/supplements should not be used to enhance engine oil performance. Engine oil additives/supplements should not be used to extend engine oil change intervals. No additive is known to be safe for engine durability and can degrade emission components. Additives can contain undesirable materials that harm the long term durability of engines by:

- Doubling the level of Phosphorus in the engine oil. The ILSAC (International Lubricant Standard Approval Committee) GF-2 and GF-3 standards require that engine oil contain no more than 0.10% Phosphorus to protect the vehicles emissions performance. Addition of engine oil additives/supplements can poison, from the added sulfur and phosphorus, catalysts and hinder efforts to guarantee emissions performance to 80,000 miles.
- Altering the viscosity characteristics of the engine oil so that it no longer meets the requirements of the specified viscosity grade.
- Creating potential for an undesirable additive compatibility interaction in the engine crankcase. Generally it is not desirable to mix additive packages from different suppliers in the crankcase; there have been reports of low temperature engine failures caused by additive package incompatibility with such mixtures.

ENGINE COOLANT

WARNING: Antifreeze is an ethylene-glycol base coolant and is harmful if swallowed or inhaled. If swallowed, drink two glasses of water and induce vomiting. If inhaled, move to fresh air area. Seek medical attention immediately. Do not store in open or unmarked containers. Wash skin and clothing thoroughly after coming in contact with ethylene-glycol. Keep out of reach of children. Dispose of glycol base coolant properly, contact your dealer or government agency for location of collection center in your area. Do not open a cooling system when the engine is at operating temperature or hot under pressure, personal injury can result. Avoid radiator cooling fan when engine compartment related service is performed, personal injury can result.

CAUTION: Use of Propylene-Glycol based coolants is not recommended, as they provide less freeze protection and less corrosion protection.

The cooling system is designed around the coolant. The coolant must accept heat from engine metal, in the cylinder head area near the exhaust valves and engine block. Then coolant carries the heat to

the radiator where the tube/fin radiator can transfer the heat to the air.

The use of aluminum cylinder blocks, cylinder heads, and water pumps requires special corrosion protection. Mopar® Antifreeze/Coolant, 5 Year/100,000 Mile Formula (MS-9769), or the equivalent ethylene-glycol base coolant with organic corrosion inhibitors (called HOAT, for Hybrid Organic Additive Technology) is recommended. This coolant offers the best engine cooling without corrosion when mixed with 50% ethylene-glycol and 50% distilled water to obtain a freeze point of -37°C (-35° F). If it loses color or becomes contaminated, drain, flush, and replace with fresh properly mixed coolant solution.

CAUTION: Mopar® Antifreeze/Coolant, 5 Year/100,000 Mile Formula (MS-9769) may not be mixed with any other type of antifreeze. Mixing of coolants other than specified (non-HOAT or other HOAT) may result in engine damage that may not be covered under the new vehicle warranty, and decreased corrosion protection.

COOLANT PERFORMANCE

The required ethylene-glycol and water mixture depends upon climate and vehicle operating conditions. The coolant performance of various mixtures follows:

Pure Water- Water can absorb more heat than a mixture of water and ethylene-glycol. This is for purpose of heat transfer only. Water also freezes at a higher temperature and allows corrosion.

100 percent Ethylene-Glycol - The corrosion inhibiting additives in ethylene-glycol need the presence of water to dissolve. Without water, additives form deposits in system. These act as insulation causing temperature to rise to as high as 149°C (300°F). This temperature is hot enough to melt plastic. The increased temperature can result in sever engine damage. In addition, 100 percent ethylene-glycol freezes at -22°C (-8°F).

50/50 Ethylene-Glycol and Water - Is the recommended mixture, it provides protection against freezing to -37°C (-34°F). The antifreeze concentration **must always** be a minimum of 44 percent, year-round in all climates. If percentage is lower, engine parts may be eroded by cavitation. Maximum protection against freezing is provided with a 68 percent antifreeze concentration, which prevents freezing down to -67.7°C (-90°F). A higher percentage will freeze at a warmer temperature. Also, a higher percentage of antifreeze can cause the engine to overheat because specific heat of antifreeze is lower than that of water.

CAUTION: Richer antifreeze mixtures cannot be measured with normal field equipment and can cause problems associated with 100 percent ethylene-glycol.

BRAKE FLUID

The brake fluid used in this vehicle must conform to DOT 3 specifications and SAE J1703 standards. No other type of brake fluid is recommended or approved for usage in the vehicle brake system. Use only Mopar® Brake Fluid or equivalent from a tightly sealed container.

CAUTION: Never use reclaimed brake fluid or fluid from a container which has been left open. An open container of brake fluid will absorb moisture from the air and contaminate the fluid.

CAUTION: Never use any type of a petroleum-based fluid in the brake hydraulic system. Use of such type fluids will result in seal damage of the vehicle brake hydraulic system causing a failure of the vehicle brake system. Petroleum based fluids would be items such as engine oil, transmission fluid, power steering fluid, etc.

POWER STEERING FLUID

The recommended fluid for the power steering system is Mopar® Power Steering fluid + 4 or Mopar® ATF+4 Automatic Transmission Fluid. Both Fluids have the same material standard specifications (MS-9602).

Mopar® ATF+4 (and Mopar® Power Steering fluid + 4), when new, is red in color. ATF+4 is dyed red so it can be identified from other fluids used in the vehicle such as engine oil or antifreeze. The red color is not permanent and is not an indicator of fluid condition. As the vehicle is driven, ATF+4 will begin to look darker in color and may eventually become brown. **THIS IS NORMAL** . ATF+4 also has a unique odor that may change with age. Consequently, odor and color cannot be used to indicate the fluid condition or the need for a fluid change.

The power steering system is filled-for-life at the factory and requires no regular maintenance. Although not required at specific intervals, the fluid level may be checked periodically. Check the fluid level anytime there is a system noise or fluid leak suspected. Refer to **Steering/Pump/FLUID - Standard Procedure**

A/C REFRIGERANT

The refrigerant used in this air conditioning system is a HydroFluoroCarbon (HFC), type R-134a. Unlike R-12, which is a ChloroFluoroCarbon (CFC), R-134a refrigerant does not contain ozone-depleting chlorine. R-134a refrigerant is a nontoxic, nonflammable, clear and colorless liquefied gas.

CAUTION: R-134a refrigerant is not compatible with R-12 refrigerant in an A/C system. Even a small amount of R-12 refrigerant added to an R-134a refrigerant system will cause A/C compressor failure.

The A/C refrigerant system is filled-for-life at the factory and requires no regular maintenance. Although not required at specific intervals, the charge level should be checked if system performance deteriorates or if a noise or leak is suspected. Refer to **Heating and Air Conditioning - Diagnosis and Testing** .

DESCRIPTION

The fluid check/fill points and lubrication locations are located in each applicable Sections.

OPERATION

AUTOMATIC TRANSMISSION FLUID

The automatic transmission fluid is selected based upon several qualities. The fluid must provide a high level of protection for the internal components by providing a lubricating film between adjacent metal components. The fluid must also be thermally stable so that it can maintain a consistent viscosity through a large temperature range. If the viscosity stays constant through the temperature range of operation, transmission operation and shift feel will remain consistent. Transmission fluid must also be a good conductor of heat. The fluid must absorb heat from the internal transmission components and transfer that heat to the transmission case.

SPECIFICATIONS

FLUIDS, LUBRICANTS AND GENUINE PARTS

ENGINE

Description	Type	Part Number	Capacities	
			U.S.	Metric
Cooling System				
<-- Engine Coolant (3.5L Engine)	MOPAR® Antifreeze/Coolant 5 Year/100,000 Mile Formula HOAT (Hybrid Organic Additive Technology)	1 Gallon - 05066386AA	11.1 Quarts	10.5 Liters
<-- Engine Coolant (5.7L Engine)	MOPAR® Antifreeze/Coolant 5 Year/100,000 Mile Formula HOAT (Hybrid Organic Additive Technology)	1 Gallon - 05066386AA	14.7 Quarts	13.9 Liters
<-- Engine Coolant (6.1L Engine)	MOPAR® Antifreeze/Coolant 5 Year/100,000 Mile Formula HOAT (Hybrid Organic Additive Technology)	1 Gallon - 05066386AA	15.2 Quarts	14.4 Liters
Engine Oil with Filter				
Engine Oil (3.5L Engines)	MOPAR® API Certified SAE 10W-30 engine oil, meeting the requirements of Chrysler Material Standard MS-6395.	1 Quart - 04761839AC 5 Quarts - 04761845AD	6 Quarts	5.7 Liters
Engine Oil (5.7L Engines)	MOPAR® API Certified SAE 5W-20 engine oil, meeting the requirements of Chrysler Material Standard MS-6395.	1 Quart - 04761872AC 5 Quarts - 04761851AD	7 Quarts	6.6 Liters
<--<-- Engine Oil (6.1L Engine	For best performance and maximum protection under all types of operating conditions, the manufacturer only recommends full synthetic engine oils that meet the American Petroleum Institute (API) categories of SM or SM/CF, and meet the requirements of Chrysler Material Standard MS-10725. The manufacturer recommends the use of a full synthetic engine	1 Quart - 05127394AB	7 Quarts	6.6 Liters

	oil, such as Pennzoil Platinum European Formula SAE 5W-40 equivalent. For additional information, refer to the "Engine Oil Selection" and "Engine Oil Viscosity (SAE Grade)" in the Maintenance Procedures.			
Engine Oil Filter (3.5L, 5.7L and 6.1L Engines	MOPAR® Engine Oil Filter	04884899AB	N/A	N/A
Fuel (approximate)				
Fuel Selection (3.5L Engine) Domestic only	87 Octane Acceptable - 89 Octane Recommended	N/A	18 Gallons	68 Liters
<--<--<-- Fuel Selection (5.7L Engine) Domestic only	87 Octane Acceptable - 89 Octane Recommended	N/A	19 Gallons	72 Liters
<--<--<--<-- Fuel Selection (6.1L Engine) Domestic	91 Octane Only or higher	N/A	19 Gallons	72 Liters
A/C Refrigerant System				
A/C Refrigerant System	R-134a	82300101AB	1.625 Pounds	0.737 Kilograms
-				
<-- System fill capacity includes heater and coolant recovery bottle filled to MAX level.				
<--<-- For countries that use the ACEA European Oil Categories for Service Fill Oils, use the recommended engine oil that meets the requirements of ACEA C3, and approved to MB 229.31 or MB 229.51 only. Refer to your engine oil filler cap for correct SAE grade.				
<--<--<-- For best performance and maximum protection under all types of operating conditions, vehicles equipped with a 5.7L engine and a manual transmission, 91 Octane Premium Unleaded fuel is preferred.				
<--<--<--<-- For best performance and maximum protection under all types of operating conditions, Export vehicles equipped with a 6.1L engine, use 98 Octane Premium Unleaded Fuel.				
CAUTION: **Nominal refill capacities are shown. A variation may be observed from vehicle to vehicle due to manufacturing tolerance and refill procedure.**				

SPARK PLUGS

Description	Type	Part Number	Gap	
			U.S.	Metric
Spark Plugs (3.5L	NGK® Single Platinum	04606591AB (ZFR5LP13G)	0.051	01.30

Engine)			in	mm
Spark Plugs (5.7L Engine)	NGK® Yttrium	05149177AB (LZFR5C-11G)	0.043 in	01.10 mm
Spark Plugs (6.1L Engine)	NGK® Double Platinum	05037404AA (PLZTR5A-13)	0.051 in	01.30 mm

TRANSMISSION

Description	Type	Part Number	Capacities	
			U.S.	Metric
Automatic				
42RLE - Service Fill	MOPAR® ATF+4 Automatic Transmission Fluid	1 Quart - 05013457AA 1 Gallon - 05013458AA	4.0 Quarts	3.8 Liters
<-- 42RLE- Overhaul Fill	MOPAR® ATF+4 Automatic Transmission Fluid	1 Quart - 05013457AA 1 Gallon - 05013458AA	8.8 Quarts	8.3 Liters
NAG 1 - Service Fill	MOPAR® ATF+4 Automatic Transmission Fluid	1 Quart - 05013457AA 1 Gallon - 05013458AA	5.3 Quarts	5.0 Liters
<-- NAG 1 - Overhaul Fill	MOPAR® ATF+4 Automatic Transmission Fluid	1 Quart - 05013457AA 1 Gallon - 05013458AA	8.1 Quarts	7.7 Liters
Manual				
<--<-- TREMIC TR6060	MOPAR® ATF+4 Automatic Transmission Fluid	1 Quart - 05013457AA 1 Gallon - 05013458AA	N/A	N/A
-				
<-- Dry fill capacity. Depending on type and size of internal cooler, length and inside diameter of cooler lines, or use of an auxiliary cooler, these figures may vary. Refer to the appropriate service information for the correct procedures.				
<--<-- Approximate dry fill or fill to bottom edge of fill plug hole.				
CAUTION: **Nominal refill capacities are shown. A variation may be observed from vehicle to vehicle due to manufacturing tolerance and refill procedure.**				

CHASSIS

Description	Type	Part Number	Capacities	
			U.S.	Metric

Axles (Rear)				
198mm RII Rear Axle	MOPAR® Synthetic Gear Lubricant SAE 75W-140	1 Quart - 04874469	1.5 Quarts	1.4 Liters
215MM RII Rear Axle	MOPAR® Synthetic Gear Lubricant SAE 75W-140	1 Quart - 05010320AA	1.3 Quarts	1.2 Liters
<-- 226mm RII Rear Axle	MOPAR® Synthetic Gear Lubricant SAE 75W-90	1 Quart - 05010320AA	1.4 Quarts	1.3 Liters
Chassis Systems				
<--<-- Brake Master Cylinder	MOPAR® Brake Fluid DOT 3, SAE J1703.	12 oz. Bottle - 04318080AB 32 oz. Bottle - 04318081AB	N/A	N/A
<--<--<-- Power Steering Reservoir	MOPAR® Power Steering Fluid +4	1 Quart - 05013457AA	N/A	N/A
-				
<-- Limited-Slip Rear Axles require the addition of 118 ml (4 oz.) MOPAR® Limited Slip Additive.				
<--<-- If MOPAR® Brake Fluid DOT 3 is not available, then MOPAR® Brake and Clutch Fluid DOT 4 (P/N 04549625AC), is acceptable.				
<--<--<-- If MOPAR® Power Steering Fluid +4 is not available, then MOPAR® ATF +4 Automatic Transmission Fluid (P/N 05166226AA), is acceptable.				
<--<--<--<-- If equipped with Trailer Tow package use MOPAR® Synthetic Gear Lubricant, SAE 75W-140				
CAUTION: **Nominal refill capacities are shown. A variation may be observed from vehicle to vehicle due to manufacturing tolerance and refill procedure.**				

FUSE LOCATIONS AND TYPES

SPECIFICATIONS

FUSES/INTEGRATED POWER MODULE (IPM)

Integrated Power Module (IPM)

The Integrated Power Module (IPM) is located in the engine compartment. This module contains fuses and relays.

CAUTION:

- **When installing the integrated power module cover, it is important to ensure the cover is properly positioned and fully latched. Failure to do so may allow water to get into the integrated power module and possibly result in an electrical system failure.**
- **When replacing a blown fuse, it is important to use only a fuse having the correct amperage rating. The use of a fuse with a rating**

other than indicated may result in a dangerous electrical system overload. If a properly rated fuse continues to blow, it indicates a problem in the circuit that must be corrected.

Cavity	Cartridge Fuse	Mini-Fuse	Description
1	-	15 Amp Blue	Washer Motor
2	-	25 Amp Neutral	Powertrain Control Module (PCM)
3	-	25 Amp Neutral	Ignition Run/Start
4	-	25 Amp Neutral	EGR Solenoid/Alternator
5	-	-	-
6	-	25 Amp Neutral	Ignition Coils/Injectors
7	-	-	-
8	-	25 Amp Neutral	Starter
9	-	-	-
10	30 Amp Pink	-	Windshield Wiper
11	30 Amp Pink	-	Anti-Lock Brake System (ABS) Valves
12	40 Amp Green	-	Radiator Fan Lo/High
13	50 Amp Red	-	Anti-Lock Brake System (ABS) Pump Motor
14	-	-	-
15	50 Amp Red	-	Radiator Fan
16	-	-	-
17	-	-	-
18	-	-	-
19	-	-	-
20	-	-	-
21	-	-	-
22	-	-	-

Rear Power Distribution Center Fuses

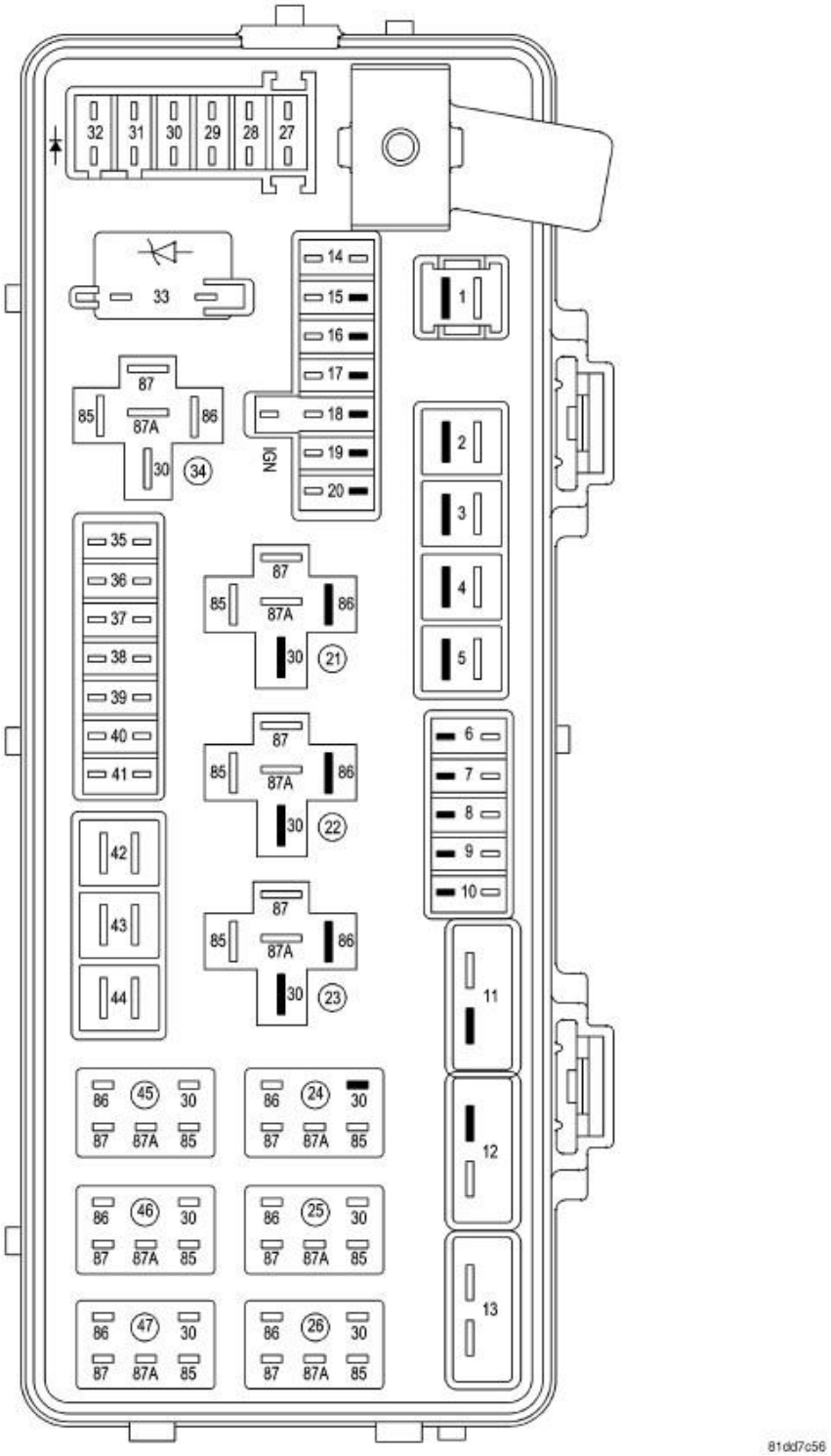

Fig. 5: Rear Power Distribution Center Fuses
Courtesy of CHRYSLER LLC

There is also a power distribution center located in the trunk under the spare tire access panel. This center contains fuses and relays.

CAUTION:

- **When installing the Power Distribution Center cover, it is important to ensure the cover is properly positioned and fully latched. Failure to do so may allow water to get into the Power Distribution Center, and possibly result in an electrical system failure.**
- **When replacing a blown fuse, it is important to use only a fuse having the correct amperage rating. The use of a fuse with a rating other than indicated may result in a dangerous electrical system overload. If a properly rated fuse continues to blow, it indicates a problem in the circuit that must be corrected.**
- **Cavity 1 of the Rear Power Distribution Center contains a black IOD fuse needed for vehicle processing during assembly. The service replacement part is a 60 Amp yellow cartridge fuse.**

Cavity	Cartridge Fuse	Mini-Fuse	Description
1	60 Amp Yellow	-	Ignition Off Draw (IOD)
2	40 Amp Green	-	Integrated Power Module (IPM)
3	-	-	-
4	40 Amp Green	-	Integrated Power Module (IPM)
5	30 Amp Pink	-	Heated Seats - if equipped
6	-	20 Amp Yellow	Fuel Pump
7	-	15 Amp Blue	Sub Amp - if equipped
8	-	15 Amp Blue	Diagnostic Link Connector (DLC)/Wireless Ignition Node (WIN)
9	-	20 Amp Yellow	Power Outlet
10	-	-	-
11*	-	-	-
12*	-	-	-
13*	-	-	-
14	-	10 Amp Red	AC Heater Control/Cluster/Security Module - if equipped
15	-	-	-
16	-	-	-
17	-	20 Amp Yellow	Cluster
18	-	20 Amp Yellow	Selectable Power Outlet
19	-	10 Amp Red	Stop Lights
20	-	-	-
21	-	-	-
22	-	-	-
23	-	-	-
24	-	-	-
25	-	-	-

26	-	-	-
27	-	10 Amp Red	Occupant Restraint Controller (ORC)
28	-	10 Amp Red	Ignition Run
29	-	5 Amp Orange	Cluster/Electronic Stability Program (ESP)/Powertrain Control Module (PCM)/STOP LIGHT Switch
30	-	10 Amp Red	Door Modules/Power Mirrors/Steering Control Module (SCM)
31	-	-	-
32	-	-	-
33	-	-	-
34	-	-	-
35	-	5 Amp Orange	Antenna Module - if equipped/Power Mirrors
36	-	25 Amp Clear	Hands-Free Phone - if equipped//Radio
37	-	15 Amp Blue	Transmission
38	-	10 Amp Red	Cargo Light/Vehicle Information Module - if equipped
39	-	10 Amp Red	Heated Mirrors - if equipped
40	-	5 Amp Orange	Auto Inside Rearview Mirror/Heated Seats - if equipped/Switch Bank
41	-	10 Amp Red	AC Heater Control/Headlights/Tire Pressure Monitoring - if equipped
42	30 Amp Pink	-	Front Blower Motor
43	30 Amp Pink	-	Rear Window Defroster
44	20 Amp Blue	-	Amplifier - if equipped/Sunroof - if equipped

***** Cavities 11, 12, and 13 contain self-resetting fuses (circuit breakers) that are only serviceable by an authorized dealer. The Cluster (without power memory seat), the Driver Seat Switch (with power memory seat), and the Memory Module (if equipped) are fused by the 25 amp circuit breaker in Cavity 11. The Passenger Seat Switch is fused by the 25 amp circuit breaker in Cavity 12. The Door Modules (except base), the Driver Door Lock Switch (base), the Driver Express Power Window Switch (if equipped), and the Passenger Door Lock Switch (base) are fused by the 25 amp circuit breaker in Cavity 13. If you experience temporary or permanent loss of these systems, see your authorized dealer for service.

FUSES/INTEGRATED POWER MODULE (IPM) - SRT8

Integrated Power Module (IPM)

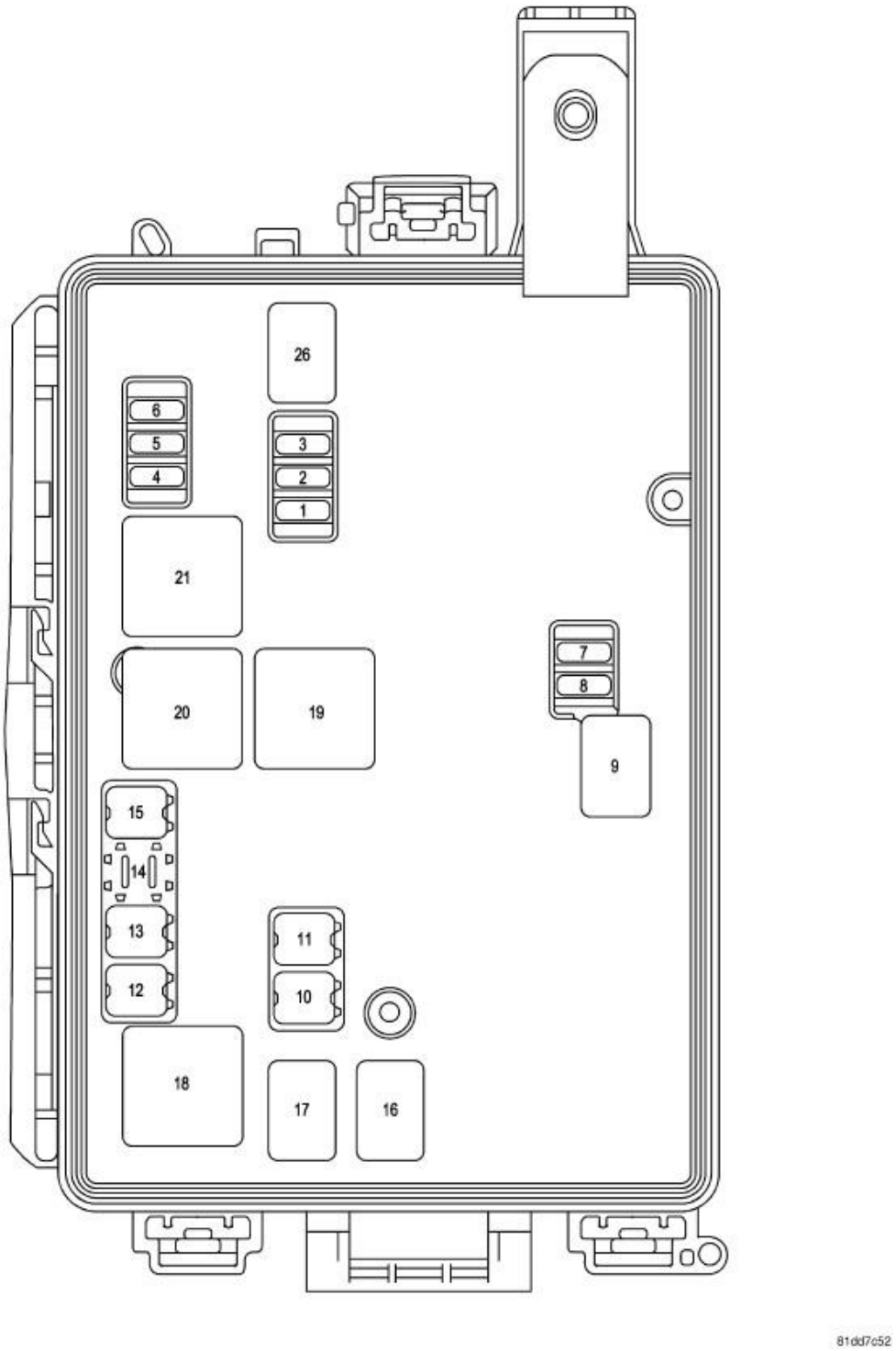

Fig. 6: Power Distribution Centers
Courtesy of CHRYSLER LLC

The Integrated Power Module (IPM) is located in the engine compartment. This module contains fuses and relays.

CAUTION:

- **When installing the integrated power module cover, it is important to ensure the cover is properly positioned and fully latched. Failure to do so may allow water to get into the integrated power module and possibly result in an electrical system failure.**
- **When replacing a blown fuse, it is important to use only a fuse having the correct amperage rating. The use of a fuse with a rating other than indicated may result in a dangerous electrical system overload. If a properly rated fuse continues to blow, it indicates a problem in the circuit that must be corrected.**

Cavity	Cartridge Fuse	Mini-Fuse	Description
1	-	15 Amp Blue	Washer Motor
2	-	25 Amp Neutral	Powertrain Control Module (PCM)
3	-	25 Amp Neutral	Ignition Run/Start
4	-	25 Amp Neutral	Alternator
5	-	-	-
6	-	25 Amp Neutral	Ignition Coils/Injectors
7	-	-	-
8	-	25 Amp Neutral	Starter
9	-	-	-
10	30 Amp Pink	-	Windshield Wiper
11	30 Amp Pink	-	Anti-lock Brake System (ABS) Valves
12	40 Amp Green	-	Radiator Fan
13	50 Amp Red	-	Anti-lock Brake System (ABS) Pump Motor
14	-	-	-
15	50 Amp Red	-	Radiator Fan
16	-	-	-
17	-	-	-
18	-	-	-
19	-	-	-
20	-	-	-
21	-	-	-
22	-	-	-

Rear Power Distribution Center Fuses

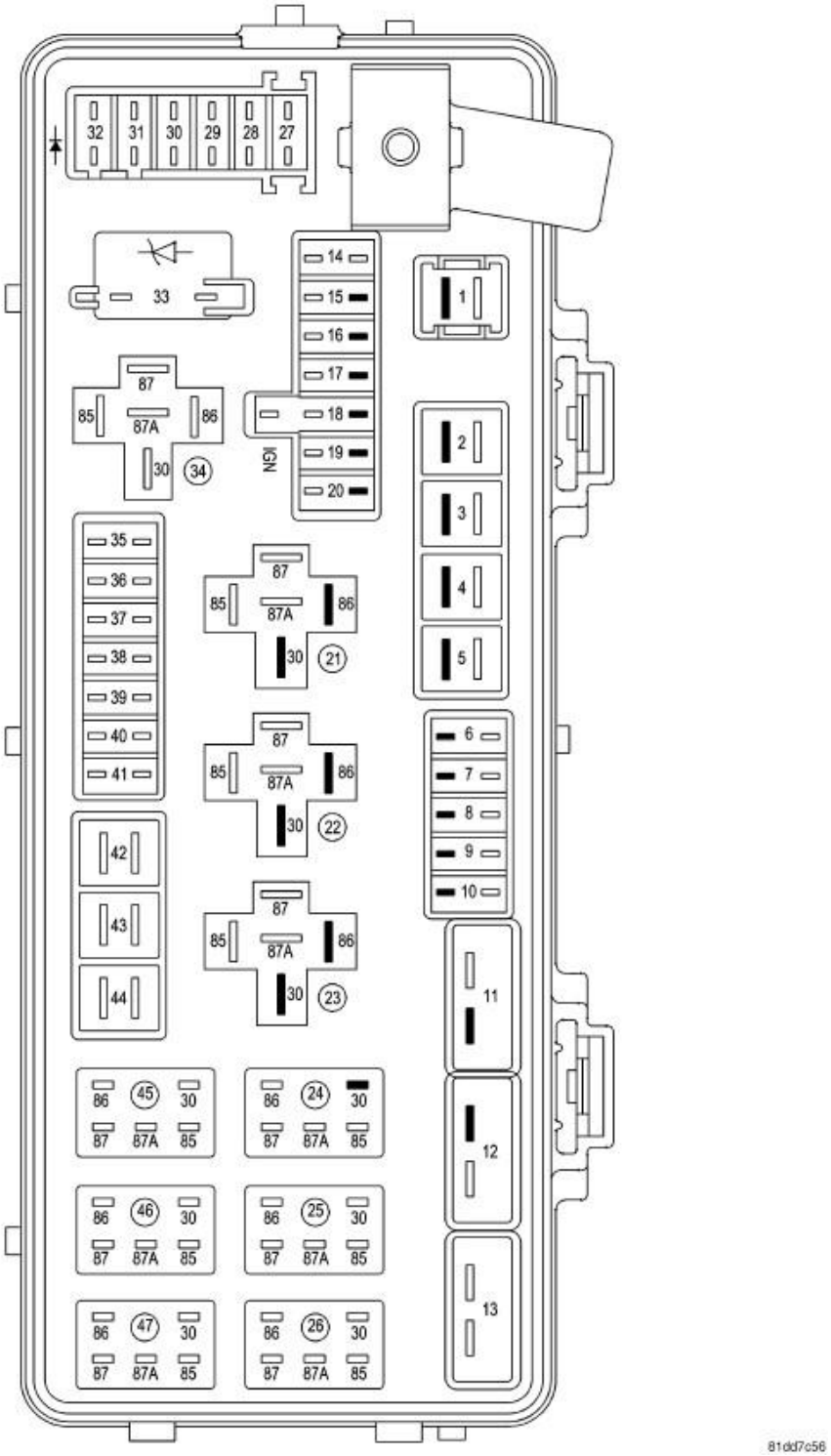

Fig. 7: Rear Power Distribution Center Fuses
Courtesy of CHRYSLER LLC

There is also a power distribution center located in the trunk under the spare tire access panel. This center contains fuses and relays.

CAUTION:

- **When installing the Power Distribution Center cover, it is important to ensure the cover is properly positioned and fully latched. Failure to do so may allow water to get into the Power Distribution Center, and possibly result in an electrical system failure.**
- **When replacing a blown fuse, it is important to use only a fuse having the correct amperage rating. The use of a fuse with a rating other than indicated may result in a dangerous electrical system overload. If a properly rated fuse continues to blow, it indicates a problem in the circuit that must be corrected.**
- **Cavity 1 of the Rear Power Distribution Center contains a black IOD fuse needed for vehicle processing during assembly. The service replacement part is a 60 Amp yellow cartridge fuse.**

Rear Power Distribution Center Fuses - SRT8

Cavity	Cartridge Fuse	Mini-Fuse	Description
1	60 Amp Yellow	-	Ignition Off Draw (IOD)
2	40 Amp Green	-	Integrated Power Module (IPM)
3	-	-	-
4	40 Amp Green	-	Integrated Power Module (IPM)
5	30 Amp Pink	-	Heated Seats - if equipped
6	-	20 Amp Yellow	Fuel Pump
7	-	20 Amp Yellow	Sub Amp - if equipped
8	-	15 Amp Blue	Diagnostic Link Connector (DLC)/Wireless Ignition Node (WIN)
9	-	20 Amp Yellow	Power Outlet
10	-	-	-
11*	-	-	-
12*	-	-	-
13*	-	-	-
14	-	10 Amp Red	AC Heater Control/Cluster/Security Module - if equipped
15	-	20 Amp Yellow	-
16	-	20 Amp Yellow	-
17	-	20 Amp Yellow	Cluster
18	-	20 Amp Yellow	Selectable Power Outlet
19	-	10 Amp Red	Stop Lights
20	-	-	-
21	-	-	-
22	-	-	-
23	-	-	-
24	-	-	-

25	-	-	-
26	-	-	-
27	-	10 Amp Red	Occupant Restraint Controller (ORC)
28	-	10 Amp Red	Ignition Run
29	-	5 Amp Orange	Cluster/Electronic Stability Program (ESP)/Powertrain Control Module (PCM)/STOP LIGHT Switch
30	-	10 Amp Red	Door Modules/Power Mirrors/Steering Control Module (SCM)
31	-	-	-
32	-	-	-
33	-	-	-
34	-	-	-
35	-	5 Amp Orange	Antenna Module - if equipped/Power Mirrors/Rain Sensor - if equipped
36	-	20 Amp Yellow	Hands-Free Phone - if equipped/Video Monitor - if equipped/Radio
37	-	15 Amp Blue	Transmission
38	-	10 Amp Red	Cargo Light/Vehicle Information Module - if equipped
39	-	10 Amp Red	Heated Mirrors - if equipped
40	-	5 Amp Orange	Auto Inside Rearview Mirror/Heated Seats - if equipped/Switch Bank
41	-	10 Amp Red	AC Heater Control/Headlights/Park Assist - if equipped/Tire Pressure Monitoring - if equipped/Occupant Restraint Controller (ORC)
42	30 Amp Pink	-	Front Blower Motor
43	30 Amp Pink	-	Rear Window Defroster
44	20 Amp Blue	-	Amplifier - if equipped/Sunroof - if equipped

***** Cavities 11, 12, and 13 contain self-resetting fuses (circuit breakers) that are only serviceable by an authorized dealer. The Cluster (without power memory seat), the Driver Seat Switch (with power memory seat), and the Memory Module (if equipped) are fused by the 25 amp circuit breaker in Cavity 11. The Passenger Seat Switch is fused by the 25 amp circuit breaker in Cavity 12. The Door Modules (except base), the Driver Door Lock Switch (base), the Driver Express Power Window Switch (if equipped), and the Passenger Door Lock Switch (base) are fused by the 25 amp circuit breaker in Cavity 13. If you experience temporary or permanent loss of these systems, see your authorized dealer for service.

HOISTING

STANDARD PROCEDURE

HOISTING

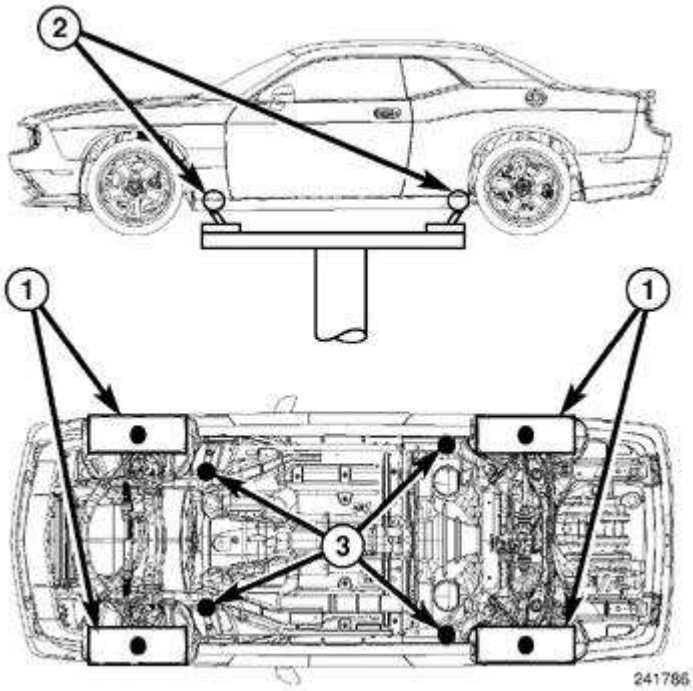

Fig. 8: Challenger Lifting Points
Courtesy of CHRYSLER LLC

1 - DRIVE ON HOIST
2 - FLOOR JACK, VEHICLE EMERGENCY JACK
3 - FRAME CONTACT LIFT (SINGLE POST)
3 - CHASSIS LIFT (DUAL LIFT)
3 - OUTBOARD LIFT (DUAL LIFT)
3 - FLOOR JACK

Refer to Owner's Manual provided with vehicle for proper emergency jacking procedures.

WARNING: The hoisting and jack lifting points provided are for a complete vehicle. When the engine or rear suspension is removed from a vehicle, the center of gravity is altered making some hoisting conditions unstable. Properly support or secure vehicle to hoisting device when these conditions exist. Failure to follow these instructions may result in serious or fatal injury.

CAUTION: Do not position hoisting device on any suspension component, including the front or rear suspension crossmembers. Do not hoist on the front and rear bumpers, the lower radiator crossmember, or the front engine mount.

Do not attempt to raise one entire side of the vehicle by placing a floor jack midway between the front and rear wheels. This practice may result in permanent damage to the body.

When properly positioned, a floor jack can be used to lift the vehicle and support the raised vehicle with jack stands.

A floor jack or any lifting device must never be used on any part of the underbody other than the described areas.

JUMP STARTING

STANDARD PROCEDURE

JUMP STARTING

WARNING: Review all safety precautions and warnings in the battery system section of the service manual. Refer to Electrical/Battery System/BATTERY - Standard Procedure

- **Take care to avoid the radiator cooling fan whenever the hood is raised. It can start anytime the ignition switch is ON. You can be hurt by the fan.**
- **Do not attempt to push or tow your vehicle to get it started. Vehicles equipped with an automatic transmission cannot be started this way. Unburned fuel could enter the catalytic converter and once the engine has started, ignite and damage the converter and vehicle. If the vehicle has a discharged battery, booster cables may be used to obtain a start from another vehicle. This type of start can be dangerous if done improperly, so follow this procedure carefully.**
- **Battery fluid is a corrosive acid solution; do not allow battery fluid to contact eyes, skin, or clothing. Don't lean over battery when attaching clamps or allow the clamps to touch each other. If acid splashes in eyes or on skin, flush contaminated area immediately with large quantities of water.**
- **A battery generates hydrogen gas, which is flammable and explosive. Keep flame or spark away from the vent holes.**
- **Do not use a booster battery or any other booster source with an output that exceeds 12 Volts.**
- **The battery in this vehicle has a vent hose that should not be disconnected and should only be replaced with a battery of the same type (vented).**

Failure to follow these instructions may result in serious or fatal injury.

CAUTION: When using another vehicle as a booster, do not allow vehicles to touch. Electrical systems can be damaged on either vehicle.

NOTE: The battery is stored under an access cover in the trunk. Remote battery

terminals are located in the engine compartment for jump starting.

TO JUMP START A DISABLED VEHICLE:

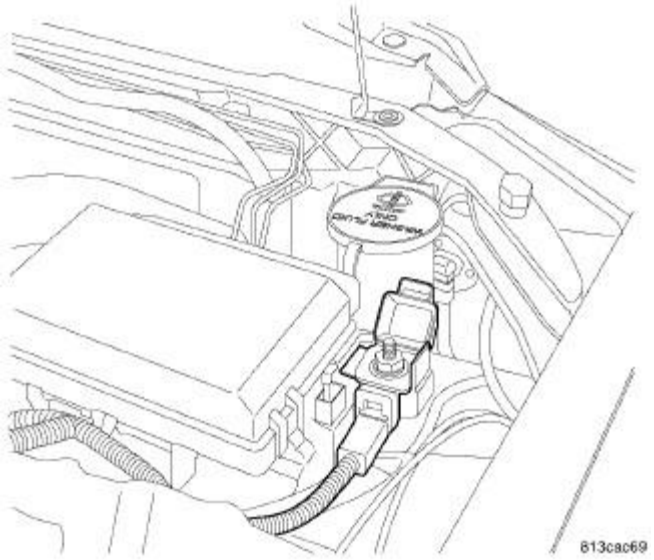

Fig. 9: Remote Jump-Start Battery(+) Attachment Point
Courtesy of CHRYSLER LLC

1. Wear eye protection and remove any metal jewelry, such as watchbands or bracelets, that might make an inadvertent electrical contact.
2. When boost is provided by a battery in another vehicle, park that vehicle within booster cable reach, but do not allow the vehicles to touch one another.
3. Set the parking brake, place the automatic transmission in PARK, and turn the ignition switch to the LOCK position on both vehicles.
4. Turn off the heater, radio, and all unnecessary electrical loads.
5. Connect one end of the jumper cable to the remote jump-start positive battery post (+) in the engine compartment. Connect the other end of the same cable to the positive terminal of the booster battery. Refer to the following illustration for jump-starting connections.
6. Connect the other cable, first to the negative terminal of the booster battery and then to the engine ground (-) of the vehicle with the discharged battery. Make sure you have a good contact on the engine ground. Refer to the following illustration for jump-starting connections.
7. Start the engine in the vehicle that has the booster battery. Let the engine idle a few minutes. Then, start the engine in the vehicle with the discharged battery.

   NOTE: Refer to Electrical/Battery System - Standard Procedure if the ESP/BAS light (in the instrument cluster) remains on continuously after starting the engine of the vehicle with the discharged battery.

8. When removing the jumper cables, reverse the above sequence exactly. Be careful of the moving belts and fan.

WARNING:

- **You should not try to start your vehicle by pushing or towing.**
- **Do not connect the cable to the negative post of the discharged battery. The resulting electrical spark could cause the battery to explode.**
- **During cold weather when temperatures are below the freezing point, electrolyte in a discharged battery may freeze. Do not attempt jump-starting because the battery could rupture or explode. The battery temperature must be brought above the freezing point before attempting jump-start.**
- **Failure to follow these instructions may result in serious or fatal injury.**

MAINTENANCE SCHEDULES

INSPECTION

5 YEAR INSPECTION - LIFETIME POWERTRAIN WARRANTY

The following steps outline the dealer inspection procedure required every 5 years for vehicles covered under the terms of the Lifetime Powertrain Warranty. Refer to the appropriate warranty information for additional terms and coverages applicable to the Lifetime Powertrain Warranty.

1. Lift the vehicle on a suitable hoist.
2. Check all Powertrain components for leaks or physical damage. Note any concerns.
3. Lower the vehicle and check the level and condition of the engine oil.
4. Connect a diagnostic scan tool and check for any Diagnostic Trouble Codes (DTC).

DESCRIPTION

MAINTENANCE SCHEDULES - SRT8 - EXPORT - MIDDLE EAST

Oil Change Indicator System

The oil change indicator system will remind you that it is time to take your vehicle in for scheduled maintenance.

On Electronic Vehicle Information Center (EVIC) equipped vehicles "Oil Change Required" will be displayed in the EVIC and a single chime will sound, indicating that an oil change is necessary.

The oil change indicator message will illuminate approximately 7,000 miles (11 200 km) after the most recent oil change was performed. Have your vehicle serviced as soon as possible, within 500 miles (800 km). However, an earlier oil change at 3,000 miles (5 000 km) may be required if the vehicle is operated under "Severe Duty Conditions" later in this section.

NOTE:

- **The oil change indicator message will not monitor the time since the last**

oil change. Change your vehicles oil if it has been 6 months since your last oil change even if the oil change indicator message is NOT illuminated.

- **Change your engine oil more often if you drive your vehicle off-road for an extended period of time.**
- **Under no circumstances should oil change intervals exceed 7,500 miles (12 000 km) or 6 months, whichever comes first.**

Oil Change Indicator- Reset

The vehicle is equipped with an engine oil change indicator system. The "Oil Change Required" message flashes in the EVIC display for approximately ten seconds after a single chime has sounded, to indicate the next scheduled oil change interval. The engine oil change indicator system is duty cycle based, which means the engine oil change interval may fluctuate depending upon your personal driving style.

Unless reset, this message continues to display each time you turn the ignition switch to the ON/RUN position. To turn off the message temporarily, press and release the Menu button. To reset the oil change indicator system (after performing the scheduled maintenance) perform the following procedure:

1. Turn the ignition switch to the "ON" position. Do not start the engine.
2. Fully press the accelerator pedal slowly three times within ten seconds.
3. Turn the ignition switch to the "LOCK" position.

At Each Stop for Fuel

- Check the engine oil level. Refer to "Engine Oil" under "Maintenance Procedures" in Section 7.
- Check the windshield washer solvent and add if required.

Once a Month

- Check tire pressure and look for unusual wear or damage.
- Inspect the battery, and clean and tighten the terminals as required.
- Check the fluid levels of coolant reservoir, brake master cylinder, power steering, and transmission, and add as needed.
- Check all lights and other electrical items for correct operation.

At Each Oil Change

- Change the engine oil filter.
- Inspect the brake hoses and lines.

Required Maintenance Intervals

WARNING: You can be badly injured working on or around a motor vehicle. Perfom only that service work for which you have the knowledge and the right equipment. If you have any doubt about your ability to perform a service job, take your vehicle to a competent mechanic. Failure to follow these instructions may result in possible serious or fatal injury.

CAUTION: Failure to perform the required maintenance items may result in damage to the vehicle.

Perform Maintenance Every (Where time and mileage are listed, follow the interval that occurs first.)			Maintenance Items
Miles	**Kilometers**	**Months**	
7500	12000	6	• Change the engine oil and engine oil filter.** • Rotate tires.
15000	24000	12	• Change the engine oil and engine oil filter.** • Rotate tires. • If you are using your vehicle in dusty or off-road conditions, inspect the engine air cleaner filter, and replace if necessary. • Replace the air conditioning filter. • Inspect the brake linings, and replace if necessary. • Inspect the CV joints. Perform the first inspection at 15,000 miles (24 000 km) or 12 months. • Inspect the exhaust system. Perform the first inspection at 15,000 miles (24 000 km) or 12 months. • Inspect the manual transmission fluid (if equipped), add as necessary. • Inspect the rear axle fluid.
22500	36000	18	• Change the engine oil and engine oil filter.** • Rotate tires. • Inspect the CV joints. • Inspect the exhaust system. • Inspect the front suspension, tie rod ends and boot seals, and replace if necessary. • Change the manual transmission fluid (if equipped) if using your vehicle for any of the following: Most of your driving is at sustained

			high speeds during hot weather, above 90°F (32°C), driving in dusty conditions, or stop and go driving.
30000	48000	24	• Change the engine oil and engine oil filter.** • Rotate tires. • Replace the engine air cleaner filter. • Adjust parking brake on vehicles equipped with four-wheel disc brakes. • Replace the air conditioning filter. • Inspect the brake linings, and replace if necessary. • Inspect the rear axle fluid. • Inspect the manual transmission fluid (if equipped), add as necessary.
37500	60000	30	• Change the engine oil and engine oil filter.** • Rotate tires.
45000	72000	36	• Change the engine oil and engine oil filter.** • Rotate tires. • If you are using your vehicle in dusty or off-road conditions, inspect the engine air cleaner filter, and replace if necessary. • Replace the air conditioning filter. • Inspect the brake linings, and replace if necessary. • Change the rear axle fluid if using your vehicle for any of the following: police, taxi, fleet, or frequent trailer towing. • Inspect the CV joints. • Inspect the exhaust system. • Inspect the front suspension, tie rod ends and boot seals, and replace if necessary. • Change the manual transmission fluid (if equipped) if using your vehicle for any of the following: Most of your driving is at sustained high speeds during hot weather, above 90°F (32°C), driving in dusty conditions, or stop and go driving.
52500	84000	42	• Change the engine oil and engine oil filter.** • Rotate tires.
60000	96000	48	• Change the engine oil and engine oil filter.**

			• Rotate tires. • Replace the engine air cleaner filter. • Adjust parking brake on vehicles equipped with four-wheel disc brakes. • Replace the air conditioning filter. • Inspect the rear axle fluid. • Inspect the brake linings, and replace if necessary. • Inspect the manual transmission fluid (if equipped), add as necessary. • Change the automatic transmission fluid and filter if using your vehicle for any of the following: police, taxi, fleet, or frequent trailer towing.
67500	108000	54	• Change the engine oil and engine oil filter.** • Rotate tires. • Inspect the CV joints. • Inspect the exhaust system. • Inspect the front suspension, tie rod ends and boot seals, and replace if necessary. • Change the manual transmission fluid (if equipped) if using your vehicle for any of the following: Most of your driving is at sustained high speeds during hot weather, above 90°F (32°C), driving in dusty conditions, or stop and go driving.
75000	120000	60	• Change the engine oil and engine oil filter.** • Rotate tires. • If you are using your vehicle in dusty or off-road conditions, inspect the engine air cleaner filter, and replace if necessary. • Replace the air conditioning filter. • Inspect the rear axle fluid. • Inspect the brake linings, and replace if necessary. • Inspect the manual transmission fluid (if equipped), add as necessary. • Flush and replace the engine coolant at 60 months if not done at 105,000 miles (168 000 km).
82500	132000	66	• Change the engine oil and engine oil filter.**

			• Rotate tires.
90000	144000	72	• Change the engine oil and engine oil filter.** • Rotate tires. • Replace the engine air cleaner filter. • **Inspect and replace the PCV Valve if necessary.****** • Adjust parking brake on vehicles equipped with four-wheel disc brakes. • Replace the air conditioning filter. • Inspect the brake linings, and replace if necessary. • Inspect the CV joints. • Inspect the exhaust system. • Change the rear axle fluid if using your vehicle for any of the following: police, taxi, fleet, or frequent trailer towing. • Inspect the front suspension, tie rod ends and boot seals, and replace if necessary. • Change the manual transmission fluid (if equipped) if using your vehicle for any of the following: Most of your driving is at sustained high speeds during hot weather, above 90°F (32°C), driving in dusty conditions, or stop and go driving.
97500	156000	78	• Change the engine oil and engine oil filter.** • Rotate tires.
105000	168000	84	• Change the engine oil and engine oil filter.** • Rotate tires. • **Replace the spark plugs.** • If you are using your vehicle in dusty or off-road conditions, inspect the engine air cleaner filter, and replace if necessary. • Replace the air conditioning filter. • Inspect the rear axle fluid. • Inspect the brake linings, and replace if necessary. • Inspect the manual transmission fluid (if equipped), add as necessary. • Flush and replace the engine coolant if not done at 60 months.

112500	180000	90	• Change the engine oil and engine oil filter.** • Rotate tires. • Inspect the CV joints. • Inspect the exhaust system. • Inspect the front suspension, tie rod ends and boot seals, and replace if necessary. • Change the manual transmission fluid (if equipped) if using your vehicle for any of the following: Most of your driving is at sustained high speeds during hot weather, above 90°F (32°C), driving in dusty conditions, or stop and go driving.
120000	192000	96	• Change the engine oil and engine oil filter.** • Rotate tires. • Replace the engine air cleaner filter. • Adjust parking brake on vehicles equipped with four-wheel disc brakes. • Replace the air conditioning filter. • Inspect the rear axle fluid. • Inspect the brake linings, and replace if necessary. • Inspect the manual transmission fluid (if equipped), add as necessary. • Change the automatic transmission fluid and filter.
127500	204000	102	• Change the engine oil and engine oil filter.** • Rotate tires.
135000	216000	108	• Change the engine oil and engine oil filter.** • Rotate tires. • If you are using your vehicle in dusty or off-road conditions, inspect the engine air cleaner filter, and replace if necessary. • Replace the air conditioning filter. • Inspect the brake linings, and replace if necessary. • Inspect the CV joints. • Inspect the exhaust system. • Change the rear axle fluid if using your vehicle for any of the following: police, taxi, fleet, or frequent trailer towing.

			• Inspect the front suspension, tie rod ends and boot seals, and replace if necessary. • Change the manual transmission fluid (if equipped) if using your vehicle for any of the following: Most of your driving is at sustained high speeds during hot weather, above 90°F (32°C), driving in dusty conditions, or stop and go driving.
142500	228000	114	• Change the engine oil and engine oil filter.** • Rotate tires.
150000	240000	120	• Change the engine oil and engine oil filter.** • Rotate tires. • Replace the engine air cleaner filter. • Adjust parking brake on vehicles equipped with four-wheel disc brakes. • Replace the air conditioning filter. • Inspect the rear axle fluid. • Inspect the brake linings, and replace if necessary. • Inspect the manual transmission fluid (if equipped), add as necessary.

** Change the engine oil and engine oil filter at every 3,000 miles (5 000 km) or 3 months if using your vehicle under any of the following severe duty conditions:

- Stop and go driving.
- Driving in dusty conditions.
- Short trips of less than 10 miles (16 km).
- Trailer towing.
- Taxi, police, or delivery service (commercial service).
- Off-road or desert operation.

**** This maintenance is recommended by the manufacturer to the owner, but is not required to maintain emissions warranty.

MAINTENANCE SCHEDULES - DOMESTIC

Oil Change Indicator System

The oil change indicator system reminds you that it is time to take your vehicle in for scheduled maintenance.

On the Electronic Vehicle Information Center (EVIC) equipped vehicles "Oil Change Required" is displayed in the EVIC and a single chime sounds indicating that an oil change is necessary.

On non-EVIC equipped vehicles "Change Oil" flashes in the instrument cluster odometer and a single chime sounds indicating that an oil change is necessary.

Based on engine operating conditions the oil change indicator message illuminates. This means that service is required for your vehicle. Have your vehicle serviced as soon as possible, within the next 805 km (500 miles).

NOTE:

- **The oil change indicator message will not monitor the time since the last oil change. Change the vehicle oil if it has been six months since your last oil change even if the oil change indicator message is not illuminated.**
- **Change your engine oil more often if you drive your vehicle off-road for an extended period of time.**
- **Under no circumstances should oil change intervals exceed 10,000 km (6,000 miles) or six months, whichever comes first.**

Oil Change Indicator- Reset

The vehicle is equipped with an engine oil change indicator system. The "Oil Change Required" message flashes in the EVIC display for approximately ten seconds after a single chime has sounded, to indicate the next scheduled oil change interval. The engine oil change indicator system is duty cycle based, which means the engine oil change interval may fluctuate depending upon your personal driving style.

Unless reset, this message continues to display each time you turn the ignition switch to the ON/RUN position. To turn off the message temporarily, press and release the Menu button. To reset the oil change indicator system (after performing the scheduled maintenance) perform the following procedure:

1. Turn the ignition switch to the "ON" position. Do not start the engine.
2. Fully press the accelerator pedal slowly three times within ten seconds.
3. Turn the ignition switch to the "LOCK" position.

NOTE: **If the indicator message illuminates when you start the vehicle, the oil change indicator system did not reset. If necessary, repeat this procedure.**

At Each Stop for Fuel

- Check the engine oil level. Refer to "engine Oil" under "Maintenance Procedures" in Section 7.
- Check the windshield washer solvent and add if required.

Once a Month

- Check tire pressure and look for unusual wear or damage.
- Inspect the battery, and clean and tighten the terminals as required.
- Check the fluid levels of coolant reservoir, brake master cylinder, power steering, and transmission, and add as needed.
- Check all lights and other electrical items for correct operation.

At Each Oil Change

- Change the engine oil filter.
- Inspect the brake hoses and lines.

WARNING: You can be badly injured working on or around a motor vehicle. Perfom only that service work for which you have the knowledge and the right equipment. If you have any doubt about your ability to perform a service job, take your vehicle to a competent mechanic. Failure to follow these instructions may result in possible serious or fatal injury.

CAUTION: Failure to perform the required maintenance items may result in damage to the vehicle.

Required Maintenance Intervals

Perform Maintenance Every (Where time and mileage are listed, follow the interval that occurs first.)			Maintenance Items
Miles	**Kilometers**	**Months**	
6000	10000	6	• Change the engine oil and engine oil filter. • Rotate the tires.
12000	20000	12	• Change the engine oil and engine oil filter. • Rotate the tires. • If using your vehicle in dusty or off-road conditions, inspect the engine air cleaner filter and replace if necessary. • Replace the air conditioning filter (if equipped) • Inspect the brake linings and replace if necessary. • Inspect the CV joints. Perform the first inspection at 20 000 km (12,000 miles) or 12 months. • Inspect exhaust system. Perform the first inspection at 20 000 km (12,000 miles) or 12 months.

			• Inspect the manual transmission fluid (if equipped), add as necessary.
18000	30000	18	• Change the engine oil and engine oil filter. • Rotate the tires. • Inspect the rear axle fluid.
24000	40000	24	• Change the engine oil and engine oil filter. • Rotate the tires. • If using your vehicle in dusty or off-road conditions, inspect the engine air cleaner filter and replace if necessary. • Replace the air conditioning filter (if equipped) • Inspect the brake linings and replace if necessary. • Inspect the CV joints. • Inspect exhaust system. • Inspect the front suspension, tie rod ends and boot seals; replace if necessary. • Change the manual transmission fluid (if equipped) if using your vehicle for any of the following: Most of your driving is at sustained high speeds during hot weather, above 32°C (90°F), driving in dusty conditions, or stop and go driving.
30000	50000	30	• Change the engine oil and engine oil filter. • Rotate the tires. • Replace the engine air cleaner filter. • **Replace the spark plugs (5.7L engine).** • Adjust parking brake on vehicles equipped with four-wheel disc brakes.
36000	60000	36	• Change the engine oil and engine oil filter. • Rotate the tires. • If using your vehicle in dusty or off-road conditions, inspect the engine air cleaner filter and replace if necessary. • Replace the air conditioning filter (if equipped) • Inspect the brake linings and replace if necessary. • Inspect the rear axle fluid. • Inspect the manual transmission fluid (if equipped), add as necessary.

42000	70000	42	• Change the engine oil and engine oil filter. • Rotate the tires.
48000	80000	48	• Change the engine oil and engine oil filter. • Rotate the tires. • If using your vehicle in dusty or off-road conditions, inspect the engine air cleaner filter and replace if necessary. • Replace the air conditioning filter (if equipped) • Inspect the brake linings and replace if necessary. • Inspect the CV joints. • Inspect exhaust system. • Inspect the front suspension, tie rod ends and boot seals; replace if necessary. • Change the manual transmission fluid (if equipped) if using your vehicle for any of the following: Most of your driving is at sustained high speeds during hot weather, above 90°F (32°C), driving in dusty conditions, or stop and go driving.
54000	90000	54	• Change the engine oil and engine oil filter. • Rotate the tires. • Inspect the rear axle fluid.
60000	100000	60	• Change the engine oil and engine oil filter. • Rotate the tires. • Replace the engine air cleaner filter. • **Replace the spark plugs (5.7L engine).** • Replace the air conditioning filter (if equipped) • Inspect the brake linings and replace if necessary. • Adjust parking brake on vehicles equipped with four-wheel disc brakes. • Inspect the manual transmission fluid (if equipped), add as necessary. • Change the automatic transmission fluid and filter if using your vehicle for police, taxi, fleet, or frequent trailer towing.
66000	110000	66	• Change the engine oil and engine oil filter. • Rotate the tires. • If using your vehicle in dusty or off-road

			conditions, inspect the engine air cleaner filter and replace if necessary.
72000	120000	72	• Change the engine oil and engine oil filter. • Rotate the tires. • Replace the air conditioning filter (if equipped) • Inspect the brake linings and replace if necessary. • Inspect the CV joints. • Inspect exhaust system. • Inspect the front suspension, tie rod ends and boot seals; replace if necessary. • Inspect the rear axle fluid. • Change the manual transmission fluid (if equipped) if using your vehicle for any of the following: Most of your driving is at sustained high speeds during hot weather, above 32°C (90°F), driving in dusty conditions, or stop and go driving.
78000	130000	78	• Change the engine oil and engine oil filter. • Rotate the tires. • If using your vehicle in dusty or off-road conditions, inspect the engine air cleaner filter and replace if necessary.
84000	140000	84	• Change the engine oil and engine oil filter. • Rotate the tires. • Replace the air conditioning filter (if equipped) • Inspect the brake linings and replace if necessary. • Inspect the manual transmission fluid (if equipped), add as necessary.
90000	150000	90	• Change the engine oil and engine oil filter. • Rotate the tires. • Replace the engine air cleaner filter. • **Replace the spark plugs (5.7L engine).** • **Inspect and replace PCV valve if necessary. **** • Inspect the rear axle fluid. • Adjust parking brake on vehicles equipped with four-wheel disc brakes.
96000	160000	96	• Change the engine oil and engine oil filter.

			• Rotate the tires. • Replace the air conditioning filter (if equipped) • Inspect the brake linings and replace if necessary. • Inspect the CV joints. • Inspect exhaust system. • Inspect the front suspension, tie rod ends and boot seals; replace if necessary. • Change the manual transmission fluid (if equipped).
102000	170000	102	• Change the engine oil and engine oil filter. • Rotate the tires. • If using your vehicle in dusty or off-road conditions, inspect the engine air cleaner filter and replace if necessary. • **Replace the spark plugs (3.5L engine).** • **Replace the timing belt (3.5L engine).** • Flush and replace the engine coolant.
108000	180000	108	• Change the engine oil and engine oil filter. • Rotate the tires. • Replace the air conditioning filter (if equipped) • Inspect the brake linings and replace if necessary. • Inspect the rear axle fluid. • Inspect the manual transmission fluid (if equipped), add as necessary.
114000	190000	114	• Change the engine oil and engine oil filter. • Rotate the tires. • If using your vehicle in dusty or off-road conditions, inspect the engine air cleaner filter and replace if necessary.
120000	200000	120	• Change the engine oil and engine oil filter. • Rotate the tires. • Replace the engine air cleaner filter. • Replace the air conditioning filter (if equipped) • **Replace the spark plugs (5.7L engine).** • Inspect the brake linings and replace if necessary. • Adjust parking brake on vehicles equipped with

			four-wheel disc brakes. • Inspect the CV joints. • Inspect exhaust system. • Change the manual transmission fluid (if equipped) if using your vehicle for any of the following: Most of your driving is at sustained high speeds during hot weather, above 32°C (90°F), driving in dusty conditions, or stop and go driving. • Change the automatic transmission fluid and filter. • Replace the accessory drive belt (3.5L/5.7L engines).
126000	210000	126	• Change the engine oil and engine oil filter. • Rotate the tires. • If using your vehicle in dusty or off-road conditions, inspect the engine air cleaner filter and replace if necessary. • Inspect the rear axle fluid.
132000	220000	132	• Change the engine oil and engine oil filter. • Rotate the tires. • Replace the air conditioning filter (if equipped) • Inspect the brake linings and replace if necessary. • Inspect the manual transmission fluid (if equipped), add as necessary.
138000	230000	138	• Change the engine oil and engine oil filter. • Rotate the tires. • If using your vehicle in dusty or off-road conditions, inspect the engine air cleaner filter and replace if necessary.
144000	240000	144	• Change the engine oil and engine oil filter. • Rotate the tires. • Replace the air conditioning filter (if equipped) • Inspect the brake linings and replace if necessary. • Inspect the CV joints. • Inspect exhaust system. • Inspect the rear axle fluid. • Inspect the front suspension, tie rod ends and

			boot seals; replace if necessary. • Change the manual transmission fluid (if equipped) if using your vehicle for any of the following: Most of your driving is at sustained high speeds during hot weather, above 32°C (90°F), driving in dusty conditions, or stop and go driving.
150000	250000	150	• Change the engine oil and engine oil filter. • Rotate the tires. • Replace the engine air cleaner filter. • **Replace the spark plugs (5.7L engine).** • Adjust parking brake on vehicles equipped with four-wheel disc brakes.

MAINTENANCE SCHEDULES - SRT8

Oil Change Indicator System

The oil change indicator system reminds you that it is time to take your vehicle in for scheduled maintenance.

On the Electronic Vehicle Information Center (EVIC) equipped vehicles "Oil Change Required" is displayed in the EVIC and a single chime sounds indicating that an oil change is necessary.

On non-EVIC equipped vehicles "Change Oil" flashes in the instrument cluster odometer and a single chime sounds indicating that an oil change is necessary.

Based on engine operating conditions the oil change indicator message illuminates. This means that service is required for your vehicle. Have your vehicle serviced as soon as possible, within the next 805 km (500 miles).

NOTE:

- **The oil change indicator message will not monitor the time since the last oil change. Change the vehicle oil if it has been six months since your last oil change even if the oil change indicator message is not illuminated.**
- **Change your engine oil more often if you drive your vehicle off-road for an extended period of time.**
- **Under no circumstances should oil change intervals exceed 10,000 km (6,000 miles) or six months, whichever comes first.**

Oil Change Indicator- Reset

The vehicle is equipped with an engine oil change indicator system. The "Oil Change Required" message flashes in the EVIC display for approximately ten seconds after a single chime has sounded, to indicate the next scheduled oil change interval. The engine oil change indicator system is duty cycle based, which means the engine oil change interval may fluctuate depending upon your

personal driving style.

Unless reset, this message continues to display each time you turn the ignition switch to the ON/RUN position. To turn off the message temporarily, press and release the Menu button. To reset the oil change indicator system (after performing the scheduled maintenance) perform the following procedure:

1. Turn the ignition switch to the "ON" position. Do not start the engine.
2. Fully press the accelerator pedal slowly three times within ten seconds.
3. Turn the ignition switch to the "LOCK" position.

NOTE: If the indicator message illuminates when you start the vehicle, the oil change indicator system did not reset. If necessary, repeat this procedure.

At Each Stop for Fuel

- Check the engine oil level. Refer to "Engine Oil" under "Maintenance Procedures" in Section 7.
- Check the windshield washer solvent and add if required.

Once a Month

- Check tire pressure and look for unusual wear or damage.
- Inspect the battery, and clean and tighten the terminals as required.
- Check the fluid levels of coolant reservoir, brake master cylinder, power steering, and transmission, and add as needed.
- Check all lights and other electrical items for correct operation.

At Each Oil Change

- Change the engine oil filter.
- Inspect the brake hoses and lines.

CAUTION: Failure to perform the required maintenance items may result in damage to the vehicle.

Required Maintenance Intervals

Perform Maintenance Every (Where time and mileage are listed, follow the interval that occurs first.)			Maintenance Items
Miles	**Kilometers**	**Months**	
6000	10000	6	• Change the engine oil and engine oil filter. • Rotate the tires.

12000	20000	12	• Change the engine oil and engine oil filter. • Rotate the tires. • If you are using your vehicle in dusty or off-road conditions, inspect the engine air cleaner filter, and replace if necessary. • Replace the air conditioning filter. • Inspect the brake linings, and replace if necessary. • Inspect the CV joints. Perform the first inspection at 20 000 km (12,000 miles) or 12 months. • Inspect the exhaust system. Perform the first inspection at 20 000 km (12,000 miles) or 12 months. • Inspect the manual transmission fluid (if equipped), add as necessary.
18000	30000	18	• Change the engine oil and engine oil filter. • Rotate the tires. • Inspect the rear axle fluid.
24000	40000	24	• Change the engine oil and engine oil filter. • Rotate the tires. • If you are using your vehicle in dusty or off-road conditions, inspect the engine air cleaner filter, and replace if necessary. • Replace the air conditioning filter. • Inspect the brake linings, and replace if necessary. • Inspect the CV joints. • Inspect the exhaust system. • Inspect the front suspension, tie rod ends and boot seals, and replace if necessary. • Change the manual transmission fluid (if equipped) if using your vehicle for any of the following: Most of your driving is at sustained high speeds during hot weather, above 32°C (90°F), driving in dusty conditions, or stop and go driving.
30000	50000	30	• Change the engine oil and engine oil filter. • Rotate the tires. • Replace the engine air cleaner filter.

			• Adjust parking brake on vehicles equipped with four-wheel disc brakes.
36000	60000	36	• Change the engine oil and engine oil filter. • Rotate the tires. • If you are using your vehicle in dusty or off-road conditions, inspect the engine air cleaner filter, and replace if necessary. • Replace the air conditioning filter. • Inspect the brake linings, and replace if necessary. • Inspect the rear axle fluid. • Inspect the manual transmission fluid (if equipped), add as necessary.
42000	70000	42	• Change the engine oil and engine oil filter. • Rotate the tires.
48000	80000	48	• Change the engine oil and engine oil filter. • Rotate the tires. • If you are using your vehicle in dusty or off-road conditions, inspect the engine air cleaner filter, and replace if necessary. • Replace the air conditioning filter. • Inspect the brake linings, and replace if necessary. • Inspect the CV joints. • Inspect the exhaust system. • Inspect the front suspension, tie rod ends and boot seals, and replace if necessary. • Change the rear axle fluid if using your vehicle for any of the following: police, taxi, fleet, or frequent trailer towing. • Change the manual transmission fluid (if equipped) if using your vehicle for any of the following: Most of your driving is at sustained high speeds during hot weather, above 32°C (90°F), driving in dusty conditions, or stop and go driving.
54000	90000	54	• Change the engine oil and engine oil filter. • Rotate the tires. • Inspect the rear axle fluid.
60000	100000	60	• Change the engine oil and engine oil filter.

			• Rotate the tires. • Replace the engine air cleaner filter. • Replace the air conditioning filter. • Inspect the brake linings, and replace if necessary. • Adjust parking brake on vehicles equipped with four-wheel disc brakes. • Inspect the manual transmission fluid (if equipped), add as necessary. • Change the automatic transmission fluid and filter if using your vehicle for police, taxi, fleet, or frequent trailer towing.
66000	110000	66	• Change the engine oil and engine oil filter. • Rotate the tires.
72000	120000	72	• Change the engine oil and engine oil filter. • Rotate the tires. • If you are using your vehicle in dusty or off-road conditions, inspect the engine air cleaner filter, and replace if necessary. • Replace the air conditioning filter. • Inspect the brake linings, and replace if necessary. • Inspect the CV joints. • Inspect the rear axle fluid. • Inspect the exhaust system. • Inspect the front suspension, tie rod ends and boot seals, and replace if necessary. • Change the manual transmission fluid (if equipped) if using your vehicle for any of the following: Most of your driving is at sustained high speeds during hot weather, above 32°C (90°F), driving in dusty conditions, or stop and go driving.
78000	130000	78	• Change the engine oil and engine oil filter. • Rotate the tires.
84000	140000	84	• Change the engine oil and engine oil filter. • Rotate the tires. • If you are using your vehicle in dusty or off-road conditions, inspect the engine air cleaner filter, and replace if necessary.

			• Replace the air conditioning filter. • Inspect the brake linings, and replace if necessary. • Inspect the manual transmission fluid (if equipped), add as necessary.
90000	150000	90	• Change the engine oil and engine oil filter. • Rotate the tires. • Replace the engine air cleaner filter. • **Inspect and replace the PCV Valve if necessary.*** • Inspect the rear axle fluid. • Adjust parking brake on vehicles equipped with four-wheel disc brakes.
96000	160000	96	• Change the engine oil and engine oil filter. • Rotate the tires. • If you are using your vehicle in dusty or off-road conditions, inspect the engine air cleaner filter, and replace if necessary. • Replace the air conditioning filter. • Inspect the brake linings, and replace if necessary. • Inspect the CV joints. • Inspect the exhaust system. • Inspect the front suspension, tie rod ends and boot seals, and replace if necessary. • Change the rear axle fluid if using your vehicle for police, taxi, fleet, or frequent trailer towing. • Change the manual transmission fluid (if equipped).
102000	170000	102	• Change the engine oil and engine oil filter. • Rotate the tires. • **Replace the spark plugs.** • Flush and replace the engine coolant.
108000	180000	108	• Change the engine oil and engine oil filter. • Rotate the tires. • If you are using your vehicle in dusty or off-road conditions, inspect the engine air cleaner filter, and replace if necessary. • Replace the air conditioning filter.

			• Inspect the brake linings, and replace if necessary. • Inspect the rear axle fluid. • Inspect the manual transmission fluid (if equipped), add as necessary.
114000	190000	114	• Change the engine oil and engine oil filter. • Rotate the tires.
120000	200000	120	• Change the engine oil and engine oil filter. • Rotate the tires. • Replace the engine air cleaner filter. • Replace the air conditioning filter. • Inspect the brake linings, and replace if necessary. • Adjust parking brake on vehicles equipped with four-wheel disc brakes. • Inspect the CV joints. • Inspect the exhaust system. • Inspect the front suspension, tie rod ends and boot seals, and replace if necessary. • Change the automatic transmission fluid and filter. • Change the manual transmission fluid (if equipped) if using your vehicle for any of the following: Most of your driving is at sustained high speeds during hot weather, above 32°C (90°F), driving in dusty conditions, or stop and go driving.
126000	210000	126	• Change the engine oil and engine oil filter. • Rotate the tires. • Inspect the rear axle fluid.
132000	220000	132	• Change the engine oil and engine oil filter. • Rotate the tires. • If you are using your vehicle in dusty or off-road conditions, inspect the engine air cleaner filter, and replace if necessary. • Replace the air conditioning filter. • Inspect the brake linings, and replace if necessary. • Inspect the manual transmission fluid (if equipped), add as necessary.

138000	230000	138	• Change the engine oil and engine oil filter. • Rotate the tires.
144000	240000	144	• Change the engine oil and engine oil filter. • Rotate the tires. • If you are using your vehicle in dusty or off-road conditions, inspect the engine air cleaner filter, and replace if necessary. • Replace the air conditioning filter. • Inspect the brake linings, and replace if necessary. • Inspect the CV joints. • Inspect the exhaust system. • Inspect the front suspension, tie rod ends and boot seals, and replace if necessary. • Change the rear axle fluid if using your vehicle for any of the following: police, taxi, fleet, or frequent trailer towing. • Change the manual transmission fluid (if equipped) if using your vehicle for any of the following: Most of your driving is at sustained high speeds during hot weather, above 32°C (90°F), driving in dusty conditions, or stop and go driving.
150000	250000	150	• Change the engine oil and engine oil filter. • Rotate the tires. • Replace the engine air cleaner filter. • Adjust parking brake on vehicles equipped with four-wheel disc brakes.

* This maintenance is recommended by the manufacturer to the owner, but is not required to maintain emissions warranty.

WARNING: You can be badly injured working on or around a motor vehicle. Perform only that service work for which you have the knowledge and the right equipment. If you have any doubt about your ability to perform a service job, take your vehicle to a competent mechanic. Failure to follow these instructions may result in possible serious or fatal injury.

REPLACEMENT BULBS

SPECIFICATIONS

REPLACEMENT LIGHT BULBS - EXTERIOR

REPLACEMENT LIGHT BULBS - EXTERIOR

LIGHT BULBS	BULB NUMBER
Low beam headlight - high intensity discharge (hid)	D1S
High beam headlamp	9005
Front park/turn lamp	3157
Front fog light	9145/H10
Front side marker	168
Tail light	3057K
Tail/stop/turn light	3057K
Rear side marker	168
Backup light	921
Center high mount stop light (chmsl)	LED
License	168

REPLACEMENT LIGHT BULBS - INTERIOR

REPLACEMENT LIGHT BULBS - INTERIOR

LIGHT BULBS - Interior	BULB NUMBER
Rear courtesy/reading lights	W5W
Rear compartment (trunk) light	562
Overhead console reading lights	578
Visor vanity lights	A6220
Glove box light	194
Door courtesy	562
Shift indicator light	JKLE14140
Optional door map pocket / cupholder lighting	LED

NOTE: All of the interior bulbs are glass wedge base or glass cartridge types. Aluminum base bulbs are not approved and should not be used for replacement.

TOWING

SPECIFICATIONS

STANDARD PROCEDURE - RECREATIONAL TOWING (BEHIND MOTORHOME, ETC.)

Recreational towing of this vehicle is not recommended.

TRAILER TOWING

Trailer towing with this vehicle is not recommended.

STANDARD PROCEDURE

STANDARD PROCEDURE - TOWING

WARNINGS AND CAUTIONS

WARNING: Do not allow towing attachment devices to contact the fuel tank or lines, fuel leak can result.

Do not lift or tow vehicle by front or rear bumper.

Do not go under a lifted vehicle if not supported properly on safety stands.

Do not allow passengers to ride in a towed vehicle.

Use a safety chain that is independent from the towing attachment device.

CAUTION: Do not damage brake lines, exhaust system, shock absorbers, sway bars, or any other under vehicle components when attaching towing device to vehicle.

Do not secure vehicle to towing device by the use of front or rear suspension or steering components.

Remove or secure loose or protruding objects from a damaged vehicle before towing.

Refer to state and local rules and regulations before towing a vehicle.

Do not allow weight of towed vehicle to bear on lower fascia, air dams, or spoilers.

RECOMMENDED TOWING EQUIPMENT

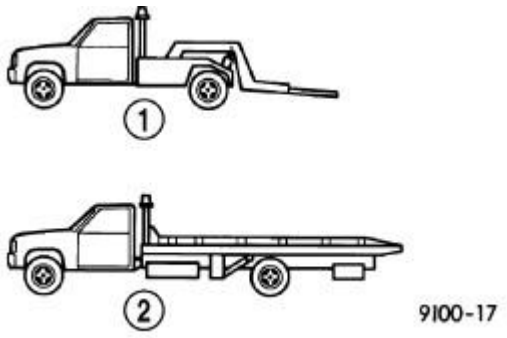

Fig. 10: Recommended Towing Devices
Courtesy of CHRYSLER LLC

1 - WHEEL LIFT 2 - FLAT BED CARRIER

- RWD vehicles, a flat bed towing device is recommended.
- AWD vehicles, a flat bed towing device is recommended.

CAUTION:
- **Do not attempt to tow this vehicle from the front with sling type towing equipment. Damage to the front fascia and air dams will result.**
- **The only approved method of towing is with a flat bed truck.**
- **Do not tow the vehicle from the rear. Damage to the rear sheet metal, liftgate and fascia will occur.**
- **Do not push or tow this vehicle with another vehicle as damage to the bumper fascia and transmission may result.**

GROUND CLEARANCE

CAUTION: If vehicle is towed with wheels removed, install lug nuts to retain brake drums or rotors.

be sure the has at least 100 mm (4 in.) ground clearance. If minimum ground clearance cannot be reached, use a towing dolly. If a flat bed device is used, the approach angle should not exceed 15 degrees.

If using a wheel lift towing device, the disabled vehicle should be raised until the lifted wheels are a minimum 100 mm (4 in.) from the ground. Be sure there is at least 100 mm (4 in.) clearance between the tail pipe and the ground. If necessary, remove the wheels from the front end of the vehicle and lower the front end closer to the ground, to increase the ground clearance at the rear of the vehicle. Install lug nuts on wheel attaching studs to retain brake rotors.

LOCKED VEHICLE TOWING

When a locked vehicle must be towed with the front wheels on the ground, use a towing dolly or flat bed hauler.

FLAT BED TOWING TIE DOWNS

CAUTION: Do not tie vehicle down by attaching chains or cables to suspension components or engine mounts, damage to vehicle can result.

The vehicle can be tied to a flat bed device using the pair of front transportation slots on the bottom

surface of the rails, behind the front wheels. The rear transportation slots are on the bottom of the left bumper extension and in the bracket extending inboard of the right bumper extension.

WITHOUT THE IGNITION KEY

Special care must be taken when the vehicle is towed with the ignition in the LOCK position. The only approved method of towing with out the ignition key is with a flat bed truck. Proper towing equipment is necessary to prevent damage to the vehicle.

TOWING THIS VEHICLE BEHIND ANOTHER VEHICLE (Flat towing with all four wheels on the ground)

Your vehicle may be towed under the following conditions: The gear selector must be in NEUTRAL, the distance to be traveled must not exceed 48 km (30) miles, and the towing speed must not exceed 48 km/h (30 mph). Exceeding these towing limits may cause a transmission geartrain failure. If the transmission is not operative, or if the vehicle is to be towed more than 48 km (30) miles, the vehicle must be transported using a flat bed or the drive shaft disconnected at the rear axle drive flange.

TOWING THIS VEHICLE BEHIND ANOTHER VEHICLE WITH A TOW DOLLEY

The manufacture **does not recommend** that you tow this vehicle on a tow dolley. Vehicle damage may occur.

ACCESSORIES AND EQUIPMENT

Vehicle Theft Security - Service Information - Challenger

DESCRIPTION

DESCRIPTION

VEHICLE THEFT SECURITY SYSTEM

The Vehicle Theft Security System is a function of the Wireless Ignition Module (WIN) is available in two different configurations.

The WIN system provides perimeter vehicle protection by monitoring the vehicle doors, the ignition switch, and the hood. If unauthorized vehicle use or tampering is detected, these systems respond by pulsing the vehicle horn as an audible deterrent and flashing certain exterior lamps as a visual deterrent.

The WIN includes the following major components, which are described in further detail elsewhere in this service information:

- **Door Ajar Switches** - Integral to the door latch mechanism of each front and rear door.
- **Ignition Switch** - Integral part of the WIN module, can not be serviced.
- **Instrument Cluster** - The Instrument Cluster is known as the Cab Compartment Node (CCN). The CCN is located in the instrument panel above the steering column opening, directly in front of the driver. Refer to **Electrical - Instrument Cluster/Instrument Cluster - Description** .
- **Siren** - An alarm siren is located behind th left front wheelhouse splash shield, outboard of the left front frame rail. A single fastner secures the mounting bracket to the tight end of the front crossmember of vehicles built for sale in certain export markets where it is required equipment.

OPERATION

OPERATION

The Instrument Cluster, referred to as the Cab Compartment Node (CCN), is used to control and integrate many of the functions and features included in the Vehicle Theft Security System (VTSS). In the VTSS, the CCN receives inputs indicating the status of the door ajar switches, the liftgate ajar switch and the ignition switch. The CCN processes the information from all of these inputs, internally controls the security indicator as appropriate, and sends electronic messages to the Integrated Power Module (IPM) over the Controller Area Network (CAN) data bus. The FCM internally controls the output to the hazard warning lamps and sends a control output to energize or de-energize the horn relay as appropriate.

The following are paragraphs describing the operation of each of the VTSS features.

ENABLING

VTSS should be learned of the vehicle configuration message from the FCM when the EMIC/CCN gets replaced.

ARMING

Passive arming of the VTSS occurs when the vehicle is exited with the key removed from the ignition switch, the headlamps turned off, and the doors are locked while they are open using the power door lock switch. Active arming occurs when the Lock button on the Remote Keyless Entry (RKE) transmitter is pressed to lock the vehicle. For active arming to occur, the doors must be closed and the ignition switch must be in the off position when the RKE transmitter Lock button is pressed. The power door lock switch will not function if the key is in the ignition switch or the headlamps are turned on with the driver side front door open.

Pre-arming of the VTSS is initiated when a door or the liftgate is open, when the vehicle is locked using a power door lock switch, or when the RKE transmitter Lock button is pressed. Pre-arming will not occur if the key is in the ignition switch or the headlamps are turned on with the driver side front door open. When the VTSS is pre-armed, the arming sequence is delayed until all of the doors and the liftgate have been closed. The VTSS will remains in the Pre-Armed mode for up to 16 seconds after all doors and the liftgate have been closed.

Once the VTSS begins the passive or active arming sequence, the security indicator in the instrument cluster will flashes rapidly for about 17seconds, indicating VTSS arming is in progress. If the ignition switch is turned to the ON position, a door or the liftgate opened, or unlocked by any means, or the RKE Panic button is pressed during the 16 second arming process, the security indicator stops flashing and the arming process aborts. Once the 16 second arming sequence is successfully completed, the security indicator flashes at a slower rate, indicating the VTSS is armed.

DISARMING

Active disarming of the VTSS occurs when the vehicle is unlocked by pressing the Unlock button of the RKE transmitter. Once the alarm has been activated, either disarming method deactivates the alarm. Pressing the Panic button on the RKE transmitter will **not** disarm the VTSS.

POWER-UP MODE

When the armed VTSS senses the battery has been disconnected and reconnected, it enters its power-up mode. In power-up mode the alarm system remains armed following a battery failure or disconnect. If the VTSS was armed prior to a battery disconnect or failure, the technician or vehicle operator has to actively or passively disarm the alarm system after the battery is reconnected. The power-up mode also applies if the battery goes dead while the system is armed, and battery jump-starting is attempted. The VTSS is armed until the technician or vehicle operator has actively or passively disarmed the alarm system. If the VTSS is in the disarmed mode prior to a battery disconnect or failure, it will remains disarmed after the battery is reconnected or replaced, or if jump-starting is attempted.

TAMPER ALERT

The VTSS tamper alert feature will sounds the horn three times upon disarming, if the alarm was

triggered and has since timed-out (about 18 minutes) or if the battery has been disconnected and reconnected. This feature alerts the vehicle operator the VTSS alarm was activated while the vehicle was unattended.

STANDARD PROCEDURE

SENTRY KEY TRANSPONDER PROGRAMMING

All Sentry Key FOB with Integrated Keys (FOBIKs) included with the vehicle are pre-programmed to work with the Wireless Ignition Module when it is shipped from the factory. The Wireless Ignition Node (WIN) may be programmed to recognize up to a total of eight Sentry Keys. When programming a blank Sentry Key FOBIK, the integrated valet key must be cut to match the door lock cylinder in the vehicle for which it will be used. Once the additional or new key has been cut, the WIN must be programmed to recognize it as a valid FOBIK. There are two possible methods to program the WIN to recognize a new or additional valid FOBIK, the Secured Access Method and the Customer Learn Method. Following are the details of these two programming methods.

SECURED ACCESS METHOD

The Secured Access method applies to all vehicles. This method requires the use of a diagnostic scan tool. This method will also require that you have access to the unique four-digit PIN code that was assigned to the original WIN. The PIN code **must** be used to enter the Secured Access Mode in the WIN. This PIN number may be obtained from the vehicle owner, from the original vehicle invoice, or from the Chrysler Customer Center. Refer to **Electrical - Electronic Control Modules/Electronic Control Modules - Standard Procedure** .

CUSTOMER LEARN METHOD

NOTE: **The Customer Learn feature is only available on domestic vehicles, or those vehicles which have a U.S. country code designator. This programming method also requires access to at least two valid Sentry Key FOBIKs. If two valid Sentry Key FOBIKs are not available, or if the vehicle does not have a U.S. country code designator, the Secured Access Method MUST be used to program new or additional valid keys to the WIN.**

The Customer Learn programming method procedures are as follows:

1. Obtain the blank Sentry Key FOBIK(s) that are to be programmed as valid for the vehicle. Cut the blank integrated valet key(s) to match the door lock cylinder mechanical key codes.
2. Insert one of the two valid Sentry Key FOBIKs into the ignition switch and turn the ignition switch to the ON position.
3. After the ignition switch has been in the ON position for longer than 3 seconds, but no more than 15 seconds, cycle the ignition switch back to the OFF position. Replace the first valid Sentry Key FOBIK in the ignition switch with the second valid Sentry Key FOBIK and turn the ignition switch back to the ON position. The second valid FOBIK must be inserted into the ignition switch within 15 seconds of removing the first valid FOBIK.

4. About 10 seconds after the completion of 3, the security indicator in the instrument cluster will start to flash and a single audible chime will sound to indicate that the system has entered the Customer Learn programming mode.
5. Within 60 seconds of entering the Customer Learn programming mode, turn the ignition switch to the OFF position. Replace the valid Sentry Key FOBIK with a new Sentry Key FOBIK with a blank transponder and turn the ignition switch back to the ON position.
6. About 10 seconds after the completion of 5, a single audible chime will sound and the security indicator will stop flashing, stay ON solid for 3 seconds, then turn OFF to indicate that the new Sentry Key FOBIK blank transponder has been successfully programmed. The SKIS will immediately exit the Customer Learn programming mode. After the ignition is cycled the vehicle may be started using the newly programmed valid Sentry Key FOBIK.

Each of these steps must be repeated and completed in their entirety for each additional Sentry Key FOBIK that is to be programmed. If the above steps are not completed in the given sequence, or within the allotted time, the SKIS will exit the Customer Learn programming mode and the programming will be unsuccessful. The WIN will also automatically exit the Customer Learn programming mode if it sees a Sentry Key FOBIK with a non-blank transponder when it should see a blank, if it has already programmed 8 valid Sentry Key FOBIKs, or if the ignition switch is turned to the OFF position for more than about 50 seconds.

KEY, TRANSPONDER

DESCRIPTION

DESCRIPTION

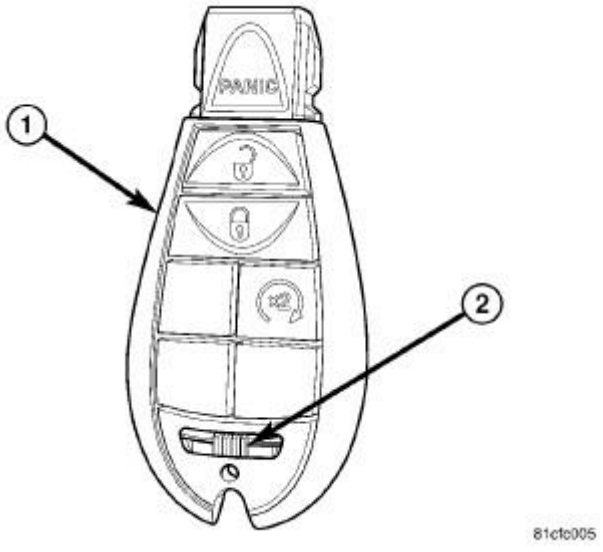

Fig. 1: Transponder Key
Courtesy of CHRYSLER LLC

The FOBIK has a transponder chip included on the circuit board beneath the cover of each FOB with

Integrated Key (FOBIK) (1) included with the vehicle. The FOBIK includes an integral mechanical valet key which is stored within the bottom of the FOBIK housing until it is released using the latch button (2). The valet key is cut to match the mechanical coding of the door and glove box lock cylinders. Each new replacement FOBIK must be programmed for operation of the Remote Keyless Entry (RKE) system and has a unique transponder identification code that is permanently programmed into it by the manufacturer. This identification code must be programmed into the Wireless Ignition Node (WIN).

The FOBIK transponder cannot be adjusted or repaired. If ineffective or damaged, the entire FOBIK and RKE transmitter unit must be replaced.

OPERATION

OPERATION

When the ignition switch is turned to the ON position, the Wireless Ignition Node (WIN) communicates through its antenna with the Sentry Key transponder within the FOB with Integrated Key (FOBIK) using a Low Frequency (LF) Radio Frequency (RF) signal. The WIN then listens for a LF response from the transponder through the same antenna. The Sentry Key transponder chip is within the range of the WIN transceiver antenna ring when it is inserted into the ignition switch.

The WIN determines whether a valid FOBIK is present in the ignition switch based upon the response from the transponder. If a valid FOBIK is detected, that fact is communicated by the WIN to the Powertrain Control Module (PCM) over the Controller Area Network (CAN) data bus, and the PCM allows the engine to continue running. If the PCM receives an **invalid key** message, or receives no message from the WIN over the CAN data bus, the engine will be disabled after about two seconds of operation. The Instrument Cluster, Cab Compartment Node (CCN) will also respond to the **invalid key** message on the CAN data bus by flashing the security indicator ON and OFF.

Each Key FOBIK has a unique transponder identification code permanently programmed into it by the manufacturer. Likewise, the WIN has a unique Secret Key code programmed into it by the manufacturer. When a Key FOBIK is programmed into the memory of the WIN, the WIN stores the transponder identification code from the Key FOBIK, and the Key FOBIK learns the Secret Key code from the WIN. Once the Key FOBIK learns the Secret Key code of the WIN, it is permanently stored in the memory of the transponder. Therefore, once a FOBIK has been programmed to a particular vehicle, it cannot be used on any other vehicle. See **Electrical - Vehicle Theft Security/Vehicle Theft Security - Standard Procedure**.

The WIN performs a self-test each time the ignition switch is turned to the ON position, and will store key-related fault information in the form of a Diagnostic Trouble Code (DTC) in WIN memory if a Key FOBIK transponder problem is detected. The Key FOBIK transponder chip can be diagnosed, and any stored DTC can be retrieved using a diagnostic scan tool. Refer to the appropriate diagnostic service information.

ACCESSORIES AND EQUIPMENT

Power Windows - Service Information - Challenger

DESCRIPTION

DESCRIPTION

The power window system allows each of the door windows to be raised and lowered electrically by actuating a switch on the trim panel of each respective door. A master switch on the driver side front door trim panel, allows the driver to raise or lower each of the passenger door windows and to lock out the individual switches on the passenger doors from operation. The power window system receives battery feed through a circuit breaker in the Junction Block (JB), only when the ignition switch is in the ON position.

The power window system includes the power window switches on each door trim panel, a circuit breaker, door modules and the power window motors inside each door.

The window motors are replaced with the window regulator assembly. If the window motors require replacement, the window regulator must be replaced.

NOTE: **When the glass is removed or adjusted, the motor replaced and/or the regulator is replaced, the door module must be denormalized before it can be calibrated/normalized. See Electrical - Power Systems/Power Windows - Standard Procedure.**

OPERATION

OPERATION

POWER WINDOW SWITCH

The power windows are controlled by a window/lock switch on the trim panel of each front door. Switches in the driver door window/lock switch allows the driver to control the passenger windows.

The power window switch for the driver side front door window has a second detent position beyond the normal Down position, that provides an automatic one-touch window down feature.

Some vehicles may be equipped with an express closing feature (front windows only). During an express closing, anytime an obstacle is detected in the way of the glass, the motor will stop and reverses travel to avoid pinching an occupant fingers. Modules in the doors are programmed to compare the position of the glass to the amount of current being used to drive up the glass.

The system also includes various features to manage the perceived forces on the glass as it travels up. If the express closing calibration is lost, the system will self-calibrate itself after the windows are moved up and down two cycles.

The power window switches control the battery and ground feeds to the power window motors. All passenger door power window switches receive their battery and ground feeds through the circuitry of the window/lock switch. When the power window lockout switch is in the Lock position, the battery feed for the individual passenger door power window switches is interrupted.

POWER WINDOW MOTOR

A permanent magnet reversible motor moves the window regulator through an integral gearbox mechanism. A positive and negative battery connection to the two motor terminals causes the motor to rotate in one direction. Reversing the current through these same two connections causes the motor to rotate in the opposite direction.

In addition, each power window motor is equipped with an integral self-resetting circuit breaker to protect the motor from overloads.

NOTE: When the glass is removed or adjusted, the motor replaced and/or the regulator is replaced, the door module must be denormalized before it can be calibrated/normalized. See Electrical - Power Systems/Power Windows - Standard Procedure.

EXPRESS DOWN WINDOW FEATURE

This feature allows you to remotely lower both front door windows at the same time. To use this feature, press and release the UNLOCK button on the RKE transmitter and then immediately press and hold the UNLOCK button until the windows lower to the desired level or until they lower completely.

DIAGNOSIS AND TESTING

POWER WINDOWS

Any diagnosis of the Power Windows system should begin with the use of scan tool. For information on the use of the scan tool, refer to the appropriate Diagnostic Service information.

For complete circuit diagrams, refer to the appropriate wiring information.

STANDARD PROCEDURE

CLEAR/RELEARN

NOTE: Make sure battery is fully charged before proceeding.

NOTE: This needs to be completed every time the window glass is adjusted/removed, motor replaced, and or regulator replaced.

CLEAR/DENORMALIZE USING A SCAN TOOL

To clear/denormalize the door module memory, using a scan tool under the Miscellaneous menu look for Denormalization Window Command/ECU reset, and follow the directions.

RELEARN/NORMALIZE USING A SCAN TOOL

To relearn/normalize the door module memory, using a scan tool under the Miscellaneous menu look for Normalization Window command, and follow the directions.

CLEAR/DENORMALIZE, RELEARN/NORMIALIZE WITHOUT A SCAN TOOL

Hold up/down the window switch for at least 30 seconds until the DTC is set for stuck switch. This will clear the memory of the calibration information (CLEAR/DENORMAILIZE). Proceed to relearn/normalize.

1. Put a battery charger on vehicle.
2. If equipped with express-up/express-down, reset the express-up/down module for the door window glass. The window switch on the corresponding door must be used to control the window. Do not use the master switch for the passenger window.
3. To calibrate, start by moving the window to the middle position.
4. Drive the glass to the full-up position by pulling up on the window switch to its second detent and hold the switch until the glass is fully closed. Do not release the window switch. Continue to hold the window switch up for 2 seconds after the window glass is full closed.
5. Drive the glass to the full - down position by pushing down (depress) the window switch, (second detent if equipped with express-down) until the window glass is down for 2 seconds after the window glass is fully open. Do not release the window switch. Continue to hold the window switch down for 2 seconds after the window glass is fully open.
6. Check the operation of the express-up/ express-down feature.
7. If the express up/down doesn't work, repeat step # 3, waiting for 3 seconds.
8. Check that the window glass reverses when in the express-up mode by holding a pen in the path of the glass.
9. Once the proper operation of the express-up/express-down feature has been verified, clear all Diagnostic Trouble Codes (DTC's).

MOTOR, WINDOW REGULATOR

DIAGNOSIS AND TESTING

DIAGNOSIS AND TESTING

1. Remove door trim panel. Refer to **Body/Door - Front/PANEL, Door Trim - Removal**
2. Connect positive (+) lead from a test battery to either of the two motor terminals.
3. Connect negative (-) lead from test battery to remaining motor terminal.

4. The motor should now rotate in one direction to either move window up or down.
    a. If window happens to already be in full UP position, and motor is connected so as to move it in UP direction, no movement will be observed.
    b. Likewise, if motor connected to move window in DOWN direction, no movement will be observed if window is already in full DOWN position.
    c. Reverse battery lead in 2 and 3 , and window should now move. If window does not move, replace motor.
5. If window moved completely up or down, the test leads should be reversed one more time to complete a full window travel inspection.
6. If window does not move, check to make sure that it is free.
7. The window should slide up and down freely in the glass channels. If the window does not move freely, the window lift motor will not be able to move the glass.
8. To determine if the glass slides freely, disconnect the regulator from the glass lift plate. Remove the two attaching screws, and slide the window up and down by hand.

REMOVAL

REMOVAL

1. Disconnect and isolate the negative battery cable.
2. Remove the door trim panel. Refer to **Body/Door - Front/PANEL, Door Trim - Removal**
3. Disconnect the electrical connector.
4. Remove the mounting fasteners and remove the motor.

INSTALLATION

INSTALLATION

1. Install the window motor and install the mounting fasteners.
2. Connect the electrical connector.
3. Install the door trim panel. Refer to **Body/Door - Front/PANEL, Door Trim - Installation**
4. Connect the negative battery cable.

SWITCH, POWER WINDOW

REMOVAL

REMOVAL

NOTE: **A battery reconnect procedure must be performed anytime the battery has been disconnected. Refer to Electrical - Engine Systems/Battery System - Standard Procedure and Electrical - Power Systems/Power Locks/SWITCH, Lock - Removal .**

INSTALLATION

INSTALLATION

NOTE: **A battery reconnect procedure must be performed anytime the battery has been disconnected. Refer to Electrical - Engine Systems/Battery System - Standard Procedure and Electrical - Power Systems/Power Locks/SWITCH, Lock - Installation .**

ACCESSORIES AND EQUIPMENT

Wipers/Washers - Service Information - Challenger

DESCRIPTION

DESCRIPTION

The wiper/washersystem includes the following major components:

- **Front Control Module (FCM)** - This module is integral to the Integrated Power Module (IPM) and is located in the engine compartment, near the right shock tower. Refer to **Electrical - Wiring/Power Distribution - Description** .
- **Washer Nozzle** - Two washer nozzles with integral check valves are secured to the hood panel near the base of the windshield.
- **Washer Plumbing** - The plumbing for the washer system consists of nylon hoses and molded plastic fittings. The plumbing is routed within the engine compartment from the washer reservoir. The washer hose is routed across the underside of the hood panel to the washer nozzles.
- **Wiper Arms** - The two wiper arms are secured with nuts to the threaded ends of the two wiper pivot shafts, which extend through the cowl panel located near the base of the windshield.
- **Wiper Blade** - The two wiper blades are secured to the two wiper arms with an integral latch, and are parked on the glass near the bottom of the windshield when the wiper system is not in operation.
- **Wiper Module** - The wiper pivot shafts are the only visible components of the wiper module. The remainder of the module is concealed within the engine compartment beneath the cowl panel. The wiper module includes a cast aluminum wiper module bracket, two rubber-isolated wiper module mounts, one dowel on the underside of the wiper motor, the wiper motor crank arm, the two wiper drive links, the two powered wiper pivots.
- **Instrument Cluster** - The ElectroMechanical Instrument Cluster (EMIC) is also known as the Cab Compartment Node (CCN). The EMIC/CCN is located in the instrument panel above the steering column opening, directly in front of the driver. Refer to **Electrical - Instrument Cluster/Instrument Cluster - Description** .
- **Multifunction Switch** - The multifunction switch is located on the steering column, just behind the steering wheel. A control stalk that extends from the left side of the switch that is dedicated to providing all of the driver controls for the front wiper/washer systems, turn signal, and high and low beam functions. Refer to **Electrical - Lamps and Lighting/Lamps/Lighting - Exterior/SWITCH, Multifunction - Description** .
- **Washer Fluid Level Switch** - Located in a dedicated hole on the lower portion of the washer reservoir, ahead of the right front wheel house splash shield.
- **Washer Pump/Motor** - The electric washer pump/motor is located in the lower portion of the washer reservoir, ahead of the right front wheel house splash shield. The washer pump/motor provides washer fluid to the front washer system plumbing.
- **Washer Reservoir** - The washer reservoir is mounted just in front of the right front wheel splash shield. The filler neck is located in the right front corner of the engine compartment.

- **Wiper High/Low Relay** - Located in the Power Distribution Center (PDC) in the engine compartment.
- **Wiper On/Off Relay** - Located in the Power Distribution Center (PDC) in the engine compartment.

OPERATION

OPERATION

WIPER/WASHER SYSTEM

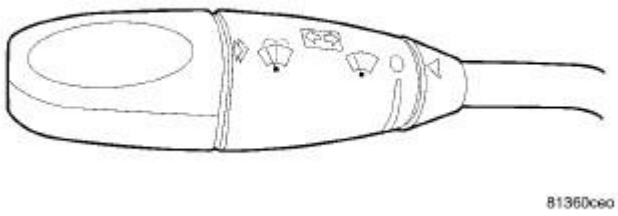

Fig. 1: Multi-Function Switch
Courtesy of CHRYSLER LLC

All wiper/washer system functions are initiated with the control knob on the end of the multifunction switch control stalk that extends from the left side of the steering column, just behind the steering wheel. Rotating the control knob on the end of the control stalk, selects the off, intermittent, auto (on models equipped with automatic wipers), low, or high front wiper system operating modes. In the intermittent mode, the control knob allows the vehicle operator to select from one of six intermittent wipe intervals. In the auto mode, the control knob allows the vehicle operator to select from one of six automatic wiper sensitivity levels. Pressing in on the end of the control stalk momentarily activates the Mist Wipe. Pressing it in all the way activates the windshield washers. In the auto mode, the sensitivity of the wipers is increased (less delay between wipes), the result is a corresponding acknowledgment wipe to let you know an adjustment has been made to the system. The multifunction switch provides hardwiredresistor multiplexed inputs to the Steering Column Control Module (SCCM), for all of the wiper/washer system functions. The SCCM then sends electronic messages to the Front Control Module (FCM) over the Controller Area Network (CAN) data bus requesting the appropriate front wiper/washer system operating modes.

All wiper/washer system operation is controlled by the FCM logic circuits. That logic will only allows these systems to operate when the ignition switch is in the accessory or on positions. Battery current is directed from a B(+) fuse in the Integrated Power Module (IPM) to the wiper on/off relay, and the wiper high/low relay in the Power Distribution Center (PDC) through a fused B(+) circuit. The FCM uses low side drivers to control wiper system operation by energizing or de-energizing the wiper high/low and wiper on/off relays. The FCM uses both high side and low side drivers to control the operation of the washer pump/motor unit. The multifunction switch circuitry receives a clean ground output from the SCCM on a multifunction switch return circuit, then provides resistor multiplexed inputs to the SCCM on an intermittent wipe mux circuit to indicate the selected wiper system mode

and on a wash/beam select mux circuit to indicate the selected washer system mode.

CONTINUOUS WIPE MODE

When the low position of the multifunction switch is selected, the SCCM sends an electronic wiper switch low message to the FCM, the FCM then energizes the wiper on/off relay. This directs battery current to the low speed brush of the wiper motor through the normally open contacts of the energized wiper on/off relay and the normally closed contacts of the de-energized wiper high/low relay causing the wipers to cycle at low speed.

When the high position of the control knob is selected, the SCCM sends an electronic wiper switch high message to the FCM, the FCM then energizes both the wiper on/off and the wiper high/low relays. This directs battery current to the hight speed brush of the wiper motor through the normally open contacts of the energized wiper on/off relay and the normally open contacts of the energized wiper high/low relay, causing the wipers to cycle at high speed.

When the off position of control knob is selected, the SCCM sends an electronic wiper switch off message to the FCM. If the wiper motor was operating at high speed, the FCM immediately de-energizes the wiper high/low relay causing the wiper motor to return to low speed operation, causing one of two events to occur. The event that occurs depends on the position of the wiper blades on the windshield at the moment that the control knob off position is selected.

If the wiper blades are in the down position on the windshield when the off position is selected, the park switch that is integral to the wiper motor is closed to ground and provides a hard wired park switch sense input to the FCM. The FCM then de-energizes the wiper on/off relay and the wiper motor ceases to operate. If the wiper blades are not in the down position on the windshield at the moment the off position is selected, the park switch is an open circuit and the FCM keeps the wiper on/off relay energized, causingthe wiper motor to continue running at low speed until the wiper blades are in the down position on the windshield and the park switch input to the FCM is again closed to ground.

HEADLAMPS ON WITH WIPERS MODE

The CCN provides an automatic headlamps on with wipers feature for models equipped withautomatic headlamps. This is a customer programmable feature. If this feature is enabled, the headlamps turn on automatically whenever the windshield wipers are turned on, and turn off automatically when the wipers are turned off. If this feature is enabled, when the automatic wiper mode is selected, the headlamps turn on automatically only after the wipers complete a minimum of five automatic wipe cycles within about 60 seconds.The headlamps turn off automatically after four minutes elapse without any wipe cycles.

INTERMITTENT WIPE MODE

When the control knob of the multifunction switch control knob is moved to one of the intermittent interval positions, the SCCM sends an electronic wiper switch delay message to the FCM, then the FCM electronic intermittent wipe logic circuit responds by calculating the correct length of time between wiper sweeps based upon the selected delay interval input. The FCM monitors the changing state of the wiper motor park switch through a hardwired park switch sense input. This input allows

the FCM to determine the proper intervals at which to energize and de-energize the wiper on/off relay and to operate the wiper motor intermittently for one low speed cycle at a time.

The FCM logic is also programmed to provide vehicle speed sensitivity to the selected intermittent wipe delay intervals. In order to provide this feature the FCM monitors electronic vehicle speed messages from the Powertrain Control Module (PCM) and doubles the selected delay interval whenever the vehicle speed is approximately 16 km/h (10 mph) or less.

PULSE WIPE MODE

When the control knob of the multifunction switch control stalk is pressed to the momentary pulse wipe position for less than one-half second, the SCCM sends an electronic switch message to the FCM, the FCM then energizes the wiper on/off relay for one complete wipe cycle. The FCM de-energizes the relay when the state of the park switch sense changes to ground, parking the wiper blades near the base of the windshield.

WASH MODE

When the control knob of the multifunction switch contral stalk is pressed to the momentary wash position for more than one-half second, the SCCM sends an electronic washer switch message to the FCM, the FCM then directs battery current and ground to the washer pump/motor unit. This causes the washer pump/motor unit to be energized for as long as the Wash switch is held closed, up to about 10 seconds, and to de-energize when the front Wash switch is released.

When the control knob is pressed to the momentary wash position while the wiper system is operating in one of the intermittent interval positions, the washer pump/motor operation is the same. However, the FCM also energizes the wiper on/off relay to override the selected delay interval and operate the wiper motor in a continuous low speed mode for as long as the control knob is held pressed, then de-energizes the relay and reverts to the selected delay mode interval several wipe cycles after the control knob is released. If the control knob is held pressed for more than 10 seconds, the FCM suspends washer pump/motor operation until the knob is released, then cycled back to the wash position, if so desired.

The headlamp washer system (if equipped) uses a separate high pressure pump attached to the windshield washer reservoir. The headlamp washer pump feeds then nozzles mounted in the front fascia of the vehicle. The nozzle bodies spray the headlamps with high pressure washer solvent when the system is activated.

To activate the headlamp washers, turn the headlamps on and press the windshield washer control knob. This operates the windshield washers and directs two, timed, high pressure sprays onto the headlamp lens.

WIPE-AFTER-WASH MODE

When the control knob of the multifunction switch control stalk is pressed to the momentary wash position for more than one-half second while the wiper system is not operating, the instrument cluster sends an electronic washer switch message to the FCM, the FCM then directs battery current and ground to the washer pump/motor unit and energizes the wiper on/off relay. This will causes the

washer pump/motor unit to be energized and operate the wiper motor in a continuous low speed mode for as long as the wash switch is held closed, up to about 10 seconds. When the control knob is released, the FCM de-energizes the washer pump/motor unit, but allows the wiper motor to operate for several additional wipe cycles before it de-energizes the wiper on/off relay and parks the wiper blades near the base of the windshield.

If the control knob is held pressed for more than 30 seconds, the FCM suspends washer pump/motor operation until the knob is released, then cycled back to the wash position. However, the wipers continue to operate for as long as the wash switch is held closed. The FCM monitors the changing state of the wiper motor park switch through a hardwired wiper park switch sense circuit input. This input allows the FCM to count the number of wipe cycles that occur after the wash switch is released, and to determine the proper interval at which to de-energize the wiper on/off relay to complete the wipe-after-wash mode cycle.

ARM, WIPER

REMOVAL

REMOVAL

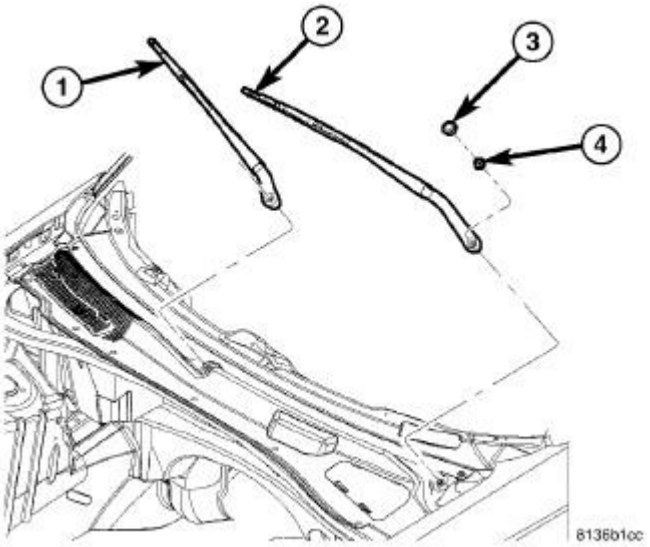

Fig. 2: Removing/Installing Front Wiper Arms
Courtesy of CHRYSLER LLC

1. Remove the nut caps (3).
2. Remove the retaining nuts (4).

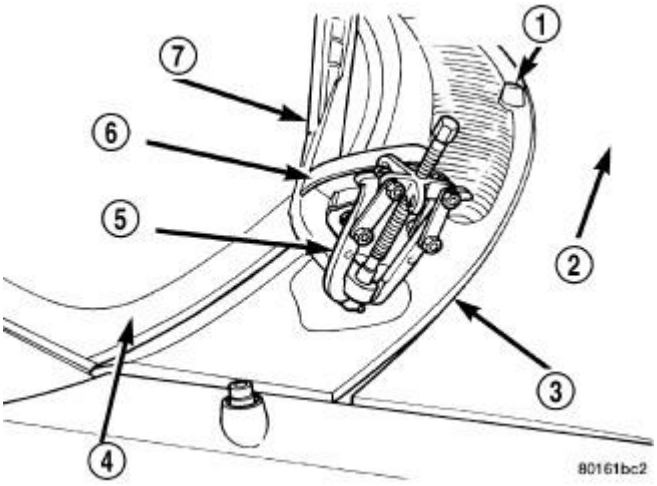

Fig. 3: Wiper Pivot
Courtesy of CHRYSLER LLC

3. Using a suitable two-jaw puller (5), separate the wiper arm (7) from the wiper pivot.

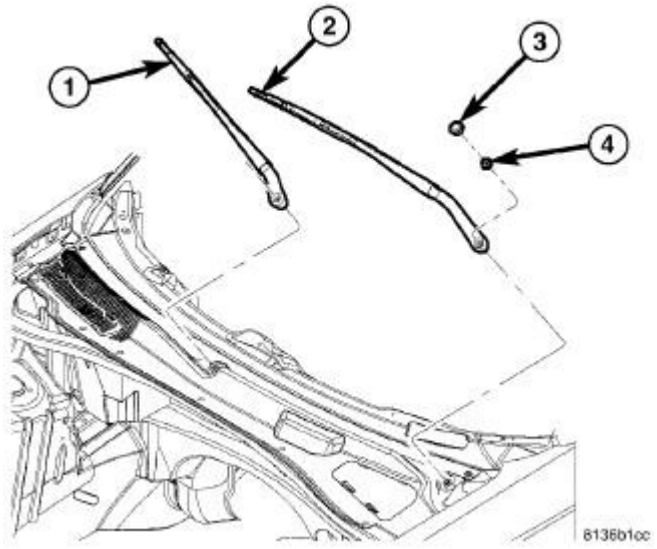

Fig. 4: Removing/Installing Front Wiper Arms
Courtesy of CHRYSLER LLC

4. Remove the wiper arms (1 and 2).

INSTALLATION

INSTALLATION

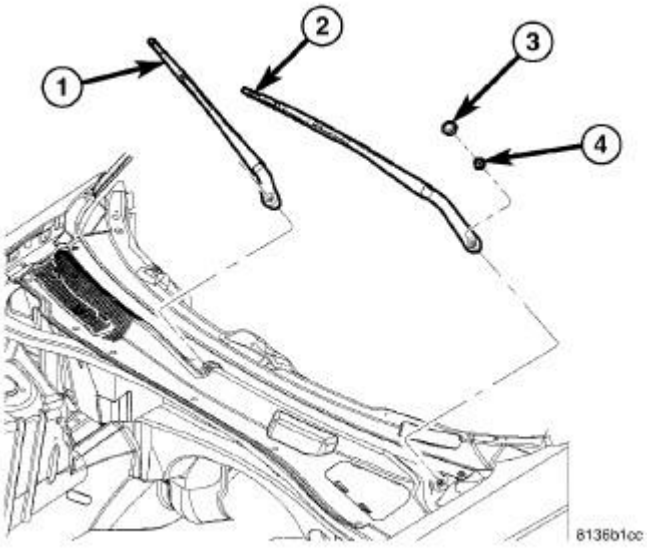

Fig. 5: Removing/Installing Front Wiper Arms
Courtesy of CHRYSLER LLC

1. Install wiper arms (1) on wiper arm pivots.
2. Install retaining nuts (4). Tighten nuts to 18 N.m (13 ft. lbs.).
3. Install nut caps (3).

LINKAGE, WIPER ARM

DESCRIPTION

DESCRIPTION



Fig. 6: Front Wiper Module
Courtesy of CHRYSLER LLC

The wiper module is secured to the cowl plenum with screws through two rubber grommet-type insulators. The module is located in the rear of the engine compartment, concealed beneath the molded plastic cowl plenum grille panel. The ends of the pivot shafts protruding through openings in

the cowl plenum cover/grille panel are the only visible components of the wiper module. The wiper module consists of the following major components:

- **Crank Arm** - The wiper motor crank arm is a stamped steel unit with an internally splined hole on the driven end that is secured to the wiper motor output shaft with a nut.A long ball stud secures the drive end to accept the wiper linkage.
- **Linkage** - The two wiper linkage members are constructed of stamped steel. A driver side drive link consists of a plastic socket-type bushing in the left end, and a plastic sleeve-type bushing in the right end. The socket bushing is snap-fit over the pivot ball stud on the left pivot lever arm, while the sleeve bushing is fit over the longer pivot stud on the wiper motor crank arm. The passenger side drive link has a plastic socket-type bushing on each end. One end of this drive link is snap-fit over the ball stud on the right pivot lever arm, while the other end is snap-fit over the top of the driver side drive link on the ball stud of the wiper motor crank arm.
- **Motor** - The wiper motor is secured on the underside of the module bracket near the center with three screws. The wiper motor output shaft passes through a hole in the module bracket, where a nut secures the wiper motor crank arm to the motor output shaft. The two-speed permanent magnet wiper motor features an integral transmission, an internal park switch, and an internal Positive Temperature Coefficient (PTC) circuit breaker.
- **Pivots** - This module features two pivots. The two wiper pivot shafts have lever arms with ball studs at their base to accept the wiper linkage. The upper end of all three pivot shafts has a threaded stud with a tapered and serrated area just below the threads to accept the left or right wiper arm links.

The wiper module cannot be adjusted or repaired. The wiper motor is only available for separate service replacement. If any other component of the module is inoperative or damaged, the entire front wiper module unit must be replaced.

OPERATION

OPERATION

The wiper module operation is controlled by the battery current inputs received by the wiper motor through the wiper on/off and wiper high/low relays. The wiper motor speed is controlled by current flow to either the low speed or the high speed set of brushes. The park switch is a single pole, single throw, momentary switch within the wiper motor that is mechanically actuated by the wiper motor transmission components. The park switch alternately opens and closes the wiper park switch sense circuit to ground, depending upon the position of the wipers on the glass. This feature allows the motor to complete its current wipe cycle after the wiper system has been turned off, and to park the wiper blades in the lowest portion of the wipe pattern. The automatic resetting circuit breaker protects the motor from overloads.

The wiper motor crank arm, the two wiper linkage members, and the two wiper pivots mechanically convert the rotary output of the wiper motor to the back and forth wiping motion of the wiper arms and blades on the glass.

REMOVAL

REMOVAL

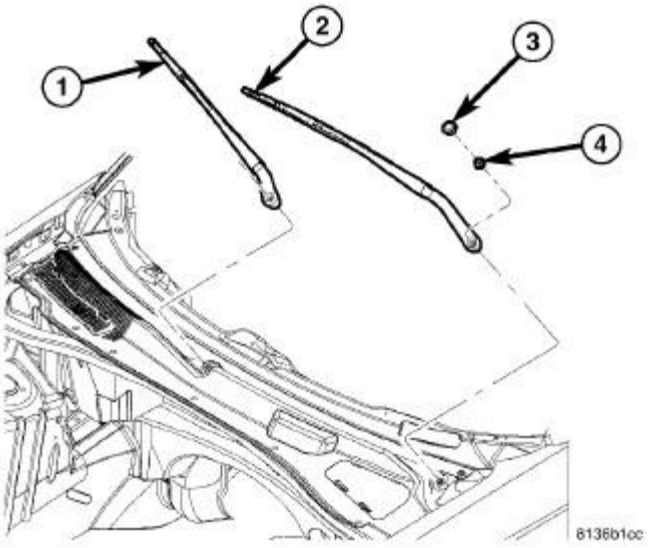

Fig. 7: Removing/Installing Front Wiper Arms
Courtesy of CHRYSLER LLC

1. Disconnect and isolate the battery negative cable.
2. Remove the wiper arms (1) and (2). See **Electrical - Wipers/Washers/Wipers/Washers/ARM, Wiper - Removal**.

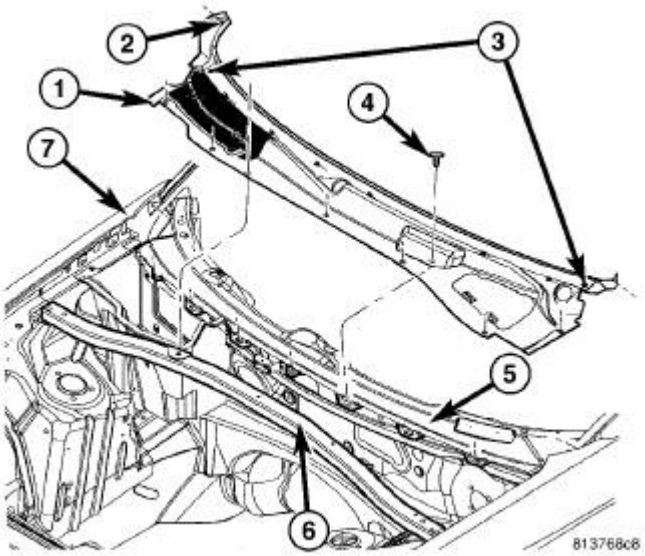

Fig. 8: Removing/Installing Cowl Panel
Courtesy of CHRYSLER LLC

3. Remove the cowl panel (1). Refer to **Body/Exterior/COVER, Cowl Panel - Removal** .

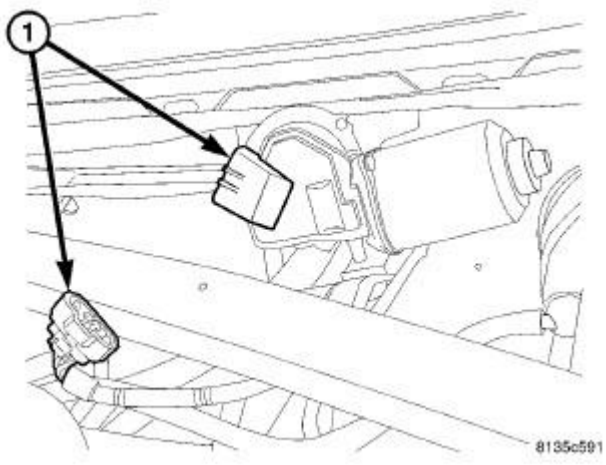

Fig. 9: Wiper Motor Electrical Connector
Courtesy of CHRYSLER LLC

4. Disconnect the wiper motor electrical connector (1).

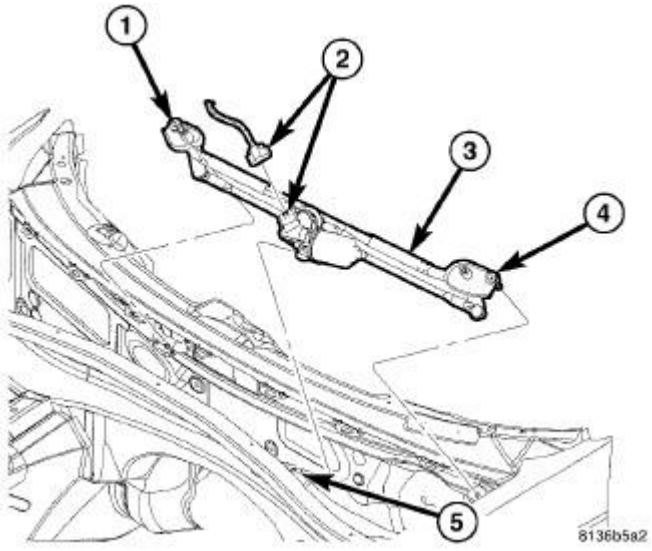

Fig. 10: Removing/Installing Wiper Module
Courtesy of CHRYSLER LLC

5. Remove the two retaining bolts (1 and 4) and remove wiper module (3) from vehicle.

INSTALLATION

INSTALLATION

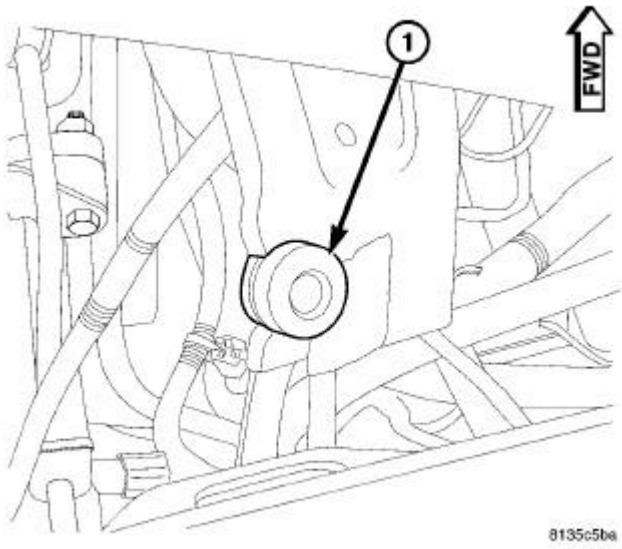

Fig. 11: Grommet
Courtesy of CHRYSLER LLC

1. Inspect the grommet (1) that the wiper motor sits in. If cracked, brittle, or damaged, replace the grommet (1).

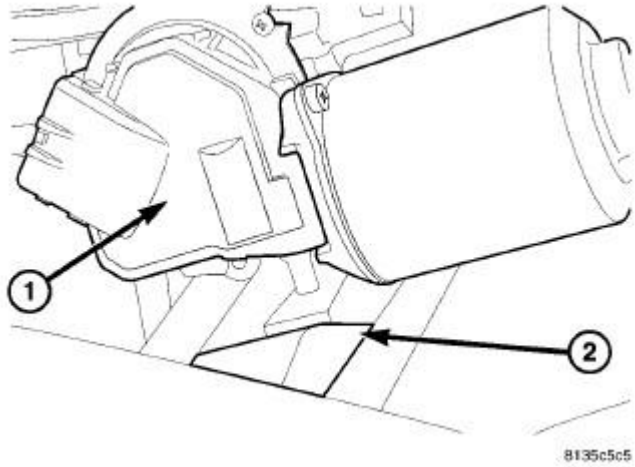

Fig. 12: Wiper Motor And Mounting Grommet
Courtesy of CHRYSLER LLC

2. While positioning the wiper module in its mounting location, make sure that the dowel on the bottom of the wiper motor (1) slides into the mounting grommet (2) correctly.

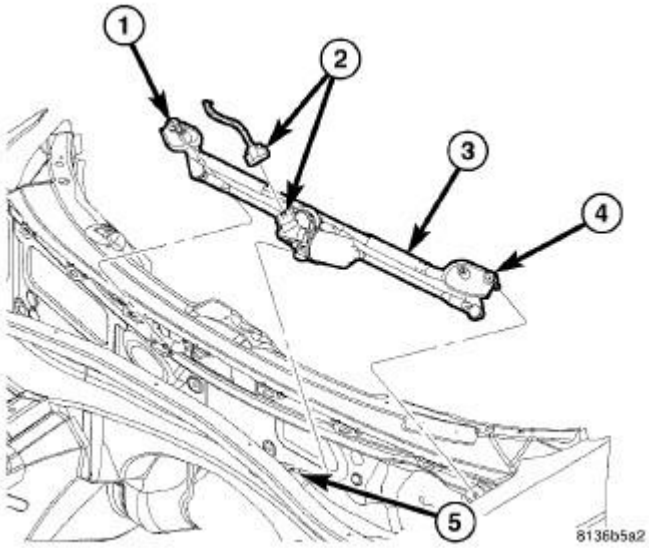

Fig. 13: Removing/Installing Wiper Module
Courtesy of CHRYSLER LLC

3. Install the two retaining bolts (1 and 4). Torque bolts to 8 N.m (70 in. lbs.).

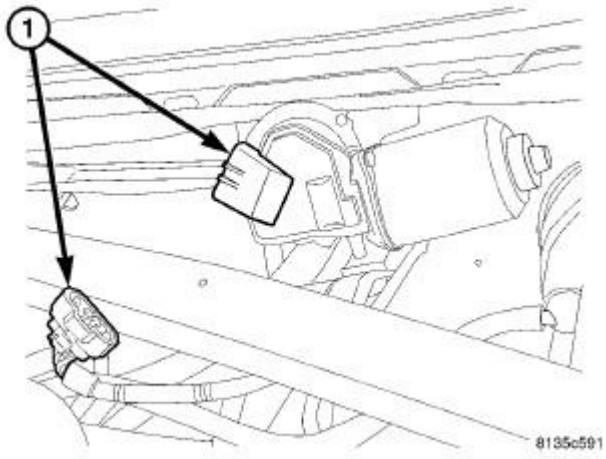

Fig. 14: Wiper Motor Electrical Connector
Courtesy of CHRYSLER LLC

4. Connect the wiper motor electrical connector (1).

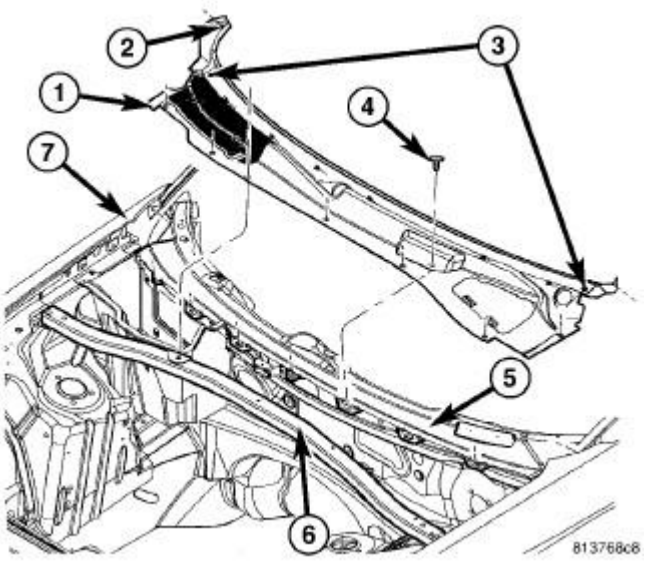

Fig. 15: Removing/Installing Cowl Panel
Courtesy of CHRYSLER LLC

5. Install the cowl panel (1). Refer to **Body/Exterior/COVER, Cowl Panel - Installation** .

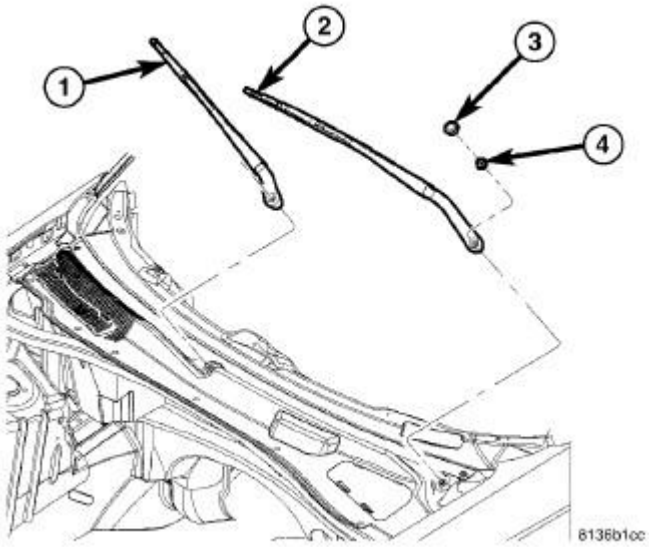

Fig. 16: Removing/Installing Front Wiper Arms
Courtesy of CHRYSLER LLC

6. Install the wiper arms (1) and (2). See **Electrical - Wipers/Washers/Wipers/Washers/ARM, Wiper - Installation**. Torque nuts to 18 N.m (150 in. lbs.).
7. Connect the battery negative cable.

MOTOR, WIPER, FRONT

REMOVAL

REMOVAL

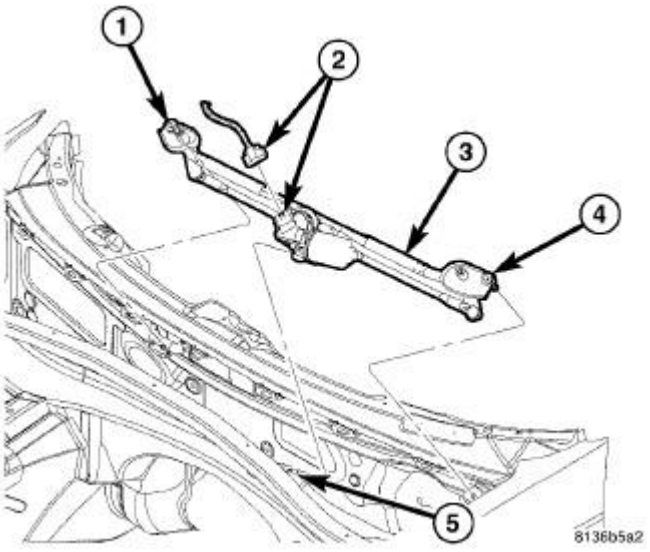

Fig. 17: Removing/Installing Wiper Module
Courtesy of CHRYSLER LLC

1. Disconnect and isolate the negative battery cable.
2. Remove the front wiper module (3). See **Electrical - Wipers/Washers/Wipers/Washers/LINKAGE, Wiper Arm - Removal**.

NOTE: When removing the motor from the linkage assembly, do not remove the bellcrank nut. A timing issue will arise with the cam in the motor and a new motor will be needed. The wiper motor will be shipped from Mopar® with the bellcrank already installed.

3. With the front wiper module on bench or in vise, remove the linkage using a screwdriver, flat bar, or equivalent to pry the linkage off the bellcrank.
4. Remove the two motor mounting bolts (1).

NOTE: When separating the motor from the linkage, there are two pocket nuts that may fall out. Take care to keep these and reinstall them during installation.

5. Separate the wiper motor from the wiper module/linkage.

INSTALLATION

INSTALLATION

NOTE: **When installing the motor onto the linkage assembly, do not remove the bellcrank. A timing issue will arise with the cam in the motor and a new motor will be needed. The wiper motor will be shipped from Mopar® with the bellcrank already installed.**

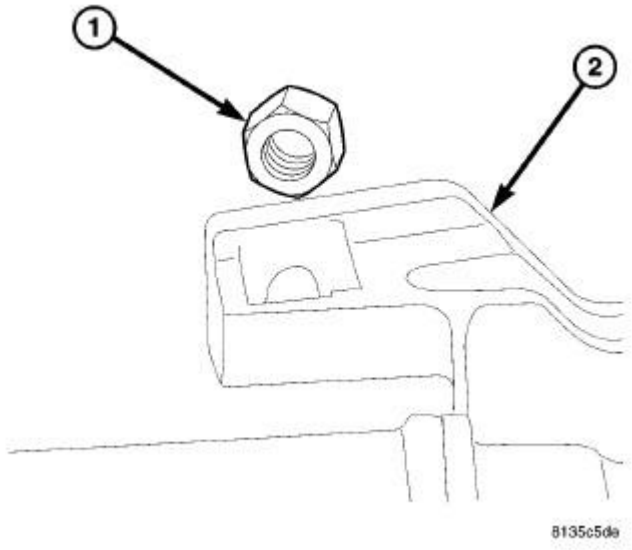

Fig. 18: Pocket Nut
Courtesy of CHRYSLER LLC

1. Ensure that the pocket nuts (1) are in place in the motor before assembly.
2. If needed to install pocket nut (1), align the nut with the pocket.

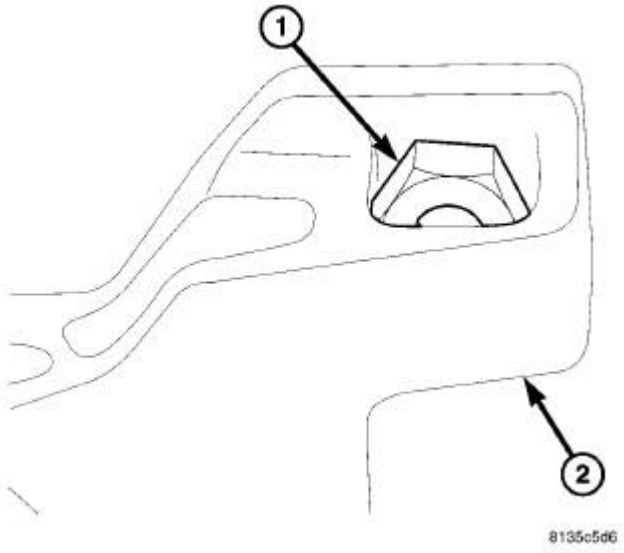

Fig. 19: Pocket Nut
Courtesy of CHRYSLER LLC

3. Drop nut (1) into pocket.
4. Place wiper motor in its mounting location making sure that the pocket nuts are in place.
5. Install and tighten the mounting bolts (1).
6. Snap the wiper linkage on the ball on the bellcrank. Make sure to use Mopar® approved grease when installing.

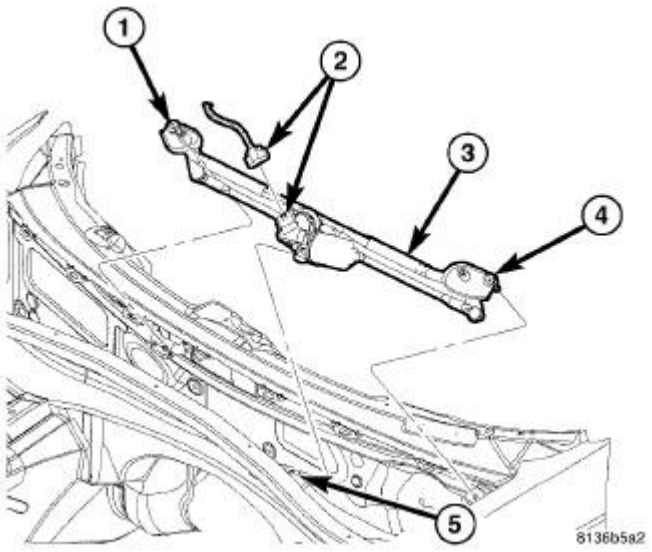

Fig. 20: Removing/Installing Wiper Module
Courtesy of CHRYSLER LLC

7. Install the front wiper module (3). See **Electrical - Wipers/Washers/Wipers/Washers/LINKAGE, Wiper Arm - Installation**.
8. Connect the negative battery cable.

PUMP, WINDSHIELD WASHER

REMOVAL

REMOVAL

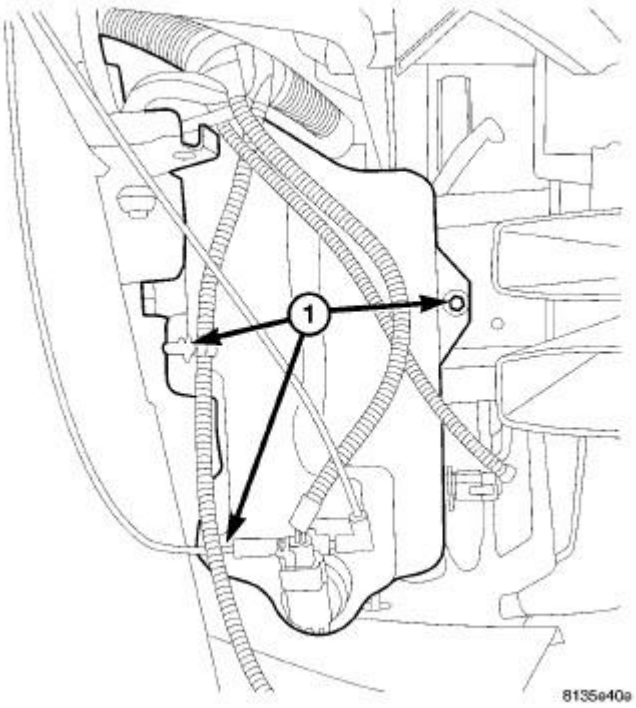

Fig. 21: Removing/Installing Washer Reservoir
Courtesy of CHRYSLER LLC

1. Disconnect and isolate the battery negative cable.
2. Drain washer fluid from the reservoir and into a suitable clean container. This can be done by disconnecting the windshield washer hose from the front (outboard) washer pump and allowing the washer fluid to drain into a container through a temporary jumper hose connected to the front washer pump.
3. Remove the washer reservoir. See **Electrical - Wipers/Washers/Wipers/Washers/RESERVOIR, Windshield Washer - Removal**.

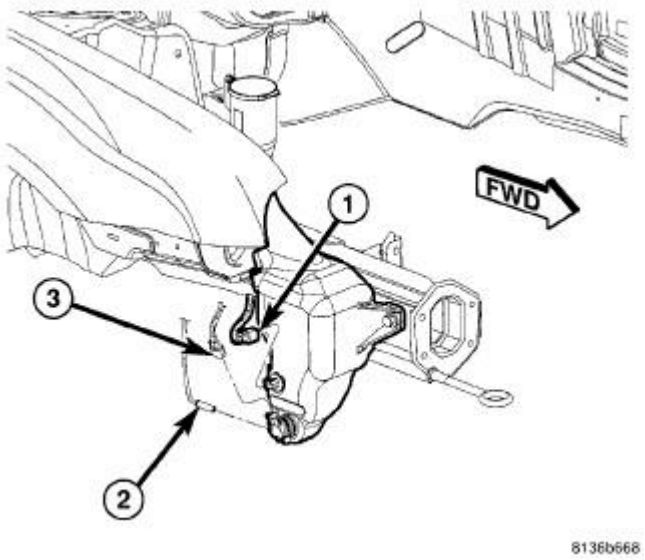

Fig. 22: Washer Pump Motor
Courtesy of CHRYSLER LLC

4. Remove the washer pump motor by pulling out of reservoir. Inspect the grommet and if installing a new motor, always use a new grommet.

INSTALLATION

INSTALLATION

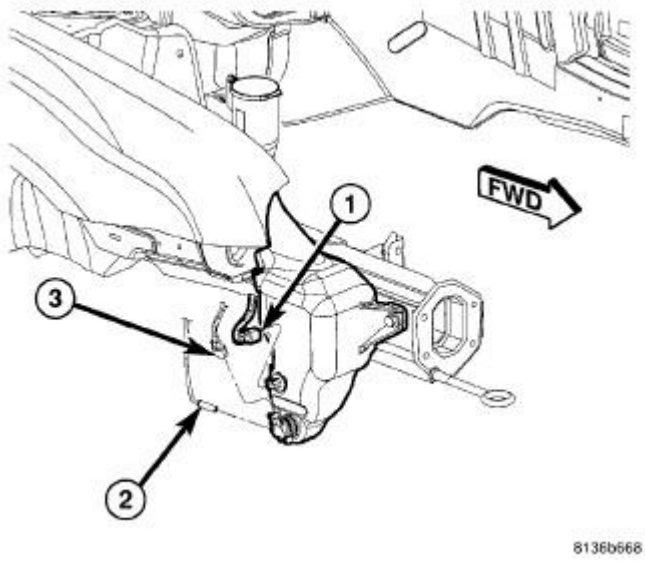

Fig. 23: Washer Pump Motor
Courtesy of CHRYSLER LLC

1. Inspect grommet and if installing new motor, use a new grommet. Position the motor into

opening and firmly press into place.

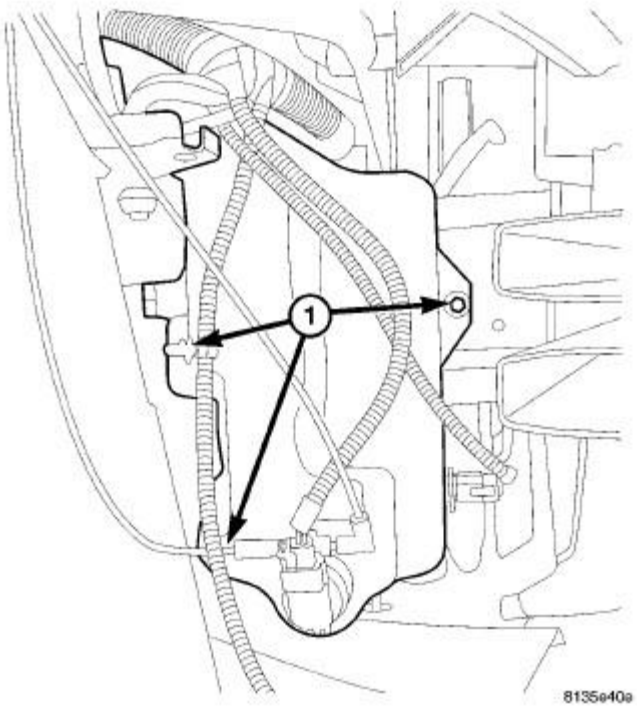

Fig. 24: Removing/Installing Washer Reservoir
Courtesy of CHRYSLER LLC

2. Install the washer reservoir. See **Electrical - Wipers/Washers/Wipers/Washers/RESERVOIR, Windshield Washer - Installation**.
3. Refill the reservoir with fluid drained previously.
4. Connect the battery negative cable.

RESERVOIR, WINDSHIELD WASHER

REMOVAL

REMOVAL

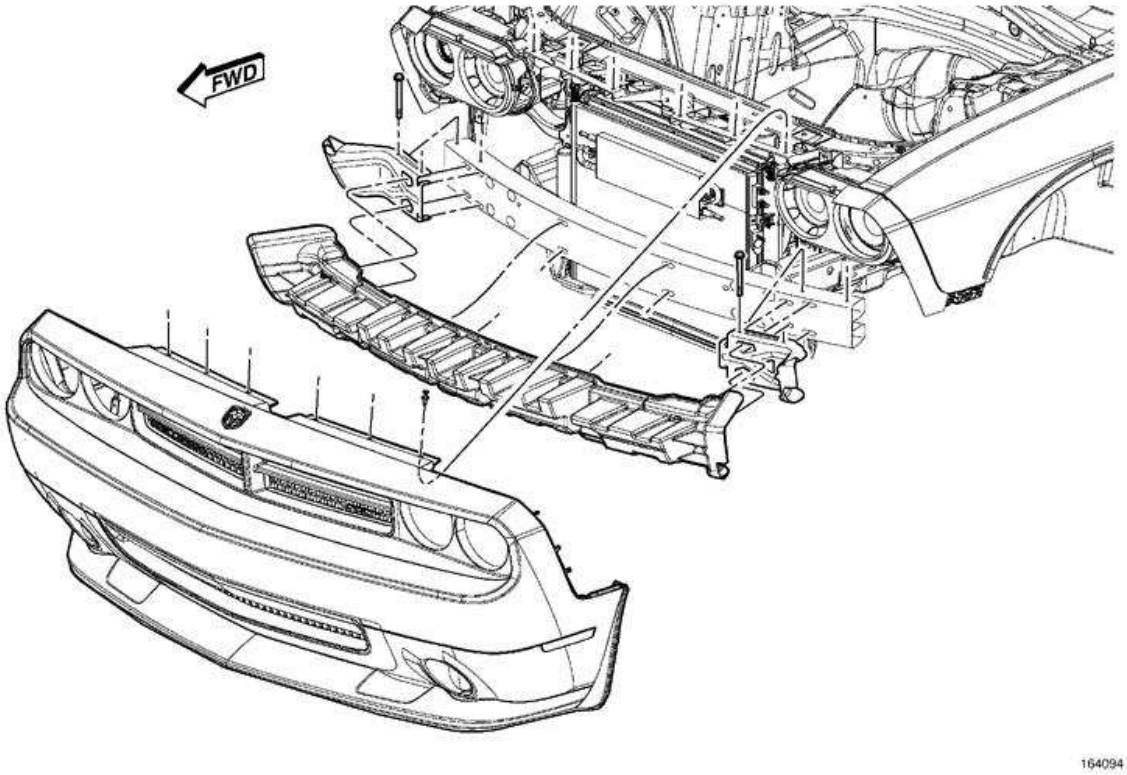

Fig. 25: Front Fascia
Courtesy of CHRYSLER LLC

1. Disconnect and isolate the battery negative cable.
2. Remove the front fascia. Refer to **Frame and Bumpers/Bumpers/FASCIA, Front - Removal** .

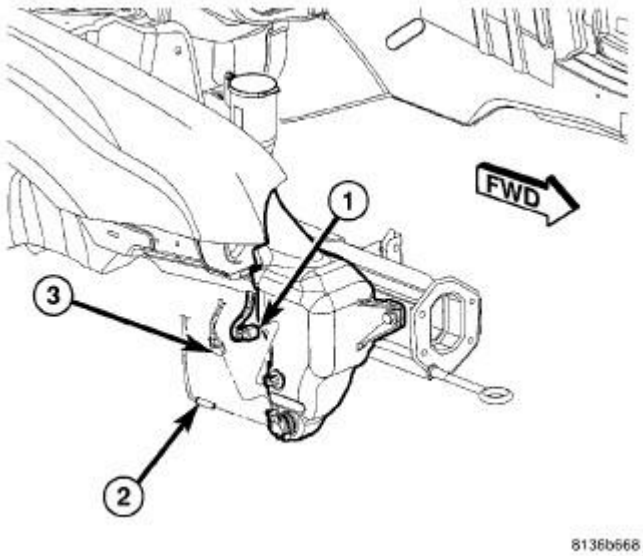

Fig. 26: Washer Pump Motor
Courtesy of CHRYSLER LLC

3. Disconnect the electrical connectors (1 and 3) from the washer fluid reservoir.
4. Disconnect the hose from reservoir (2) and drain the washer fluid into suitable container.

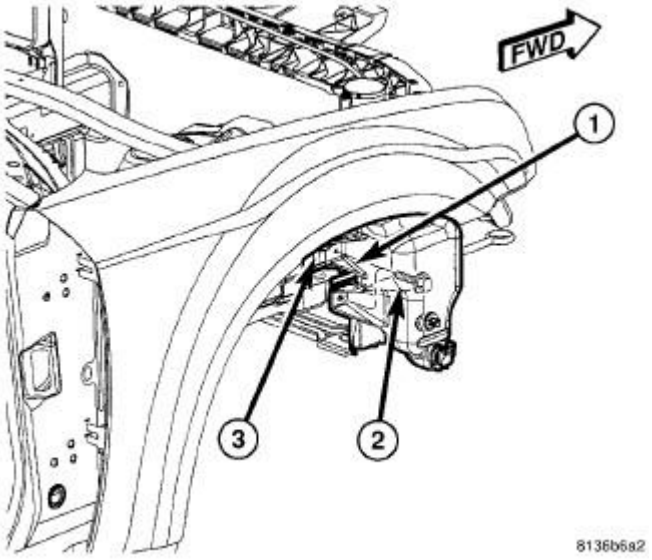

Fig. 27: Identifying Rear Mounting Fastener
Courtesy of CHRYSLER LLC

5. Remove the rear mounting fastener (2).

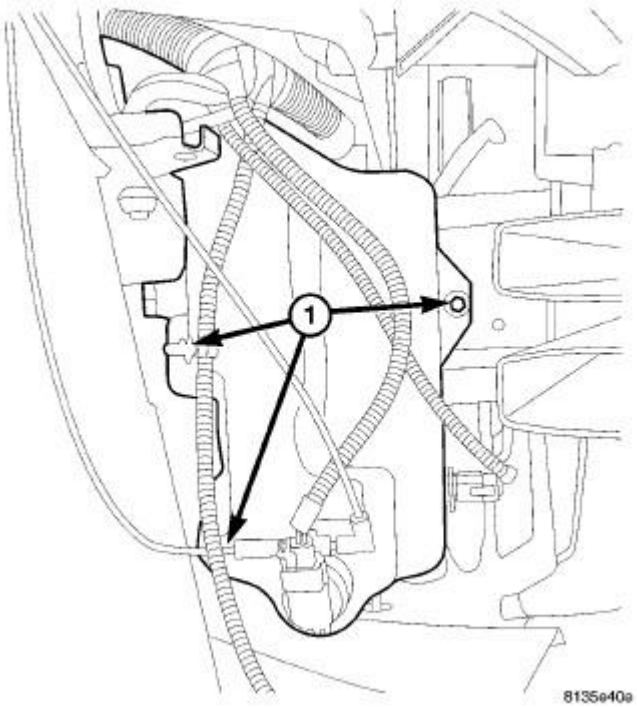

Fig. 28: Removing/Installing Washer Reservoir
Courtesy of CHRYSLER LLC

6. Remove the remaining three mounting fasteners (1).

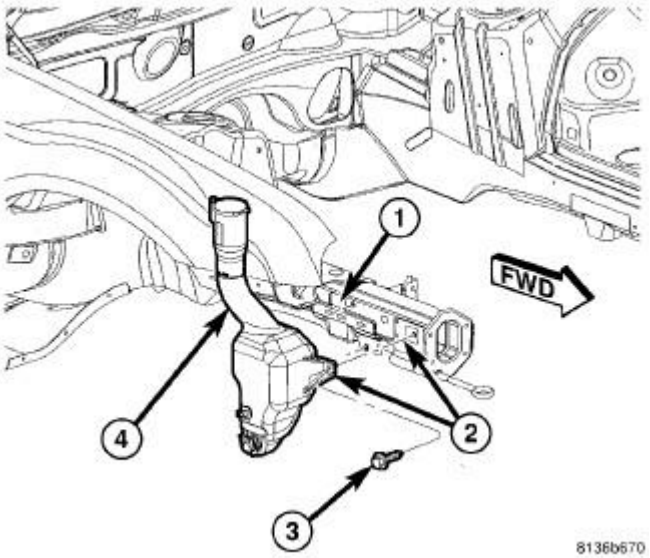

Fig. 29: Washer Fluid Reservoir
Courtesy of CHRYSLER LLC

7. Remove the washer fluid reservoir (4) from the vehicle.

INSTALLATION

INSTALLATION

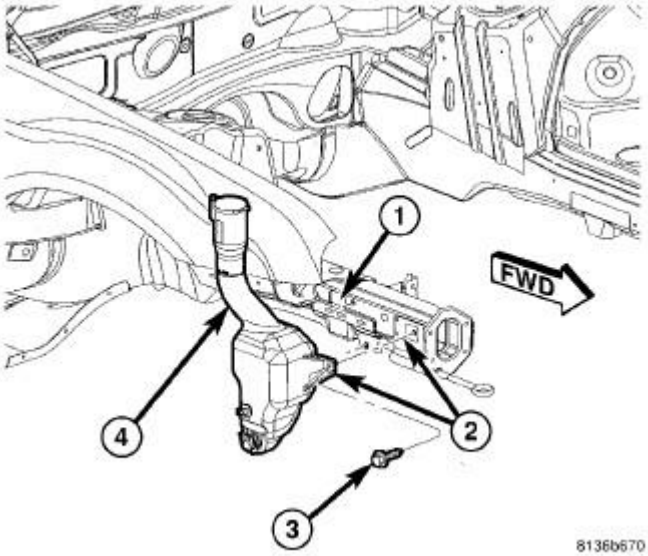

Fig. 30: Washer Fluid Reservoir
Courtesy of CHRYSLER LLC

1. Position the washer fluid reservoir (4) in vehicle.

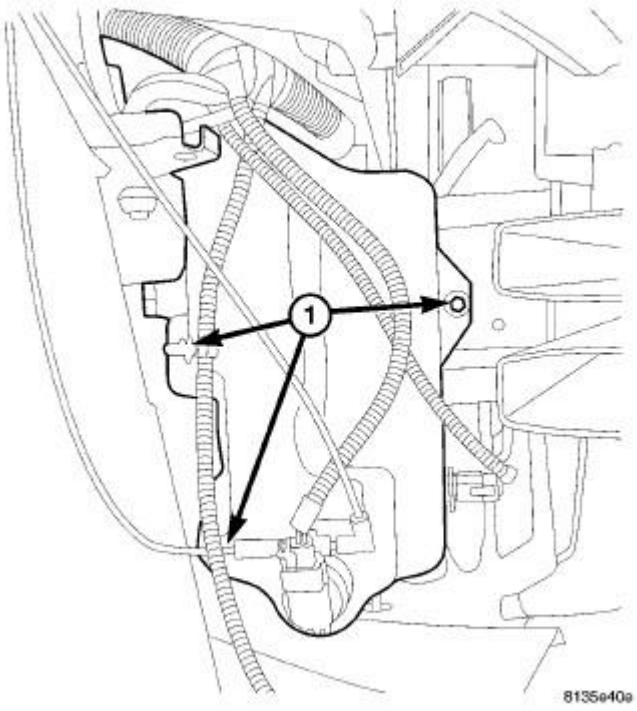

Fig. 31: Removing/Installing Washer Reservoir
Courtesy of CHRYSLER LLC

2. Install the three mounting fasteners (1). Tighten fasteners to 7 N.m (62 in. lbs).

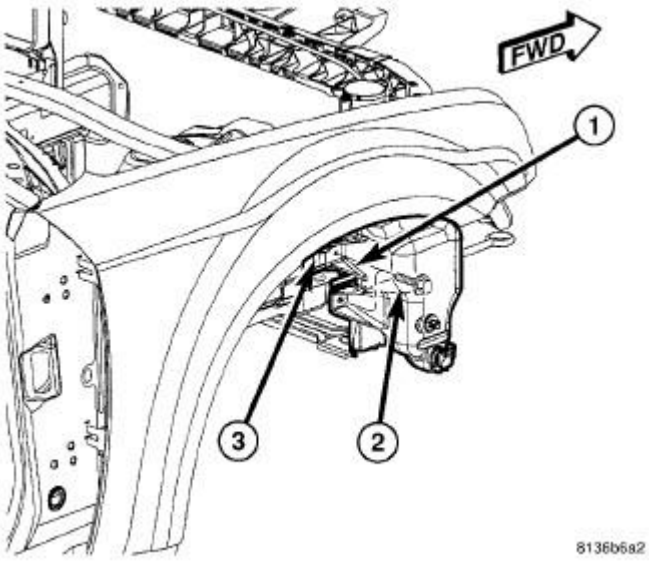

Fig. 32: Identifying Rear Mounting Fastener
Courtesy of CHRYSLER LLC

3. Install the rear mounting fastener (2). Tighten fastener to 7 N.m (62 in. lbs).

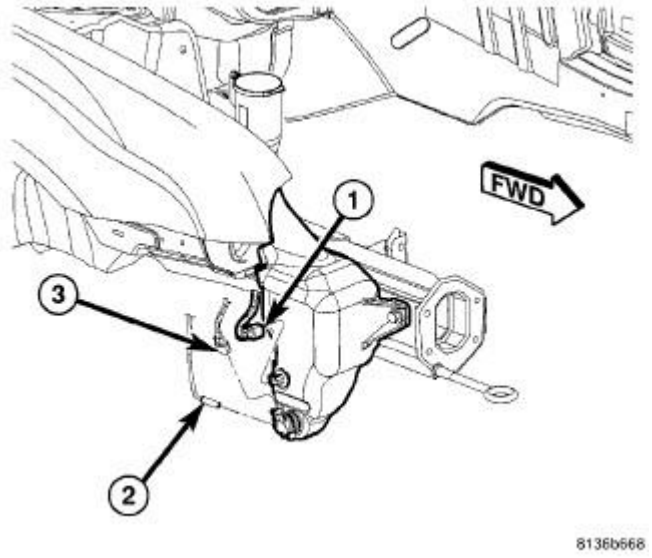

Fig. 33: Washer Pump Motor
Courtesy of CHRYSLER LLC

4. Connect the electrical connectors (1 and 3) and hose (2) to washer fluid reservoir.

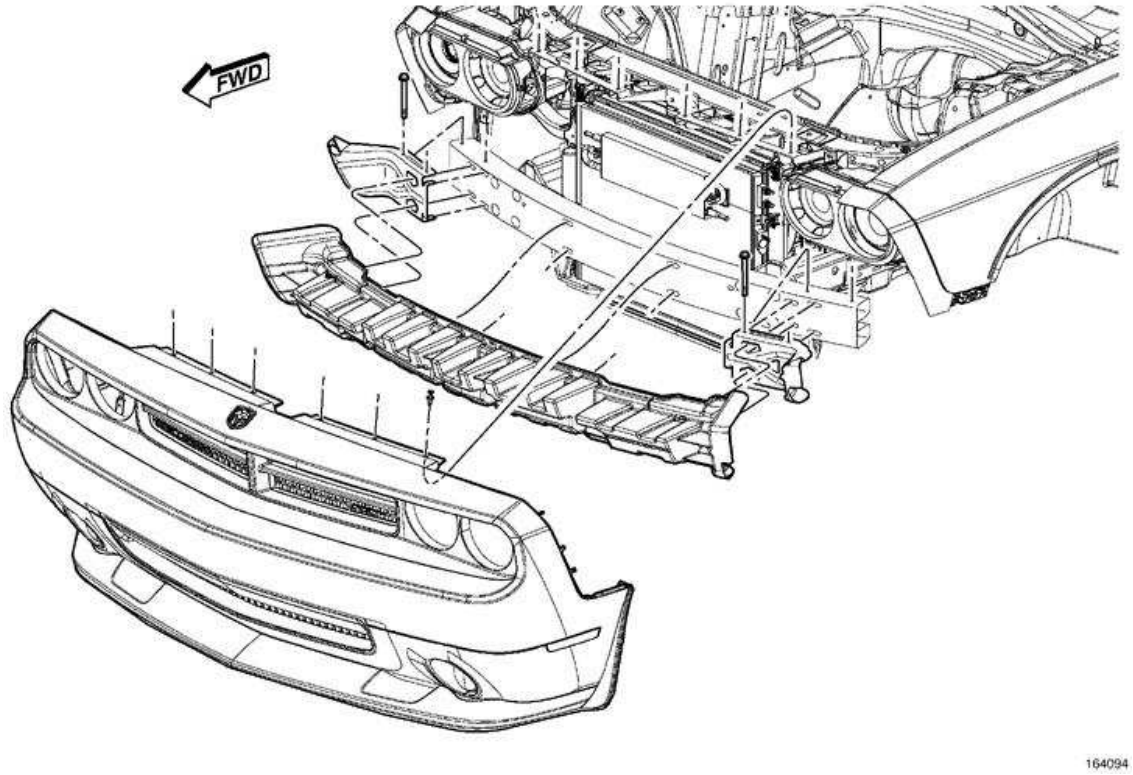

Fig. 34: Front Fascia
Courtesy of CHRYSLER LLC

5. Install the front fascia. Refer to **Frame and Bumpers/Bumpers/FASCIA, Front - Installation** .
6. Connect the battery negative cable.
7. Fill the washer fluid reservoir.

SWITCH, WASHER FLUID LEVEL

REMOVAL

REMOVAL

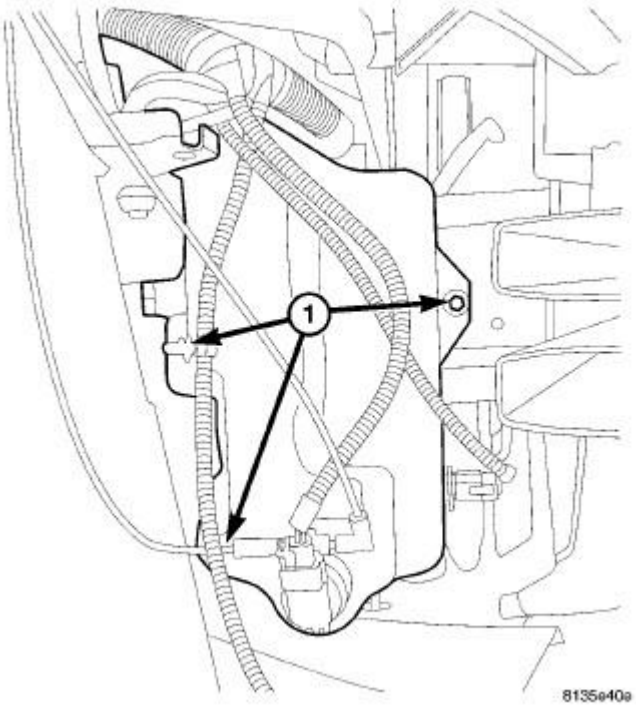

Fig. 35: Removing/Installing Washer Reservoir
Courtesy of CHRYSLER LLC

1. Disconnect and isolate the battery negative cable.
2. Drain washer fluid from the reservoir and into a suitable clean container. This can be done by disconnecting the windshield washer hose from the front (outboard) washer pump and allowing the washer fluid to drain into a container through a temporary jumper hose connected to the front washer pump.
3. Remove the washer reservoir. See **Electrical - Wipers/Washers/Wipers/Washers/RESERVOIR, Windshield Washer - Removal**.

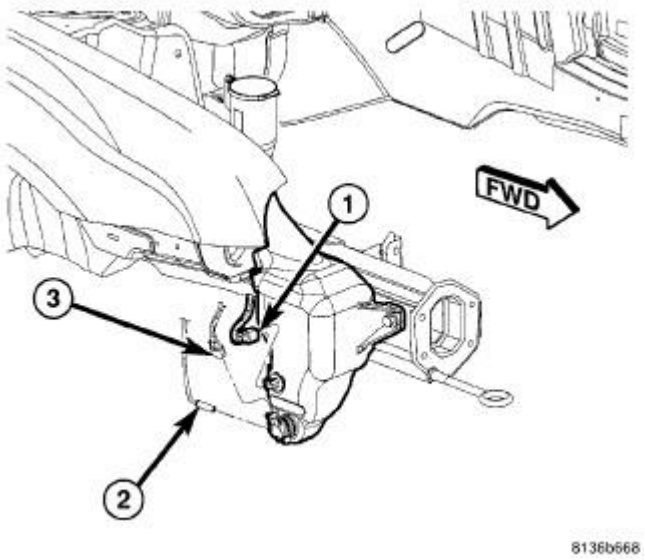

Fig. 36: Washer Pump Motor
Courtesy of CHRYSLER LLC

4. Remove the washer fluid level switch by pulling out of reservoir. Inspect the grommet and if installing a new switch, always use a new grommet.

INSTALLATION

INSTALLATION

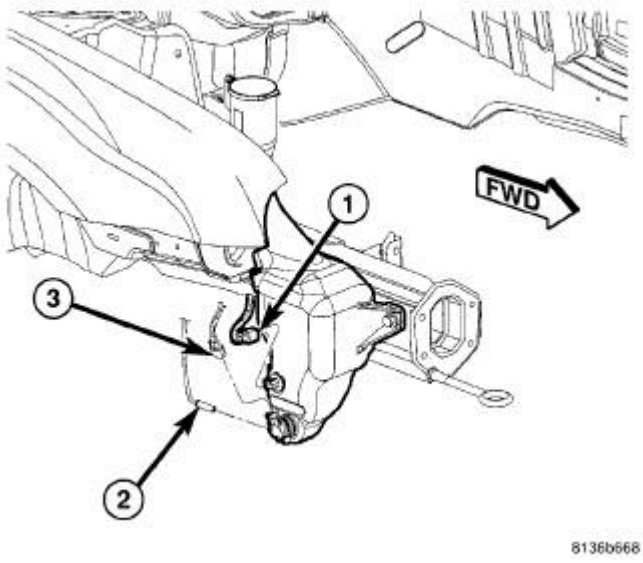

Fig. 37: Washer Pump Motor
Courtesy of CHRYSLER LLC

1. Inspect grommet and if installing new switch, use a new grommet. Position the switch into

opening and firmly press into place.

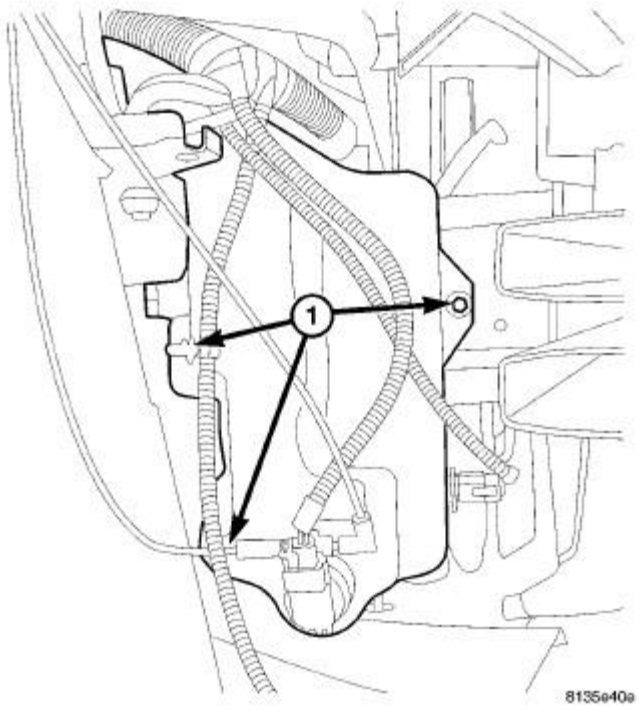

Fig. 38: Removing/Installing Washer Reservoir
Courtesy of CHRYSLER LLC

2. Install the washer reservoir. See **Electrical - Wipers/Washers/Wipers/Washers/RESERVOIR, Windshield Washer - Installation**.
3. Refill the reservoir with fluid drained previously.
4. Connect the battery negative cable.

Rear Suspension - Challenger

DESCRIPTION

NON SRT

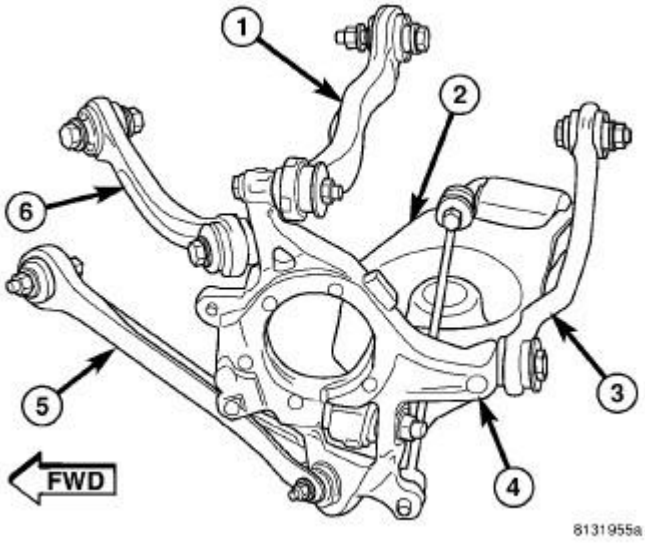

Fig. 1: Rear Suspension Components
Courtesy of CHRYSLER GROUP, LLC

This vehicle utilizes a five-link rear suspension including the following major components:

- Camber Link (1)
- Compression Link (5)
- Spring Link (2)
- Tension Link (6)
- Toe Link (3)
- Coil Spring
- Crossmember
- Hub And Bearing
- Knuckle (4)
- Shock Absorber
- Stabilizer Bar

Service Procedures for the crossmember can be found in Frame And Bumpers Refer to **CROSSMEMBER, REAR, REMOVAL** .

SRT

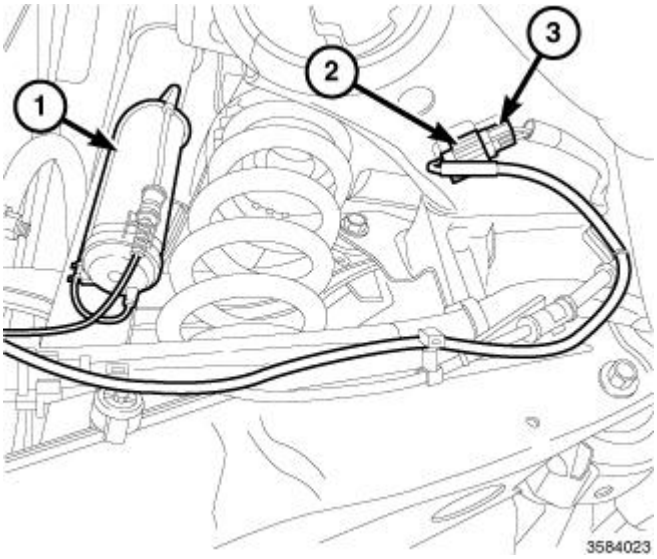

Fig. 2: Shock Solenoid Assembly & ADS Harness Connector
Courtesy of CHRYSLER GROUP, LLC

NOTE: Left side shown, right side similar.

The SRT rear suspension is part of an Active Damping System (ADS). The ADS includes unique shock absorbers, an Active Damping Control Module (ADCM), and three accelerometers that work together to modify the ride of the suspension over varying road conditions.

The Active Damping System (ADS) rear shock is similar to a conventional shock with the addition of a shock solenoid assembly (1) mounted on the side of its body with a three wire harness connector attached to it. The ADS shock assembly is serviced the same as a conventional shock absorber, with the addition of disconnecting the ADS harness connector (2) on the crossmember.

Service of all other rear suspension components remain the same as the standard components. When components differ, be sure to use only SRT components on SRT vehicles.

The rear knuckle for the SRT is different from the standard knuckle. Although similar in appearance and in service, the mounting bosses for the disc brake caliper have been moved downward to allow mounting of the Brembo four-piston brake caliper. Due to this change, an updated special tool is needed to remove the sleeve that retains the lower control arm ball joint to the knuckle.

The rear stabilizer bar diameter has been increased for the SRT but it is serviced in the same manner as the standard bar.

SPECIFICATIONS

SPECIFICATIONS

DESCRIPTION	N.m	Ft. Lbs.	In. Lbs.
Brake Caliper Adapter Knuckle Bolts	115	85	-
Camber Link Crossmember Bolt	85	63	-
Camber Link Knuckle Bolt	98	72	-
Compression Link Crossmember Bolt	85	63	-
Compression Link Knuckle Bolt	81	60	-
Crossmember Mounting Bolts	180	133	-
Hub And Bearing Mounting Bolts	68	50	-
Hub Nut	213	157	-
Parking Brake Cable Knuckle Screw	8	-	71
Shock Absorber Mounting Bolts - Upper	52	38	-
Shock Absorber Mounting Bolt Nut - Lower	72	53	-
Spring Link Crossmember Bolt	108	80	-
Spring Link Knuckle Nut	142	105	-
Stabilizer Bar Isolator Retainer Bolts	61	45	-
Stabilizer Link Nuts	61	45	-
Tension Link Crossmember Bolt	85	63	-
Tension Link Knuckle Bolt	98	72	-
Toe Link Crossmember Nut	108	80	-
Toe Link Knuckle Bolt	95	70	-

SPECIAL TOOLS

SPECIAL TOOLS

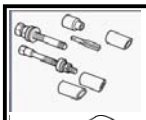	9361-1 - Tap, Plug M16 X 2.0
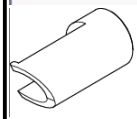	9361-10 - Cup, Remover, Right Side
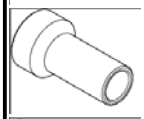	9361-11 - Guide, Tap
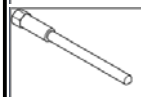	9361-12 - Installer, Bushing
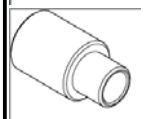	9361-2 - Tap Guide
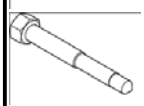	9361-3 - Screw, Forcing

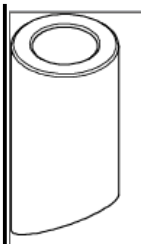	9361-4 - Cup, Bushing
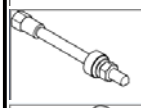	9361-7 - Screw, Installation
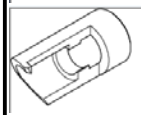	9361-9 - Cup, Remover, Left Side
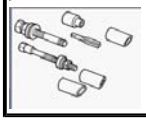	9361A - Rear Knuckle Sleeve Remover/Installer Kit (Originally Shipped In Kit Number(s) 9329, 9515, 9516, 9516-CAN, 9517, 9517-CAN, 9518, 9519, 9540, 9541.)

HUB AND BEARING

DIAGNOSIS AND TESTING

DIAGNOSIS AND TESTING - HUB AND BEARING - NOISE

NOTE: The wheel bearing is designed to last for the life of the vehicle and requires no type of periodic maintenance.

Bearings will produce noise if worn or damaged. The noise will generally change when the bearings are loaded. A road test of the vehicle is normally required to determine if there is a bearing noise, or if it may be some other component, and to assist in finding the location. The following procedure, together with the **DIAGNOSTIC CHART** , should help determine the proper cause. Note that if a particular vehicle road test maneuver, steering to the right for instance, results in noise only part of the time, it is not likely a faulty bearing. Bearing noises are not typically intermittent.

NOTE: Damaged bearing seals and the resulting excessive grease loss may also require bearing replacement. Moderate grease seepage from the bearing is considered normal and should not require replacement of the wheel bearing. Wheel bearings are designed to last the life of the vehicle and require no type of periodic maintenance. To diagnose the hub, measure hub runout

Refer to ROTOR, BRAKE, DIAGNOSIS AND TESTING .

DIAGNOSTIC PROCEDURE:

1. Perform drive evaluation. Find a smooth level road surface void of traffic or obstructions. Turn off any accessories which may cause background noise. Evaluate for noise at 50 km/h (30 mph) and 100 km/h (60 mph) and with vehicle in neutral to eliminate potential drivetrain noises. With vehicle at a constant speed, steer back and forth to left and right (approximately 45 degree steering input each way). This will

load and unload the bearings and may change the noise level. When bearing damage is slight, the noise is sometimes noticeable at lower speeds and at other times is more noticeable at higher speeds.

2. Drive evaluation results: Noise increase when turning right may indicate a problem with the left bearing. Noise increase when turning left may indicate a problem with the right bearing.
3. Put vehicle up on hoist. Grab the tire by pushing in on the top center and pulling out on the bottom center to check for excessive movement in the bearing.
4. Check for potential rubbing on rotating components, such as rotor splash shields, heat shields touching propshaft or halfshaft, wheel well liners contacting tire, wheel cover on wheel, etc. Any cyclic noise (once per wheel revolution for example) is not likely a wheel bearing fault.
5. Remove the wheel and tire assembly, disc brake caliper and brake rotor. Refer to **ROTOR, BRAKE, DIAGNOSIS AND TESTING** .
6. Rotate the wheel hub, checking for resistance or roughness.
7. Any roughness or resistance to rotation may indicate dirt intrusion or a failed hub bearing. If the bearing exhibits any of these conditions, the hub & bearing will require replacement. Do not attempt to disassemble the bearing for repair.
8. Rotate the wheel hub, utilize Chassis Ears (or equivalent) to check for noise.
9. If none of the above checks indicate a bearing failure, refer to the **DIAGNOSTIC CHART** for other possible causes.

DIAGNOSTIC CHART - HUB & BEARING

CONDITION	POSSIBLE CAUSES	POTENTIAL CORRECTIONS
FRONT END WHINE ON TURNS	1. Low Power Steering Fluid Level (if applicable)	1. Fill power steering fluid reservoir to proper level, check for leaks (make sure all air is bled from system fluid)
	2. Worn Tires and/or Incorrect Wheel Alignment	2. Replace Tires, Check And Reset Wheel Alignment
	3. Defective Wheel Bearing	3. Replace Wheel Bearing
	4. Wrong Power Steering Fluid (if applicable)	4. Replace With Correct Power Steering Fluid
FRONT END GROWL OR GRINDING ON TURNS	1. Loose Wheel Lug Nuts	1. Verify Wheel Lug Nut Torque
	2. Engine Mount Grounding Against Frame Or Body Of Vehicle	2. Check For Engine Mount Hitting Frame Rail And Reposition Engine As Required
	3. Worn Tires and/or Incorrect Wheel Alignment	3. Replace Tires, Check and Reset Wheel Alignment
	4. Defective Wheel	

	Bearing 5. Worn or Broken C/V Joint 6. Engine Not Centered, Causing Axle Half Shaft to Bottom Out	4. Replace Wheel Bearing 5. Replace C/V Joint 6. Center the Engine
POPPING/CLICKING/SNAPPING DURING ACCELERATION AFTER DRIVE-TO-REVERSE SHIFT, REVERSE-TO-DRIVE SHIFT OR WHILE TURNING	1. Insufficient Hub Nut Torque 2. Insufficient Grease on Mating Surface of Axle Half Shaft Outer C/V Joint to Wheel Hub/Bearing, or Worn/Damaged Gasket	1. Torque Hub Nut to Spec 2. Separate Half Shaft From Hub and Bearing and Wipe Mating Surfaces Clean. Apply Light Coating of Wheel Bearing Grease to C/V Joint Surface and Reassemble, or Replace Gasket. Torque Hub Nut to Spec
WHINE/HUM/ROAR WITH VEHICLE GOING STRAIGHT AT A CONSTANT SPEED	1. Worn Tires and/or Incorrect Wheel Alignment 2. Defective Wheel Bearing	1. Replace Tires and Reset Wheel Alignment 2. Replace Wheel Bearing
GROWL OR GRINDING WITH VEHICLE GOING STRAIGHT AT A CONSTANT SPEED	1. Engine Mount Grinding Against Frame or Body 2. Defective Wheel Bearing 3. Worn or Broken C/V Joint	1. Check and Reposition Engine as Required 2. Replace Wheel Bearing 3. Replace C/V Joint

REMOVAL

NON SRT

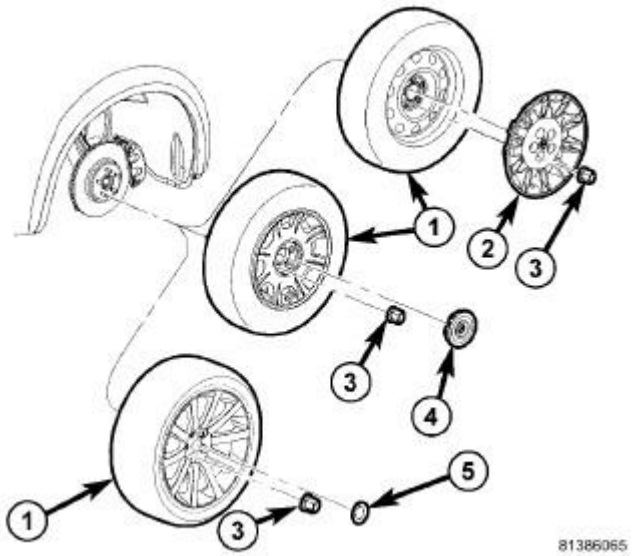

Fig. 3: Tire And Wheel Mounting
Courtesy of CHRYSLER GROUP, LLC

1. Raise and support vehicle. Refer to **HOISTING, STANDARD PROCEDURE** .
2. Remove wheel mounting nuts (3), then tire and wheel assembly (1).

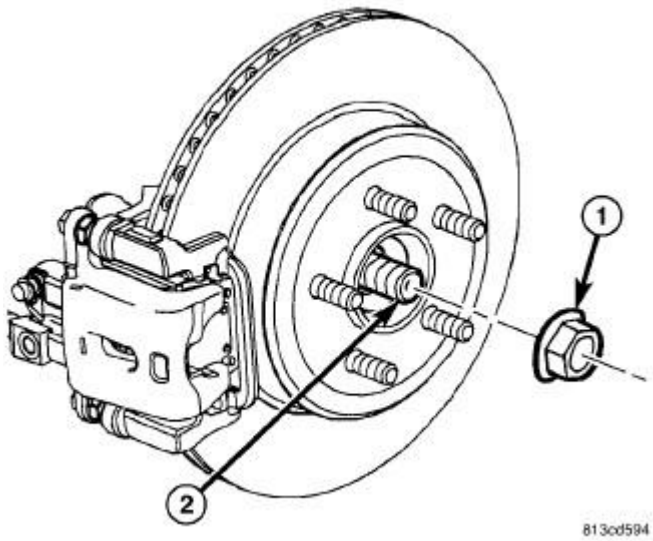

Fig. 4: Identifying Hub Nut
Courtesy of CHRYSLER GROUP, LLC

3. While a helper applies brakes to keep hub from rotating, remove hub nut (1) from the half shaft (2).

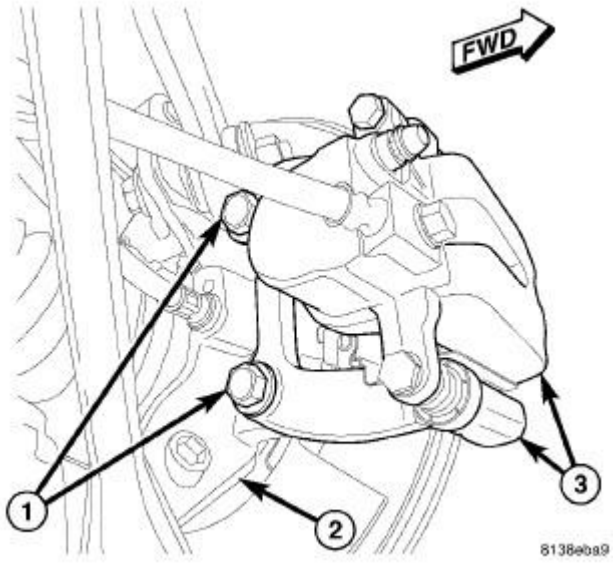

Fig. 5: Rear Caliper Adapter, Knuckle & Bolts
Courtesy of CHRYSLER GROUP, LLC

NOTE: In some cases, it may be necessary to retract caliper piston in its bore a small amount in order to provide sufficient clearance between shoes and rotor to easily remove caliper from knuckle. This can usually be accomplished before guide pin bolts are removed, by grasping rear of caliper and pulling outward working with guide pins, thus retracting piston. Never push on piston directly as it may get damaged.

4. Remove two bolts (1) securing disc brake caliper adapter (3) to knuckle (2).
5. Remove disc brake caliper and adapter (3) from knuckle as an assembly. Hang assembly out of way using wire or a bungee cord. Use care not to overextend brake hose when doing this.

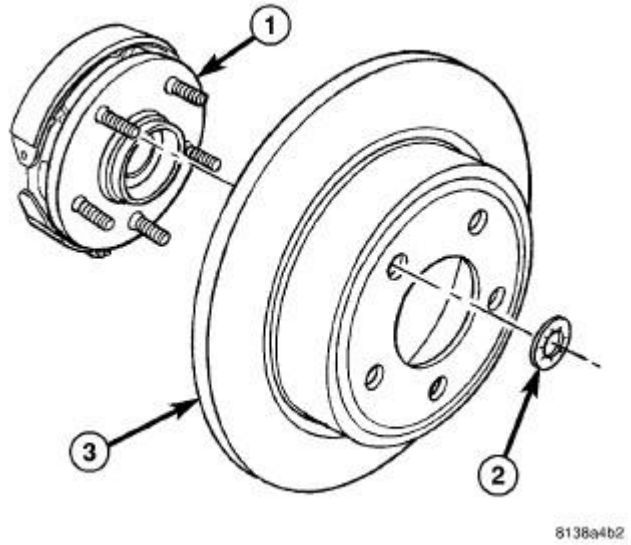

Fig. 6: Rear Brake Rotor, Hub & Clips
Courtesy of CHRYSLER GROUP, LLC

6. Remove any clips (2) retaining brake rotor (3) to wheel mounting studs.
7. Slide brake rotor (3) off hub and bearing (1).

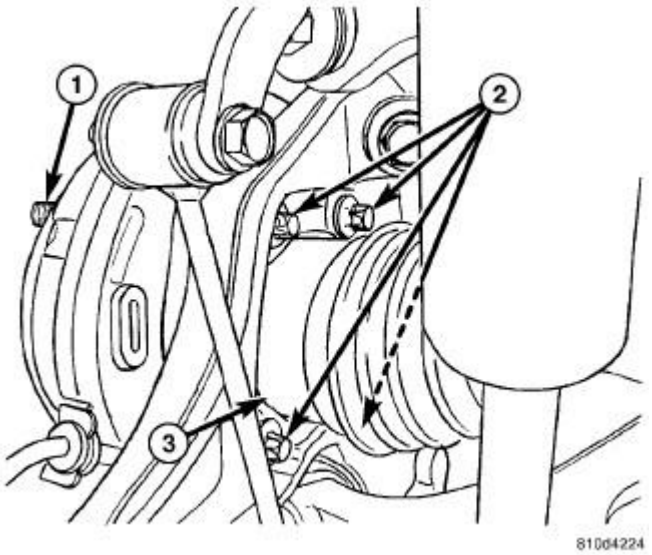

Fig. 7: Hub & Bearing, Mounting Bolts & Half Shaft
Courtesy of CHRYSLER GROUP, LLC

1 - HUB AND BEARING
2 - MOUNTING

BOLTS 3 - HALF SHAFT (IF EQUIPPED)

8. Loosen each hub and bearing mounting bolt (2) a turn or two at a time while pulling outward on hub and bearing to avoid bolt contact with half shaft outer joint. Once removed from threads in hub and bearing (but not knuckle), allow bolts to stay in and protrude through knuckle and brake support plate to keep brake support plate in place when hub and bearing is removed.
9. Slide hub and bearing off knuckle and half shaft.

SRT

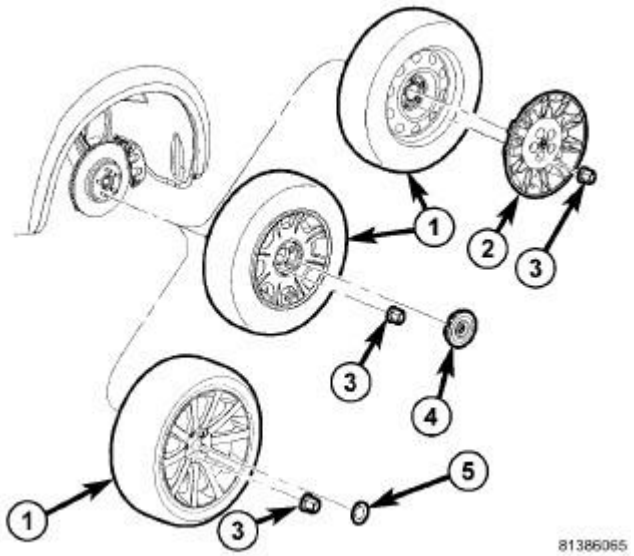

Fig. 8: Tire And Wheel Mounting
Courtesy of CHRYSLER GROUP, LLC

1. Raise and support vehicle. Refer to **HOISTING, STANDARD PROCEDURE** .
2. Remove wheel mounting nuts (3), then tire and wheel assembly (1).

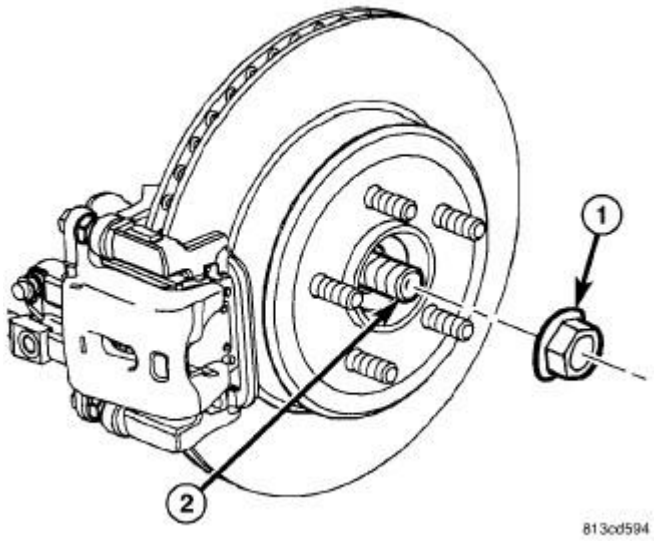

Fig. 9: Identifying Hub Nut
Courtesy of CHRYSLER GROUP, LLC

3. While a helper applies brakes to keep hub from rotating, remove hub nut (1) from the half shaft (2).

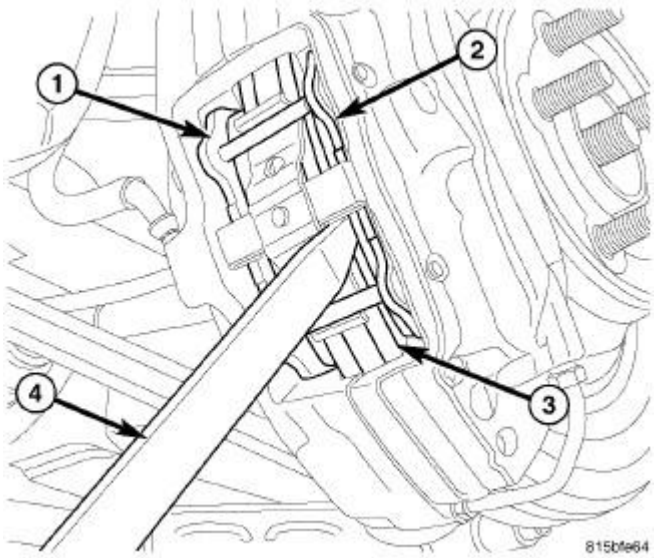

Fig. 10: Pushing Back Pistons In Bore
Courtesy of CHRYSLER GROUP, LLC

CAUTION: When pushing pistons back into caliper bores, use only a trim stick as shown or other suitable soft tool. Never use a screwdriver or other metal pry bar due to potential damage to braking surface of rotor, caliper, pistons or dust boots.

4. Place trim stick (4) between brake pad (2) and outer edge of rotor (3).
5. Using trim stick, slowly apply pressure against brake pad (2) until both pistons (on that side of caliper) are completely bottomed in bores of caliper half.

NOTE: Repeat above procedure to opposite brake pad (1) and pistons as necessary.

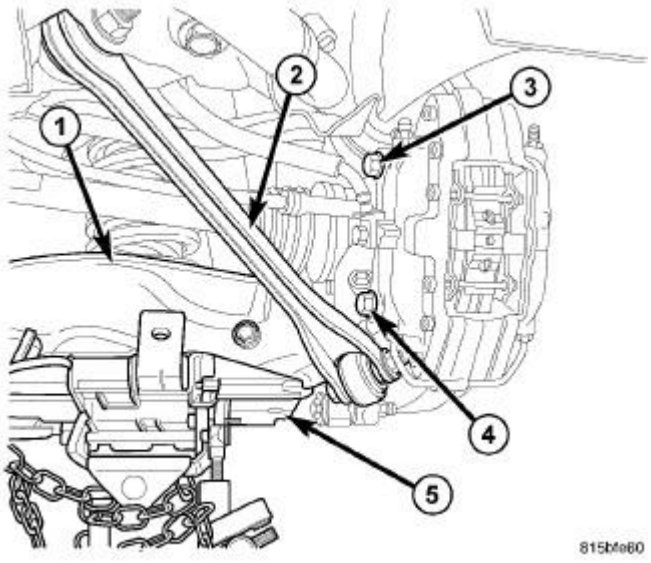

Fig. 11: Accessing Rear Caliper Mounting Bolts
Courtesy of CHRYSLER GROUP, LLC

6. Support spring link (1) using a transmission jack (5) or other appropriate jack. Raise spring link just enough to access brake caliper lower mounting bolt (4) from above compression link (2).

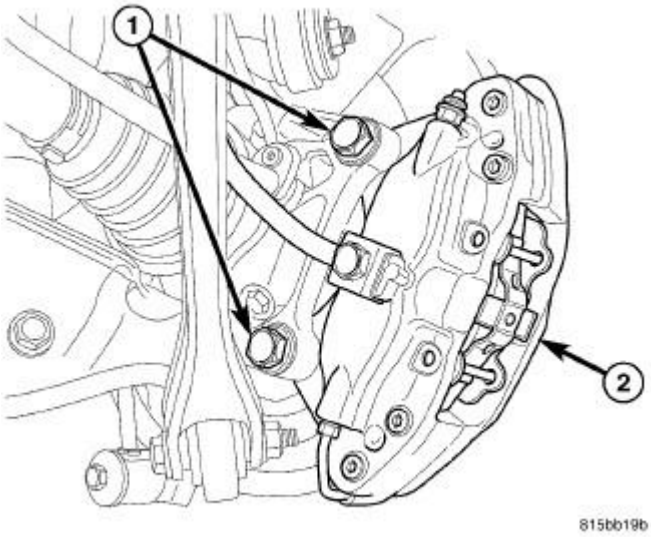

Fig. 12: Rear Caliper Mounting Bolts
Courtesy of CHRYSLER GROUP, LLC

7. Remove the lower and upper caliper mounting bolts (1).
8. Remove brake caliper (2) with pads from knuckle and brake rotor. Hang assembly out of way using wire or a bungee cord. Use care not to overextend brake hose when doing this.

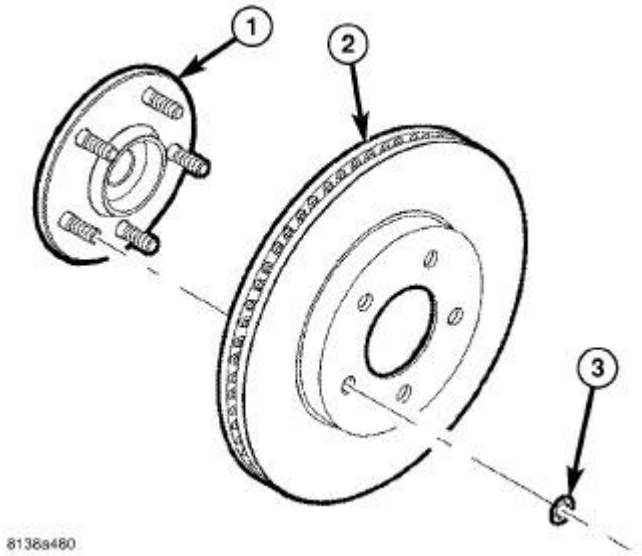

Fig. 13: Brake Rotor, Hub & Clips
Courtesy of CHRYSLER GROUP, LLC

9. Remove any clips (3) retaining brake rotor (2) to wheel mounting studs.
10. Slide brake rotor (2) off hub and bearing (1).

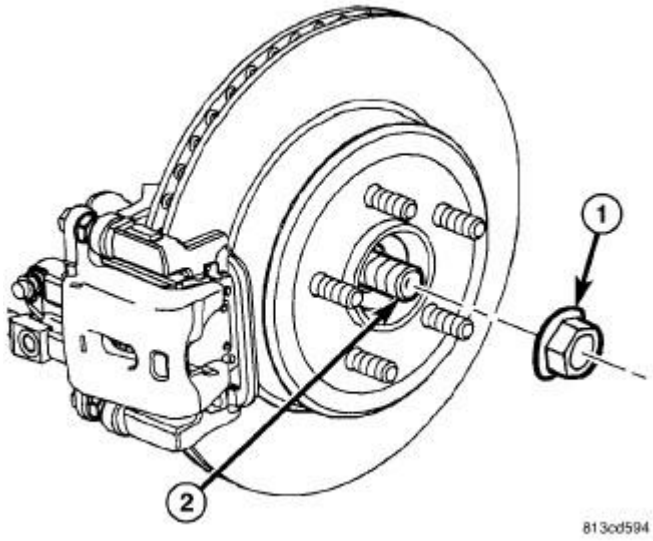

Fig. 14: Identifying Hub Nut
Courtesy of CHRYSLER GROUP, LLC

11. Push inward on end of half shaft (2) until C/V joints bottom. This is necessary to give as much access to hub and bearing mounting bolts as possible.

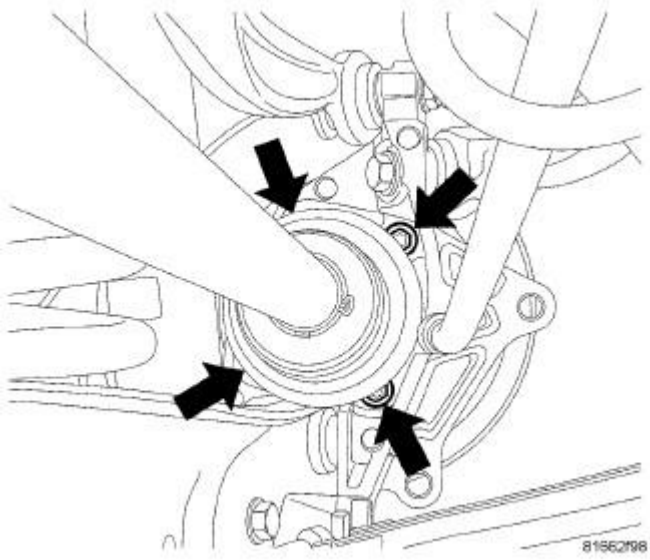

Fig. 15: Hub And Bearing Mounting Bolts
Courtesy of CHRYSLER GROUP, LLC

NOTE: It is important to keep suspension jacked up as requested in to ease access to lower hub and bearing mounting bolts. Refer to step 6.

NOTE: Use a 3/8 inch drive wobble extension along with a Torx® socket to access and remove two top and lower front mounting bolt. Use a standard 3/8 inch drive universal joint along with a Torx® socket to access and remove lower rear mounting bolt.

12. Loosen each (of the four) hub and bearing mounting bolt a turn or two at a time while pulling outward on hub and bearing to avoid bolt contact with half shaft outer joint. Once removed from threads in hub and bearing (but not knuckle), allow bolts to stay in and protrude through knuckle and parking brake adapter to keep brake adapter in place while hub and bearing is off vehicle.
13. Slide hub and bearing out of knuckle and off half shaft.

INSTALLATION

NON SRT

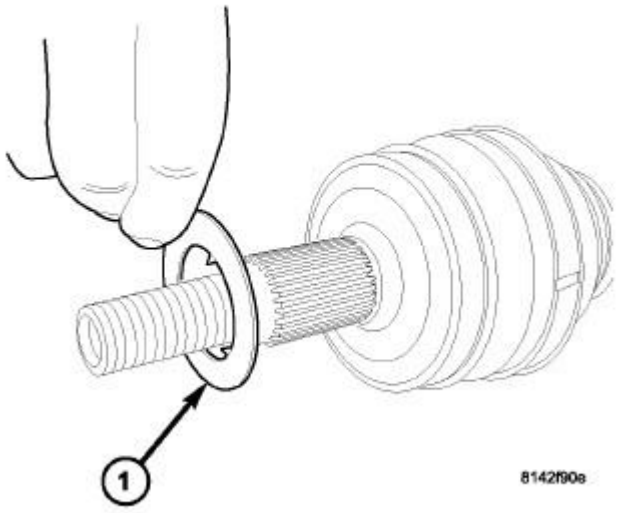

Fig. 16: Halfshaft Isolation Washer
Courtesy of CHRYSLER GROUP, LLC

NOTE: Before installing hub and bearing on end of axle half shaft, ensure isolation washer is present on end of half shaft. Inspect washer making sure it is not worn or damaged. Washer can be installed in either direction on shaft.

1. Position hub and bearing bolts though rear of knuckle and parking brake support just enough to hold support in place as hub and bearing is installed.
2. Slide hub and bearing onto half shaft. Place hub and bearing through brake support, onto knuckle, lining up mounting bolt holes with bolts.

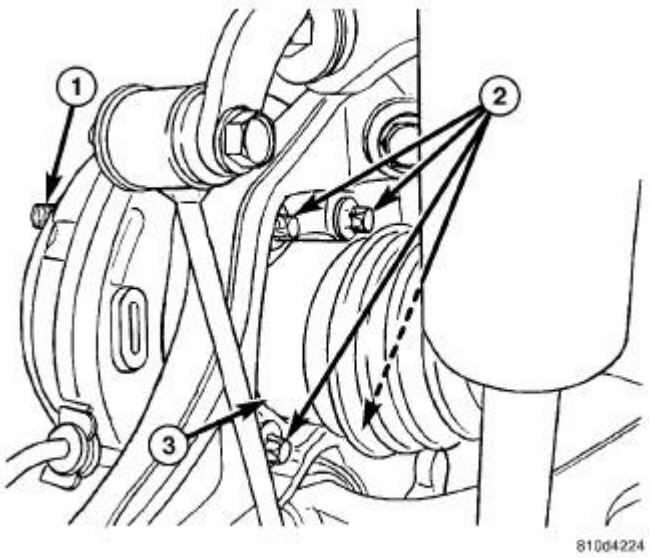

Fig. 17: Hub & Bearing, Mounting Bolts & Half Shaft
Courtesy of CHRYSLER GROUP, LLC

1 - HUB AND BEARING
2 - MOUNTING BOLTS
3 - HALF SHAFT (IF EQUIPPED)

3. Install four bolts (2) fastening hub and bearing in place. Tighten mounting bolts to 68 N.m (50 ft. lbs.).

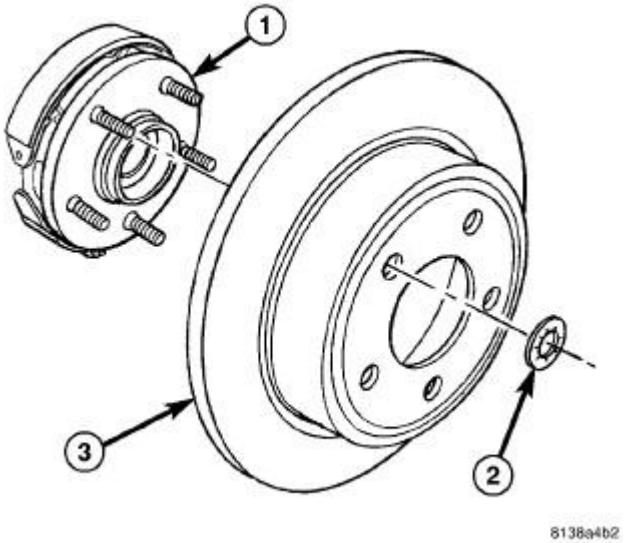

Fig. 18: Rear Brake Rotor, Hub & Clips
Courtesy of CHRYSLER GROUP, LLC

NOTE: Inspect disc brake pads and parking brake shoes before brake rotor installation. Refer to PADS, BRAKE, INSPECTION .

4. Install brake rotor (3) over wheel mounting studs and onto hub (1).

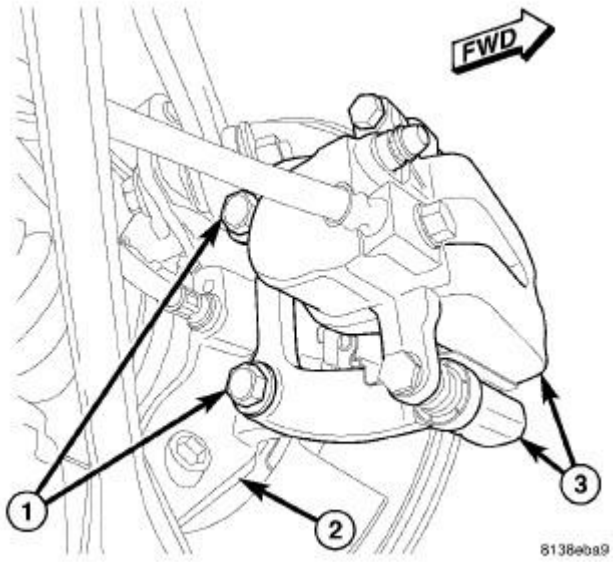

Fig. 19: Rear Caliper Adapter, Knuckle & Bolts
Courtesy of CHRYSLER GROUP, LLC

5. Install disc brake caliper and adapter assembly (3) over brake rotor.
6. Install mounting bolts (1) securing caliper adapter (3) to knuckle (2). Tighten bolts to 115 N.m (85 ft. lbs.).

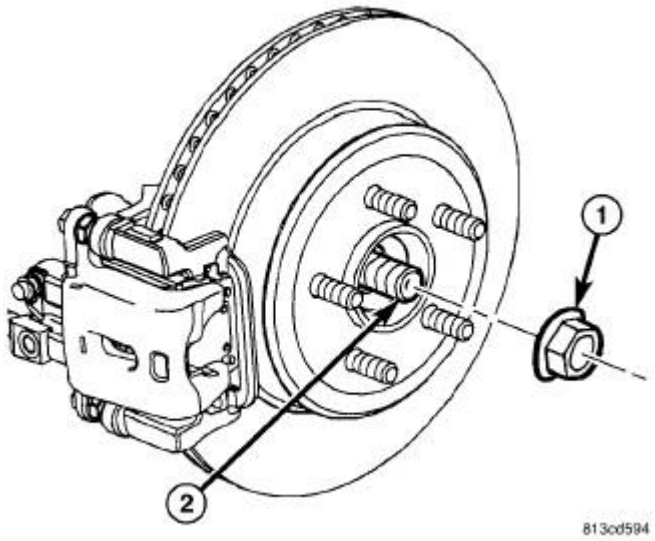

Fig. 20: Identifying Hub Nut
Courtesy of CHRYSLER GROUP, LLC

NOTE: Always install a new hub nut. The original hub nut is one-time use only and should be discarded when removed.

7. Install hub nut (1) on end of half shaft (2). While a helper applies brakes to keep hub from turning, tighten hub nut to 213 N.m (157 ft. lbs.).
8. Verify proper adjustment of the parking brake shoes and adjust as necessary. Refer to **SHOES, PARKING BRAKE, ADJUSTMENTS** .

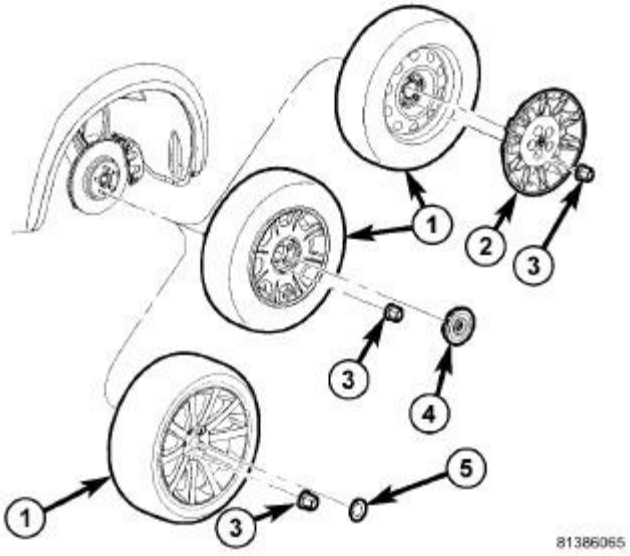

Fig. 21: Tire And Wheel Mounting
Courtesy of CHRYSLER GROUP, LLC

9. Install tire and wheel assembly (1). Refer to **INSTALLATION** .
10. Lower vehicle.
11. Pump brake pedal several times to ensure vehicle has a firm brake pedal before moving vehicle.

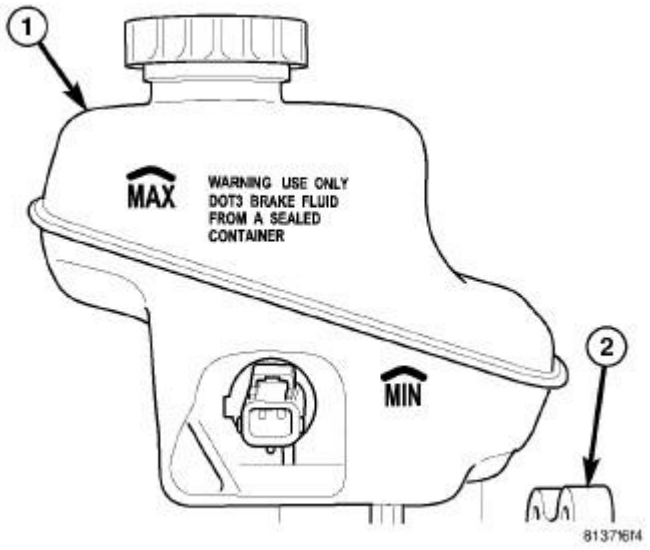

Fig. 22: Reservoir Fluid Level Markings
Courtesy of CHRYSLER GROUP, LLC

12. Check and adjust brake fluid level in reservoir (1) as necessary.
13. Road test vehicle and make several stops to wear off any foreign material on brakes and to seat brake pads.

SRT

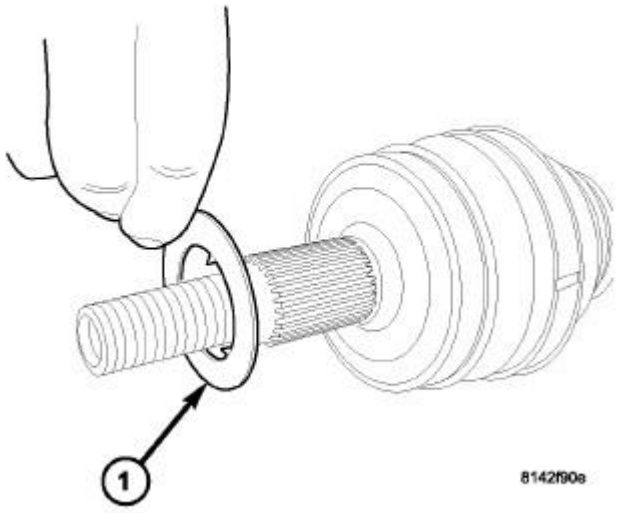

Fig. 23: Halfshaft Isolation Washer
Courtesy of CHRYSLER GROUP, LLC

NOTE: **Before installing hub and bearing on end of axle half shaft, ensure isolation washer (1) is present on end of half shaft. Inspect washer making sure it is not worn or damaged. Washer can be installed in either direction on shaft.**

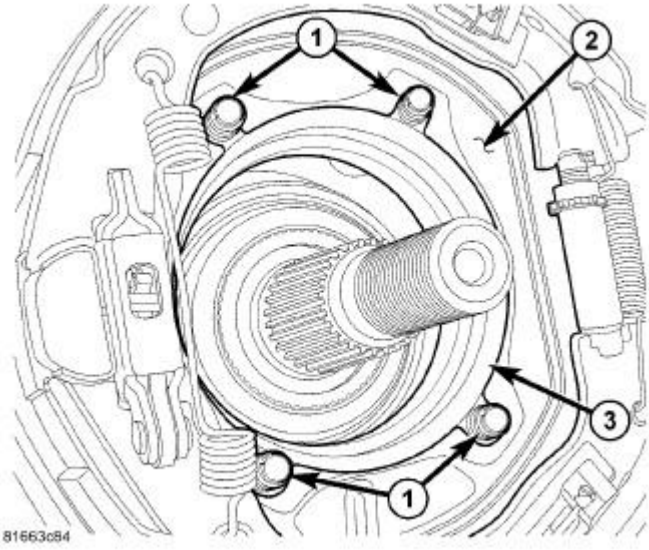

Fig. 24: Hub And Mounting Bolts, Knuckle & Adapter
Courtesy of CHRYSLER GROUP, LLC

NOTE: To help upon installation, make sure that hub and bearing mounting bolts (1) extend through knuckle (3) and parking brake adapter (2) to hold adapter in place during hub and bearing installation.

1. Position hub and bearing mounting bolts (1) though rear of knuckle (3) and parking brake adapter (2) just enough to hold adapter in place.

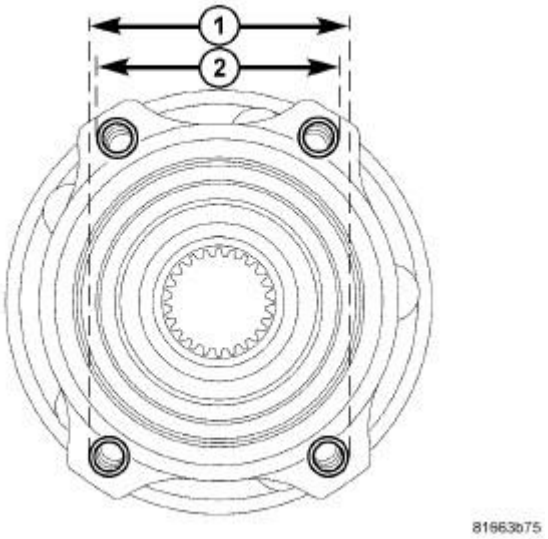

Fig. 25: Hub And Bearing Bolt Hole Pattern
Courtesy of CHRYSLER GROUP, LLC

NOTE: Hub and bearing mounting bolt holes are not evenly spaced. Upper mounting holes (2) are not as far apart as lower mounting holes (1). Make note of this before installing hub and bearing.

2. Slide hub and bearing onto half shaft. Insert hub and bearing through parking brake adapter and knuckle, lining up mounting bolt holes with bolts.

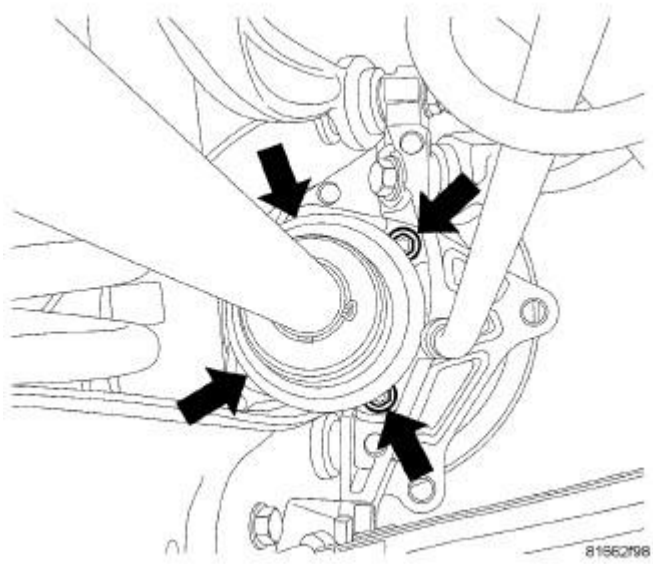

Fig. 26: Hub And Bearing Mounting Bolts
Courtesy of CHRYSLER GROUP, LLC

NOTE: Make sure suspension is jacked up as requested during removal to ease access to lower hub and bearing mounting bolts.

NOTE: Use a 3/8 inch drive wobble extension along with a Torx® socket to slip past half shaft outer C/V joint and install two top and lower front mounting bolts. Use a standard 3/8 inch drive universal joint along with a Torx® socket to install lower rear mounting bolt.

3. Carefully start all four mounting bolts into hub and bearing. Using a cross pattern, tighten each hub and bearing mounting bolt a turn or two at a time, slowly drawing hub and bearing into mounted position. Periodically, push in on end of half shaft to give as much room as possible for tools on mounting bolts. Tighten mounting bolts to 68 N.m (50 ft. lbs.).

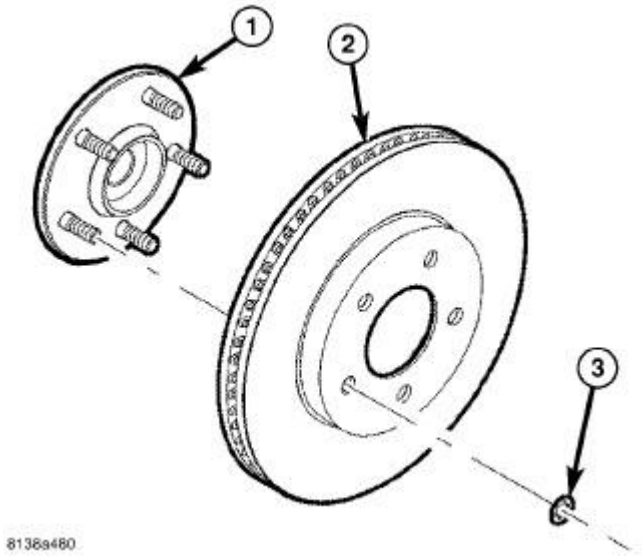

Fig. 27: Brake Rotor, Hub & Clips
Courtesy of CHRYSLER GROUP, LLC

NOTE: Inspect disc brake pads and parking brake shoes before brake rotor installation. Refer to PADS, BRAKE, INSPECTION .

4. Clean hub face (1) to remove any dirt or corrosion where rotor mounts.
5. Install brake rotor (2) over studs on hub and bearing (1).

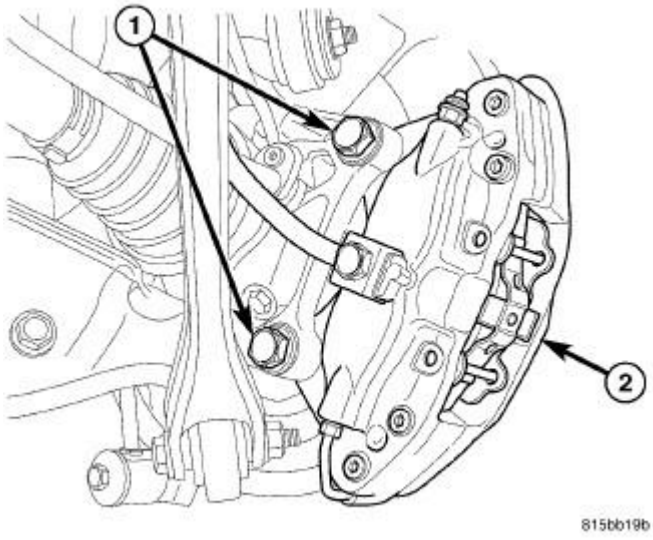

Fig. 28: Rear Caliper Mounting Bolts
Courtesy of CHRYSLER GROUP, LLC

6. Slide caliper with pads (2) over brake rotor and align with knuckle.

7. Install caliper mounting bolts (1). Tighten bolts to 130 N.m (96 ft. lbs.).
8. Remove jack from under spring link.

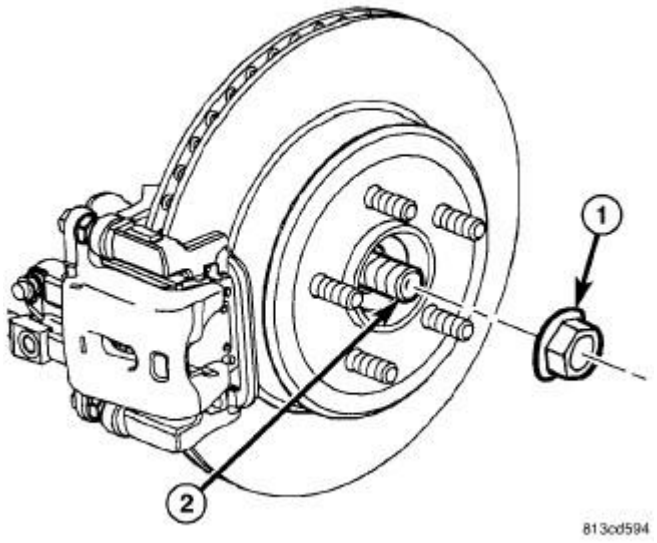

Fig. 29: Identifying Hub Nut
Courtesy of CHRYSLER GROUP, LLC

NOTE: Always install a new hub nut. The original hub nut is one-time use only and should be discarded when removed.

9. Install hub nut (1) on end of half shaft (2). While a helper applies brakes to keep hub from turning, tighten hub nut to 213 N.m (157 ft. lbs.).
10. Verify proper adjustment of the parking brake shoes and adjust as necessary. Refer to **SHOES, PARKING BRAKE, ADJUSTMENTS** .

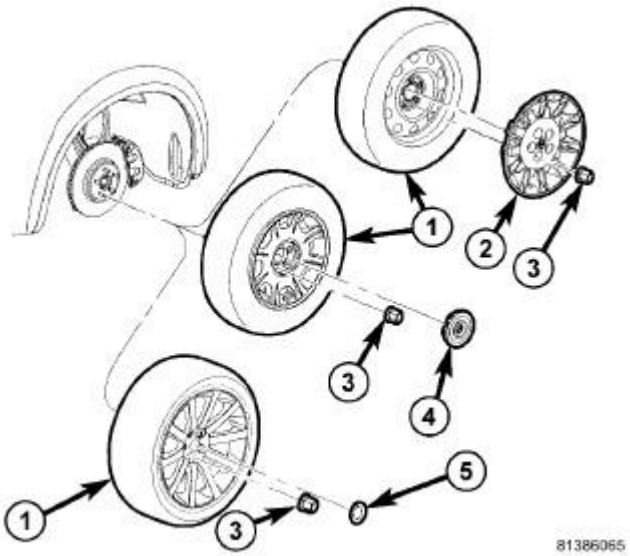

Fig. 30: Tire And Wheel Mounting
Courtesy of CHRYSLER GROUP, LLC

11. Install tire and wheel assembly (1). Refer to **INSTALLATION** . Tighten wheel mounting nuts (3) to 150 N.m (110 ft. lbs.).
12. Lower vehicle.
13. Pump brake pedal several times to ensure vehicle has a firm brake pedal before moving vehicle.

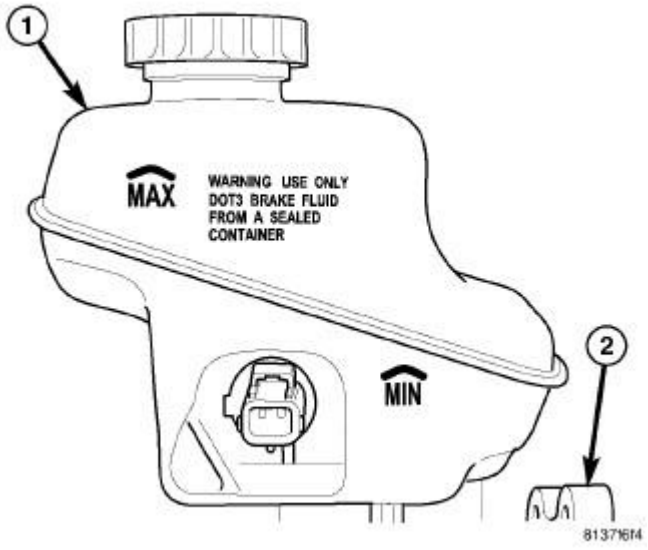

Fig. 31: Reservoir Fluid Level Markings
Courtesy of CHRYSLER GROUP, LLC

14. Check and adjust brake fluid level in reservoir (1) as necessary.
15. Road test vehicle and make several stops to wear off any foreign material on brakes and to seat brake

pads.

KNUCKLE, REAR

REMOVAL

NON SRT

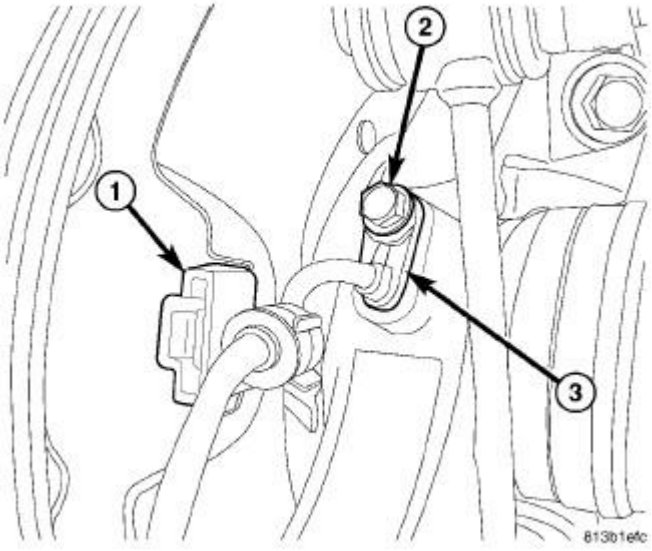

Fig. 32: Rear Wheel Speed Sensor & Screw
Courtesy of CHRYSLER GROUP, LLC

1. Raise and support vehicle. Refer to **HOISTING, STANDARD PROCEDURE** .
2. Unclip wheel speed sensor cable at rear brake rotor shield (1).
3. Remove screw (2) fastening sensor head (3) to rear knuckle.
4. Remove wheel speed sensor head from knuckle.
5. Access and remove rear hub and bearing. Refer to **HUB AND BEARING, REMOVAL**.
6. Remove parking brake shoes. Refer to **SHOES, PARKING BRAKE, REMOVAL** .

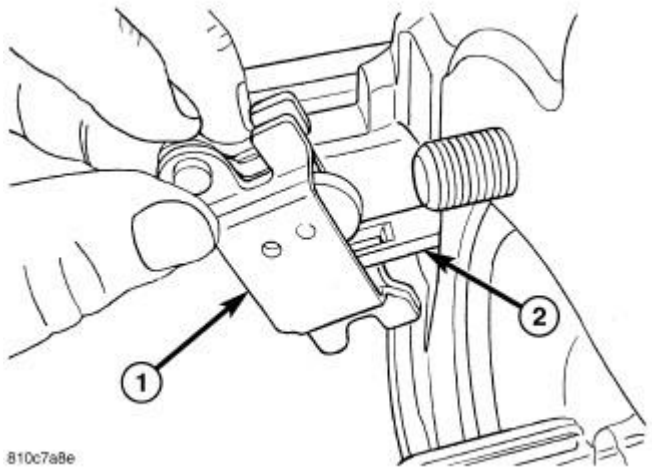

Fig. 33: Removing/Installing Actuator
Courtesy of CHRYSLER GROUP, LLC

1 - PARKING BRAKE SHOE ACTUATOR 2 - CABLE END

7. If not removed, remove parking brake shoe actuator lever (1) from end of cable (2).
8. Remove shoe support from knuckle.

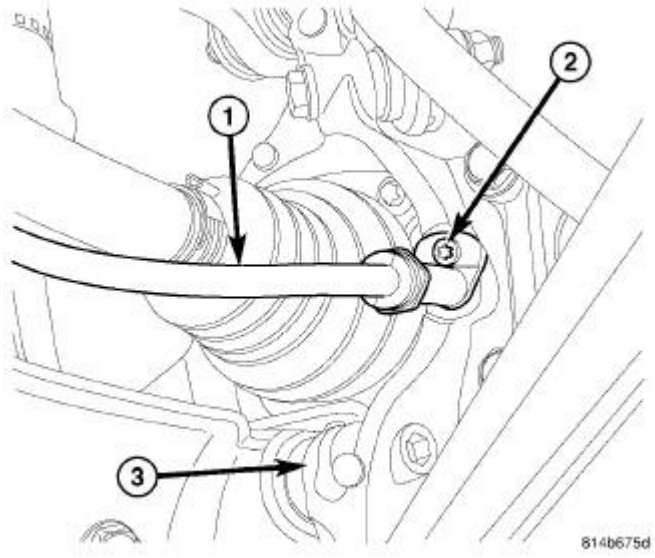

Fig. 34: Parking Brake Cable & Screw
Courtesy of CHRYSLER GROUP, LLC

9. Remove parking brake cable screw (2) at knuckle (3) and pull cable (1) out of knuckle.

10. Position under-hoist utility jack or jack stand under spring link. Raise jack head to contact spring link at shock mount secure in place.

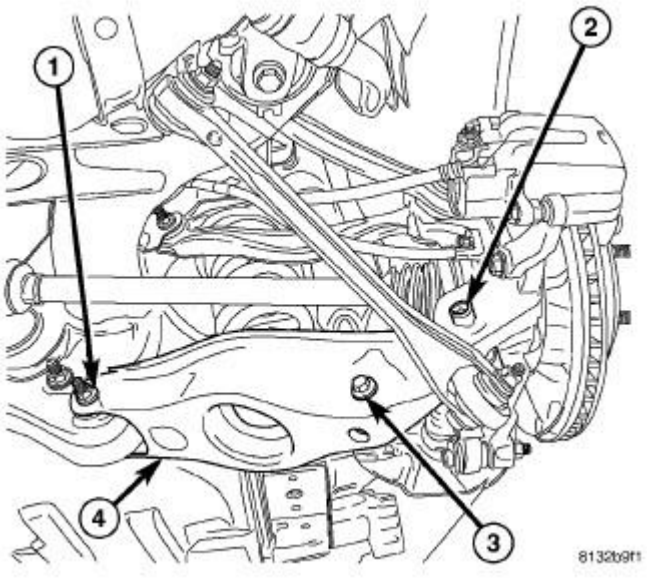

Fig. 35: Spring Link Mounting
Courtesy of CHRYSLER GROUP, LLC

11. Remove spring link-to-knuckle nut and bolt (2).

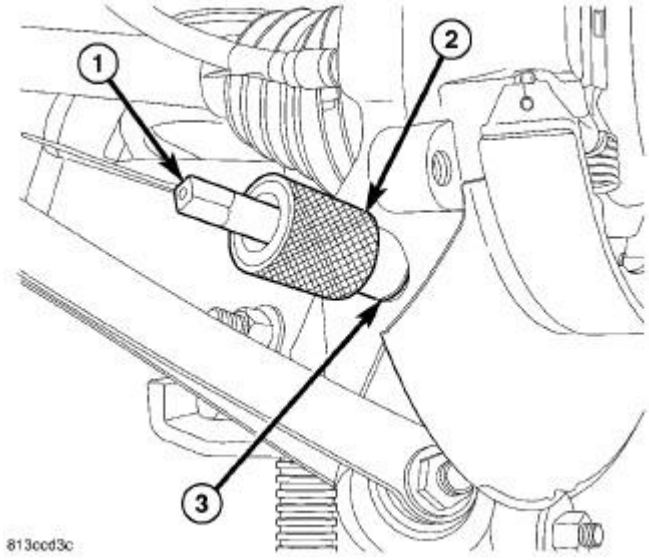

Fig. 36: Cutting Threads Through Bushing
Courtesy of CHRYSLER GROUP, LLC

CAUTION: It is important to use Tap Guide (2) when tapping sleeve in knuckle to help keep Plug Tap (1) straight during use or damage to Tap may

occur.

12. Place special tool #9361-2, Tap Guide (2) against sleeve (3) in knuckle to keep special tool #9361-1, Tap, Plug M16 X 2.0 (1) straight. Using Tap with an appropriate handle, cut threads approximately halfway through bushing (or about six complete threads). **It is important to back tap out, clean out burrs and lubricate Tap often during process.**

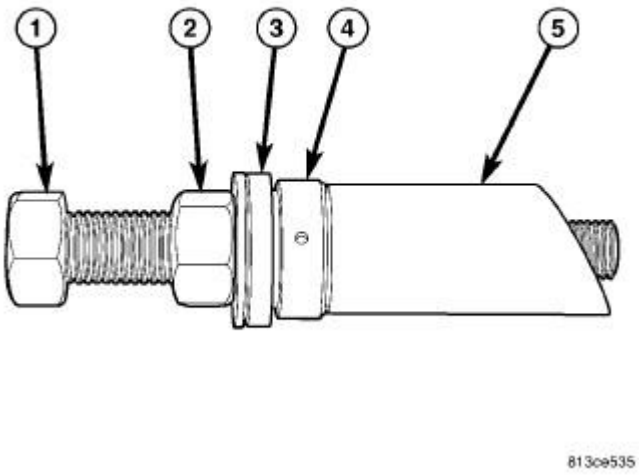

Fig. 37: Rear Knuckle Sleeve Remover/Installer
Courtesy of CHRYSLER GROUP, LLC

NOTE: Prior to using special tool #9361A, Rear Knuckle Sleeve Remover/Installer Kit, lubricate Bolt (1) threads to provide ease of use and promote tool longevity.

NOTE: When installing thrust bearing on Remover, be sure to place hardened side against nut. Place bearing outer cage against stationary component.

13. Assemble special tool #9361A, Rear Knuckle Sleeve Remover/Installer Kit as shown.
    - (1) special tool #9361-3, Screw, Forcing
    - (2) Nut
    - (3) Spherical Washer
    - (4) Thrust Bearing
    - (5) special tool #9361-4, Cup, Bushing

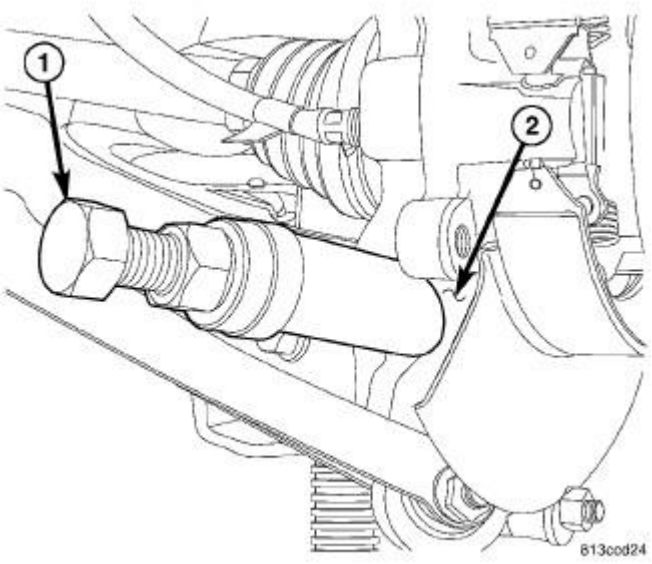

Fig. 38: Removing Knuckle Sleeve
Courtesy of CHRYSLER GROUP, LLC

14. Thread special tool #9361-3, Screw, Forcing (1) into tapped knuckle sleeve.
15. Rotate Nut down, matching Sleeve angled end with angled face of knuckle.
16. Continue to rotate Nut until knuckle sleeve is removed from knuckle. **Discard knuckle sleeve; replace it with new upon installation.**

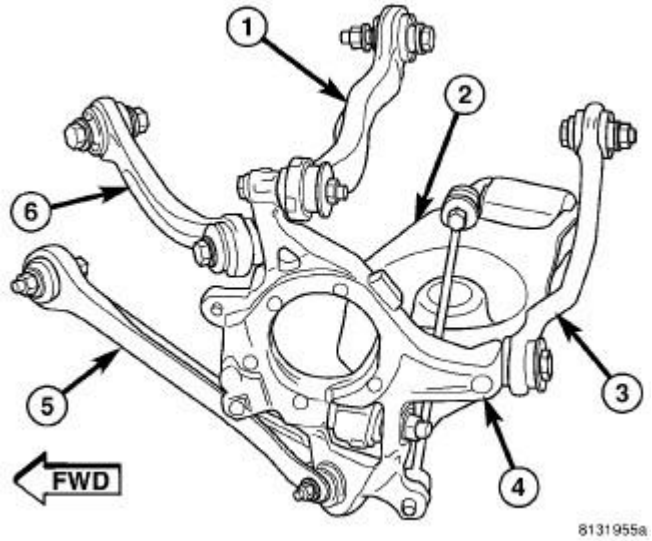

Fig. 39: Rear Suspension Components
Courtesy of CHRYSLER GROUP, LLC

17. Remove bolt and nut fastening compression link (5) to knuckle (4).
18. Remove bolt fastening toe link (3) to knuckle (4).

19. Remove nut and bolt fastening stabilizer link to knuckle (4).
20. Remove nut and bolt fastening tension link (6) to knuckle (4).
21. Remove nut and bolt fastening camber link (1) to knuckle (4).
22. Remove knuckle (4).
23. Remove hub mounting bolts from knuckle.

SRT

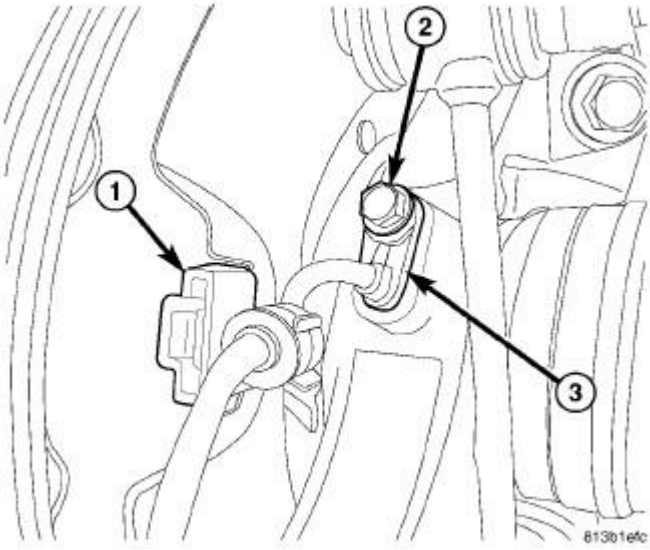

Fig. 40: Rear Wheel Speed Sensor & Screw
Courtesy of CHRYSLER GROUP, LLC

1. Raise and support vehicle. Refer to **HOISTING, STANDARD PROCEDURE** .
2. Unclip wheel speed sensor cable at rear brake rotor shield (1).
3. Remove screw (2) fastening sensor head (3) to rear knuckle.
4. Remove wheel speed sensor head from knuckle.
5. Access and remove rear hub and bearing. Refer to **HUB AND BEARING, REMOVAL**.
6. Remove parking brake shoes. Refer to **SHOES, PARKING BRAKE, REMOVAL** .

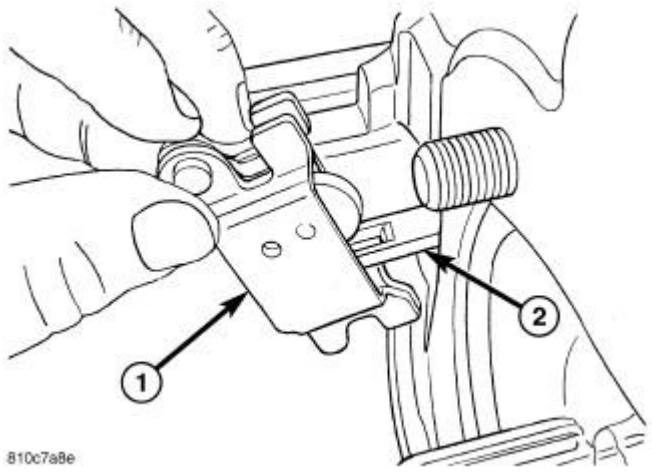

Fig. 41: Removing/Installing Actuator
Courtesy of CHRYSLER GROUP, LLC

1 - PARKING BRAKE SHOE ACTUATOR 2 - CABLE END

7. If not removed, remove parking brake shoe actuator lever (1) from end of cable (2).
8. Remove shoe support from knuckle.

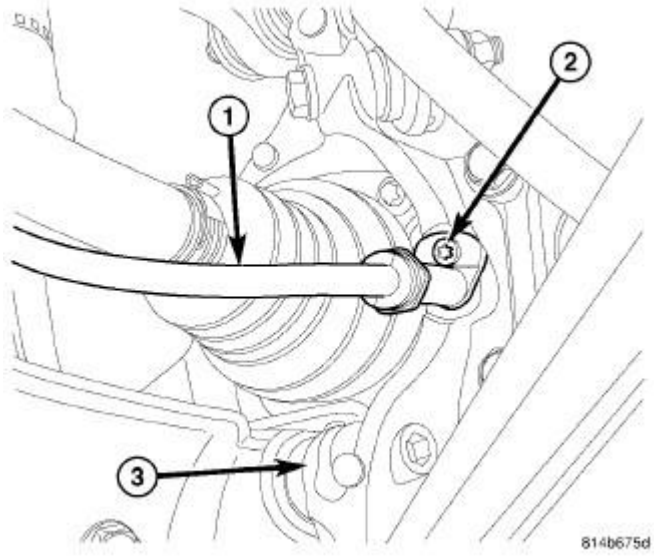

Fig. 42: Parking Brake Cable & Screw
Courtesy of CHRYSLER GROUP, LLC

9. Remove parking brake cable screw (2) at knuckle (3) and pull cable (1) out of knuckle.

10. Position under-hoist utility jack or jack stand under spring link. Raise jack head to contact spring link at shock mount secure in place.

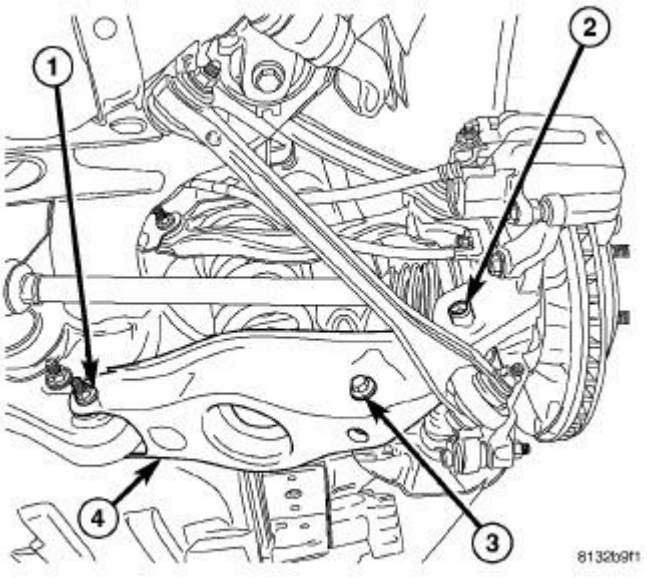

Fig. 43: Spring Link Mounting
Courtesy of CHRYSLER GROUP, LLC

11. Remove spring link-to-knuckle nut and bolt (2).

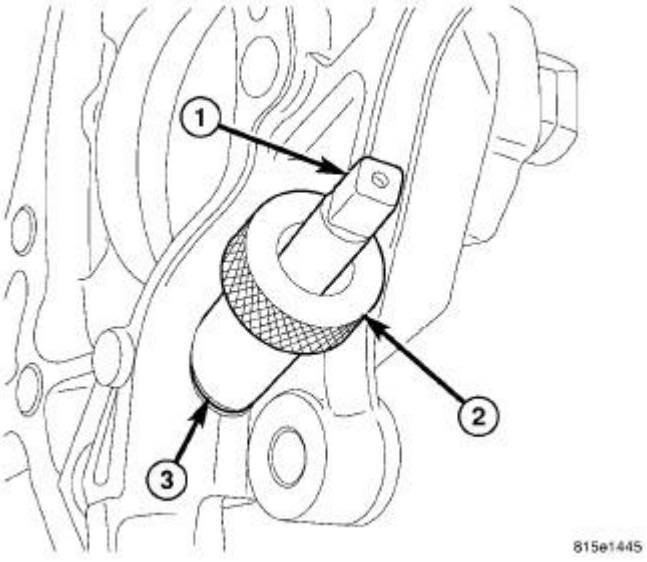

Fig. 44: Cutting Threads Through Bushing
Courtesy of CHRYSLER GROUP, LLC

CAUTION: It important to use Tap Guide (2), when tapping sleeve in knuckle to help keep Plug Tap (1), straight during use or damage to Tap may

occur.

12. Place special tool #9361-11, Guide, Tap (2) against sleeve (3) in knuckle to keep special tool #9361-1, Tap, Plug M16 X 2.0 (1) straight. Using Tap with an appropriate handle, cut threads approximately halfway through bushing (or about six complete threads). **It is important to back tap out, clean out burrs and lubricate Tap often during process.**

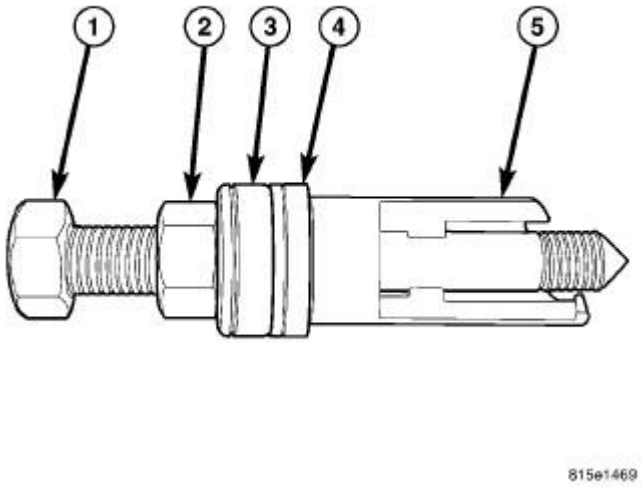

Fig. 45: Rear Knuckle Sleeve Remover/Installer Kit
Courtesy of CHRYSLER GROUP, LLC

NOTE: Prior to using special tool #9361A, Rear Knuckle Sleeve Remover/Installer Kit, lubricate Bolt (1) threads to provide ease of use and promote tool longevity.

13. Assemble special tool #9361A, Rear Knuckle Sleeve Remover/Installer Kit, as shown.
    - (1) special tool #9361-3, Screw, Forcing
    - (2) Nut
    - (3) Thrust Bearing
    - (4) Spherical Washer
    - (5) special tool #9361-9, Cup, Remover, Left Side (Left Side - Shown in figure)
    - (5) special tool #9361-10, Cup, Remover, Right Side (Right Side)

NOTE: When installing thrust bearing (3) on Remover, be sure to place hardened side against nut (2). Place bearing outer cage against stationary component.

NOTE: It is important to use appropriate Sleeve (special tool #9361-9, Cup, Remover, Left Side or special tool #9361-10, Cup, Remover, Right Side) on

Remover to provide proper Tool-to-Knuckle contact.

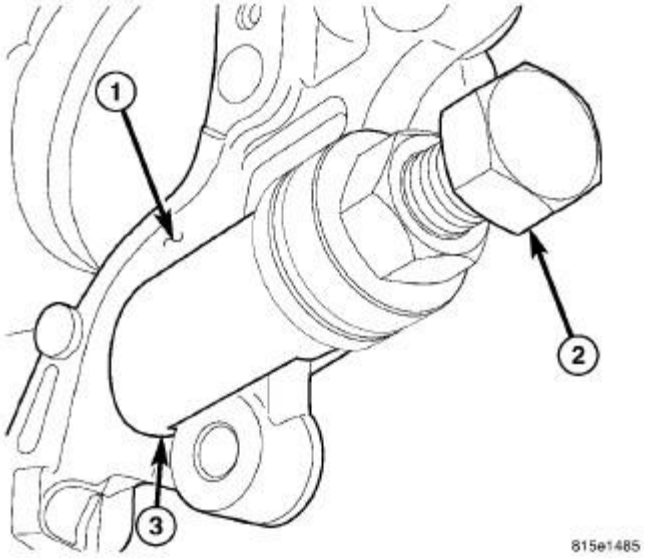

Fig. 46: Removing Knuckle Sleeve
Courtesy of CHRYSLER GROUP, LLC

14. Thread special tool #9361-3, Screw, Forcing (2) into tapped knuckle sleeve.
15. Rotate Nut down, matching Sleeve (special tool #9361-9, Cup, Remover, Left Side) or special tool #9361-10, Cup, Remover, Right Side) angled end with angled face of knuckle (1). **Make sure foot on Sleeve (3) is inserted behind machined brake caliper mounting boss.**
16. Continue to rotate Nut until knuckle sleeve is removed from knuckle. **Discard knuckle sleeve; replace it with new upon installation.**

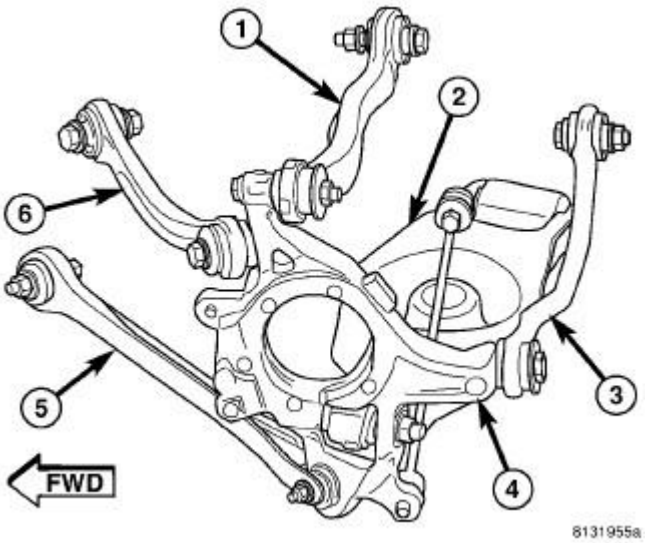

Fig. 47: Rear Suspension Components

Courtesy of CHRYSLER GROUP, LLC

17. Remove bolt and nut fastening compression link (5) to knuckle (4).
18. Remove bolt fastening toe link (3) to knuckle (4).
19. Remove nut and bolt fastening stabilizer link to knuckle (4).
20. Remove nut and bolt fastening tension link (6) to knuckle (4).
21. Remove nut and bolt fastening camber link (1) to knuckle (4).
22. Remove knuckle (4).
23. Remove hub mounting bolts from knuckle.

INSTALLATION

NON SRT

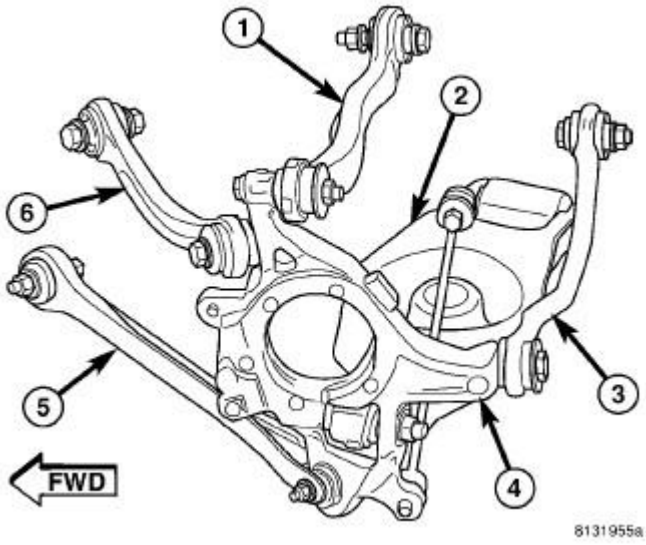

Fig. 48: Rear Suspension Components
Courtesy of CHRYSLER GROUP, LLC

1. Install four hub mounting bolts through knuckle from inboard side allowing ends to protrude from opposite side.
2. Position knuckle on vehicle and install bolt and nut fastening camber link (1) to knuckle (4) as shown. **Do not tighten bolt at this time.**
3. Install bolt and nut fastening tension link (6) to knuckle (4) as shown. **Do not tighten bolt at this time.**
4. Install bolt and nut fastening stabilizer link to knuckle (4). **Do not tighten bolt at this time.**
5. Install bolt fastening toe link (3) to knuckle (4). **Do not tighten bolt at this time.**
6. Install bolt and nut fastening compression link (5) to knuckle (4). **Do not tighten bolt at this time.**

NOTE: If a new knuckle sleeve is not installed in knuckle, perform step 7 through 11.

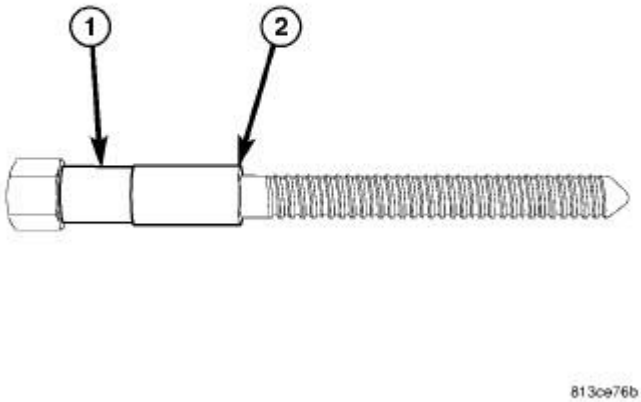

Fig. 49: Rear Knuckle Sleeve Remover/Installer
Courtesy of CHRYSLER GROUP, LLC

NOTE: Prior to using special tool #9361A, Rear Knuckle Sleeve Remover/Installer Kit, lubricate bolt (1) threads to provide ease of use and promote tool longevity.

7. Place NEW knuckle sleeve (2) onto special tool #9361-7, Screw, Installation (1), and slide it up to Bolt's head.

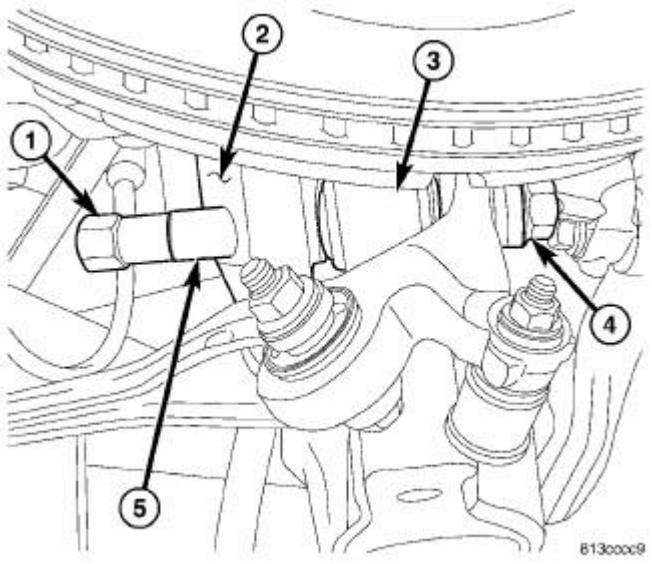

Fig. 50: Installing Knuckle Sleeve
Courtesy of CHRYSLER GROUP, LLC

8. Starting from knuckle forward end, slide special tool #9361-7, Screw, Installation (1) with sleeve (5) through knuckle (2) and spring link ball joint (3).
9. Install thrust bearing and nut (4) on end of Bolt. **When installing thrust bearing on Installer, be sure to place hardened side against nut. Place bearing outer cage against stationary component.**
10. While holding Bolt head (1) stationary, rotate Nut (4) (using hand tools) installing sleeve in knuckle. Install sleeve until Nut stops turning. **Do not overtighten Nut.**
11. Remove special tool.

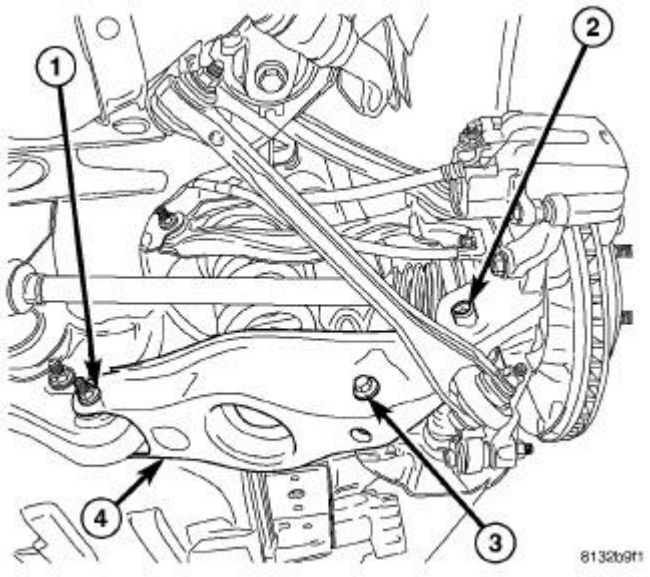

Fig. 51: Spring Link Mounting
Courtesy of CHRYSLER GROUP, LLC

12. Install spring link-to-knuckle bolt (2) front-to-rear through knuckle and link, then install nut. While holding bolt head stationary, tighten nut to 138 N.m (102 ft. lbs.).
13. Remove under-hoist utility jack or jack stand from under spring link.

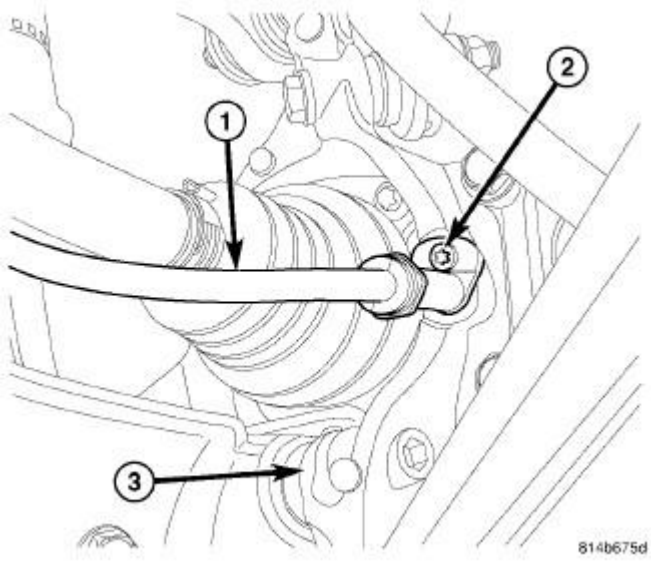

Fig. 52: Parking Brake Cable & Screw
Courtesy of CHRYSLER GROUP, LLC

14. Insert end of cable (1) through rear knuckle (3) and install mounting screw (2). Tighten screw to 8 N.m (71 in. lbs.).
15. Install parking brake shoe support over hub and bearing mounting screws and onto face of knuckle.

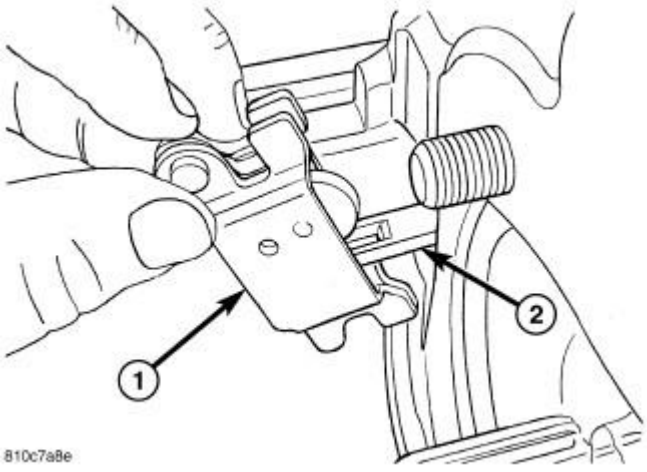

Fig. 53: Removing/Installing Actuator
Courtesy of CHRYSLER GROUP, LLC

1 - PARKING BRAKE SHOE ACTUATOR
2 - CABLE END

16. Install shoe actuator lever (1) on end of parking brake cable (2). Make sure actuator lever is positioned with word "UP" facing outward.
17. Install parking brake shoes as well as all components necessary to access them. Refer to **SHOES, PARKING BRAKE, INSTALLATION** .

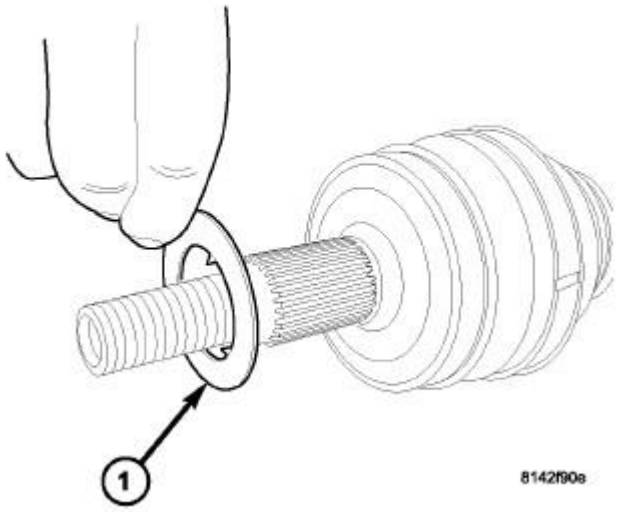

Fig. 54: Halfshaft Isolation Washer
Courtesy of CHRYSLER GROUP, LLC

NOTE: Before installing hub and bearing on end of axle half shaft, ensure isolation washer is present on end of half shaft. Inspect washer making sure it is not worn or damaged. Washer can be installed in either direction on shaft.

18. Install hub and bearing as well as all components necessary to access it. Refer to **HUB AND BEARING, INSTALLATION**.

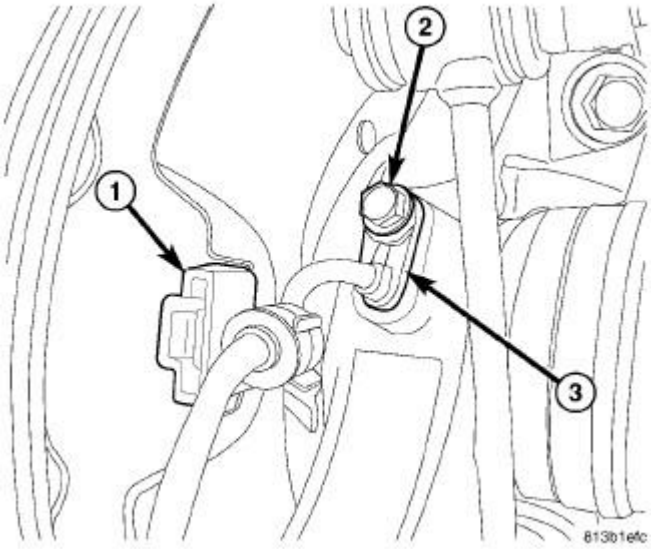

Fig. 55: Rear Wheel Speed Sensor & Screw
Courtesy of CHRYSLER GROUP, LLC

19. Insert wheel speed sensor head (3) into mounting hole in rear of knuckle.
20. Install screw (2) fastening sensor head (3) to rear knuckle. Tighten Screw to 11 N.m (97 in. lbs.).
21. Install sensor cable at rear brake rotor shield (1).
22. Lower vehicle.
23. Adjust parking brake shoes as necessary. Refer to **SHOES, PARKING BRAKE, ADJUSTMENTS** .
24. Position vehicle on alignment rack/drive-on hoist. Raise vehicle as necessary to access mounting bolts.

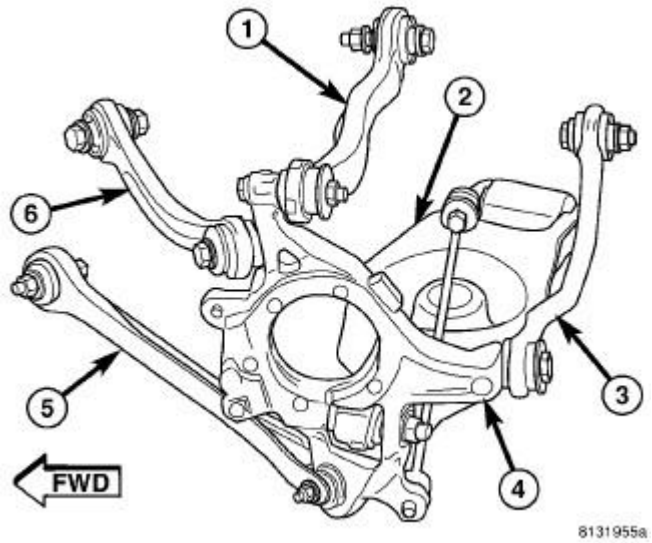

Fig. 56: Rear Suspension Components
Courtesy of CHRYSLER GROUP, LLC

25. Tighten fasteners at knuckle (vehicle at curb height) as follows:
    - Camber Link (1) - 98 N.m (72 ft. lbs.).
    - Compression Link (5) - 81 N.m (60 ft. lbs.).
    - Stabilizer Link - 61 N.m (45 ft. lbs.).
    - Tension Link (6) - 98 N.m (72 ft. lbs.).
    - Toe Link (3) - 95 N.m (70 ft. lbs.).
26. Perform wheel alignment. Refer to **WHEEL ALIGNMENT, STANDARD PROCEDURE** .

SRT

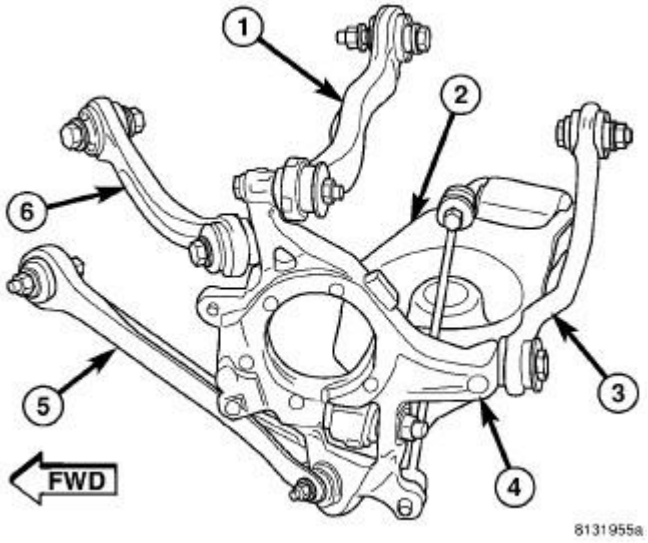

Fig. 57: Rear Suspension Components
Courtesy of CHRYSLER GROUP, LLC

1. Install four hub mounting bolts through knuckle from inboard side allowing ends to protrude from opposite side.
2. Position knuckle on vehicle and install bolt and nut fastening camber link (1) to knuckle (4) as shown. **Do not tighten bolt at this time.**
3. Install bolt and nut fastening tension link (6) to knuckle (4) as shown. **Do not tighten bolt at this time.**
4. Install bolt and nut fastening stabilizer link to knuckle (4). **Do not tighten bolt at this time.**
5. Install bolt fastening toe link (3) to knuckle (4). **Do not tighten bolt at this time.**
6. Install bolt and nut fastening compression link (5) to knuckle (4). **Do not tighten bolt at this time.**

NOTE: If a new knuckle sleeve is not installed in knuckle, perform step 7 through 11.

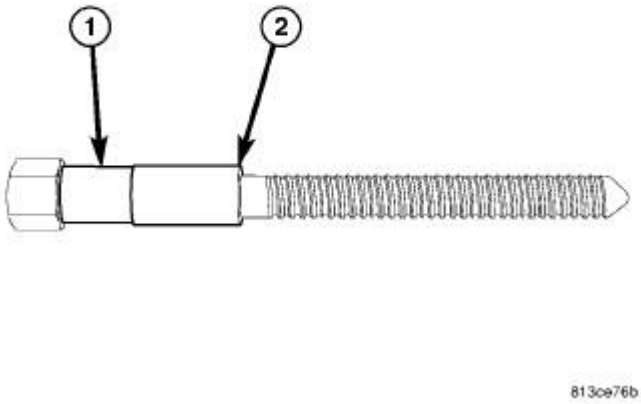

Fig. 58: Rear Knuckle Sleeve Remover/Installer
Courtesy of CHRYSLER GROUP, LLC

NOTE: Prior to using special tool #9361A, Rear Knuckle Sleeve Remover/Installer Kit, lubricate bolt (1) threads to provide ease of use and promote tool longevity.

7. Place NEW knuckle sleeve (2) onto special tool #9361-12, Installer, Bushing (1), and slide it up to Bolt head.

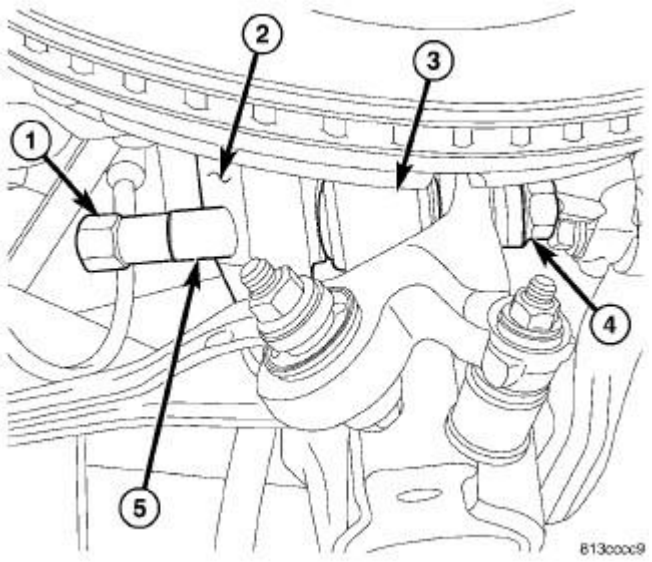

Fig. 59: Installing Knuckle Sleeve
Courtesy of CHRYSLER GROUP, LLC

8. Starting from knuckle forward end, slide special tool #9361-12, Installer, Bushing (1) with sleeve (5) through knuckle (2) and spring link ball joint (3).
9. Install Installation Thrust Bearing (around 3/8 inch thick) and special flange nut (4) on end of Bolt. **When installing thrust bearing on Installer, be sure to place hardened side against nut. Place bearing outer cage against stationary component.**
10. While holding Bolt head (1) stationary, rotate Nut (4) (using hand tools) installing sleeve in knuckle. Install sleeve until Nut stops turning. **Do not overtighten Nut.**
11. Remove special tool.

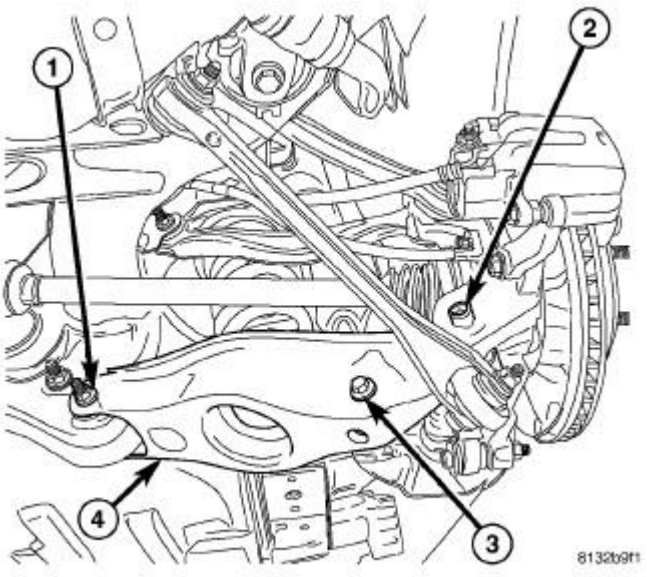

Fig. 60: Spring Link Mounting
Courtesy of CHRYSLER GROUP, LLC

12. Install spring link-to-knuckle bolt (2) front-to-rear through knuckle and link, then install nut. While holding bolt head stationary, tighten nut to 138 N.m (102 ft. lbs.).
13. Remove under-hoist utility jack or jack stand from under spring link.

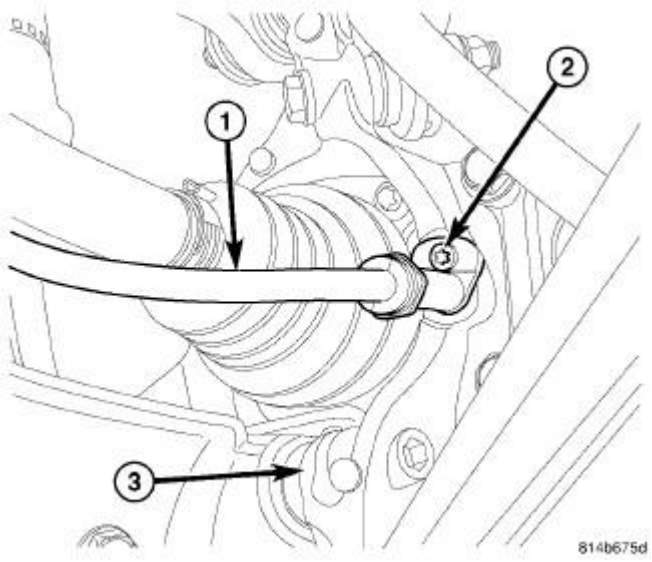

Fig. 61: Parking Brake Cable & Screw
Courtesy of CHRYSLER GROUP, LLC

14. Insert end of cable (1) through rear knuckle (3) and install mounting screw (2). Tighten screw to 8 N.m (71 in. lbs.).
15. Install parking brake shoe support over hub and bearing mounting screws and onto face of knuckle.

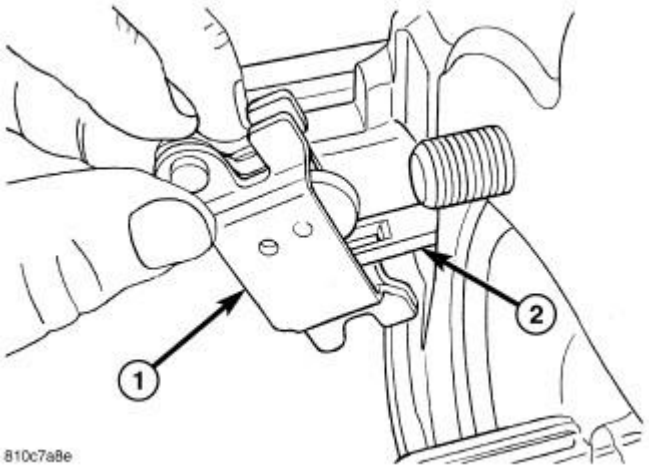

Fig. 62: Removing/Installing Actuator
Courtesy of CHRYSLER GROUP, LLC

1 - PARKING BRAKE SHOE ACTUATOR
2 - CABLE END

16. Install shoe actuator lever (1) on end of parking brake cable (2). Make sure actuator lever is positioned with word "UP" facing outward.
17. Install parking brake shoes as well as all components necessary to access them. Refer to **SHOES, PARKING BRAKE, INSTALLATION** .

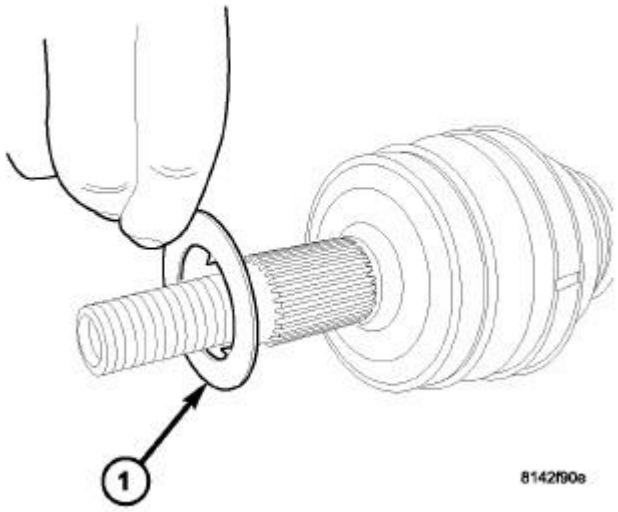

Fig. 63: Halfshaft Isolation Washer
Courtesy of CHRYSLER GROUP, LLC

NOTE: Before installing hub and bearing on end of axle half shaft, ensure isolation washer is present on end of half shaft. Inspect washer making sure it is not worn or damaged. Washer can be installed in either direction on shaft.

18. Install hub and bearing as well as all components necessary to access it. Refer to **HUB AND BEARING, INSTALLATION**.

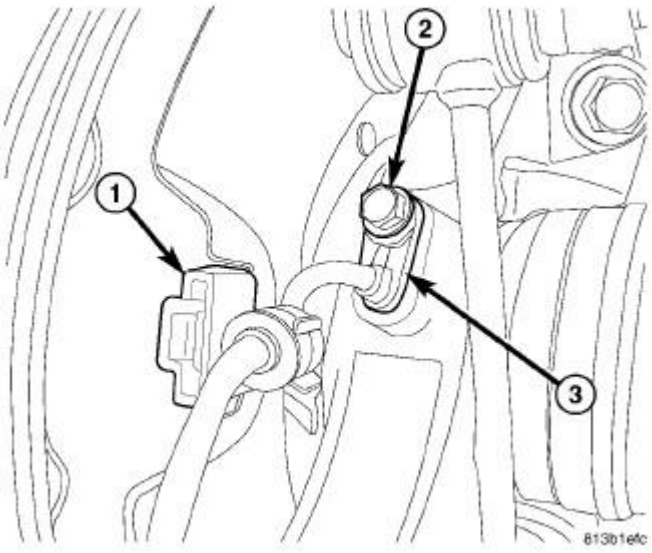

Fig. 64: Rear Wheel Speed Sensor & Screw
Courtesy of CHRYSLER GROUP, LLC

19. Insert wheel speed sensor head (3) into mounting hole in rear of knuckle.
20. Install screw (2) fastening sensor head (3) to rear knuckle. Tighten Screw to 11 N.m (97 in. lbs.).
21. Install sensor cable at rear brake rotor shield (1).
22. Lower vehicle.
23. Adjust parking brake shoes as necessary. Refer to **SHOES, PARKING BRAKE, ADJUSTMENTS** .
24. Position vehicle on alignment rack/drive-on hoist. Raise vehicle as necessary to access mounting bolts.

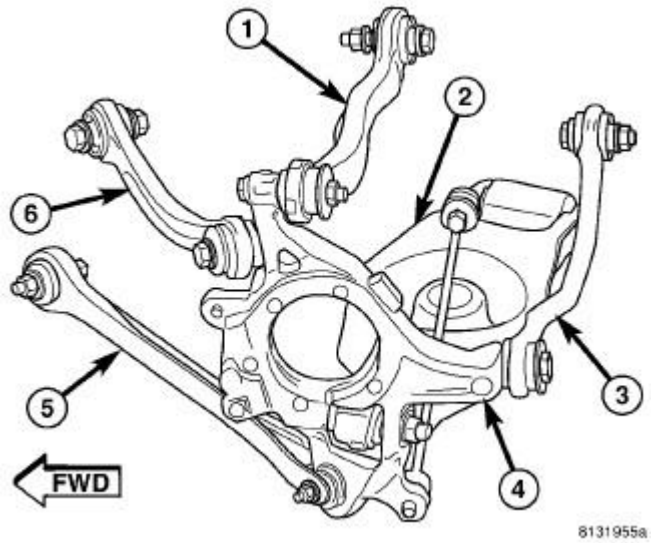

Fig. 65: Rear Suspension Components
Courtesy of CHRYSLER GROUP, LLC

25. Tighten fasteners at knuckle (vehicle at curb height) as follows:
    - Camber Link (1) - 98 N.m (72 ft. lbs.).
    - Compression Link (5) - 81 N.m (60 ft. lbs.).
    - Stabilizer Link - 61 N.m (45 ft. lbs.).
    - Tension Link (6) - 98 N.m (72 ft. lbs.).
    - Toe Link (3) - 95 N.m (70 ft. lbs.).
26. Perform wheel alignment. Refer to **WHEEL ALIGNMENT, STANDARD PROCEDURE** .

LINK, CAMBER

REMOVAL

REMOVAL

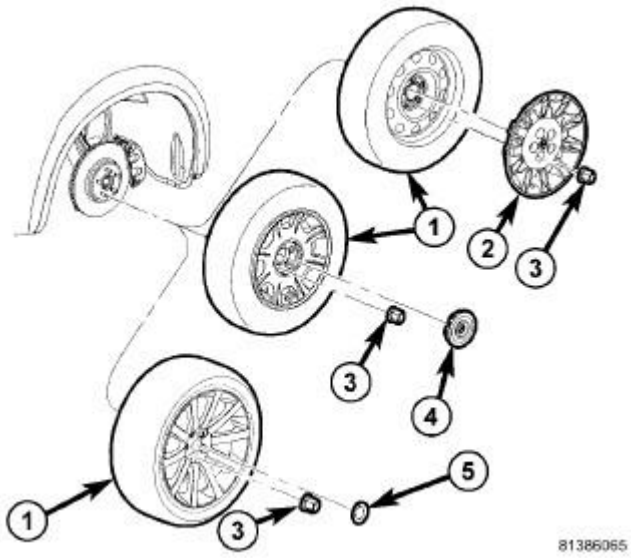

Fig. 66: Tire And Wheel Mounting
Courtesy of CHRYSLER GROUP, LLC

1. Raise and support vehicle. Refer to **HOISTING, STANDARD PROCEDURE** .
2. On both sides of vehicle, remove wheel mounting nuts (3), then rear tire and wheel assembly (1).

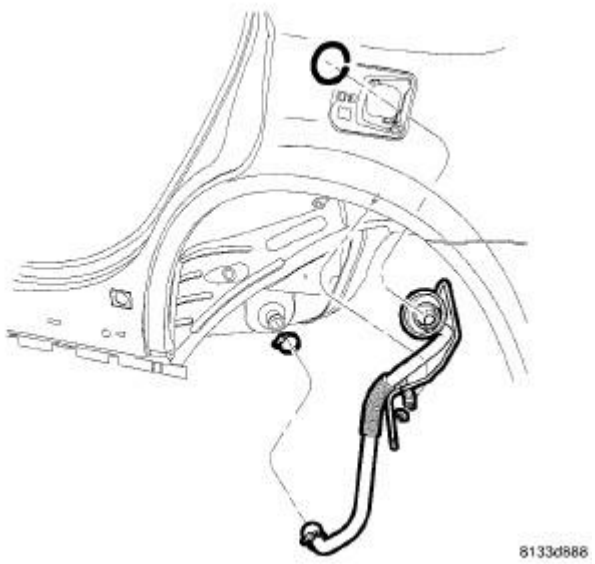

Fig. 67: Filler Tube Assembly
Courtesy of CHRYSLER GROUP, LLC

WARNING: Before opening fuel system, review all Warnings and Cautions.

3. If servicing left side, remove fuel filler tube. Refer to **TUBE, FUEL TANK FILLER, REMOVAL** .
4. Position an extra pair of jack stands under and support forward end of engine cradle to help stabilize vehicle during rear suspension removal/installation.
5. Perform the following if vehicle is equipped with dual-exhaust or are servicing right side on vehicle with single exhaust:
    a. Position under-hoist utility jack or stand several inches below exhaust at muffler.
    b. Disconnect exhaust isolators at muffler and resonators hangers.
    c. Lower exhaust down to rest upon top of jack or stand placed below muffler.

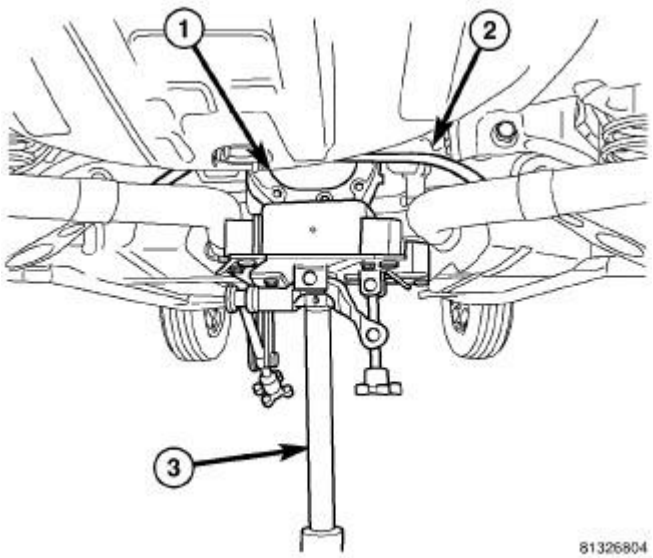

Fig. 68: Supporting Rear Axle Differential
Courtesy of CHRYSLER GROUP, LLC

6. Position under-hoist utility jack or transmission jack (3) under center of rear axle differential (1). Raise jack head to contact differential and secure in place. **When securing crossmember to jack, be sure not to secure stabilizer bar.**

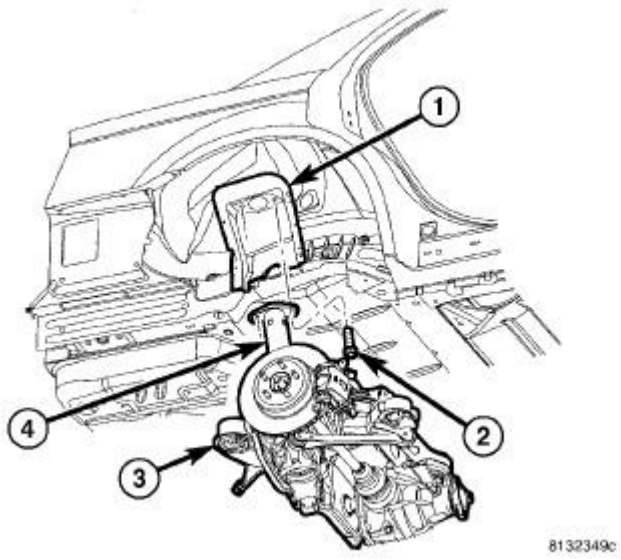

Fig. 69: Shock Absorber & Upper Mounting Screws
Courtesy of CHRYSLER GROUP, LLC

7. Remove shock absorber (1) upper mounting screws (2).

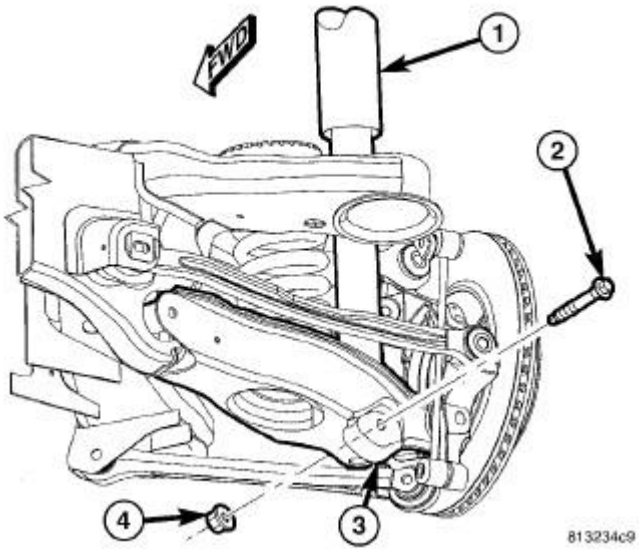

Fig. 70: Shock Absorber Lower Mounting Bolt & Nut
Courtesy of CHRYSLER GROUP, LLC

8. Remove shock absorber (1) lower mounting bolt (2) and nut (4).

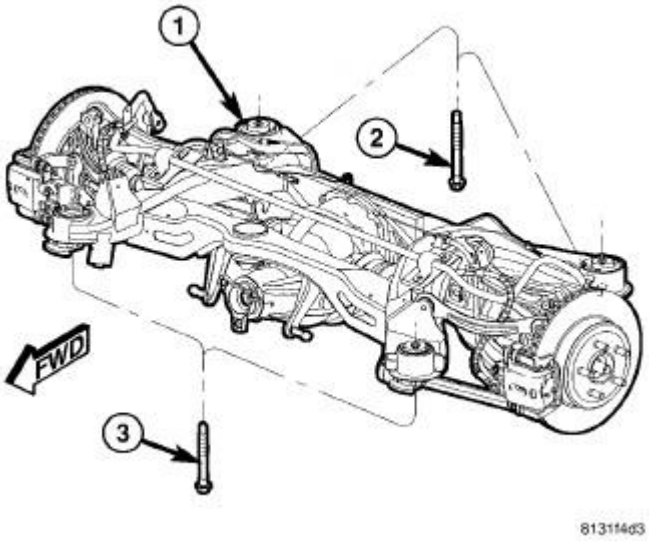

Fig. 71: Rear Crossmember Mounting Bolts
Courtesy of CHRYSLER GROUP, LLC

CAUTION: When removing crossmember mounting bolts (2 and 3) it is important NOT to loosen or remove crossmember mounting bolts on opposite side of vehicle. Doing so will require rear wheel alignment following reinstallation to ensure proper thrust angle.

9. Remove both front and rear crossmember mounting bolts (2 and 3) on repair-side of vehicle.

CAUTION: To avoid damaging other components of vehicle, do not lower crossmember (1) any further than necessary to remove shock absorber.

10. **Slowly** lower jack allowing repair-side of crossmember to drop. Lower jack just enough to allow top of shock absorber to clear body flange.

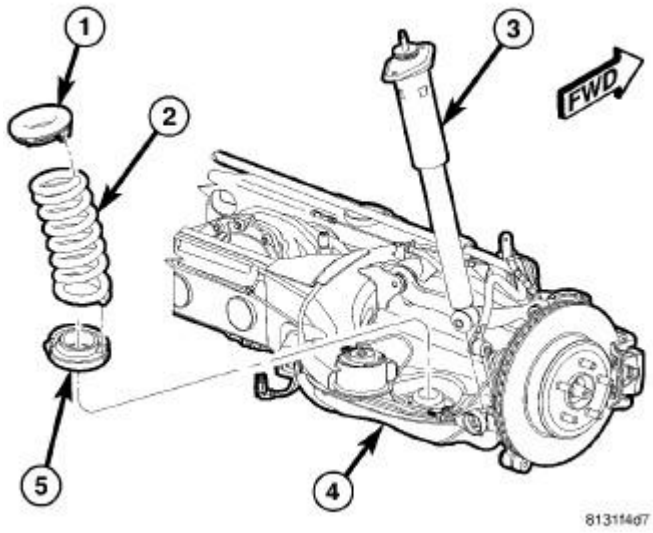

Fig. 72: Isolators, Coil Spring, Shock Absorber & Crossmember
Courtesy of CHRYSLER GROUP, LLC

11. Remove shock absorber (3) by tipping top outward and lifting lower end out of pocket in spring link (4).

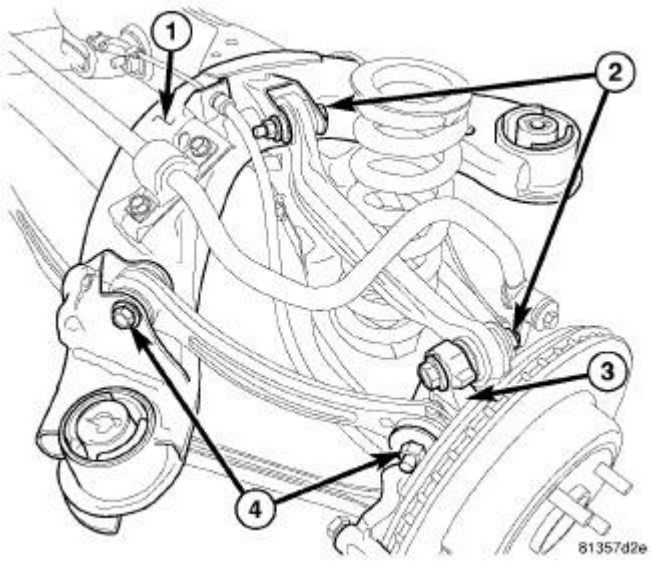

Fig. 73: Camber Link, Nuts & Bolts
Courtesy of CHRYSLER GROUP, LLC

NOTE: Do not lower repair-side of crossmember any further than necessary to gain access to link mounting bolts at crossmember.

12. Remove nut and bolt (2) mounting link to knuckle (3).
13. Remove nut and bolt (2) mounting link to crossmember (1).
14. Remove link.

INSTALLATION

INSTALLATION

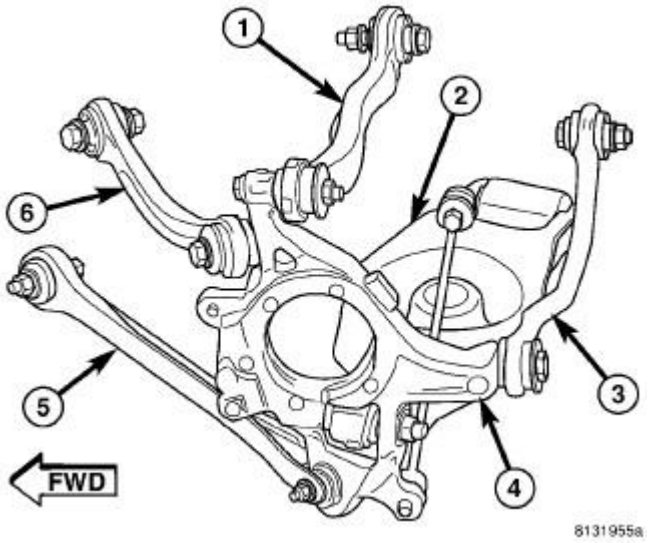

Fig. 74: Rear Suspension Components
Courtesy of CHRYSLER GROUP, LLC

NOTE: When installing link (1), ensure the following to avoid mis-installation:

- **Heavier, thicker end goes toward crossmember.**
- **Fore-or-aft bow faces forward (curves around coil spring).**
- **Up-or-down bow faces downward.**

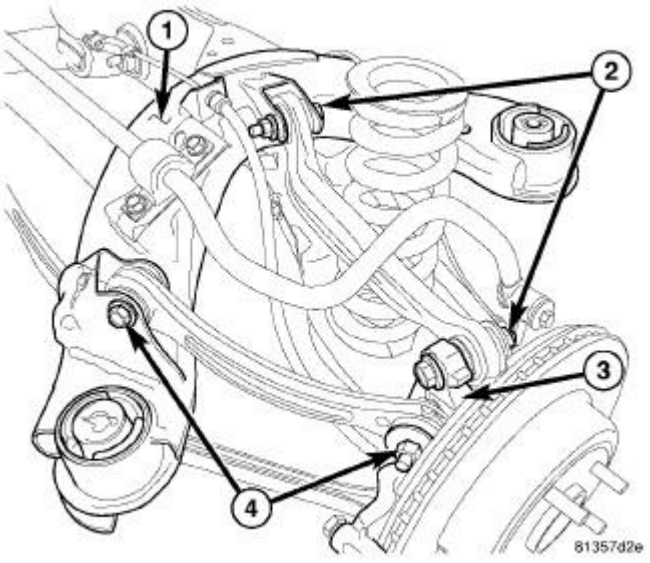

Fig. 75: Camber Link, Nuts & Bolts
Courtesy of CHRYSLER GROUP, LLC

1. Place link in bracket on crossmember (1). Install bolt and nut (2) at crossmember (1) as shown. **Do not**

tighten bolt at this time.

2. Install bolt and nut (2) mounting link to knuckle (3) as shown. **Do not tighten bolt at this time.**

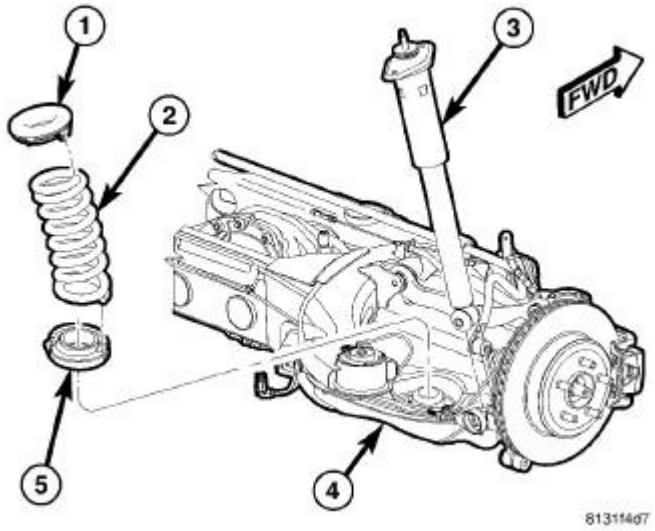

Fig. 76: Isolators, Coil Spring, Shock Absorber & Crossmember
Courtesy of CHRYSLER GROUP, LLC

3. Install shock absorber (3) by setting lower end into pocket in spring link (4), then tipping top inward until aligned with upper mounting holes.

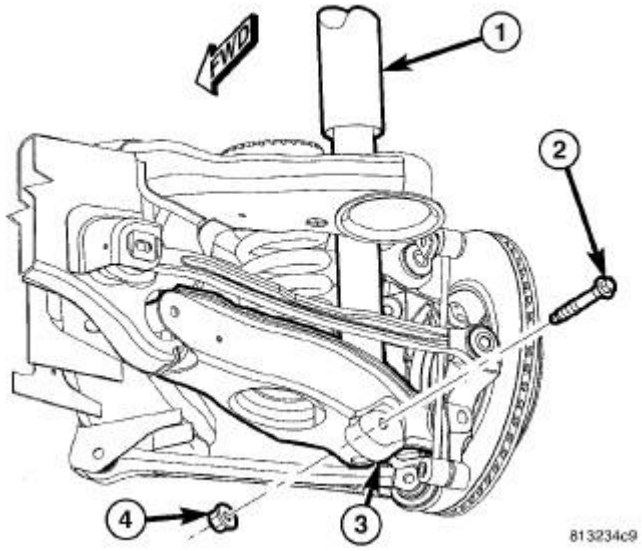

Fig. 77: Shock Absorber Lower Mounting Bolt & Nut
Courtesy of CHRYSLER GROUP, LLC

4. Install lower shock mounting bolt and nut. **Do not tighten at this time.**

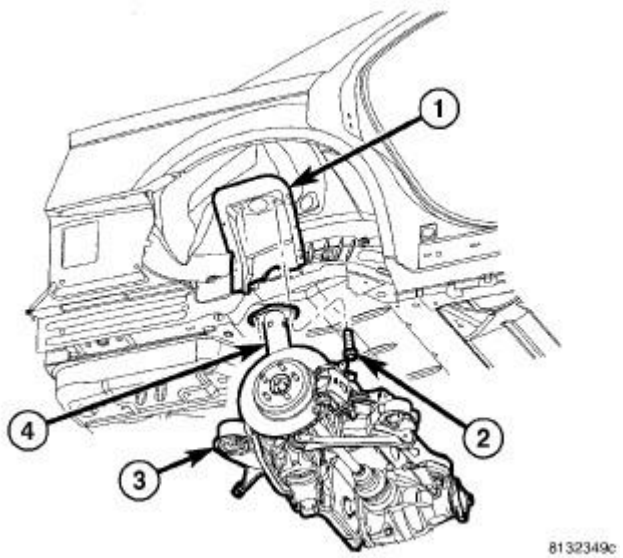

Fig. 78: Shock Absorber & Upper Mounting Screws
Courtesy of CHRYSLER GROUP, LLC

5. Carefully raise jack, guiding coil spring and upper end of shock absorber (4) into mounted positions.
6. Install shock absorber upper mounting screws (2). Tighten upper mounting screws to 52 N.m (38 ft. lbs.).

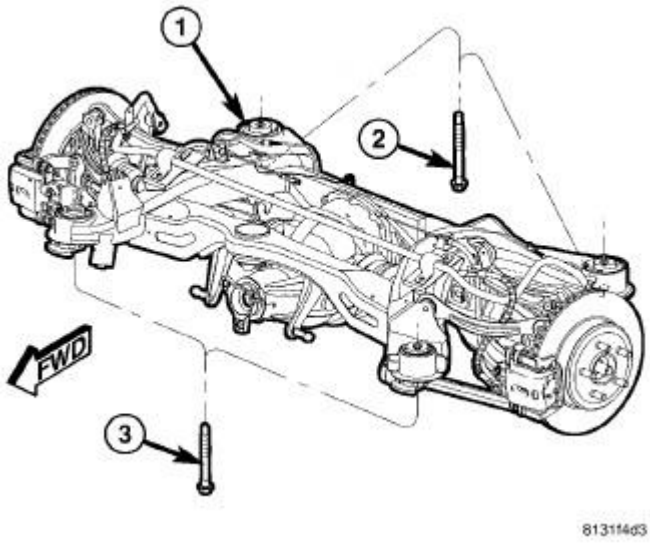

Fig. 79: Rear Crossmember Mounting Bolts
Courtesy of CHRYSLER GROUP, LLC

NOTE: Rear crossmember mounting bolts (2) are longer than front mounting bolts (3). Do not interchange mounting bolts.

7. Install crossmember mounting bolts (2 and 3). **Snug, but do not fully tighten bolts at this time.**

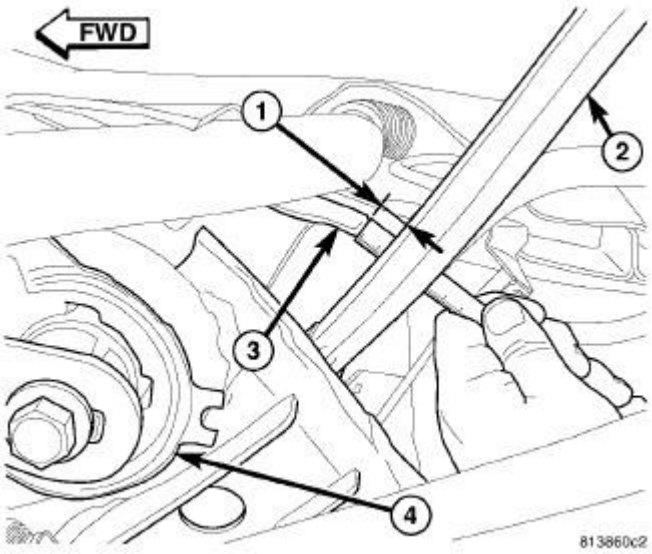

Fig. 80: Measuring Tension Link Clearance
Courtesy of CHRYSLER GROUP, LLC

8. Measure distance (1) between from tension link (2) to body weld flange (3) directly in front of it, just outboard of front mount bushing (4). **This distance must be at least 12 mm to allow proper clearance for suspension movement.** If distance is less than 12 mm, shift that side of rear crossmember directly rearward until distance is 12 mm or greater. To do so, loosen 3 mounting bolts slightly, leaving one on opposite side of shift snugged to pivot off of. Shift crossmember rearward and snug loosened bolts. Measure opposite side to be sure it also maintains minimum 12 mm distance.

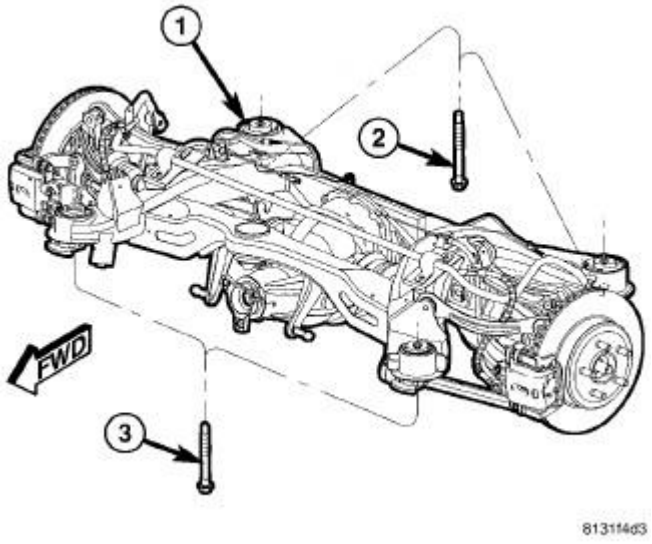

Fig. 81: Rear Crossmember Mounting Bolts
Courtesy of CHRYSLER GROUP, LLC

9. Tighten all crossmember mounting bolts (2 and 3) to 180 N.m (133 ft. lbs.).

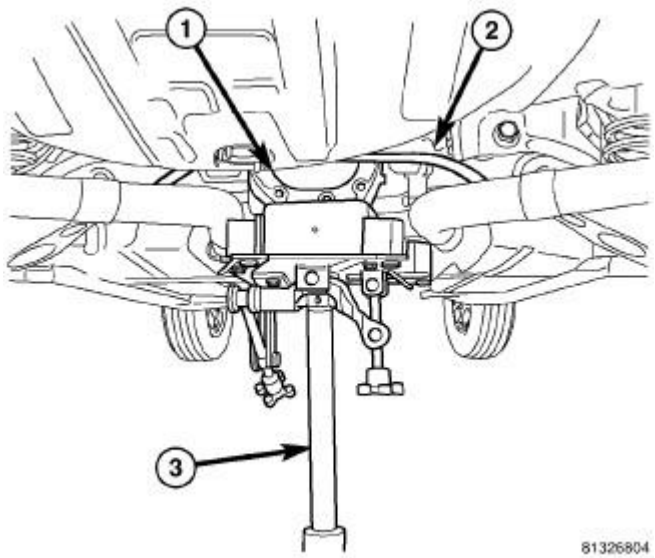

Fig. 82: Supporting Rear Axle Differential
Courtesy of CHRYSLER GROUP, LLC

10. Remove jack (3) from under rear axle differential.
11. If previously lowered, raise rear exhaust back to mounted position and connect exhaust isolators at muffler and resonators hangers. Remove jack or stand below exhaust muffler.

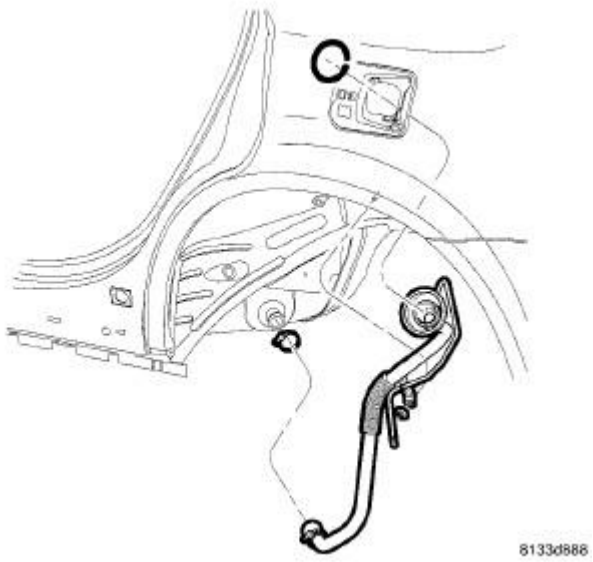

Fig. 83: Filler Tube Assembly
Courtesy of CHRYSLER GROUP, LLC

12. If removed, install fuel filler tube. Refer to **TUBE, FUEL TANK FILLER, INSTALLATION** .

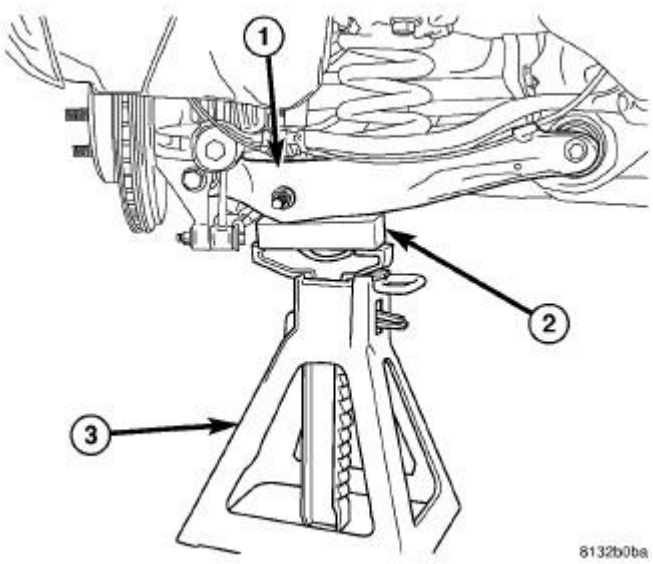

Fig. 84: Jack Stand Under Control Arm
Courtesy of CHRYSLER GROUP, LLC

13. Lower vehicle until front tires contact floor but rear is still suspended. Place jack stands under each rear suspension spring link. Place an appropriate wooden block between stand and link to avoid damaging spring link, then lower vehicle until full vehicle weight is supported by suspension.

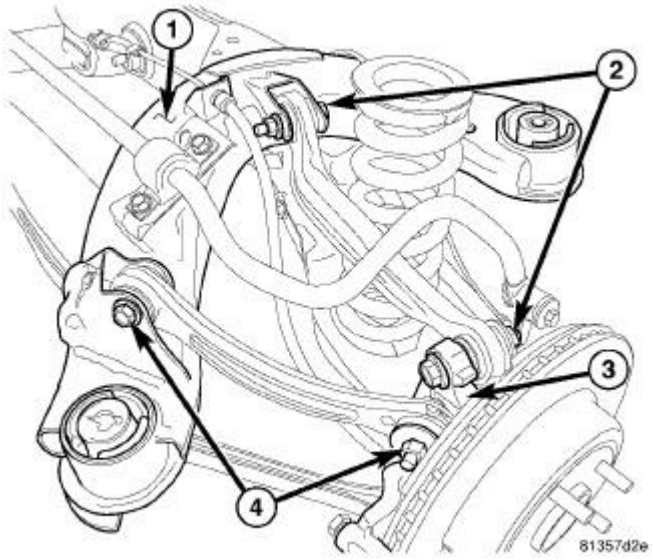

Fig. 85: Camber Link, Nuts & Bolts
Courtesy of CHRYSLER GROUP, LLC

14. Tighten camber link fasteners (2) to:
    - Bolt at crossmember - 85 N.m (63 ft. lbs.).
    - Bolt nut at knuckle - 98 N.m (72 ft. lbs.).

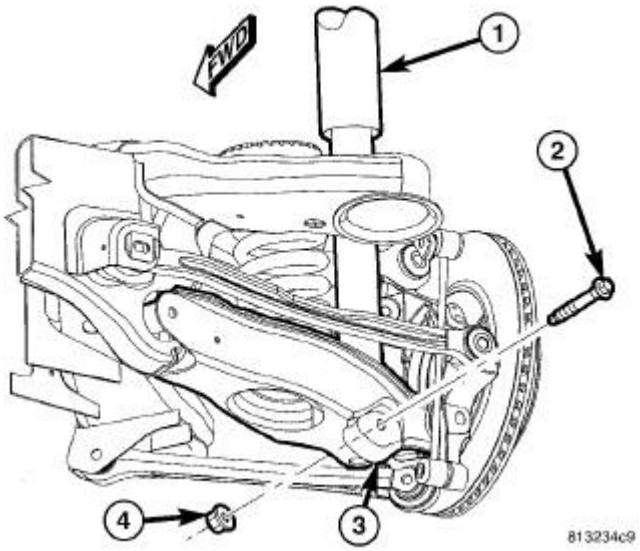

Fig. 86: Shock Absorber Lower Mounting Bolt & Nut
Courtesy of CHRYSLER GROUP, LLC

15. Tighten shock absorber lower mounting bolt nut (4) to 72 N.m (53 ft. lbs.).

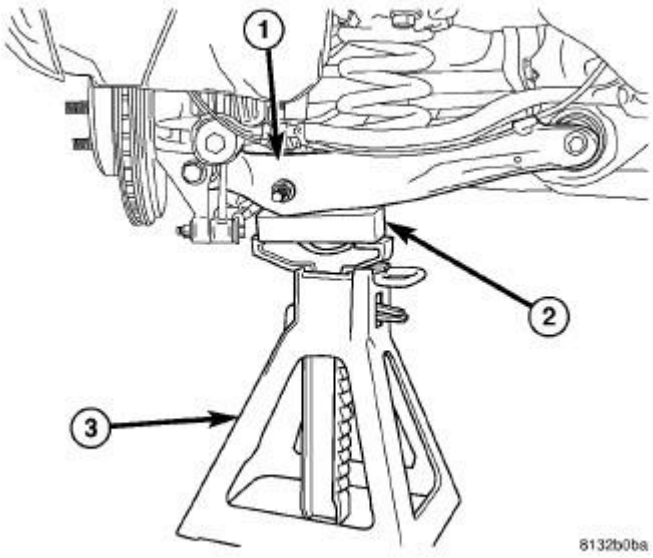

Fig. 87: Jack Stand Under Control Arm
Courtesy of CHRYSLER GROUP, LLC

16. Raise vehicle and remove jack stands (3).

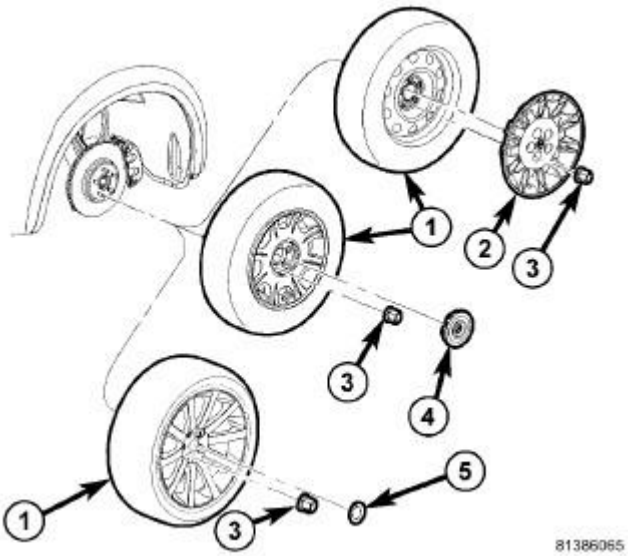

Fig. 88: Tire And Wheel Mounting
Courtesy of CHRYSLER GROUP, LLC

17. Install tire and wheel assemblies (1). Tighten wheel mounting nuts (3) to 150 N.m (110 ft. lbs.) Refer to **INSTALLATION** .
18. Lower vehicle.
19. Perform wheel alignment. Refer to **WHEEL ALIGNMENT, STANDARD PROCEDURE** .

LINK, COMPRESSION

REMOVAL

REMOVAL

1. Raise and support vehicle. Refer to **HOISTING, STANDARD PROCEDURE** .

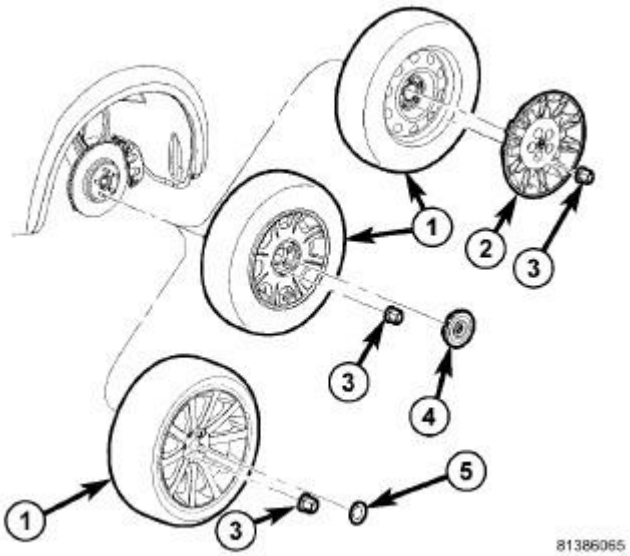

Fig. 89: Tire And Wheel Mounting
Courtesy of CHRYSLER GROUP, LLC

2. Remove wheel mounting nuts (3), then rear tire and wheel assembly (1).

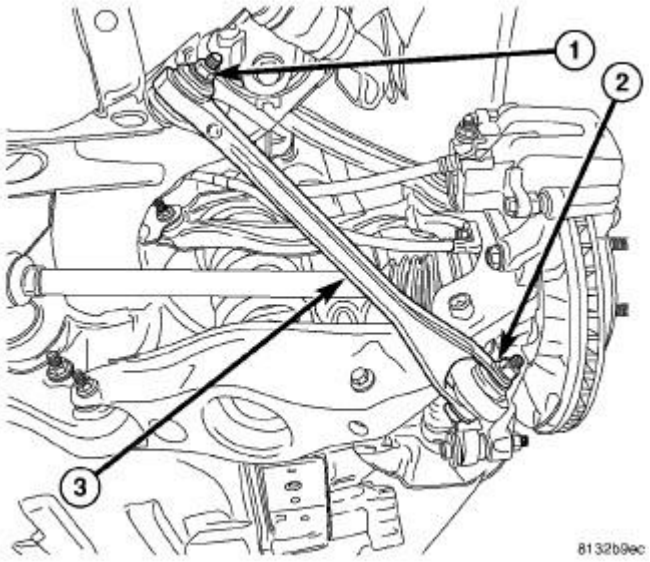

Fig. 90: Compression Link Mounting
Courtesy of CHRYSLER GROUP, LLC

3. Remove bolt and nut (2) mounting link (3) at knuckle.
4. Remove bolt and nut (1) mounting link (3) at crossmember.
5. Remove link (3).

INSTALLATION

INSTALLATION

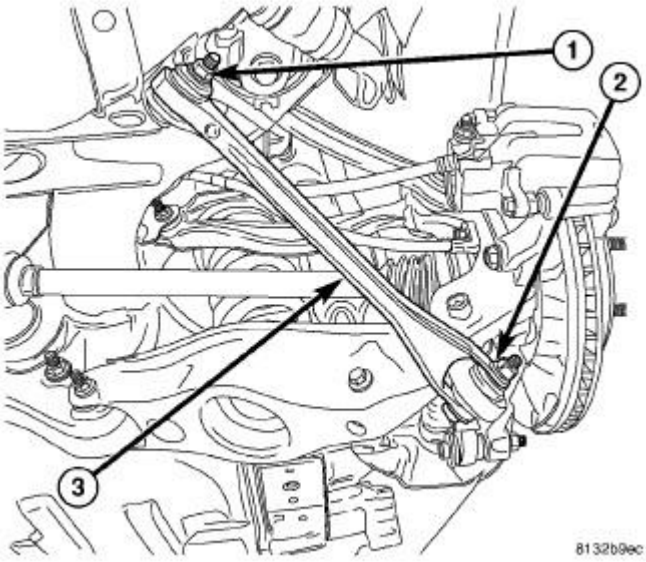

Fig. 91: Compression Link Mounting
Courtesy of CHRYSLER GROUP, LLC

NOTE: Although the compression link is different end-to-end, there is no top and bottom.

1. Position link and install bolt and nut (1) mounting link (3) at crossmember. **Do not tighten bolt at this time.**
2. Install bolt and nut (2) mounting link (3) at knuckle. **Do not tighten bolt at this time.**

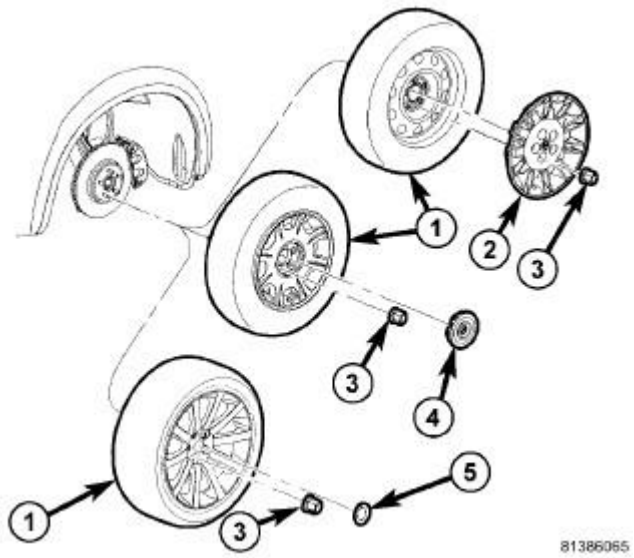

Fig. 92: Tire And Wheel Mounting

Courtesy of CHRYSLER GROUP, LLC

3. Install tire and wheel assembly (1). Tighten wheel mounting nuts (3) to 150 N.m (110 ft. lbs.). Refer to **INSTALLATION** .
4. Lower vehicle.
5. Position vehicle on alignment rack/drive-on lift. Raise vehicle as necessary to access link fasteners.
6. Tighten compression link fasteners to:
    - Bolt at crossmember - 85 N.m (63 ft. lbs.).
    - Bolt at knuckle - 81 N.m (60 ft. lbs.).
7. Perform wheel alignment Refer to **WHEEL ALIGNMENT, STANDARD PROCEDURE** .

LINK, SPRING

REMOVAL

NON SRT

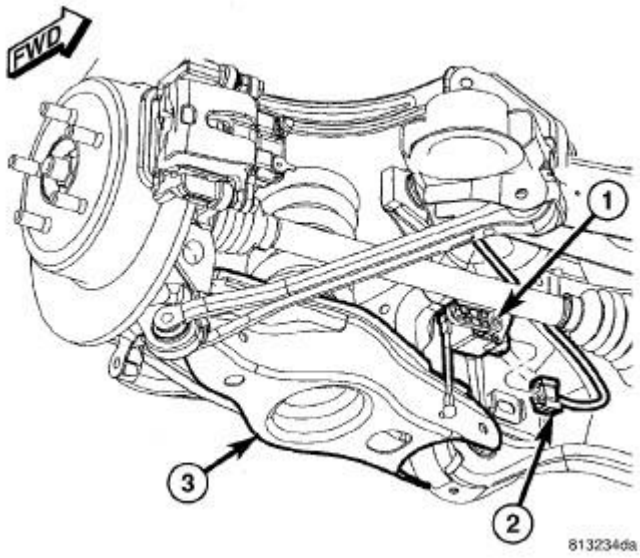

Fig. 93: Headlamp Leveling Sensor
Courtesy of CHRYSLER GROUP, LLC

1. Raise and support vehicle Refer to **HOISTING, STANDARD PROCEDURE** .
2. Access and remove rear spring. Refer to **SPRING(S), REMOVAL**.
3. If servicing right spring link, disconnect headlamp leveling sensor (1) link at spring link (3), if equipped.

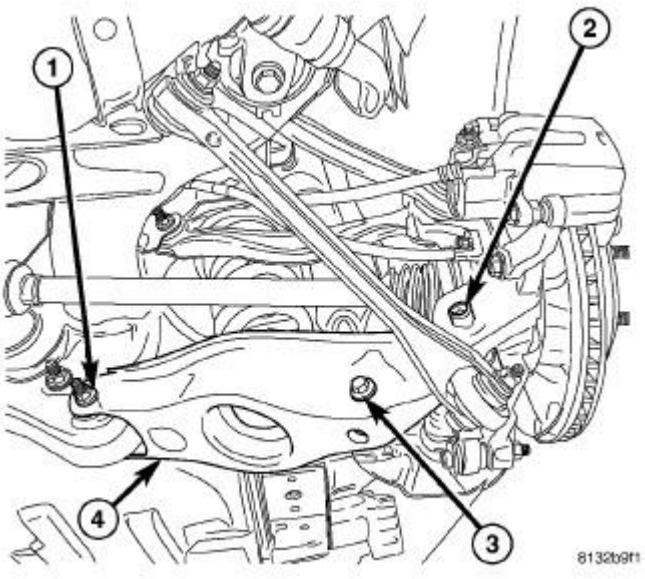

Fig. 94: Spring Link Mounting
Courtesy of CHRYSLER GROUP, LLC

4. Remove spring link-to-knuckle nut and bolt (2).

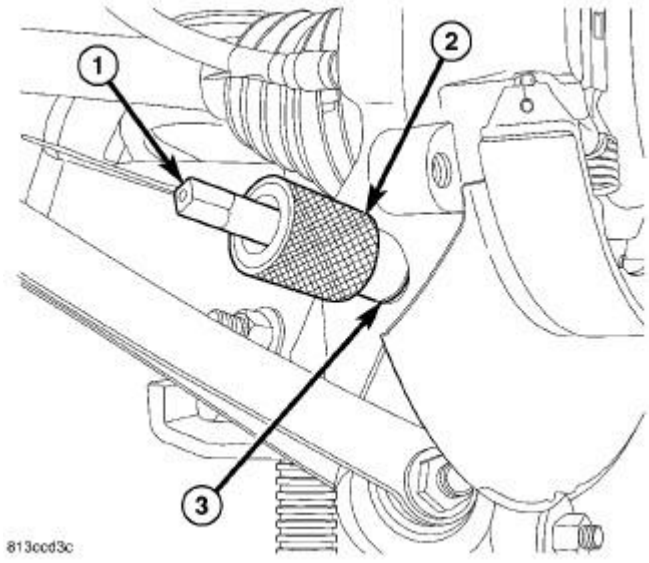

Fig. 95: Cutting Threads Through Bushing
Courtesy of CHRYSLER GROUP, LLC

CAUTION: It is important to use Tap Guide (2) when tapping sleeve in knuckle to help keep Plug Tap (1) straight during use or damage to Tap may occur.

5. Place Guide (special tool #9361-2, Tap Guide) (2) against sleeve (3) in knuckle to keep special tool

#9361-1, Tap, Plug M16 X 2.0 (1) straight. Using Tap with an appropriate handle, cut threads approximately halfway through bushing (or about six complete threads). **It is important to back tap out, clean out burrs and lubricate Tap often during process.**

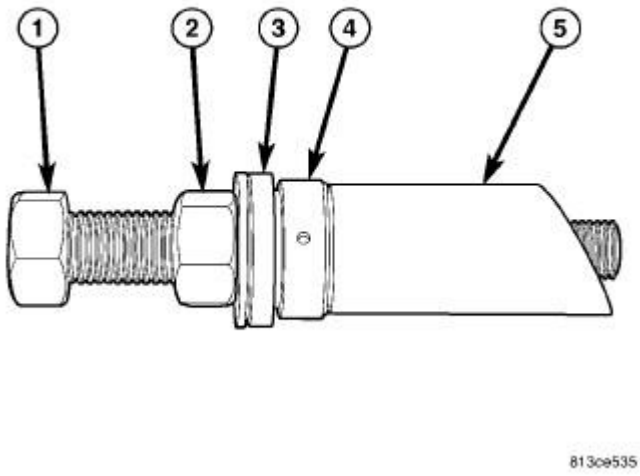

Fig. 96: Rear Knuckle Sleeve Remover/Installer
Courtesy of CHRYSLER GROUP, LLC

NOTE: Prior to using special tool #9361A, Rear Knuckle Sleeve Remover/Installer Kit, lubricate Bolt (1) threads to provide ease of use and promote tool longevity.

NOTE: When installing thrust bearing on Remover, be sure to place hardened side against nut. Place bearing outer cage against stationary component.

6. Assemble special tool #9361A, Rear Knuckle Sleeve Remover/Installer Kit as shown.
   - (1) special tool #9361-3, Screw, Forcing
   - (2) Nut
   - (3) Spherical Washer
   - (4) Thrust Bearing
   - (5) special tool #9361-4, Cup, Bushing

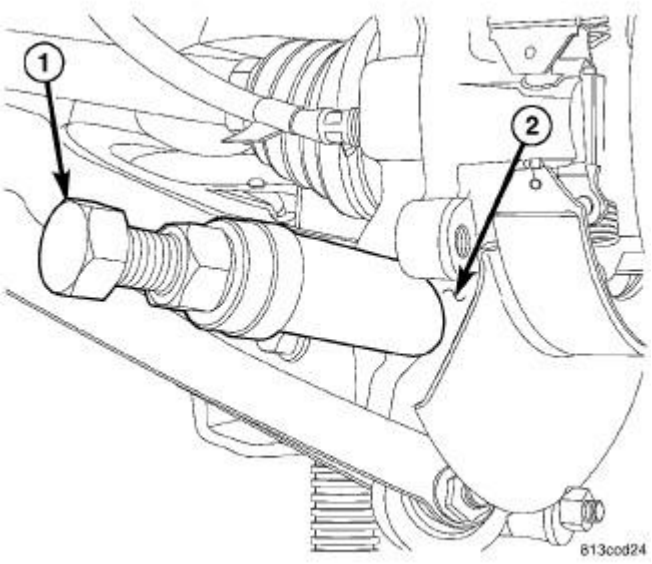

Fig. 97: Removing Knuckle Sleeve
Courtesy of CHRYSLER GROUP, LLC

7. Thread special tool #9361-3, Screw, Forcing (1) into tapped knuckle sleeve.
8. Rotate Nut down, matching Sleeve angled end with angled face of knuckle.
9. Continue to rotate Nut until knuckle sleeve is removed from knuckle. **Discard knuckle sleeve; replace it with new upon installation.**

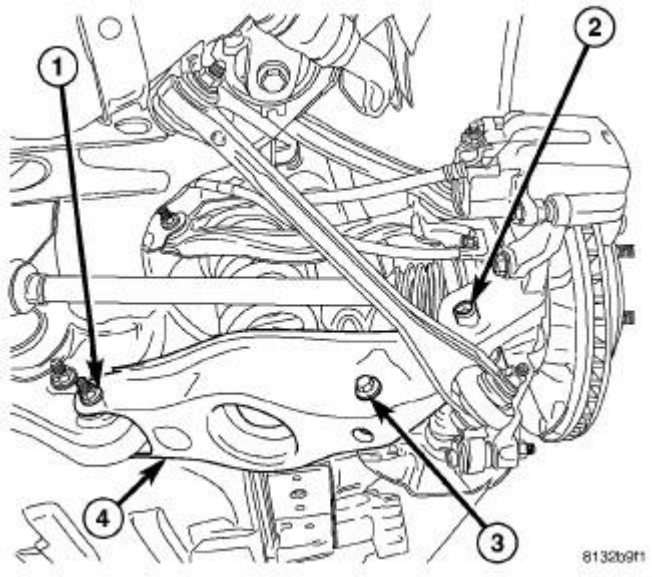

Fig. 98: Spring Link Mounting
Courtesy of CHRYSLER GROUP, LLC

10. Remove bolt and nut (1) fastening spring link (4) to crossmember.
11. Remove spring link (4).

SRT

1. Access and remove rear brake rotor on side of repair. Refer to **ROTOR, BRAKE, REMOVAL** .
2. Access and remove rear spring on side of repair. Refer to **SPRING(S), REMOVAL**.

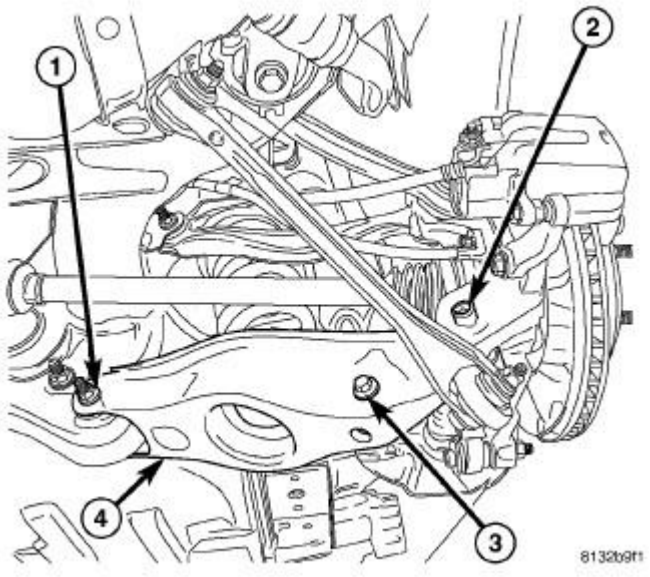

Fig. 99: Spring Link Mounting
Courtesy of CHRYSLER GROUP, LLC

3. Remove spring link-to-knuckle nut and bolt (2).

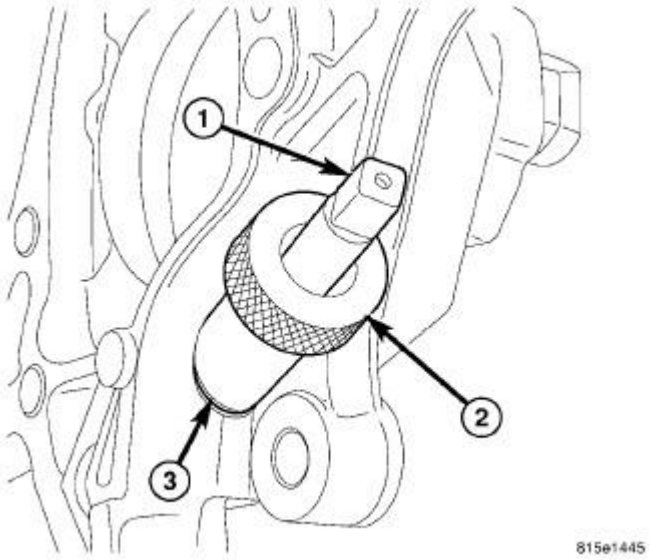

Fig. 100: Cutting Threads Through Bushing
Courtesy of CHRYSLER GROUP, LLC

CAUTION: It important to use Tap Guide (2) when tapping sleeve in knuckle to help keep Plug Tap (1) straight during use or damage to Tap may occur.

4. Place special tool #9361-11, Guide, Tap (2) against sleeve (3) in knuckle to keep special tool #9361-1, Tap, Plug M16 X 2.0 (1) straight. Using Tap with an appropriate handle, cut threads approximately halfway through bushing (or about six complete threads). **It is important to back tap out, clean out burrs and lubricate Tap often during process.**

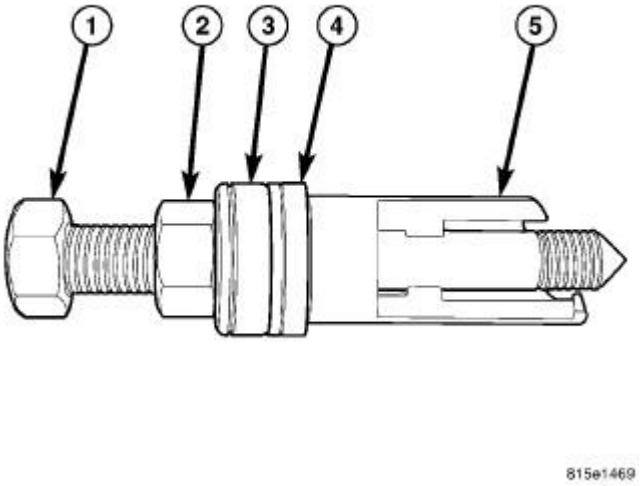

Fig. 101: Rear Knuckle Sleeve Remover/Installer Kit
Courtesy of CHRYSLER GROUP, LLC

NOTE: Prior to using special tool #9361A, Rear Knuckle Sleeve Remover/Installer Kit, lubricate Bolt (1) threads to provide ease of use and promote tool longevity.

5. Assemble special tool #9361A, Rear Knuckle Sleeve Remover/Installer Kit as shown.
   - (1) special tool #9361-3, Screw, Forcing
   - (2) Nut
   - (3) Thrust Bearing
   - (4) Spherical Washer
   - (5) special tool #9361-9, Cup, Remover, Left Side (Left Side - Shown in figure)
   - (5) special tool #9361-10, Cup, Remover, Right Side (Right Side)

NOTE: When installing thrust bearing (3) on Remover, be sure to place hardened side against nut (2). Place bearing outer cage against stationary component.

NOTE: **It is important to use appropriate Sleeve (special tool #9361-9, Cup, Remover, Left Side or special tool #9361-10, Cup, Remover, Right Side) on Remover to provide proper Tool-to-Knuckle contact.**

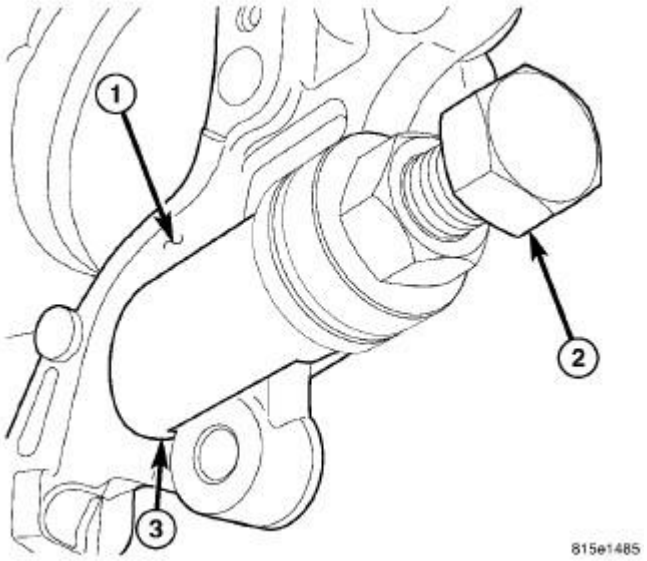

Fig. 102: Removing Knuckle Sleeve
Courtesy of CHRYSLER GROUP, LLC

6. Thread special tool #9361-3, Screw, Forcing (2) into tapped knuckle sleeve.
7. Rotate Nut down, matching Sleeve (special tool #9361-9, Cup, Remover, Left Side or special tool #9361-10, Cup, Remover, Right Side) angled end with angled face of knuckle (1). **Make sure foot on Sleeve (3) is inserted behind machined brake caliper mounting boss.**
8. Continue to rotate Nut until knuckle sleeve is removed from knuckle. **Discard knuckle sleeve; replace it with new upon installation.**

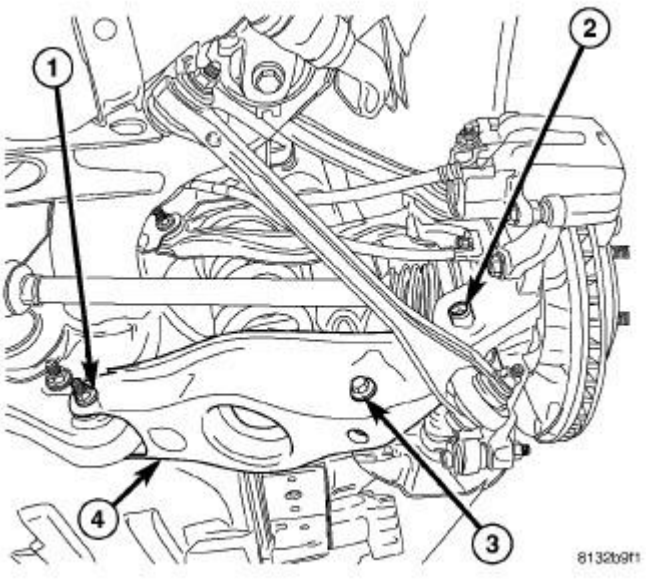

Fig. 103: Spring Link Mounting
Courtesy of CHRYSLER GROUP, LLC

9. Remove bolt and nut (1) fastening spring link (4) to crossmember.
10. Remove spring link (4).

INSTALLATION

NON SRT

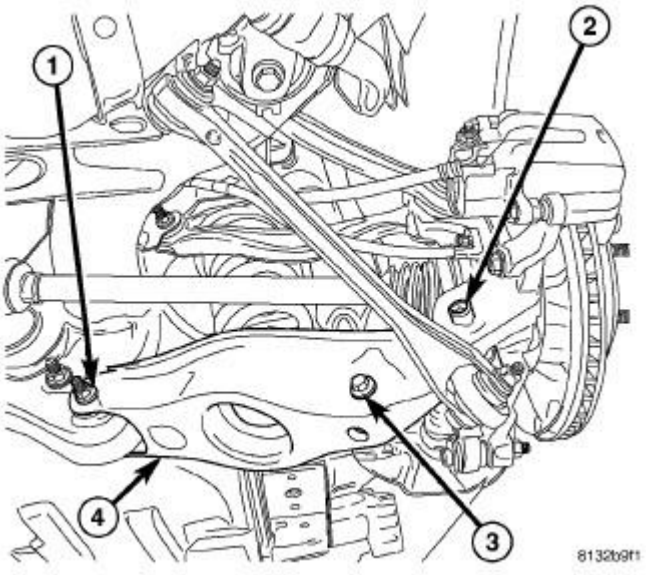

Fig. 104: Spring Link Mounting
Courtesy of CHRYSLER GROUP, LLC

1. Guide ball joint end of spring link (4) into mounting pocket of knuckle, then swing opposite end up to bushing in crossmember and install bolt and nut (1) fastening spring link (4) to crossmember. **Do not tighten bolt at this time.**

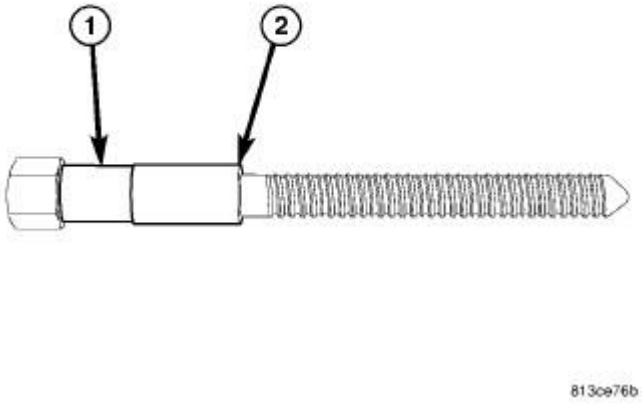

Fig. 105: Rear Knuckle Sleeve Remover/Installer
Courtesy of CHRYSLER GROUP, LLC

NOTE: Prior to using special tool #9361A, Rear Knuckle Sleeve Remover/Installer Kit, lubricate bolt (1) threads to provide ease of use and promote tool longevity.

2. Place NEW knuckle sleeve (2) onto special tool #9361-7, Screw, Installation (1), and slide it up to Bolt head.

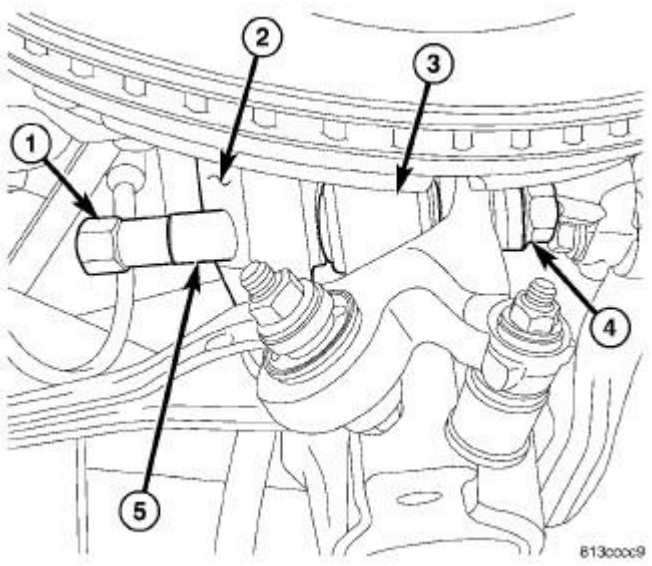

Fig. 106: Installing Knuckle Sleeve
Courtesy of CHRYSLER GROUP, LLC

3. Starting from knuckle forward end, slide special tool #9361-7, Screw, Installation (1) with sleeve (5) through knuckle (2) and spring link ball joint (3).
4. Install thrust bearing and nut (4) on end of Bolt. **When installing thrust bearing on Installer, be sure to place hardened side against nut. Place bearing outer cage against stationary component.**
5. While holding Bolt head (1) stationary, rotate Nut (4) (using hand tools) installing sleeve in knuckle. Install sleeve until Nut stops turning. **Do not overtighten Nut.**
6. Remove special tool.

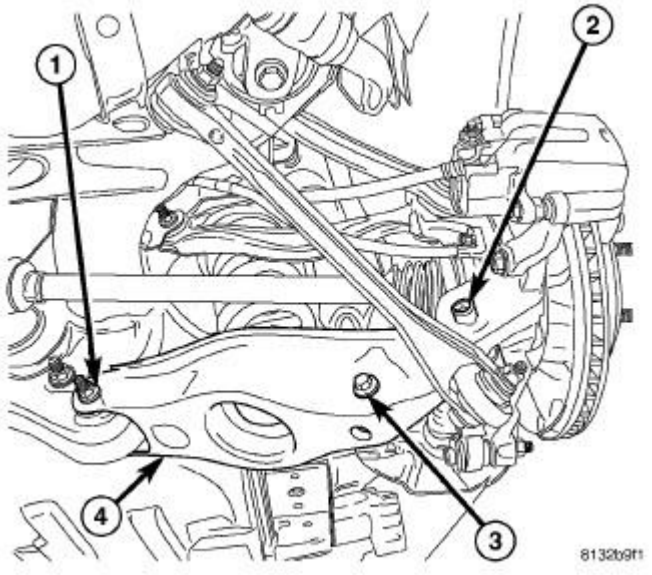

Fig. 107: Spring Link Mounting
Courtesy of CHRYSLER GROUP, LLC

7. Install spring link-to-knuckle bolt (2) front-to-rear through knuckle and link, then install nut. While holding bolt head stationary, tighten nut to 142 N.m (105 ft. lbs.).

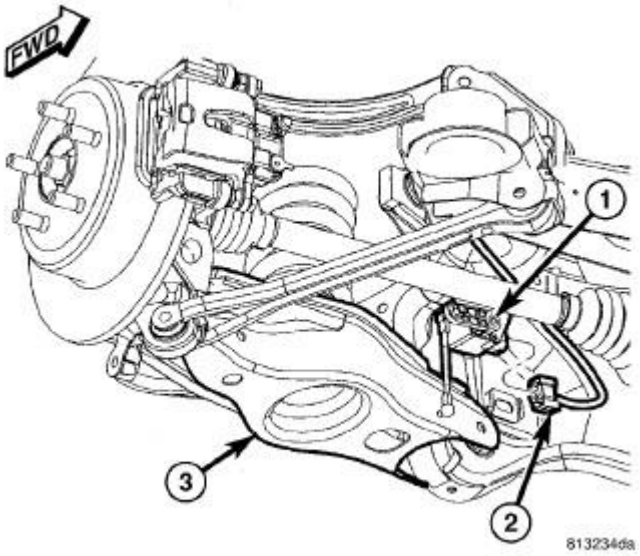

Fig. 108: Headlamp Leveling Sensor
Courtesy of CHRYSLER GROUP, LLC

8. Export Only - If servicing right spring link, connect headlamp leveling sensor (1) link at spring link (3).
9. Install rear spring as well as all components necessary to access it. Refer to **SPRING(S), INSTALLATION**.
10. Lower vehicle.
11. Position vehicle on alignment rack/drive-on lift. Raise vehicle as necessary to access mounting bolt.
12. Tighten spring link bolt at crossmember to 108 N.m (80 ft. lbs.).
13. Perform wheel alignment. Refer to **WHEEL ALIGNMENT, STANDARD PROCEDURE** .

SRT

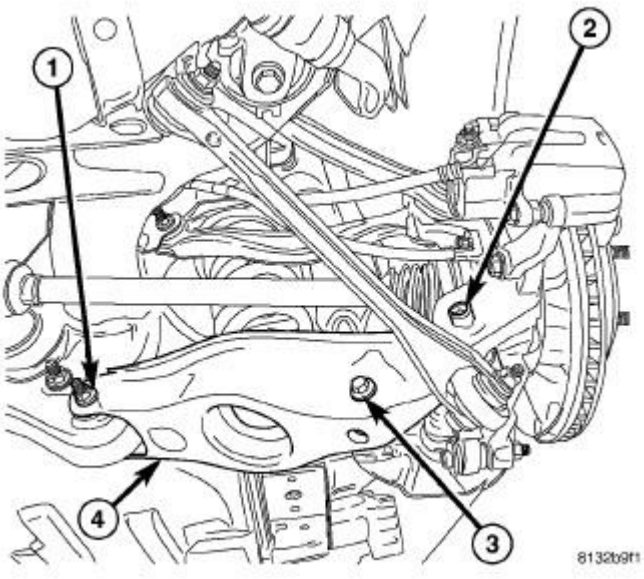

Fig. 109: Spring Link Mounting
Courtesy of CHRYSLER GROUP, LLC

1. Guide ball joint end of spring link (4) into mounting pocket of knuckle, then swing opposite end up to bushing in crossmember and install bolt and nut (1) fastening spring link (4) to crossmember. **Do not tighten bolt at this time.**

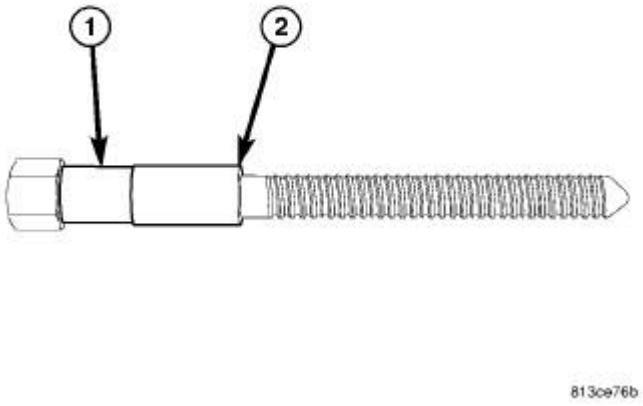

Fig. 110: Rear Knuckle Sleeve Remover/Installer
Courtesy of CHRYSLER GROUP, LLC

NOTE: Prior to using special tool #9361A, Rear Knuckle Sleeve Remover/Installer Kit, lubricate bolt (1) threads to provide ease of use and promote tool longevity.

2. Place NEW knuckle sleeve (2) onto special tool #9361-12, Installer, Bushing (1), and slide it up to Bolt head.

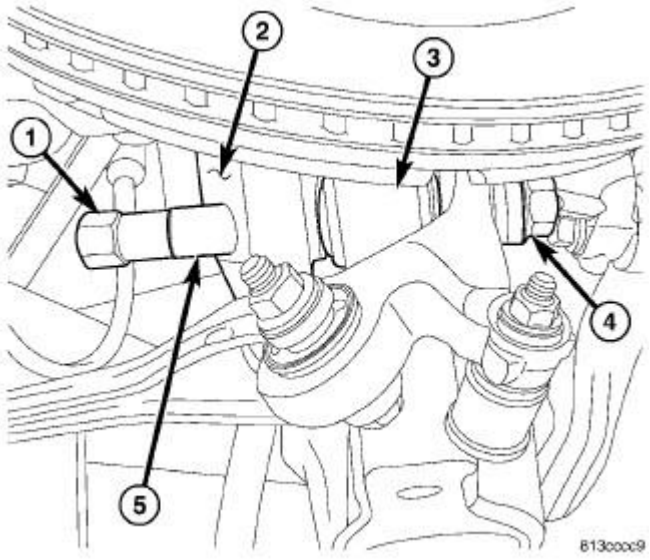

Fig. 111: Installing Knuckle Sleeve
Courtesy of CHRYSLER GROUP, LLC

3. Starting from knuckle forward end, slide special tool #9361-12, Installer, Bushing (1) with sleeve (5) through knuckle (2) and spring link ball joint (3).
4. Install Installation Thrust Bearing (around 3/8 inch thick) and special flange nut (4) on end of Bolt. **When installing thrust bearing on Installer, be sure to place hardened side against nut. Place bearing outer cage against stationary component.**
5. While holding Bolt head (1) stationary, rotate Nut (4) (using hand tools) installing sleeve in knuckle. Install sleeve until Nut stops turning. **Do not overtighten Nut.**
6. Remove special tool.

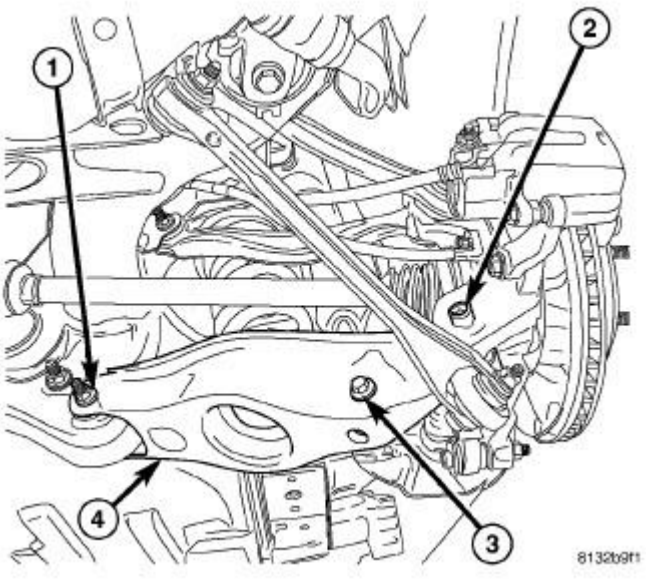

Fig. 112: Spring Link Mounting
Courtesy of CHRYSLER GROUP, LLC

7. Install spring link-to-knuckle bolt (2) front-to-rear through knuckle and link, then install nut. While holding bolt head stationary, tighten nut to 138 N.m (102 ft. lbs.).
8. Install rear spring and all components necessary to access it, except rear tire and wheel assembly on side of repair Refer to **SPRING(S), INSTALLATION**.
9. Install rear brake rotor and components necessary to access it Refer to **ROTOR, BRAKE, INSTALLATION** .
10. Lower vehicle.
11. Pump brake pedal several times to ensure vehicle has a firm brake pedal before moving vehicle.
12. Position vehicle on alignment rack/drive-on lift. Raise vehicle as necessary to access mounting bolt.
13. Tighten spring link bolt at crossmember to 108 N.m (80 ft. lbs.).
14. Tighten shock absorber lower mounting bolt nut to 72 N.m (53 ft. lbs.).
15. Perform wheel alignment. Refer to **WHEEL ALIGNMENT, STANDARD PROCEDURE** .

LINK, TENSION

REMOVAL

REMOVAL

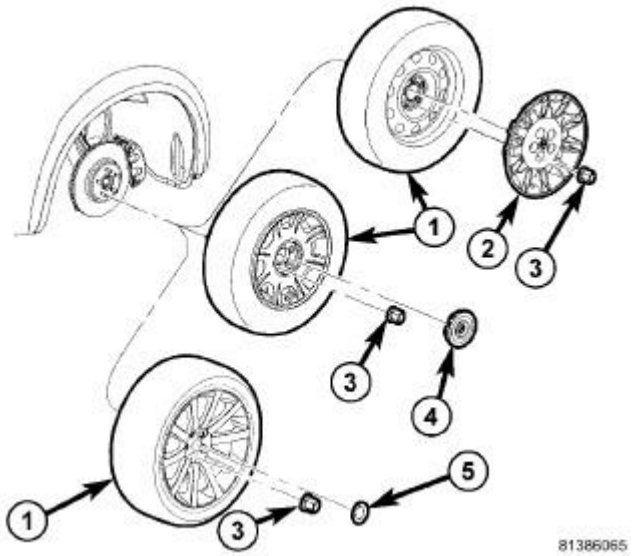

Fig. 113: Tire And Wheel Mounting
Courtesy of CHRYSLER GROUP, LLC

1. Raise and support vehicle. Refer to **HOISTING, STANDARD PROCEDURE** .
2. On both sides of vehicle, remove wheel mounting nuts (3), then rear tire and wheel assembly (1).

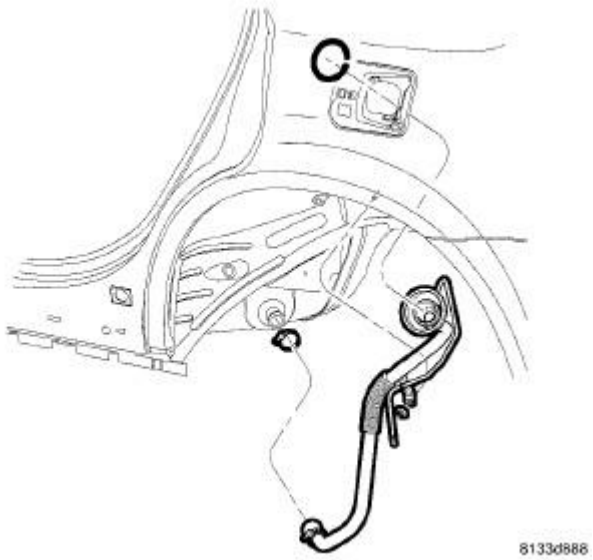

Fig. 114: Filler Tube Assembly
Courtesy of CHRYSLER GROUP, LLC

WARNING: Before opening fuel system, review all Warnings and Cautions.

3. If servicing left side, remove fuel filler tube. Refer to **TUBE, FUEL TANK FILLER, REMOVAL** .

4. Position an extra pair of jack stands under and support forward end of engine cradle to help stabilize vehicle during rear suspension removal/installation.
5. Perform the following if vehicle is equipped with dual-exhaust or are servicing right side on vehicle with single exhaust.
    a. Position under-hoist utility jack or stand several inches below exhaust at muffler.
    b. Disconnect exhaust isolators at muffler and resonators hangers.
    c. Lower exhaust down to rest upon top of jack or stand placed below muffler.

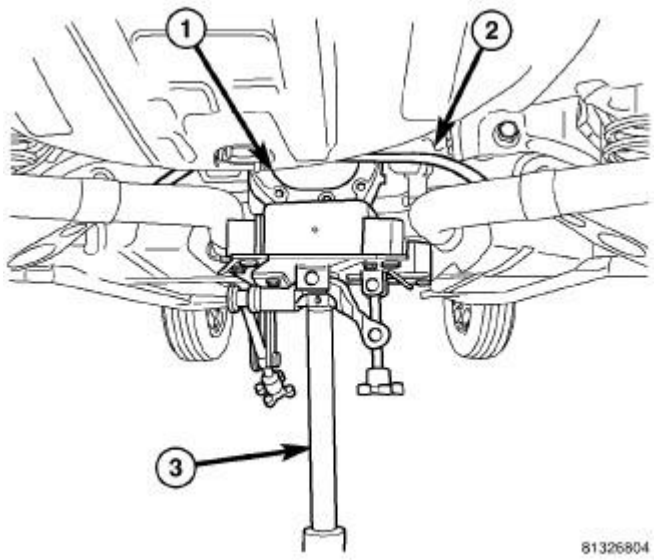

Fig. 115: Supporting Rear Axle Differential
Courtesy of CHRYSLER GROUP, LLC

6. Position under-hoist utility jack or transmission jack (3) under center of rear axle differential (1). Raise jack head to contact differential and secure in place. **When securing crossmember to jack, be sure not to secure stabilizer bar.**

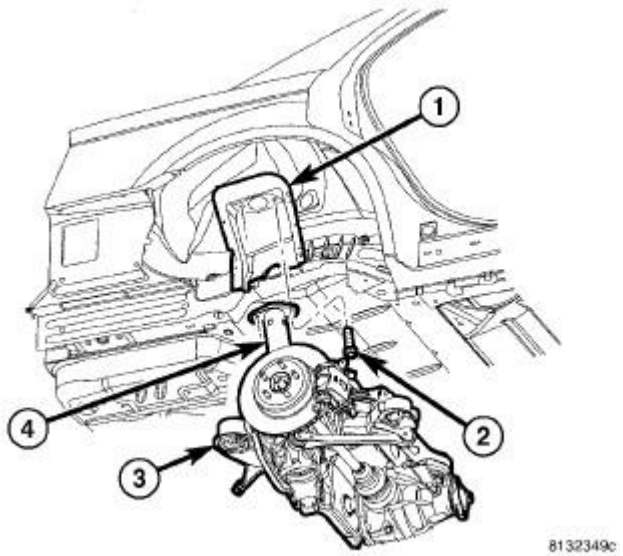

Fig. 116: Shock Absorber & Upper Mounting Screws
Courtesy of CHRYSLER GROUP, LLC

7. Remove shock absorber (1) upper mounting screws (2).

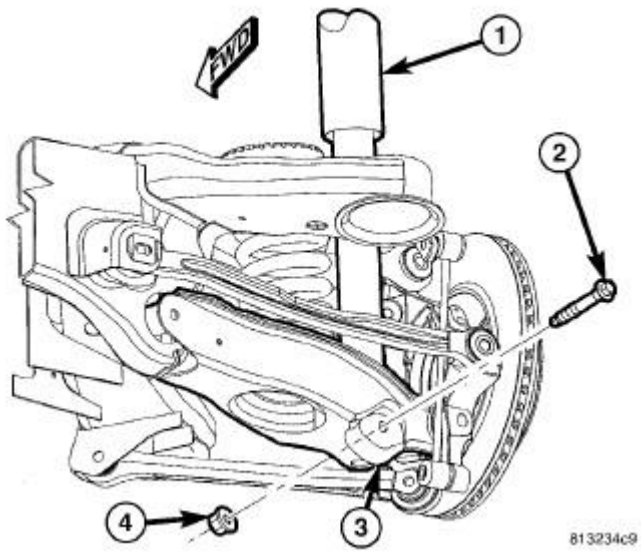

Fig. 117: Shock Absorber Lower Mounting Bolt & Nut
Courtesy of CHRYSLER GROUP, LLC

8. Remove shock absorber (1) lower mounting bolt (2) and nut (4).

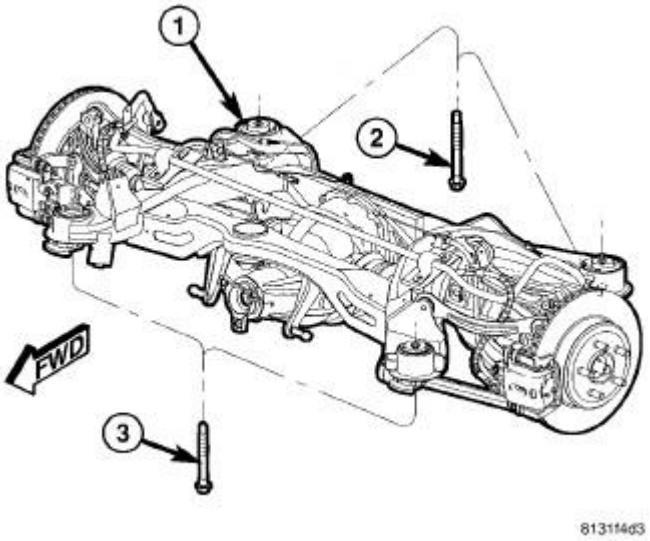

Fig. 118: Rear Crossmember Mounting Bolts
Courtesy of CHRYSLER GROUP, LLC

CAUTION: When removing crossmember mounting bolts (2 and 3) it is important NOT to loosen or remove crossmember mounting bolts on opposite side of vehicle. Doing so will require rear wheel alignment following reinstallation to ensure proper thrust angle.

9. Remove both front and rear crossmember mounting bolts (2 and 3) on repair-side of vehicle.

CAUTION: To avoid damaging other components of vehicle, do not lower crossmember (1) any further than necessary to remove shock absorber.

10. **Slowly** lower jack allowing repair-side of crossmember to drop. Lower jack just enough to allow top of shock absorber to clear body flange.

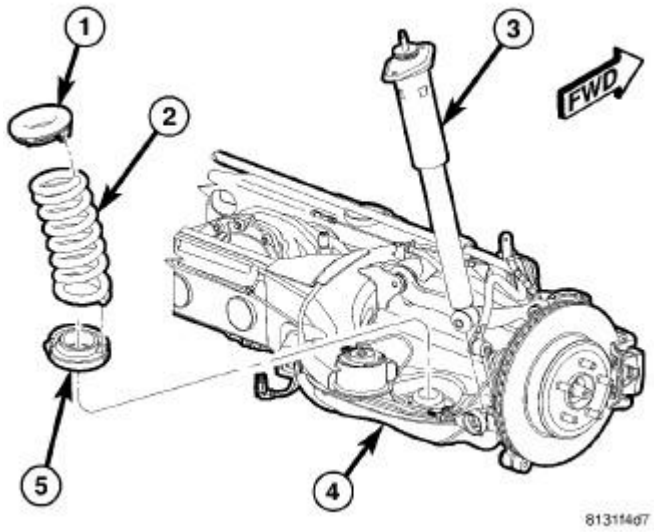

Fig. 119: Isolators, Coil Spring, Shock Absorber & Crossmember
Courtesy of CHRYSLER GROUP, LLC

11. Remove shock absorber (3) by tipping top outward and lifting lower end out of pocket in spring link (4).

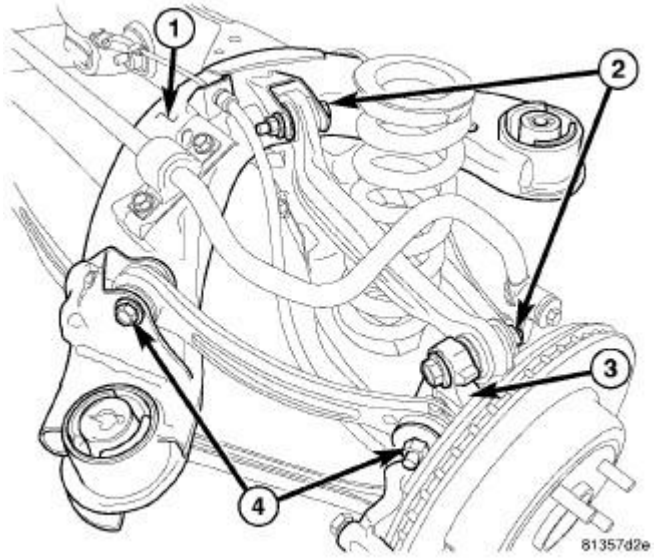

Fig. 120: Camber Link, Nuts & Bolts
Courtesy of CHRYSLER GROUP, LLC

NOTE: Do not lower repair-side of crossmember any further than necessary to gain access to link mounting bolts at crossmember.

12. Remove nut and bolt (4) mounting link to knuckle (3).
13. Remove nut and bolt (4) mounting link to crossmember (1).

14. Remove link.

INSTALLATION

INSTALLATION

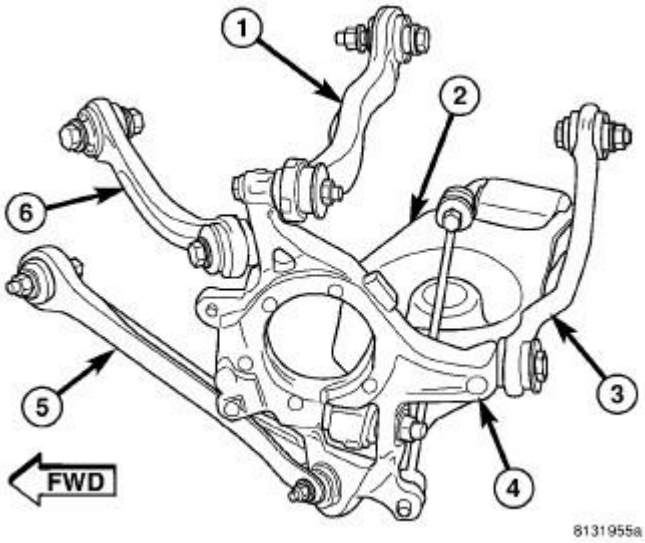

Fig. 121: Rear Suspension Components
Courtesy of CHRYSLER GROUP, LLC

NOTE: When installing tension link, although link (6) is same end-to-end, make sure that center bow is facing downward.

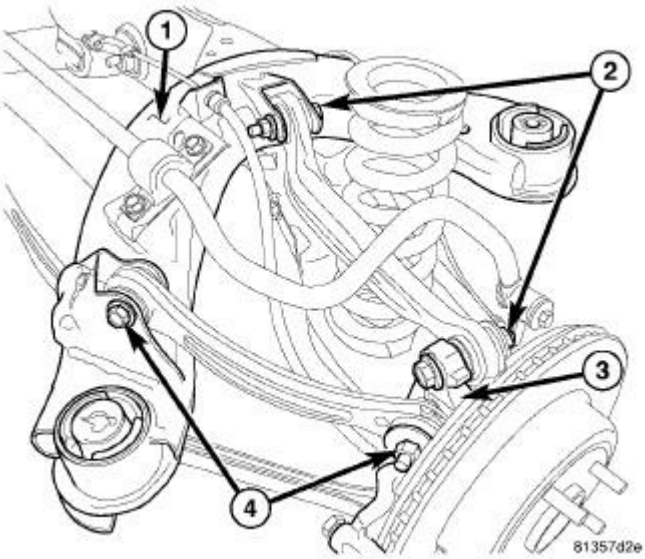

Fig. 122: Camber Link, Nuts & Bolts

Courtesy of CHRYSLER GROUP, LLC

1. Place link in bracket on crossmember (1). Install bolt and nut (4) at crossmember (1) as shown. **Do not tighten bolt at this time.**
2. Install bolt and nut (4) mounting link to knuckle (3) as shown. **Do not tighten bolt at this time.**

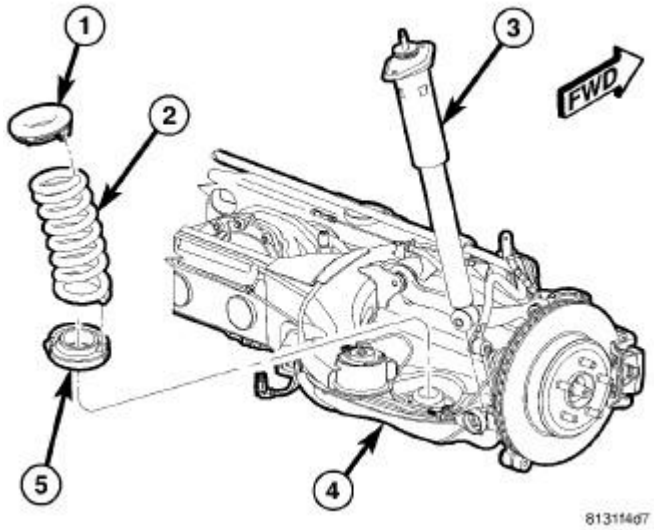

Fig. 123: Isolators, Coil Spring, Shock Absorber & Crossmember
Courtesy of CHRYSLER GROUP, LLC

3. Install shock absorber (3) by setting lower end into pocket in spring link (4), then tipping top inward until aligned with upper mounting holes.

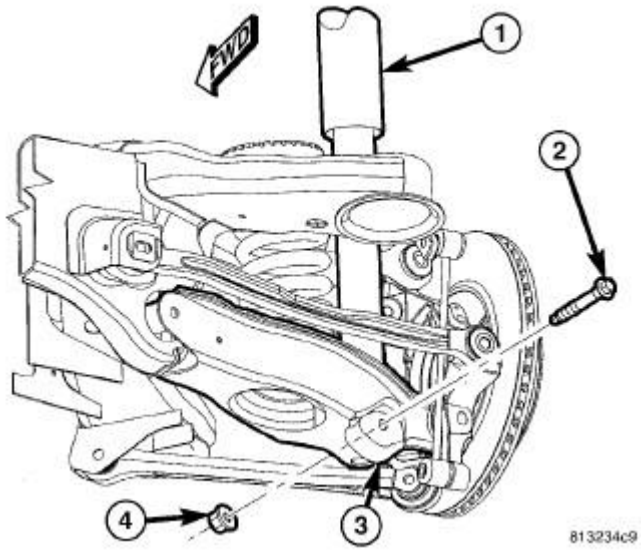

Fig. 124: Shock Absorber Lower Mounting Bolt & Nut
Courtesy of CHRYSLER GROUP, LLC

4. Install lower shock mounting bolt and nut. **Do not tighten at this time.**

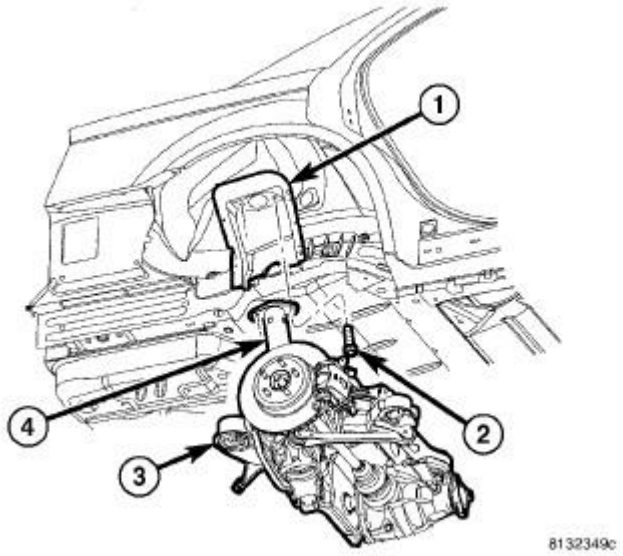

Fig. 125: Shock Absorber & Upper Mounting Screws
Courtesy of CHRYSLER GROUP, LLC

5. Carefully raise jack, guiding coil spring and upper end of shock absorber (4) into mounted positions.
6. Install shock absorber upper mounting screws (2). Tighten upper mounting screws to 52 N.m (38 ft. lbs.).

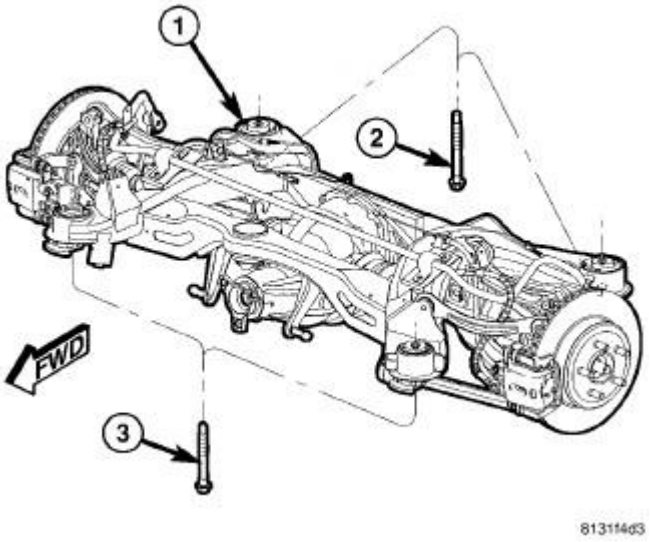

Fig. 126: Rear Crossmember Mounting Bolts
Courtesy of CHRYSLER GROUP, LLC

NOTE: Rear crossmember mounting bolts (2) are longer than front mounting bolts (3). Do not interchange mounting bolts.

7. Install crossmember mounting bolts (2 and 3). **Snug, but do not fully tighten bolts at this time.**

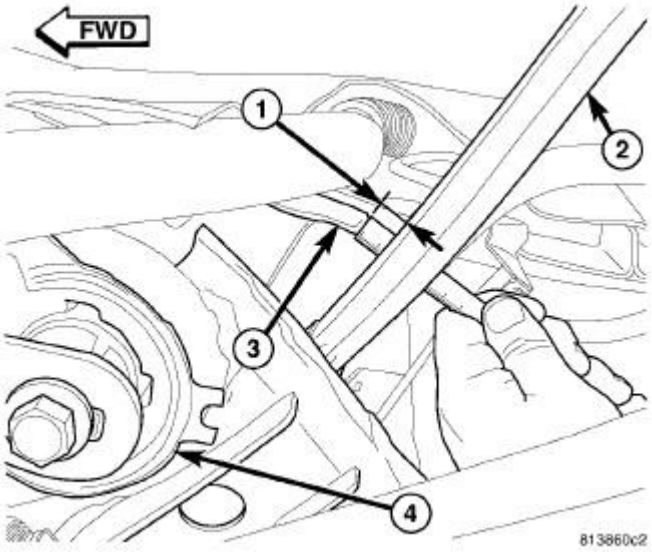

Fig. 127: Measuring Tension Link Clearance
Courtesy of CHRYSLER GROUP, LLC

8. Measure distance (1) between from tension link (2) to body weld flange (3) directly in front of it, just outboard of front mount bushing (4). **This distance must be at least 12 mm to allow proper clearance for suspension movement.** If distance is less than 12 mm, shift that side of rear crossmember directly rearward until distance is 12 mm or greater. To do so, loosen 3 mounting bolts slightly, leaving one on opposite side of shift snugged to pivot off of. Shift crossmember rearward and snug loosened bolts. Measure opposite side to be sure it also maintains minimum 12 mm distance.

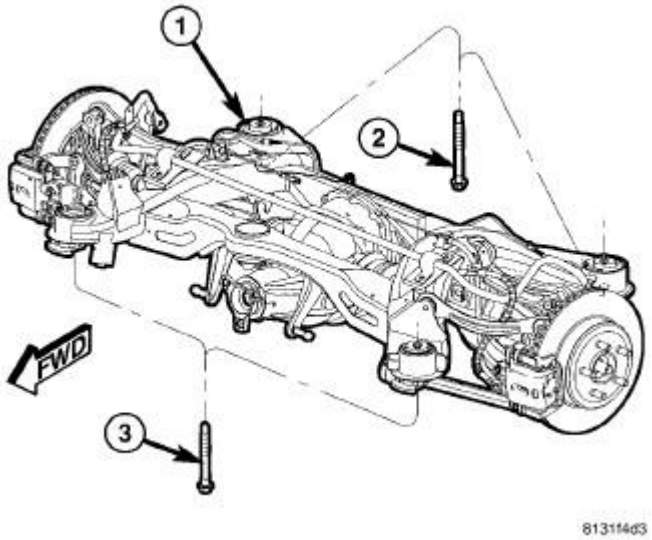

Fig. 128: Rear Crossmember Mounting Bolts
Courtesy of CHRYSLER GROUP, LLC

9. Tighten all crossmember mounting bolts (2 and 3) to 180 N.m (133 ft. lbs.).

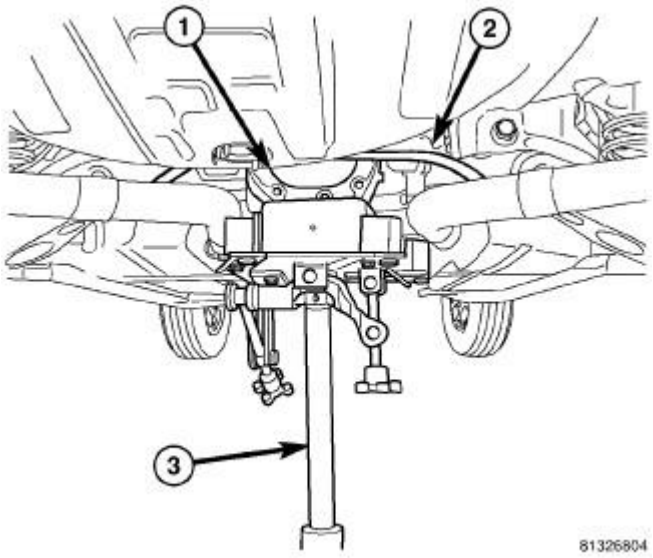

Fig. 129: Supporting Rear Axle Differential
Courtesy of CHRYSLER GROUP, LLC

10. Remove jack (3) from under rear axle differential.
11. If previously lowered, raise rear exhaust back to mounted position and connect exhaust isolators at muffler and resonators hangers. Remove jack or stand below exhaust muffler.

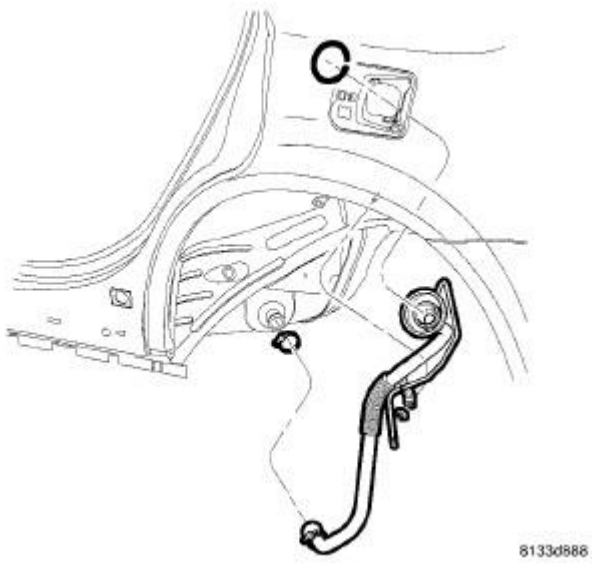

Fig. 130: Filler Tube Assembly
Courtesy of CHRYSLER GROUP, LLC

12. If removed, install fuel filler tube. Refer to **TUBE, FUEL TANK FILLER, INSTALLATION** .

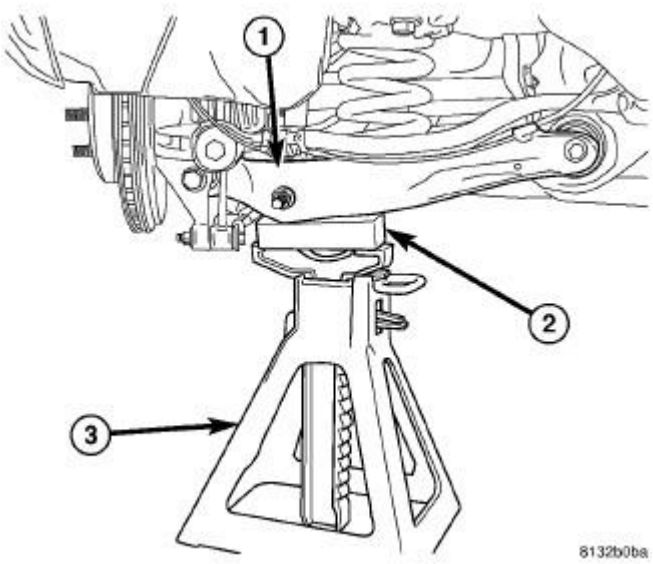

Fig. 131: Jack Stand Under Control Arm
Courtesy of CHRYSLER GROUP, LLC

13. Lower vehicle until front tires contact floor but rear is still suspended. Place jack stands under each rear suspension spring link. Place an appropriate wooden block between stand and link to avoid damaging spring link, then lower vehicle until full vehicle weight is supported by suspension.

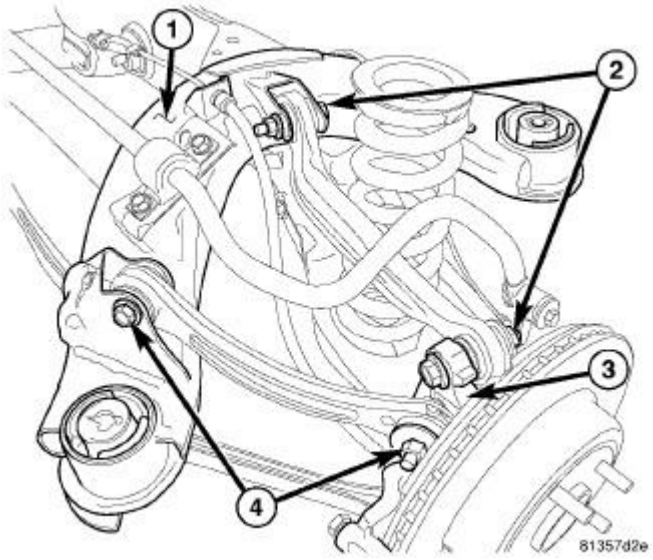

Fig. 132: Camber Link, Nuts & Bolts
Courtesy of CHRYSLER GROUP, LLC

14. Tighten tension link fasteners (4) to:
    - Bolt nut at crossmember - 85 N.m (63 ft. lbs.).
    - Bolt at knuckle - 98 N.m (72 ft. lbs.).

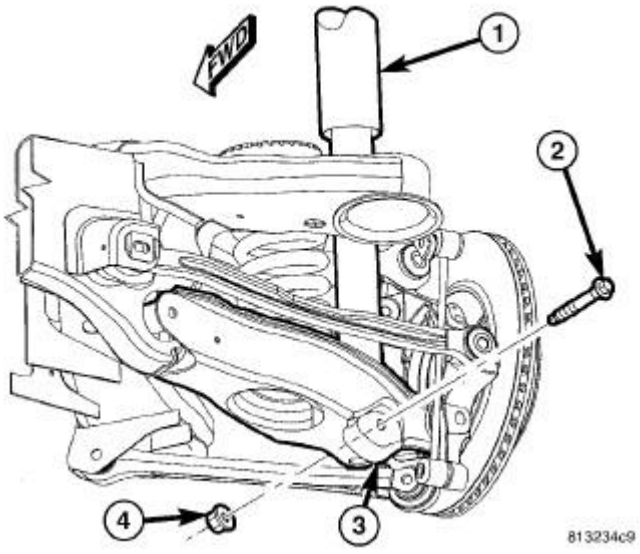

Fig. 133: Shock Absorber Lower Mounting Bolt & Nut
Courtesy of CHRYSLER GROUP, LLC

15. Tighten shock absorber lower mounting bolt nut (4) to 72 N.m (53 ft. lbs.).

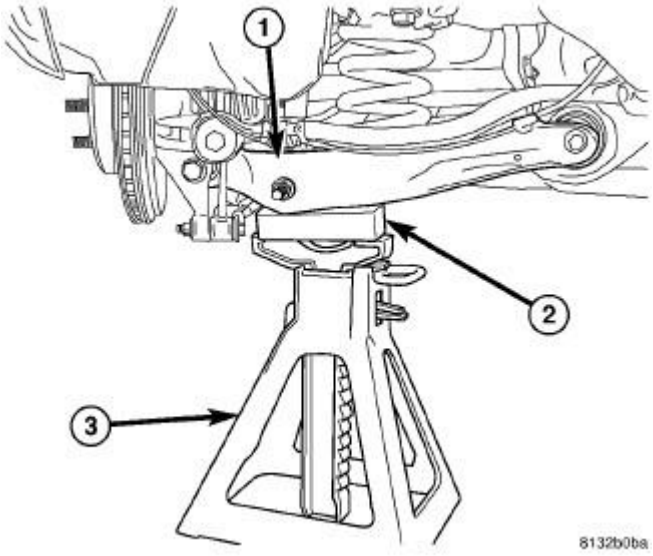

Fig. 134: Jack Stand Under Control Arm
Courtesy of CHRYSLER GROUP, LLC

16. Raise vehicle and remove jack stands (3).

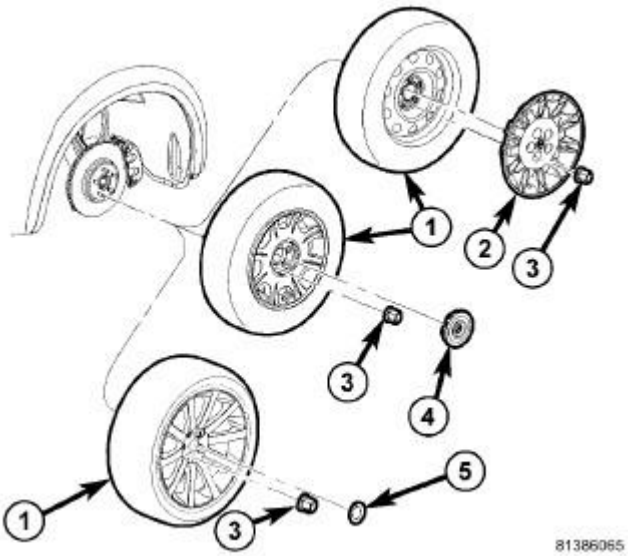

Fig. 135: Tire And Wheel Mounting
Courtesy of CHRYSLER GROUP, LLC

17. Install tire and wheel assemblies (1). Tighten wheel mounting nuts (3) to 150 N.m (110 ft. lbs.) Refer to **INSTALLATION** .
18. Lower vehicle.
19. Perform wheel alignment. Refer to **WHEEL ALIGNMENT, STANDARD PROCEDURE** .

LINK, TOE

REMOVAL

LEFT LINK

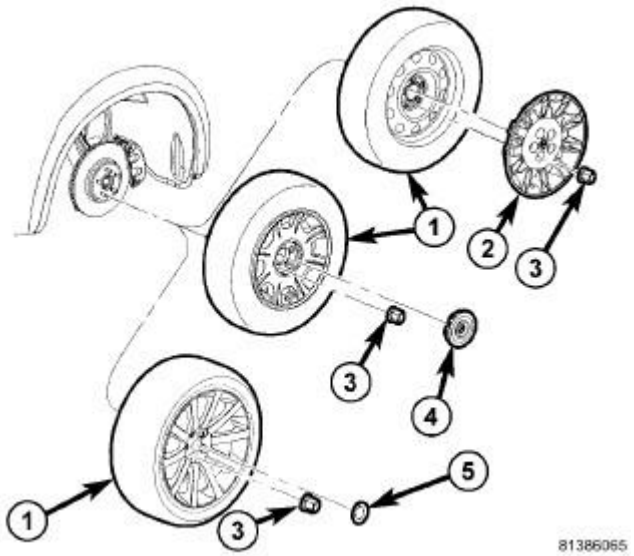

Fig. 136: Tire And Wheel Mounting
Courtesy of CHRYSLER GROUP, LLC

1. Raise and support vehicle. Refer to **HOISTING, STANDARD PROCEDURE** .
2. On both sides of vehicle, remove wheel mounting nuts (3), then rear tire and wheel assembly (1).

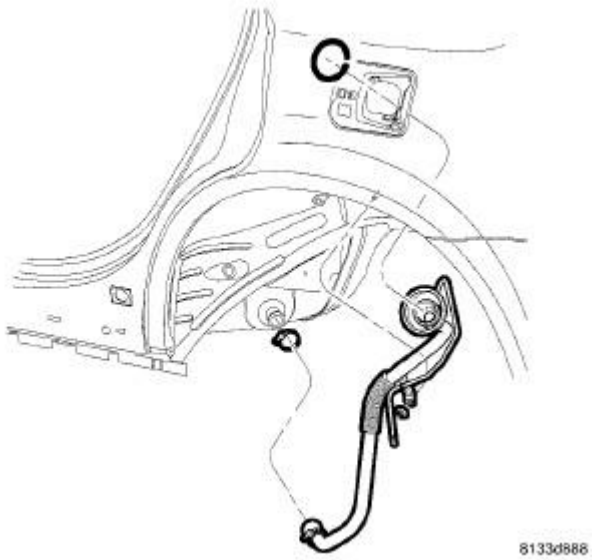

Fig. 137: Filler Tube Assembly
Courtesy of CHRYSLER GROUP, LLC

WARNING: Before opening fuel system, review all Warnings and Cautions.

3. Remove fuel filler tube. Refer to **TUBE, FUEL TANK FILLER, REMOVAL** .

4. Position an extra pair of jack stands under and support forward end of engine cradle to help stabilize vehicle during rear suspension removal/installation.
5. Perform following if vehicle is equipped with dual-exhaust.
    a. Position under-hoist utility jack or stand several inches below exhaust at muffler.
    b. Disconnect exhaust isolators at muffler and resonators hangers.
    c. Lower exhaust down to rest upon top of jack or stand placed below muffler.

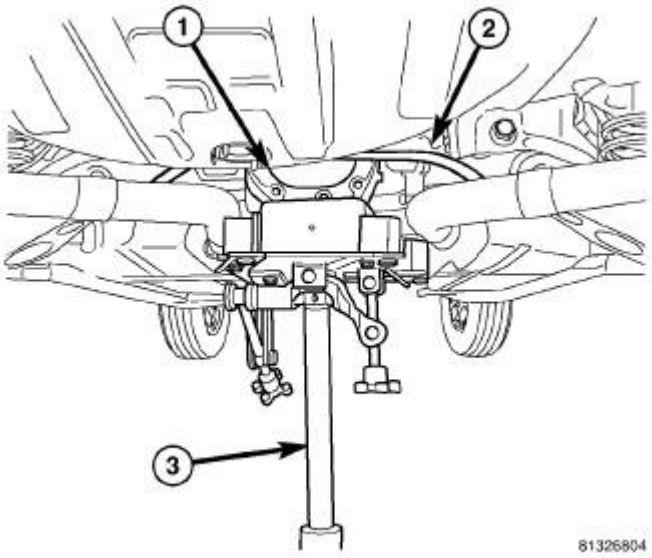

Fig. 138: Supporting Rear Axle Differential
Courtesy of CHRYSLER GROUP, LLC

6. Position under-hoist utility jack or transmission jack (3) under center of rear axle differential (1). Raise jack head to contact differential and secure in place.

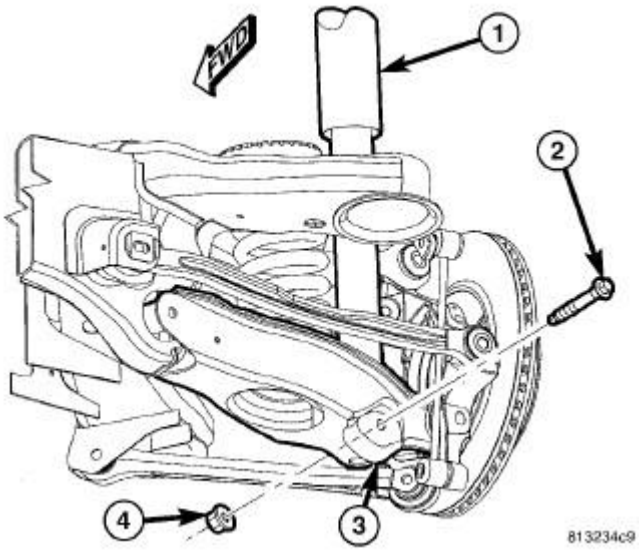

Fig. 139: Shock Absorber Lower Mounting Bolt & Nut
Courtesy of CHRYSLER GROUP, LLC

7. Remove shock absorber (1) lower mounting bolt (2) and nut (4).

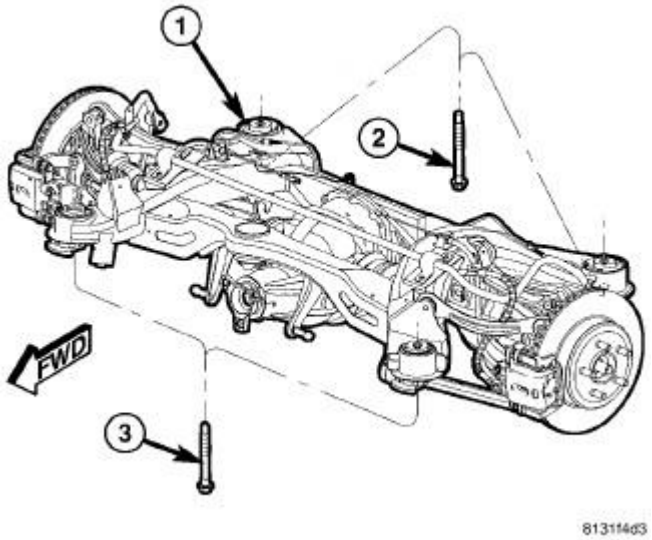

Fig. 140: Rear Crossmember Mounting Bolts
Courtesy of CHRYSLER GROUP, LLC

CAUTION: When removing crossmember mounting bolts (2 and 3) it is important NOT to loosen or remove crossmember mounting bolts on opposite side of vehicle. Doing so will require rear wheel alignment following reinstallation to ensure proper thrust angle.

8. Remove both front and rear crossmember mounting bolts (2 and 3) on repair-side of vehicle.

CAUTION: To avoid damaging other components of vehicle, do not lower crossmember (1) any further than necessary to remove shock absorber.

9. **Slowly** lower jack allowing repair-side of crossmember to drop. **Do not lower jack at a fast rate.** Lower jack just enough to allow toe link mounting bolt at crossmember.

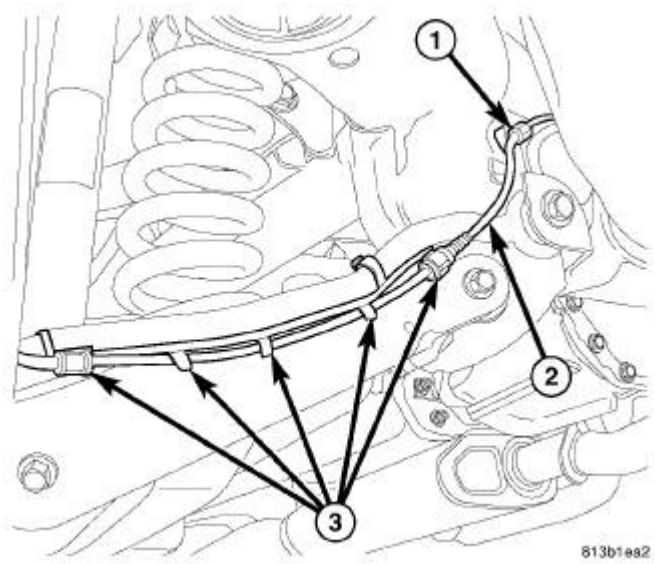

Fig. 141: Wheel Speed Sensor Cable
Courtesy of CHRYSLER GROUP, LLC

10. If equipped, remove wheel speed sensor cable (2) from toe link.

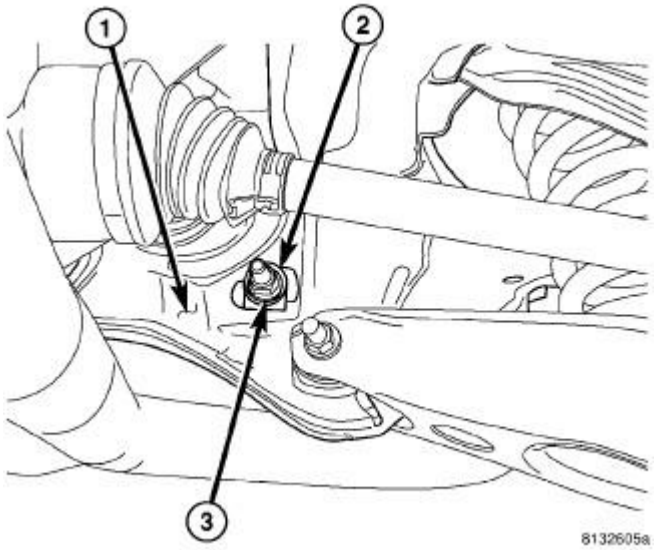

Fig. 142: Rear Toe Adjustment Bolt Nut
Courtesy of CHRYSLER GROUP, LLC

11. While holding toe adjustment cam bolt from rotating, remove nut (3) securing toe link at crossmember (1).

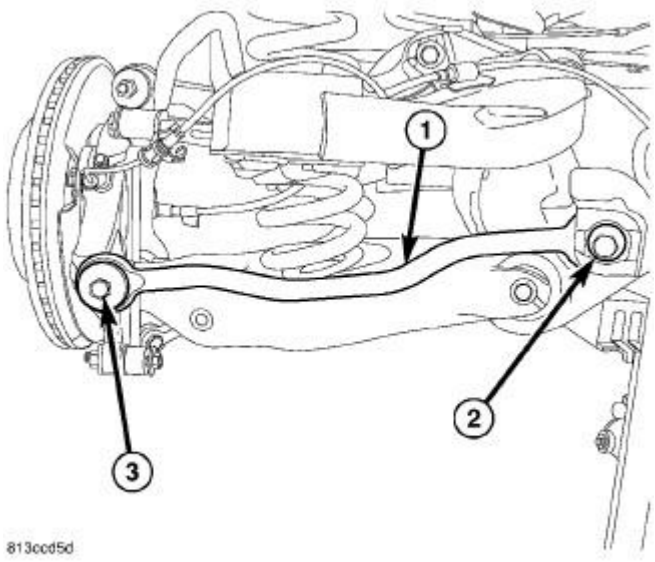

Fig. 143: Toe Link, Mounting Bolt & Cam Bolt
Courtesy of CHRYSLER GROUP, LLC

12. Slide cam bolt (2) rearward out of crossmember and link (1).
13. Remove mounting bolt (3) and nut at knuckle.
14. Remove toe link (1).

RIGHT LINK

1. Raise and support vehicle. Refer to **HOISTING, STANDARD PROCEDURE** .

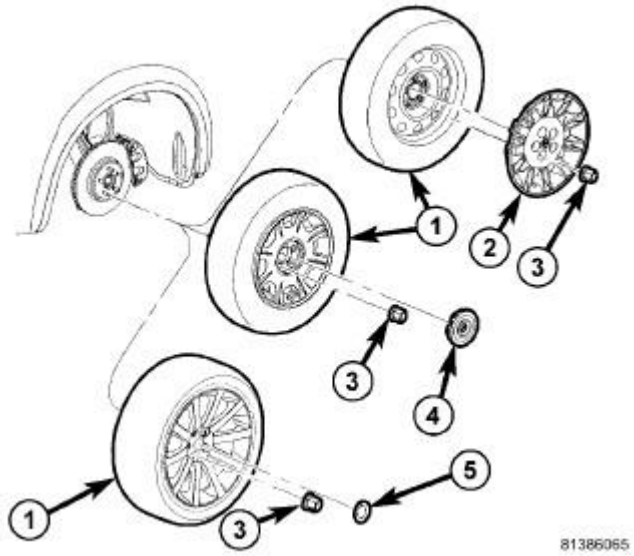

Fig. 144: Tire And Wheel Mounting
Courtesy of CHRYSLER GROUP, LLC

2. Remove wheel mounting nuts (3), then rear tire and wheel assembly (1).

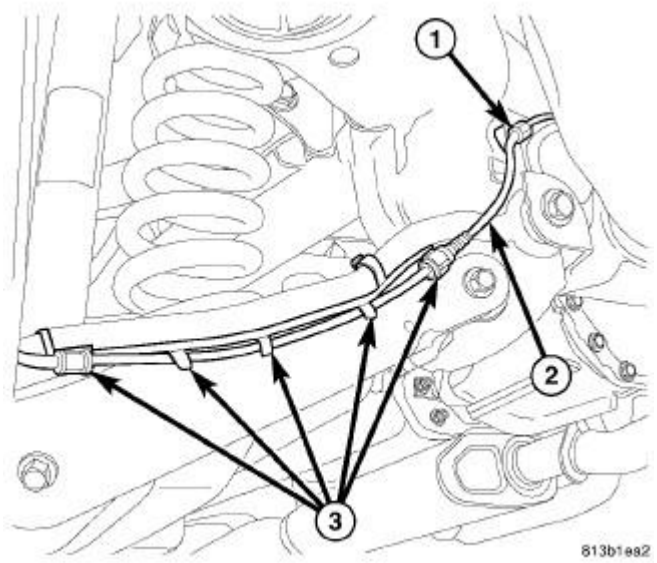

Fig. 145: Wheel Speed Sensor Cable
Courtesy of CHRYSLER GROUP, LLC

3. If equipped, remove wheel speed sensor cable (2) from toe link.

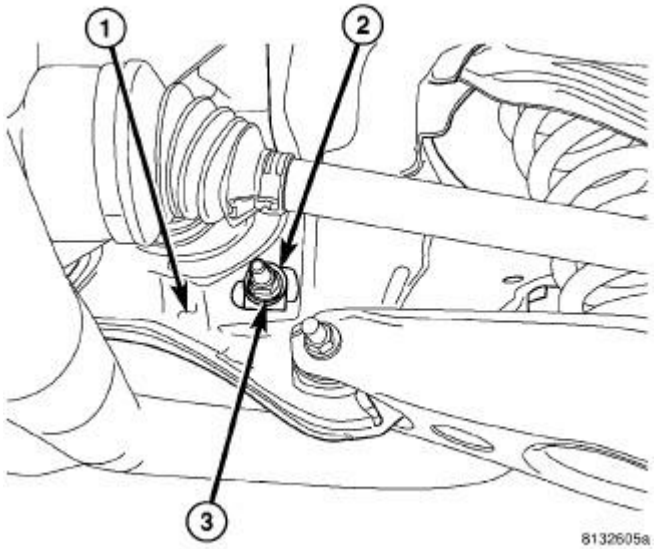

Fig. 146: Rear Toe Adjustment Bolt Nut
Courtesy of CHRYSLER GROUP, LLC

4. While holding toe adjustment cam bolt from rotating, remove nut (3) securing toe link at crossmember (1).

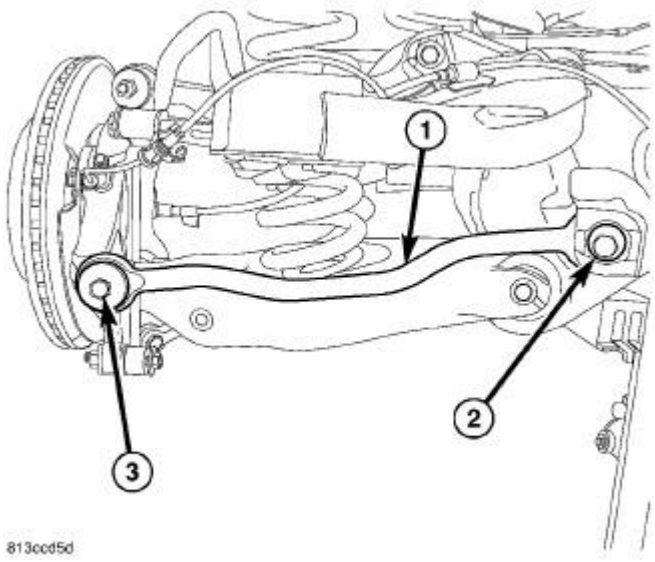

Fig. 147: Toe Link, Mounting Bolt & Cam Bolt
Courtesy of CHRYSLER GROUP, LLC

5. Slide cam bolt (2) rearward out of crossmember and link (1).
6. Remove mounting bolt (3) and nut at knuckle.
7. Remove toe link (1).

INSTALLATION

LEFT LINK

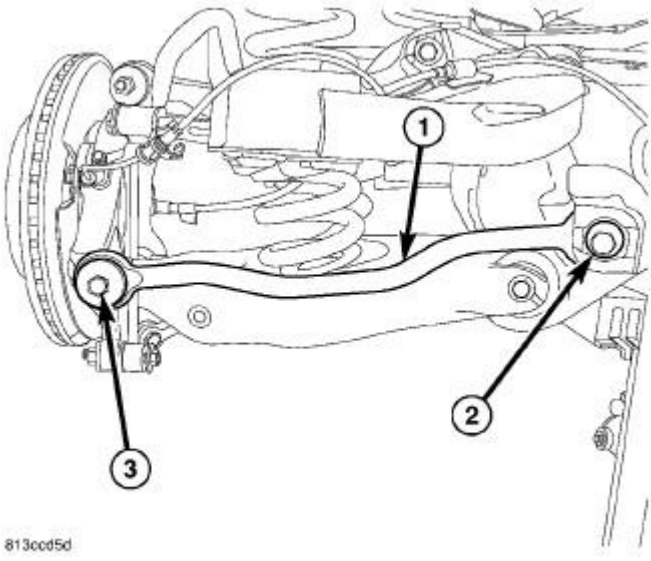

Fig. 148: Toe Link, Mounting Bolt & Cam Bolt
Courtesy of CHRYSLER GROUP, LLC

1. Slide crossmember end of toe link (1) into box bracket on crossmember. Slide cam bolt (2) through bracket and link from rear.
2. Install bolt (3) and nut securing link to knuckle. **Do not tighten bolt at this time.**

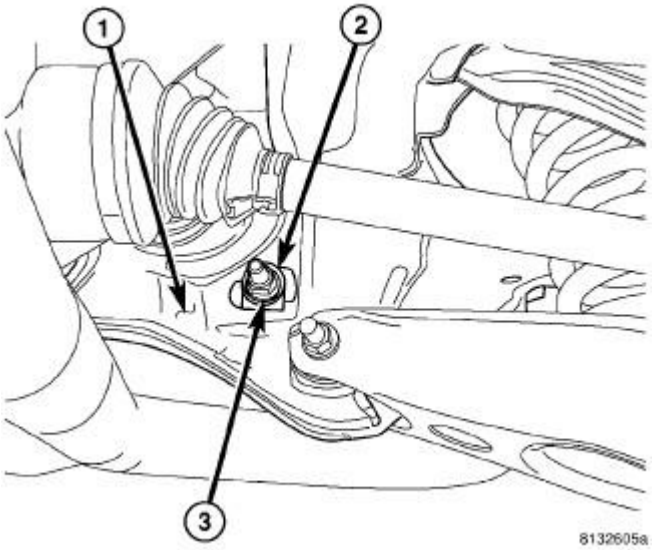

Fig. 149: Rear Toe Adjustment Bolt Nut
Courtesy of CHRYSLER GROUP, LLC

3. While holding toe adjustment cam bolt from rotating (cam facing upward), Install cam washer (2) and nut (3) securing toe link at crossmember (1). **Do not tighten nut at this time.**

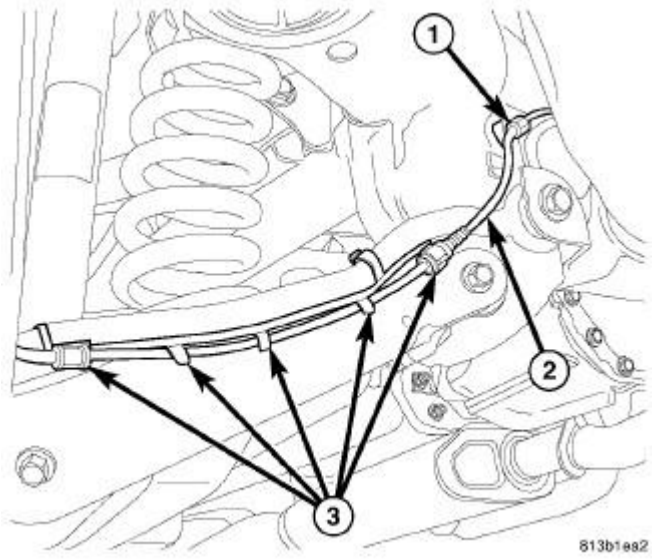

Fig. 150: Wheel Speed Sensor Cable
Courtesy of CHRYSLER GROUP, LLC

4. If equipped, attach wheel speed sensor cable (2) to toe link.

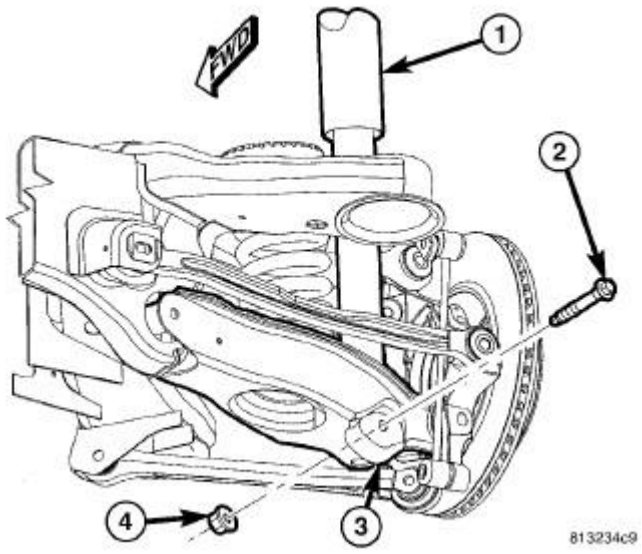

Fig. 151: Shock Absorber Lower Mounting Bolt & Nut
Courtesy of CHRYSLER GROUP, LLC

5. Carefully raise jack, guiding coil spring and lower end of shock absorber (4) into mounted positions.
6. When lower shock mounting bolt holes line up install bolt (2) and nut (4). **Do not tighten at this time.**

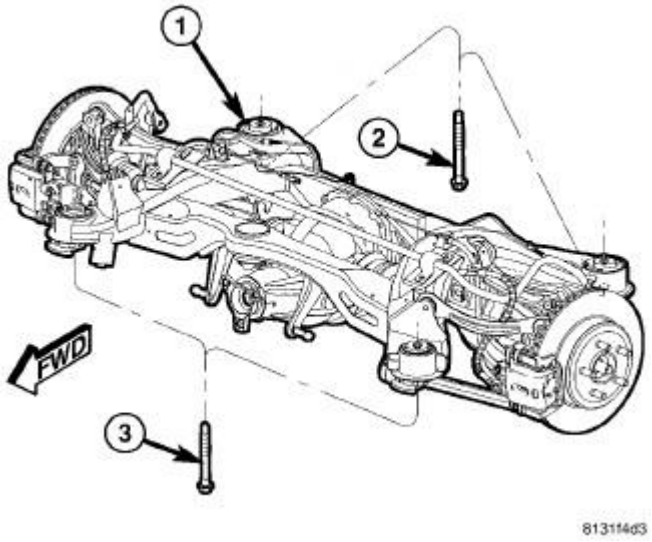

Fig. 152: Rear Crossmember Mounting Bolts
Courtesy of CHRYSLER GROUP, LLC

NOTE: Rear crossmember mounting bolts (2) are longer than front mounting bolts (3). Do not interchange mounting bolts.

7. Continue to raise crossmember in not already in mounted position, then install crossmember mounting bolts (2 and 3). **Snug, but do not fully tighten bolts at this time.**

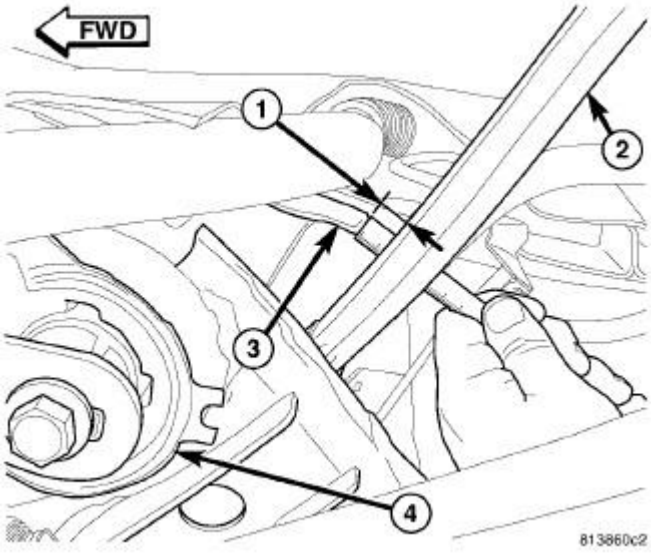

Fig. 153: Measuring Tension Link Clearance
Courtesy of CHRYSLER GROUP, LLC

8. Measure distance (1) between from tension link (2) to body weld flange (3) directly in front of it, just outboard of front mount bushing (4). **This distance must be at least 12 mm to allow proper clearance for suspension movement.** If distance is less than 12 mm, shift that side of rear crossmember directly rearward until distance is 12 mm or greater. To do so, loosen 3 mounting bolts slightly, leaving one on opposite side of shift snugged to pivot off of. Shift crossmember rearward and snug loosened bolts. Measure opposite side to be sure it also maintains minimum 12 mm distance.

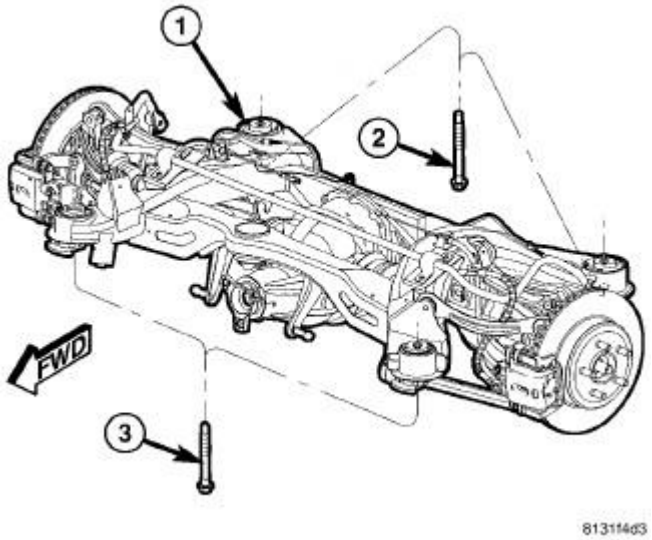

Fig. 154: Rear Crossmember Mounting Bolts

Courtesy of CHRYSLER GROUP, LLC

9. Tighten all crossmember mounting bolts (2 and 3) to 180 N.m (133 ft. lbs.).

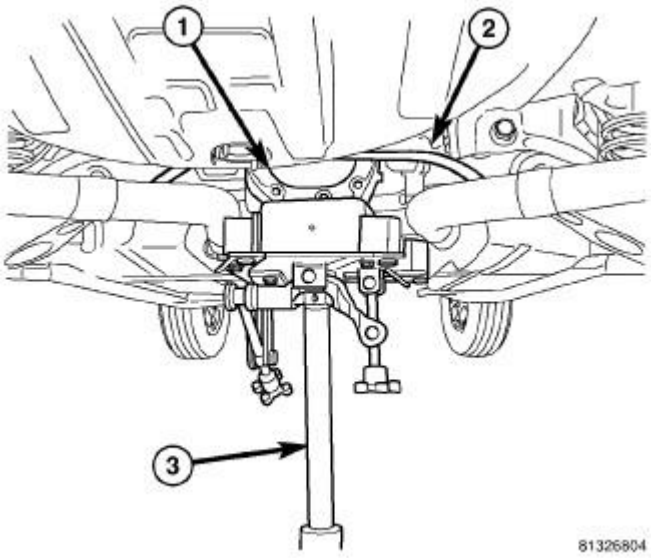

Fig. 155: Supporting Rear Axle Differential
Courtesy of CHRYSLER GROUP, LLC

10. Remove jack (3) from under rear axle differential.
11. If previously lowered, raise rear exhaust back to mounted position and connect exhaust isolators at muffler and resonators hangers. Remove jack or stand below exhaust muffler.

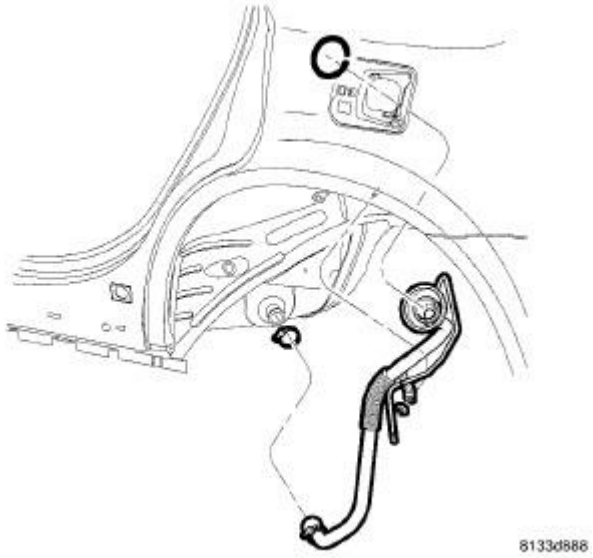

Fig. 156: Filler Tube Assembly
Courtesy of CHRYSLER GROUP, LLC

12. Install fuel filler tube. Refer to **TUBE, FUEL TANK FILLER, INSTALLATION** .

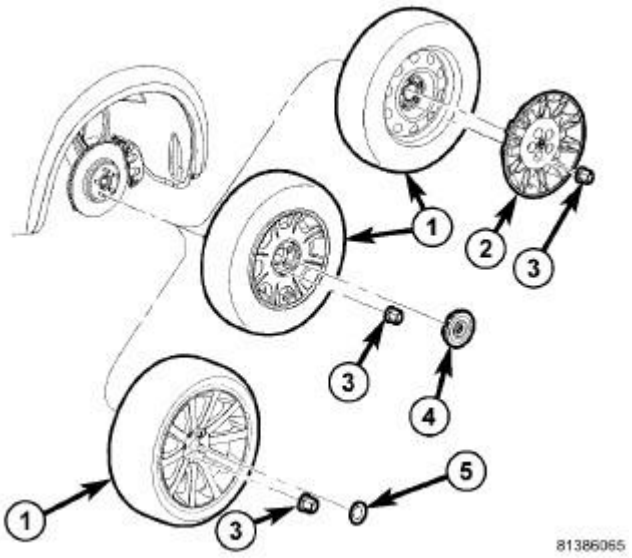

Fig. 157: Tire And Wheel Mounting
Courtesy of CHRYSLER GROUP, LLC

13. Install tire and wheel assemblies (1). Tighten wheel mounting nuts (3) to 150 N.m (110 ft. lbs.). Refer to **INSTALLATION** .
14. Lower vehicle.
15. Position vehicle on alignment rack/drive-on lift. Raise vehicle as necessary to access mounting bolts.

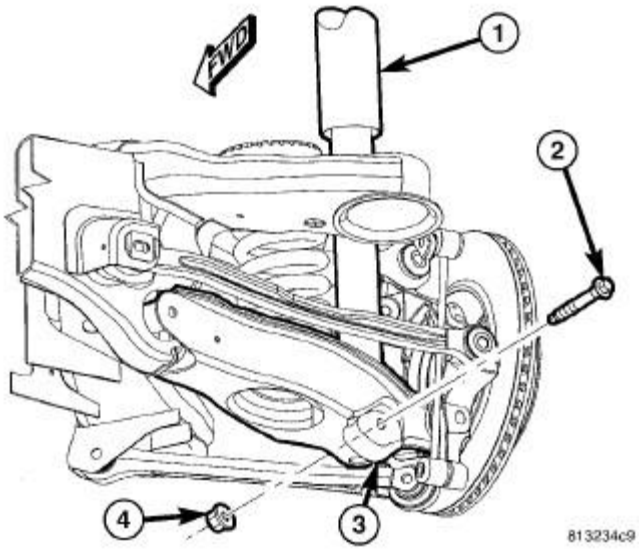

Fig. 158: Shock Absorber Lower Mounting Bolt & Nut
Courtesy of CHRYSLER GROUP, LLC

16. Tighten shock absorber lower mounting bolt nut (4) to 72 N.m (53 ft. lbs.).

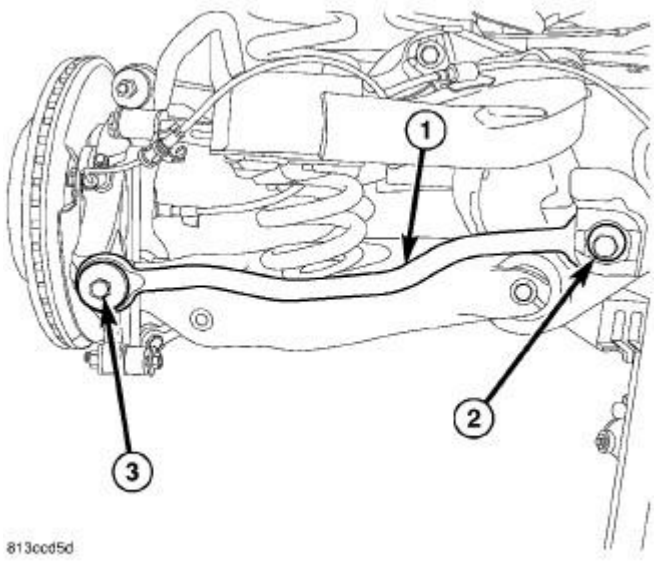

Fig. 159: Toe Link, Mounting Bolt & Cam Bolt
Courtesy of CHRYSLER GROUP, LLC

17. Tighten toe link (1) fasteners to:
    - Nut at crossmember - 108 N.m (80 ft. lbs.) (This nut may be tightened after rear wheel alignment toe is set. Do not tighten from bolt head end.).
    - Bolt at knuckle - 95 N.m (70 ft. lbs.).
18. Perform wheel alignment. Refer to **WHEEL ALIGNMENT, STANDARD PROCEDURE** .

RIGHT LINK

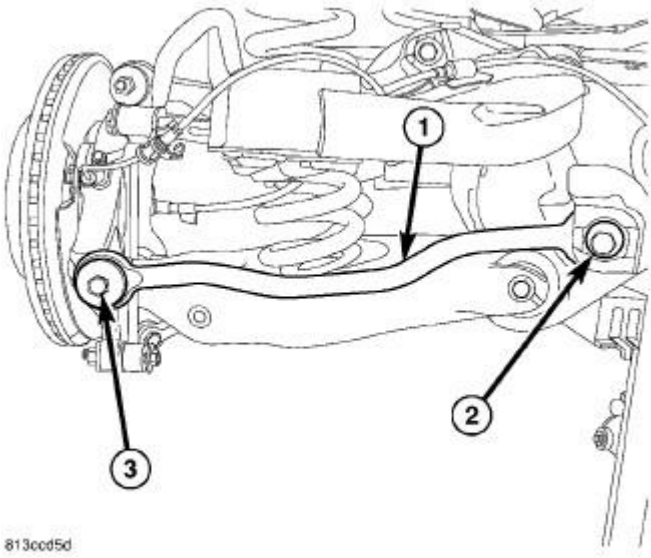

Fig. 160: Toe Link, Mounting Bolt & Cam Bolt
Courtesy of CHRYSLER GROUP, LLC

1. Slide crossmember end of toe link (1) into box bracket on crossmember. Slide cam bolt (2) through bracket and link from rear of vehicle.
2. Install bolt (3) and nut securing link to knuckle. **Do not tighten bolt at this time.**

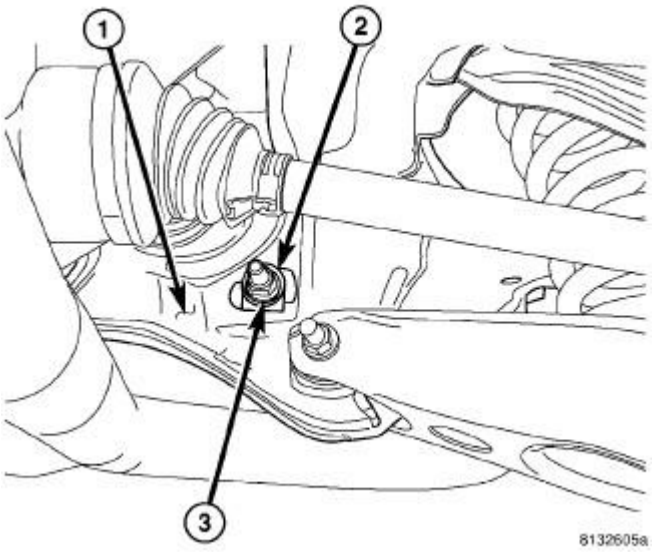

Fig. 161: Rear Toe Adjustment Bolt Nut
Courtesy of CHRYSLER GROUP, LLC

3. While holding toe adjustment cam bolt from rotating (cam facing upward), install cam washer (2) and nut (3) securing toe link at crossmember (1). **Do not tighten nut at this time.**

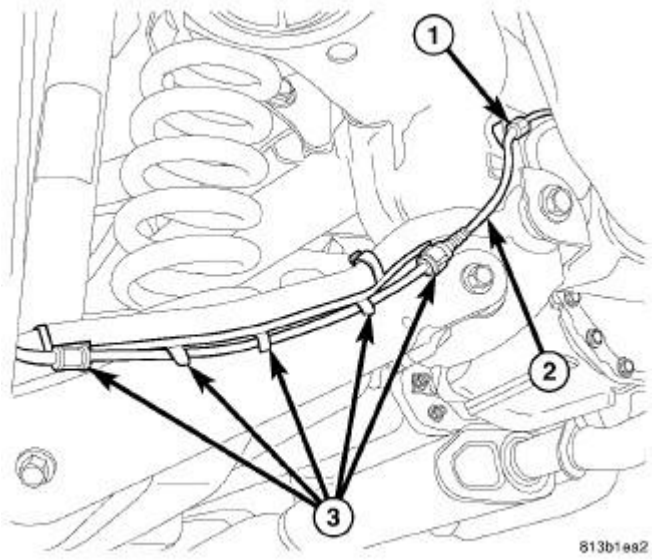

Fig. 162: Wheel Speed Sensor Cable

Courtesy of CHRYSLER GROUP, LLC

4. If equipped, Attach wheel speed sensor cable (2) to toe link.
5. Raise rear exhaust back to mounted position and connect exhaust isolators at muffler and resonators hangers. Remove jack or stand below exhaust muffler.

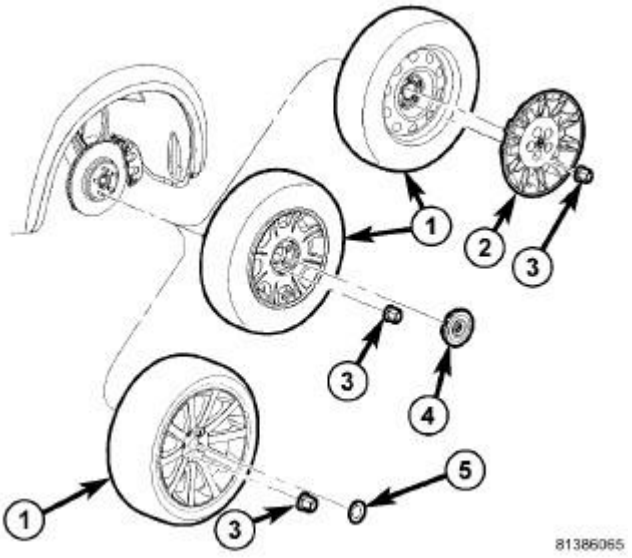

Fig. 163: Tire And Wheel Mounting
Courtesy of CHRYSLER GROUP, LLC

6. Install tire and wheel assembly (1). Tighten wheel mounting nuts (3) to 150 N.m (110 ft. lbs.). Refer to **INSTALLATION** .
7. Lower vehicle.
8. Position vehicle on alignment rack/drive-on lift. Raise vehicle as necessary to access mounting bolts.

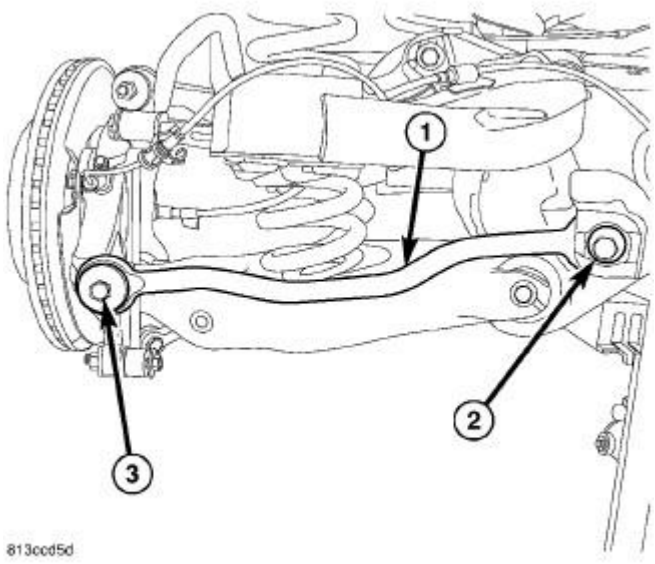

Fig. 164: Toe Link, Mounting Bolt & Cam Bolt
Courtesy of CHRYSLER GROUP, LLC

9. Tighten toe link (1) fasteners to:
   - Nut at crossmember - 108 N.m (80 ft. lbs.) (This nut may be tightened after rear wheel alignment toe is set. Do not tighten from bolt head end.).
   - Bolt at knuckle - 95 N.m (70 ft. lbs.).
10. Perform wheel alignment Refer to **WHEEL ALIGNMENT, STANDARD PROCEDURE** .

SHOCK ABSORBER, SUSPENSION

DESCRIPTION

NON SRT

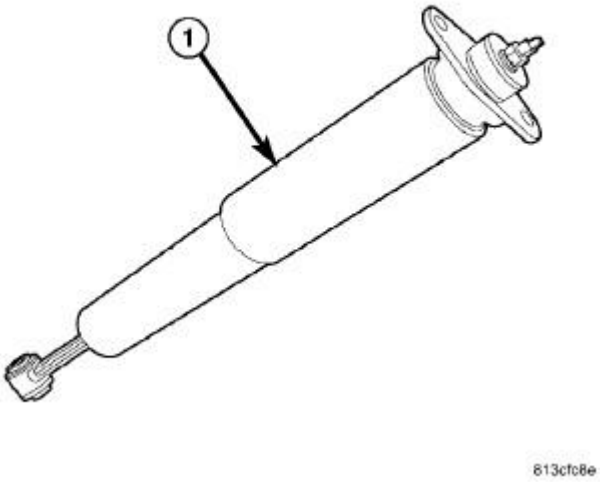

Fig. 165: Nivomat Load-Leveling Shock Absorber
Courtesy of CHRYSLER GROUP, LLC

Non SRT vehicles have standard gas-charged shock absorbers for the rear suspension.

SRT

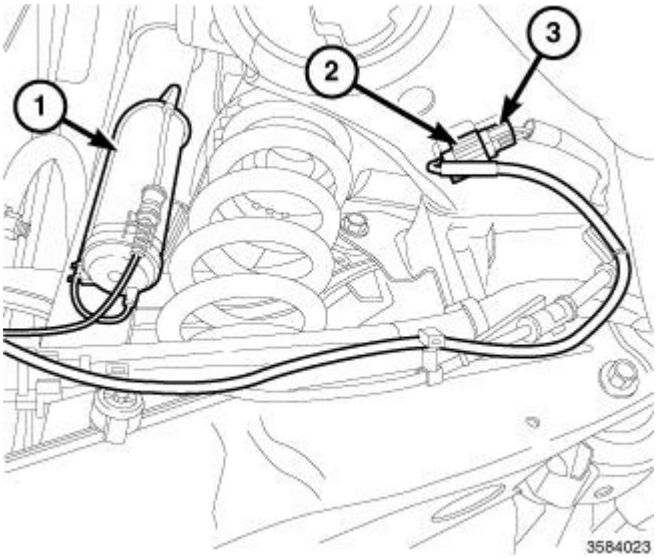

Fig. 166: Shock Solenoid Assembly & ADS Harness Connector
Courtesy of CHRYSLER GROUP, LLC

NOTE: Left side shown, right side similar.

This vehicle has Active Damping System (ADS) shock absorbers for the rear suspension. The ADS shock absorbers are serviced the same as conventional shocks, except the ADS connector (2) must be removed from the harness connector (3). It is important to pay close attention to which direction the shock solenoid assembly

(1) is pointing when removing and installing ADS shocks.

REMOVAL

NON SRT

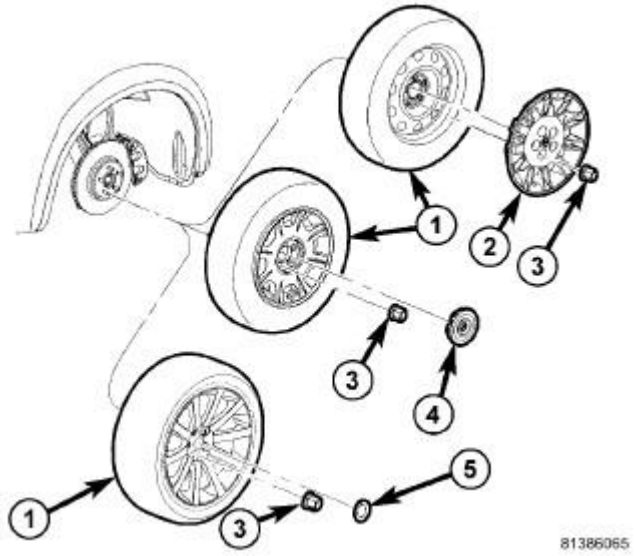

Fig. 167: Tire And Wheel Mounting
Courtesy of CHRYSLER GROUP, LLC

1. Raise and support vehicle. Refer to **HOISTING, STANDARD PROCEDURE** .
2. Remove wheel mounting nuts (3), then tire and wheel assembly (1).
3. Position under-hoist utility jack or jack stand under outer spring link adding just enough support to keep suspension from going into full-rebound when shock absorber mounting bolts are removed.

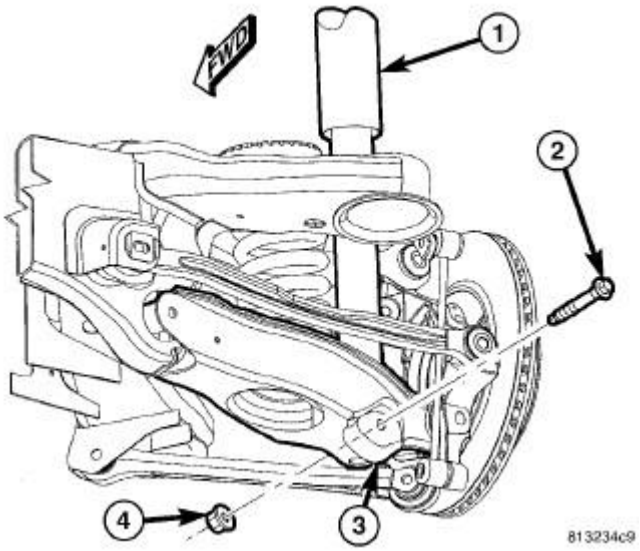

Fig. 168: Shock Absorber Lower Mounting Bolt & Nut
Courtesy of CHRYSLER GROUP, LLC

4. Remove shock absorber (1) lower mounting bolt (2) and nut (4).

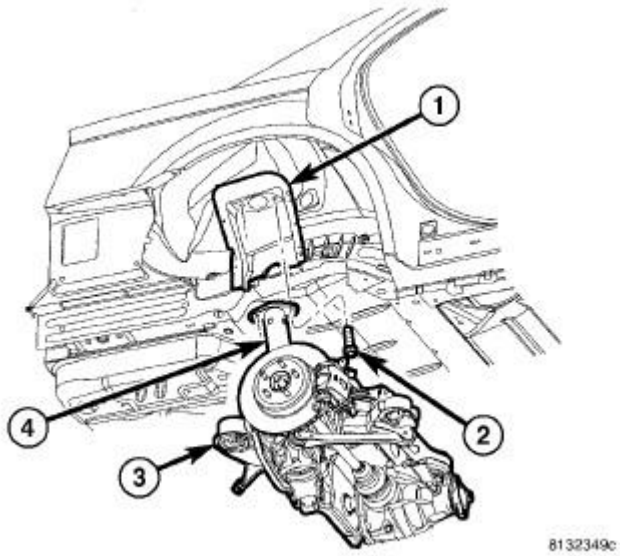

Fig. 169: Shock Absorber & Upper Mounting Screws
Courtesy of CHRYSLER GROUP, LLC

5. Remove shock absorber (1) upper mounting bolts (2).
6. Remove shock absorber (4).

SRT

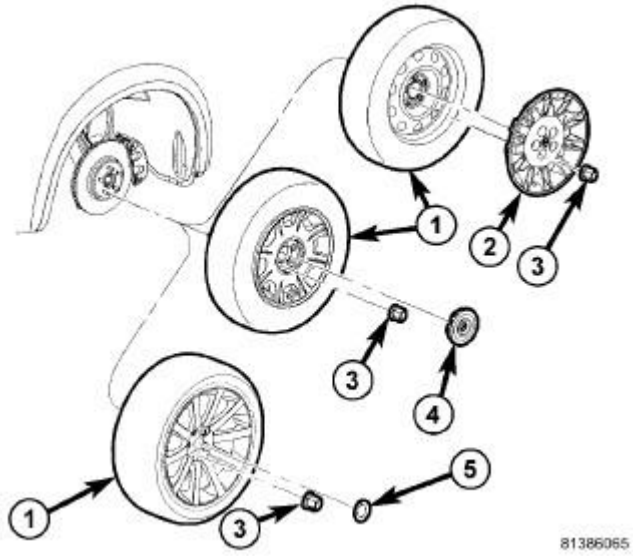

Fig. 170: Tire And Wheel Mounting

Courtesy of CHRYSLER GROUP, LLC

1. Raise and support vehicle. Refer to **HOISTING, STANDARD PROCEDURE** .
2. Remove wheel mounting nuts (3), then tire and wheel assembly (1).
3. Position under-hoist utility jack or jack stand under outer spring link adding just enough support to keep suspension from going into full-rebound when shock absorber mounting bolts are removed.

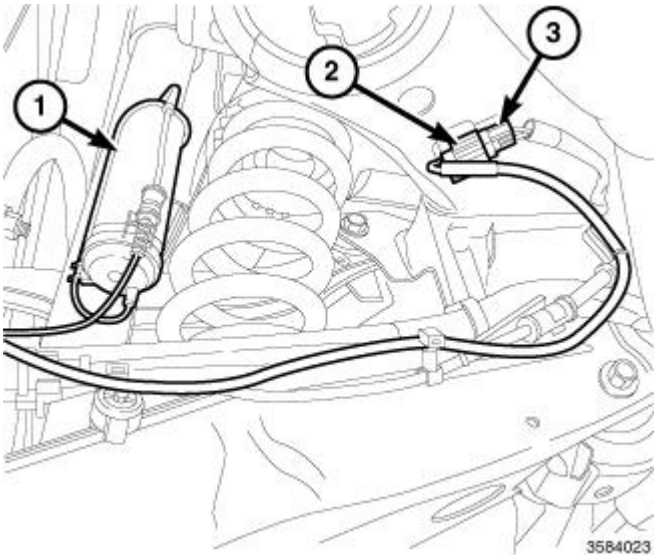

Fig. 171: Shock Solenoid Assembly & ADS Harness Connector
Courtesy of CHRYSLER GROUP, LLC

NOTE: Left side shown, right side similar.

4. Disconnect the Active Damping System (ADS) shock connector (2) from the harness connector (3).

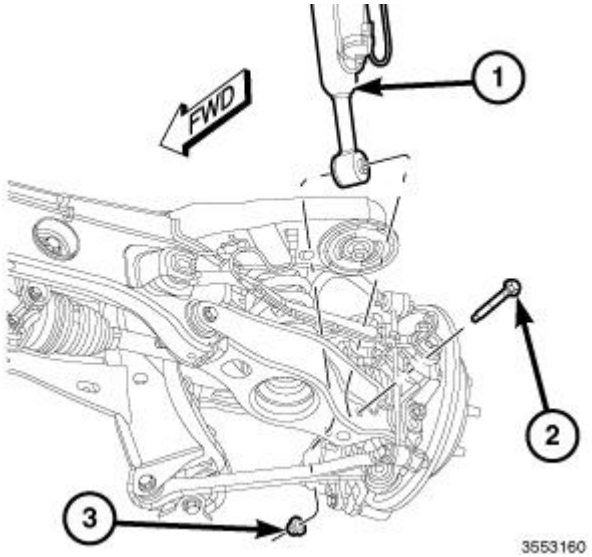

Fig. 172: Lower Mounting Bolt, Nut & Shock Absorber
Courtesy of CHRYSLER GROUP, LLC

NOTE: Right side shown, left side similar.

5. Remove lower mounting bolt (2) and nut (3) securing shock absorber (1) to knuckle.

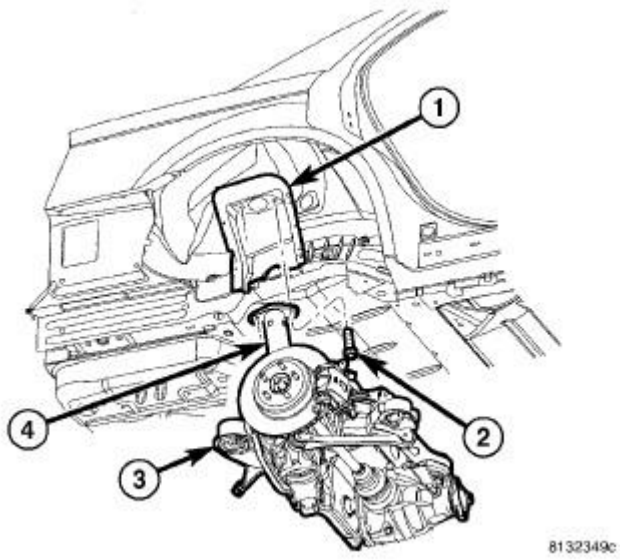

Fig. 173: Shock Absorber & Upper Mounting Screws
Courtesy of CHRYSLER GROUP, LLC

6. Remove shock absorber upper mounting bolts (2).
7. Remove shock absorber (4).

INSTALLATION

NON SRT

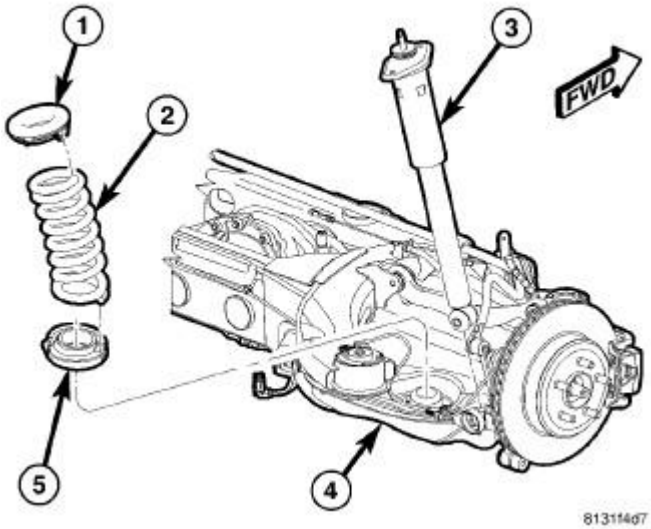

Fig. 174: Isolators, Coil Spring, Shock Absorber & Crossmember
Courtesy of CHRYSLER GROUP, LLC

1. Insert lower end of shock absorber (3) into well of spring link (4).

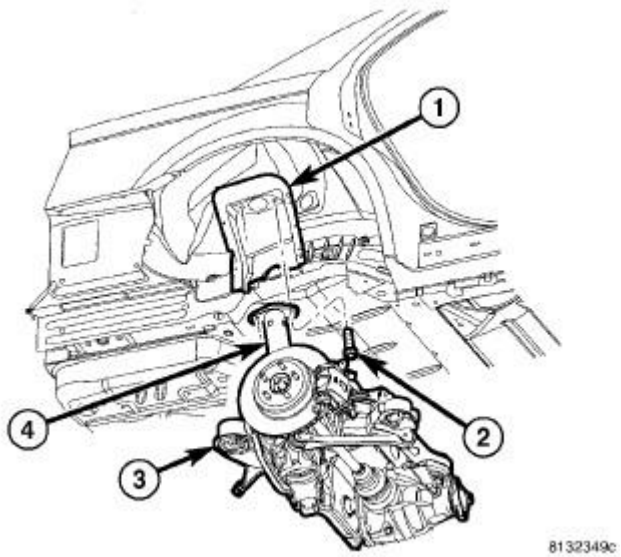

Fig. 175: Shock Absorber & Upper Mounting Screws
Courtesy of CHRYSLER GROUP, LLC

2. Raise upper end of shock absorber (4) up into mounted position on body (1) and install upper mounting screws (2). Tighten upper mounting screws to 52 N.m (38 ft. lbs.).

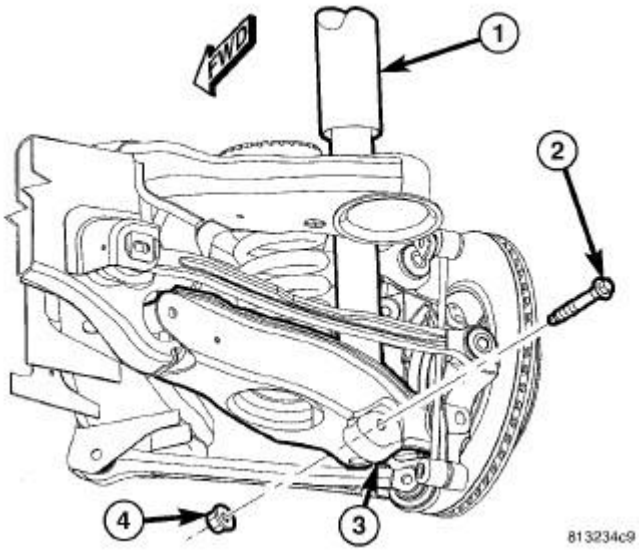

Fig. 176: Shock Absorber Lower Mounting Bolt & Nut
Courtesy of CHRYSLER GROUP, LLC

3. Install lower shock mounting bolt (2) and nut (4). **Do not tighten at this time.**
4. Remove under-hoist utility jack or jack stand from under spring link.

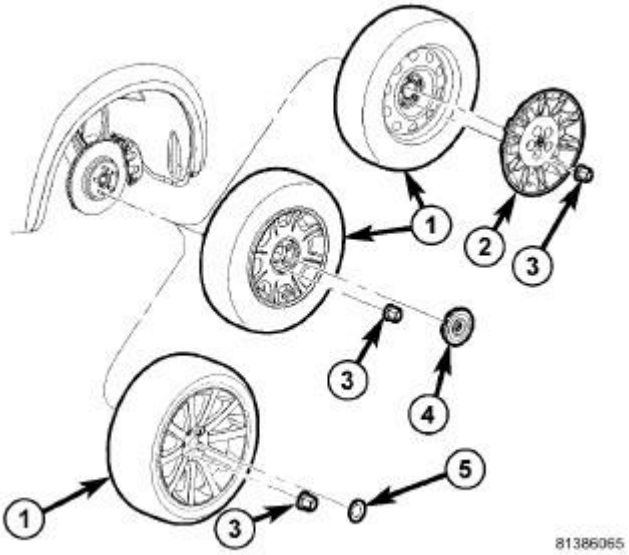

Fig. 177: Tire And Wheel Mounting
Courtesy of CHRYSLER GROUP, LLC

5. Install tire and wheel assembly (1). Tighten wheel mounting nuts (3) to 150 N.m (110 ft. lbs.). Refer to **INSTALLATION** .
6. Lower vehicle.
7. Position vehicle on alignment rack/drive-on hoist. Raise vehicle as necessary to access lower mounting

bolt.

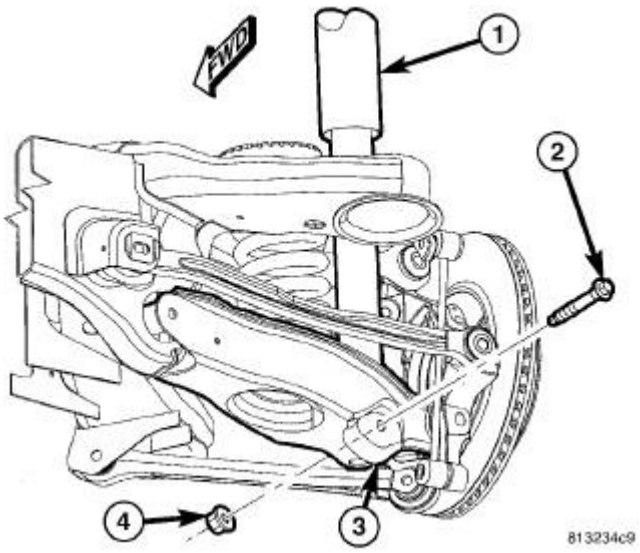

Fig. 178: Shock Absorber Lower Mounting Bolt & Nut
Courtesy of CHRYSLER GROUP, LLC

8. Tighten shock absorber lower mounting bolt nut (4) to 72 N.m (53 ft. lbs.).

SRT

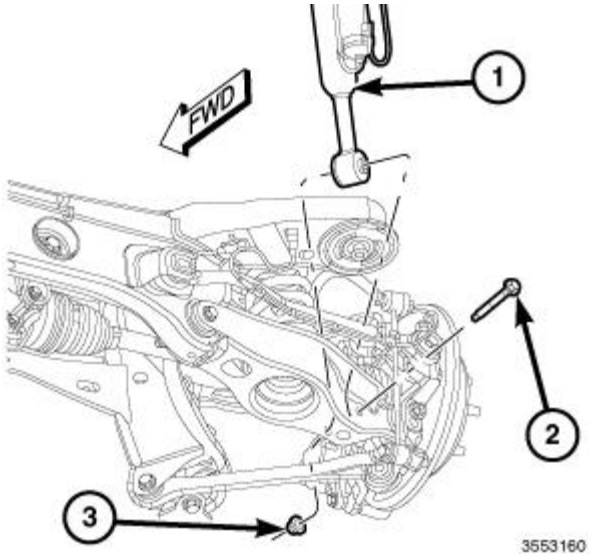

Fig. 179: Lower Mounting Bolt, Nut & Shock Absorber
Courtesy of CHRYSLER GROUP, LLC

1. Insert lower end of shock absorber (1) into well of spring link.

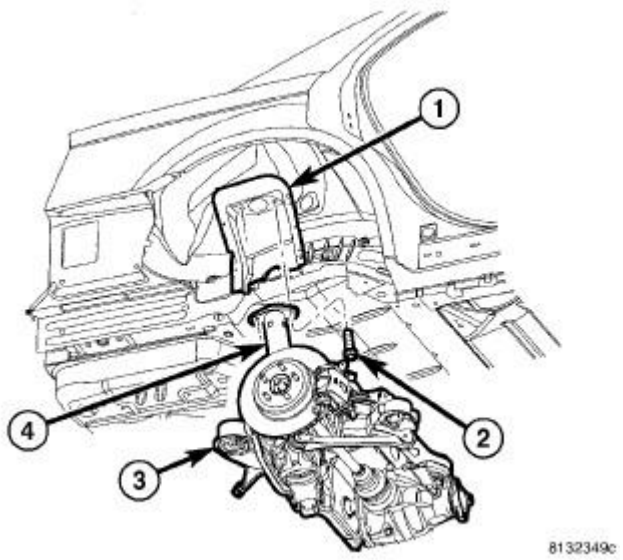

Fig. 180: Shock Absorber & Upper Mounting Screws
Courtesy of CHRYSLER GROUP, LLC

2. Raise upper end of shock absorber (4) up into mounted position on body (1) and install upper mounting screws (2). Tighten upper mounting screws to 52 N.m (38 ft. lbs.).

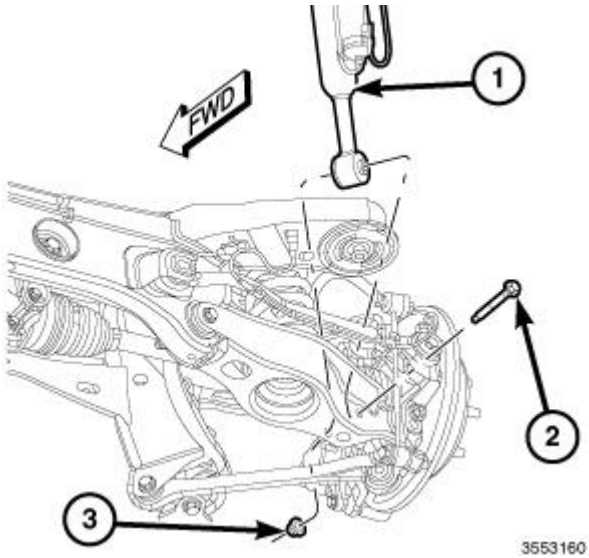

Fig. 181: Lower Mounting Bolt, Nut & Shock Absorber
Courtesy of CHRYSLER GROUP, LLC

3. Install lower shock mounting bolt (2) and nut (3). **Do not tighten at this time.**
4. Remove under-hoist utility jack or jack stand from under spring link.

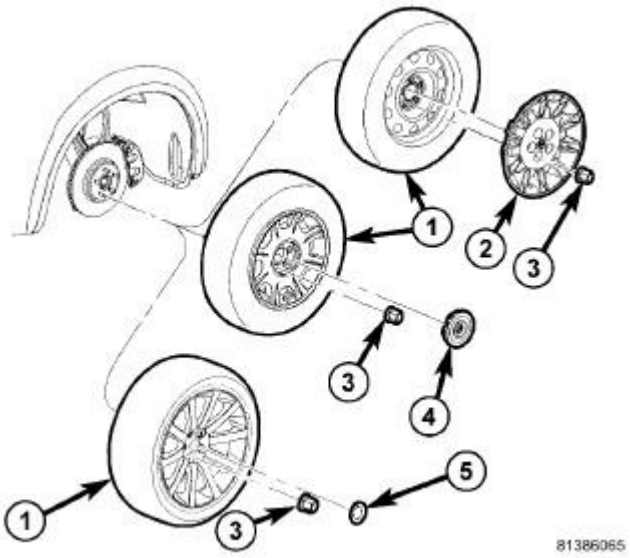

Fig. 182: Tire And Wheel Mounting
Courtesy of CHRYSLER GROUP, LLC

5. Install tire and wheel assembly (1). Tighten wheel mounting nuts (3) to 150 N.m (110 ft. lbs.). Refer to **INSTALLATION** .
6. Lower vehicle.
7. Position vehicle on alignment rack/drive-on hoist. Raise vehicle as necessary to access lower mounting bolt.

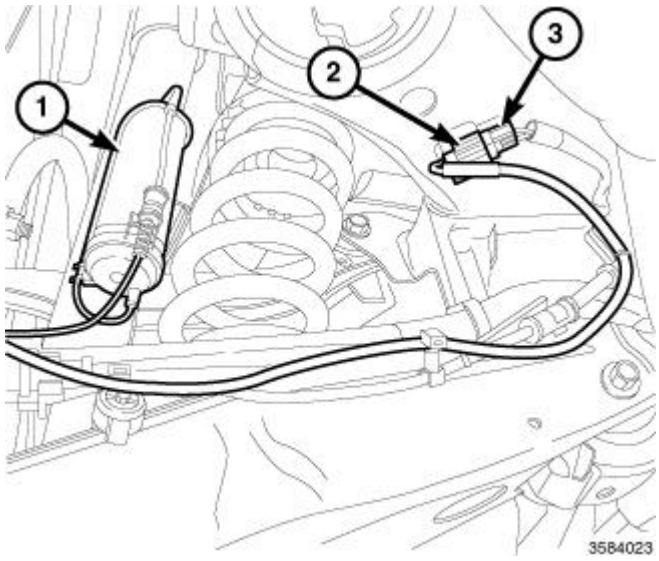

Fig. 183: Shock Solenoid Assembly & ADS Harness Connector
Courtesy of CHRYSLER GROUP, LLC

8. Connect the Active Damping System (ADS) connector (2) from the ADS shock (1) to the harness connector (3).

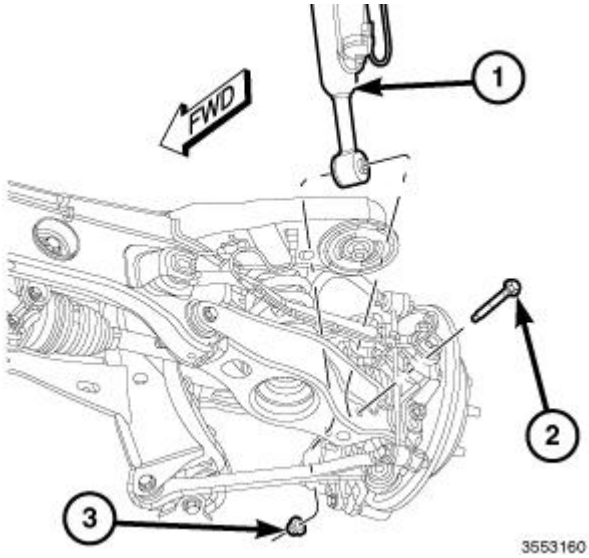

Fig. 184: Lower Mounting Bolt, Nut & Shock Absorber
Courtesy of CHRYSLER GROUP, LLC

9. Tighten shock absorber lower mounting nut (3) to 72 N.m (53 ft. lbs.).

SPRING(S)

REMOVAL

REMOVAL

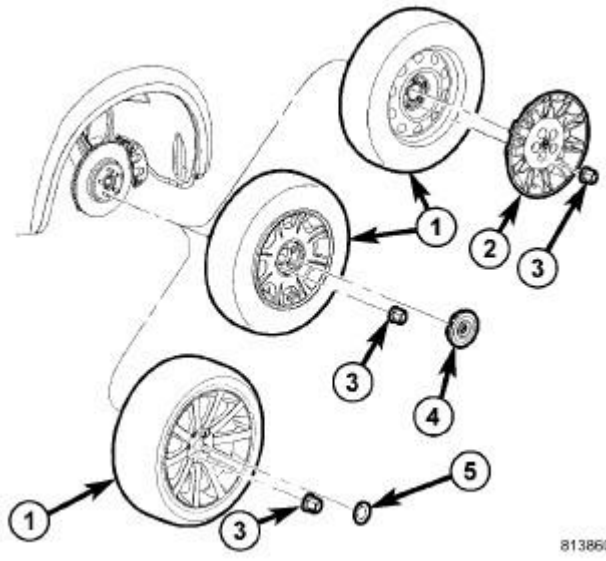

Fig. 185: Tire And Wheel Mounting
Courtesy of CHRYSLER GROUP, LLC

1. Raise and support vehicle. Refer to **HOISTING, STANDARD PROCEDURE** .

2. On both sides of vehicle, remove wheel mounting nuts (3), then rear tire and wheel assembly (1).

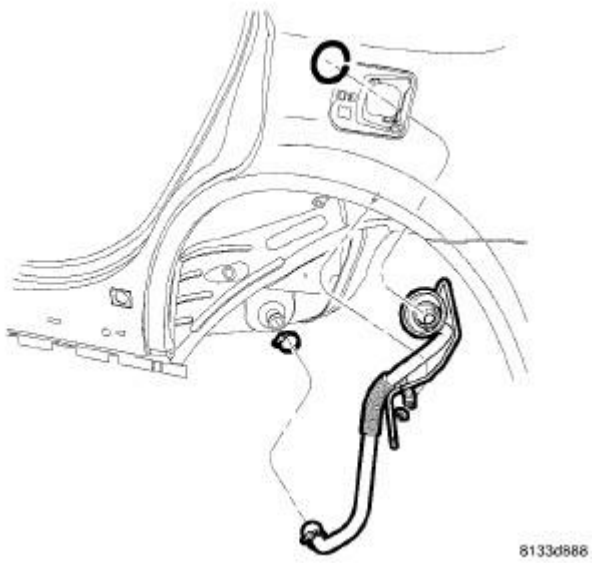

Fig. 186: Filler Tube Assembly
Courtesy of CHRYSLER GROUP, LLC

WARNING: Before opening fuel system, review all Warnings and Cautions.

3. If servicing left side shock absorber, remove fuel filler tube. Refer to **TUBE, FUEL TANK FILLER, REMOVAL** .
4. Position an extra pair of jack stands under and support forward end of engine cradle to help stabilize vehicle during rear suspension removal/installation.
5. Perform following if vehicle is equipped with dual exhaust or if servicing right side on vehicle with single exhaust:
    a. Position under-hoist utility jack or stand several inches below exhaust at muffler.
    b. Disconnect exhaust isolators at muffler and resonators hangers.
    c. Lower exhaust down to rest upon top of jack or stand placed below muffler.

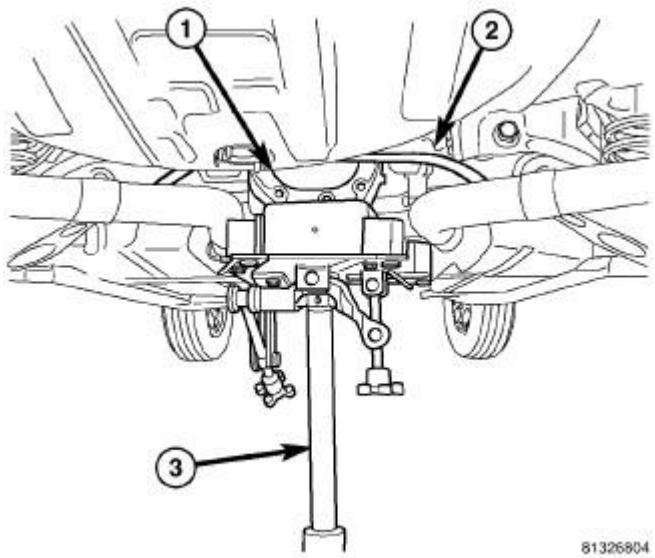

Fig. 187: Supporting Rear Axle Differential
Courtesy of CHRYSLER GROUP, LLC

6. Position under-hoist utility jack or transmission jack (3) under center of rear axle differential (1). Raise jack head to contact differential and secure in place. **When securing crossmember to jack, be sure not to secure stabilizer bar.**

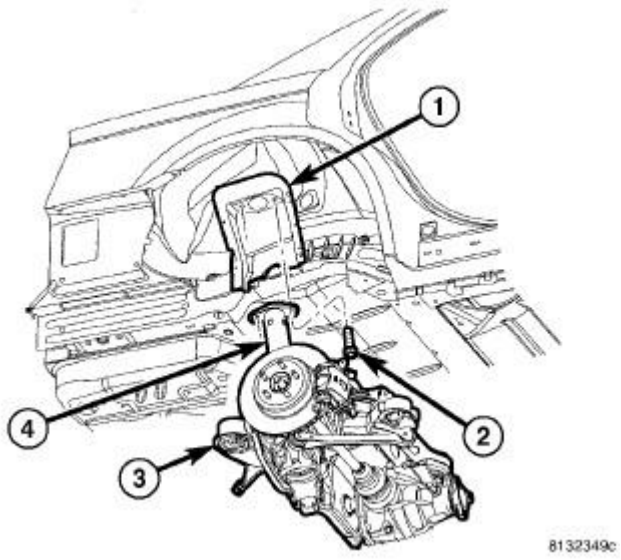

Fig. 188: Shock Absorber & Upper Mounting Screws
Courtesy of CHRYSLER GROUP, LLC

7. Remove shock absorber (1) upper mounting screws (2).

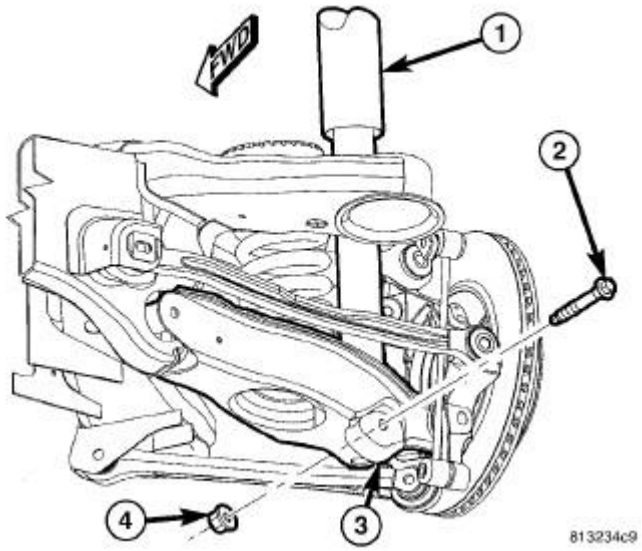

Fig. 189: Shock Absorber Lower Mounting Bolt & Nut
Courtesy of CHRYSLER GROUP, LLC

8. Remove shock absorber (1) lower mounting bolt (2) and nut (4).

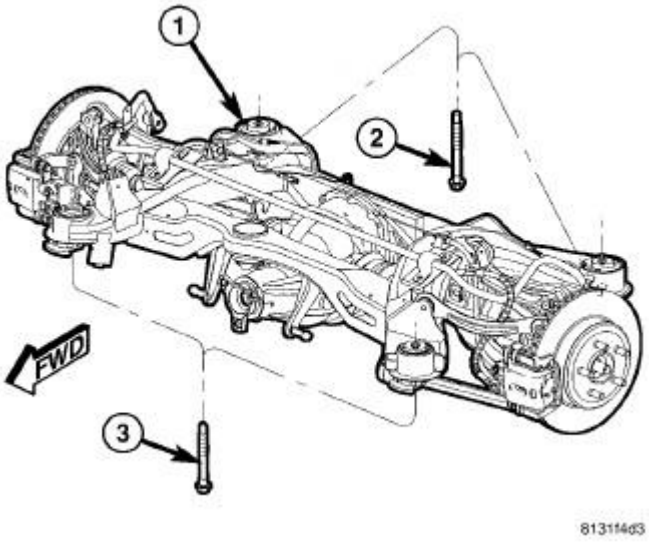

Fig. 190: Rear Crossmember Mounting Bolts
Courtesy of CHRYSLER GROUP, LLC

CAUTION: When removing crossmember mounting bolts (2 and 3) it is important NOT to loosen or remove crossmember mounting bolts on opposite side of vehicle. Doing so will require rear wheel alignment following reinstallation to ensure proper thrust angle.

9. Remove both front and rear crossmember mounting bolts (2 and 3) on repair-side of vehicle.

CAUTION: To avoid damaging other components of vehicle, do not lower crossmember (1) any further than necessary to remove shock absorber.

10. **Slowly** lower jack allowing repair-side of crossmember to drop. Lower jack just enough to allow top of shock absorber to clear body flange.

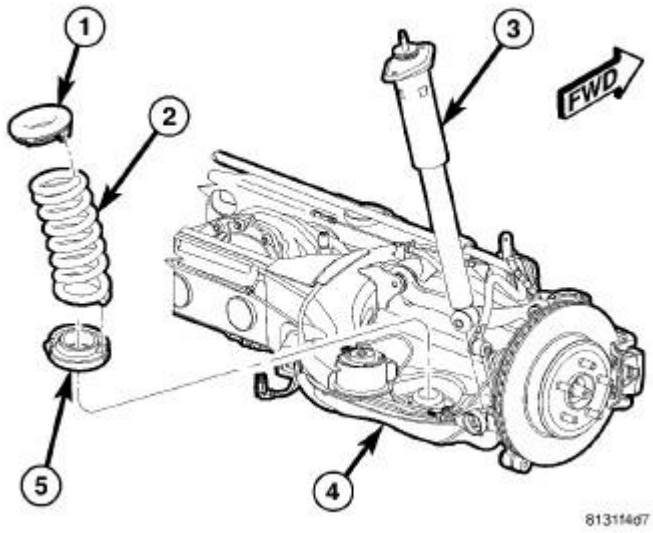

Fig. 191: Isolators, Coil Spring, Shock Absorber & Crossmember
Courtesy of CHRYSLER GROUP, LLC

11. Remove shock absorber (3) by tipping top outward and lifting lower end out of pocket in spring link (4).
12. Disconnect brake hose at bracket mounted to body to allow to avoid overextending hose, damaging it, during following step.
13. Slowly lower jack until crossmember is low enough to remove coil spring. **Do not lower jack any further than necessary to remove spring.**
14. Remove coil spring and isolators (1, 2 and 5).

INSTALLATION

INSTALLATION

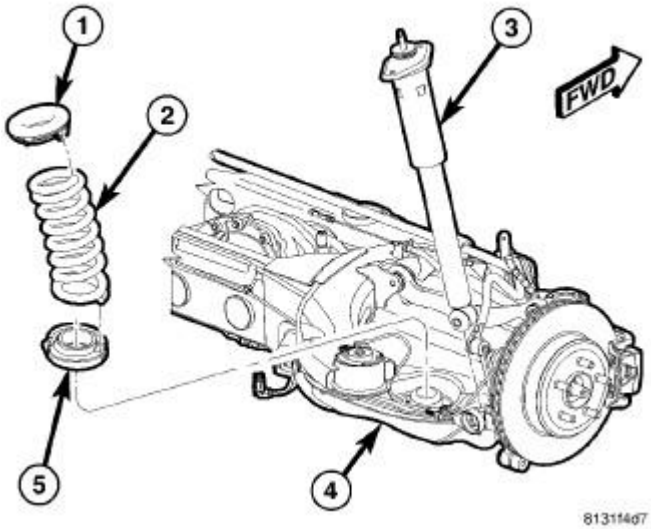

Fig. 192: Isolators, Coil Spring, Shock Absorber & Crossmember
Courtesy of CHRYSLER GROUP, LLC

NOTE: Rear coil springs are interchangeable.

1. Install upper (1) and lower (5) isolators on coil spring (2).

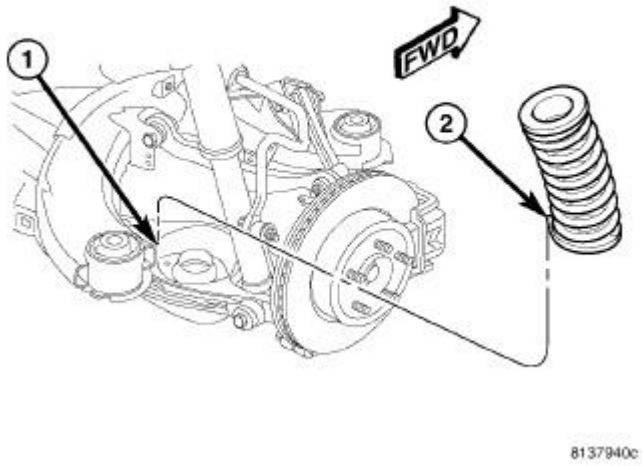

Fig. 193: Matching Spring Isolator To Spring Link
Courtesy of CHRYSLER GROUP, LLC

NOTE: Before installing coil spring, make sure isolators (1 and 5) are completely installed on ends of spring.

2. Install coil spring with isolators into spring pocket of spring link (1) fitting lower isolator (2) to shape of pocket, then align top of spring with body mount.

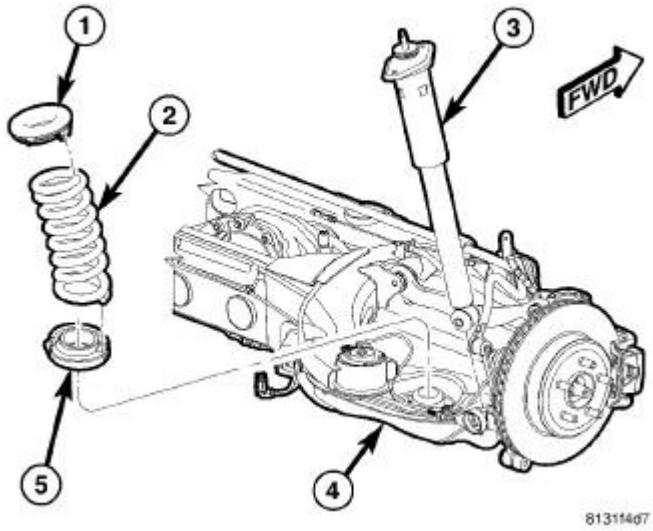

Fig. 194: Isolators, Coil Spring, Shock Absorber & Crossmember
Courtesy of CHRYSLER GROUP, LLC

3. Install shock absorber (3) by setting lower end into pocket in spring link (4), then tipping top inward until aligned with upper mounting holes.

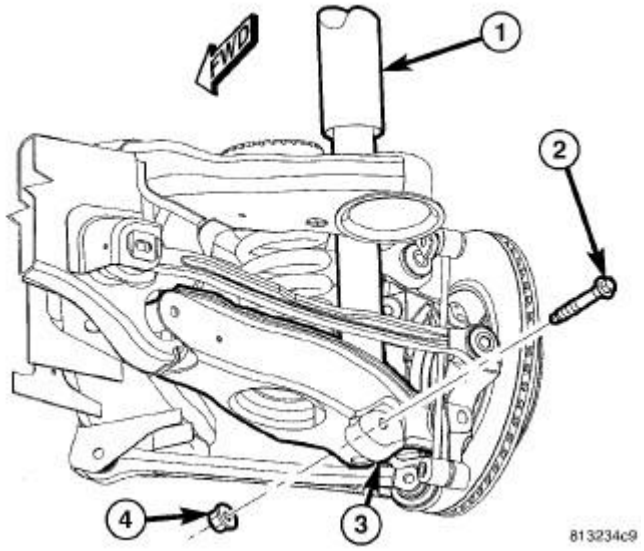

Fig. 195: Shock Absorber Lower Mounting Bolt & Nut
Courtesy of CHRYSLER GROUP, LLC

4. Install lower shock mounting bolt and nut. **Do not tighten at this time.**

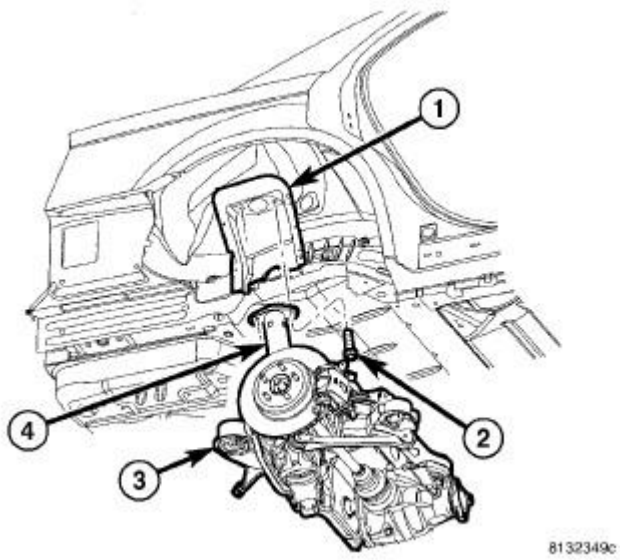

Fig. 196: Shock Absorber & Upper Mounting Screws
Courtesy of CHRYSLER GROUP, LLC

5. Carefully raise jack, guiding coil spring and upper end of shock absorber (4) into mounted positions.
6. Install shock absorber upper mounting screws (2). Tighten upper mounting screws to 52 N.m (38 ft. lbs.).

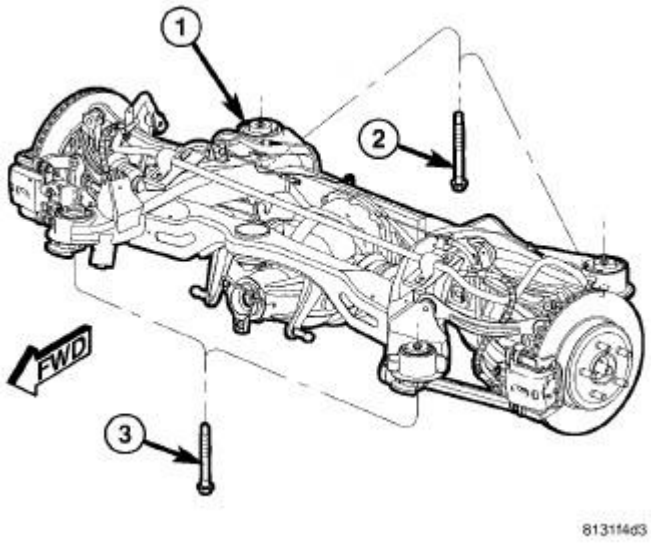

Fig. 197: Rear Crossmember Mounting Bolts
Courtesy of CHRYSLER GROUP, LLC

NOTE: Rear crossmember mounting bolts (2) are longer than front mounting bolts (3). Do not interchange mounting bolts.

7. Install crossmember mounting bolts (2 and 3). **Snug, but do not fully tighten bolts at this time.**

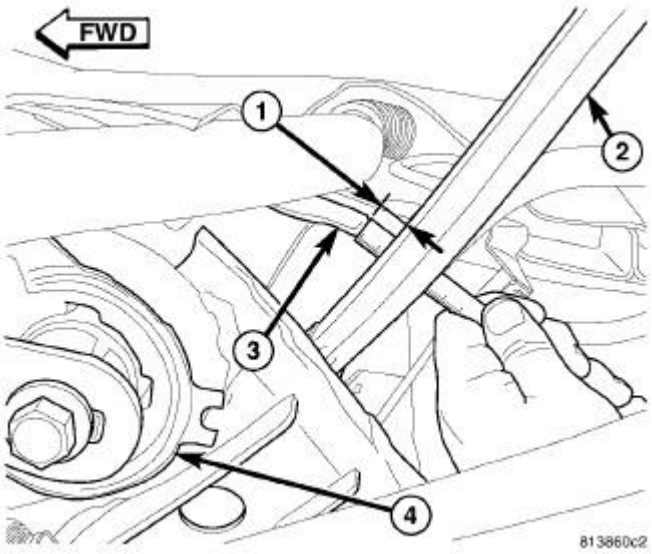

Fig. 198: Measuring Tension Link Clearance
Courtesy of CHRYSLER GROUP, LLC

8. Measure distance (1) between from tension link (2) to body weld flange (3) directly in front of it, just outboard of front mount bushing (4). **This distance must be at least 12 mm to allow proper clearance for suspension movement.** If distance is less than 12 mm, shift that side of rear crossmember directly rearward until distance is 12 mm or greater. To do so, loosen 3 mounting bolts slightly, leaving one on opposite side of shift snugged to pivot off of. Shift crossmember rearward and snug loosened bolts. Measure opposite side to be sure it also maintains minimum 12 mm distance.

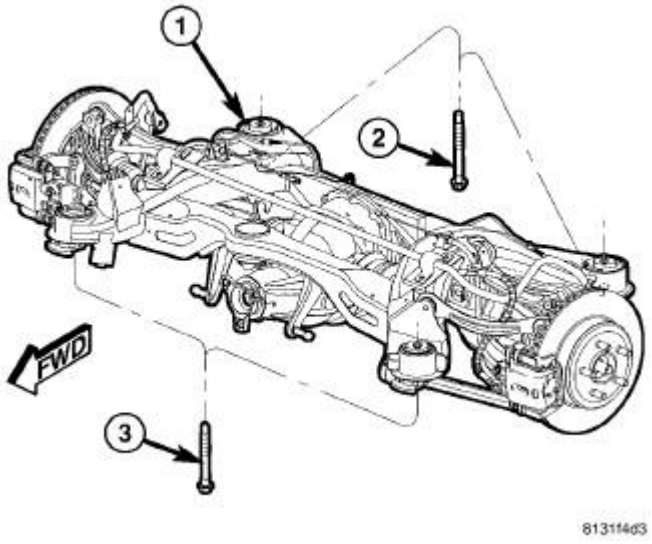

Fig. 199: Rear Crossmember Mounting Bolts
Courtesy of CHRYSLER GROUP, LLC

9. Tighten all crossmember mounting bolts (2 and 3) to 180 N.m (133 ft. lbs.).

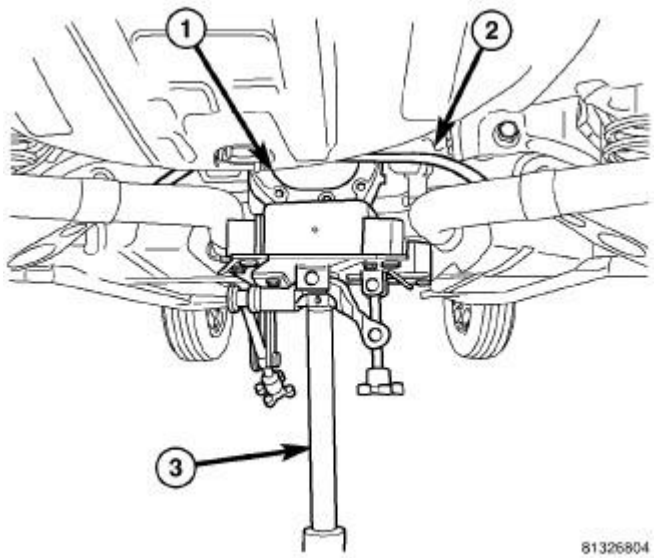

Fig. 200: Supporting Rear Axle Differential
Courtesy of CHRYSLER GROUP, LLC

10. Remove jack (3) from under rear axle differential.
11. If previously lowered, raise rear exhaust back to mounted position and connect exhaust isolators at muffler and resonators hangers. Remove jack or stand below exhaust muffler.

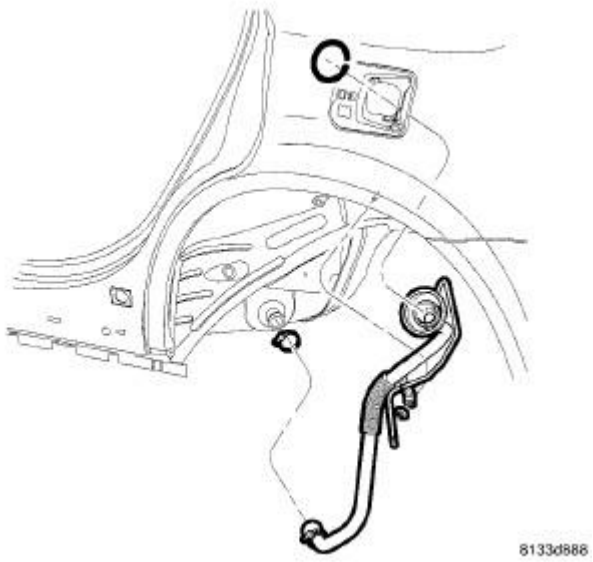

Fig. 201: Filler Tube Assembly
Courtesy of CHRYSLER GROUP, LLC

12. Install fuel filler tube. Refer to **TUBE, FUEL TANK FILLER, INSTALLATION** .

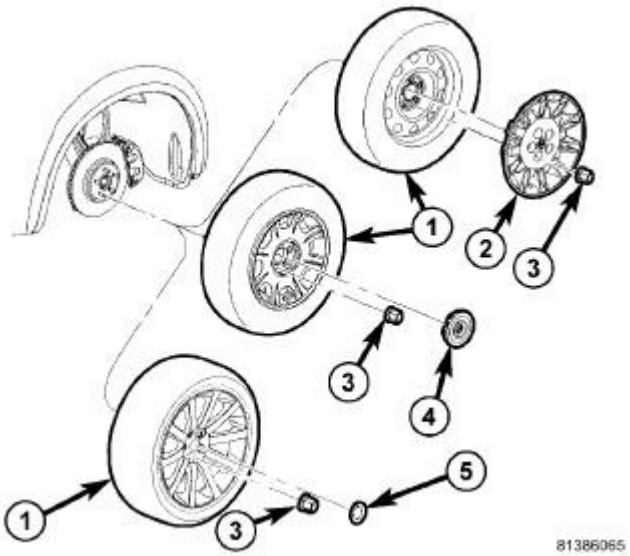

Fig. 202: Tire And Wheel Mounting
Courtesy of CHRYSLER GROUP, LLC

13. Install tire and wheel assemblies (1). Tighten wheel mounting nuts (3) to 150 N.m (110 ft. lbs.) Refer to **INSTALLATION** .
14. Lower vehicle.
15. Position vehicle on alignment rack/drive-on lift. Raise lift as necessary to access lower mounting bolt.

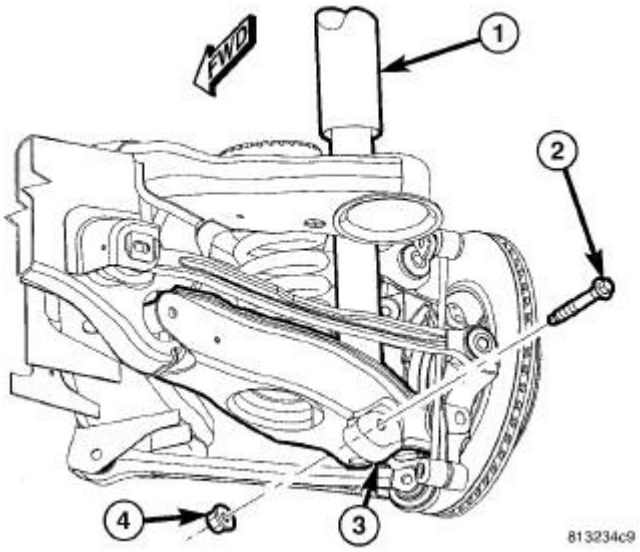

Fig. 203: Shock Absorber Lower Mounting Bolt & Nut
Courtesy of CHRYSLER GROUP, LLC

16. Tighten shock absorber lower mounting bolt nut (4) to 72 N.m (53 ft. lbs.).

STABILIZER BAR, REAR SUSPENSION

REMOVAL

REMOVAL

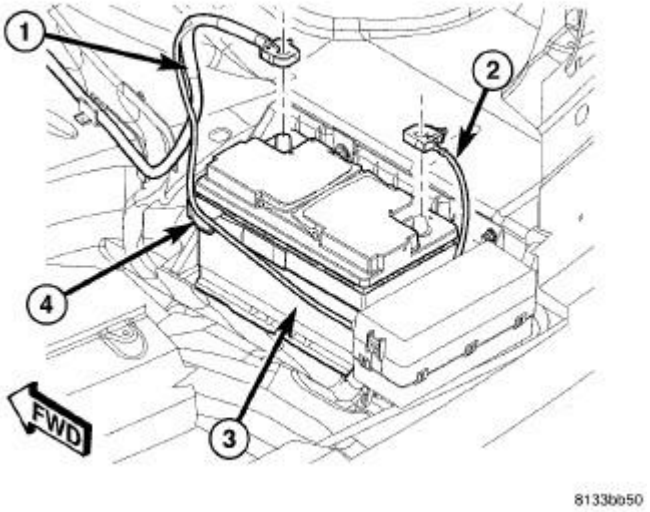

Fig. 204: Disconnecting/Connecting Battery Cables
Courtesy of CHRYSLER GROUP, LLC

1. Disconnect and isolate battery negative cable (2) from battery post.
2. Raise and support vehicle. Refer to **HOISTING, STANDARD PROCEDURE** .

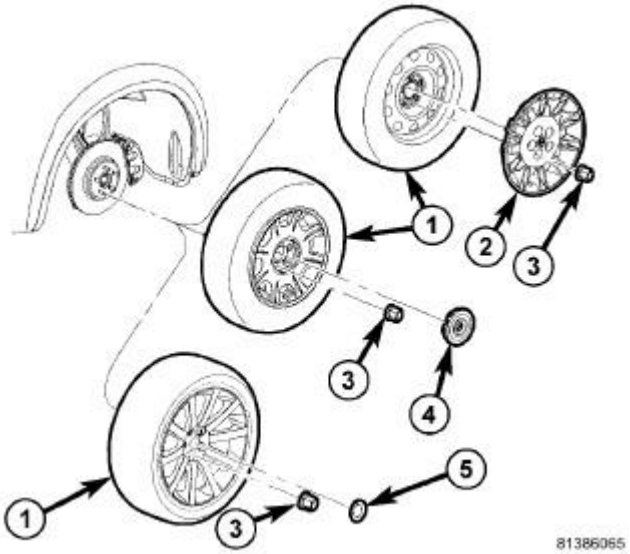

Fig. 205: Tire And Wheel Mounting

Courtesy of CHRYSLER GROUP, LLC

3. On each side of vehicle rear, remove wheel mounting nuts (3), then tire and wheel assembly (1).
4. Remove rear exhaust system. Refer to **MUFFLER, EXHAUST, REMOVAL** .

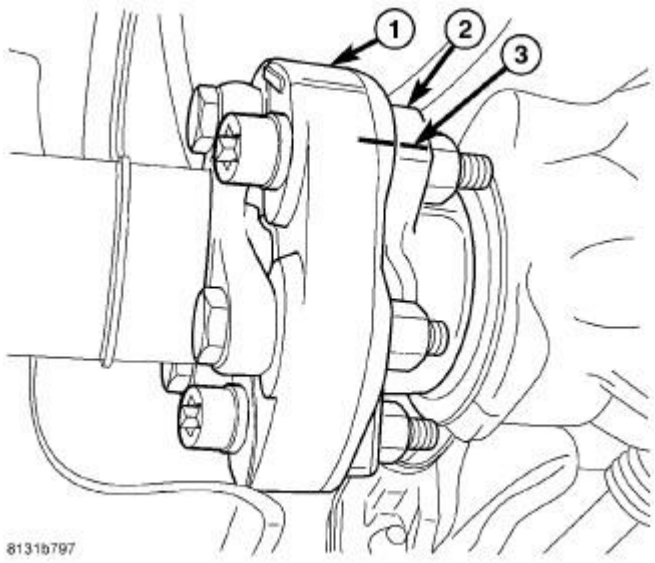

Fig. 206: Axle Flange, Rubber Coupler & Index Marks
Courtesy of CHRYSLER GROUP, LLC

5. Apply alignment index marks (3) to the propeller shaft rubber coupler (1) and axle flange (2).

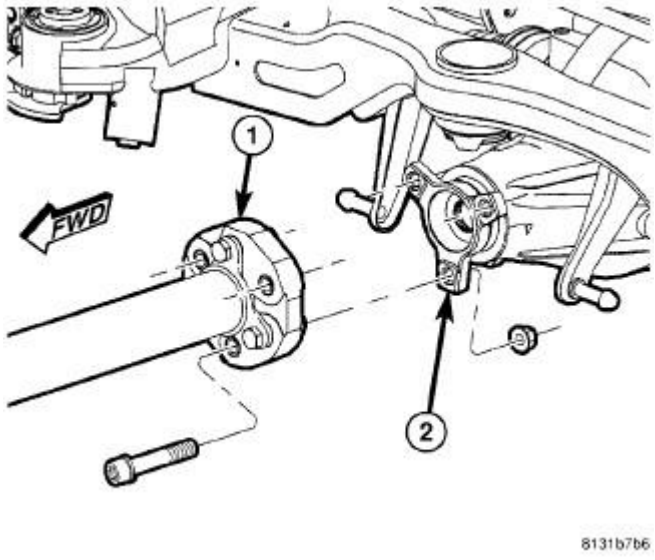

Fig. 207: Propeller Shaft Coupler & Rear Axle Flange
Courtesy of CHRYSLER GROUP, LLC

6. Remove three (four if equipped with 215 MM axle) propeller shaft coupler-to-axle flange bolts and nuts.

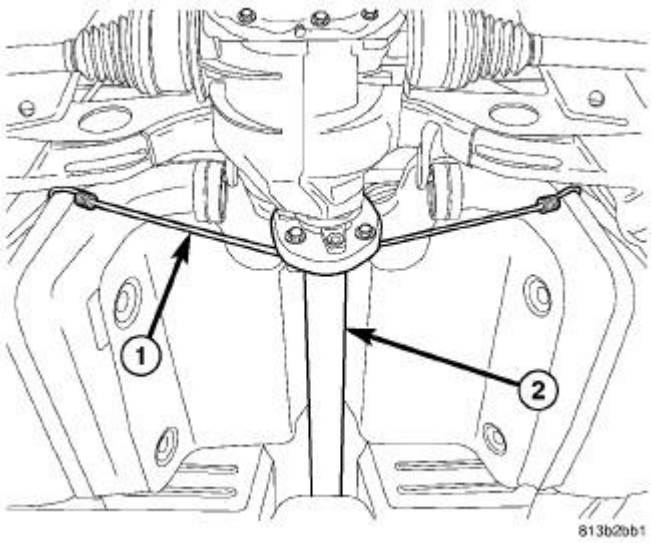

Fig. 208: Supporting Propeller Shaft
Courtesy of CHRYSLER GROUP, LLC

7. Support propeller shaft (2) using a bungee cord (1). Attach ends of cord to fuel tank straps as shown.

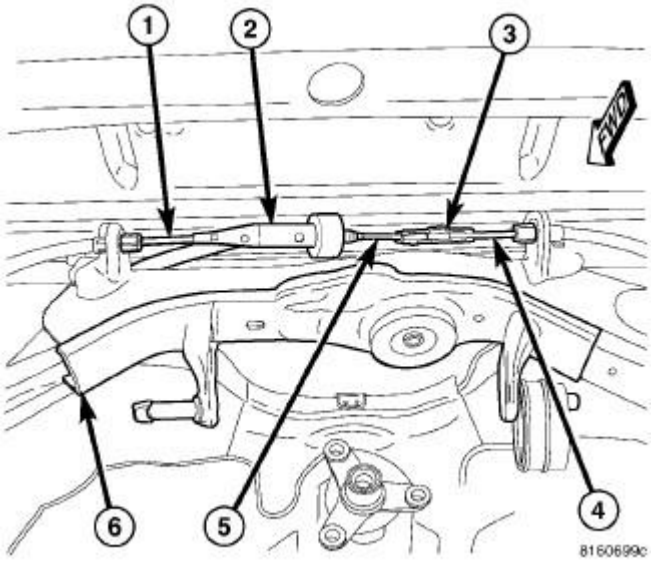

Fig. 209: Parking Brake Cable Components
Courtesy of CHRYSLER GROUP, LLC

NOTE: Due to short travel and low spring tension, it is not necessary to lock-out parking brake lever to service parking brake components.

8. Disconnect front parking brake cable (5) at connector (3) to right rear parking brake cable (4).

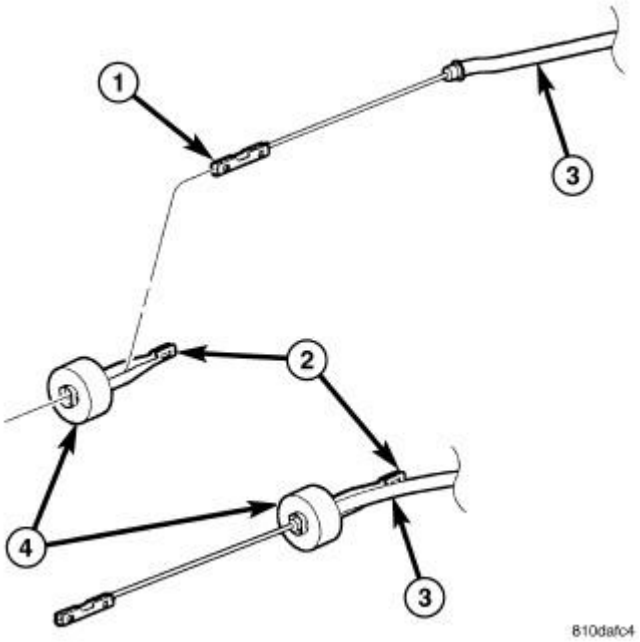

Fig. 210: Front Parking Brake Cable & Equalizer
Courtesy of CHRYSLER GROUP, LLC

9. Remove front parking brake cable (3) from equalizer (2).

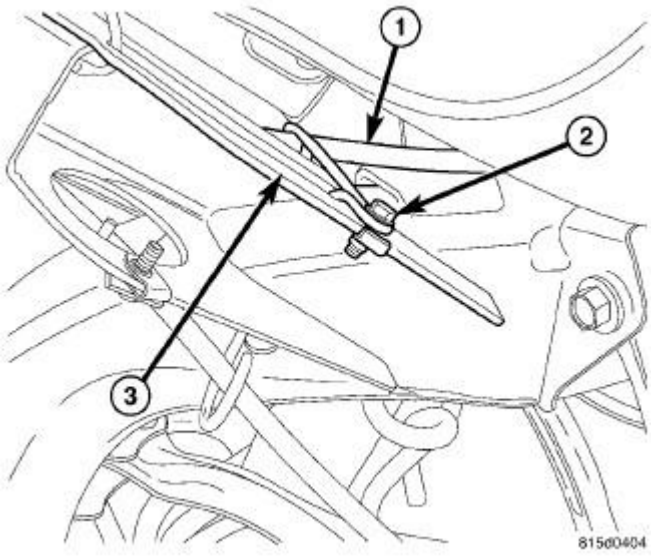

Fig. 211: Front Parking Brake Cable, Rear Crossmember Front Flange & Screw
Courtesy of CHRYSLER GROUP, LLC

10. Remove screw (2) fastening front parking brake cable (1) routing bracket to rear crossmember front flange (3).

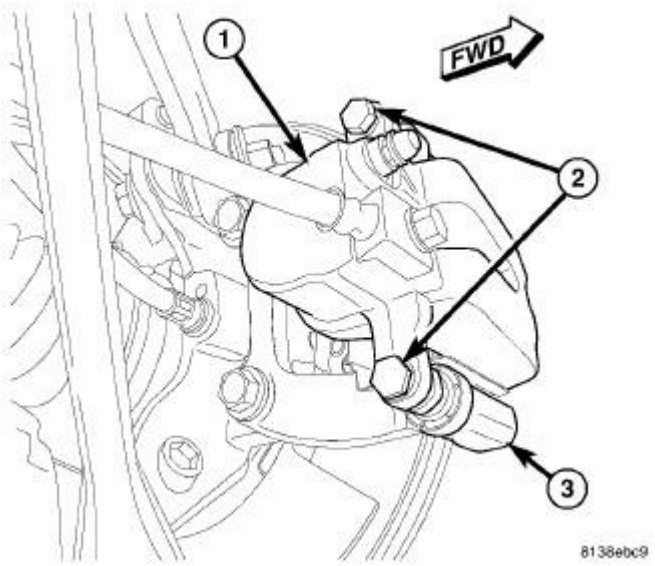

Fig. 212: Rear Brake Caliper, Adapter & Guide Pin Bolts
Courtesy of CHRYSLER GROUP, LLC

11. If equipped with standard or premium disc brakes, on each rear disc brake:
    a. While holding guide pins from turning, remove disc brake caliper guide pin bolts (2).
    b. Remove brake caliper (1) from brake adapter (3) and pads.
    c. Guide brake caliper up through suspension, following brake hose path. Support caliper above rear suspension using with bungee cord or wire to keep caliper from overextending brake hose when crossmember is lowered.

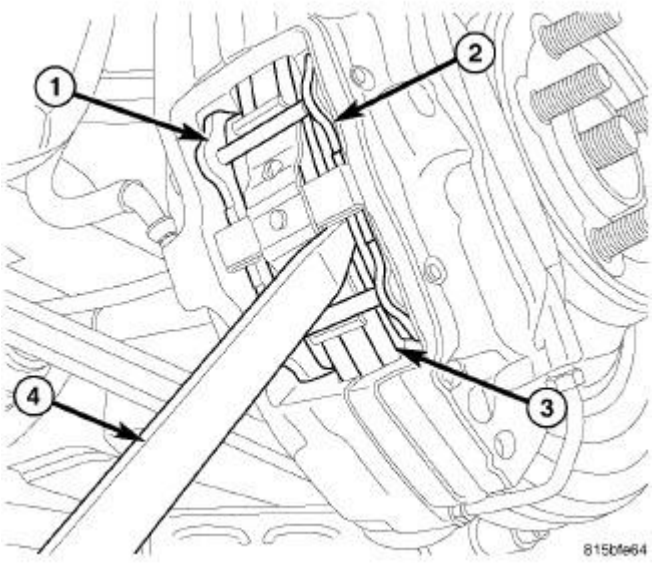

Fig. 213: Pushing Back Pistons In Bore
Courtesy of CHRYSLER GROUP, LLC

CAUTION: When pushing pistons back into caliper bores, use only a trim stick as shown or other suitable soft tool. Never use a screwdriver or other metal pry bar due to potential damage to braking surface of rotor, caliper, pistons or dust boots.

12. If equipped with SRT8 disc brakes, on each rear disc brake, place trim stick (4) between brake pad (2) and outer edge of rotor (3).
13. If equipped with SRT8 disc brakes, on each rear disc brake, using trim stick, slowly apply pressure against brake pad (2) until both pistons (on that side of caliper) are completely bottomed in bores of caliper half.

NOTE: Repeat above procedure to opposite brake pad (1) and pistons as necessary.

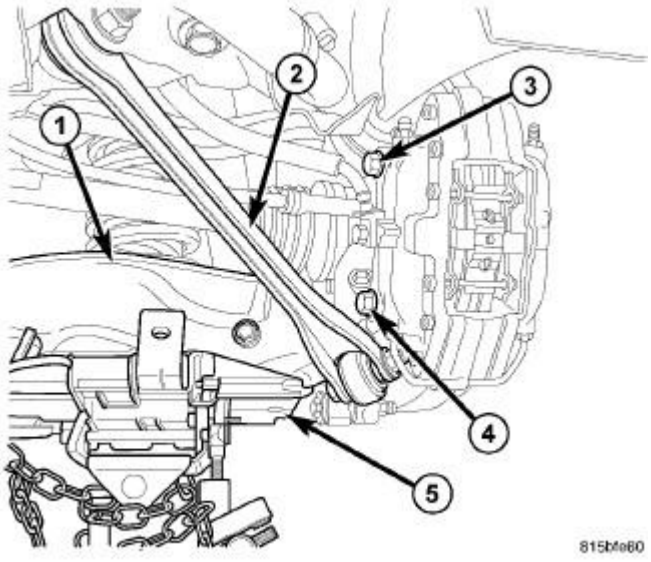

Fig. 214: Accessing Rear Caliper Mounting Bolts
Courtesy of CHRYSLER GROUP, LLC

14. If equipped with SRT8 disc brakes, on each rear disc brake, support spring link (1) using a transmission jack (5) or other appropriate jack. Raise spring link just enough to access brake caliper lower mounting bolt (4) from above compression link (2).

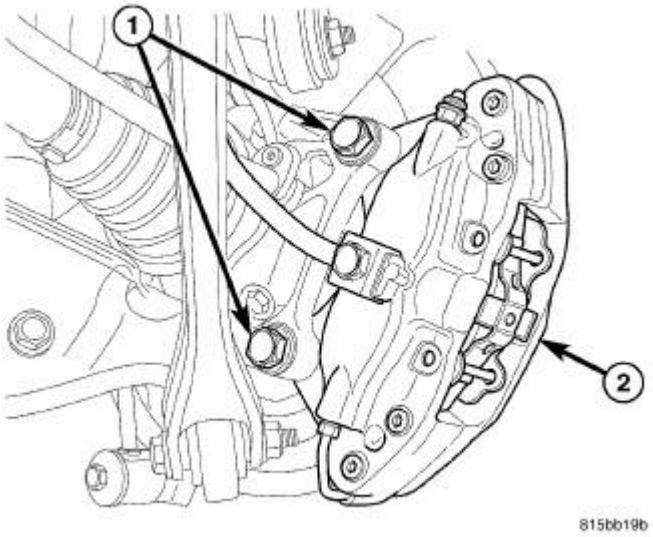

Fig. 215: Rear Caliper Mounting Bolts
Courtesy of CHRYSLER GROUP, LLC

15. If equipped with SRT8 disc brakes, on each rear disc brake, remove the lower and upper caliper mounting bolts (1).
16. If equipped with SRT8 disc brakes, on each rear disc brake, remove brake caliper (2) with pads from knuckle and brake rotor. Hang assembly out of way using wire or a bungee cord. Use care not to overextend brake hose when doing this.
17. If equipped with SRT8 disc brakes, remove jack from under spring link.

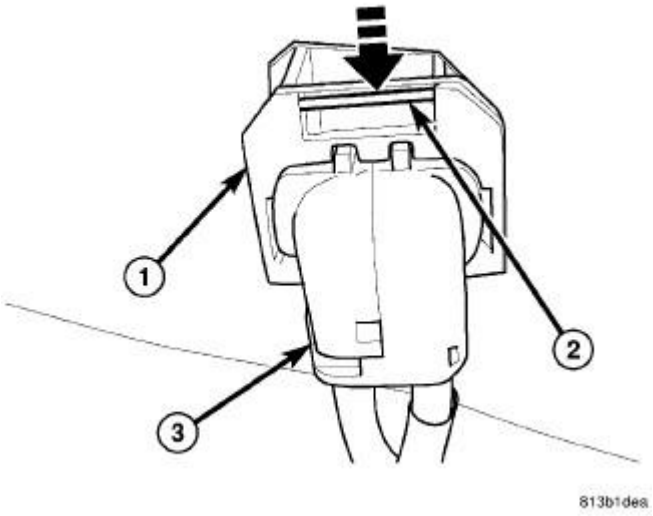

Fig. 216: Releasing Wheel Speed Sensor Connector
Courtesy of CHRYSLER GROUP, LLC

NOTE: To remove wheel speed sensor connector from body wiring harness connector, move retaining clip (2) and pull sensor connector outward.

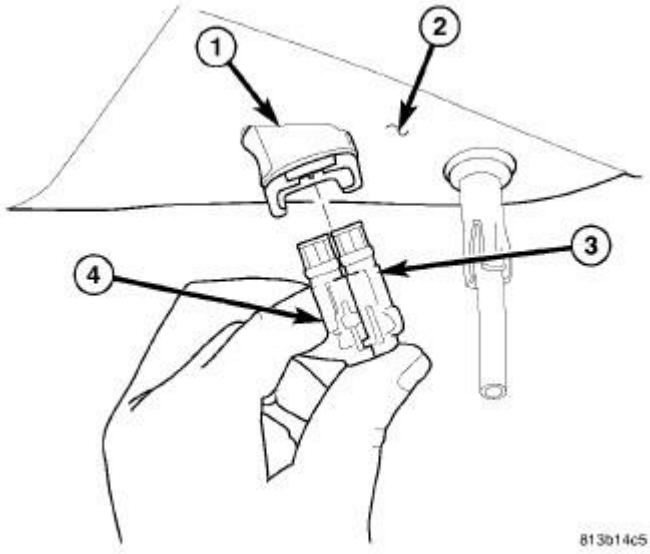

Fig. 217: Sensor Connection To Body Connector
Courtesy of CHRYSLER GROUP, LLC

18. Remove wheel speed sensor connectors (3 and 4) from body wiring harness connector (1) located in luggage compartment floor pan (2).

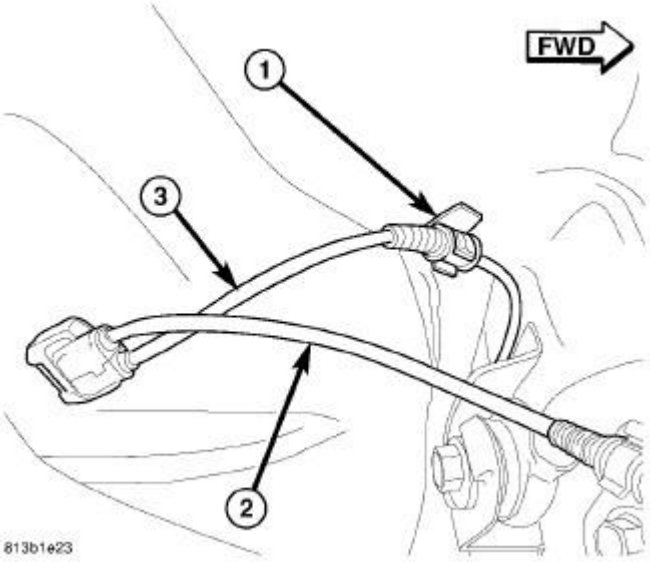

Fig. 218: Left/Right Rear Wheel Speed Sensor Cable & Routing Clip
Courtesy of CHRYSLER GROUP, LLC

19. Unclip left wheel speed sensor cable (3) from routing clip (1) near body connector.

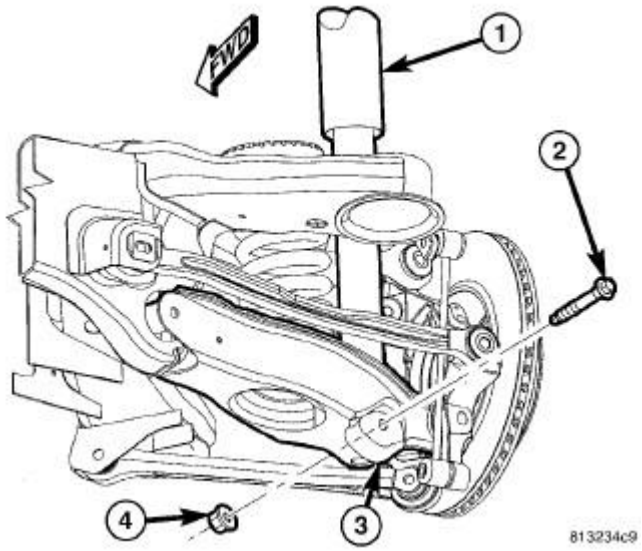

Fig. 219: Shock Absorber Lower Mounting Bolt & Nut
Courtesy of CHRYSLER GROUP, LLC

20. On each side of vehicle, remove shock absorber (1) lower mounting bolt (2) and nut (4).

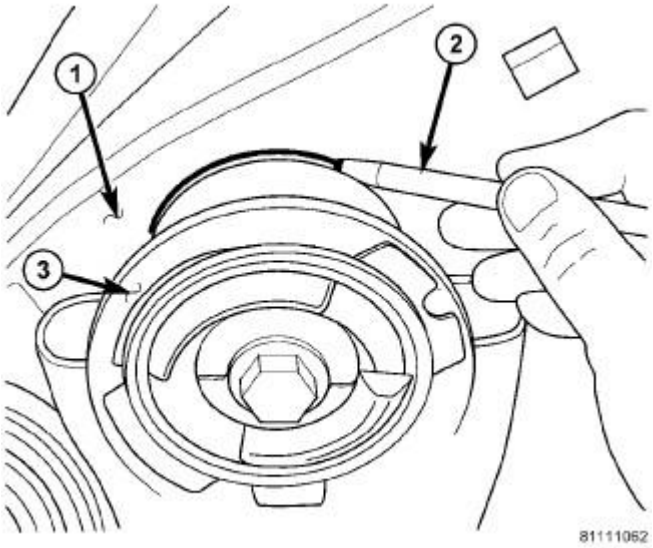

Fig. 220: Marking Location Of Crossmember Mount To Body
Courtesy of CHRYSLER GROUP, LLC

1 - BODY 2 - MARKER (OR CRAYON) 3 - CROSSMEMBER

BUSHING FLANGE

21. Carefully mark location of rear crossmember on body at all four mount (bushing) locations using a marker or crayon. **Do not use a scratch awl to mark location.**
22. Position an extra pair of jack stands under and support forward end of engine cradle to help stabilize vehicle during rear suspension removal/installation.

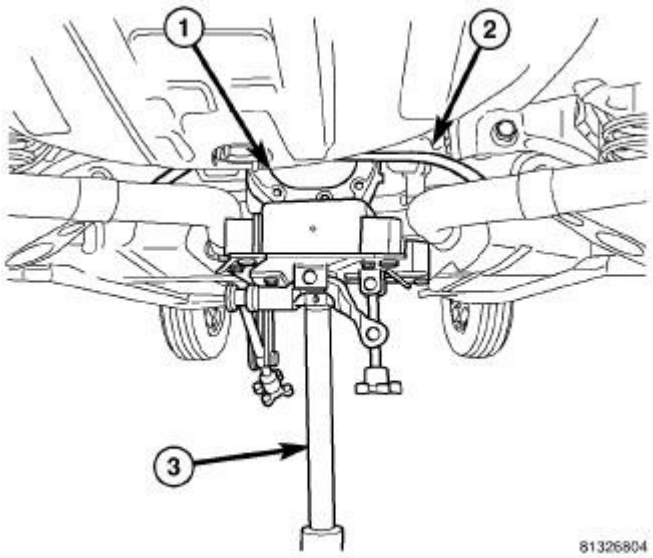

Fig. 221: Supporting Rear Axle Differential
Courtesy of CHRYSLER GROUP, LLC

23. Position under-hoist utility jack or transmission jack (3) under center of rear axle differential (1). Raise jack head to contact differential and secure in place. **When securing crossmember to jack, be sure not to secure stabilizer bar.**

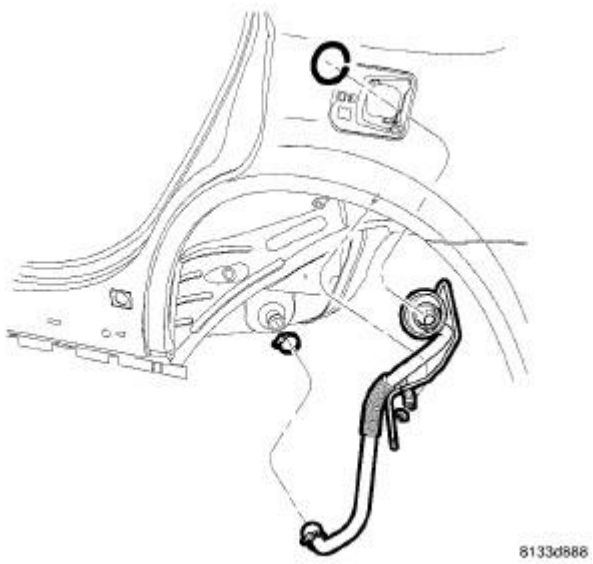

Fig. 222: Filler Tube Assembly
Courtesy of CHRYSLER GROUP, LLC

WARNING: Before opening fuel system, review all Warnings and Cautions.

24. Remove fuel filler tube. Refer to **TUBE, FUEL TANK FILLER, REMOVAL** .

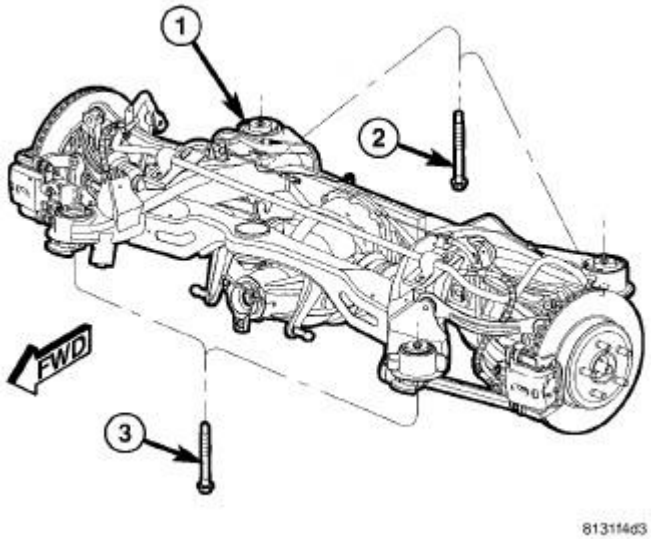

Fig. 223: Rear Crossmember Mounting Bolts
Courtesy of CHRYSLER GROUP, LLC

25. Remove both front (3) and both rear (2) mounting bolts fastening crossmember (1) in place.
26. **Slowly** lower crossmember using jack. **Do not lower jack at a fast rate.** Lower just enough to allow

propeller shaft removal from rear axle differential. **Do not lower jack any further than necessary.** Slide propeller shaft out of rear axle differential and allow bungee cord previously installed to support.

27. Continue to lower jack until crossmember is at a comfortable working level to access stabilizer bar fasteners.

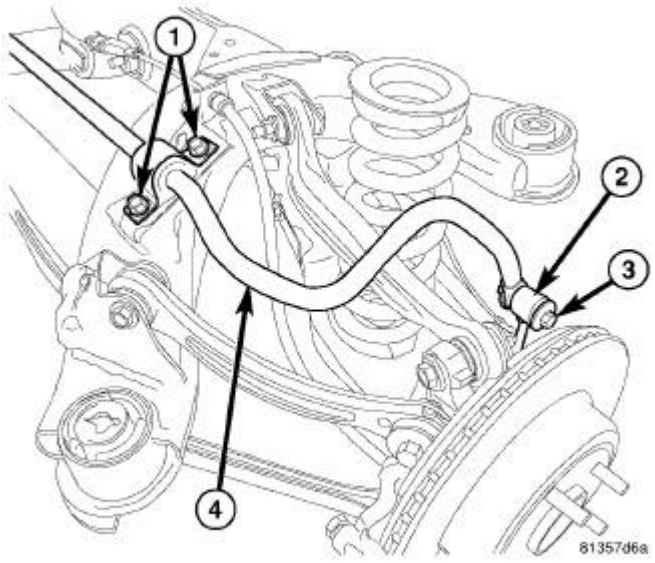

Fig. 224: Rear Stabilizer Bar Mounting
Courtesy of CHRYSLER GROUP, LLC

28. On each end, remove bolt (3) and nut fastening stabilizer bar (4) to stabilizer link (2).
29. Remove bolts (1) fastening each stabilizer bar isolator retainer to crossmember.
30. Remove stabilizer bar (4) with isolators and retainers.
31. Remove retainers from isolators.
32. Remove isolators from stabilizer bar utilizing slits in bushings.

INSTALLATION

INSTALLATION

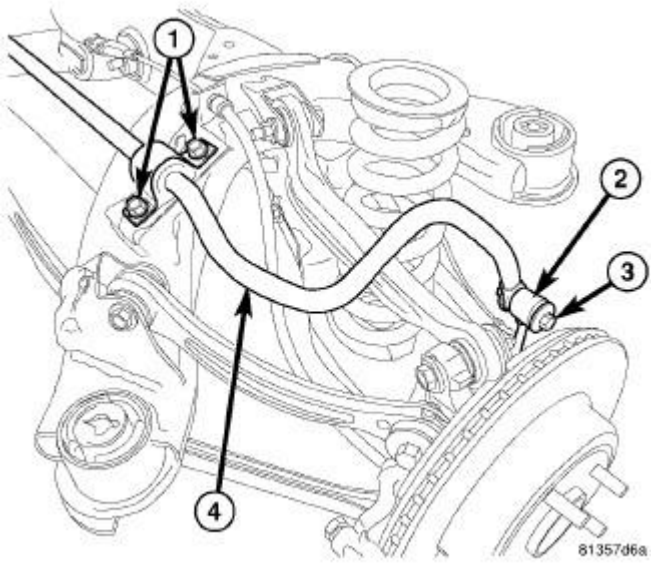

Fig. 225: Rear Stabilizer Bar Mounting
Courtesy of CHRYSLER GROUP, LLC

1. Install isolators on stabilizer bar utilizing slits in bushings. Install each isolator so its slit faces forward and flat side is positioned toward crossmember once installed.
2. Install retainers on isolators.
3. Install stabilizer bar (4) with isolators and retainers on crossmember.
4. Install isolator retainer mounting bolts (1). **Do not tighten at this time.**
5. Install bolt (3) and nut fastening stabilizer bar ends to each stabilizer links (2). **Do not tighten at this time.**
6. Tighten isolator retainer mounting bolts (1) to 61 N.m (45 ft. lbs.).

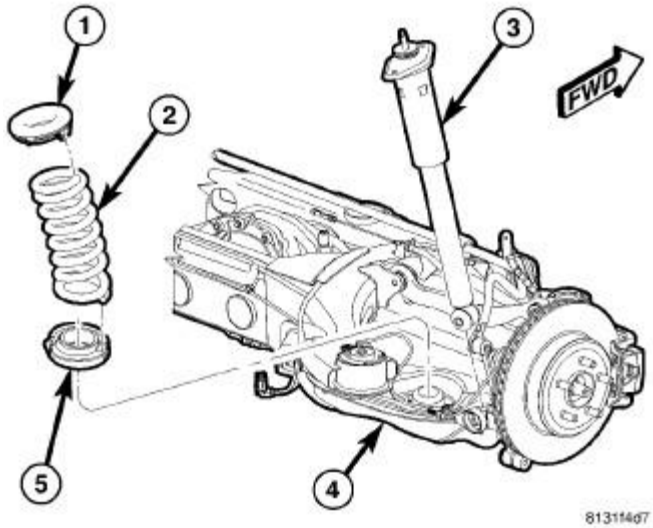

Fig. 226: Isolators, Coil Spring, Shock Absorber & Crossmember

Courtesy of CHRYSLER GROUP, LLC

7. Remove coil springs (2) with isolators (1 and 5) from spring links (4).
8. Raise crossmember to body mounting points. As crossmember is raised, slide propeller shaft onto rear axle differential flange and align shocks with pockets in spring links.

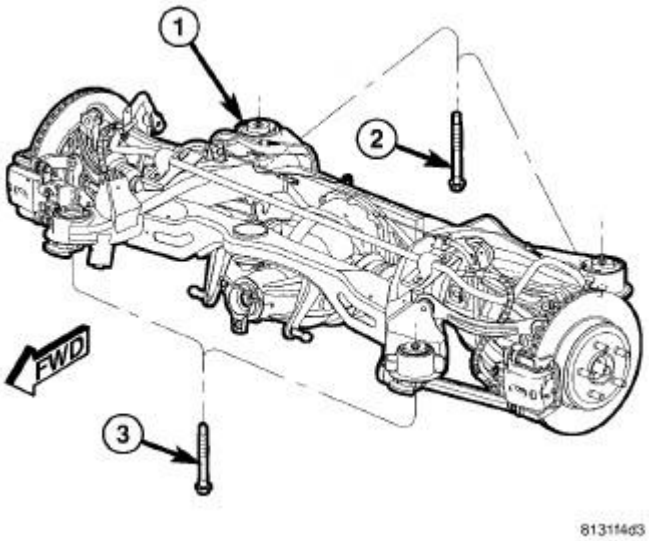

Fig. 227: Rear Crossmember Mounting Bolts
Courtesy of CHRYSLER GROUP, LLC

NOTE: There are four crossmember mounting bolts. Rear mounting bolts (2) are longer than front mounting bolts (3). Do not interchange mounting bolts.

9. Continue to raise crossmember (1) with jack until crossmember mounting bolts (2 and 3) can be installed. Install left side crossmember mounting bolts, but not the right side bolts. It is not necessary to tighten bolts at this point.

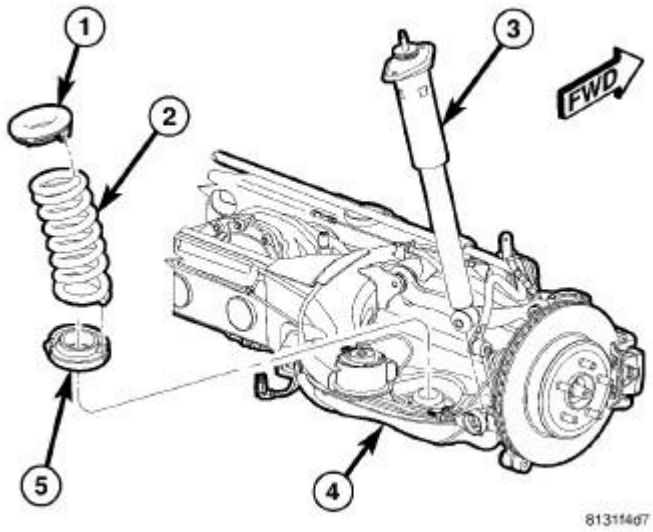

Fig. 228: Isolators, Coil Spring, Shock Absorber & Crossmember
Courtesy of CHRYSLER GROUP, LLC

CAUTION: To avoid damaging other components of vehicle, do not lower crossmember any further than necessary to install coil spring (2).

10. **Slowly** lower jack allowing right side of crossmember to drop. **Do not lower jack at a fast rate.** Lower jack just enough to allow spring (2) Installation. **Do not lower jack any further than necessary.**

NOTE: Before installing coil spring, make sure isolators (1 and 5) are completely installed on ends of spring.

11. Install coil spring (2) with isolators into spring pocket of spring link fitting the lower isolator to the shape of the pocket, then align top of spring with body mount.

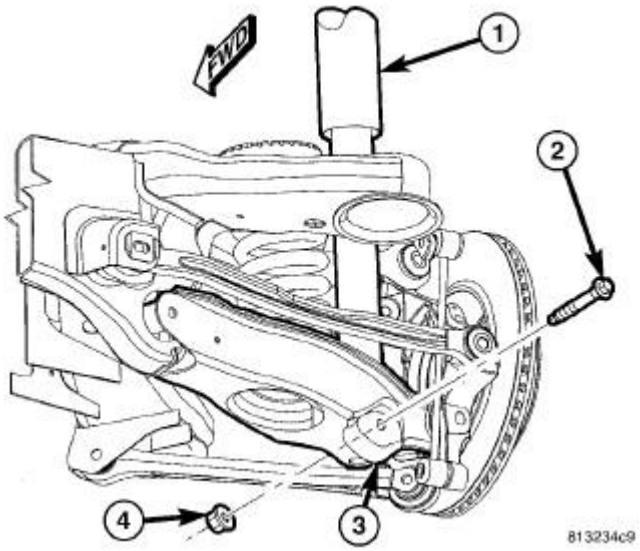

Fig. 229: Shock Absorber Lower Mounting Bolt & Nut
Courtesy of CHRYSLER GROUP, LLC

12. Carefully raise jack, guiding coil spring and lower end of shock absorber (1) into mounted positions. Once shock absorber (1) lower mounting hole lines up with hole in spring link (3), stop jacking.
13. Install lower shock mounting bolt (2) and nut (4). **Do not tighten at this time.**

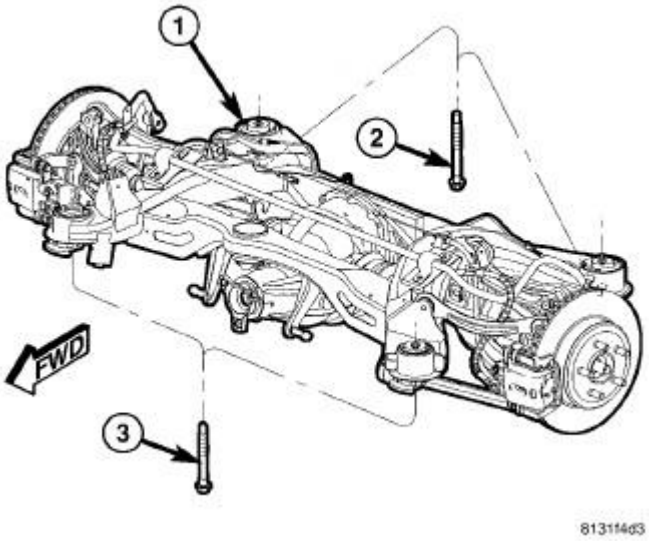

Fig. 230: Rear Crossmember Mounting Bolts
Courtesy of CHRYSLER GROUP, LLC

NOTE: There are four crossmember mounting bolts. Rear mounting bolts (2) are longer than front mounting bolts (3). Do not interchange mounting bolts.

14. Raise right side of crossmember (1) into mounted position. Install right side crossmember mounting bolts (2 and 3). **Snug, but do not fully tighten bolts at this time.**
15. Remove both front and rear crossmember mounting bolts (2 and 3) on **left** side of vehicle.

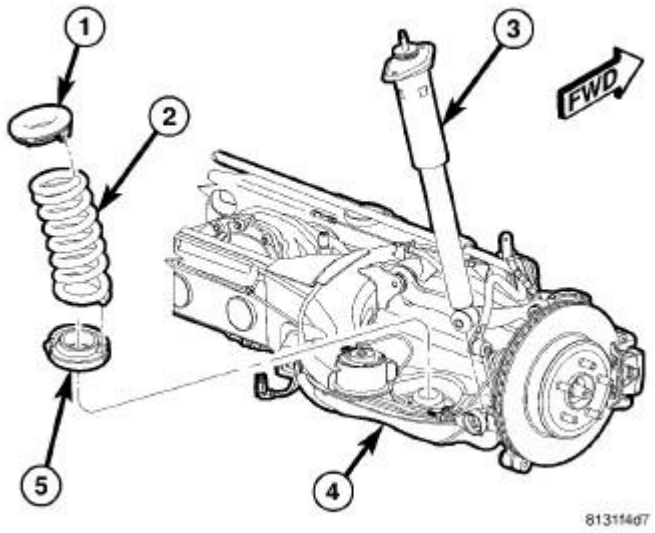

Fig. 231: Isolators, Coil Spring, Shock Absorber & Crossmember
Courtesy of CHRYSLER GROUP, LLC

CAUTION: To avoid damaging other components of vehicle, do not lower crossmember any further than necessary to install coil spring (2).

16. **Slowly** lower jack allowing left side of crossmember to drop. **Do not lower jack at a fast rate.** Lower jack just enough to allow spring (2) Installation. **Do not lower jack any further than necessary.**

NOTE: Before installing coil spring, make sure isolators (1 and 5) are completely installed on ends of spring.

17. Install coil spring (2) with isolators into spring pocket of spring link fitting the lower isolator to the shape of the pocket, then align top of spring with body mount.

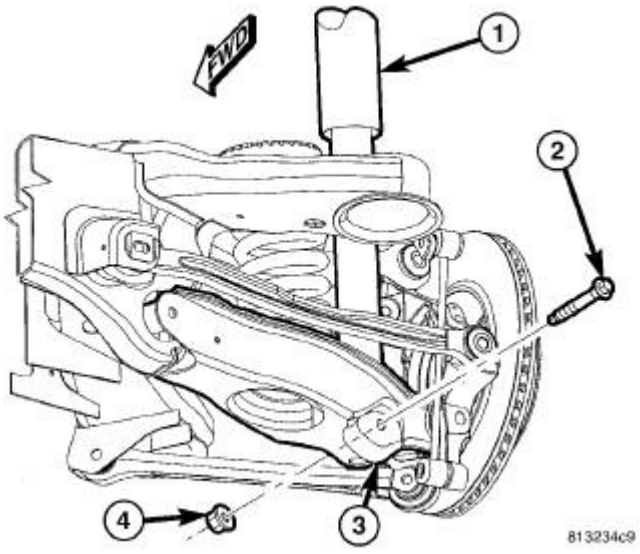

Fig. 232: Shock Absorber Lower Mounting Bolt & Nut
Courtesy of CHRYSLER GROUP, LLC

18. Carefully raise jack, guiding coil spring and lower end of shock absorber (1) into mounted positions. Once shock absorber (1) lower mounting hole lines up with hole in spring link (3), stop jacking.
19. Install lower shock mounting bolt (2) and nut (4). **Do not tighten at this time.**

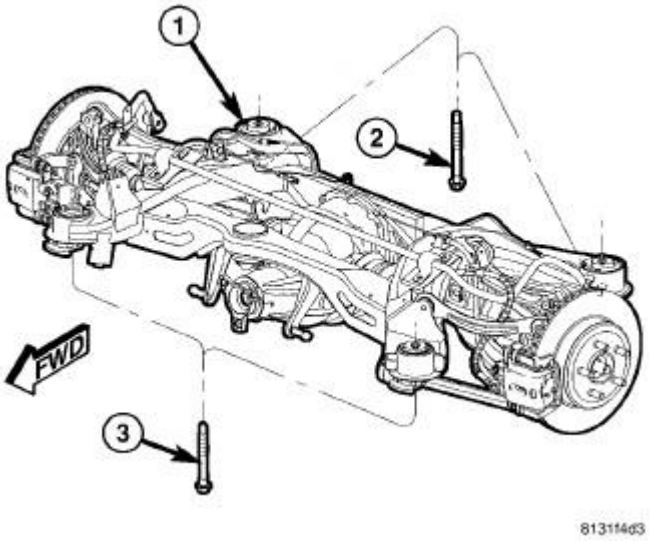

Fig. 233: Rear Crossmember Mounting Bolts
Courtesy of CHRYSLER GROUP, LLC

NOTE: There are four crossmember mounting bolts. Rear mounting bolts (2) are longer than front mounting bolts (3). Do not interchange mounting bolts.

20. Raise left side of crossmember (1) into mounted position. Install left side crossmember mounting bolts (2 and 3). **Snug, but do not fully tighten bolts at this time.**

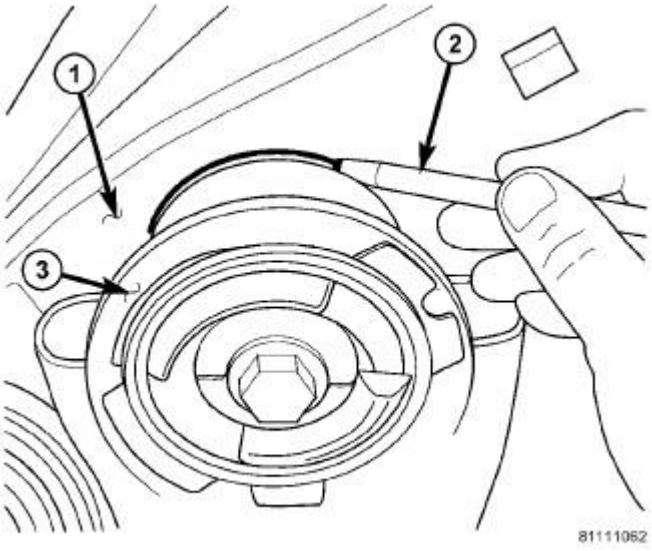

Fig. 234: Marking Location Of Crossmember Mount To Body
Courtesy of CHRYSLER GROUP, LLC

1 - BODY 2 - MARKER (OR CRAYON) 3 - CROSSMEMBER BUSHING FLANGE

21. Shift crossmember as necessary to line up mounts (3) with location marks drawn on body (1) before removal.

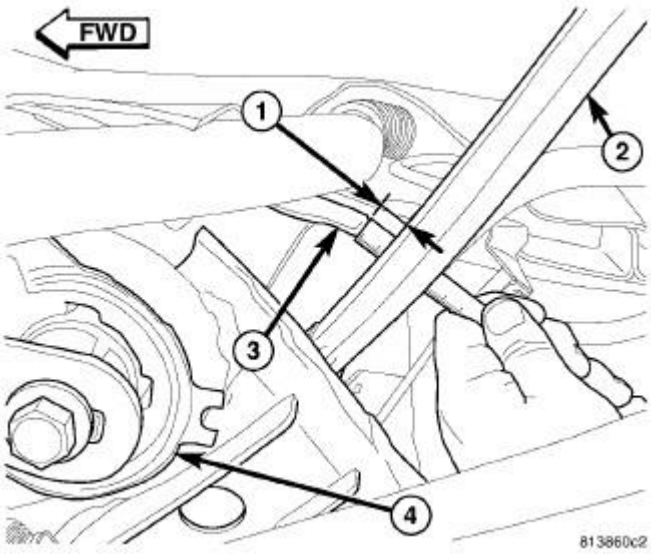

Fig. 235: Measuring Tension Link Clearance
Courtesy of CHRYSLER GROUP, LLC

22. Once mounts are lined up with location marks, on both sides of vehicle, measure distance (1) between the tension link (2) and weld flange (3) on body directly in front of it, just outboard of the front mount bushing (4). **This distance must be at least 12 mm to allow proper clearance for suspension movement.** If distance is less than 12 mm on either side of vehicle, shift that side of rear crossmember directly rearward until distance is 12 mm or greater. To do so, loosen 3 mounting bolts slightly, leaving one on opposite side of shift snugged to pivot off of. Shift crossmember rearward and snug loosened bolts. Remeasure opposite side to be sure it still maintains minimum 12 mm distance.

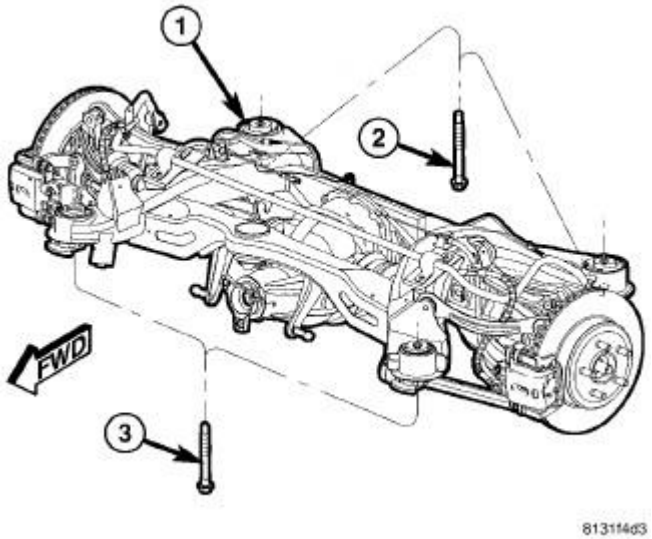

Fig. 236: Rear Crossmember Mounting Bolts
Courtesy of CHRYSLER GROUP, LLC

23. Tighten all four crossmember mounting bolts (2 and 3) to 180 N.m (133 ft. lbs.).

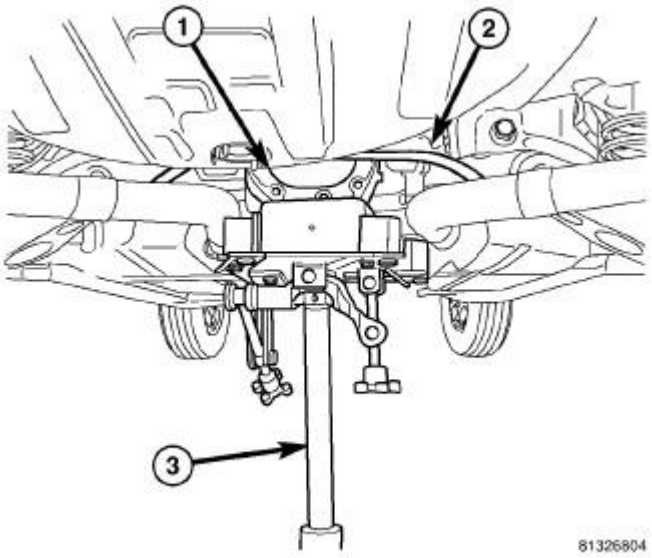

Fig. 237: Supporting Rear Axle Differential
Courtesy of CHRYSLER GROUP, LLC

24. Remove jack (3) from under rear axle differential.

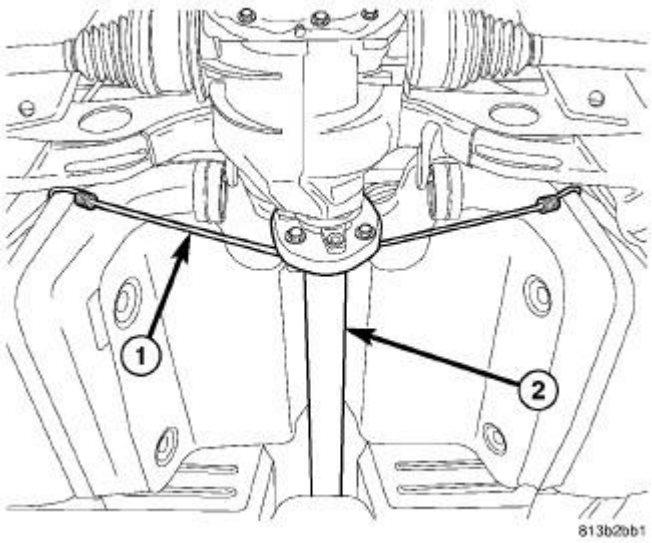

Fig. 238: Supporting Propeller Shaft
Courtesy of CHRYSLER GROUP, LLC

25. Remove bungee cord (1) supporting propeller shaft (2).

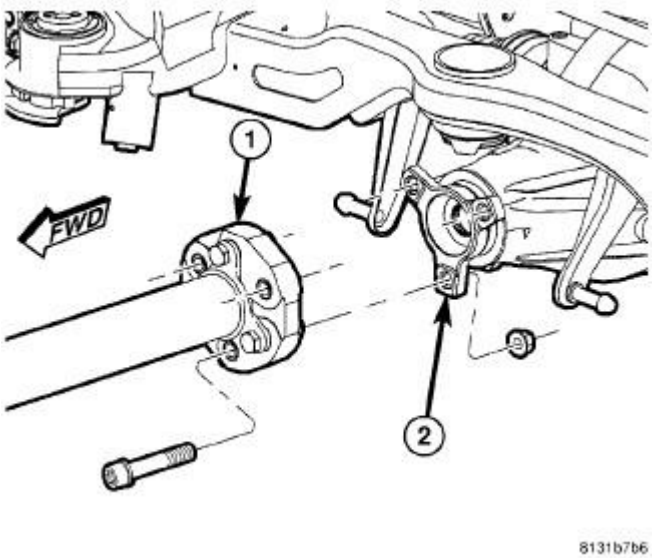

Fig. 239: Propeller Shaft Coupler & Rear Axle Flange
Courtesy of CHRYSLER GROUP, LLC

26. Align propeller shaft index marks placed upon removal. Install propeller shaft rear coupler-to-axle flange bolts and nuts by hand. Tighten propeller shaft rear coupler-to-axle flange bolts to 81 N.m (60 ft. lbs.).

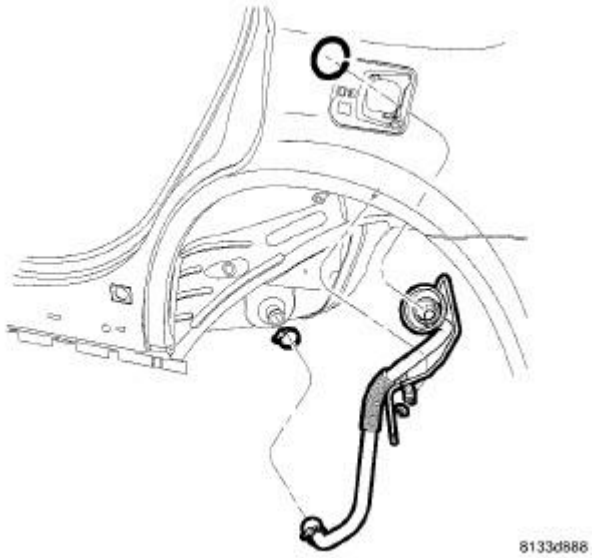

Fig. 240: Filler Tube Assembly
Courtesy of CHRYSLER GROUP, LLC

27. Install fuel filler tube Refer to **TUBE, FUEL TANK FILLER, INSTALLATION** .

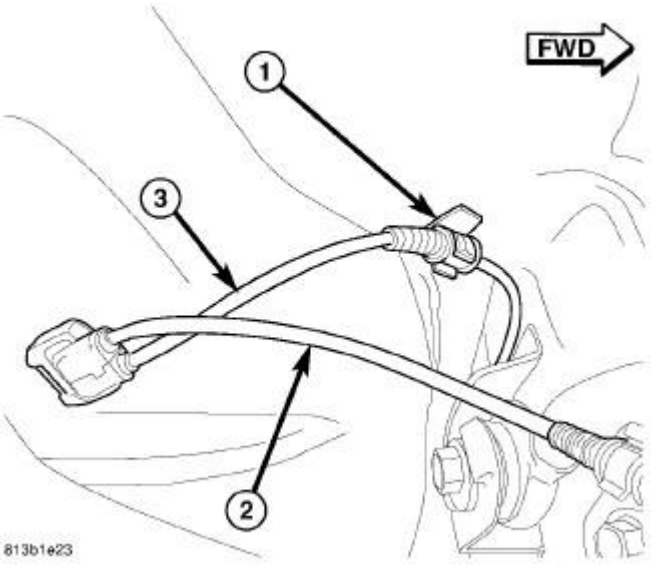

Fig. 241: Left/Right Rear Wheel Speed Sensor Cable & Routing Clip
Courtesy of CHRYSLER GROUP, LLC

28. Clip left rear wheel speed sensor cable (3) to routing clip (1) near body connector.

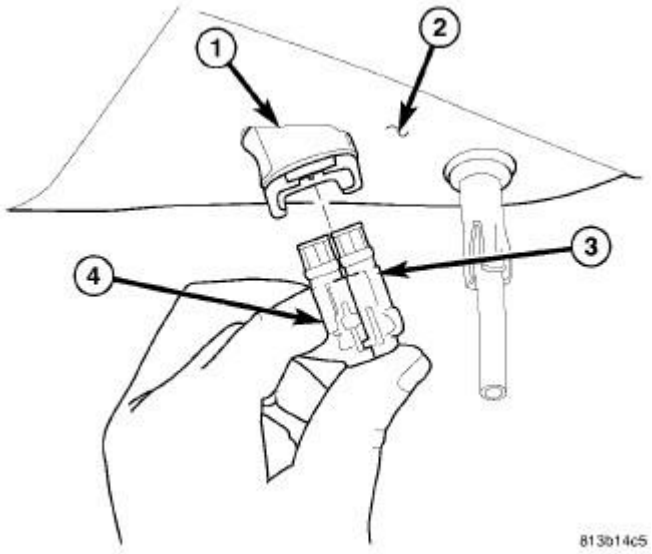

Fig. 242: Sensor Connection To Body Connector
Courtesy of CHRYSLER GROUP, LLC

29. Match left rear wheel speed sensor connector (4) to right sensor connector (3) to make one connector.
30. Insert speed sensor connectors (3 and 4) into body wiring harness connector (1) located in luggage compartment floor pan (2). When installing connector, make sure retaining clip on body connector is properly in place and sensor connector cannot be pulled out.

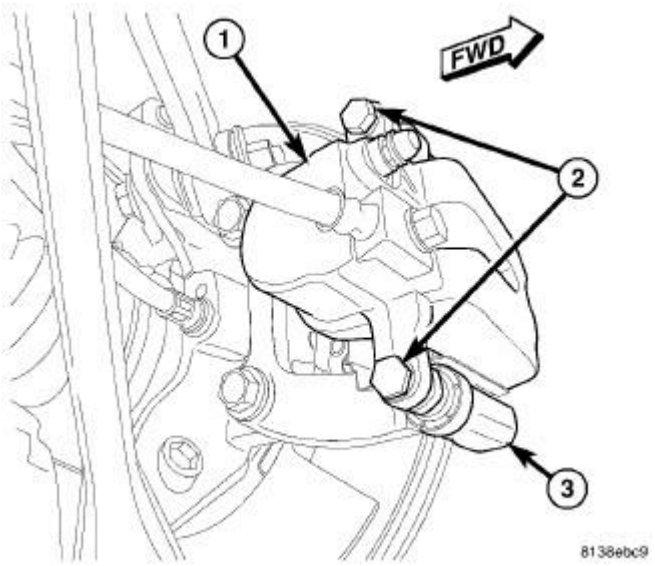

Fig. 243: Rear Brake Caliper, Adapter & Guide Pin Bolts
Courtesy of CHRYSLER GROUP, LLC

CAUTION: Extreme caution should be taken not to cross-thread caliper guide pin bolts (2) when they are installed.

NOTE: Before installing caliper guide pin bolts, clean guide pin bolt threads and apply Mopar® Lock AND Seal Adhesive or equivalent.

31. If equipped with standard or premium disc brakes, on each rear disc brake:
    a. Push caliper guide pins into caliper adapter to clear caliper mounting bosses when installing.
    b. Guide caliper and brake hose down through rear suspension, then slide caliper over brake pads and onto caliper adapter (3).
    c. Align caliper mounting holes with guide pins, then install guide pin bolts (2). While holding guide pins from turning, tighten bolts to 31 N.m (23 ft. lbs.).
    d. Make sure brake hose is properly routed and will not come in contact with suspension components.
32. If equipped with SRT8 disc brakes, at each rear disc brake, support spring link using a transmission jack or other appropriate jack as indicated in removal procedure. Refer to **SPRING(S), REMOVAL**.

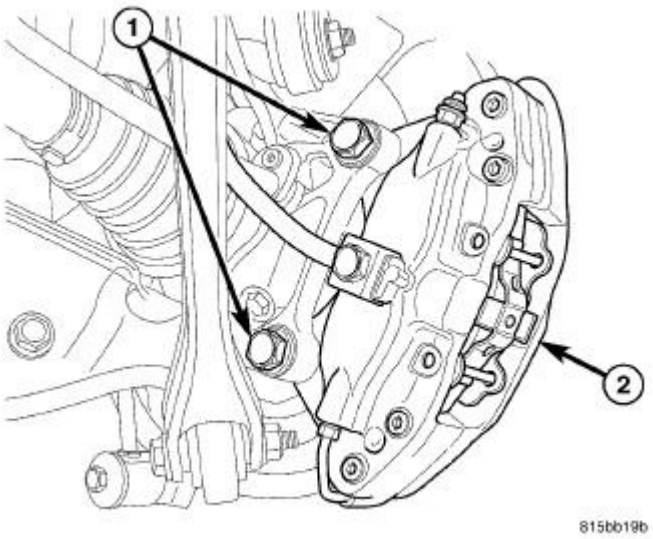

Fig. 244: Rear Caliper Mounting Bolts
Courtesy of CHRYSLER GROUP, LLC

33. If equipped with SRT8 disc brakes, on each rear disc brake, slide caliper with pads (2) over brake rotor and align with knuckle.
34. If equipped with SRT8 disc brakes, on each rear disc brake, install caliper mounting bolts (1). Tighten bolts to 130 N.m (96 ft. lbs.).
35. If equipped with SRT8 disc brakes, on each rear disc brake, remove jack from under spring link.

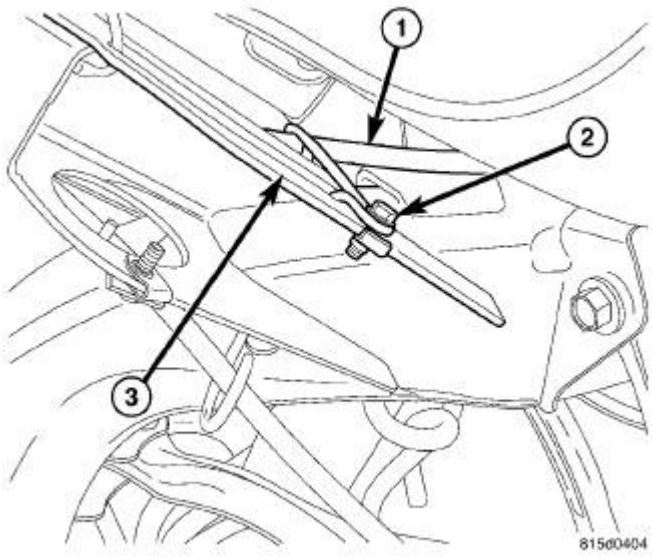

Fig. 245: Front Parking Brake Cable, Rear Crossmember Front Flange & Screw
Courtesy of CHRYSLER GROUP, LLC

36. Insert routing front parking brake cable bracket locating pin in front flange of crossmember (3), then

install screw (2) fastening cable (1) routing bracket to rear crossmember.

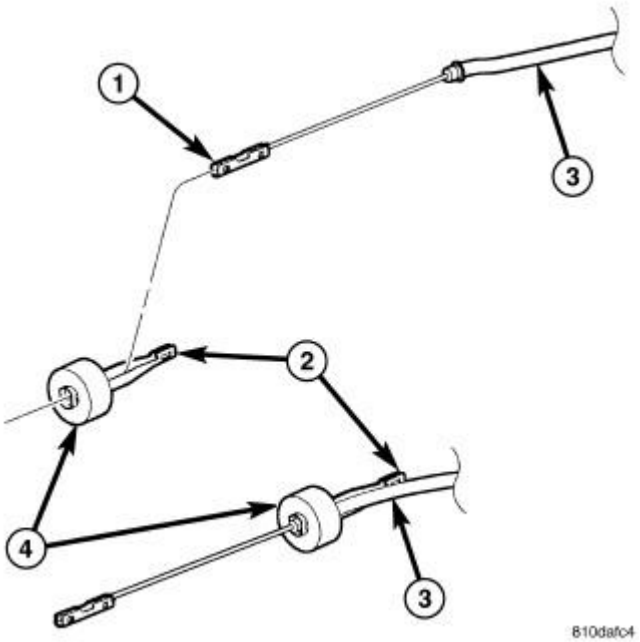

Fig. 246: Front Parking Brake Cable & Equalizer
Courtesy of CHRYSLER GROUP, LLC

37. Route parking brake cable above rear crossmember, then slide cable (1, 3) through equalizer (2) above rear axle differential.

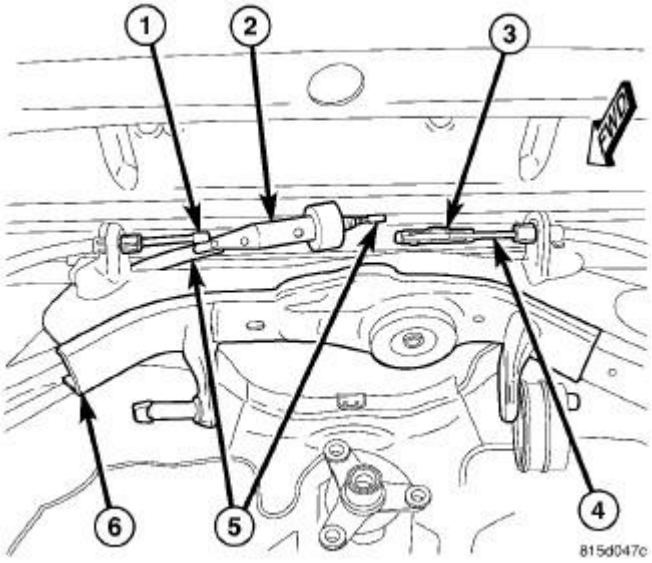

Fig. 247: Parking Brake Cables At Rear Crossmember
Courtesy of CHRYSLER GROUP, LLC

NOTE: Due to short travel and low spring tension, it is not necessary to lock-out parking brake lever to service parking brake components.

38. Connect front parking brake cable (5) at connector (3) to right rear parking brake cable (4).

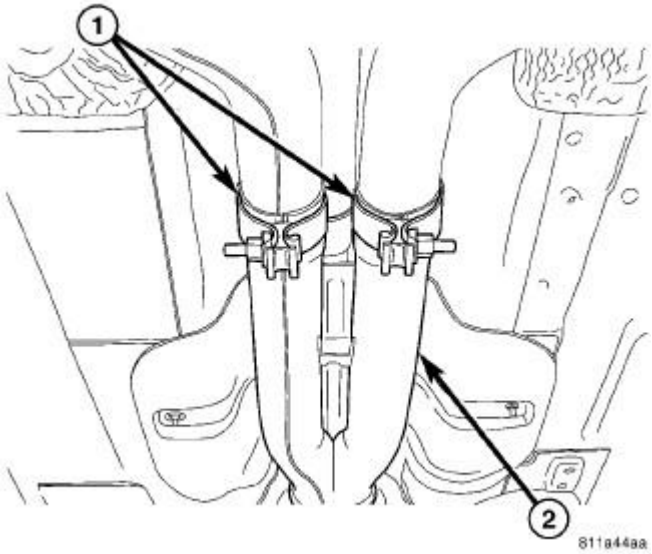

Fig. 248: Identifying Clamps & Rear Exhaust System
Courtesy of CHRYSLER GROUP, LLC

39. Install rear exhaust system (2) (dual-outlet exhaust shown in figure). Refer to **MUFFLER, EXHAUST, INSTALLATION** .

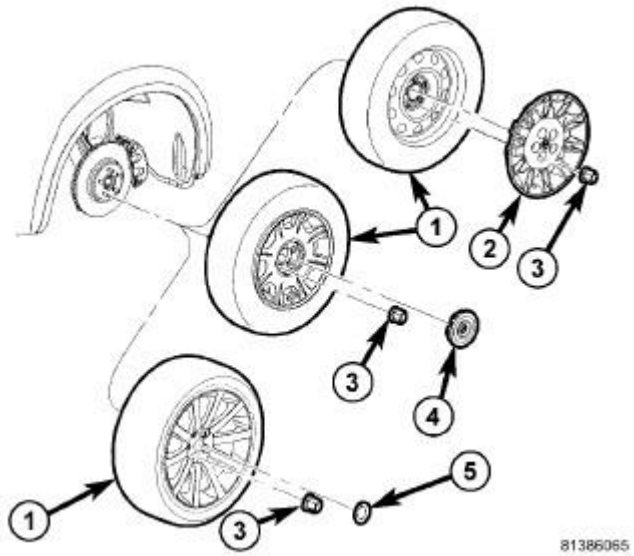

Fig. 249: Tire And Wheel Mounting
Courtesy of CHRYSLER GROUP, LLC

40. Install tire and wheel assemblies (1). Tighten wheel mounting nuts (3) to 150 N.m (110 ft. lbs.). Refer to **INSTALLATION** .
41. Lower vehicle until rear wheels are just above floor level.
42. Apply parking brake lever. Release lever, then reapply.
43. Check to make sure rear wheels will not rotate with lever applied.
44. Lower vehicle.

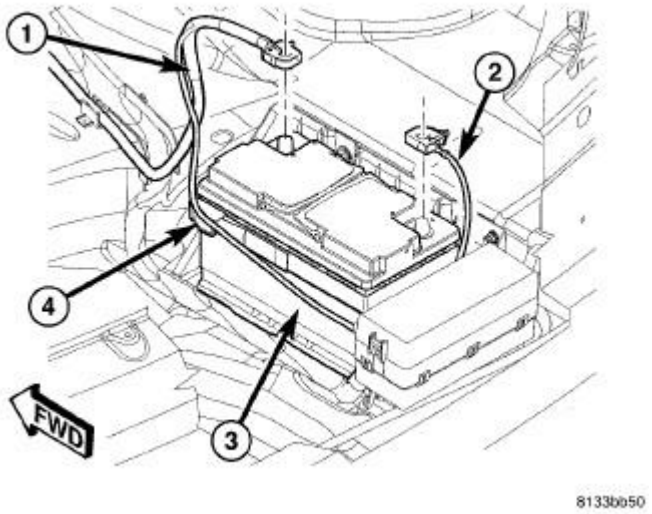

Fig. 250: Disconnecting/Connecting Battery Cables
Courtesy of CHRYSLER GROUP, LLC

45. Connect battery negative cable (2) to battery post. It is important that this is performed properly.
46. Pump brake pedal several times to ensure vehicle has a firm brake pedal before moving vehicle.
47. Position vehicle on alignment rack/drive-on hoist. Raise vehicle as necessary to access mounting bolts.

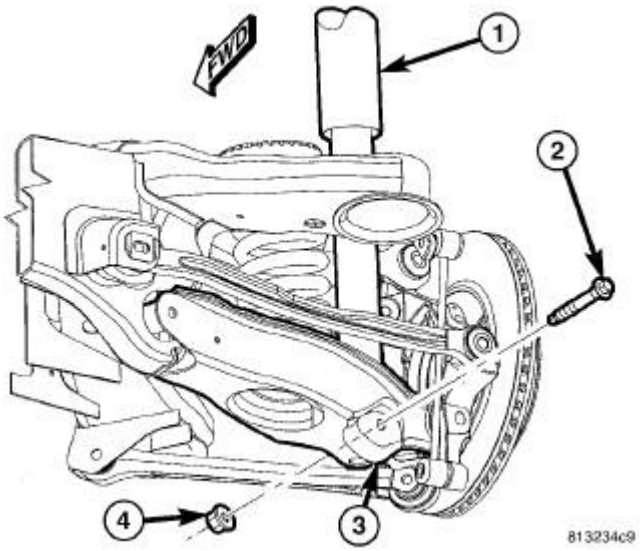

Fig. 251: Shock Absorber Lower Mounting Bolt & Nut
Courtesy of CHRYSLER GROUP, LLC

48. Tighten shock absorber lower mounting bolt nuts (4) to 72 N.m (53 ft. lbs.).

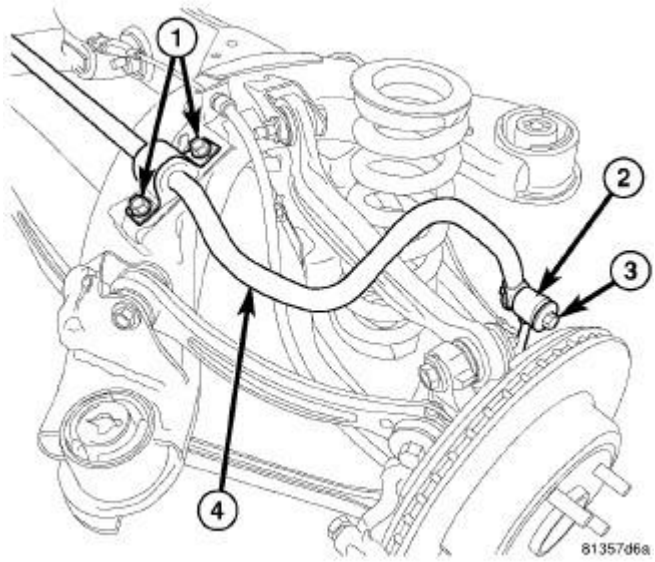

Fig. 252: Rear Stabilizer Bar Mounting
Courtesy of CHRYSLER GROUP, LLC

49. Tighten stabilizer link fasteners (3) to 61 N.m (45 ft. lbs.).
50. Perform wheel alignment, paying special attention to thrust angle. If rear crossmember needs to be shifted to align thrust angle, try to avoid compromising tension link clearance. Refer to step 22. Refer to **WHEEL ALIGNMENT, STANDARD PROCEDURE** .

DIAGNOSIS AND TESTING

DIAGNOSIS AND TESTING - TIRE AND WHEEL VIBRATION

Tire and wheel imbalance, runout and tire road force variation can cause vehicles to exhibit steering wheel vibration and/or seat vibration.

VISUAL INSPECTION

Visual inspection of the vehicle is recommended prior to road testing or performing any other procedure. Raise and support the vehicle. Refer to **HOISTING, STANDARD PROCEDURE** .

Inspect for the following:

- Verify correct (OEM) wheel and tire, as well as presence of wheel weights.
- Inspect tires and wheels for damage, mud packing and unusual wear; correct as necessary.
- Check and adjust tire air pressure to the pressure listed on the label attached to the driver's door opening.

ROAD TEST

NOTE: If a Noise & Vibration Analyzer is available, use it to diagnosis the issue during the road test.

NOTE: If the vehicle has been sitting for an extended period of time it is recommended to drive to warm the tires. This process could eliminate flat spots that can cause vibration.

Road test vehicle on a smooth road **at and near the designated speed** where legal speed limits allow. Lightly place hands on steering wheel at the 10:00 and 2:00 positions and observe for:

- Steering wheel oscillation: clockwise/counterclockwise
- Steering wheel high frequency movement: rapid vibration up and down
- Seat high frequency movement: rapid vibration up and down

To rule out vibrations due to brakes or powertrain:

- Lightly apply brakes at the designated speed; if vibration occurs or is enhanced, vibration is likely due to a brake concern.
- Shift transmission into neutral while vibration is occurring; if vibration is eliminated, vibration is likely due to a powertrain concern. Refer to the appropriate powertrain service information.

TIRE/WHEEL BALANCE AND ROAD FORCE VARIATION

NOTE: If wheel balance equipment is capable of testing tire road force variation and the tire/wheel assemblies are within specification, place the tires with the greater road force variation on the rear of the vehicle.

Balance the tire and wheel assemblies as necessary, and if wheel balance equipment is capable, also test for tire and wheel runout and road force variation following the wheel balancer manufacturer's instructions and using the information listed in Tire And Wheel Balance. Refer to **STANDARD PROCEDURE**. Repeat the road test above to verify the vibration is repaired.

STANDARD PROCEDURE

TIRE AND WHEEL BALANCE

NOTE: Always verify the wheel and tire balance before removing any wheel weights. If assembly is within specification and weights are not corroded or loose, do not remove weights. The process of removing and adding weight could damage wheel protective coating.

NOTE: Balance and road force variation equipment must be calibrated and maintained per equipment manufacturer's specifications.

NOTE: If a tire sealant & inflator kit was used to temporarily repair small punctures then the tire must be removed from wheel and all the sealant must be removed with a water damped cloth before repairing & balancing the assembly.

NOTE: Some wheels may not have an outer flange. Apply adhesive weights on midplane surface to balance.

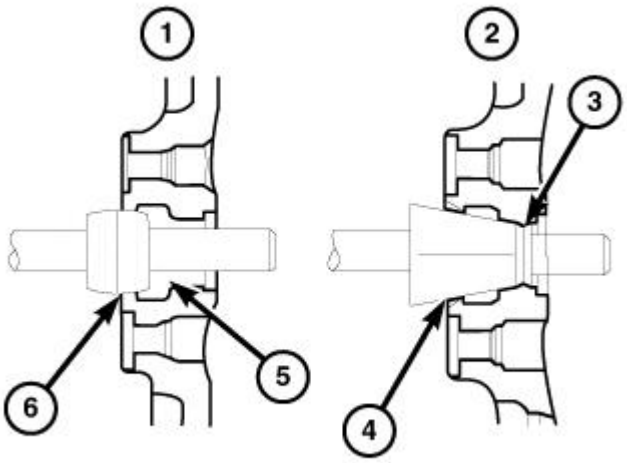

2460193

Fig. 1: Balancing Wheels Using Cone/Collet
Courtesy of CHRYSLER GROUP, LLC

NOTE: **Use of the proper collet will prevent potential damage to the Chrome Clad wheels.**

NOTE: **Balance equipment could read an incorrect balance result when measuring Chrome Clad wheels. This is caused by the equipments mounting cone/collet contacting the cladding or the cone/collet is not balanced. A dual-taper collet (1) type wheel centering tool is recommended as opposed to a high-taper cone (2) type wheel centering tool. Always use the manufacturer's recommended balance equipment.**

- **Dual-taper collet type (1)**
- **High-taper cone type (2)**
- **Possible obstruction (3)**
- **May not seat properly (4)**
- **No obstruction (5)**
- **Properly seated (6)**

NOTE: **If wheel balance equipment is capable of testing tire road force variation and the tire/wheel assemblies are within specification, place the tires with the greater road force variation on the rear of the vehicle.**

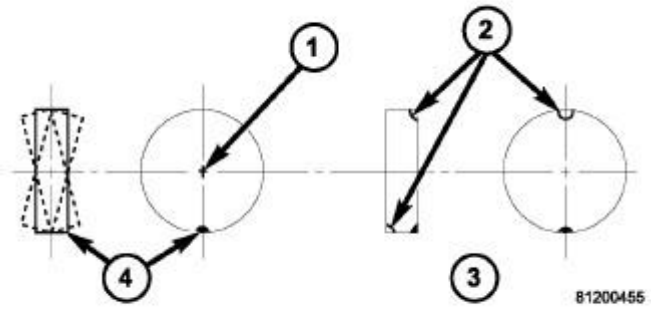

Fig. 2: Dynamic Balancing
Courtesy of CHRYSLER GROUP, LLC

For dynamic balancing (**recommended**), the balance equipment is designed to indicate the location and amount of weight to be applied to both the inner and outer rim flanges (2).

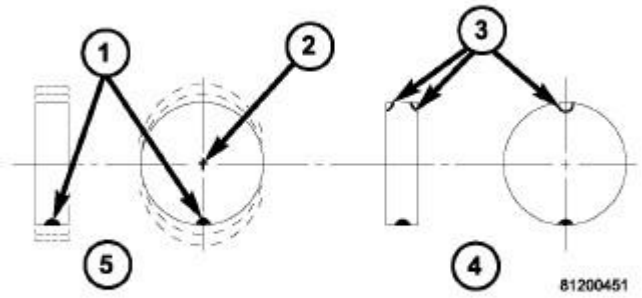

Fig. 3: Static Balancing
Courtesy of CHRYSLER GROUP, LLC

For static balancing (**not recommended**), find the location of the heavy spot causing the imbalance (1). Counter balance the wheel directly opposite the heavy spot. Determine weight required to counterbalance the area of imbalance. Place half of this weight on the **inner** rim flange and the other half on the **outer** rim flange (3) at the predetermined spots.

Aluminum wheels use a different type wheel weight than steel wheels. Be sure to use the correct wheel weight for the wheel type.

Always verify the balance. When using off-vehicle equipment, remount the tire and wheel assembly 180 degrees on the balancer spindle and recheck balance. Balance variation from one spot to the other should not be more than 0.125 (?) ounce. If variation is more than 0.125 ounce, balancing equipment could be malfunctioning or the wrong collet/cone may have been used.

If difficult to balance, break down the tire and wheel assembly and check for loose debris inside the tire. Prior to disassembly, mark (index) the tire at the valve stem. Use this mark in order to remount the tire in its original orientation with respect to the wheel.

TIRE AND WHEEL ROTATION

The following information covers recommended tire rotation practices. For Tire And Wheel Removal and Installation procedures. Refer to **INSTALLATION** or **REMOVAL**.

THREE-SEASON TIRE EQUIPPED

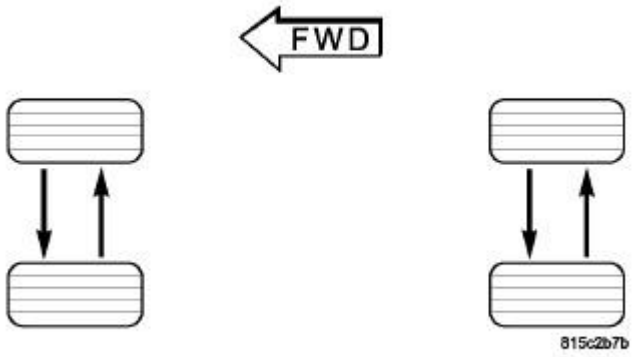

Fig. 4: Three-Season Tire Rotation Pattern
Courtesy of CHRYSLER GROUP, LLC

Vehicles equipped with Three-Season tires (Goodyear F1 Supercar) do not allow for normal tire rotation due to different size tires front-to-rear. These tires have a non-directional asymmetrical tread pattern allowing the tire and wheel assemblies to be switched side-to-side on the same axle.

ALL-SEASON TIRE EQUIPPED

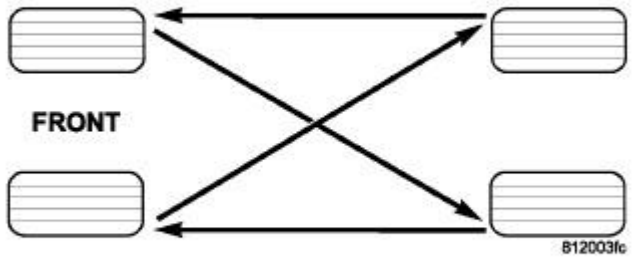

Fig. 5: Rotating Tires
Courtesy of CHRYSLER GROUP, LLC

Vehicles equipped with All-Season tires (Goodyear Eagle RS-A) use the suggested method of tire rotation that is shown in the graphic. Other rotation methods can be used, but they will not provide all the tire longevity benefits.

REMOVAL

TIRE AND WHEEL ASSEMBLY (ALUMINUM WHEEL)

1. Raise vehicle so tire and wheel assembly clears ground level.

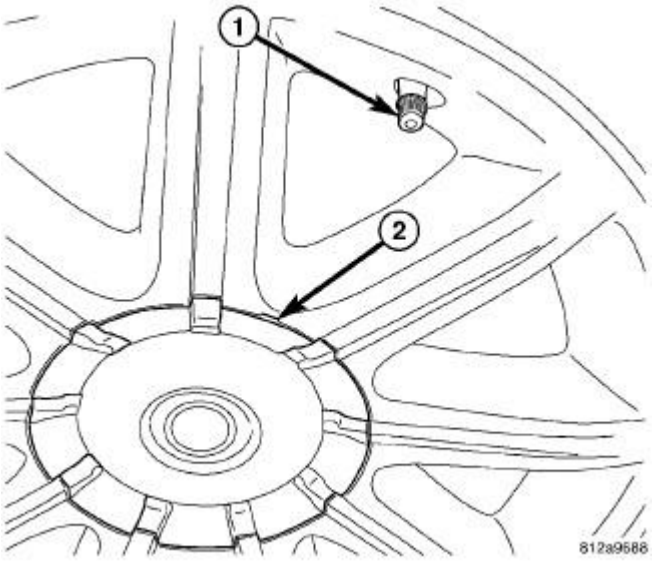

Fig. 6: Center Cap Removal Notch
Courtesy of CHRYSLER GROUP, LLC

2. If vehicle is equipped with wheel center caps covering wheel nuts, remove cap with appropriate removal tool utilizing notch formed into wheel (2) near valve stem (1). Use care not to damage wheel coating.

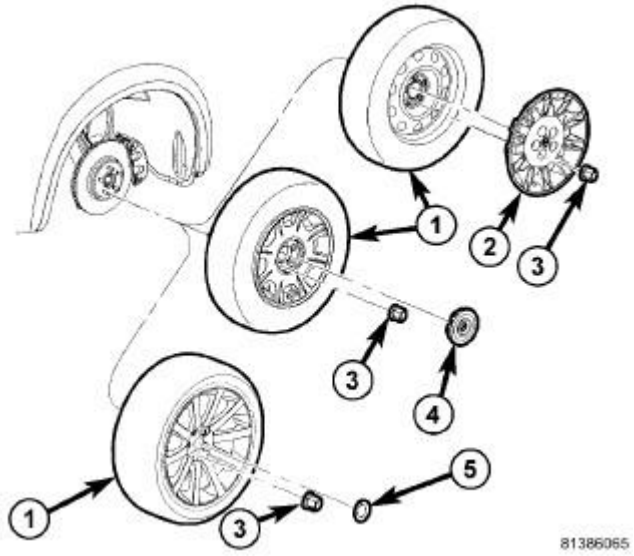

Fig. 7: Tire And Wheel Mounting
Courtesy of CHRYSLER GROUP, LLC

3. Remove five wheel mounting (lug) nuts (3) from studs.
4. Remove tire and wheel assembly (1) from hub.

TIRE AND WHEEL ASSEMBLY (STEEL WHEEL)

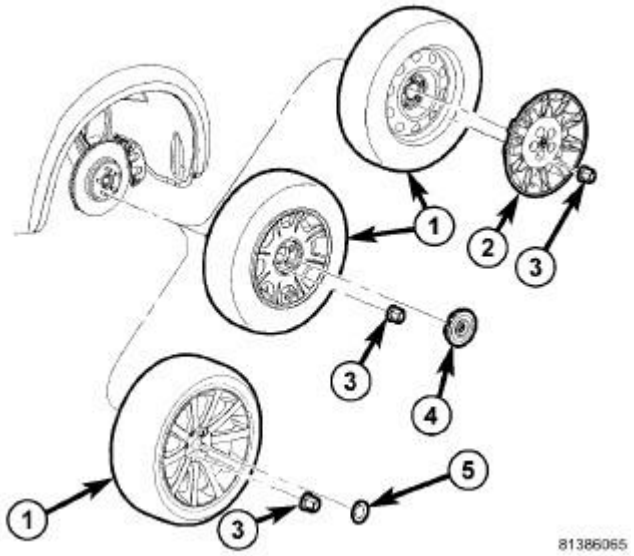

Fig. 8: Tire And Wheel Mounting
Courtesy of CHRYSLER GROUP, LLC

1. Raise and support vehicle so tire and wheel assembly clears ground level.

CAUTION: When removing the wheel cover, do not pry the wheel cover from the wheel. This can result in damage to the wheel cover. The wheel cover is attached using the wheel mounting nuts.

2. Remove five wheel mounting (lug) nuts (3) from studs.
3. Remove wheel cover (2) using care not to let tire and wheel assembly (1) fall off vehicle.
4. Remove tire and wheel assembly (1) from hub.

INSTALLATION

TIRE AND WHEEL ASSEMBLY (ALUMINUM WHEEL)

WARNING: Installing wheels without good metal-to-metal contact with the mounting surface could cause loosening of the wheel mounting (lug) nuts. This could adversely affect the safety and handling of the vehicle.

NOTE: Never use oil or grease on studs or wheel mounting (lug) nuts.

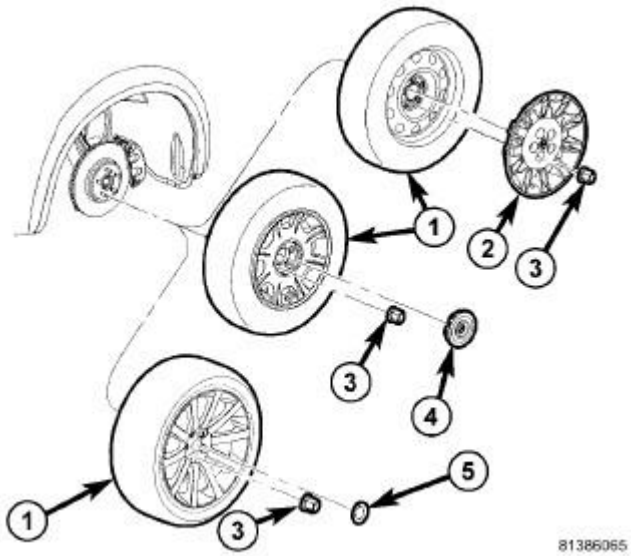

Fig. 9: Tire And Wheel Mounting
Courtesy of CHRYSLER GROUP, LLC

1. Clean wheel mounting surfaces, removing any build-up of corrosion. It is important to have good metal-to-metal contact between wheel and vehicle.
2. Position tire and wheel assembly (1) on wheel mounting studs using hub pilot as guide. Place and hold wheel flush up against mounting surface.

NOTE: Always use the original (OEM) style wheel mounting (lug) nuts. Do not use replacement parts of lesser quality or substitute design.

3. Loosely install all five wheel mounting (lug) nuts (3).

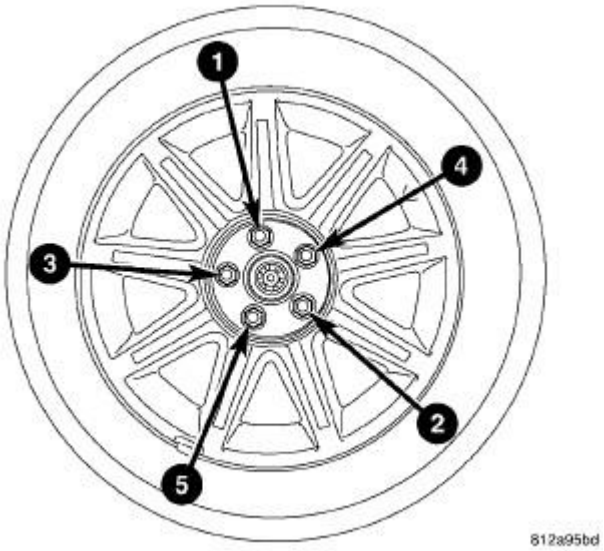

Fig. 10: Tightening Sequence - Aluminum Wheel
Courtesy of CHRYSLER GROUP, LLC

4. Lightly snug all wheel mounting nuts, then progressively tighten them in proper sequence shown in illustration. Tighten wheel mounting nuts to 150 N.m (110 ft. lbs.).

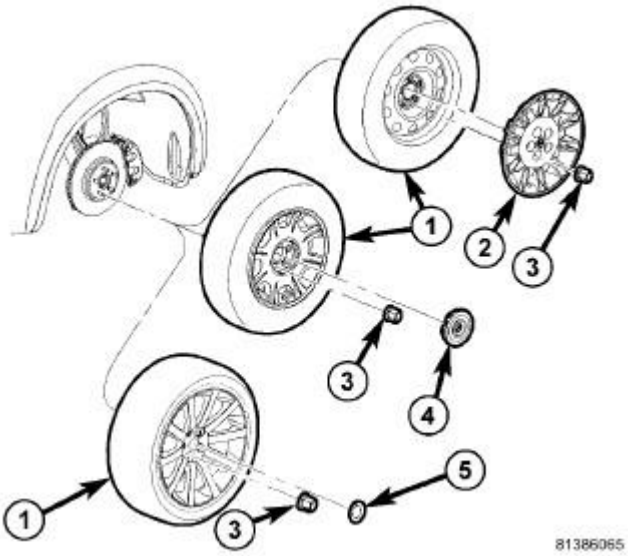

Fig. 11: Tire And Wheel Mounting
Courtesy of CHRYSLER GROUP, LLC

5. If applicable, install wheel center cap (4).
6. Lower vehicle.

TIRE AND WHEEL ASSEMBLY (STEEL WHEEL)

WARNING: Installing wheels without good metal-to-metal contact with the mounting surface could cause loosening of the wheel mounting (lug) nuts. This could adversely affect the safety and handling of the vehicle.

NOTE: Never use oil or grease on studs or wheel mounting nuts.

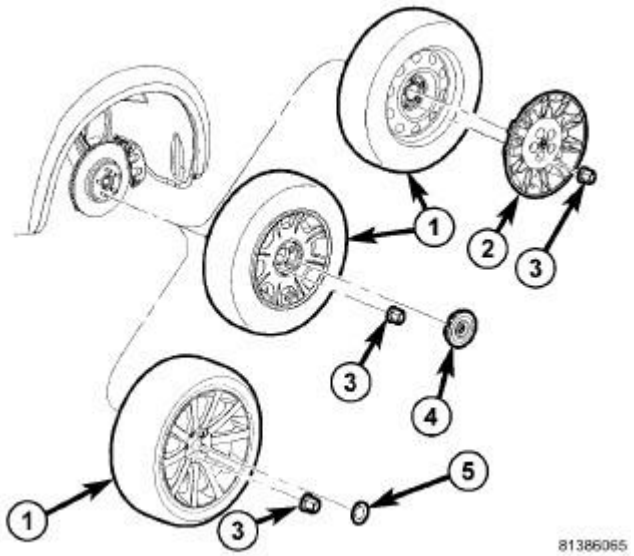

Fig. 12: Tire And Wheel Mounting
Courtesy of CHRYSLER GROUP, LLC

1. Clean wheel mounting surfaces, removing any corrosion build-up. It is important to have good metal-to-metal contact between wheel and vehicle.
2. Position tire and wheel assembly (1) on wheel mounting studs using hub pilot as guide. Place and hold wheel flush up against mounting surface.

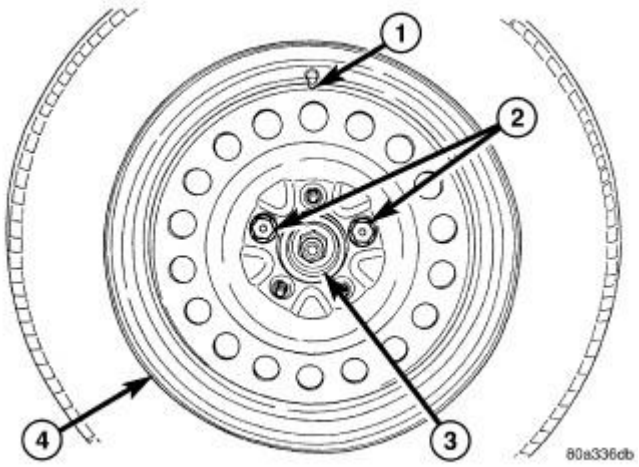

Fig. 13: Valve Stem, Nuts, Hub And Wheel
Courtesy of CHRYSLER GROUP, LLC

1 - VALVE STEM
2 - NUTS
3 - HUB
4 - WHEEL

NOTE: Wheel mounting nuts must be installed on the studs as shown (2) in the illustration, to allow proper installation of the wheel cover.

3. Using valve stem as an index placed at 12 o'clock position (1), install and **lightly tighten** two wheel mounting nuts on studs located at 2 O'clock and 10 O'clock positions as shown (2) in the illustration.

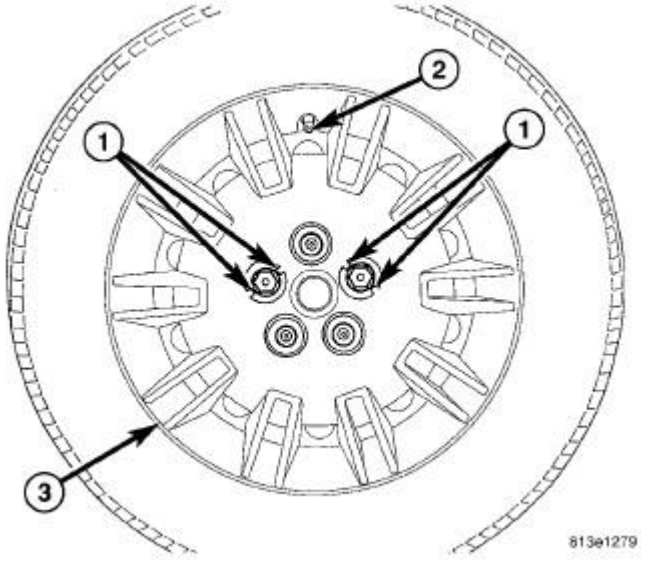

Fig. 14: Installing Cover Over Two Nuts
Courtesy of CHRYSLER GROUP, LLC

4. Place wheel cover (3) on wheel in the following fashion:
   a. Align valve notch in wheel cover with valve stem on wheel (2).
   b. At same time, align two holes in wheel cover having retaining tabs (1) with two installed wheel nuts.
   c. Press in on center of wheel cover until wheel cover retaining tabs (1) push past and engage rear of previously installed wheel mounting nuts. This will hold wheel cover in place.

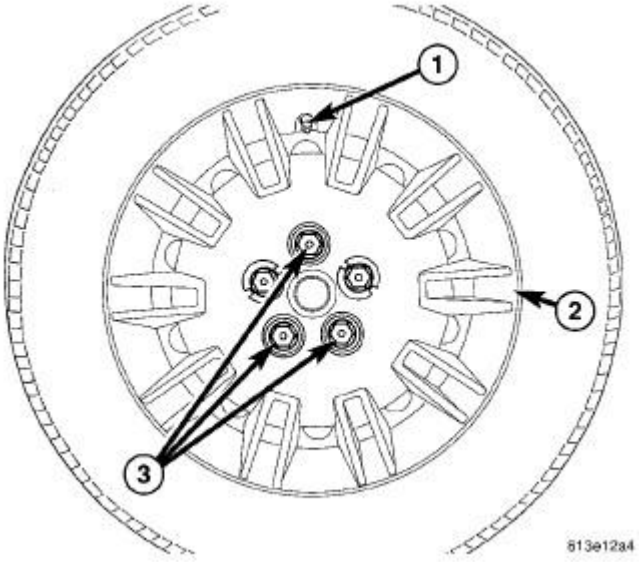

Fig. 15: Three Nuts Retaining Cover/Wheel
Courtesy of CHRYSLER GROUP, LLC

5. Install and **lightly tighten** three remaining wheel mounting nuts (3) securing wheel cover in place.

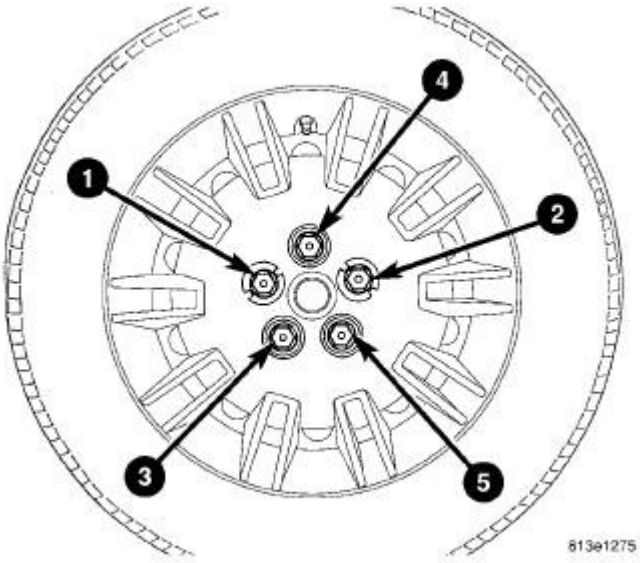

Fig. 16: Wheel Nut Tightening Sequence
Courtesy of CHRYSLER GROUP, LLC

6. Progressively tighten all five wheel mounting nuts in proper sequence. Tighten wheel mounting nuts to 150 N.m (110 ft. lbs.)
7. Lower vehicle.

SPECIAL TOOLS

SPECIAL TOOLS

	C-3919 - Gauge, Brake Shoes
	C-4150A - Press, Ball Joint (Originally Shipped In Kit Number(s) 6672, 6745.)

TIRE PRESSURE MONITORING

DESCRIPTION

BASE

The Base TPM system consists of tire pressure monitoring sensors attached to each road wheel through the valve stem mounting hole, a central receiver module (Wireless Ignition Node (WIN)), and an indicator lamp.

The receiver circuit for the TPM system is integrated into the WIN. For non-remote start vehicles, the antenna is internal to the WIN. For factory installed remote start vehicles, the antenna is external to the WIN. The WIN can also include the Remote Keyless Entry (RKE) receiver, Remote Start (if equipped) and the Sentry Key Immobilizer (SKIM) receiver. All receivers share a number of common components. The WIN decodes the RF signals transmitted by each of the vehicle's tire pressure sensors. The decoded information is used to determine if "warning" or "fault" conditions exist within the TPM system.

Upon detection of a warning or fault condition, the WIN will send a request to the module that controls the indicator lamp (and the text display if equipped with the Premium system) via the vehicle bus system to illuminate or flash the indicator lamp. Also, upon detection of a warning or fault condition, the electronic display will send a request to sound the "chime".

The WIN will store all warning and fault conditions, placard pressure values and low-pressure threshold values (lamp ON and OFF) in memory that can be accessed through diagnostic communication. If new sensors are introduced to the vehicle, the data stored for the sensor being replaced will be deleted.

The WIN will store all wheel sensor ID's and locations and faults in memory that can be accessed through diagnostic communication. All other data values transmitted from each active wheel sensor (not the spare tire) shall be stored in the WIN memory.

The WIN automatically learns and stores the sensor IDs while driving "within 20 minutes continuously above 15 mph (24 km/h)" after a sensor has been replaced. The learning sequence will initiate when the vehicle has been stopped for more than 20 minutes.

NOTE: **A new sensor ID can also be programmed directly into the WIN or TPM module by using a RKE-TPM Analyzer in conjunction with a Scan Tool. Once the new sensor ID has been programmed, the vehicle will need to be driven above 15 mph until the fault is no longer active (lamp extinguishes) and display is**

updated (for up to 20 minutes).

NOTE: Using a TPM-RKE Analyzer can take up to a minute to force a transmission from a sensor.

PREMIUM

The Premium TPM system consists of tire pressure monitoring sensors attached to each road wheel through the valve stem mounting hole and a TPM module. The receiver circuit for the TPM system is mounted in the right rear wheel well. The TPM module is fixed to a metal bracket mounted to the inner wheel well located behind the splash shield. The TPM module decodes the RF signals transmitted by each of the vehicle's tire pressure sensors. The decoded information is used to determine if "warning" or "fault" conditions exist within the TPM system.

Upon detection of a warning or fault condition, the TPM module will send a request to the module that controls the indicator lamp and the text display via the vehicle bus system to illuminate or flash the indicator lamp. Also, upon detection of a warning or fault condition, the electronic display will send a request to sound the "chime".

The TPM module will store all warning and fault conditions, placard pressure values and low pressure threshold values (lamp ON and OFF) in memory that can be accessed through diagnostic communication. If new sensors are introduced to the vehicle, the data stored for the sensor being replaced will be deleted once the new sensor ID has been learned.

The TPM module will store all wheel sensor ID's and locations and faults in memory that can be accessed through diagnostic communication.

The TPM module automatically learns and stores the sensor IDs while driving "within 20 minutes continuously above 15 mph (24 km/h)" after a sensor has been replaced. The learning sequence will initiate when the vehicle has been stopped for more than 20 minutes.

NOTE: A new sensor ID can also be programmed directly into the WIN or TPM module by using a RKE-TPM Analyzer in conjunction with a Scan Tool. Once the new sensor ID has been programmed, the vehicle will need to be driven above 15 mph until the fault is no longer active (lamp extinguishes) and display is updated (for up to 20 minutes).

NOTE: Using a TPM-RKE Analyzer can take up to a minute to force a transmission from a sensor.

OPERATION

OPERATION

TIRE PRESSURE MONITORING

The Tire Pressure Monitoring (TPM) system is designed to operate without loss of function for all OEM tire construction for this vehicle. Sensors, mounted to each road wheel as part of the valve stem, transmit an RF

signal indicating their individual pressure to a receiver located in the TPM module. These transmissions occur approximately once every minute at speeds over 15 mph (24 km/h). For more information on sensors. Refer to **SENSOR, TIRE PRESSURE MONITORING (TPM), OPERATION**.

If the TPM module detects that the tire pressure in any road tire is going low, beyond the Low Pressure (lamp) ON threshold (see placard table below), a chime will sound and the indicator lamp will turn on. In addition to the chime and lamp, a graphic display of the pressure value(s) and position of the low tire(s) will flash in the Electronic Vehicle Information Center (EVIC). Once pressure in the suspect tire(s) raises above the Low Pressure (lamp) OFF Threshold (see placard table below), and the TPM module receives a valid transmission from the sensor, the lamp will go out. If a system fault is detected due to a missing sensor signal, in addition to a chime and a indicator lamp flashing, a "Check TPM System" text message will be displayed in the instrument cluster, and the tire pressure graphic display will have "- -" in place of the pressure value. After the flash sequence, the TPM indicator lamp will remain illuminated. The system will return to normal once the TPM module receives a valid transmission from that sensor location. If a system fault is detected, the indicator lamp will flash on/off for 75 seconds and then remain on solid.

If the TPM module detects a warning or fault condition at ignition key ON it will wait approximately ten seconds before sending the first request to illuminate the indicator lamp. This will assure that the display module has concluded its bulb check period. The display module will request a chime once per ignition cycle when a "warning" or "fault" condition is detected. A "warning" or "fault" condition will remain enabled until the problem causing the condition is corrected and reset.

The TPM module shall continuously monitor for the receipt of tire pressure RF message transmissions from the wheel sensors during the ignition key ON cycle. The wheel sensor IDs and the location of each sensor (e.g. Tire 1, Tire 2 etc.) are learned by the TPM control module using signal strength and direction of wheel rotation as received by the TPM module from each of the sensors, and updates the graphic display when necessary or during a service procedure, as required.

The TPM System will continue to warn the driver of low tire pressure as long as the condition exists, and will not turn off the indicator lamp until the tire pressure is at or above the Low Pressure (lamp) OFF threshold (see placard table below). The system will automatically update and the TPM indicator lamp will turn off once the updated tire pressures have been received.

Tire pressure will vary with temperature by about 1 psi (6.9 kPa) for every 12°F (6.5°C). This means that when the outside temperature decreases, the tire pressure will decrease. Tire pressure should always be set based on cold inflation tire pressure (placard pressure). This is defined as the tire pressure after a vehicle has not been driven for more than 3 hours (and in outside ambient temperature). The tire pressure will also increase as the vehicle is driven? this is normal and there should be no adjustment for this increased pressure. For a system fault, the system will return to normal once the TPM module receives a valid transmission from that sensor location.

TPM THRESHOLD PRESSURES

NOTE: To determine the pressure thresholds for a vehicle, refer to the Tire Inflation Pressure (Placard) Label found on the Driver B-pillar, then apply the placard pressure to the following table.

TPM THRESHOLD PRESSURES

Placard Pressure (Cold) (PSI)	Low Pressure ON Threshold (PSI)	Low Pressure OFF Threshold (PSI)
28	22	26
29	23	27
30	24	28
31	25	29
32	25	29
33	26	30
34	27	31
35	28	32
36	29	33
37	29	34
38	30	35
39	31	36
40	32	37
41	33	38
42	34	39
43	35	40
44	36	41
45	36	41
46	37	43
47	38	44
48	38	45
49	39	45
50	40	47
51	41	48
55	44	52
60	48	57
65	52	62
70	56	67
75	60	72
80	64	77

DIAGNOSIS AND TESTING

DIAGNOSIS AND TESTING - TIRE PRESSURE MONITORING

When diagnosing a tire pressure issue, first check the Tire Pressure Monitoring (TPM) indicator lamp in the instrument cluster during ignition key ON. From the OFF position, turn the key to ON and check the TPM indicator lamp to observe one of the following:

- If after 10 seconds the indicator lamp is illuminating continuously (not flashing), proceed to LOW PRESSURE below.

- If after 10 seconds the indicator lamp flashes on/off for 75 seconds, then remains on solid, there is a system fault detected. Proceed to SYSTEM FAULT below.

LOW PRESSURE

NOTE: Tire pressure may increase from 2 to 6 psi (14 to 41 kPa) during normal driving conditions. Do NOT reduce this normal pressure build up.

NOTE: Tire pressure will vary with temperature by about 1 psi (6.9 kPa) for every 12°F (6.5°C). This means that when the outside temperature decreases, the tire pressure will also decrease. Tire pressure should always be set based on cold inflation tire pressure. For details, refer to TIRES, STANDARD PROCEDURE.

Check air pressure as necessary in all tires using a known accurate air gauge and adjust to the specification listed on the Tire Inflation Pressure Label (Placard) provided with the vehicle (usually applied to the driver side B-pillar). After adjusting air pressure in a tire on the vehicle, the vehicle needs to be driven for approximately two minutes above 15 mph for the message or indicator lamp to go out.

If air pressure in any tire is low, inspect **all** the tires for leaks. A water "dunk tank" or other water test may be used to check for a leak around the sensor as long as any water at the valve core is removed once the procedure is completed. The water can be easily expelled from the core area by pushing in on the core for several seconds, allowing escaping air to drive out any moisture. Reinflate the tire as necessary. Always make sure the original (special) valve stem cap is securely installed to keep moisture out of the sensor.

If the indicator lamp is still ON continuously, refer to the appropriate diagnostic information.

SYSTEM FAULT

If a system fault is detected, a chime will sound and the TPM indicator (telltale) lamp will flash for 75 seconds, then remain on solid. For vehicles with the Premium TPM Systems, a "CHECK TPM SYSTEM" message will appear in the Electronic Vehicle Information Center (EVIC), followed by a graphic display. A system fault can occur by many reasons, including the following:

- Signal interference due to electronic devices or driving next to facilities emitting the same radio frequencies as the TPM sensors
- Installing some form of aftermarket window tinting that affects radio wave signals
- Accumulation of snow or ice around the wheels or wheel housings
- Using tire chains on the vehicle
- Using wheels not equipped with TPM sensors

Refer to the appropriate diagnostic information.

MODULE, TIRE PRESSURE MONITORING (TPM)

DESCRIPTION

DESCRIPTION

The Tire Pressure Monitor (TPM) module is a stand-alone receiver used to perform all TPM functionality in a Premium TPM System on this vehicle. The TPM is located in the right rear wheel well behind the splash shield and is mounted to the wheel house inner flange with a bracket. The TPM uses information transmitted from each of the sensors as well as the difference in the strength of the signal received to determine the location of each of the sensors. The TPM then transmits the required information directly to the CCN in order to update the lamp, chime and display as required.

OPERATION

OPERATION

The Tire Pressure Monitor (TPM) receives information from each of the sensors in the form of RF signals. The information contained in each of the transmissions provides all the information necessary for the TPM to determine the pressure in each tire as well as the position of the sensor. This autolocating process only happens in the first 10 minutes of any drive cycle while traveling at speeds above 15 mph (24 km/h) (The autolocating process will start again only if the vehicle has been shut off for approximately 20 minutes or longer).

REMOVAL

REMOVAL

1. Remove wheelhouse splash shield. Refer to **SHIELD, SPLASH, FRONT WHEELHOUSE, REMOVAL** or **SHIELD, SPLASH, REAR WHEELHOUSE, REMOVAL** .

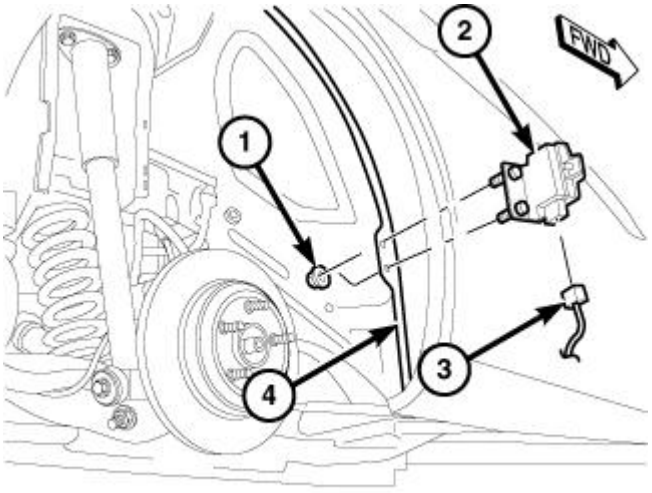

Fig. 17: TPM Module, Connector, Seam Flange And Mounting Nuts
Courtesy of CHRYSLER GROUP, LLC

2. Disconnect wiring harness connector (3) at the Tire Pressure Monitoring (TPM) Module (2).
3. Remove mounting nuts (1), then remove TPM module (2) from body seam flange (4).

INSTALLATION

INSTALLATION

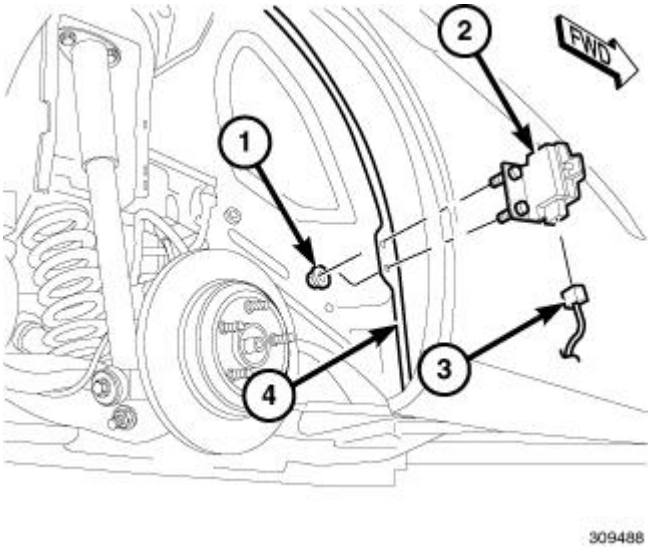

Fig. 18: TPM Module, Connector, Seam Flange And Mounting Nuts
Courtesy of CHRYSLER GROUP, LLC

1. Position the Tire Pressure Monitoring (TPM) Module (2) on body seam flange (4) and install mounting nuts (1).
2. Connect wiring harness connector (3) at TPM Module (2).
3. Install wheelhouse splash shield and all components removed to access it. Refer to **SHIELD, SPLASH, FRONT WHEELHOUSE, INSTALLATION** or **SHIELD, SPLASH, REAR WHEELHOUSE, INSTALLATION** .
4. Perform one of the following to make the system learn the new sensor ID.
    a. Use the TPM-RKE Analyzer 9936, with the Scan Tool to program the TPM Module with the tire pressure sensor ID. This is part of the TPM Verification Diagnostic Test. Refer to **STANDARD PROCEDURE** .
    b. Once the vehicle has remained stationary for more than 20 minutes, drive vehicle for a minimum of 20 minutes while maintaining a continuous speed above 15 mph (24 km/h). During this time, the system will learn the new sensor ID. This is part of the TPM Verification Diagnostic Test. Refer to **STANDARD PROCEDURE** .

SENSOR, TIRE PRESSURE MONITORING (TPM)

CAUTION

CAUTION

CAUTION: The use of tire sealants is not recommended for vehicles equipped with the Tire Pressure Monitoring system. Tire sealants may clog tire pressure sensors.

CAUTION: Tire pressure sensor valve stem caps and cores are specially designed for

the sensors. Due to risk of corrosion, do not use a standard valve stem cap or core in a tire pressure sensor in place of the original equipment style sensor cap and core.

CAUTION: It is not recommended to install a tire pressure sensor in an aftermarket wheel. Use tire pressure sensors in original style factory wheels only.

CAUTION: Any time a sensor is to be reinstalled in a wheel, a new valve stem assembly must be installed to ensure air tight sealing.

NOTE: TPM thresholds have been established for the original tire size equipped on the vehicle. Use original size tires only to maintain system accuracy.

DESCRIPTION

NON SRT8

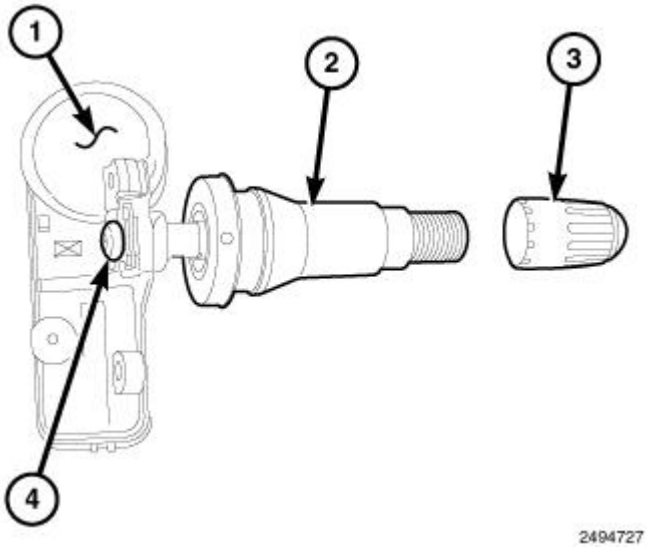

Fig. 19: Tire Pressure Monitoring Sensor Components
Courtesy of CHRYSLER GROUP, LLC

NOTE: Replace the valve stem assembly and tire pressure sensor mounting screw with each tire change.

One tire pressure sensor (1) is mounted to a valve stem (2) specifically designed for mounting the pressure sensor (1) in each wheel in place of the traditional tire valve stem. Each sensor has an internal battery that lasts up to 10 years. The battery is not serviceable. At the time of battery failure, the sensor (1) must be replaced. The TPM system operates on a 433 MHz radio frequency. The tire pressure sensor valve stem (2) looks similar to a standard valve stem with the tire mounted on the wheel. To visually identify a tire pressure sensor/valve stem, the valve stem cap (3) is longer than a standard valve stem.

NOTE: This vehicle uses the 433 MHz TPM sensor. Although 315 MHz and 433 MHz sensors are identical in size and shape, they are not interchangeable. Always make sure the correct sensor is being used. A RKE-TPM Analyzer can be used to determine the sensor's frequency without having to dismount the tire.

The TPM sensors are designed for original style factory wheels. It is not recommended to install a tire pressure sensor in an aftermarket wheel. (This could cause sealing and system performance issues.)

The serviceable components of the tire pressure sensor are:

- Tire pressure sensor (1), including all components below
- Valve stem (2), including screw (4), core and cap (3)
- Valve stem core (not shown)
- Valve stem cap (3)

The valve stem caps and cores used are specifically designed for the tire pressure monitoring sensors. Although similar to standard valve stem caps and cores, they are different. The valve stem cap has a special seal inside to keep moisture and corrosion out. The valve stem core has a special nickel coating to protect from corrosion.

SRT8

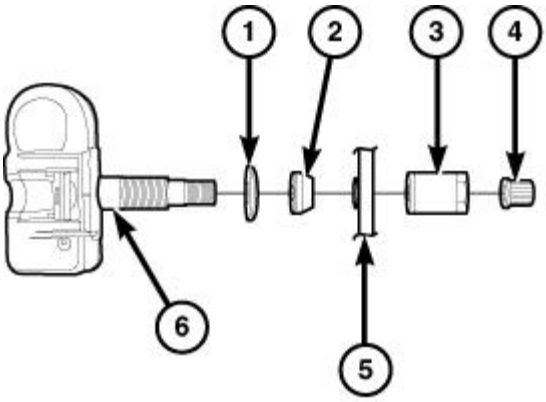

Fig. 20: Sensor Mounting - Exploded View
Courtesy of CHRYSLER GROUP, LLC

On vehicles equipped with Tire Pressure Monitoring (TPM), one tire pressure sensor (6) is mounted to each wheel in place of the traditional tire valve stem. Each sensor has an internal battery that lasts up to 10 years. The battery is not serviceable. At the time of battery failure, the sensor must be replaced.

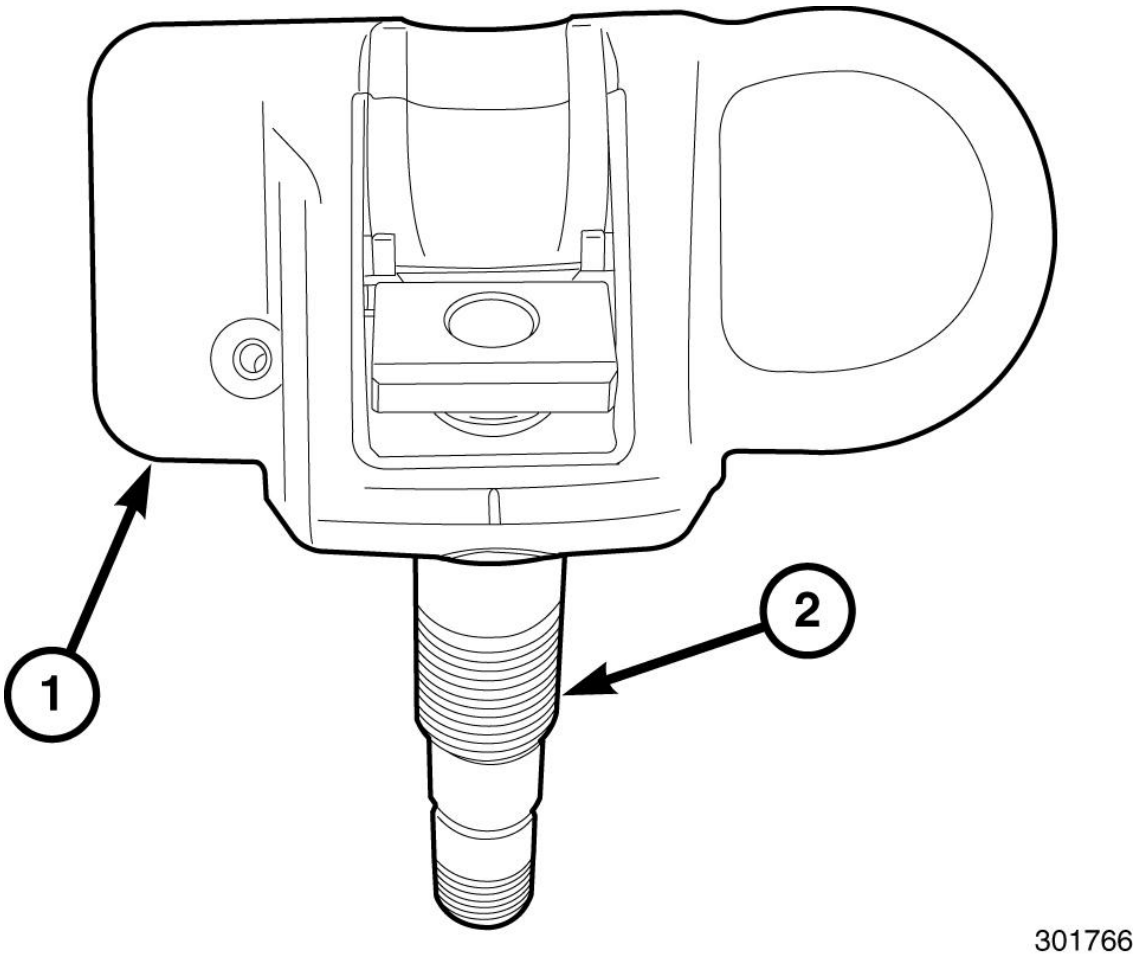

Fig. 21: Tire Pressure Monitoring Sensor
Courtesy of CHRYSLER GROUP, LLC

The TPM system operates on a 433 MHz radio frequency. The 433 MHz sensors (1) can be easily identified by the part number.

CAUTION: Although additional sensors operating at 433 MHz sensors are available and are used in other applications, they are not interchangeable. Always make sure the correct sensor is being used and be sure to replace the sensor with the correct part number.

NOTE: Once mounted inside a tire and wheel assembly you are not able to visually see the difference between this sensor and other 315 MHz and 433 MHz sensors. At that point, the TPM/RKE Analyzer 9936, with the Scan Tool may be used to identify the sensor frequency or the tire can be dismounted allowing visual inspection of the sensor body and part number.

The TPM sensors are designed for original style factory wheels. It is not recommended to install a tire pressure sensor in an aftermarket wheel (This could cause sealing and system performance issues). **Do not attempt to install a tire pressure sensor in an aftermarket wheel. If aftermarket wheels are installed and do not**

contain tire pressure sensors, the system will not function properly and the driver will be continuously notified of a system malfunction.

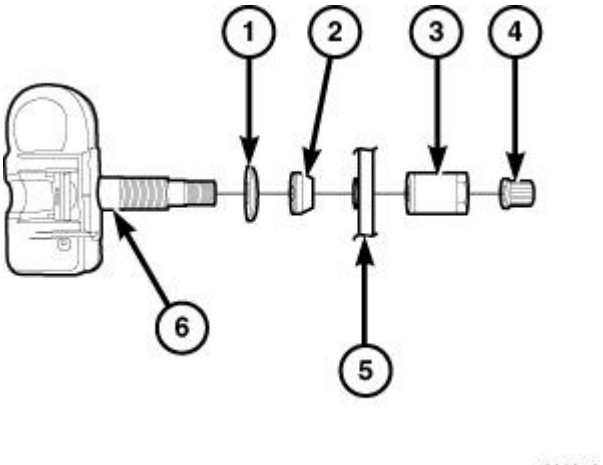

Fig. 22: Sensor Mounting - Exploded View
Courtesy of CHRYSLER GROUP, LLC

1 - METAL WASHER
2 - SEAL
3 - NUT (WITH PRESSED-IN WASHER)
4 - CAP (WITH SEAL)
5 - SECTIONAL CUTAWAY OF WHEEL
6 - TPM SENSOR

The serviceable components of the tire pressure sensor are:

- Sensor-To-Wheel Seal (2) and Metal Washer (1)
- Valve Stem Cap (4)
- Valve Stem Core
- Valve Stem Nut (with pressed-in washer) (3)

NOTE: Any time a sensor is installed on a wheel, a new Sensor-To-Wheel Seal (2), Metal Washer (1) and Valve Stem Nut (3) must be installed to ensure air tight sealing. A service kit is available.

The valve stem caps and cores are specifically designed for the tire pressure monitoring sensors. Although similar to standard valve stem caps and cores, they are different. The valve stem cap has a special seal inside to keep moisture and corrosion out. The valve stem core has a special nickel coating to protect from corrosion.

OPERATION

OPERATION

CAUTION: The TPMS has been optimized for the original equipment tires and wheels. TPMS pressures have been established for the tire size equipped on your vehicle. Undesirable system operation or sensor damage may result when using replacement equipment that is not of the same size, type, and/or style. Aftermarket wheels can cause sensor damage. Do not use aftermarket tire sealants or balance beads if your vehicle is equipped with a TPMS, as damage to the sensors may result.

CAUTION: After inspecting or adjusting the tire pressure always reinstall the valve stem cap. This will prevent moisture and dirt from entering the valve stem, which could damage the Tire Pressure Monitoring Sensor.

CAUTION: Tire pressure sensor valve stem caps and cores are specially designed for the sensors. Due to risk of corrosion, do not use a standard valve stem cap or core in a tire pressure sensor in place of the original equipment style sensor cap and core.

CAUTION: Any time a sensor is to be reinstalled in a wheel, a new valve stem assembly must be installed to ensure air tight sealing.

NOTE: TPM thresholds have been established for the original tire size equipped on the vehicle. Use original size tires only to maintain system accuracy.

The battery operated tire pressure sensor is both a transmitter and a receiver. The TPM sensor can be forced to transmit if using a special tool such as a TPM-RKE Analyzer. The TPM-RKE Analyzer has the ability to change the sensor mode and to diagnose a faulty TPM sensor. Using a TPM-RKE Analyzer can take up to a minute to force a transmission from a sensor.

Each sensor's (transmitter) broadcast is uniquely coded so that the module can monitor the state of each of the sensors on the four rotating road wheels. The module can automatically learn and store the sensor's ID while driving "within 10 minutes continuously above 15 m.p.h. (24 Km/h)" after a sensor has been replaced. The vehicle must be stationary for more then 20 minutes in order to initiate the learning sequence.

The sensor IDs can also be programmed using the TPM-RKE Analyzer Tool. Scan each TPM sensor at each road wheel, and store each Sensor ID in the correct location. (LEFT FRONT, LEFT REAR, RIGHT FRONT, and RIGHT REAR) Connect the TPM-RKE Analyzer Tool to the Scan Tool. Then follow the programming steps outlined in the diagnostic Scan Tool for "Program Tire Pressure Sensor ID w/ TPM Tool".

REMOVAL

NON SRT8

1. Raise and support vehicle. Refer to **HOISTING, STANDARD PROCEDURE** .
2. Remove tire and wheel assembly.

CAUTION: The cap used on this valve stem contains an O-ring seal to prevent contamination and moisture from entering the valve stem. Do not substitute a regular valve stem cap in its place.

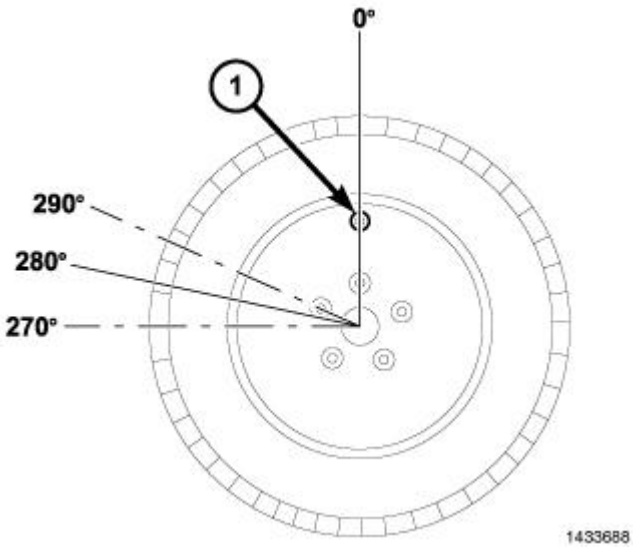

Fig. 23: Start Mount/Dismount Tool Within 10 Degrees Of Valve Stem
Courtesy of CHRYSLER GROUP, LLC

3. Dismount tire from wheel following tire changer manufacturers instructions while paying special attention to the following to avoid damaging the pressure sensor:
   a. When breaking the tire bead loose from the wheel rim, avoid using the Bead Breaker in the area of the sensor (1). That includes both outer and inner beads of the tire.
   b. When preparing to dismount the tire from the wheel, carefully insert the mounting/dismounting tool 280° from the valve stem ± 10°, then proceed to dismount the tire from the wheel. Use this process on both outer and inner tire beads.

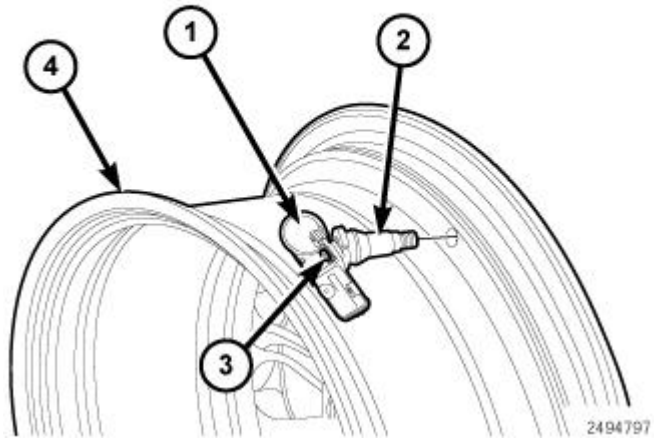

Fig. 24: Valve Stem Retainer Screw, Sensor & Valve Stem

Courtesy of CHRYSLER GROUP, LLC

4. Remove the sensor to valve stem retainer screw (3) and remove the sensor (1) from the valve stem (2).
5. Remove the valve stem (2) from the wheel (4).

SRT8

1. Raise and support vehicle.
2. Remove tire and wheel assembly.

CAUTION: The cap used on this valve stem contains an O-ring seal to prevent contamination and moisture from entering the valve stem. Do not substitute a regular valve stem cap in its place.

CAUTION: The valve stem used on this vehicle is made of aluminum and the core is nickel plated brass. The original valve stem core must be reinstalled and not substituted with a valve stem core made of a different material. This is required to prevent corrosion in the valve stem caused by the different metals.

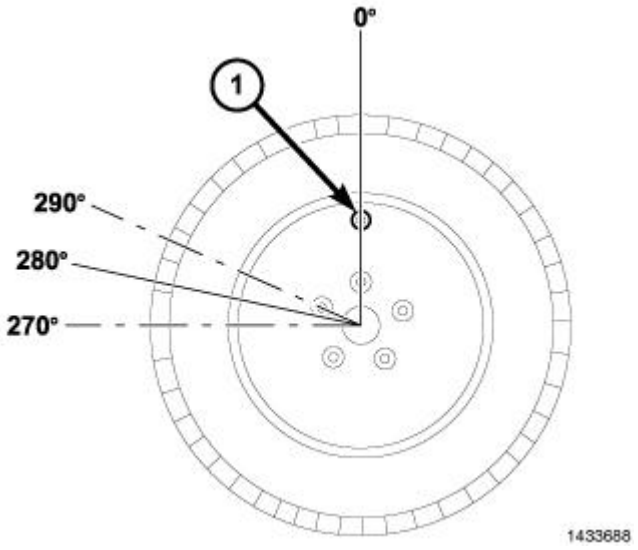

Fig. 25: Start Mount/Dismount Tool Within 10 Degrees Of Valve Stem
Courtesy of CHRYSLER GROUP, LLC

3. Dismount tire from wheel following tire changer manufacturers instructions while paying special attention to the following to avoid damaging the pressure sensor:
   a. When breaking the tire bead loose from the wheel rim, avoid using the Bead Breaker in the area of the sensor (1). That includes both outer and inner beads of the tire.
   b. When preparing to dismount the tire from the wheel, carefully insert the mounting/dismounting tool 280° from the valve stem ± 10°, then proceed to dismount the tire from the wheel. Use this process on both outer and inner tire beads.

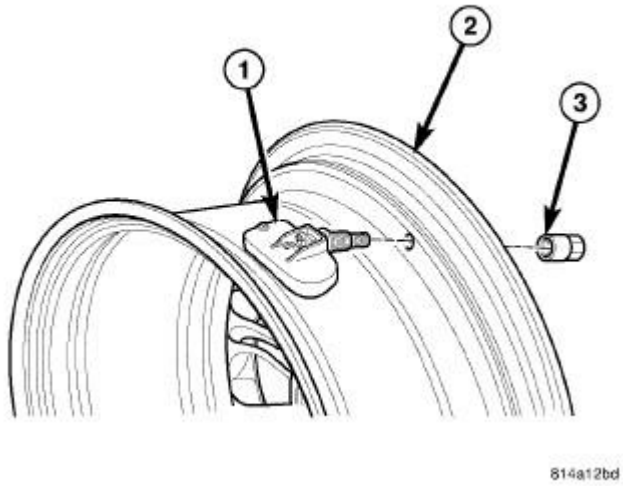

Fig. 26: Sensor Mounting To Wheel
Courtesy of CHRYSLER GROUP, LLC

4. Remove sensor nut (3) retaining sensor to wheel. While removing nut, hold pressure against rear of metal valve stem to keep valve stem from pushing rearward, damaging antenna strap.
5. Remove sensor (1) from wheel (2).

INSTALLATION

NON SRT8

NOTE: If replacing tire pressure sensor, a new valve stem will be pre-mounted to the sensor as an assembly. Verify that the sensor is positioned properly before seating the valve stem. If replacing a valve stem only (using the existing tire pressure sensor), the new valve stem will include a new tire pressure sensor mounting screw. Always use a new mounting screw when attaching a sensor to a valve stem.

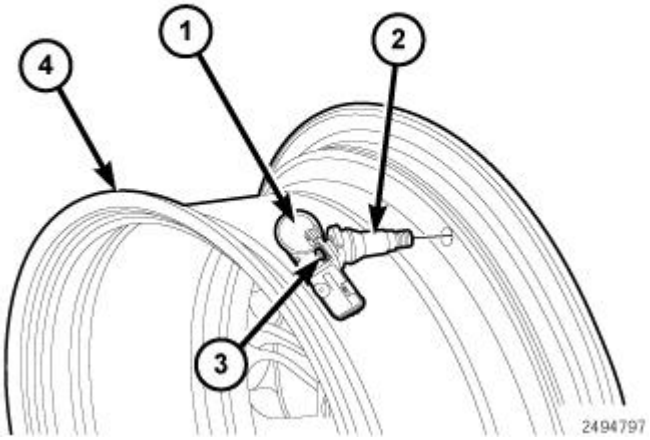

Fig. 27: Valve Stem Retainer Screw, Sensor & Valve Stem
Courtesy of CHRYSLER GROUP, LLC

CAUTION: Any time a sensor is to be reinstalled in a wheel, a new valve stem assembly must be installed to ensure air tight sealing.

1. Wipe area clean around sensor/valve stem mounting hole in wheel (4). Make sure surface of wheel is not damaged.

NOTE: A new valve stem is pre-lubricated for proper installation with a standard tool.

NOTE: If replacing tire pressure sensor, a new valve stem will be pre-mounted to the sensor as an assembly. Verify that the sensor is positioned properly before seating the valve stem.

2. Insert valve stem (2) through wheel (4) and pull through to seat with standard valve stem installation tool.

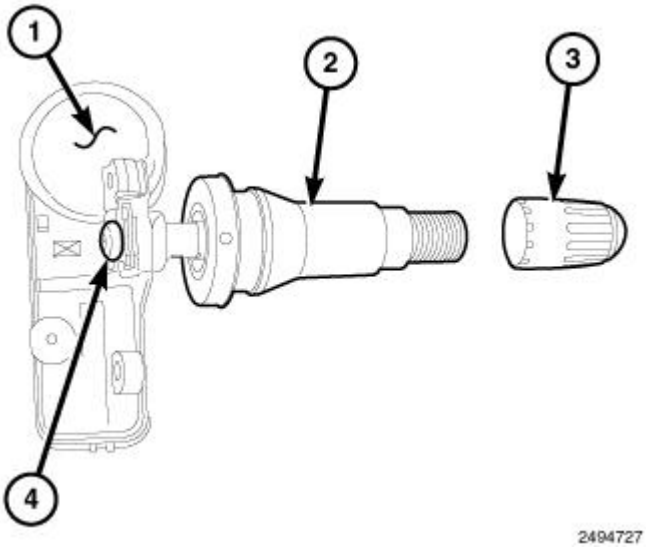

Fig. 28: Tire Pressure Monitoring Sensor Components
Courtesy of CHRYSLER GROUP, LLC

3. If replacing the valve stem (2) only (using the existing tire pressure sensor), verify that the flat sides of the brass extension on the bottom of the valve stem (2) are at a 90 degree angle with the wheel. Position the pressure sensor (1) over the brass extension, install the retainer screw (4) and tighten to 1.4 N.m (12 in. lbs.).
4. Mount tire on wheel following tire changer manufacturers instructions, paying special attention to the following to avoid damaging tire pressure sensor:

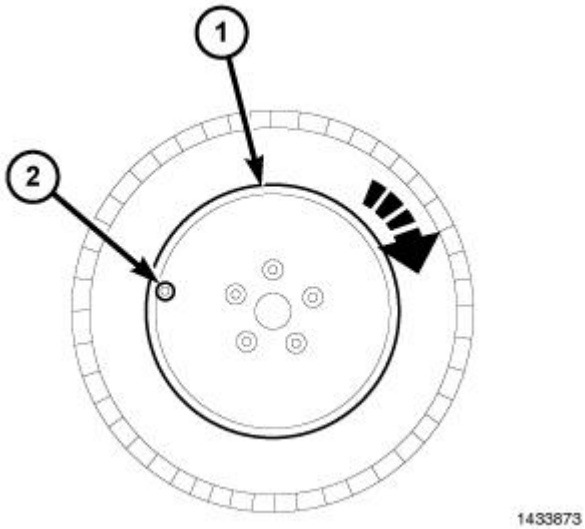

Fig. 29: Mounting Tire Using Rotating Wheel Machine
Courtesy of CHRYSLER GROUP, LLC

a. Rotating Wheel Tire Changers - Once the wheel is mounted to the changer, position the sensor valve stem (2) approximately 280° from the head of the changer (located at 1) in a clockwise direction before rotating the wheel (also in a clockwise direction) to mount the tire. Use this

procedure on both the outer and inner tire beads.

1 - HEAD OF CHANGER LOCATED HERE 2 - VALVE STEM

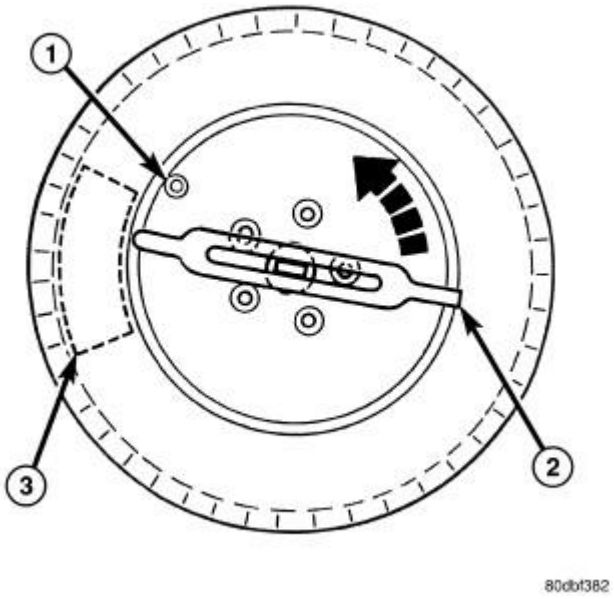

Fig. 30: Mounting Tire Using Rotating Tool Machine
Courtesy of CHRYSLER GROUP, LLC

b. Rotating Tool Tire Changers - Position the wheel on the changer so that the sensor valve stem (1) is located approximately 210° clockwise from the installation end of the mounting/dismounting tool (2) once the tool is mounted for tire installation. Make sure the sensor is clear of the lower bead breaker area (3) to avoid damaging the sensor when the breaker rises. Rotate the tool (2) in a counterclockwise direction to mount the tire. Use this procedure on both the outer and inner tire beads.

1 - VALVE STEM 2 - INSTALLATION END OF MOUNTING/DISMOUNTING TOOL 3 - BEAD BREAKER (KEEP CLEAR OF SENSOR)

c. Adjust air pressure to that listed on Tire Inflation Pressure Label (Placard) provided with vehicle

(usually applied to driver's side B-pillar). Make sure **original style** valve stem cap is securely installed to keep moisture out of sensor.

d. Install tire and wheel assembly on the vehicle.
e. Remove the support and lower the vehicle.
f. Perform one of the following to make the system learn the new sensor ID.
g. Use the TPM-RKE Analyzer, 9936, with the Scan Tool to program the WIN with the tire pressure sensor ID. This is part of the TPM Verification Diagnostic Test. Refer to **STANDARD PROCEDURE** .
h. Once the vehicle has remained stationary for more than 20 minutes, drive vehicle for a minimum of 10 minutes while maintaining a continuous speed above 15 mph (24 km/h). During this time, the system will learn the new sensor ID. This is part of the TPM Verification Diagnostic Test. Refer to **STANDARD PROCEDURE** .

NOTE: If a sensor cannot be trained, refer to appropriate diagnostic information.

SRT8

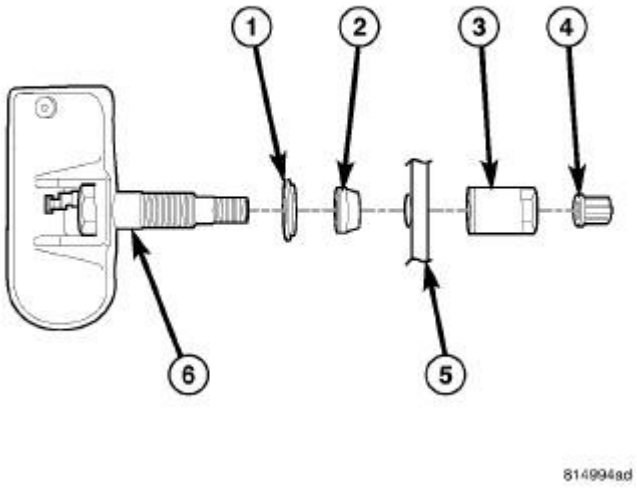

Fig. 31: Sensor Mounting - Exploded View
Courtesy of CHRYSLER GROUP, LLC

1 - METAL WASHER
2 - SEAL
3 - NUT (WITH PRESSED-IN WASHER)
4 - CAP (WITH SEAL)
5 - SECTIONAL CUTAWAY OF WHEEL
6 - TPM SENSOR

NOTE: Before reinstalling an existing tire pressure sensor, replace seal (2) and metal

washer (1) at base of sensor valve stem (6) to ensure proper sealing.

1. Wipe area clean around sensor/valve stem mounting hole in wheel (5). Make sure surface of wheel is not damaged.

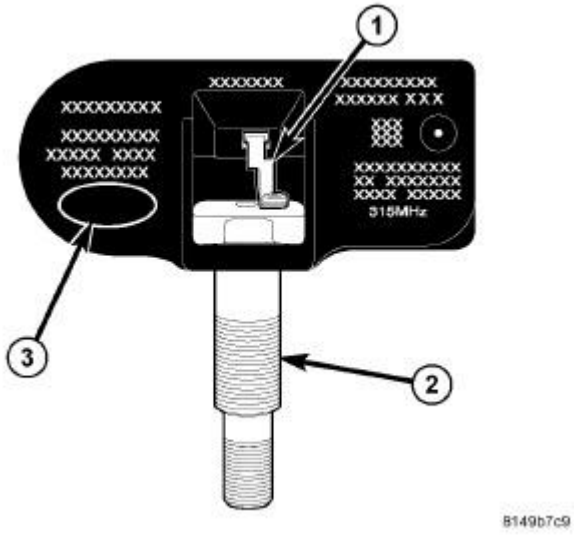

Fig. 32: Antenna Strap, Valve Stem & Identification Insignia
Courtesy of CHRYSLER GROUP, LLC

1 - ANTENNA STRAP
2 - VALVE STEM
3 - IDENTIFICATION INSIGNIA

CAUTION: To avoid damaging sensor antenna strap (1), if equipped, hold pressure against rear of metal valve stem (2) while sensor is inserted through wheel mounting hole and nut is installed.

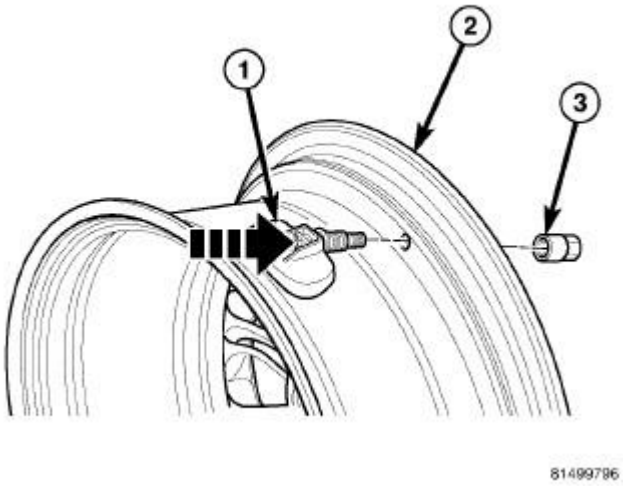

Fig. 33: Sensor Installation To Wheel
Courtesy of CHRYSLER GROUP, LLC

1 - TIRE PRESSURE SENSOR
2 - WHEEL
3 - NUT (WITH WASHER)

2. Insert sensor (1) through wheel (2) as shown keeping pressure against rear of metal valve stem (See Arrow). Potted side of sensor is to be positioned toward wheel. Do not attempt to mount sensor otherwise, damage may occur.
3. Install sensor nut (with pressed-in washer) (3) by hand.

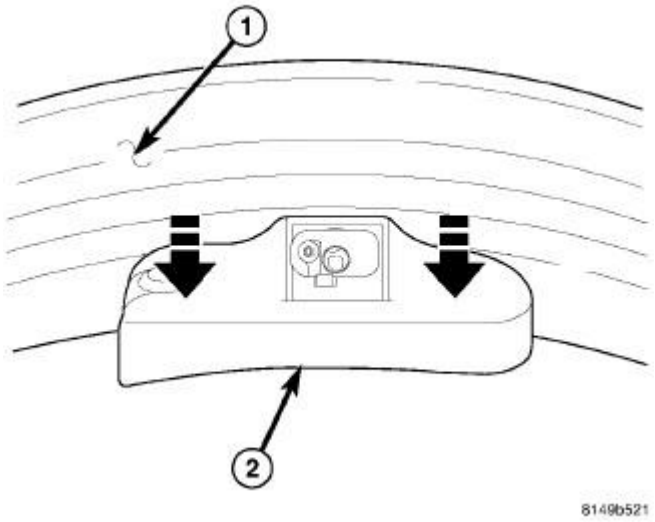

Fig. 34: Tire Pressure Sensor Against Wheel Interior
Courtesy of CHRYSLER GROUP, LLC

1 - WHEEL INTERIOR
2 - TIRE PRESSURE SENSOR

CAUTION: Over-torquing the sensor nut by as little as 12 N.m (106 in. lbs.) may result in sensor separation from the valve stem. Under this condition, the sensor may still function. However, the condition should be corrected immediately.

NOTE: Before tightening sensor nut, push downward on sensor housing (2) in an attempt to make it flush with interior contour of wheel (1).

4. While holding sensor in position, tighten sensor nut to 6 N.m (53 in. lbs.).
5. Mount tire on wheel following tire changer manufacturers instructions, paying special attention to the following to avoid damaging tire pressure sensor:

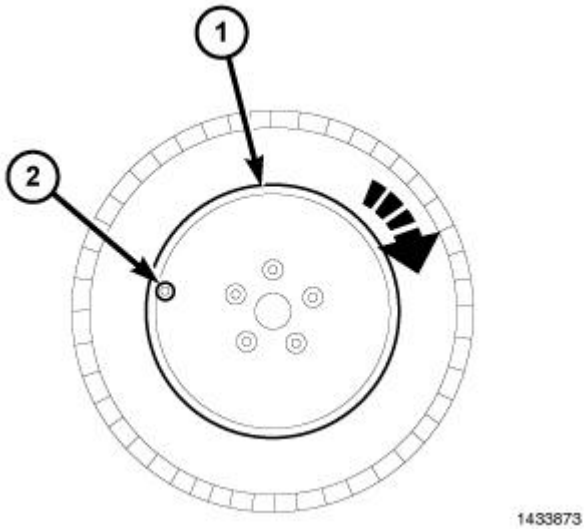

Fig. 35: Mounting Tire Using Rotating Wheel Machine
Courtesy of CHRYSLER GROUP, LLC

a. Rotating Wheel Tire Changers - Once the wheel is mounted to the changer, position the sensor valve stem (2) approximately 280° from the head of the changer (located at 1) in a clockwise direction before rotating the wheel (also in a clockwise direction) to mount the tire. Use this procedure on both the outer and inner tire beads.

1 - HEAD OF CHANGER LOCATED HERE
2 - VALVE STEM

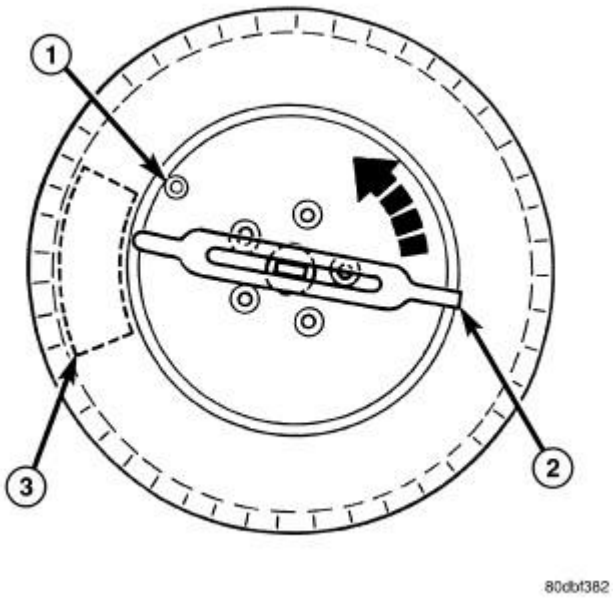

Fig. 36: Mounting Tire Using Rotating Tool Machine
Courtesy of CHRYSLER GROUP, LLC

b. Rotating Tool Tire Changers - Position the wheel on the changer so that the sensor valve stem (1) is located approximately 210° clockwise from the installation end of the mounting/dismounting tool (2) once the tool is mounted for tire installation. Make sure the sensor is clear of the lower bead breaker area (3) to avoid damaging the sensor when the breaker rises. Rotate the tool (2) in a counterclockwise direction to mount the tire. Use this procedure on both the outer and inner tire beads.

1 - VALVE STEM
2 - INSTALLATION END OF MOUNTING/DISMOUNTING TOOL
3 - BEAD BREAKER (KEEP CLEAR OF SENSOR)

c. Adjust air pressure to that listed on Tire Inflation Pressure Label (Placard) provided with vehicle (usually applied to driver's side B-pillar). Make sure **original style** valve stem cap is securely installed to keep moisture out of sensor.
d. Install tire and wheel assembly on vehicle.
e. Remove the support and lower the vehicle.
f. Perform one of the following to make the system learn the new sensor ID.
g. Use the TPM-RKE Analyzer, 9936, with the Scan Tool to program the WIN with the tire pressure sensor ID. This is part of the TPM Verification Diagnostic Test. Refer to **STANDARD PROCEDURE** .

h. Once the vehicle has remained stationary for more than 20 minutes, drive vehicle for a minimum of 10 minutes while maintaining a continuous speed above 15 mph (24 km/h). During this time, the system will learn the new sensor ID. This is part of the TPM Diagnostic Verification Test. Refer to **STANDARD PROCEDURE** .

NOTE: If a sensor cannot be trained, refer to appropriate diagnostic information.

TIRES

DESCRIPTION

TIRE

Tires are designed and engineered for each specific vehicle. They provide the best overall performance for normal operation. The ride and handling characteristics match the vehicle's requirements. With proper care they will give excellent reliability, traction, skid resistance, and tread life.

Driving habits have more effect on tire life than any other factor. Careful drivers will obtain, in most cases, much greater mileage than severe use or careless drivers. A few of the driving habits which will shorten the life of any tire are:

- Rapid acceleration
- Severe application of brakes
- High-speed driving
- Taking turns at excessive speeds
- Striking curbs and other obstacles
- Operating vehicle with over or under inflated tire pressures

Radial ply tires are more prone to irregular tread wear. It is important to follow the tire rotation interval shown in the section on Tire Rotation. This will help to achieve a greater tread-life potential.

TIRE IDENTIFICATION

Tire type, size, load index and speed rating are encoded in the letters and numbers imprinted on the side wall of the tire. Refer to the TIRE IDENTIFICATION chart to decipher the code. For example purposes, the tire size P225/60 R 16 97 T is used in the chart. An All Season type tire will also have either M + S, M AND S or M - S (indicating mud and snow traction) imprinted on the side wall. An Extra or Light Load marking "XL" or "LL" may also be listed on the sidewall. The absence of an "XL" or "LL" marking infers a standard load tire.

TIRE IDENTIFICATION

Reading Tire Codes		
P	TIRE TYPE (Not present on all tires)	P - Passenger
		T - Temporary
		C - Commercial

		LT - Light Truck
225	SECTIONAL WIDTH	SHOWN IN MILLIMETERS
60	ASPECT RATIO	SHOWN IN PERCENTAGE*
R	CONSTRUCTION TYPE	R - RADIAL
		B - BIAS BELTED
		D - DIAGONAL (BIAS)
16	WHEEL DIAMETER	SHOWN IN INCHES
97	LOAD INDEX	**
T	SPEED RATING	**

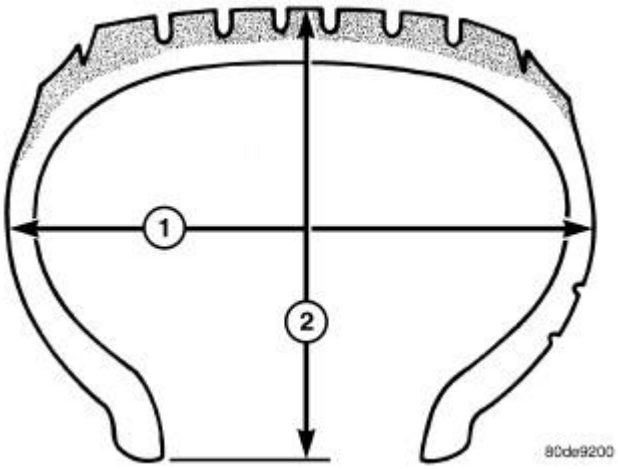

Fig. 37: Tire Aspect Ratio
Courtesy of CHRYSLER GROUP, LLC

1 - SECTIONAL WIDTH 2 - SECTIONAL HEIGHT

NOTE: * Height (2) ÷ Width (1) = Aspect Ratio.

NOTE: ** Consult the tire manufacturer regarding any questions on tire specifications or capabilities.

TIRE CHAINS

Refer to the Owner's Manual supplied with the vehicle to determine whether the use of tire chains is permitted on this vehicle.

TIRE - SRT8

There is no spare tire available with this vehicle. It is equipped with the TIREFIT tire repair kit to be used to repair small punctures in the tire as necessary. For additional information, refer to the Owner's Manual.

There are two different tire types available for the SRT8 vehicle. A standard Three-Season tire and an optional All-Season tire. Both tires have a non-directional asymmetrical tread pattern.

NOTE: The Three-Season tire size differs front-to-rear on the vehicle. Because of this size difference, normal tire rotation is not applicable. The All-Season tire and wheel combination may be rotated. Refer to STANDARD PROCEDURE.

THREE-SEASON TIRE

DESCRIPTION	SPECIFICATION
Manufacturer	Goodyear
Model	Eagle F1 Supercar
Size - Front	245/45ZR20
Size - Rear	255/45ZR20

ALL-SEASON TIRE

DESCRIPTION	SPECIFICATION
Manufacturer	Goodyear
Model	Eagle RS-A
Size	245/45ZR20

REPLACEMENT TIRES

WARNING: Failure to equip the vehicle with tires having adequate speed capability can result in sudden tire failure.

WARNING: In order to maintain the speed capability of the vehicle, replacement tires must have speed ratings equal to or higher than those fitted to the vehicle as original equipment. If tires with lower speed ratings are fitted, the vehicle's handling may be affected and the speed capability of the vehicle may be lowered to the maximum speed capability of the replacement tires. To avoid an accident resulting in severe or fatal injury, consult the tire manufacturer in regards to maximum speed ratings.

It is recommended that tires equivalent to the original equipment tires be used when replacement is needed.

Failure to use equivalent replacement tires may adversely affect the safety and handling of the vehicle.

The original equipment tires provide a proper combination of many characteristics such as:

- Ride
- Noise
- Handling
- Durability

- Tread life
- Traction
- Rolling resistance
- Speed capability

The use of tires smaller than the minimum tire size approved for the vehicle can result in tire overloading and failure.

Use tires that have the approved load rating for the vehicle and never overload them. Failure to equip the vehicle with tires having adequate speed capability can result in sudden tire failure and loss of vehicle control.

The use of oversize tires may cause interference with vehicle components. Under extremes of suspension and steering travel, interference with vehicle components may cause tire damage.

SPARE TIRE

A compact (temporary) spare tire and wheel assembly is standard equipment on most models of this vehicle. A full-size spare is not available on most models.

SRT vehicles and select Export vehicles are equipped with the TIREFIT tire repair kit as standard equipment in place of a spare tire. It is to be used to repair small punctures in the tire as necessary. A compact spare tire is optional on select Export Vehicles. For additional information, refer to the Owner's Manual.

The spare tire and wheel diameters and wheel offsets match those of the road wheels on the vehicle.

The compact (temporary) spare tire is designed for emergency use only. The original tire should be repaired or replaced at the first opportunity, then reinstalled. Do not exceed speeds of 80 km/h (50 mph) when using the compact (temporary) spare tire and wheel assembly. Refer to the Owner's Manual for complete details.

DIAGNOSIS AND TESTING

TIRE NOISE

Unusual tire noise can be associated with tire and wheel vibration or irregular tire wear. For vibration issues, refer to **DIAGNOSIS AND TESTING**. For irregular tire wear issues. Refer to **TIRES, DIAGNOSIS AND TESTING**.

TIRE/VEHICLE LEAD

Refer to **WHEEL ALIGNMENT, DIAGNOSIS AND TESTING** .

TIRE WEAR PATTERNS

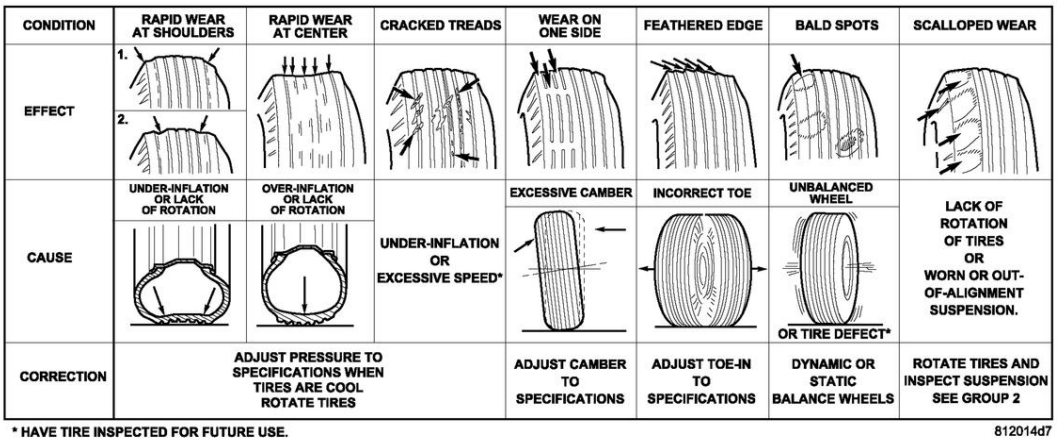

Fig. 38: Identifying Tire Wear Patterns
Courtesy of CHRYSLER GROUP, LLC

Under inflation will cause wear on the shoulders of tire. Over inflation will cause wear at the center of tire.

Excessive camber causes the tire to run at an angle to the road. One side of tread is then worn more than the other.

Excessive toe-in or toe-out causes wear on the tread edges and a feathered effect across the tread.

TREAD WEAR INDICATORS

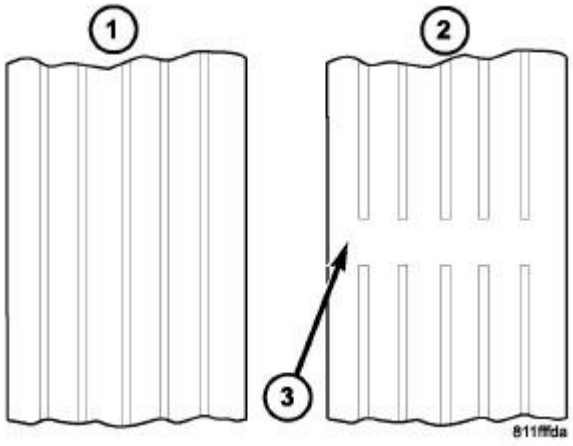

Fig. 39: Identifying Tread Wear Indicators
Courtesy of CHRYSLER GROUP, LLC

Tread wear indicators are molded into the bottom of the tread grooves. When tread depth is 1.6 mm (1/16 in.), the tread wear indicators will appear as a 13 mm (1/2 in.) band (3).

Tire replacement is necessary when indicators appear in two or more grooves or if localized balding occurs.

STANDARD PROCEDURE

TIRE INFLATION PRESSURES

The specified tire pressures have been chosen to provide safe operation, vehicle stability, and a smooth ride. The proper tire pressure specification can be found on the Tire And Loading Information Label provided with the vehicle (usually on the driver's door opening or B-pillar).

A quality air pressure gauge is recommended to check tire air pressure. Tire pressure should be checked cold once per month. Check tire pressure more frequently when the weather temperature varies widely. Tire pressure will decrease when the outdoor temperature drops. After checking the air pressure, replace valve cap finger tight.

Inflation pressures specified on the Tire Inflation Pressure Label are always the cold inflation pressure of the tire. Cold inflation pressure is obtained after the vehicle has not been operated for at least 3 hours, or the vehicle is driven less than one mile after being inoperative for 3 hours. Tire inflation pressures may increase from 2 to 6 pounds per square inch (psi) during operation. Do not reduce this normal pressure buildup.

Improper inflation can cause:

- Uneven wear patterns
- Reduced tread life
- Reduced fuel economy
- Unsatisfactory ride
- The vehicle to drift.

WARNING: Over or Under inflated tires can affect vehicle handling. The tire can fail suddenly, resulting in loss of vehicle control.

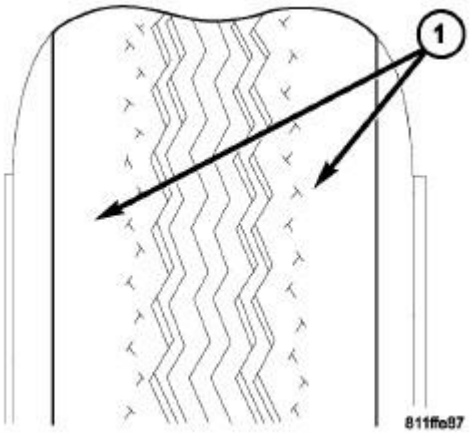

Fig. 40: Under Inflation
Courtesy of CHRYSLER GROUP, LLC

Under inflation causes rapid shoulder wear, tire flexing, and can result in tire failure (1).

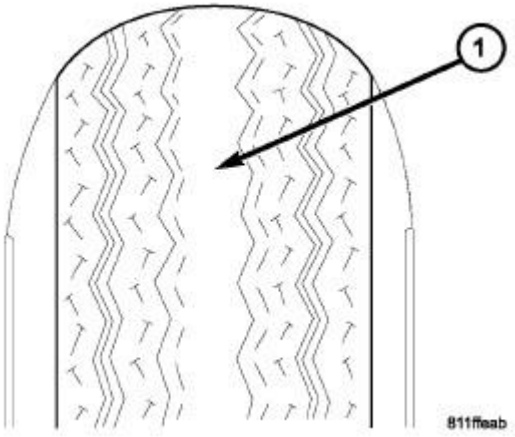

Fig. 41: Over Inflation
Courtesy of CHRYSLER GROUP, LLC

Over inflation causes rapid center wear and loss of the tire's ability to cushion shocks (1).

TIRE LEAK REPAIRING

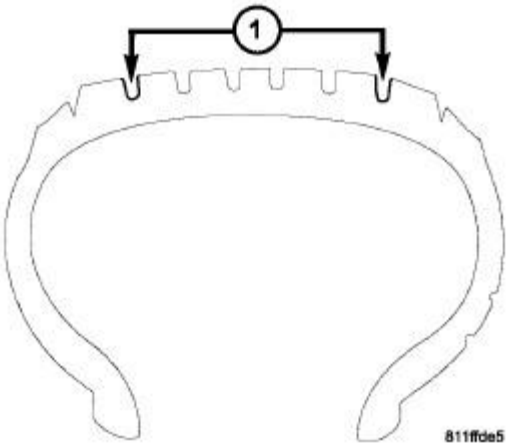

Fig. 42: Identifying Tire Repair Area
Courtesy of CHRYSLER GROUP, LLC

For proper repairing, a radial tire must be removed from the wheel. Repairs should only be made if the defect or puncture, is in the tread area (1). The tire should be replaced if the puncture is located in the sidewall.

Deflate tire completely before attempting to dismount the tire from the wheel. **Use a lubricant such as a mild soap solution when dismounting or mounting tire.** Use tools free of burrs or sharp edges which could damage the tire or wheel rim.

Before mounting tire on wheel, make sure all rust is removed from the rim bead and repaint if necessary.

Install wheel on vehicle, and progressively tighten the 5 wheel nuts to a torque of 150 N.m (110 ft. lbs.).

WHEELS

DESCRIPTION

DESCRIPTION

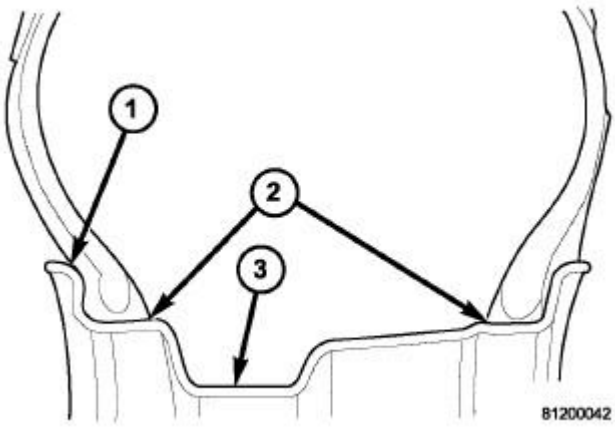

Fig. 43: Identifying Wheel/Rim Design
Courtesy of CHRYSLER GROUP, LLC

All vehicles use either steel or cast aluminum drop center wheels. The original equipment wheels are designed for proper operation at all loads up to the specified maximum vehicle capacity.

Every wheel has raised sections between the rim flanges (1) and drop well (3) called safety humps (2). In case of air loss, these raised sections help hold the tire in position on the wheel until the vehicle can be brought to a safe stop. When being installed on the wheel, initial inflation of the tire forces the tire bead over these raised sections into place.

The wheel studs and nuts are designed for specific wheel applications and must be replaced with equivalent parts. Do not use replacement parts of lesser quality or of a substitute design. All aluminum and steel wheels have wheel stud nuts with an enlarged nose. This enlarged nose is necessary to ensure proper retention of the wheels.

DIAGNOSIS AND TESTING

DIAGNOSIS AND TESTING - WHEEL INSPECTION

Inspect wheels for:

- Excessive runout

- Dents, cracks or irregular bends
- Damaged wheel stud (lug) holes
- Air Leaks

NOTE: Do not attempt to repair a wheel by hammering, heating or welding.

If a wheel is damaged, an original equipment replacement wheel should be used. When obtaining replacement wheels, they should be equivalent in load carrying capacity. The diameter, width, offset, pilot hole and bolt circle of the wheel should be the same as the original wheel.

WARNING: Failure to use equivalent replacement wheels may adversely affect the safety and handling of the vehicle.

WARNING: Replacement with used wheels is not recommended. The service history of the wheel may have included severe treatment or very high mileage. The rim could fail without warning.

WARNING: Chrysler LLC does not recommend that customers use "reconditioned" wheels (wheels that have been damaged and repaired) because they can result in a sudden catastrophic wheel failure which could cause loss of control and result in injury or death. For clarification:

- **Cosmetic refinishing for the purpose of repairing a superficial flaw is an acceptable procedure providing it is limited to paint or clear coat only, the wheel is not modified in any way, and there is no exposure to paint curing heat over 200 degrees Fahrenheit (93 degrees Celsius).**
- **Damaged wheels are those which have been bent, broken, cracked or sustained some other physical damage which may have compromised the wheel structure.**
- **Repaired indicates that the wheel has been modified through bending, welding, heating, straightening, or material removal to rectify damage.**
- **Re-plating of chrome plated wheels is not an acceptable procedure nor is chrome plating of original equipment painted or polished wheels, as this may alter mechanical properties and affect fatigue life.**

SPECIFICATIONS

WHEEL

SPECIFICATIONS

DESCRIPTION	SPECIFICATION

Wheel Mounting (Lug) Nut Hex Size	21 mm
Wheel Mounting Stud Size	M14 x 1.5 mm

TORQUE

DESCRIPTION	N.m	Ft. Lbs.	In. Lbs.
TPM Sensor Mounting Nut	8	-	71
Valve Core	0.5	-	4
Wheel Mounting (Lug) Nut	150	110	-

WHEEL - SRT8

SPECIFICATIONS

DESCRIPTION	SPECIFICATION
Wheel Size	20 in. X 9 in.
Wheel Bolt Pattern (Circle) Size	115 mm (4.53 in.)
Wheel Offset	25.5 mm
Wheel Mounting Stud Size	M14 x 1.5 mm

TORQUE SPECIFICATIONS

DESCRIPTION	N.m	Ft. Lbs.	In. Lbs.
Wheel Mounting (Lug) Nut	150	110	-

CLEANING

CLEANING

All wheels and wheel trim, especially aluminum and chrome plated, should be cleaned regularly using mild soap and water to maintain their luster and to prevent corrosion. Wash them with the same soap solution recommended for the body of the vehicle.

When cleaning extremely dirty wheels, care must be taken in the selection of tire and wheel cleaning chemicals and equipment to prevent damage to the wheels. Mopar® Tire and Wheel Cleaner, Mopar® Wheel Treatment or Mopar® Chrome Cleaner is recommended. Any of the "DO NOT USE" items listed below can damage wheels and wheel trim.

DO NOT USE:

- Any abrasive cleaner
- Any abrasive cleaning pad (such as steel wool) or abrasive brush
- Any cleaner that contains an acid which can react with and discolor the chrome surface. **Many wheel cleaners contain acids that can harm the wheel surface.**
- Oven cleaner
- A car wash that uses carbide-tipped wheel cleaning brushes or acidic solutions.

STUD, WHEEL, FRONT

REMOVAL

REMOVAL

NOTE: Before proceeding, refer to CAUTION and WARNING .

CAUTION: Wheel mounting studs MUST NOT be hammered out of hub flange of hub and bearing assembly. If a stud is removed by hammering it out, damage to hub and bearing assembly will occur leading to premature bearing failure.

1. Raise and support vehicle. Refer to **HOISTING, STANDARD PROCEDURE** .
2. Remove front wheel and tire assembly. Refer to **REMOVAL**.
3. Access and remove front brake rotor. Refer to **ROTOR, BRAKE, REMOVAL** .

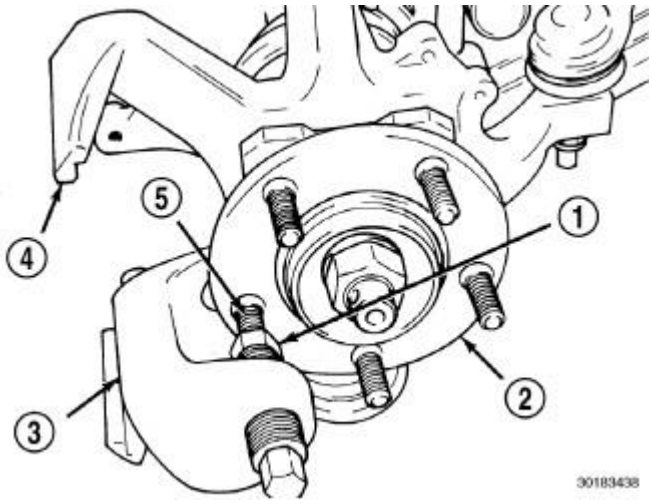

Fig. 44: Removing Front Wheel Stud
Courtesy of CHRYSLER GROUP, LLC

1 - WHEEL MOUNTING (LUG) NUT
2 - HUB AND BEARING ASSEMBLY
3 - SPECIAL TOOL C-4150A
4 - STEERING KNUCKLE
5 - WHEEL

STUD

4. On wheel mounting stud to be removed, install a wheel mounting (lug) nut (1) far enough so the threads on the stud are even with end of nut. Install Remover (3) (special tool #C-4150A, Press, Ball Joint), on hub and bearing flange and wheel stud (5).
5. Tighten screw on Remover, pushing wheel stud (5) out of hub flange. Once shoulder of wheel stud is past flange, remove special tool. Remove nut from stud and remove stud from hub flange.

INSTALLATION

INSTALLATION

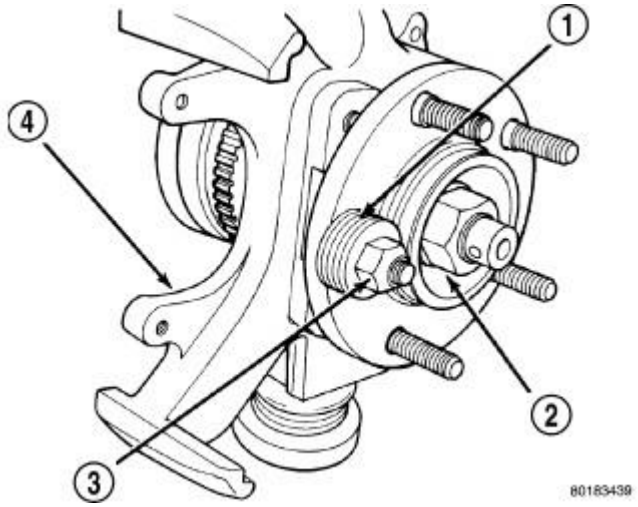

Fig. 45: Washer, Nut, Steering Knuckle & Hub Assembly
Courtesy of CHRYSLER GROUP, LLC

1 - WASHERS
2 - HUB AND BEARING ASSEMBLY
3 - WHEEL MOUNTING (LUG) NUT
4 - STEERING KNUCKLE

1. Install replacement wheel stud into flange of hub and bearing from rear. Install stack of washers (1) on wheel stud, then install a standard type wheel mounting (lug) nut (3) on stud with flat side of lug nut against washers.
2. Tighten nut (3), pulling wheel stud into hub flange. Once head of stud is fully seated against rear of hub flange, remove nut and washers from stud.
3. Install brake rotor and caliper Refer to **ROTOR, BRAKE, INSTALLATION** .
4. Install wheel and tire assembly. Refer to **INSTALLATION**. Tighten wheel mounting (lug) nuts in proper sequence to 150 N.m (110 ft. lbs.).
5. Lower vehicle.
6. Road test vehicle to ensure proper operation of the brakes.

STUD, WHEEL, REAR

REMOVAL

REMOVAL

NOTE: Before proceeding, refer to CAUTION and WARNING .

CAUTION: Wheel mounting studs MUST NOT be hammered out of hub flange of hub and bearing assembly. If a stud is removed by hammering it out, damage to hub and bearing assembly will occur leading to premature bearing failure.

1. Raise and support vehicle. Refer to **HOISTING, STANDARD PROCEDURE** .
2. Remove rear wheel and tire assembly. Refer to **REMOVAL**.
3. Access and remove rear brake rotor. Refer to **ROTOR, BRAKE, REMOVAL** .

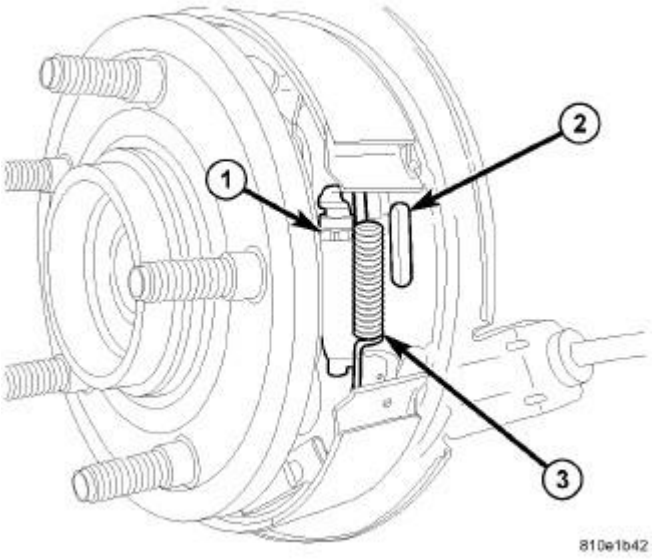

Fig. 46: Shoe Adjuster & Spring
Courtesy of CHRYSLER GROUP, LLC

1 - ADJUSTER STAR WHEEL
2 - ADJUSTER ACCESS HOLE IN SUPPORT

PLATE
3 - SPRING

4. Back off shoe adjustment until adjuster (1) threads bottom.
5. Using appropriate tools, remove spring (3) at adjuster.
6. Pull upward on upper shoe near adjuster to provide enough slack to remove adjuster from shoes, then remove adjuster (1).

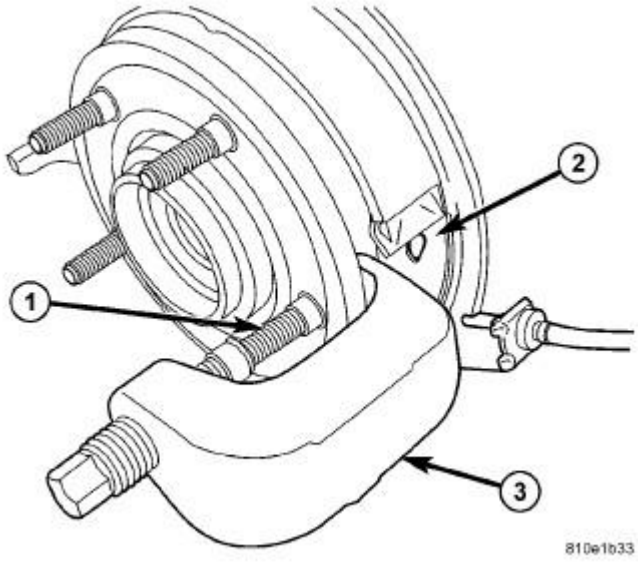

Fig. 47: Removing Stud From Hub
Courtesy of CHRYSLER GROUP, LLC

1 - STUD
2 - OPEN AREA WHERE ADJUSTER WAS REMOVED
3 - REMOVER C-4150A

7. Install Remover (3) (special tool #C-4150A, Press, Ball Joint), on hub and bearing flange and wheel stud (1).
8. Tighten Remover forcing screw, pushing wheel stud (1) out of hub and bearing flange. Remove tool (3).
9. Remove stud from rear of hub flange. It may be necessary to rock hub flange back and forth to ease stud removal.

INSTALLATION

INSTALLATION

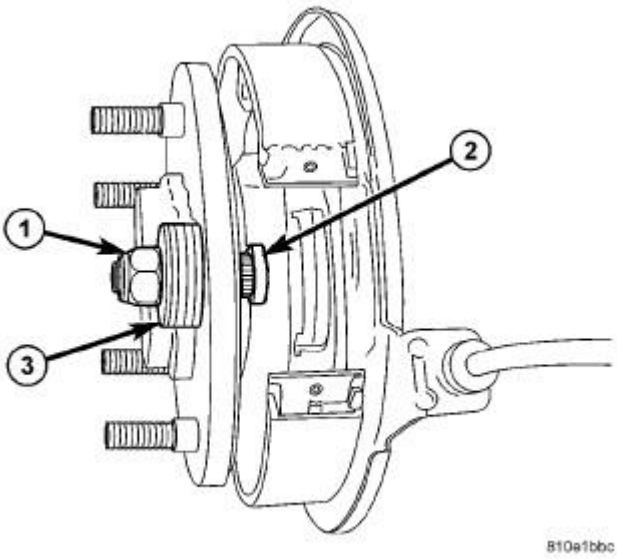

Fig. 48: Nut & Washers Installed On Stud
Courtesy of CHRYSLER GROUP, LLC

1 - STANDARD WHEEL NUT INSTALLED FLAT SIDE FIRST
2 - STUD
3 - STACK OF WASHERS

1. Install replacement wheel stud into flange of hub and bearing from rear (2). Install a stack of washers (3) (approximately 5, depending on thickness) over stud, then install a standard wheel mounting (lug) nut (1) on stud with flat side of nut against washers.
2. Tighten wheel mounting nut (1), pulling wheel stud into flange of hub and bearing. Once head of stud (2) is fully seated against rear of hub flange, remove nut and washers from wheel stud.

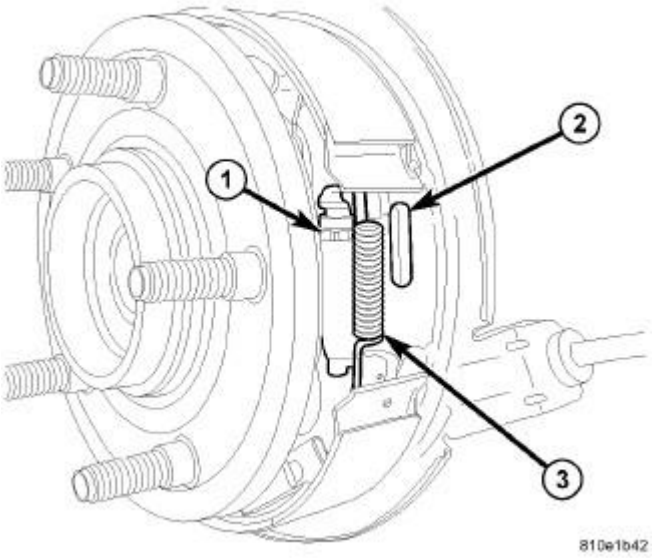

Fig. 49: Shoe Adjuster & Spring
Courtesy of CHRYSLER GROUP, LLC

1 - ADJUSTER STAR WHEEL
2 - ADJUSTER ACCESS HOLE IN SUPPORT PLATE
3 - SPRING

3. Install parking brake shoe adjuster (1) between upper and lower parking brake shoes. Position end of adjuster with star wheel upward. Once in place, slide upper shoe downward against adjuster mounting slot, taking up any slack between two pieces.
4. Using appropriate tools, install spring (3) at adjuster.

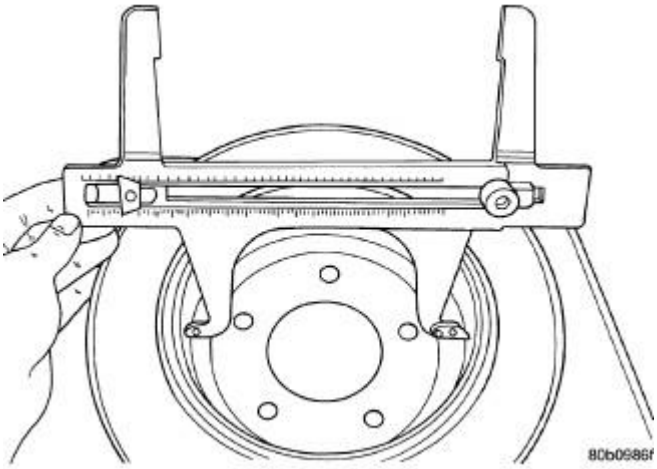

Fig. 50: Measuring Parking Brake Drum Diameter
Courtesy of CHRYSLER GROUP, LLC

NOTE: When measuring brake drum diameter, diameter should be measured in center of shoe contact surface area.

5. Using Brake Shoe Gauge (special tool #C-3919, Gauge, Brake Shoes), or equivalent, measure inside diameter of parking brake drum portion of rotor.

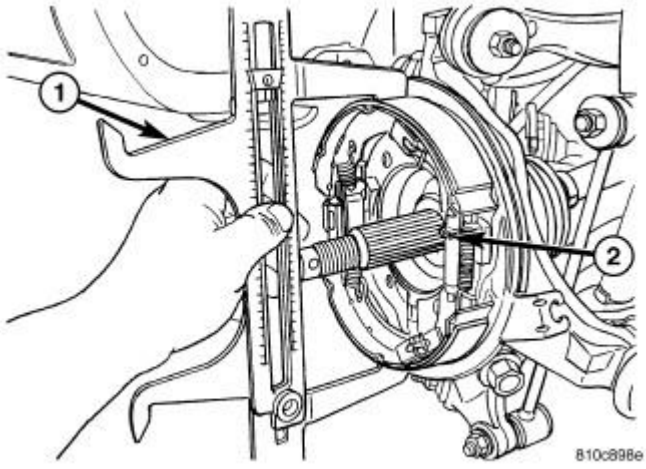

Fig. 51: Measuring Parking Brake Shoes
Courtesy of CHRYSLER GROUP, LLC

1 - BRAKE SHOE GAUGE
2 - ADJUSTER STAR WHEEL

6. Place Gauge (1) over parking brake shoes at widest point.
7. Using adjuster star wheel (2), adjust parking brake shoes until linings on both park brake shoes just touch jaws on gauge. This will give a good preliminary adjustment of parking brake shoes, before a final adjustment is made at end of this procedure.
8. Install brake rotor and components removed to access it. Refer to **ROTOR, BRAKE, INSTALLATION** .
9. Install wheel and tire assembly. Refer to **INSTALLATION**. Tighten wheel mounting (lug) nuts in proper sequence to 150 N.m (110 ft. lbs.).
10. Adjust parking brake shoes. Refer to **SHOES, PARKING BRAKE, ADJUSTMENTS** .
11. Lower vehicle.
12. Road test vehicle to ensure proper operation of the brakes.

AIR CONDITIONING

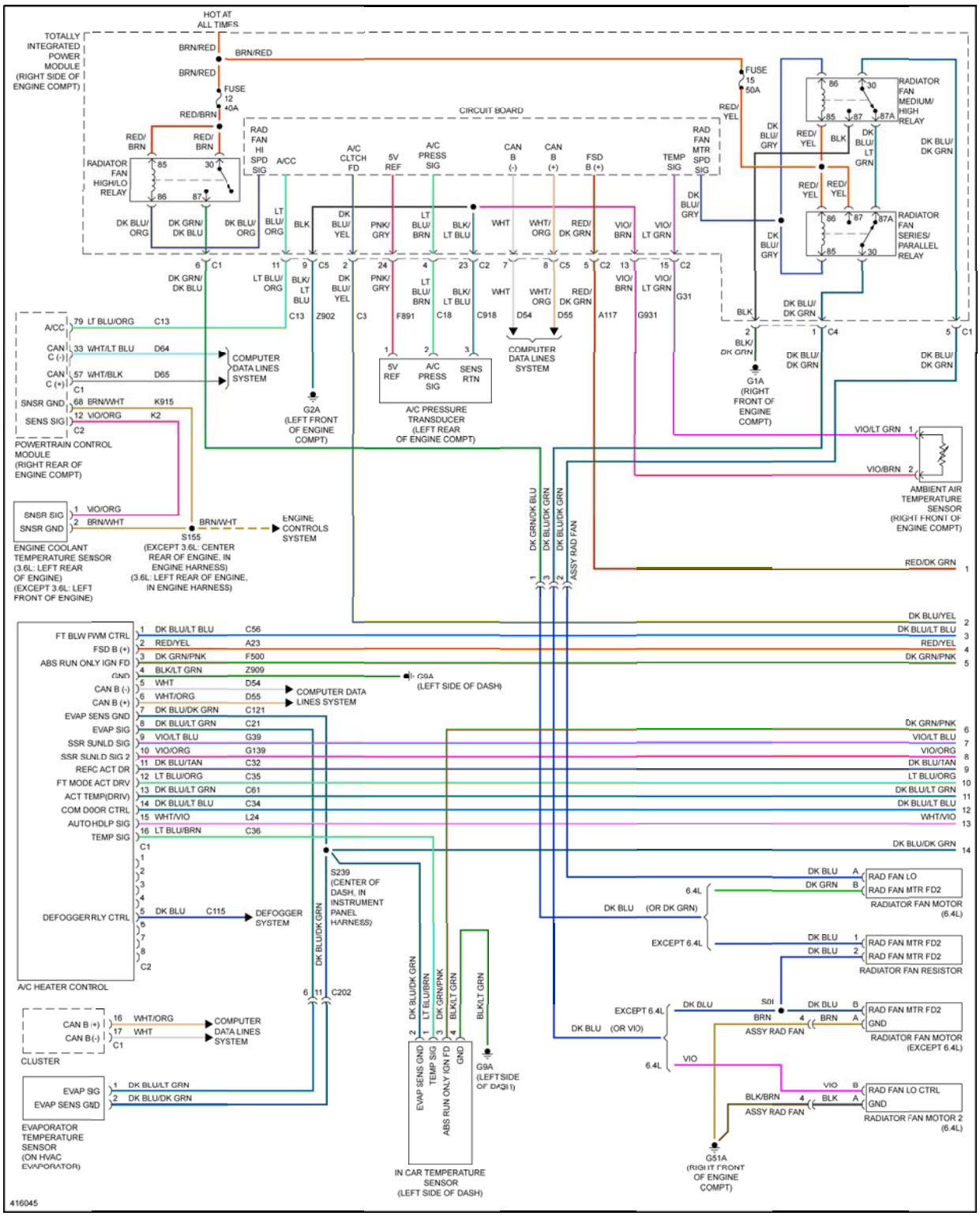

Fig. 1: Automatic A/C Circuit (1 of 2)

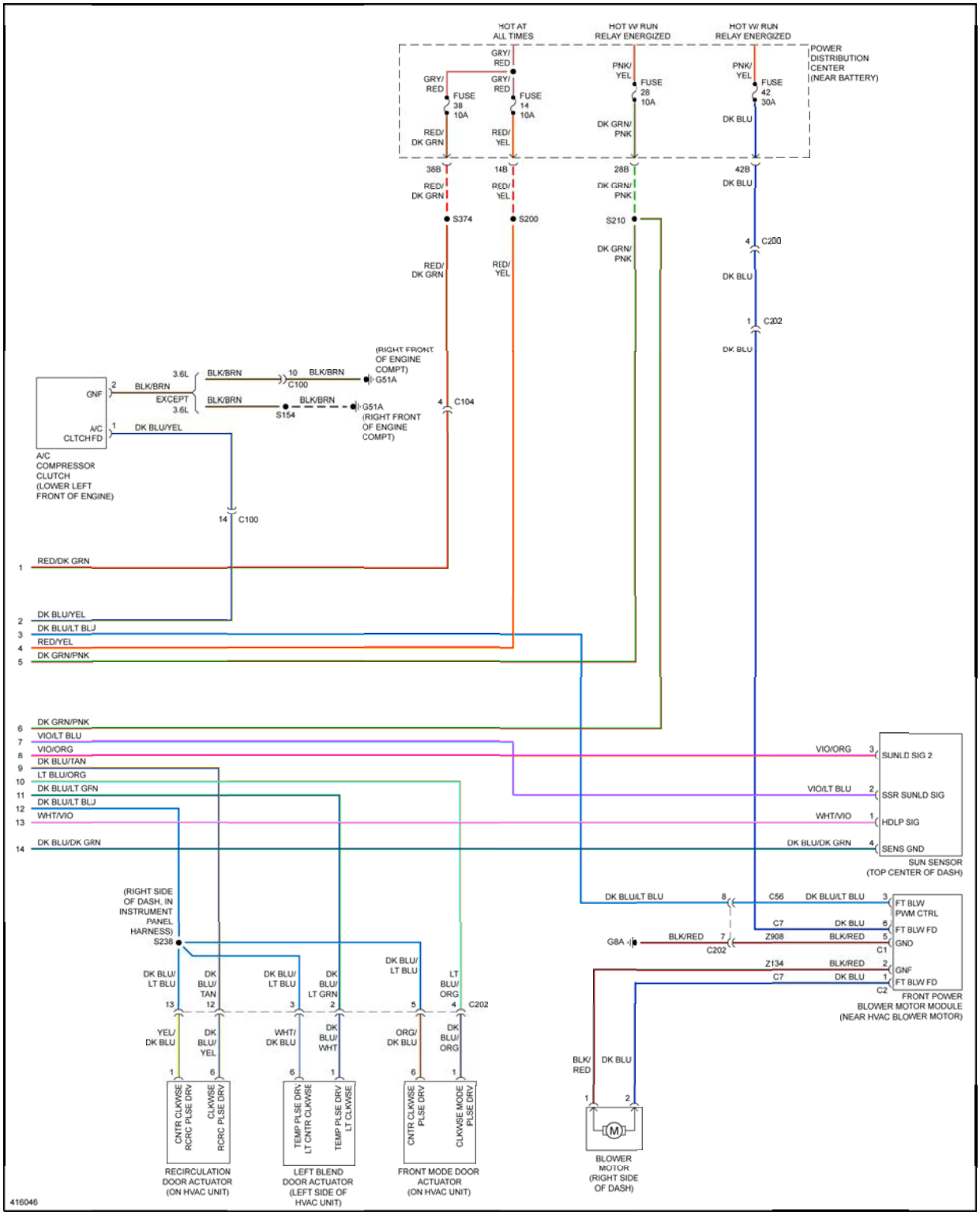

Fig. 2: Automatic A/C Circuit (2 of 2)

ANTI-LOCK BRAKES

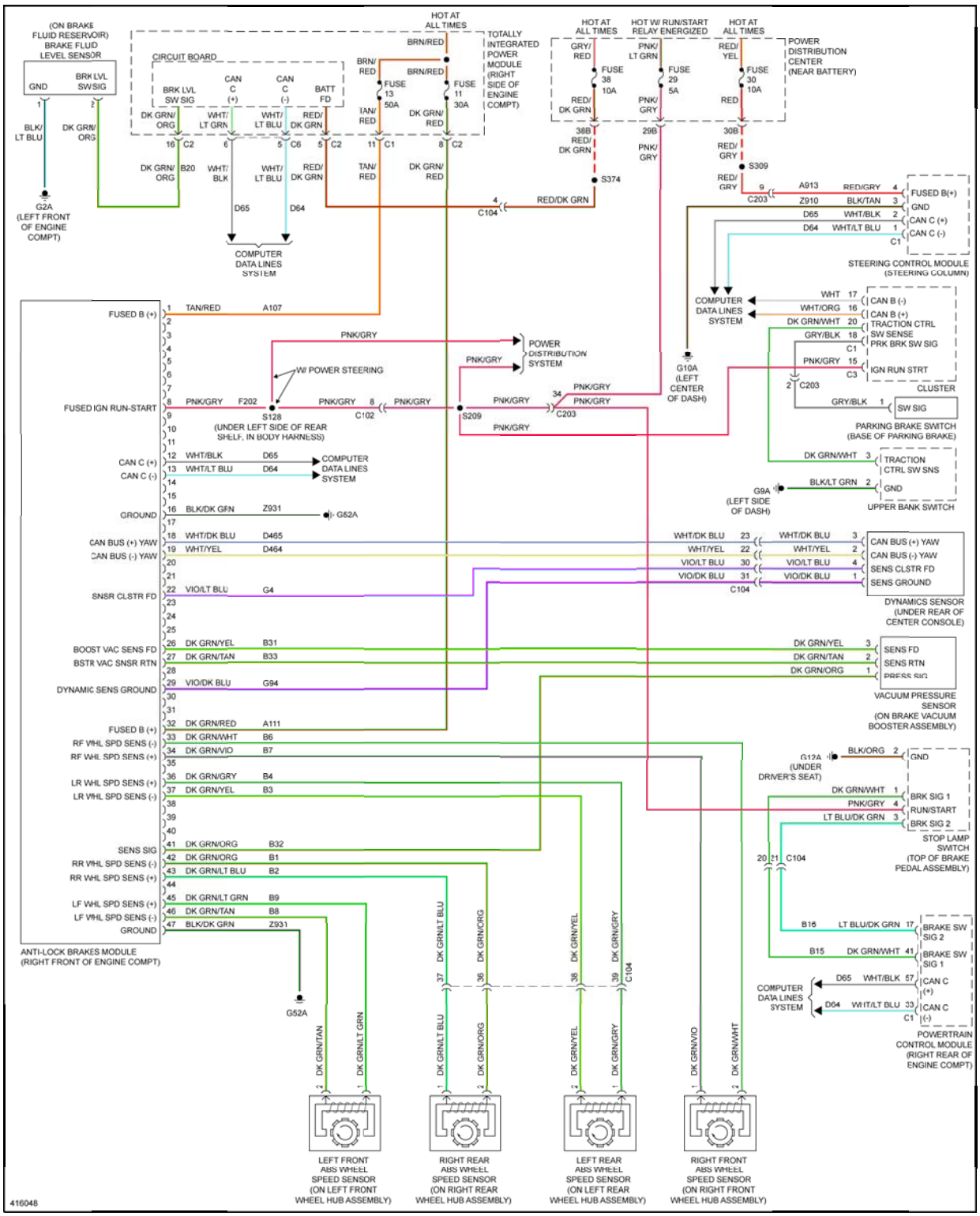

Fig. 3: Anti-lock Brakes Circuit

ANTI-THEFT

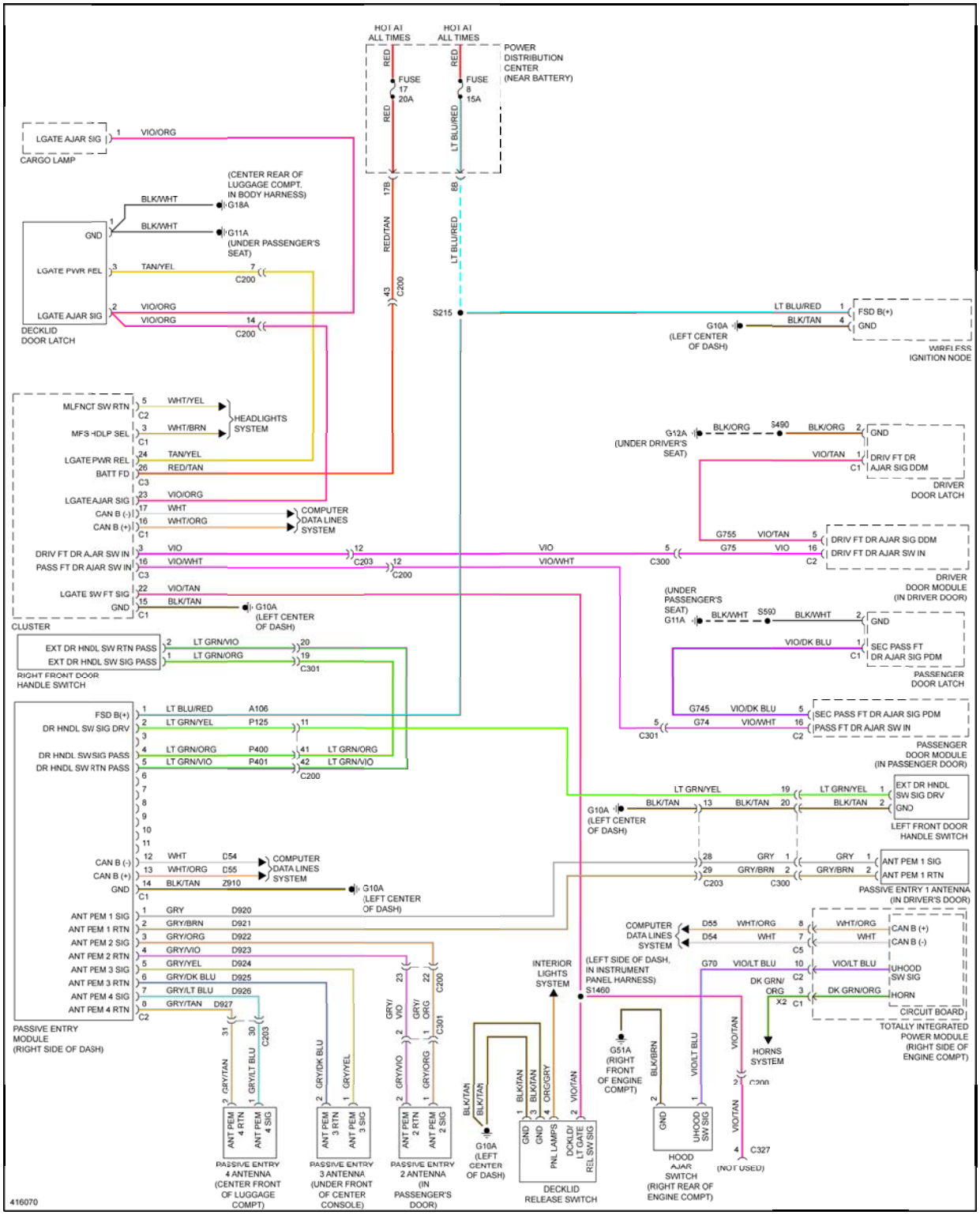

Fig. 4: Anti-theft Circuit

BODY CONTROL MODULES

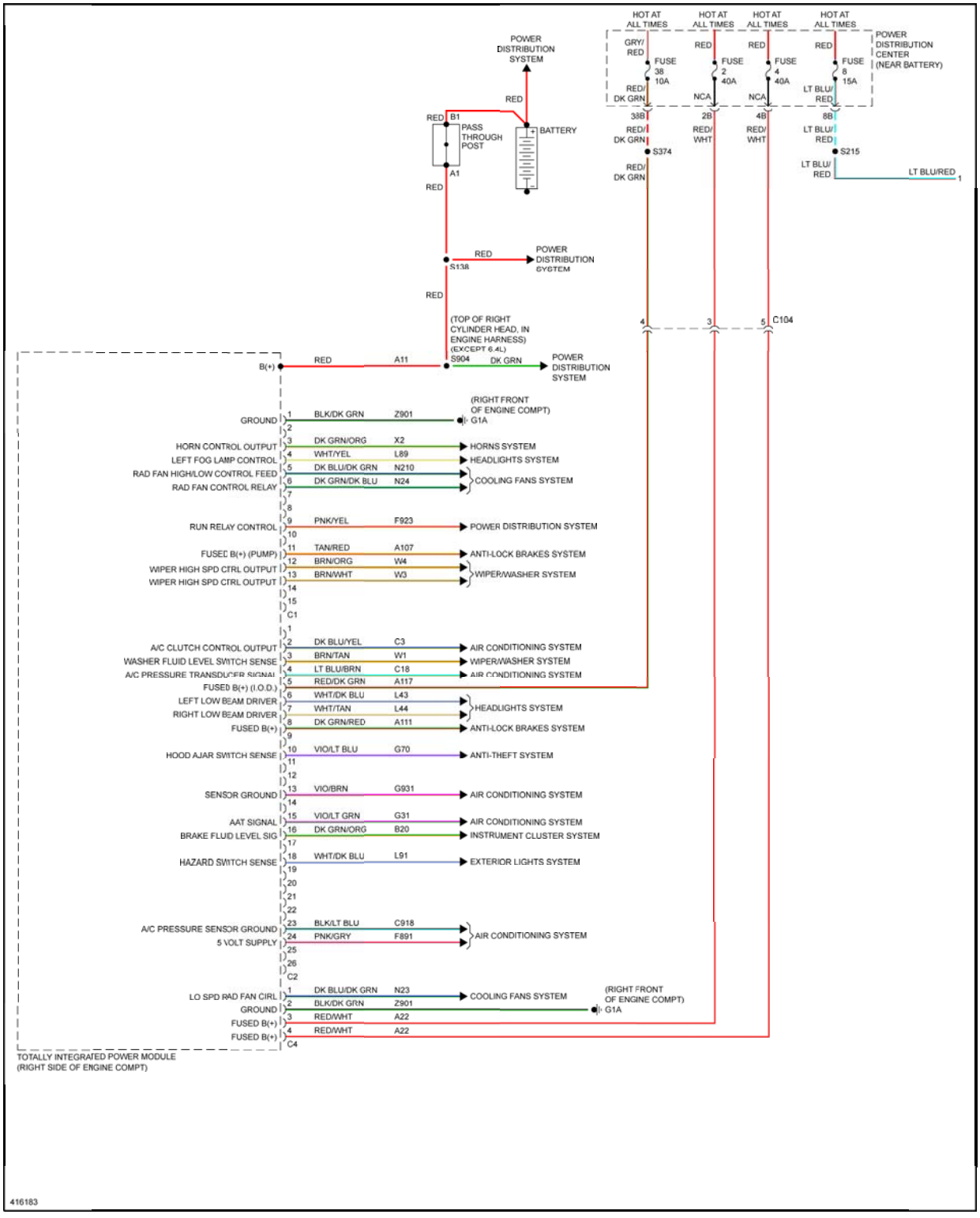

Fig. 5: Body Control Modules Circuit (1 of 2)

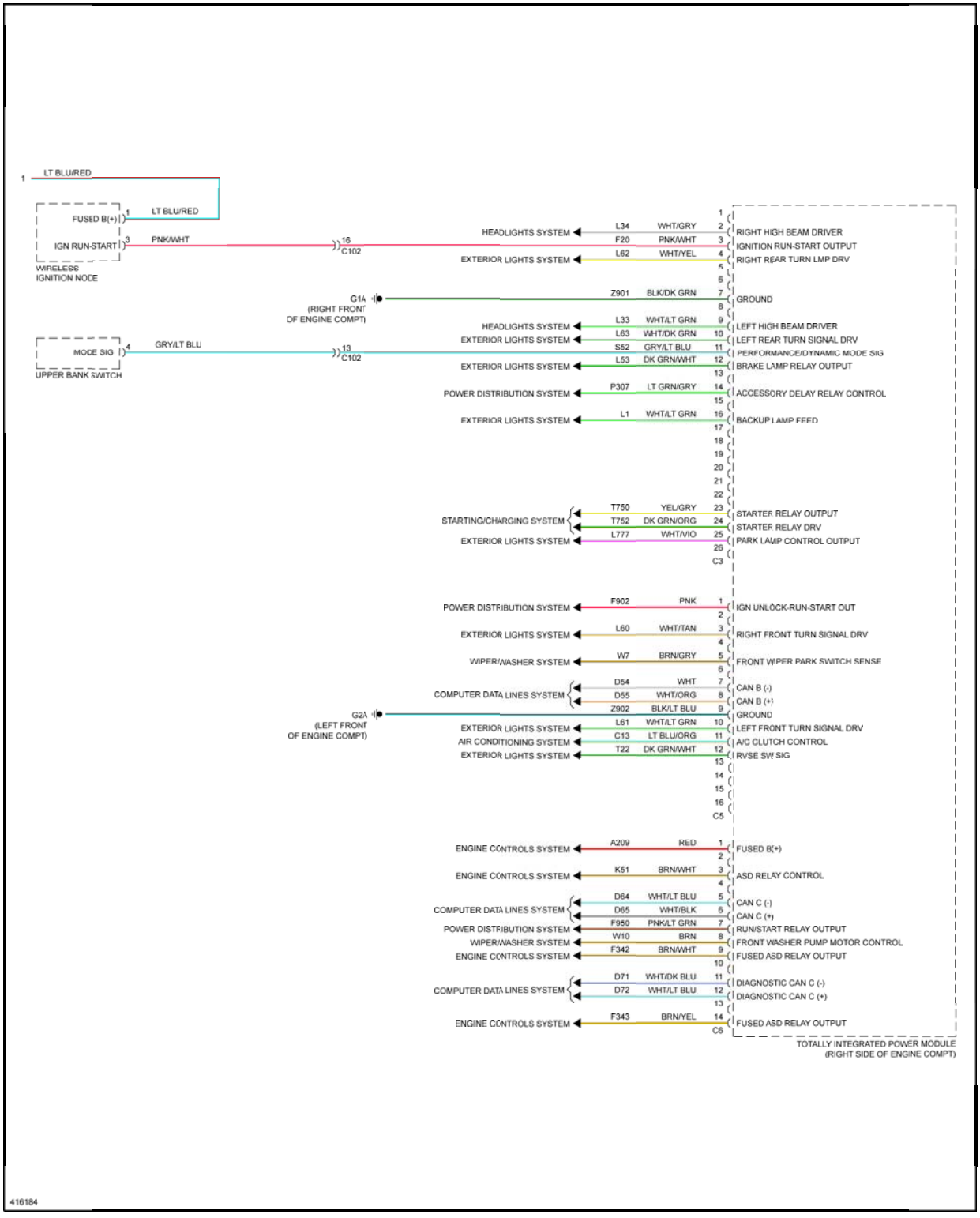

Fig. 6: Body Control Modules Circuit (2 of 2)

COMPUTER DATA LINES

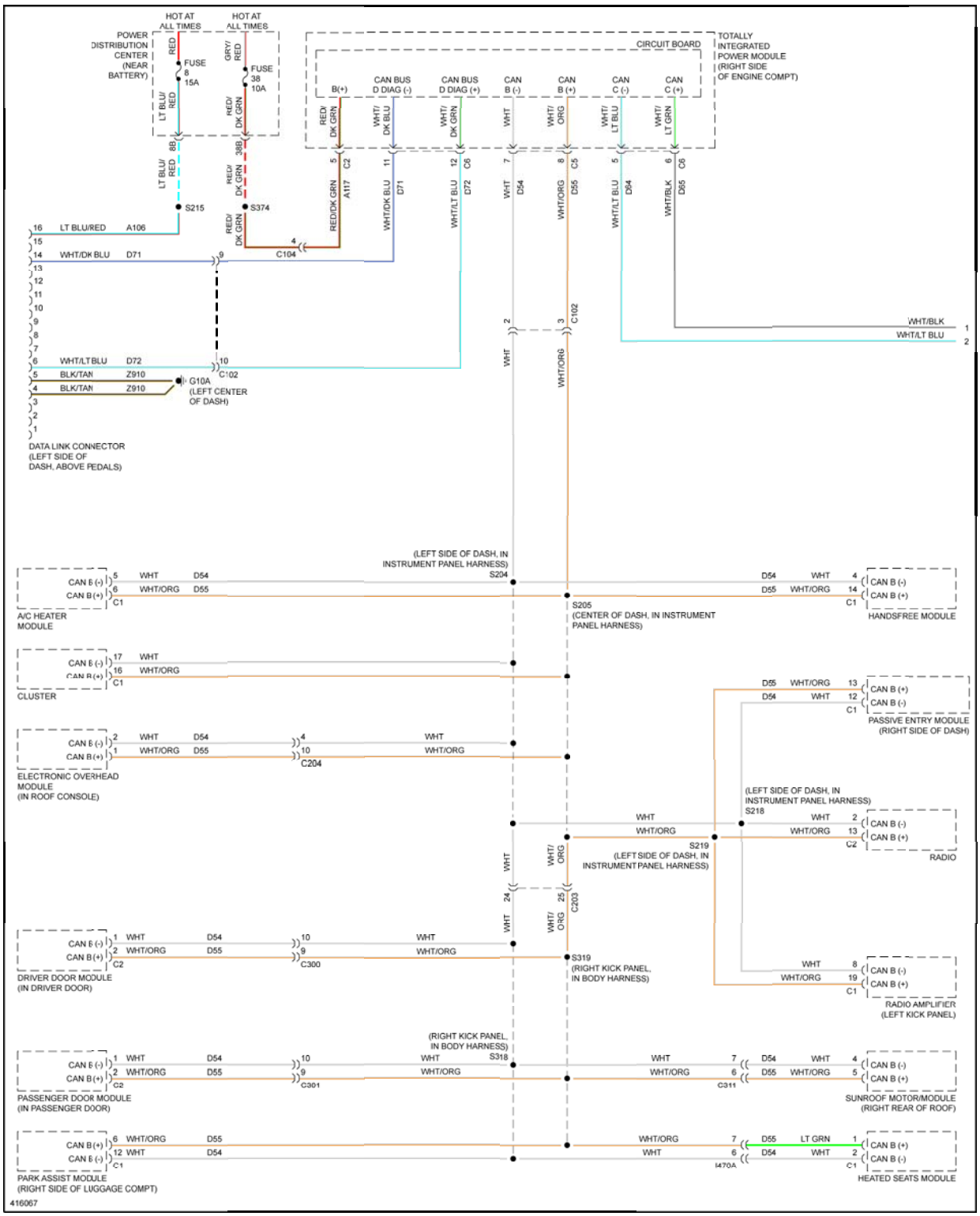

Fig. 7: Computer Data Lines Circuit (1 of 2)

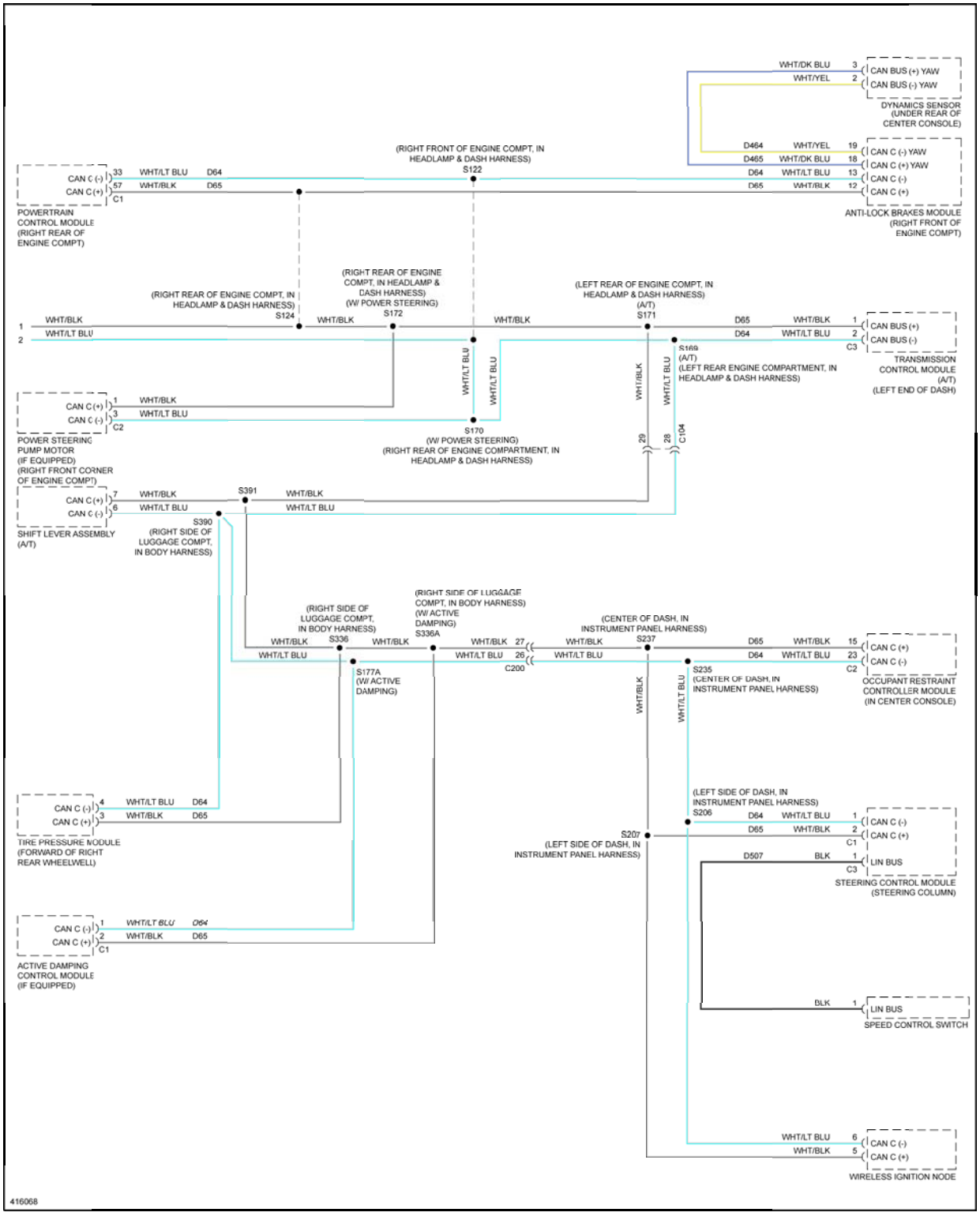

Fig. 8: Computer Data Lines Circuit (2 of 2)

COOLING FAN

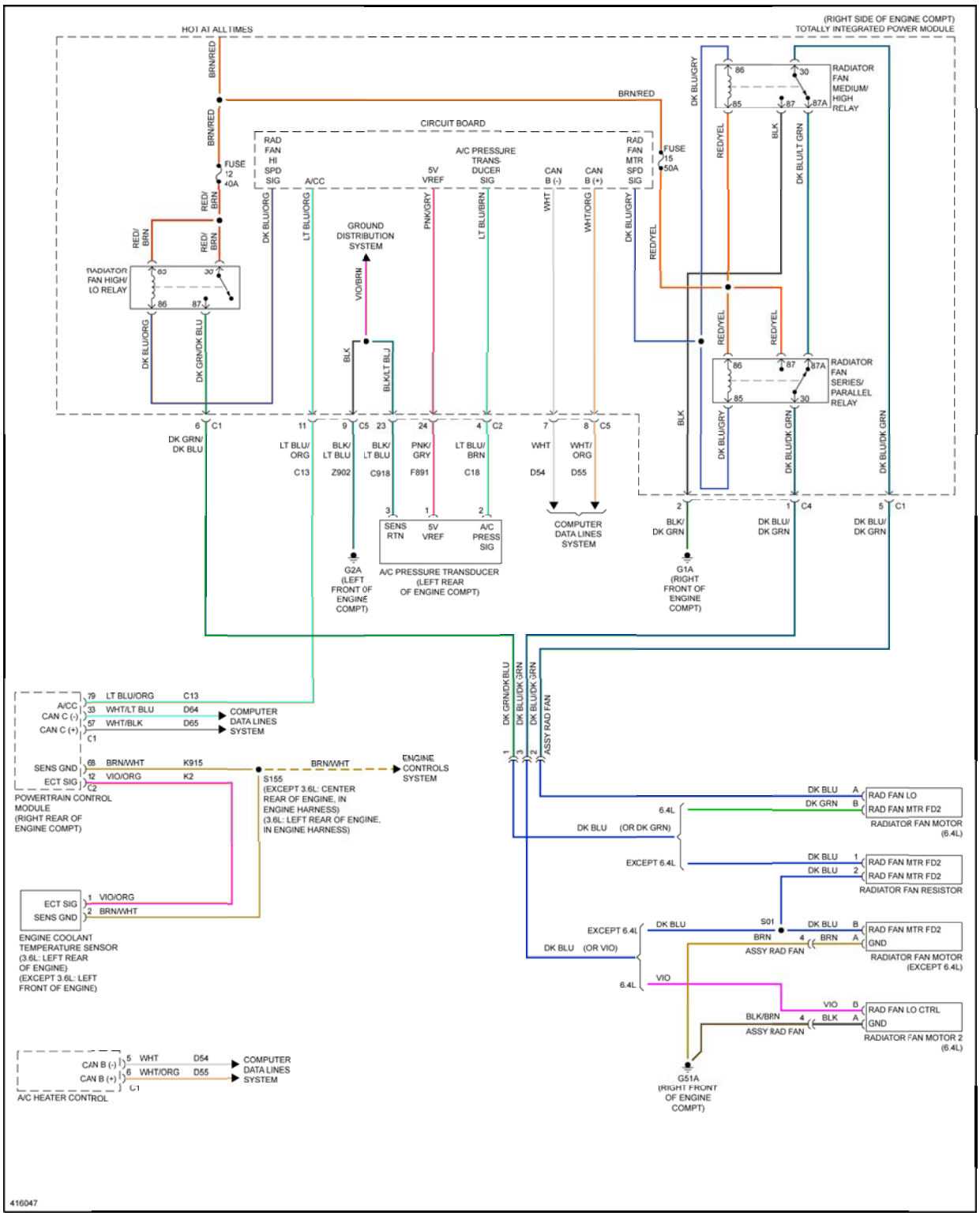

Fig. 9: Cooling Fan Circuit

CRUISE CONTROL

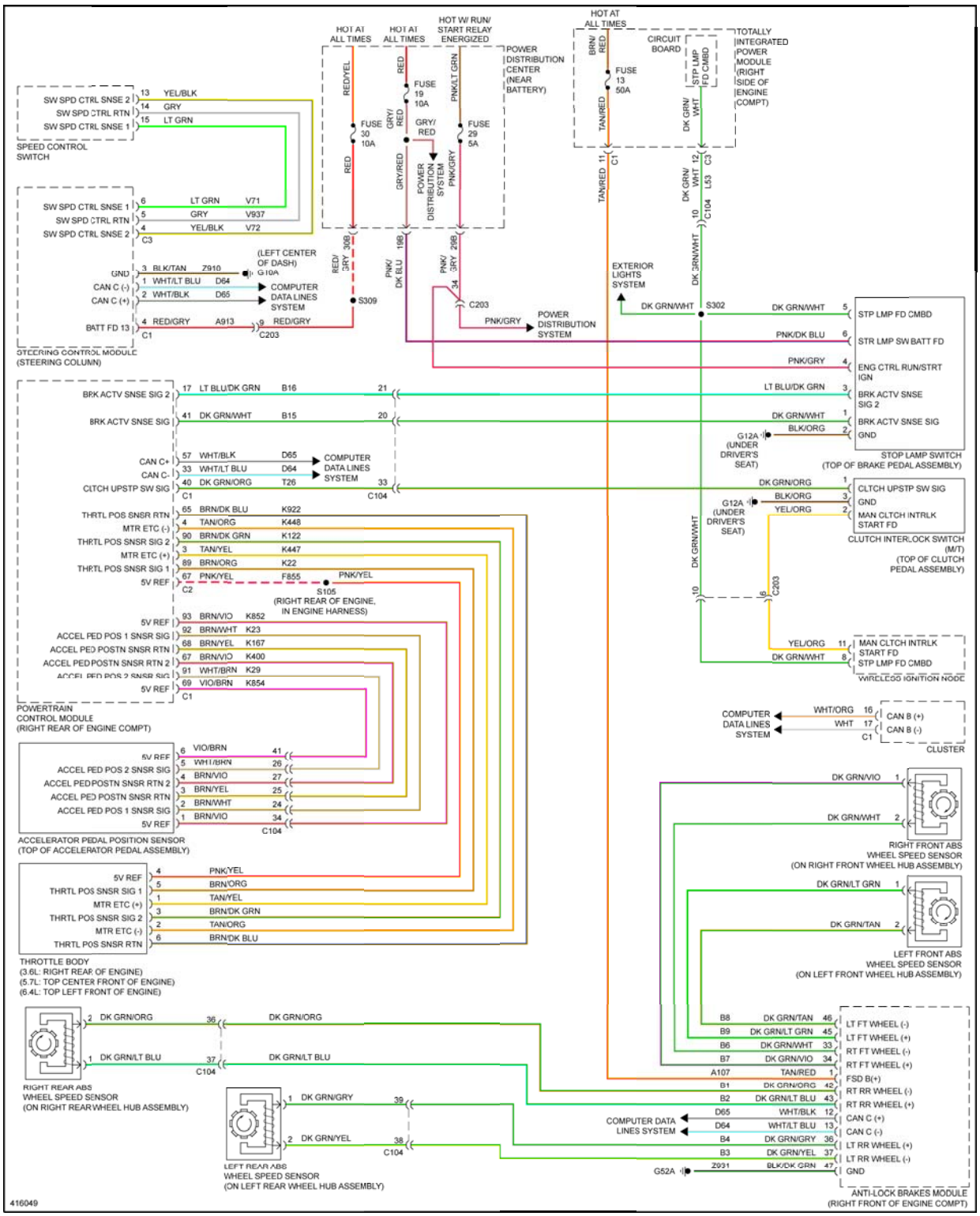

Fig. 10: Cruise Control Circuit

DEFOGGERS

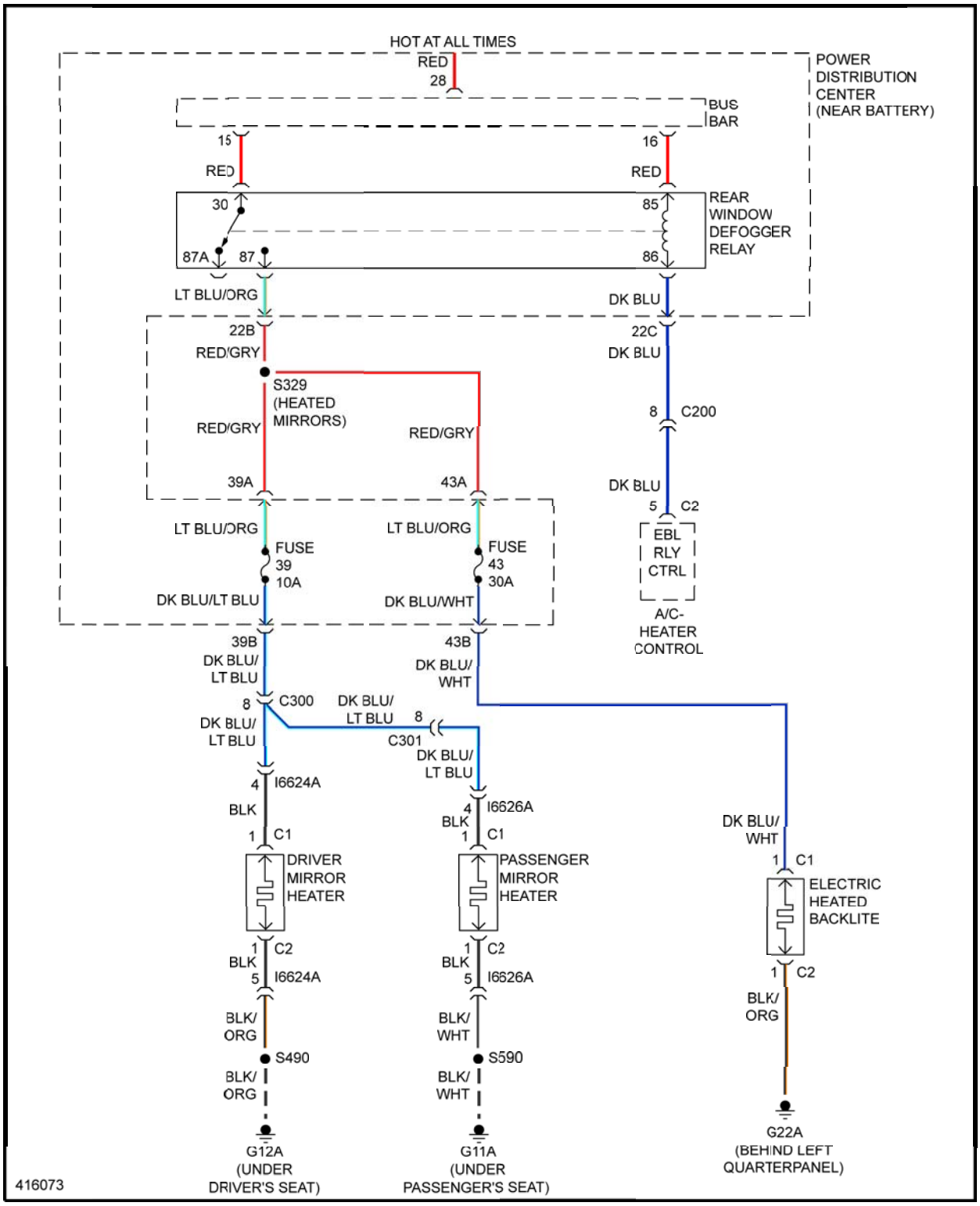

Fig. 11: Defoggers Circuit

ELECTRONIC POWER STEERING

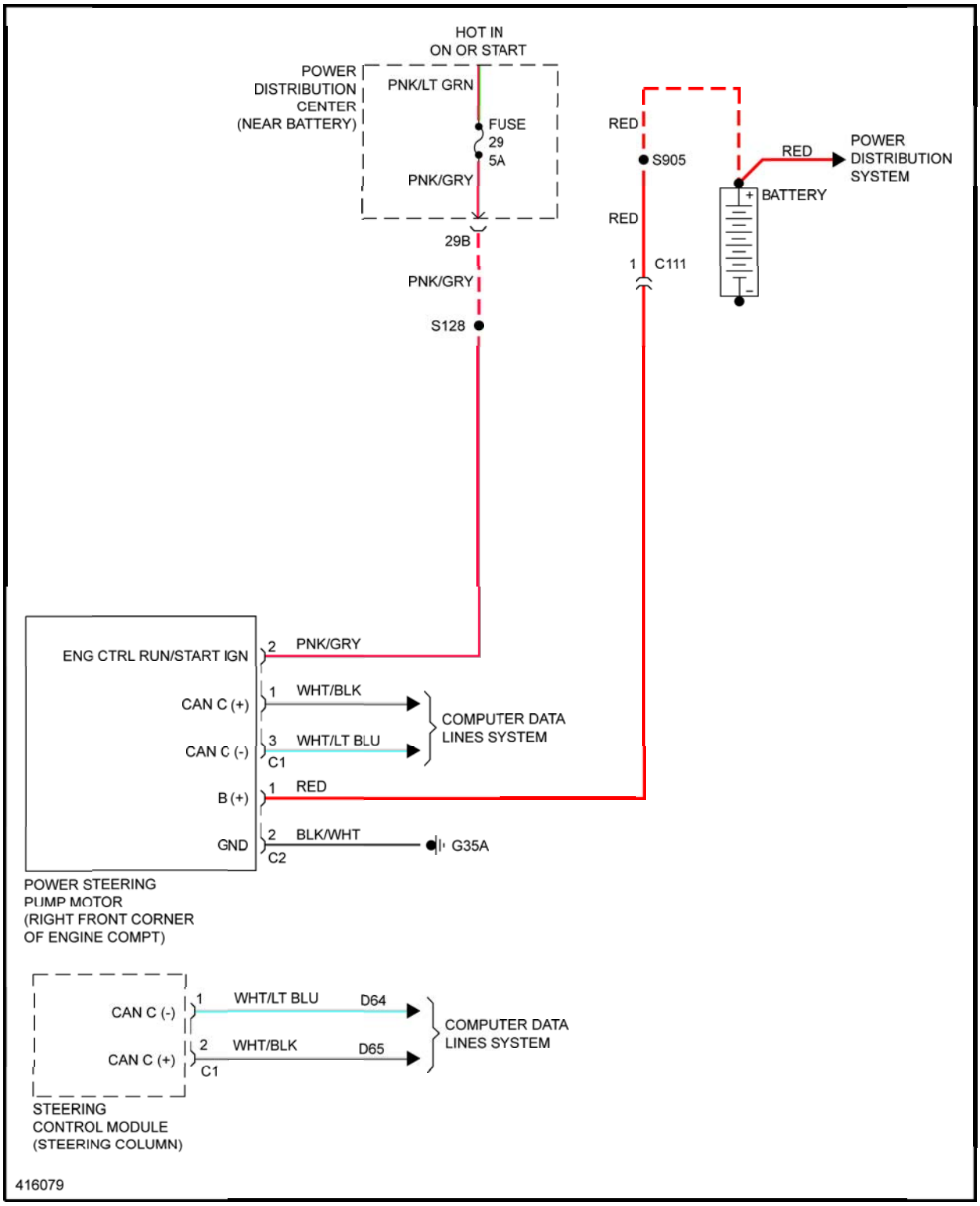

Fig. 12: Electronic Power Steering Circuit

ELECTRONIC SUSPENSION

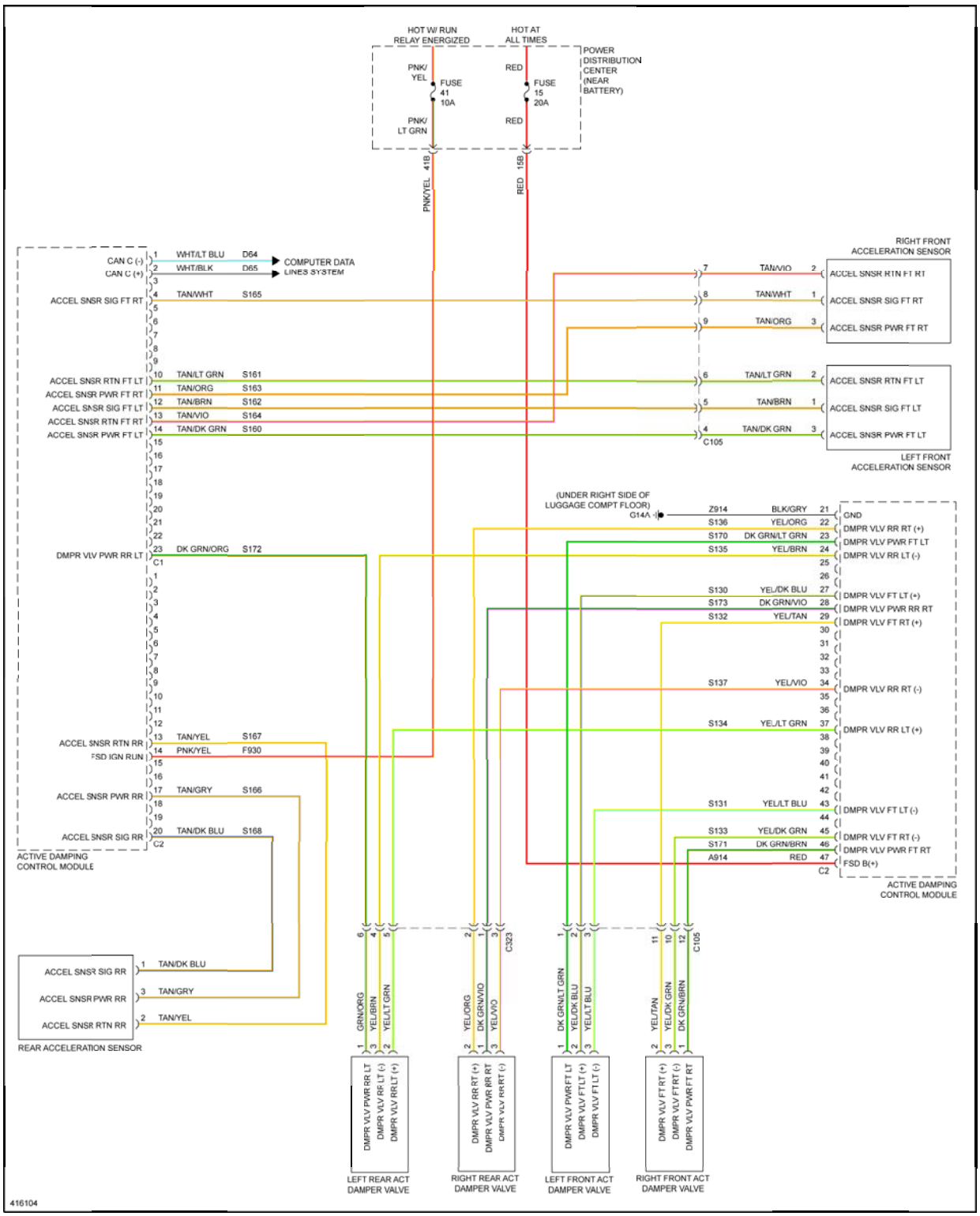

Fig. 13: Electronic Suspension Circuit

ENGINE PERFORMANCE

3.6L FLEX FUEL

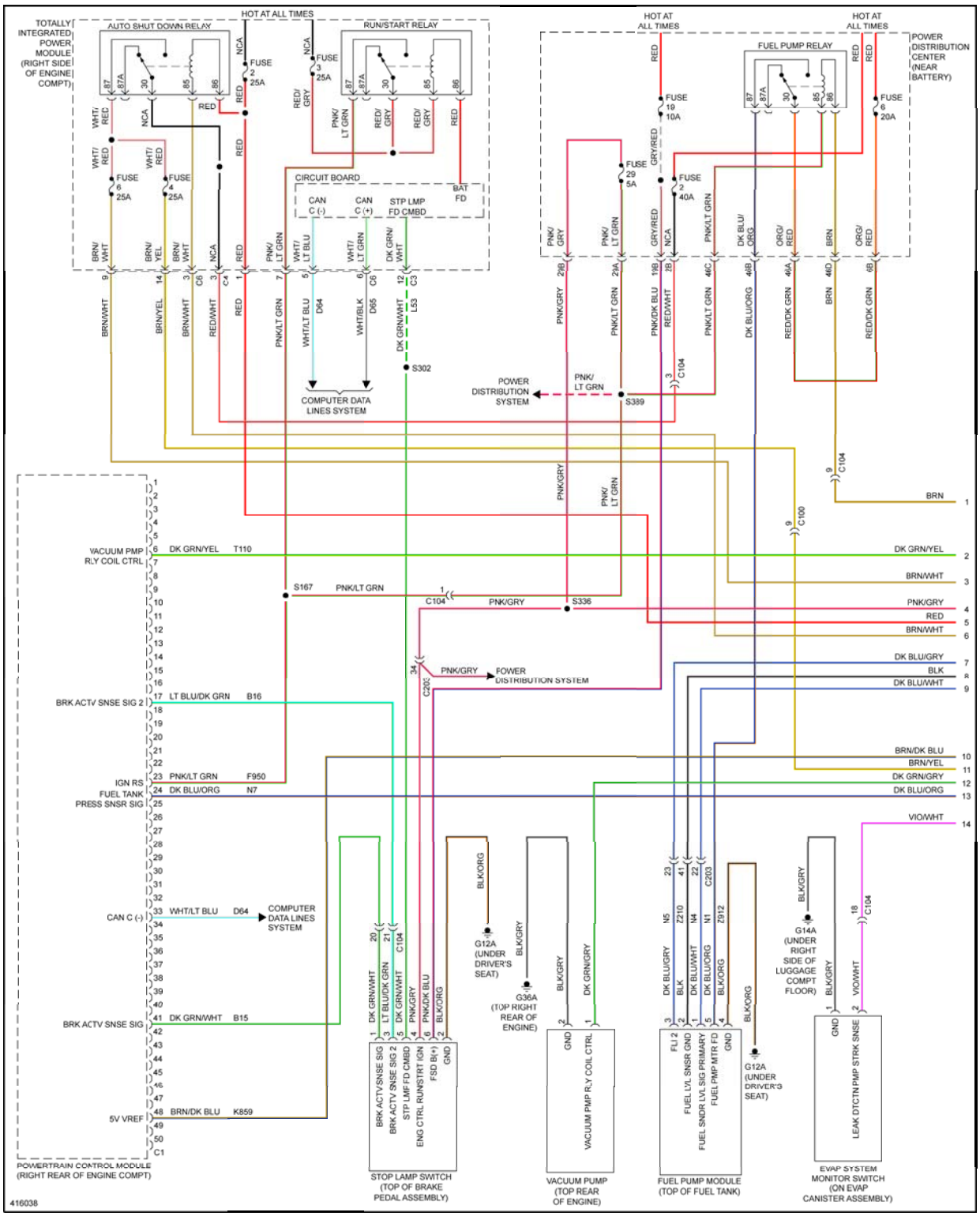

Fig. 14: 3.6L Flex Fuel, Engine Performance Circuit (1 of 5)

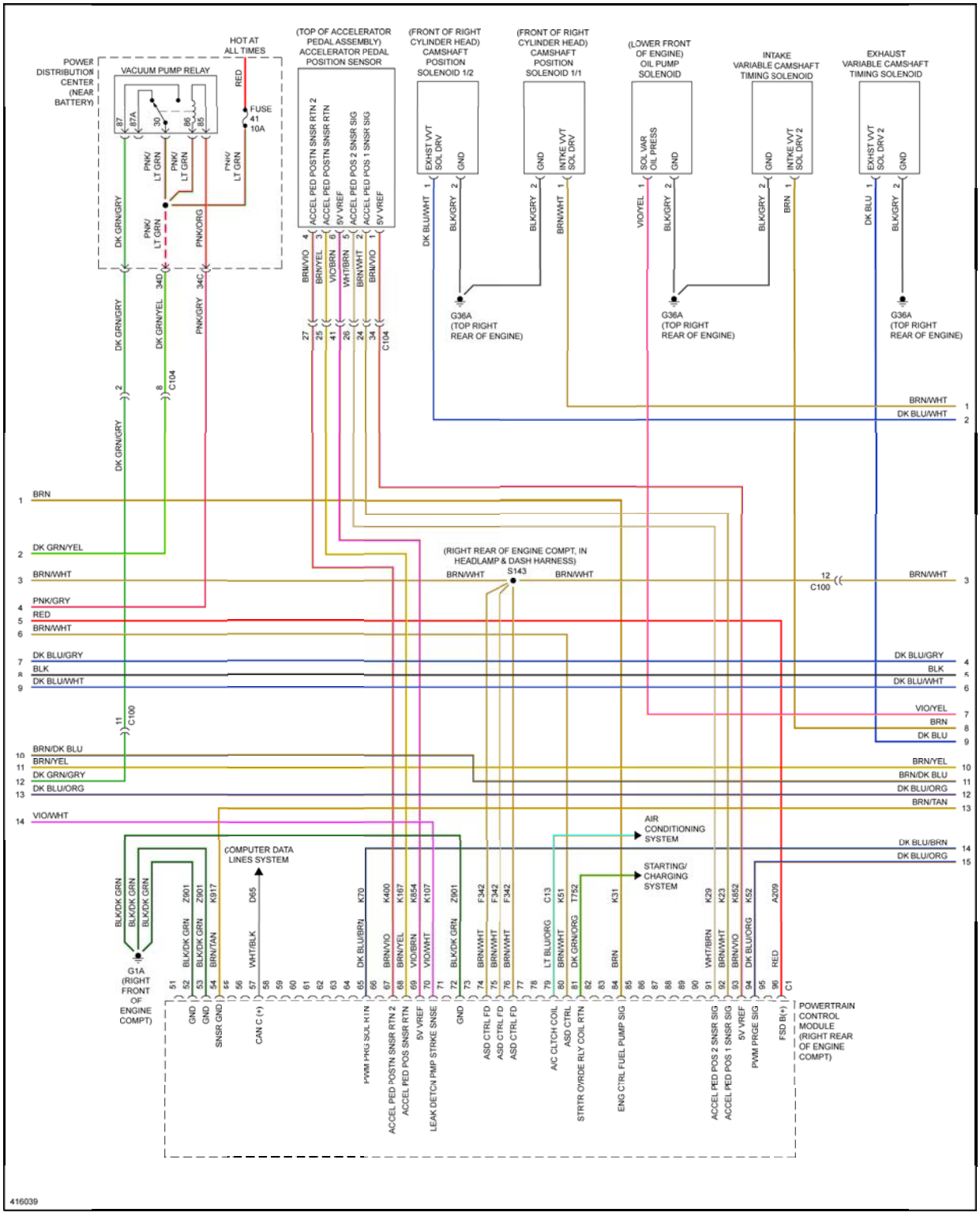

Fig. 15: 3.6L Flex Fuel, Engine Performance Circuit (2 of 5)

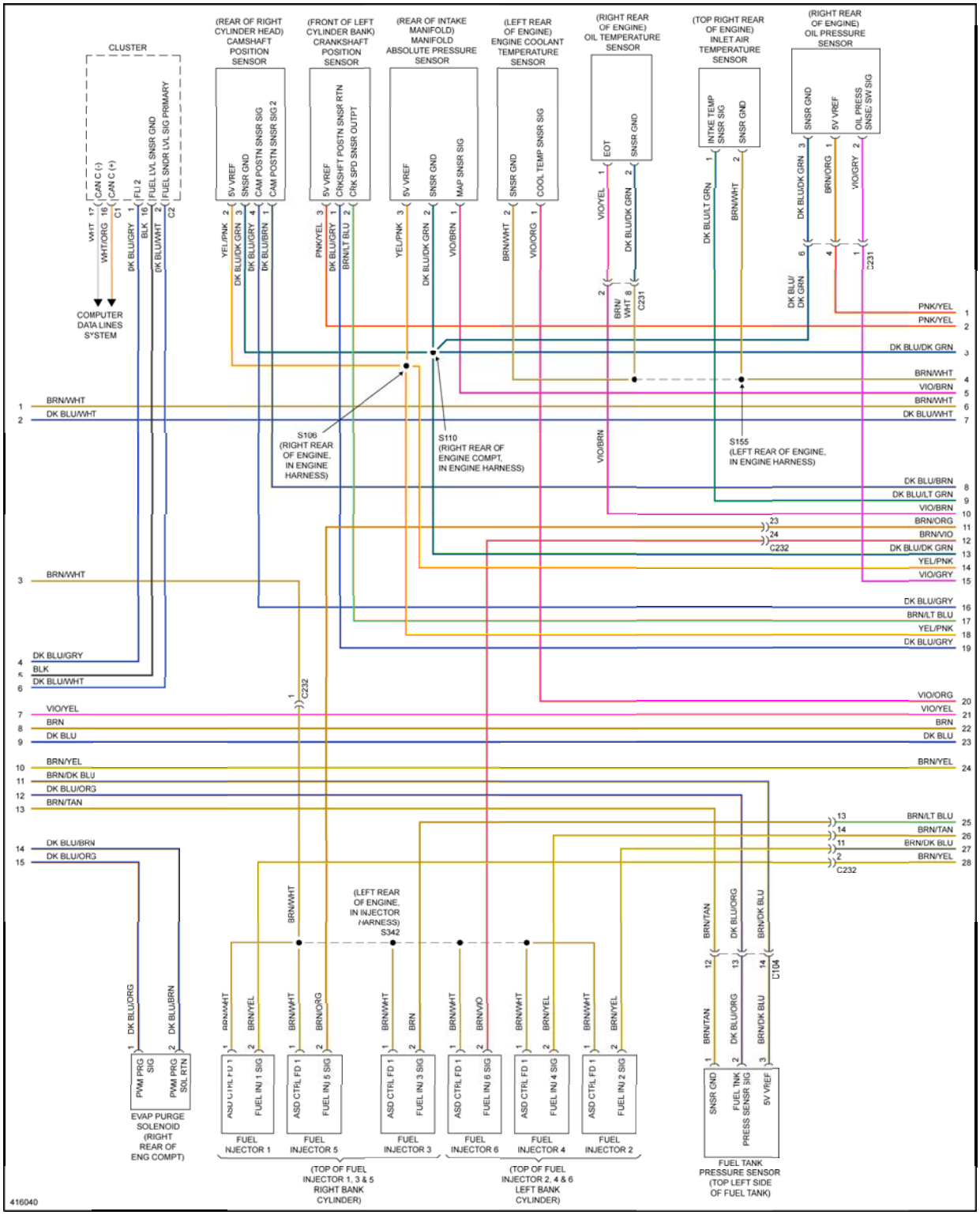

Fig. 16: 3.6L Flex Fuel, Engine Performance Circuit (3 of 5)

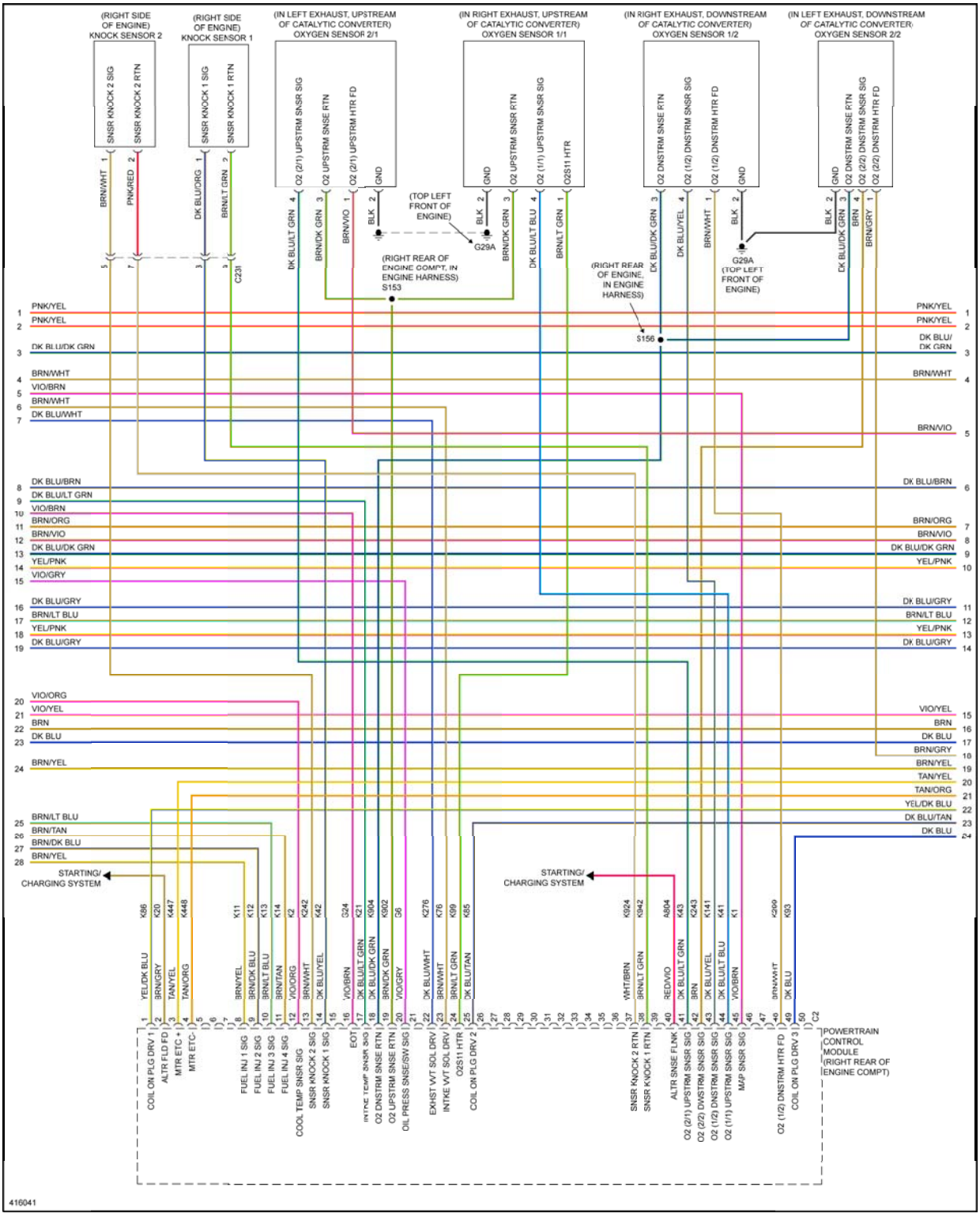

Fig. 17: 3.6L Flex Fuel, Engine Performance Circuit (4 of 5)

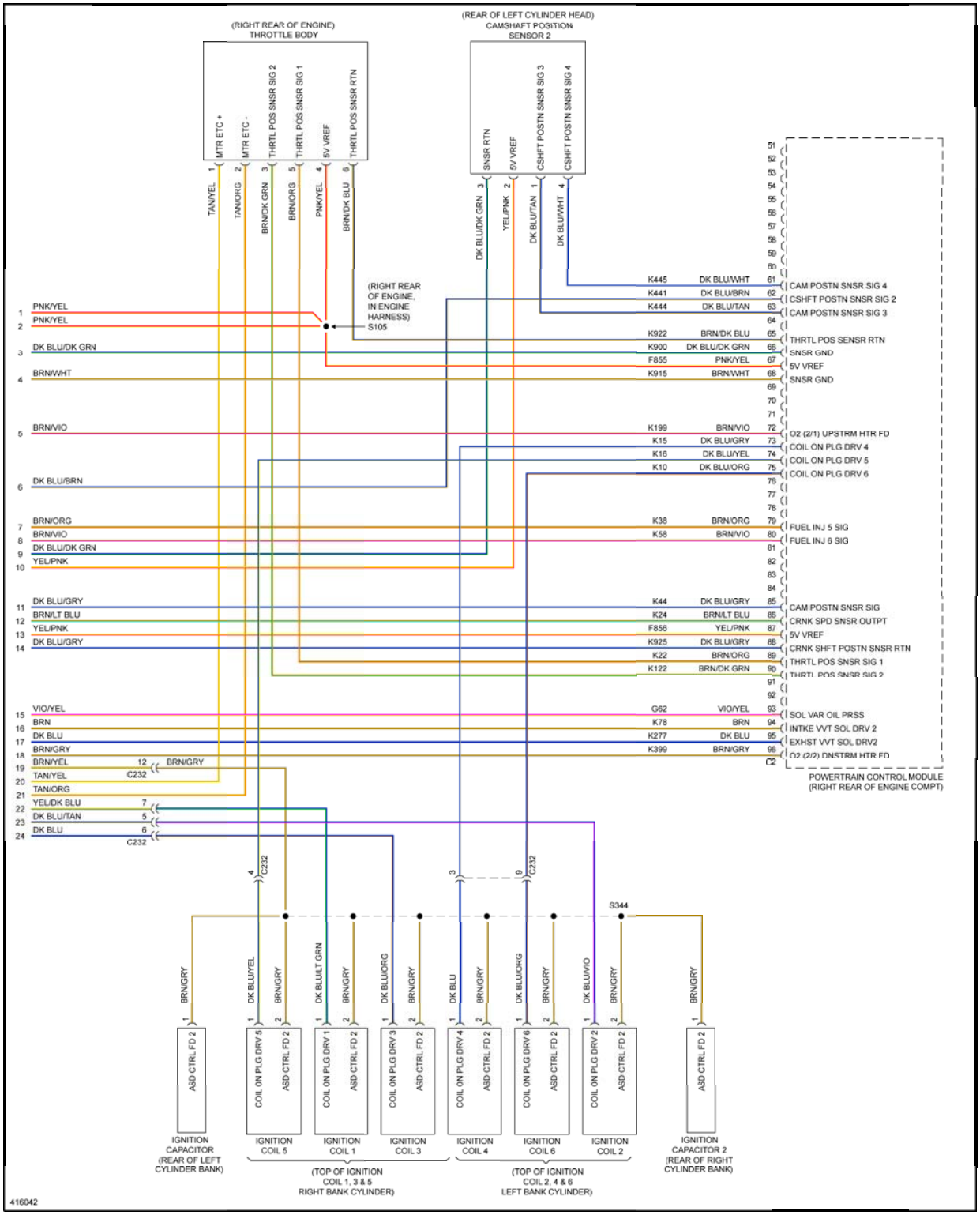

Fig. 18: 3.6L Flex Fuel, Engine Performance Circuit (5 of 5)

5.7L

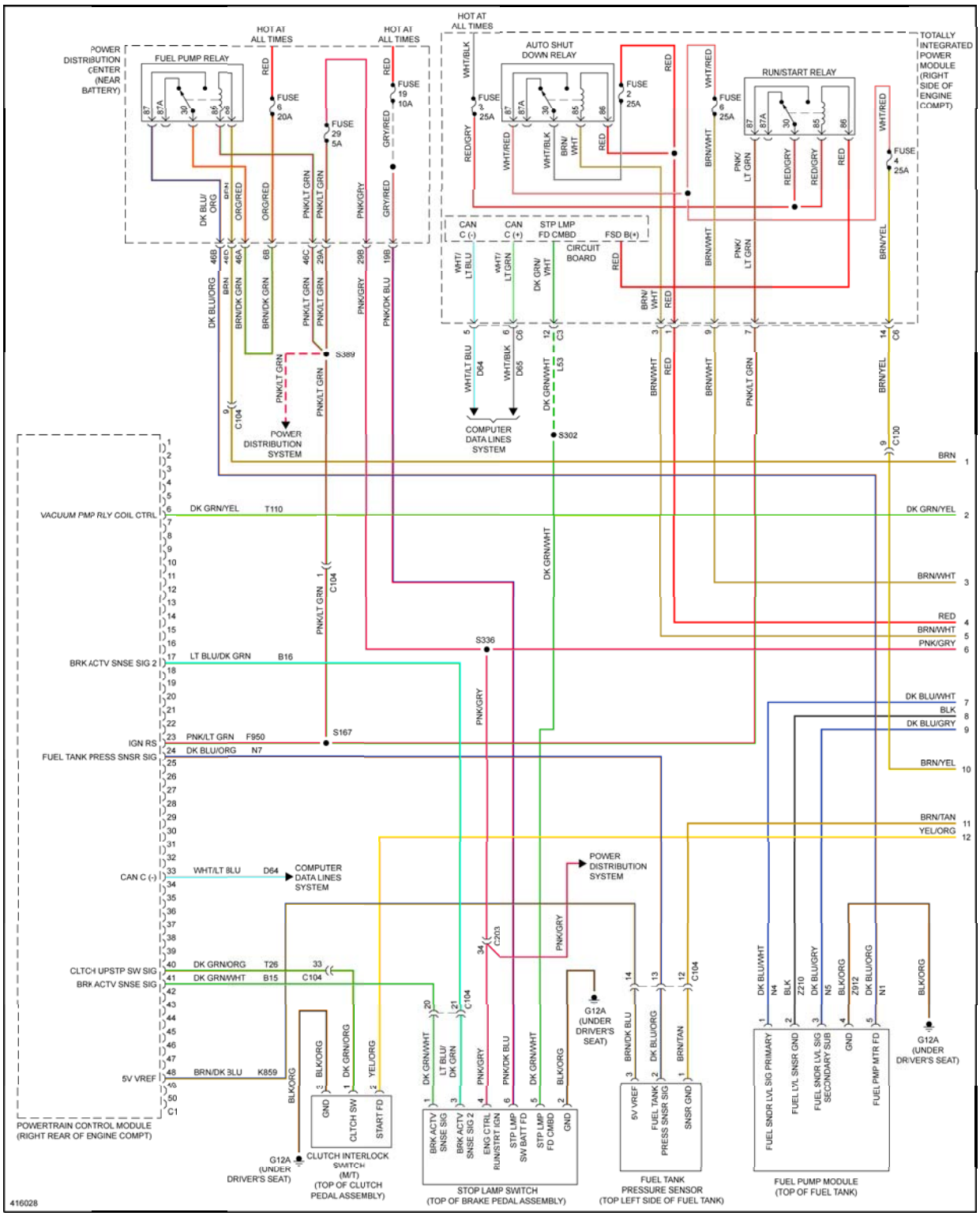

Fig. 19: 5.7L, Engine Performance Circuit (1 of 5)

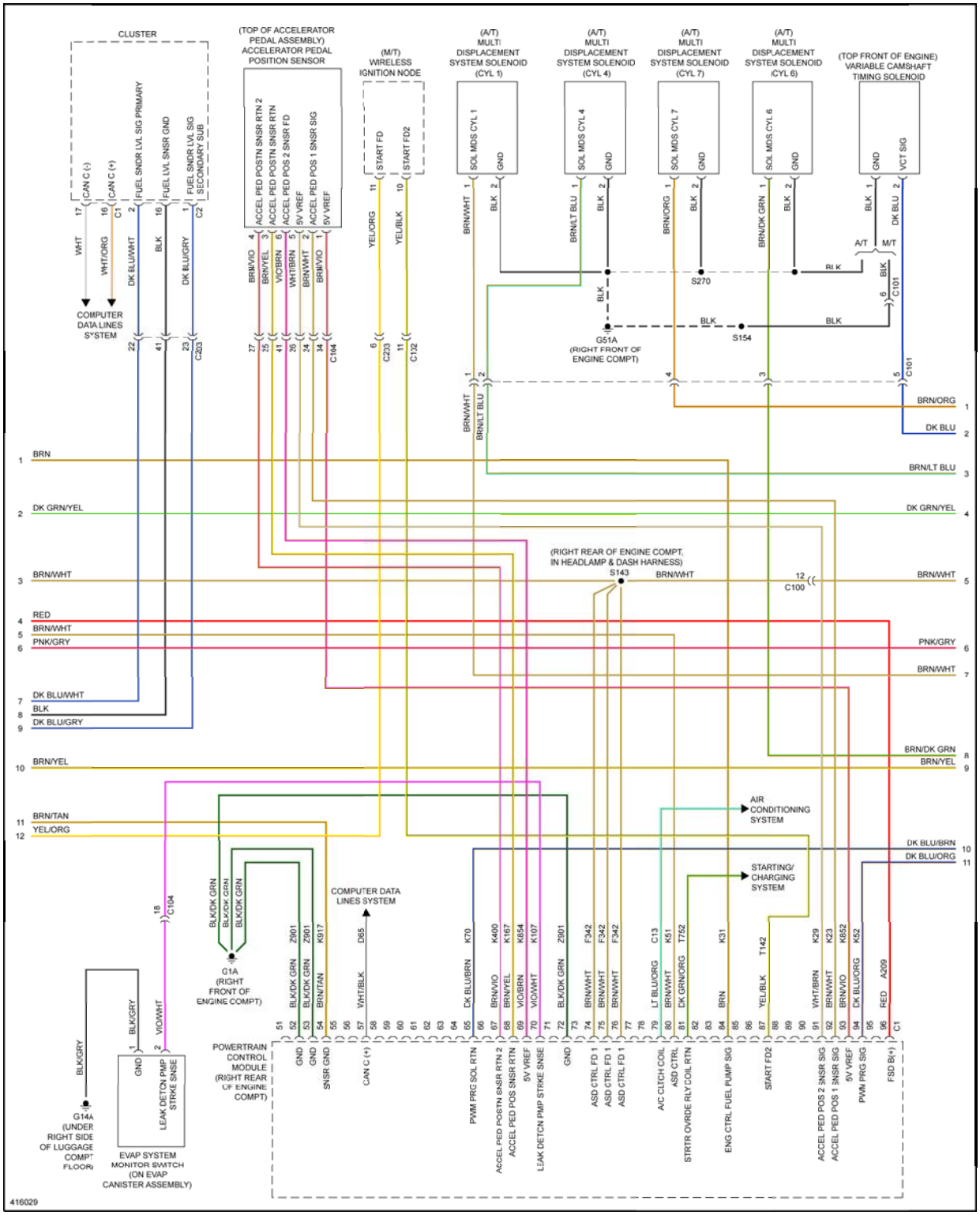

Fig. 20: 5.7L, Engine Performance Circuit (2 of 5)

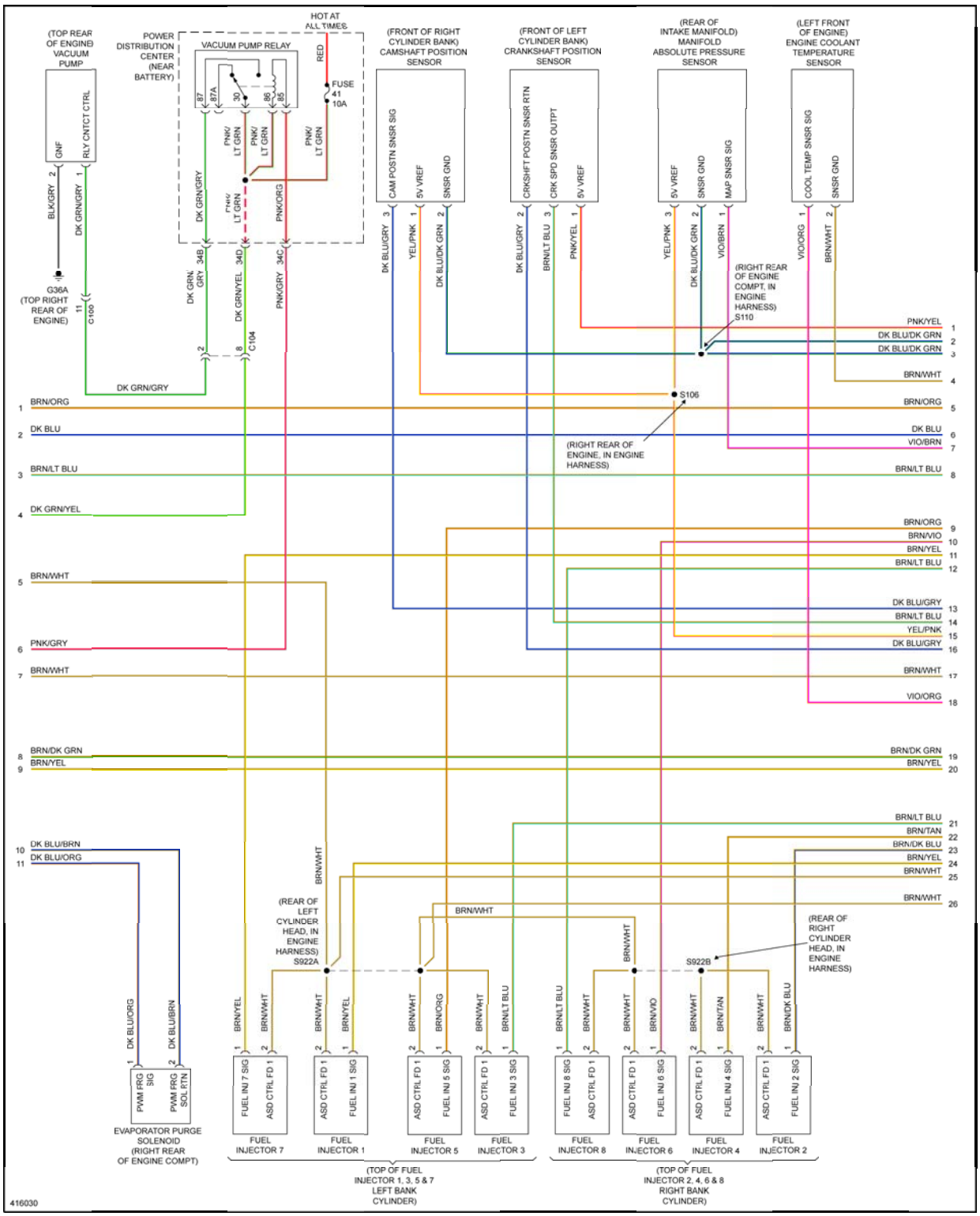

Fig. 21: 5.7L, Engine Performance Circuit (3 of 5)

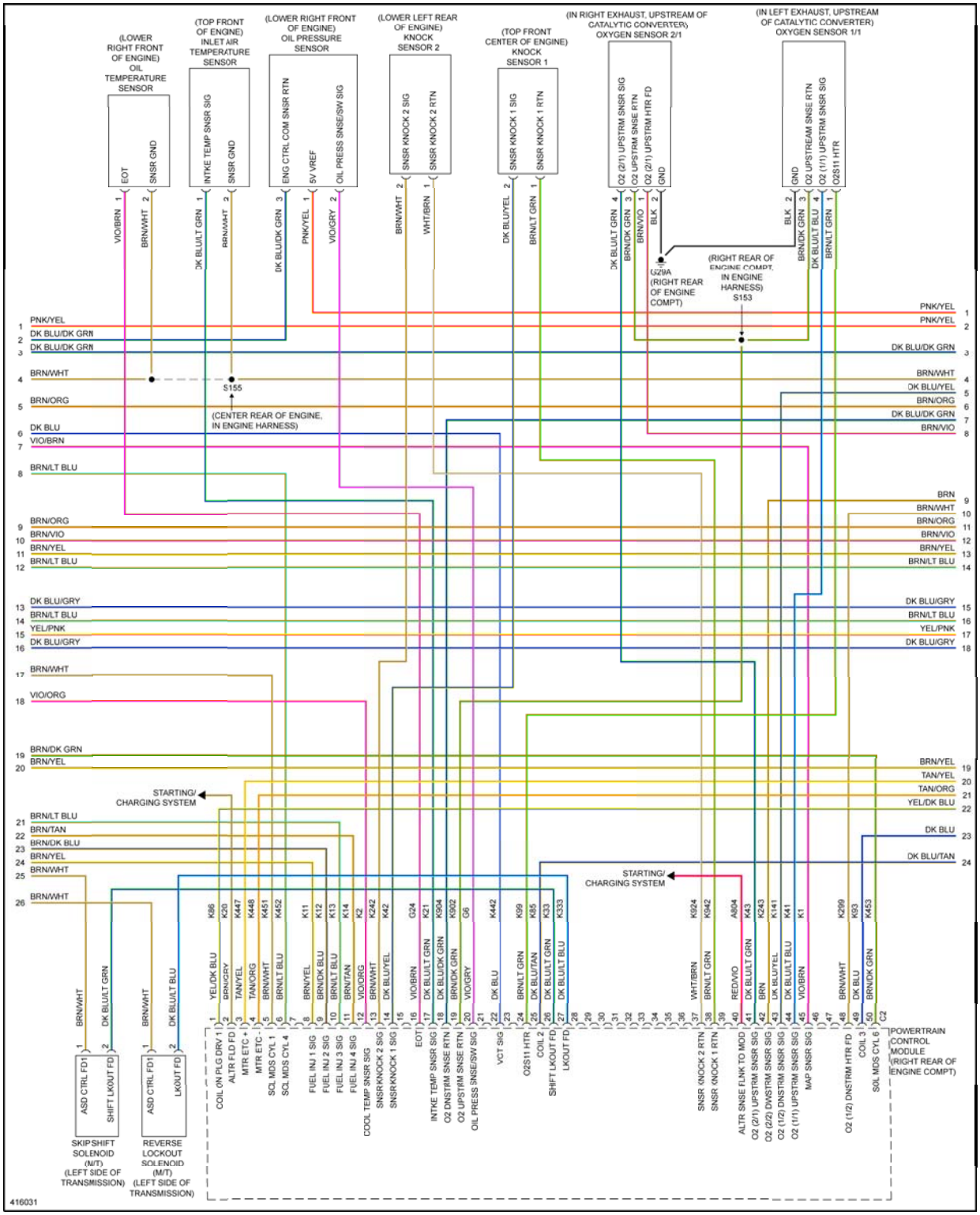

Fig. 22: 5.7L, Engine Performance Circuit (4 of 5)

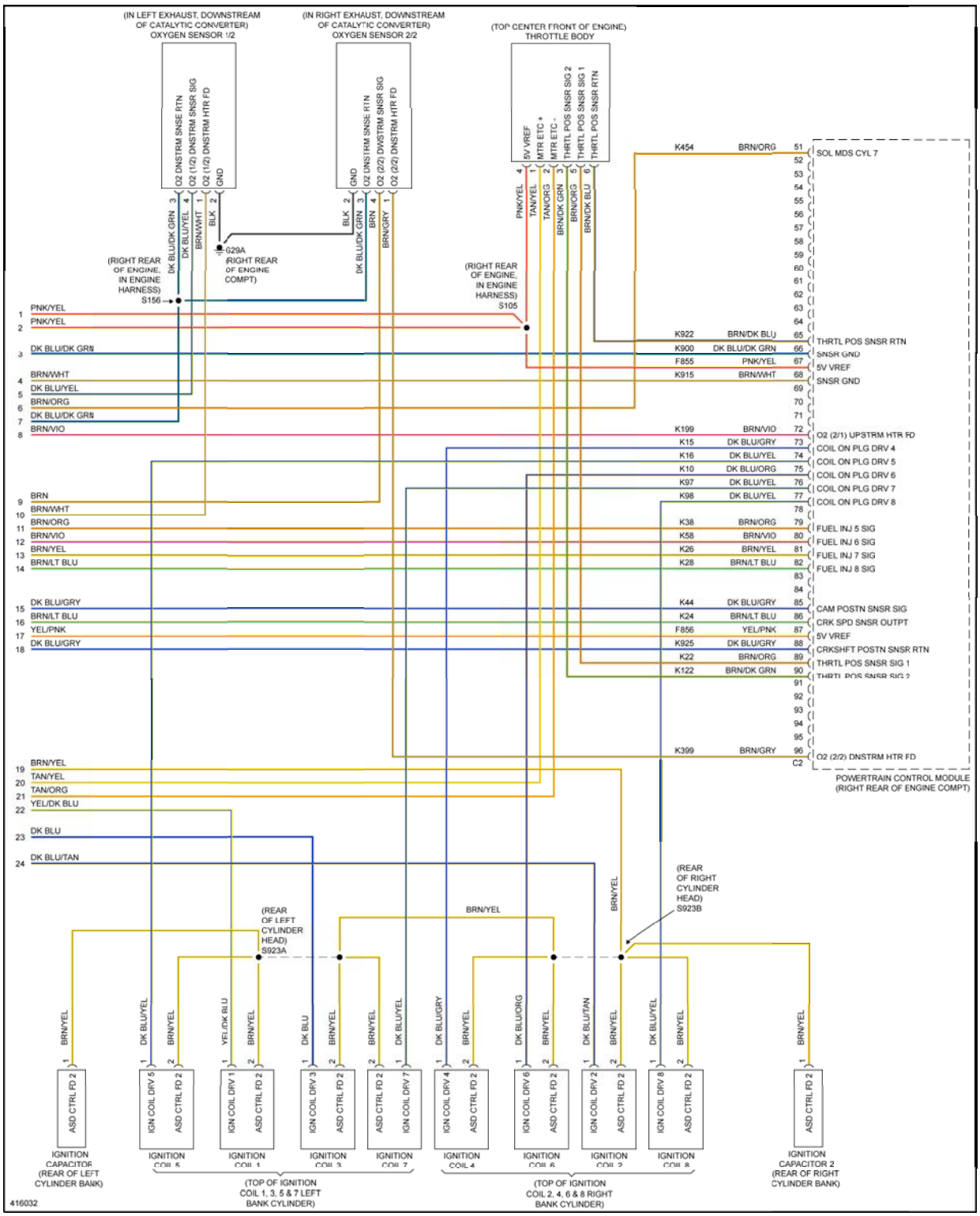

Fig. 23: 5.7L, Engine Performance Circuit (5 of 5)

6.4L

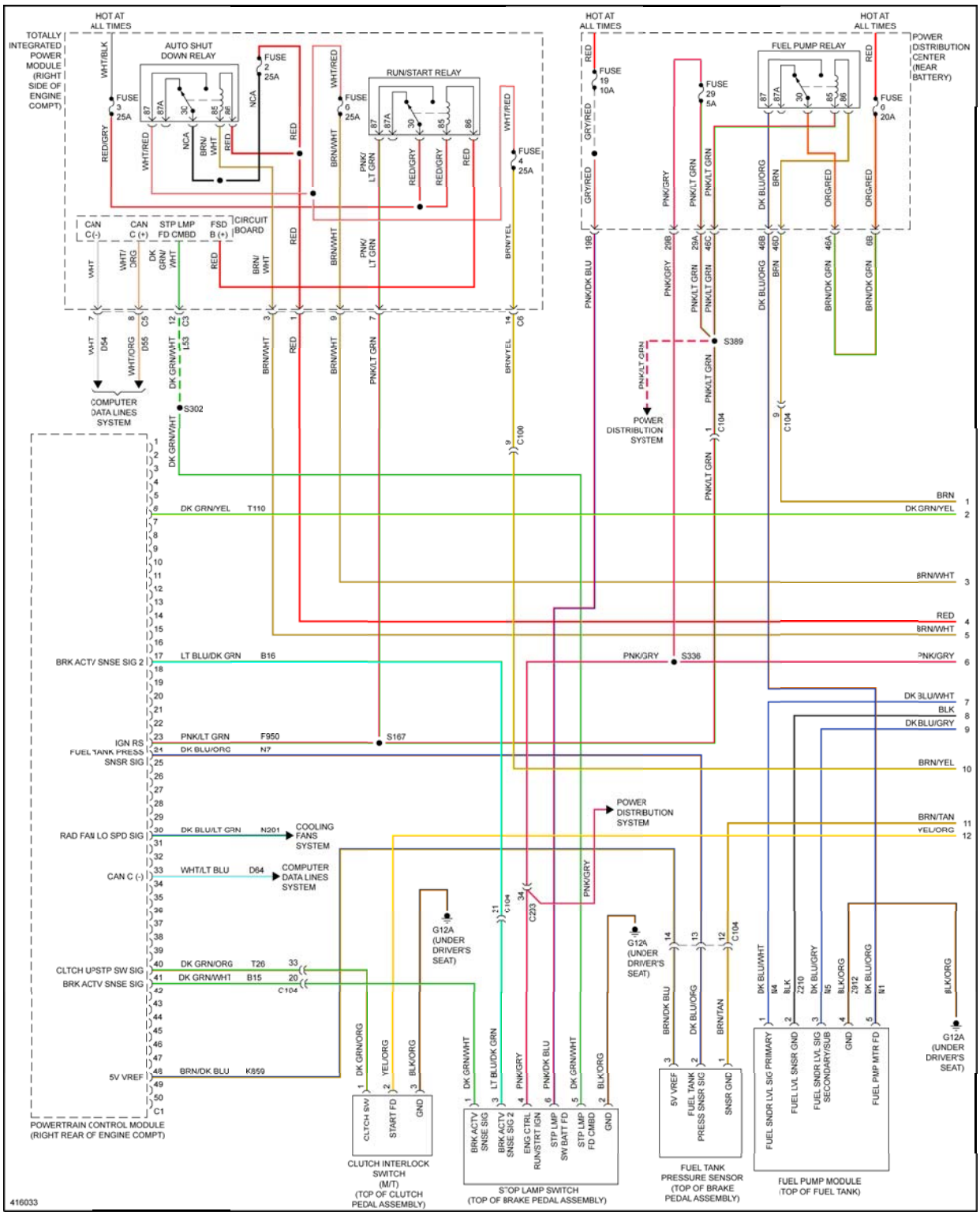

Fig. 24: 6.4L, Engine Performance Circuit (1 of 5)

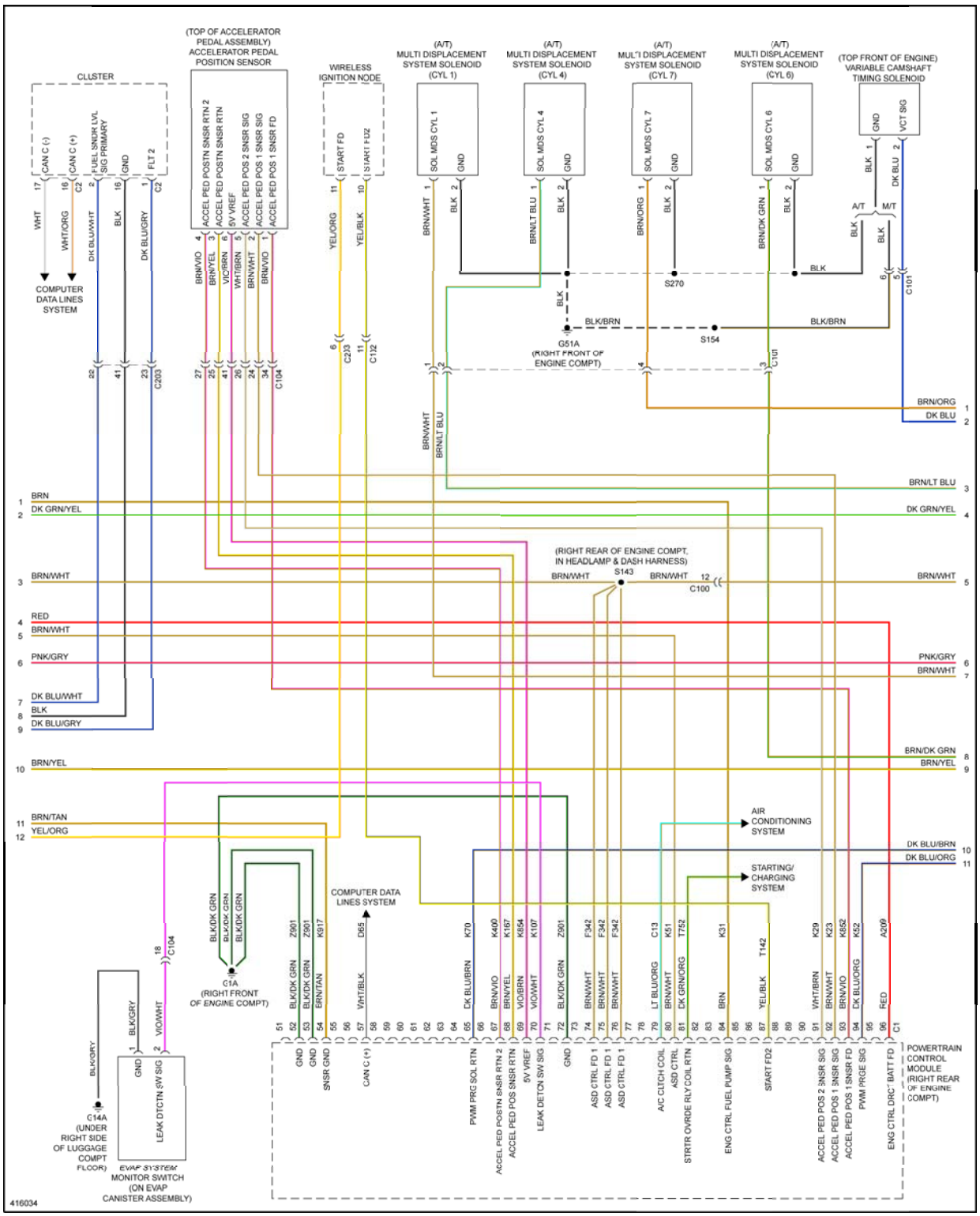

Fig. 25: 6.4L, Engine Performance Circuit (2 of 5)

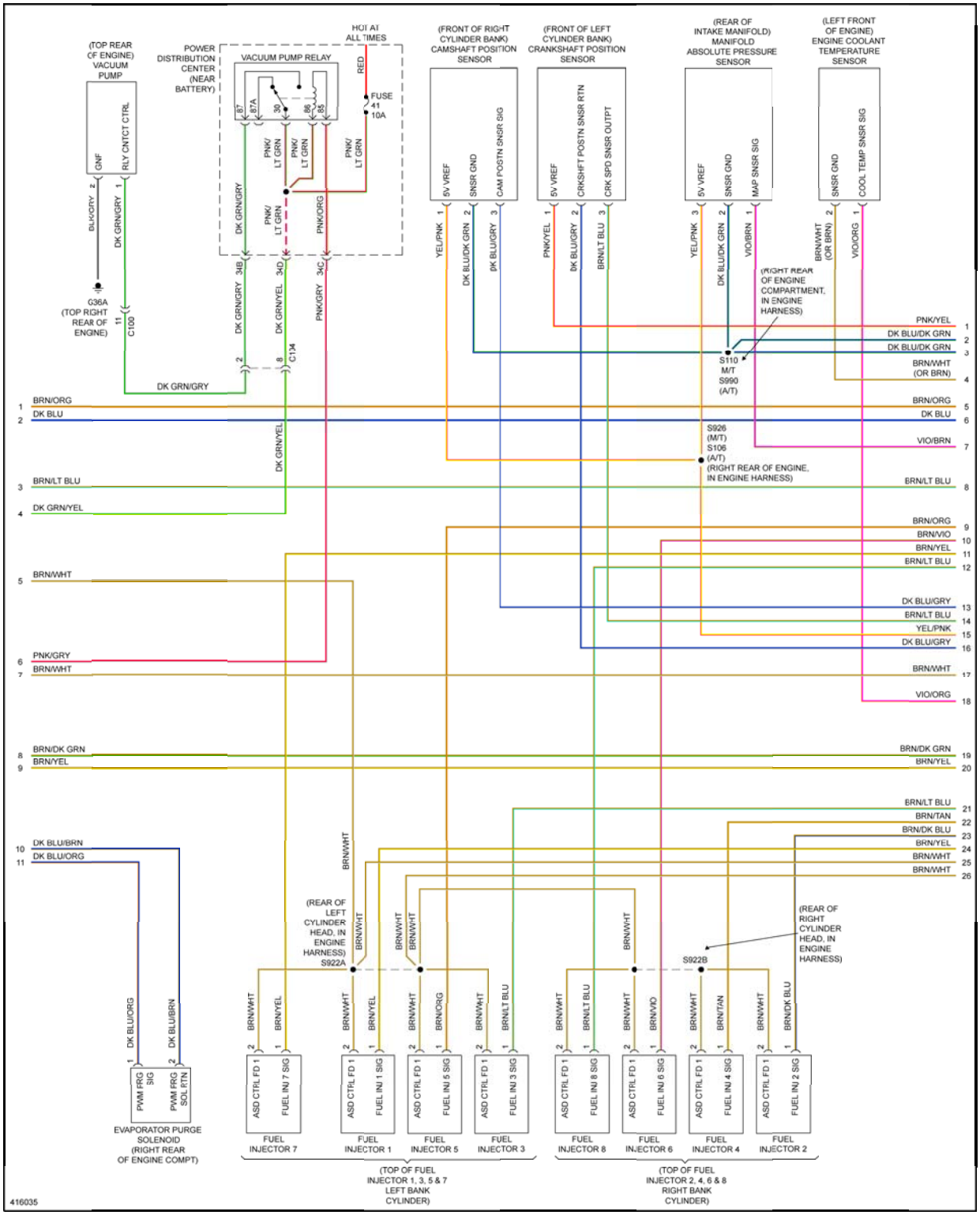

Fig. 26: 6.4L, Engine Performance Circuit (3 of 5)

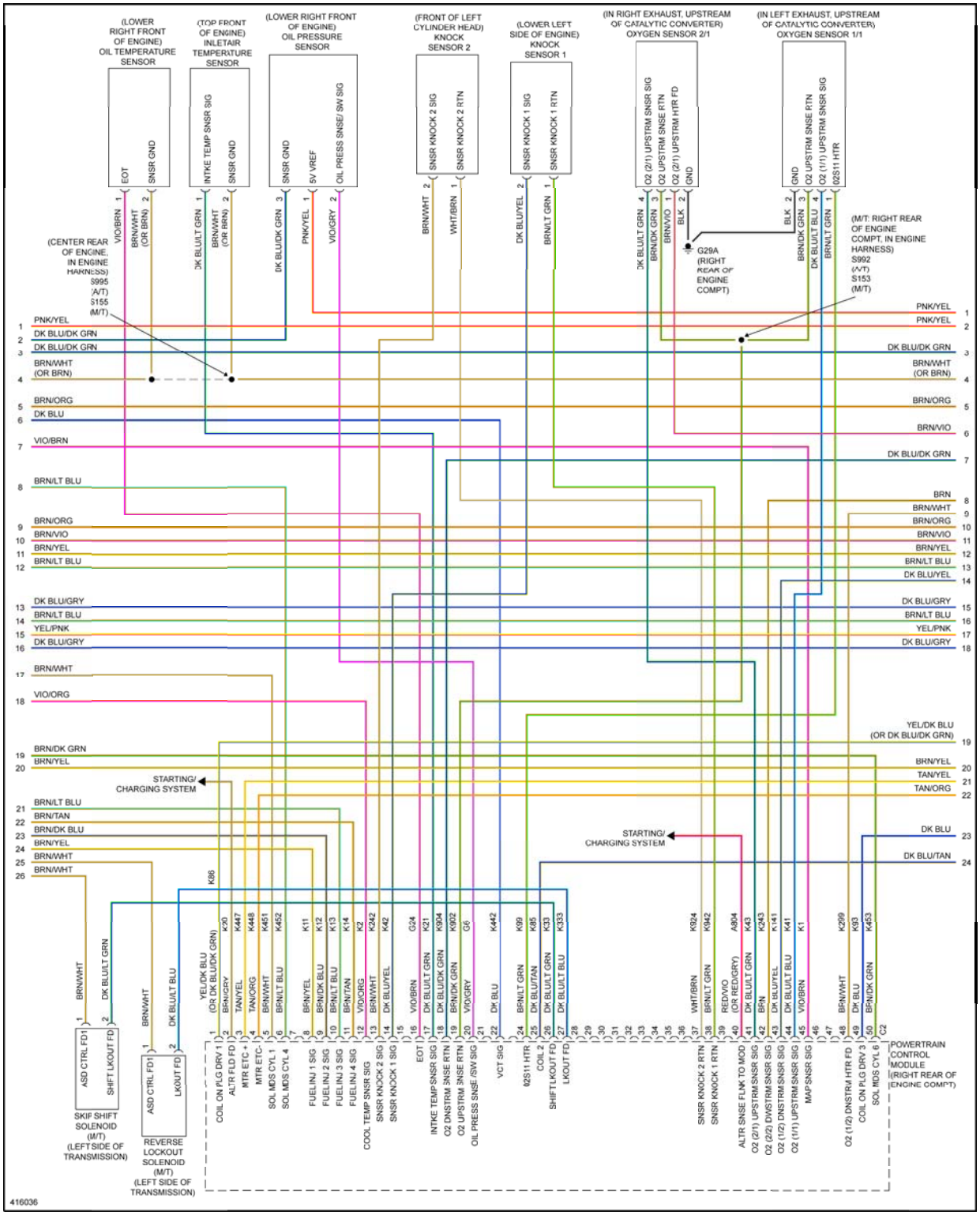

Fig. 27: 6.4L, Engine Performance Circuit (4 of 5)

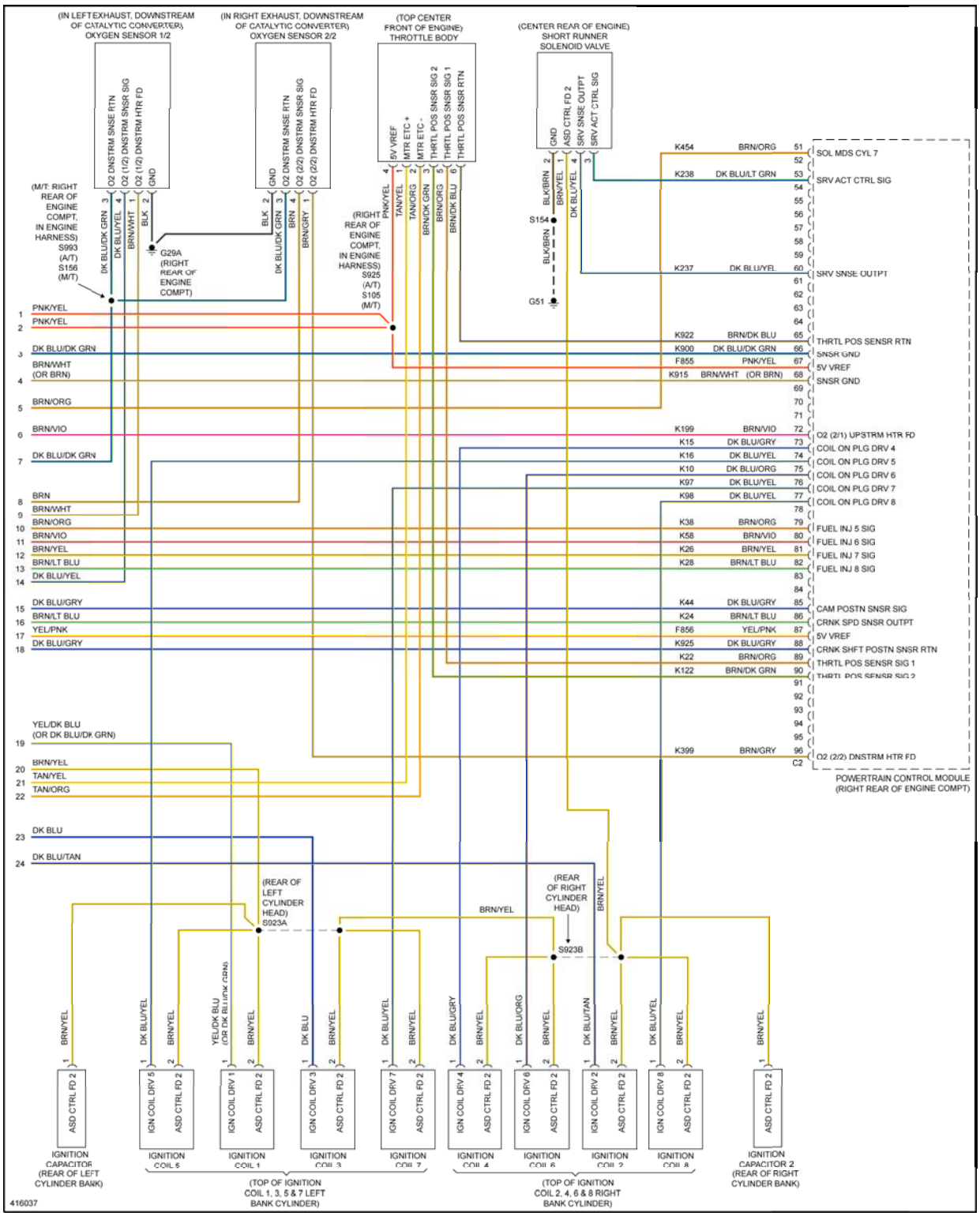

Fig. 28: 6.4L, Engine Performance Circuit (5 of 5)

EXTERIOR LIGHTS

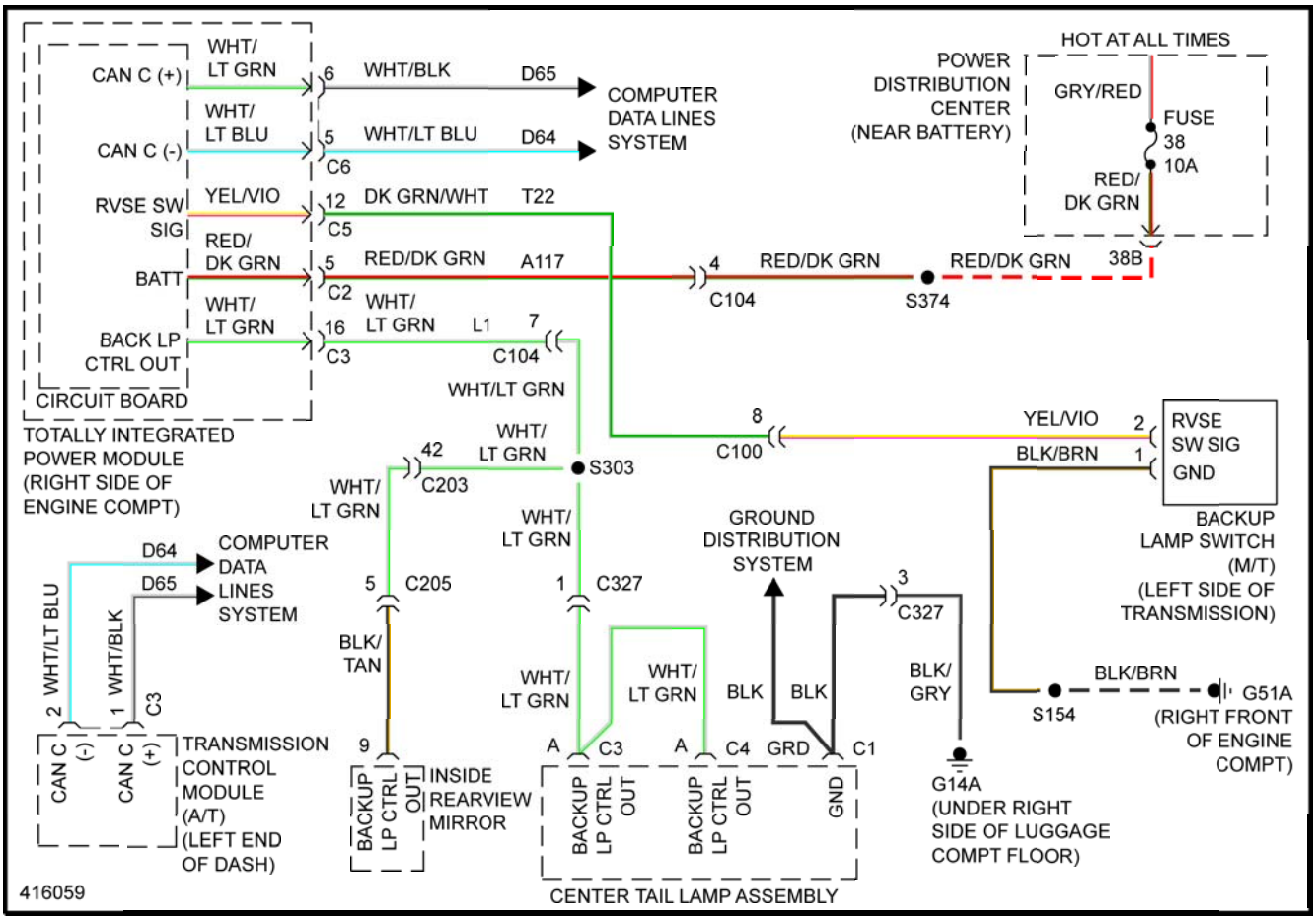

Fig. 29: Backup Lamps Circuit

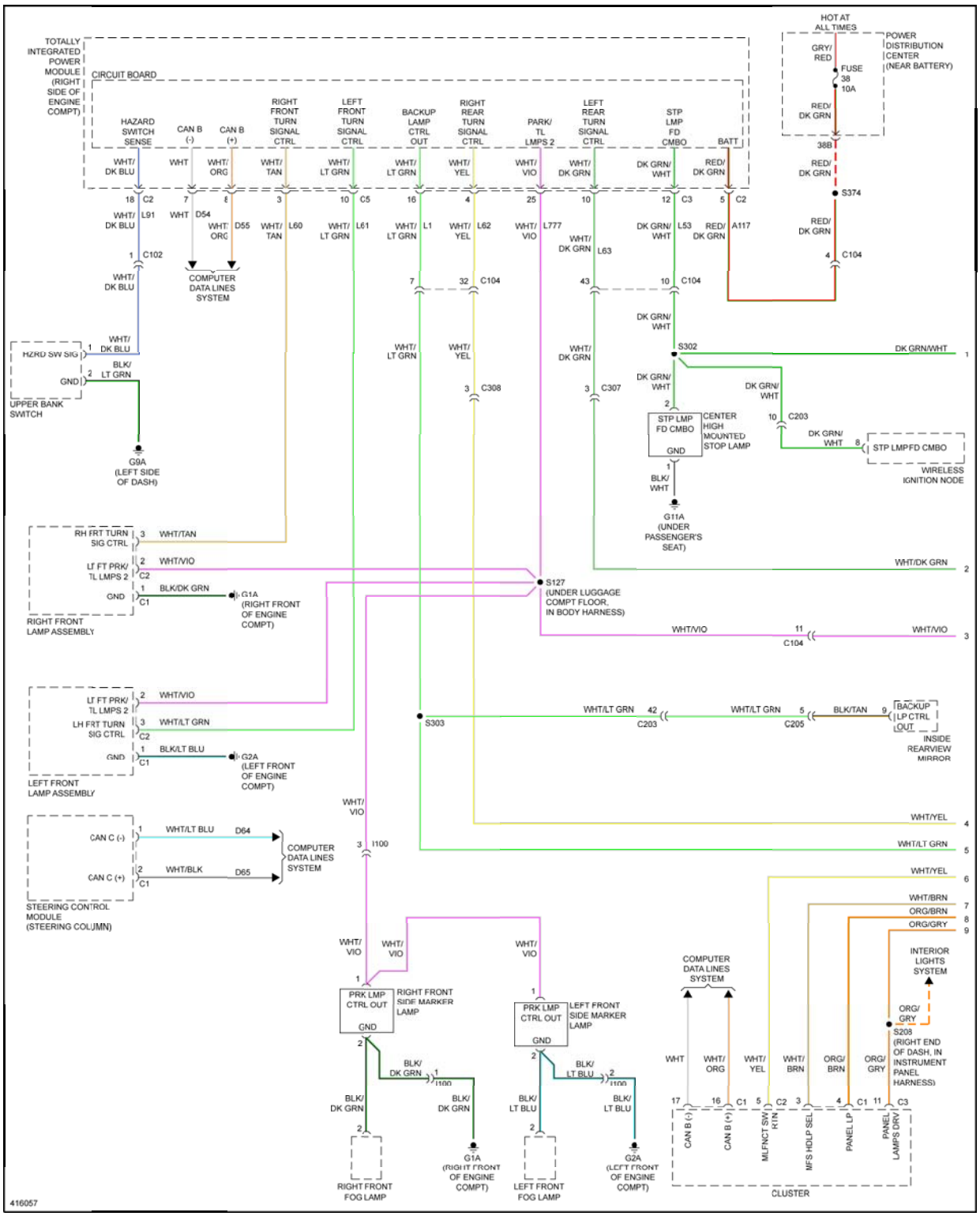

Fig. 30: Exterior Lamps Circuit (1 of 2)

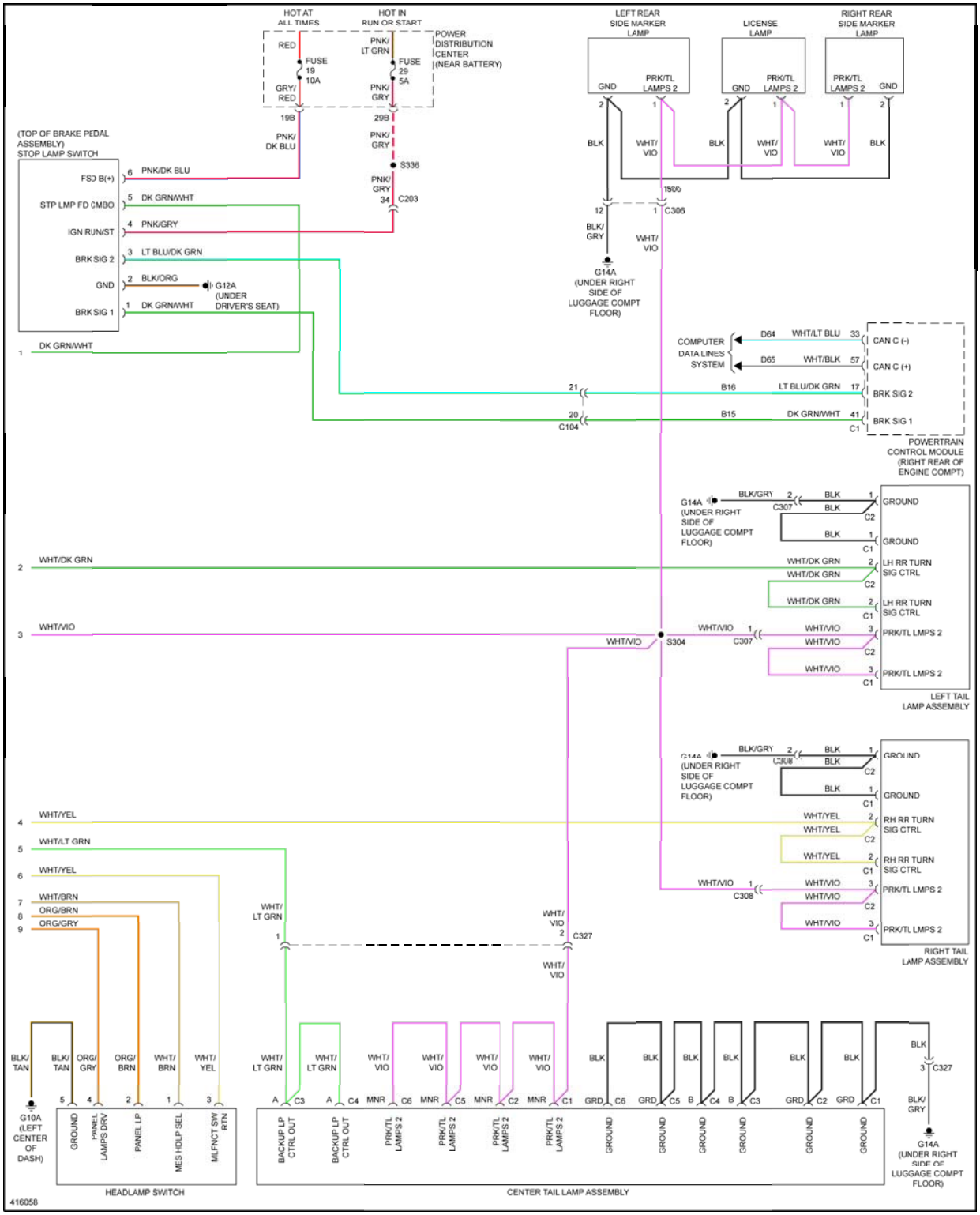

Fig. 31: Exterior Lamps Circuit (2 of 2)

GROUND DISTRIBUTION

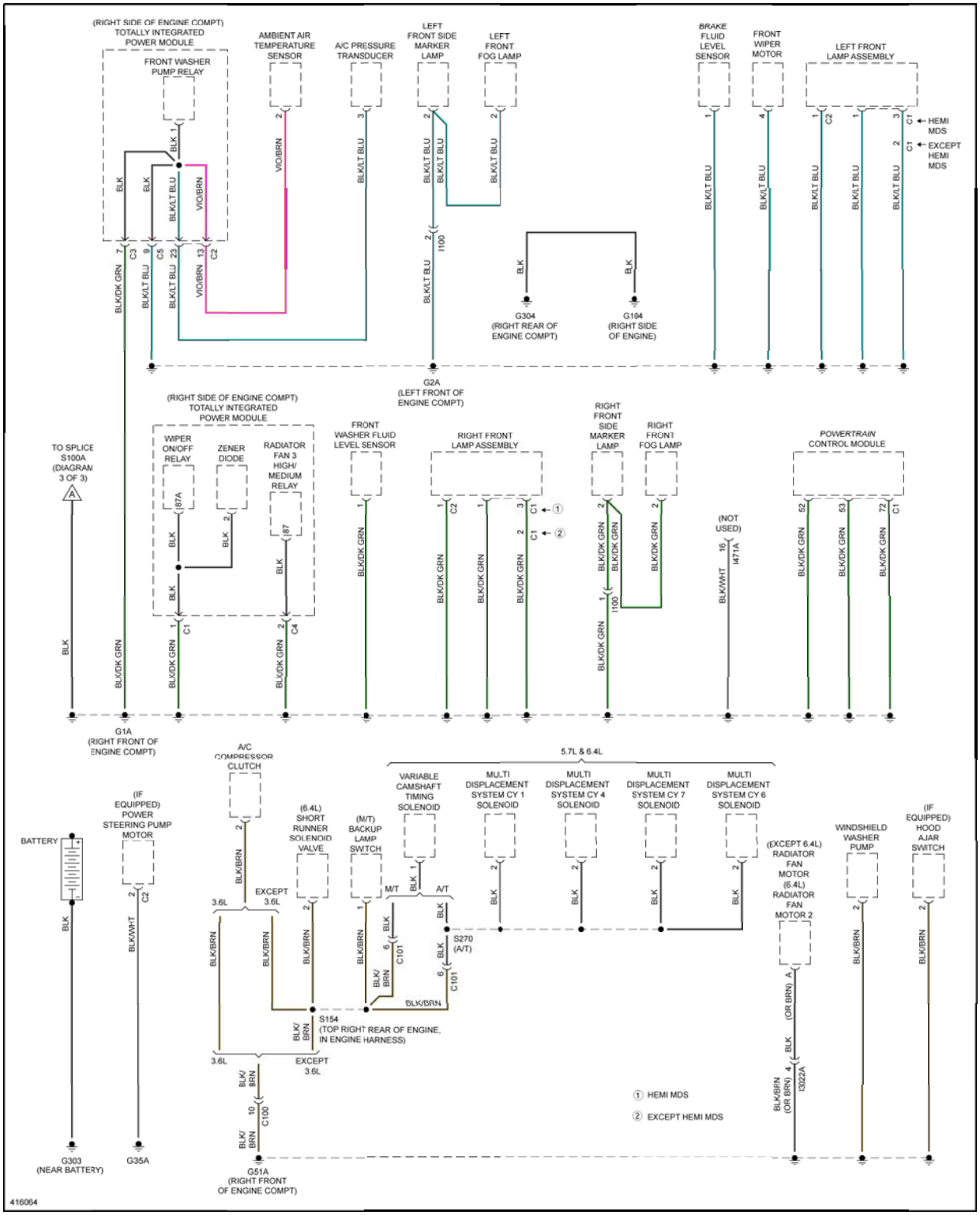

Fig. 32: Ground Distribution Circuit (1 of 3)

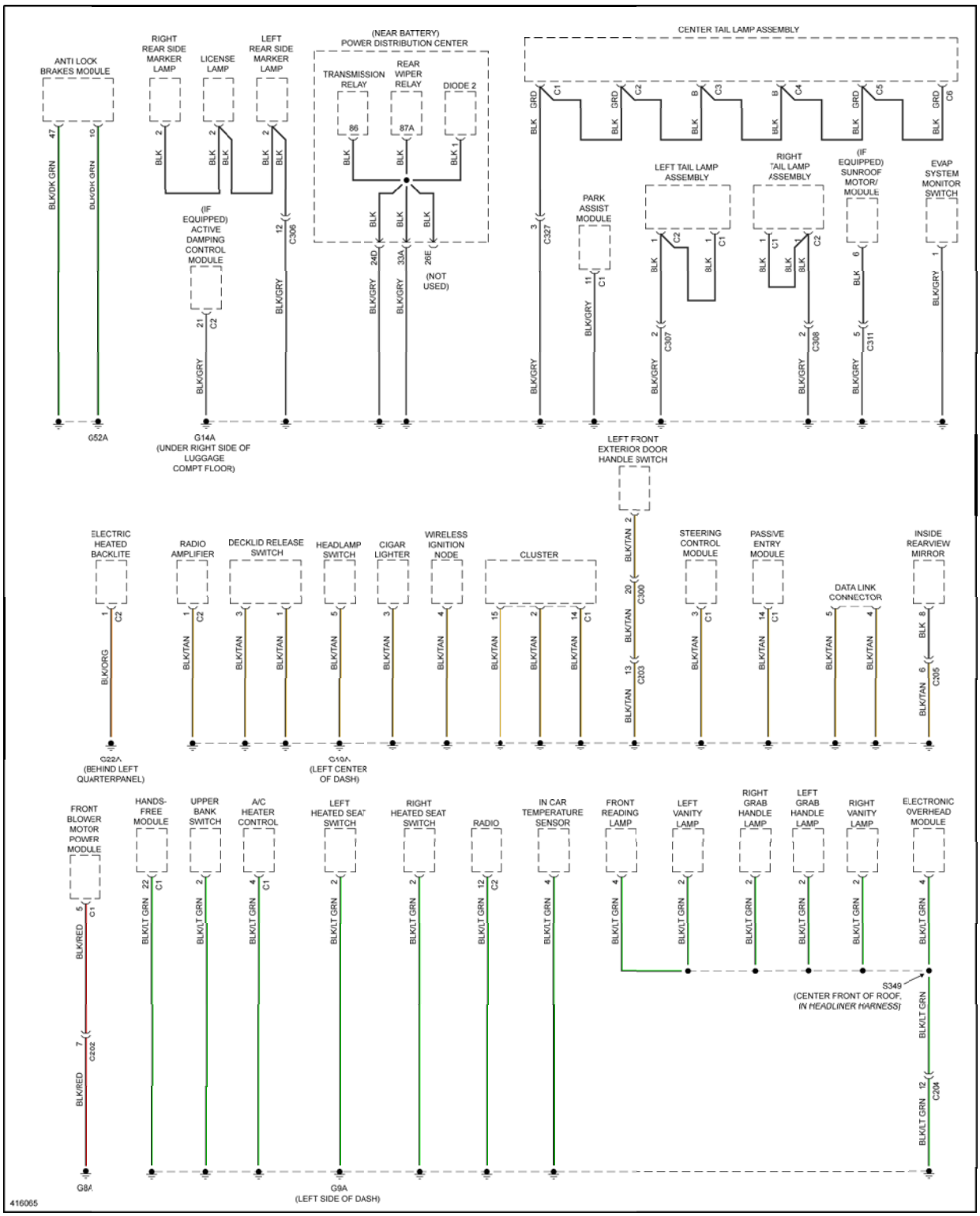

Fig. 33: Ground Distribution Circuit (2 of 3)

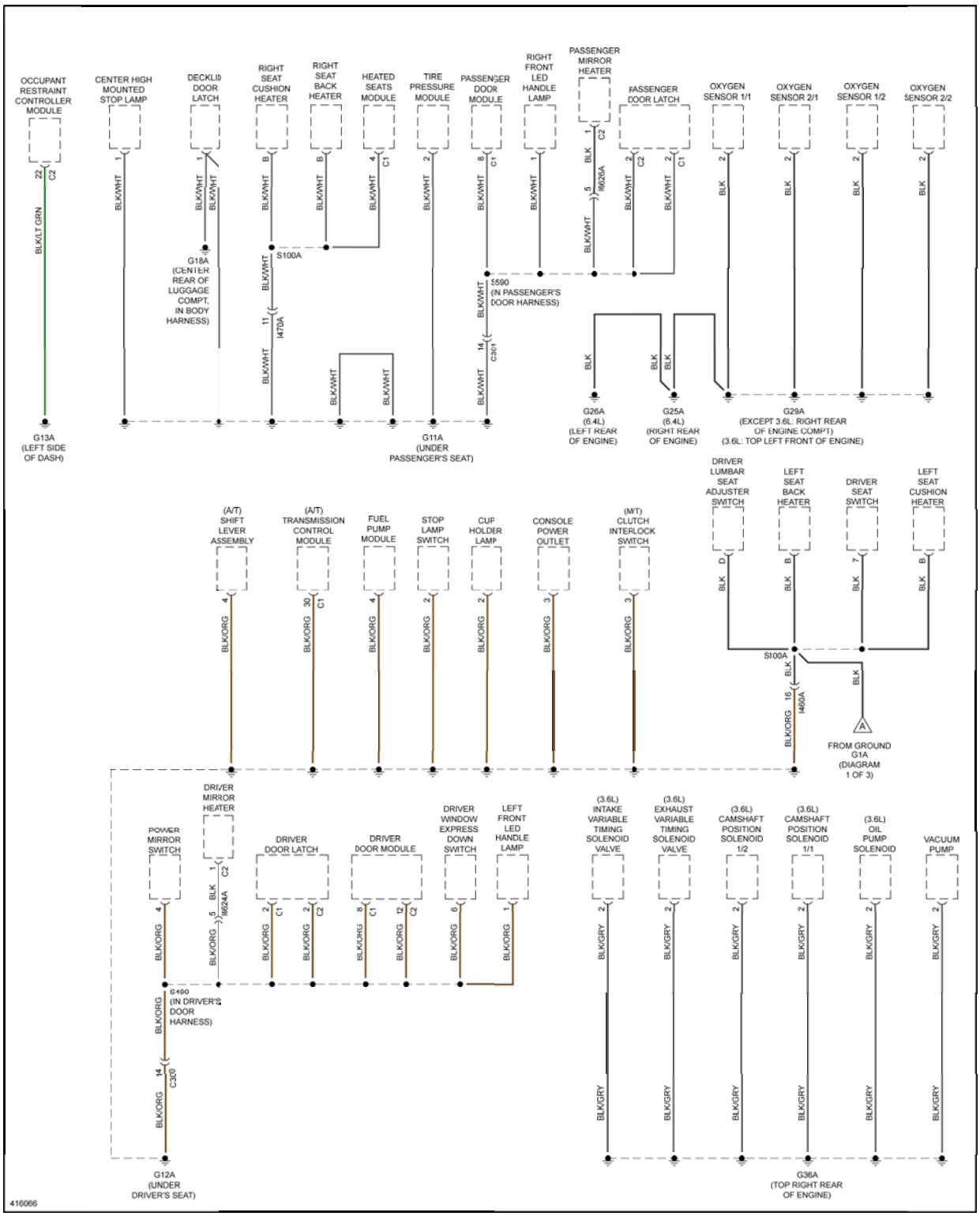

Fig. 34: Ground Distribution Circuit (3 of 3)

HEADLIGHTS

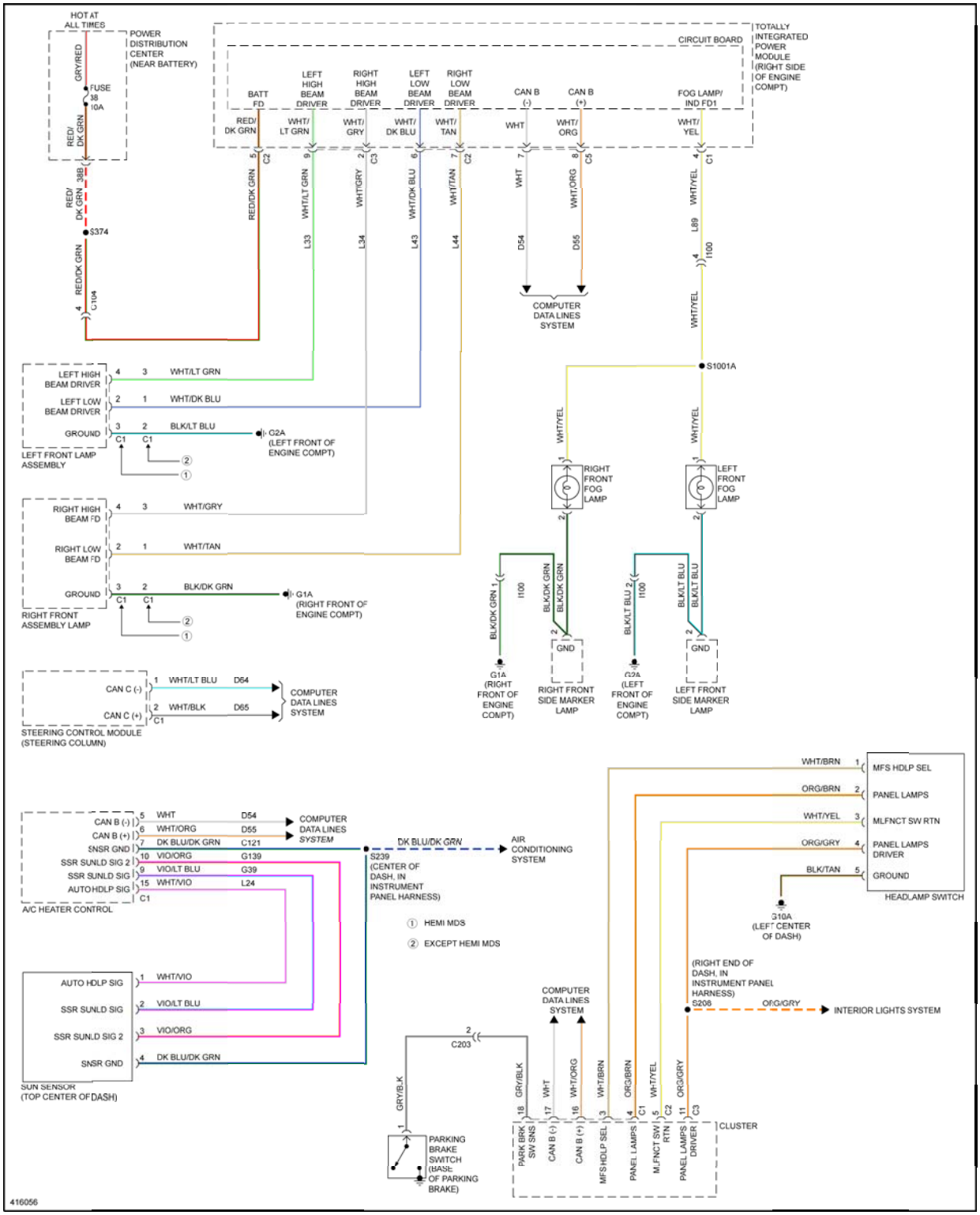

Fig. 35: Headlights Circuit

HORN

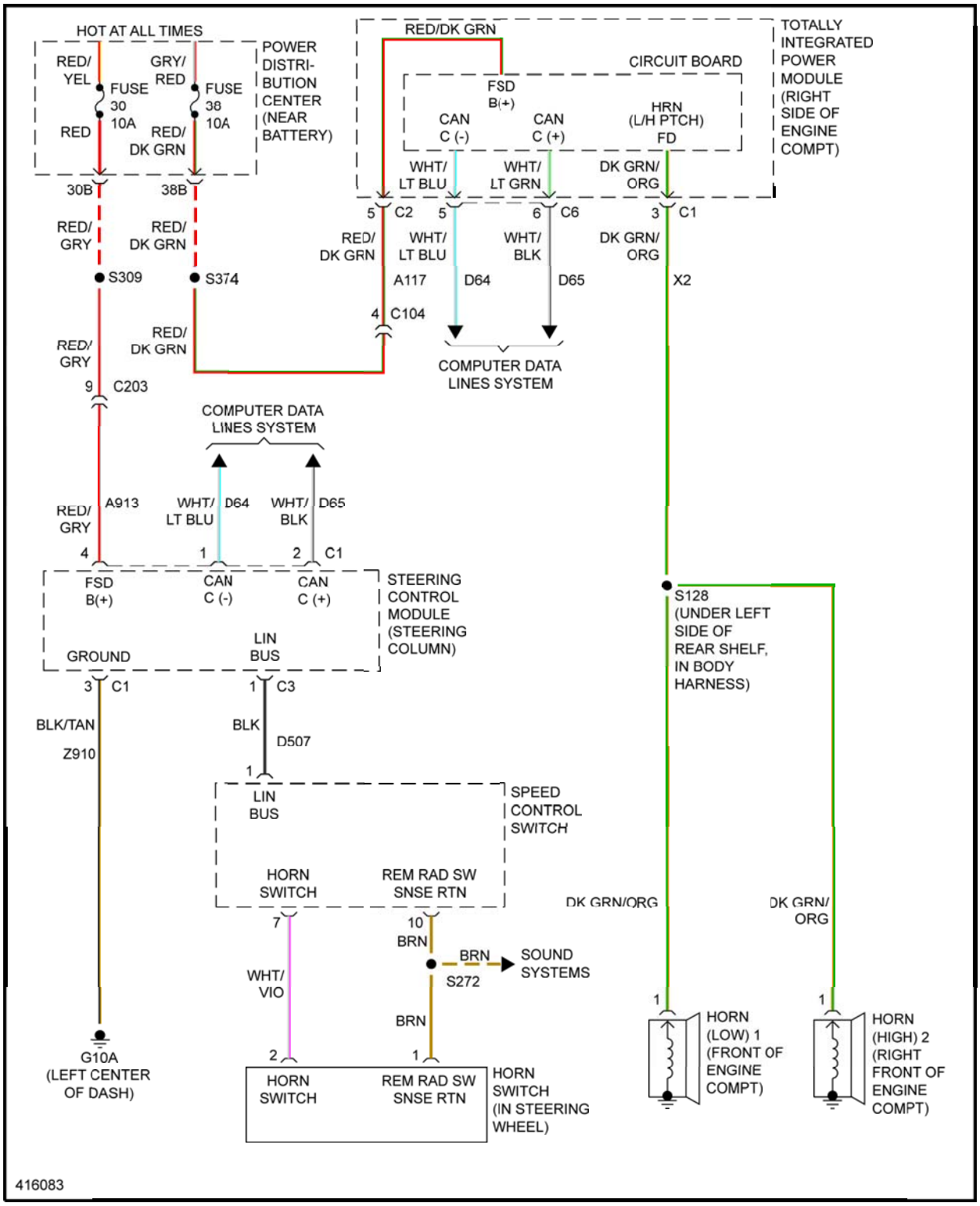

Fig. 36: Horn Circuit

INSTRUMENT CLUSTER

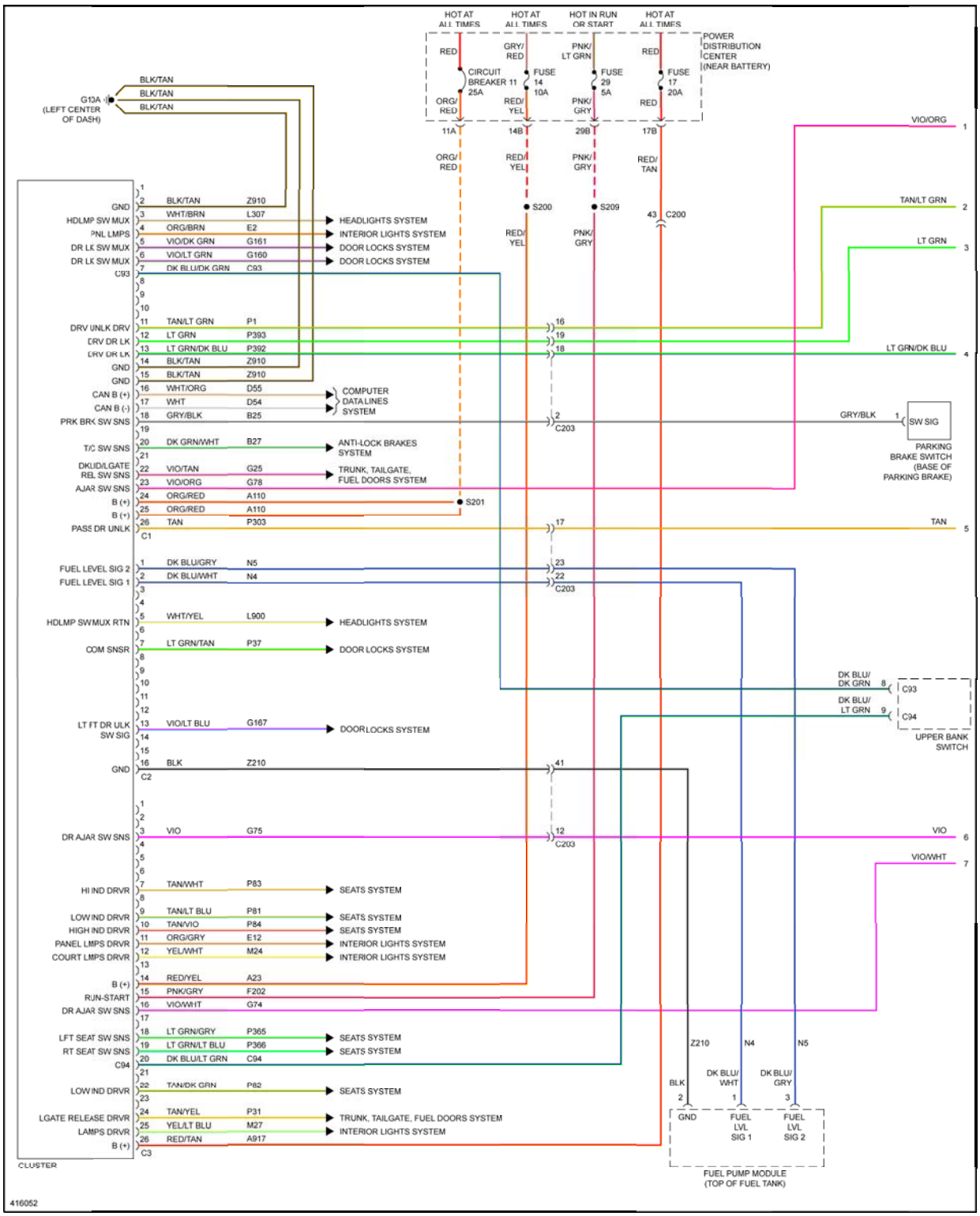

Fig. 37: Instrument Cluster Circuit (1 of 2)

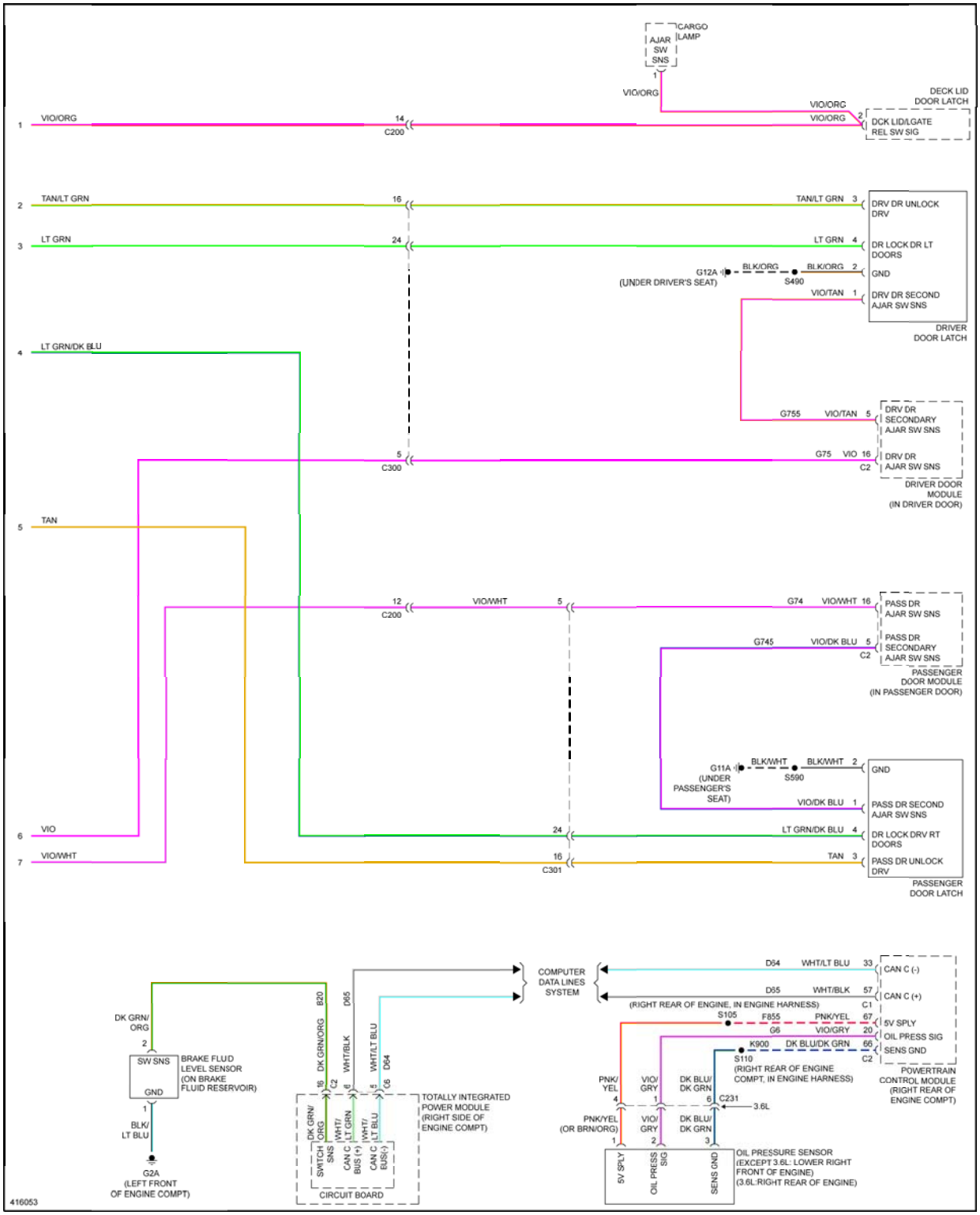

Fig. 38: Instrument Cluster Circuit (2 of 2)

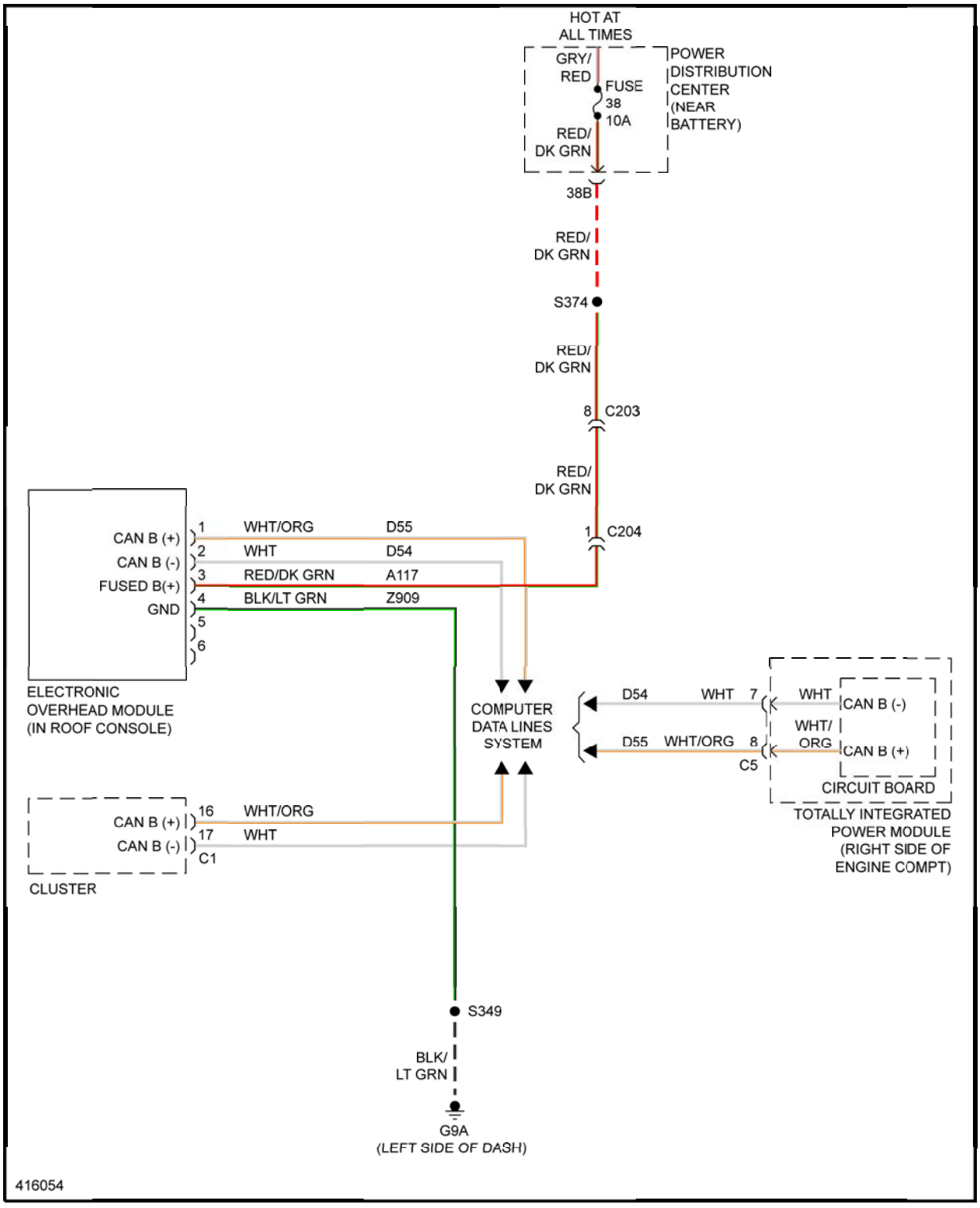

Fig. 39: Overhead Console Circuit

INTERIOR LIGHTS

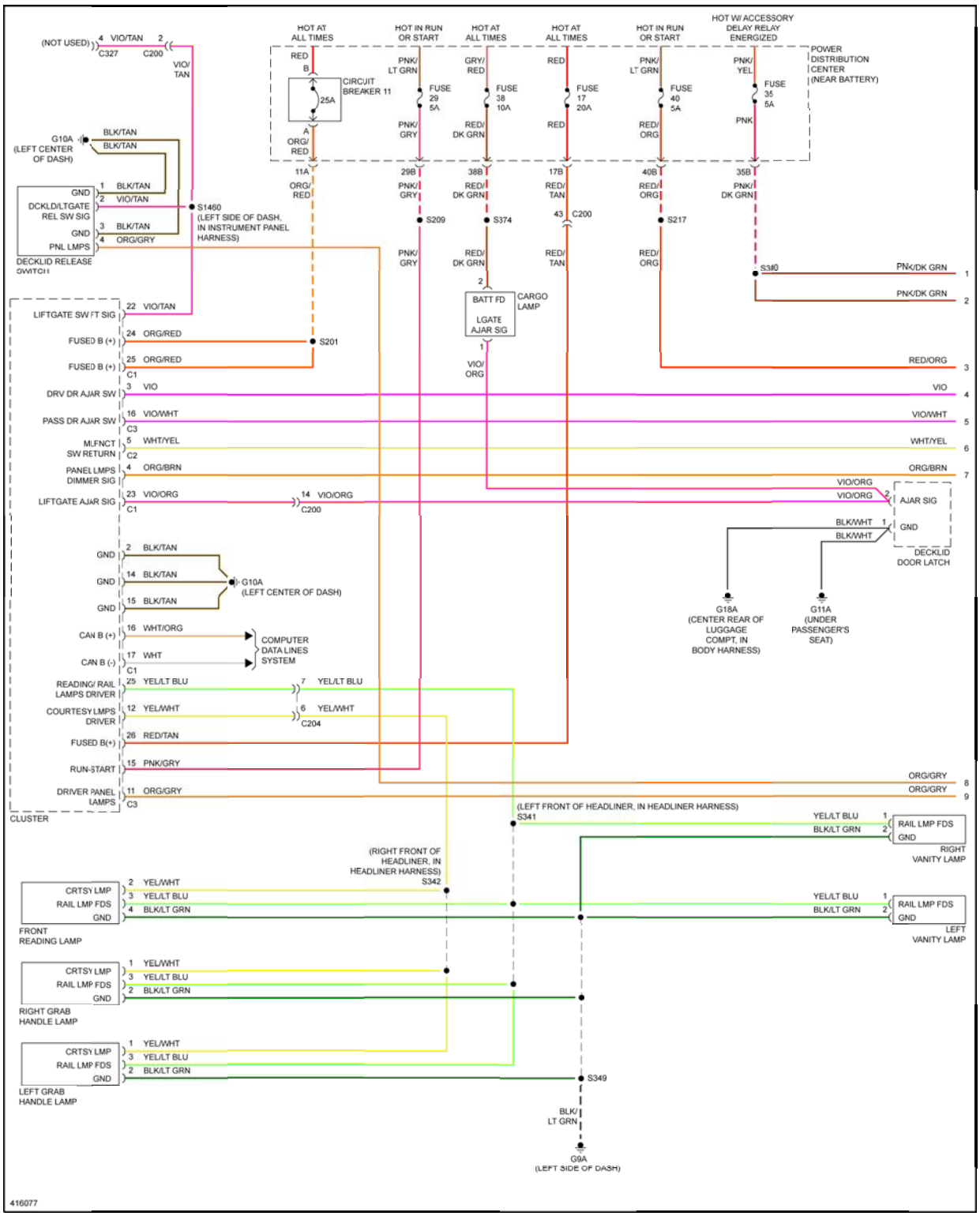

Fig. 40: Interior Lights Circuit (1 of 2)

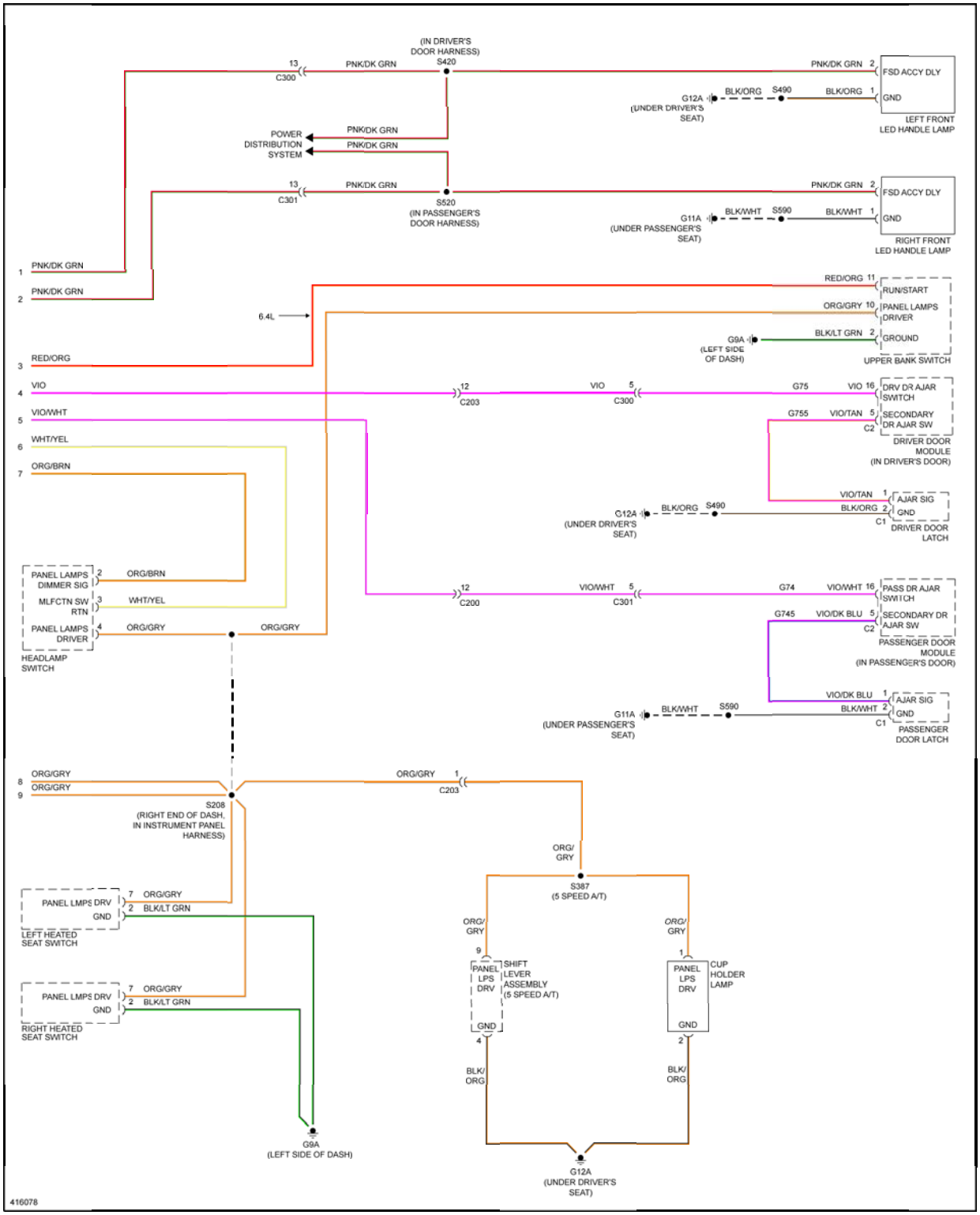

Fig. 41: Interior Lights Circuit (2 of 2)

NAVIGATION

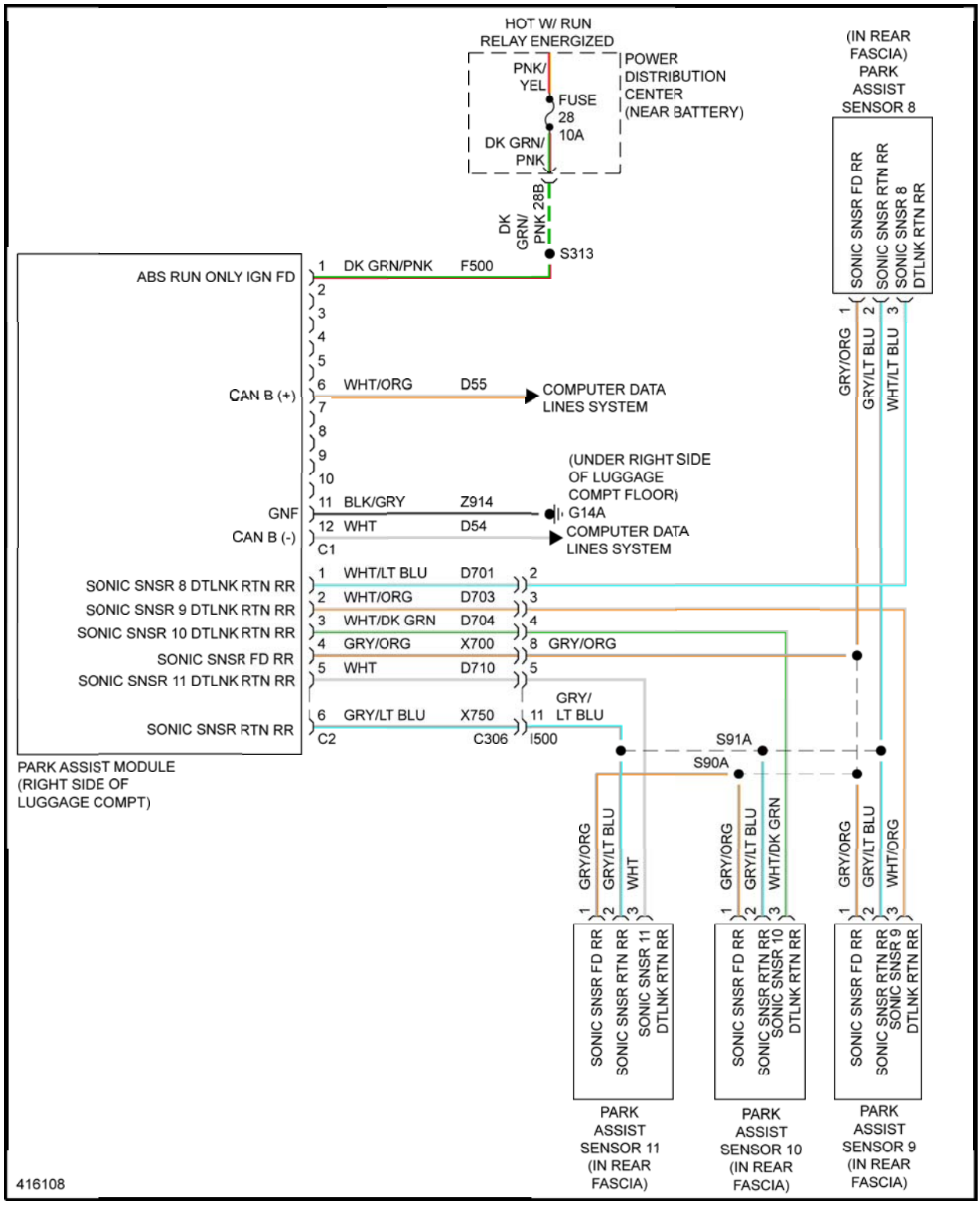

Fig. 42: Navigation Circuit

POWER DISTRIBUTION

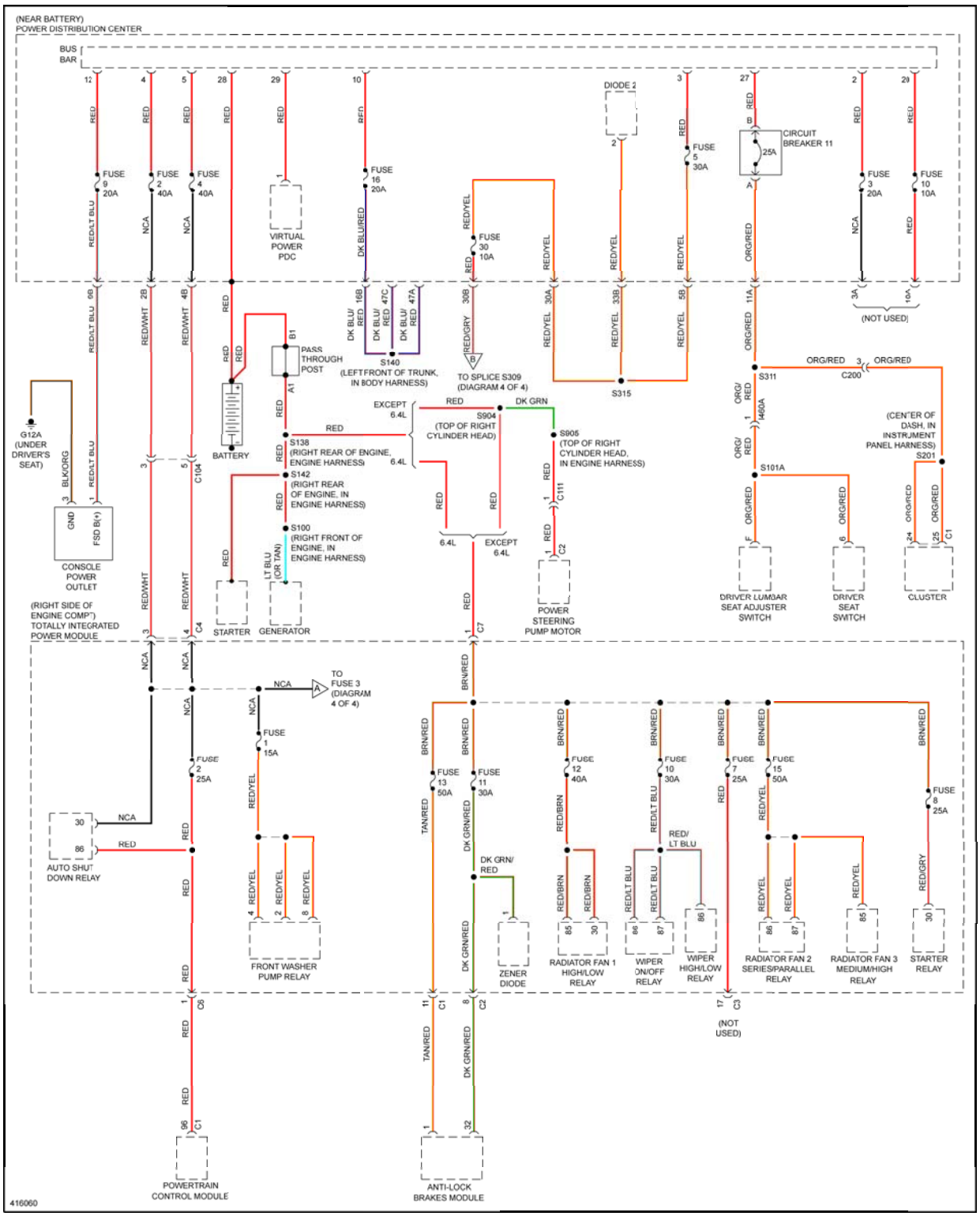

Fig. 43: Power Distribution Circuit (1 of 4)

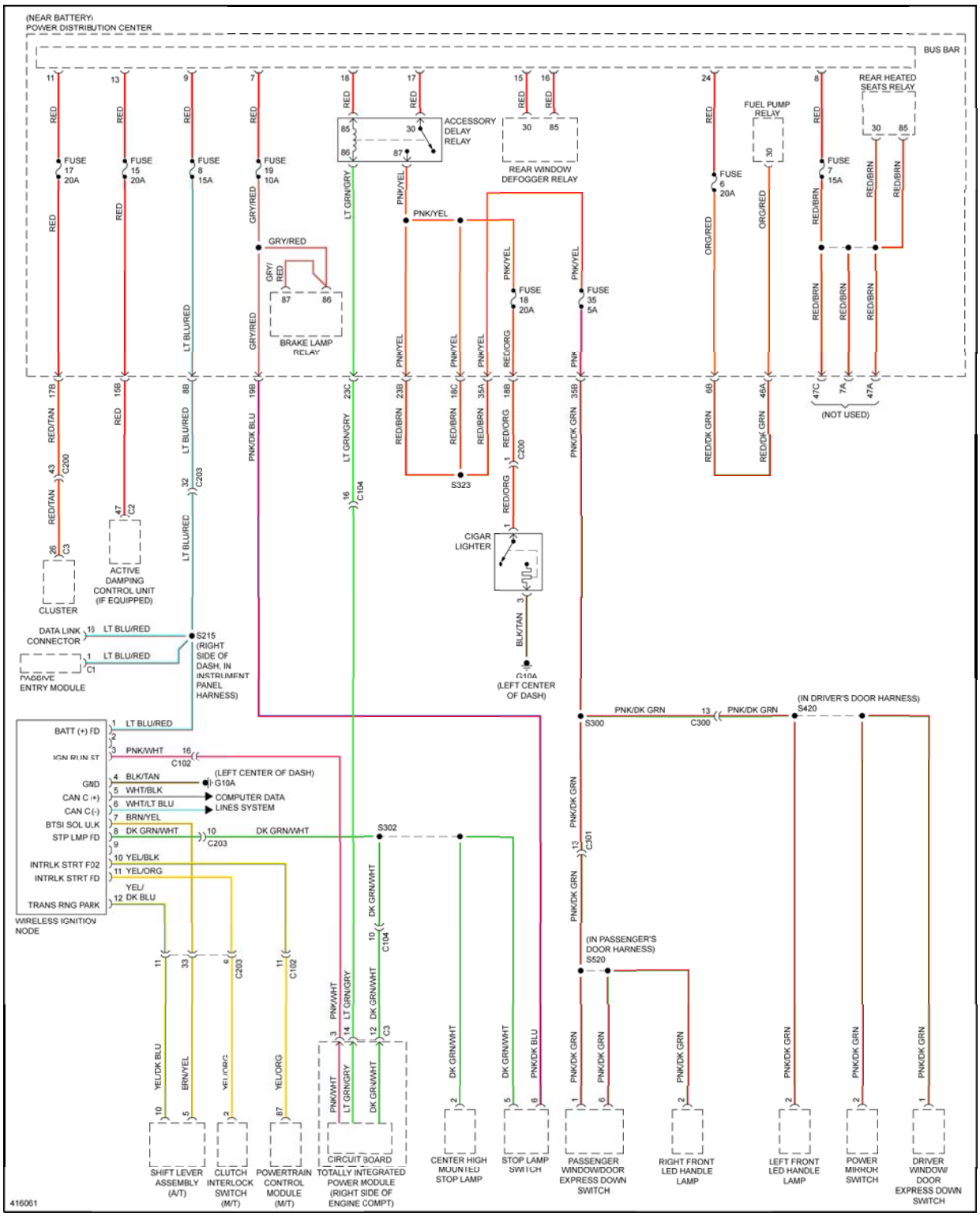

Fig. 44: Power Distribution Circuit (2 of 4)

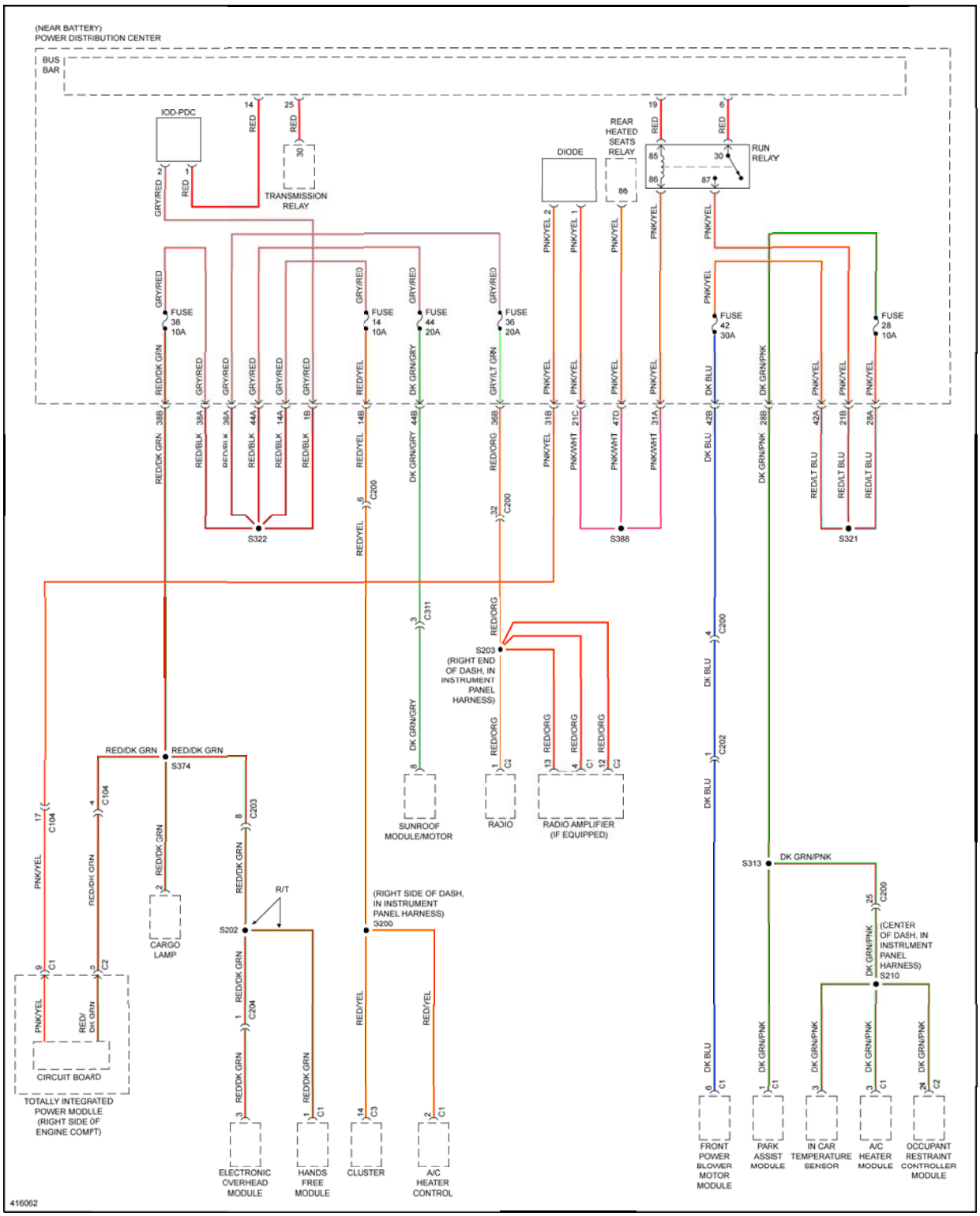

Fig. 45: Power Distribution Circuit (3 of 4)

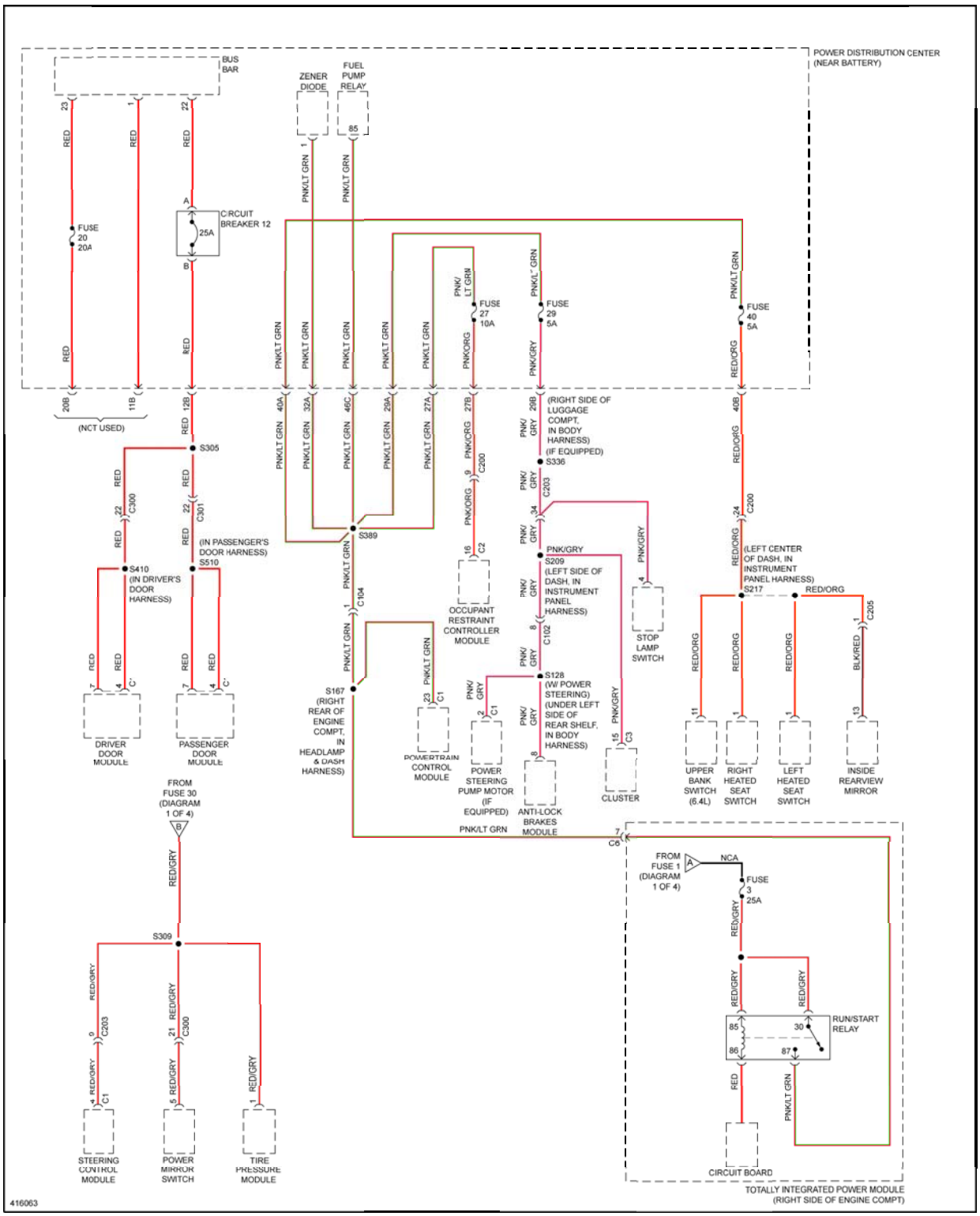

Fig. 46: Power Distribution Circuit (4 of 4)

POWER DOOR LOCKS

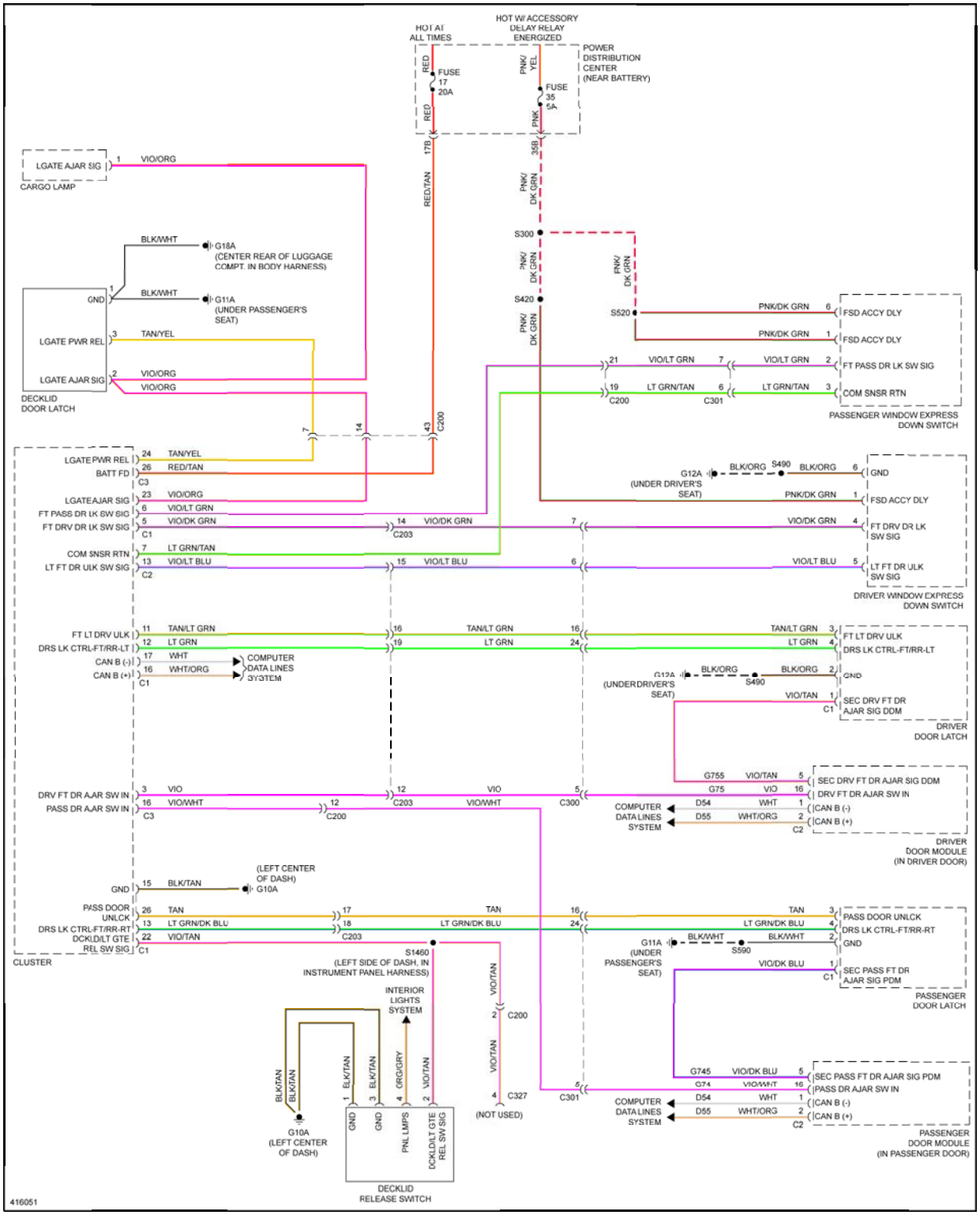

Fig. 47: Power Door Locks Circuit

POWER MIRRORS

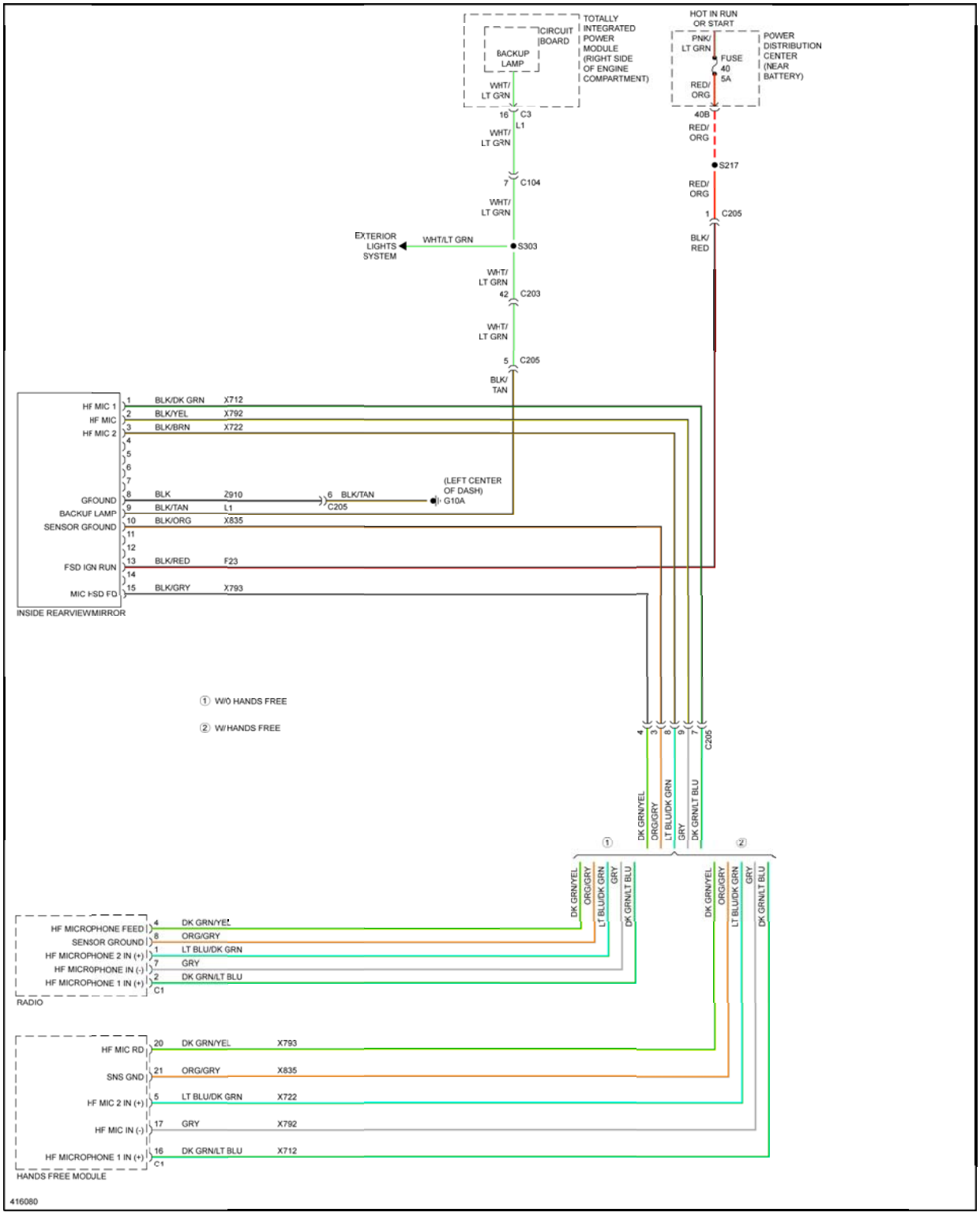

Fig. 48: Automatic Day/Night Mirror Circuit

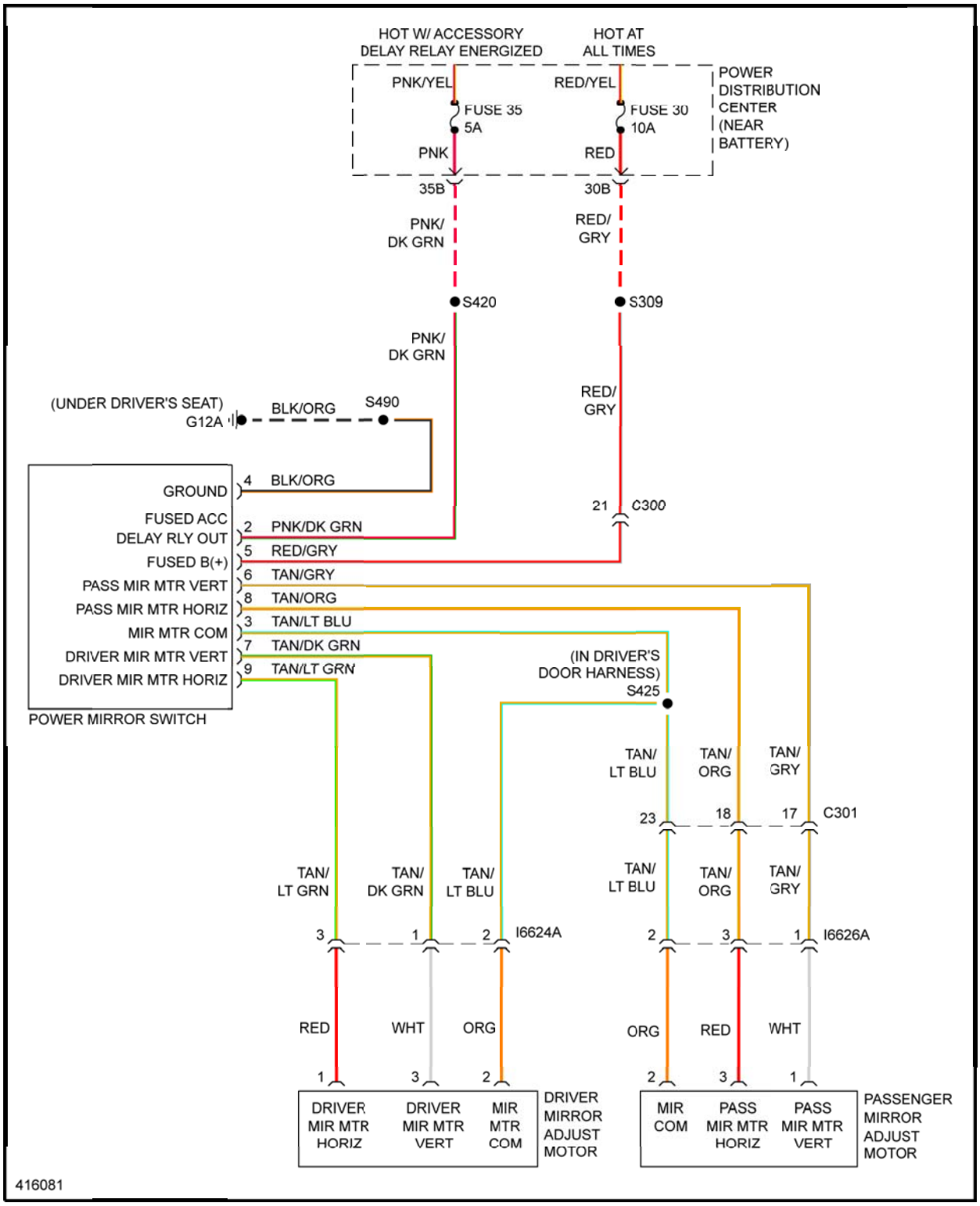

Fig. 49: Power Mirrors Circuit

POWER SEATS

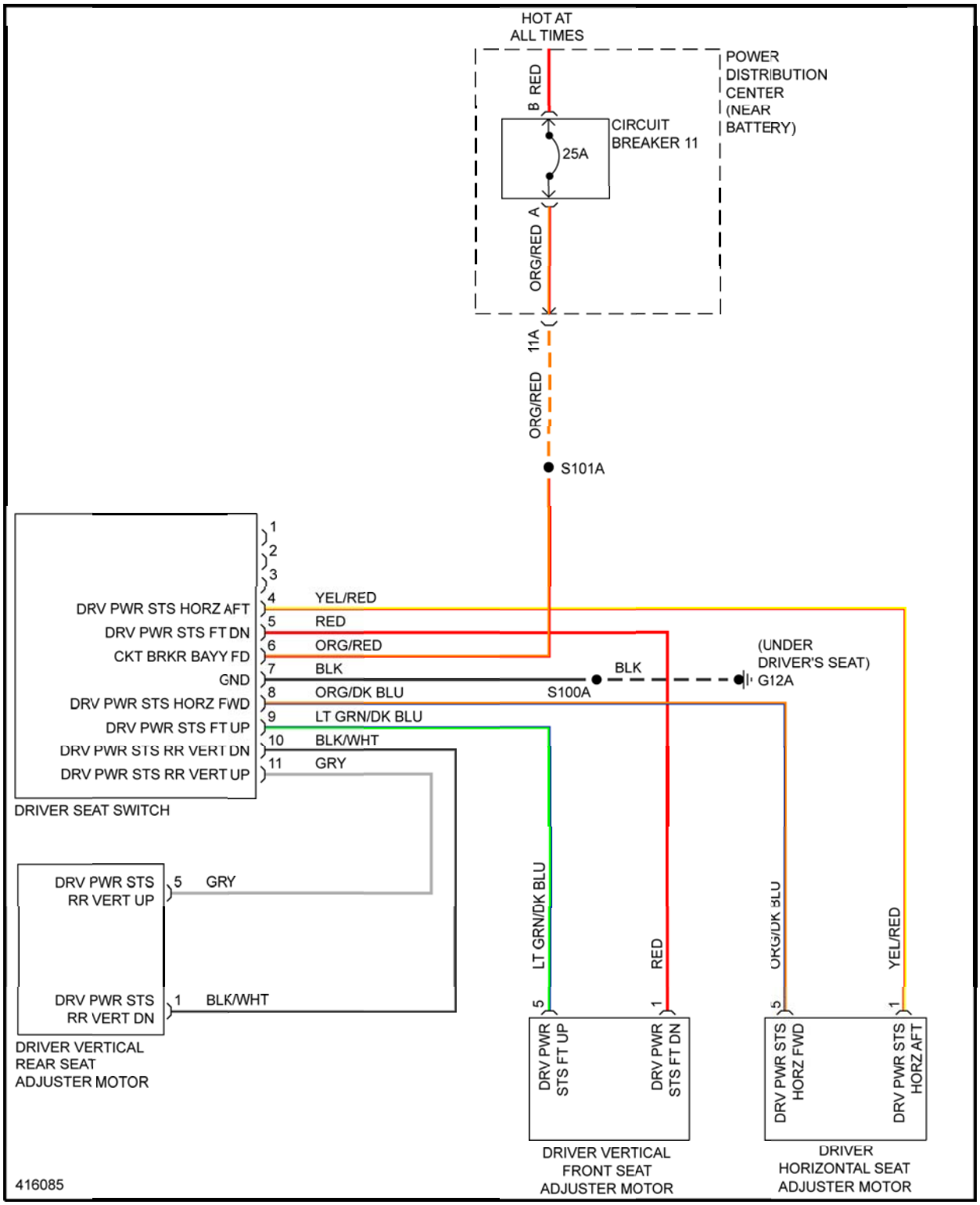

Fig. 50: Driver Power Seat Circuit

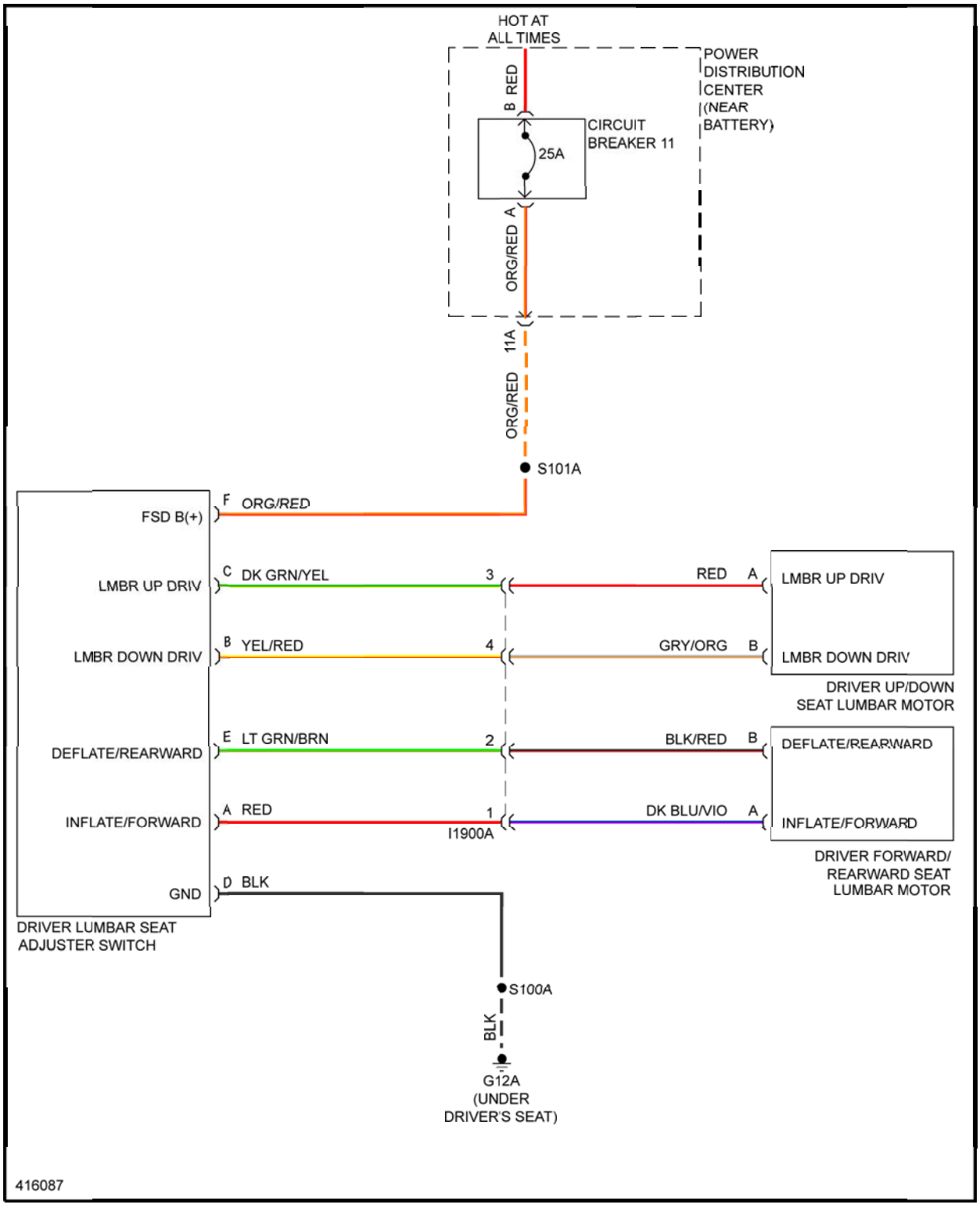

Fig. 51: Driver"s Lumbar Circuit

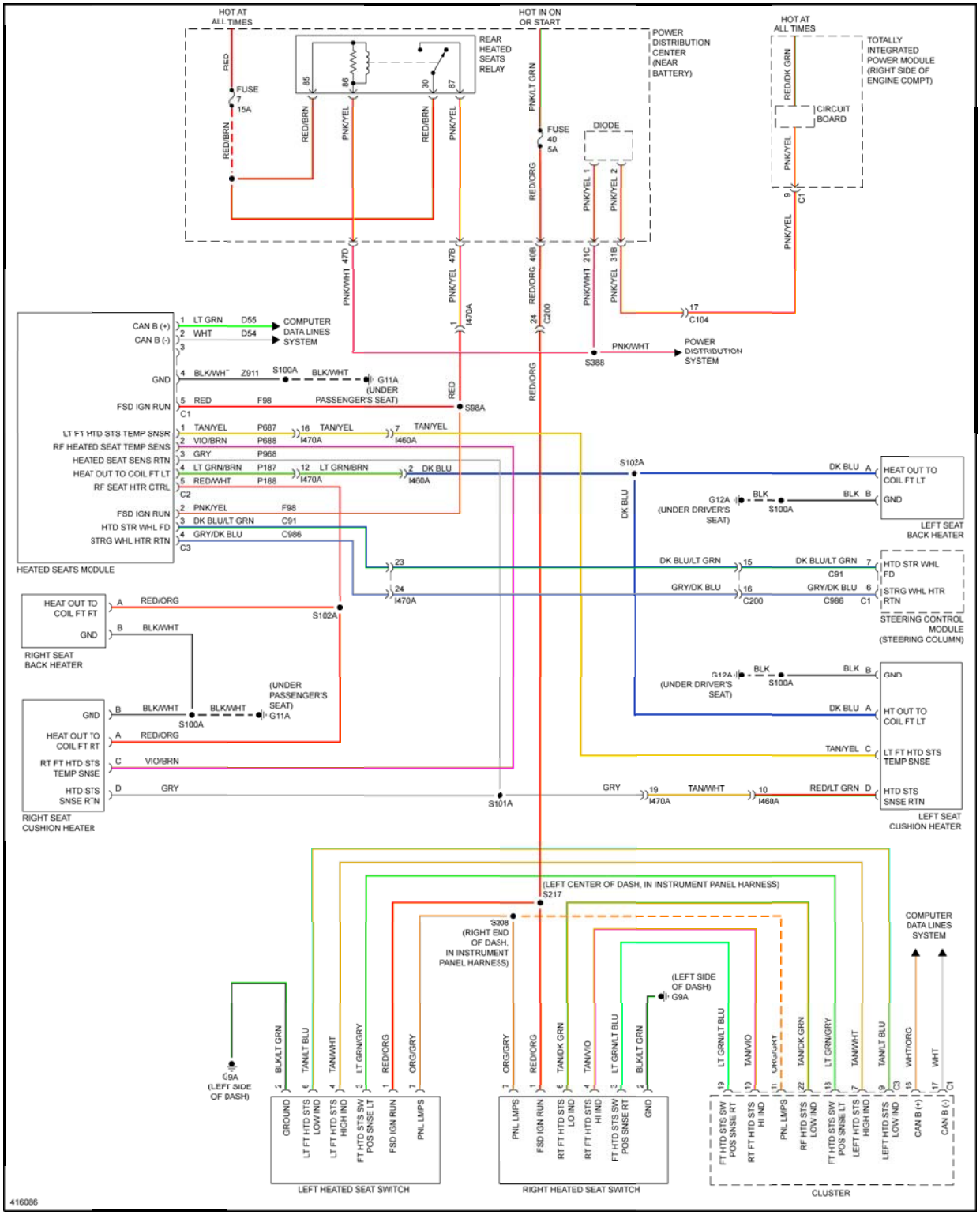

Fig. 52: Heated Seats Circuit

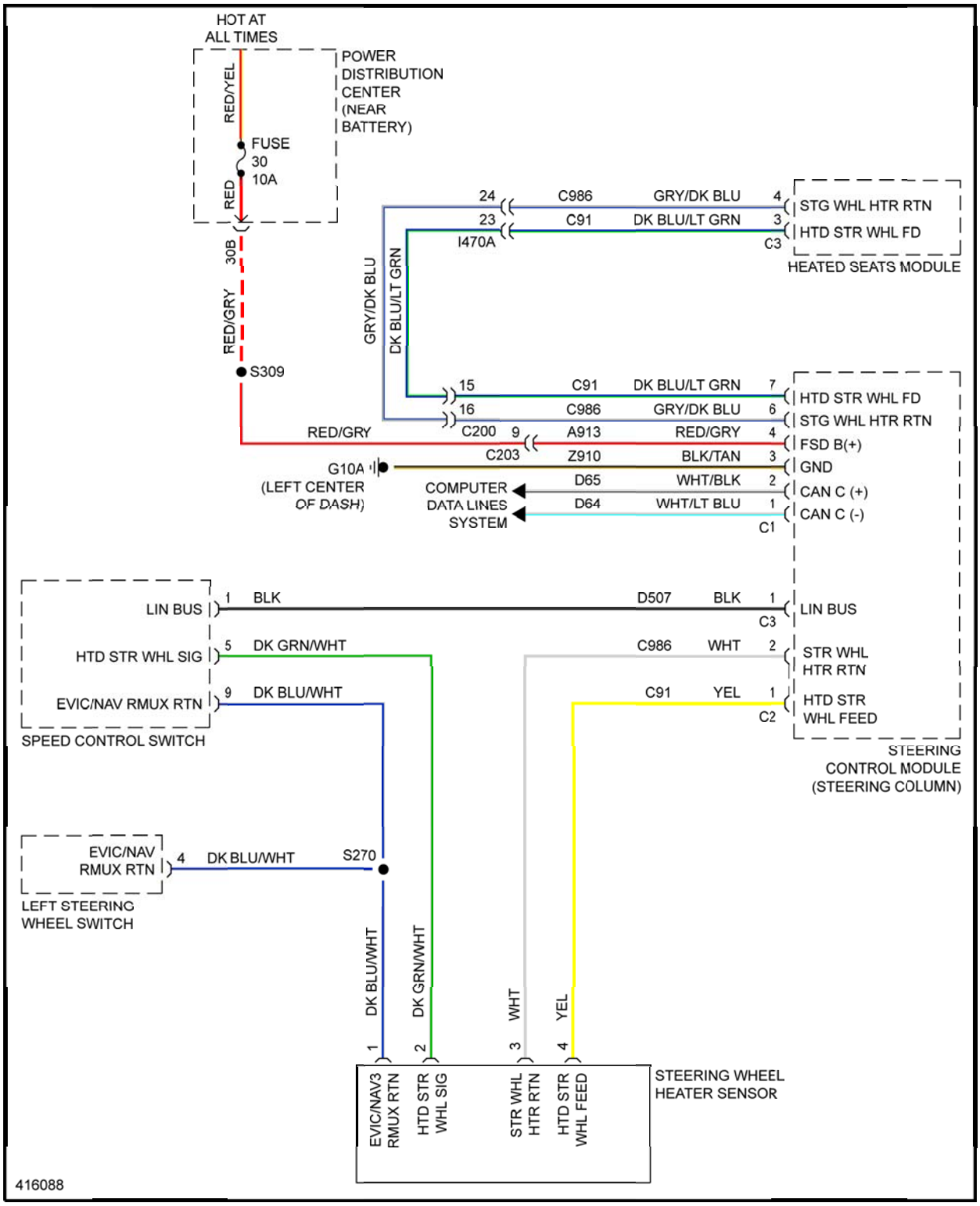

Fig. 53: Heated Steering Wheel Circuit

POWER TOP/SUNROOF

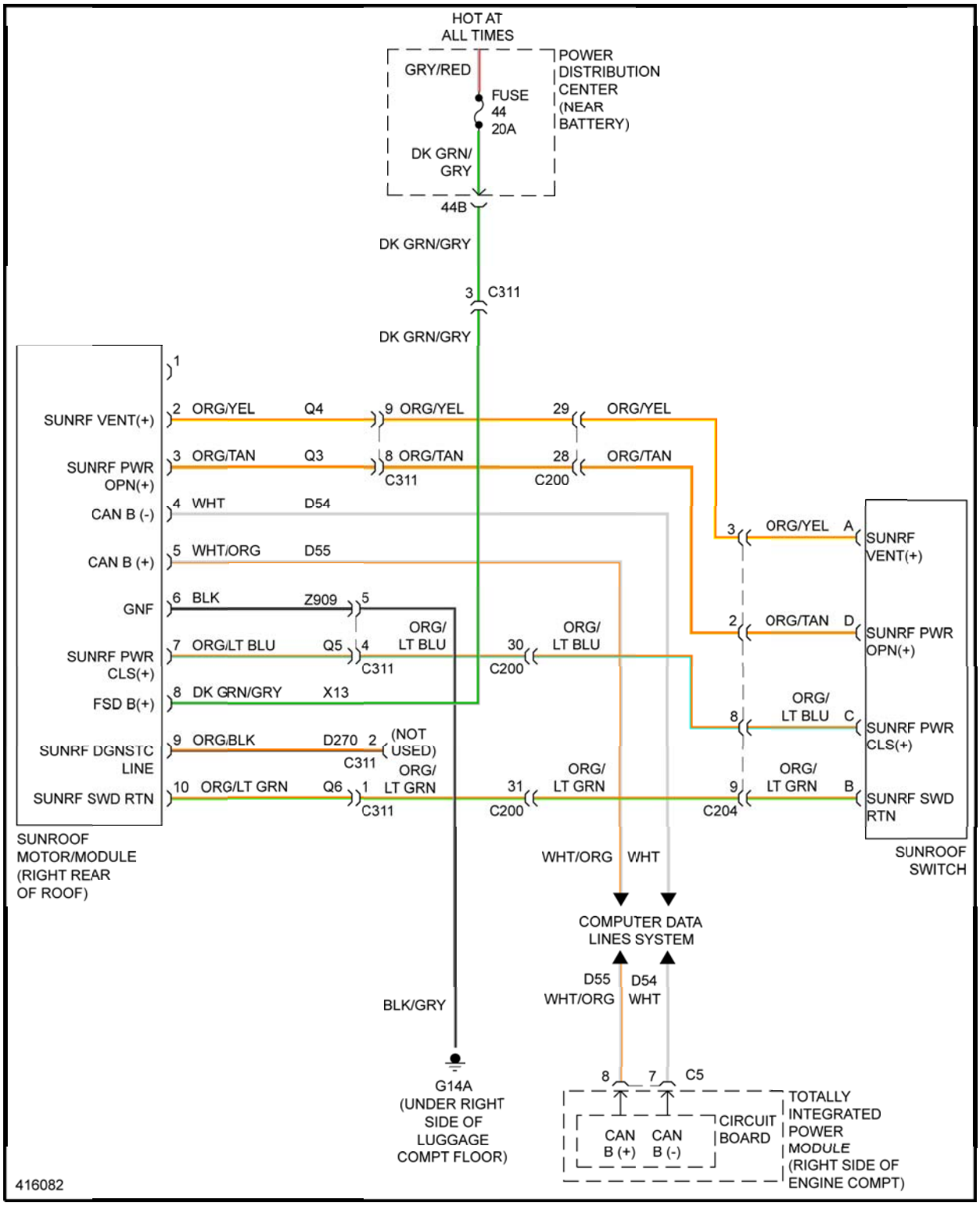

Fig. 54: Power Top/Sunroof Circuit

POWER WINDOWS

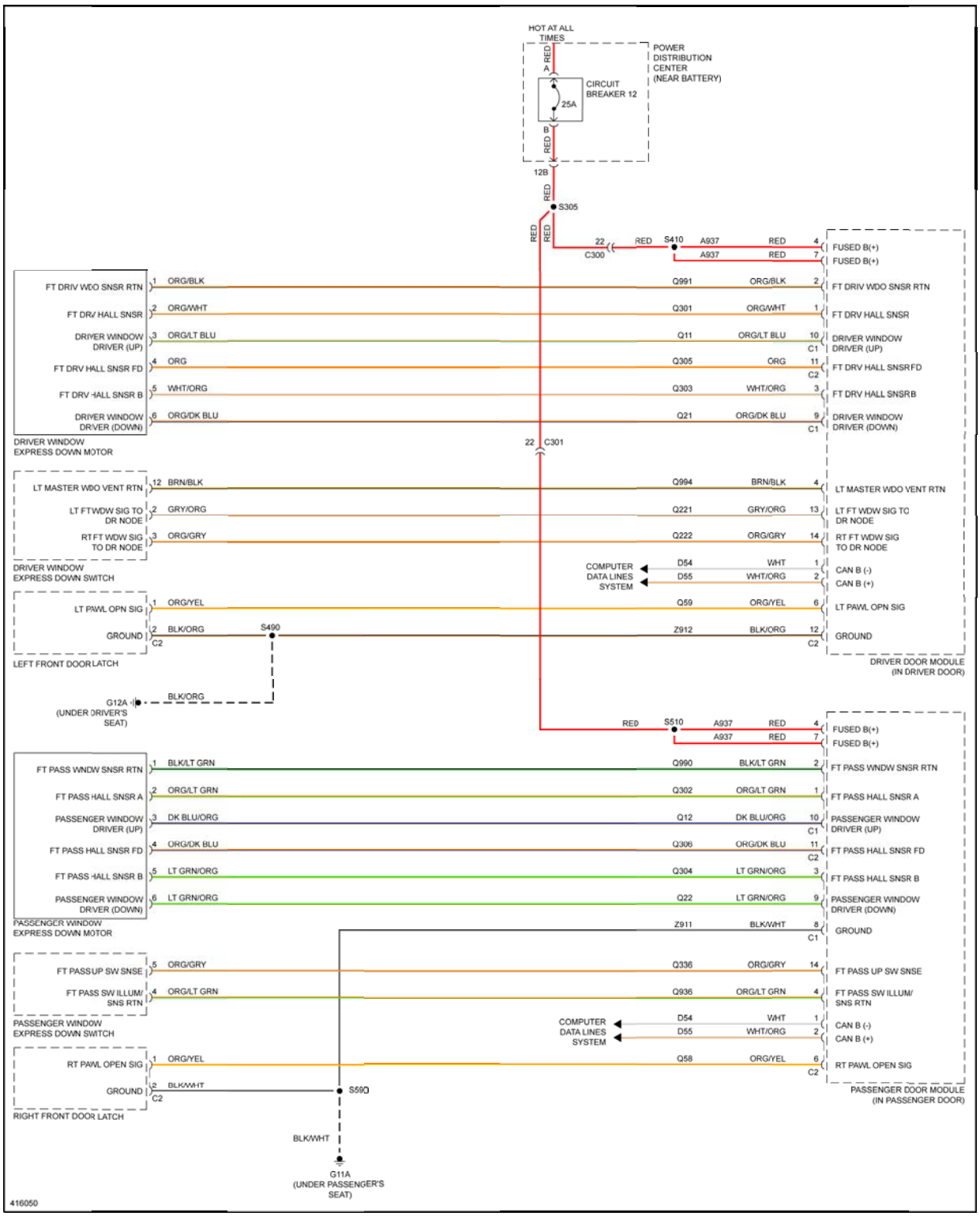

Fig. 55: Power Windows Circuit

RADIO

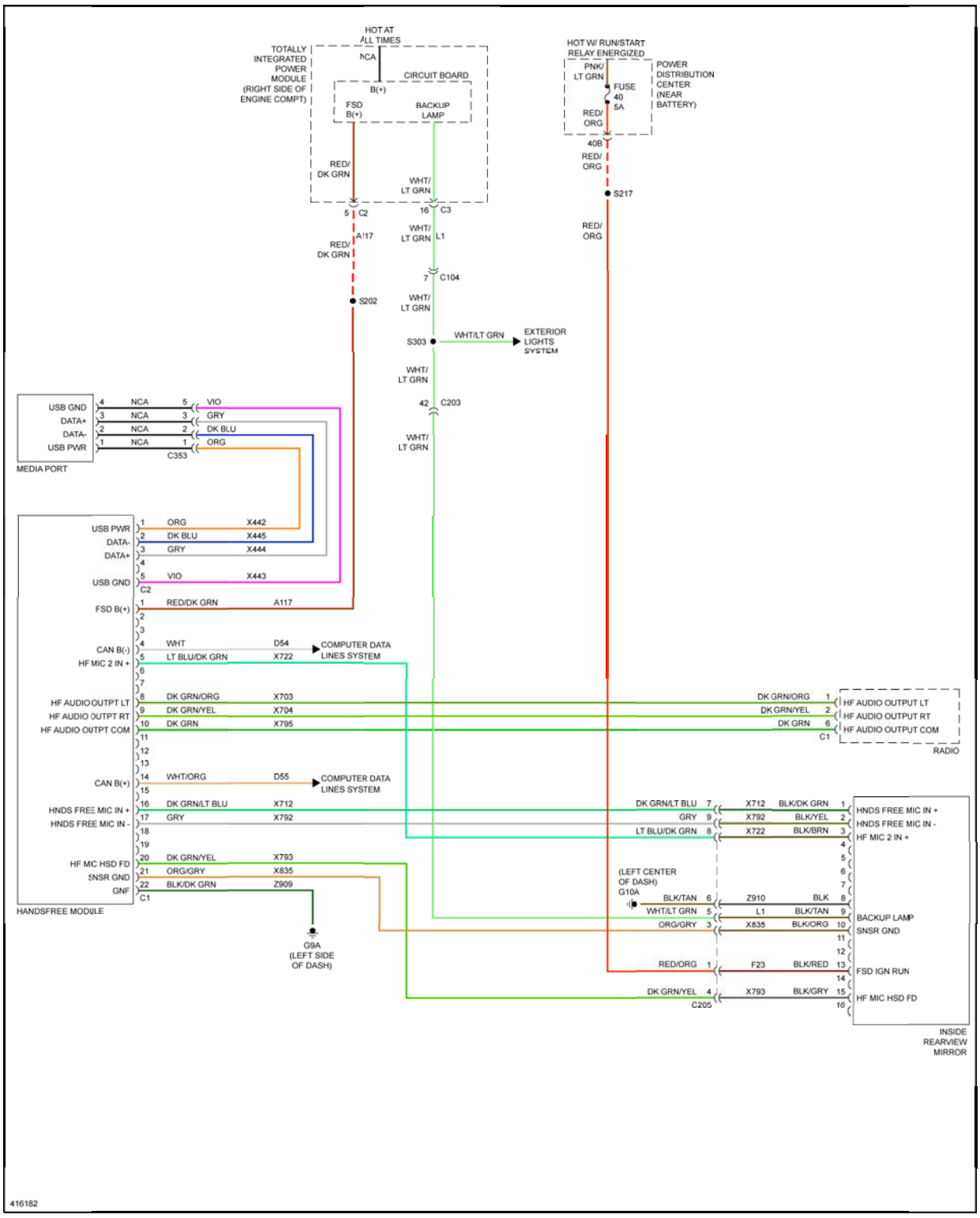

Fig. 56: Hands Free Module Circuit

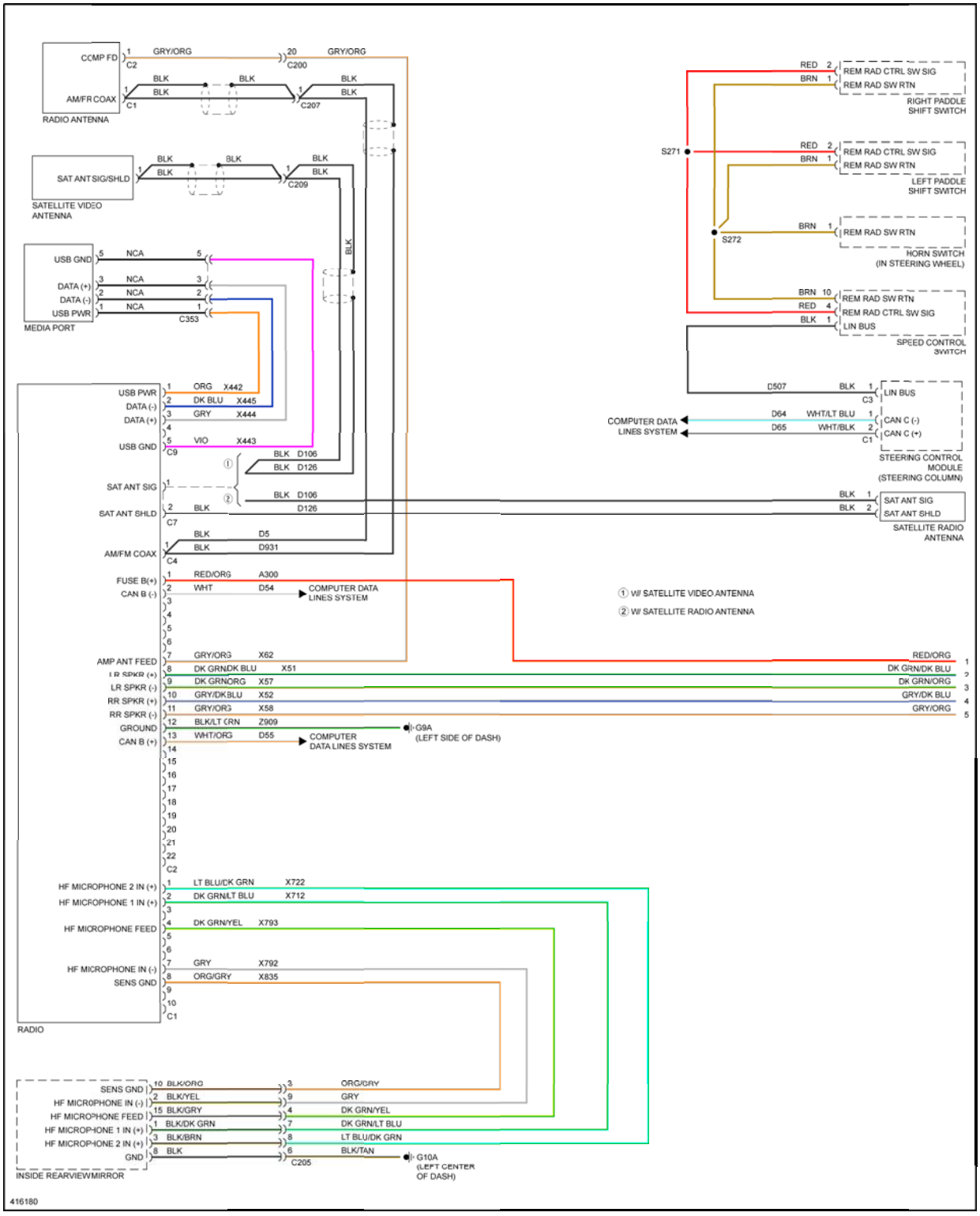

Fig. 57: Radio Circuit (1 of 2)

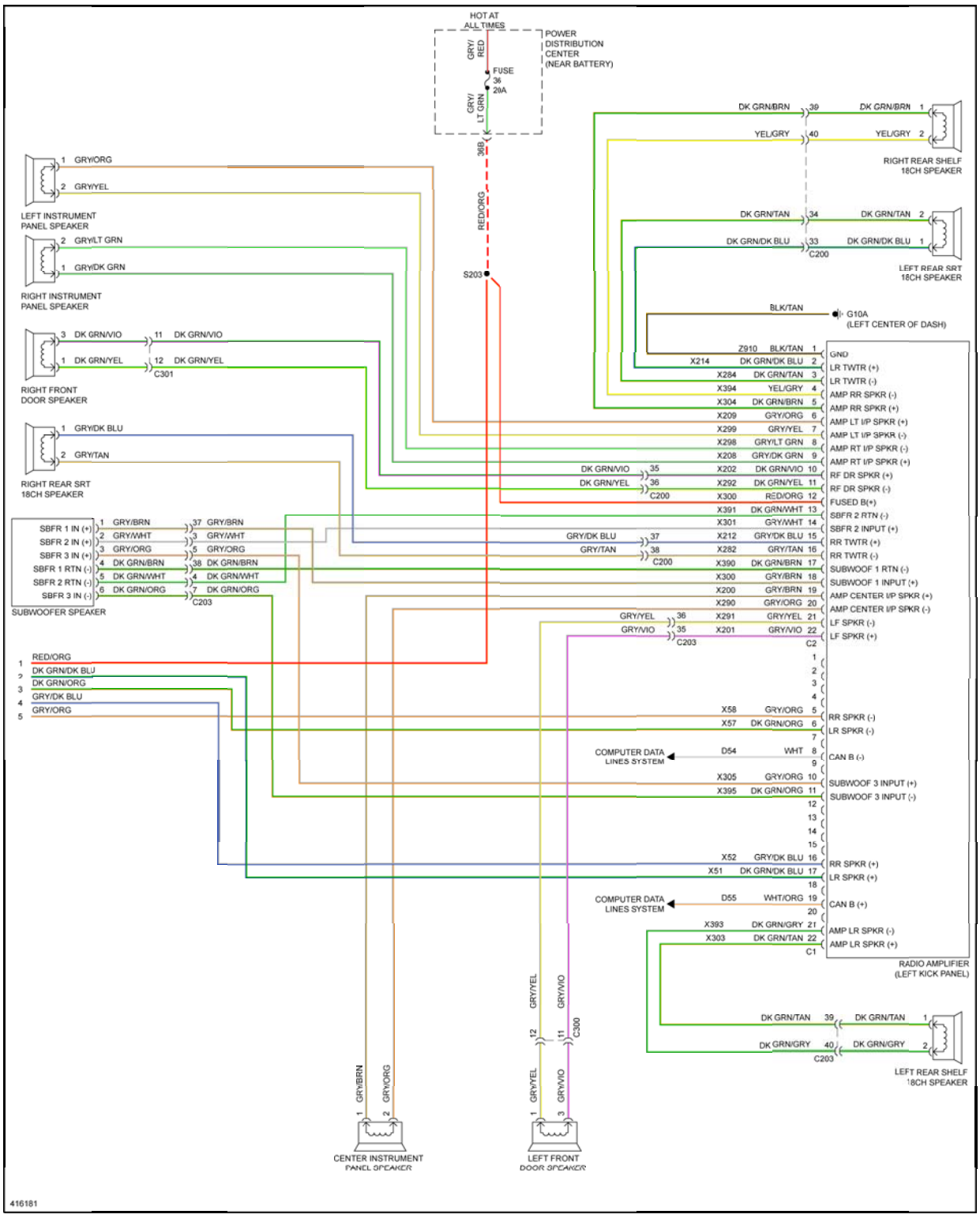

Fig. 58: Radio Circuit (2 of 2)

SHIFT INTERLOCK

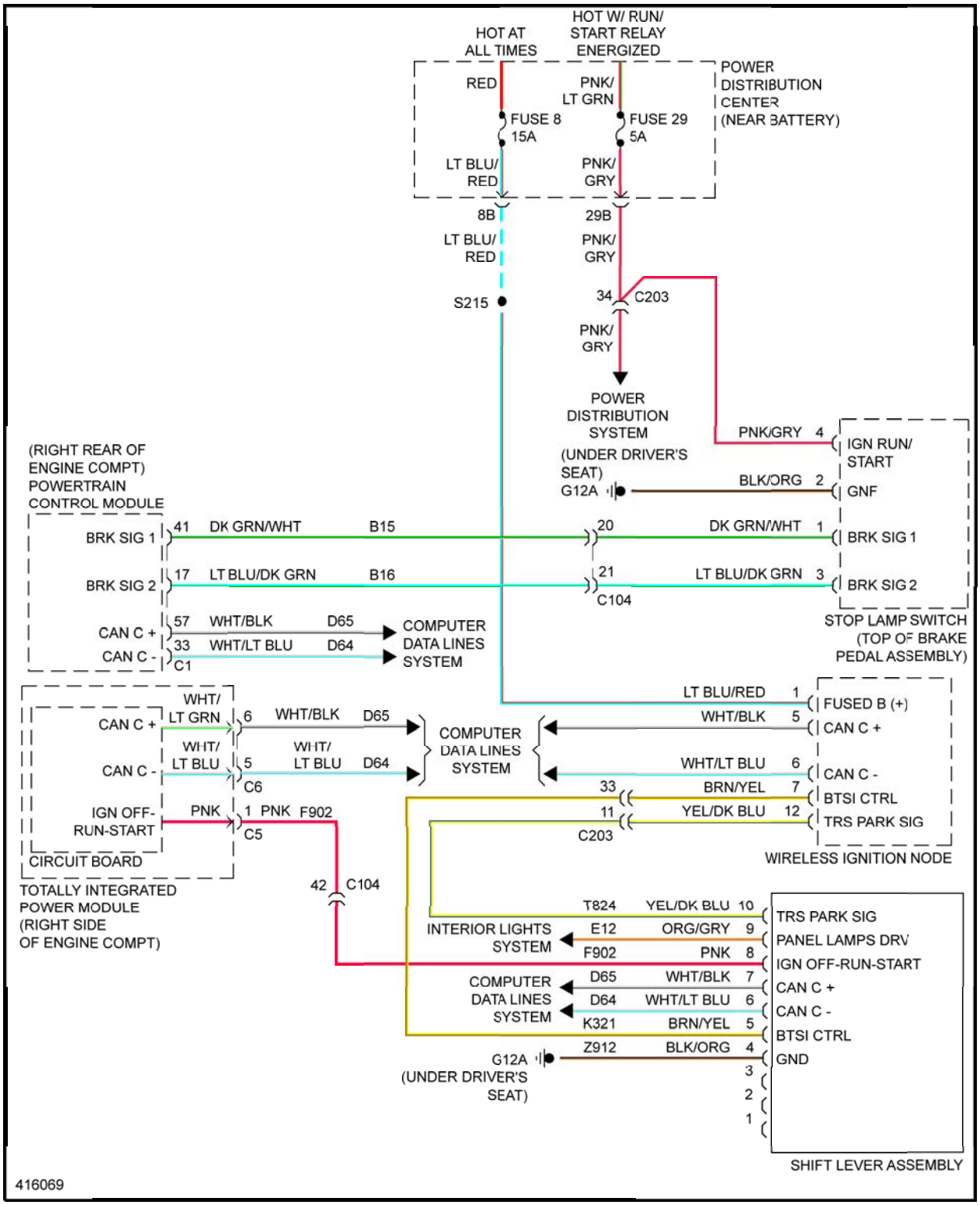

Fig. 59: Shift Interlock Circuit

STARTING/CHARGING

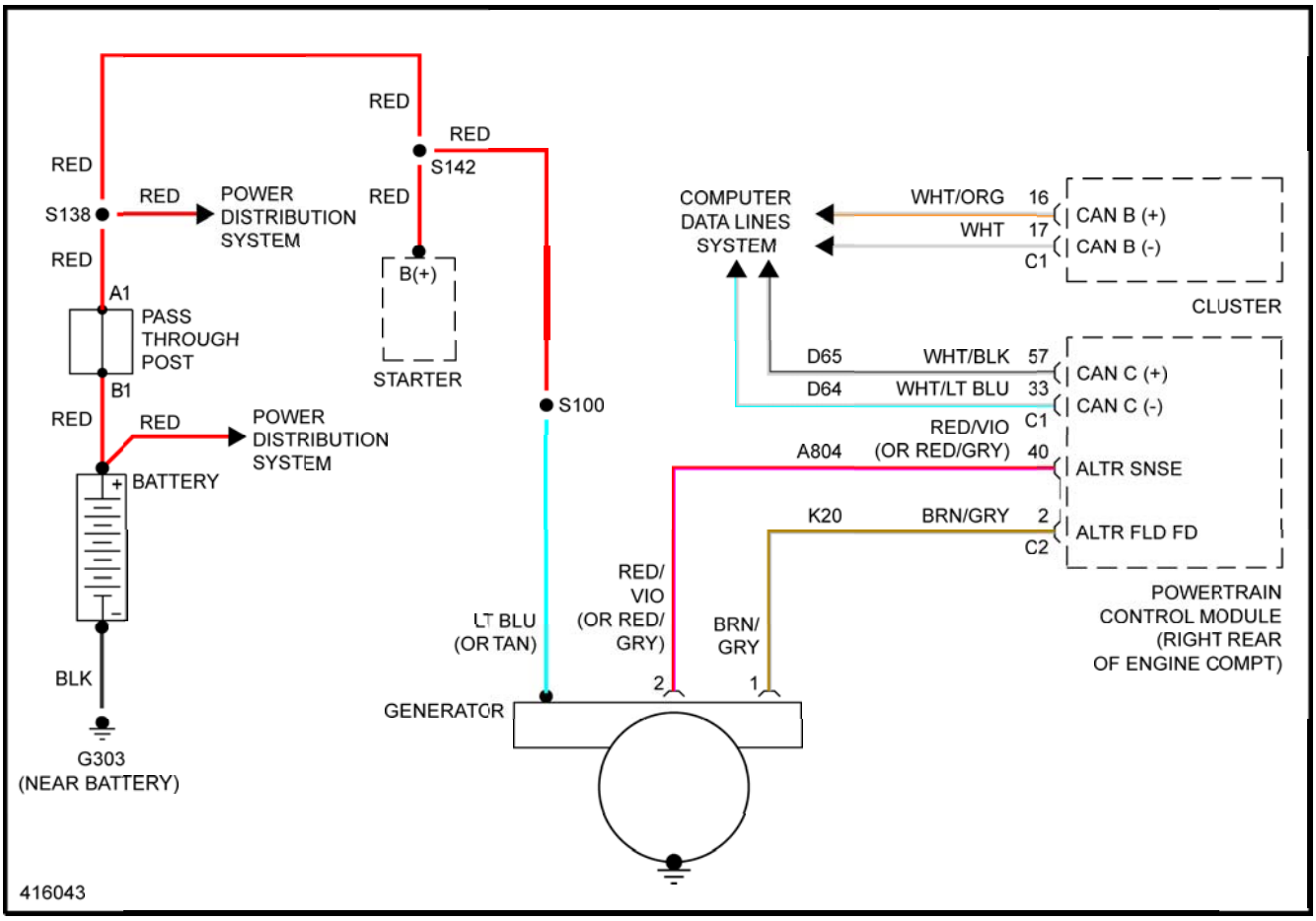

Fig. 60: Charging Circuit

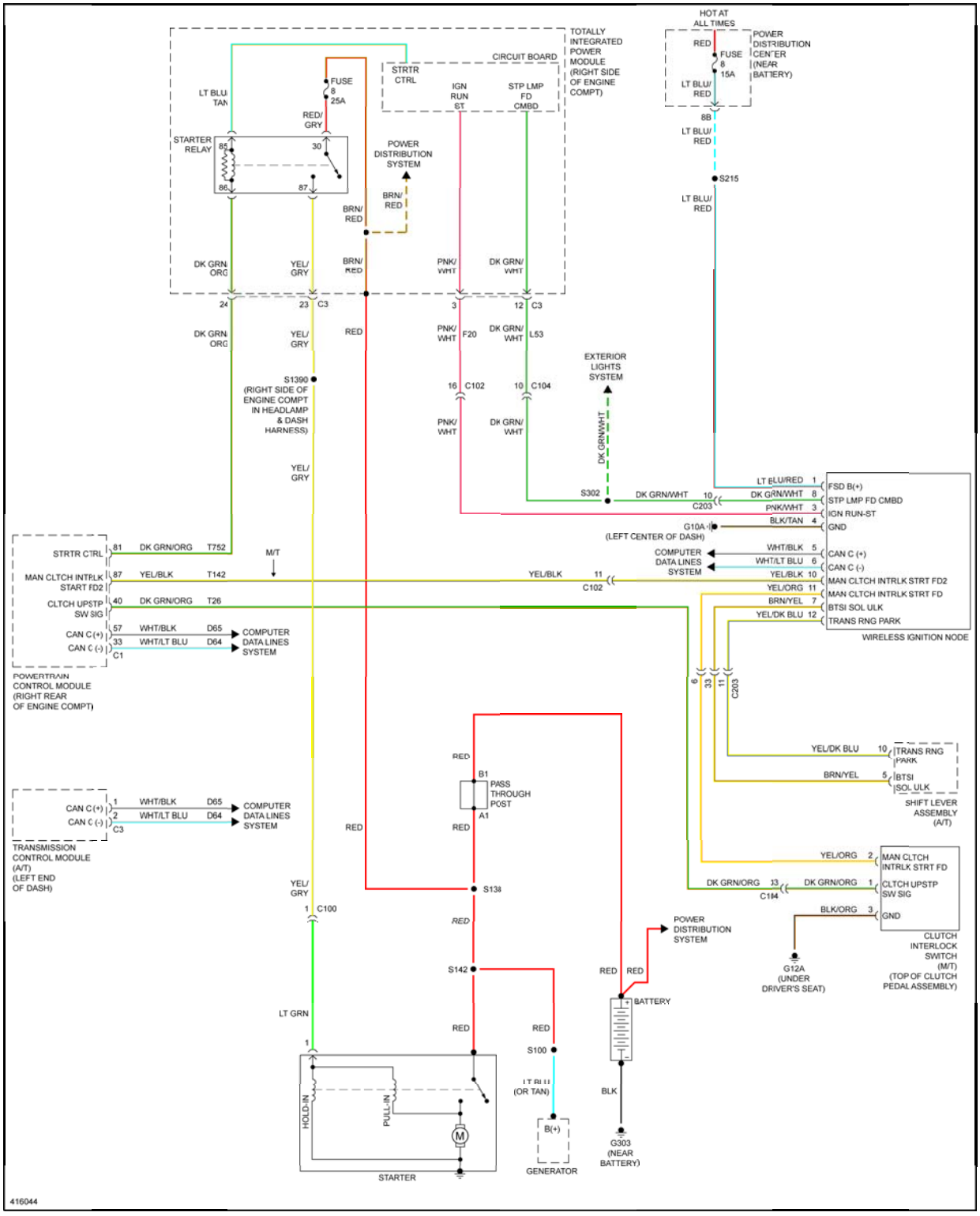

Fig. 61: Starting Circuit

SUPPLEMENTAL RESTRAINTS

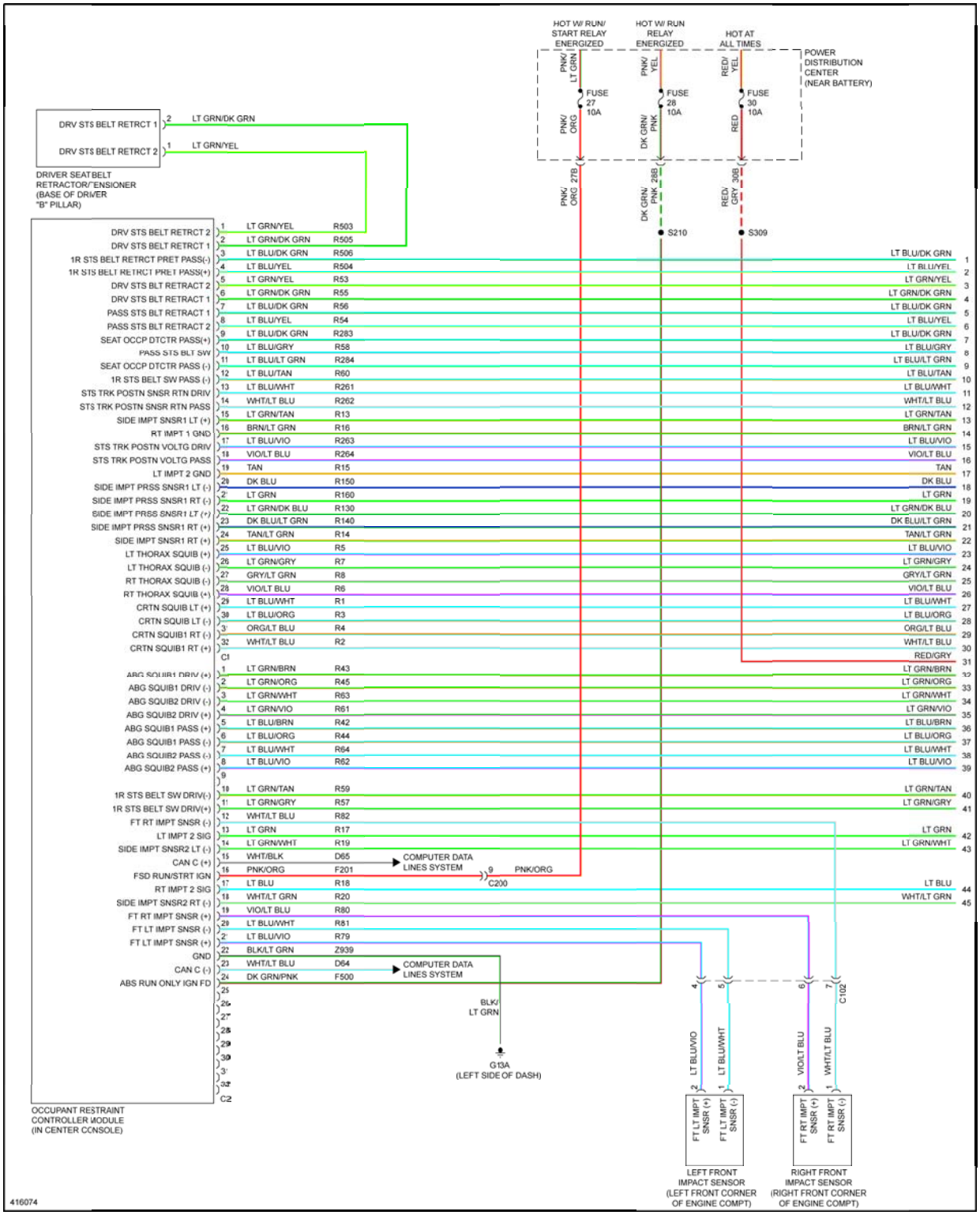

Fig. 62: Supplemental Restraints Circuit (1 of 3)

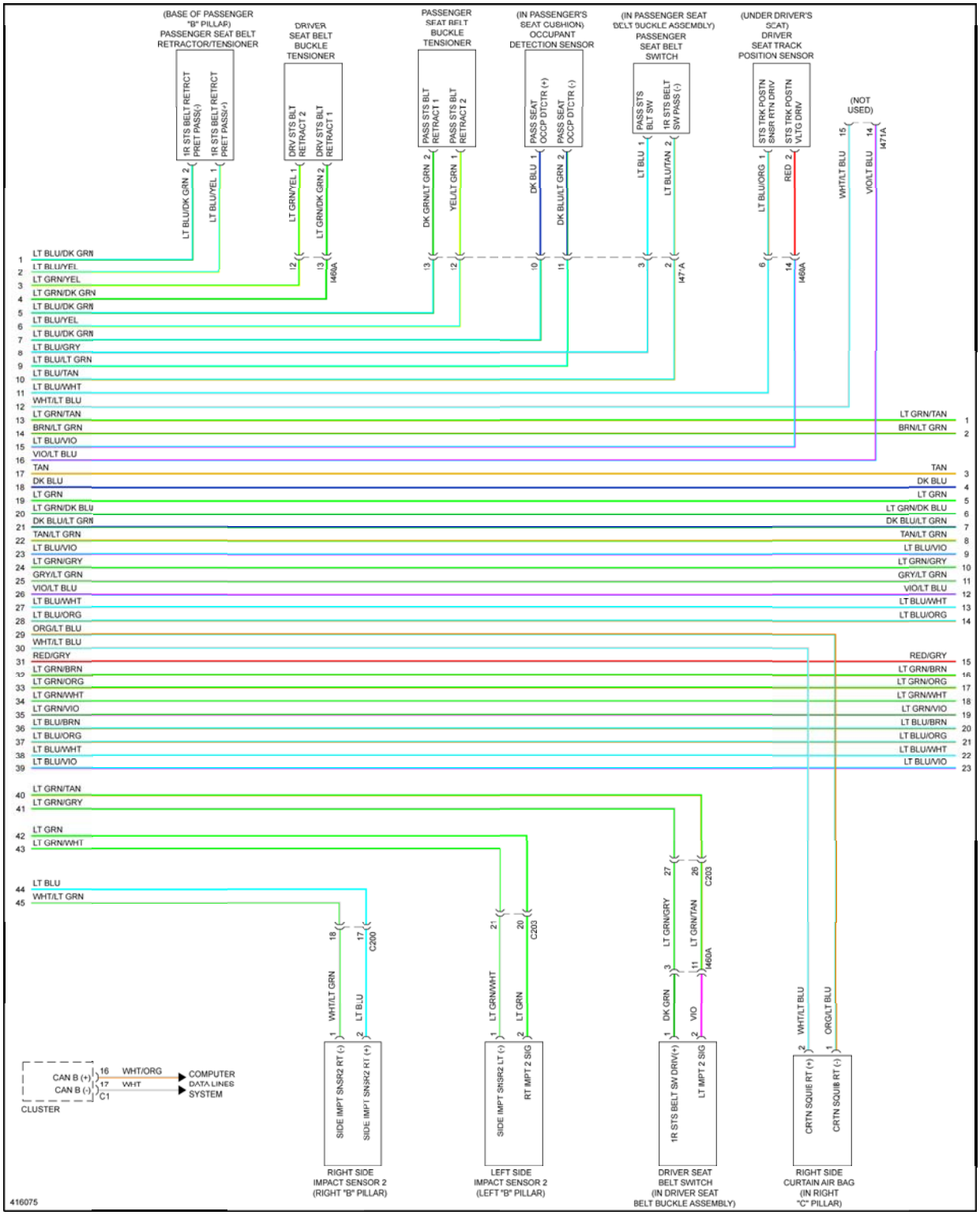

Fig. 63: Supplemental Restraints Circuit (2 of 3)

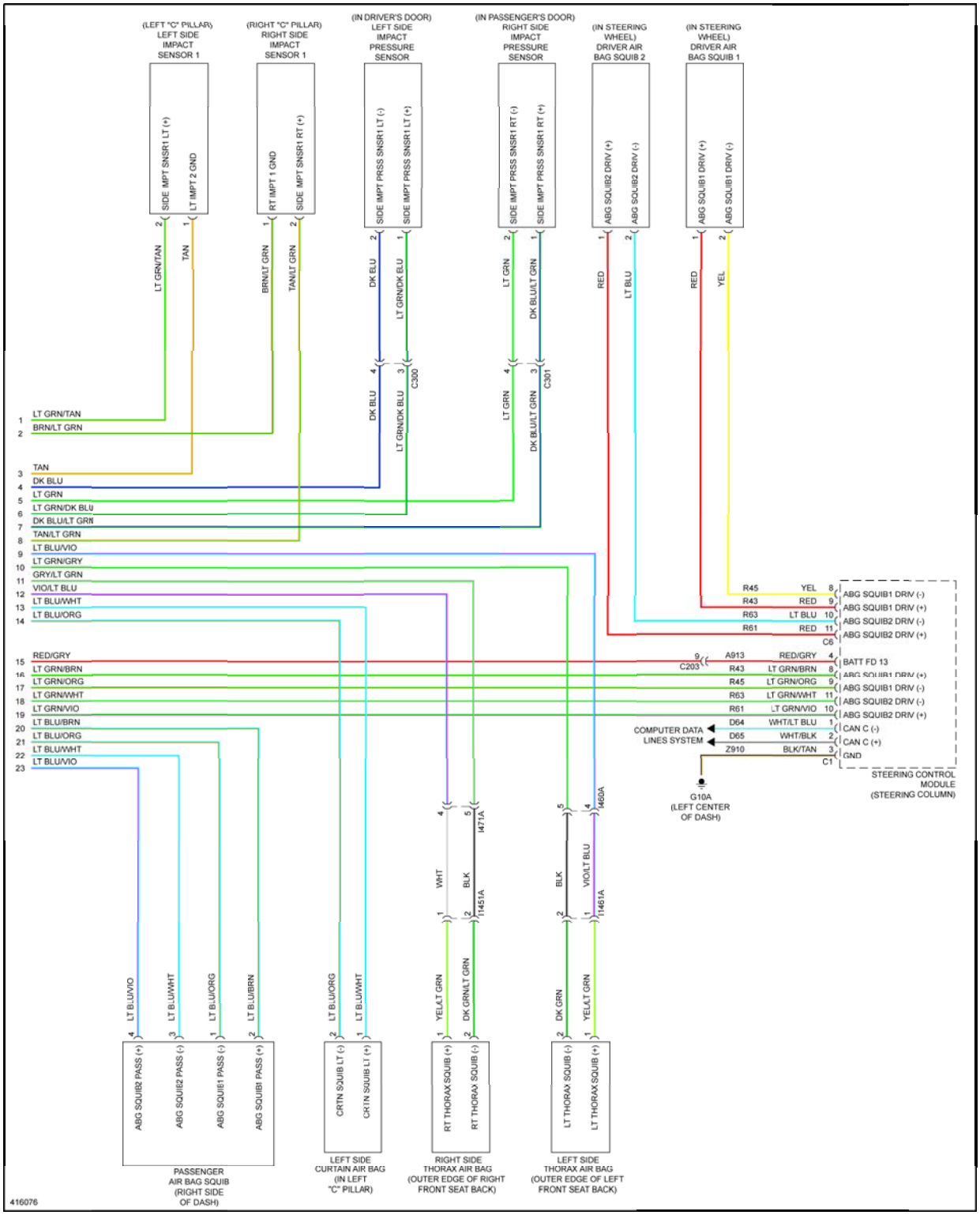

Fig. 64: Supplemental Restraints Circuit (3 of 3)

TRANSMISSION

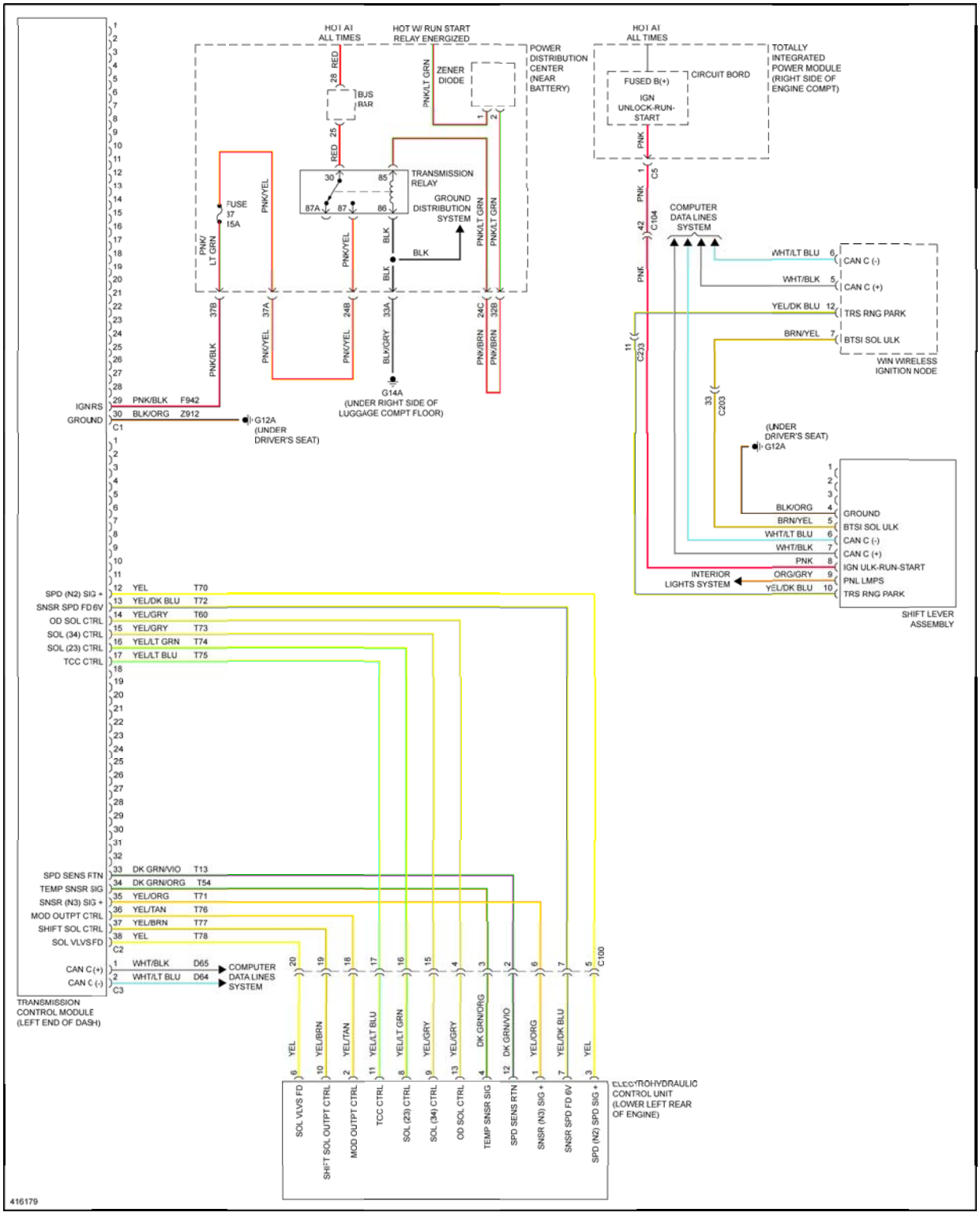

Fig. 65: Transmission Circuit

TRUNK, TAILGATE, FUEL DOOR

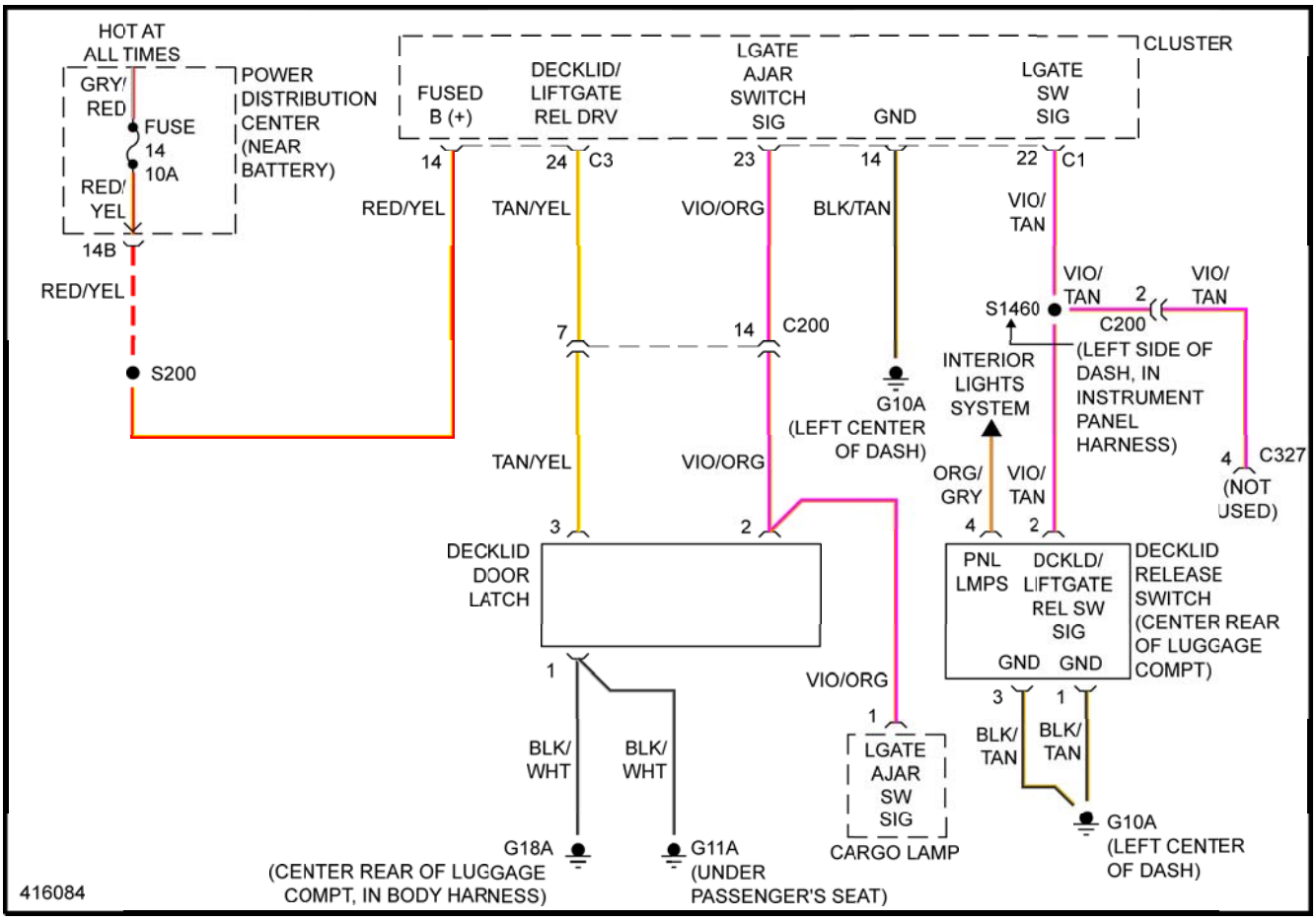

Fig. 66: Deck Lid Release Circuit

WARNING SYSTEMS

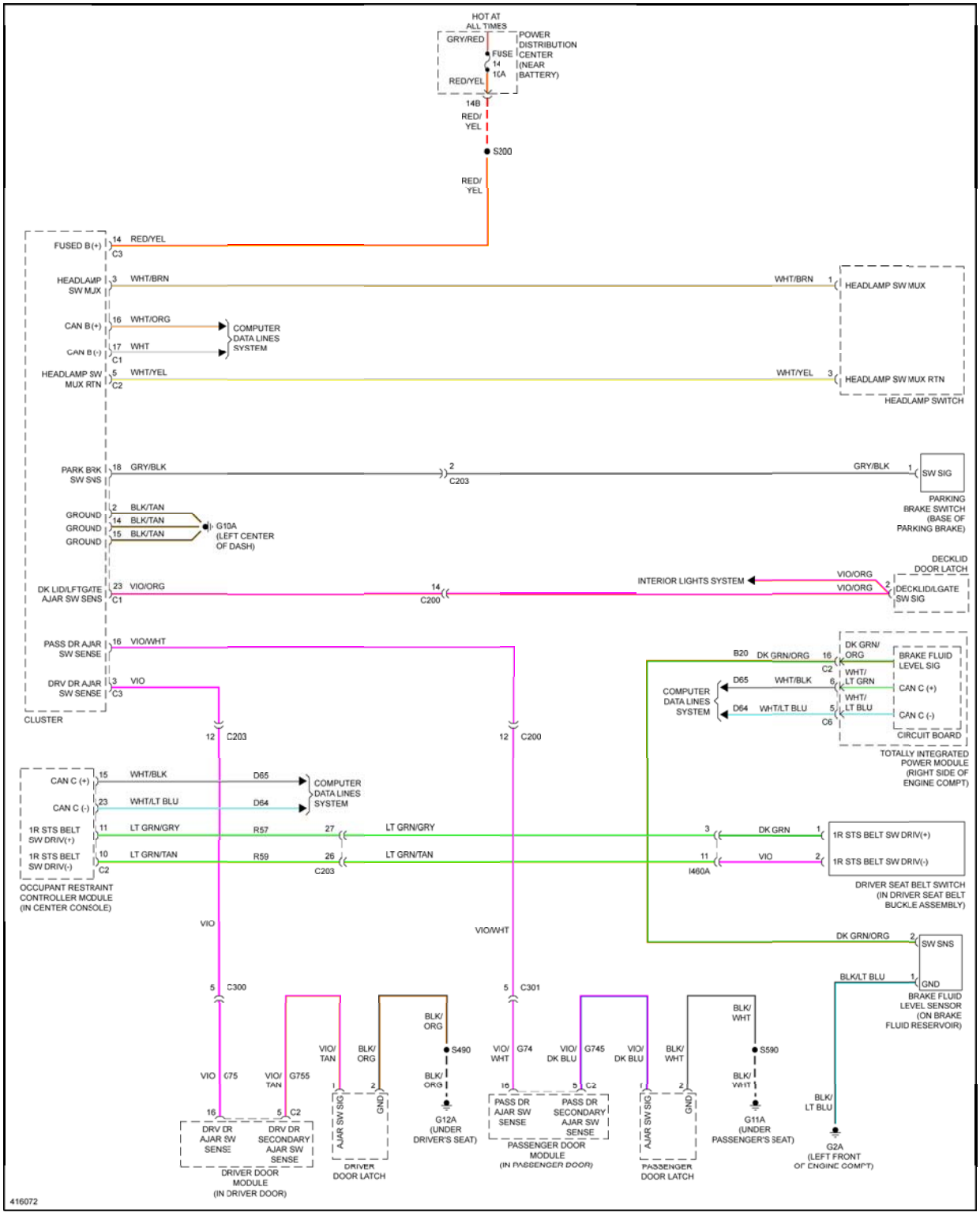

Fig. 67: Chime Circuit

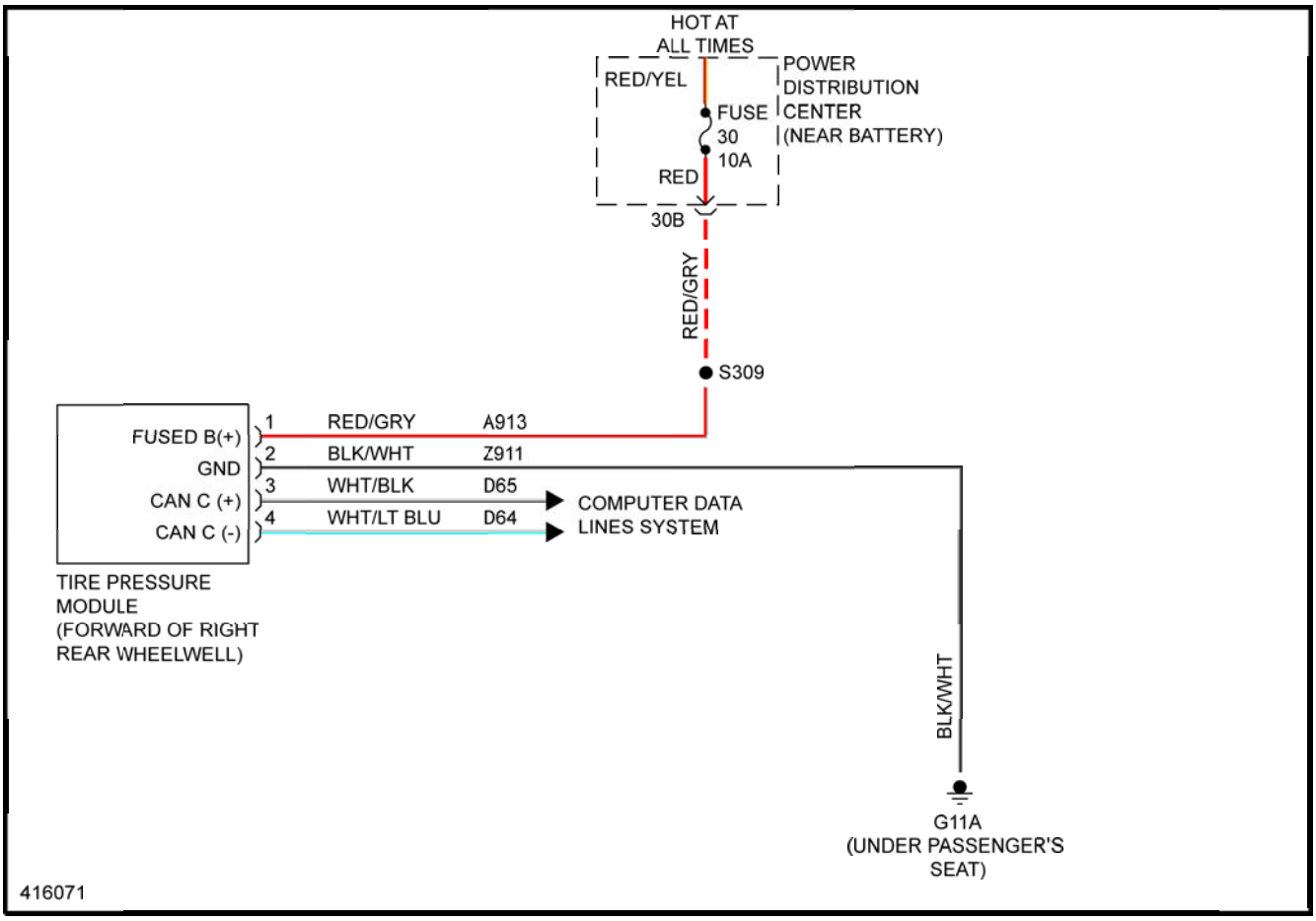

Fig. 68: Tire Pressure Monitoring Circuit

WIPER/WASHER

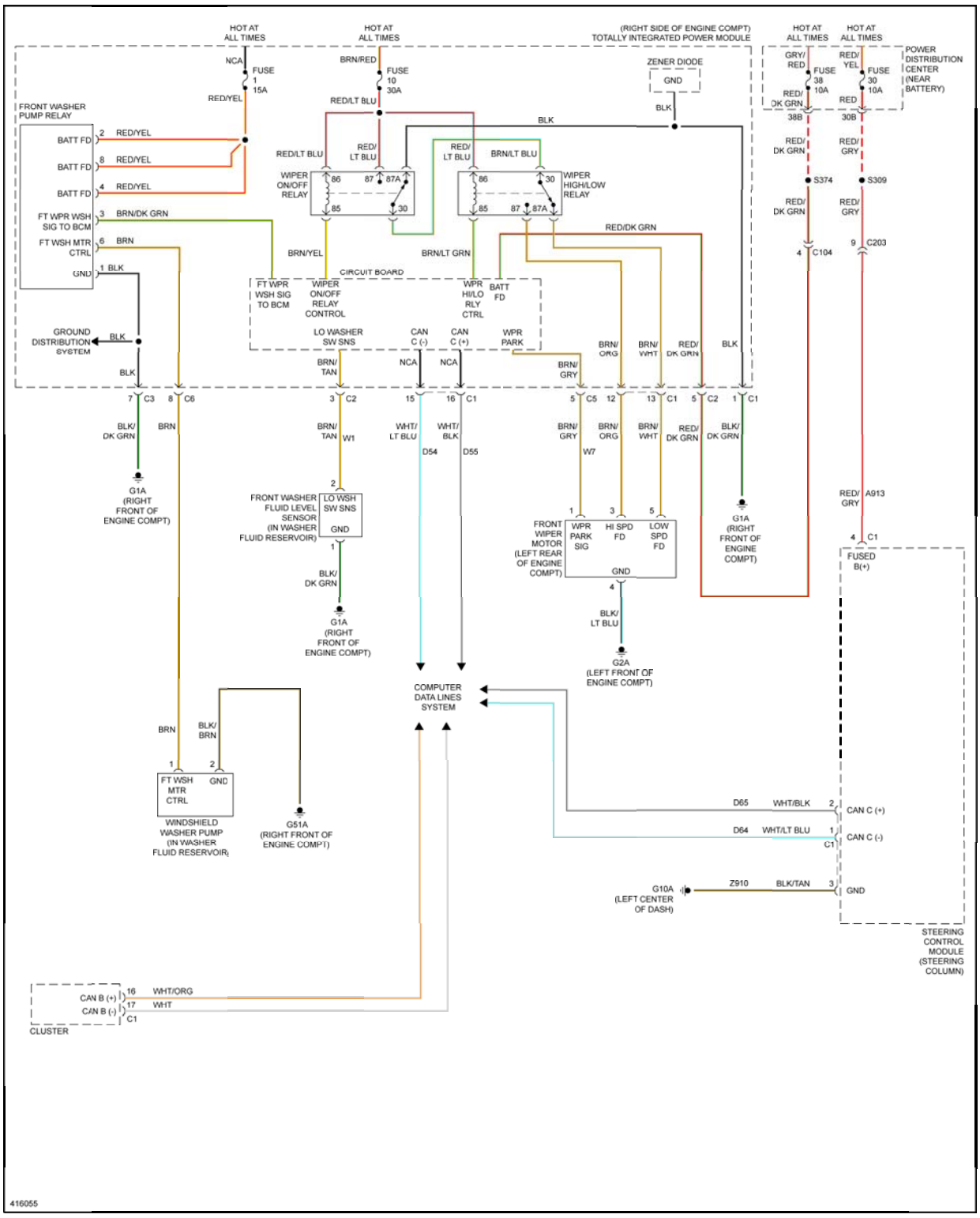

Fig. 69: Wiper/Washer Circuit

2013 SUSPENSION

Rear Suspension - Challenger

DESCRIPTION

NON SRT

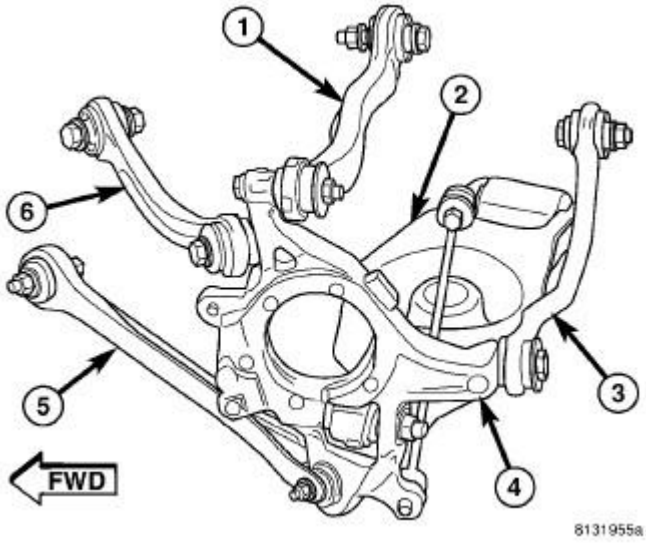

Fig. 1: Rear Suspension Components
Courtesy of CHRYSLER GROUP, LLC

This vehicle utilizes a five-link rear suspension including the following major components:

- Camber Link (1)
- Compression Link (5)
- Spring Link (2)
- Tension Link (6)
- Toe Link (3)
- Coil Spring
- Crossmember
- Hub And Bearing
- Knuckle (4)
- Shock Absorber
- Stabilizer Bar

Service Procedures for the crossmember can be found in Frame And Bumpers Refer to **CROSSMEMBER, REAR, REMOVAL** .

SRT

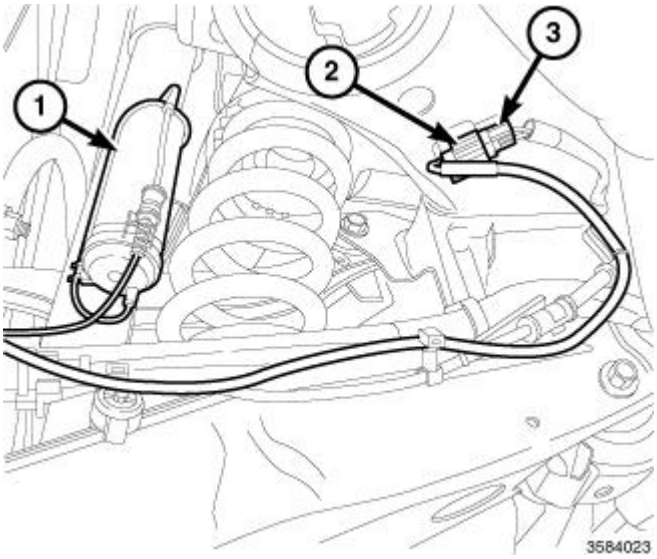

Fig. 2: Shock Solenoid Assembly & ADS Harness Connector
Courtesy of CHRYSLER GROUP, LLC

NOTE: Left side shown, right side similar.

The SRT rear suspension is part of an Active Damping System (ADS). The ADS includes unique shock absorbers, an Active Damping Control Module (ADCM), and three accelerometers that work together to modify the ride of the suspension over varying road conditions.

The Active Damping System (ADS) rear shock is similar to a conventional shock with the addition of a shock solenoid assembly (1) mounted on the side of its body with a three wire harness connector attached to it. The ADS shock assembly is serviced the same as a conventional shock absorber, with the addition of disconnecting the ADS harness connector (2) on the crossmember.

Service of all other rear suspension components remain the same as the standard components. When components differ, be sure to use only SRT components on SRT vehicles.

The rear knuckle for the SRT is different from the standard knuckle. Although similar in appearance and in service, the mounting bosses for the disc brake caliper have been moved downward to allow mounting of the Brembo four-piston brake caliper. Due to this change, an updated special tool is needed to remove the sleeve that retains the lower control arm ball joint to the knuckle.

The rear stabilizer bar diameter has been increased for the SRT but it is serviced in the same manner as the standard bar.

SPECIFICATIONS

SPECIFICATIONS

DESCRIPTION	N.m	Ft. Lbs.	In. Lbs.
Brake Caliper Adapter Knuckle Bolts	115	85	-
Camber Link Crossmember Bolt	85	63	-
Camber Link Knuckle Bolt	98	72	-
Compression Link Crossmember Bolt	85	63	-
Compression Link Knuckle Bolt	81	60	-
Crossmember Mounting Bolts	180	133	-
Hub And Bearing Mounting Bolts	68	50	-
Hub Nut	213	157	-
Parking Brake Cable Knuckle Screw	8	-	71
Shock Absorber Mounting Bolts - Upper	52	38	-
Shock Absorber Mounting Bolt Nut - Lower	72	53	-
Spring Link Crossmember Bolt	108	80	-
Spring Link Knuckle Nut	142	105	-
Stabilizer Bar Isolator Retainer Bolts	61	45	-
Stabilizer Link Nuts	61	45	-
Tension Link Crossmember Bolt	85	63	-
Tension Link Knuckle Bolt	98	72	-
Toe Link Crossmember Nut	108	80	-
Toe Link Knuckle Bolt	95	70	-

SPECIAL TOOLS

SPECIAL TOOLS

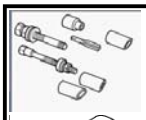	9361-1 - Tap, Plug M16 X 2.0
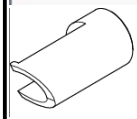	9361-10 - Cup, Remover, Right Side
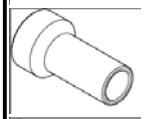	9361-11 - Guide, Tap
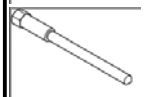	9361-12 - Installer, Bushing
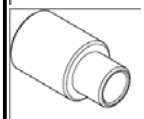	9361-2 - Tap Guide
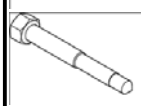	9361-3 - Screw, Forcing

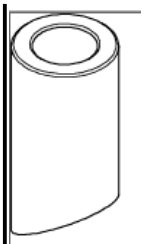	9361-4 - Cup, Bushing
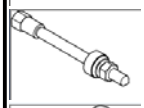	9361-7 - Screw, Installation
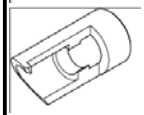	9361-9 - Cup, Remover, Left Side
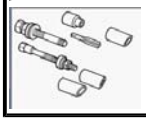	9361A - Rear Knuckle Sleeve Remover/Installer Kit (Originally Shipped In Kit Number(s) 9329, 9515, 9516, 9516-CAN, 9517, 9517-CAN, 9518, 9519, 9540, 9541.)

HUB AND BEARING

DIAGNOSIS AND TESTING

DIAGNOSIS AND TESTING - HUB AND BEARING - NOISE

NOTE: The wheel bearing is designed to last for the life of the vehicle and requires no type of periodic maintenance.

Bearings will produce noise if worn or damaged. The noise will generally change when the bearings are loaded. A road test of the vehicle is normally required to determine if there is a bearing noise, or if it may be some other component, and to assist in finding the location. The following procedure, together with the **DIAGNOSTIC CHART** , should help determine the proper cause. Note that if a particular vehicle road test maneuver, steering to the right for instance, results in noise only part of the time, it is not likely a faulty bearing. Bearing noises are not typically intermittent.

NOTE: Damaged bearing seals and the resulting excessive grease loss may also require bearing replacement. Moderate grease seepage from the bearing is considered normal and should not require replacement of the wheel bearing. Wheel bearings are designed to last the life of the vehicle and require no type of periodic maintenance. To diagnose the hub, measure hub runout

Refer to ROTOR, BRAKE, DIAGNOSIS AND TESTING .

DIAGNOSTIC PROCEDURE:

1. Perform drive evaluation. Find a smooth level road surface void of traffic or obstructions. Turn off any accessories which may cause background noise. Evaluate for noise at 50 km/h (30 mph) and 100 km/h (60 mph) and with vehicle in neutral to eliminate potential drivetrain noises. With vehicle at a constant speed, steer back and forth to left and right (approximately 45 degree steering input each way). This will

load and unload the bearings and may change the noise level. When bearing damage is slight, the noise is sometimes noticeable at lower speeds and at other times is more noticeable at higher speeds.

2. Drive evaluation results: Noise increase when turning right may indicate a problem with the left bearing. Noise increase when turning left may indicate a problem with the right bearing.
3. Put vehicle up on hoist. Grab the tire by pushing in on the top center and pulling out on the bottom center to check for excessive movement in the bearing.
4. Check for potential rubbing on rotating components, such as rotor splash shields, heat shields touching propshaft or halfshaft, wheel well liners contacting tire, wheel cover on wheel, etc. Any cyclic noise (once per wheel revolution for example) is not likely a wheel bearing fault.
5. Remove the wheel and tire assembly, disc brake caliper and brake rotor. Refer to **ROTOR, BRAKE, DIAGNOSIS AND TESTING** .
6. Rotate the wheel hub, checking for resistance or roughness.
7. Any roughness or resistance to rotation may indicate dirt intrusion or a failed hub bearing. If the bearing exhibits any of these conditions, the hub & bearing will require replacement. Do not attempt to disassemble the bearing for repair.
8. Rotate the wheel hub, utilize Chassis Ears (or equivalent) to check for noise.
9. If none of the above checks indicate a bearing failure, refer to the **DIAGNOSTIC CHART** for other possible causes.

DIAGNOSTIC CHART - HUB & BEARING

CONDITION	POSSIBLE CAUSES	POTENTIAL CORRECTIONS
FRONT END WHINE ON TURNS	1. Low Power Steering Fluid Level (if applicable)	1. Fill power steering fluid reservoir to proper level, check for leaks (make sure all air is bled from system fluid)
	2. Worn Tires and/or Incorrect Wheel Alignment	2. Replace Tires, Check And Reset Wheel Alignment
	3. Defective Wheel Bearing	3. Replace Wheel Bearing
	4. Wrong Power Steering Fluid (if applicable)	4. Replace With Correct Power Steering Fluid
FRONT END GROWL OR GRINDING ON TURNS	1. Loose Wheel Lug Nuts	1. Verify Wheel Lug Nut Torque
	2. Engine Mount Grounding Against Frame Or Body Of Vehicle	2. Check For Engine Mount Hitting Frame Rail And Reposition Engine As Required
	3. Worn Tires and/or Incorrect Wheel Alignment	3. Replace Tires, Check and Reset Wheel Alignment
	4. Defective Wheel	

	Bearing 5. Worn or Broken C/V Joint 6. Engine Not Centered, Causing Axle Half Shaft to Bottom Out	4. Replace Wheel Bearing 5. Replace C/V Joint 6. Center the Engine
POPPING/CLICKING/SNAPPING DURING ACCELERATION AFTER DRIVE-TO-REVERSE SHIFT, REVERSE-TO-DRIVE SHIFT OR WHILE TURNING	1. Insufficient Hub Nut Torque 2. Insufficient Grease on Mating Surface of Axle Half Shaft Outer C/V Joint to Wheel Hub/Bearing, or Worn/Damaged Gasket	1. Torque Hub Nut to Spec 2. Separate Half Shaft From Hub and Bearing and Wipe Mating Surfaces Clean. Apply Light Coating of Wheel Bearing Grease to C/V Joint Surface and Reassemble, or Replace Gasket. Torque Hub Nut to Spec
WHINE/HUM/ROAR WITH VEHICLE GOING STRAIGHT AT A CONSTANT SPEED	1. Worn Tires and/or Incorrect Wheel Alignment 2. Defective Wheel Bearing	1. Replace Tires and Reset Wheel Alignment 2. Replace Wheel Bearing
GROWL OR GRINDING WITH VEHICLE GOING STRAIGHT AT A CONSTANT SPEED	1. Engine Mount Grinding Against Frame or Body 2. Defective Wheel Bearing 3. Worn or Broken C/V Joint	1. Check and Reposition Engine as Required 2. Replace Wheel Bearing 3. Replace C/V Joint

REMOVAL

NON SRT

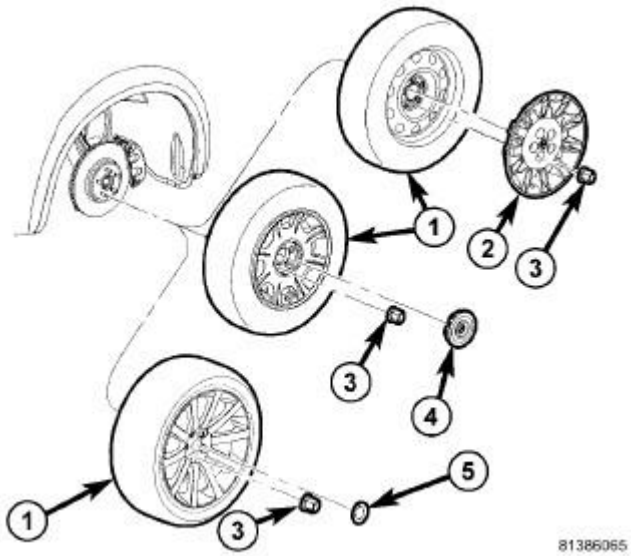

Fig. 3: Tire And Wheel Mounting
Courtesy of CHRYSLER GROUP, LLC

1. Raise and support vehicle. Refer to **HOISTING, STANDARD PROCEDURE** .
2. Remove wheel mounting nuts (3), then tire and wheel assembly (1).

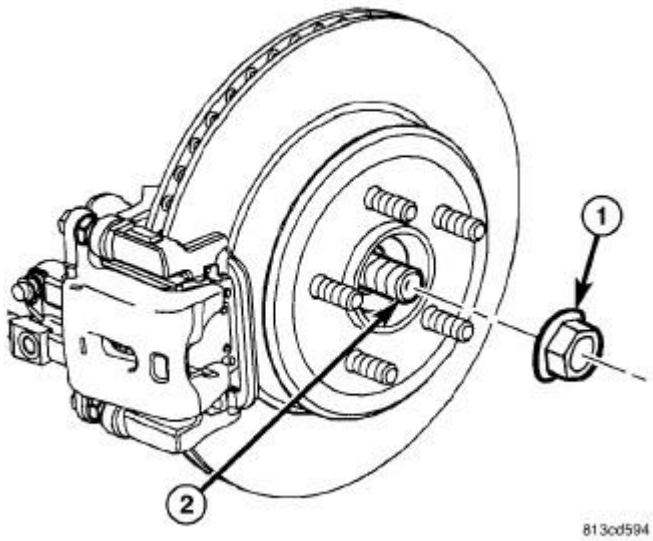

Fig. 4: Identifying Hub Nut
Courtesy of CHRYSLER GROUP, LLC

3. While a helper applies brakes to keep hub from rotating, remove hub nut (1) from the half shaft (2).

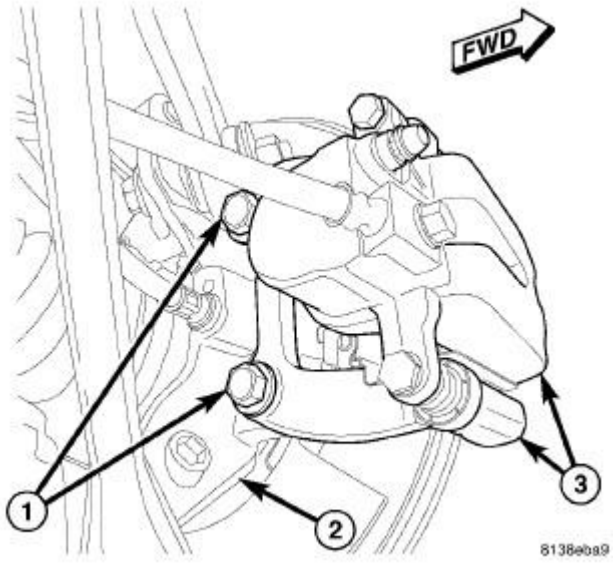

Fig. 5: Rear Caliper Adapter, Knuckle & Bolts
Courtesy of CHRYSLER GROUP, LLC

NOTE: In some cases, it may be necessary to retract caliper piston in its bore a small amount in order to provide sufficient clearance between shoes and rotor to easily remove caliper from knuckle. This can usually be accomplished before guide pin bolts are removed, by grasping rear of caliper and pulling outward working with guide pins, thus retracting piston. Never push on piston directly as it may get damaged.

4. Remove two bolts (1) securing disc brake caliper adapter (3) to knuckle (2).
5. Remove disc brake caliper and adapter (3) from knuckle as an assembly. Hang assembly out of way using wire or a bungee cord. Use care not to overextend brake hose when doing this.

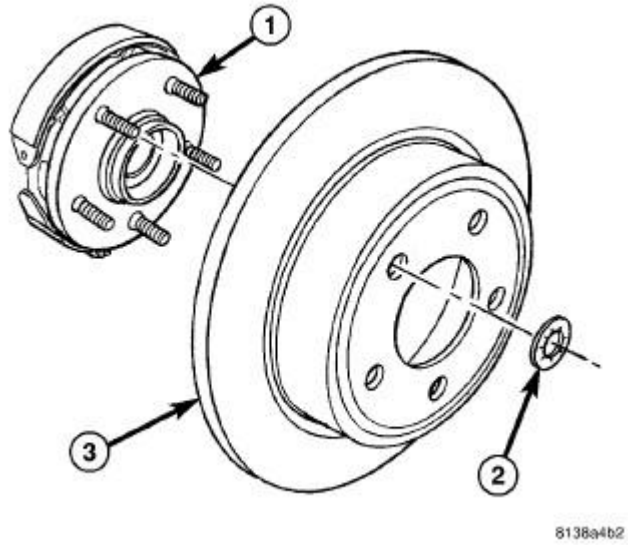

Fig. 6: Rear Brake Rotor, Hub & Clips
Courtesy of CHRYSLER GROUP, LLC

6. Remove any clips (2) retaining brake rotor (3) to wheel mounting studs.
7. Slide brake rotor (3) off hub and bearing (1).

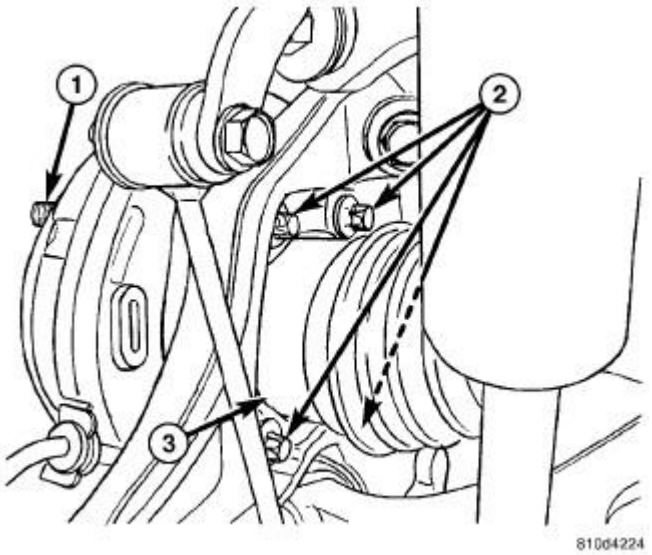

Fig. 7: Hub & Bearing, Mounting Bolts & Half Shaft
Courtesy of CHRYSLER GROUP, LLC

1 - HUB AND BEARING
2 - MOUNTING

BOLTS 3 - HALF SHAFT (IF EQUIPPED)

8. Loosen each hub and bearing mounting bolt (2) a turn or two at a time while pulling outward on hub and bearing to avoid bolt contact with half shaft outer joint. Once removed from threads in hub and bearing (but not knuckle), allow bolts to stay in and protrude through knuckle and brake support plate to keep brake support plate in place when hub and bearing is removed.
9. Slide hub and bearing off knuckle and half shaft.

SRT

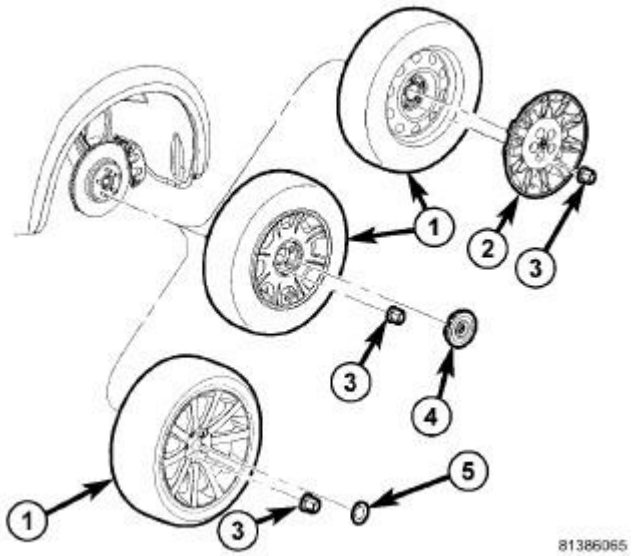

Fig. 8: Tire And Wheel Mounting
Courtesy of CHRYSLER GROUP, LLC

1. Raise and support vehicle. Refer to **HOISTING, STANDARD PROCEDURE** .
2. Remove wheel mounting nuts (3), then tire and wheel assembly (1).

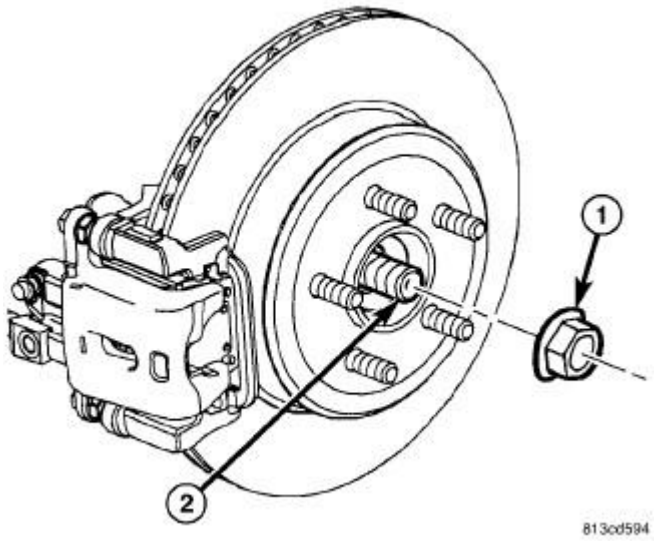

Fig. 9: Identifying Hub Nut
Courtesy of CHRYSLER GROUP, LLC

3. While a helper applies brakes to keep hub from rotating, remove hub nut (1) from the half shaft (2).

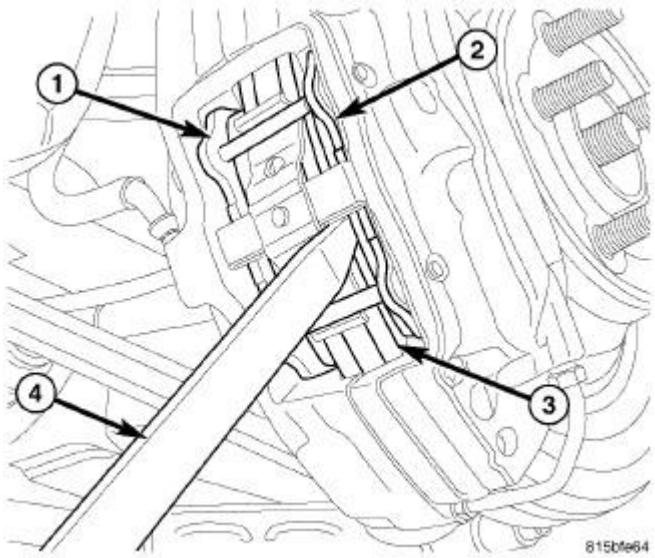

Fig. 10: Pushing Back Pistons In Bore
Courtesy of CHRYSLER GROUP, LLC

CAUTION: When pushing pistons back into caliper bores, use only a trim stick as shown or other suitable soft tool. Never use a screwdriver or other metal pry bar due to potential damage to braking surface of rotor, caliper, pistons or dust boots.

4. Place trim stick (4) between brake pad (2) and outer edge of rotor (3).
5. Using trim stick, slowly apply pressure against brake pad (2) until both pistons (on that side of caliper) are completely bottomed in bores of caliper half.

NOTE: Repeat above procedure to opposite brake pad (1) and pistons as necessary.

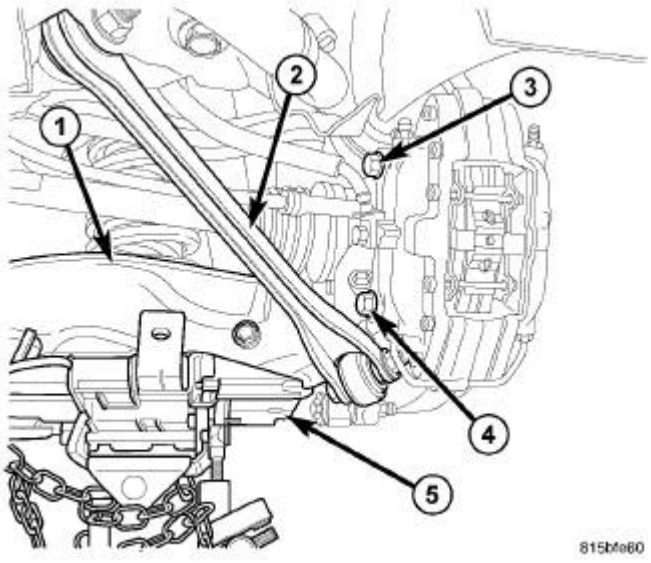

Fig. 11: Accessing Rear Caliper Mounting Bolts
Courtesy of CHRYSLER GROUP, LLC

6. Support spring link (1) using a transmission jack (5) or other appropriate jack. Raise spring link just enough to access brake caliper lower mounting bolt (4) from above compression link (2).

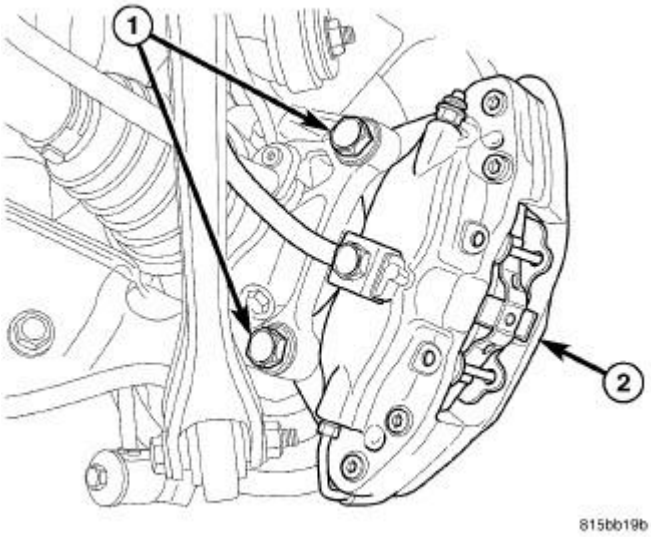

Fig. 12: Rear Caliper Mounting Bolts
Courtesy of CHRYSLER GROUP, LLC

7. Remove the lower and upper caliper mounting bolts (1).
8. Remove brake caliper (2) with pads from knuckle and brake rotor. Hang assembly out of way using wire or a bungee cord. Use care not to overextend brake hose when doing this.

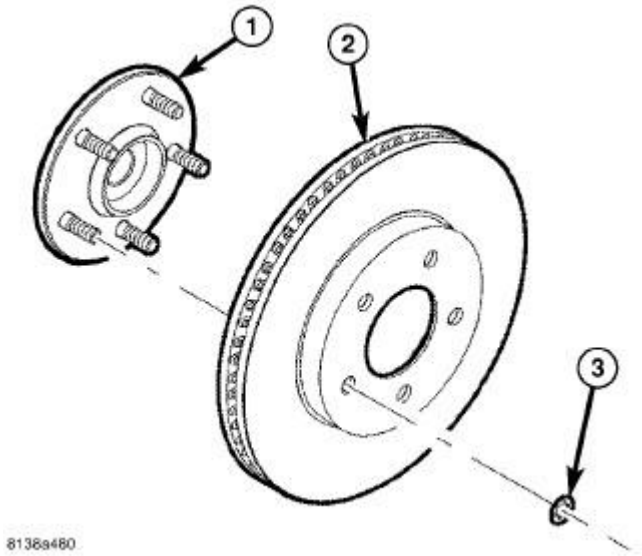

Fig. 13: Brake Rotor, Hub & Clips
Courtesy of CHRYSLER GROUP, LLC

9. Remove any clips (3) retaining brake rotor (2) to wheel mounting studs.
10. Slide brake rotor (2) off hub and bearing (1).

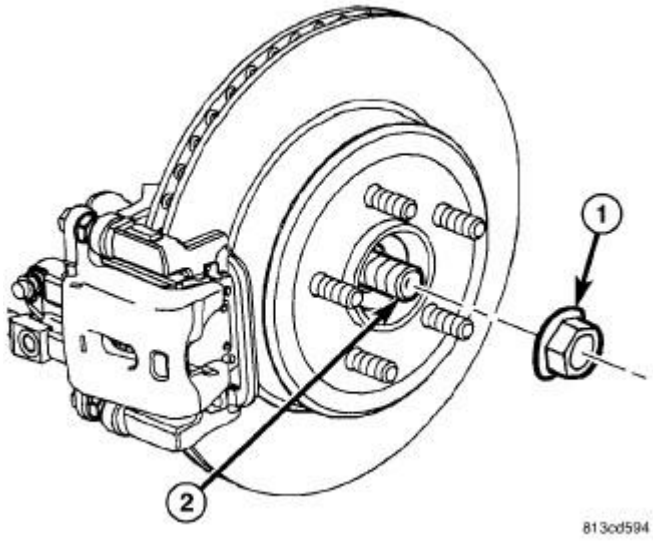

Fig. 14: Identifying Hub Nut
Courtesy of CHRYSLER GROUP, LLC

11. Push inward on end of half shaft (2) until C/V joints bottom. This is necessary to give as much access to hub and bearing mounting bolts as possible.

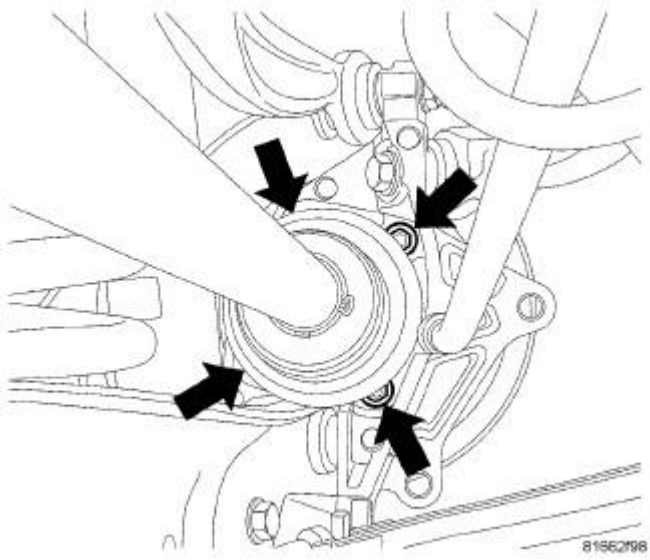

Fig. 15: Hub And Bearing Mounting Bolts
Courtesy of CHRYSLER GROUP, LLC

NOTE: It is important to keep suspension jacked up as requested in to ease access to lower hub and bearing mounting bolts. Refer to step 6.

NOTE: Use a 3/8 inch drive wobble extension along with a Torx® socket to access and remove two top and lower front mounting bolt. Use a standard 3/8 inch drive universal joint along with a Torx® socket to access and remove lower rear mounting bolt.

12. Loosen each (of the four) hub and bearing mounting bolt a turn or two at a time while pulling outward on hub and bearing to avoid bolt contact with half shaft outer joint. Once removed from threads in hub and bearing (but not knuckle), allow bolts to stay in and protrude through knuckle and parking brake adapter to keep brake adapter in place while hub and bearing is off vehicle.
13. Slide hub and bearing out of knuckle and off half shaft.

INSTALLATION

NON SRT

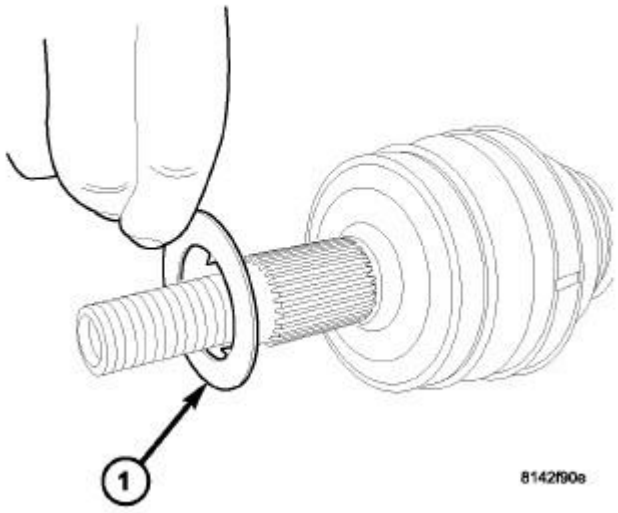

Fig. 16: Halfshaft Isolation Washer
Courtesy of CHRYSLER GROUP, LLC

NOTE: Before installing hub and bearing on end of axle half shaft, ensure isolation washer is present on end of half shaft. Inspect washer making sure it is not worn or damaged. Washer can be installed in either direction on shaft.

1. Position hub and bearing bolts though rear of knuckle and parking brake support just enough to hold support in place as hub and bearing is installed.
2. Slide hub and bearing onto half shaft. Place hub and bearing through brake support, onto knuckle, lining up mounting bolt holes with bolts.

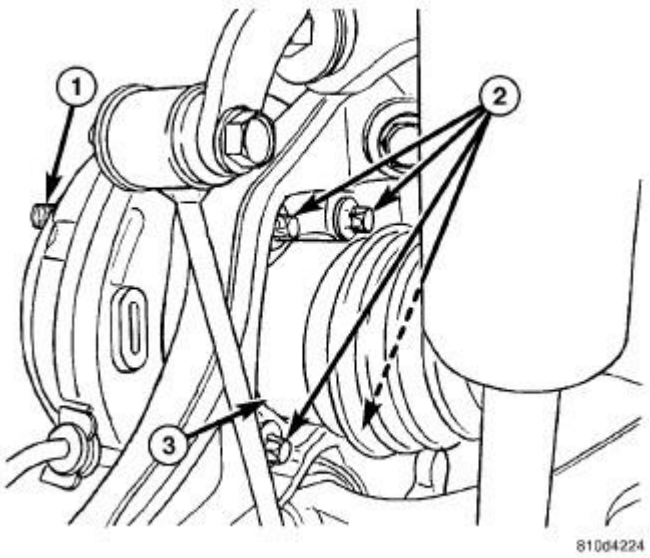

Fig. 17: Hub & Bearing, Mounting Bolts & Half Shaft
Courtesy of CHRYSLER GROUP, LLC

1 - HUB AND BEARING
2 - MOUNTING BOLTS
3 - HALF SHAFT (IF EQUIPPED)

3. Install four bolts (2) fastening hub and bearing in place. Tighten mounting bolts to 68 N.m (50 ft. lbs.).

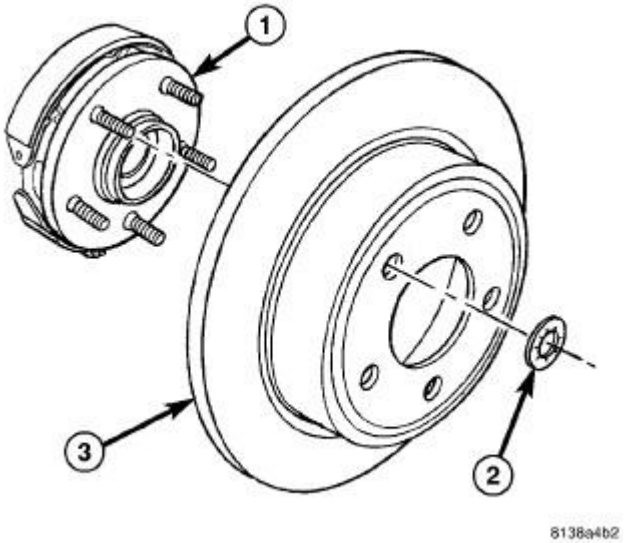

Fig. 18: Rear Brake Rotor, Hub & Clips
Courtesy of CHRYSLER GROUP, LLC

NOTE: Inspect disc brake pads and parking brake shoes before brake rotor installation. Refer to PADS, BRAKE, INSPECTION .

4. Install brake rotor (3) over wheel mounting studs and onto hub (1).

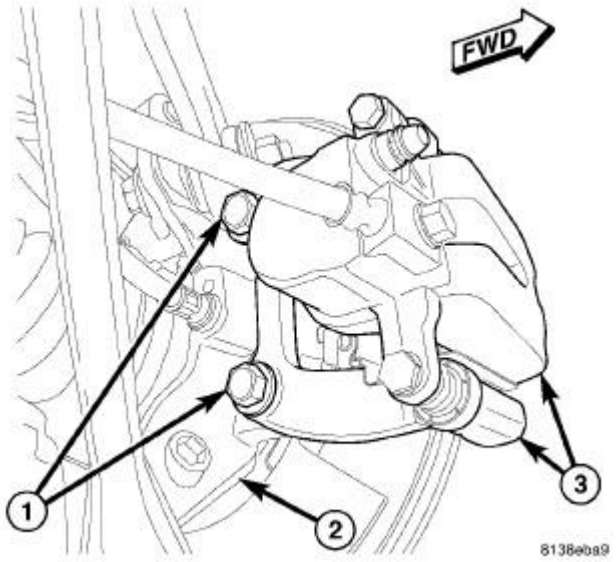

Fig. 19: Rear Caliper Adapter, Knuckle & Bolts
Courtesy of CHRYSLER GROUP, LLC

5. Install disc brake caliper and adapter assembly (3) over brake rotor.
6. Install mounting bolts (1) securing caliper adapter (3) to knuckle (2). Tighten bolts to 115 N.m (85 ft. lbs.).

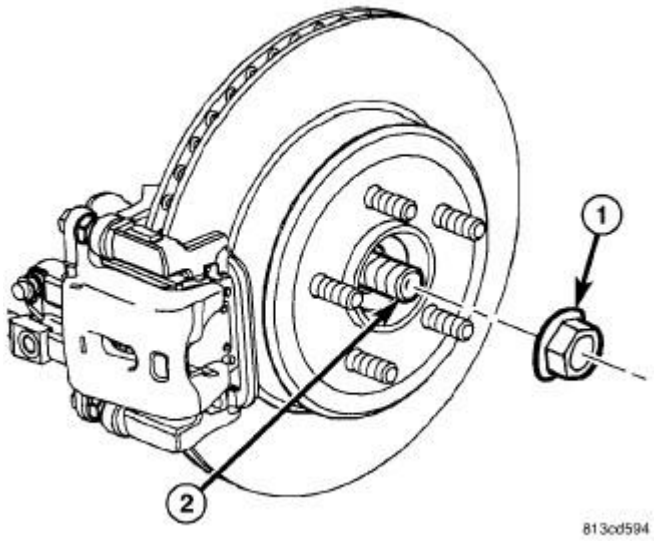

Fig. 20: Identifying Hub Nut
Courtesy of CHRYSLER GROUP, LLC

NOTE: Always install a new hub nut. The original hub nut is one-time use only and should be discarded when removed.

7. Install hub nut (1) on end of half shaft (2). While a helper applies brakes to keep hub from turning, tighten hub nut to 213 N.m (157 ft. lbs.).
8. Verify proper adjustment of the parking brake shoes and adjust as necessary. Refer to **SHOES, PARKING BRAKE, ADJUSTMENTS** .

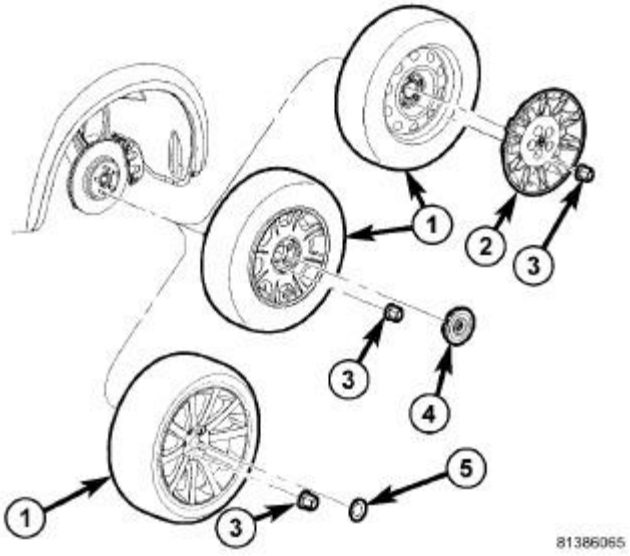

Fig. 21: Tire And Wheel Mounting
Courtesy of CHRYSLER GROUP, LLC

9. Install tire and wheel assembly (1). Refer to **INSTALLATION** .
10. Lower vehicle.
11. Pump brake pedal several times to ensure vehicle has a firm brake pedal before moving vehicle.

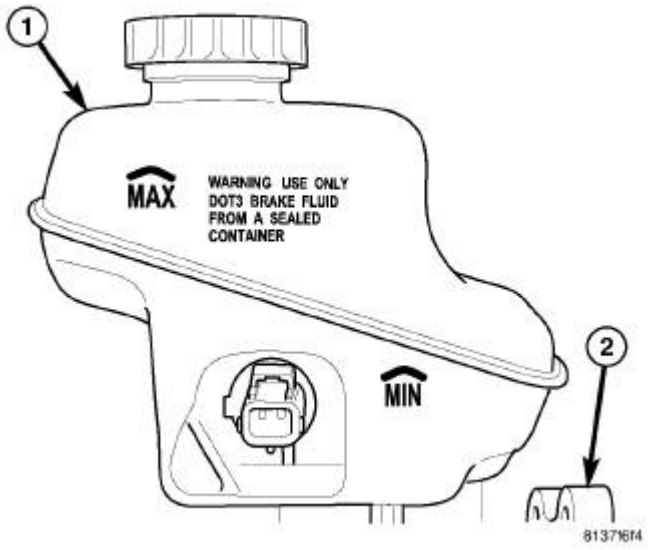

Fig. 22: Reservoir Fluid Level Markings
Courtesy of CHRYSLER GROUP, LLC

12. Check and adjust brake fluid level in reservoir (1) as necessary.
13. Road test vehicle and make several stops to wear off any foreign material on brakes and to seat brake pads.

SRT

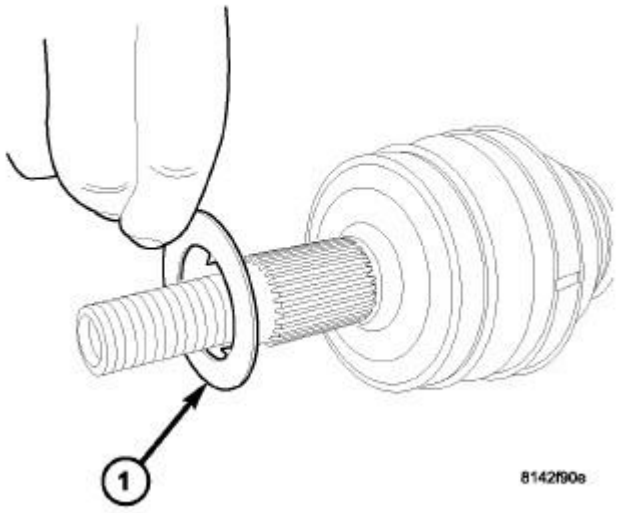

Fig. 23: Halfshaft Isolation Washer
Courtesy of CHRYSLER GROUP, LLC

NOTE: **Before installing hub and bearing on end of axle half shaft, ensure isolation washer (1) is present on end of half shaft. Inspect washer making sure it is not worn or damaged. Washer can be installed in either direction on shaft.**

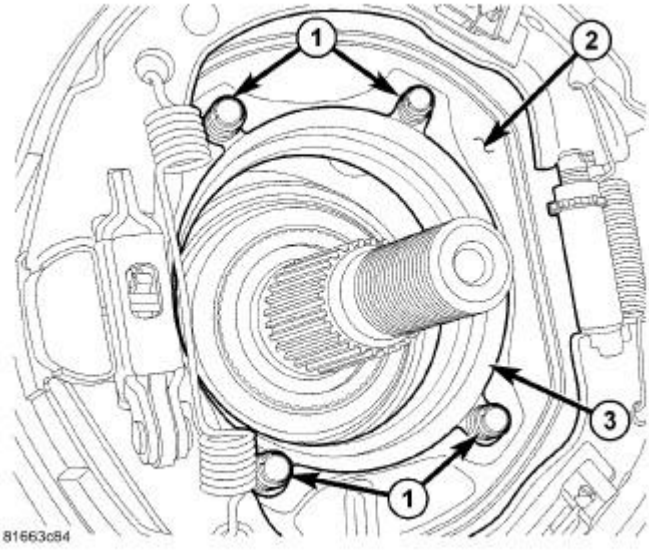

Fig. 24: Hub And Mounting Bolts, Knuckle & Adapter
Courtesy of CHRYSLER GROUP, LLC

NOTE: To help upon installation, make sure that hub and bearing mounting bolts (1) extend through knuckle (3) and parking brake adapter (2) to hold adapter in place during hub and bearing installation.

1. Position hub and bearing mounting bolts (1) though rear of knuckle (3) and parking brake adapter (2) just enough to hold adapter in place.

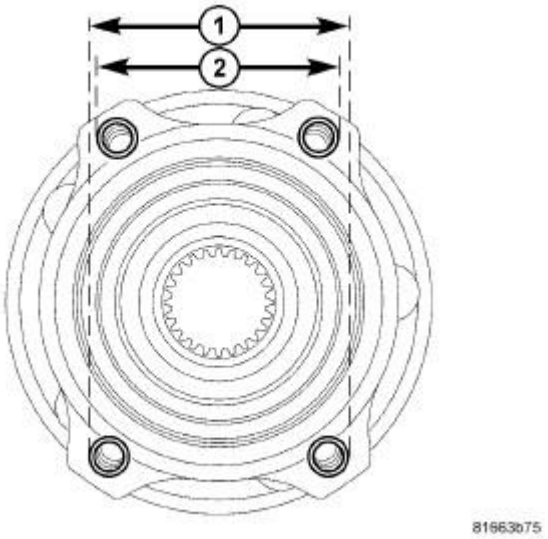

Fig. 25: Hub And Bearing Bolt Hole Pattern
Courtesy of CHRYSLER GROUP, LLC

NOTE: Hub and bearing mounting bolt holes are not evenly spaced. Upper mounting holes (2) are not as far apart as lower mounting holes (1). Make note of this before installing hub and bearing.

2. Slide hub and bearing onto half shaft. Insert hub and bearing through parking brake adapter and knuckle, lining up mounting bolt holes with bolts.

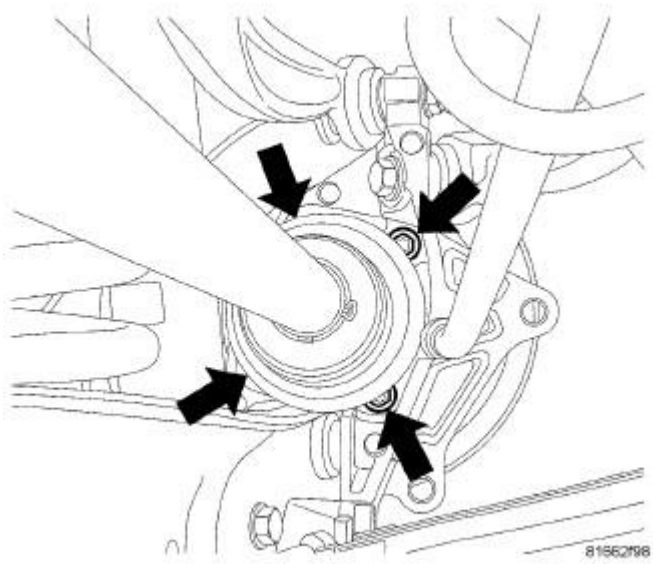

Fig. 26: Hub And Bearing Mounting Bolts
Courtesy of CHRYSLER GROUP, LLC

NOTE: Make sure suspension is jacked up as requested during removal to ease access to lower hub and bearing mounting bolts.

NOTE: Use a 3/8 inch drive wobble extension along with a Torx® socket to slip past half shaft outer C/V joint and install two top and lower front mounting bolts. Use a standard 3/8 inch drive universal joint along with a Torx® socket to install lower rear mounting bolt.

3. Carefully start all four mounting bolts into hub and bearing. Using a cross pattern, tighten each hub and bearing mounting bolt a turn or two at a time, slowly drawing hub and bearing into mounted position. Periodically, push in on end of half shaft to give as much room as possible for tools on mounting bolts. Tighten mounting bolts to 68 N.m (50 ft. lbs.).

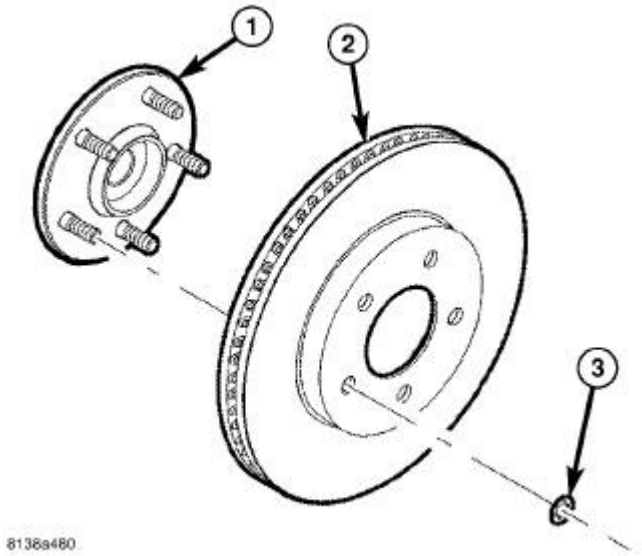

Fig. 27: Brake Rotor, Hub & Clips
Courtesy of CHRYSLER GROUP, LLC

NOTE: Inspect disc brake pads and parking brake shoes before brake rotor installation. Refer to PADS, BRAKE, INSPECTION .

4. Clean hub face (1) to remove any dirt or corrosion where rotor mounts.
5. Install brake rotor (2) over studs on hub and bearing (1).

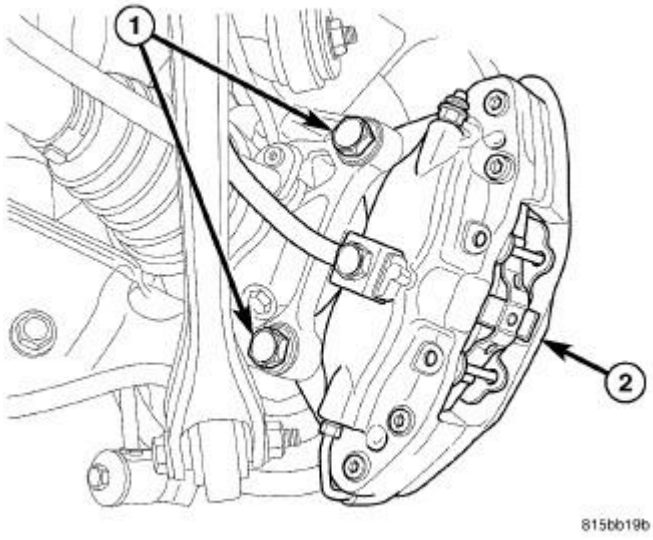

Fig. 28: Rear Caliper Mounting Bolts
Courtesy of CHRYSLER GROUP, LLC

6. Slide caliper with pads (2) over brake rotor and align with knuckle.

7. Install caliper mounting bolts (1). Tighten bolts to 130 N.m (96 ft. lbs.).
8. Remove jack from under spring link.

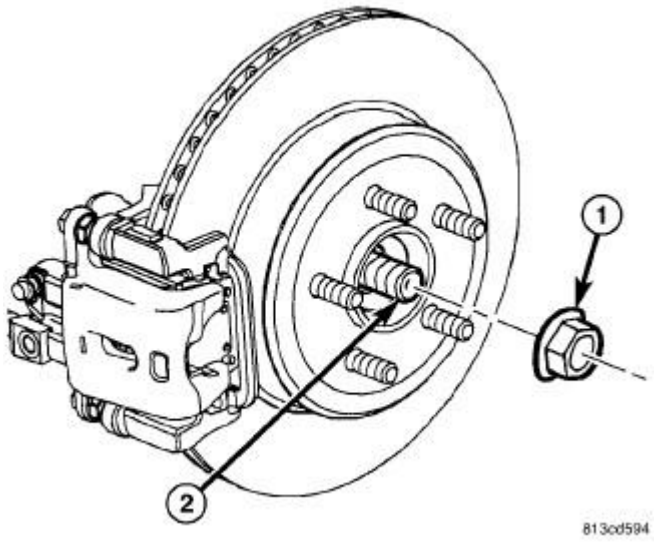

Fig. 29: Identifying Hub Nut
Courtesy of CHRYSLER GROUP, LLC

NOTE: Always install a new hub nut. The original hub nut is one-time use only and should be discarded when removed.

9. Install hub nut (1) on end of half shaft (2). While a helper applies brakes to keep hub from turning, tighten hub nut to 213 N.m (157 ft. lbs.).
10. Verify proper adjustment of the parking brake shoes and adjust as necessary. Refer to **SHOES, PARKING BRAKE, ADJUSTMENTS** .

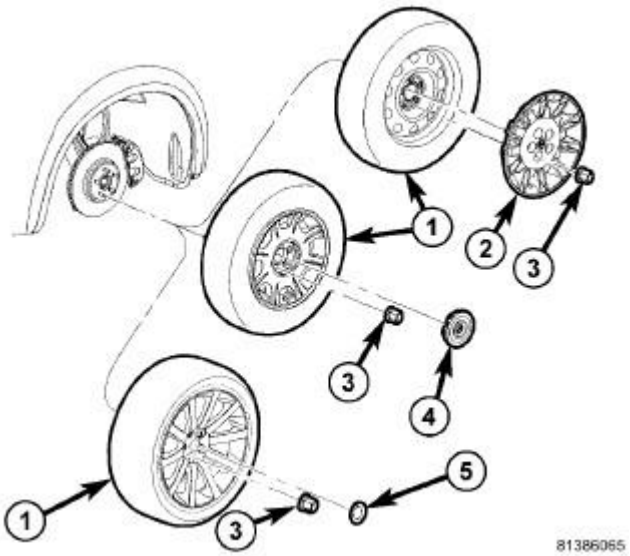

Fig. 30: Tire And Wheel Mounting
Courtesy of CHRYSLER GROUP, LLC

11. Install tire and wheel assembly (1). Refer to **INSTALLATION** . Tighten wheel mounting nuts (3) to 150 N.m (110 ft. lbs.).
12. Lower vehicle.
13. Pump brake pedal several times to ensure vehicle has a firm brake pedal before moving vehicle.

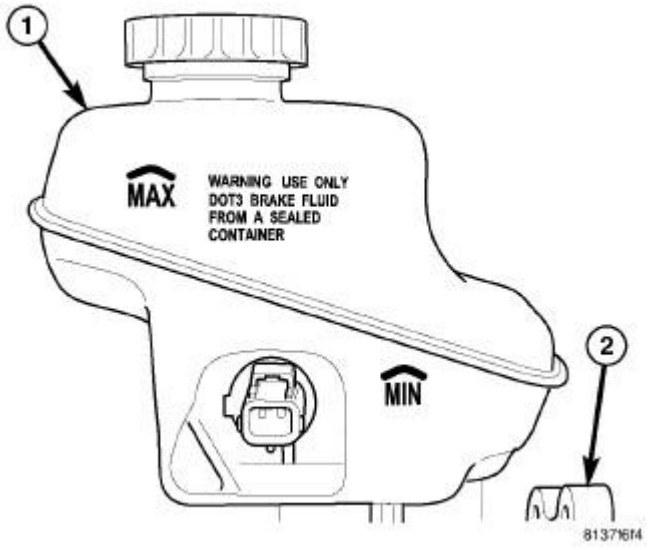

Fig. 31: Reservoir Fluid Level Markings
Courtesy of CHRYSLER GROUP, LLC

14. Check and adjust brake fluid level in reservoir (1) as necessary.
15. Road test vehicle and make several stops to wear off any foreign material on brakes and to seat brake

pads.

KNUCKLE, REAR

REMOVAL

NON SRT

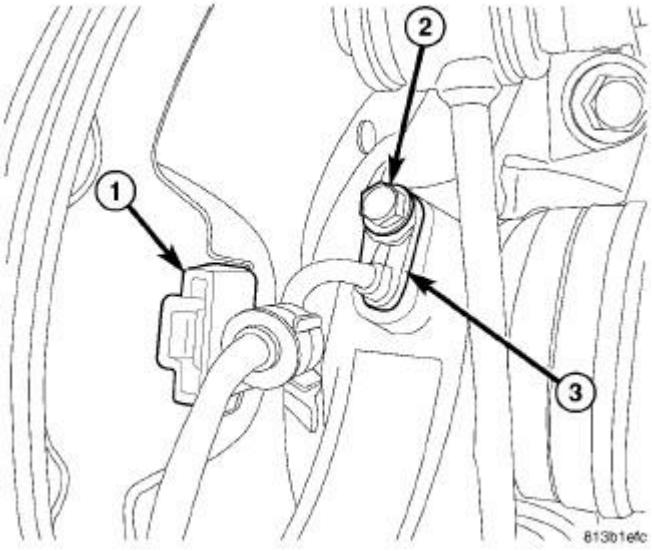

Fig. 32: Rear Wheel Speed Sensor & Screw
Courtesy of CHRYSLER GROUP, LLC

1. Raise and support vehicle. Refer to **HOISTING, STANDARD PROCEDURE** .
2. Unclip wheel speed sensor cable at rear brake rotor shield (1).
3. Remove screw (2) fastening sensor head (3) to rear knuckle.
4. Remove wheel speed sensor head from knuckle.
5. Access and remove rear hub and bearing. Refer to **HUB AND BEARING, REMOVAL**.
6. Remove parking brake shoes. Refer to **SHOES, PARKING BRAKE, REMOVAL** .

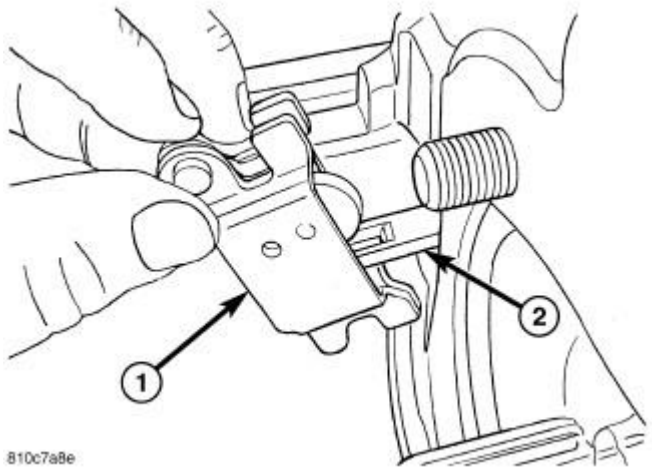

Fig. 33: Removing/Installing Actuator
Courtesy of CHRYSLER GROUP, LLC

1 - PARKING BRAKE SHOE ACTUATOR 2 - CABLE END

7. If not removed, remove parking brake shoe actuator lever (1) from end of cable (2).
8. Remove shoe support from knuckle.

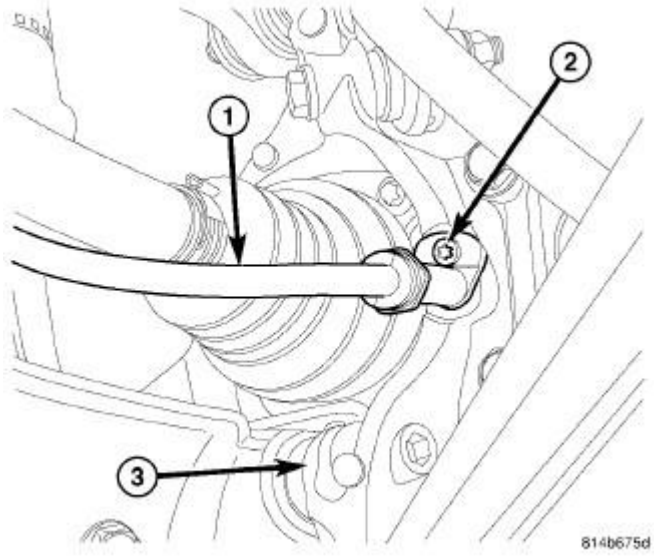

Fig. 34: Parking Brake Cable & Screw
Courtesy of CHRYSLER GROUP, LLC

9. Remove parking brake cable screw (2) at knuckle (3) and pull cable (1) out of knuckle.

10. Position under-hoist utility jack or jack stand under spring link. Raise jack head to contact spring link at shock mount secure in place.

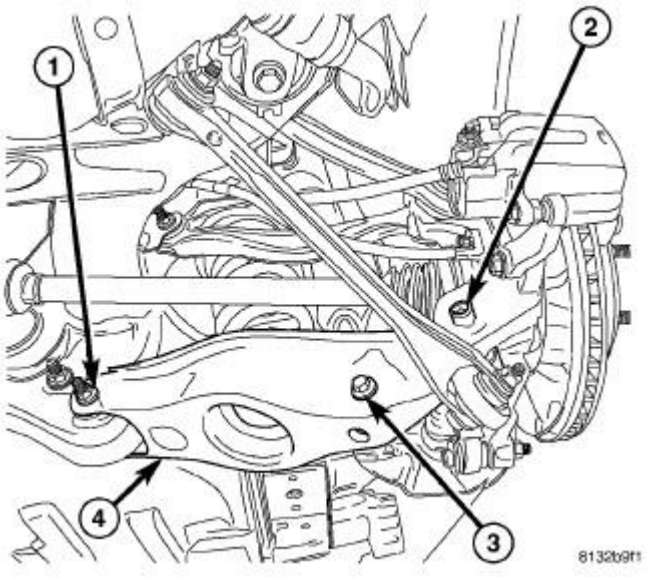

Fig. 35: Spring Link Mounting
Courtesy of CHRYSLER GROUP, LLC

11. Remove spring link-to-knuckle nut and bolt (2).

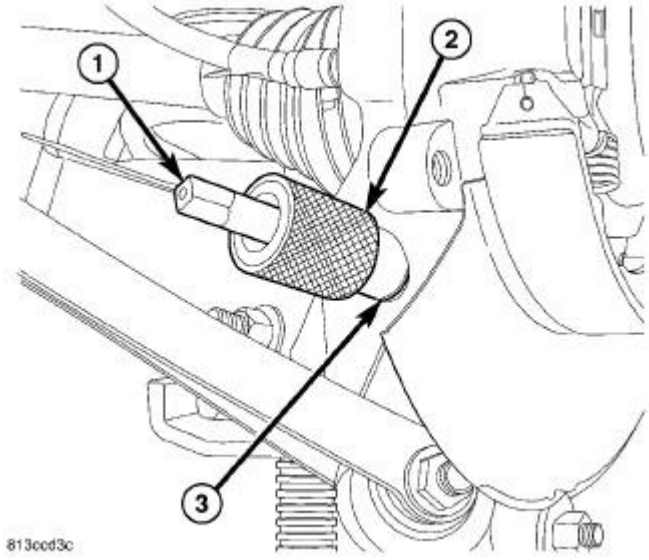

Fig. 36: Cutting Threads Through Bushing
Courtesy of CHRYSLER GROUP, LLC

CAUTION: It is important to use Tap Guide (2) when tapping sleeve in knuckle to help keep Plug Tap (1) straight during use or damage to Tap may

occur.

12. Place special tool #9361-2, Tap Guide (2) against sleeve (3) in knuckle to keep special tool #9361-1, Tap, Plug M16 X 2.0 (1) straight. Using Tap with an appropriate handle, cut threads approximately halfway through bushing (or about six complete threads). **It is important to back tap out, clean out burrs and lubricate Tap often during process.**

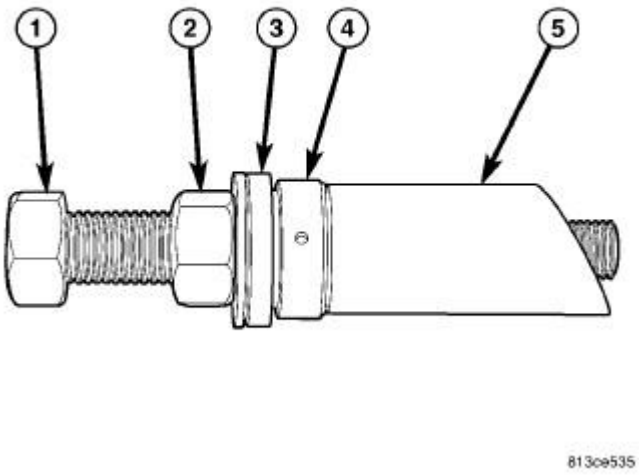

Fig. 37: Rear Knuckle Sleeve Remover/Installer
Courtesy of CHRYSLER GROUP, LLC

NOTE: Prior to using special tool #9361A, Rear Knuckle Sleeve Remover/Installer Kit, lubricate Bolt (1) threads to provide ease of use and promote tool longevity.

NOTE: When installing thrust bearing on Remover, be sure to place hardened side against nut. Place bearing outer cage against stationary component.

13. Assemble special tool #9361A, Rear Knuckle Sleeve Remover/Installer Kit as shown.
    - (1) special tool #9361-3, Screw, Forcing
    - (2) Nut
    - (3) Spherical Washer
    - (4) Thrust Bearing
    - (5) special tool #9361-4, Cup, Bushing

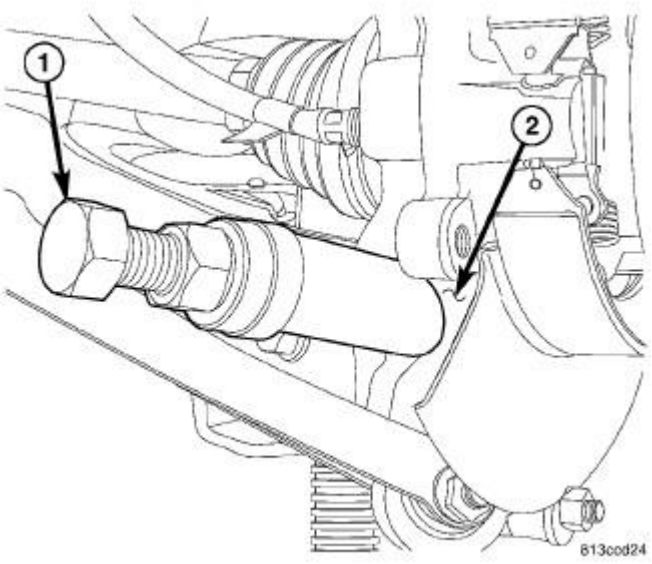

Fig. 38: Removing Knuckle Sleeve
Courtesy of CHRYSLER GROUP, LLC

14. Thread special tool #9361-3, Screw, Forcing (1) into tapped knuckle sleeve.
15. Rotate Nut down, matching Sleeve angled end with angled face of knuckle.
16. Continue to rotate Nut until knuckle sleeve is removed from knuckle. **Discard knuckle sleeve; replace it with new upon installation.**

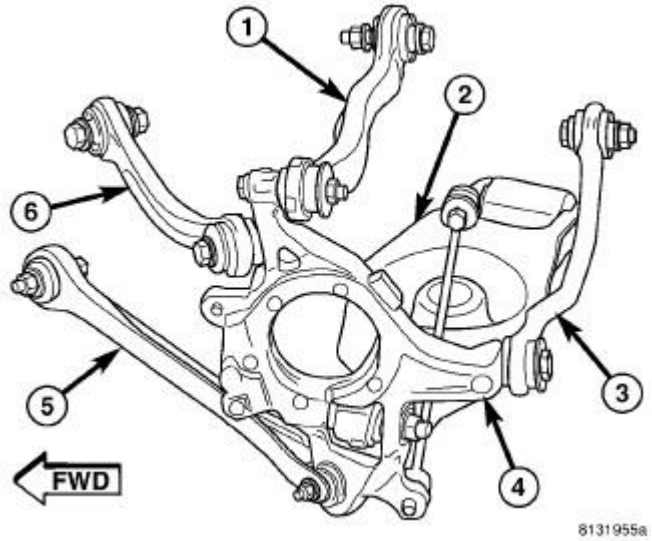

Fig. 39: Rear Suspension Components
Courtesy of CHRYSLER GROUP, LLC

17. Remove bolt and nut fastening compression link (5) to knuckle (4).
18. Remove bolt fastening toe link (3) to knuckle (4).

19. Remove nut and bolt fastening stabilizer link to knuckle (4).
20. Remove nut and bolt fastening tension link (6) to knuckle (4).
21. Remove nut and bolt fastening camber link (1) to knuckle (4).
22. Remove knuckle (4).
23. Remove hub mounting bolts from knuckle.

SRT

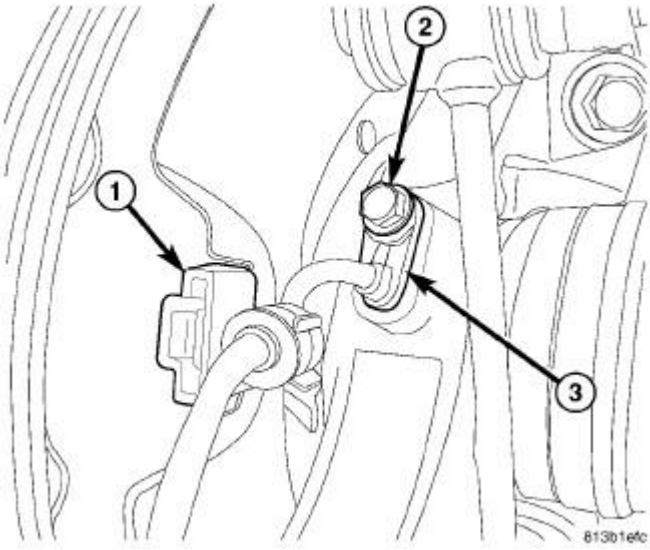

Fig. 40: Rear Wheel Speed Sensor & Screw
Courtesy of CHRYSLER GROUP, LLC

1. Raise and support vehicle. Refer to **HOISTING, STANDARD PROCEDURE** .
2. Unclip wheel speed sensor cable at rear brake rotor shield (1).
3. Remove screw (2) fastening sensor head (3) to rear knuckle.
4. Remove wheel speed sensor head from knuckle.
5. Access and remove rear hub and bearing. Refer to **HUB AND BEARING, REMOVAL**.
6. Remove parking brake shoes. Refer to **SHOES, PARKING BRAKE, REMOVAL** .

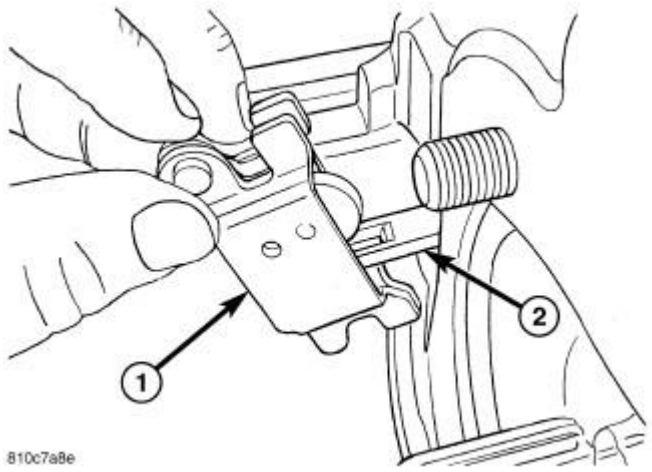

Fig. 41: Removing/Installing Actuator
Courtesy of CHRYSLER GROUP, LLC

1 - PARKING BRAKE SHOE ACTUATOR 2 - CABLE END

7. If not removed, remove parking brake shoe actuator lever (1) from end of cable (2).
8. Remove shoe support from knuckle.

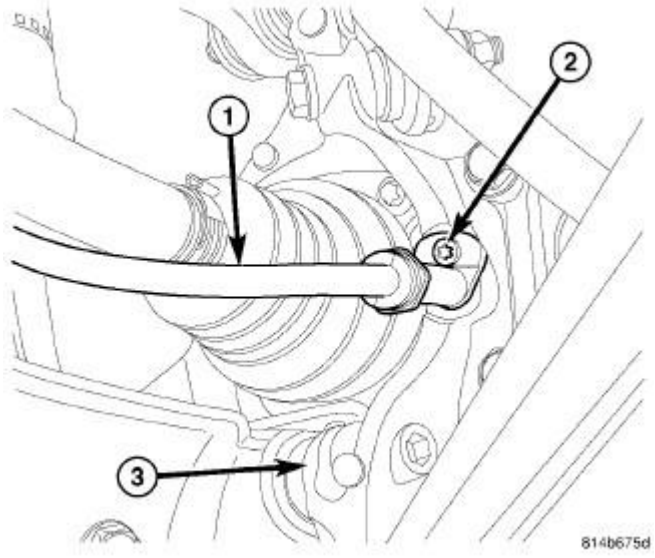

Fig. 42: Parking Brake Cable & Screw
Courtesy of CHRYSLER GROUP, LLC

9. Remove parking brake cable screw (2) at knuckle (3) and pull cable (1) out of knuckle.

10. Position under-hoist utility jack or jack stand under spring link. Raise jack head to contact spring link at shock mount secure in place.

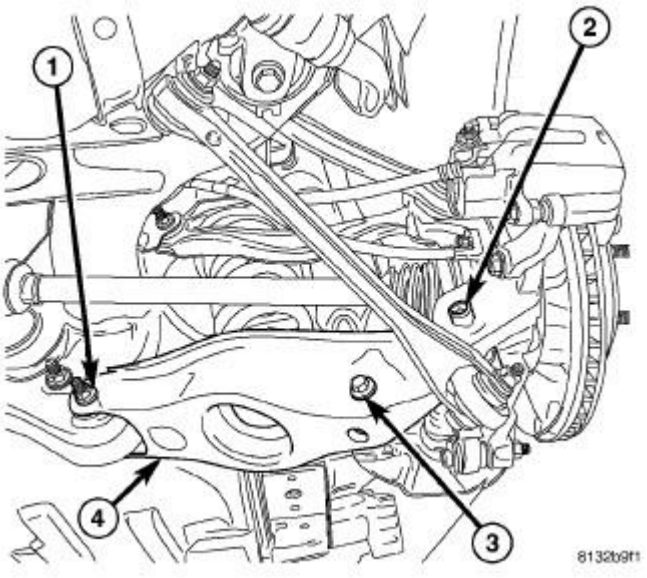

Fig. 43: Spring Link Mounting
Courtesy of CHRYSLER GROUP, LLC

11. Remove spring link-to-knuckle nut and bolt (2).

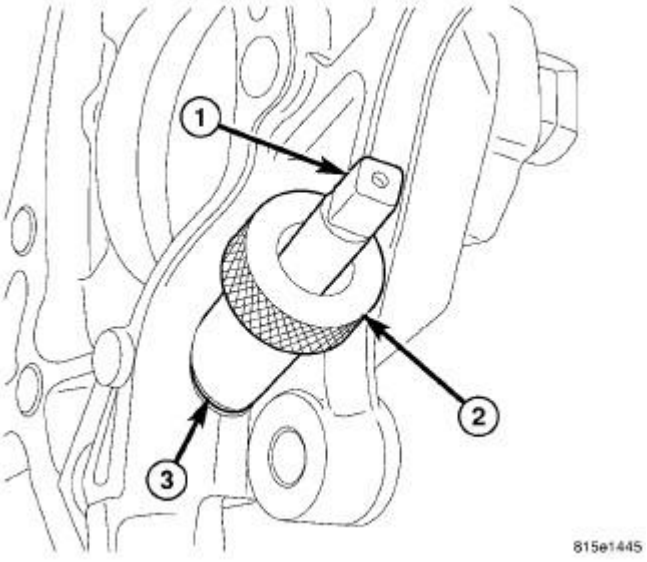

Fig. 44: Cutting Threads Through Bushing
Courtesy of CHRYSLER GROUP, LLC

CAUTION: It important to use Tap Guide (2), when tapping sleeve in knuckle to help keep Plug Tap (1), straight during use or damage to Tap may

occur.

12. Place special tool #9361-11, Guide, Tap (2) against sleeve (3) in knuckle to keep special tool #9361-1, Tap, Plug M16 X 2.0 (1) straight. Using Tap with an appropriate handle, cut threads approximately halfway through bushing (or about six complete threads). **It is important to back tap out, clean out burrs and lubricate Tap often during process.**

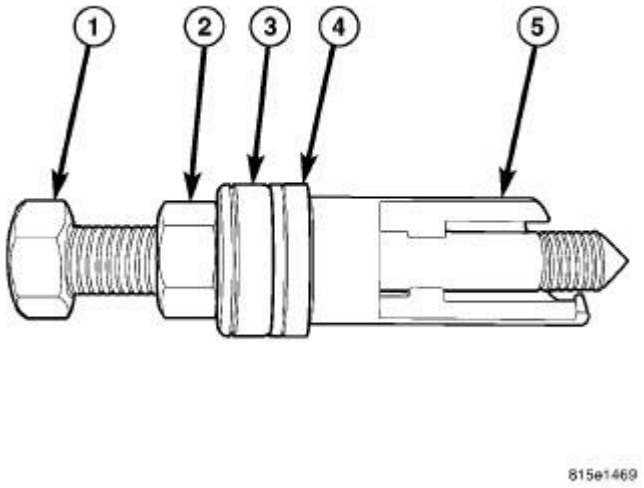

Fig. 45: Rear Knuckle Sleeve Remover/Installer Kit
Courtesy of CHRYSLER GROUP, LLC

NOTE: Prior to using special tool #9361A, Rear Knuckle Sleeve Remover/Installer Kit, lubricate Bolt (1) threads to provide ease of use and promote tool longevity.

13. Assemble special tool #9361A, Rear Knuckle Sleeve Remover/Installer Kit, as shown.
    - (1) special tool #9361-3, Screw, Forcing
    - (2) Nut
    - (3) Thrust Bearing
    - (4) Spherical Washer
    - (5) special tool #9361-9, Cup, Remover, Left Side (Left Side - Shown in figure)
    - (5) special tool #9361-10, Cup, Remover, Right Side (Right Side)

NOTE: When installing thrust bearing (3) on Remover, be sure to place hardened side against nut (2). Place bearing outer cage against stationary component.

NOTE: It is important to use appropriate Sleeve (special tool #9361-9, Cup, Remover, Left Side or special tool #9361-10, Cup, Remover, Right Side) on

Remover to provide proper Tool-to-Knuckle contact.

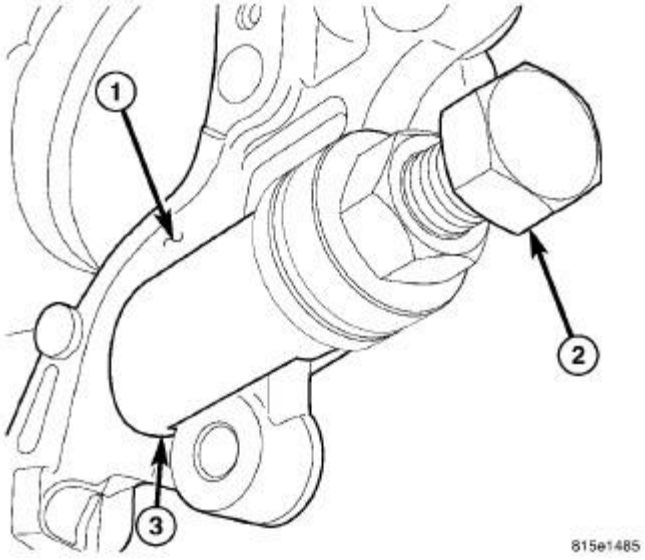

Fig. 46: Removing Knuckle Sleeve
Courtesy of CHRYSLER GROUP, LLC

14. Thread special tool #9361-3, Screw, Forcing (2) into tapped knuckle sleeve.
15. Rotate Nut down, matching Sleeve (special tool #9361-9, Cup, Remover, Left Side) or special tool #9361-10, Cup, Remover, Right Side) angled end with angled face of knuckle (1). **Make sure foot on Sleeve (3) is inserted behind machined brake caliper mounting boss.**
16. Continue to rotate Nut until knuckle sleeve is removed from knuckle. **Discard knuckle sleeve; replace it with new upon installation.**

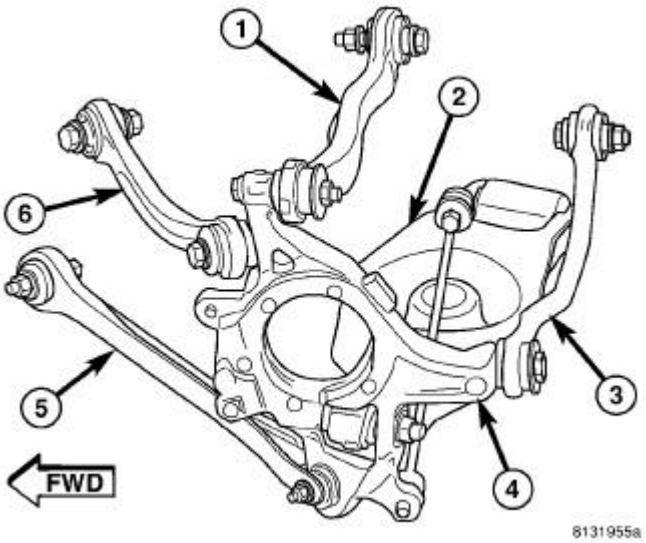

Fig. 47: Rear Suspension Components

Courtesy of CHRYSLER GROUP, LLC

17. Remove bolt and nut fastening compression link (5) to knuckle (4).
18. Remove bolt fastening toe link (3) to knuckle (4).
19. Remove nut and bolt fastening stabilizer link to knuckle (4).
20. Remove nut and bolt fastening tension link (6) to knuckle (4).
21. Remove nut and bolt fastening camber link (1) to knuckle (4).
22. Remove knuckle (4).
23. Remove hub mounting bolts from knuckle.

INSTALLATION

NON SRT

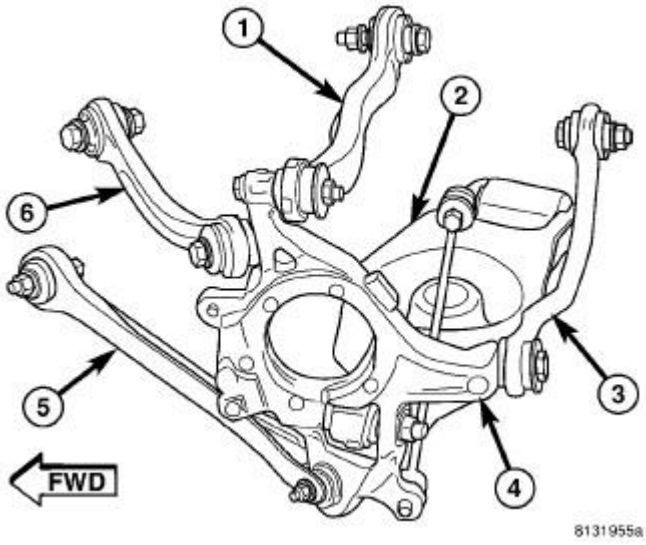

Fig. 48: Rear Suspension Components
Courtesy of CHRYSLER GROUP, LLC

1. Install four hub mounting bolts through knuckle from inboard side allowing ends to protrude from opposite side.
2. Position knuckle on vehicle and install bolt and nut fastening camber link (1) to knuckle (4) as shown. **Do not tighten bolt at this time.**
3. Install bolt and nut fastening tension link (6) to knuckle (4) as shown. **Do not tighten bolt at this time.**
4. Install bolt and nut fastening stabilizer link to knuckle (4). **Do not tighten bolt at this time.**
5. Install bolt fastening toe link (3) to knuckle (4). **Do not tighten bolt at this time.**
6. Install bolt and nut fastening compression link (5) to knuckle (4). **Do not tighten bolt at this time.**

NOTE: If a new knuckle sleeve is not installed in knuckle, perform step 7 through 11.

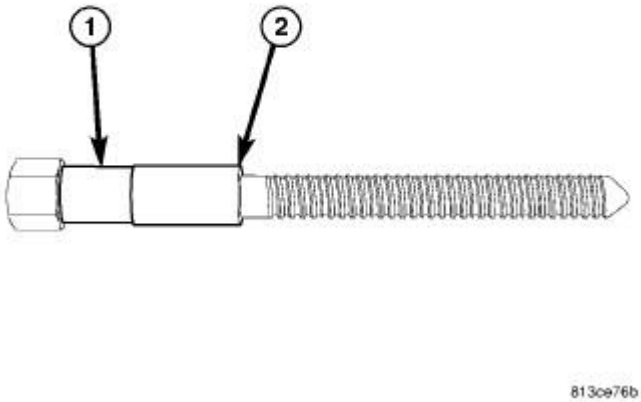

Fig. 49: Rear Knuckle Sleeve Remover/Installer
Courtesy of CHRYSLER GROUP, LLC

NOTE: Prior to using special tool #9361A, Rear Knuckle Sleeve Remover/Installer Kit, lubricate bolt (1) threads to provide ease of use and promote tool longevity.

7. Place NEW knuckle sleeve (2) onto special tool #9361-7, Screw, Installation (1), and slide it up to Bolt's head.

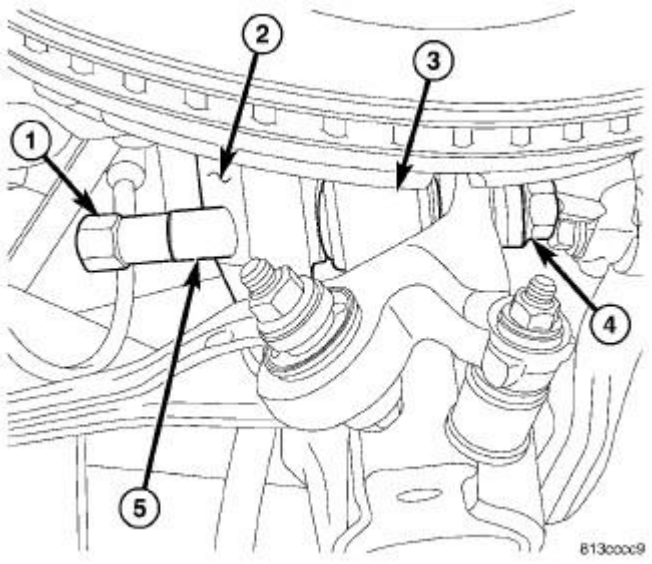

Fig. 50: Installing Knuckle Sleeve
Courtesy of CHRYSLER GROUP, LLC

8. Starting from knuckle forward end, slide special tool #9361-7, Screw, Installation (1) with sleeve (5) through knuckle (2) and spring link ball joint (3).
9. Install thrust bearing and nut (4) on end of Bolt. **When installing thrust bearing on Installer, be sure to place hardened side against nut. Place bearing outer cage against stationary component.**
10. While holding Bolt head (1) stationary, rotate Nut (4) (using hand tools) installing sleeve in knuckle. Install sleeve until Nut stops turning. **Do not overtighten Nut.**
11. Remove special tool.

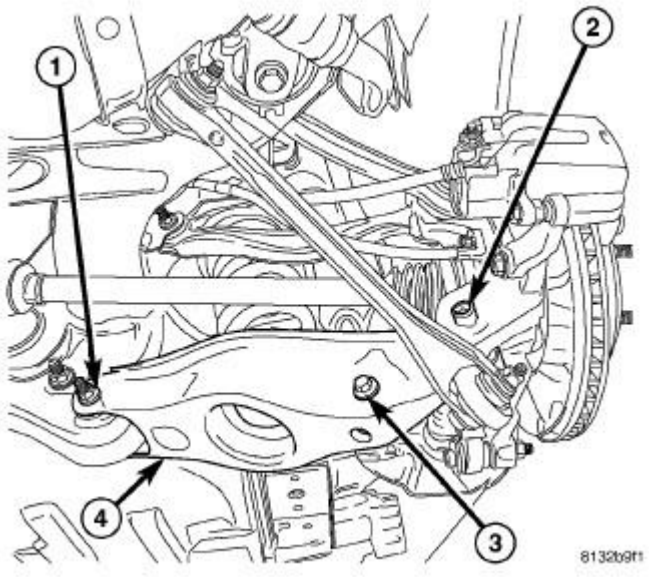

Fig. 51: Spring Link Mounting
Courtesy of CHRYSLER GROUP, LLC

12. Install spring link-to-knuckle bolt (2) front-to-rear through knuckle and link, then install nut. While holding bolt head stationary, tighten nut to 138 N.m (102 ft. lbs.).
13. Remove under-hoist utility jack or jack stand from under spring link.

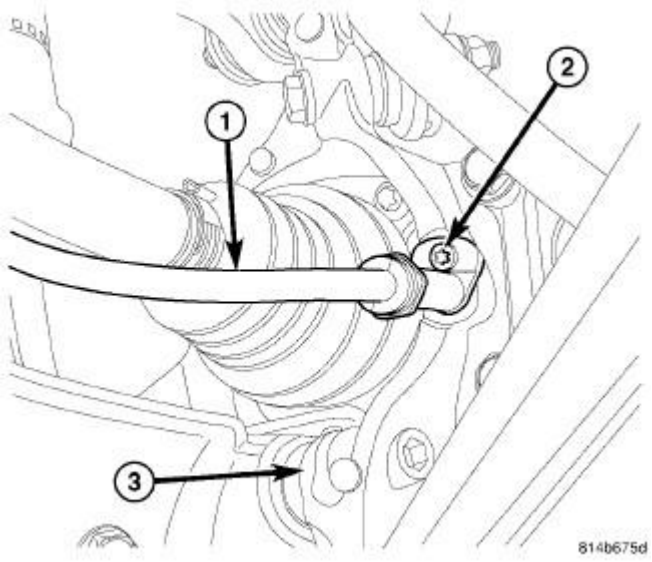

Fig. 52: Parking Brake Cable & Screw
Courtesy of CHRYSLER GROUP, LLC

14. Insert end of cable (1) through rear knuckle (3) and install mounting screw (2). Tighten screw to 8 N.m (71 in. lbs.).
15. Install parking brake shoe support over hub and bearing mounting screws and onto face of knuckle.

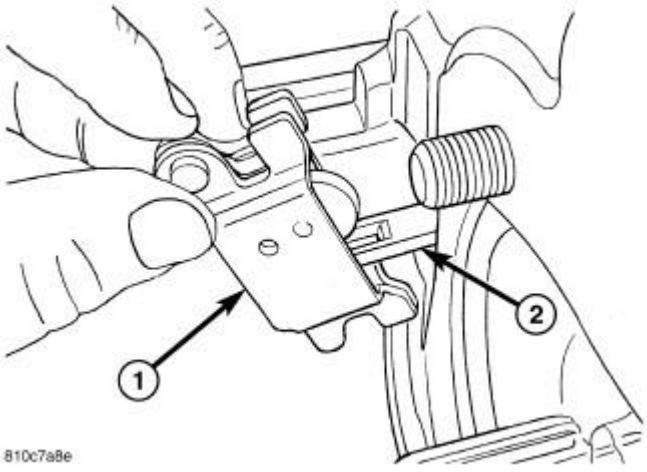

Fig. 53: Removing/Installing Actuator
Courtesy of CHRYSLER GROUP, LLC

1 - PARKING BRAKE SHOE ACTUATOR
2 - CABLE END

16. Install shoe actuator lever (1) on end of parking brake cable (2). Make sure actuator lever is positioned with word "UP" facing outward.
17. Install parking brake shoes as well as all components necessary to access them. Refer to **SHOES, PARKING BRAKE, INSTALLATION** .

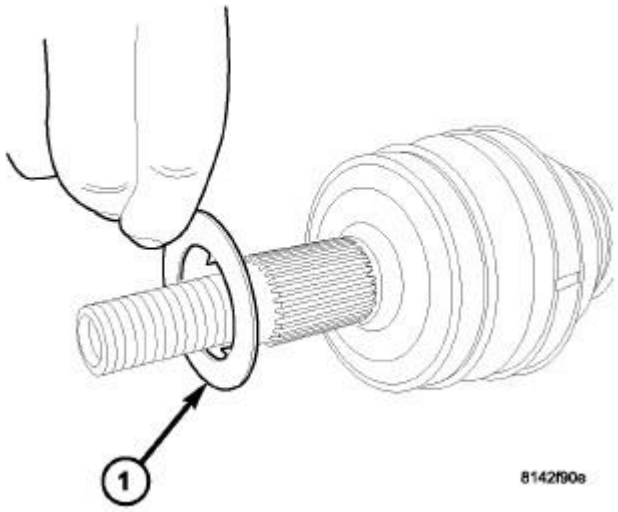

Fig. 54: Halfshaft Isolation Washer
Courtesy of CHRYSLER GROUP, LLC

NOTE: Before installing hub and bearing on end of axle half shaft, ensure isolation washer is present on end of half shaft. Inspect washer making sure it is not worn or damaged. Washer can be installed in either direction on shaft.

18. Install hub and bearing as well as all components necessary to access it. Refer to **HUB AND BEARING, INSTALLATION**.

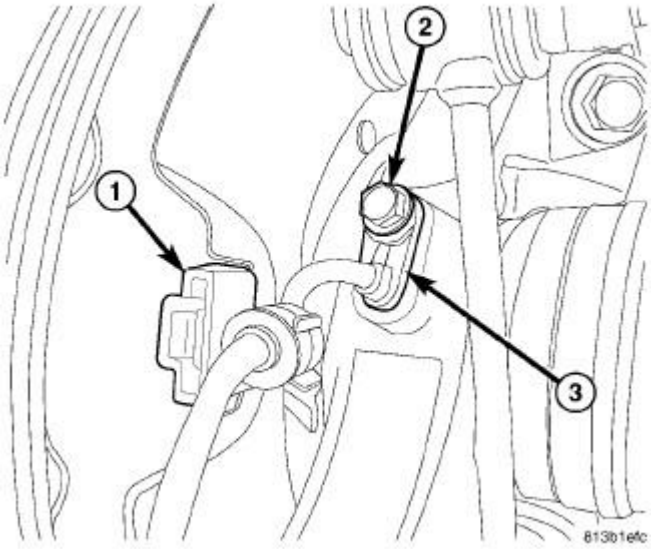

Fig. 55: Rear Wheel Speed Sensor & Screw
Courtesy of CHRYSLER GROUP, LLC

19. Insert wheel speed sensor head (3) into mounting hole in rear of knuckle.
20. Install screw (2) fastening sensor head (3) to rear knuckle. Tighten Screw to 11 N.m (97 in. lbs.).
21. Install sensor cable at rear brake rotor shield (1).
22. Lower vehicle.
23. Adjust parking brake shoes as necessary. Refer to **SHOES, PARKING BRAKE, ADJUSTMENTS** .
24. Position vehicle on alignment rack/drive-on hoist. Raise vehicle as necessary to access mounting bolts.

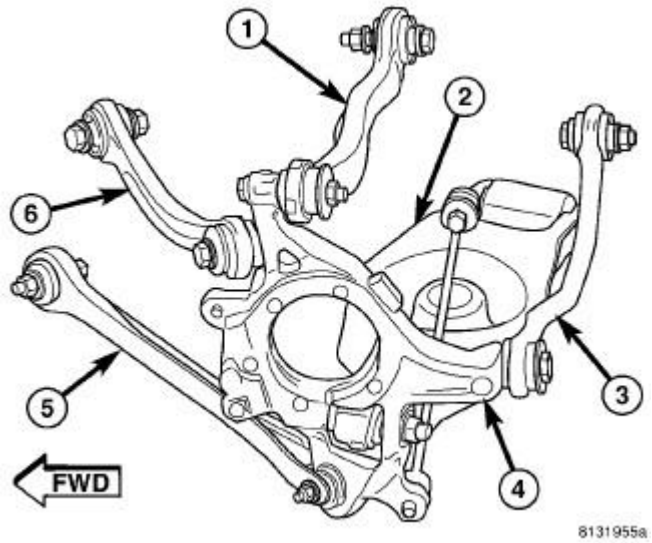

Fig. 56: Rear Suspension Components
Courtesy of CHRYSLER GROUP, LLC

25. Tighten fasteners at knuckle (vehicle at curb height) as follows:
    - Camber Link (1) - 98 N.m (72 ft. lbs.).
    - Compression Link (5) - 81 N.m (60 ft. lbs.).
    - Stabilizer Link - 61 N.m (45 ft. lbs.).
    - Tension Link (6) - 98 N.m (72 ft. lbs.).
    - Toe Link (3) - 95 N.m (70 ft. lbs.).
26. Perform wheel alignment. Refer to **WHEEL ALIGNMENT, STANDARD PROCEDURE** .

SRT

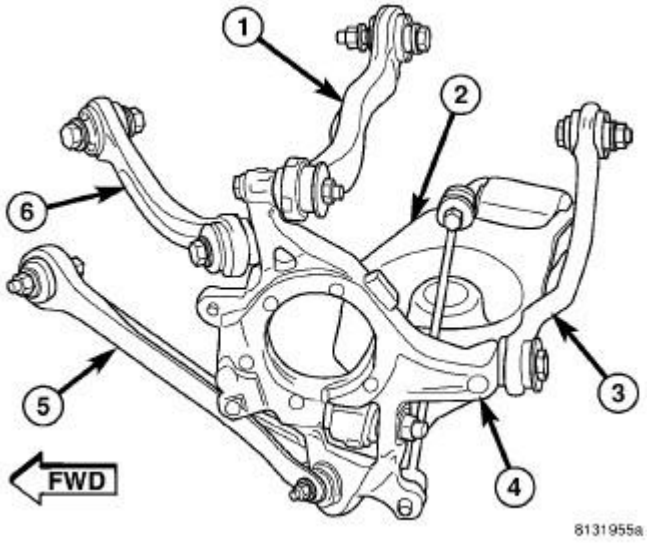

Fig. 57: Rear Suspension Components
Courtesy of CHRYSLER GROUP, LLC

1. Install four hub mounting bolts through knuckle from inboard side allowing ends to protrude from opposite side.
2. Position knuckle on vehicle and install bolt and nut fastening camber link (1) to knuckle (4) as shown. **Do not tighten bolt at this time.**
3. Install bolt and nut fastening tension link (6) to knuckle (4) as shown. **Do not tighten bolt at this time.**
4. Install bolt and nut fastening stabilizer link to knuckle (4). **Do not tighten bolt at this time.**
5. Install bolt fastening toe link (3) to knuckle (4). **Do not tighten bolt at this time.**
6. Install bolt and nut fastening compression link (5) to knuckle (4). **Do not tighten bolt at this time.**

NOTE: If a new knuckle sleeve is not installed in knuckle, perform step 7 through 11.

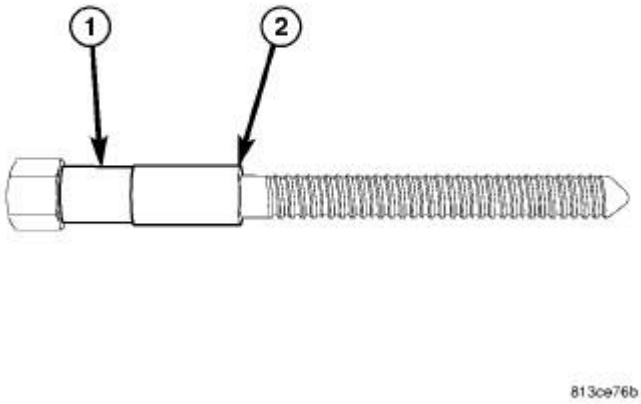

Fig. 58: Rear Knuckle Sleeve Remover/Installer
Courtesy of CHRYSLER GROUP, LLC

NOTE: Prior to using special tool #9361A, Rear Knuckle Sleeve Remover/Installer Kit, lubricate bolt (1) threads to provide ease of use and promote tool longevity.

7. Place NEW knuckle sleeve (2) onto special tool #9361-12, Installer, Bushing (1), and slide it up to Bolt head.

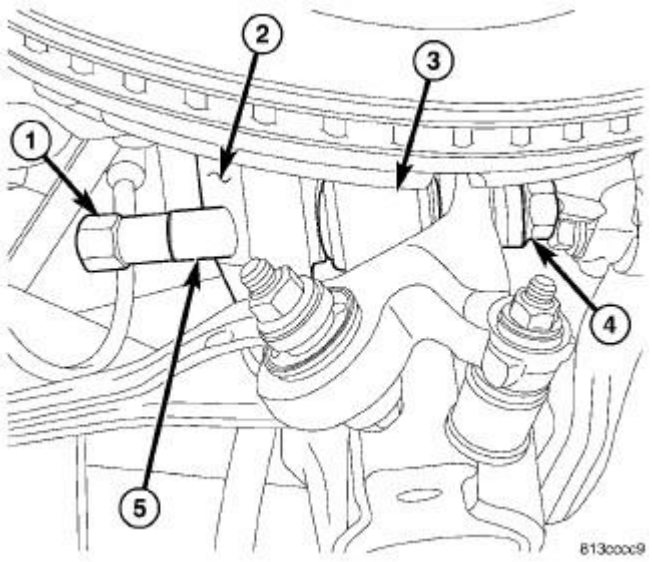

Fig. 59: Installing Knuckle Sleeve
Courtesy of CHRYSLER GROUP, LLC

8. Starting from knuckle forward end, slide special tool #9361-12, Installer, Bushing (1) with sleeve (5) through knuckle (2) and spring link ball joint (3).
9. Install Installation Thrust Bearing (around 3/8 inch thick) and special flange nut (4) on end of Bolt. **When installing thrust bearing on Installer, be sure to place hardened side against nut. Place bearing outer cage against stationary component.**
10. While holding Bolt head (1) stationary, rotate Nut (4) (using hand tools) installing sleeve in knuckle. Install sleeve until Nut stops turning. **Do not overtighten Nut.**
11. Remove special tool.

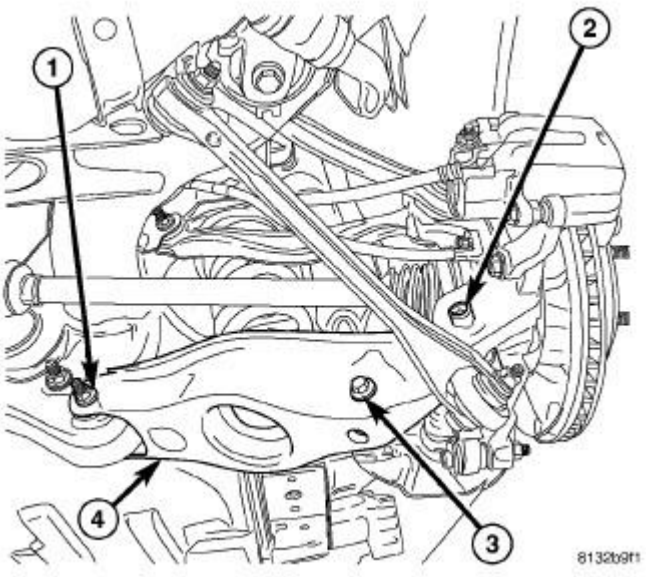

Fig. 60: Spring Link Mounting
Courtesy of CHRYSLER GROUP, LLC

12. Install spring link-to-knuckle bolt (2) front-to-rear through knuckle and link, then install nut. While holding bolt head stationary, tighten nut to 138 N.m (102 ft. lbs.).
13. Remove under-hoist utility jack or jack stand from under spring link.

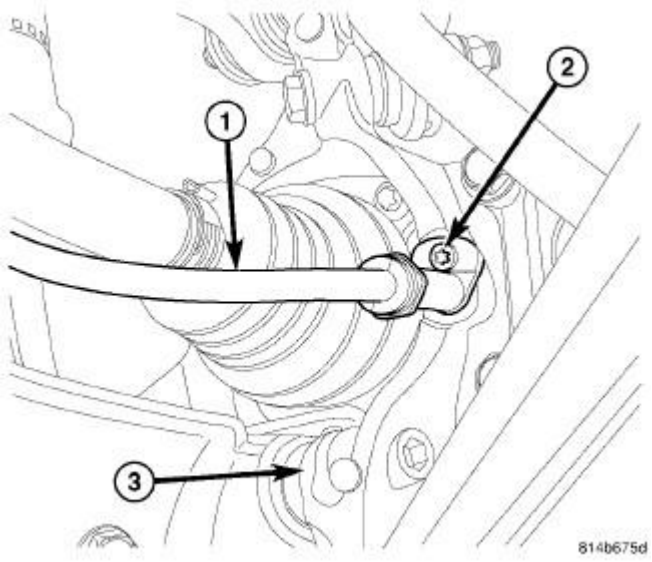

Fig. 61: Parking Brake Cable & Screw
Courtesy of CHRYSLER GROUP, LLC

14. Insert end of cable (1) through rear knuckle (3) and install mounting screw (2). Tighten screw to 8 N.m (71 in. lbs.).
15. Install parking brake shoe support over hub and bearing mounting screws and onto face of knuckle.

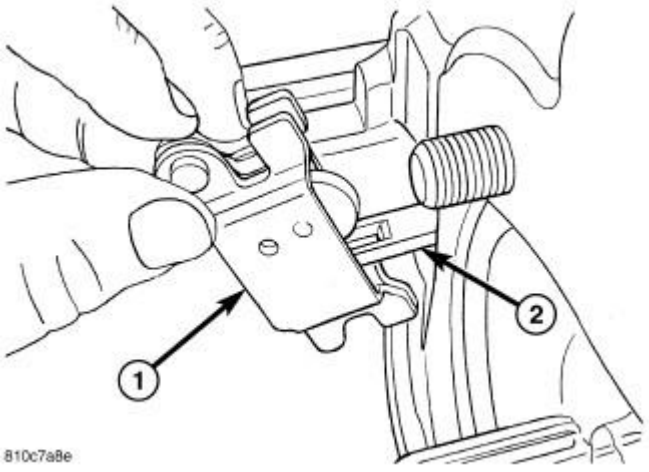

Fig. 62: Removing/Installing Actuator
Courtesy of CHRYSLER GROUP, LLC

1 - PARKING BRAKE SHOE ACTUATOR
2 - CABLE END

16. Install shoe actuator lever (1) on end of parking brake cable (2). Make sure actuator lever is positioned with word "UP" facing outward.
17. Install parking brake shoes as well as all components necessary to access them. Refer to **SHOES, PARKING BRAKE, INSTALLATION** .

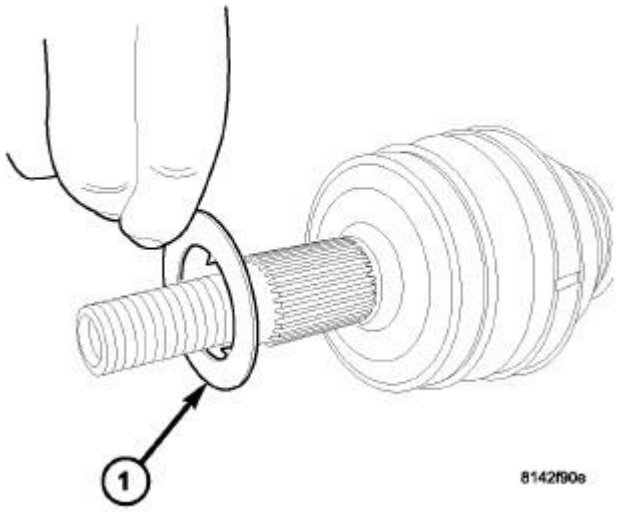

Fig. 63: Halfshaft Isolation Washer
Courtesy of CHRYSLER GROUP, LLC

NOTE: Before installing hub and bearing on end of axle half shaft, ensure isolation washer is present on end of half shaft. Inspect washer making sure it is not worn or damaged. Washer can be installed in either direction on shaft.

18. Install hub and bearing as well as all components necessary to access it. Refer to **HUB AND BEARING, INSTALLATION**.

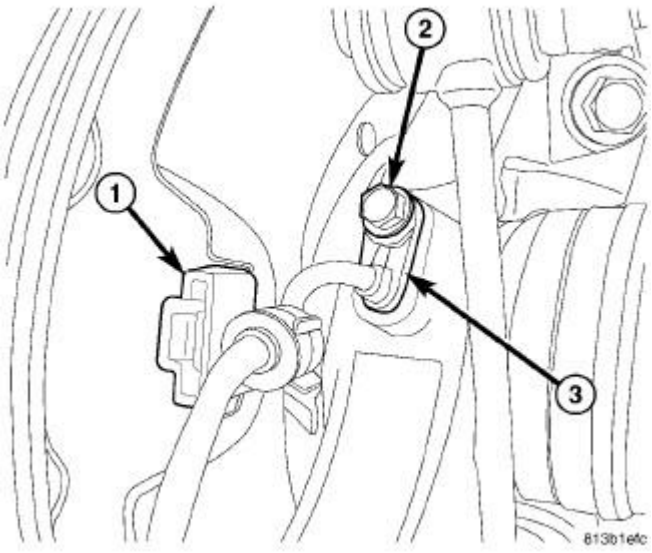

Fig. 64: Rear Wheel Speed Sensor & Screw
Courtesy of CHRYSLER GROUP, LLC

19. Insert wheel speed sensor head (3) into mounting hole in rear of knuckle.
20. Install screw (2) fastening sensor head (3) to rear knuckle. Tighten Screw to 11 N.m (97 in. lbs.).
21. Install sensor cable at rear brake rotor shield (1).
22. Lower vehicle.
23. Adjust parking brake shoes as necessary. Refer to **SHOES, PARKING BRAKE, ADJUSTMENTS** .
24. Position vehicle on alignment rack/drive-on hoist. Raise vehicle as necessary to access mounting bolts.

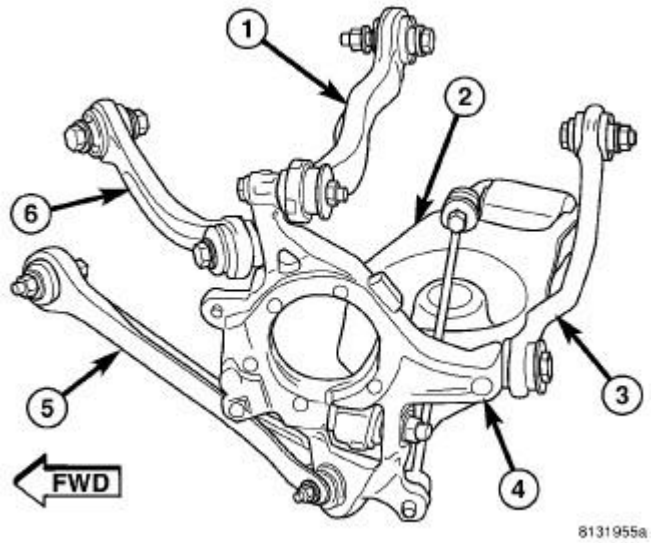

Fig. 65: Rear Suspension Components
Courtesy of CHRYSLER GROUP, LLC

25. Tighten fasteners at knuckle (vehicle at curb height) as follows:
    - Camber Link (1) - 98 N.m (72 ft. lbs.).
    - Compression Link (5) - 81 N.m (60 ft. lbs.).
    - Stabilizer Link - 61 N.m (45 ft. lbs.).
    - Tension Link (6) - 98 N.m (72 ft. lbs.).
    - Toe Link (3) - 95 N.m (70 ft. lbs.).
26. Perform wheel alignment. Refer to **WHEEL ALIGNMENT, STANDARD PROCEDURE** .

LINK, CAMBER

REMOVAL

REMOVAL

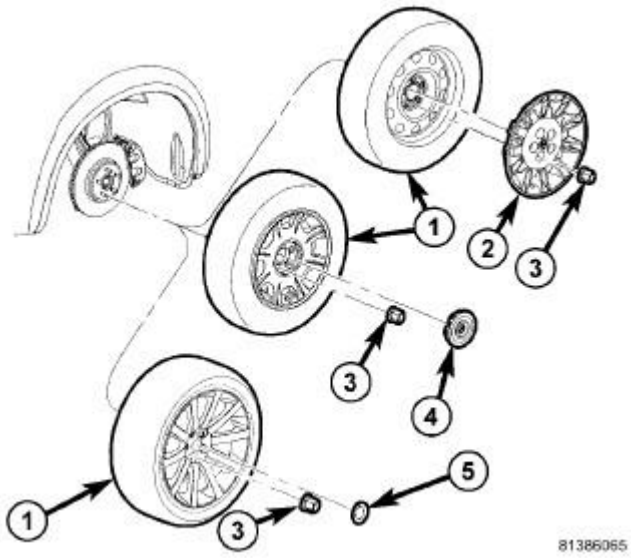

Fig. 66: Tire And Wheel Mounting
Courtesy of CHRYSLER GROUP, LLC

1. Raise and support vehicle. Refer to **HOISTING, STANDARD PROCEDURE** .
2. On both sides of vehicle, remove wheel mounting nuts (3), then rear tire and wheel assembly (1).

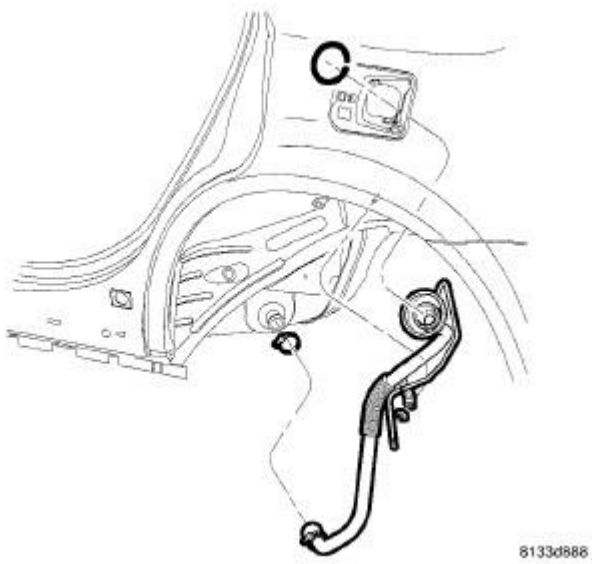

Fig. 67: Filler Tube Assembly
Courtesy of CHRYSLER GROUP, LLC

WARNING: Before opening fuel system, review all Warnings and Cautions.

3. If servicing left side, remove fuel filler tube. Refer to **TUBE, FUEL TANK FILLER, REMOVAL** .
4. Position an extra pair of jack stands under and support forward end of engine cradle to help stabilize vehicle during rear suspension removal/installation.
5. Perform the following if vehicle is equipped with dual-exhaust or are servicing right side on vehicle with single exhaust:
    a. Position under-hoist utility jack or stand several inches below exhaust at muffler.
    b. Disconnect exhaust isolators at muffler and resonators hangers.
    c. Lower exhaust down to rest upon top of jack or stand placed below muffler.

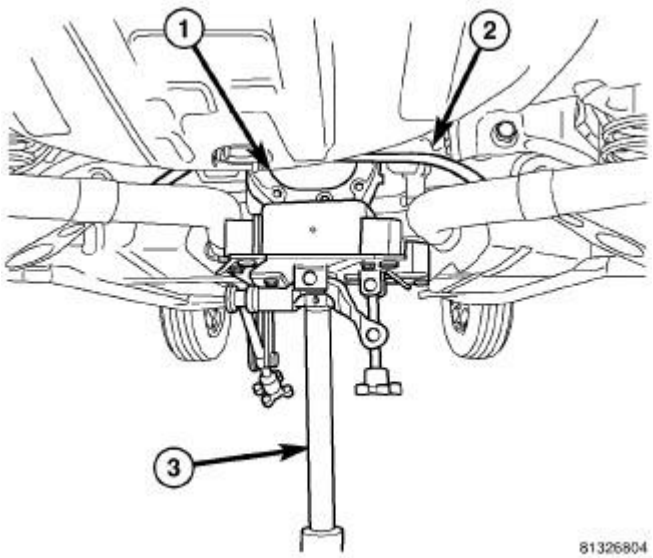

Fig. 68: Supporting Rear Axle Differential
Courtesy of CHRYSLER GROUP, LLC

6. Position under-hoist utility jack or transmission jack (3) under center of rear axle differential (1). Raise jack head to contact differential and secure in place. **When securing crossmember to jack, be sure not to secure stabilizer bar.**

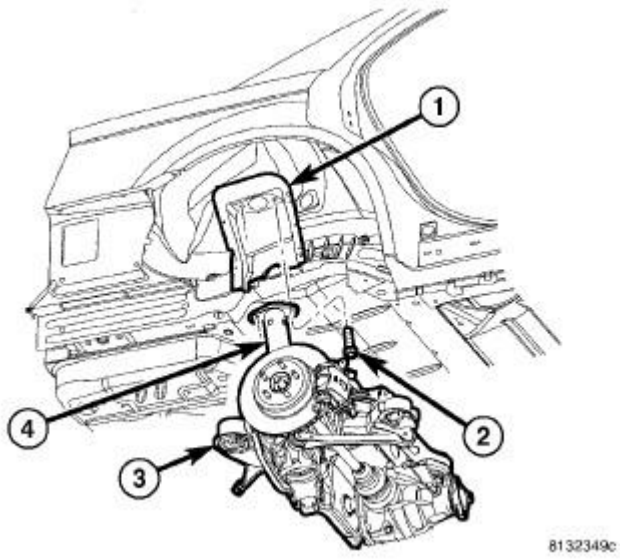

Fig. 69: Shock Absorber & Upper Mounting Screws
Courtesy of CHRYSLER GROUP, LLC

7. Remove shock absorber (1) upper mounting screws (2).

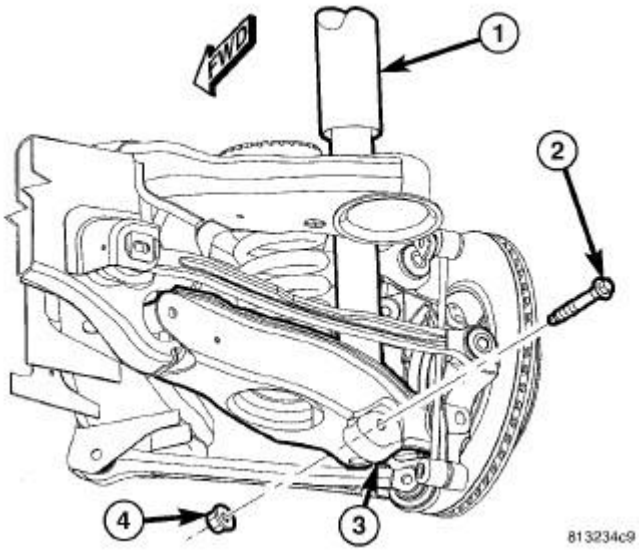

Fig. 70: Shock Absorber Lower Mounting Bolt & Nut
Courtesy of CHRYSLER GROUP, LLC

8. Remove shock absorber (1) lower mounting bolt (2) and nut (4).

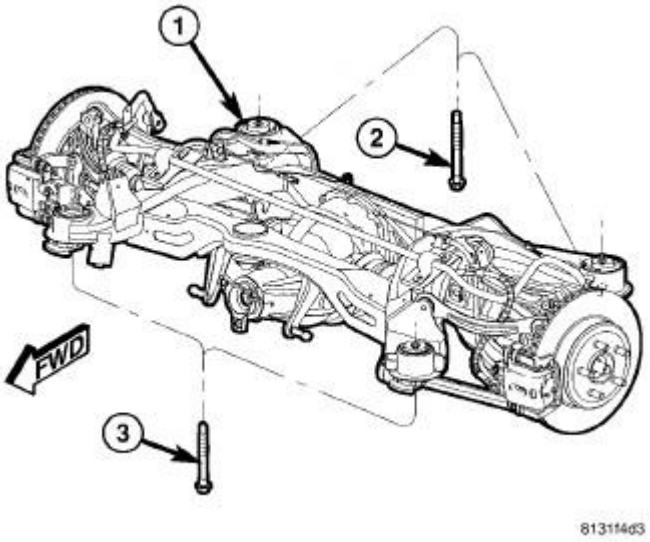

Fig. 71: Rear Crossmember Mounting Bolts
Courtesy of CHRYSLER GROUP, LLC

CAUTION: When removing crossmember mounting bolts (2 and 3) it is important NOT to loosen or remove crossmember mounting bolts on opposite side of vehicle. Doing so will require rear wheel alignment following reinstallation to ensure proper thrust angle.

9. Remove both front and rear crossmember mounting bolts (2 and 3) on repair-side of vehicle.

CAUTION: To avoid damaging other components of vehicle, do not lower crossmember (1) any further than necessary to remove shock absorber.

10. **Slowly** lower jack allowing repair-side of crossmember to drop. Lower jack just enough to allow top of shock absorber to clear body flange.

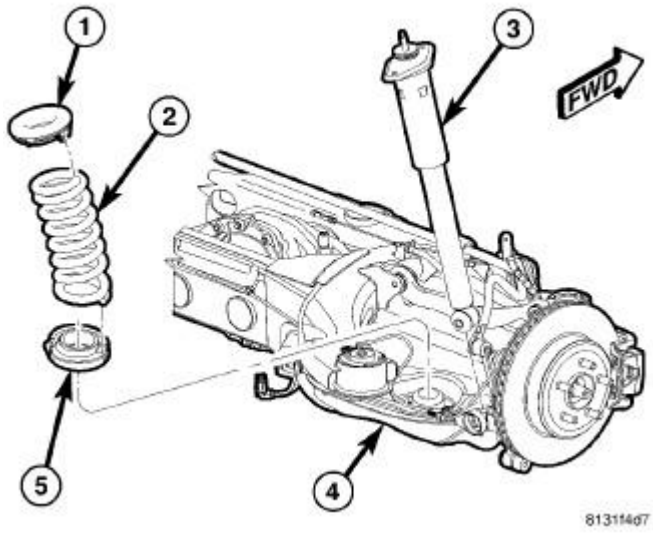

Fig. 72: Isolators, Coil Spring, Shock Absorber & Crossmember
Courtesy of CHRYSLER GROUP, LLC

11. Remove shock absorber (3) by tipping top outward and lifting lower end out of pocket in spring link (4).

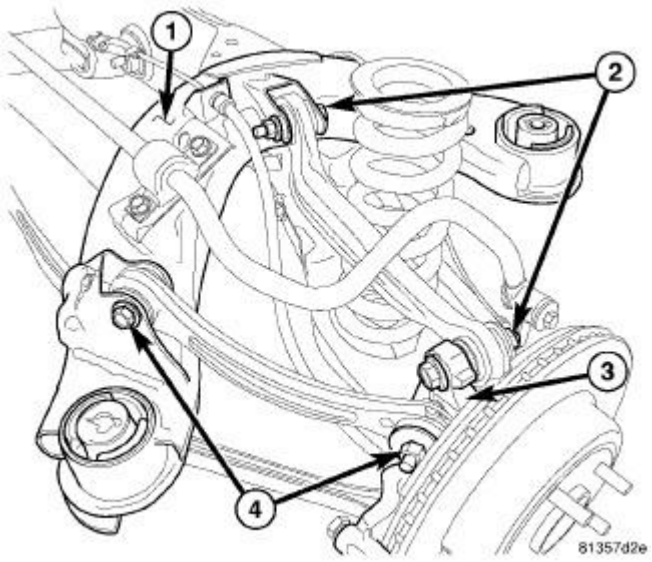

Fig. 73: Camber Link, Nuts & Bolts
Courtesy of CHRYSLER GROUP, LLC

NOTE: Do not lower repair-side of crossmember any further than necessary to gain access to link mounting bolts at crossmember.

12. Remove nut and bolt (2) mounting link to knuckle (3).
13. Remove nut and bolt (2) mounting link to crossmember (1).
14. Remove link.

INSTALLATION

INSTALLATION

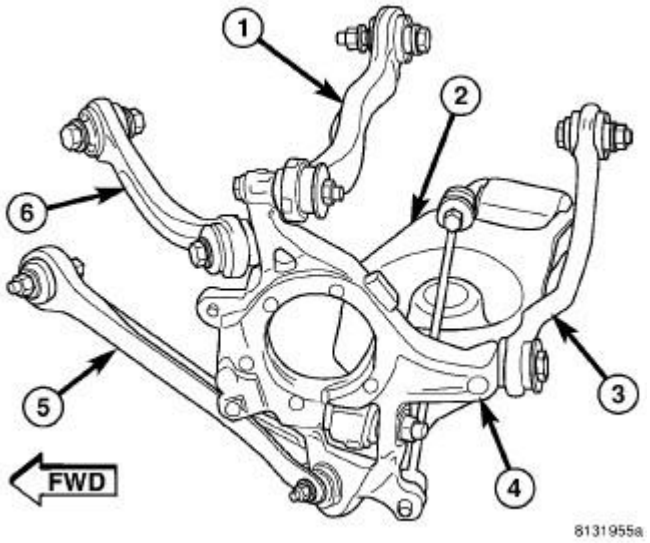

Fig. 74: Rear Suspension Components
Courtesy of CHRYSLER GROUP, LLC

NOTE: When installing link (1), ensure the following to avoid mis-installation:

- **Heavier, thicker end goes toward crossmember.**
- **Fore-or-aft bow faces forward (curves around coil spring).**
- **Up-or-down bow faces downward.**

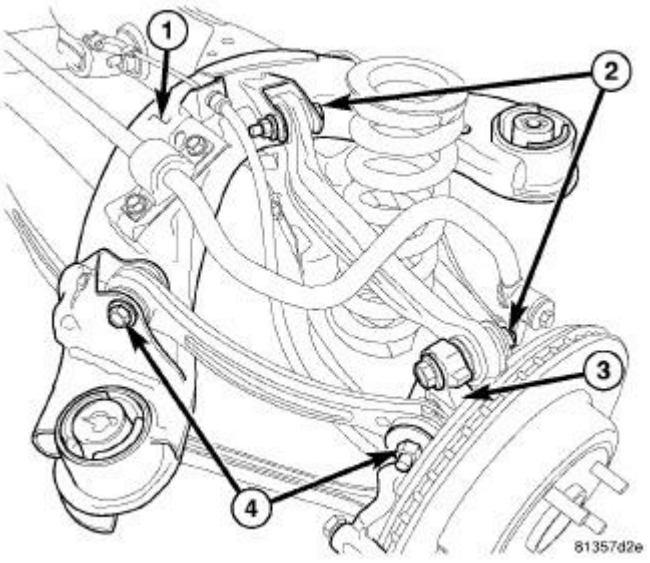

Fig. 75: Camber Link, Nuts & Bolts
Courtesy of CHRYSLER GROUP, LLC

1. Place link in bracket on crossmember (1). Install bolt and nut (2) at crossmember (1) as shown. **Do not**

tighten bolt at this time.

2. Install bolt and nut (2) mounting link to knuckle (3) as shown. **Do not tighten bolt at this time.**

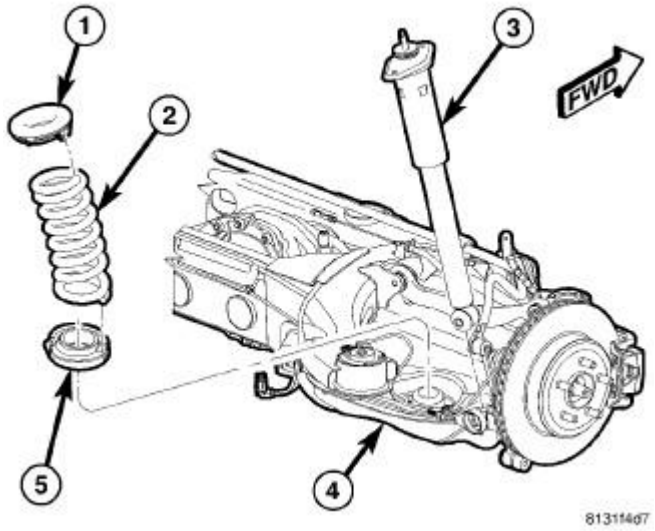

Fig. 76: Isolators, Coil Spring, Shock Absorber & Crossmember
Courtesy of CHRYSLER GROUP, LLC

3. Install shock absorber (3) by setting lower end into pocket in spring link (4), then tipping top inward until aligned with upper mounting holes.

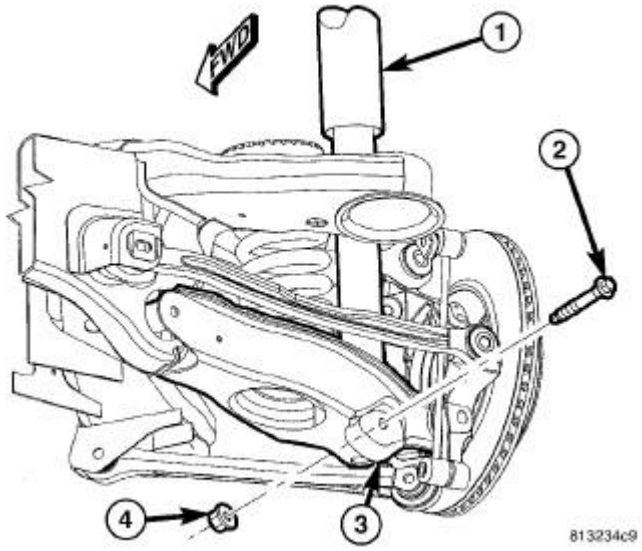

Fig. 77: Shock Absorber Lower Mounting Bolt & Nut
Courtesy of CHRYSLER GROUP, LLC

4. Install lower shock mounting bolt and nut. **Do not tighten at this time.**

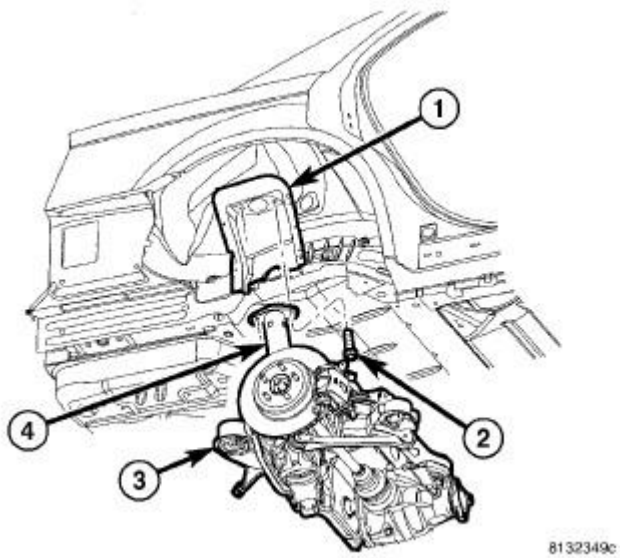

Fig. 78: Shock Absorber & Upper Mounting Screws
Courtesy of CHRYSLER GROUP, LLC

5. Carefully raise jack, guiding coil spring and upper end of shock absorber (4) into mounted positions.
6. Install shock absorber upper mounting screws (2). Tighten upper mounting screws to 52 N.m (38 ft. lbs.).

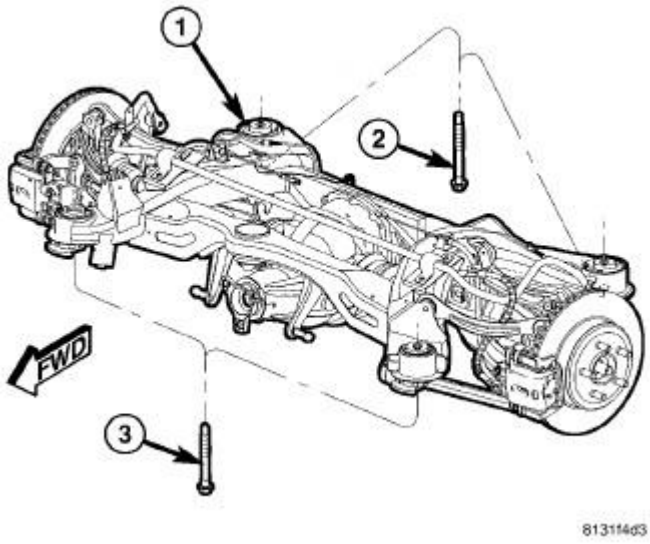

Fig. 79: Rear Crossmember Mounting Bolts
Courtesy of CHRYSLER GROUP, LLC

NOTE: Rear crossmember mounting bolts (2) are longer than front mounting bolts (3). Do not interchange mounting bolts.

7. Install crossmember mounting bolts (2 and 3). **Snug, but do not fully tighten bolts at this time.**

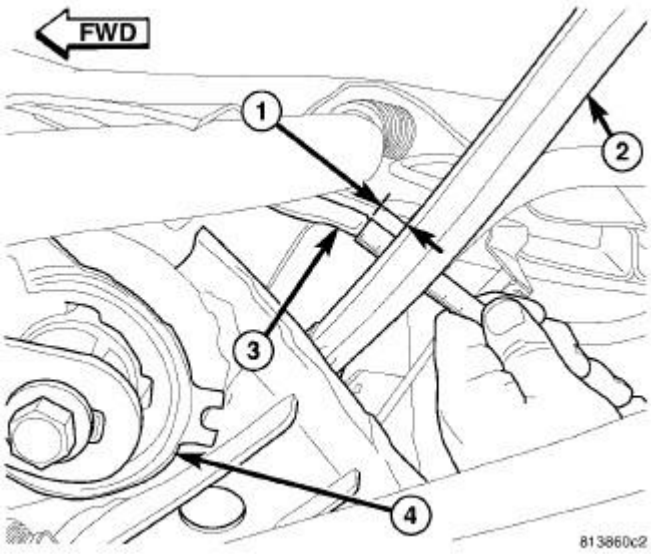

Fig. 80: Measuring Tension Link Clearance
Courtesy of CHRYSLER GROUP, LLC

8. Measure distance (1) between from tension link (2) to body weld flange (3) directly in front of it, just outboard of front mount bushing (4). **This distance must be at least 12 mm to allow proper clearance for suspension movement.** If distance is less than 12 mm, shift that side of rear crossmember directly rearward until distance is 12 mm or greater. To do so, loosen 3 mounting bolts slightly, leaving one on opposite side of shift snugged to pivot off of. Shift crossmember rearward and snug loosened bolts. Measure opposite side to be sure it also maintains minimum 12 mm distance.

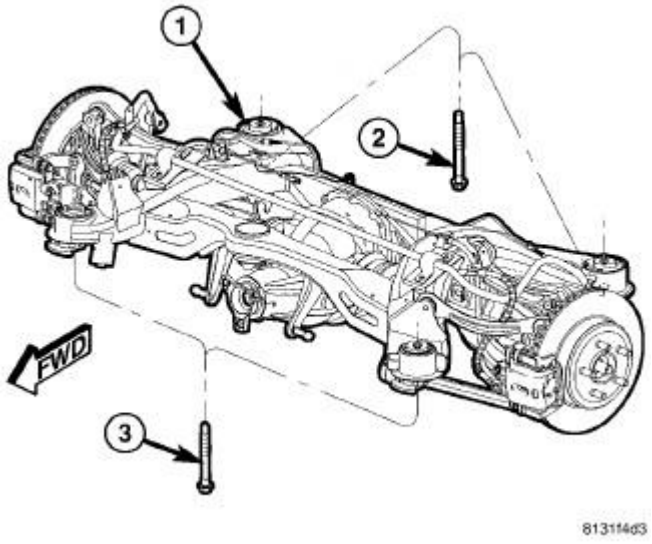

Fig. 81: Rear Crossmember Mounting Bolts
Courtesy of CHRYSLER GROUP, LLC

9. Tighten all crossmember mounting bolts (2 and 3) to 180 N.m (133 ft. lbs.).

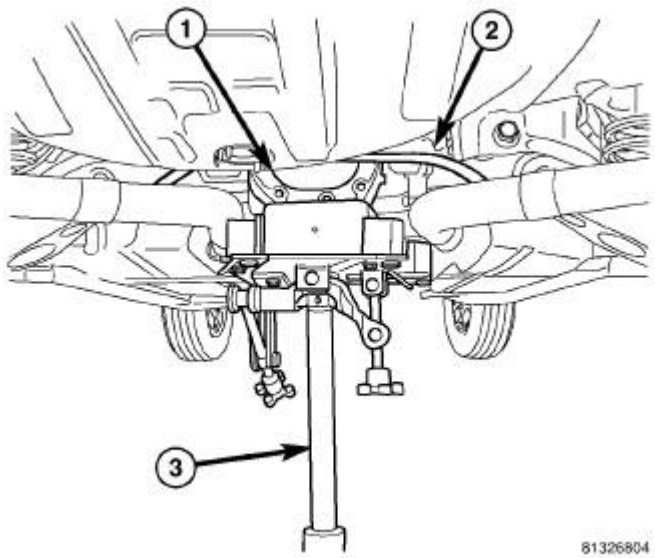

Fig. 82: Supporting Rear Axle Differential
Courtesy of CHRYSLER GROUP, LLC

10. Remove jack (3) from under rear axle differential.
11. If previously lowered, raise rear exhaust back to mounted position and connect exhaust isolators at muffler and resonators hangers. Remove jack or stand below exhaust muffler.

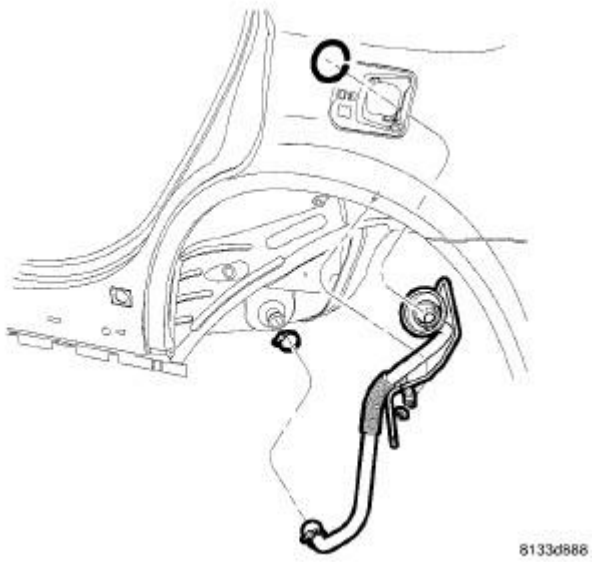

Fig. 83: Filler Tube Assembly
Courtesy of CHRYSLER GROUP, LLC

12. If removed, install fuel filler tube. Refer to **TUBE, FUEL TANK FILLER, INSTALLATION** .

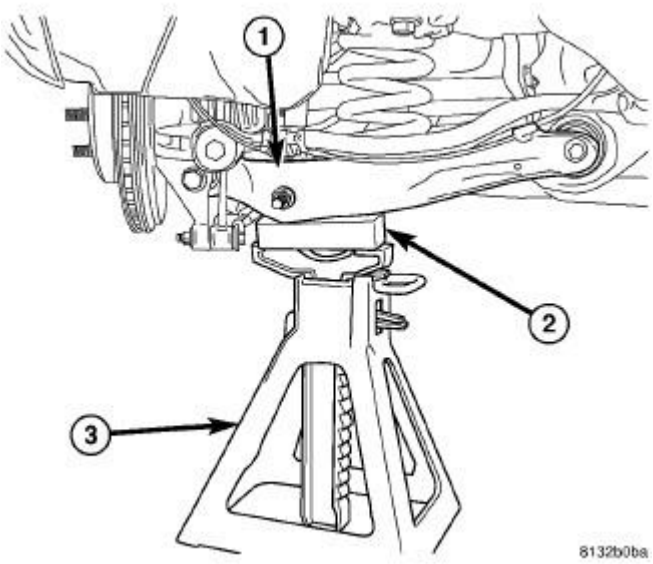

Fig. 84: Jack Stand Under Control Arm
Courtesy of CHRYSLER GROUP, LLC

13. Lower vehicle until front tires contact floor but rear is still suspended. Place jack stands under each rear suspension spring link. Place an appropriate wooden block between stand and link to avoid damaging spring link, then lower vehicle until full vehicle weight is supported by suspension.

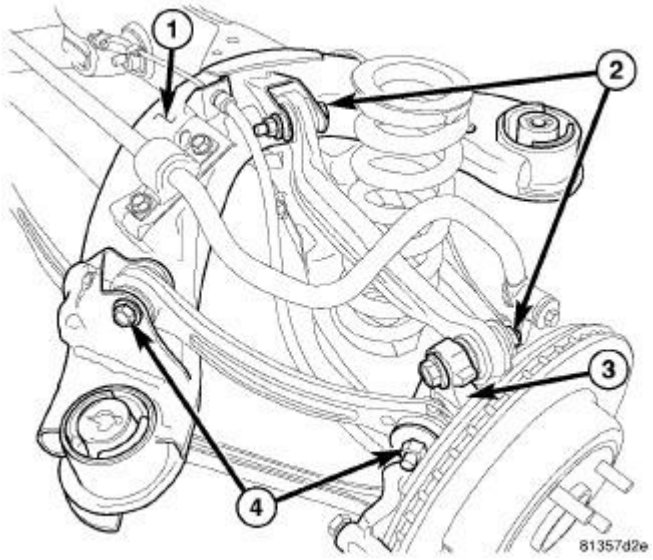

Fig. 85: Camber Link, Nuts & Bolts
Courtesy of CHRYSLER GROUP, LLC

14. Tighten camber link fasteners (2) to:
    - Bolt at crossmember - 85 N.m (63 ft. lbs.).
    - Bolt nut at knuckle - 98 N.m (72 ft. lbs.).

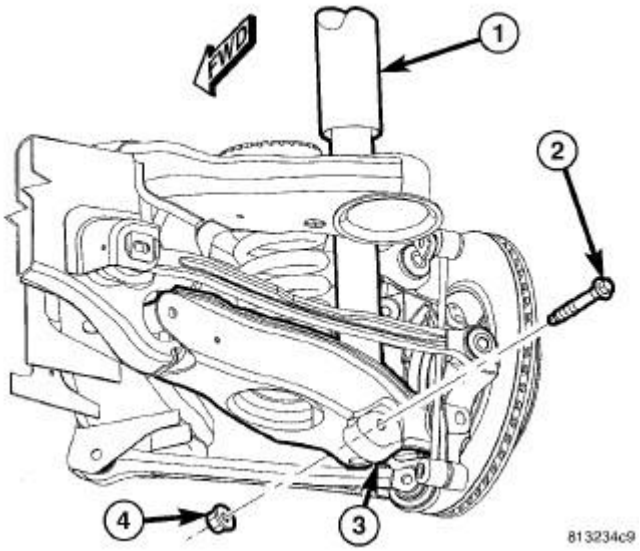

Fig. 86: Shock Absorber Lower Mounting Bolt & Nut
Courtesy of CHRYSLER GROUP, LLC

15. Tighten shock absorber lower mounting bolt nut (4) to 72 N.m (53 ft. lbs.).

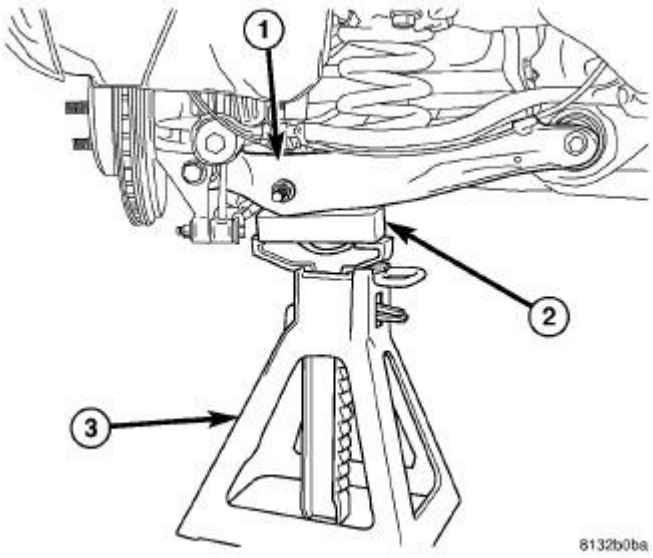

Fig. 87: Jack Stand Under Control Arm
Courtesy of CHRYSLER GROUP, LLC

16. Raise vehicle and remove jack stands (3).

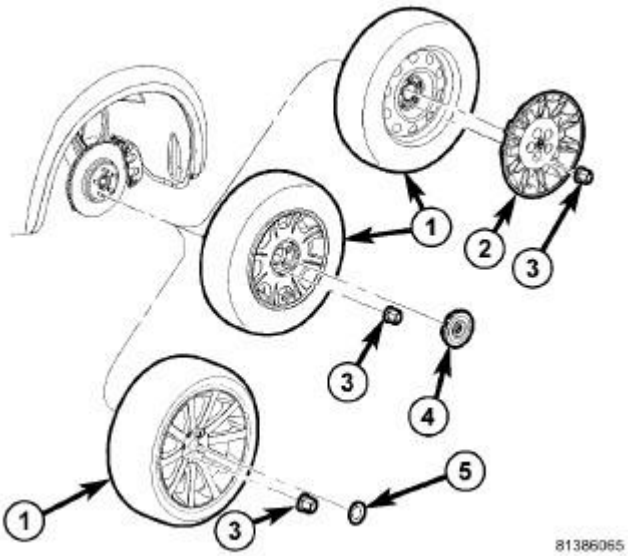

Fig. 88: Tire And Wheel Mounting
Courtesy of CHRYSLER GROUP, LLC

17. Install tire and wheel assemblies (1). Tighten wheel mounting nuts (3) to 150 N.m (110 ft. lbs.) Refer to **INSTALLATION** .
18. Lower vehicle.
19. Perform wheel alignment. Refer to **WHEEL ALIGNMENT, STANDARD PROCEDURE** .

LINK, COMPRESSION

REMOVAL

REMOVAL

1. Raise and support vehicle. Refer to **HOISTING, STANDARD PROCEDURE** .

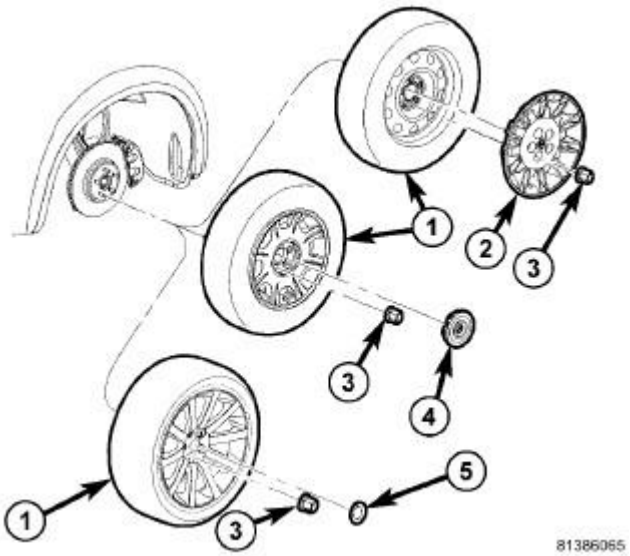

Fig. 89: Tire And Wheel Mounting
Courtesy of CHRYSLER GROUP, LLC

2. Remove wheel mounting nuts (3), then rear tire and wheel assembly (1).

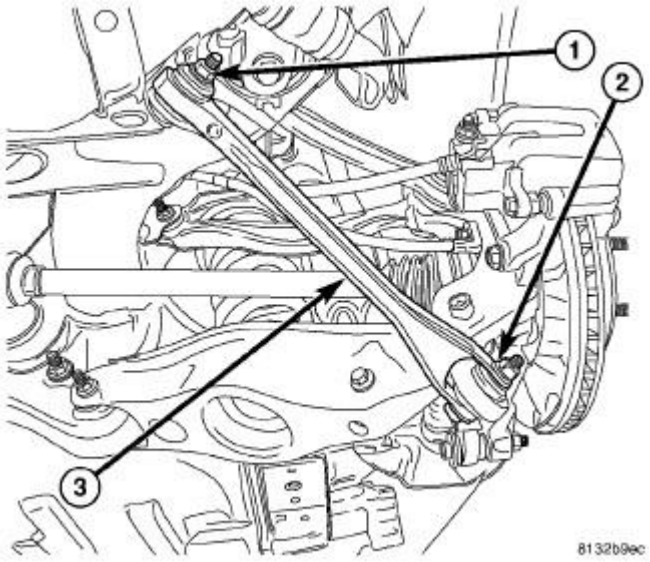

Fig. 90: Compression Link Mounting
Courtesy of CHRYSLER GROUP, LLC

3. Remove bolt and nut (2) mounting link (3) at knuckle.
4. Remove bolt and nut (1) mounting link (3) at crossmember.
5. Remove link (3).

INSTALLATION

INSTALLATION

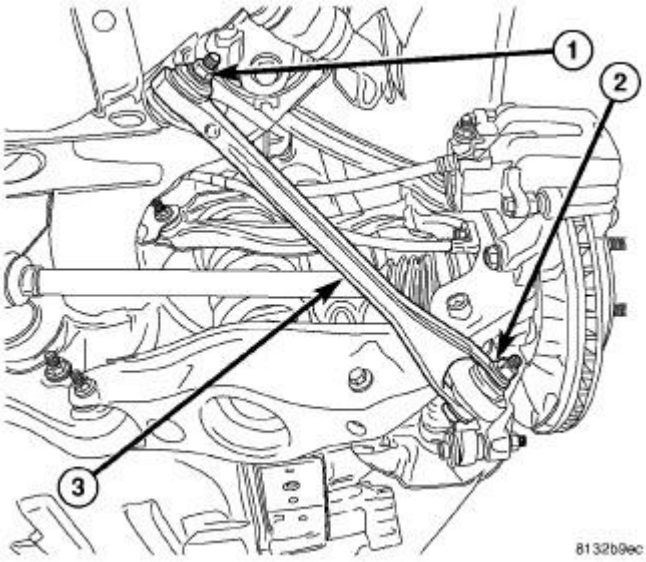

Fig. 91: Compression Link Mounting
Courtesy of CHRYSLER GROUP, LLC

NOTE: Although the compression link is different end-to-end, there is no top and bottom.

1. Position link and install bolt and nut (1) mounting link (3) at crossmember. **Do not tighten bolt at this time.**
2. Install bolt and nut (2) mounting link (3) at knuckle. **Do not tighten bolt at this time.**

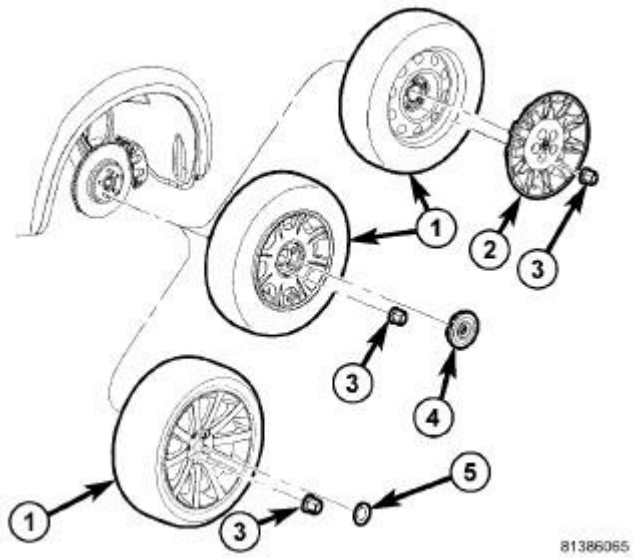

Fig. 92: Tire And Wheel Mounting

Courtesy of CHRYSLER GROUP, LLC

3. Install tire and wheel assembly (1). Tighten wheel mounting nuts (3) to 150 N.m (110 ft. lbs.). Refer to **INSTALLATION** .
4. Lower vehicle.
5. Position vehicle on alignment rack/drive-on lift. Raise vehicle as necessary to access link fasteners.
6. Tighten compression link fasteners to:
    - Bolt at crossmember - 85 N.m (63 ft. lbs.).
    - Bolt at knuckle - 81 N.m (60 ft. lbs.).
7. Perform wheel alignment Refer to **WHEEL ALIGNMENT, STANDARD PROCEDURE** .

LINK, SPRING

REMOVAL

NON SRT

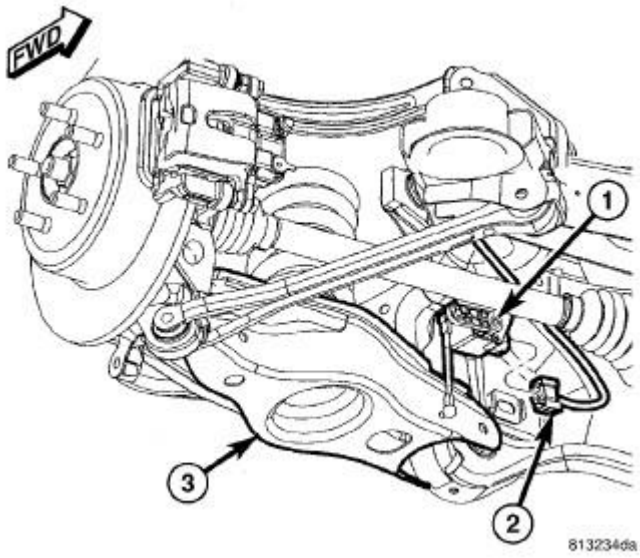

Fig. 93: Headlamp Leveling Sensor
Courtesy of CHRYSLER GROUP, LLC

1. Raise and support vehicle Refer to **HOISTING, STANDARD PROCEDURE** .
2. Access and remove rear spring. Refer to **SPRING(S), REMOVAL**.
3. If servicing right spring link, disconnect headlamp leveling sensor (1) link at spring link (3), if equipped.

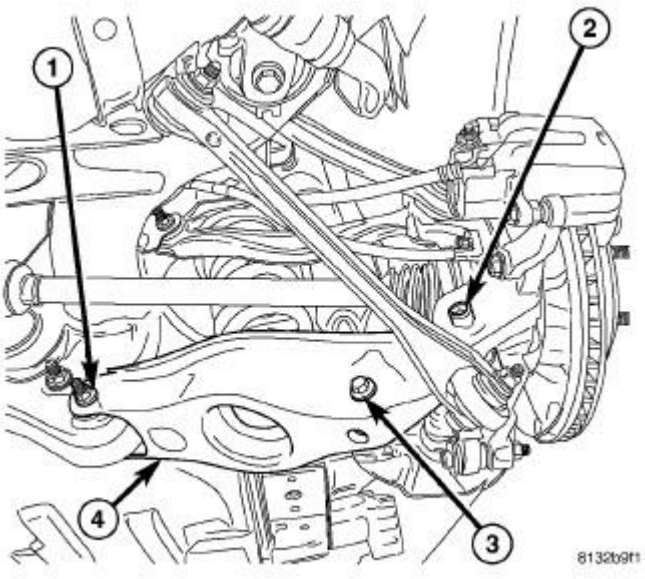

Fig. 94: Spring Link Mounting
Courtesy of CHRYSLER GROUP, LLC

4. Remove spring link-to-knuckle nut and bolt (2).

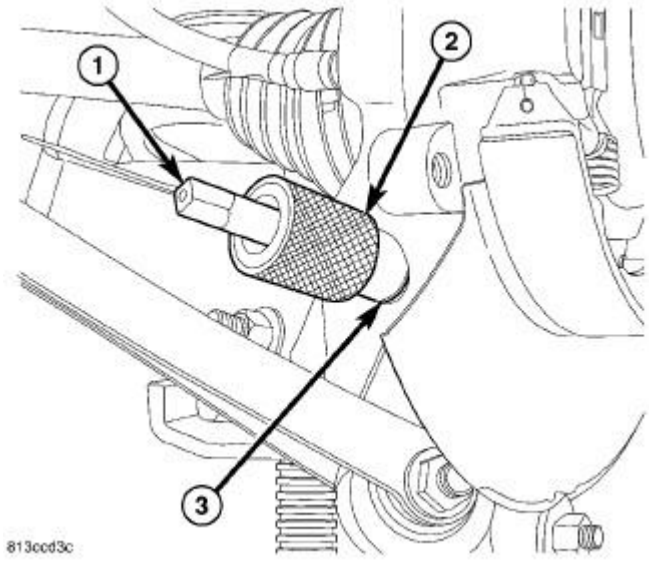

Fig. 95: Cutting Threads Through Bushing
Courtesy of CHRYSLER GROUP, LLC

CAUTION: It is important to use Tap Guide (2) when tapping sleeve in knuckle to help keep Plug Tap (1) straight during use or damage to Tap may occur.

5. Place Guide (special tool #9361-2, Tap Guide) (2) against sleeve (3) in knuckle to keep special tool

#9361-1, Tap, Plug M16 X 2.0 (1) straight. Using Tap with an appropriate handle, cut threads approximately halfway through bushing (or about six complete threads). **It is important to back tap out, clean out burrs and lubricate Tap often during process.**

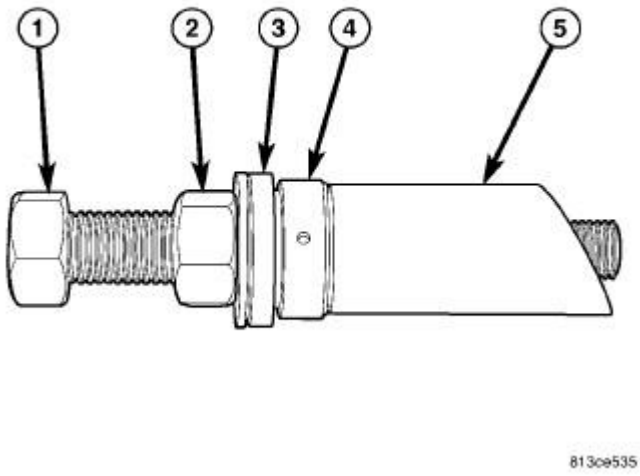

Fig. 96: Rear Knuckle Sleeve Remover/Installer
Courtesy of CHRYSLER GROUP, LLC

NOTE: Prior to using special tool #9361A, Rear Knuckle Sleeve Remover/Installer Kit, lubricate Bolt (1) threads to provide ease of use and promote tool longevity.

NOTE: When installing thrust bearing on Remover, be sure to place hardened side against nut. Place bearing outer cage against stationary component.

6. Assemble special tool #9361A, Rear Knuckle Sleeve Remover/Installer Kit as shown.
   - (1) special tool #9361-3, Screw, Forcing
   - (2) Nut
   - (3) Spherical Washer
   - (4) Thrust Bearing
   - (5) special tool #9361-4, Cup, Bushing

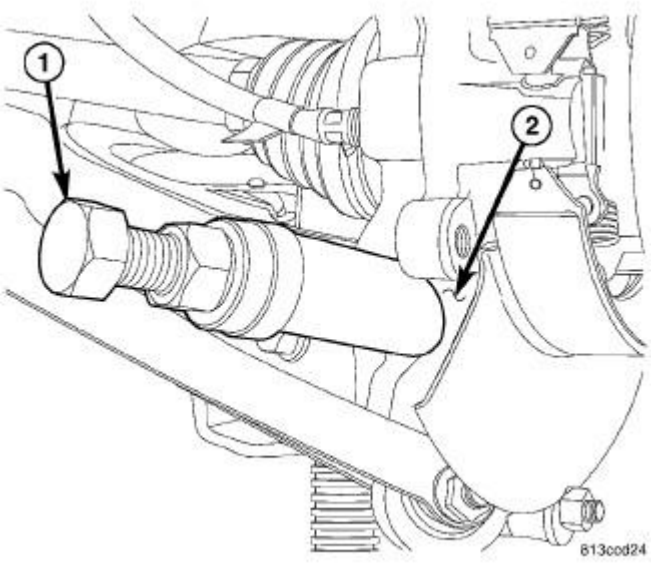

Fig. 97: Removing Knuckle Sleeve
Courtesy of CHRYSLER GROUP, LLC

7. Thread special tool #9361-3, Screw, Forcing (1) into tapped knuckle sleeve.
8. Rotate Nut down, matching Sleeve angled end with angled face of knuckle.
9. Continue to rotate Nut until knuckle sleeve is removed from knuckle. **Discard knuckle sleeve; replace it with new upon installation.**

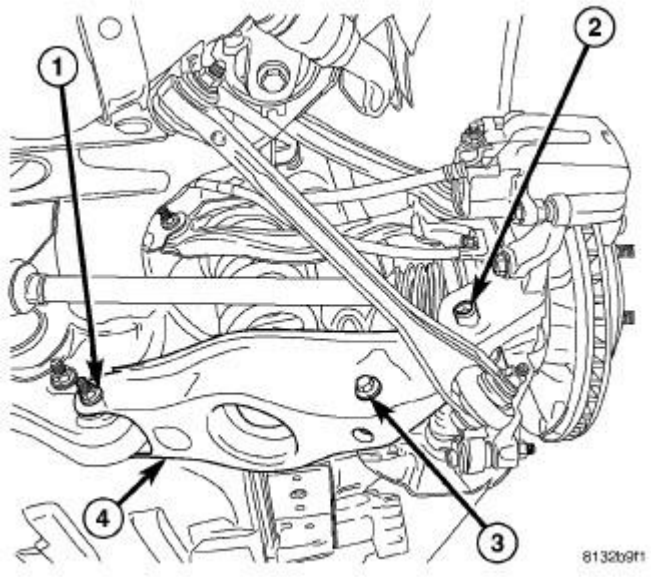

Fig. 98: Spring Link Mounting
Courtesy of CHRYSLER GROUP, LLC

10. Remove bolt and nut (1) fastening spring link (4) to crossmember.
11. Remove spring link (4).

SRT

1. Access and remove rear brake rotor on side of repair. Refer to **ROTOR, BRAKE, REMOVAL** .
2. Access and remove rear spring on side of repair. Refer to **SPRING(S), REMOVAL**.

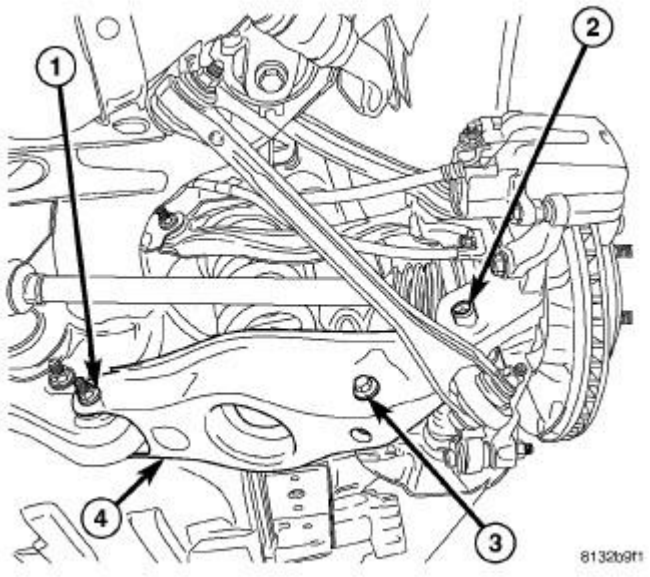

Fig. 99: Spring Link Mounting
Courtesy of CHRYSLER GROUP, LLC

3. Remove spring link-to-knuckle nut and bolt (2).

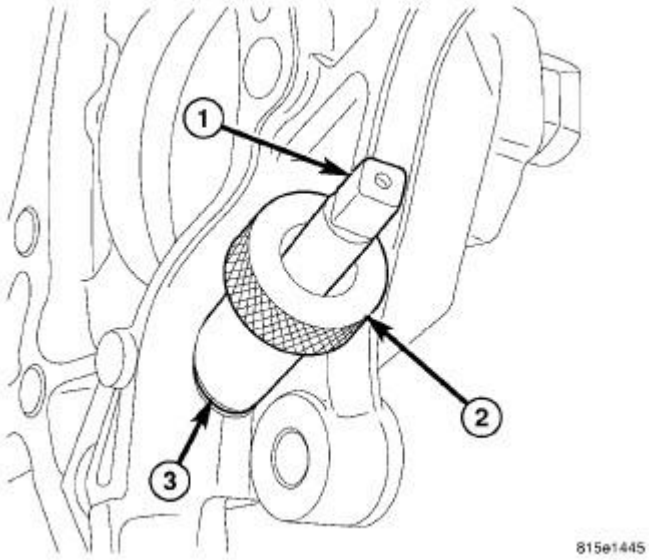

Fig. 100: Cutting Threads Through Bushing
Courtesy of CHRYSLER GROUP, LLC

CAUTION: It important to use Tap Guide (2) when tapping sleeve in knuckle to help keep Plug Tap (1) straight during use or damage to Tap may occur.

4. Place special tool #9361-11, Guide, Tap (2) against sleeve (3) in knuckle to keep special tool #9361-1, Tap, Plug M16 X 2.0 (1) straight. Using Tap with an appropriate handle, cut threads approximately halfway through bushing (or about six complete threads). **It is important to back tap out, clean out burrs and lubricate Tap often during process.**

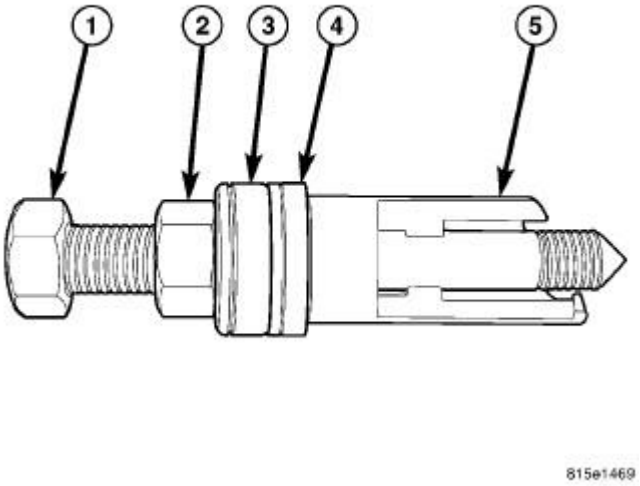

Fig. 101: Rear Knuckle Sleeve Remover/Installer Kit
Courtesy of CHRYSLER GROUP, LLC

NOTE: Prior to using special tool #9361A, Rear Knuckle Sleeve Remover/Installer Kit, lubricate Bolt (1) threads to provide ease of use and promote tool longevity.

5. Assemble special tool #9361A, Rear Knuckle Sleeve Remover/Installer Kit as shown.
   - (1) special tool #9361-3, Screw, Forcing
   - (2) Nut
   - (3) Thrust Bearing
   - (4) Spherical Washer
   - (5) special tool #9361-9, Cup, Remover, Left Side (Left Side - Shown in figure)
   - (5) special tool #9361-10, Cup, Remover, Right Side (Right Side)

NOTE: When installing thrust bearing (3) on Remover, be sure to place hardened side against nut (2). Place bearing outer cage against stationary component.

NOTE: **It is important to use appropriate Sleeve (special tool #9361-9, Cup, Remover, Left Side or special tool #9361-10, Cup, Remover, Right Side) on Remover to provide proper Tool-to-Knuckle contact.**

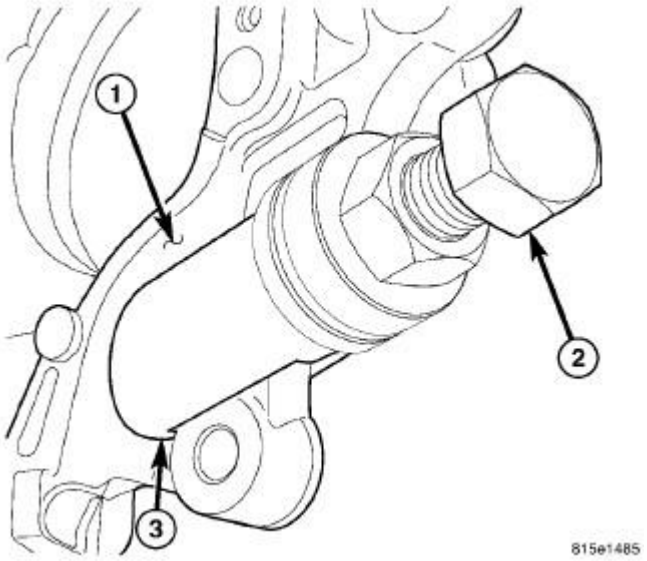

Fig. 102: Removing Knuckle Sleeve
Courtesy of CHRYSLER GROUP, LLC

6. Thread special tool #9361-3, Screw, Forcing (2) into tapped knuckle sleeve.
7. Rotate Nut down, matching Sleeve (special tool #9361-9, Cup, Remover, Left Side or special tool #9361-10, Cup, Remover, Right Side) angled end with angled face of knuckle (1). **Make sure foot on Sleeve (3) is inserted behind machined brake caliper mounting boss.**
8. Continue to rotate Nut until knuckle sleeve is removed from knuckle. **Discard knuckle sleeve; replace it with new upon installation.**

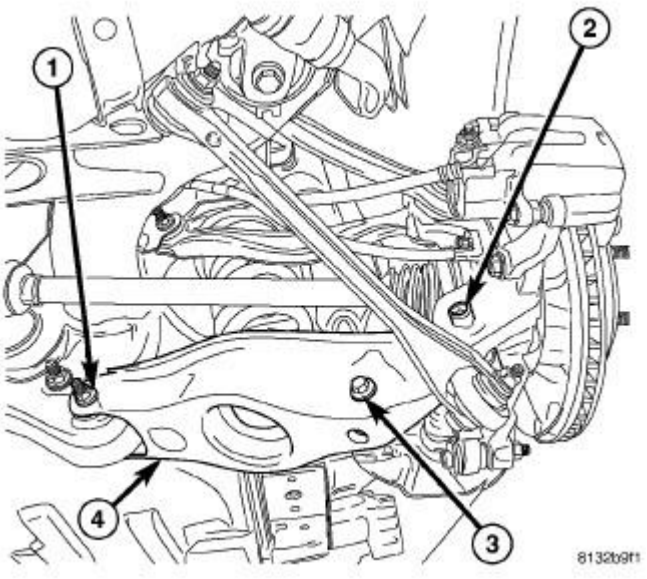

Fig. 103: Spring Link Mounting
Courtesy of CHRYSLER GROUP, LLC

9. Remove bolt and nut (1) fastening spring link (4) to crossmember.
10. Remove spring link (4).

INSTALLATION

NON SRT

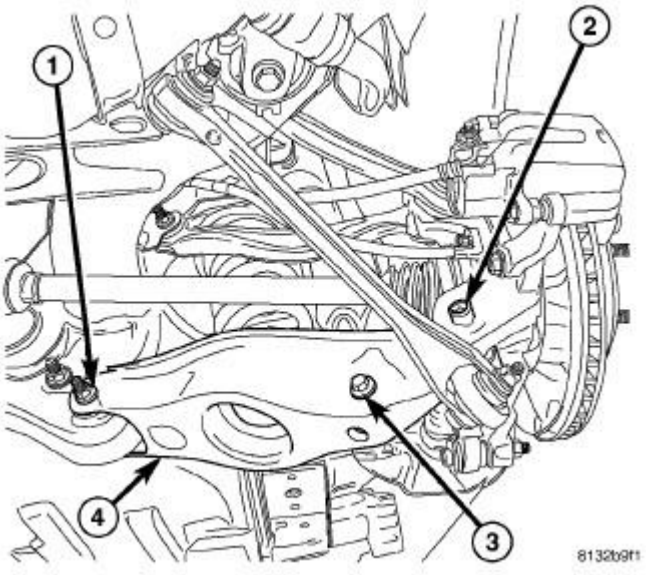

Fig. 104: Spring Link Mounting
Courtesy of CHRYSLER GROUP, LLC

1. Guide ball joint end of spring link (4) into mounting pocket of knuckle, then swing opposite end up to bushing in crossmember and install bolt and nut (1) fastening spring link (4) to crossmember. **Do not tighten bolt at this time.**

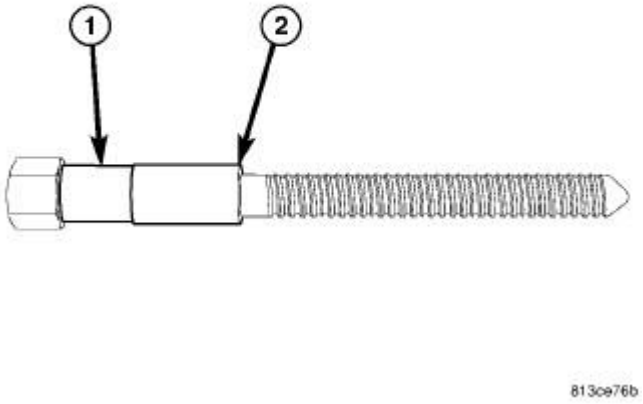

Fig. 105: Rear Knuckle Sleeve Remover/Installer
Courtesy of CHRYSLER GROUP, LLC

NOTE: Prior to using special tool #9361A, Rear Knuckle Sleeve Remover/Installer Kit, lubricate bolt (1) threads to provide ease of use and promote tool longevity.

2. Place NEW knuckle sleeve (2) onto special tool #9361-7, Screw, Installation (1), and slide it up to Bolt head.

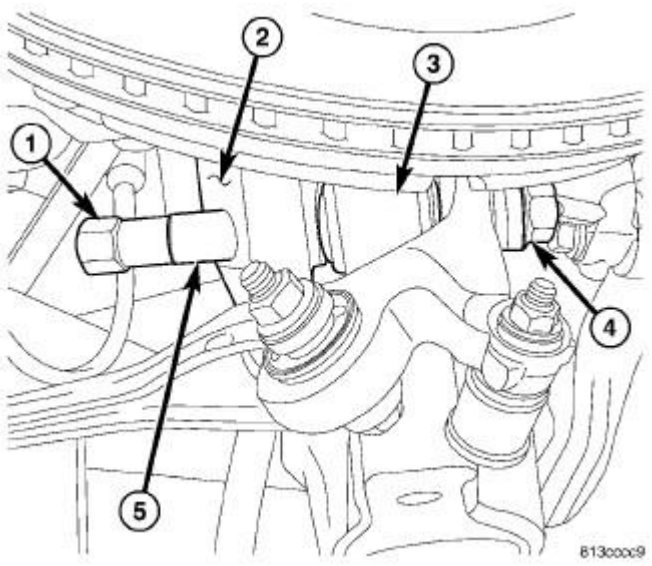

Fig. 106: Installing Knuckle Sleeve
Courtesy of CHRYSLER GROUP, LLC

3. Starting from knuckle forward end, slide special tool #9361-7, Screw, Installation (1) with sleeve (5) through knuckle (2) and spring link ball joint (3).
4. Install thrust bearing and nut (4) on end of Bolt. **When installing thrust bearing on Installer, be sure to place hardened side against nut. Place bearing outer cage against stationary component.**
5. While holding Bolt head (1) stationary, rotate Nut (4) (using hand tools) installing sleeve in knuckle. Install sleeve until Nut stops turning. **Do not overtighten Nut.**
6. Remove special tool.

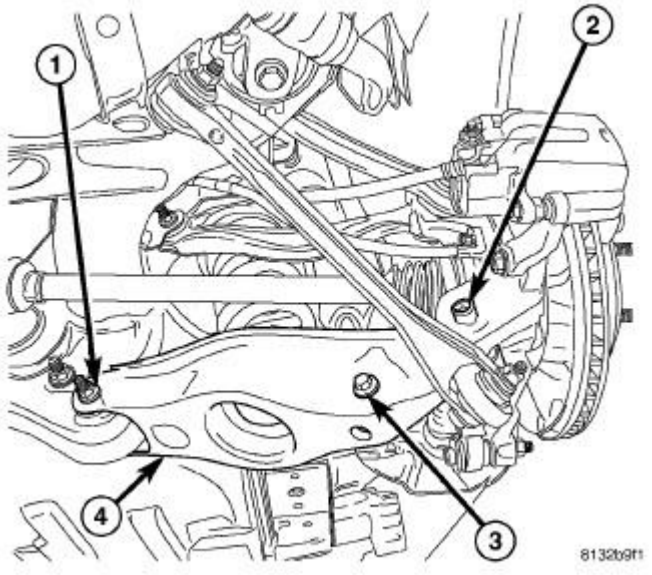

Fig. 107: Spring Link Mounting
Courtesy of CHRYSLER GROUP, LLC

7. Install spring link-to-knuckle bolt (2) front-to-rear through knuckle and link, then install nut. While holding bolt head stationary, tighten nut to 142 N.m (105 ft. lbs.).

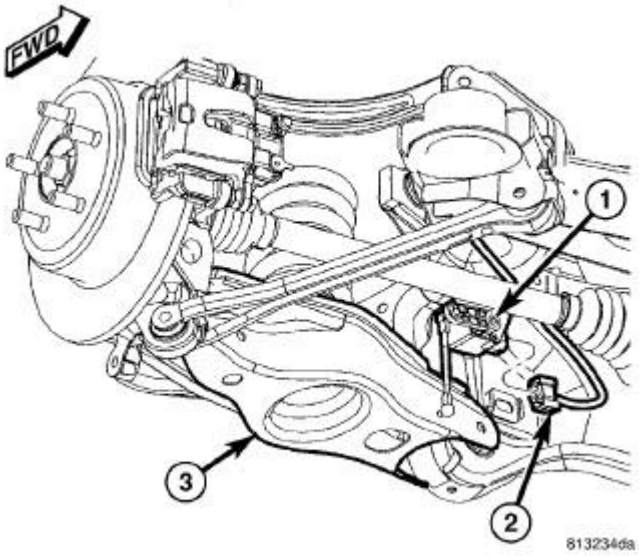

Fig. 108: Headlamp Leveling Sensor
Courtesy of CHRYSLER GROUP, LLC

8. Export Only - If servicing right spring link, connect headlamp leveling sensor (1) link at spring link (3).
9. Install rear spring as well as all components necessary to access it. Refer to **SPRING(S), INSTALLATION**.
10. Lower vehicle.
11. Position vehicle on alignment rack/drive-on lift. Raise vehicle as necessary to access mounting bolt.
12. Tighten spring link bolt at crossmember to 108 N.m (80 ft. lbs.).
13. Perform wheel alignment. Refer to **WHEEL ALIGNMENT, STANDARD PROCEDURE** .

SRT

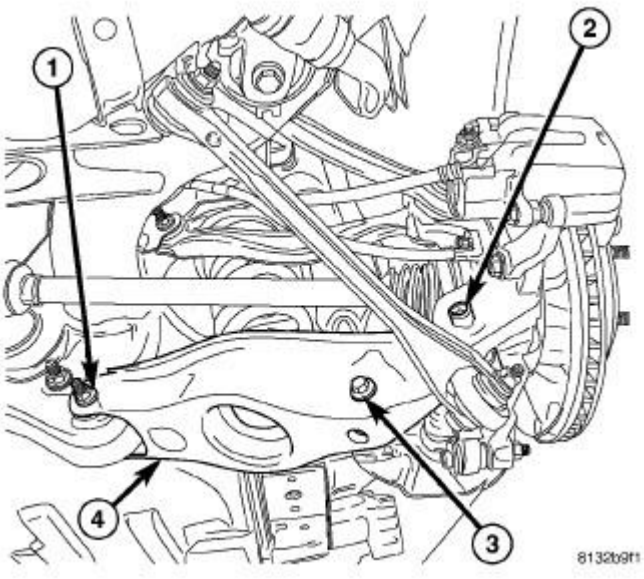

Fig. 109: Spring Link Mounting
Courtesy of CHRYSLER GROUP, LLC

1. Guide ball joint end of spring link (4) into mounting pocket of knuckle, then swing opposite end up to bushing in crossmember and install bolt and nut (1) fastening spring link (4) to crossmember. **Do not tighten bolt at this time.**

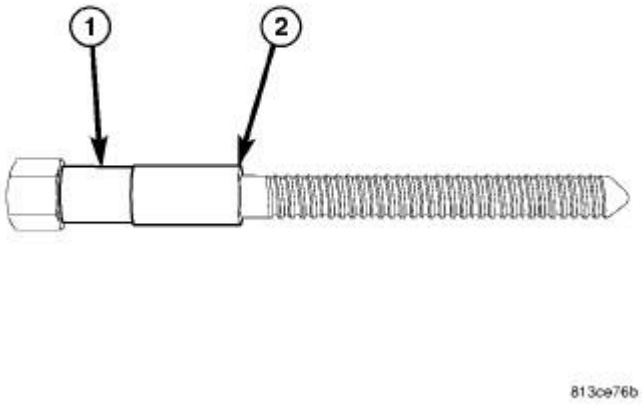

Fig. 110: Rear Knuckle Sleeve Remover/Installer
Courtesy of CHRYSLER GROUP, LLC

NOTE: Prior to using special tool #9361A, Rear Knuckle Sleeve Remover/Installer Kit, lubricate bolt (1) threads to provide ease of use and promote tool longevity.

2. Place NEW knuckle sleeve (2) onto special tool #9361-12, Installer, Bushing (1), and slide it up to Bolt head.

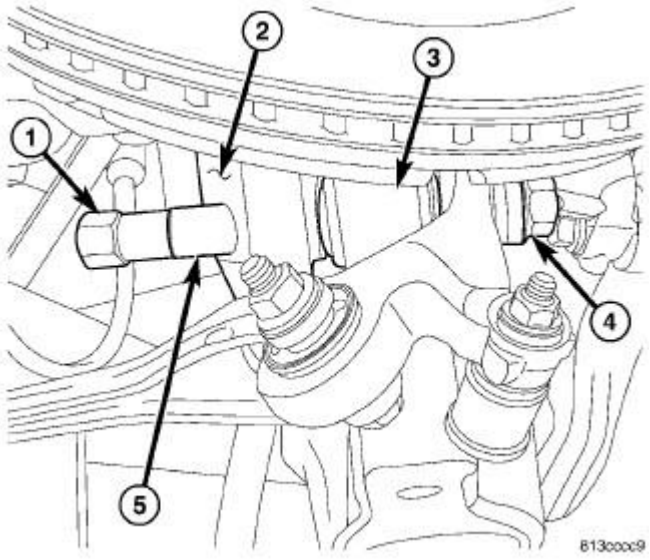

Fig. 111: Installing Knuckle Sleeve
Courtesy of CHRYSLER GROUP, LLC

3. Starting from knuckle forward end, slide special tool #9361-12, Installer, Bushing (1) with sleeve (5) through knuckle (2) and spring link ball joint (3).
4. Install Installation Thrust Bearing (around 3/8 inch thick) and special flange nut (4) on end of Bolt. **When installing thrust bearing on Installer, be sure to place hardened side against nut. Place bearing outer cage against stationary component.**
5. While holding Bolt head (1) stationary, rotate Nut (4) (using hand tools) installing sleeve in knuckle. Install sleeve until Nut stops turning. **Do not overtighten Nut.**
6. Remove special tool.

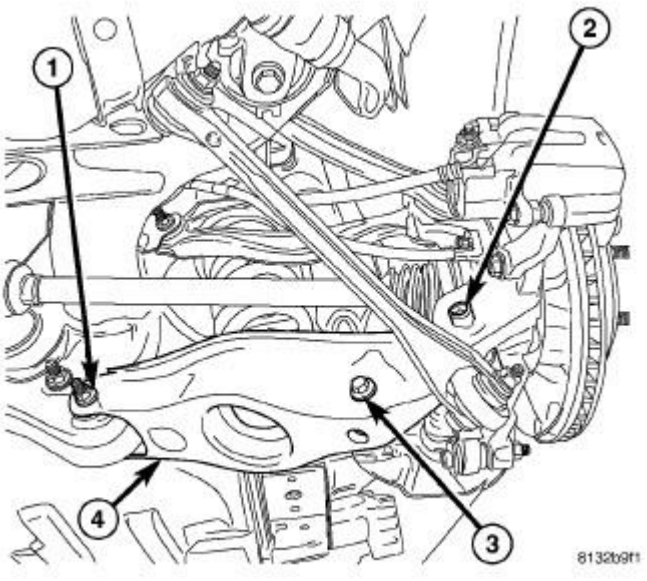

Fig. 112: Spring Link Mounting
Courtesy of CHRYSLER GROUP, LLC

7. Install spring link-to-knuckle bolt (2) front-to-rear through knuckle and link, then install nut. While holding bolt head stationary, tighten nut to 138 N.m (102 ft. lbs.).
8. Install rear spring and all components necessary to access it, except rear tire and wheel assembly on side of repair Refer to **SPRING(S), INSTALLATION**.
9. Install rear brake rotor and components necessary to access it Refer to **ROTOR, BRAKE, INSTALLATION** .
10. Lower vehicle.
11. Pump brake pedal several times to ensure vehicle has a firm brake pedal before moving vehicle.
12. Position vehicle on alignment rack/drive-on lift. Raise vehicle as necessary to access mounting bolt.
13. Tighten spring link bolt at crossmember to 108 N.m (80 ft. lbs.).
14. Tighten shock absorber lower mounting bolt nut to 72 N.m (53 ft. lbs.).
15. Perform wheel alignment. Refer to **WHEEL ALIGNMENT, STANDARD PROCEDURE** .

LINK, TENSION

REMOVAL

REMOVAL

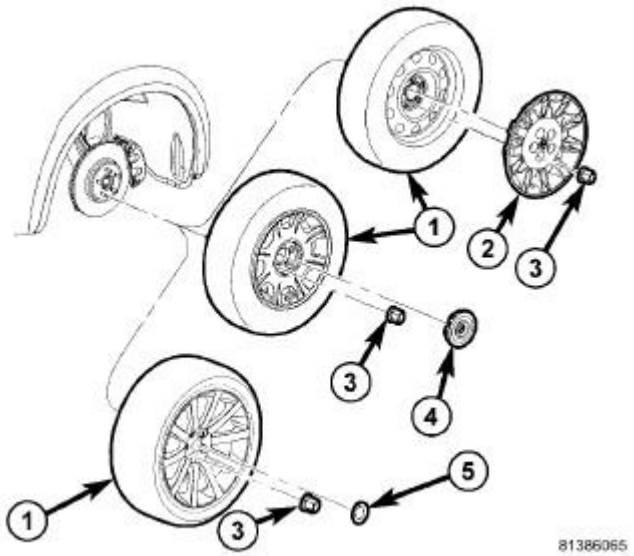

Fig. 113: Tire And Wheel Mounting
Courtesy of CHRYSLER GROUP, LLC

1. Raise and support vehicle. Refer to **HOISTING, STANDARD PROCEDURE** .
2. On both sides of vehicle, remove wheel mounting nuts (3), then rear tire and wheel assembly (1).

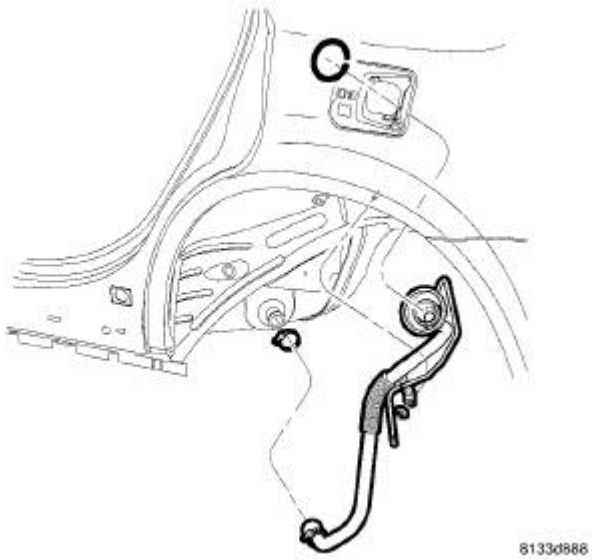

Fig. 114: Filler Tube Assembly
Courtesy of CHRYSLER GROUP, LLC

WARNING: Before opening fuel system, review all Warnings and Cautions.

3. If servicing left side, remove fuel filler tube. Refer to **TUBE, FUEL TANK FILLER, REMOVAL** .

4. Position an extra pair of jack stands under and support forward end of engine cradle to help stabilize vehicle during rear suspension removal/installation.
5. Perform the following if vehicle is equipped with dual-exhaust or are servicing right side on vehicle with single exhaust.
    a. Position under-hoist utility jack or stand several inches below exhaust at muffler.
    b. Disconnect exhaust isolators at muffler and resonators hangers.
    c. Lower exhaust down to rest upon top of jack or stand placed below muffler.

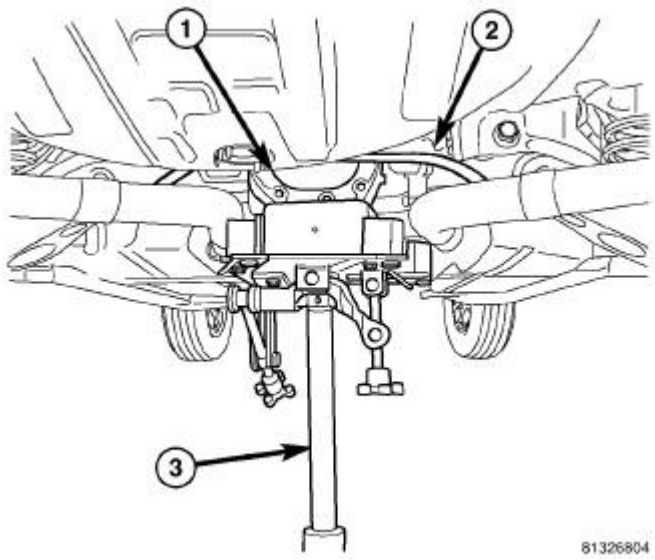

Fig. 115: Supporting Rear Axle Differential
Courtesy of CHRYSLER GROUP, LLC

6. Position under-hoist utility jack or transmission jack (3) under center of rear axle differential (1). Raise jack head to contact differential and secure in place. **When securing crossmember to jack, be sure not to secure stabilizer bar.**

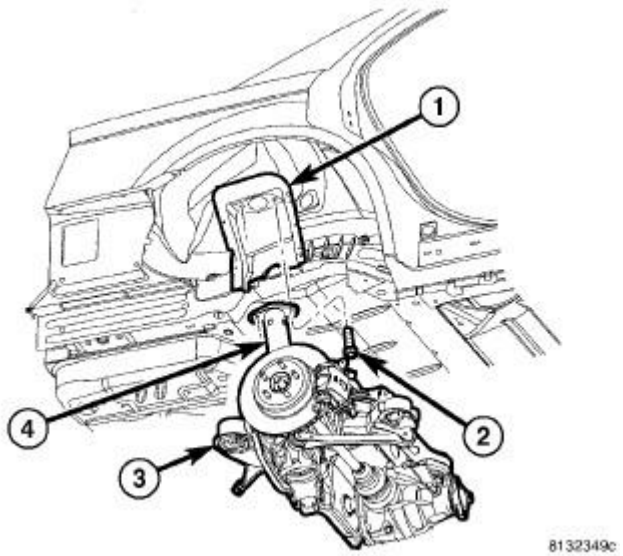

Fig. 116: Shock Absorber & Upper Mounting Screws
Courtesy of CHRYSLER GROUP, LLC

7. Remove shock absorber (1) upper mounting screws (2).

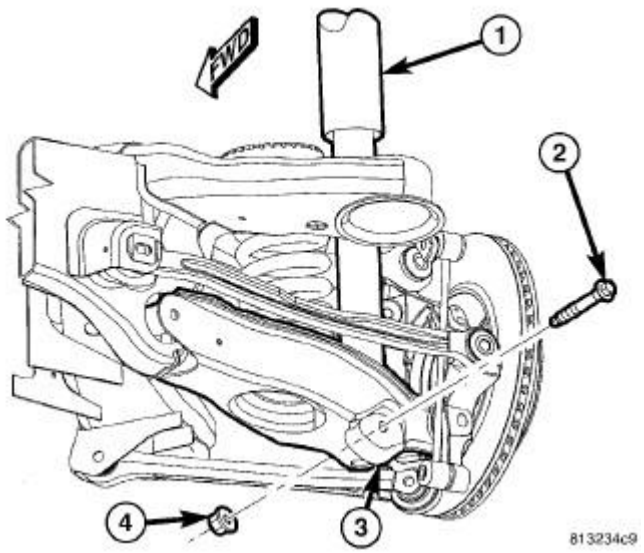

Fig. 117: Shock Absorber Lower Mounting Bolt & Nut
Courtesy of CHRYSLER GROUP, LLC

8. Remove shock absorber (1) lower mounting bolt (2) and nut (4).

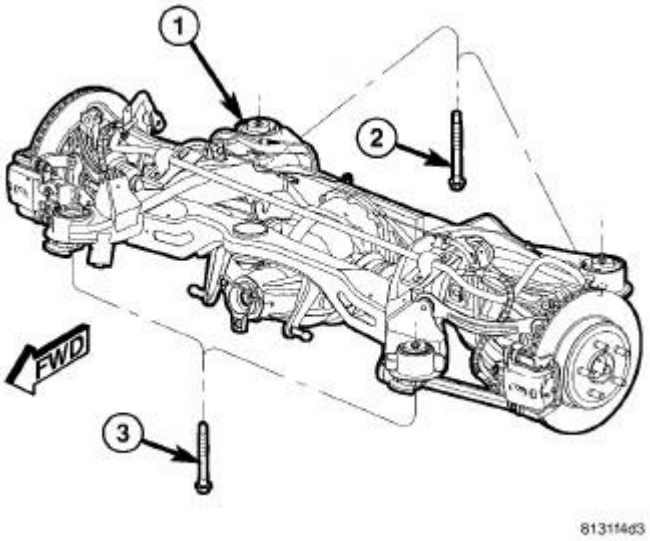

Fig. 118: Rear Crossmember Mounting Bolts
Courtesy of CHRYSLER GROUP, LLC

CAUTION: When removing crossmember mounting bolts (2 and 3) it is important NOT to loosen or remove crossmember mounting bolts on opposite side of vehicle. Doing so will require rear wheel alignment following reinstallation to ensure proper thrust angle.

9. Remove both front and rear crossmember mounting bolts (2 and 3) on repair-side of vehicle.

CAUTION: To avoid damaging other components of vehicle, do not lower crossmember (1) any further than necessary to remove shock absorber.

10. **Slowly** lower jack allowing repair-side of crossmember to drop. Lower jack just enough to allow top of shock absorber to clear body flange.

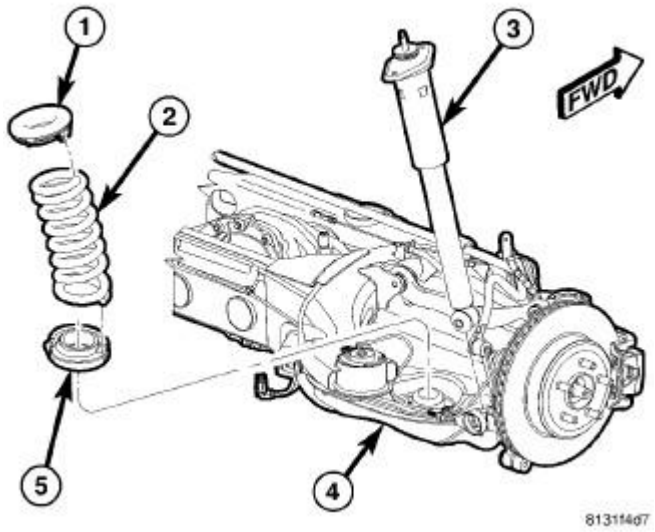

Fig. 119: Isolators, Coil Spring, Shock Absorber & Crossmember
Courtesy of CHRYSLER GROUP, LLC

11. Remove shock absorber (3) by tipping top outward and lifting lower end out of pocket in spring link (4).

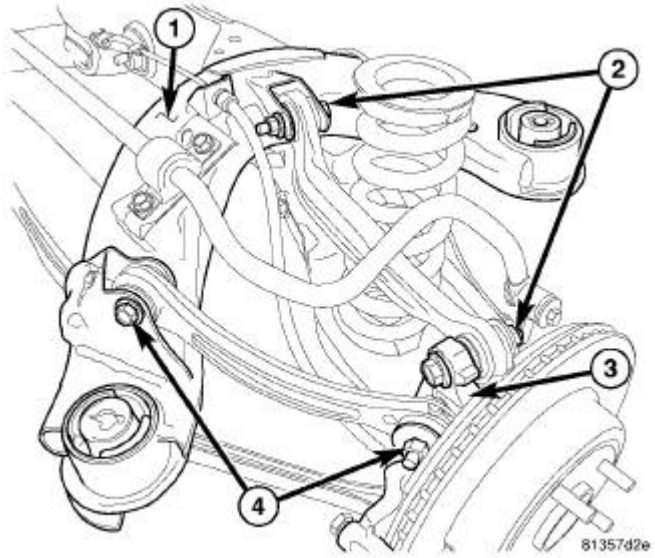

Fig. 120: Camber Link, Nuts & Bolts
Courtesy of CHRYSLER GROUP, LLC

NOTE: Do not lower repair-side of crossmember any further than necessary to gain access to link mounting bolts at crossmember.

12. Remove nut and bolt (4) mounting link to knuckle (3).
13. Remove nut and bolt (4) mounting link to crossmember (1).

14. Remove link.

INSTALLATION

INSTALLATION

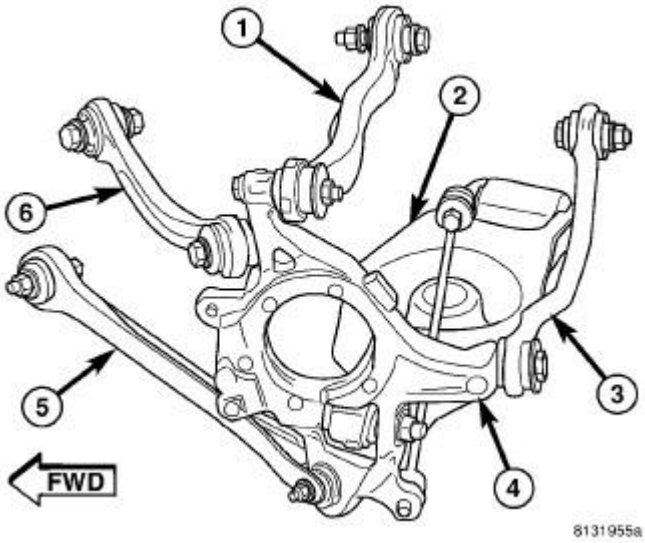

Fig. 121: Rear Suspension Components
Courtesy of CHRYSLER GROUP, LLC

NOTE: When installing tension link, although link (6) is same end-to-end, make sure that center bow is facing downward.

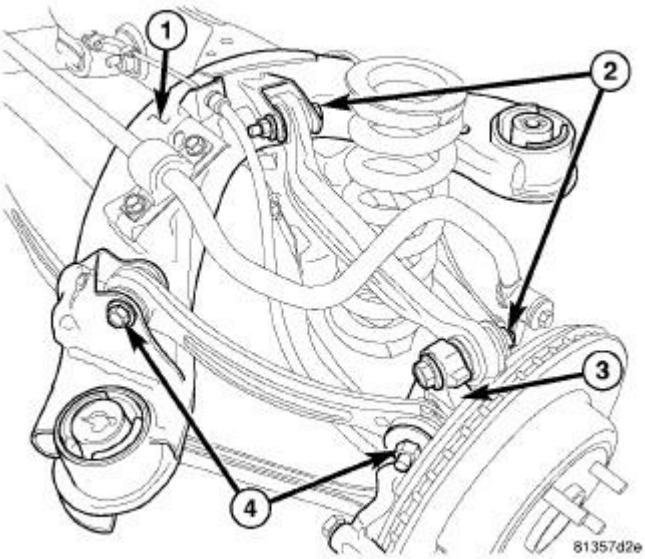

Fig. 122: Camber Link, Nuts & Bolts

Courtesy of CHRYSLER GROUP, LLC

1. Place link in bracket on crossmember (1). Install bolt and nut (4) at crossmember (1) as shown. **Do not tighten bolt at this time.**
2. Install bolt and nut (4) mounting link to knuckle (3) as shown. **Do not tighten bolt at this time.**

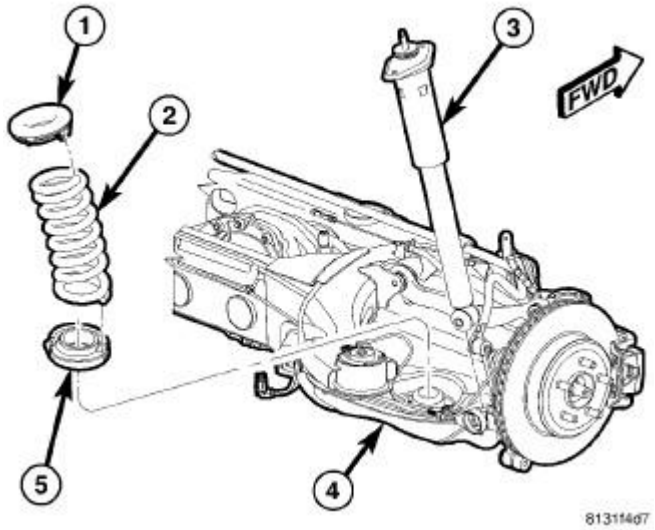

Fig. 123: Isolators, Coil Spring, Shock Absorber & Crossmember
Courtesy of CHRYSLER GROUP, LLC

3. Install shock absorber (3) by setting lower end into pocket in spring link (4), then tipping top inward until aligned with upper mounting holes.

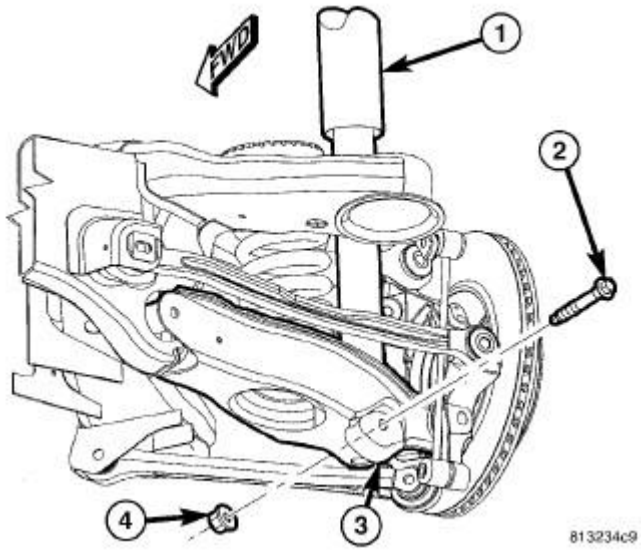

Fig. 124: Shock Absorber Lower Mounting Bolt & Nut
Courtesy of CHRYSLER GROUP, LLC

4. Install lower shock mounting bolt and nut. **Do not tighten at this time.**

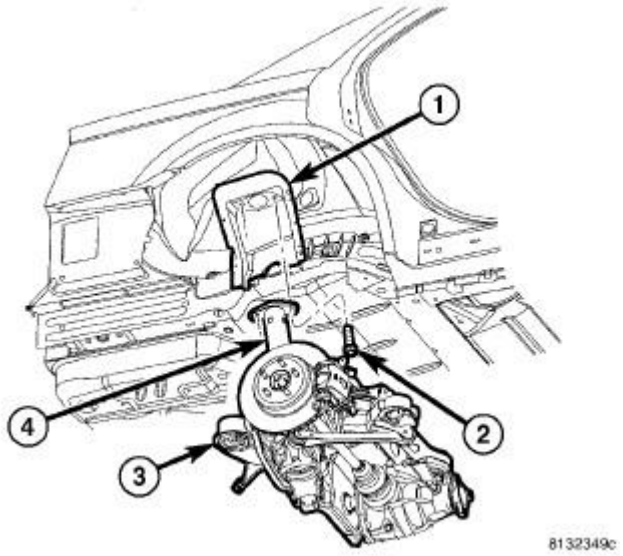

Fig. 125: Shock Absorber & Upper Mounting Screws
Courtesy of CHRYSLER GROUP, LLC

5. Carefully raise jack, guiding coil spring and upper end of shock absorber (4) into mounted positions.
6. Install shock absorber upper mounting screws (2). Tighten upper mounting screws to 52 N.m (38 ft. lbs.).

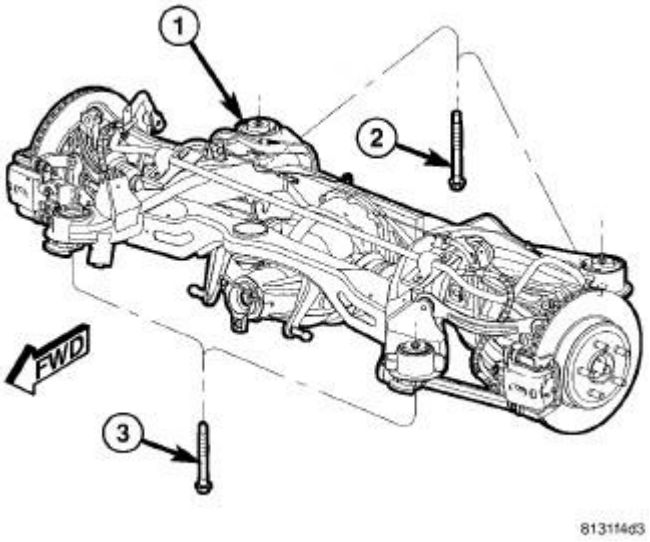

Fig. 126: Rear Crossmember Mounting Bolts
Courtesy of CHRYSLER GROUP, LLC

NOTE: Rear crossmember mounting bolts (2) are longer than front mounting bolts (3). Do not interchange mounting bolts.

7. Install crossmember mounting bolts (2 and 3). **Snug, but do not fully tighten bolts at this time.**

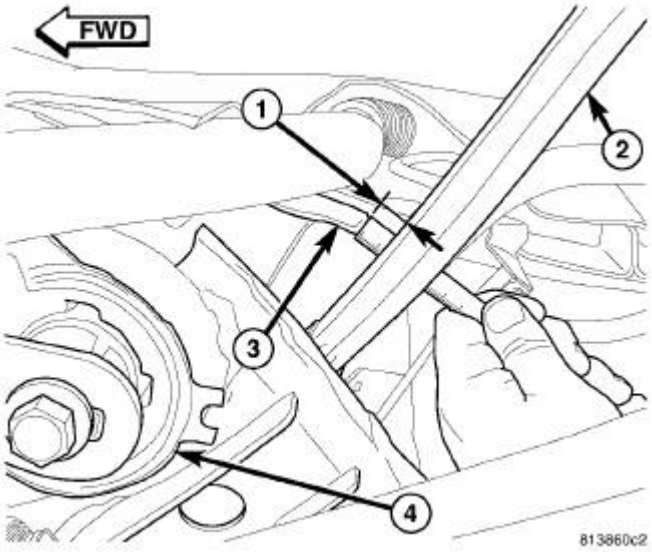

Fig. 127: Measuring Tension Link Clearance
Courtesy of CHRYSLER GROUP, LLC

8. Measure distance (1) between from tension link (2) to body weld flange (3) directly in front of it, just outboard of front mount bushing (4). **This distance must be at least 12 mm to allow proper clearance for suspension movement.** If distance is less than 12 mm, shift that side of rear crossmember directly rearward until distance is 12 mm or greater. To do so, loosen 3 mounting bolts slightly, leaving one on opposite side of shift snugged to pivot off of. Shift crossmember rearward and snug loosened bolts. Measure opposite side to be sure it also maintains minimum 12 mm distance.

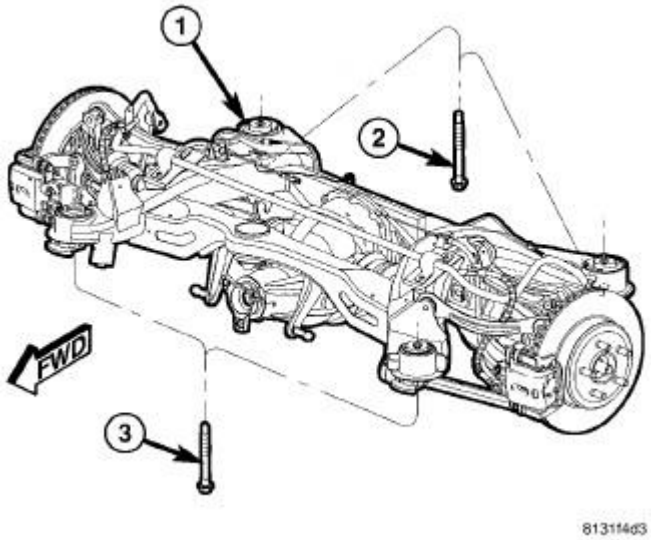

Fig. 128: Rear Crossmember Mounting Bolts
Courtesy of CHRYSLER GROUP, LLC

9. Tighten all crossmember mounting bolts (2 and 3) to 180 N.m (133 ft. lbs.).

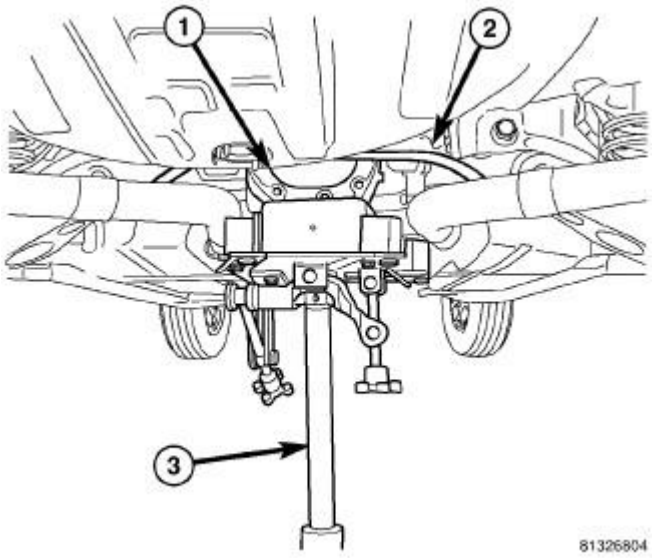

Fig. 129: Supporting Rear Axle Differential
Courtesy of CHRYSLER GROUP, LLC

10. Remove jack (3) from under rear axle differential.
11. If previously lowered, raise rear exhaust back to mounted position and connect exhaust isolators at muffler and resonators hangers. Remove jack or stand below exhaust muffler.

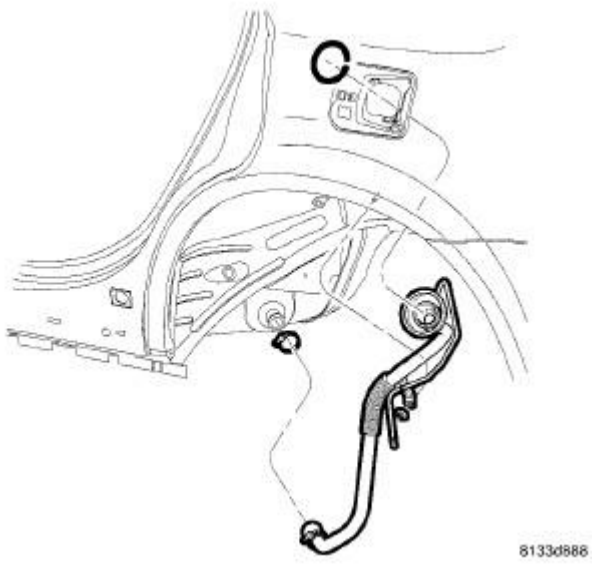

Fig. 130: Filler Tube Assembly
Courtesy of CHRYSLER GROUP, LLC

12. If removed, install fuel filler tube. Refer to **TUBE, FUEL TANK FILLER, INSTALLATION** .

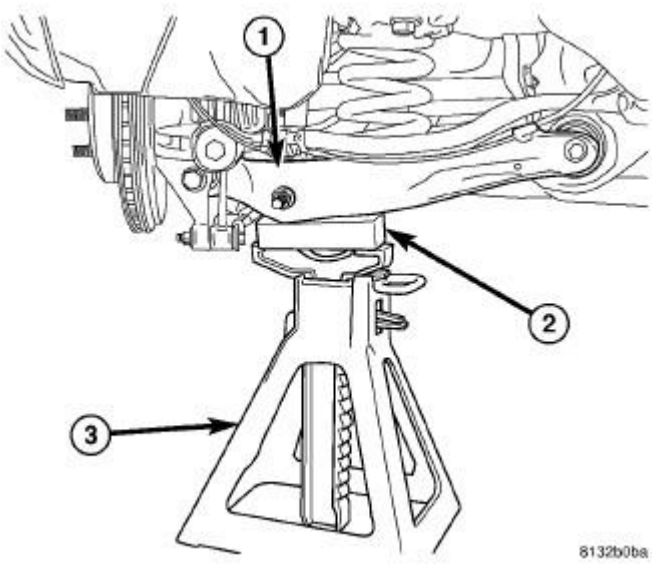

Fig. 131: Jack Stand Under Control Arm
Courtesy of CHRYSLER GROUP, LLC

13. Lower vehicle until front tires contact floor but rear is still suspended. Place jack stands under each rear suspension spring link. Place an appropriate wooden block between stand and link to avoid damaging spring link, then lower vehicle until full vehicle weight is supported by suspension.

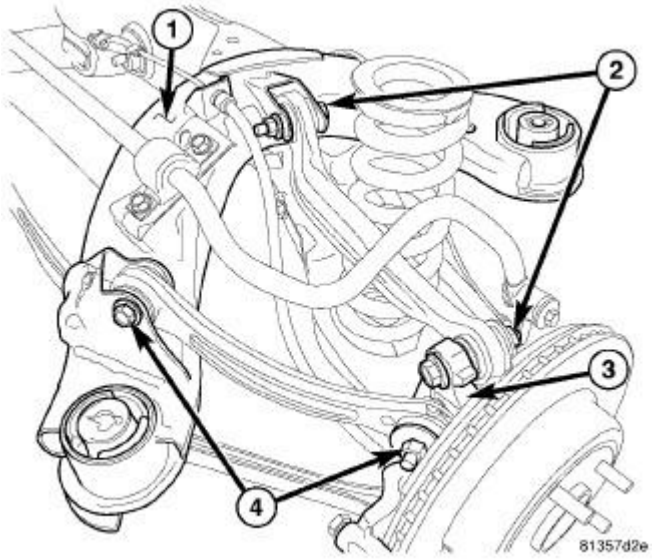

Fig. 132: Camber Link, Nuts & Bolts
Courtesy of CHRYSLER GROUP, LLC

14. Tighten tension link fasteners (4) to:
    - Bolt nut at crossmember - 85 N.m (63 ft. lbs.).
    - Bolt at knuckle - 98 N.m (72 ft. lbs.).

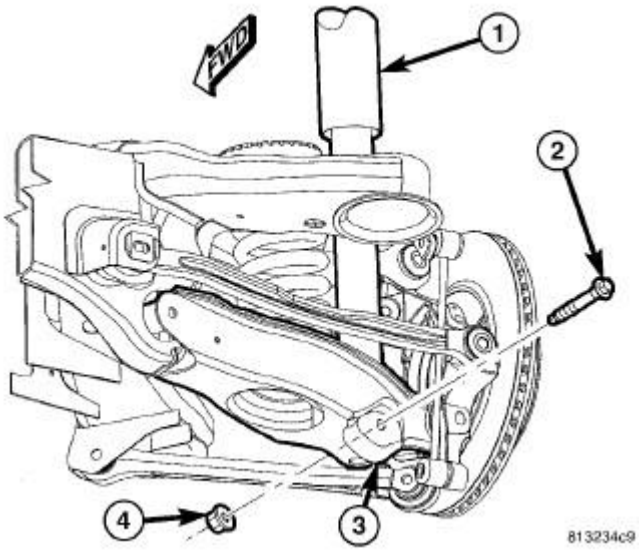

Fig. 133: Shock Absorber Lower Mounting Bolt & Nut
Courtesy of CHRYSLER GROUP, LLC

15. Tighten shock absorber lower mounting bolt nut (4) to 72 N.m (53 ft. lbs.).

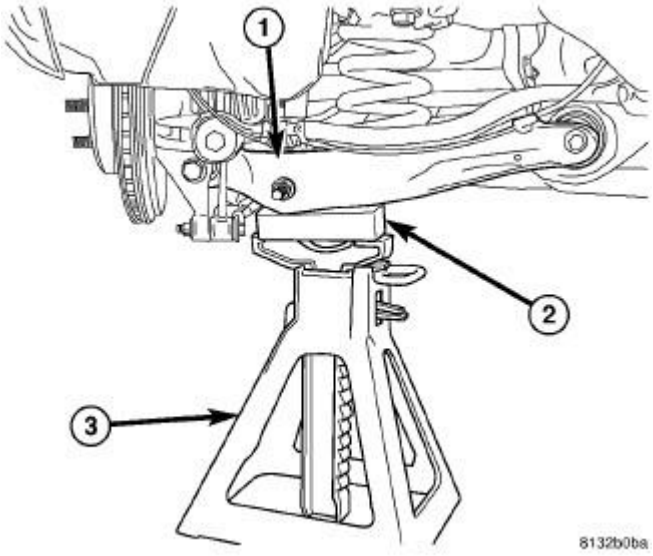

Fig. 134: Jack Stand Under Control Arm
Courtesy of CHRYSLER GROUP, LLC

16. Raise vehicle and remove jack stands (3).

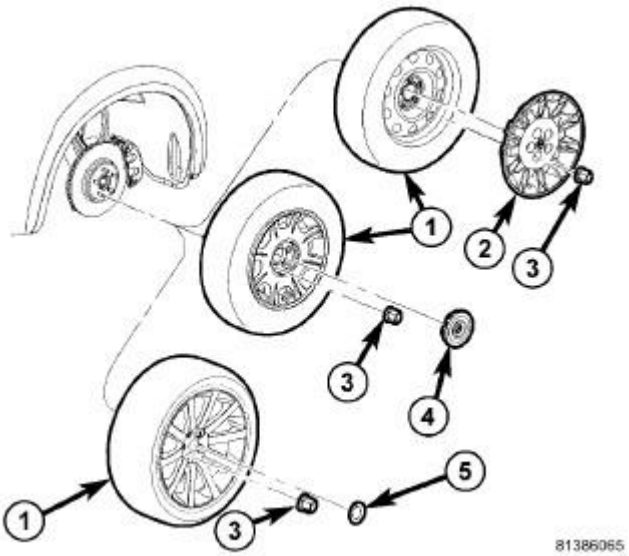

Fig. 135: Tire And Wheel Mounting
Courtesy of CHRYSLER GROUP, LLC

17. Install tire and wheel assemblies (1). Tighten wheel mounting nuts (3) to 150 N.m (110 ft. lbs.) Refer to **INSTALLATION** .
18. Lower vehicle.
19. Perform wheel alignment. Refer to **WHEEL ALIGNMENT, STANDARD PROCEDURE** .

LINK, TOE

REMOVAL

LEFT LINK

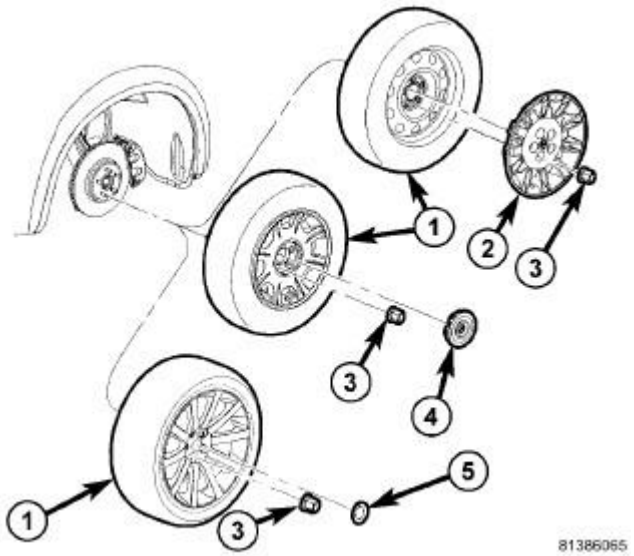

Fig. 136: Tire And Wheel Mounting
Courtesy of CHRYSLER GROUP, LLC

1. Raise and support vehicle. Refer to **HOISTING, STANDARD PROCEDURE** .
2. On both sides of vehicle, remove wheel mounting nuts (3), then rear tire and wheel assembly (1).

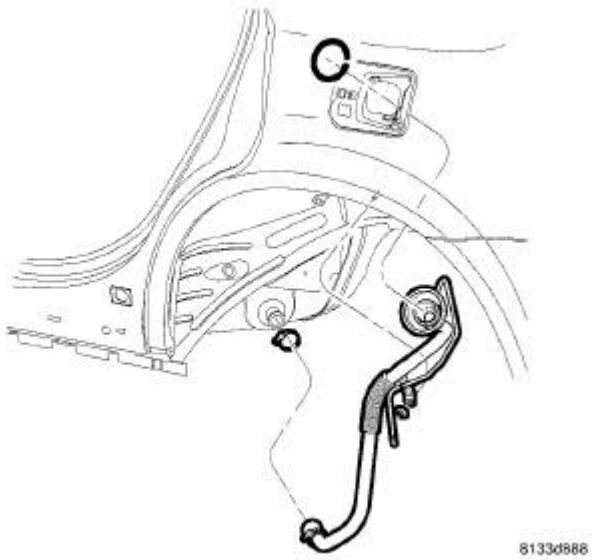

Fig. 137: Filler Tube Assembly
Courtesy of CHRYSLER GROUP, LLC

WARNING: Before opening fuel system, review all Warnings and Cautions.

3. Remove fuel filler tube. Refer to **TUBE, FUEL TANK FILLER, REMOVAL** .

4. Position an extra pair of jack stands under and support forward end of engine cradle to help stabilize vehicle during rear suspension removal/installation.
5. Perform following if vehicle is equipped with dual-exhaust.
    a. Position under-hoist utility jack or stand several inches below exhaust at muffler.
    b. Disconnect exhaust isolators at muffler and resonators hangers.
    c. Lower exhaust down to rest upon top of jack or stand placed below muffler.

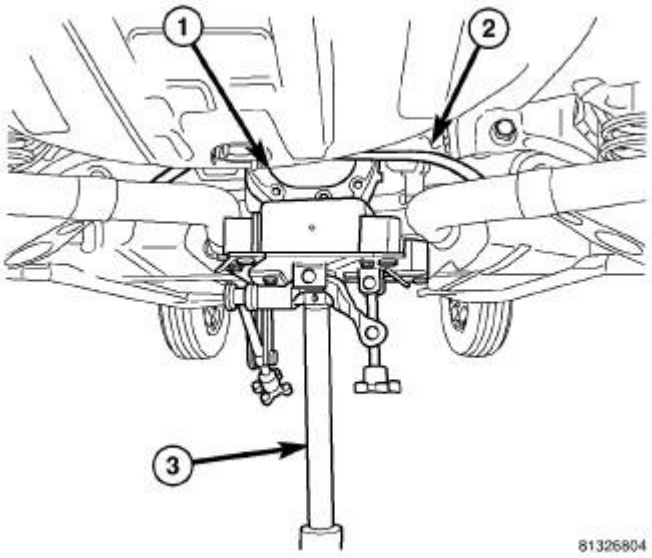

Fig. 138: Supporting Rear Axle Differential
Courtesy of CHRYSLER GROUP, LLC

6. Position under-hoist utility jack or transmission jack (3) under center of rear axle differential (1). Raise jack head to contact differential and secure in place.

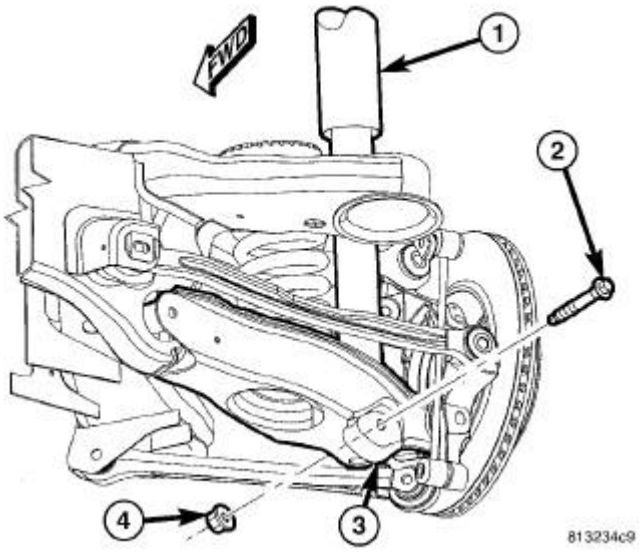

Fig. 139: Shock Absorber Lower Mounting Bolt & Nut
Courtesy of CHRYSLER GROUP, LLC

7. Remove shock absorber (1) lower mounting bolt (2) and nut (4).

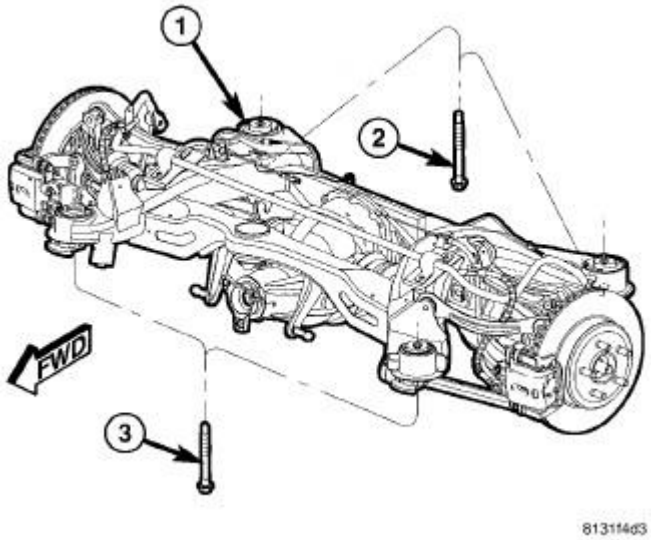

Fig. 140: Rear Crossmember Mounting Bolts
Courtesy of CHRYSLER GROUP, LLC

CAUTION: When removing crossmember mounting bolts (2 and 3) it is important NOT to loosen or remove crossmember mounting bolts on opposite side of vehicle. Doing so will require rear wheel alignment following reinstallation to ensure proper thrust angle.

8. Remove both front and rear crossmember mounting bolts (2 and 3) on repair-side of vehicle.

CAUTION: To avoid damaging other components of vehicle, do not lower crossmember (1) any further than necessary to remove shock absorber.

9. **Slowly** lower jack allowing repair-side of crossmember to drop. **Do not lower jack at a fast rate.** Lower jack just enough to allow toe link mounting bolt at crossmember.

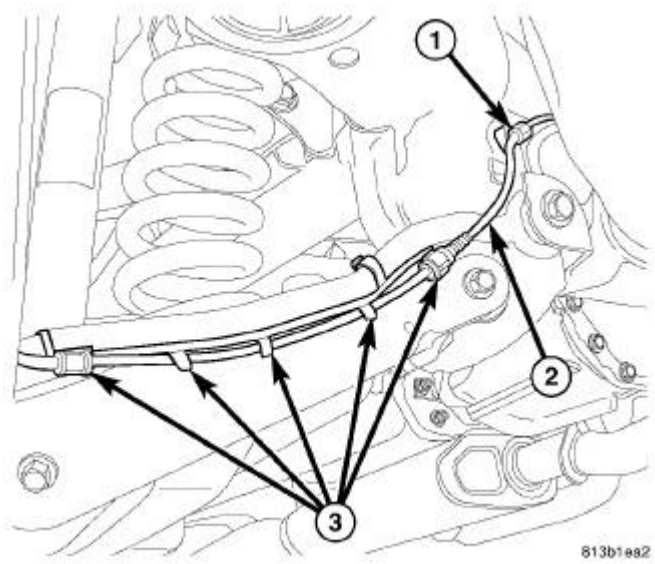

Fig. 141: Wheel Speed Sensor Cable
Courtesy of CHRYSLER GROUP, LLC

10. If equipped, remove wheel speed sensor cable (2) from toe link.

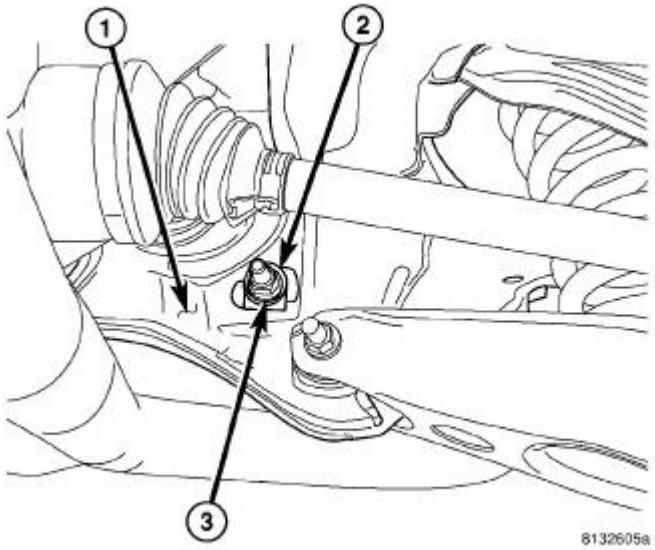

Fig. 142: Rear Toe Adjustment Bolt Nut
Courtesy of CHRYSLER GROUP, LLC

11. While holding toe adjustment cam bolt from rotating, remove nut (3) securing toe link at crossmember (1).

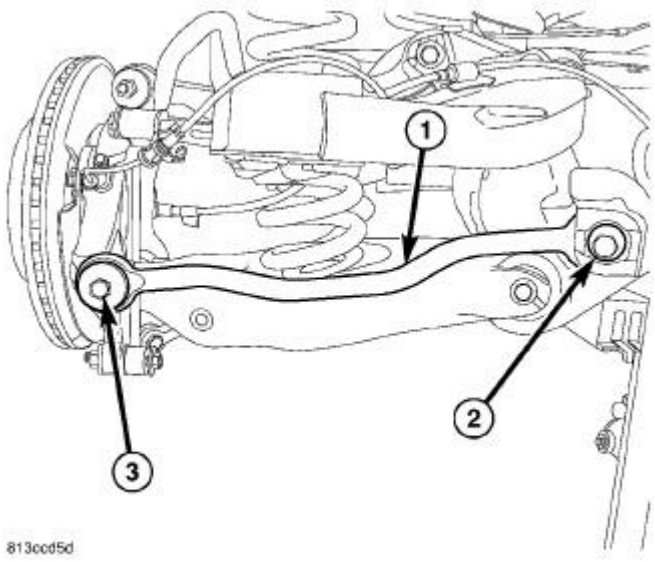

Fig. 143: Toe Link, Mounting Bolt & Cam Bolt
Courtesy of CHRYSLER GROUP, LLC

12. Slide cam bolt (2) rearward out of crossmember and link (1).
13. Remove mounting bolt (3) and nut at knuckle.
14. Remove toe link (1).

RIGHT LINK

1. Raise and support vehicle. Refer to **HOISTING, STANDARD PROCEDURE** .

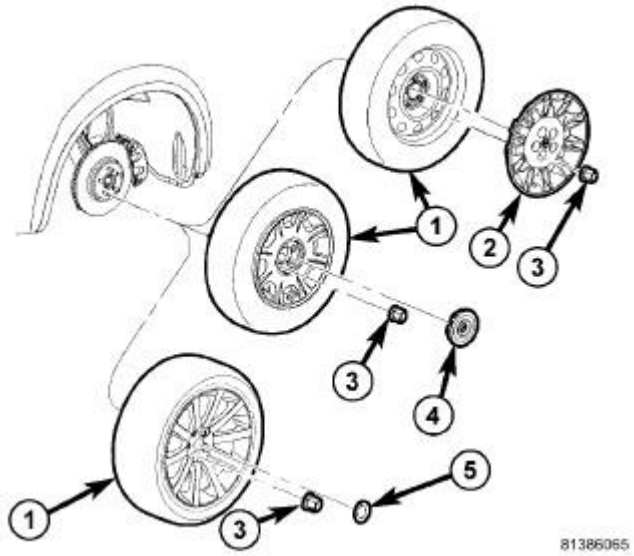

Fig. 144: Tire And Wheel Mounting
Courtesy of CHRYSLER GROUP, LLC

2. Remove wheel mounting nuts (3), then rear tire and wheel assembly (1).

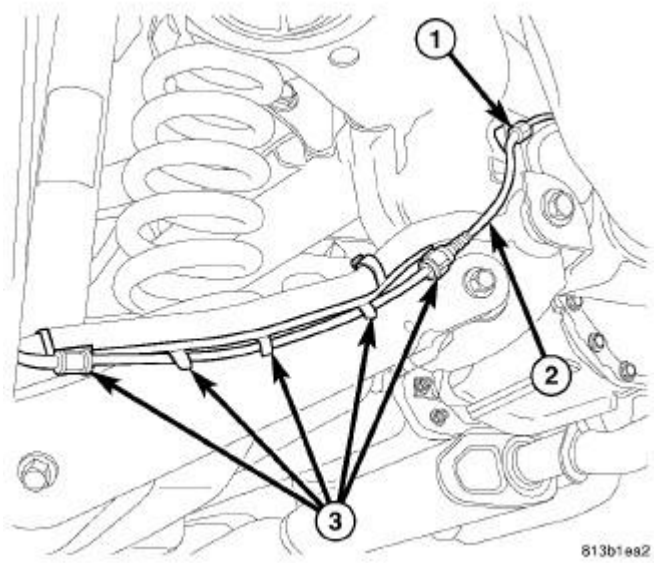

Fig. 145: Wheel Speed Sensor Cable
Courtesy of CHRYSLER GROUP, LLC

3. If equipped, remove wheel speed sensor cable (2) from toe link.

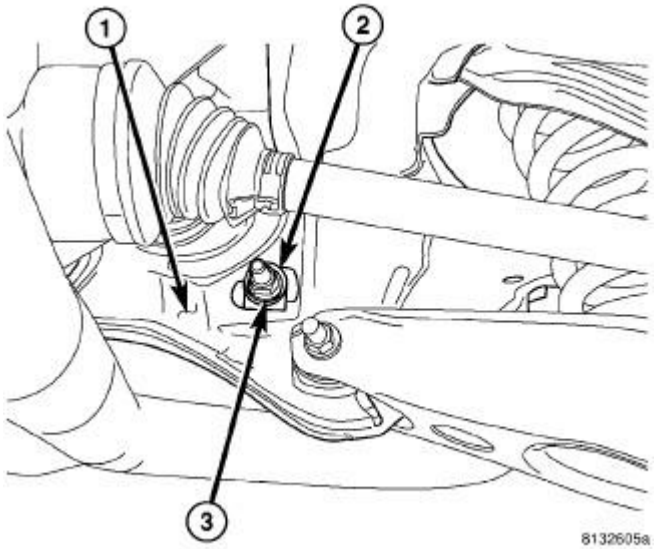

Fig. 146: Rear Toe Adjustment Bolt Nut
Courtesy of CHRYSLER GROUP, LLC

4. While holding toe adjustment cam bolt from rotating, remove nut (3) securing toe link at crossmember (1).

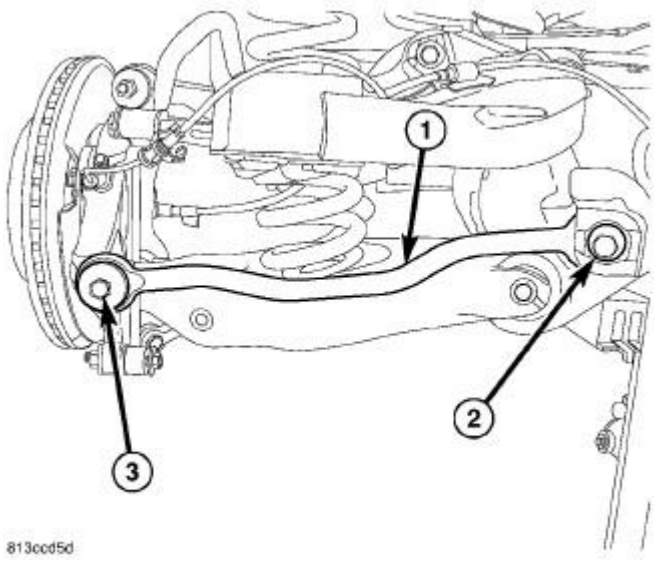

Fig. 147: Toe Link, Mounting Bolt & Cam Bolt
Courtesy of CHRYSLER GROUP, LLC

5. Slide cam bolt (2) rearward out of crossmember and link (1).
6. Remove mounting bolt (3) and nut at knuckle.
7. Remove toe link (1).

INSTALLATION

LEFT LINK

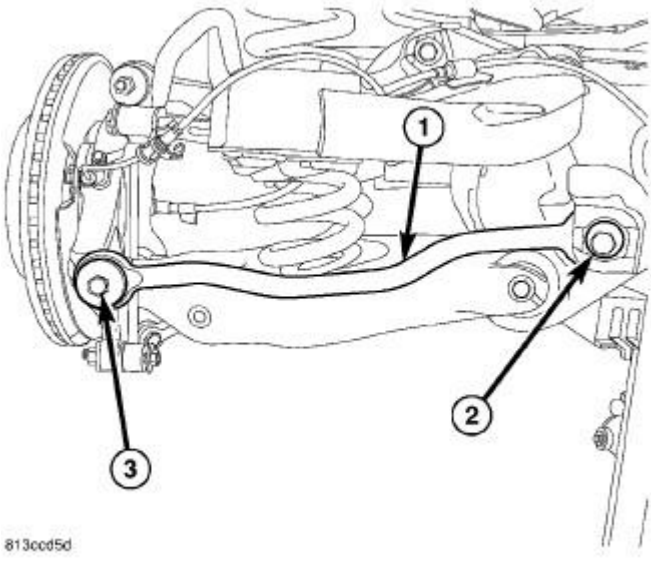

Fig. 148: Toe Link, Mounting Bolt & Cam Bolt
Courtesy of CHRYSLER GROUP, LLC

1. Slide crossmember end of toe link (1) into box bracket on crossmember. Slide cam bolt (2) through bracket and link from rear.
2. Install bolt (3) and nut securing link to knuckle. **Do not tighten bolt at this time.**

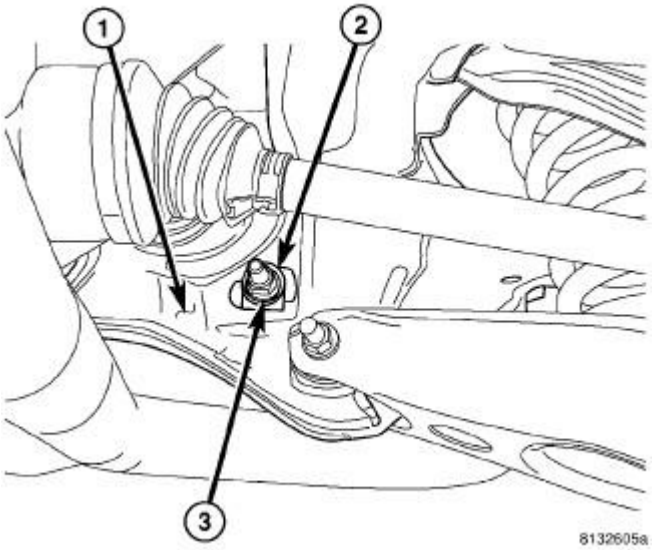

Fig. 149: Rear Toe Adjustment Bolt Nut
Courtesy of CHRYSLER GROUP, LLC

3. While holding toe adjustment cam bolt from rotating (cam facing upward), Install cam washer (2) and nut (3) securing toe link at crossmember (1). **Do not tighten nut at this time.**

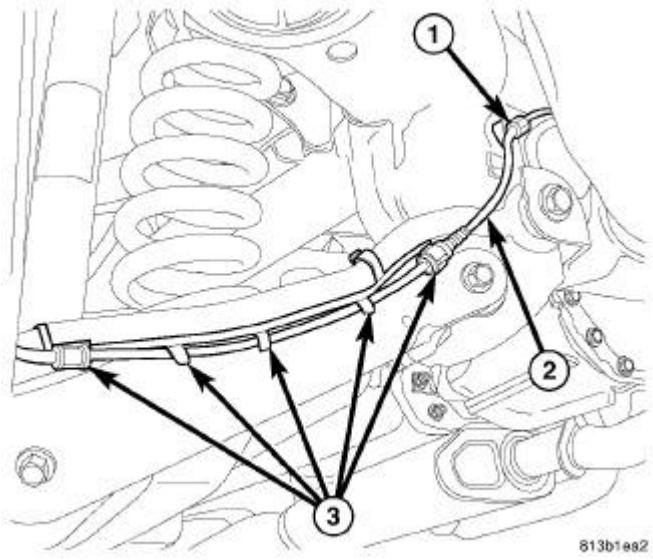

Fig. 150: Wheel Speed Sensor Cable
Courtesy of CHRYSLER GROUP, LLC

4. If equipped, attach wheel speed sensor cable (2) to toe link.

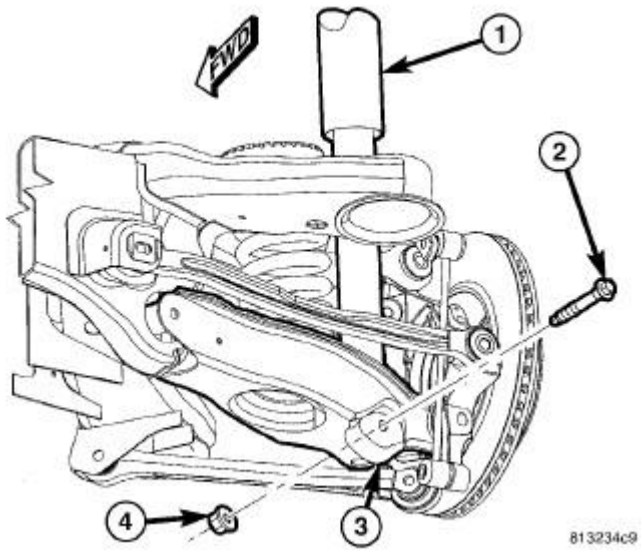

Fig. 151: Shock Absorber Lower Mounting Bolt & Nut
Courtesy of CHRYSLER GROUP, LLC

5. Carefully raise jack, guiding coil spring and lower end of shock absorber (4) into mounted positions.
6. When lower shock mounting bolt holes line up install bolt (2) and nut (4). **Do not tighten at this time.**

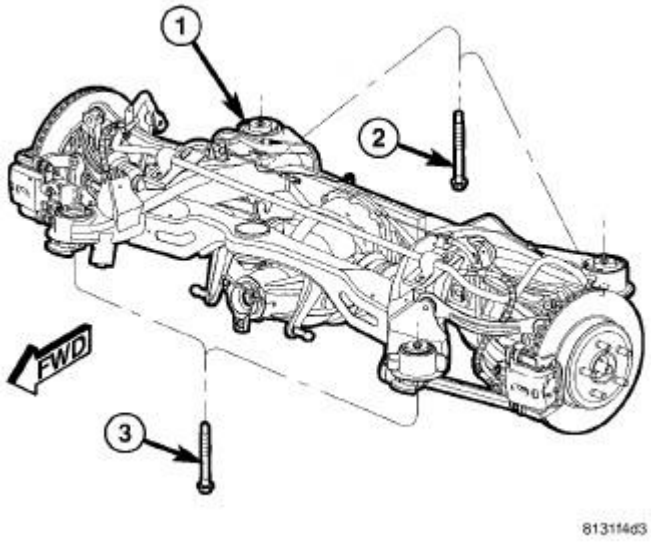

Fig. 152: Rear Crossmember Mounting Bolts
Courtesy of CHRYSLER GROUP, LLC

NOTE: Rear crossmember mounting bolts (2) are longer than front mounting bolts (3). Do not interchange mounting bolts.

7. Continue to raise crossmember in not already in mounted position, then install crossmember mounting bolts (2 and 3). **Snug, but do not fully tighten bolts at this time.**

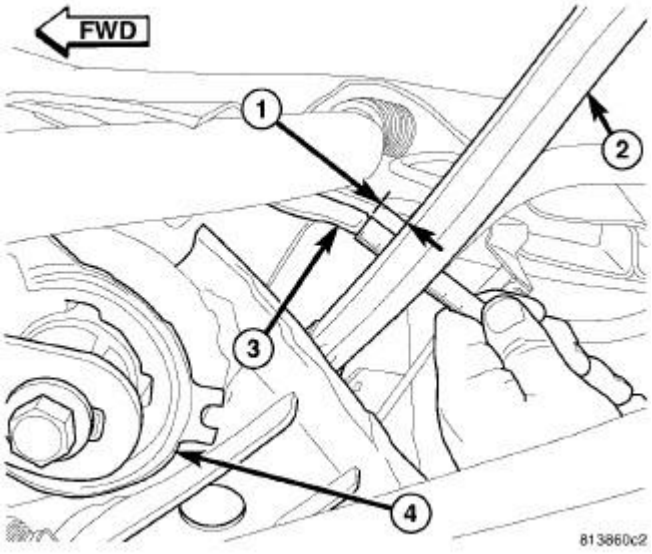

Fig. 153: Measuring Tension Link Clearance
Courtesy of CHRYSLER GROUP, LLC

8. Measure distance (1) between from tension link (2) to body weld flange (3) directly in front of it, just outboard of front mount bushing (4). **This distance must be at least 12 mm to allow proper clearance for suspension movement.** If distance is less than 12 mm, shift that side of rear crossmember directly rearward until distance is 12 mm or greater. To do so, loosen 3 mounting bolts slightly, leaving one on opposite side of shift snugged to pivot off of. Shift crossmember rearward and snug loosened bolts. Measure opposite side to be sure it also maintains minimum 12 mm distance.

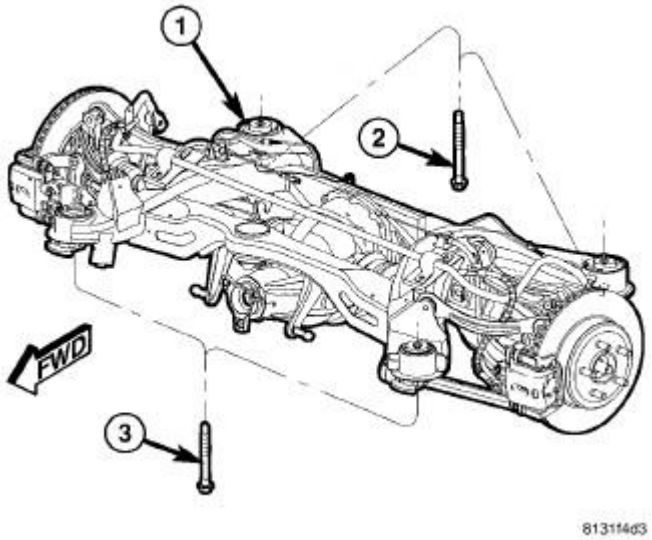

Fig. 154: Rear Crossmember Mounting Bolts

Courtesy of CHRYSLER GROUP, LLC

9. Tighten all crossmember mounting bolts (2 and 3) to 180 N.m (133 ft. lbs.).

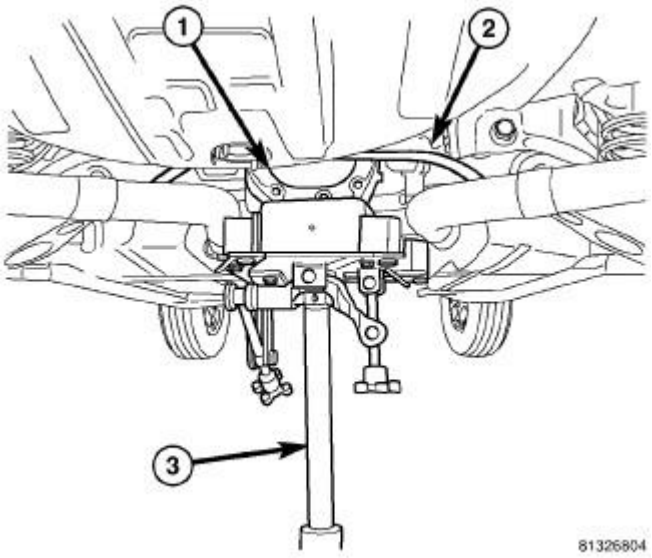

Fig. 155: Supporting Rear Axle Differential
Courtesy of CHRYSLER GROUP, LLC

10. Remove jack (3) from under rear axle differential.
11. If previously lowered, raise rear exhaust back to mounted position and connect exhaust isolators at muffler and resonators hangers. Remove jack or stand below exhaust muffler.

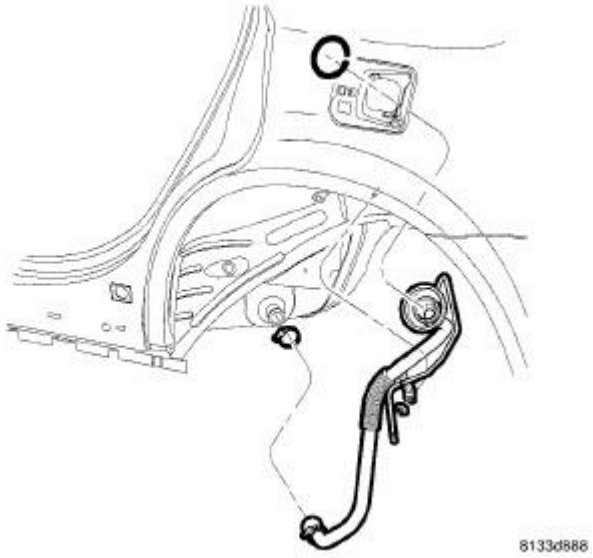

Fig. 156: Filler Tube Assembly
Courtesy of CHRYSLER GROUP, LLC

12. Install fuel filler tube. Refer to **TUBE, FUEL TANK FILLER, INSTALLATION** .

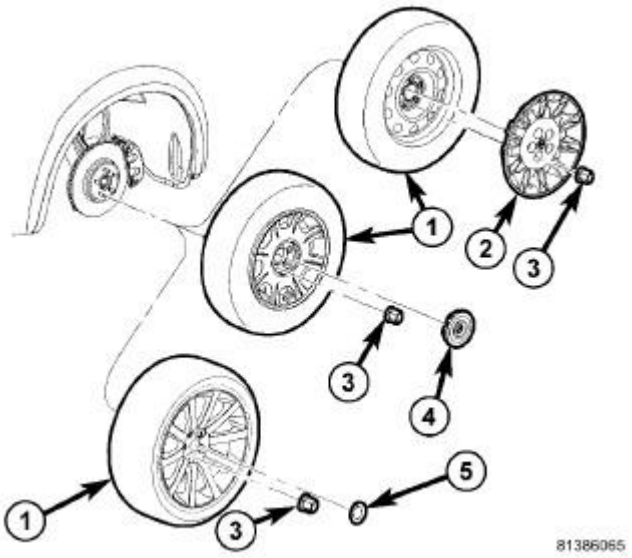

Fig. 157: Tire And Wheel Mounting
Courtesy of CHRYSLER GROUP, LLC

13. Install tire and wheel assemblies (1). Tighten wheel mounting nuts (3) to 150 N.m (110 ft. lbs.). Refer to **INSTALLATION** .
14. Lower vehicle.
15. Position vehicle on alignment rack/drive-on lift. Raise vehicle as necessary to access mounting bolts.

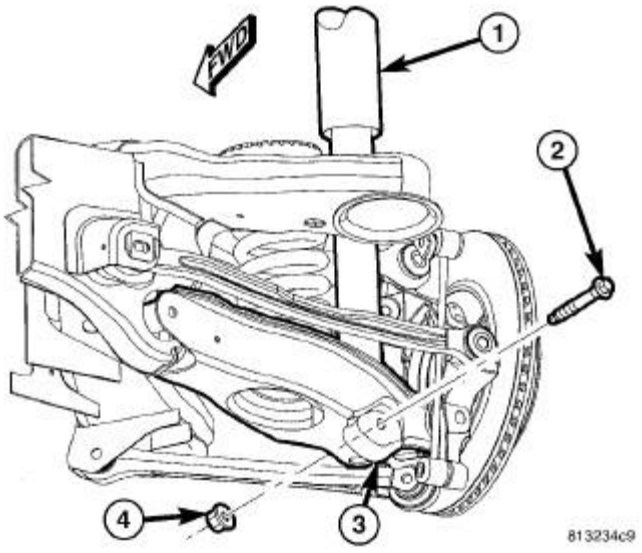

Fig. 158: Shock Absorber Lower Mounting Bolt & Nut
Courtesy of CHRYSLER GROUP, LLC

16. Tighten shock absorber lower mounting bolt nut (4) to 72 N.m (53 ft. lbs.).

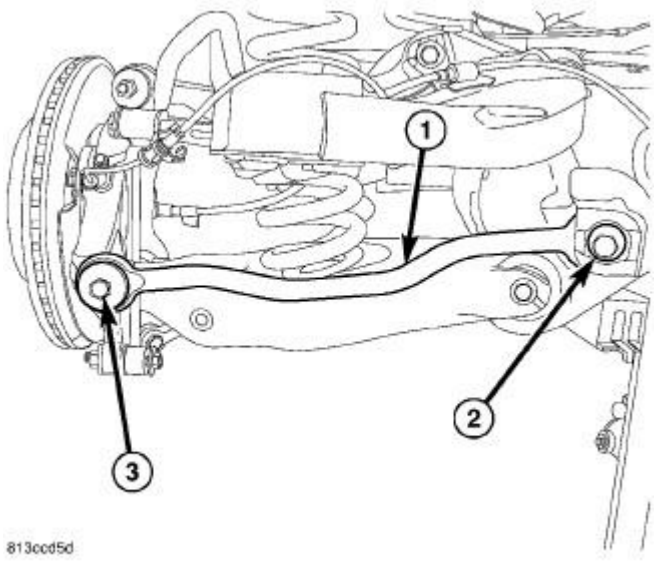

Fig. 159: Toe Link, Mounting Bolt & Cam Bolt
Courtesy of CHRYSLER GROUP, LLC

17. Tighten toe link (1) fasteners to:
    - Nut at crossmember - 108 N.m (80 ft. lbs.) (This nut may be tightened after rear wheel alignment toe is set. Do not tighten from bolt head end.).
    - Bolt at knuckle - 95 N.m (70 ft. lbs.).
18. Perform wheel alignment. Refer to **WHEEL ALIGNMENT, STANDARD PROCEDURE** .

RIGHT LINK

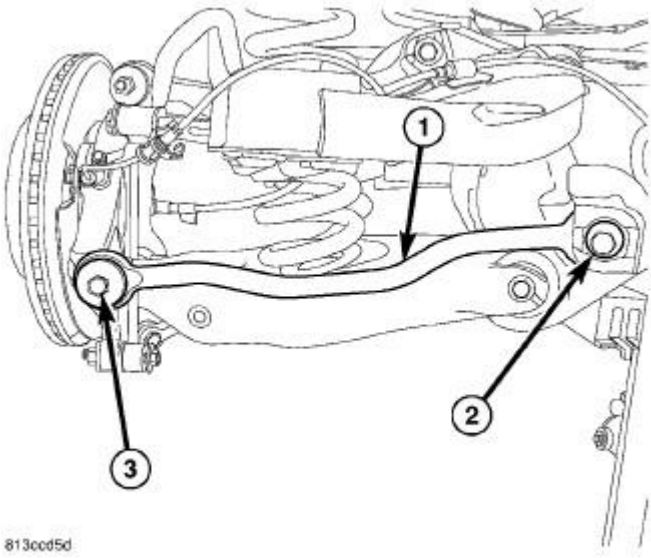

Fig. 160: Toe Link, Mounting Bolt & Cam Bolt
Courtesy of CHRYSLER GROUP, LLC

1. Slide crossmember end of toe link (1) into box bracket on crossmember. Slide cam bolt (2) through bracket and link from rear of vehicle.
2. Install bolt (3) and nut securing link to knuckle. **Do not tighten bolt at this time.**

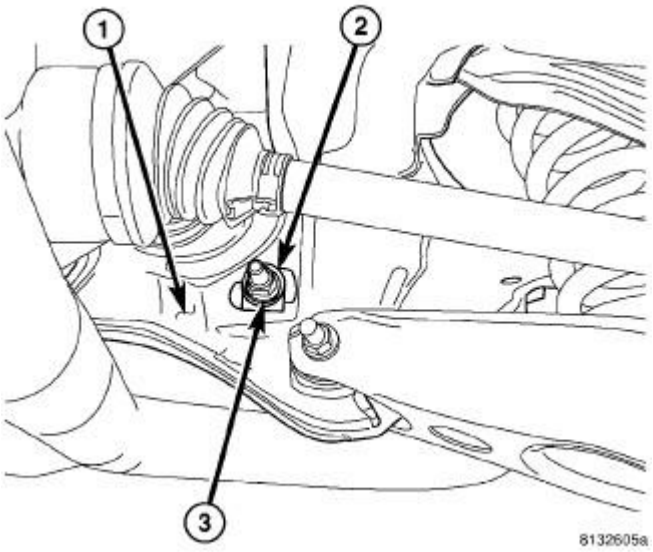

Fig. 161: Rear Toe Adjustment Bolt Nut
Courtesy of CHRYSLER GROUP, LLC

3. While holding toe adjustment cam bolt from rotating (cam facing upward), install cam washer (2) and nut (3) securing toe link at crossmember (1). **Do not tighten nut at this time.**

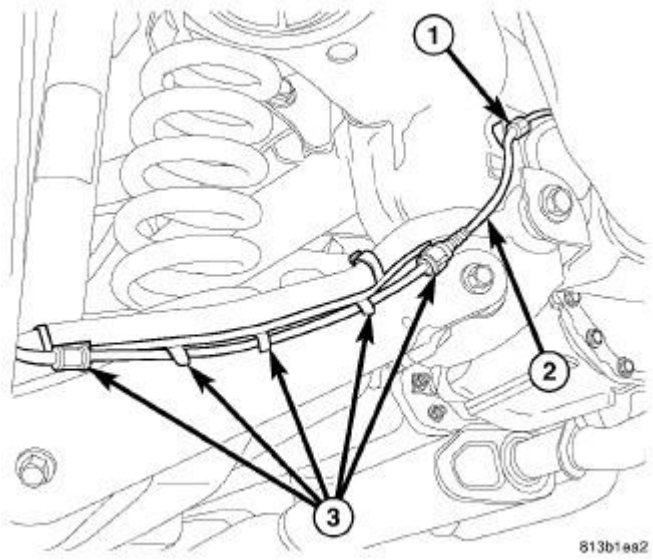

Fig. 162: Wheel Speed Sensor Cable

Courtesy of CHRYSLER GROUP, LLC

4. If equipped, Attach wheel speed sensor cable (2) to toe link.
5. Raise rear exhaust back to mounted position and connect exhaust isolators at muffler and resonators hangers. Remove jack or stand below exhaust muffler.

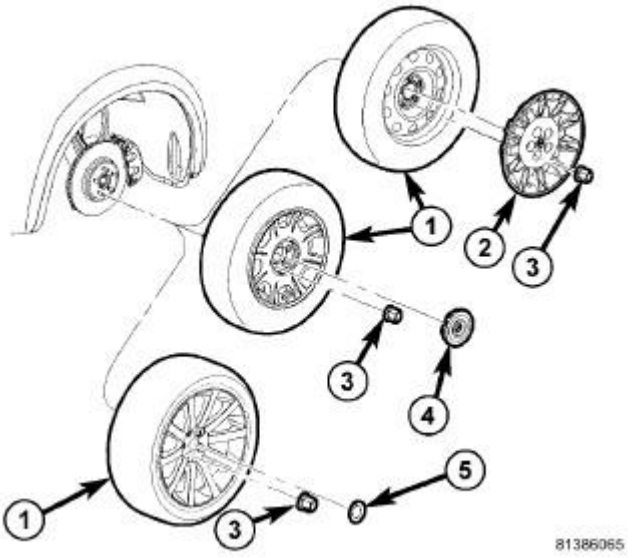

Fig. 163: Tire And Wheel Mounting
Courtesy of CHRYSLER GROUP, LLC

6. Install tire and wheel assembly (1). Tighten wheel mounting nuts (3) to 150 N.m (110 ft. lbs.). Refer to **INSTALLATION** .
7. Lower vehicle.
8. Position vehicle on alignment rack/drive-on lift. Raise vehicle as necessary to access mounting bolts.

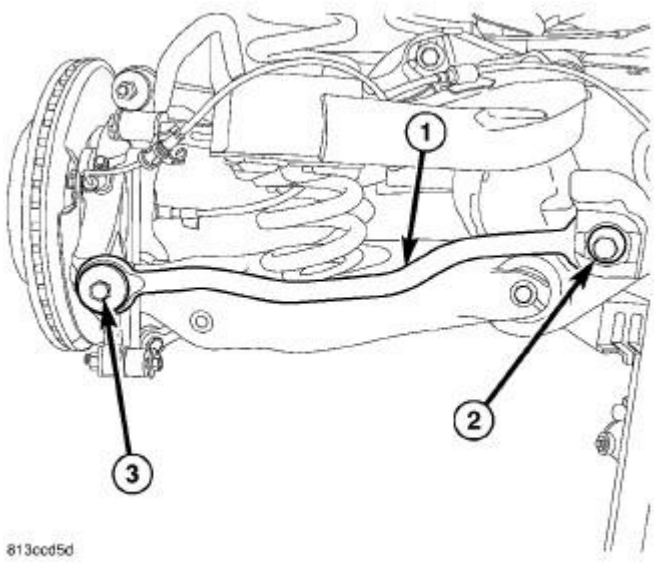

Fig. 164: Toe Link, Mounting Bolt & Cam Bolt
Courtesy of CHRYSLER GROUP, LLC

9. Tighten toe link (1) fasteners to:
   - Nut at crossmember - 108 N.m (80 ft. lbs.) (This nut may be tightened after rear wheel alignment toe is set. Do not tighten from bolt head end.).
   - Bolt at knuckle - 95 N.m (70 ft. lbs.).
10. Perform wheel alignment Refer to **WHEEL ALIGNMENT, STANDARD PROCEDURE** .

SHOCK ABSORBER, SUSPENSION

DESCRIPTION

NON SRT

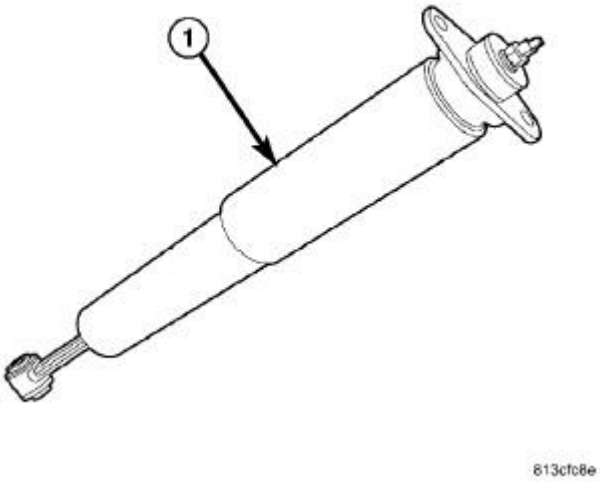

Fig. 165: Nivomat Load-Leveling Shock Absorber
Courtesy of CHRYSLER GROUP, LLC

Non SRT vehicles have standard gas-charged shock absorbers for the rear suspension.

SRT

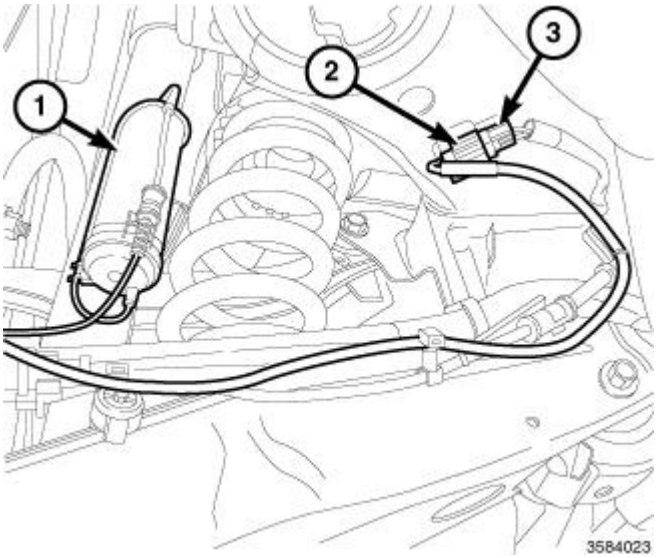

Fig. 166: Shock Solenoid Assembly & ADS Harness Connector
Courtesy of CHRYSLER GROUP, LLC

NOTE: Left side shown, right side similar.

This vehicle has Active Damping System (ADS) shock absorbers for the rear suspension. The ADS shock absorbers are serviced the same as conventional shocks, except the ADS connector (2) must be removed from the harness connector (3). It is important to pay close attention to which direction the shock solenoid assembly

(1) is pointing when removing and installing ADS shocks.

REMOVAL

NON SRT

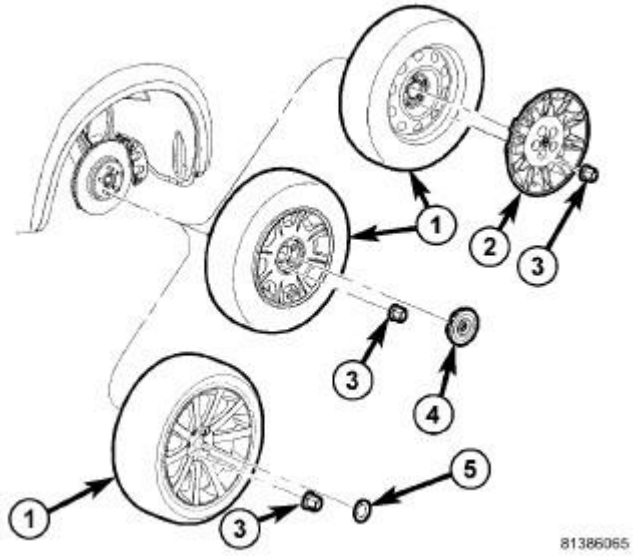

Fig. 167: Tire And Wheel Mounting
Courtesy of CHRYSLER GROUP, LLC

1. Raise and support vehicle. Refer to **HOISTING, STANDARD PROCEDURE** .
2. Remove wheel mounting nuts (3), then tire and wheel assembly (1).
3. Position under-hoist utility jack or jack stand under outer spring link adding just enough support to keep suspension from going into full-rebound when shock absorber mounting bolts are removed.

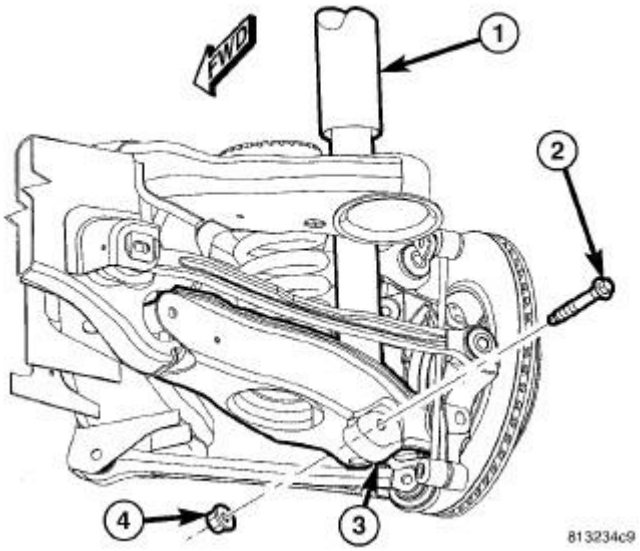

Fig. 168: Shock Absorber Lower Mounting Bolt & Nut
Courtesy of CHRYSLER GROUP, LLC

4. Remove shock absorber (1) lower mounting bolt (2) and nut (4).

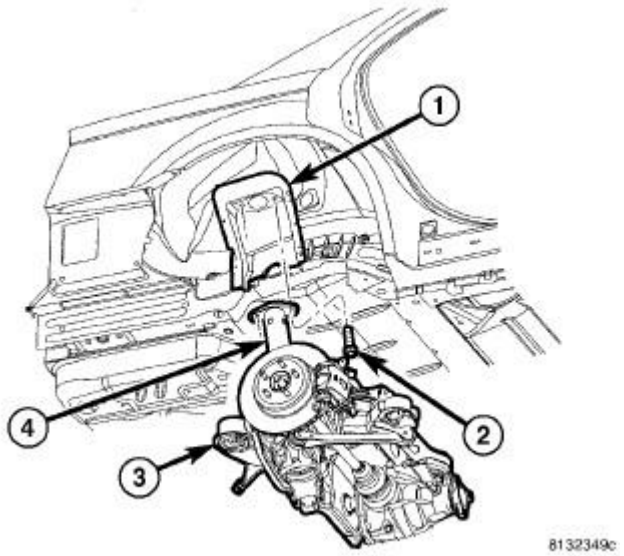

Fig. 169: Shock Absorber & Upper Mounting Screws
Courtesy of CHRYSLER GROUP, LLC

5. Remove shock absorber (1) upper mounting bolts (2).
6. Remove shock absorber (4).

SRT

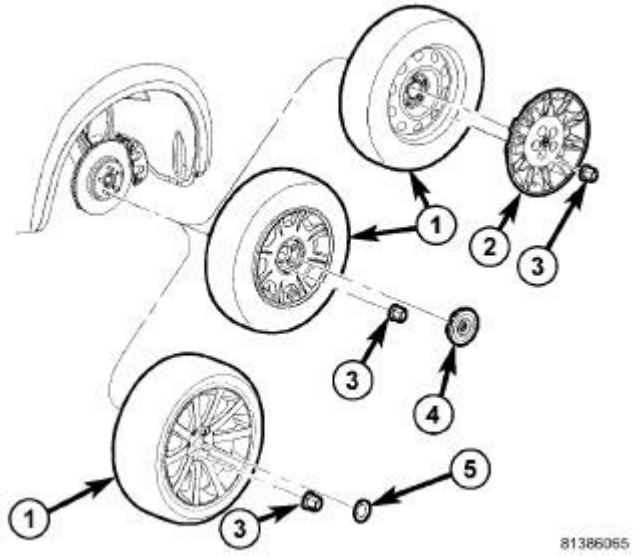

Fig. 170: Tire And Wheel Mounting

Courtesy of CHRYSLER GROUP, LLC

1. Raise and support vehicle. Refer to **HOISTING, STANDARD PROCEDURE** .
2. Remove wheel mounting nuts (3), then tire and wheel assembly (1).
3. Position under-hoist utility jack or jack stand under outer spring link adding just enough support to keep suspension from going into full-rebound when shock absorber mounting bolts are removed.

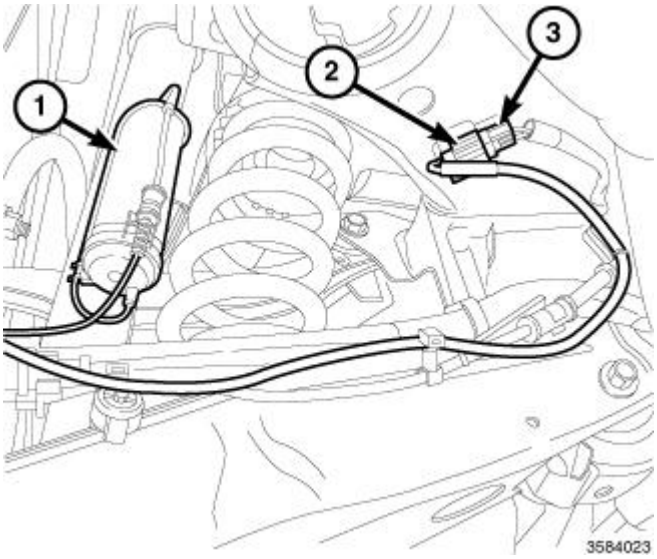

Fig. 171: Shock Solenoid Assembly & ADS Harness Connector
Courtesy of CHRYSLER GROUP, LLC

NOTE: Left side shown, right side similar.

4. Disconnect the Active Damping System (ADS) shock connector (2) from the harness connector (3).

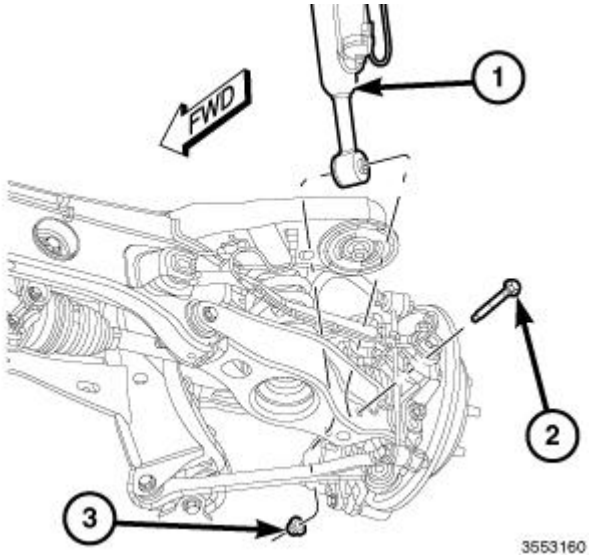

Fig. 172: Lower Mounting Bolt, Nut & Shock Absorber
Courtesy of CHRYSLER GROUP, LLC

NOTE: Right side shown, left side similar.

5. Remove lower mounting bolt (2) and nut (3) securing shock absorber (1) to knuckle.

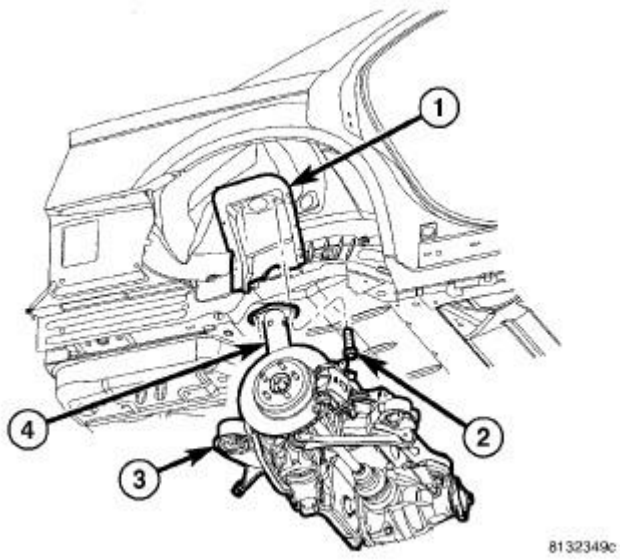

Fig. 173: Shock Absorber & Upper Mounting Screws
Courtesy of CHRYSLER GROUP, LLC

6. Remove shock absorber upper mounting bolts (2).
7. Remove shock absorber (4).

INSTALLATION

NON SRT

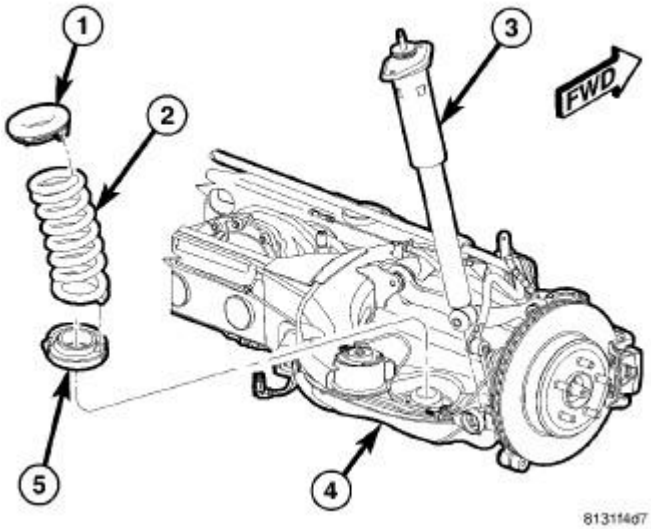

Fig. 174: Isolators, Coil Spring, Shock Absorber & Crossmember
Courtesy of CHRYSLER GROUP, LLC

1. Insert lower end of shock absorber (3) into well of spring link (4).

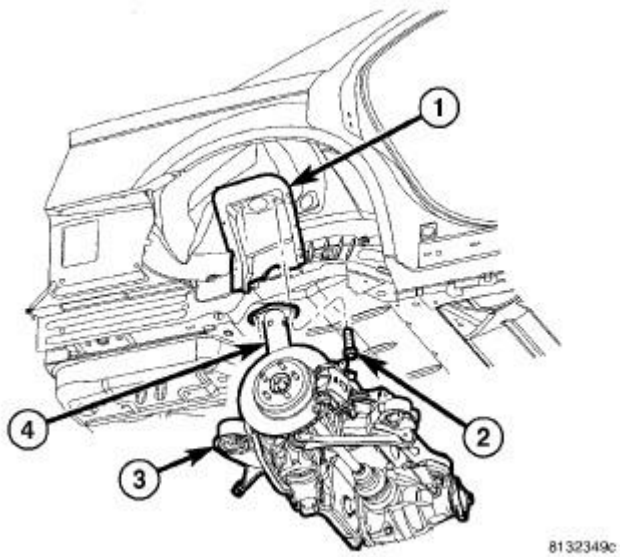

Fig. 175: Shock Absorber & Upper Mounting Screws
Courtesy of CHRYSLER GROUP, LLC

2. Raise upper end of shock absorber (4) up into mounted position on body (1) and install upper mounting screws (2). Tighten upper mounting screws to 52 N.m (38 ft. lbs.).

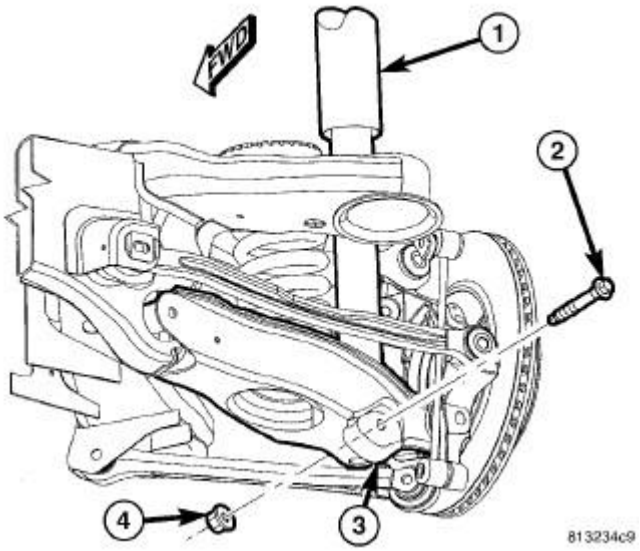

Fig. 176: Shock Absorber Lower Mounting Bolt & Nut
Courtesy of CHRYSLER GROUP, LLC

3. Install lower shock mounting bolt (2) and nut (4). **Do not tighten at this time.**
4. Remove under-hoist utility jack or jack stand from under spring link.

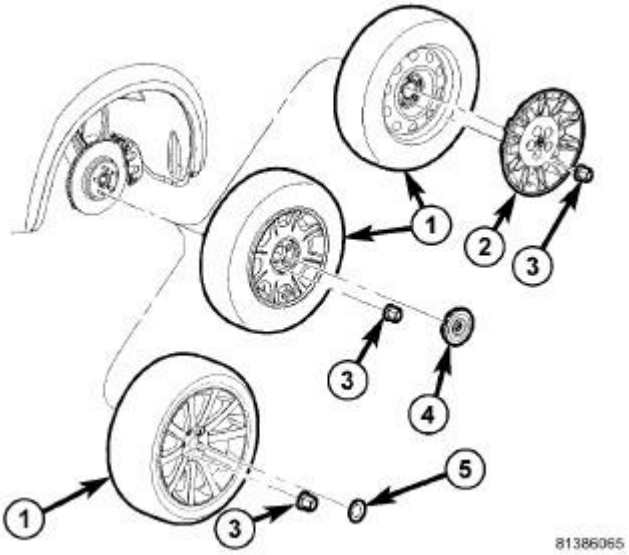

Fig. 177: Tire And Wheel Mounting
Courtesy of CHRYSLER GROUP, LLC

5. Install tire and wheel assembly (1). Tighten wheel mounting nuts (3) to 150 N.m (110 ft. lbs.). Refer to **INSTALLATION** .
6. Lower vehicle.
7. Position vehicle on alignment rack/drive-on hoist. Raise vehicle as necessary to access lower mounting

bolt.

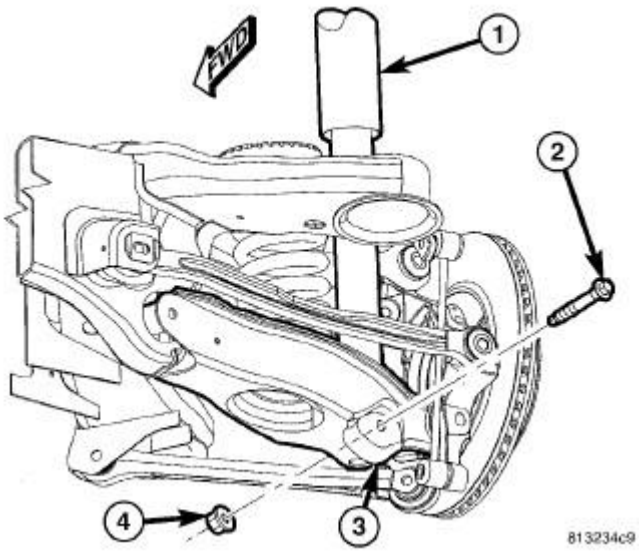

Fig. 178: Shock Absorber Lower Mounting Bolt & Nut
Courtesy of CHRYSLER GROUP, LLC

8. Tighten shock absorber lower mounting bolt nut (4) to 72 N.m (53 ft. lbs.).

SRT

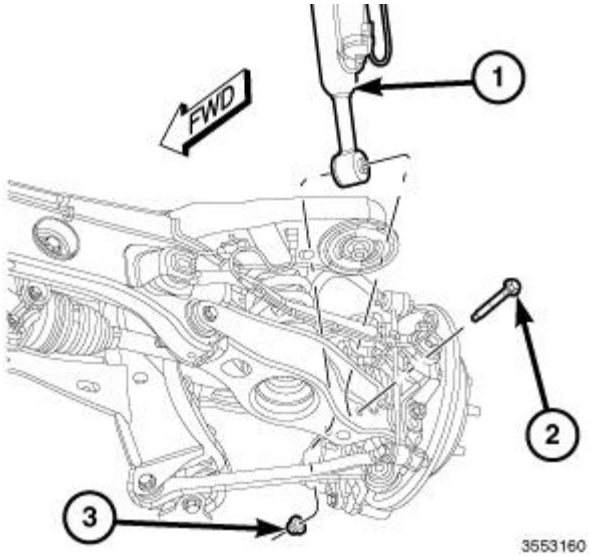

Fig. 179: Lower Mounting Bolt, Nut & Shock Absorber
Courtesy of CHRYSLER GROUP, LLC

1. Insert lower end of shock absorber (1) into well of spring link.

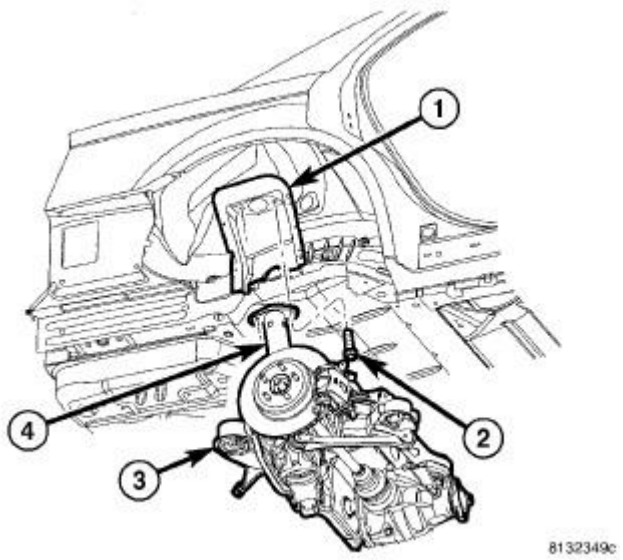

Fig. 180: Shock Absorber & Upper Mounting Screws
Courtesy of CHRYSLER GROUP, LLC

2. Raise upper end of shock absorber (4) up into mounted position on body (1) and install upper mounting screws (2). Tighten upper mounting screws to 52 N.m (38 ft. lbs.).

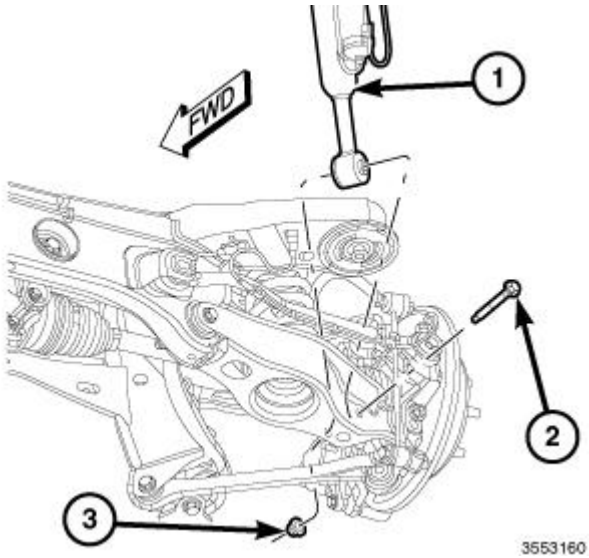

Fig. 181: Lower Mounting Bolt, Nut & Shock Absorber
Courtesy of CHRYSLER GROUP, LLC

3. Install lower shock mounting bolt (2) and nut (3). **Do not tighten at this time.**
4. Remove under-hoist utility jack or jack stand from under spring link.

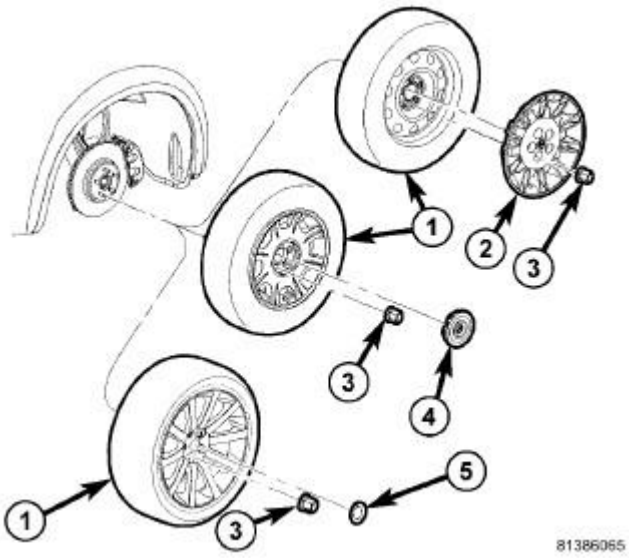

Fig. 182: Tire And Wheel Mounting
Courtesy of CHRYSLER GROUP, LLC

5. Install tire and wheel assembly (1). Tighten wheel mounting nuts (3) to 150 N.m (110 ft. lbs.). Refer to **INSTALLATION** .
6. Lower vehicle.
7. Position vehicle on alignment rack/drive-on hoist. Raise vehicle as necessary to access lower mounting bolt.

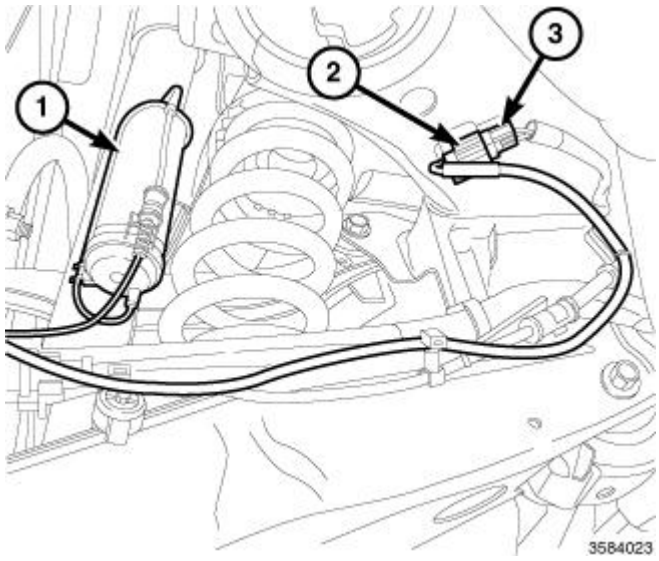

Fig. 183: Shock Solenoid Assembly & ADS Harness Connector
Courtesy of CHRYSLER GROUP, LLC

8. Connect the Active Damping System (ADS) connector (2) from the ADS shock (1) to the harness connector (3).

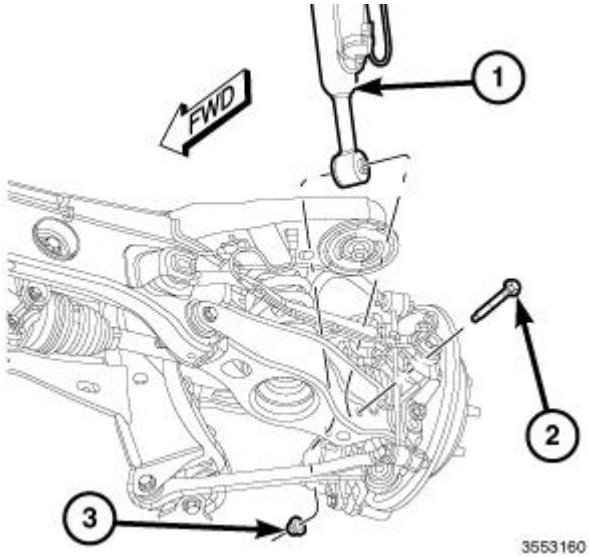

Fig. 184: Lower Mounting Bolt, Nut & Shock Absorber
Courtesy of CHRYSLER GROUP, LLC

9. Tighten shock absorber lower mounting nut (3) to 72 N.m (53 ft. lbs.).

SPRING(S)

REMOVAL

REMOVAL

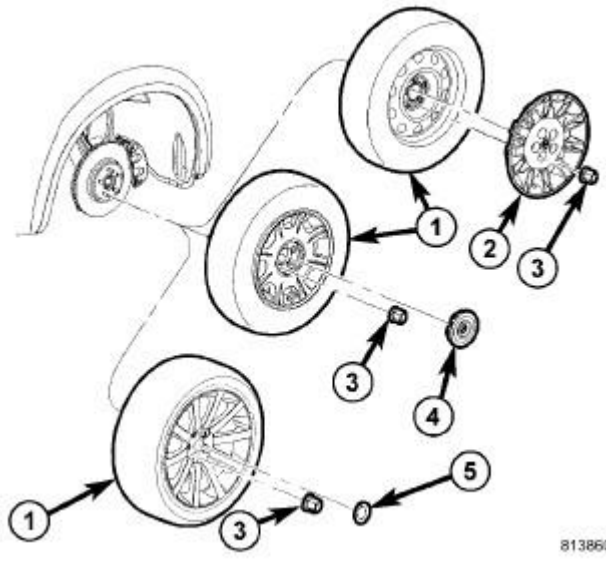

Fig. 185: Tire And Wheel Mounting
Courtesy of CHRYSLER GROUP, LLC

1. Raise and support vehicle. Refer to **HOISTING, STANDARD PROCEDURE** .

2. On both sides of vehicle, remove wheel mounting nuts (3), then rear tire and wheel assembly (1).

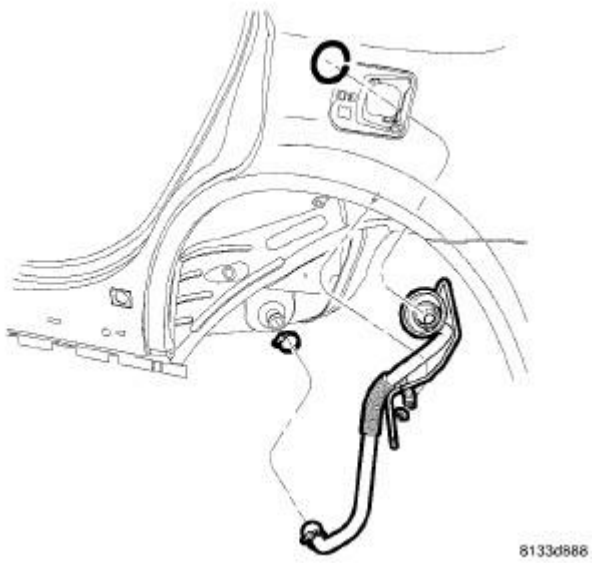

Fig. 186: Filler Tube Assembly
Courtesy of CHRYSLER GROUP, LLC

WARNING: Before opening fuel system, review all Warnings and Cautions.

3. If servicing left side shock absorber, remove fuel filler tube. Refer to **TUBE, FUEL TANK FILLER, REMOVAL** .
4. Position an extra pair of jack stands under and support forward end of engine cradle to help stabilize vehicle during rear suspension removal/installation.
5. Perform following if vehicle is equipped with dual exhaust or if servicing right side on vehicle with single exhaust:
    a. Position under-hoist utility jack or stand several inches below exhaust at muffler.
    b. Disconnect exhaust isolators at muffler and resonators hangers.
    c. Lower exhaust down to rest upon top of jack or stand placed below muffler.

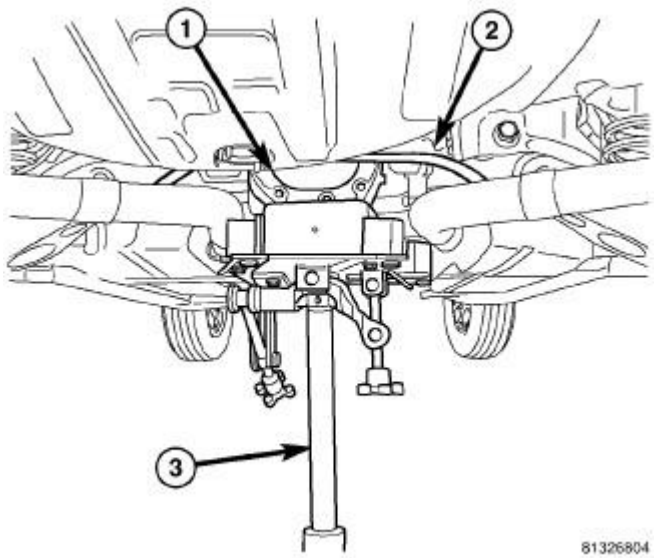

Fig. 187: Supporting Rear Axle Differential
Courtesy of CHRYSLER GROUP, LLC

6. Position under-hoist utility jack or transmission jack (3) under center of rear axle differential (1). Raise jack head to contact differential and secure in place. **When securing crossmember to jack, be sure not to secure stabilizer bar.**

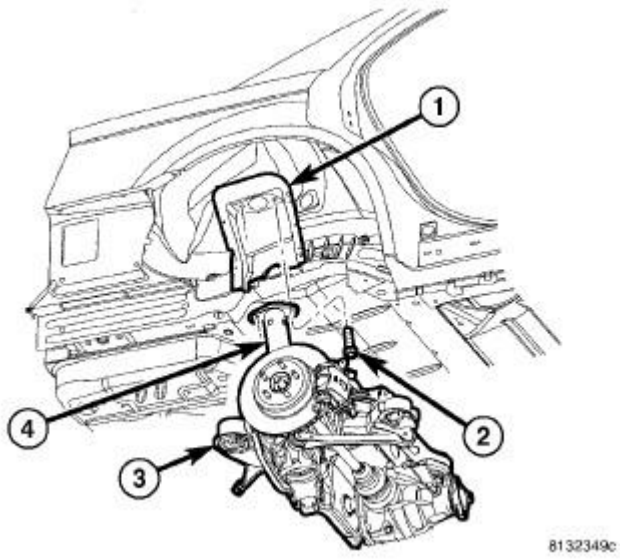

Fig. 188: Shock Absorber & Upper Mounting Screws
Courtesy of CHRYSLER GROUP, LLC

7. Remove shock absorber (1) upper mounting screws (2).

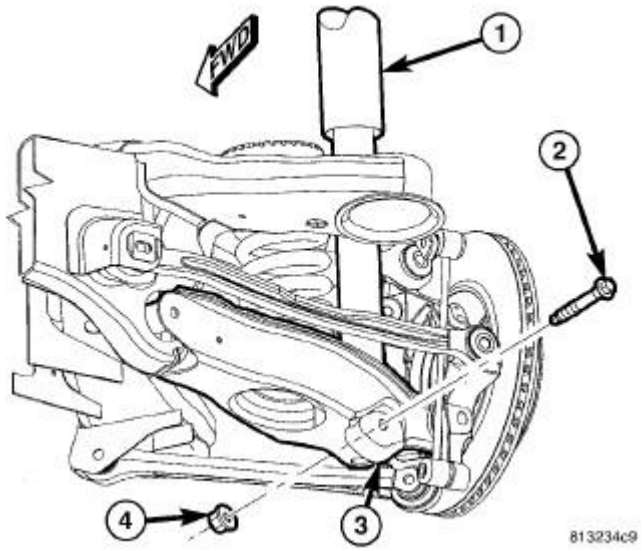

Fig. 189: Shock Absorber Lower Mounting Bolt & Nut
Courtesy of CHRYSLER GROUP, LLC

8. Remove shock absorber (1) lower mounting bolt (2) and nut (4).

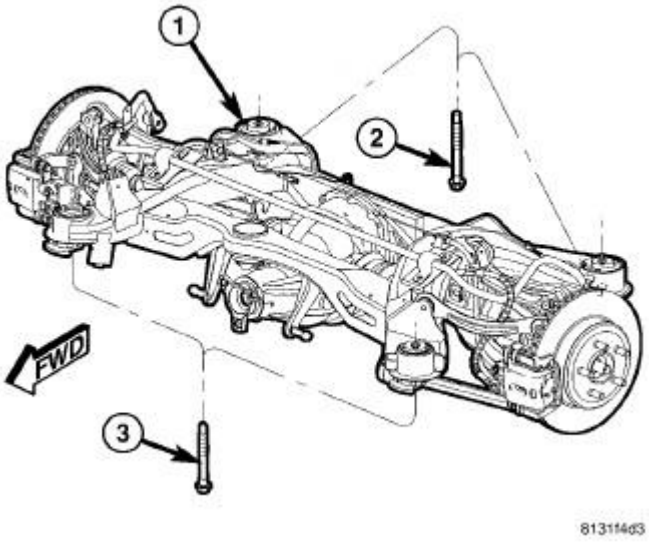

Fig. 190: Rear Crossmember Mounting Bolts
Courtesy of CHRYSLER GROUP, LLC

CAUTION: When removing crossmember mounting bolts (2 and 3) it is important NOT to loosen or remove crossmember mounting bolts on opposite side of vehicle. Doing so will require rear wheel alignment following reinstallation to ensure proper thrust angle.

9. Remove both front and rear crossmember mounting bolts (2 and 3) on repair-side of vehicle.

CAUTION: To avoid damaging other components of vehicle, do not lower crossmember (1) any further than necessary to remove shock absorber.

10. **Slowly** lower jack allowing repair-side of crossmember to drop. Lower jack just enough to allow top of shock absorber to clear body flange.

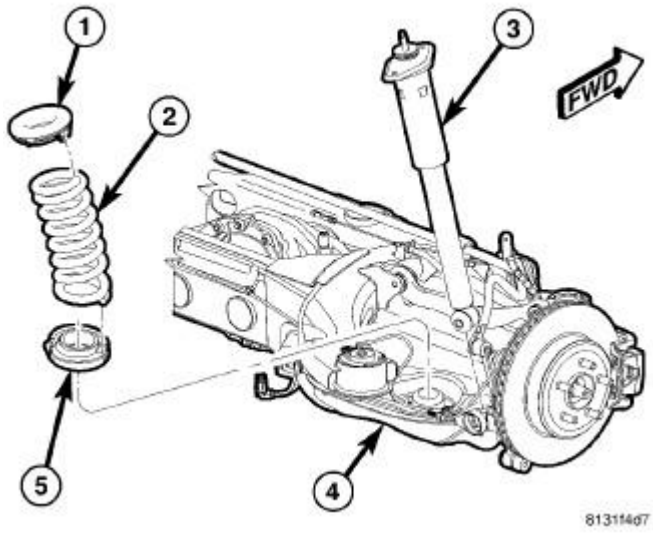

Fig. 191: Isolators, Coil Spring, Shock Absorber & Crossmember
Courtesy of CHRYSLER GROUP, LLC

11. Remove shock absorber (3) by tipping top outward and lifting lower end out of pocket in spring link (4).
12. Disconnect brake hose at bracket mounted to body to allow to avoid overextending hose, damaging it, during following step.
13. Slowly lower jack until crossmember is low enough to remove coil spring. **Do not lower jack any further than necessary to remove spring.**
14. Remove coil spring and isolators (1, 2 and 5).

INSTALLATION

INSTALLATION

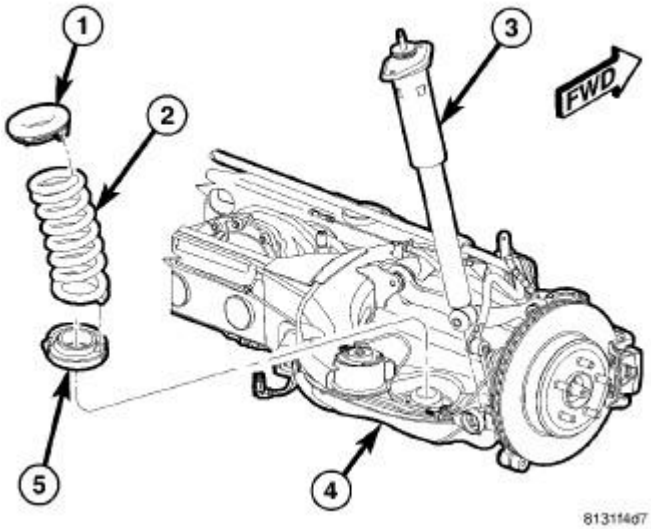

Fig. 192: Isolators, Coil Spring, Shock Absorber & Crossmember
Courtesy of CHRYSLER GROUP, LLC

NOTE: Rear coil springs are interchangeable.

1. Install upper (1) and lower (5) isolators on coil spring (2).

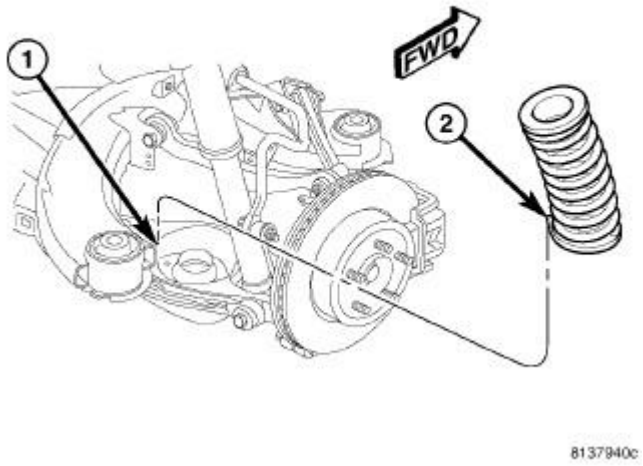

Fig. 193: Matching Spring Isolator To Spring Link
Courtesy of CHRYSLER GROUP, LLC

NOTE: Before installing coil spring, make sure isolators (1 and 5) are completely installed on ends of spring.

2. Install coil spring with isolators into spring pocket of spring link (1) fitting lower isolator (2) to shape of pocket, then align top of spring with body mount.

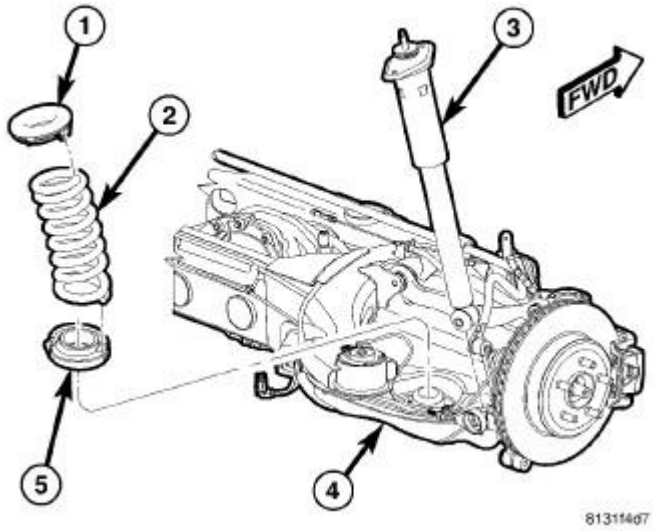

Fig. 194: Isolators, Coil Spring, Shock Absorber & Crossmember
Courtesy of CHRYSLER GROUP, LLC

3. Install shock absorber (3) by setting lower end into pocket in spring link (4), then tipping top inward until aligned with upper mounting holes.

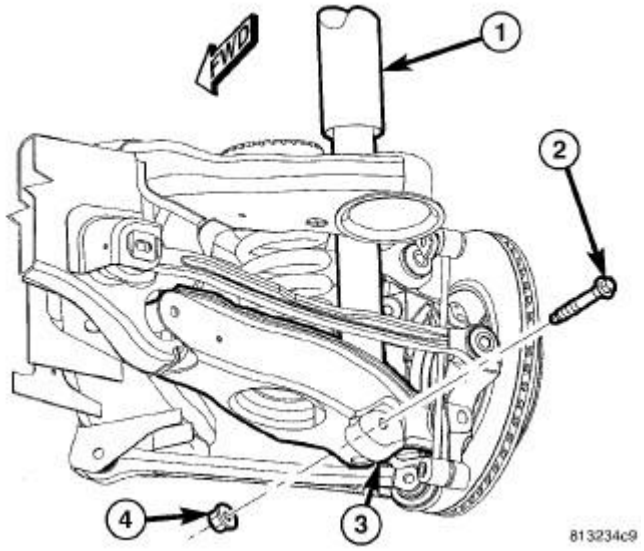

Fig. 195: Shock Absorber Lower Mounting Bolt & Nut
Courtesy of CHRYSLER GROUP, LLC

4. Install lower shock mounting bolt and nut. **Do not tighten at this time.**

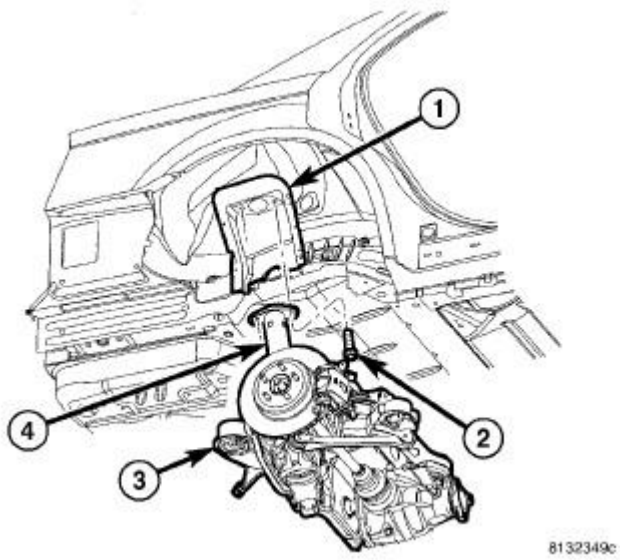

Fig. 196: Shock Absorber & Upper Mounting Screws
Courtesy of CHRYSLER GROUP, LLC

5. Carefully raise jack, guiding coil spring and upper end of shock absorber (4) into mounted positions.
6. Install shock absorber upper mounting screws (2). Tighten upper mounting screws to 52 N.m (38 ft. lbs.).

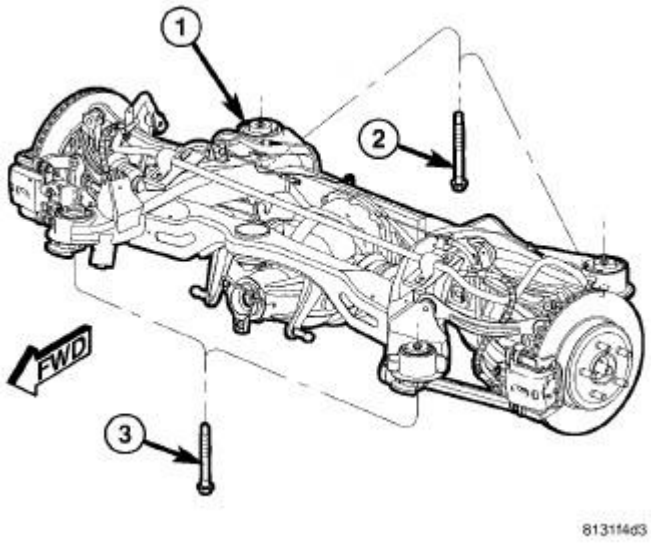

Fig. 197: Rear Crossmember Mounting Bolts
Courtesy of CHRYSLER GROUP, LLC

NOTE: Rear crossmember mounting bolts (2) are longer than front mounting bolts (3). Do not interchange mounting bolts.

7. Install crossmember mounting bolts (2 and 3). **Snug, but do not fully tighten bolts at this time.**

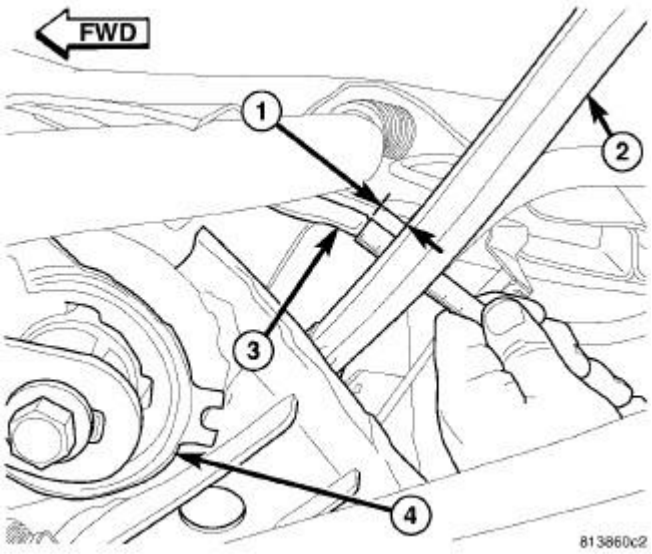

Fig. 198: Measuring Tension Link Clearance
Courtesy of CHRYSLER GROUP, LLC

8. Measure distance (1) between from tension link (2) to body weld flange (3) directly in front of it, just outboard of front mount bushing (4). **This distance must be at least 12 mm to allow proper clearance for suspension movement.** If distance is less than 12 mm, shift that side of rear crossmember directly rearward until distance is 12 mm or greater. To do so, loosen 3 mounting bolts slightly, leaving one on opposite side of shift snugged to pivot off of. Shift crossmember rearward and snug loosened bolts. Measure opposite side to be sure it also maintains minimum 12 mm distance.

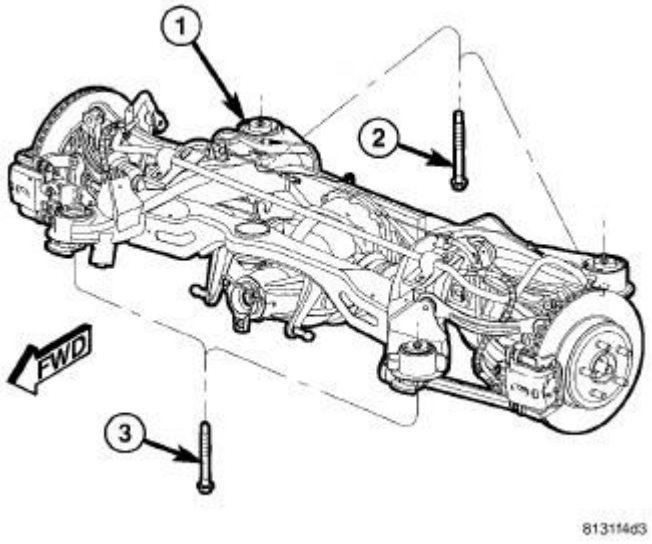

Fig. 199: Rear Crossmember Mounting Bolts
Courtesy of CHRYSLER GROUP, LLC

9. Tighten all crossmember mounting bolts (2 and 3) to 180 N.m (133 ft. lbs.).

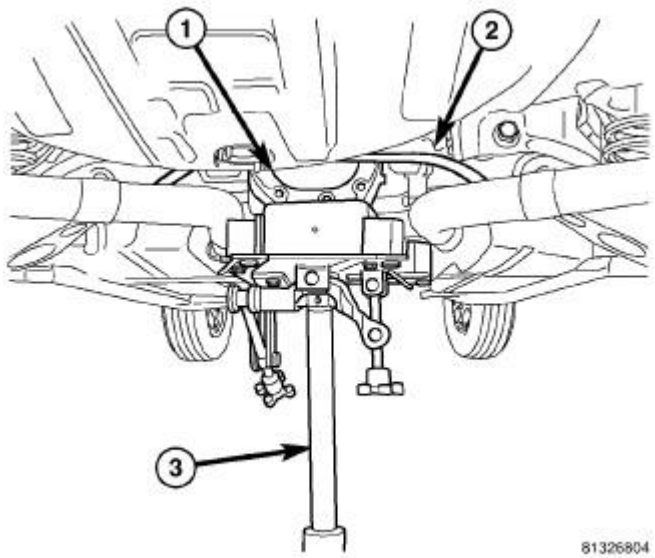

Fig. 200: Supporting Rear Axle Differential
Courtesy of CHRYSLER GROUP, LLC

10. Remove jack (3) from under rear axle differential.
11. If previously lowered, raise rear exhaust back to mounted position and connect exhaust isolators at muffler and resonators hangers. Remove jack or stand below exhaust muffler.

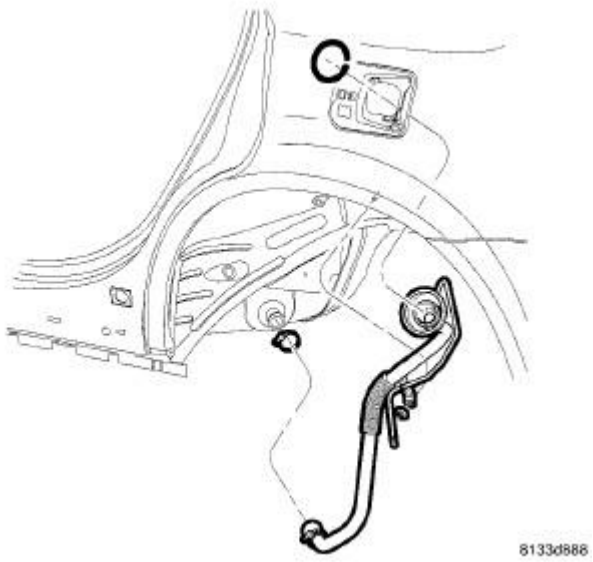

Fig. 201: Filler Tube Assembly
Courtesy of CHRYSLER GROUP, LLC

12. Install fuel filler tube. Refer to **TUBE, FUEL TANK FILLER, INSTALLATION** .

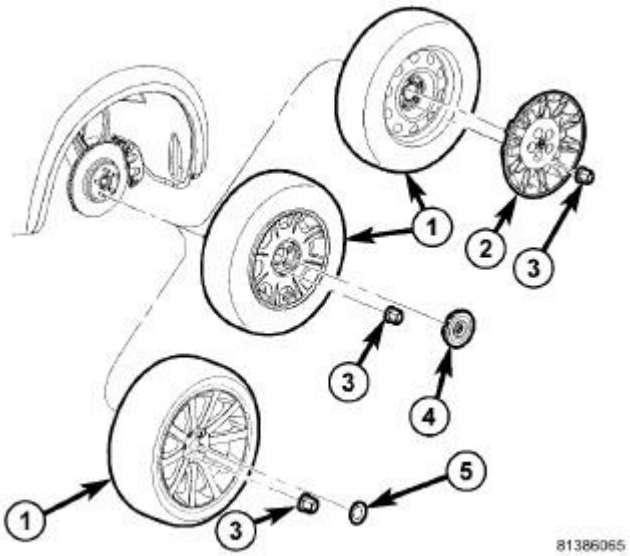

Fig. 202: Tire And Wheel Mounting
Courtesy of CHRYSLER GROUP, LLC

13. Install tire and wheel assemblies (1). Tighten wheel mounting nuts (3) to 150 N.m (110 ft. lbs.) Refer to **INSTALLATION** .
14. Lower vehicle.
15. Position vehicle on alignment rack/drive-on lift. Raise lift as necessary to access lower mounting bolt.

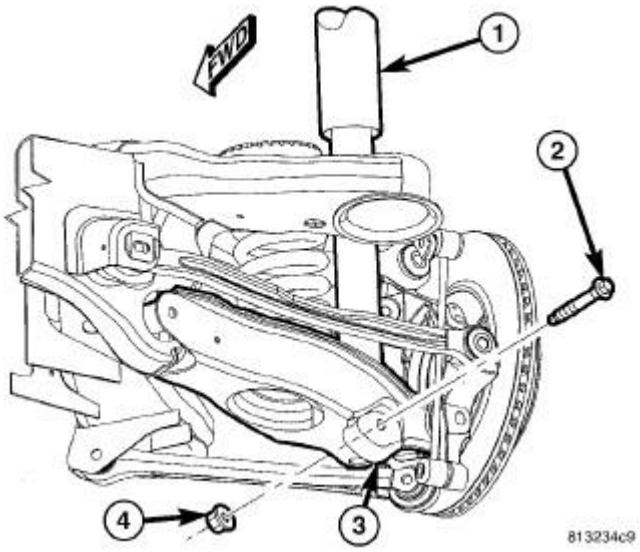

Fig. 203: Shock Absorber Lower Mounting Bolt & Nut
Courtesy of CHRYSLER GROUP, LLC

16. Tighten shock absorber lower mounting bolt nut (4) to 72 N.m (53 ft. lbs.).

STABILIZER BAR, REAR SUSPENSION

REMOVAL

REMOVAL

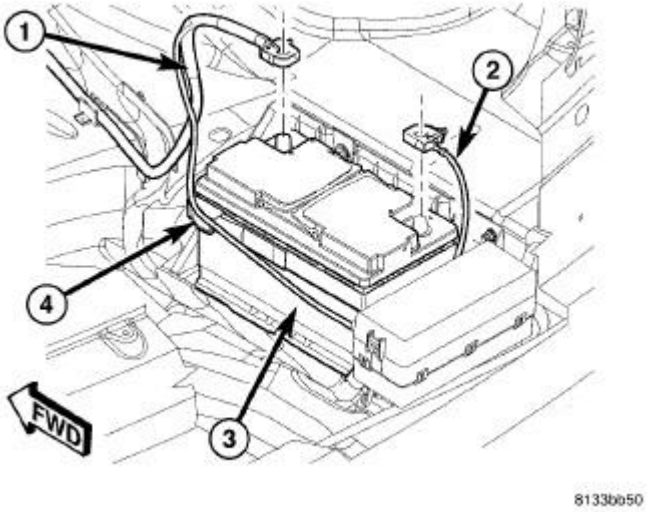

Fig. 204: Disconnecting/Connecting Battery Cables
Courtesy of CHRYSLER GROUP, LLC

1. Disconnect and isolate battery negative cable (2) from battery post.
2. Raise and support vehicle. Refer to **HOISTING, STANDARD PROCEDURE** .

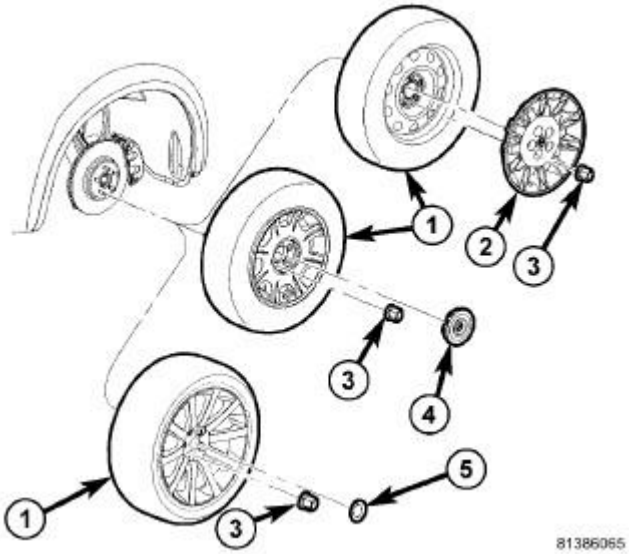

Fig. 205: Tire And Wheel Mounting

Courtesy of CHRYSLER GROUP, LLC

3. On each side of vehicle rear, remove wheel mounting nuts (3), then tire and wheel assembly (1).
4. Remove rear exhaust system. Refer to **MUFFLER, EXHAUST, REMOVAL** .

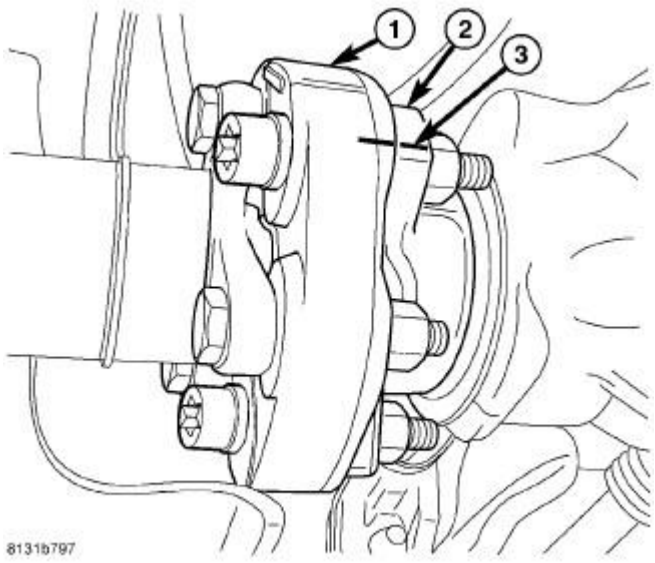

Fig. 206: Axle Flange, Rubber Coupler & Index Marks
Courtesy of CHRYSLER GROUP, LLC

5. Apply alignment index marks (3) to the propeller shaft rubber coupler (1) and axle flange (2).

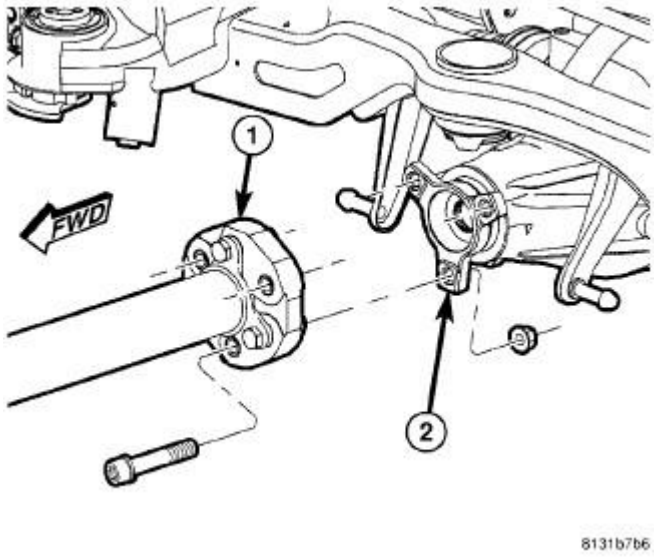

Fig. 207: Propeller Shaft Coupler & Rear Axle Flange
Courtesy of CHRYSLER GROUP, LLC

6. Remove three (four if equipped with 215 MM axle) propeller shaft coupler-to-axle flange bolts and nuts.

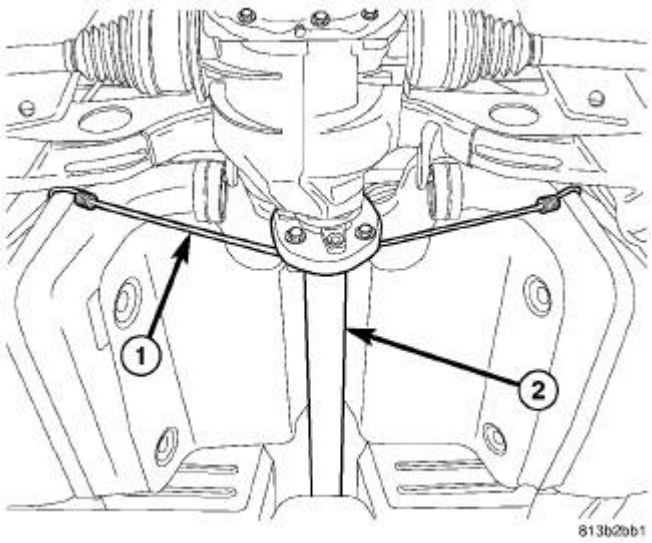

Fig. 208: Supporting Propeller Shaft
Courtesy of CHRYSLER GROUP, LLC

7. Support propeller shaft (2) using a bungee cord (1). Attach ends of cord to fuel tank straps as shown.

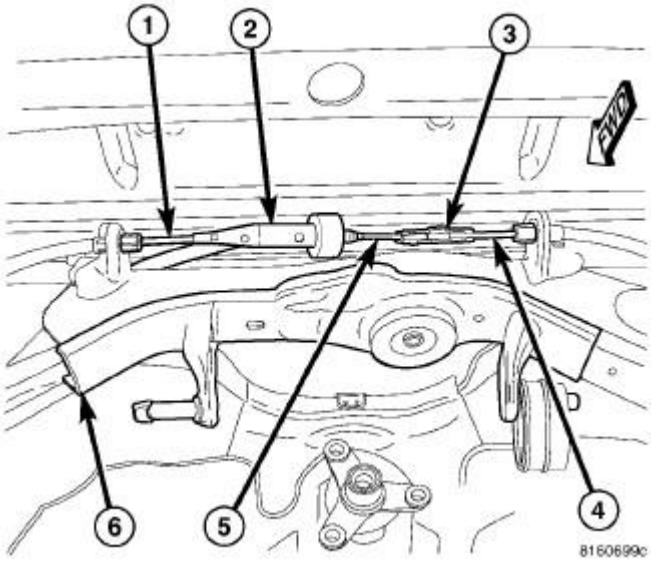

Fig. 209: Parking Brake Cable Components
Courtesy of CHRYSLER GROUP, LLC

NOTE: Due to short travel and low spring tension, it is not necessary to lock-out parking brake lever to service parking brake components.

8. Disconnect front parking brake cable (5) at connector (3) to right rear parking brake cable (4).

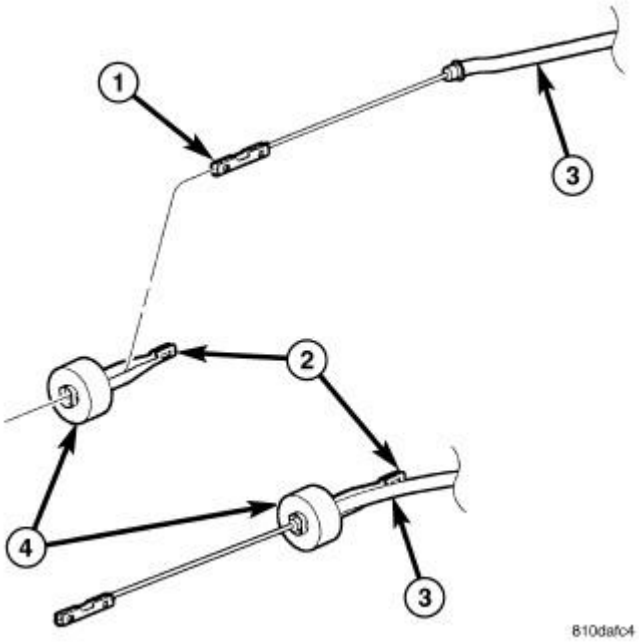

Fig. 210: Front Parking Brake Cable & Equalizer
Courtesy of CHRYSLER GROUP, LLC

9. Remove front parking brake cable (3) from equalizer (2).

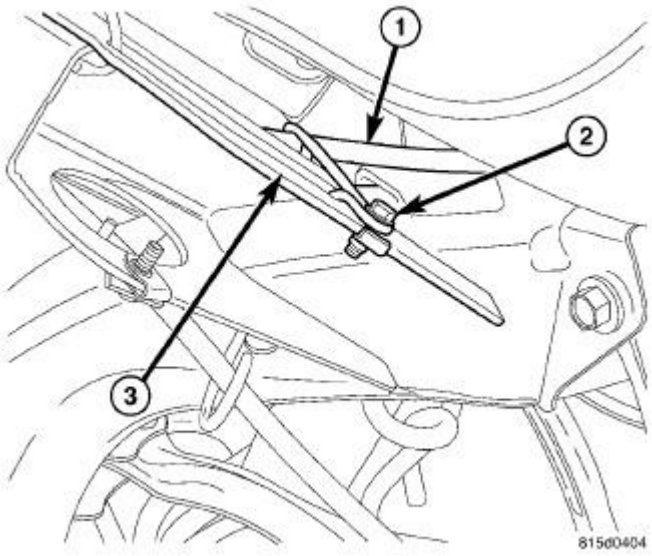

Fig. 211: Front Parking Brake Cable, Rear Crossmember Front Flange & Screw
Courtesy of CHRYSLER GROUP, LLC

10. Remove screw (2) fastening front parking brake cable (1) routing bracket to rear crossmember front flange (3).

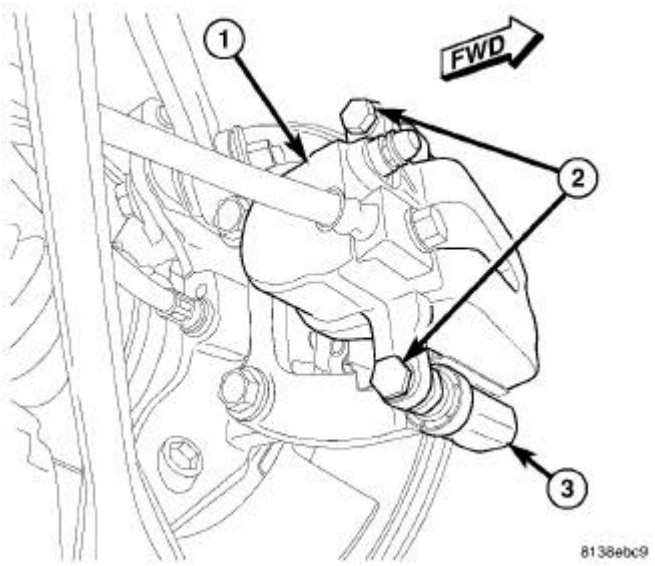

Fig. 212: Rear Brake Caliper, Adapter & Guide Pin Bolts
Courtesy of CHRYSLER GROUP, LLC

11. If equipped with standard or premium disc brakes, on each rear disc brake:
    a. While holding guide pins from turning, remove disc brake caliper guide pin bolts (2).
    b. Remove brake caliper (1) from brake adapter (3) and pads.
    c. Guide brake caliper up through suspension, following brake hose path. Support caliper above rear suspension using with bungee cord or wire to keep caliper from overextending brake hose when crossmember is lowered.

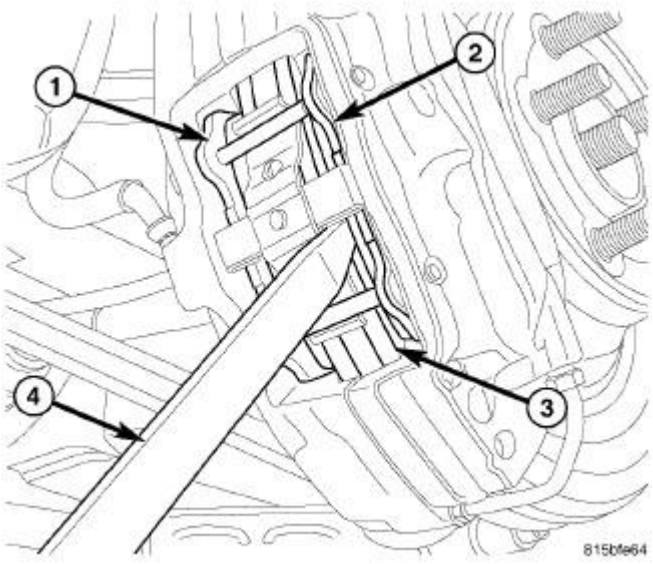

Fig. 213: Pushing Back Pistons In Bore
Courtesy of CHRYSLER GROUP, LLC

CAUTION: When pushing pistons back into caliper bores, use only a trim stick as shown or other suitable soft tool. Never use a screwdriver or other metal pry bar due to potential damage to braking surface of rotor, caliper, pistons or dust boots.

12. If equipped with SRT8 disc brakes, on each rear disc brake, place trim stick (4) between brake pad (2) and outer edge of rotor (3).
13. If equipped with SRT8 disc brakes, on each rear disc brake, using trim stick, slowly apply pressure against brake pad (2) until both pistons (on that side of caliper) are completely bottomed in bores of caliper half.

NOTE: Repeat above procedure to opposite brake pad (1) and pistons as necessary.

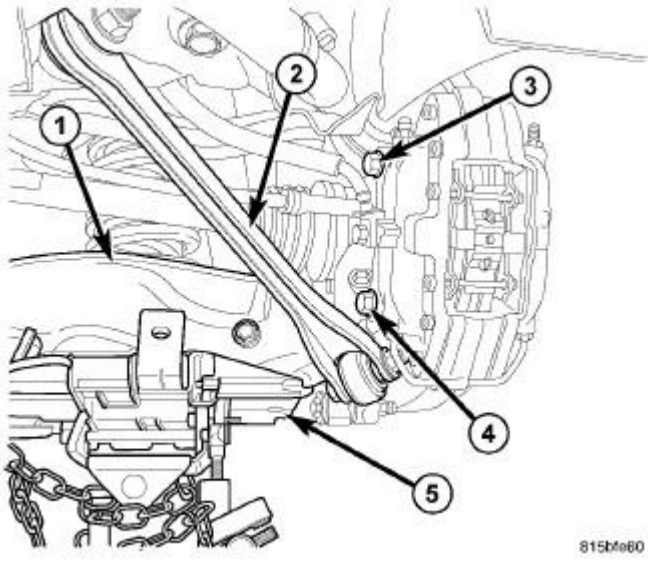

Fig. 214: Accessing Rear Caliper Mounting Bolts
Courtesy of CHRYSLER GROUP, LLC

14. If equipped with SRT8 disc brakes, on each rear disc brake, support spring link (1) using a transmission jack (5) or other appropriate jack. Raise spring link just enough to access brake caliper lower mounting bolt (4) from above compression link (2).

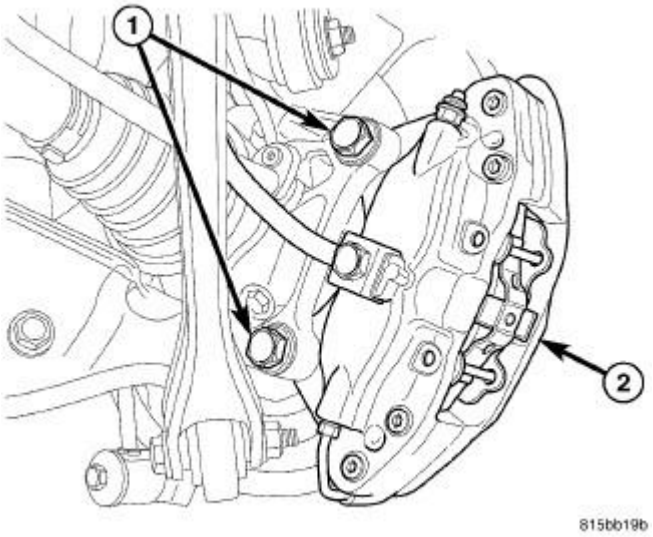

Fig. 215: Rear Caliper Mounting Bolts
Courtesy of CHRYSLER GROUP, LLC

15. If equipped with SRT8 disc brakes, on each rear disc brake, remove the lower and upper caliper mounting bolts (1).
16. If equipped with SRT8 disc brakes, on each rear disc brake, remove brake caliper (2) with pads from knuckle and brake rotor. Hang assembly out of way using wire or a bungee cord. Use care not to overextend brake hose when doing this.
17. If equipped with SRT8 disc brakes, remove jack from under spring link.

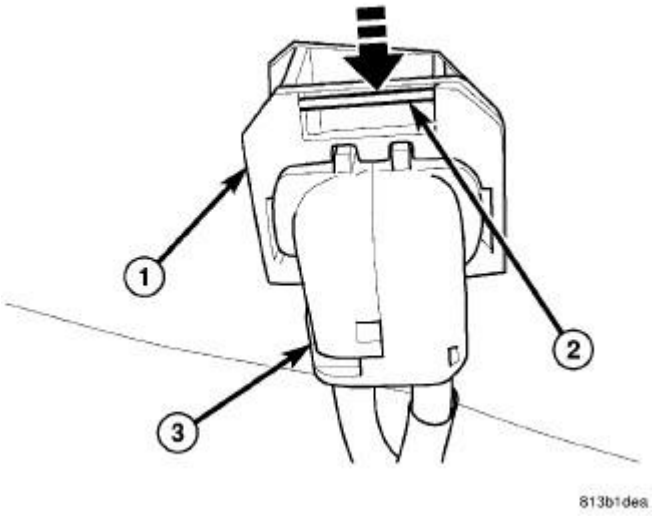

Fig. 216: Releasing Wheel Speed Sensor Connector
Courtesy of CHRYSLER GROUP, LLC

NOTE: To remove wheel speed sensor connector from body wiring harness connector, move retaining clip (2) and pull sensor connector outward.

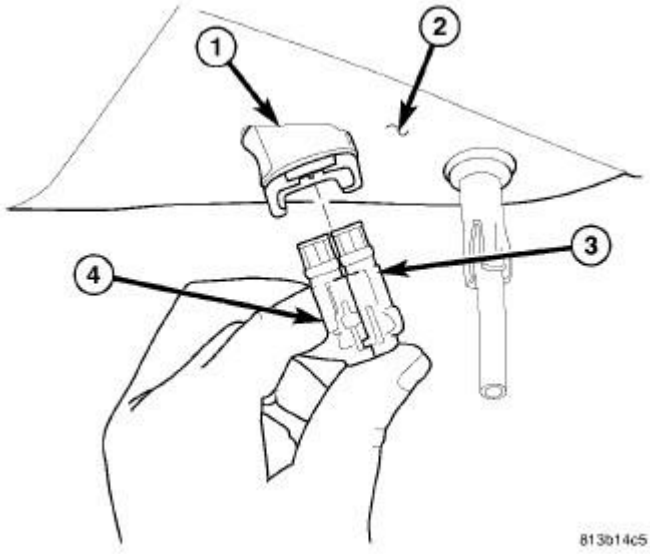

Fig. 217: Sensor Connection To Body Connector
Courtesy of CHRYSLER GROUP, LLC

18. Remove wheel speed sensor connectors (3 and 4) from body wiring harness connector (1) located in luggage compartment floor pan (2).

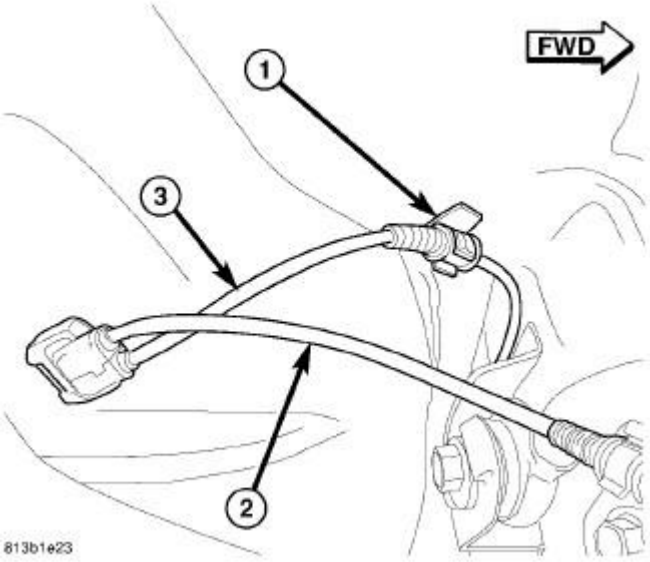

Fig. 218: Left/Right Rear Wheel Speed Sensor Cable & Routing Clip
Courtesy of CHRYSLER GROUP, LLC

19. Unclip left wheel speed sensor cable (3) from routing clip (1) near body connector.

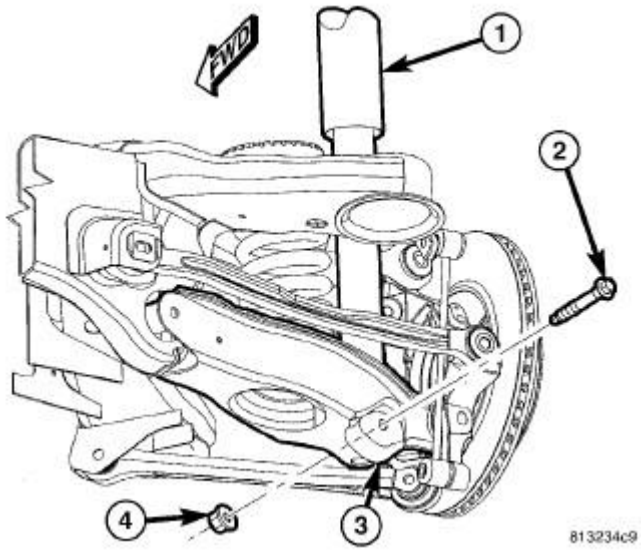

Fig. 219: Shock Absorber Lower Mounting Bolt & Nut
Courtesy of CHRYSLER GROUP, LLC

20. On each side of vehicle, remove shock absorber (1) lower mounting bolt (2) and nut (4).

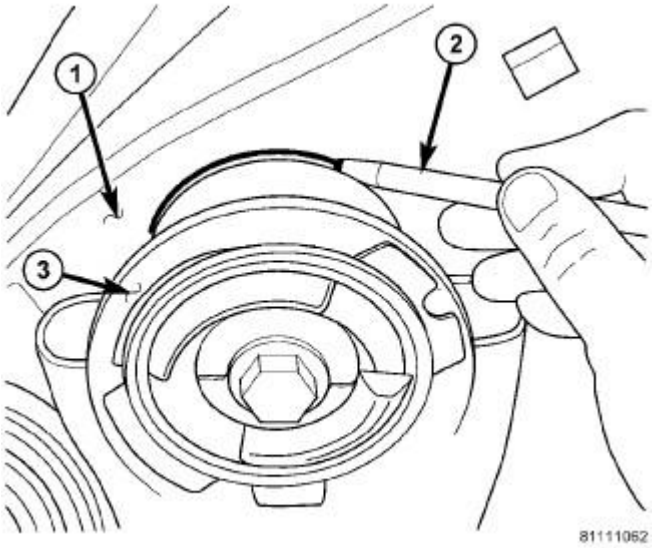

Fig. 220: Marking Location Of Crossmember Mount To Body
Courtesy of CHRYSLER GROUP, LLC

1 - BODY 2 - MARKER (OR CRAYON) 3 - CROSSMEMBER

BUSHING FLANGE

21. Carefully mark location of rear crossmember on body at all four mount (bushing) locations using a marker or crayon. **Do not use a scratch awl to mark location.**
22. Position an extra pair of jack stands under and support forward end of engine cradle to help stabilize vehicle during rear suspension removal/installation.

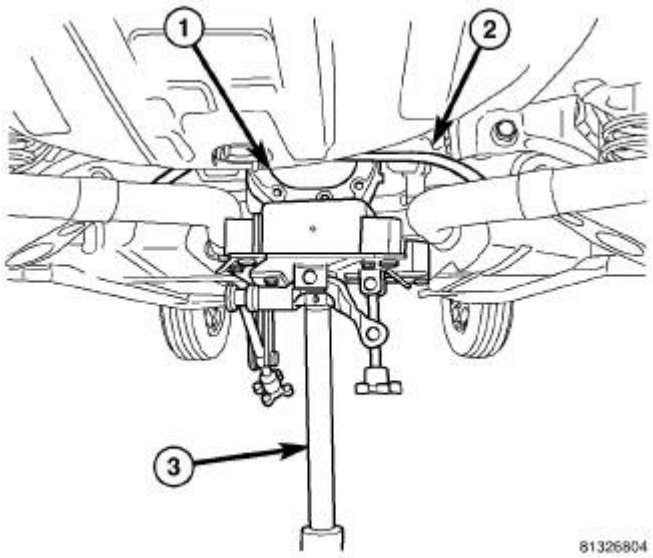

Fig. 221: Supporting Rear Axle Differential
Courtesy of CHRYSLER GROUP, LLC

23. Position under-hoist utility jack or transmission jack (3) under center of rear axle differential (1). Raise jack head to contact differential and secure in place. **When securing crossmember to jack, be sure not to secure stabilizer bar.**

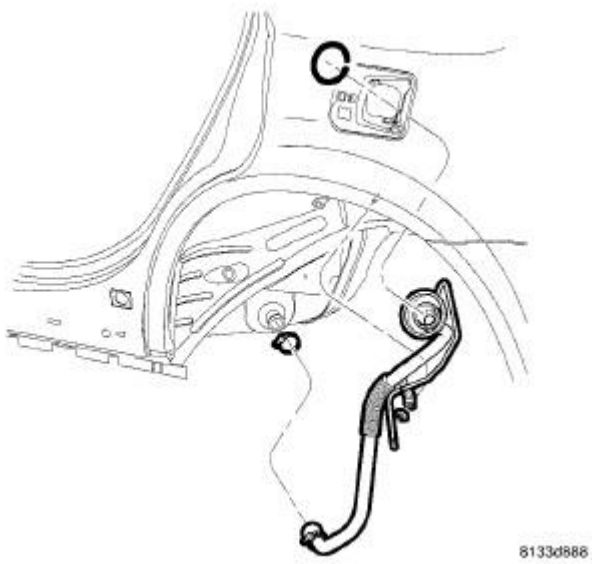

Fig. 222: Filler Tube Assembly
Courtesy of CHRYSLER GROUP, LLC

WARNING: Before opening fuel system, review all Warnings and Cautions.

24. Remove fuel filler tube. Refer to **TUBE, FUEL TANK FILLER, REMOVAL** .

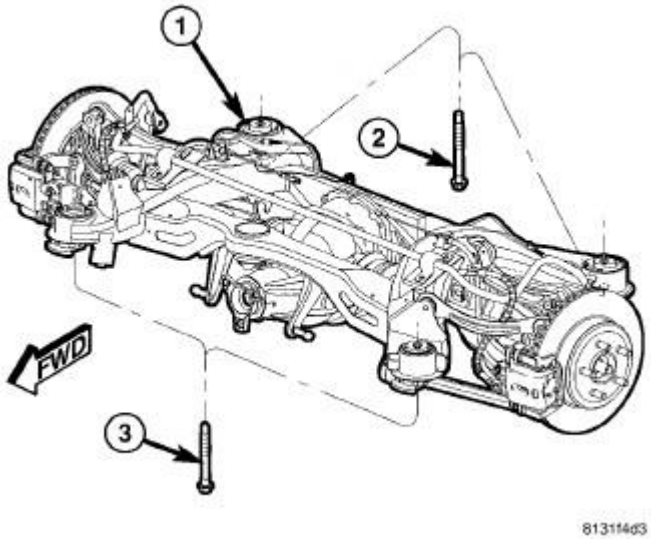

Fig. 223: Rear Crossmember Mounting Bolts
Courtesy of CHRYSLER GROUP, LLC

25. Remove both front (3) and both rear (2) mounting bolts fastening crossmember (1) in place.
26. **Slowly** lower crossmember using jack. **Do not lower jack at a fast rate.** Lower just enough to allow

propeller shaft removal from rear axle differential. **Do not lower jack any further than necessary.** Slide propeller shaft out of rear axle differential and allow bungee cord previously installed to support.

27. Continue to lower jack until crossmember is at a comfortable working level to access stabilizer bar fasteners.

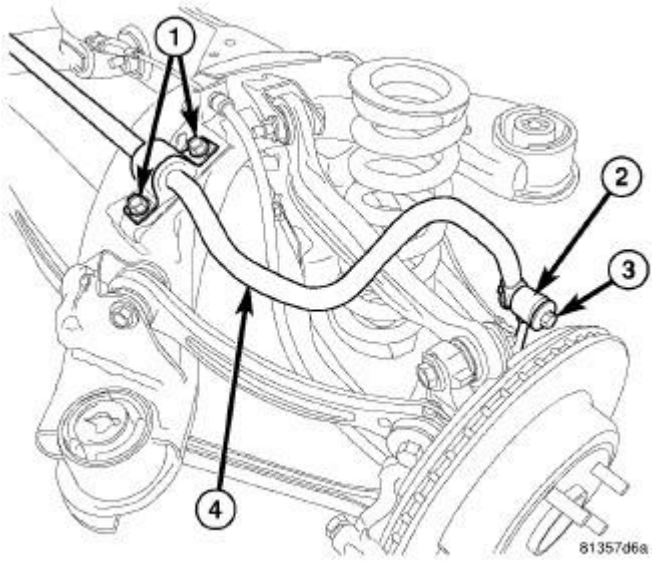

Fig. 224: Rear Stabilizer Bar Mounting
Courtesy of CHRYSLER GROUP, LLC

28. On each end, remove bolt (3) and nut fastening stabilizer bar (4) to stabilizer link (2).
29. Remove bolts (1) fastening each stabilizer bar isolator retainer to crossmember.
30. Remove stabilizer bar (4) with isolators and retainers.
31. Remove retainers from isolators.
32. Remove isolators from stabilizer bar utilizing slits in bushings.

INSTALLATION

INSTALLATION

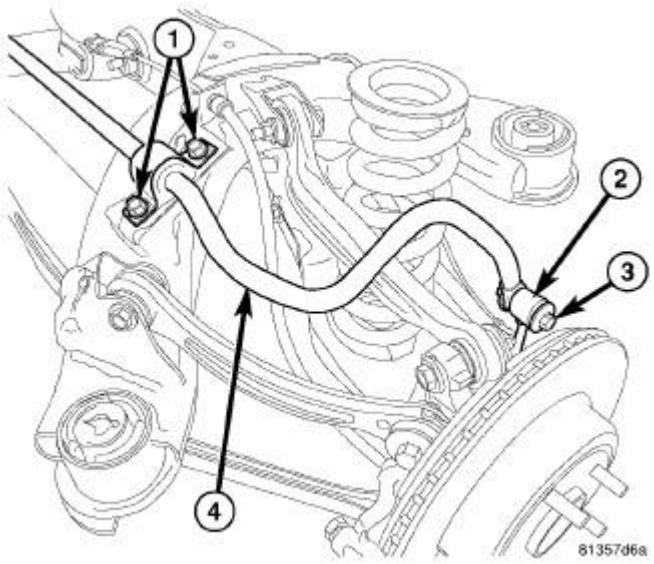

Fig. 225: Rear Stabilizer Bar Mounting
Courtesy of CHRYSLER GROUP, LLC

1. Install isolators on stabilizer bar utilizing slits in bushings. Install each isolator so its slit faces forward and flat side is positioned toward crossmember once installed.
2. Install retainers on isolators.
3. Install stabilizer bar (4) with isolators and retainers on crossmember.
4. Install isolator retainer mounting bolts (1). **Do not tighten at this time.**
5. Install bolt (3) and nut fastening stabilizer bar ends to each stabilizer links (2). **Do not tighten at this time.**
6. Tighten isolator retainer mounting bolts (1) to 61 N.m (45 ft. lbs.).

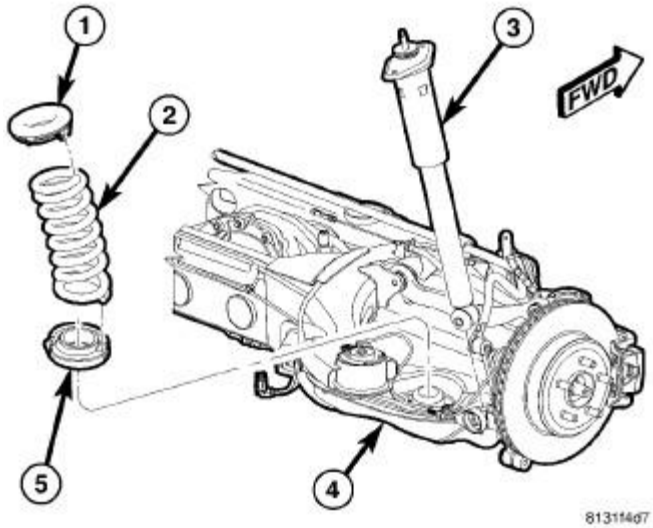

Fig. 226: Isolators, Coil Spring, Shock Absorber & Crossmember

Courtesy of CHRYSLER GROUP, LLC

7. Remove coil springs (2) with isolators (1 and 5) from spring links (4).
8. Raise crossmember to body mounting points. As crossmember is raised, slide propeller shaft onto rear axle differential flange and align shocks with pockets in spring links.

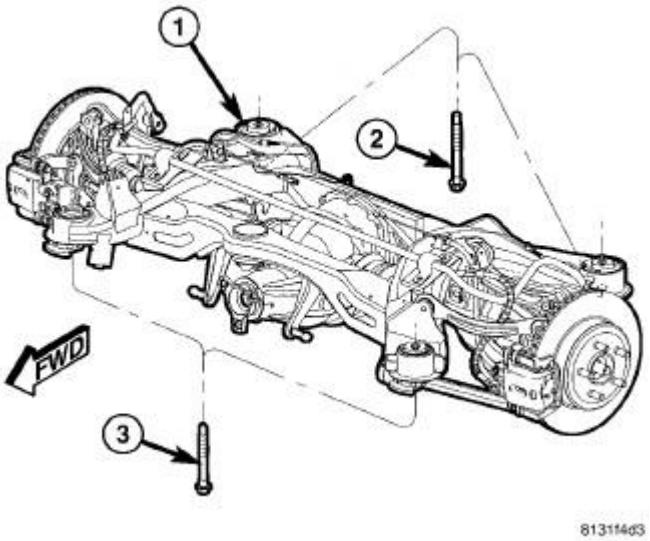

Fig. 227: Rear Crossmember Mounting Bolts
Courtesy of CHRYSLER GROUP, LLC

NOTE: There are four crossmember mounting bolts. Rear mounting bolts (2) are longer than front mounting bolts (3). Do not interchange mounting bolts.

9. Continue to raise crossmember (1) with jack until crossmember mounting bolts (2 and 3) can be installed. Install left side crossmember mounting bolts, but not the right side bolts. It is not necessary to tighten bolts at this point.

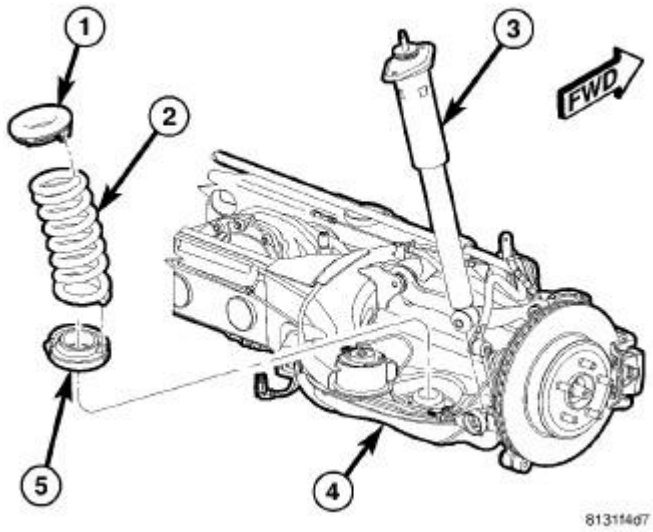

Fig. 228: Isolators, Coil Spring, Shock Absorber & Crossmember
Courtesy of CHRYSLER GROUP, LLC

CAUTION: To avoid damaging other components of vehicle, do not lower crossmember any further than necessary to install coil spring (2).

10. **Slowly** lower jack allowing right side of crossmember to drop. **Do not lower jack at a fast rate.** Lower jack just enough to allow spring (2) Installation. **Do not lower jack any further than necessary.**

NOTE: Before installing coil spring, make sure isolators (1 and 5) are completely installed on ends of spring.

11. Install coil spring (2) with isolators into spring pocket of spring link fitting the lower isolator to the shape of the pocket, then align top of spring with body mount.

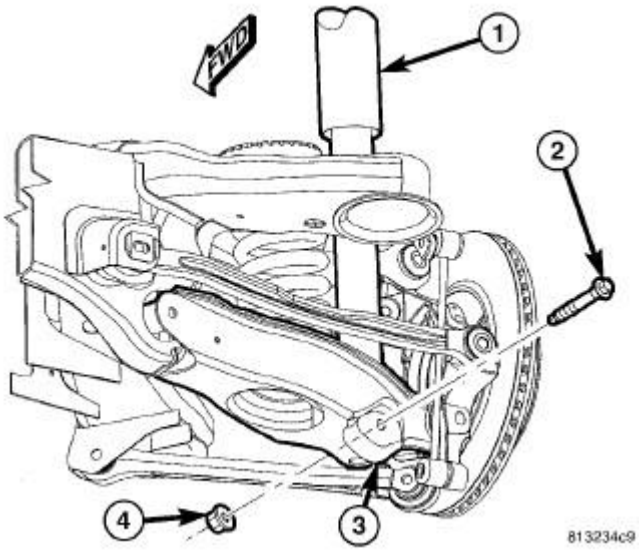

Fig. 229: Shock Absorber Lower Mounting Bolt & Nut
Courtesy of CHRYSLER GROUP, LLC

12. Carefully raise jack, guiding coil spring and lower end of shock absorber (1) into mounted positions. Once shock absorber (1) lower mounting hole lines up with hole in spring link (3), stop jacking.
13. Install lower shock mounting bolt (2) and nut (4). **Do not tighten at this time.**

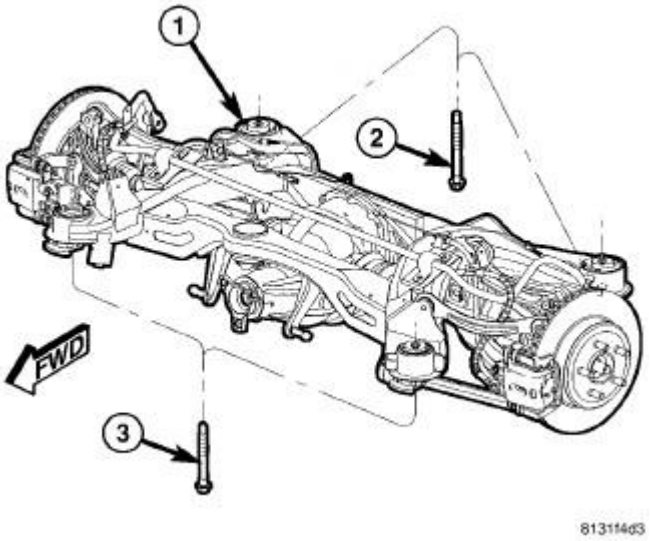

Fig. 230: Rear Crossmember Mounting Bolts
Courtesy of CHRYSLER GROUP, LLC

NOTE: There are four crossmember mounting bolts. Rear mounting bolts (2) are longer than front mounting bolts (3). Do not interchange mounting bolts.

14. Raise right side of crossmember (1) into mounted position. Install right side crossmember mounting bolts (2 and 3). **Snug, but do not fully tighten bolts at this time.**
15. Remove both front and rear crossmember mounting bolts (2 and 3) on **left** side of vehicle.

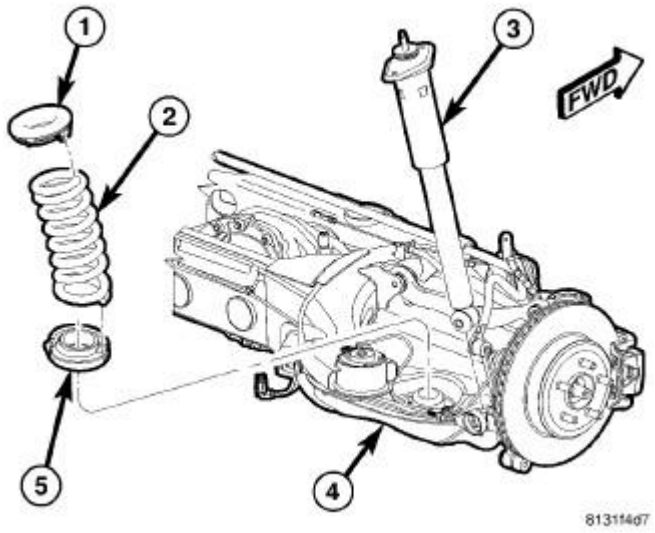

Fig. 231: Isolators, Coil Spring, Shock Absorber & Crossmember
Courtesy of CHRYSLER GROUP, LLC

CAUTION: To avoid damaging other components of vehicle, do not lower crossmember any further than necessary to install coil spring (2).

16. **Slowly** lower jack allowing left side of crossmember to drop. **Do not lower jack at a fast rate.** Lower jack just enough to allow spring (2) Installation. **Do not lower jack any further than necessary.**

NOTE: Before installing coil spring, make sure isolators (1 and 5) are completely installed on ends of spring.

17. Install coil spring (2) with isolators into spring pocket of spring link fitting the lower isolator to the shape of the pocket, then align top of spring with body mount.

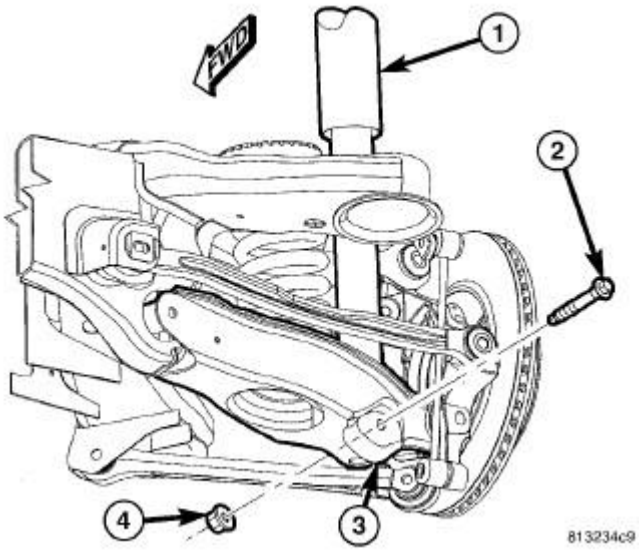

Fig. 232: Shock Absorber Lower Mounting Bolt & Nut
Courtesy of CHRYSLER GROUP, LLC

18. Carefully raise jack, guiding coil spring and lower end of shock absorber (1) into mounted positions. Once shock absorber (1) lower mounting hole lines up with hole in spring link (3), stop jacking.
19. Install lower shock mounting bolt (2) and nut (4). **Do not tighten at this time.**

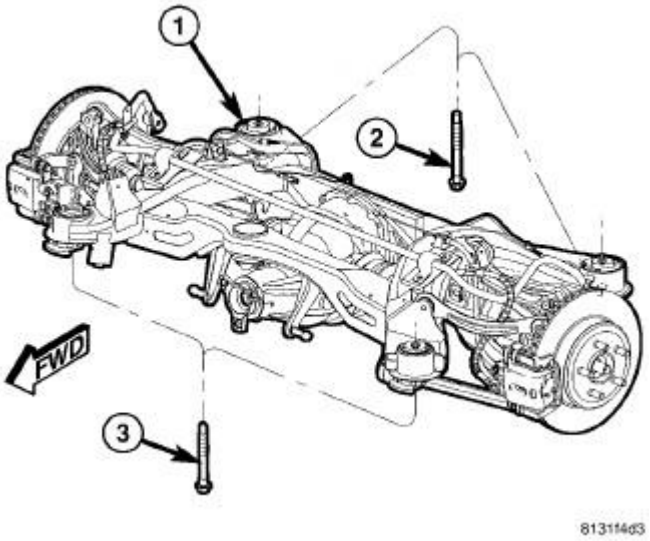

Fig. 233: Rear Crossmember Mounting Bolts
Courtesy of CHRYSLER GROUP, LLC

NOTE: There are four crossmember mounting bolts. Rear mounting bolts (2) are longer than front mounting bolts (3). Do not interchange mounting bolts.

20. Raise left side of crossmember (1) into mounted position. Install left side crossmember mounting bolts (2 and 3). **Snug, but do not fully tighten bolts at this time.**

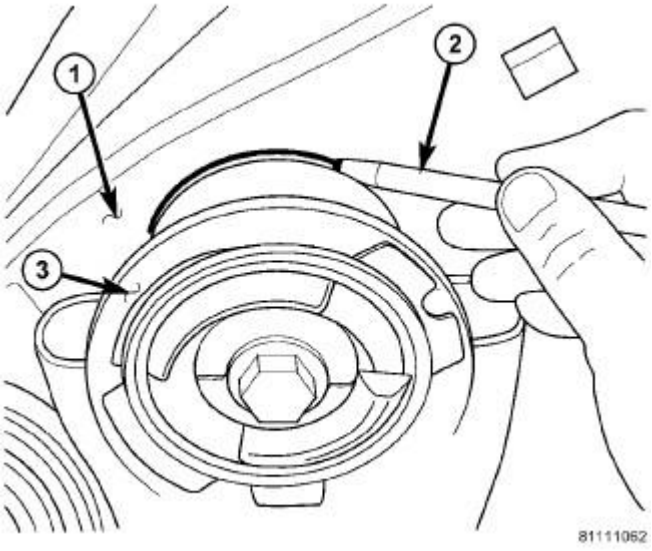

Fig. 234: Marking Location Of Crossmember Mount To Body
Courtesy of CHRYSLER GROUP, LLC

1 - BODY 2 - MARKER (OR CRAYON) 3 - CROSSMEMBER BUSHING FLANGE

21. Shift crossmember as necessary to line up mounts (3) with location marks drawn on body (1) before removal.

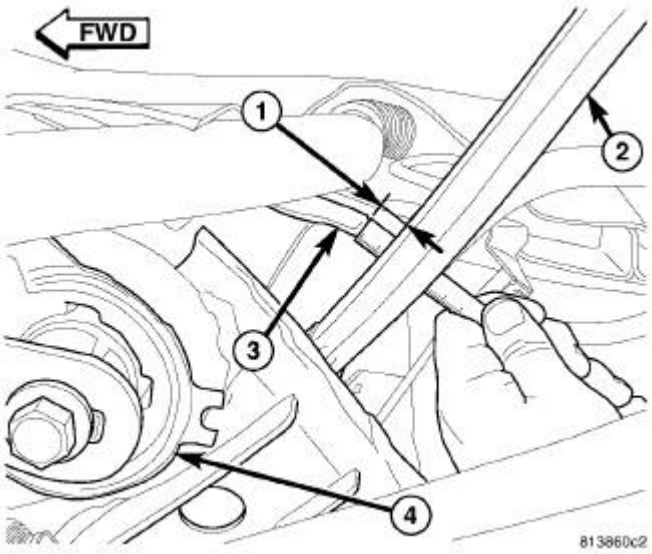

Fig. 235: Measuring Tension Link Clearance
Courtesy of CHRYSLER GROUP, LLC

22. Once mounts are lined up with location marks, on both sides of vehicle, measure distance (1) between the tension link (2) and weld flange (3) on body directly in front of it, just outboard of the front mount bushing (4). **This distance must be at least 12 mm to allow proper clearance for suspension movement.** If distance is less than 12 mm on either side of vehicle, shift that side of rear crossmember directly rearward until distance is 12 mm or greater. To do so, loosen 3 mounting bolts slightly, leaving one on opposite side of shift snugged to pivot off of. Shift crossmember rearward and snug loosened bolts. Remeasure opposite side to be sure it still maintains minimum 12 mm distance.

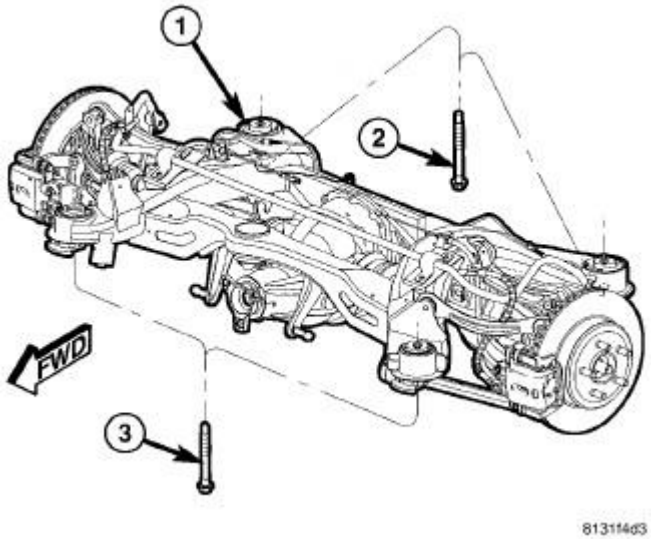

Fig. 236: Rear Crossmember Mounting Bolts
Courtesy of CHRYSLER GROUP, LLC

23. Tighten all four crossmember mounting bolts (2 and 3) to 180 N.m (133 ft. lbs.).

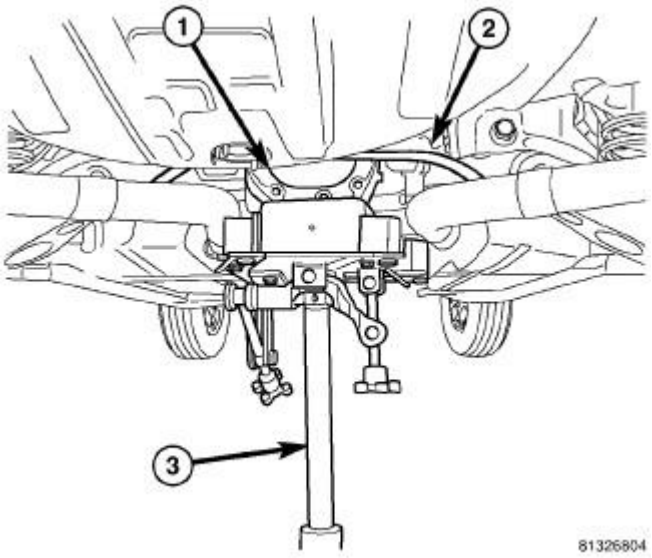

Fig. 237: Supporting Rear Axle Differential
Courtesy of CHRYSLER GROUP, LLC

24. Remove jack (3) from under rear axle differential.

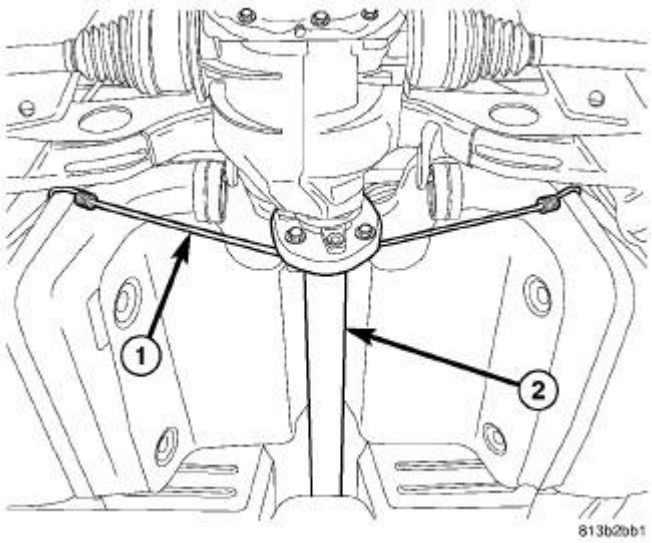

Fig. 238: Supporting Propeller Shaft
Courtesy of CHRYSLER GROUP, LLC

25. Remove bungee cord (1) supporting propeller shaft (2).

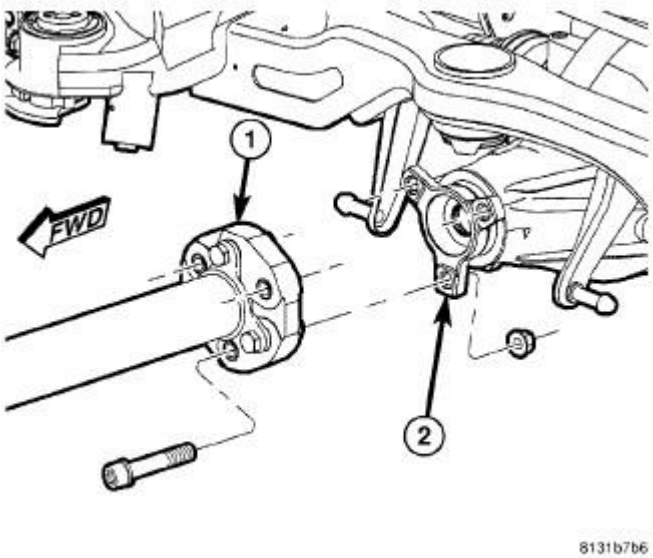

Fig. 239: Propeller Shaft Coupler & Rear Axle Flange
Courtesy of CHRYSLER GROUP, LLC

26. Align propeller shaft index marks placed upon removal. Install propeller shaft rear coupler-to-axle flange bolts and nuts by hand. Tighten propeller shaft rear coupler-to-axle flange bolts to 81 N.m (60 ft. lbs.).

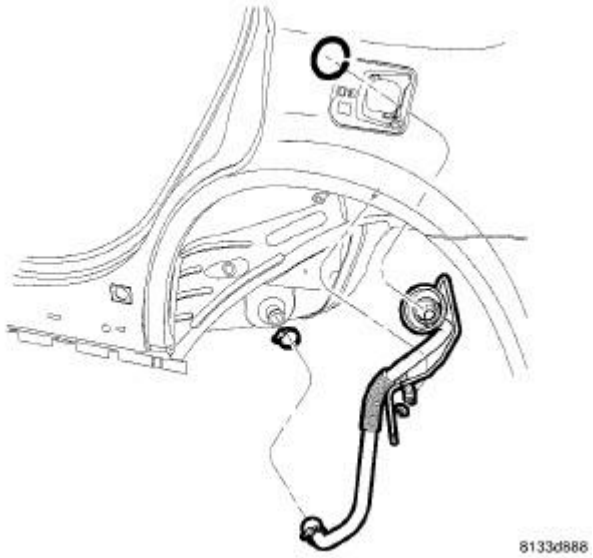

Fig. 240: Filler Tube Assembly
Courtesy of CHRYSLER GROUP, LLC

27. Install fuel filler tube Refer to **TUBE, FUEL TANK FILLER, INSTALLATION** .

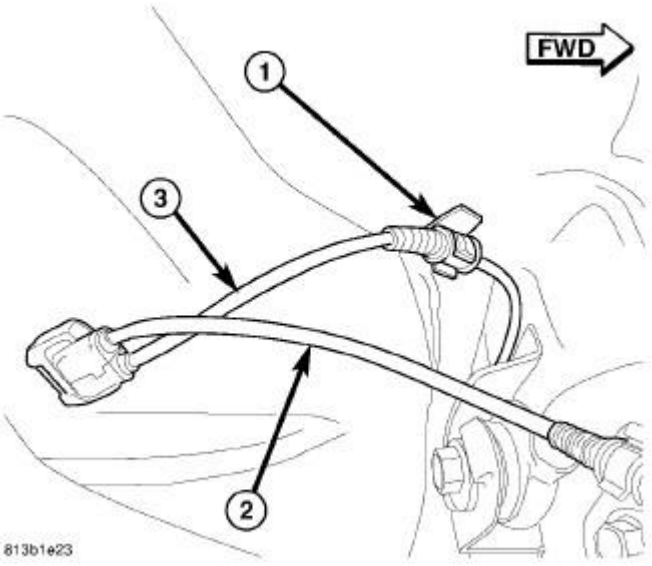

Fig. 241: Left/Right Rear Wheel Speed Sensor Cable & Routing Clip
Courtesy of CHRYSLER GROUP, LLC

28. Clip left rear wheel speed sensor cable (3) to routing clip (1) near body connector.

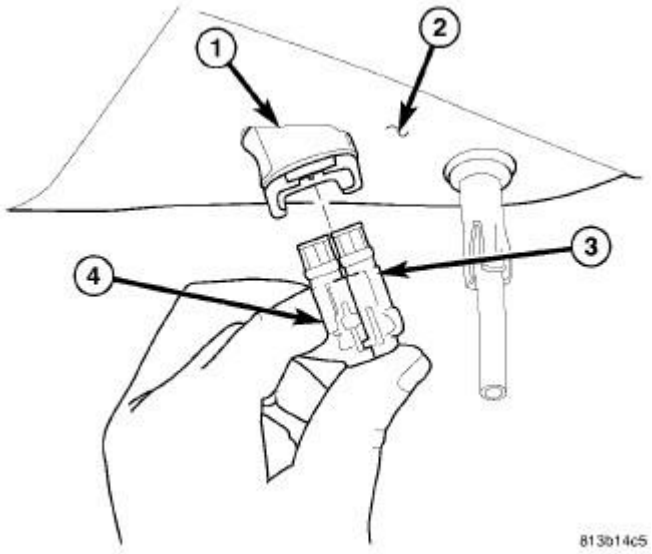

Fig. 242: Sensor Connection To Body Connector
Courtesy of CHRYSLER GROUP, LLC

29. Match left rear wheel speed sensor connector (4) to right sensor connector (3) to make one connector.
30. Insert speed sensor connectors (3 and 4) into body wiring harness connector (1) located in luggage compartment floor pan (2). When installing connector, make sure retaining clip on body connector is properly in place and sensor connector cannot be pulled out.

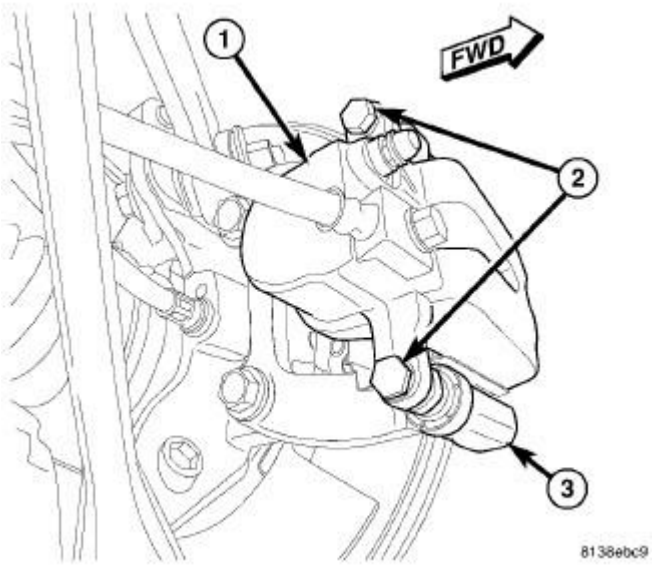

Fig. 243: Rear Brake Caliper, Adapter & Guide Pin Bolts
Courtesy of CHRYSLER GROUP, LLC

CAUTION: Extreme caution should be taken not to cross-thread caliper guide pin bolts (2) when they are installed.

NOTE: Before installing caliper guide pin bolts, clean guide pin bolt threads and apply Mopar® Lock AND Seal Adhesive or equivalent.

31. If equipped with standard or premium disc brakes, on each rear disc brake:
    a. Push caliper guide pins into caliper adapter to clear caliper mounting bosses when installing.
    b. Guide caliper and brake hose down through rear suspension, then slide caliper over brake pads and onto caliper adapter (3).
    c. Align caliper mounting holes with guide pins, then install guide pin bolts (2). While holding guide pins from turning, tighten bolts to 31 N.m (23 ft. lbs.).
    d. Make sure brake hose is properly routed and will not come in contact with suspension components.
32. If equipped with SRT8 disc brakes, at each rear disc brake, support spring link using a transmission jack or other appropriate jack as indicated in removal procedure. Refer to **SPRING(S), REMOVAL**.

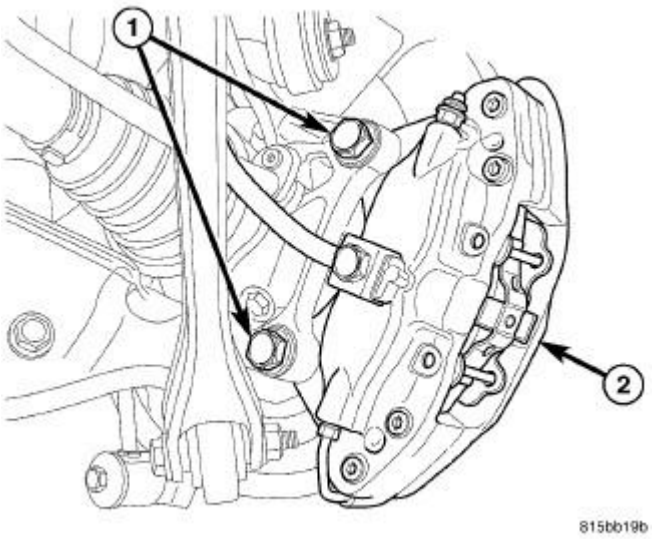

Fig. 244: Rear Caliper Mounting Bolts
Courtesy of CHRYSLER GROUP, LLC

33. If equipped with SRT8 disc brakes, on each rear disc brake, slide caliper with pads (2) over brake rotor and align with knuckle.
34. If equipped with SRT8 disc brakes, on each rear disc brake, install caliper mounting bolts (1). Tighten bolts to 130 N.m (96 ft. lbs.).
35. If equipped with SRT8 disc brakes, on each rear disc brake, remove jack from under spring link.

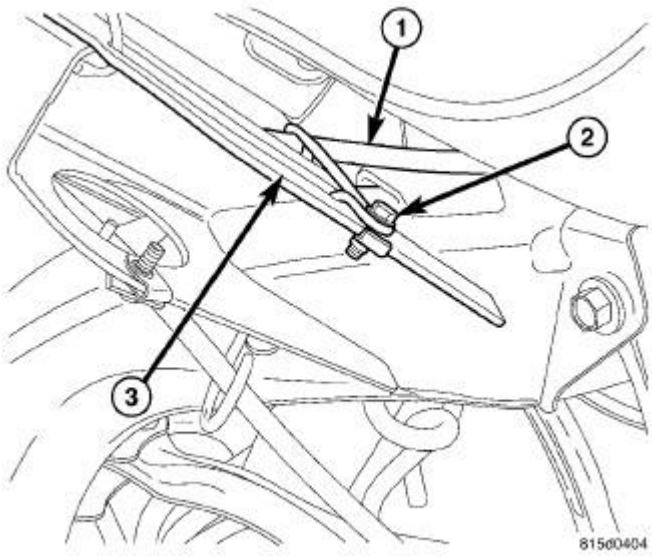

Fig. 245: Front Parking Brake Cable, Rear Crossmember Front Flange & Screw
Courtesy of CHRYSLER GROUP, LLC

36. Insert routing front parking brake cable bracket locating pin in front flange of crossmember (3), then

install screw (2) fastening cable (1) routing bracket to rear crossmember.

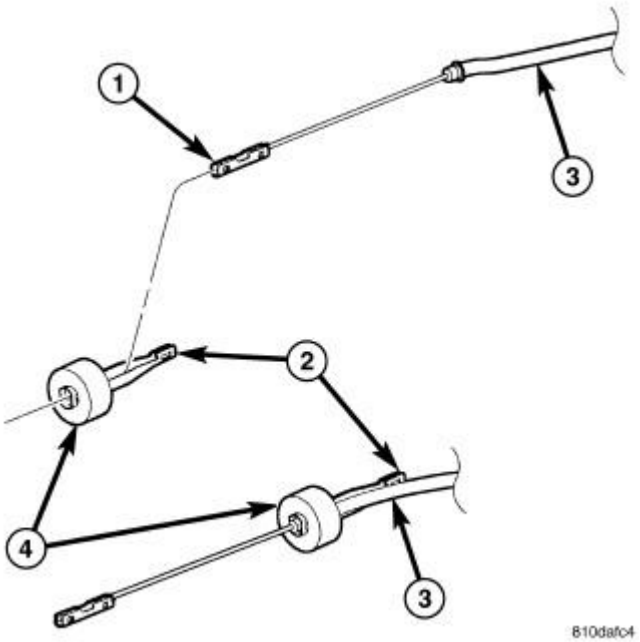

Fig. 246: Front Parking Brake Cable & Equalizer
Courtesy of CHRYSLER GROUP, LLC

37. Route parking brake cable above rear crossmember, then slide cable (1, 3) through equalizer (2) above rear axle differential.

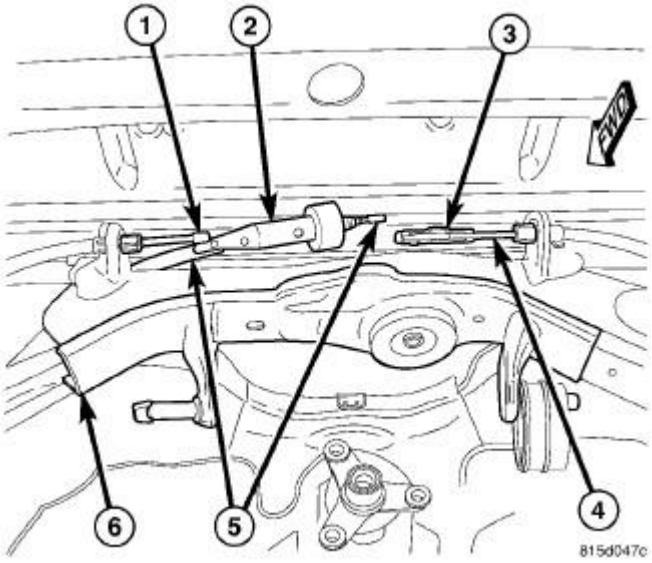

Fig. 247: Parking Brake Cables At Rear Crossmember
Courtesy of CHRYSLER GROUP, LLC

NOTE: Due to short travel and low spring tension, it is not necessary to lock-out parking brake lever to service parking brake components.

38. Connect front parking brake cable (5) at connector (3) to right rear parking brake cable (4).

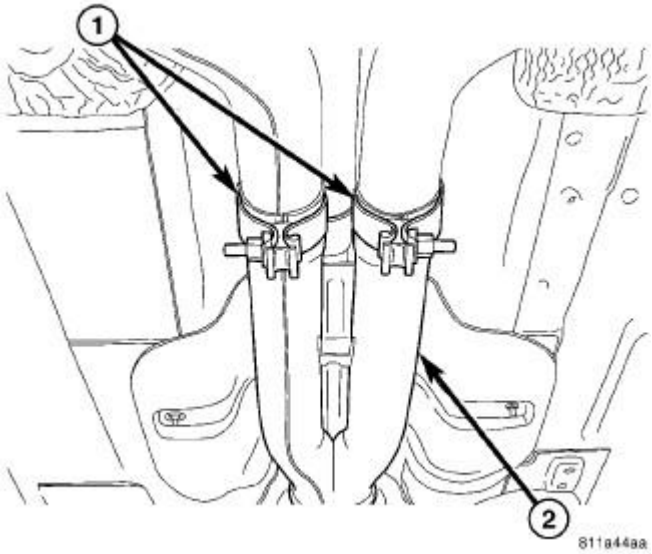

Fig. 248: Identifying Clamps & Rear Exhaust System
Courtesy of CHRYSLER GROUP, LLC

39. Install rear exhaust system (2) (dual-outlet exhaust shown in figure). Refer to **MUFFLER, EXHAUST, INSTALLATION** .

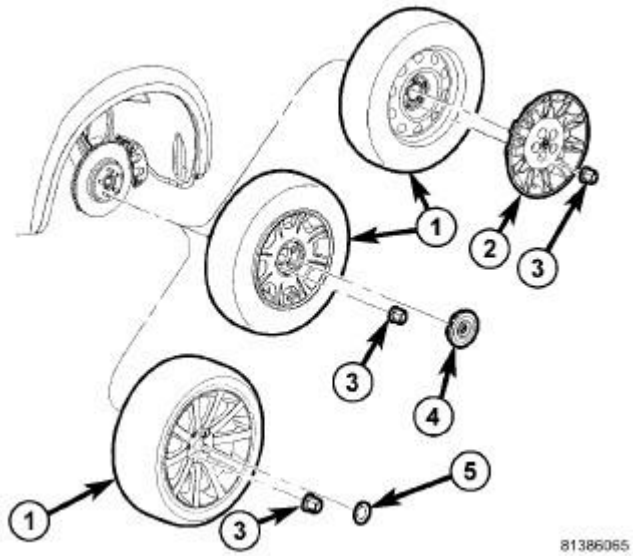

Fig. 249: Tire And Wheel Mounting
Courtesy of CHRYSLER GROUP, LLC

40. Install tire and wheel assemblies (1). Tighten wheel mounting nuts (3) to 150 N.m (110 ft. lbs.). Refer to **INSTALLATION** .
41. Lower vehicle until rear wheels are just above floor level.
42. Apply parking brake lever. Release lever, then reapply.
43. Check to make sure rear wheels will not rotate with lever applied.
44. Lower vehicle.

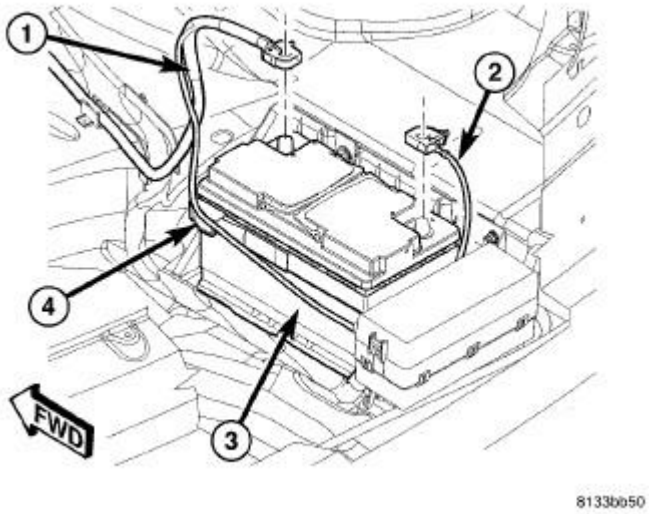

Fig. 250: Disconnecting/Connecting Battery Cables
Courtesy of CHRYSLER GROUP, LLC

45. Connect battery negative cable (2) to battery post. It is important that this is performed properly.
46. Pump brake pedal several times to ensure vehicle has a firm brake pedal before moving vehicle.
47. Position vehicle on alignment rack/drive-on hoist. Raise vehicle as necessary to access mounting bolts.

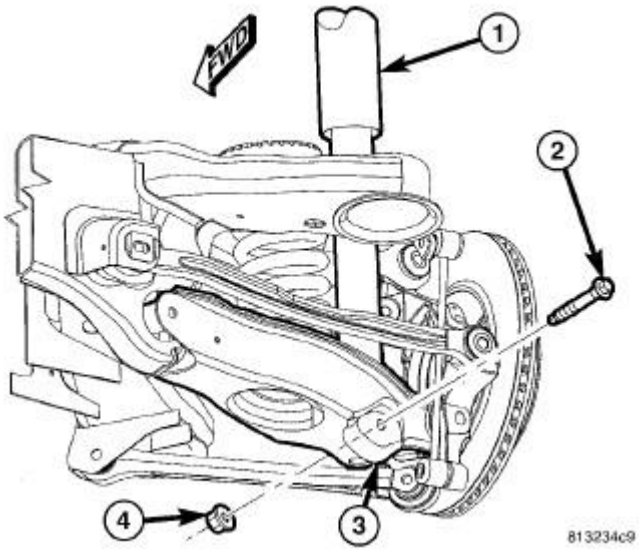

Fig. 251: Shock Absorber Lower Mounting Bolt & Nut
Courtesy of CHRYSLER GROUP, LLC

48. Tighten shock absorber lower mounting bolt nuts (4) to 72 N.m (53 ft. lbs.).

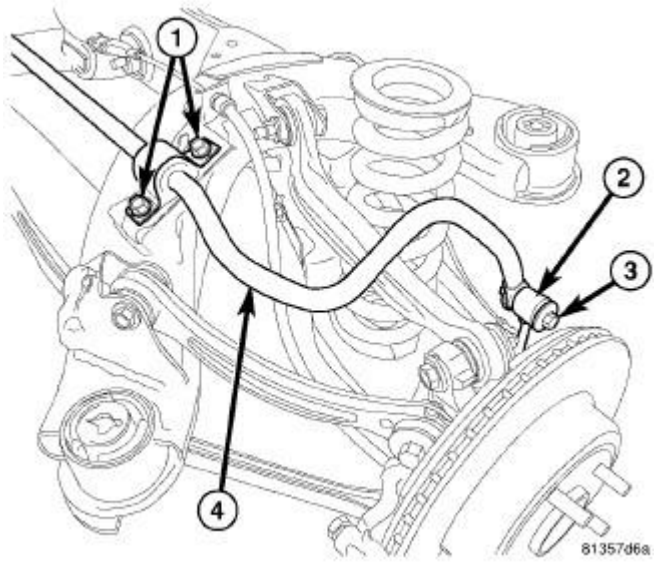

Fig. 252: Rear Stabilizer Bar Mounting
Courtesy of CHRYSLER GROUP, LLC

49. Tighten stabilizer link fasteners (3) to 61 N.m (45 ft. lbs.).
50. Perform wheel alignment, paying special attention to thrust angle. If rear crossmember needs to be shifted to align thrust angle, try to avoid compromising tension link clearance. Refer to step 22. Refer to **WHEEL ALIGNMENT, STANDARD PROCEDURE** .